October 24, 2022

Mr. Christopher Carthy, Chairman
and Members of the Planning Board
Town of North Castle
17 Bedford Road
Armonk, NY 10504

RE: JMC Project 20101
The Summit Club at Armonk Residential
568 & 570 Bedford Road (NY-22)
Town of North Castle, NY

Response to Town Comments Resubmission

Dear Chairman Carthy and Members of the Planning Board:

On behalf of the owner and applicant, Summit Club Partners, LLC, respectively, we are pleased to submit the following documents for your continued review of the Site Plan Application for the proposed multi-family residential development at the above referenced project:

1. Granoff Architects Drawings:

Dwg. No.	Title	Rev. #/Date	
Landscape:			
LS C	Cover-Landscape	1	10/24/2022
LS 100.0	Overall Site Plan	1	10/24/2022
LS 100.1A	Overall Site Plan-Southern Development	1	10/24/2022
LS 100.1B	Overall Site Plan-Northern Development	1	10/24/2022
LS 100.2	Site Details	1	10/24/2022
LS 101.0	Amenities Building-Masonry Plan	1	10/24/2022
LS 101.1	Amenities Building-Planting Plan	1	10/24/2022
LS 101.2	Amenities Building-Pool Fencing Plan	1	10/24/2022
LS 101.3	Amenities Building-Details	1	10/24/2022
LS 101.4	Amenities Building-Pool Deck Elevations	1	10/24/2022
LS 102	Main Entry Plan-Landscape	1	10/24/2022
LS 103.1	Residential Building-Typical Planting Plan	1	10/24/2022
LS 104	Detention Basin Planting Plan	1	10/24/2022
Photometric Plan:			
SL-1A	Exterior Lighting Photometric Calc Phase 1	1	10/19/2022
Razar Series LED Cutsheet/Specifications, prepared by U.S. Architectural Lighting			

Pool Engineering:

W-01	Cover Sheet		10/05/2022
W-02	Pool and Spa Plan		10/05/2022
W-03	Pool Section Stair Section		10/05/2022
W-04	Spa Plan, Section, Details		10/05/2022
W-05	Pool Details		10/05/2022
W-06	Pool Plumbing Plan Equipment Schedule		10/05/2022
W-07	Lap Pool Filtration System Schematic/Surge Capacity		10/05/2022
W-08	Notes/Details		10/05/2022
W-09	Equipment Cut Sheets		10/05/2022
W-10	Equipment Cut Sheets		10/05/2022

Maintenance Building:

LS 105	Maintenance Building-Planting Plan	1	10/24/2022
A 100	Floor Plan-Lower Level	1	10/24/2022
A 101	Floor Plan-Upper Level	1	10/24/2022
A 300	Building Elevations	1	10/24/2022
A 301	Building Elevations/Section	1	10/24/2022

STP & WTP (Water & Sewage Treatment Buildings):

A 100	Water Treatment & Sewage Treatment Buildings	1	10/24/2022

Water Tank Design:

8 of 10	Drawing 6 (Water Tank Plans/Elevations, Example Image)	11/23/2021

2. WSP USA Documents:
   "Engineer's Report for Summit Club Water-Supply System", dated August 2022
   "72-Hour Pumping Test Report", dated August 2022

3. R&M Engineering Documents:
   Sewage Treatment Plant Drawing Set, dated September 2022
   Sewage Treatment Plant Engineering Report, dated 09/15/2022
   Sewage Treatment Plant Contract Documents Plans and Specifications, dated 09/15/2022

4. "Town of North Castle Zoning Board of Appeals Approval Resolution", dated 08/04/2022.

5. Lasberg Construction Associates, Inc. Documents:
   "Blasting Plan", dated 10/21/2022
   "Preliminary Rock Crushing Plan", dated 10/21/2022

The revisions depicted on the above noted plans reflect responses to comments outlined in the Town of North Castle Planning Department Memorandum, dated June 29, 2022. For ease of review, we have repeated and enumerated the comments in italic print, followed by our responses:

General Comments

Comment No. 1

The proposed 10 foot tall tennis court fence exceeds the maximum fence height of six feet. Any fence exceeding six feet in height will require a variance from the Zoning Board of Appeals.

Response No. 1

An area variance for the proposed 10 foot tall tennis court fence was obtained from the Zoning Board of Appeals on 08/04/2022. Refer to Town of North Castle Zoning Board of Appeals Approval Resolution, dated 08/04/2022.

Comment No. 2

The site plan depicts proposed water well 1 located within the Town-regulated wetland buffer within the golf course. In addition, a water main connection is also located within the Town-regulated wetland buffer. A total of 25 square feet of buffer impact is proposed.

Given the de minimis impact at the edge of the buffer associated with the proposed disturbance, it is recommended that pursuant to Section 340-5(D) of the Town Code, the Planning Board determine that the requested wetland permit is minor in nature and direct that the permit be processed administratively by the Town Engineer. This would obviate the need for Conservation Board review and a public hearing.

Response No. 2

The comment is so noted.

Comment No. 3

The site plan should be revised to depict a lighting/photometric plan for review that conforms to the minimum requirements of Section 355-45.M of the Town Code. All proposed site lighting should be depicted on this plan.

Response No. 3

A proposed lighting/photometric plan meeting the minimum requirements of Section 355-45.M of the Town Code have been prepared. Refer to "Exterior Lighting Photometric Calculation Phase 1", prepared by Apex Lighting Solutions, dated 10/19/2022 and Razar Series LED Cutsheet/Specifications, prepared by U.S. Architectural Lighting.

Comment No. 4

A golf course community must be affiliated with an adjoining membership club which is subject to a Town Board special use permit. Such affiliation shall be established by the requirement that, except for the initial developer/sponsor of the golf course community and successor sponsors/owners of units which have not yet been sold for owner occupancy, the owner of a dwelling unit of the golf course community must for the duration of ownership be a member (whether individually or as a family) of the membership club. The terms and conditions of membership shall be determined by the membership club.

The golf course of the affiliated membership club functions as the open space for the golf course community, and preservation of that open space is a basis for the permitted density of a golf course community. Accordingly, as a condition of site development plan approval of a golf course community, the affiliated membership club shall record in the Westchester County Clerk's office a permanent conservation easement pursuant to which the membership club agrees that the property on which the golf course is located shall be used solely as a golf course or as open space. The conservation easement shall be in form and substance reasonably acceptable to the Town Board and Town Attorney.

Response No. 4

The owners of the market-rate residences will all be members of The Summit Club which has reopened as of April, 2021. A Temporary Special Use Permit for the club/golf course operations, including the temporary facilities was approved by the Town Board on 02/24/2021.

The golf course lot is already subject to a recorded Declaration providing that the golf course lot can only be used as a golf course/club or as open space. The landowner, Summit Club Partners, LLC, will enter into a permanent conservation easement and file it with the Westchester County Clerk's office.

Comment No. 5

The Applicant will need to file the previously discussed conservation easement prior to the issuance of the first building permit.

Response No. 5

The comment is so noted.

Comment No. 6

The Applicant has indicated that chipping would be required during construction. At this time, the Applicant should provide details for review by the Planning Board.

Response No. 6

Refer to "Blasting Plan", prepared by Lasberg Construction Associates, Inc., dated 10/21/2022.

Comment No. 7

The Applicant has indicated that rock processing would be proposed on the site. Additional details should be submitted regarding the proposed operation at this time.

Response No. 7

Refer to "Preliminary Rock Crushing Plan", prepared by Lasberg Construction Associates, Inc., dated 10/21/2022.

Comment No. 8

The Town charges a fee in lieu of providing recreation facilities. The Applicant believes that sufficient on-site recreational facilities are being provided to meet the demand of the project, and has requested a credit be given for the market rate homes. The residents of the AFFH units would not be required to be members of the Club and would likely use Town recreation facilities. Therefore, the required $1,000 per unit fee in lieu should be paid by the Applicant for the AFFH units.

Response No. 8

The comment is so noted.

Comment No. 9

The site plan depicts 65,300 square feet of Town-regulated steep slope disturbance.

Response No. 9

The comment is so noted.

Comment No. 10

The site plan depicts the removal of 250 Town-regulated trees.

Response No. 10

The comment is so noted.

Comment No. 11

The previously submitted landscaping/screening plan should be included with the plan review set.

Response No. 1

The proposed landscaping/screening plans, prepared by Granoff Architects, have been included in this submission.

Comment No. 12

The Applicant has retained the services of a hydrogeologist/water system consultant to design a new on-site water system. According to the project Hydrogeologist/Water Supply Consultant (WSP), the next step for the project potable water system will be to conduct a 72-hour yield test of the three on-site wells with a full NYS Part 5 water sample for each well. After the 72-hour test is completed, WSP will revise the 50% plans and specifications that have been developed and previously provided to the Town. Once the plans and specifications have been updated and further developed, they will be submitted to the Town of North Castle (Sal Misiti), it's consultants and the WCDH.

Response No. 12

The applicant has retained the services of a hydrogeologist/water system consultant who is currently working on the design of the new on-site water system. The new water system will be sized appropriately to accommodate the proposed residential, golf club and various amenities facilities.

A 72-hour yield test on the three on-site wells has been conducted and a full NYS Part 5 water sample has been collected from each well. The 72-hour pumping test report prepared by WSP has been submitted to the Town and has been reviewed by the Town's Hydrogeologic Consultant (HES). WSP is now revising the plans, report and specifications that have been developed and previously provided to the Town. Once the plans, report and specifications have been updated and further developed, they will be submitted to the Town of North Castle (Sal Misiti), it's consultants and the WCDH. Please refer to drawings/documents, prepared by WSP USA.

Comment No. 13

The Applicant has retained the services of a sewage treatment plant consultant to design a new sewage treatment plant. the existing STP building will be reused as an equipment storage building. Instead, a new sewage treatment plant is proposed within the hillside between the existing driveway leading to the STP building and the south side of the existing driving range. The new plant has been sized appropriately to accommodate the proposed residential, golf club and various amenities facilities.

Response No. 13

The applicant has retained the services of a sewage treatment plant consultant (R&M Engineering) who is responsible for the design of the new sewage treatment plant. As indicated above, the existing sewage treatment plant (STP) building will be demolished, and a new maintenance building will be built in its place. A new STP is proposed within the hillside between the existing driveway leading to the STP building and the south side of the existing driving range. The new plant has been sized appropriately to accommodate the proposed residential, golf club and various amenities facilities. Refer to drawings prepared by R&M Engineering.

The STP Engineering Design Report and SPDES Permit application have been submitted to the New York State Department of Environmental Conservation (NYSDEC) Division of Water and are currently under review. At the request of NYSDEC, R&M is preparing an Abandonment Plan for the existing STP structures which will be submitted shortly prior to obtaining review comments for the report. Once comments are received, all STP design documents will be updated addressing comments from all regulatory agencies to prevent conflicting feedback.

Comment No. 14

The Applicant has submitted proposed entrance signage located in front of the proposed stone walls. The sign size and location appear to be appropriate.

Response No. 14

The comment is so noted.

Comment No. 15

Pursuant to Section 355-24.I.1 of the Town Code AFFH units shall be marketed in accordance with the Westchester County Fair Affordable Housing Affirmative Marketing Plan.

Response No. 15

The comment is so noted.

Comment No. 16

Pursuant to Section 355-24-I.2 of the Town Code, the maximum monthly rent for an affordable AFFH unit and the maximum gross sales price for an AFAH unit shall be established in accordance with US Department of Housing and Urban Development guidelines as published in the current edition of the Westchester County Area Median Income AMI Sales Rent Limits available from the County of Westchester.

Response No. 16

The comment is so noted.

Comment No. 17

Pursuant to Section 355-24-I.3 of the Town Code, units designated as affordable AFFH units shall remain affordable for a minimum of 50 years from date of initial certificate of occupancy for rental properties and from date of original sale for ownership units.

Response No. 17

The comment is so noted.

Comment No. 18

Pursuant to Section 355-24-I.4 of the Town Code, a property containing any affordable AFFH units shall be restricted using a mechanism such as declaration of restrictive covenants in recordable form acceptable to the Town which shall ensure that the affordable AFFH unit shall remain subject to affordable regulations for the minimum 50-year period of affordability. The covenants shall require that the unit be the primary residence of the resident household selected to occupy the unit upon approval such declaration shall be recorded against the property containing the affordable AFFH unit prior to the issuance of a Certificate of Occupancy for the development.

Response No. 18

The comment is so noted. The applicant will comply.

In addition to the above responses, we have incorporated a proposed 6,000 SF maintenance

building in the "Utilities Complex" so that golf course operations can continue during the construction of the residential phase as the existing maintenance building is located in the middle of the residential roadway. The proposed maintenance building is being located between the proposed water supply (holding tank/treatment) buildings and the proposed sewage treatment plant building. The existing sewage treatment plant building shall be demolished as part of this construction.

We trust the attached documents and above responses are sufficient for your review and we respectfully request placement on the November 14th Planning Board agenda. In the interim, we are also requesting a meeting with the Town Planner before the meeting on the 14th to discuss the submission and any open items. Thank you for your consideration.

If you have any questions or require additional information, please do not hesitate to contact our office at (914) 273-5225.

Sincerely,

JMC Planning Engineering Landscape Architecture & Land Surveying, PLLC

Paul Sysak

Paul R. Sysak, RLA
Project Manager

cc: Adam R. Kaufman, AICP
Joseph M. Cermele, PE, CFM
Roland Baroni, Esq.
Jeffrey B. Mendell
Mark P. Weingarten, Esq.
Peter J. Wise, Esq.
Rich S. Granoff, AIA, LEED AP
Kenneth S. Andersen, AIA

p:\2020\20101\admin\ltcarthy 2022-10-24.docx

THE SUMMIT CLUB AT ARMONK

NORTH CASTLE, NY

GENERAL NOTES:

1. CONTACT THE PROJECT LANDSCAPE ARCHITECT AT:
GRANOFF ARCHITECTS P.C.
330 RAILROAD AVE
GREENWICH, CT 06830
(203) 625-9460

2. THE TERM "CONTRACTOR" SHALL DEFINED AS THE GENERAL CONTRACTOR AND SUB-CONTRACTORS; THE GENERAL CONTRACTOR SHALL BE RESPONSIBLE FOR ALL WORK INCLUDING ALL SUBCONTRACTORS HEREON. ALL DRAWINGS AND NOTES APPLY TO ALL CONTRACTORS AND HIS/HER SUBCONTRACTORS.

3. CONTRACTOR SHALL NOTIFY THE OWNER AND LANDSCAPE ARCHITECT AT LEAST 48 HOURS PRIOR TO ANY ROUTINE FIELD OBSERVATION REQUIRED.

4. CONSTRUCTION SHALL FOLLOW THE CONDITIONS OF THE PLANS AND SPECIFICATIONS. IN ANY CASE OF DISCREPANCY BETWEEN SITE CONDITIONS AND THE DRAWINGS AND THE SPECIFICATIONS OR BETWEEN DRAWINGS AND SPECIFICATIONS NOTIFY THE LANDSCAPE ARCHITECT AS SOON AS THE DISCREPANCY IS APPARENT.

5. VERIFY LOCATIONS, ELEVATIONS AND DIMENSIONS IN FIELD PRIOR TO CONSTRUCTION. NOTIFY LANDSCAPE ARCHITECT OF ANY DISCREPANCY.

6. CONTACT "CALL DIG SAFELY NEW YORK" AT 1-800-962-7962 PRIOR TO ANY SITE WORK ACTIVITY. THE CONTRACTOR SHALL BE AWARE OF ALL SUBSURFACE DRAINAGE AND ALL UTILITIES AS SHOWN ON PLANS AND AS MARKED OUT ON SITE. PROTECT EXPOSED LINES FROM DAMAGE AND DEBRIS. THE CONTRACTOR SHALL BE RESPONSIBLE FOR REPAIR OF ALL DAMAGED UTILITIES DUE TO CONSTRUCTION AT NO ADDITIONAL COST TO THE OWNER.

7. THE CONTRACTOR IS RESPONSIBLE FOR SECURING ALL CONSTRUCTION PERMITS AND LICENSES REQUIRED TO COMPLETE THE WORK. ALL BONDS AND INSURANCE WILL BE THE RESPONSIBILITY OF THE CONTRACTOR.

8. IT IS THE GENERAL CONTRACTOR'S RESPONSIBILITY TO INFORM ALL CONTRACTORS, SUBCONTRACTORS, AND EMPLOYEES OF ALL CONDITIONS ASSOCIATED WITH ANY PERMITS ISSUED.

9. CONTRACTOR IS RESPONSIBLE FOR REPAIR OF ALL DAMAGE AND DISTURBANCE WHICH MAY OCCUR AS A RESULT OF HIS WORK.

10. BLEND NEW WORK SMOOTHLY WITH EXISTING GRADES AND MATERIALS TO REMAIN. AVOID SHARP BREAKS IN GRADE; ROUND OVER TOP AND BOTTOMS OF SLOPES.

11. FINAL GRADE IN ALL CASES SHALL SLOPE AWAY FROM THE BUILDING AT A MINIMUM OF 1/4" PER FOOT (2%) AND ALL PAVED AREAS SHALL HAVE A MINIMUM PITCH OF AT LEAST 1/8" PER FOOT (1%).

12. ALL TREES OR VEGETATION TO BE REMOVED OR TRANSPLANTED ARE TAGGED ON SITE WITH FLAGGING TAPE. REFER TO TREE PROTECTION PLANS, NOTES AND DETAILS.

13. THE CONTRACTOR SHALL PROTECT ALL CATCH BASINS WITH FILTER FABRIC OR STAKED HAY BALES AND SHALL EMPLOY ALL OTHER NECESSARY MEANS TO CONTROL AND PREVENT EROSION THROUGHOUT THE CONSTRUCTION PERIOD UNTIL ALL AREAS STABILIZED. THE CONTRACTOR SHALL MINIMIZE THE AMOUNT OF DISTURBED AREA EXPOSED AT ANY ONE TIME AND STABILIZE THE AREA AS SOON AS PRACTICAL. REFER TO EROSION CONTROL DRAWINGS, NOTES AND DETAILS. ALL DRAINAGE STRUCTURES ARE TO BE CLEANED OF ANY ACCUMULATED DEBRIS AT THE END OF PROJECT CONSTRUCTION. SEE TREE PROTECTION & EROSION CONTROL DETAILS SHEET.

14. THE CONTRACTOR SHALL MAINTAIN ACCESS AND EGRESS TO THE SITE AT ALL TIMES DURING CONSTRUCTION. NOTIFY OWNER 24 HOURS IN ADVANCE OF ANY DISRUPTION IN ACCESS. THE CONTRACTOR SHALL PROVIDE AND MAINTAIN TRAFFIC CONTROL DEVICES, WARNING SIGNS, BARRICADES, FLASHERS, FLAG MEN, ETC.) IN ACCORDANCE WITH THE MANUAL OF UNIFORM TRAFFIC CONTROL DEVICES FOR STREETS AND HIGHWAYS, USDOT, FHA 1988 PT. VI, TRAFFIC CONTROLS FOR STREETS AND HIGHWAY CONSTRUCTION AND MAINTENANCE OPERATIONS AS MAY BE AMENDED TO DATE, FOR THE MAINTENANCE AND PROTECTION OF BOTH VEHICULAR AND PEDESTRIAN TRAFFIC.

15. TRAFFIC SHALL BE MAINTAINED AT ALL TIMES ON BEDFORD RD. THE STREET SHALL NOT BE CLOSED TO TRAFFIC, NOR SHALL ANY TRAFFIC BE DETOURED TO OTHER STREETS WITHOUT PRIOR WRITTEN APPROVAL OF THE VILLAGE TRAFFIC ENGINEER.

16. WORKING HOURS AND ALL NOISE PRODUCING ACTIVITIES MUST CONFORM TO THE TOWN OF NORTH CASTLE REGULATED WORKING HOURS.

17. REMOVAL AND DISPOSAL OF ALL MATERIALS TO COMPLY WITH ANY AND ALL STATE AND LOCAL CODES AND REGULATIONS.

18. THE CONTRACTOR IS TO RESTORE TO ORIGINAL CONDITION ALL DISTURBED AREAS CAUSED BY THE ACTIVITIES OF THE PROJECT.

19. THE CONTRACTOR IS RESPONSIBLE TO SUPERVISE THE ASSEMBLY OF ALL MATERIALS.

20. THE CONTRACTOR SHALL DETERMINE THE METHODS, MEANS, TECHNIQUES, SEQUENCES AND PROCEDURES OF IMPLEMENTING THE PROJECT.

21. THE CONTRACTOR SHALL COMPLETE ALL WORK REQUIRED TO PRODUCE A COMPLETE JOB IN ACCORDANCE WITH THE BEST APPLICABLE STANDARDS. IT IS INTENDED THAT THE WORK BE EXECUTED IN ACCORDANCE WITH THE BEST CUSTOMARY BUILDING PRACTICES. IF WORK IS REQUIRED IN A MANNER TO MAKE IT IMPOSSIBLE TO PRODUCE FIRST CLASS WORK OR IF ERRORS, CONFLICTS OR DISCREPANCIES APPEAR AMONG THE CONTRACT DOCUMENTS, INFORM THE LANDSCAPE ARCHITECT IMMEDIATELY AND REQUEST INTERPRETATION BEFORE PROCEEDING WITH THE WORK. IF THE CONTRACTOR FAILS TO MAKE SUCH A STATEMENT AND REQUEST, NO EXCUSE WILL THEREAFTER BE ENTERTAINED, NOR ADDITIONAL EXPENSE BE ACCEPTED FOR FAILURE TO CARRY OUT WORK IN A SATISFACTORY MANNER.

22. CONTRACTOR SHALL REFER TO ADDITIONAL NOTES FOUND THROUGHOUT THE CONTRACT DRAWINGS.

OUTDOOR LIGHTING NOTES:

1. ALL LIGHTING WORK SHALL BE DONE IN ACCORDANCE WITH NATIONAL ELECTRIC CODE AND IN ACCORDANCE WITH THE STANDARDS AND REQUIREMENTS OF THE TOWN OF NORTH CASTLE, INCLUDING PERMITS AND REQUIRED INSPECTIONS

2. ALL FIXTURES SHALL BE FULL CUTOFF; SHALL BE COMPLIANT WITH DARK SKY RECOMMENDATIONS; OR FITTED WITH SHROUDS TO SHIELD THE LIGHT SOURCE.

3. THE CONTRACTOR SHALL FURNISH AND INSTALL ALL FIXTURES, OUTLETS AND SWITCHES LISTED AND SHOWN ON PLANS. SIZE AND PROVIDE ALL TRANSFORMERS AND JUNCTION BOXES NECESSARY TO COMPLETE THE WORK, INCLUDING CONDUIT, WIRE, FITTINGS, EXCAVATION, BACKFILL, ETC. REQUIRED TO MAKE A COMPLETE FUNCTIONING SYSTEM. ALL FIXTURES SHALL BE SUPPLIED WITH LAMPS. THE LEAST WATT LAMP SHALL BE SUPPLIED , SUBJECT TO THE OWNERS'S APPROVAL. RE-LAMPING WITH MAXIMUM WATT LAMPS MAY BE REQUIRED.

4. THE CONTRACTOR SHALL FURNISH AND INSTALL ALL CONDUITS NECESSARY FOR A COMPLETE INSTALLATION. THIS INCLUDES SIZING GALVANIZED STEEL AND PVC WITH ALL ASSOCIATED FITTINGS, COUPLINGS AND BUSHINGS. ALL LINE VOLTAGE SHALL BE IN CONDUIT WITH A MINIMUM COVER OF 24 INCHES AND A MINIMUM OF 12 INCHES OF COMPACTED SAND AROUND IT AND AS PER CODE. METALLIC CAUTION TAPE SHALL BE PLACED 6 INCHES BELOW FINISHED GRADE.

5. ALL WIRING AND TRENCHING TO TREE TRUNKS BENEATH TREE CANOPIES TO BE RADIAL TO TREE TRUNK AND APPROVED BY L.A. PRIOR TO GROUND DISTURBANCE. TRENCHING WITHIN THE TREE CANOPY SHALL BE EXCAVATED WITH AN AIR SPADE TOOL TO MINIMIZE ROOT DAMAGE. CARE IS TO BE TAKEN TO PREVENT EXPOSED TREE ROOTS FROM DRYING.

6. FINAL SWITCH LOCATIONS TO BE APPROVED BY OWNER. CONTRACTOR SHALL VERIFY AND COORDINATE NEW SWITCHES WITH EXISTING INTERIOR LIGHTING. DRAWING SHOWS PROPOSED LANDSCAPE LIGHTING AND DOES NOT SHOW EXISTING ARCHITECTURAL LIGHTING

7. FINAL FIXTURE PLACEMENT TO BE APPROVED BY THE LANDSCAPE ARCHITECT & OWNER AFTER NIGHTTIME DEMONSTRATION OF INITIAL PLACEMENT.

8. ALL PATH LIGHTS TO BE LOCATED 12" BACK FROM EDGE OF PAVING UNLESS OTHERWISE DIRECTED BY THE LANDSCAPE ARCHITECT.

9. LOCATIONS OF TRANSFORMERS, JUNCTION BOXES, FIXTURES AND OUTLETS ARE A GRAPHIC REPRESENTATION AND MAY NOT SHOW PRECISE LOCATION. FINAL LOCATIONS TO BE APPROVED BY L.A. PRIOR TO INSTALLATION. ACTUAL WIRING ROUTES ARE NOT SHOWN ON THIS PLAN. WIRING ROUTES INDICATED ARE A GRAPHIC REPRESENTATION OF CONNECTIONS AND GROUPINGS OF LIGHTS FOR SWITCHING. L.A. TO APPROVE WIRING ROUTES PRIOR TO GROUND DISTURBANCE. ALL LINE VOLTAGE RUNS IN CONDUIT MINIMUM 18 INCHES DEEP OR AS PER LOCAL CODE..

10. STAKE MOUNTED UPLIGHTS TO BE MOVABLE WITHIN A SIX (6) FOOT RADIUS OF INSTALLED LOCATION.

11. TRANSFORMERS FOR LOW VOLTAGE LIGHTING AND JUNCTION BOXES NOT SHOWN. CONTRACTOR TO DETERMINE NUMBER REQUIRED AND COORDINATE THEIR LOCATION WITH THE LANDSCAPE ARCHITECT.

12. WIRING SIZES ARE TO BE DETERMINED BY ELECTRICIAN TO INSURE FULLY FUNCTIONAL SYSTEM WITH NO MORE THAN A 5% VOLTAGE DROP FROM EACH TRANSFORMER TO FARTHEST FIXTURE ON LINE FROM THAT TRANSFORMER..

13. ALL WIRE CONNECTIONS TO BE THOROUGHLY SEALED WITH SILICONE SEALANT & WILL BE LOCATED WITHIN FIXTURE STEMS, TREE MOUNTS, OR JUNCTION BOXES WHEREVER POSSIBLE. DIRECT BURIAL OF LOW VOLTAGE CONNECTIONS WILL BE MINIMIZED. DIRECT BURIAL CONNECTIONS FOR LINE VOLTAGE WILL NOT BE PERMITTED.

14. REVIEW EXISTING CONDITIONS AND PROPOSED PLANTING PLANS. ELECTRICIAN TO BE RESPONSIBLE FOR RESTORING ANY SITE OR UTILITY DAMAGE CAUSED BY HIS INSTALLATION WORK.

15. SEE LIGHTING PLAN FOR LIGHT FIXTURE TYPE AND SPECIFICATIONS.

TREE PROTECTION AND EROSION CONTROL NOTES:

1. ALL TREE PROTECTION AND REMOVALS SHALL BE IN ACCORDANCE WITH THE DRAWINGS, DETAILS AND NOTES HEREON. REFER TO TREE PROTECTION DRAWINGS AND DETAILS FOR ADDITIONAL INFORMATION

2. PRIOR TO ANY OTHER WORK, THE CONTRACTOR SHALL STAKE OUT THE LIMITS OF "TREE PROTECTION AREAS" WITHIN THE WORK ZONE AS SHOWN ON THE PLANS FOR APPROVAL BY THE LANDSCAPE ARCHITECT. IF NO TREE/LANDSCAPE PROTECTION AREA LIMITS ARE SPECIFICALLY SHOWN ON THE PLANS AND WORK WILL OCCUR IN OR NEAR TREES OR VEGETATED AREAS, THE LANDSCAPE ARCHITECT WILL DIRECT THE CONTRACTOR. THE INTENT OF THE LIMITS ARE TO PROTECT THE ROOT ZONE OF INDIVIDUAL TREES AND GROUPINGS OF TREES (USING THE "DRIPLINE" - THE VERTICAL PROJECTION TO THE GROUND OF THE TREES' CANOPY - AS A GUIDE), LAWNS AND OTHER VALUABLE VEGETATION TO THE MAXIMUM EXTENT FEASIBLE WHILE ALLOWING THE CONTRACTOR SUFFICIENT ROOM TO OPERATE. THEREFORE, THE CONTRACTOR MUST ASSESS THE ADEQUACY OF THE ALLOWED SPACE FOR ALL CONCEIVABLE ACTIVITIES INCLUDING THE PARKING OF PERSONAL VEHICLES. IT IS UNDERSTOOD THAT WORK MAY NEED TO OCCUR IN THE ROOT ZONE OF TREES. IN SUCH CASES, THE CONTRACTOR MAY PROPOSE ADJUSTMENTS TO THE STAKEOUT OF PROTECTION LIMITS TO SUIT FIELD CONDITIONS AND SUCH OPERATIONS. ANY SUCH ADJUSTMENTS SHALL BE SHOWN ON A PLAN AND/OR APPROVED IN THE FIELD BY THE LANDSCAPE ARCHITECT.

3. THE CONTRACTOR SHALL NOT STOCKPILE MATERIAL, PARK ANY VEHICLE, OR DRIVE ANY VEHICLE WITHIN THE DRIP LINE OF EXISTING TREES. IT IS UNDERSTOOD THAT LOCALIZED STAGING/STORAGE AREAS MAY BE NECESSARY IN ADDITION TO ANY MAIN AREAS SHOWN ON PLANS. THE CONTRACTOR SHALL COORDINATE WITH THE LANDSCAPE ARCHITECT FOR ANY AREAS OUTSIDE TREE/LANDSCAPE PROTECTION FOR AREAS APPROPRIATE FOR STORAGE OF MATERIALS, AND EQUIPMENT AS WELL AS PARKING OF CONTRACTOR'S VEHICLES AND ACCESS ROUTES THROUGH THE ACTIVE WORK ZONE. THESE AREAS MUST BE DEFINED BY APPROPRIATE FENCING AND MUST MEET ALL TREE PROTECTION SPECIFICATIONS.

4. ONCE PROTECTION FENCING IS IN PLACE, THE CONTRACTOR SHALL NOT ENTER OR DAMAGE OR DIMINISH THE LANDSCAPE OR ANY PORTION THERE OF WITHIN THE DEFINED TREE/LANDSCAPE PROTECTION AREAS. AT ALL TIMES DURING THE COURSE OF THE PROJECT, THE CONTRACTOR SHALL AVOID SOIL COMPACTION, POLLUTION, EROSION AND IMPACTS TO EXISTING VEGETATION UNLESS REMOVAL, SELECTIVE THINNING OR CLEARING ARE SPECIFIED IN THE DRAWINGS.

5. WHERE WORK AREAS MUST ENCROACH ON TREE ROOT ZONES , THE CONTRACTOR, IF ORDERED BY LANDSCAPE ARCHITECT OR AS NOTED ON THE PLANS, SHALL FURNISH APPROXIMATELY 12-INCH LAYER OF WOOD CHIPS OR ACCESS MAT WITHIN THE DRIP LINE AREA TO REDUCE SOIL COMPACTION ON UNPAVED AREAS TO MINIMIZE SOIL COMPACTION AND PREVENT CONTAMINATION OF EXISTING SOIL. UNDER NO CIRCUMSTANCES MAY PETROLEUM PRODUCTS, CONCRETE WASH WATER, PAINT, OR OTHER POLLUTANTS BE ALLOWED TO SEEP INTO THE LANDSCAPE.

6. THE LANDSCAPE ARCHITECT MUST BE NOTIFIED WHENEVER TRENCHING OCCURS WITHIN THE DRIPLINE FOR ANY TREE. ALL EXCAVATION WITHIN THE DRIP LINE OF A TREE OR NEAR THE DRIP LINE SHALL BE PERFORMED WITH AN AIR SPADE. THERE WILL BE NO SEPARATE PAYMENT FOR ANY REQUIRED AIR SPADE EXCAVATION. SEE ROOT PRUNING AND TRENCHING DETAILS.

7. NO TREE PRUNING MAY BE PERFORMED EXCEPT BY (OR UNDER THE SUPERVISION OF) A QUALIFIED TREE-CARE PROFESSIONAL APPROVED BY THE LANDSCAPE ARCHITECT.

8. "UNAUTHORIZED" TREE REMOVALS: IF THE CONTRACTOR REMOVES TREES NOT IDENTIFIED ON THE DRAWINGS OR REMOVES TREES NOT APPROVED BY LANDSCAPE ARCHITECT, OR SO SEVERELY DAMAGES TREES AS A RESULT OF CONSTRUCTION ACTIVITY THAT IN THE JUDGMENT OF LANDSCAPE ARCHITECT THEY MUST BE REMOVED, THE CONTRACTOR SHALL PROVIDE REPLACEMENT TREES AT HIS/HER OWN EXPENSE SUCH THAT FOR EACH TREE REMOVED EQUALS ONE SIX INCH CALIPER TREE AS APPROVED BY THE LANDSCAPE ARCHITECT. THE FINAL LOCATION OF REPLACEMENT TREES SHALL BE WITHIN THE PROJECT LIMITS AND WILL BE LOCATED IN THE FIELD BY THE LANDSCAPE ARCHITECT. IF PLANTING WITHIN THE LIMITS IS NOT POSSIBLE THE LANDSCAPE ARCHITECT, OWNER, AND CONTRACTOR SHALL AGREE ON APPROPRIATE MITIGATION. ANY REPLACEMENT TREES PLANTED AS MITIGATION MUST BE WATERED, MAINTAINED AND GUARANTEED PER PLANTING SPECIFICATIONS IN THE DRAWINGS AND AT NO ADDITIONAL COST.

9. LANDSCAPE MAINTENANCE DURING CONSTRUCTION: DURING THE COURSE OF THE PROJECT, THE CONTRACTOR SHALL MAINTAIN THE APPEARANCE OF THE PROJECT SITE BY REMOVING LITTER, DEBRIS AND EXCESS MATERIALS, AS A RESULT OF THE CONSTRUCTION OPERATIONS, FROM THE WORK SITE ON A REGULAR BASIS AND SHALL STORE ALL CONSTRUCTION EQUIPMENT AND CONSTRUCTION MATERIAL IN AN ORGANIZED MANNER THROUGHOUT THE CONSTRUCTION PERIOD.

10. IN CASE OF A TREE REMOVAL, ALL REMNANTS INCLUDING, BUT NOT LIMITED TO, STUMPS, TRUNKS, LIMBS, BRANCHES, AND FOLIAGE SHALL BE DISPOSED OF AS EXPEDITIOUSLY AS POSSIBLE.

11. RESTORATION OF LANDSCAPE: ALL EXCESS MATERIALS AND DEBRIS RESULTING FROM THE CONTRACTOR'S OPERATIONS SHALL BE REMOVED BY THE CONTRACTOR, AS PART OF SITE RESTORATION. ALL SOIL DIMINISHED AND/OR CONTAMINATED WITH EXCESS MATERIAL AND DEBRIS SHALL ALSO BE REMOVED AND REPLACED WITH TOPSOIL ACCEPTABLE TO THE LANDSCAPE ARCHITECT. THE CONTRACTOR, AS DIRECTED BY LANDSCAPE ARCHITECT, SHALL RESTORE A MINIMUM OF 6" OF NEW TOPSOIL ON ALL AREAS WHERE THE TOPSOIL LAYER HAS BEEN DIMINISHED OR LOST DUE TO HIS/HER OPERATIONS. OUTSIDE THE DRIP LINE OF TREES, IF IT IS DETERMINED BY THE LANDSCAPE ARCHITECT THAT THE SOIL HAS BEEN COMPACTED DURING THE COURSE OF THE PROJECT, IT WILL BE UNCOMPACTED AND LOOSENED (BY USE OF AN AIR SPADE WITHIN AND NEAR THE DRIPLINES OF TREES) TO THE DEPTH OF 12 INCHES PRIOR TO FINAL GRADING OR PLANTING. UNDER NO CIRCUMSTANCES MAY HEAVY EQUIPMENT (I.E. PAYLOADERS) BE USED TO ACCOMPLISH SITE RESTORATION WITHIN THE DRIP LINE OF TREES. IN ALL ROOT-SENSITIVE AREAS, WORK MUST BE DONE USING ONLY AN AIR SPADE.

12. ALL UTILITY CONFLICTS WITH PROPOSED TREES SHALL BE IMMEDIATELY BROUGHT TO THE ATTENTION OF THE LANDSCAPE ARCHITECT.

13. CONTRACTOR SHALL REFER TO TO THE DEMOLITION/EROSION CONTROL PLAN FOR MORE INFORMATION

PLANTING NOTES:

1. SEE DEMOLITION AND EROSION CONTROL DRAWING FOR EXISTING PLANTS TO BE STOCKPILED AND MAINTAINED FOR TRANSPLANTING. ADDITIONAL PLANTINGS MAY BE REQUIRED FOR TOP OF WALL BARRIER PLANTING AND WILL BE REQUESTED UPON OWNER'S APPROVAL ADDITIONAL PLANTING PHASES TO BE COMPLETED IN SEPARATE CONTRACT (SPRING SEASON).

2. TOPSOIL FOR PLANTING:
A. MATERIAL: TOPSOIL SHALL CONSIST OF NATURAL LOAM, FREE FROM SUBSOIL, OBTAINED FROM AN AREA THAT HAS NEVER BEEN PREVIOUSLY STRIPPED. MANUFACTURED OR AMENDED SOILS ARE NOT ACCEPTABLE UNLESS OTHERWISE DIRECTED BY LANDSCAPE ARCHITECT.
B. QUALITY: TOPSOIL SHALL BE OF UNIFORM QUALITY, FREE FROM HARD CLODS, STIFF CLAY, HARD PLAN, SODS, PARTIALLY DISINTEGRATED STONE, LIME, CEMENT, ASHES, SLAG, CONCRETE, TAR RESIDUES, TARRED PAPER, BOARDS, CHIPS, STICKS, OR ANY OTHER UNDESIRABLE MATERIAL.
C. NO TOPSOIL SHALL BE DELIVERED, MANIPULATED OR HANDLED IN A FROZEN OR MUDDY CONDITION. THE LANDSCAPE ARCHITECT RESERVES THE RIGHT TO REJECT, ON OR AFTER DELIVERY, OF ANY MATERIAL THAT DOES NOT, IN THEIR OPINION, MEET THESE SPECIFICATIONS.:

3. IRRIGATION SYSTEM (SEPARATE PRICE):
A. THE EXISTING IRRIGATION SYSTEM SHALL BE MODIFIED AND SHALL BE A FULLY OPERATIONAL AND COMPLETE IN-GROUND IRRIGATION SYSTEM, INCLUDING BUT NOT LIMITED TO THE FOLLOWING:
- ALL EXCAVATION, TRENCHING, PUMPS, FILTERS, VALVES, BOXES, TIMERS, CONNECTIONS, WIRING, PIPING, DRIP TUBE, HEADS AND EMITTERS AS NECESSARY.
B. CONTRACTOR IS REQUIRED TO COORDINATE WORK WITH IRRIGATION CONTRACTOR. CONTRACTOR SHALL PROVIDE SLEEVES AS INDICATED ON THE DRAWINGS OR AS REQUIRED BY THE IRRIGATION INSTALLER

4. NEW SEED (INCLUDING FINE GRADING) WHERE REQUIRED
A. INSTALLATION OF SEED SHALL INCLUDE FINE GRADING, PREPARATION OF SOIL BED, INCORPORATION OF FERTILIZER AND LIME, PROTECTION (BEFORE AND AFTER INSTALLATION) AND MAINTENANCE UNTIL FINAL ACCEPTANCE.
B. SEED MIX SHALL BE LOW MAINTENANCE, NATIVE, AND DROUGHT TOLERANT MIX WITH ANNUAL RYE. SEED MIX APPROPRIATE FOR TIME OF PLANTING. SEED MIX TO BE APPROVED BY THE LANDSCAPE ARCHITECT. SEEDING RATE SHALL BE AS RECOMMENDED BY THE MANUFACTURER.
C. FERTILIZER FOR LAWNS: FERTILIZE LAWN AREAS EVENLY USING MECHANICAL METHODS ACCORDING TO MANUFACTURER'S INSTRUCTIONS AND AS DIRECTED. FERTILIZER TO BE "SCOTTS ORGANIC CHOICE LAWN FOOD" BY THE SCOTTS MIRACLE-GRO COMPAN 14111 SCOTTSLAWN ROAD MARYSVILLE, OH 43041, OR AS RECOMMENDED BY THE SOD GROWER, OR APPROVED EQUAL.
D. ACCEPTANCE (OF SEED): THE LANDSCAPE ARCHITECT SHALL REJECT ANY AREAS OF SEED WHICH IN THEIR OPINION HAS NOT PROPERLY GERMINATED TO FORM AN EVEN AND VIGOROUS GROWING BED. REJECTED SEED BEDS SHALL BE PREPARED AND RE-SEEDED AT NO COST TO THE OWNER. SEED LAWNS SHALL BE READY FOR ACCEPTANCE AFTER A MINIMUM OF A 60 DAY ACTIVE GROWING PERIOD, UNTIL A UNIFORM STAND OF $2\frac{1}{2}$ INCHES IS OBTAINED, WITH A MINIMUM OF 95% COVERAGE. UNACCEPTED SEED LAWNS SHALL BE RE-SEEDED AS SPECIFIED.

5. MAINTENANCE OF SEED:

-THE CONTRACTOR SHALL PROPERLY WATER AS OFTEN AS REQUIRED TO MAINTAIN OPTIMUM GROWING CONDITIONS UNTIL FINAL ACCEPTANCE. THE CONTRACTOR SHALL MAINTAIN LAWN AT ONE AND A HALF TO THREE INCHES (1-1/2 TO 3") IN HEIGHT, FOR TWO MOWINGS OR UNTIL ACCEPTANCE. CONTRACTOR SHALL MONITOR IRRIGATION SYSTEM TO ENSURE NEW SOD AND SEED LAWNS RECEIVE PROPER AMOUNTS OF WATER.

-MAINTAIN ALL LAWNS THROUGHOUT AND IMMEDIATELY FOLLOWING PLANTING OPERATIONS UNTIL PROJECT IS CERTIFIED SUBSTANTIALLY COMPLETE.

- MAINTAIN SURFACES AND SUPPLY ADDITIONAL TOPSOIL WHERE NECESSARY, INCLUDING AREAS AFFECTED BY EROSION.
REPLANT DAMAGED LAWN AREAS SHOWING GROWTH FAILURE, DETERIORATION, BARE OR THIN SPOTS AND ERODED AREAS.
.

DRAWING LIST:

LS C	COVER SHEET
LS 100.0	OVERALL SITE PLAN
LS 100.1A	OVERALL SITE PLAN - SOUTHERN DEVELOPMENT
LS 100.1B	OVERALL SITE PLAN - NORTHERN DEVELOPMENT
LS 100.2	SITE DETAILS
LS 101.0	AMENITIES BUILDING - MASONRY LAYOUT PLAN
LS 101.1	AMENITIES BUILDING - PLANTING PLAN
LS 101.2	AMENITIES BUILDING - POOL FENCING LAYOUT
LS 101.3	AMENITIES BUILDING - DETAILS
LS 101.4	AMENITIES BUILDING - POOL DECK ELEVATIONS
LS 102	MAIN ENTRY - PLANTING PLAN
LS 103.0	RESIDENTIAL BUILDING - TYPICAL MASONRY LAYOUT PLAN
LS 103.1	RESIDENTIAL BUILDING - TYPICAL PLANTING PLAN
LS 103.2	RESIDENTIAL BUILDING - DETAILS
LS 104	DETENTION BASIN PLANTING PLAN
LS 105	MAINTENANCE BUILDING - PLANTING PLAN
LS 106	SCHEMATIC COTTAGES - OVERALL LAYOUT

REFER TO GRANOFF ARCHITECTS ARCHITECTURAL PLANS FOR ADDITIONAL BUILDING INFORMATION

REFER TO JMC CIVIL PLANS FOR ADDITIONAL SITE INFORMATION

REFER TO DRAKELEY INDUSTRIES PLANS FOR ADDITIONAL POOL INFORMATION

ABBREVIATIONS:

B.P.	BOTTOM PIER	MANUF.	MANUFACTURER
B.S.	BOTTOM STEP	MAX.	MAXIMUM
B.W.	BOTTOM WALL	MFR.	MANUFACTURER
BL	BASE LINE	MIN.	MINIMUM
BC	BOTTOM OF CURB	MH	MAN HOLE
BLDG.	BUILDING	NEC.	NECESSARY
CL	CENTER LINE	N.I.C	NOT IN CONTRACT
CMU	CONCRETE MASONRY UNIT	N.T.S	NOT TO SCALE
CONC.	CONCRETE	NO./#	NUMBER
CONT.	CONTINUOUS	OC	ON CENTER
DI	DRAIN INLET	PL	PROPERTY LINE
DIA.	DIAMETER	R	RISER
DN.	DOWN	REQ'D	REQUIRED
EA.	EACH	R.O.W.	RIGHT OF WAY
EJ	EXPANSION JOINT	SPEC.	SPECIFICATION
EL.	ELEVATION	SQ.	SQUARE
ELEV.	ELEVATION	T	TREAD
EQ.	EQUAL	TC	TOP OF CURB
E.W.	EACH WAY	T.P	TOP PIER
EX.JT.	EXPANSION JOINT	T.S.	TOP STAIR
EXP.JT.	EXPANSION JOINT	T.W.	TOP WALL
EX	EXISTING	TBD	TO BE DETERMINED
EXIST.	EXISTING	TYP.	TYPICAL
FL	FLOW LINE	UW	UNDER WATER
FLR.	FLOOR	UG	UNDERGROUND
FLWR	FLOWER	VIF	VERIFY IN FIELD
FTG.	FOOTING	W.L.	WATER LINE
G	GRATE ELEVATION/RIM ELEV.	W/	WITH
H.B.	HOSE BIB	W/O	WITHOUT
JNT.	JOINT	WT	WATERTABLE

REFER TO OTHER DRAWINGS FOR LEGENDS AND KEYS

LOCATION MAP:

LOCAL MAP (N.T.S.)

North

GRANOFF ARCHITECTS
330 RAILROAD AVENUE
GREENWICH, CT 06830
203.625.9460
WWW.GRANOFFARCHITECTS.COM

CONSULTANTS

REVISIONS

#	DATE	REVISION DESCRIPTION	BY:
1	10/24/2022	PLANNING BOARD SUBMISSION	KA

PHASE
PLANNING BOARD SUBMISSION

PROJECT NAME
SUMMIT CLUB

ARMONK, NY

JOB NO.: ----
DRAWN BY: JS PROJ. MANAGER: KA
DATE: 10/24/2022 SCALE: AS NOTED

DRAWING TITLE
COVER - LANDSCAPE

DRAWING NO.
LC

© 2022 GRANOFF ARCHITECTS
These drawings, concepts, designs and ideas are the property of R.S. Granoff Architects, P.C. They may not be copied, reproduced, disclosed to others, or used in connection with any work other than the specified project for which they were prepared, in whole or in part, without prior written consent of R.S. Granoff Architects, P.C.

Oct 21, 2022 Z:\Brynwood 2.0\10_Construction Drawings\02_CD_Landscape Architecture\SHEET FILES\LC COVER - LANDSCAPE.dwg

GRANOFF ARCHITECTS
330 RAILROAD AVENUE
GREENWICH, CT 06830
203.625.9460
WWW.GRANOFFARCHITECTS.COM
CONSULTANTS

MIXED TALL FESCUE SEED MIX

PROPOSED POTABLE WATER TREATMENT BUILDING AND TANK

EXISTING BUILDING TO BE REMOVED, PROPOSED MAINTENANCE BUILDING
SEE ARCHITECTURAL DRAWINGS

PROPOSED GOLF CART ONLY ACCESS

PROPOSED SEWAGE TREATMENT PLANT

PROPOSED TOTAL LIMIT OF DISTURBANCE
1,485,547 S.F. / 419.4 AC.
(INCLUDES TRENCHING TO WATER SUPPLY WELLS)

2.5:1 SLOPE

SEE L104 FOR DETENTION BASIN PLANTING PLAN
DETENTION BASIN SIZED BY ENGINEER

PROPOSED BUILDING

PROPOSED BUILDING

PROPOSED BUILDING

PROPOSED BUILDING

PROPOSED BUILDING

PROPOSED 2.5:1 SLOPE

STABILIZED SLOPE TALL FESCUE MIX
V.I.F. EXISTING TREES TO REMAIN, INCORPORATE NEW PLANTINGS AROUND REMAINING EXISTING TREES

PHASE I POOL HOUSE
DESIGN BY GRANOFF ARCHITECTS

CHAMPIONSHIP COURT

TENNIS COURTS & PICKLE BALL COURTS NOT TO BE LIT FOR NIGHT USE

PROPOSED TOTAL LIMIT OF DISTURBANCE
1,485,547 S.F. / 419.4 AC.
(INCLUDES TRENCHING TO WATER SUPPLY WELLS)

PROPOSED 2.5:1 SLOPE OR STEEPER ROCK FACE AS COORDINATED WITH GEOTECHNICAL ENGINEER

GRADE CHANGE NECESSARY FOR ROADWAY, SEE CIVIL TOPO. STABILIZE SLOPE BY CREATING A NATURALISTIC PLANTING AREA SURROUNDING EXISTING TREES TO REMAIN. ORNAMENTAL TALL FESCUE MIXTURE TBD FROM ERNST SEED OR EQUAL.

EXISTING TENNIS COURTS TO BE REMOVED AND RESTORED WITH TALL FESCUE MIX UP TO NEW NATIVE UNDERSTORY PLANTINGS

APPROXIMATE LINE OF BUFFER EDGE

PROPOSED FESCUE BERMS WITH SHADE TREE MATRIX

APPROXIMATE EDGE OF ASPHALT

APPROXIMATE LOCATION OF EXISTING WATER MAIN TO BE ABANDONED (VT 7 TO 9 FT)

UNDERSTORY BUFFER PLANTING (TYP.):
REMOVE BRAMBLE AND SELECTIVE REMOVAL OF EXISTING TREES BASED ON EXISTING HEALTH/CONDITION OF TREE AND PROPOSED WORK. INFILL PLANTING WITH EVERGREEN TREES/SHRUBS, FLOWERING TREES/SHRUBS FOR VISUAL INTEREST. ACTUAL QUANTITY TO BE VERIFIED IN FIELD PRIOR TO BIDDING.

UNDERSTORY PLANTING PALETTE TO INCLUDE:
AMELANCHIER CANADENSIS
CERCIS CANADENSIS
PICEA GLAUCA
RHODODENDRON MAXIMUM
HYDRANGEA QUERCIFOLIA
VACCINIUM CORYMBOSUM
VIBURNUM DENTATUM

PROPOSED EXTENSION OF FIELDSTONE WALL +/- 15' OFF EDGE OF PAVEMENT, GENTLY CURVING OFF ROADWAY AT ENTRY DRIVE. MAINTAIN LEVEL HEIGHT FOLLOWING CONTOURS. VERIFY LOCATION IN FIELD

ORNAMENTAL ENTRY PLANTING:
INSTALL FOUNDATION SHRUB PLANTINGS WITH DECORATIVE ARRAY OF GRASSES, PERENNIALS AND SEASONAL ANNUALS

PROPOSED ENTRY ALLEE OF STATELY TREES PLANTED 25' O.C.

PROPOSED ENTRY WALL TO GENTLY CURVE BACK INTO SITE AND TERMINATE WITH 3'X3' ILLUMINATED STONE PIERS

PROPOSED EXTENSION OF FIELDSTONE WALL +\- 15' OFF EDGE OF PAVEMENT, GENTLY CURVING OFF ROADWAY AT ENTRY DRIVE. MAINTAIN LEVEL HEIGHT FOLLOWING CONTOURS. VERIFY LOCATION IN FIELD

UNDERSTORY BUFFER PLANTING (TYP.):
REMOVE BRAMBLE AND SELECTIVE REMOVAL OF EXISTING TREES BASED ON EXISTING HEALTH/CONDITION OF TREE AND PROPOSED WORK. INFILL PLANTING WITH EVERGREEN TREES/SHRUBS, FLOWERING TREES/SHRUBS FOR VISUAL INTEREST. ACTUAL QUANTITY TO BE VERIFIED IN FIELD PRIOR TO BIDDING.

UNDERSTORY PLANTING PALETTE TO INCLUDE:
AMELANCHIER CANADENSIS
CERCIS CANADENSIS
PICEA GLAUCA
RHODODENDRON MAXIMUM
HYDRANGEA QUERCIFOLIA
VACCINIUM CORYMBOSUM
VIBURNUM DENTATUM

REVIEW CONDITION OF EXISTING FIELDSTONE WALL, REPAIR AND EXTEND. LOCATE AND MAINTAIN HISTORIC MILE MARKER.

OVERALL SITE PLAN

1" = 50'-0"

REVISIONS

#	DATE	REVISION DESCRIPTION	BY:
1	10/24/2022	PLANNING BOARD SUBMISSION	KA

PHASE
PLANNING BOARD SUBMISSION

PROJECT NAME
SUMMIT CLUB

ARMONK, NY

JOB NO.: ----
DRAWN BY: JS PROJ. MANAGER: KA
DATE: 10/24/2022 SCALE: AS NOTED

DRAWING TITLE
OVERALL SITE PLAN

DRAWING NO.
LS 100.0

© 2022 GRANOFF ARCHITECTS
These drawings, concepts, designs and ideas are the property of R.S. Granoff Architects, P.C.. They may not be copied, reproduced, disclosed to others, or used in connection with any work other than the specified project for which they were prepared, in whole or in part, without prior written consent of R.S. Granoff Architects, P.C.

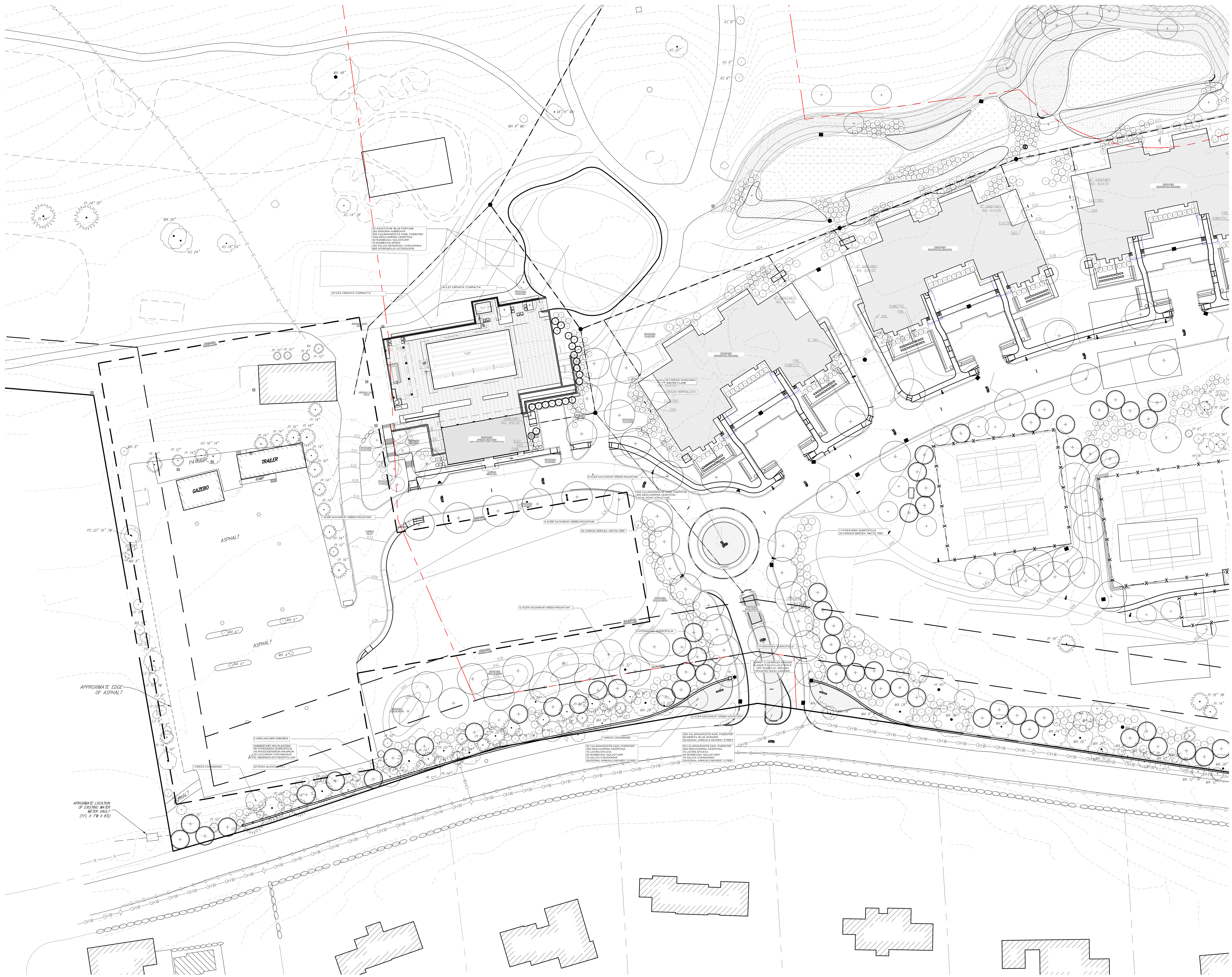

OVERALL SITE PLAN - SOUTHERN DEVELOPMENT

1" = 30'-0"

Oct 21, 2022 Z:\Brynwood 2.0\10_Construction Drawings\02_CD_Landscape Architecture\SHEET FILES\LS 100.1A OVERALL SITE PLAN - SOUTHERN DEVELOPMENT.dwg

GRANOFF ARCHITECTS
330 RAILROAD AVENUE
GREENWICH, CT 06830
203.625.9460
WWW.GRANOFFARCHITECTS.COM

CONSULTANTS

REVISIONS

#	DATE	REVISION DESCRIPTION	BY:
1	10/24/2022	PLANNING BOARD SUBMISSION	KA

PHASE
PLANNING BOARD SUBMISSION

PROJECT NAME
SUMMIT CLUB

ARMONK, NY

JOB NO.: ----
DRAWN BY: JS PROJ. MANAGER: KA
DATE: 10/24/2022 SCALE: AS NOTED

DRAWING TITLE
OVERALL SITE PLAN - SOUTHERN DEVELOPMENT

DRAWING NO.
LS 100.1A

© 2022 GRANOFF ARCHITECTS
These drawings, concepts, designs and ideas are the property of R.S. Granoff Architects, P.C. They may not be copied, reproduced, disclosed to others, or used in connection with any work other than the specified project for which they were prepared, in whole or in part, without prior written consent of R.S. Granoff Architects, P.C.

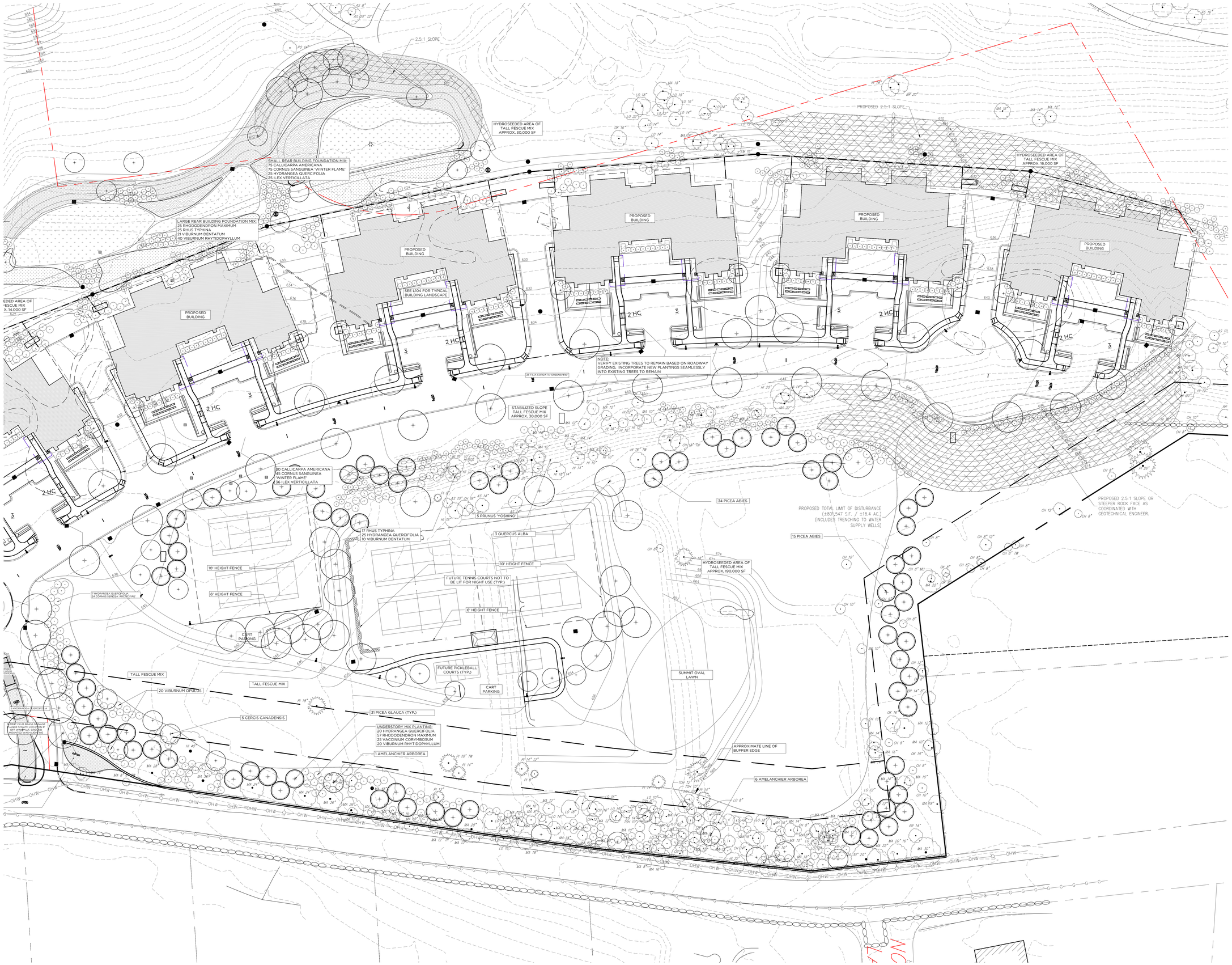

OVERALL SITE PLAN - NORTHERN DEVELOPMENT

1" = 30'-0"

GRANOFF ARCHITECTS

330 RAILROAD AVENUE
GREENWICH, CT 06830

203.625.9460

WWW.GRANOFFARCHITECTS.COM

CONSULTANTS

REVISIONS

#	DATE	REVISION DESCRIPTION	BY:
1	10/24/2022	PLANNING BOARD SUBMISSION	KA

PHASE

PLANNING BOARD SUBMISSION

PROJECT NAME

SUMMIT CLUB

ARMONK, NY

JOB NO.: ----

DRAWN BY: JS PROJ. MANAGER: KA

DATE: 10/24/2022 SCALE: AS NOTED

DRAWING TITLE

OVERALL SITE PLAN - NORTHERN DEVELOPMENT

DRAWING NO.

LS 100.1B

© 2022 GRANOFF ARCHITECTS
These drawings, concepts, designs and ideas are the property of R.S. Granoff Architects, P.C.. They may not be copied, reproduced, disclosed to others, or used in connection with any work other than the specified project for which they were prepared, in whole or in part, without prior written consent of R.S. Granoff Architects, P.C.

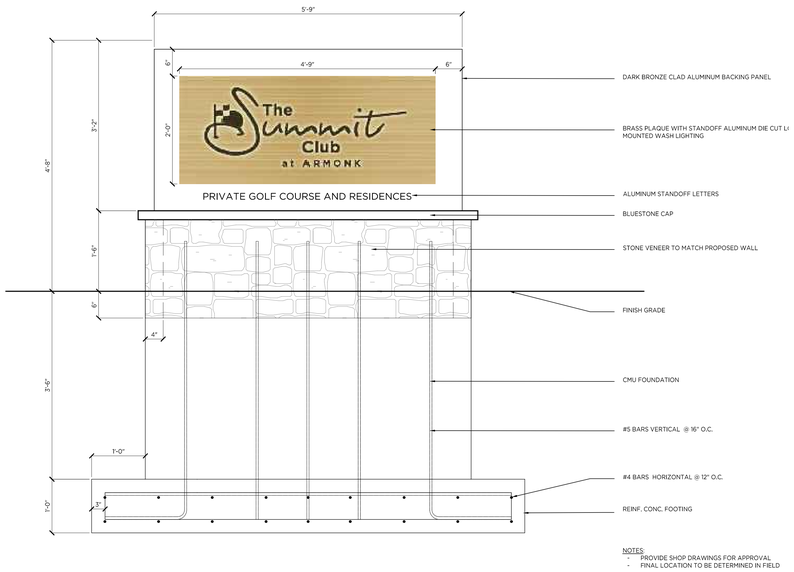

NOTES:
- PROVIDE SHOP DRAWINGS FOR APPROVAL
- FINAL LOCATION TO BE DETERMINED IN FIELD

1 ENTRY MONUMENT SIGNAGE

1"=1'-0"

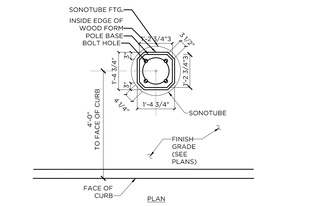

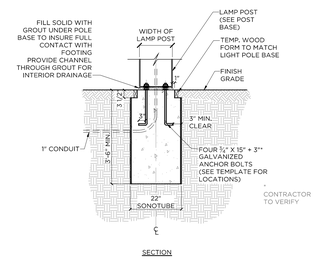

NOTES:
- SEE PLAN FOR LOCATIONS.
- EXISTING FOOTINGS TO REMAIN AND BE REUSED FOR NEW LIGHT POLES IF DETERMINED TO BE STRUCTURALLY SUITABLE
- LIGHTING SPEC - USA LIGHTING RZR - 18' MOUNTING HEIGHT
  SEE APEX LIGHTING PLAN FOR FULL SPEC

4 CONCRETE LIGHT POST FOOTING DETAIL

1/2"=1'-0"

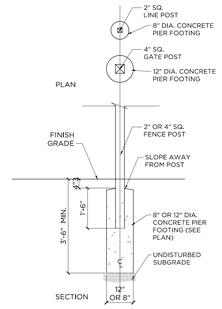

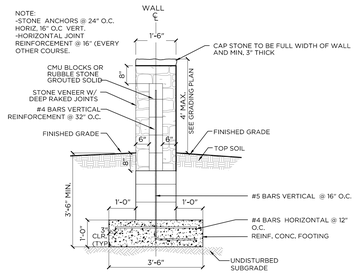

2 FREE STANDING STONE WALL W/ CONCRETE FOOTING DETAIL

1/2"=1'-0"

5 TENNIS COURT FENCING POST DETAIL

1/2"=1'-0"

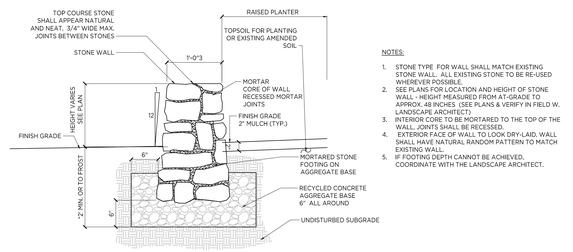

NOTES:
1. STONE TYPE FOR WALL SHALL MATCH EXISTING STONE WALL. ALL EXISTING STONE TO BE RE-USED WHEREVER POSSIBLE.
2. SEE PLANS FOR LOCATION AND HEIGHT OF STONE WALL - HEIGHT MEASURED FROM AT-GRADE TO APPROX. 48 INCHES (SEE PLANS & VERIFY IN FIELD W. LANDSCAPE ARCHITECT)
3. INTERIOR CORE TO BE MORTARED TO THE TOP OF THE WALL, JOINTS SHALL BE RECESSED.
4. EXTERIOR FACE OF WALL TO LOOK DRY-LAID, WALL SHALL HAVE NATURAL RANDOM PATTERN TO MATCH EXISTING WALL.
5. IF FOOTING DEPTH CANNOT BE ACHIEVED, COORDINATE WITH THE LANDSCAPE ARCHITECT.

3 FREE STANDING STONE WALL ALTERNATIVE DETAIL

1"=1'-0"

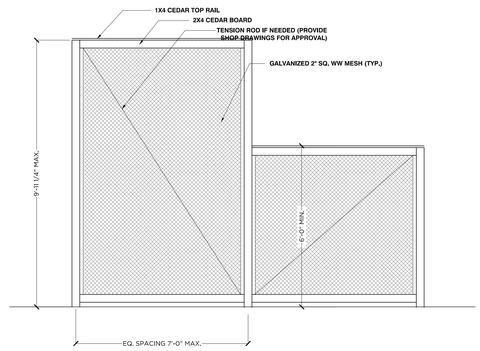

6 TENNIS COURT FENCING PANEL DETAIL

1/2"=1'-0"

GRANOFF ARCHITECTS
330 RAILROAD AVENUE
GREENWICH, CT. 06830
203.625.9460
WWW.GRANOFFARCHITECTS.COM
CONSULTANTS

REVISIONS

#	DATE	REVISION DESCRIPTION	BY:
1	10/24/2022	PLANNING BOARD SUBMISSION	KA

PHASE
PLANNING BOARD SUBMISSION

PROJECT NAME
SUMMIT CLUB

ARMONK, NY

JOB NO.: ----
DRAWN BY: JS PROJ. MANAGER: KA
DATE: 10/24/2022 SCALE: AS NOTED

DRAWING TITLE
SITE DETAILS

DRAWING NO.
LS 100.2

© 2022 GRANOFF ARCHITECTS
These drawings, concepts, designs and ideas are the property of R.S. Granoff Architects, P.C.. They may not be copied, reproduced, disclosed to others, or used in connection with any work other than the specified project for which they were prepared, in whole or in part, without prior written consent of R.S. Granoff Architects, P.C.

© 2022 Granoff Architects, P.C. | Summit Club | Armonk, NY | 10/24/2022 | PLANNING BOARD SUBMISSION

GRANOFF ARCHITECTS
330 RAILROAD AVENUE
GREENWICH, CT 06830
203.625.9460
WWW.GRANOFFARCHITECTS.COM
CONSULTANTS

PROPOSED RELOCATED TEE BOX. LOCATION TBD.

PROPOSED RELOCATED TEE BOX. TBD

PROPOSED RELOCATED 15,000 sf PRACTICE GREEN

SPA TUB 10'x15'

ELEVATED LIFEGUARD STAND (TYP.)

POOL DECK DRAIN PIPE COORDINATE WITH CIVIL DRAINAGE DESIGN

PROPOSED DECK SLOT DRAIN

ADULT POOL 45'X82'

ELEVATED LIFEGUARD STAND (TYP.)

ADA LIFT (TYP.)

PROPOSED BAR

PROPOSED PORCELAIN ON REINFORCED CONCRETE SLAB POOL DECK, ALL REBAR TO BE PROPERLY GROUNDED AND BONDED

SURGE TANK

POOL EQ. AREA OPTION

PROPOSED DECK SLOT DRAIN GROUNDED AND BONDED (TYP.)

ASPHALT CART PATH

TW 626.0 +
BW 621.0 +

TW 626.0 +

BW 622.0 +
TW 626.0 +

TW 631.4

BS 620.5 +
TS 622.24 +

BW 620.6 +

BW 627.0 +
TW 633.0 +

TW 633.0

BS 622.5 +

PROPOSED PLANTING

TS 625.98 +

TW 633.0

633.0 +

BS 626.17 +

TS 627.86 +

PROPOSED AMENITY BUILDING *(SEE ARCHITECTURAL DRAWINGS)*

PROPOSED PLANTING

BS 628.02 +

TS 631.5 +

ACCESS DRIVE 2

PROPOSED PLANTING

COBBLE DROP OFF

5+00

4+00

AMENITIES BUILDING POOL PATIO LAYOUT PLAN

1/8" = 1'-0"

REVISIONS

#	DATE	REVISION DESCRIPTION	BY:
1	10/24/2022	PLANNING BOARD SUBMISSION	KA

PHASE
PLANNING BOARD SUBMISSION

PROJECT NAME
SUMMIT CLUB

ARMONK, NY

JOB NO.: ----

DRAWN BY: JS PROJ. MANAGER: KA

DATE: 10/24/2022 SCALE: AS NOTED

DRAWING TITLE
AMENITIES BUILDING - MASONRY LAYOUT PLAN

DRAWING NO.
LS 101.0

© 2022 GRANOFF ARCHITECTS
These drawings, concepts, designs and ideas are the property of R.S. Granoff Architects, P.C.. They may not be copied, reproduced, disclosed to others, or used in connection with any work other than the specified project for which they were prepared, in whole or in part, without prior written consent of R.S. Granoff Architects, P.C.

GRANOFF ARCHITECTS
330 RAILROAD AVENUE
GREENWICH, CT 06830
203.625.9460
WWW.GRANOFFARCHITECTS.COM

CONSULTANTS

PROPOSED RELOCATED TEE BOX. LOCATION TBD.

PROPOSED RELOCATED TEE BOX. TBD

PROPOSED RELOCATED 15,000 sf PRACTICE GREEN

(3) AMELANCHIER x GRANDIFLORA 'AUTUMN BRILLIANCE'

(25) CALAMAGROSTIS ACUTIFLORA 'KARL FOERSTER'
(50) PENNISETUM ALOP. 'HAMELN'
(5) PEROVSKIA 'LITTLE SPIRE'
(15) SALVIA CARADONNA
(15) LEUCANTHEMUM SUPERBUM

SPA TUB
10'x15'

(50) DESCHAMPSIA CESPITOSA
(100) PENNISETUM ALOP. 'HAMELN'
(25) SALVIA CARADONNA
(25) LEUCANTHEMUM SUPERBUM

(30) CALAMAGROSTIS ACUTIFLORA 'KARL FOERSTER'
(5) PEROVSKIA 'LITTLE SPIRE'

ADULT POOL
45'X82'

SURGE TANK

POOL EQ. AREA OPTION

ASPHALT CART PATH

(40) CALAMAGROSTIS ACUTIFLORA 'KARL FOERSTER'
(4) MUHLENBERGIA CAPILLARIS

(50) CALAMAGROSTIS ACUTIFLORA 'KARL FOERSTER'
(20) PENNISETUM ALOP. 'HAMELN'
(4) MUHLENBERGIA CAPILLARIS

(20) CALAMAGROSTIS ACUTIFLORA 'KARL FOERSTER'
(5) MUHLENBERGIA CAPILLARIS

(100) CALAMAGROSTIS ACUTIFLORA 'KARL FOERSTER'
(10) MUHLENBERGIA CAPILLARIS
(20) PEROVSKIA 'LITTLE SPIRE'
(40) LEUCANTHEMUM SUPERBUM

(11) ILEX CRENATA 'STEEDS' 36-48"

(11) ILEX CRENATA 'STEEDS' 36-48"

(50) CALAMAGROSTIS ACUTIFLORA 'KARL FOERSTER'
(10) MUHLENBERGIA CAPILLARIS
(20) SALVIA CARADONNA
(25) PEROVSKIA 'LITTLE SPIRE'
(25) LEUCANTHEMUM SUPERBUM

(26) ILEX CRENATA 'STEEDS' 5-6'

(26) ILEX CRENATA 'STEEDS' 5-6'

(10) THUJA 'GREEN GIANT' 8-10'

(6) PRUNUS x 'YOSHINO' 3.5-4"

(6) HYDRANGEA QUERCIFOLIA

(250) CAREX PENSYLVANICA
(150) CALAMAGROSTIS ACUTIFLORA 'KARL FOERSTER'
(75) DESCHAMPSIA CESPITOSA
(25) MUHLENBERGIA CAPILLARIS
(20) AGASTACHE 'BLUE FORTUNE'
(50) SALVIA CARADONNA
(25) PEROVSKIA 'LITTLE SPIRE'
(50) LEUCANTHEMUM SUPERBUM

(6) HYDRANGEA QUERCIFOLIA

(600) CAREX PENSYLVANICA
(250) CALAMAGROSTIS ACUTIFLORA 'KARL FOERSTER'
(100) DESCHAMPSIA CESPITOSA
(50) MUHLENBERGIA CAPILLARIS
(20) AGASTACHE 'BLUE FORTUNE'
(25) SALVIA CARADONNA
(50) PEROVSKIA 'LITTLE SPIRE'
(50) LEUCANTHEMUM SUPERBUM

PROPOSED
AMENITY BUILDING
(SEE ARCHITECTURAL DRAWINGS)

CART PARKING

ACCESS DRIVE 2

(16) BUXUS 'WINGERGREEN' 30-36"

(3) VIBURNUM OPULUS ROSEUM

(3) ILEX CRENATA 'STEEDS' 4-5'

(10) BUXUS 'WINGERGREEN' 30-36"

(3) VIBURNUM OPULUS ROSEUM

(3) ILEX CRENATA 'STEEDS' 4-5'

(6) BUXUS 'WINGERGREEN' 30-36"

(1) ACER SACHARUM 'GREEN MOUNTAIN'
(INCLUDED ON LS 100.0)

COBBLE DROP OFF

5+00

4+00

AMENITIES BUILDING PLANTING PLAN

1/8" = 1'-0"

REVISIONS

#	DATE	REVISION DESCRIPTION	BY:
1	10/24/2022	PLANNING BOARD SUBMISSION	KA

PHASE
PLANNING BOARD SUBMISSION

PROJECT NAME
SUMMIT CLUB

ARMONK, NY

JOB NO.: ----

DRAWN BY: JS PROJ. MANAGER: KA

DATE: 10/24/2022 SCALE: AS NOTED

DRAWING TITLE
AMENITIES BUILDING - PLANTING PLAN

DRAWING NO.
LS 101.1

© 2022 GRANOFF ARCHITECTS
These drawings, concepts, designs and ideas are the property of R.S. Granoff Architects, P.C.. They may not be copied, reproduced, disclosed to others, or used in connection with any work other than the specified project for which they were prepared, in whole or in part, without prior written consent of R.S. Granoff Architects, P.C.

GRANOFF ARCHITECTS
330 RAILROAD AVENUE
GREENWICH, CT 06830
203.625.9460
WWW.GRANOFFARCHITECTS.COM
CONSULTANTS

PROPOSED RELOCATED TEE BOX. LOCATION TBD.

PROPOSED RELOCATED TEE BOX. TBD

PROPOSED RELOCATED 15,000 sf PRACTICE GREEN

SPA TUB 10'x15'

PROPOSED POOL CODE GLASS FENCING

ELEVATED LIFEGUARD STAND (TYP.)

POOL DECK DRAIN PIPE CONNECTED TO M.E.P. DRAINAGE DESIGN

PROPOSED DECK SLOT DRAIN

ADULT POOL 45'X82'

ELEVATED LIFEGUARD STAND (TYP.)

ADA LIFT (TYP.)

PROPOSED BAR

ASPHALT CART PATH

PROPOSED DECK SLOT DRAIN GROUNDED AND BONDED (TYP.)

SURGE TANK

POOL EQ. AREA OPTION

PROPOSED POOL CODE BLACK VYNIL COATED W.W. MESH FENCE

PROPOSED PLANTING

PROPOSED AMENITY BUILDING *(SEE ARCHITECTURAL DRAWINGS)*

PROPOSED PLANTING

ACCESS DRIVE 2

PROPOSED PLANTING

COBBLE DROP OFF

5+00

4+00

AMENITIES BUILDING POOL PATIO LAYOUT PLAN

1/8" = 1'-0"

REVISIONS

#	DATE	REVISION DESCRIPTION	BY:
1	10/24/2022	PLANNING BOARD SUBMISSION	KA

PHASE
PLANNING BOARD SUBMISSION

PROJECT NAME
SUMMIT CLUB

ARMONK, NY

JOB NO.: ----

DRAWN BY: JS PROJ. MANAGER: KA

DATE: 10/24/2022 SCALE: AS NOTED

DRAWING TITLE
AMENITIES BUILDING - POOL FENCING PLAN

DRAWING NO.
LS 101.2

© 2022 GRANOFF ARCHITECTS
These drawings, concepts, designs and ideas are the property of R.S. Granoff Architects, P.C.. They may not be copied, reproduced, disclosed to others, or used in connection with any work other than the specified project for which they were prepared, in whole or in part, without prior written consent of R.S. Granoff Architects, P.C.

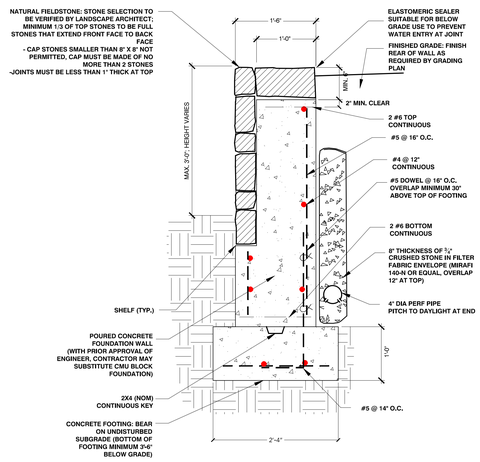

1 STONE VENEER RETAINING WALL 0' - 3' DETAIL

1"=1'-0"

2 STONE VENEER RETAINING WALL 3' - 6' DETAIL

1"=1'-0"

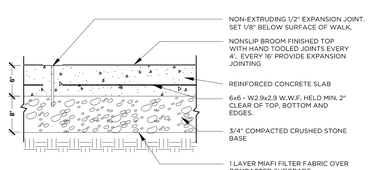

NOTES:
1. ALL CONCRETE WALKWAYS SHALL BE CONSISTENT
2. CONCRETE SHALL HAVE A SPECIFIED MINIMUM COMPRESSIVE STRENGTH OF 3,500 PSI AT 28 DAYS.
3. CONTRACTOR TO ENSURE ALL CURBING AND SIDEWALKS ARE BLENDED SEAMLESSLY INTO EXISTING SURROUNDS. ENSURE NO TRIP HAZARDS.
4. JOINTING TO BE HAND TOOLED EVERY 4'. EVERY 16' PROVIDE 1/2" PREFORMED NON-EXTRUDING EXPANSION JOINT. SET 1/8" BELOW SURFACE OF WALK.
5. BLEND ALL NEW WORK FLUSH INTO EXISTING GRADES.

3 CONCRETE SIDEWALK DETAIL

1"=1'-0"

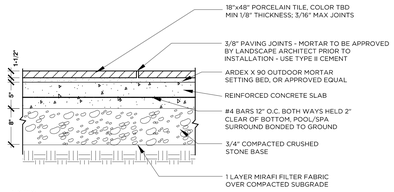

NOTES:
1. ALL CONCRETE SLABS MUST BE SUPPORTED ON HAUNCHES FROM ADJOINING WALLS AND SWIMMING POOL AND/OR PIERS TO UNDISTURBED DUE TO PRESENCE OF LOOSE FILL ON SITE
2. CONTRACTOR SHALL SUBMIT STONE SAMPLE FOR APPROVAL BY L.A. PRIOR TO INSTALLATION.
3. CONTRACTOR SHALL FURNISH 6' X 6' MOCK-UP OF PAVING ON SAND TO ILLUSTRATE PATTERN FOR APPROVAL BY L.A.
4. REFER TO DRAWINGS FOR LOCATION OF PAVEMENT TYPES.
5. ALL STONE SURFACES TO BE SEALED WITH APPROPRIATE STONE SEALER MANUFACTURED BY PROSOCO AND APPLIED AS PER MANUFACTURERS INSTRUCTIONS.
6. POOL CONTRACTOR SHALL PROVIDE SHOP DRAWINGS BY PE SHOWING INTEGRATION OF POOL REINFORCING AND BONDING.

4 PORCELAIN TILE ON REINFORCED CONCRETE SLAB DETAIL

1"=1'-0"

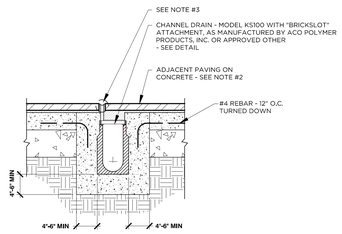

NOTES:
1. CONCRETE SHALL BE A MINIMUM STRENGTH OF 3000 PSI AND SHALL BE VIBRATED TO ELIMINATE AIR POCKETS.
2. THE PAVER COURSE ADJACENT TO THE CHANNEL EDGE MUST BE FULLY BONDED TO THE CONCRETE SURROUND.
3. THE FINISHED LEVEL OF THE PAVEMENT SURROUND MUST BE APPROX. 1/8" ABOVE THE TOP OF THE CHANNEL EDGE.
4. REFER TO MANUFACTURER'S INSTRUCTIONS AND SPECIFICATIONS FOR FURTHER INSTALLATION DETAILS.
5. REVIEW FINAL PART AND COMPONENT SELECTION WITH LANDSCAPE ARCHITECT PRIOR TO PURCHASE.
6. FINAL PLACEMENT TO BE DETERMINED BY PAVING PATTERN. CONFIRM PLACEMENT WITH LANDSCAPE ARCHITECT PRIOR TO INSTALLATION.

5 POOL PERIMIETER OVERFLOW DRAIN DETAIL

1"=1'-0"

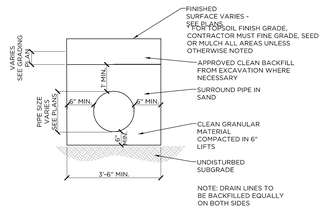

NOTE: DRAIN LINES TO BE BACKFILLED EQUALLY ON BOTH SIDES

6 TYPICAL DRAINAGE LINE DETAIL

1"=1'-0"

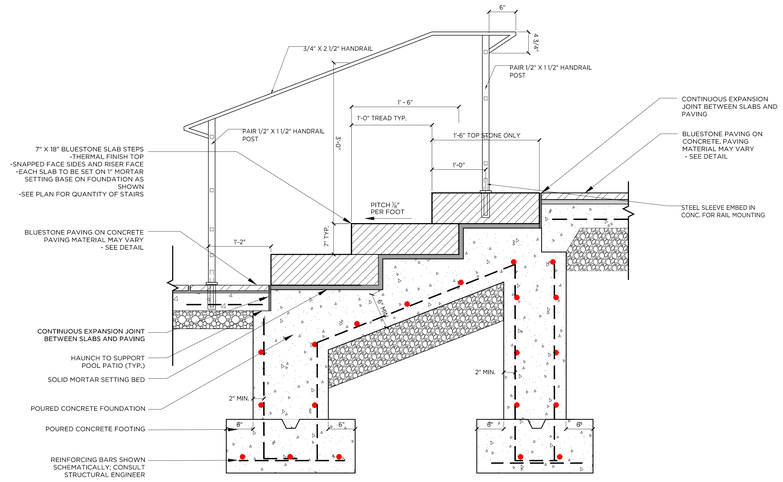

NOTES:
1. REINFORCING SHOWN IS SCHEMATIC. CONSTRUCT STEP FOUNDATIONS/REINFORCING CONTINUOUS WITH ANY ADJACENT PROPOSED WALL FOUNDATIONS/REINFORCING (NOT SHOWN). SUBMIT PHOTOS OF STONE SLABS PRIOR TO PROCUREMENT
2. ALL STONE SLABS MUST BE APPROVED BY LANDSCAPE ARCHITECT PRIOR TO INSTALLATION
3. WITH PRIOR APPROVAL OF STRUCTURAL ENGINEER, CONTRACTOR MAY SUBSTITUTE REINFORCED CONCRETE BLOCK FOUNDATION CONSTRUCTION
5. EXPANSION JOINT:
   -INSTALL POLYETHYLENE FOAM EXP. JOINT FILLER: HARRISTRIP-OFF OR EQUAL
   -SEAL JOINTS TO WITHIN 1/8" OF TOP WITH FLEXIBLE WEATHERPROOF SILICOME SEALANT
   -TOPDRESS SEALANT WITH SILICA SAND COATING, COLOR SHALL MATCH MORTAR JOINTS; SAMPLE SHALL BE APPROVED BY LANDSCAPE ARCHITECT PRIOR TO INSTALLATION

8 MONOLITHIC STONE STEPS ON REINFORCED CONCRETE

NTS

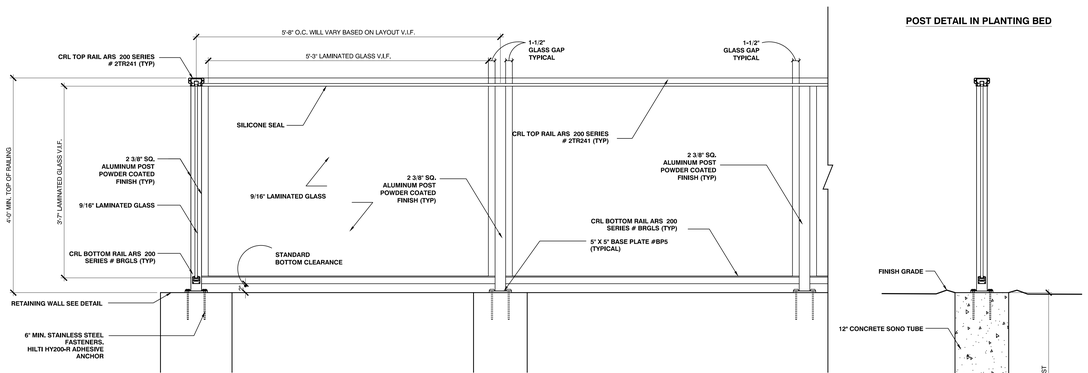

POST DETAIL IN PLANTING BED

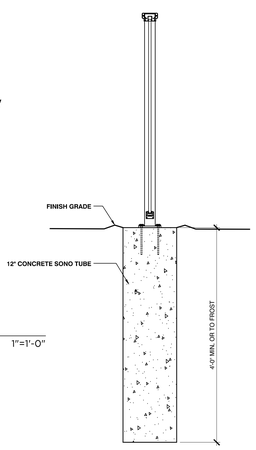

NOTES:
1. ALL POOL FENCING, GATES AND HARDWARE SHALL BE IN COMPLIANCE WITH POOL CODE FOR COMMERCIAL APPLICATIONS.
2. DETAIL IS BASED ON C.R. LAURENCE FENCING SYSTEM COMPONENTS. SUBMIT SHOP DRAWINGS FOR APPROVAL.
3. PRIOR TO ORDERING GLASS, CONTRACTOR SHALL LAY OUT FENCING LOCATION AND MARK POST LAYOUT FOR APPROVAL BY LANDSCAPE ARCHITECT. POSTS SHOULD BE LAID OUT WITH A TYPICAL DIMENSION, SOME PANELS WILL VARY BASED ON LAYOUT.

7 POOL FENCING DETAIL

1"=1'-0"

GRANOFF ARCHITECTS
330 RAILROAD AVENUE
GREENWICH, CT 06830
203.625.9460
WWW.GRANOFFARCHITECTS.COM
CONSULTANTS

REVISIONS

#	DATE	REVISION DESCRIPTION	BY:
1	10/24/2022	PLANNING BOARD SUBMISSION	KA

PHASE
PLANNING BOARD SUBMISSION

PROJECT NAME
SUMMIT CLUB

ARMONK, NY

JOB NO.: ----
DRAWN BY: JS PROJ. MANAGER: KA
DATE: 10/24/2022 SCALE: AS NOTED

DRAWING TITLE
AMENITIES BUILDING - DETAILS

DRAWING NO.
LS 101.3

© 2022 GRANOFF ARCHITECTS
All rights reserved. Designs and ideas are the property of R.S. Granoff Architects, P.C. They may not be copied, reproduced, disclosed to others, or used in connection with any work other than the specified project for which they were prepared, in whole or in part, without prior written consent of R.S. Granoff Architects, P.C.

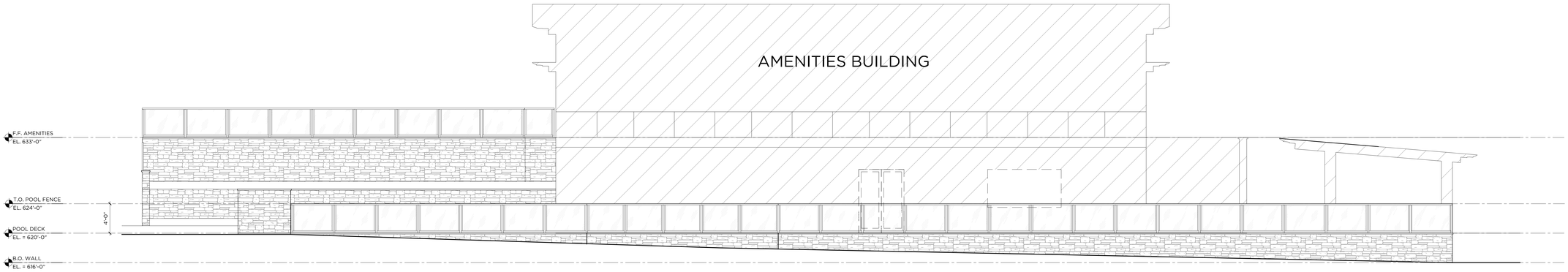

NOTES:
SEE LS 101.4 FOR MORE INFORMATION.

1 WEST ELEVATION - POOL TERRACE
3/16"=1'-0"

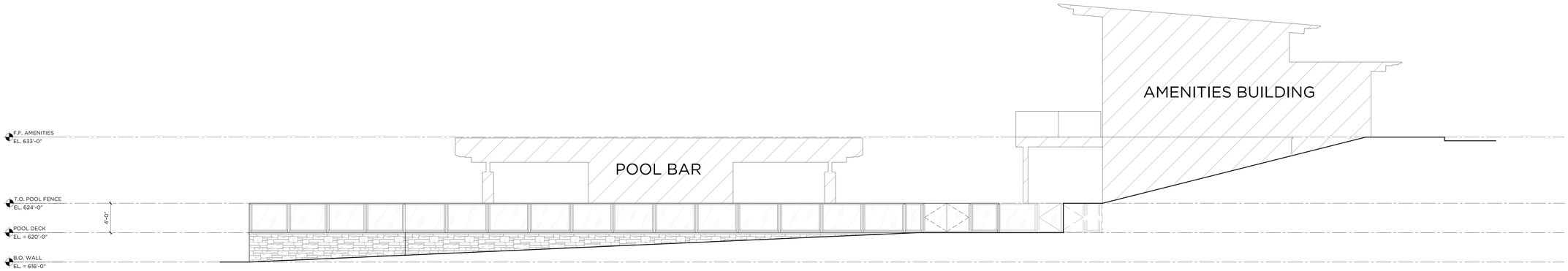

NOTES:
SEE LS 101.4 FOR MORE INFORMATION.

2 SOUTH ELEVATION - POOL TERRACE
3/16"=1'-0"

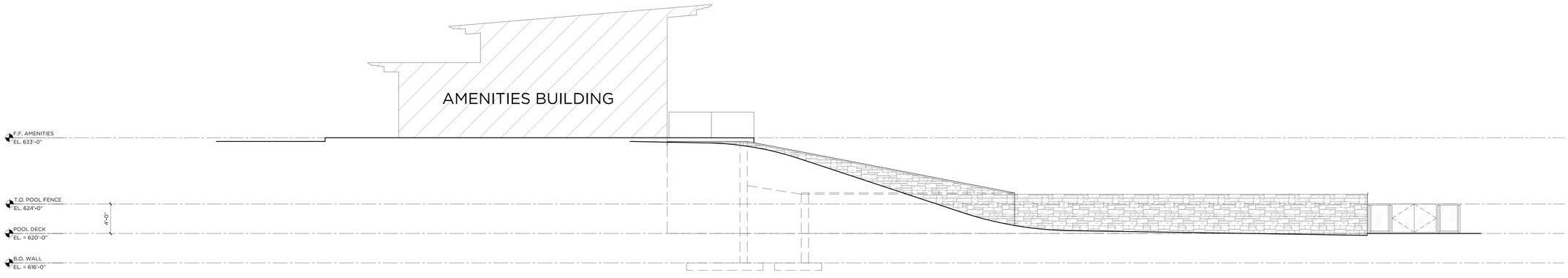

NOTES:
SEE LS 101.4 FOR MORE INFORMATION.

3 NORTH ELEVATION - POOL TERRACE
3/16"=1'-0"

GRANOFF ARCHITECTS

330 RAILROAD AVENUE
GREENWICH, CT 06830

203.625.9460

WWW.GRANOFFARCHITECTS.COM

CONSULTANTS

REVISIONS

#	DATE	REVISION DESCRIPTION	BY:
1	10/24/2022	PLANNING BOARD SUBMISSION	KA

PHASE
PLANNING BOARD SUBMISSION

PROJECT NAME
SUMMIT CLUB

ARMONK, NY

JOB NO.: ----
DRAWN BY: JS PROJ. MANAGER: KA
DATE: 10/24/2022 SCALE: AS NOTED

DRAWING TITLE
AMENITIES BUILDING - POOL DECK ELEVATIONS

DRAWING NO.
LS 101.4

© 2022 GRANOFF ARCHITECTS
These drawings, concepts, designs and ideas are the property of R.S. Granoff Architects, P.C.. They may not be copied, reproduced, disclosed to others, or used in connection with any work other than the specified project for which they were prepared, in whole or in part, without prior written consent of R.S. Granoff Architects, P.C.

2022 Summit Club Documents\Summit Club Drawings\Summit Club.rvt 10/24/2022 3:39:55 PM Jessica Sanchez

GRANOFF ARCHITECTS

330 RAILROAD AVENUE
GREENWICH, CT. 06830

203.625.9460

WWW.GRANOFFARCHITECTS.COM

CONSULTANTS

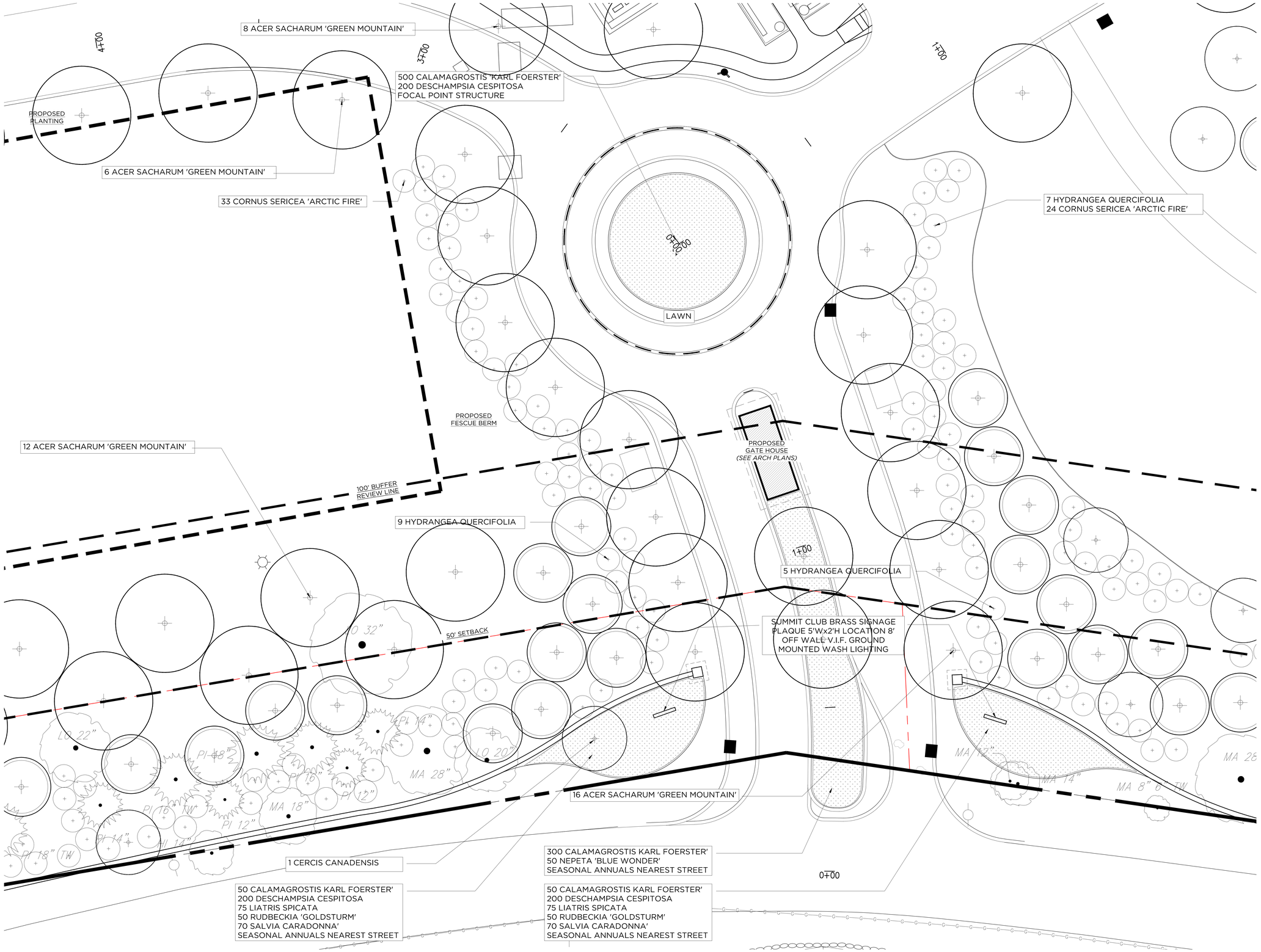

MAIN ENTRY PLANTING PLAN

1" = 10'-0"

REVISIONS

#	DATE	REVISION DESCRIPTION	BY:
1	10/24/2022	PLANNING BOARD SUBMISSION	KA

PHASE

PLANNING BOARD SUBMISSION

PROJECT NAME

SUMMIT CLUB

ARMONK, NY

JOB NO.: ----

DRAWN BY: JS PROJ. MANAGER: KA

DATE: 10/24/2022 SCALE: AS NOTED

DRAWING TITLE

MAIN ENTRY - PLANTING PLAN

DRAWING NO.

LS 102

© 2022 GRANOFF ARCHITECTS
All rights reserved. Drawings and ideas are the property of R.S. Granoff Architects, P.C. They may not be copied, reproduced, disclosed to others, or used in connection with any work other than the specified project for which they were prepared, in whole or in part, without prior written consent of R.S. Granoff Architects, P.C.

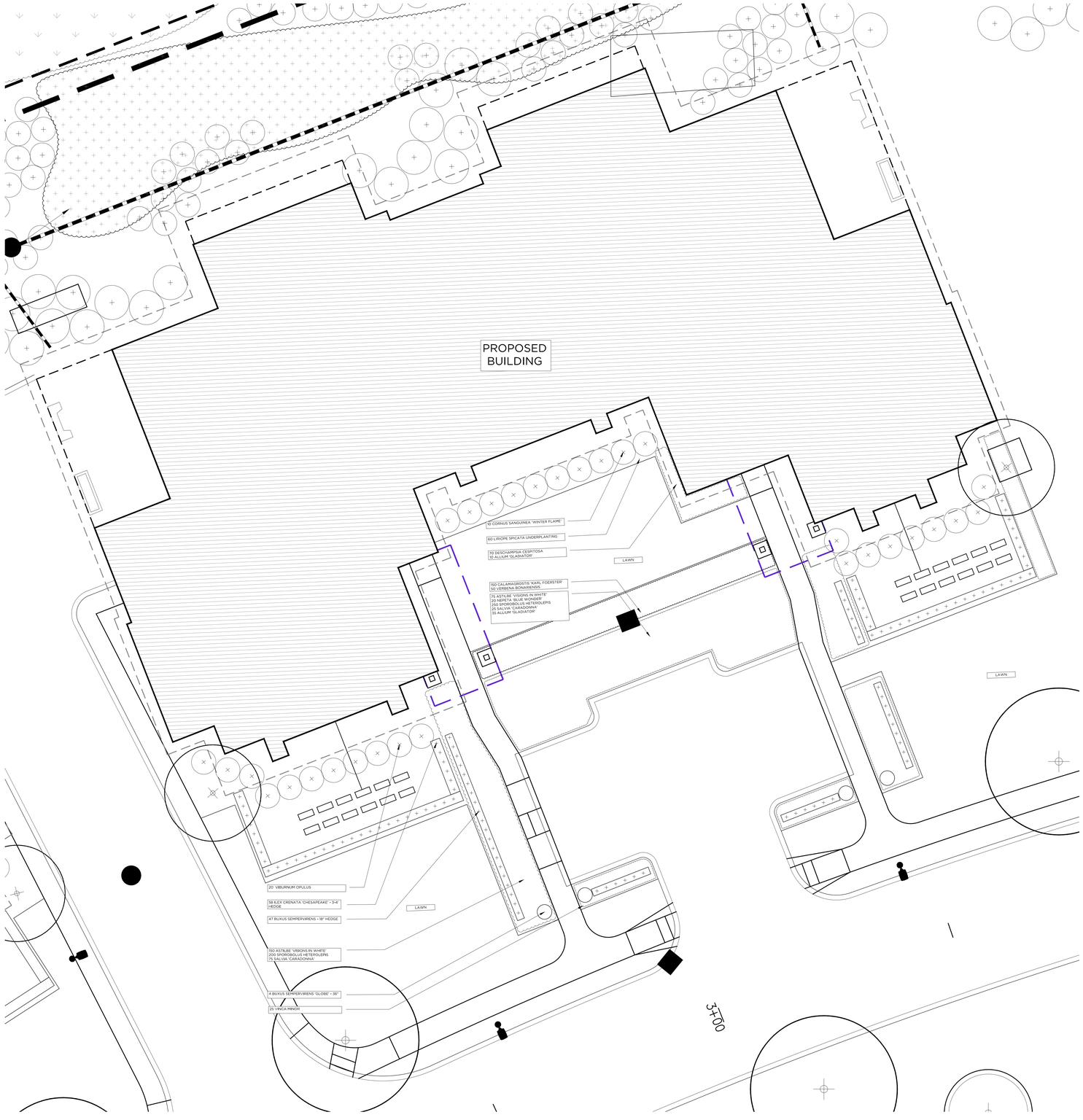

RESIDENTIAL BUILDING TYPICAL PLANTING PLAN

1" = 10'-0"

GRANOFF ARCHITECTS

330 RAILROAD AVENUE
GREENWICH, CT. 06830

203.625.9460

WWW.GRANOFFARCHITECTS.COM

CONSULTANTS

REVISIONS

#	DATE	REVISION DESCRIPTION	BY:
1	10/24/2022	PLANNING BOARD SUBMISSION	KA

PHASE

PLANNING BOARD SUBMISSION

PROJECT NAME

SUMMIT CLUB

ARMONK, NY

JOB NO.: ----

DRAWN BY: JS PROJ. MANAGER: KA

DATE: 10/24/2022 SCALE: AS NOTED

DRAWING TITLE

RESIDENTIAL BUILDING - TYPICAL PLANTING PLAN

DRAWING NO.

LS 103.1

© 2022 GRANOFF ARCHITECTS
These drawings, concepts, designs and ideas are the property of R.S. Granoff Architects, P.C.. They may not be copied, reproduced, disclosed to others, or used in connection with any work other than the specified project for which they were prepared, in whole or in part, without prior written consent of R.S. Granoff Architects, P.C.

DETENTION BASIN PLANTING PLAN

1" = 20'-0"

GRANOFF ARCHITECTS

330 RAILROAD AVENUE
GREENWICH, CT. 06830

203.625.9460

WWW.GRANOFFARCHITECTS.COM

CONSULTANTS

REVISIONS

#	DATE	REVISION DESCRIPTION	BY:
1	10/24/2022	PLANNING BOARD SUBMISSION	KA

PHASE

PLANNING BOARD SUBMISSION

PROJECT NAME

SUMMIT CLUB

ARMONK, NY

JOB NO.: ---

DRAWN BY: JS PROJ. MANAGER: KA

DATE: 10/24/2022 SCALE: AS NOTED

DRAWING TITLE

DETENTION BASIN PLANTING PLAN

DRAWING NO.

LS 104

© 2022 GRANOFF ARCHITECTS
These drawings, concepts, designs and ideas are the property of R.S. Granoff Architects, P.C.. They may not be copied, reproduced, disclosed to others, or used in connection with any work other than the specified project for which they were prepared, in whole or in part, without prior written consent of R.S. Granoff Architects, P.C.

JOB NAME: SUMMIT CLUB
APEX LIGHTING SOLUTIONS
REFLECTANCES: N/A
WORKPLANE/CALC PLANE: @ GRADE
MOUNTING HEIGHT: SEE LUMINAIRE SCHEDULE
APPS: LED
SALES: TM

Luminaire Schedule							
Qty	Label	Arrangement	Lumens	Input Watts	LLF	BUG Rating	Description
1	SL2	SINGLE	11518	86.8	0.850	B2-U0-G2	USA RZR-PLED-II-40LED-700MA-WW-VOLT-FINISH MOUNTED TO 18FT POLE @ 18FT AFG TO BOF
7	SL2B	Single	6281	42.7	0.850	B2-U0-G1	USA RZR-PTY-PLED-II-40LED-350mA-WW-VOLT-FINISH MOUNTED TO 12FT POLE WITH OPTICAL HT @ 13.89FT
1	SL3	SINGLE	10880	86.8	0.850	B2-U0-G3	USA RZR-PLED-III-W-40LED-700MA-WW-VOLT-FINISH MOUNTED TO 18FT POLE @ 18FT AFG TO BOF
3	SL4	SINGLE	10595	86.8	0.850	B2-U0-G3	USA RZR-PLED-IV-FT-W-40LED-700MA-WW-VOLT-FINISH MOUNTED TO 18FT POLE @ 18FT AFG TO BOF
21	SL5	SINGLE	11920	86.8	0.850	B4-U0-G2	USA RZR-PLED-VSQ-M-40LED-700MA-WW-VOLT-FINISH MOUNTED TO 18FT POLE @ 18FT AFG TO BOF

Calculation Summary						
Label	Grid Z	Avg	Max	Min	Avg/Min	Max/Min
SITE	0	0.27	5.1	0.0	N.A.	N.A.
PATHWAY		2.12	5.1	0.0	N.A.	N.A.
PHASE 1		1.48	4.6	0.0	N.A.	N.A.

GENERAL DISCLAIMER:

Calculations have been performed according to IES standards and good practice Some differences between measured values and calculated results may occur due to tolerances in calculation methods, testing procedures, component performance, measurement techniques and field conditions such as voltage and temperature variations. Input data used to generate the attached calculations such as room dimensions, reflectances, furniture and architectural elements significantly affect the lighting calculations. If the real environment conditions do not match the input data, differences will occur between measured values and calculated values.

* LLF Determined Using Current Published Lamp Data

NOTE TO REVIEWER:

Total Light Loss Factor (LLF) applied at time of design is determined by applying the Lamp Lumen Depreciation (LLD) from current lamp manufacturer's catalog, a Luminaire Dirt Depreciation Factor (LDD) based on IES recommended values and a Ballast Factor (BF) from current ballast specification sheets. Application of an incorrect Light Loss Factor (LLF) will result in forecasts of performance that will not accurately depict actual results.

For proper comparison of photometric layouts, it is essential that you insist all designers use correct Light Loss Factors.

APEX LIGHTING SOLUTIONS
THE POINT WHERE ALL ASCENDING LINES CONVERGE
20-30 BEAVER ROAD
WETHERSFIELD, CT 06109
TELEPHONE 860.632.8766
FACSIMILIE 860.632.8236
www.apexltg.com

PROJECT TITLE:

SUMMIT CLUB

DRAWING TITLE:

EXTERIOR LIGHTING
PHOTOMETRIC CALCULATION
PHASE 1

FILE NAME: SL-1A SUMMIT CLUB - PHASE 1 10-19-2022 LED.dwg

SCALE : 1"=40'-0"

DATE: 10/19/22

DRAWN BY: LED

SHEET:

SL-1A

SOLID STATE AREA LIGHTING

RAZAR SERIES-LED

SPECIFICATIONS

PROJECT NAME:

PROJECT TYPE:

RAZAR

(MODELS: RZRM, RZR, RZR-G & RZR-MAF*) PATENT PENDING

OPTICAL HOUSING
Heavy cast low copper aluminum (A356 alloy; <0.2% copper) assembly with integral cooling fins. The Optical Panel mounting surface is milled flat (surface variance <± .002") to facilitate thermal transfer of heat to housing and cooling fins. Solid barrier wall separates optical and electrical compartments. The optical and electrical compartments are integrated to create one assembly. Minimum wall thickness is .188".

ELECTRICAL HOUSING w/ INTEGRATED ARM
Heavy cast low copper aluminum (A356 alloy; <0.2% copper) assembly with integral cooling ribs surrounding the electrical compartment and a flat surface on the top of the arm to accommodate a photocell receptacle. Solid barrier wall separates optical and electrical compartments. The optical compartment and electrical compartment with the integrated support arm combine to create one assembly. Minimum wall thickness is .188". Cast and hinged driver assembly cover is integrated with wiring compartment cover.

PLED™ OPTICS
Emitters (LED's) are arrayed on a metal core PCB panel with each emitter located on a copper thermal transfer pad and enclosed by an LED refractor. LED optics completely seal each individual emitter to meet an IP66 rating. In asymmetric distributions, a micro-reflector inside the refractor re-directs the house side emitter output towards the street side and functions as a house side shielding element. Refractors are injection molded H12 acrylic. Each LED refractor is sealed to the PCB over an emitter and all refractors are retained by an aluminum frame. Any one Panel, or group of Panels in a luminaire, have the same optical pattern. LED refractors produce standard site/area distributions. Panels are field replaceable and field rotatable in 90° increments.

LED DRIVER(S)
Constant current electronic with a power factor of >.90 and a minimum operating temperature of -40°F/-40°C. Driver(s) is/are UL and cUL recognized and mounted directly against the Electrical Housing to facilitate thermal transfer, held down by universal clamps to facilitate easy removal. In-line terminal blocks facilitate wiring between the driver and optical arrays. Drivers accept an input of 120-277V, 50/60Hz or 347V-480V, 50,60Hz. (0 - 10V dimmable driver is standard. Driver has a minimum of 3KV internal surge protection. Luminaire supplied with 20KV surge protector for field accessible installation.)

LED EMITTERS
High output LED's are utilized with drive currents ranging from 350mA to 1050mA. 70CRI Minimum. LED's are available in standard Neutral White (4000K), or optional Cool White (5000K) or Warm White (3000K). Consult Factory for other LED options.

AMBER LED's
PCA (Phosphor Converted Amber) LED's utilize phosphors to create color output similar to LPS lamps and have a slight output in the blue spectral bandwidth. **TRA** (True Amber) LED's utilize material that emits light in the amber spectral bandwidth only without the use of phosphors.

FINISH
Electrostatically applied TGIC Polyester Powder Coat on substrate prepared with 20 PSI power wash at 140°F. Four step media blast and iron phosphate pretreatment for protection and paint adhesion. 400°F bake for maximum hardness and durability.

MAST ARM FITTER/ELECTRICAL HOUSING
Replaces standard Electrical Housing. Fits standard 2 3/8" O.D. horizontal tenon. Two (2) straps with two (2) bolts each encircle the lower half of the tenon. Upper half of the tenon rests on self-centering steps that position the angle of the luminaire at 0°, +1.5°, +1.5 or +3° up from the horizontal. All hardware is stainless steel.

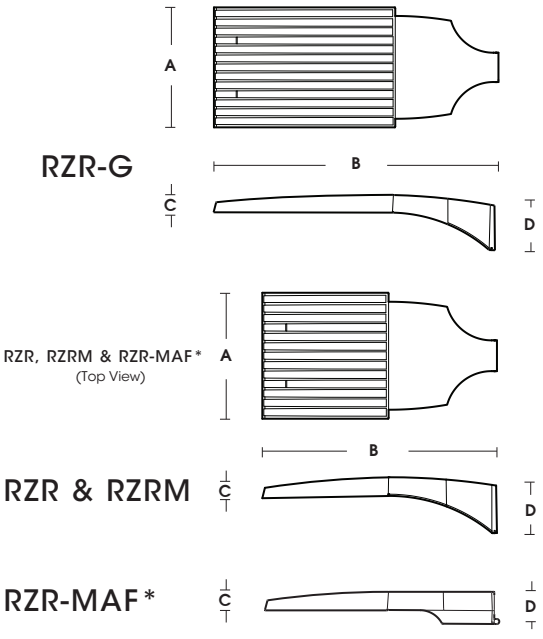

FIXTURE	A	B	C	D
RZR-G	15" 381mm	36.5" 927mm	3" 76mm	7" 187mm
RZR	14.75" 375mm	28.25" 718mm	2.75" 70mm	6.5" 165mm
RZRM	11.5" 292mm	22" 559mm	2.5" 64mm	5.25" 133mm
RZR-MAF	15" 381mm	28.25" 724mm	2.5" 64mm	4" 102mm

*DLC PENDING AS OF 7/19

c UL us LISTED

MADE IN THE USA

2020248

U.S. Architectural Lighting

660 West Avenue O, Palmdale, CA 93551
Phone (661) 233-2000 Fax (661) 233-2001
www.usaltg.com

U.S. ARCHITECTURAL LIGHTING

RAZAR SERIES-LED

SPECIFICATIONS

WALLMOUNT

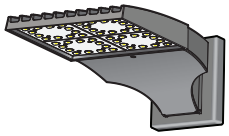

CAST ALUMINUM ARM AND WALL BRACKET ASSEMBLY PROVIDED WITH BUILT IN GASKETED WIRE ACCESS FOR FIXTURE/SUPPLY WIRE CONNECTION.

WALL PLATE

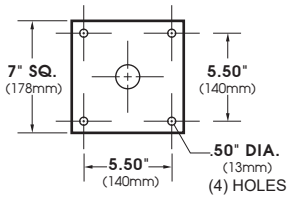

PLED® MODULES

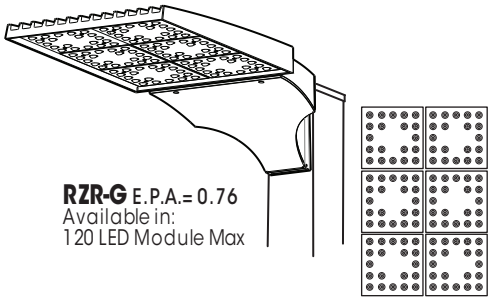

RZR-G E.P.A.= 0.76
Available in:
120 LED Module Max

120 LED Module

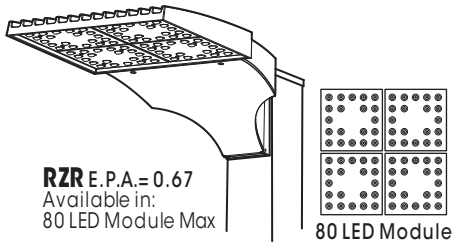

RZR E.P.A.= 0.67
Available in:
80 LED Module Max

80 LED Module

POLE DRILLING TEMPLATE

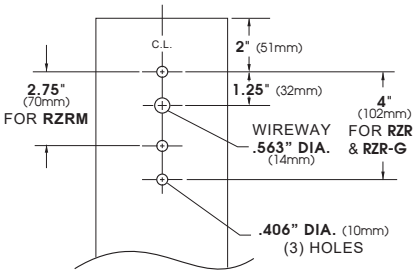

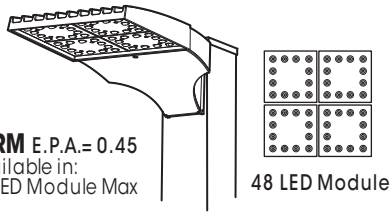

RZRM E.P.A.= 0.45
Available in:
48 LED Module Max

48 LED Module

Spec/Order Example: RZR/PLED-IV/80LED-700mA/CW/277/RAL-8019-S

SPEC/ORDERING INFORMATION

MODEL	OPTICS	LED MODE	VOLTAGE	FINISH	OPTIONS

MODEL

- ☐ RZR-G
- ☐ RZR
- ☐ RZR-MAF[1]
- ☐ RZRM

NOTES:
1 - DLC PENDING AS OF 7/19

OPTICS

- ☐ TYPE II **PLED-II** . . . . .
- ☐ TYPE II FRONT ROW **PLED-II-FR** . . . . .
- ☐ TYPE II MEDIAN ILLUMINATOR **PLED-II-ML** . . . . .
- ☐ TYPE III MED. **PLED-III-M** . . . . .
- ☐ TYPE III WIDE **PLED-III-W** . . . .
- ☐ TYPE IV **PLED-IV** . . . . .
- ☐ TYPE IV **PLED-IV-FT** . . . . .
- ☐ TYPE V NARROW **PLED-VSQ-N** . . . .
- ☐ TYPE V MED. **PLED-V-SQ-M** . .
- ☐ TYPE V WIDE **PLED-V-SQ-W** . .

LED MODE

NO. LEDs

RZR-G

- ☐ 120LED
- ☐ 80LED

RZR

- ☐ 80LED
- ☐ 40LED

- ☐ **RZRM** 48LED
- ☐ 24LED

DRIVE CURRENT

- ☐ 350mA
- ☐ 525mA
- ☐ 700mA[2]
- ☐ 1050mA[2]

COLOR TEMP - CCT

- ☐ NW (4000K)* *STANDARD
- ☐ CW (5000K)
- ☐ WW (3000K)

CONSULT FACTORY FOR OTHER LED COLORS

AMBER[3]

- ☐ PHOSPHOR CONVERTED AMBER **PCA**
- ☐ TRUE AMBER[4] **TRA**

NOTES:
2 - 700mA and 1050mA NOT FOR USE WITH TRA LED'S

3 - NARROW BAND AMBERS HAVE NO DEFINABLE CCT EQUIVALENT

4 - AVAILABLE IN 350mA & 525mA DRIVE CURRENTS ONLY

VOLTAGE

- ☐ 120
- ☐ 208
- ☐ 240
- ☐ 277
- ☐ 347
- ☐ 480

FINISH

STANDARD TEXTURED FINISH

- ☐ BLACK **RAL-9005-T**
- ☐ WHITE **RAL-9003-T**
- ☐ GREY **RAL-7004-T**
- ☐ DARK BRONZE **RAL-8019-T**
- ☐ GREEN **RAL-6005-T**

FOR SMOOTH FINISH REPLACE SUFFIX "T" WITH SUFFIX "S" (EXAMPLE: RAL-9005-S)

CONSULT FACTORY FOR CUSTOM COLORS

OPTIONS

- ☐ HIGH-LOW DIMMING FOR HARDWIRED SWITCHING OR NONINTEGRATED MOTION SENSOR . . . . . **HLSW**
- ☐ INTERNAL HOUSE SIDE SHIELD . . . **HS-PLED**
- ☐ PHOTO CELL + VOLTAGE (EXAMPLE: PC120V) . . **PC+V**
- ☐ TWIST LOCK RECEPTACLE ONLY . . . **TPR**
- ☐ 7-PIN TWIST LOCK RECEPTACLE ONLY . . . **TPR7**
- ☐ SINGLE FUSE (120V, 277V, 347V) . . **SF**
- ☐ DOUBLE FUSE (208V, 240V, 480V) . . **DF**
- ☐ STEP DIM MOTION SENSOR (PROGRAMMED 50/100) **MS-F211**
- ☐ REMOTE MOTION SENSOR CONFIGURATOR **MS-FC10**

U.S. Architectural Lighting

660 West Avenue O, Palmdale, CA 93551
Phone (661) 233-2000 Fax (661) 233-2001
www.usaltg.com

U.S. ARCHITECTURAL LIGHTING

Approximate Average Lumens – 4000K

(Lumens median of all distributions)

	350mA			525mA			700mA			1050mA		
	Watts	Lumens	HID Eq.	Watts	Lumens	HID Eq.	Watts	Lumens	HID Eq.	Watts	Lumens	HID Eq.
24	28	3541	50	41	5058	70-100	53	6567	100	81	8773	150-175
40	45	5997	70-100	66	8653	100-150	87	10995	175	134	14647	200-250
48	55	7046	100	81	10018	150-175	105	12600	200	160	17566	250
80	87	11622	175-200	131	16736	200-250	174	21235	400	266	28190	450-575
120	127	17405	250	195	24860	450	260	31592	575-750	396	43323	750-1000

LED COUNT	SOURCE TYPE	SOURCE	INITIAL LUMENS - 4000K CCT	INITIAL LUMENS - 3000K CCT	INITIAL LUMENS - 5000K CCT	L70 GREATER THAN (HR)	STARTING TEMP.	SYSTEM WATTS	VOLTS	MAX INPUT AMPS
24	LED	24 PLED® Optical Module - 350mA	3,298 - 3,784	3,133 - 3,595	3,463 - 3,973	60,000+	-20°F	29	120 277	0.24 0.10
24	LED	24 PLED® Optical Module - 525mA	4,711 - 5,405	4,475 - 5,135	4,947 - 5,675	60,000+	-20°F	42	120 277	0.34 0.15
24	LED	24 PLED® Optical Module - 700mA	6,023 - 6,911	5,722 - 6,565	6,324 - 7,256	60,000+	-20°F	56	120 277	0.45 0.20
24	LED	24 PLED® Optical Module - 1050mA	8,171 - 9,375	7,762 - 8,906	8,580 - 9,844	60,000+	-20°F	82	120 277	0.68 0.30
40	LED	40 PLED Optical Module - 350mA	5,585 - 6,408	5,306 - 6,088	5,864 - 6,729	60,000+	-20°F	43	120 277	0.38 0.17
40	LED	40 PLED® Optical Module - 525mA	8,059 - 9,246	7,656 - 8,784	8,462 - 9,709	60,000+	-20°F	65	120 277	0.55 0.24
40	LED	40 PLED® Optical Module - 700mA	10,240 - 11,749	9,728 - 11,162	10,752 - 12,337	60,000+	-20°F	87	120 277	0.73 0.32
40	LED	40 PLED® Optical Module - 1050mA	13,642 - 15,652	12,960 - 14,870	14,324 - 16,435	60,000+	-20°F	128	120 277	1.12 0.49
48	LED	48 PLED® Optical Module - 350mA	6,562 - 7,529	6,234 - 7,153	6,890 - 7,909	60,000+	-20°F	53	120 277	0.46 0.20
48	LED	48 PLED® Optical Module - 525mA	9,330 - 10,705	8,864 - 10,170	9,797 - 11,240	60,000+	-20°F	79	120 277	0.68 0.29
48	LED	48 PLED® Optical Module - 700mA	11,735 - 13,464	11,148 - 12,791	12,322 - 14,137	60,000+	-20°F	106	120 277	0.88 0.38
48	LED	48 PLED® Optical Module - 1050mA	16,360 - 18,771	15,542 - 17,832	17,178 - 19,709	60,000+	-20°F	160	120 277	1.33 0.58
RZR										
80	LED	80 PLED® Optical Module - 350mA	10,824 - 12,419	10,283 - 11,798	11,365 - 13,040	60,000+	-20°F	86	120 277	0.75 0.33
80	LED	80 PLED® Optical Module - 525mA	15,587 - 17,884	14,808 - 16,990	16,366 - 18,778	60,000+	-20°F	130	120 277	1.10 0.48
80	LED	80 PLED® Optical Module - 700mA	19,767 - 22,680	18,779 - 21,546	20,755 - 23,814	60,000+	-20°F	174	120 277	1.45 0.63
80	LED	80 PLED® Optical Module - 1050mA	26,255 - 30,124	24,942 - 28,618	27,568 - 31,630	60,000+	-20°F	257	120 277	2.22 0.96
RZR-G										
80	LED	80 PLED® Optical Module - 350mA	10,950 - 12,564	10,403 - 11,936	11,498 - 13,192	60,000+	-20°F	87	120 277	0.75 0.33
80	LED	80 PLED® Optical Module - 525mA	15,735 - 18,054	14,948 - 17,151	16,522 - 18,957	60,000+	-20°F	129	120 277	1.10 0.48
80	LED	80 PLED® Optical Module - 700mA	20,074 - 23,032	19,071 - 21,881	21,078 - 24,184	60,000+	-20°F	174	120 277	1.45 0.63
80	LED	80 PLED® Optical Module - 1050mA	27,651 - 31,725	26,268 - 30,139	29,033 - 33,311	60,000+	-20°F	266	120 277	2.22 0.96

RAZAR SERIES-LED

LED/ELECTRICAL GUIDE (pg. 2)

LED COUNT	SOURCE TYPE	SOURCE	INITIAL LUMENS - 4000K CCT	INITIAL LUMENS - 3000K CCT	INITIAL LUMENS - 5000K CCT	L70 GREATER THAN (HR)	STARTING TEMP.	SYSTEM WATTS	VOLTS	MAX INPUT AMPS
120	LED	120 PLED® Optical Module - 350mA	16,211 - 18,599	15,400 - 17,669	17,021 - 19,529	60,000+	-20°F	130	120 277	1.06 0.46
120	LED	120 PLED® Optical Module - 525mA	23,154 - 26,566	21996 - 25,238	24,312 - 27,894	60,000+	-20°F	192	120 277	1.63 0.70
120	LED	120 PLED® Optical Module - 700mA	29,424 - 33,760	27,953 - 32,072	30,895 - 35,448	60,000+	-20°F	260	120 277	2.17 0.94
120	LED	120 PLED® Optical Module - 1050mA	40,350 - 46,296	38,333 - 43,981	42,368 - 48,611	60,000+	-20°F	398	120 277	3.33 1.43

NOTES:
1. Max Input Amps is the highest of starting, operating, or open circuit currents.
2. Lumen values for LED Modules vary according to the distribution type. 80LED array appears in both the RZR and RZR-G models.
3. System Watts includes the source watts and all driver components.
4. Fuse value should be sufficient to protect all wiring components. For electronic driver and LED component protection, use surge suppressor supplied with luminaire. **Note: Surge suppressors are considered a perishable device.**
5. L70(10K) – TM-21 6x rule applied.

WARNING: All fixtures must be installed in accordance with local codes or the National Electrical Code. Failure to do so may result in serious personal injury.

660 West Avenue O, Palmdale, CA 93551
Phone (661) 233-2000 Fax (661) 233-2001
www.usaltg.com

ABBREVIATIONS AND TERMS

∠	ANGLE
@	AT
℄	CENTER LINE
°	DEGREES
ø	DIAMETER
₹	FLOW LINE
#	NUMBER OR REBAR SIZE
±	PLUS OR MINUS
₹	PROPERTY LINE
A	AMPERE
AB	ANCHOR BOLT
ABS	ACRYLONITRILE BUTADIENE STYRENE
ACS	AUTOMATIC CONTROL SYSTEM
ADA	AMERICANS WITH DISABILITIES ACT
A/E	ARCHITECT/ENGINEER
AFF	ABOVE FINISHED FLOOR
AFG	ABOVE FINISHED GRADE
AHJ	AUTHORITY HAVING JURISDICTION
ALT	ALTERNATE
ALUM	ALUMINUM
APPROX	APPROXIMATE
APSP	ASSOCIATION OF POOL & SPA PROFESSIONALS
ARCH	ARCHITECT
ASSY	ASSEMBLY
AUX	AUXILIARY
AWG	AMERICAN WIRE GAGE
BB	BOND BEAM
BCV	BUTTERFLY CHECK VALVE
BFP	BACKFLOW PREVENTER
BFV	BUTTERFLY VALVE
BLDG	BUILDING
BM	BENCHMARK
BMP	BEST MANAGEMENT PRACTICES
BOT	BOTTOM
BTUH	BRITTISH THERMAL UNIT PER HOUR
BTWN	BETWEEN
BV	BALL VALVE
BW	BACKWASH
BWTV	BACKWASH THROTTLING VALVE
C	CELSIUS
CFM	CUBIC FEET PER MINUTE
CHEM	CHEMICAL
CHKV	CHECK VALVE
CIP	CAST-IN-PLACE
CJ	CONSTRUCTION JOINT OR CONTROL JOINT
CLG	CEILING
CLR	CLEAR
CMU	CONCRETE MASONRY UNIT
CO	CLEANOUT
COL	COLUMN
CONC	CONCRETE
CONN	CONNECT
CONSTR	CONSTRUCTION
CONT	CONTINUE
CONTR	CONTRACTOR
CPLG	COUPLING
C TO C	CENTER TO CENTER
CTR	CENTER
CU	COPPER
CU FT	CUBIC FEET
CU YD	CUBIC YARD
D	DEEP OR DEPTH
DBL	DOUBLE
DCL	DEDICATED CLEANER LINE
DEMO	DEMOLITION
DET	DETAIL
DG	DECOMPOSED GRANITE
DIA	DIAMETER
DIM	DIMENSION
DL	DEAD LOAD
DN	DOWN
DRN	DRAIN
DWV	DRAIN, WASTE AND VENT
E	EAST
EA	EACH
EFP	EQUIVALENT FLUID PRESSURE
EJ	EXPANSION JOINT
EL	ELEVATION
ELEC	ELECTRIC
ENGR	ENGINEER
EQ	EQUAL
EQUIP	EQUIPMENT
ESMT	EASEMENT
EW	EACH WAY
EXC	EXCAVATE
EXIST	EXISTING
EXP	EXPANSION
EXT	EXTERIOR
F	FAHRENHEIT
FCV	FLOW CONTROL VALVE
FD	FLOOR DRAIN
FDTN	FOUNDATION
FF EL	FINISH FLOOR ELEVATION
FIN	FINISH
FIN GR	FINISH GRADE
FLG	FLANGE
FLR	FLOOR
FLUOR	FLUORESCENT
F METER	FLOWMETER
FNPT	FEMALE NATIONAL PIPE THREAD
FOHC	FREE OF HEART CENTER
FPS	FEET PER SECOND
FRP	FIBER REINFORCED POLYESTER
FS	FLOW SWITCH
FT	FEET OR FOOT
FTG	FOOTING
FV	FOOT VALVE
GA	GAGE
GAL	GALLON
GALV	GALVANIZED
GEN	GENERAL
GFCI	GROUND FAULT CIRCUIT INTERRUPTER
GLV	GLOBE VALVE
GPH	GALLONS PER HOUR
GPM	GALLONS PER MINUTE
GR BM	GRADE BEAM
GYP BD	GYPSUM BOARD
H	HEIGHT OR HIGH
HB	HOSE BIBB
HDPE	HIGH DENSITY POLYETHYLENE
HOA	HAND-OFF-AUTOMATIC
HORIZ	HORIZONTAL
HP	HORSEPOWER
HR	HOUR
HT	HEIGHT
HVAC	HEATING, VENTILATION & AIR CONDITIONING
HW	HOT WATER
ID	INSIDE DIAMETER
IN	INCH
INCL	INCLUDED
INSUL	INSULATION
INT	INTERIOR
INV	INVERT
J-BOX	JUNCTION BOX
KO	KNOCKOUT
KW	KILOWATT
KWH	KILOWATT HOUR
L	LENGTH OR LONG
LBS	POUNDS
LED	LIGHT EMITTING DIODE
LF	LINEAR FEET (FOOT)
LIM SW	LIMIT SWITCH
LIQ	LIQUID
LL	LIVE LOAD
LPG	LIQUID PETROLEUM GAS (PROPANE)
MATL	MATERIAL
MAX	MAXIMUM
MECH	MECHANICAL
MEP	MAXIMUM EXTENT PRACTICABLE
MFR	MANUFACTURER
MIN	MINIMUM OR MINUTE
MISC	MISCELLANEOUS
MNPT	MALE NATIONAL PIPE THREAD
MOV	MOTOR OPERATED VALVE
MSL	MEAN SEA LEVEL
MTL	METAL
N	NORTH
NA	NOT APPLICABLE
NAT	NATURAL
NC	NORMALLY CLOSED
NIC	NOT IN CONTRACT
NO	NORMALLY OPEN OR NUMBER
NOM	NOMINAL
NSPI	NATIONAL SPA & POOL INSTITUTE
NTS	NOT TO SCALE
NV	NEEDLE VALVE
O3	OZONE
OC	ON CENTER
OD	OUTSIDE DIAMETER
OF/CI	OWNER FURNISHED/CONTR INSTALLED
O/O	OUT TO OUT
OPP	OPPOSITE
ORP	OXIDATION REDUCTION POTENTIAL
PA	PIPE ANCHOR OR PLANTER AREA
PB	PULL BOX
PCC	PRECAST CONCRETE
PERF	PERFORATED
PERIM	PERIMETER
PG	PRESSURE GAGE
PH	PHASE, ACID/ALKALINE SCALE
PL	PROPERTY LINE
PLBG	PLUMBING
PLYWD	PLYWOOD
PN	PART NUMBER
PNL	PANEL
POC	POINT OF CONNECTION
POTW	POTABLE WATER
PPM	PARTS PER MILLION
PR	PAIR
PRESS SW	PRESSURE SWITCH
PROJ	PROJECT
PROP	PROPERTY
PRV	PRESSURE RELIEF VALVE
PS	PIPE SUPPORT OR PRESSURE SWITCH
PSF	POUNDS PER SQUARE FOOT
PSI	POUNDS PER SQUARE INCH
PVC	POLYVINYL CHLORIDE (PLASTIC, SCH 40 UNO)
PVC40	SCHEDULE 40 PVC
PVC80	SCHEDULE 80 PVC
PVDF	POLYVINYLIDENE FLUORIDE
PVF	POLYVINYL FLUORIDE (PLASTIC)
QTY	QUANTITY
R	RADIUS OR RETURN
RBB	RAISED BOND BEAM
RDC	REDUCER
REBAR	REINFORCING STEEL BARS
REF	REFERENCE
REINF	REINFORCE
REQD	REQUIRED
RET	RETAINING OR RETURN
REV	REVISION
RM	ROOM
RO	ROUGH OPENING
ROW	RIGHT OF WAY
RPM	REVOLUTIONS PER MINUTE
RS	RESAWN
S	SOUTH OR SUCTION
SB	SURGE BASIN
SCH	SCHEDULE
SCHEM	SCHEMATIC
SD	STORM DRAIN
SDR	SIZE DIAMETER RATIO
SECT	SECTION
SF	SQUARE FOOT (FEET)
SHT	SHEET
SIM	SIMILAR
SKM	SKIMMER
SO	SUCTION OUTLET
SPEC	SPECIFICATION
SP INSP	SPECIAL INSPECTION
SQ	SQUARE
SS	SANITARY SEWER
SST	STAINLESS STEEL
STD	STANDARD
STIR	STIRRUP
STRUCT	STRUCTURAL
SUCT	SUCTION
SW	SWITCH
SWR	SEWER
SYMM	SYMMETRICAL
T&B	TOP AND BOTTOM
T&G	TONGUE AND GROOVE
TBD	TO BE DETERMINED
TD	TRENCH DRAIN
TDH	TOTAL DYNAMIC HEAD
TEL	TELEPHONE
TEMP	TEMPERATURE OR TEMPORARY
TFF	TOP OF FINISH FLOOR
THD	THREAD
THK	THICKNESS
TO	TOP OF ___ OR TURNOVER TIME
TOB	TOP OF BEAM
TOC	TOP OF CONCRETE, COPING OR CURB
TOF	TOP OF FOOTING
TOPO	TOPOGRAPHY
TOS	TOP OF SLAB OR STEEL
TOW	TOP OF WALL
TYP	TYPICAL
UNO	UNLESS NOTED OTHERWISE
UST	UNDERGROUND STORAGE TANK
UV	ULTRAVIOLET
V	VELOCITY (FPS) OR VOLT
VA	VOLT AMPERE
VAC	VACUUM OR VOLTS ALTERNATING CURRENT
VB	VACUUM BREAKER OR VALVE BOX
VENT	VENTILATION
VERT	VERTICAL
VFD	VARIABLE FREQUENCY DRIVE
VIF	VERIFY IN FIELD
VOL	VOLUME
W	WATTS, WEST, WIDE OR WIDTH
W/	WITH
W/O	WITHOUT
WDW	WINDOW
WL	WATER LEVEL OR WATERLINE
WP	WATERPROOFING
WWF	WELDED WIRE FABRIC
XFMR	TRANSFORMER
YD	YARD OR YARD DRAIN

GENERAL NOTES

1. POOL CONTRACTOR INCLUDES ITS OWNERS, OFFICERS, EMPLOYEES AND CONSULTANTS WHENEVER REFERENCED.

2. THE POOL CONTRACTOR. ALL RIGHTS ARE RESERVED AND VIOLATIONS WILL BE PROSECUTED TO THE FULLEST EXTENT OF THE LAW. THIS PLAN IS THE WORK OF THE POOL CONTRACTOR AND SHALL NOT BE REPRODUCED, COPIED OR OTHERWISE USED WITHOUT WRITTEN PERMISSION.

3. THESE IDEAS, CONCEPTS, SKETCHES, DESIGNS, DETAILS, DRAWINGS, SPECIFICATIONS AND NOTES ARE THE SOLE EXCLUSIVE PROPERTY OF THE POOL CONTRACTOR.

4. NOTHING CONTAINED WITHIN THESE DOCUMENTS SHALL BE USED BY OR DISCLOSED TO ANY PERSON, FIRM OR CORPORATION FOR ANY PURPOSE WITHOUT THE EXPRESS WRITTEN CONSENT OF THE POOL CONTRACTOR.

5. THE POOL CONTRACTOR ACCEPTS NO RESPONSIBILITY FOR INTERPRETATIONS OR RESTRICTIONS THAT MAY BE IMPOSED BY THE HOMEOWNER'S ASSOCIATION. ALL LAYOUT DESIGN, MATERIAL PLACEMENT, MATERIAL SPECIFICATIONS OR OTHER ITEMS WITHIN THE HOMEOWNER'S ASSOCIATION'S JURISDICTION HAS BEEN DICTATED SOLELY BY THE OWNER.

6. THE POOL CONTRACTOR IS NOT RESPONSIBLE FOR CHANGES, DELETIONS, SUBSTITUTIONS OR ADDITIONS TO THE PLANS, SPECIFICATIONS OR PROJECT BY OTHERS.

7. THE POOL CONTRACTOR MAKES NO REPRESENTATION THAT THE DESIGN MEETS OR INCLUDES ALL APPLICABLE BUILDING CODES AND/OR STANDARDS OF THE AUTHORITIES HAVING JURISDICTION. PRIOR TO USING THESE CONSTRUCTION DOCUMENTS THE OWNER AND THE POOL CONTRACTOR REPRESENT AND WARRANT THAT THEY HAVE EXAMINED THE LOCAL BUILDING CODES AND ACKNOWLEDGE THAT BY USING THESE CONSTRUCTION DOCUMENTS THEY ARE JOINTLY AND SEVERALLY RESPONSIBLE TO COMPLY WITH ANY AND ALL APPLICABLE LOCAL CODES AND ORDINANCES.

8. THE POOL CONTRACTOR DOES NOT CONSULT ON SAFETY, SECURITY NOR ENVIRONMENTAL CONCERNS RELATED TO ACTUAL CONSTRUCTION MEANS, METHODS OR PROCEDURES. THE OWNER AND THE POOL CONTRACTOR SHALL SEEK ADVICE FROM PROFESSIONALS SKILLED IN THESE DISCIPLINES IF NECESSARY.

9. ANY MATERIALS, MEANS, METHODS OR PROCEDURES NOT DEPICTED IN THESE CONSTRUCTION DOCUMENTS SHALL BE THE SOLE RESPONSIBILITY OF THE OWNER AND THE POOL CONTRACTOR.

10. THE POOL CONTRACTOR SHALL BE SOLELY RESPONSIBLE FOR TEMPORARY BRACING AND SHORING OF ITEMS INCLUDING, BUT NOT LIMITED TO, EXCAVATIONS, TRENCHES, FORMS AND ERECTED STRUCTURES. THE CONSTRUCTION DOCUMENTS REPRESENT THE FINISHED WORK AND NOT THE MEANS, METHODS OR PROCEDURES.

11. THE POOL CONTRACTOR SHALL BE SOLELY RESPONSIBLE FOR ALL SITE CONDITIONS INCLUDING, BUT NOT LIMITED TO, SAFETY, SECURITY AND ENVIRONMENTAL CONCERNS. THIS REQUIREMENT IS NOT LIMITED TO EMPLOYEES, SUBCONTRACTORS, WORKING HOURS OR THE PHYSICAL EXTENTS OF THE WORK.

12. THE OWNER SHALL DEFEND, INDEMNIFY AND HOLD HARMLESS THE POOL CONTRACTOR FROM ALL LIABILITY IN CONNECTION WITH THE PERFORMANCE OF WORK EXCEPT FOR LIABILITY ARISING FROM THE SOLE NEGLIGENCE OF THE POOL CONTRACTOR.

13. THE OWNER AND THE POOL CONTRACTOR ACKNOWLEDGE THAT THESE CONSTRUCTION DOCUMENTS INCLUDE CONCEPTS THAT ARE SUBJECT TO THE SITE CONDITIONS. THE SITE CONDITIONS MAY REQUIRE MODIFICATIONS TO THE ACTUAL CONSTRUCTION OF THE PROJECT TO SATISFY THE INTENT OF THE CONCEPTS.

14. THESE DOCUMENTS ARE NOT APPROVED FOR PERMITTING OR CONSTRUCTION WITHOUT A STAMP AND SIGNATURE OF THE ENGINEER IN THE TITLE BLOCK OF EACH SHEET.

15. ANCHOR BOLTS, EMBEDS AND INSERTS FOR EQUIPMENT SPECIFIED BY OTHERS SHALL BE DESIGNED BY A QUALIFIED ENGINEER WITH SHOP DRAWINGS SUBMITTED TO THE POOL CONTRACTOR FOR REVIEW.

16. IF CHANGES ARE REQUESTED BY THE POOL CONTRACTOR, NEW CONSTRUCTION DOCUMENTS MAY BE REQUIRED FOR CONSTRUCTION AND SUBMITTAL TO THE AUTHORITIES HAVING JURISDICTION. THE OWNER SHALL PAY FOR THE POOL CONTRACTOR'S TIME AND EXPENSE TO PREPARE THE CONSTRUCTION DOCUMENTS AND THE POOL CONTRACTOR SHALL PROCESS THE PERMITS.

17. BY THE USE OF THESE PLANS, THE USER ACKNOWLEDGES THAT HE/SHE HAS READ AND UNDERSTANDS ALL OF THE INFORMATION INCLUDED HEREIN.

18. REFERENCES IN BRACKETS [...] INDICATE SPECIFIC STANDARDS, CODES, ORDINANCES, REGULATIONS AND AMENDMENTS BY THE AUTHORITIES HAVING JURISDICTION.

19. ALL STANDARDS, CODES, ORDINANCES, REGULATIONS AND AMENDMENTS BY THE AUTHORITIES HAVING JURISDICTION SHALL BE THE LATEST EDITION ALTHOUGH NO GUARANTEE IS MADE THAT REFERENCES IN BRACKETS [...] WILL MATCH THE LATEST EDITION.

20. ALL CONSTRUCTION SHALL CONFORM TO:
IBC - INTERNATIONAL BUILDING CODE
STATE AMENDMENTS TO THE IBC
LOCAL AMENDMENTS TO THE IBC
OTHER REQUIREMENTS OF THE AUTHORITIES HAVING JURISDICTION

21. THE POOL CONTRACTOR SHALL IMMEDIATELY NOTIFY THE ARCHITECT AND ENGINEER OF ALL ERRORS, OMISSIONS AND/OR CONFLICTS BETWEEN STANDARDS, CODES, ORDINANCES, REGULATIONS, AMENDMENTS BY THE AUTHORITIES HAVING JURISDICTION, DRAWINGS, SPECIFICATIONS, CONSTRUCTION DOCUMENTS AND/OR CONTRACT DOCUMENTS. THE POOL CONTRACTOR SHALL NOT PROCEED WITH ANY WORK AFFECTED BY THE ISSUE(S) UNTIL THEY ARE RESOLVED BY THE ARCHITECT AND/OR ENGINEER.

GENERAL NOTES

22. THE HIERARCHY OF CONTRACT DOCUMENTS SHALL FOLLOW THE AIA 'GUIDE FOR SUPPLEMENTARY CONDITIONS' AND HIGHER COST CONDITIONS SHOULD GOVERN WHERE CONFLICTS OCCUR.

23. THE POOL CONTRACTOR SHALL VERIFY ALL DIMENSIONS, ELEVATIONS AND SITE CONDITIONS AND SHALL IMMEDIATELY NOTIFY THE ARCHITECT AND ENGINEER OF ALL DISCREPANCIES PRIOR TO STARTING WORK.

24. IF A SPECIFIC DETAIL OR SPECIFICATION IS NOT PROVIDED THEN CONSTRUCTION SHALL BE THE SAME AS FOR SIMILAR WORK. THE POOL CONTRACTOR SHOULD CLARIFY OMISSIONS WITH THE ARCHITECT AND ENGINEER.

25. WRITTEN DIMENSIONS SHALL TAKE PRECEDENCE OVER CALCULATED DIMENSIONS THAT SHALL TAKE PRECEDENCE OVER SCALED DIMENSIONS.

26. WE HAVE PREPARED THESE DRAWINGS IN RELIANCE ON INFORMATION PROVIDED BY THE CLIENT. THE POOL CONTRACTOR IS RESPONSIBLE FOR VALIDATING THE SITE CONDITIONS AND OBTAINING ADDITIONAL DETAILS AND/OR CALCULATIONS SHOULD THE SITE CONDITIONS BE IN CONFLICT WITH THESE DRAWINGS.

SOILS

1. A SOILS REPORT MAY BE REQUIRED BY THE AUTHORITY HAVING JURISDICTION OVER THIS PROJECT. IF A VALID SOILS REPORT IS AVAILABLE THEN ALL CONSTRUCTION SHALL CONFORM TO THE RECOMMENDATIONS THEREIN. IF A VALID SOILS REPORT IS NOT AVAILABLE THEN A QUALIFIED GEOLOGIST OR SOILS ENGINEER SHOULD MAKE SITE SPECIFIC RECOMMENDATIONS AS TO SETTLEMENT POTENTIAL, EXPANSIVE AND CORROSIVE SOIL POTENTIAL, SLOPE CREEP AND STABILITY, ALLOWABLE FOUNDATION PRESSURE AND OTHER FACTORS.

2. THE BOTTOM OF EXCAVATIONS SHALL NOT SLOPE TOWARD FOUNDATIONS OF STRUCTURES.

3. EXCAVATIONS AND TRENCHING MAY BE SUBJECT TO CAVING OR SLOUGHING. SHORING OR BACKCUTS AT 2:1 OR 1:1 SLOPES MAY BE REQUIRED. THE POOL CONTRACTOR DOES NOT PROVIDE SAFETY ENGINEERING, CONSULTATION OR REVIEW. SAFETY IS THE RESPONSIBILITY OF THE OWNER.

4. AN EXCAVATION INSPECTION IS REQUIRED BY A QUALIFIED GEOLOGIST OR SOILS ENGINEER PRIOR TO INSTALLING A SUBDRAIN SYSTEM, REINFORCING STEEL AND/OR PLUMBING. THE POOL CONTRACTOR RESERVED THE RIGHT TO REQUIRE A SOILS FIELD REPORT TO BE PREPARED AT THE OWNER'S EXPENSE AFTER EXCAVATION IS COMPLETE IF THEY DETERMINE THAT UNEXPECTED CONDITIONS MAY WARRANT FURTHER INVESTIGATION.

5. THE POOL CONTRACTOR IS NOT RESPONSIBLE FOR ADDITIONAL SERVICES, EXPENSES OR DELAYS RESULTING FROM INADEQUATE DESIGN DUE TO UNFORSEEN SUBSURFACE CONDITIONS SUCH AS LOW BEARING CAPACITY, SETTLEMENT, GROUNDWATER, UTILITIES, ETC.

6. THE OWNER IS RESPONSIBLE FOR ALL COSTS OF SOILS INVESTIGATION, LABORATORY WORK, REPORTS, FIELD REPORTS, AND ADDITIONAL FEES REQUIRED BY THE AUTHORITY HAVING JURISDICTION OVER THE PROJECT.

7. HYDROSTATIC PRESSURE RELIEF VALVES SHALL BE INSTALLED.

8. MOST STRUCTURES SETTLE AND CRACK WITHOUT STRUCTURAL FAILURE; HOWEVER, WATERSHAPES THAT SETTLE, DIFFERENTIALLY SETTLE, TILT, AND/OR CRACK DUE TO SOILS OR SEISMICITY MAY LEAK AND FAILURES MAY RESULT OR PARTIAL OR TOTAL FUNCTIONAL AND ECONOMIC LOSS. THE POOL CONTRACTOR DOES NOT WARRANTY, GUARANTEE OR INSURE AGAINST LOSSES DUE TO SOILS AND SEISMICITY.

9. FROST DEPTH: 3'-0"

OWNER'S CERTIFICATE

I (WE) HEREBY CERTIFY THAT A REGISTERED SOILS ENGINEER OR GEOLOGIST HAS BEEN OR WILL BE RETAINED TO SUPERVISE OVER ALL GRADING ACTIVITY AND ADVISE ON THE COMPACTION AND STABILITY OF THE SITE.

SIGNATURE DATE

SUMMIT CLUB POOL AND SPA 568 BEDFORD ROAD ARMONK, NY 10504

SCHEDULE

ID	DESCRIPTION	QTY	FILTER RATE (GPM)	TURN OVER (MIN)	VOLUME (GAL)	SURFACE AREA (SF)	DEPTHS (FT)	PERIMETER LENGTH (FT)	MAXIMUM USER CAPACITY	USER CAPACITY BASIS	MAX TEMP (°F)	OTHER FEATURE PUMPS	SUB SURFACE LIGHTING	NOTES
POL	POOL	1	262	360	94,278	3,690	7"-4'-0"	258	246	15 SF PER USER	84	N/A	YES	
SPA	SPA	1	100	30	2,992	150	3'-9"	50	15	10 SF PER USER	104	YES	YES	

811 NOTES

1. CALL 811 FROM ANYWHERE IN THE USA AND YOUR CALL WILL BE ROUTED TO YOUR LOCAL ONE-CALL CENTER WHERE OPERATORS WILL ASK YOU FOR THE LOCATION OF YOUR DIGGING/DRILLING JOB AND ROUTE YOUR CALL TO THE AFFECTED UTILITY COMPANIES. YOUR LOCAL UTILITY COMPANIES WILL THEN SEND A PROFESSIONAL LOCATOR TO YOUR JOB TO MARK CONFLICTS WITHIN A FEW DAYS.
2. CALL AT LEAST 3 DAYS BEFORE DIGGING OR DRILLING TO AVOID SERIOUS FINES AND REPAIR EXPENSES.
3. PROVIDE:
ADDRESS, CITY, COUNTY
FOREMAN'S NAME, PHONE NUMBER, COMPANY
NATURE OF WORK, DATE WORK WILL BEGIN
PERMIT NUMBER.
4. MARK THE PLANNED EXCAVATION AREAS WITH WHITE PAINT. PAINT SHALL BE WATER-BASED QUIK-MARK BY KRYLON.
5. DIGGING/DRILLING REQUIREMENTS VARY DEPENDING ON THE SPECIFIC CITY, COUNTY AND STATE LAWS. COLOR CODES MAY VARY AND LOCAL REQUIREMENTS SHALL SUPERSEDE THIS GENERAL WARNING. FOR MORE INFORMATION, CHECK OUT THE COMMON GROUND ALLIANCE AT WWW.CALL811.COM.
6. COLOR KEY:
WHITE - PROPOSED EXCAVATION
PINK - TEMP. SURVEY MARKINGS
RED - ELECTRIC
YELLOW - GAS/OIL/STEAM
ORANGE - COMMUNICATIONS/CATV
BLUE - WATER
PURPLE - RECLAIMED WATER
GREEN - SEWER

811 Know what's below. Call before you dig.

D-01 DIGGING/DRILLING ALERT

CALL 811 BEFORE YOU DIG/DRILL!

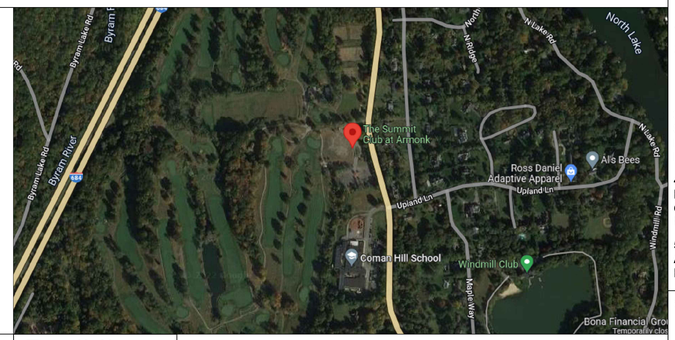

D-02 VICINITY MAP

SHEET INDEX

SHEET NUMBER	SHEET X OF Y	SHEET DESCRIPTION
W-01	SHEET 1 OF 10	COVER
W-02	SHEET 2 OF 10	POOL & SPA DIMENSION PLAN
W-03	SHEET 3 OF 10	POOL & STAIR SECTIONS
W-04	SHEET 4 OF 10	SPA PLAN & SECTIONS
W-05	SHEET 5 OF 10	MISC. SECTION DETAILS, DEPTH MARKER SCHEDULE
W-06	SHEET 6 OF 10	PLUMBING PLAN, EQUIPMENT SCHEDULE
W-07	SHEET 7 OF 10	EQUIPMENT PAD SCHEMATIC DIAGRAM, FLUID CALCULATIONS
W-08	SHEET 8 OF 10	NOTES
W-09	SHEET 9 OF 10	EQUIPMENT SPECIFICATIONS
W-10	SHEET 10 OF 10	EQUIPMENT SPECIFICATIONS

SPECIAL INSPECTION

1. SPECIAL INSPECTION IS REQUIRED AND DESCRIBED ON SHEET W-09 STRUCTURAL NOTES.

SUCTION OUTLET COVERS

1. THE WATERSHAPE(S) SHALL BE IMMEDIATELY CLOSED AND REPAIRED IF A SUCTION OUTLET COVER, FRAME, OR FASTENER IS MISSING, LOOSE, BROKEN, OR OTHERWISE DAMAGED.
2. PLASTIC COVERS SHALL BE REPLACED BY AN AUTHORIZED INSTALLER EVERY FIVE (5) YEARS.

ABSOLUTELY NO DIVING

1. THE WATERSHAPE(S) ARE NOT DESIGNED FOR DIVING. DIVING INTO A SHALLOW BODY OF WATER MAY RESULT IN SERIOUS INJURY AND/OR DEATH. THE POOL CONTRACTOR IS NOT RESPONSIBLE FOR INJURIES OR DEATH DUE TO DIVING, JUMPING, HORSEPLAY, SLIP AND FALL, OR OTHER ACCIDENTS.

SAFETY BARRIERS

1. SAFETY BARRIERS AND EQUIPMENT, INCLUDING FENCING, GATES, AUTOMATIC SAFETY COVERS, IN-WATER ALARMS, PERIMETER ALARMS, SELF-CLOSING/LATCHING DOORS, DOOR ALARMS, AND/OR OTHER DEVICES ARE OR MAY BE REQUIRED BUT NOT SHOWN IN THESE DRAWINGS. THEY ARE THE RESPONSIBILITY OF THE OWNER AND GC IS NOT RESPONSIBLE FOR INJURIES OR DEATH DUE TO INADEQUATE OR POORLY MAINTAINED SAFETY BARRIERS OR EQUIPMENT.

HIGH TRACTION SURFACES

1. STANDARD: ANSI/NFSI B101.1 TEST METHOD FOR MEASURING WET STATIC COEFFICIENT OF FRICTION (SCOF) OF COMMON HARD-SURFACE FLOOR MATERIALS.
2. DEFINITION: HIGH-TRACTION SURFACES ARE DESIGNED TO MITIGATE SLIPPING DURING NORMAL HUMAN AMBULATION BY PROVIDING A REASONABLY SUFFICIENT LEVEL OF AVAILABLE CONTACT FRICTION AND THEY SHALL HAVE A WET SCOF $\mu_2 \geq 0.60$.
3. DECK AND COPING MATERIALS SHALL HAVE HIGH-TRACTION SURFACES AND THE OWNERS SHALL MONITOR THE SCOF REGULARLY AND MAINTAIN CLEANLINESS TO PREVENT SLIPS AND FALLS.

SUMMIT CLUB
568 BEDFORD ROAD
ARMONK, NY 10504

DI
74 HICKORY LANE
BETHELHEM, CT 06751
860-274-7903

1. ABSOLUTELY NO DIVING ALLOWED.
2. SAFETY BARRIERS SHALL BE INSTALLED AND MAINTAINED BY THE OWNERS TO PREVENT UNAUTHORIZED ACCESS.
3. SUCTION OUTLET COVERS SHALL BE MAINTAINED AND REPLACED BY THE OWNERS TO PREVENT ENTRAPMENT.
4. WALKING SURFACES SHALL BE MAINTAINED BY THE OWNERS TO PREVENT SLIPS AND FALLS.
5. SEE SHEET W-01 FOR ADDITIONAL SAFETY REQUIREMENTS.

SYMBOLS

ISSUE

MARK	DATE	DESCRIPTION
AC	10/05/22	REVISIONS
AC	9/28/22	REVISIONS
AC	8/31/22	REVISIONS
AC	6/17/22	REVISIONS
SM	5/23/22	DOCUMENT

COVER SHEET

W-01

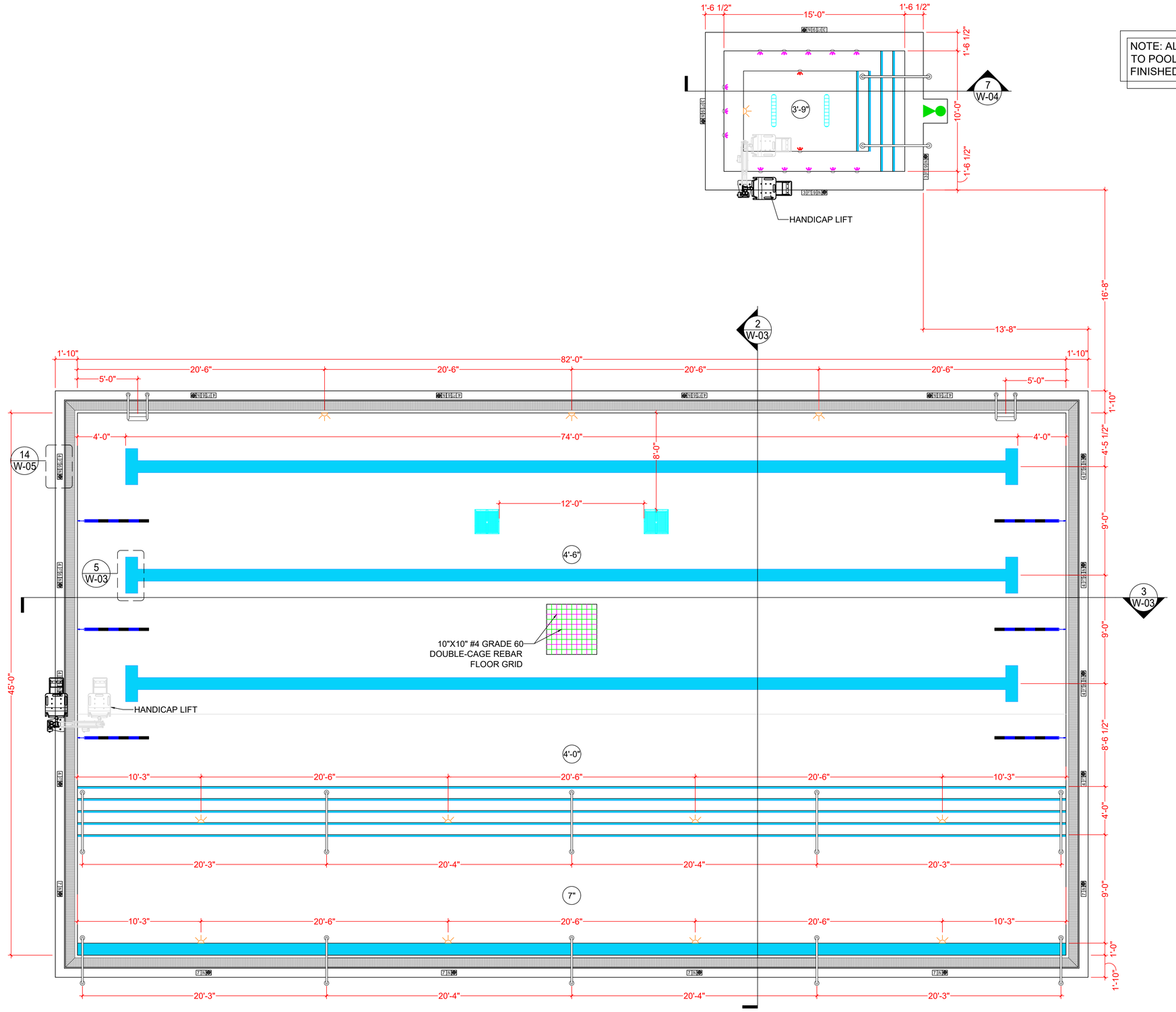

1 POOL AND SPA PLAN
SCALE: 1/4"=1'-0"

NOTE: ALL DIMENSIONS TO POOL WALLS ARE TO FINISHED FACE, U.O.N.

SUMMIT CLUB
568 BEDFORD ROAD
ARMONK, NY 10504

74 HICKORY LANE
BETHELHEM, CT 06751
860-274-7903

1. ABSOLUTELY NO DIVING ALLOWED.
2. SAFETY BARRIERS SHALL BE INSTALLED AND MAINTAINED BY THE OWNERS TO PREVENT UNAUTHORIZED ACCESS.
3. SUCTION OUTLET COVERS SHALL BE MAINTAINED AND REPLACED BY THE OWNERS TO PREVENT ENTRAPMENT.
4. WALKING SURFACES SHALL BE MAINTAINED BY THE OWNERS TO PREVENT SLIPS AND FALLS.
5. SEE SHEET W-01 FOR ADDITIONAL SAFETY REQUIREMENTS.

SYMBOLS

- SKIMMER
- JET RETURN
- SPA RETURN
- AUTOFILL
- LED LIGHT
- SPA DRAIN
- POOL MAIN DRAIN

ISSUE

MARK	DATE	DESCRIPTION
AC	10/05/22	REVISIONS
AC	9/28/22	REVISIONS
AC	8/31/22	REVISIONS
AC	6/17/22	REVISIONS
SM	5/23/22	DOCUMENT

POOL AND SPA PLAN

W-02

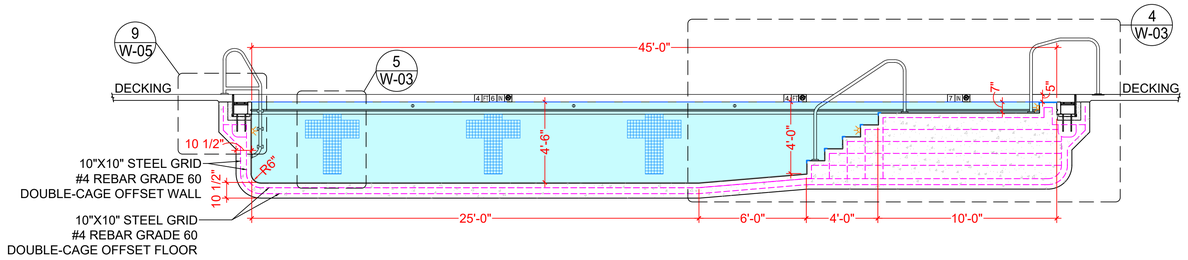

2 POOL SECTION
SCALE: 1/4"=1'-0"

NOTE: ALL DIMENSIONS TO POOL WALLS ARE TO FINISHED FACE, U.O.N.

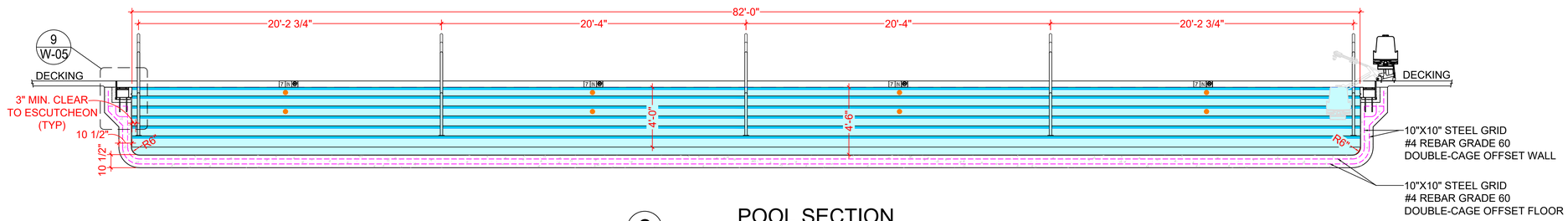

3 POOL SECTION
SCALE: 1/4"=1'-0"

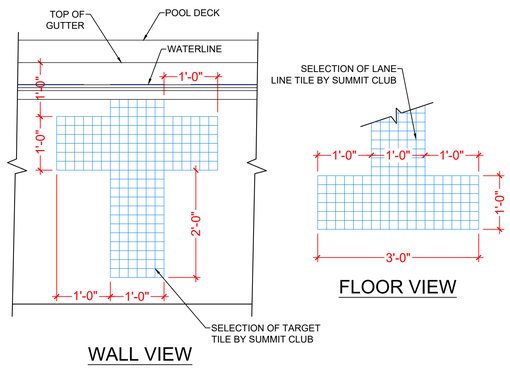

5 LANE TILE DIMENSIONS
SCALE: 3/4"=1'-0"

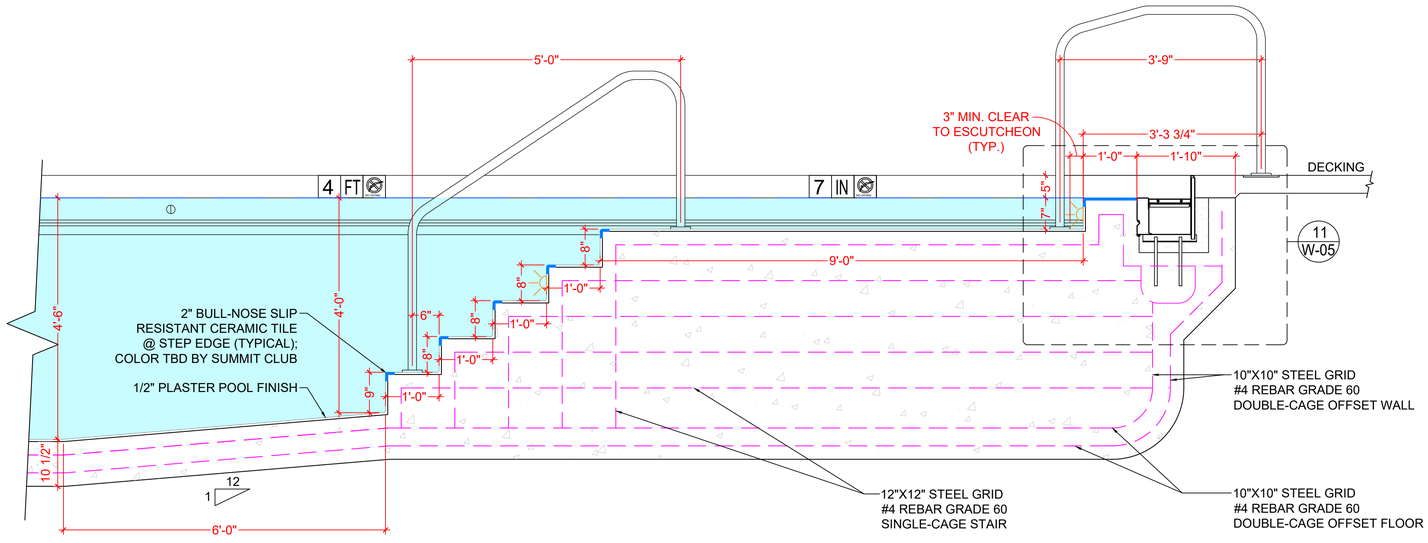

4 STAIR SECTION
SCALE: 3/4"=1'-0"

SUMMIT CLUB
568 BEDFORD ROAD
ARMONK, NY 10504

DI
74 HICKORY LANE
BETHELHEM, CT 06751
860-274-7903

1. ABSOLUTELY NO DIVING ALLOWED.
2. SAFETY BARRIERS SHALL BE INSTALLED AND MAINTAINED BY THE OWNERS TO PREVENT UNAUTHORIZED ACCESS.
3. SUCTION OUTLET COVERS SHALL BE MAINTAINED AND REPLACED BY THE OWNERS TO PREVENT ENTRAPMENT.
4. WALKING SURFACES SHALL BE MAINTAINED BY THE OWNERS TO PREVENT SLIPS AND FALLS.
5. SEE SHEET W-01 FOR ADDITIONAL SAFETY REQUIREMENTS.

SYMBOLS

ISSUE

MARK	DATE	DESCRIPTION
AC	10/05/22	REVISIONS
AC	9/28/22	REVISIONS
AC	8/31/22	REVISIONS
AC	6/17/22	REVISIONS
SM	5/23/22	DOCUMENT

POOL SECTIONS
STAIR SECTION

W-03

NOTE: ALL DIMENSIONS TO POOL WALLS ARE TO FINISHED FACE, U.O.N.

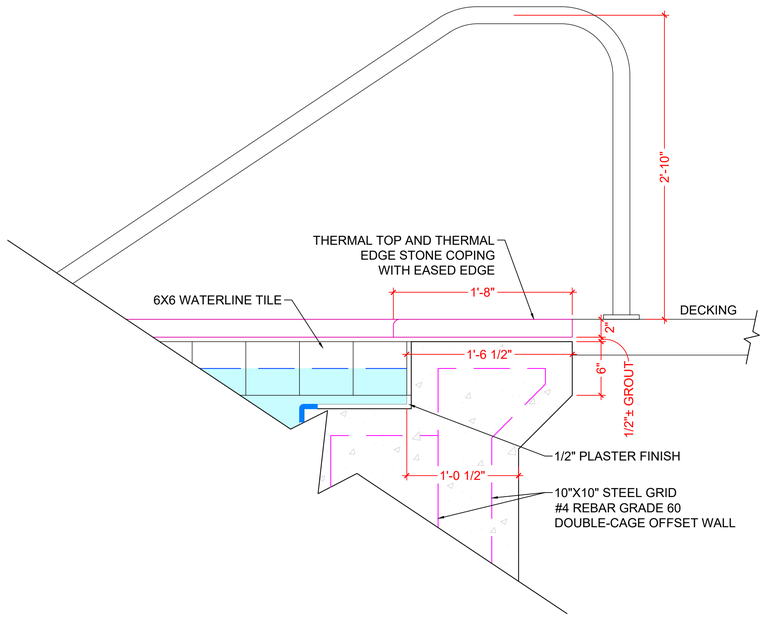

8 SPA COPING DETAIL
SCALE: 1-1/2"=1'-0"

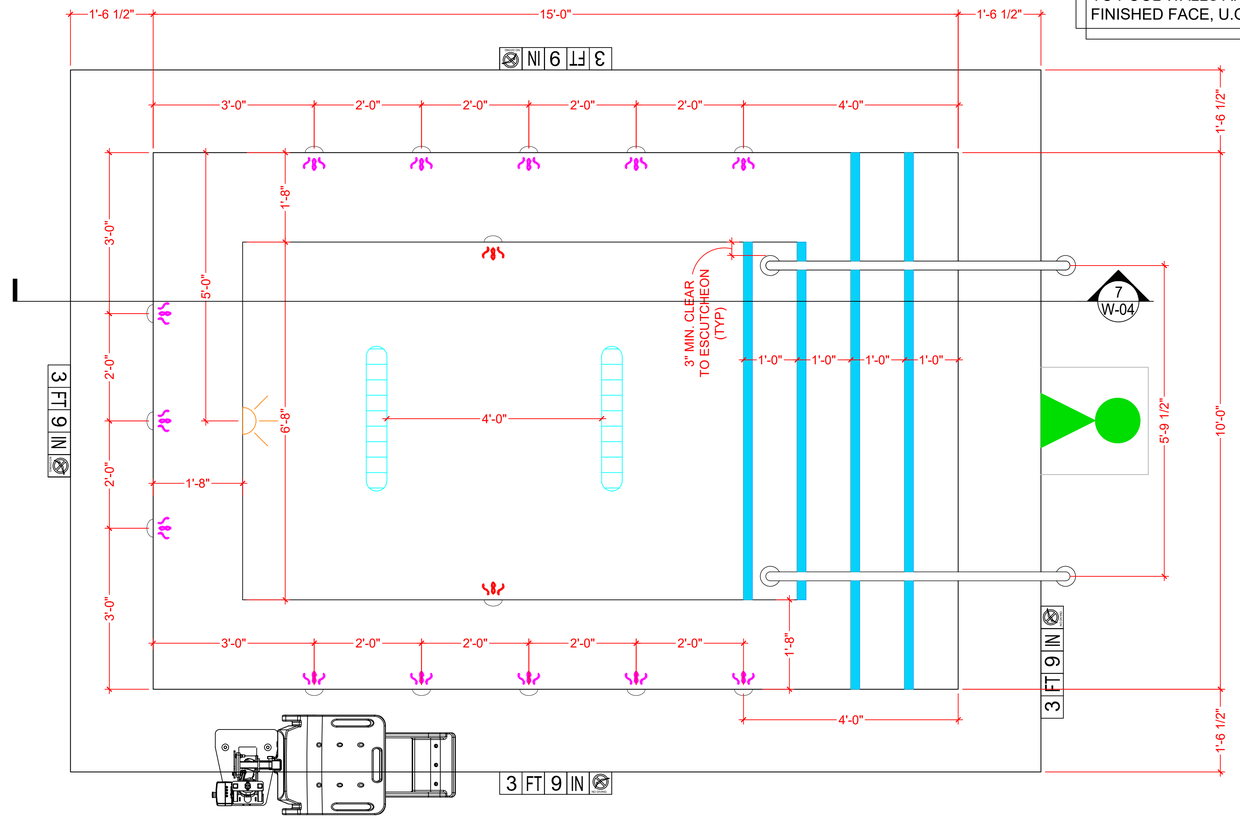

6 SPA PLAN
SCALE: 3/4"=1'-0"

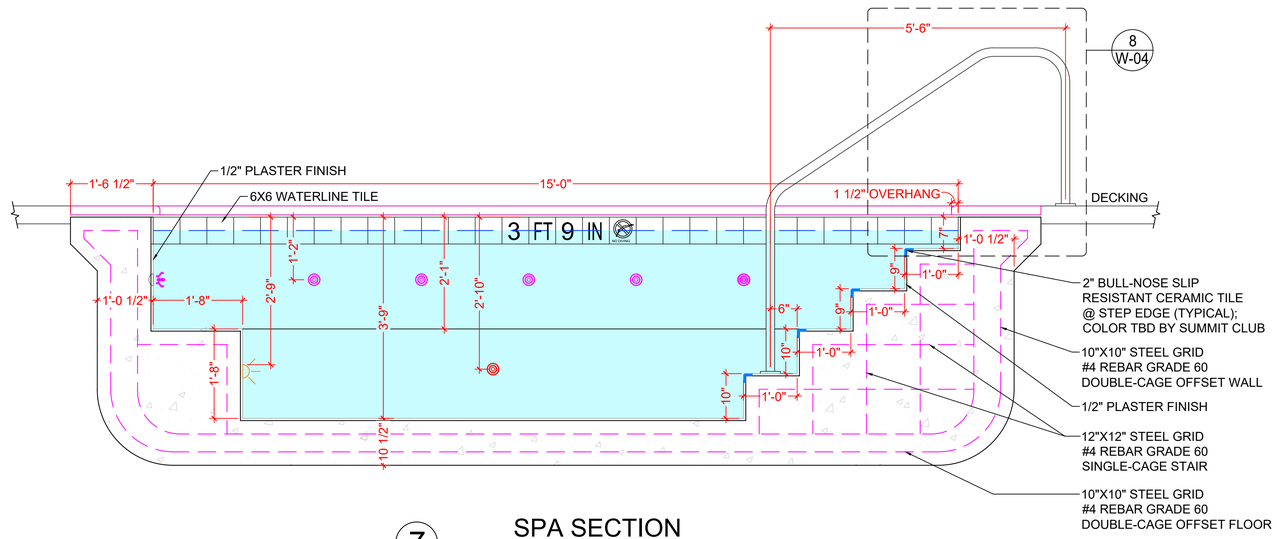

7 SPA SECTION
SCALE: 3/4"=1'-0"

SUMMIT CLUB
568 BEDFORD ROAD
ARMONK, NY 10504

74 HICKORY LANE
BETHELHEM, CT 06751
860-274-7903

1. ABSOLUTELY NO DIVING ALLOWED.
2. SAFETY BARRIERS SHALL BE INSTALLED AND MAINTAINED BY THE OWNERS TO PREVENT UNAUTHORIZED ACCESS.
3. SUCTION OUTLET COVERS SHALL BE MAINTAINED AND REPLACED BY THE OWNERS TO PREVENT ENTRAPMENT.
4. WALKING SURFACES SHALL BE MAINTAINED BY THE OWNERS TO PREVENT SLIPS AND FALLS.
5. SEE SHEET W-01 FOR ADDITIONAL SAFETY REQUIREMENTS.

SYMBOLS

- SKIMMER
- JET RETURN
- SPA RETURN
- AUTOFILL
- LED LIGHT
- SPA DRAIN
- POOL MAIN DRAIN

ISSUE

MARK	DATE	DESCRIPTION
AC	10/05/22	REVISIONS
AC	9/28/22	REVISIONS
AC	8/31/22	REVISIONS
AC	6/17/22	REVISIONS
SM	5/23/22	DOCUMENT

SPA PLAN
SPA SECTION
SPA DETAILS

W-04

NOTE: ALL DIMENSIONS TO POOL WALLS ARE TO FINISHED FACE, U.O.N.

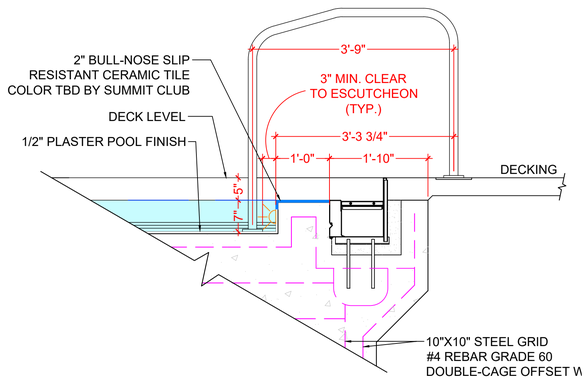

11 POOL ENTRY WAY SECTION
SCALE: 3/4"=1'-0"

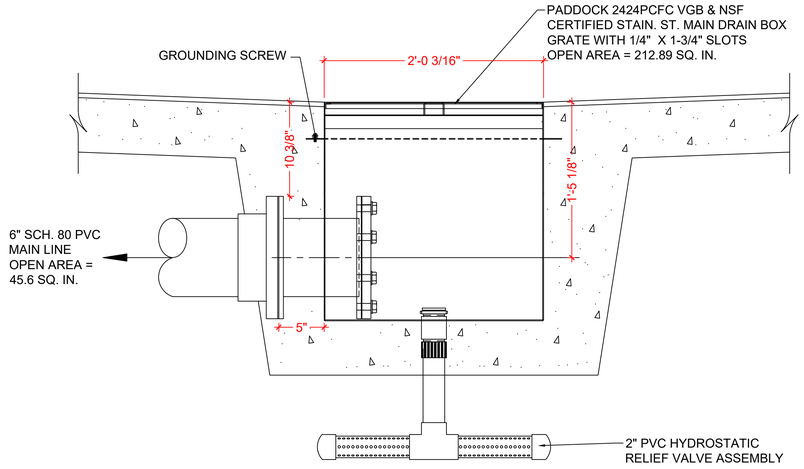

10 POOL STAIN. ST. MAIN DRAIN BOX SECTION
SCALE: 1-1/2"=1'-0"

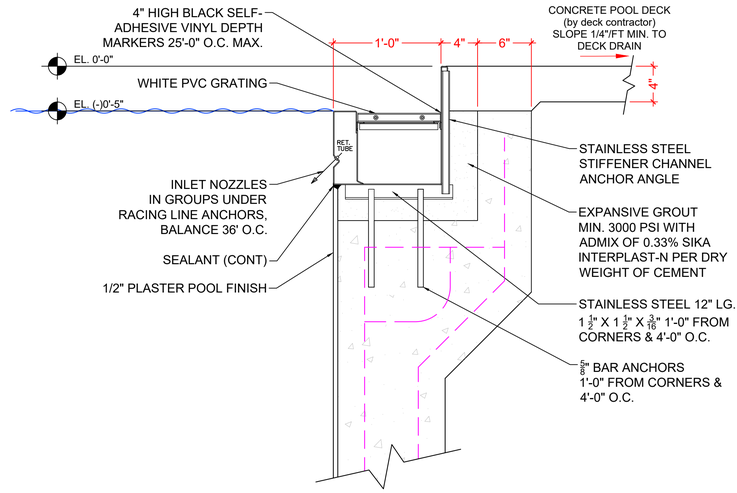

9 TYPICAL POOL WALL SECTION
SCALE: 1-1/2"=1'-0"

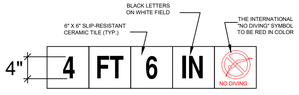

DEPTH MARKER SCHEDULE	
QTY	DEPTH
MAIN POOL	
6	7 IN
2	4 FT
10	4 FT 6 IN
SPA	
7	3 FT 9 IN

14 DEPTH MARKERS @ DECK
SCALE: 3/4"=1'-0"

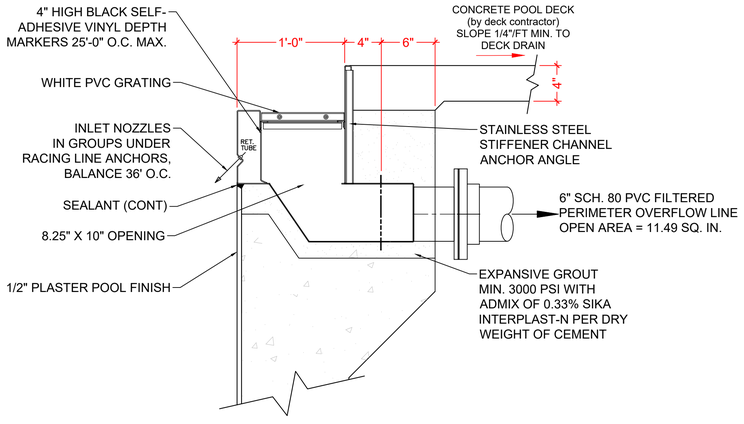

13 POOL OVERFLOW CONVERTER SECTION
SCALE: 1-1/2"=1'-0"

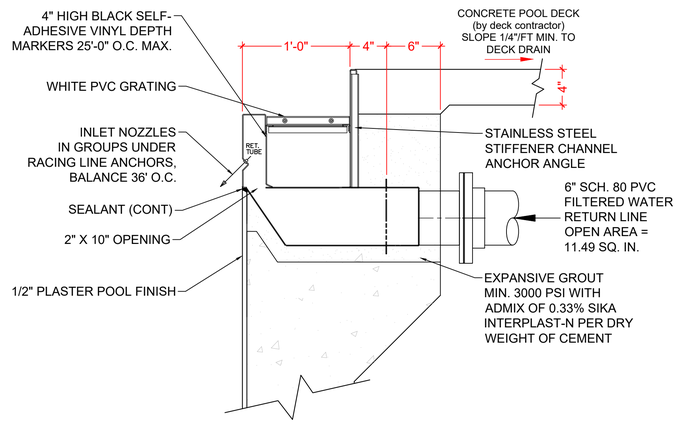

12 TYPICAL POOL RETURN CONVERTER SECTION
SCALE: 1-1/2"=1'-0"

SUMMIT CLUB
568 BEDFORD ROAD
ARMONK, NY 10504

DI
74 HICKORY LANE
BETHELHEM, CT 06751
860-274-7903

1. ABSOLUTELY NO DIVING ALLOWED.
2. SAFETY BARRIERS SHALL BE INSTALLED AND MAINTAINED BY THE OWNERS TO PREVENT UNAUTHORIZED ACCESS.
3. SUCTION OUTLET COVERS SHALL BE MAINTAINED AND REPLACED BY THE OWNERS TO PREVENT ENTRAPMENT.
4. WALKING SURFACES SHALL BE MAINTAINED BY THE OWNERS TO PREVENT SLIPS AND FALLS.
5. SEE SHEET W-01 FOR ADDITIONAL SAFETY REQUIREMENTS.

SYMBOLS

ISSUE

MARK	DATE	DESCRIPTION
AC	10/05/22	REVISIONS
AC	9/28/22	REVISIONS
AC	8/31/22	REVISIONS
AC	6/17/22	REVISIONS
SM	5/23/22	DOCUMENT

POOL DETAILS

W-05

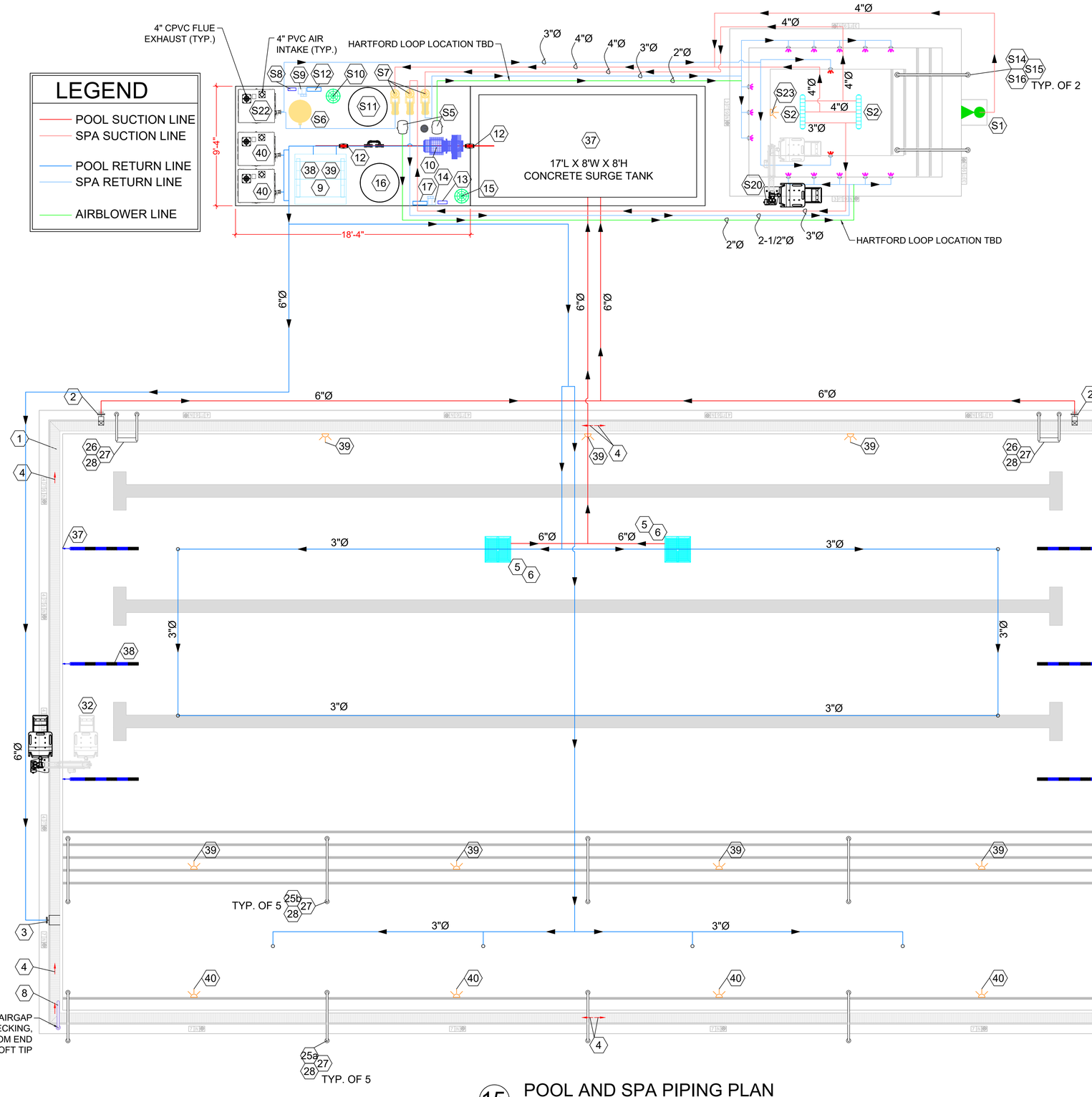

15 POOL AND SPA PIPING PLAN

SCALE: 1/4"=1'-0"

MAIN POOL EQUIPMENT LIST

PERIMETER OVERFLOW AND RECIRCULATION SYSTEM

NO.	QTY.	CAT. NO.	DESCRIPTION
1	±258'	R300TG	STR. 9 1/4" TYPE 304 ST.ST. RECIRC. SYSTEM W/ HDPE GRATING
2	2	-	6" PERIMETER OVERFLOW CONVERTER
3	1	-	6" FILTERED WATER RETURN CONVERTER
4	8	9018	JET FLOW GUTTER WASH FITTING
5	2	2424ESMD -FC-10	24"X24"X24"DP X 12GA. ST.ST. SUMP, WITH VGB CERTIFIED ST.ST. COVER & 8" AVRD & CONNECTION
6	2	8703-S	COMMERCIAL HYDROSTATIC RELIEF VALVE
7	1	6610	PADDOCK WATER LEVEL CONTROLLER
8	1	A41242-0	SR SMITH FILLSPOUT

FILTRATION EQUIPMENT

NO.	QTY.	CAT. NO.	DESCRIPTION
9	1	6725-H-1C-4 SS	48"X48" SIDE SHELL DIA. STAINLESS STEEL HORIZONTAL SAND FILTER WITH MANUAL LINKAGE VALVE CONTROL PADDOCK
10	1	340033	PENTAIR PUMP & MOTOR, MODEL EQ-500, 5 H.P. RATED FOR 262 GPM @ 39.4' TDH, 230V, SINGLE PHASE, 60 Hz
11	1	AD075-2303-N01	PENTAIR COMMERCIAL ACU DRIVE XS VFD
12	4	P51530-P0	6" FLOW SENSOR WITH PIPE SADDLE
13	1	9900	SIGNET FLOW METER

CHLORINATION EQUIPMENT

NO.	QTY.	CAT. NO.	DESCRIPTION
14	1	RC-103 SC	CHLORINE LIQUID PUMP ROLA-CHEM
15	1	351-60Ar-S80	CO2 FEEDER
16	1	TC2738DC	CHEM-TAINER 50 GAL DOUBLE WALL CONTAINMENT TANK
17	1	PC2100	CHEMTROL WATER CHEMISTRY CONTROLLER
18	1	LAM3368-NJ NJ/PM-51-NJ	COMMERCIAL TEST SET DPD FREE CHLORINE TYPE (NOT SHOWN)

MAINTENANCE EQUIPMENT

NO.	QTY.	CAT. NO.	DESCRIPTION
19	1	PLF402198	VACUUM HOSE SERVICE KING 1 1/2" HOSE X 75 FT LG.
20	1	RP-222	VACUUM HEAD 22" COMMERCIAL PRO VAC
21	1	SP-10802-Z-3	2" MIP X 1 1/2" HOSE ADAPTOR
22	1	3330	WALL BRUSH & HOLDER
23	1	3348	SKIMMER HEAD
24	1	3367	TELESCOPIC HANDLE, ADJUSTMENT 8' TO 16'

DECK EQUIPMENT

NO.	QTY.	CAT. NO.	DESCRIPTION
25a	5	4718	38" HIGH X 3'-9"LG. ST.ST. HANDRAIL (1RAIL X 2POST)
25b	5	4716	38" HIGH X 5'-0"LG. ST.ST. HANDRAIL (1RAIL X 2POST)
26	5	4716	38" HIGH X 5'-0"LG. ST.ST. HANDRAIL (1RAIL X 2POST)
27	24	4837	ST.ST. ESCUTCHEONS 4.5" DIAM.
28	24	4801	BRONZE WEDGE DECK ANCHOR

SAFETY EQUIPMENT

NO.	QTY.	CAT. NO.	DESCRIPTION
29	1	4707-6	PORTABLE LIFE GUARD CHAIR 304
30	1	4723	LIFE HOOK WITH 16'-0" HANDLE & 4723-1 WALL CLAMPS
31	1	4726	24" LIFE RING BUOY, 50FT 1/4" THROW ROPE, 4730 WALL HOOK
32	1	SR AXS2	HANDICAP LIFT

MISCELLANEOUS EQUIPMENT

NO.	QTY.	CAT. NO.	DESCRIPTION
33	1	-	8' X 8' X 17' DEEP BALANCE TANK WITH 8" M.D. CONN., (2)8" P.O. CONN., 6" PUMP SUCT. CONN. W. SS ANTIVORTEX PLATE
34	1	9767043	WIKA 2 1/2"DIAL, 0-60 PSI, LIQUID FILLED, 1/4" NPT, PRESSURE GAUGE
35	1	9767029	WIKA 2 1/2"DIAL, 30hg-0-60 PSI, LIQUID FILLED, 1/4" NPT, COMPOUND GAUGE
36	2	-	400,000 BTU/HR MIN. GAS-FIRED POOL HEATER PENTAIR ETI 400
37	6	9026	STAINLESS STEEL RECESSED RACING LINE CUP ANCHOR
38	3	-	WAVE QUELLING RACING LINE FOR 82 FT POOL
39	7	JLUW30W150	JANDY PRO SERIES LED UNDERWATER LIGHT 30W @ 150'
40	4	JLUW6W50	JANDY PRO SERIES LED UNDERWATER LIGHT 6W @ 50'

SPA EQUIPMENT LIST

PERIMETER OVERFLOW AND RECIRCULATION SYSTEM

NO.	QTY.	CAT. NO.	DESCRIPTION
S1	1	500/1051	WATERCO 2" SURFACE SKIMMER
S2	2	32CDFL101	AQUA STAR CHANNEL DRAIN 32"
S3	1	A41242-0	SR SMITH FILLSPOUT
S4	13	212-3330	WATERWAY VENTURI T JET HEAD
S5	2	AS6320220F	AIRBLOWER 2HP SILENCER 220V

FILTRATION EQUIPMENT

NO.	QTY.	CAT. NO.	DESCRIPTION
S6	1	CCP520	PENTAIR CLEAN & CLEAR + 520 CARTRIDGE FILTER
S7	3	011056	PENTAIR PUMP & MOTOR, MODEL INTELLIFLO VSF, RATED FOR 100 GPM @ 60' TDH, 230V, 60HZ
S8	2	9900	SIGNET FLOW METER

CHLORINATION EQUIPMENT

NO.	QTY.	CAT. NO.	DESCRIPTION
S9	1	RC-103 SC	CHLORINE LIQUID PUMP ROLA-CHEM
S10	1	351-60Ar-S80	CO2 FEEDER
S11	1	TC2738DC	CHEM-TAINER 50 GAL DOUBLE WALL CONTAINMENT TANK
S12	1	PC2100	CHEMTROL WATER CHEMISTRY CONTROLLER
S13	1	LAM3368-NJ NJ/PM-51-NJ	COMMERCIAL TEST SET DPD FREE CHLORINE TYPE (NOT SHOWN)

DECK EQUIPMENT

NO.	QTY.	CAT. NO.	DESCRIPTION
S14	2	4718	38" HIGH X 5'-6"LG. ST.ST. HANDRAIL (1RAIL X 2POST)
S15	4	4837	ST.ST. ESCUTCHEONS 4.5" DIAM.
S16	4	4801	BRONZE WEDGE DECK ANCHOR

SAFETY EQUIPMENT

NO.	QTY.	CAT. NO.	DESCRIPTION
S17	1	4707-6	PORTABLE LIFE GUARD CHAIR 304
S18	1	4723	LIFE HOOK WITH 16'-0" HANDLE & 4723-1 WALL CLAMPS
S19	1	4726	24" LIFE RING BUOY, 50FT 1/4" THROW ROPE, 4730 WALL HOOK
S20	1	SR AXS2	HANDICAP LIFT

MISCELLANEOUS EQUIPMENT

NO.	QTY.	CAT. NO.	DESCRIPTION
S21	3	P51530-P0	3" FLOW SENSOR WITH PIPE SADDLE
S22	1	-	400,000 BTU/HR MIN. GAS-FIRED POOL HEATER PENTAIR ETI 400
S23	1	JLUW30W150	JANDY PRO SERIES LED UNDERWATER LIGHT 30W @ 150'

GENERAL NOTES:

1. ALL BURIED PIPING BETWEEN POOL AND FILTER IS SCHEDULE 80 PVC PIPE WITH SOLVENT WELD SOCKET FITTINGS.
2. ALL WIRING & GROUNDING CONFORMS TO THE NATIONAL ELECTRICAL CODE. ALL ELECTRICAL CIRCUITS HAVE GROUND FAULT INTERRUPTORS.

BOTH MAIN POOL AND SPA HAVE HIGH RATE PRESSURE SAND FILTERS
WIRING AND GROUNDING CONFORM TO THE NY STATE UNIFORM FIRE PREVENTION AND BUILDING CODE 9 NYCRR SUBTITLE S CHAPTER I & NFPA-70, NEC LATEST ADOPTED STANDARD.

NOTE:
FILTER 48" DIAMETER X 4'-0" SIDE SHELL ST.ST. HORIZONTAL PRESSURE FILTER W/LINKAGE.

PIPING: (1)8" MAIN DRAIN LINE, (2)6" P.O. LINES, (1)4" FILTERED WATER RETURN LINE

1	POOL PERIMETER = 258'-0"
2	POOL AREA = 3,690 SQ.FT.
3	POOL CAPACITY = 94,278 GALS
4	FLOW RATE FOR 6 HR. TURNOVER = 262 GPM
5	TOTAL RECIRCULATION RATE = 262 GPM
6	FILTER AREA = 19.15 SQ.FT.
7	FILTER RATE PER SQ.FT. OF FILTER AREA = 13.7 GPM

1	SPA PERIMETER = 50'-4"
2	SPA AREA = 152 SQ.FT.
3	SPA CAPACITY = 2,992 GALS
4	FLOW RATE FOR 30 MIN. TURNOVER = 100 GPM
5	TOTAL RECIRCULATION RATE = 100 GPM
6	FILTER AREA = 520 SQ.FT.
7	FILTER RATE PER SQ.FT. OF FILTER AREA = 0.2 GPM

SUMMIT CLUB
568 BEDFORD ROAD
ARMONK, NY 10504

74 HICKORY LANE
BETHELHEM, CT 06751
860-274-7903

1. ABSOLUTELY NO DIVING ALLOWED.
2. SAFETY BARRIERS SHALL BE INSTALLED AND MAINTAINED BY THE OWNERS TO PREVENT UNAUTHORIZED ACCESS.
3. SUCTION OUTLET COVERS SHALL BE MAINTAINED AND REPLACED BY THE OWNERS TO PREVENT ENTRAPMENT.
4. WALKING SURFACES SHALL BE MAINTAINED BY THE OWNERS TO PREVENT SLIPS AND FALLS.
5. SEE SHEET W-01 FOR ADDITIONAL SAFETY REQUIREMENTS.

SYMBOLS

- SKIMMER
- JET RETURN
- SPA RETURN
- AUTOFILL
- LED LIGHT
- SPA DRAIN
- POOL MAIN DRAIN
- EQUIPMENT KEYNOTE

ISSUE

MARK	DATE	DESCRIPTION
AC	10/05/22	REVISIONS
AC	9/28/22	REVISIONS
AC	8/31/22	REVISIONS
AC	6/17/22	REVISIONS
SM	5/23/22	DOCUMENT

POOL PLUMBING PLAN
EQUIPMENT SCHEDULE

W-06

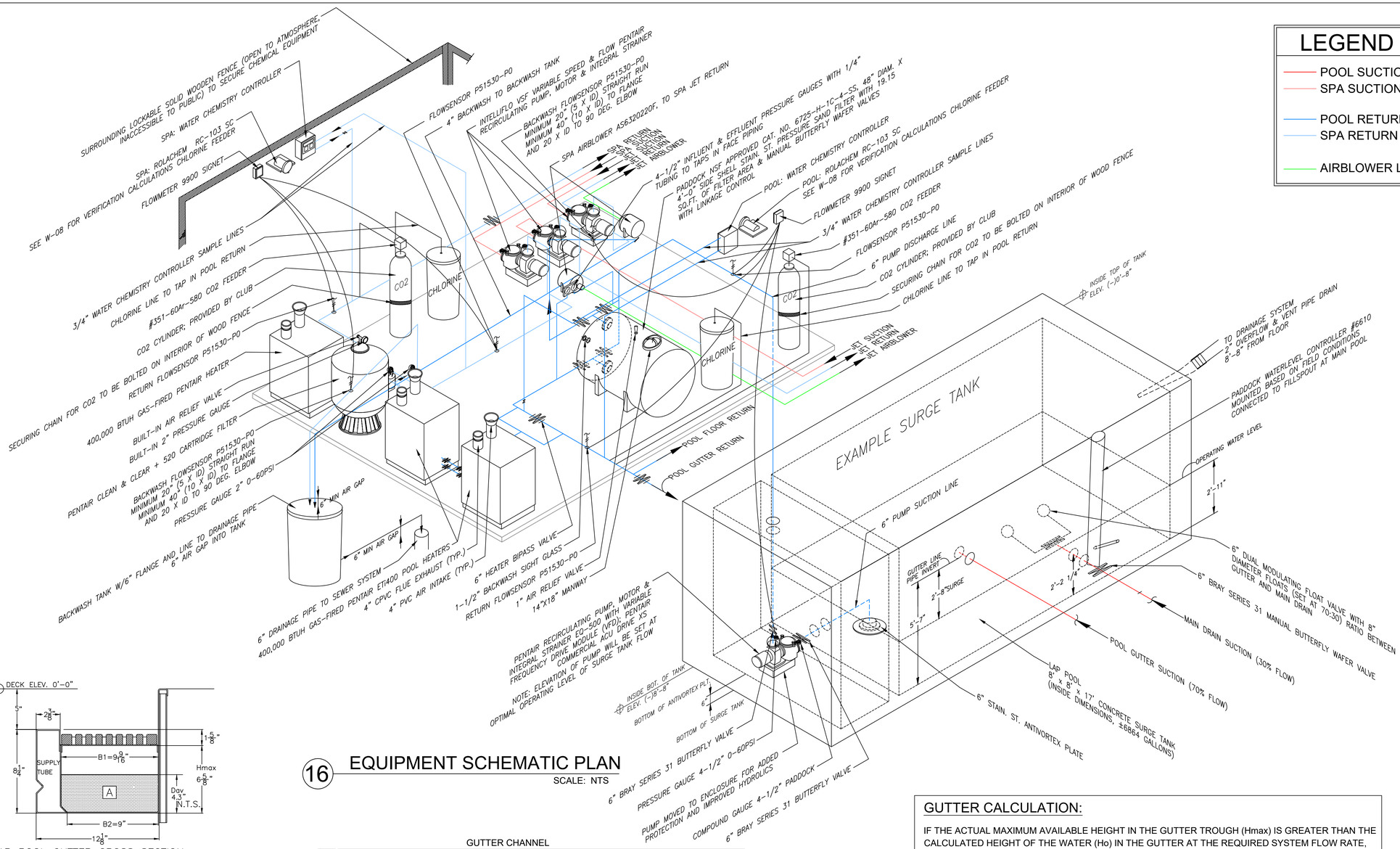

LEGEND

- POOL SUCTION LINE
- SPA SUCTION LINE
- POOL RETURN LINE
- SPA RETURN LINE
- AIRBLOWER LINE

16 EQUIPMENT SCHEMATIC PLAN

SCALE: NTS

LAP POOL GUTTER CROSS SECTION
TYPE 304L LOW CARBON SS 12 GA. #3 FINISH
R300 GUTTER SYSTEM

ST.ST. GUTTER PERIMETER= 258 FT
GUTTER SIZE= 8.25" X 12.125"
NUMBER OF CONVERTERS= 2
SYSTEM FLOW RATE= 262 GPM

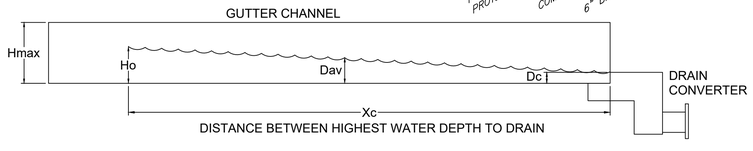

Q = FLOW (CU.FT. / SEC.) AT ONE SIDE OF CONVERTER = (262 GPM / 2 CONVERTERS) / (448.8312 GPM / CU.FT/S) = 0.2919 CU.FT./SEC.

B = EQUIVALENT WIDTH OF CHANNEL = $\frac{\text{AREA OF CHANNEL}}{\text{Hmax}} = \frac{(9.5625 \text{ IN. x } 6.625 \text{ IN.}) - (0.5 \text{ x } 0.5625 \text{ x } 0.5625)}{6.625 \text{ IN}} = 9.539 \text{ IN} =$ 0.7949 FT.

G = RATE OF ACCELERATION DUE TO GRAVITY = 32.2 FT./SEC.²

Dc = $\sqrt[3]{\frac{Q^2}{G \text{ x } B^2}} = \sqrt[3]{\frac{(0.2919)^2}{32.2 \text{ X } (0.8024)^2}} =$ 0.1602 FT. = 1.922 IN.

Dav = $\frac{\text{Hmax + Dc}}{2} = \frac{6.625 \text{ IN.} + 1.922 \text{ IN.}}{2} =$ 4.274 IN. = 0.3561 FT.

F = FRICTION COEFFICIENT = 0.02

Xc = $\frac{\text{GUTTER PERIMETER}}{2 \text{ x \# OF CONVERTERS}} = \frac{258 \text{ FT}}{2 \text{ X } 2} =$ 64.5 FT.

R = AVERAGE HYDROLIC RADIUS = $\frac{\text{WETTED AREA @ Dav}}{\text{WETTED PERIMETER @ Dav}} = \frac{40.71 \text{ SQ. IN.}}{17.78 \text{ IN.}} = 2.290 \text{ IN.} =$ 0.1908 FT.

WINTERIZING PROCEDURE:
1. PUMP DOWN POOL AND SURGE TANK THROUGH EXISTING FILTER SYSTEMS THROUGH BACKWASH STAND PIPE.
2. DRAIN ALL EXISTING FITTINGS & EQUIPMENT AT FILTER PAD.
3. KEEP WATER IN SURGE TANK TO BALANCE HYDROSTATIC PRESSURE AND VERIFY OVERFLOW LINE IS CONTINUALLY OPEN.
4. MONITOR WATER LEVEL IN POOL AND SURGE TANK OVER DURATION OF WINTER.

SURGE TANK DRAINAGE:
- SURGE TANK TO BE DRAINED VIA THE FILTER PUMPS INTO THE BACKWASH LINE VIA 6" AIR GAP.
- IF NECESSARY, DRAIN SURGE TANK WITH PORTABLE ELECTRIC PUMP INTO THE BACKWASH LINE WITH 6" AIR GAP.
- SITE SOIL CONDITIONS PREDICATE TANK STAYS FULL OF WATER DUE TO HYDROSTATIC PRESSURE.

GUTTER CALCULATION:

IF THE ACTUAL MAXIMUM AVAILABLE HEIGHT IN THE GUTTER TROUGH (Hmax) IS GREATER THAN THE CALCULATED HEIGHT OF THE WATER (Ho) IN THE GUTTER AT THE REQUIRED SYSTEM FLOW RATE, THE SIZE OF THE GUTTER IS SUFFICIENT.

CALCULATION:

Ho = $\sqrt{(3 \text{ x } Dc^2) + \frac{F \text{ x } Xc \text{ x } Dc^3}{12 \text{ x } R \text{ x } Dav}} = \sqrt{3 \text{ (0.1602 FT)}^2 + \frac{0.02 \text{ x } 64.5 \text{ FT. x } (0.1602 \text{ FT.})^3}{12 \text{ x } 0.1908 \text{ FT x } 0.3561 \text{ FT.}}} =$ 0.2890 FT. = 3.468 IN.

GUTTER SIZE IS SUFFICIENT; Ho @ 3.468 IN. IS LESS THAN Hmax @ 6.625 IN

LAP POOL SURGE CAPACITY:

REQUIRED SURGE CAPACITY = 1 GAL./SQ.FT. POOL SURFACE AREA = 3690 GALLONS

GUTTER SURGE CAPACITY = $\frac{\text{(Hmax - Ho) x 9.1875 IN.}}{\text{144 SQ. IN/SQ. FT.}}$ x 258 FT x 7.5 GAL/CU.FT. = 390 GALLONS

6" GUTTER PIPE SURGE CAPACITY = $\frac{\text{26 SQ. IN.}}{\text{144 SQ. IN/SQ. FT.}}$ x 94 FT X 7.5 GAL/CU.FT. = 127 GALLONS.

50% GUTTER PIPE SURGE CAPACITY = 0.5 X 127 GAL. = 63.6 GALLONS

SURGE TANK CAPACITY FROM OPERATING WATER LEVEL TO INVERT OF GUTTER PIPE
= 2'8" SURGE LEVEL x TANK L x TANK W x 7.5 GAL/CU.FT.
= 2.667 FT x 8 FT x 17 FT x 7.5 GAL/CU.FT = 2720 GALLONS

TOTAL SURGE CAPACITY = 390 GAL. + 63.6 GAL. + 2720 GAL. = **3174 GALLONS**

SUMMIT CLUB
568 BEDFORD ROAD
ARMONK, NY 10504

74 HICKORY LANE
BETHELHEM, CT 06751
860-274-7903

1. ABSOLUTELY NO DIVING ALLOWED.
2. SAFETY BARRIERS SHALL BE INSTALLED AND MAINTAINED BY THE OWNERS TO PREVENT UNAUTHORIZED ACCESS.
3. SUCTION OUTLET COVERS SHALL BE MAINTAINED AND REPLACED BY THE OWNERS TO PREVENT ENTRAPMENT.
4. WALKING SURFACES SHALL BE MAINTAINED BY THE OWNERS TO PREVENT SLIPS AND FALLS.
5. SEE SHEET W-01 FOR ADDITIONAL SAFETY REQUIREMENTS.

SYMBOLS

ISSUE

MARK	DATE	DESCRIPTION
AC	10/05/22	REVISIONS
AC	9/28/22	REVISIONS
AC	8/31/22	REVISIONS
AC	6/17/22	REVISIONS
SM	5/23/22	DOCUMENT

LAP POOL FILTER SYSTEM SCHEMATIC
LAP POOL SURGE CAPACITY

W-07

FLOW RATE NOTES

1. MAX FLOW RATES FOR ASTM D1785-06 SCH 40 PVC PIPE USING MAX VELOCITY OF 4.5 FPS FOR ANY PLUMBING ON THE SUCTION-SIDE OF A PUMP AND MAX VELOCITY OF 6.5 FPS FOR ANY PLUMBING ON THE DISCHARGE-SIDE OF A PUMP.

NOM SIZE SCH 40 PVC (IN)	SUCTION-SIDE MAX FLOW RATE (GPM)	DISCHARGE-SIDE MAX FLOW RATE (GPM)
3/4	7	11
1	12	18
1-1/4	21	30
1-1/2	29	41
2	47	68
2-1/2	67	97
3	104	150
4	179	258
6	405	585
8	702	1,014
10	1,106	1,598
12	1,570	2,268

2. MAX FLOW RATES FOR ASTM D1785-06 SCH 80 PVC PIPE USING MAX VELOCITY OF 4.5 FPS FOR ANY PLUMBING ON THE SUCTION-SIDE OF A PUMP AND MAX VELOCITY OF 6.5 FPS FOR ANY PLUMBING ON THE DISCHARGE-SIDE OF A PUMP.

NOM SIZE SCH 80 PVC (IN)	SUCTION-SIDE MAX FLOW RATE (GPM)	DISCHARGE-SIDE MAX FLOW RATE (GPM)
3/4	6	9
1	10	15
1-1/4	18	26
1-1/2	25	36
2	41	60
2-1/2	59	86
3	93	134
4	161	233
6	366	528
8	640	925
10	1,008	1,455
12	1,426	2,059

3. MAX FLOW RATES FOR ASTM B88-03 TYPE 'K' COPPER PIPE USING MAX VELOCITY OF 4.5 FPS FOR ANY PLUMBING ON THE SUCTION-SIDE OF A PUMP AND MAX VELOCITY OF 5 FPS FOR ANY PLUMBING ON THE DISCHARGE SIDE OF A PUMP.

NOM SIZE K OR L COPPER (IN)	SUCTION-SIDE MAX FLOW RATE (GPM)	DISCHARGE-SIDE MAX FLOW RATE (GPM)
1/2	3	3
3/4	6	7
1	11	12
1-1/4	17	19
1-1/2	24	27
2	42	47
2-1/2	65	73
3	93	103
4	164	182
6	363	403

4. MAX FLOW RATES FOR ASTM D1785-06 SCH 40 PVC PIPE GRAVITY LINES SLOPED 1/8" OR 1/4" PER FOOT.

NOM SIZE SCH 40 PVC (IN)	MAX FLOW RATE (GPM) AT S=1/8"	MAX FLOW RATE (GPM) AT S=1/4"
1-1/2	4	5
2	7	10
2-1/2	12	17
3	21	30
4	41	58
6	114	162
8	223	315
10	409	579
12	653	924

PLUMBING NOTES

1. ABSOLUTE MAX FLOW VELOCITY IS 8 FPS IN ANY PLUMBING OR EQUIPMENT.

2. FLOW VELOCITIES OF 4.5 FPS OR LESS ARE DESIRED ON THE SUCTION-SIDE OF ANY PUMP. FLOW VELOCITIES OVER 4.5 FPS ON THE SUCTION-SIDE OF ANY PUMP SHALL BE APPROVED BY THE ENGINEER IN WRITING.

3. FLOW VELOCITIES OF 6.5 FPS OR LESS ARE DESIRED ON THE DISCHARGE-SIDE OF ANY PUMP. FLOW VELOCITIES OVER 6.5 FPS ON THE DISCHARGE-SIDE OF ANY PUMP SHALL BE APPROVED BY THE ENGINEER IN WRITING.

CHLORINE FEED RATE CALCULATIONS

MAIN POOL

262 GAL/MIN X 60 MIN/HR X 24 HR/DAY = 377,280 GAL/DAY

GT = (12.5% CHLORINE CONCENTRATION X 10,000) / 10 PPM = 12,500

GPD/GT = 30.18 GALLONS OF CHLORINE SOLUTION PER 24 HOURS

RC-103 SC MAXIMUM FEED RATE PER 24 HOURS = 38 GPD ✓
80% CAPACITY CHECK FOR 10 PPM (MG/L): 30.18/38 = 79% ✓

GT = (12.5% CHLORINE CONCENTRATION X 10,000) / 1 PPM = 125,000

GPD/GT = 3.02 GALLONS OF CHLORINE SOLUTION PER 24 HOURS

RC-103 SC MINIMUM FEED RATE PER 24 HOURS = .38 GPD

SPA

100 GAL/MIN X 60 MIN/HR X 24 HR/DAY = 144,000 GAL/DAY

GT = (11% CHLORINE CONCENTRATION X 10,000) / 10 PPM = 11,000

GPD/GT = 13.09 GALLONS OF CHLORINE SOLUTION PER 24 HOURS

RC-103 SC MAXIMUM FEED RATE PER 24 HOURS = 38 GPD ✓
80% CAPACITY CHECK FOR 10 PPM (MG/L): 13.09/38 = 34% ✓

GT = (11% CHLORINE CONCENTRATION X 10,000) / 1 PPM = 110,000

GPD/GT = 1.31 GALLONS OF CHLORINE SOLUTION PER 24 HOURS

RC-25/53 MINIMUM FEED RATE PER 24 HOURS = .38 GPD

ELECTRICAL NOTES

1. THE FOLLOWING EQUIPMENT IS GROUNDED: UNDERWATER LIGHTING FIXTURES, ALL ELECTRICAL EQUIPMENT WITHIN 5 FEET OF WATER, ALL ELECTRICAL EQUIPMENT ASSOCIATED WITH THE BODIES OF WATER, JUNCTION BOXES, TRANSFORMER ENCLOSURES, GROUND-FAULT CIRCUIT INTERRUPTERS, PANELBOARDS THAT ARE NOT PART OF THE SERVICE EQUIPMENT AND THAT SUPPLY ANY ELECTRICAL EQUIPMENT ASSOCIATED WITH THE BODIES OF WATER.

2. CLEARANCE FROM WATER TO OVERHEAD CONDUCTORS COMPLIES WITH NY SANITARY CODE SECTION 6-1.29, 7.2.1.1 THAT STATES: "OVERHEAD CLEARANCE. NO ELECTRICAL WIRING SHALL PASS OVERHEAD WITHIN A 20' HORIZONTAL DISTANCE OF THE POOL."

3. CLEARANCE FROM WATER TO UNDERGROUND WIRING IS 5' MIN.

4. ALL ELECTRIC OUTLETS WITHIN 20' OF WATER ARE GFCI PROTECTED.

5. ALL LIGHTING FIXTURES, LIGHTING OUTLETS AND FANS WITHIN 5'-10' OF WATER TO ARE GFCI PROTECTED.

6. LIGHTING JUNCTION BOXES ARE 4" MIN. ABOVE HIGHEST POOL DECK. LIGHTING JUNCTION BOXES ARE 4' MIN. FROM WATER. LIGHTING JUNCTION BOXES ARE INTERMATIC PJB4175 (4 LIGHTS PLUS FEEDER CONDUIT) OR PJB2175 (2 LIGHTS PLUS FEEDER CONDUIT) SEE WWW.INTERMATIC.COM OR CALL 815.675.7076. FLUSH-DECK JUNCTION BOXES ARE ALLOWED PER NEC SECTION 680.24.A.2.

7. ALL JUNCTION BOXES ARE GROUNDED TO THE POOL CONTROLLER PANELBOARD.

8. ALL ELECTRICAL EQUIPMENT IS LISTED BY AN INDEPENDENT TESTING LABORATORY.

OWNER RESPONSIBILITIES

1. WATER SUPPLY. PROVIDE PRESSURE REGULATED POTABLE WATER SUPPLY WITH AN ISOLATION VALVE DEDICATED TO THE POOL AUTOFILL VALVE.

2. BARRIER REQUIREMENTS. THE OWNER IS RESPONSIBLE FOR THE MAINTENANCE OF: FENCING, GATES, APPROVED SAFETY POOL COVERS, DOOR ALARMS AND OTHER SAFETY ITEMS.

CHAIN LINK FENCING IS MINIMUM ELEVEN GAUGE, NON-CLIMBABLE 1-1/4" OPENINGS.

GATES OTHER THAN PEDESTRIAN ACCESS GATES ARE EQUIPPED WITH LOCKABLE HARDWARE AND SHALL REMAIN LOCKED AT ALL TIMES WHEN NOT IN USE.

NOTES

1. INSTALL ALL EQUIPMENT PER MANUFACTURER'S INSTRUCTIONS.
2. INSTALL BONDING PER NEC 680.26.
3. SUBMERGED LIGHTS SHALL BE PROTECTED BY A GFCI OR GFCB.

INTERMATIC JUNCTION BOX

MODEL	LIGHT CAPACITY
PJB4175	4
PJB2175	2

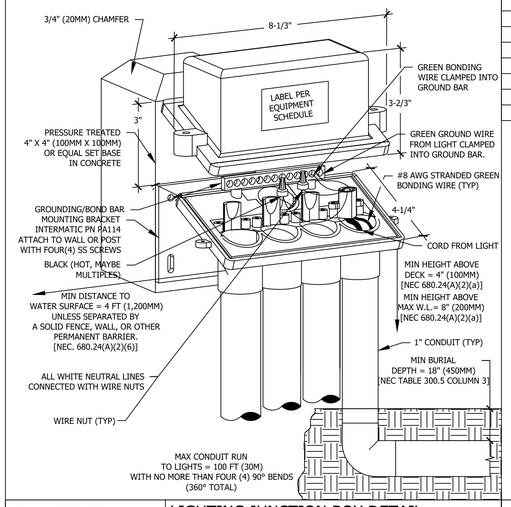

D-03 LIGHTING JUNCTION BOX DETAIL
SCALE: NTS
REV: 10.5.22

RECOMMENDED WATER PARAMETERS

PARAMETER	UNITS	MINIMUM	IDEAL	MAXIMUM
BROMINE, POOL	PPM	2.0	2.0 - 4.0	4.0
BROMINE, SPA	PPM	2.0	3.0 - 5.0	10.0
CALCIUM HARDNESS	PPM AS CaCO3	150	200 - 400	500 - 1000+
CHLORINE, FREE RESIDUAL, POOL	PPM	1.0	1.0 - 3.0	3.0
CHLORINE, FREE RESIDUAL, SPA	PPM	2.0	3.0 - 5.0	10.0
CHLORINE, FREE RESIDUAL W/ STABILIZER, POOL	PPM	1.5	1.5 - 3.0	3.0
CHLORINE, COMBINED	PPM	0	0	0.2
OXIDATION REDUCTION POTENTIAL (ORP)	mV	650	-	-
OZONE WITHOUT DEGAS	mg/L	-	-	0.1
OZONE ABOVE WATER SURFACE	mg/L	0	0	0.05
pH	-	7.2	7.4 ⟨2⟩	7.8
TEMPERATURE	°F	35	78 - 82	104
TOTAL ALKALINITY	PPM AS CaCO3	60	80 - 120	180
TOTAL DISSOLVED SOLIDS (TDS)	PPM	300	1000 - 2000	3000 ⟨3⟩

NOTES

1. MOST PARAMETERS ARE BASED ON APSP RECOMMENDED LEVELS FOR COMMERCIAL AND RESIDENTIAL POOLS AS OF 9/24/92.

⟨⟩ DETAIL KEYNOTES

1. CYANURIC ACID MAX LIMIT IS 100 PPM IN CALIFORNIA.
2. MAX TDS SHOULD ALSO BE LIMITED TO 1,500 PPM OVER THE STARTING TDS.

D-04 RECOMMENDED WATER PARAMETERS
SCALE: NTS
REV: 10.5.22

SUMMIT CLUB
568 BEDFORD ROAD
ARMONK, NY 10504

74 HICKORY LANE
BETHELHEM, CT 06751
860-274-7903

1. ABSOLUTELY NO DIVING ALLOWED.
2. SAFETY BARRIERS SHALL BE INSTALLED AND MAINTAINED BY THE OWNERS TO PREVENT UNAUTHORIZED ACCESS.
3. SUCTION OUTLET COVERS SHALL BE MAINTAINED AND REPLACED BY THE OWNERS TO PREVENT ENTRAPMENT.
4. WALKING SURFACES SHALL BE MAINTAINED BY THE OWNERS TO PREVENT SLIPS AND FALLS.
5. SEE SHEET W-01 FOR ADDITIONAL SAFETY REQUIREMENTS.

SYMBOLS

ISSUE

MARK	DATE	DESCRIPTION
AC	10/05/22	REVISIONS
AC	9/28/22	REVISIONS
AC	8/31/22	REVISIONS
AC	6/17/22	REVISIONS
SM	5/23/22	DOCUMENT

NOTES
MISCELLANEOUS DETAILS

W-08

FOR BOTH POOL AND SPA

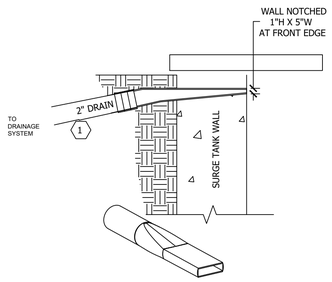

NOTES

1. ALL EQUIPMENT INSTALLED AS PER MANUFACTURER'S INSTRUCTIONS.

DETAIL KEYNOTES

1. 3" OVERFLOW CONNECTED TO THE STORM DRAIN OR LANDSCAPE DRAINAGE.

D-05 ATTACHED SURGE TANK OVERFLOW + VENT DETAIL

SCALE: NTS
REV: 10.5.22

NOTE: Gaskets help ensure that conduit is not a potential leak path. For vinyl wall fittings use both rubber gaskets. For gunite and fiberglass remove the small gasket and use the large one only.

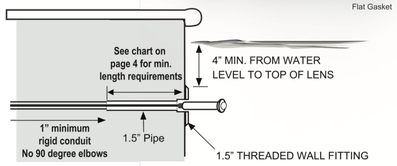

3368-NJ-01/ PM-51-NJ	0.5-10.0	0.5-10.0	6.8-8.2	60-400	60-400	Calc.	0-100

PAIR WITH LAM3428 LOW RANGE CHLORINE OCTA-SLIDE TO ACHIEVE CHLORINE RANGE OF (0.2-3.0)

D-06 TEST KIT DETAILS

SCALE: NTS
REV: 10.5.22

DETAIL NOTES

1. ALL EQUIPMENT INSTALLED AS PER MANUFACTURER'S INSTRUCTIONS.

6610
WATER LEVEL CONTROLLER

Automatic water level controllers maintain a pre-set water level in the pool by actuating a solenoid valve in the make-up water line.

8533
FILLSPOUT

This 1-1/2 inch stainless steel spout fills the pool by using an indirect connection. 20-1/2" long with 6 degree radius [illegible] 20-1/2" long

PADDOCK

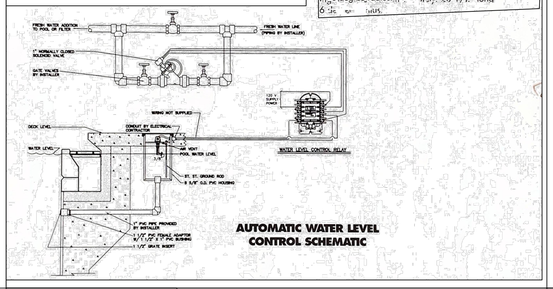

AUTOMATIC WATER LEVEL CONTROL SCHEMATIC

D-07 C02 FEEDER

SCALE: NTS
REV: 10.5.22

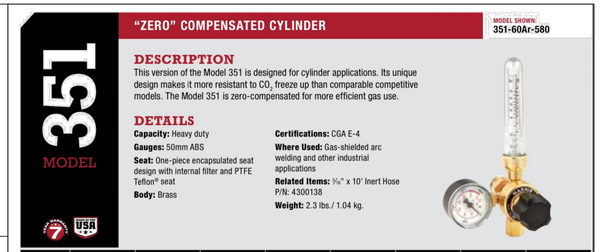

PART NO.	MODEL NO.	GAS	FLOW CAPACITY SCFH	COMPENSATED PSIG	MAX. INLET PSIG	SUPPLY PRESSURE GAUGE PSIG	INLET CONNECTION	OUTLET CONNECTION
3100331	351-60Ar-580	Ar, CO_2	10-70	0	3000	4000	CGA 580	¼"- 18 (F)

PADDOCK
STAINLESS STEEL
SAND FILTER

DETAILS

1. Manway cover
2. Air relief valve
3. Influent pipe
4. Effluent pipe
5. Paddock NSF name plate
6. Drain connection
7. Lifting lugs, (4) Total

ALL EQUIPMENT INSTALLED AS PER MANUFACTURER'S INSTRUCTIONS.

Shell Length	4'
48" Model#	6725-H-4
Area	19.15
Flow @ 15	267
Pipe Size	4

212-3330

Part No.	Description	Orifice	GPM	Case Weight	Case Quantity	List (US $)
212-3330*	10" Tee - 1 ½" S x ½" S - ¾" Spigot x 1 ½" Spigot	7/16"	17-20	32 lbs.	50 (2/bag)	16.98

D-08 VENTURI TEE

SCALE: NTS
REV: 10.5.22

Acoustical anti-vibration motor mount ensures quiet operation

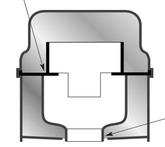

9"L x 9"W x 10.5"H

HP	AMPS/VOLTAGE	AIR-FLOW (CFM)	SEALED PRESSURE* INCHES OF H20
1.0	4.5 AMPS 110/120 VOLTS	105	65
1.5	8.0 AMPS 110/120 VOLTS	115	105
2.0	11.0 AMPS 110/120 VOLTS	115	130
1.0	2.5 AMPS 220/240 VOLTS 50/60 CYCLE	105	70
1.5	4.0 AMPS 220/240 VOLTS 50/60 CYCLE	115	105
2.0	5.0 AMPS 220/240 VOLTS 50/60 CYCLE	115	120

Thermally Protected Long Life Motors

Air intake at bottom of the Silencer™ creates a tortuous path, trapping noise inside the blower.

Durable spring check valve included with each Silencer™.

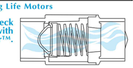

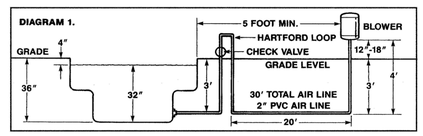

D-09 LED LIGHT DETAIL

SCALE: NTS
REV: 10.5.22

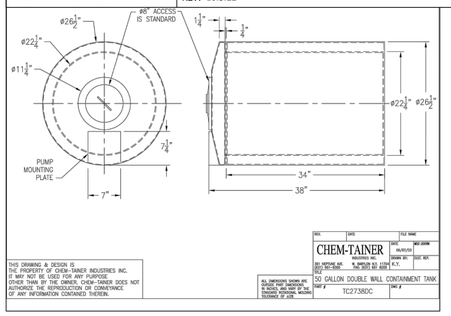

NOTES

1. ALL EQUIPMENT INSTALLED AS PER MANUFACTURER'S INSTRUCTIONS.

D-10 WATER LEVEL CONTROLLER

SCALE: NTS
REV: 10.5.22

NOTES

1. ALL EQUIPMENT INSTALLED AS PER MANUFACTURER'S INSTRUCTIONS.

MODEL	MINIMUM FEED RATE/24HR	MAXIMUM FEED RATE/24HR	RECOMMENDED VOLUME OF POOL WATER TO BE TREATED (GAL)
RC-25/53 SC	10 GPD	12 GPD	5,000-65,000
RC-103 SC	34 GPD	38 GPD	65,000-200,000

D-11 MAIN POOL FILTER DETAIL

SCALE: NTS
REV: 10.5.22

PENTAIR CLEAN & CLEAR
520 CARTRIDGE FILTER

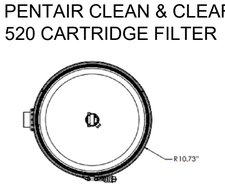

MODEL	DIM "A"
CCP 240	37"
CCP 320	43"
CCP 420	49"
CCP 520	56"

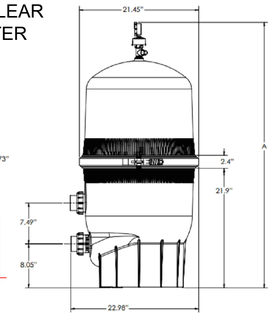

D-12 AIR BLOWER SILENCER 2 HP 220V

SCALE: NTS
REV: 10.5.22

VENT TERMINATION CLEARANCES	
DESCRIPTION	MIN CLEARANCE DIMENSION
CLEARANCE FROM WALLS	6" (150MM)
CLEARANCE FROM ANY OPENING INTO A BUILDING	4' (1,200MM) CANADA 3' (1,000MM)
CLEARANCE FROM ELECTRIC METERS, PANELS, GAS METERS, REGULATORS, AND RELIEF EQUIPMENT	4' (1,200MM)
CLEARANCE FROM PROPERTY LINE	1'-6" (450MM)
CLEARANCE FROM A/C OR HEAT PUMP	3' (900MM)
CLEARANCE ABOVE FINISHED GRADE AND NORMAL SNOW LEVEL	1' (300MM)

DETAIL NOTES

1. ALL EQUIPMENT INSTALLED AS PER MANUFACTURER'S INSTRUCTIONS.
2. BONDING INSTALLED PER NEC 680.26.
3. INSTALLED PER LOCAL CODES.

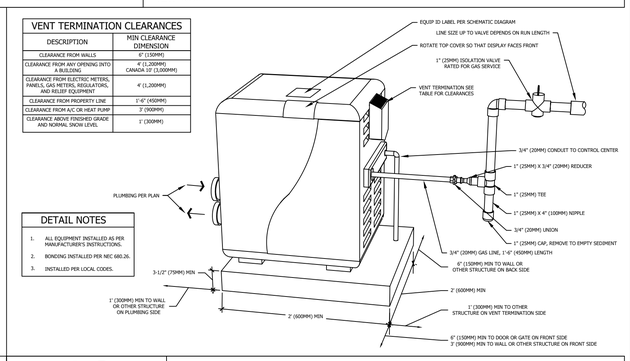

D-13 SECONDARY CHLORINE CONTAINMENT - DUAL WALL

SCALE: NTS
REV: 10.5.22

NOTES

1. ALL PAIRS OF SUCTION OUTLETS ARE A MINIMUM 36" AND MAX 48" APART (UNO) OR LOCATED OUT OF PLANE FROM ONE ANOTHER MAX 48" APART (UNO).

DETAIL KEYNOTES

1. ANTI-ENTRAPMENT SUCTION OUTLET COVER/GRATE WITH ASME A112.19.8-2007 LISTING AND FLOW RATING THAT MEETS OR EXCEEDS THE MAX POSSIBLE FLOW RATE OF THE MAIN LINE. SEE FINISH SCHEDULE FOR MANUFACTURER, COLOR AND PART NUMBER.
2. MANUFACTURED SUCTION OUTLET SUMP PER FINISH SCHEDULE OR FORMED SUMP.
3. SHELL PER STRUCTURAL ENGINEERING PLANS.
4. SPLIT LINES ARE THE SAME SIZE AS MAIN LINE (UNO). DO NOT DOWNSIZE SPLIT LINES ON THE SUCTION SIDE OF A PUMP OR SKIMMER.
5. MAIN LINE SIZE IS DETERMINED IN SCHEMATIC DIAGRAM(S). MAIN LINE TEES INTO SPLIT LINES AT THE APPROXIMATE CENTER OF THE SPLIT LINES.
6. OPTIONAL HYDROSTATIC VALVE. SEE PLANS FOR SPECIFIC REQUIREMENTS. GRAVEL BED DIMENSIONS DETERMINED BY SOILS REPORT RECOMMENDATIONS.

D-17 ESMD SPECIFICATIONS

SCALE: NTS
REV: 10.5.22

Field Mount
SIGNET 9900 TRANSMITTER

515 Sensor
(with red cap)

D-18 TRANSMITTER AND 5156 SENSOR

SCALE: NTS
REV: 10.5.22

Baker Hydro Skimmer

On conventional skimmers, water from the main drain does not go through the skimmer basket. The Hydro-Skimmer is designed to pass all water through the basket making it easy to remove leaves and debris before going to the pump.

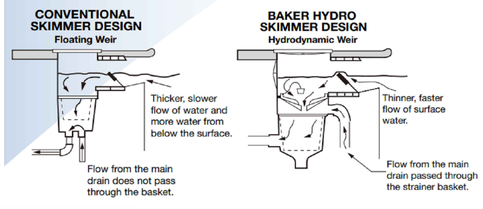

Model	Model Description	Shipping Weight
50W1050	Skimmer Standard	10
50W1051	Skimmer St'd-Deluxe (w/control plate)	12
50W2010	Skimmer - Commercial (concrete)	12
50W2011	Skimmer - Comm.-Deluxe (w/control plate)	14
50W1005	Skimmer - Prefab	11
50W1006	Skimmer - Prefab Deluxe (w/control plate)	13

D-18 HYDRO BAKER SKIMMER

SCALE: NTS
REV: 10.5.22

SUMMIT CLUB
568 BEDFORD ROAD
ARMONK, NY 10504

DI
74 HICKORY LANE
BETHELHEM, CT 06751
860-274-7903

1. ABSOLUTELY NO DIVING ALLOWED.
2. SAFETY BARRIERS SHALL BE INSTALLED AND MAINTAINED BY THE OWNERS TO PREVENT UNAUTHORIZED ACCESS.
3. SUCTION OUTLET COVERS SHALL BE MAINTAINED AND REPLACED BY THE OWNERS TO PREVENT ENTRAPMENT.
4. WALKING SURFACES SHALL BE MAINTAINED BY THE OWNERS TO PREVENT SLIPS AND FALLS.
5. SEE SHEET W-01 FOR ADDITIONAL SAFETY REQUIREMENTS.

SYMBOLS

ISSUE

MARK	DATE	DESCRIPTION
AC	10/05/22	REVISIONS
AC	9/28/22	REVISIONS
AC	8/31/22	REVISIONS
AC	6/17/22	REVISIONS
SM	5/23/22	DOCUMENT

EQUIPMENT CUT SHEETS

W-09

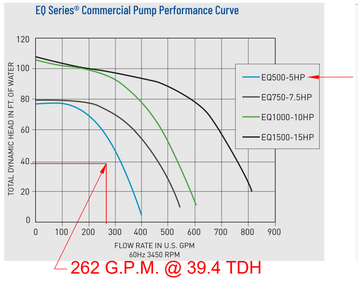

EQ Series Commercial Pump With Strainer Pot (6 Inch x 4 Inch)

Part # ODP Motor	Part # TEFC Motor	Description	Voltage	Amps	Phase	HP	Wt	Dim. A-ODP	Dim. A-TEFC	Dim. B	Dim. C	Dim. D-ODP	Dim. D-TEFC
340026		EQW 300 WaterFall	208/230	38/19	1	3	126	26.62	N/A	10.03	7.5	43.590	N/A
340027		EQWK 300 WaterFall	208 - 230/460	8.4 - 7.9/3.9	3	3	106	23.12	N/A	10.16	7.5	40.094	N/A
340028		EQW 500 WaterFall	230	23.4	1	5	126	26.62	N/A	13.18	9.7	43.590	N/A
340029		EQWK 500 WaterFall	208 - 230/460	13.6 - 12.7/6.4	3	5	106	23.12	24.68	13.31	9.7	40.094	41.65
340030		EQ500	230	19.6	1	5	126	26.62	N/A	10.03	7.5	43.590	N/A
340031	340604	EQK500	208 - 230/460	13.5 - 12.3/6.2	3	5	106	23.12	24.68	10.16	7.5	40.094	41.65
340032		EQ750	230	30.4	1	7.5	161	27.53	N/A	10.78	8.5	44.590	N/A
340033	340605	EQK750	208 - 230/460	20.1 - 18.3/9.1	3	7.5	116	24.50	28.06	10.16	7.5	41.560	45.12
340034	340606	EQK1000	208 - 230/460	27.1 - 24.3/12.2	3	10	146	26.31	29.81	10.78	8.5	43.290	46.79
340035	340607	EQK1500	208 - 230/460	40.0 - 36.0/17.8	3	15	161	26.31	28.31	10.78	8.5	43.290	45.29
340238		EQ1000	230	40.0	1	10	179	29.0	N/A	11.50	8.5	46.29	N/A

340013 Strainer Pot Assembly, Including Strainer, Lid, Basket and Hardware

D-19 | EQ500 SINGLE PHASE 5 HP PUMP (POOL)
SCALE: NTS
REV: 10.5.22

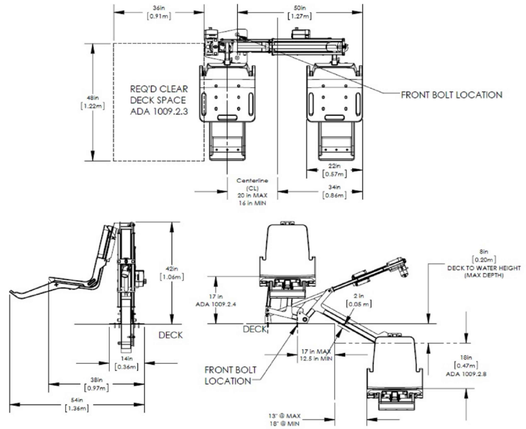

Specification Number:	SRS-1202
Product Description:	multiLift™
S.R. Smith Part Number:	575-0000
Revision:	B — Date: 07/1/2016
Written By:	Ole Hoskinson — Date: 12/16/13
Approved By:	Daniel Taughinbaugh — Date: 07/1/2016
Page 2 of 2	

Proprietary and confidential: The information contained in this specification is the sole property of S.R. Smith LLC. Any reproduction in part or whole without the written consent of S.R. Smith LLC is prohibited.

S.R. Smith
P.O. Box 400, 1017 SW Berg Parkway
Canby, Oregon 97013
Tel: (800) 824-4387 (503) 266-2231
Fax: (503) 266-4334
www.srsmith.com

D-20 | SR SMITH MULTILIFT 575 POOL LIFT
SCALE: NTS
REV: 10.5.22

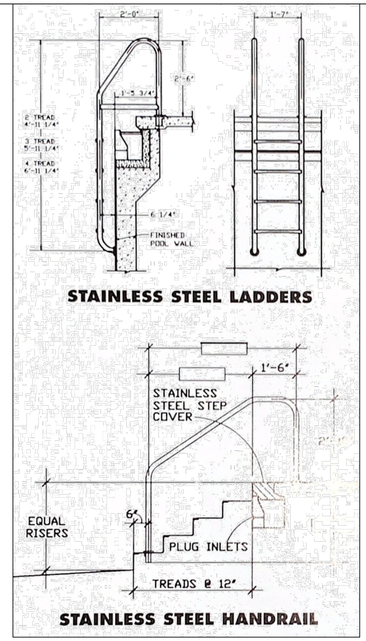

DECK EQUIPMENT

LADDERS & HAND RAILS

Paddock ladders and hand rails are fabricated from Type 304 stainless steel tubing with an outside diameter of 1.90". Standard wall thickness is .083", with other options available.

Ladder rails are spaced 19" apart with a cross brace for added stability and are furnished with slip-resistant stainless steel treads. A rubber bumper on each rail protects the interior pool finish. Anchors and escutcheons are supplied.

- ☐ 4539-1 2 Tread Ladder with .083 wall thickness
- ☐ 4539-2 2 Tread Ladder with .120 wall thickness
- ☐ 4539-3 2 Tread Ladder with .145 wall thickness
- ☐ 4540-1 3 Tread Ladder with .083 wall thickness
- ☐ 4540-2 3 Tread Ladder with .120 wall thickness
- ☒ 4540-3 3 Tread Ladder with .145 wall thickness X2 (POOL)
- ☐ 4541-1 4 Tread Ladder with .083 wall thickness
- ☐ 4541-2 4 Tread Ladder with .120 wall thickness
- ☐ 4541-3 4 Tread Ladder with .145 wall thickness
- ☐ 4542-1 5 Tread Ladder with .083 wall thickness
- ☐ 4542-2 5 Tread Ladder with .120 wall thickness
- ☐ 4542-3 5 Tread Ladder with .145 wall thickness
- ☐ 4715 34" high x 48" long Handrail
- ☒ 4716 34" high x 60" long Handrail X5 (POOL)
- ☐ 4717 34" high x 72" long Handrail
- ☒ 4718 Custom Handrail (thickness ____)

34" high x 45" long X5 (POOL)
34" high x 66" long X2 (SPA)

D-21 | STAINLESS STEEL HANDRAILS
SCALE: NTS
REV: 10.5.22

Rapid-Fill Pool Fill Spouts

- 304 stainless steel, .049" wall
- US threaded connectors included

	Part No.	Description	Shipping Weight
X1	A41242-0	1½" fill spout	1.9 lbs
	A41240-0	1" fill spout	1.4 lbs
	A41227-0	¾" fill spout	1.4 lbs

D-22 | FILL SPOUT
SCALE: NTS
REV: 10.5.22

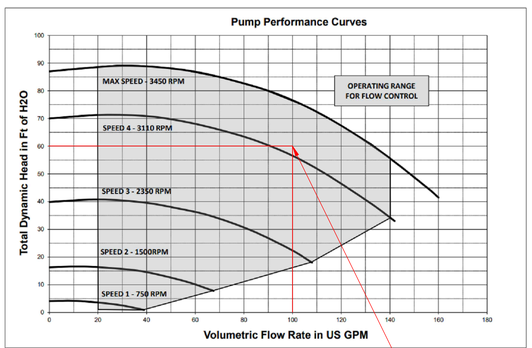

Pump Dimensions

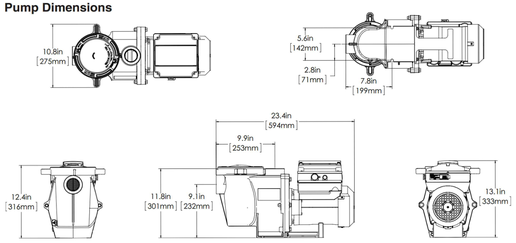

ITEM #	THP	WEF	WEIGHT (LBS)	VOLTAGE	FULL LOAD AMPS	KW	SERVICE FACTOR	HHP	SFHP	FREQUENCY (HZ)	PRIMARY LISTINGS AND CERTIFICATIONS	PORT SIZE (NPT)	PURCHASE OPTIONS
011056	3.95	6.9	55	230	16	3.2	1.0	1.88	3.95	50Hz/60Hz	UL/NSF/APSP	2" x 2"	Available Through Dealer

D-23 | INTELLIFLO VSF VARIABLE SPEED PUMP (SPA)
SCALE: NTS
REV: 10.5.22

MANUFACTURED SUMP INSTALLATION (DUAL PUMP WITH HYDROSTATIC VALVE INSTALLATION)

IMPORTANT

- Models: 32CDFLxxx, 32 CDAVxxx, 32CDFLVxxx, 32CDAVVxxx, 32CDAVACxxx or 32CDLTxxx, 32CDLTVxxx (AV=Anti-Vortex)
- Single or multiple drain or pipe use
- At IAPMO (a nationally recognized testing lab), all AquaStar channel drains have been tested to three inches in sump depth – field-fabricated or manufactured
- All AquaStar channel drains are VGB 2008 compliant
- Plumbing to one or two pumps plus skimmer equalizer are approved – DO NOT exceed maximum flow rate of outlet cover for total system
- One-, two- or three-pipe connections are approved at any port or configuration under manufactured sump or field-fabricated sump
- **Any plumbing configuration is approved but do not exceed maximum flow rate**

fig. 5

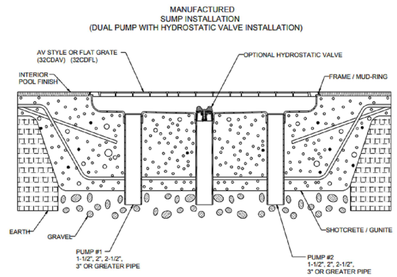

32CDFLxxx

Notes: unless otherwise specified.
Plaster shield and screws to be removed after installation.

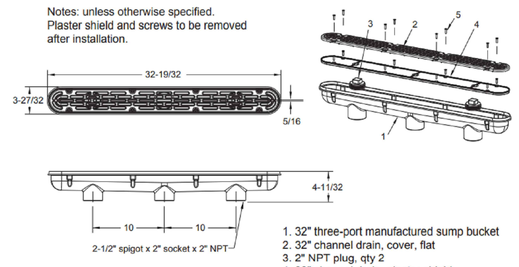

1. 32" three-port manufactured sump bucket
2. 32" channel drain, cover, flat
3. 2" NPT plug, qty 2
4. 32" channel drain, plaster shield
5. #10 x 3/4" flat head phillips type-a screw, 316ss, qty 16

HYDRAULIC SYSTEM SPECIFICATIONS (continued)

ALL MODELS LISTED BELOW = ANTI-ENTRAPMENT/ANTI-VORTEX AND FOR SINGLE OR MULTIPLE USE

MAX FLOW RATES (PER OUTLET) MOUNTING POSITIONS (xxx=COLOR SUFFIX)

Model	32CDFLxxx (and 32CDFLFRxxx, 32CDFLVxxx, 32CDLTxxx)	32CDAVxxx (and 32CDAVFRxxx, 32CDAVVxxx, 32CDAVACxxx)	TOTAL OPEN AREA	32CDBTxxx, 32CDBTFRxxx	TOTAL OPEN AREA
Floor	316 GPM @ 3.9 fps	236 GPM @ 3.4 fps	25.9	120 GPM @ 1.19 fps	32.4
Wall	208 GPM @ 2.6 fps	136 GPM @ 1.9 fps	22.6	N.A.	N.A.

D-24 | 32" STRIP DRAIN
SCALE: NTS
REV: 10.5.22

SUMMIT CLUB
568 BEDFORD ROAD
ARMONK, NY 10504

DI
74 HICKORY LANE
BETHLEHEM, CT 06751
860-274-7903

1. ABSOLUTELY NO DIVING ALLOWED.
2. SAFETY BARRIERS SHALL BE INSTALLED AND MAINTAINED BY THE OWNERS TO PREVENT UNAUTHORIZED ACCESS.
3. SUCTION OUTLET COVERS SHALL BE MAINTAINED AND REPLACED BY THE OWNERS TO PREVENT ENTRAPMENT.
4. WALKING SURFACES SHALL BE MAINTAINED BY THE OWNERS TO PREVENT SLIPS AND FALLS.
5. SEE SHEET W-01 FOR ADDITIONAL SAFETY REQUIREMENTS.

SYMBOLS

ISSUE

MARK	DATE	DESCRIPTION
AC	10/05/22	REVISIONS
AC	9/28/22	REVISIONS
AC	8/31/22	REVISIONS
AC	6/17/22	REVISIONS
SM	5/23/22	DOCUMENT

EQUIPMENT CUT SHEETS

W-10

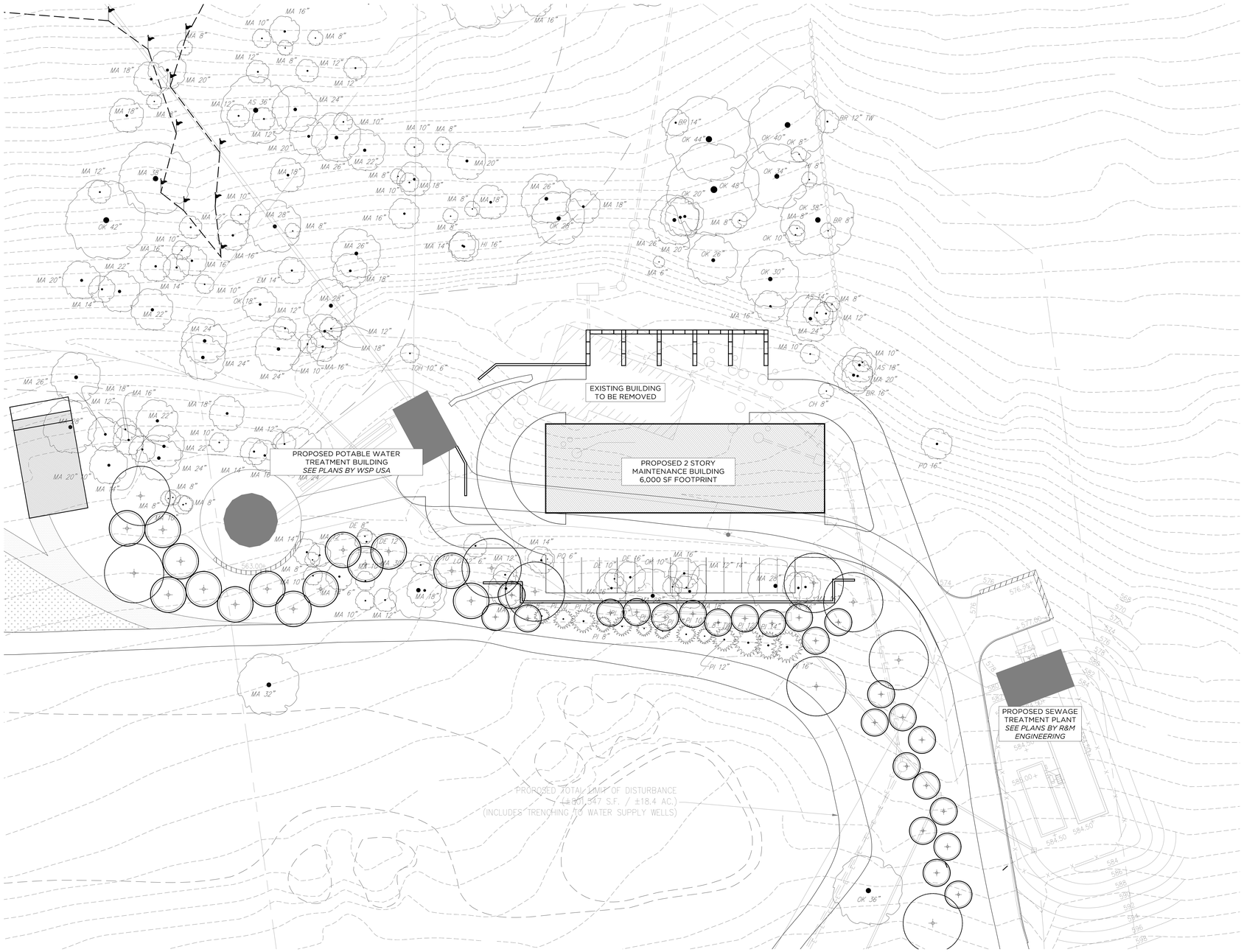

MAINTENANCE BUILDING PLANTING PLAN

1" = 20'-0"

GRANOFF ARCHITECTS

330 RAILROAD AVENUE
GREENWICH, CT 06830

203.625.9460

WWW.GRANOFFARCHITECTS.COM

CONSULTANTS

REVISIONS

#	DATE	REVISION DESCRIPTION	BY:
1	10/24/2022	PLANNING BOARD SUBMISSION	KA

PHASE

PLANNING BOARD SUBMISSION

PROJECT NAME

SUMMIT CLUB

ARMONK, NY

JOB NO.: ----

DRAWN BY: JS PROJ. MANAGER: KA

DATE: 10/24/2022 SCALE: AS NOTED

DRAWING TITLE

MAINTENANCE BUILDING - PLANTING PLAN

DRAWING NO.

LS 105

© 2022 GRANOFF ARCHITECTS

All drawings, designs and ideas are the property of R.S. Granoff Architects, P.C. They may not be copied, reproduced, disclosed to others, or used in connection with any work other than the specified project for which they were prepared, in whole or in part, without prior written consent of R.S. Granoff Architects, P.C.

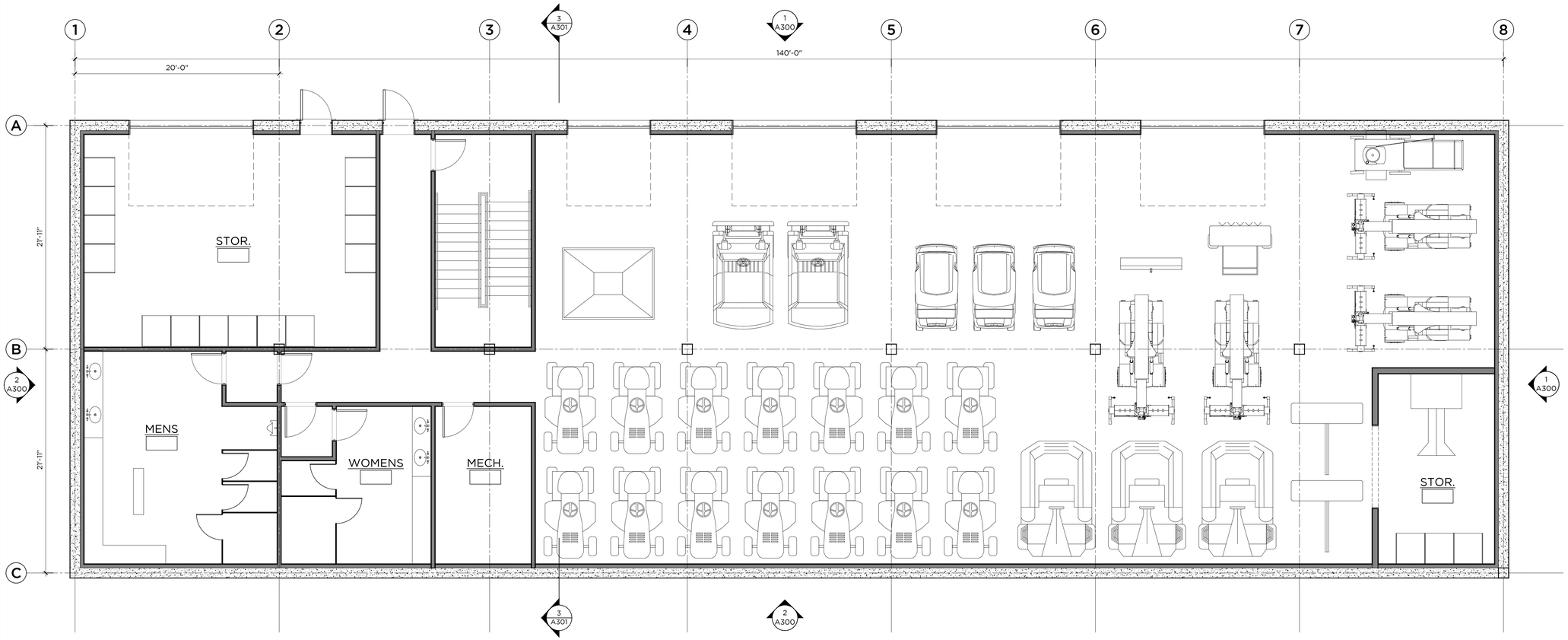

FLOOR PLAN - LOWER LEVEL

3/16" = 1'-0"

GRANOFF ARCHITECTS

330 RAILROAD AVENUE
GREENWICH, CT 06830

203.625.9460

WWW.GRANOFFARCHITECTS.COM

CONSULTANTS

REVISIONS

#	DATE	REVISION DESCRIPTION	BY:
1	10/24/2022	PLANNING BOARD SUBMISSION	KA

PHASE

PLANNING BOARD SUBMISSION

PROJECT NAME

SUMMIT CLUB PARTNERS LLC - MAINTENANCE BLDG.

ARMONK, NY

JOB NO.: ----

DRAWN BY: JT PROJ. MANAGER: KA

DATE: 10/24/2022 SCALE: AS NOTED

DRAWING TITLE

FLOOR PLAN - LOWER LEVEL

DRAWING NO.

A100

© 2021 GRANOFF ARCHITECTS
These drawings, concepts, designs and ideas are the property of R.S. Granoff Architects, P.C.. They may not be copied, reproduced, disclosed to others, or used in connection with any work other than the specified project for which they were prepared, in whole or in part, without prior written consent of R.S. Granoff Architects, P.C.

Oct 20, 2022 Z:\brynwood 2.0\10_construction drawings\01_cd_architecture\SHEET FILES\MAINTENANCE BLDG_A100 FLOOR PLAN LOWER LEVEL.dwg

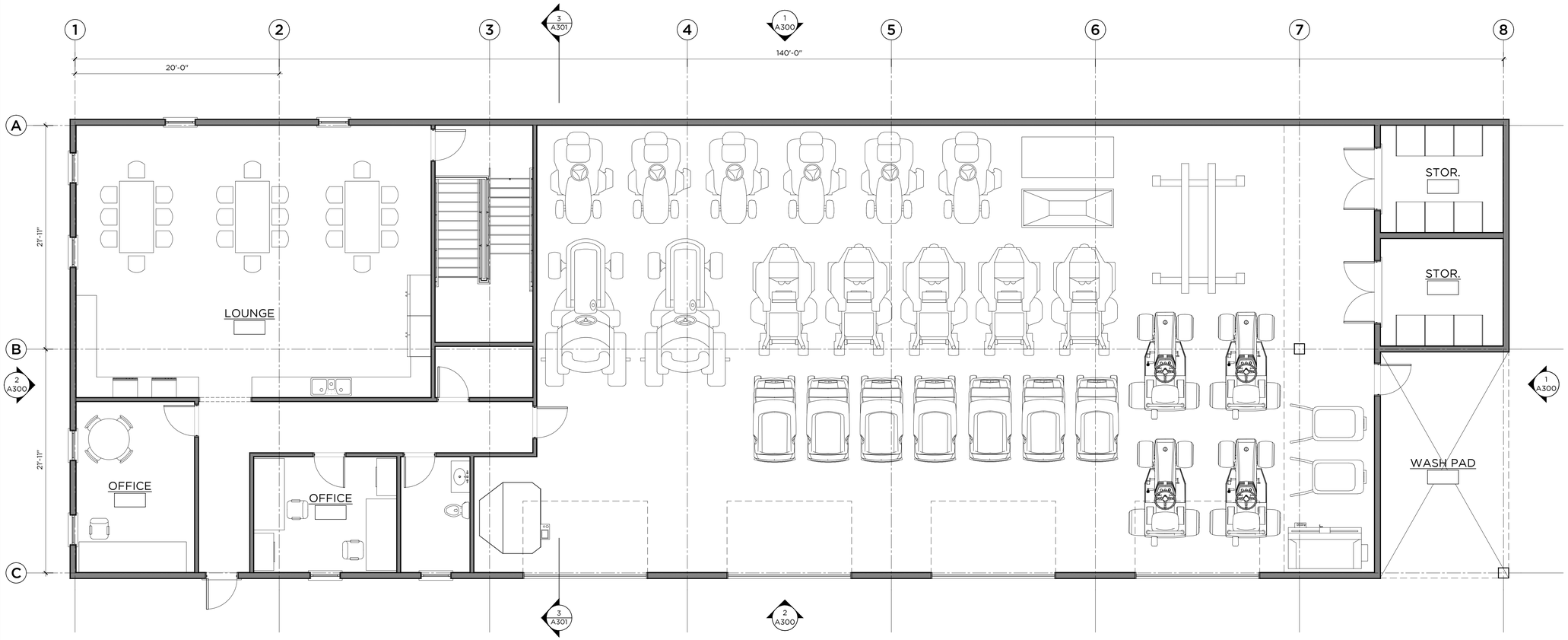

FLOOR PLAN - UPPER LEVEL

3/16" = 1'-0"

GRANOFF ARCHITECTS

330 RAILROAD AVENUE
GREENWICH, CT 06830

203.625.9460

WWW.GRANOFFARCHITECTS.COM

CONSULTANTS

REVISIONS

#	DATE	REVISION DESCRIPTION	BY:
1	10/24/2022	PLANNING BOARD SUBMISSION	KA

PHASE

PLANNING BOARD SUBMISSION

PROJECT NAME

SUMMIT CLUB PARTNERS LLC - MAINTENANCE BLDG.

ARMONK, NY

JOB NO.: ----

DRAWN BY: JT PROJ. MANAGER: KA

DATE: 10/24/2022 SCALE: AS NOTED

DRAWING TITLE

FLOOR PLAN - UPPER LEVEL

DRAWING NO.

A101

© 2021 GRANOFF ARCHITECTS
These drawings, concepts, designs and ideas are the property of R.S. Granoff Architects, P.C. They may not be copied, reproduced, disclosed to others, or used in connection with any work other than the specified project for which they were prepared, in whole or in part, without prior written consent of R.S. Granoff Architects, P.C.

Oct 20, 2022 Z:\plymwood 2.0\100_construction drawings\00_cd_architecture\SHEET FILES\MAINTENANCE BLDG_A101 FLOOR PLAN UPPER LEVEL.dwg

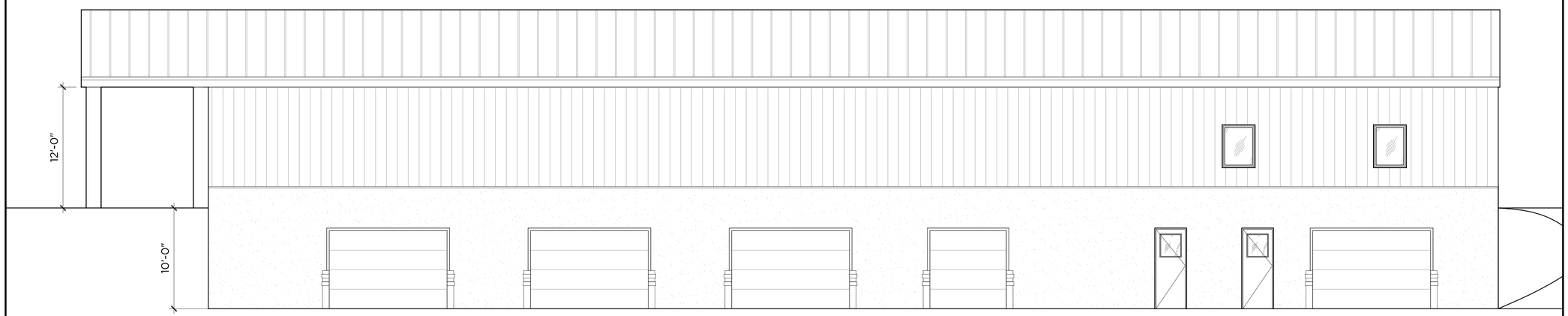

1 ELEVATION

3/16"=1'-0"

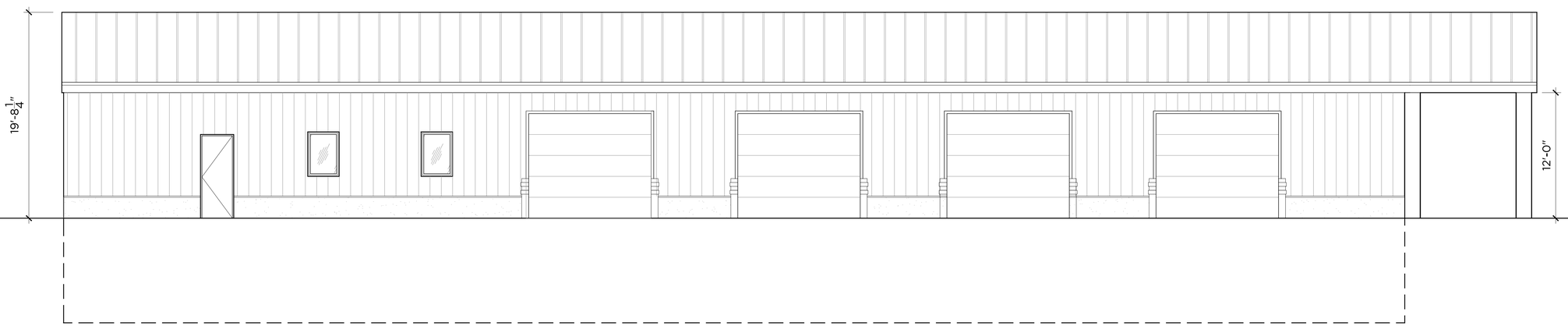

2 ELEVATION

1/2"=1'-0"

GRANOFF ARCHITECTS

330 RAILROAD AVENUE
GREENWICH, CT 06830

203.625.9460

WWW.GRANOFFARCHITECTS.COM

CONSULTANTS

REVISIONS

#	DATE	REVISION DESCRIPTION	BY:
1	10/24/2022	PLANNING BOARD SUBMISSION	KA

PHASE

PLANNING BOARD SUBMISSION

PROJECT NAME

SUMMIT CLUB PARTNERS LLC - MAINTENANCE BLDG.

ARMONK, NY

JOB NO.: ----

DRAWN BY: JT PROJ. MANAGER: KA

DATE: 10/24/2022 SCALE: AS NOTED

DRAWING TITLE

BUILDING ELEVATIONS

DRAWING NO.

A300

© 2021 GRANOFF ARCHITECTS
These drawings, concepts, designs and ideas are the property of R.S. Granoff Architects, P.C. They may not be copied, reproduced, disclosed to others, or used in connection with any work other than the specified project for which they were prepared, in whole or in part, without prior written consent of R.S. Granoff Architects, P.C.

Oct 20, 2022 Z:\storywood 2.0\10_construction drawings\01_cd_architecture\SHEET FILES\MAINTENANCE BLDG\ A300 BUILDING ELEVATIONS.dwg

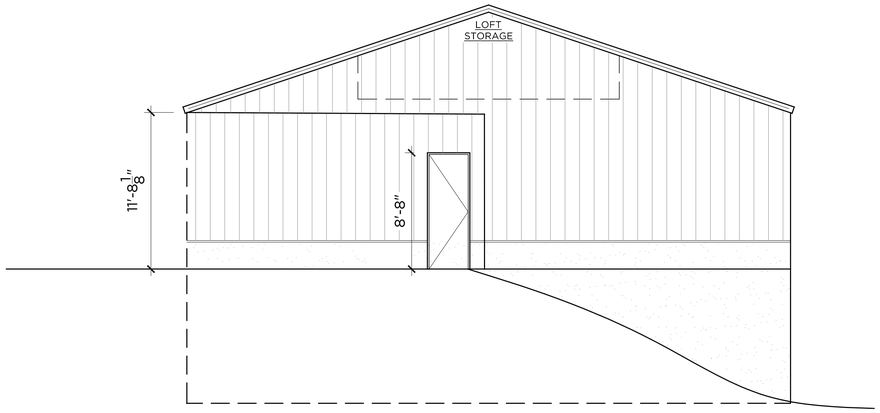

1 ELEVATION

3/16"=1'-0"

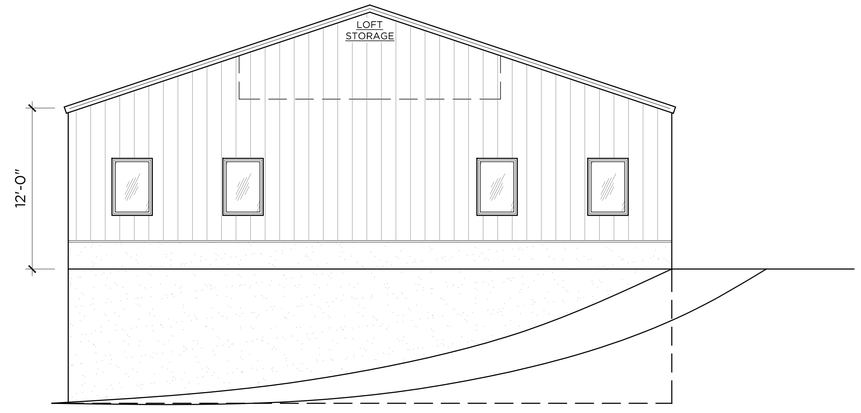

2 ELEVATION

3/16"=1'-0"

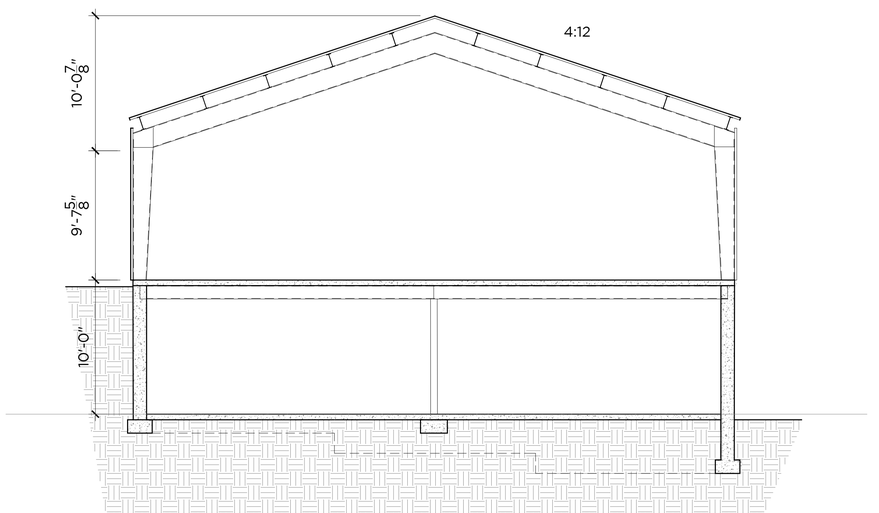

GRANOFF ARCHITECTS

330 RAILROAD AVENUE
GREENWICH, CT 06830

203.625.9460

WWW.GRANOFFARCHITECTS.COM

CONSULTANTS

REVISIONS

#	DATE	REVISION DESCRIPTION	BY:
1	10/24/2022	PLANNING BOARD SUBMISSION	KA

PHASE

PLANNING BOARD SUBMISSION

PROJECT NAME

SUMMIT CLUB PARTNERS LLC - MAINTENANCE BLDG.

ARMONK, NY

JOB NO.: ----

DRAWN BY: JT PROJ. MANAGER: KA

DATE: 10/24/2022 SCALE: AS NOTED

DRAWING TITLE

BUILDING ELEVATION

DRAWING NO.

A301

© 2021 GRANOFF ARCHITECTS
These drawings, concepts, designs and ideas are the property of R.S. Granoff Architects, P.C. They may not be copied, reproduced, disclosed to others, or used in connection with any work other than the specified project for which they were prepared, in whole or in part, without prior written consent of R.S. Granoff Architects, P.C.

Oct 20, 2022 Z:\storywood 2.0\10_construction drawings\01_cd_architecture\SHEET FILES\MAINTENANCE BLDG_A300 BUILDING ELEVATIONS.dwg

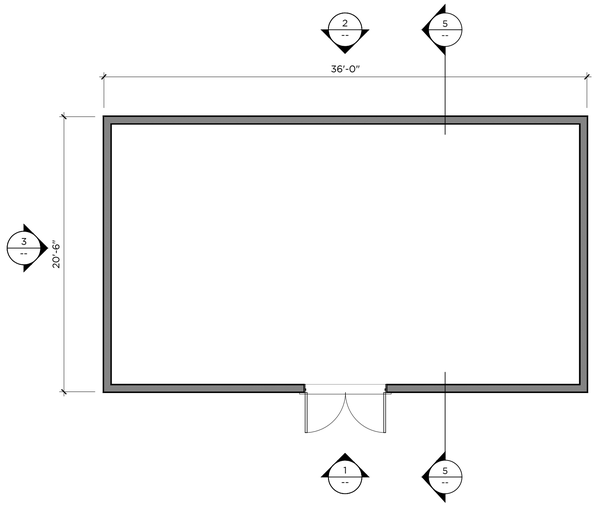

SEWAGE TREATMENT BLDG.

3/16" = 1'-0"

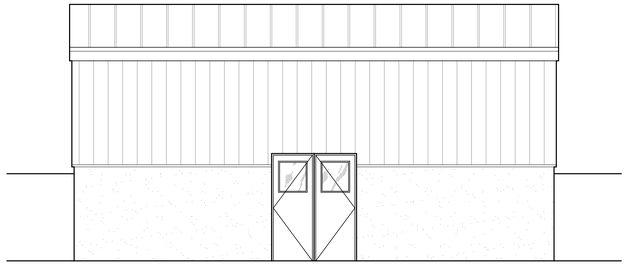

4 -- 1 ELEVATION

3/16"=1'-0"

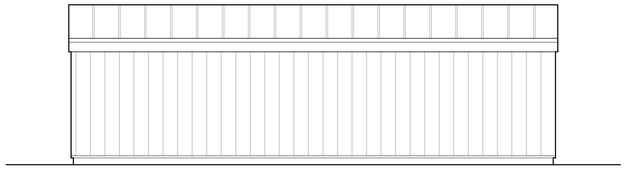

2 ELEVATION

3/16"=1'-0"

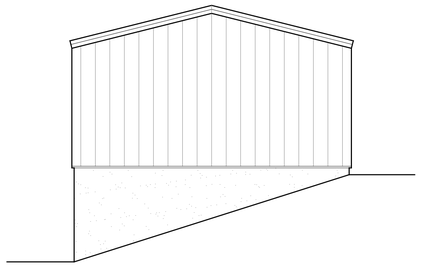

3 ELEVATION

3/16"=1'-0"

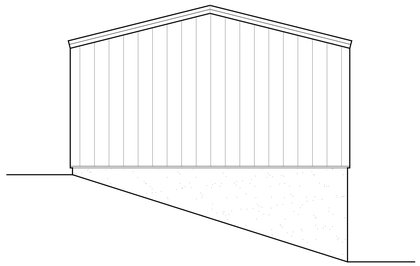

4 ELEVATION

3/16"=1'-0"

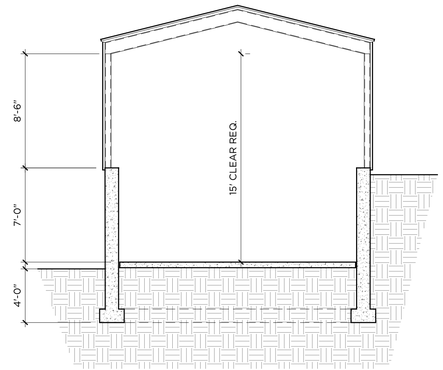

5 SECTION

3/16"=1'-0"

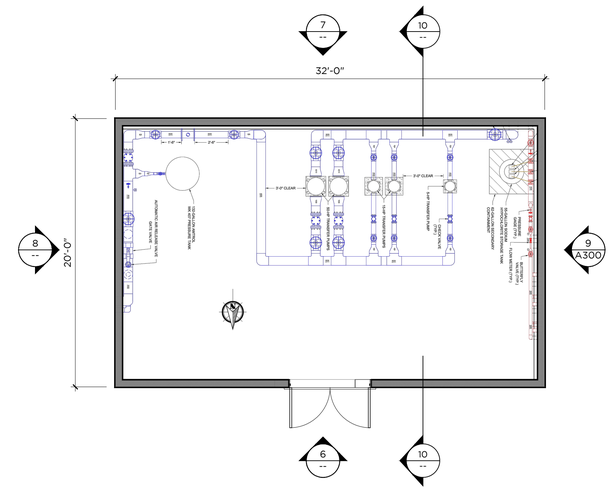

WATER TREATMENT BLDG.

3/16" = 1'-0"

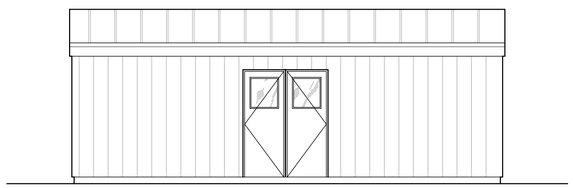

6 ELEVATION

3/16"=1'-0"

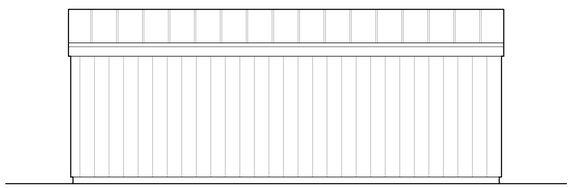

7 ELEVATION

3/16"=1'-0"

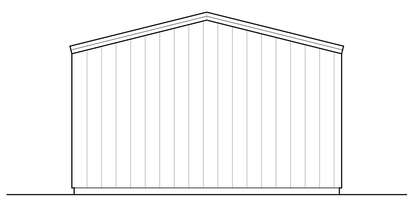

8 ELEVATION

3/16"=1'-0"

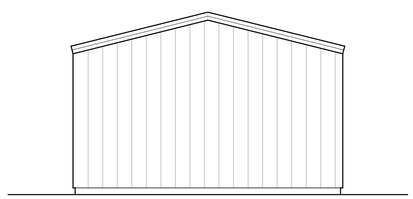

9 ELEVATION

3/16"=1'-0"

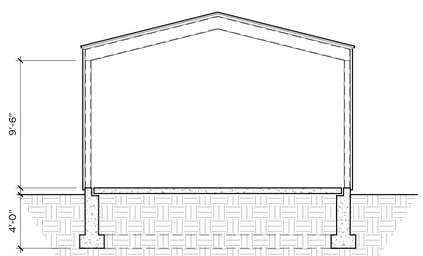

10 SECTION

3/16"=1'-0"

GRANOFF ARCHITECTS

330 RAILROAD AVENUE
GREENWICH, CT 06830

203.625.9460

WWW.GRANOFFARCHITECTS.COM

CONSULTANTS

REVISIONS

#	DATE	REVISION DESCRIPTION	BY:
1	10/24/2022	PLANNING BOARD SUBMISSION	KA

PHASE

PLANNING BOARD SUBMISSION

PROJECT NAME

SUMMIT CLUB PARTNERS LLC - STP & WTP

ARMONK, NY

JOB NO.: ----

DRAWN BY: JT PROJ. MANAGER: KA

DATE: 10/24/2022 SCALE: AS NOTED

DRAWING TITLE

WATER TREATMENT & SEWAGE TREATMENT BUILDINGS

DRAWING NO.

A100

© 2021 GRANOFF ARCHITECTS
These drawings, concepts, designs and ideas are the property of R.S. Granoff Architects, P.C. They may not be copied, reproduced, disclosed to others, or used in connection with any work other than the specified project for which they were prepared, in whole or in part, without prior written consent of R.S. Granoff Architects, P.C.

Oct 20, 2022 Z:\storywood 2.0\00_construction drawings\01_cd_architecture\SHEET FILES\MAINTENANCE BLDG\ A100 WTP BUILDING.dwg

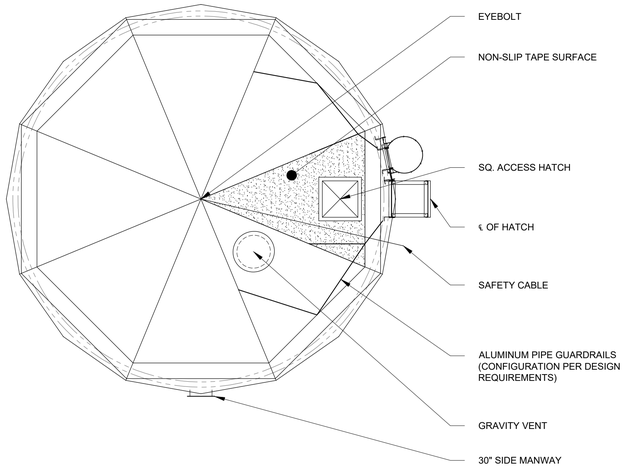

A/6 PLAN VIEW - TANK
SCALE: 1" = 5'-0"

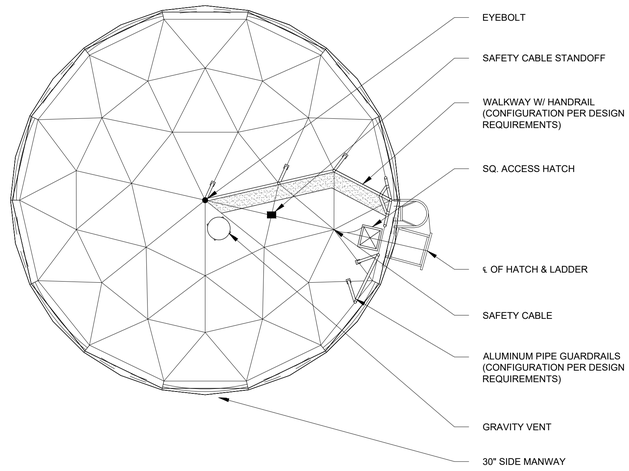

B/6 PLAN VIEW - DOME ROOF
SCALE: 1" = 5'-0"

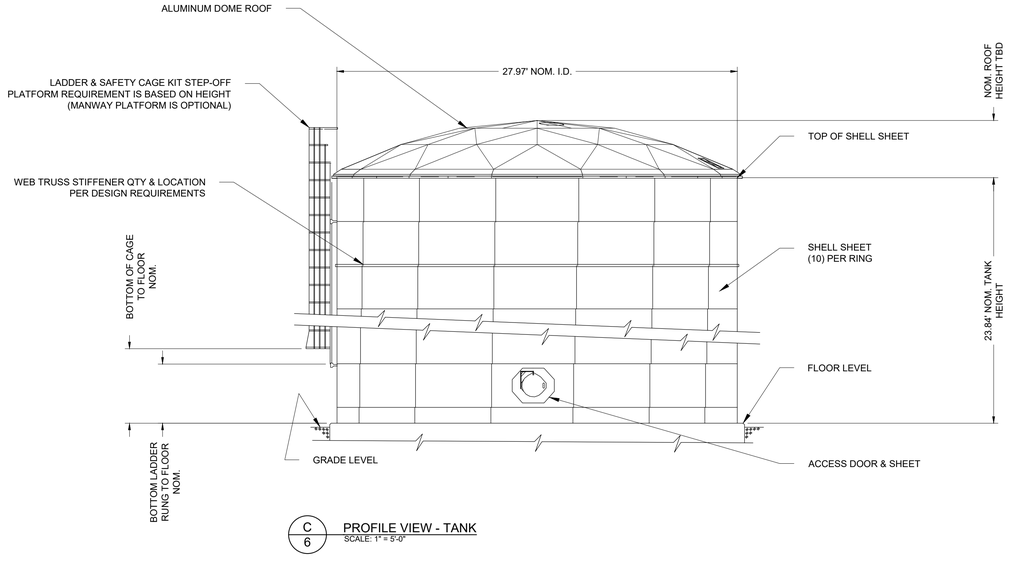

C/6 PROFILE VIEW - TANK
SCALE: 1" = 5'-0"

REVISIONS

REV	DESCRIPTION		
1	Revised:	Chkd:	Appr.:
2	Revised:	Chkd:	Appr.:
3	Revised:	Chkd:	Appr.:

SEAL

DATE

DRAWN BY	RAC
CHECKED	MS
APPROVED	SR
DRAWING DATE	11/23/21

PROPERTY OF WSP USA
IMPORTANT: THIS DRAWING PRINT IS LOANED FOR MUTUAL ASSISTANCE AND AS SUCH IS SUBJECT TO RECALL AT ANY TIME. INFORMATION CONTAINED HEREON IS NOT TO BE DISCLOSED OR REPRODUCED IN ANY FORM FOR THE BENEFIT OF PARTIES OTHER THAN NECESSARY SUBCONTRACTORS AND SUPPLIERS WITHOUT THE WRITTEN CONSENT OF WSP USA.

NOTICE: THIS DRAWING HAS BEEN PREPARED UNDER THE DIRECTION OF A LICENSED PROFESSIONAL ENGINEER. IT IS A VIOLATION OF STATE LAW FOR ANY PERSONS, UNLESS ACTING UNDER THE DIRECTION OF A LICENSED PROFESSIONAL ENGINEER, TO ALTER THIS DOCUMENT IN ANY WAY.

205,000-GALLON ABOVE GRADE POTABLE WATER ATMOSPHERIC STORAGE TANK DETAILS

Summit Club Residential
568 Bedford Road (Route 22)
Town of North Castle, New York

WSP USA
4 Research Drive, Suite 204
Shelton, Connecticut 06484
(203) 929-8555

Drawing Number
6

O:\DWG\Brynwood\Summit Club\Water Supply\P6_TankDetails.dwg, Layout1, 11/23/2021 3:44:36 PM, DWG To PDF.pc3

ENGINEER'S REPORT FOR SUMMIT CLUB WATER-SUPPLY SYSTEM

Summit Club
Town of North Castle
Westchester County, New York

DRAFT

PROJECT NO.: 31403576.000
DATE: AUGUST 2022

WSP USA
6 RESEARCH DRIVE, SUITE 260
SHELTON, CT 06484

PHONE: +1 (203) 929-8555
FAX: +1 (203) 926-9140
wsp.com

SIGNATURES

PREPARED BY:

Michael J. Shortell
Lead Environmental Engineer

REVIEWED BY:

Stephen K. Rupar, P.E
Vice President

This report was prepared by WSP USA (WSP) for the account of Summit Club Manor, in accordance with the professional services agreement. The disclosure of any information contained in this report is the sole responsibility of the intended recipient. The material in it reflects WSP's best judgement in light of the information available to it at the time of preparation. Any use that a third party makes of this report, or any reliance on or decisions to be made based on it, are the responsibility of such third parties. WSP accepts no responsibility for damages, if any, suffered by any third party as a result of decisions made or actions based on this report. This limitations statement is considered part of this report.

TABLE OF CONTENTS

1.0 INTRODUCTION 1

2.0 WATER-SUPPLY SYSTEM DESCRIPTION 2

3.0 DESIGN ASSUMPTIONS 2

4.0 EQUIPMENT SIZING 2

4.1 Submersible Well Pumps 2

4.2 Catridge Filtration System 3

4.3 Ultraviolet Light Disinfection System 4

4.4 Disinfection 4

4.5 Transfer Pumps 5

4.5.1 Atmospheric Storage Tank 6

5.0 METHOD OF OPERATIONS AND CONTROLS 6

APPENDICES

PLATES

PLATE TS:	Title Sheet
PLATE 1:	Site Plan
PLATE 1A:	Partial Site Plan
PLATE 2:	Project Notes, Equipment List, Process Flow Diagram and Well Profile
PLATE 3:	Proposed Treatment Building Details
PLATE 4:	Well Settings and Piping Details
PLATE 5:	Piping Details
PLATE 6:	205,000-Gallon Above Grade Potable Water Atmospheric Storage Tank Details
PLATE 7:	Distribution System Plan and Profile
PLATE 8:	Distribution System Plan and Profile
PLATE 9:	Oversized Water Main Plan and Profile

1.0 INTRODUCTION

WSP USA (WSP) has prepared the Engineer's Report and the plans and specifications for the proposed water-supply system for the Summit Club in North Castle, New York. The proposed Summit Club will consist of six, three-story residential structures which include 88 units. The residential units will consist of a mix of 2, 3 and 4-bedroom units resulting in a total of 211 bedrooms. Other aspects to the development will include a clubhouse, a banquet hall and a golf course with a total estimated average daily demand of 40,903 gallons per day (gpd). The water-supply system will include three bedrock water-supply wells (Well 1, Well 3 and Well 6A) and a 105,000-gallon glass lined above-grade atmospheric storage tank. The water treatment system will include a particulate filtration system consisting of a 5-micron cartridge filter and a 1-micron (absolute) cartridge filter followed by an ultraviolet light disinfection (UV) system then chlorination of the groundwater from all three bedrock water-supply wells. Disinfection contact time will be provided by an 82-foot section of 24-inch C905 PVC pipe that will be installed prior to the 105,000-gallon atmospheric storage tank. The proposed construction is displayed on the attached plans. Well logs for Well 5, Well 7 and Well 8 are included in Appendix I.

The raw water lines will consist of a below-grade, 3-inch (for Well 3) and 4-inch (For Well 1 and Well 6A) diameter high-density polyethylene (HDPE) pipe that will be installed from the proposed treatment building to the opposite side of the property and under onsite wetlands using a combination of directional drilling and open excavation techniques. Directional drilling has been selected as the manner in which the raw water main will be installed for the vast majority of the length of the raw water lines (from the entry pit to exit pit as shown on the plans). This method was selected to allow for crossing the wetlands without disturbing the wetlands. In addition, this method is the preferred manner for wetland crossings with the New York State Department of Environmental Protection (NYSDEC) considering the entry pit and exit pit for the directional drilling are located outside of the wetland buffer. The proposed raw water lines would be installed in accordance with the Inadvertent Return Contingency Plan (Plan). This Plan is included as Appendix II. The drilling fluids used would be a bentonite clay/water mixture and any excess drilling fluids would be containerized within two 10,000-gallon frac tanks that will be positioned near the drill rig. The excess bentonite clay/water mixture would be disposed of offsite in accordance with all New York State and Federal regulations. Valves will be provided on all the water piping at the directional drill entry pit and exit pit, on both sides of the wetland crossing, in accordance with Section 8.9.2 of Recommended Standards for Water Works, 2018 Edition (RSWW). Section 8.9.2 of the RSWW also indicates that the following will be provided: "permanent taps or other provisions to allow insertion of a small meter to determine leakage and obtain water samples on each side of the valve closest to the source of supply". We are requesting a waiver from this requirement because it is considered that any taps on the water lines have the potential to introduce contamination into the water supply. In addition, if there is a need to determine if there is leakage in this section of the water main, an existing tap within the proposed treatment building can be utilized, in coordination with the proposed valve at the exit pit, to conduct a short-term leakage test.

A 72-hour pumping test was conducted on Well 1, Well 3 and Well 6A during June 2022. The 72-hour pumping test included the collection of water samples for a full New York State (NYS) Subpart 5 water-quality analysis including microparticulate analysis (MPA), which is discussed within the 72-hour pumping test. The report documenting the 72-hour yield test is included in Appendix III and the laboratory report that identifies the water quality is included in the 72-hour yield test report. The 72-hour pumping test demonstrated a stabilized yield of 37 gpm (gallons per minute), 33 gpm and 43 gpm for Well 1, Well 3 and Well 6A, respectively.

2.0 WATER-SUPPLY SYSTEM DESCRIPTION

The proposed equipment is included in the appendices described below:

- Appendix IV: Manufacturer's information sheets and submersible well pump curves, pitless units and NSF certifications.
- Appendix V: Manufacturer's information sheets for disinfection equipment (chemical metering pumps, flow meter, pump control module and chemical storage tank) and NSF certification.
- Appendix VI: Manufacturer's sheets for the 105,000-gallon underground atmospheric storage tanks, the hydropneumatic storage tank and NSF certification.
- Appendix VII: Manufacturer's information sheets and transfer pump curves and NSF certifications.

3.0 DESIGN ASSUMPTIONS

Design assumptions and features of the water-supply system are as follows:

- The scope of the design work for this project, and this associated Engineer's Report, covers the treatment equipment, pumping units, atmospheric storage and operational control of Well 1, Well 3 and Well 6A.
- The potable water system has been designed in accordance with: 1) the New York State Sanitary Code, Part 5 - Drinking Water Supplies; 2) The Recommended Standards for Water Works, 2018 Edition; and 3) The New York State Department of Health Guidelines for Rural Water Supply.
- The 24-inch diameter contact pipe is being utilized to provide 4-log disinfection.

4.0 EQUIPMENT SIZING

The proposed equipment is discussed below. Manufacturer's information sheets are included in the Appendices attached to this report.

4.1 Submersible Well Pumps

The total depth of Well 1 is 645 feet and based on a 72-hour yield test, the well is artesian and the safe yield is 37 gpm at a stabilized pumping water level of 248 feet below land surface (177 ft msl (feet mean sea level)). The pump in Well 1 will be set at 275 feet below land surface. Well 1 is constructed with a 6-inch diameter casing to a depth of 51 feet and the land surface elevation in the area of Well 1 is approximately 425 ft msl. The submersible well pump will convey groundwater from the well through the proposed treatment building and into the 105,000-gallon atmospheric storage tank. The maximum elevation of the overflow in the proposed 105,000-gallon atmospheric storage tank is 589 ft msl. This configuration results in a lift of 164 feet under a static water level condition and 412 feet under a pumping condition for the pump in Well 1. Friction losses associated with pumping the water from the well to the 105,000-gallon atmospheric storage tank are approximately 6 feet. This results in a total of 208 feet of

head loss and 418 feet of head loss, respectively, under a static and pumping condition. A 10% safety factor (21 feet under static and 42 feet under a pumping condition) has been included which results in a total dynamic head (TDH) of approximately 228 feet under a static condition and 500 feet under a pumping condition. A Goulds Model 35GS50 submersible pump has been selected and is capable of pumping up to 30 gpm at 500 feet of TDH. This pump has been selected to allow for operation without inducing backpressure on the submersible well pump without lowering the water level below the stabilized pumping water level. The static and pumping condition total dynamic head calculations are included in Appendix VIII.

The total depth of Well 3 is 645 feet and based on a 72-hour yield test, the well is artesian and the safe yield is 33 gpm at a stabilized pumping water level of 109 feet below land surface (328 ft msl). The pump in Well 3 will be set at 150 feet below land surface. Well 3 is constructed with a 6-inch diameter casing to a depth of 61 feet and the land surface elevation in the area of Well 3 is approximately 437 ft msl. The submersible well pump will convey groundwater from the well through the proposed treatment building and into the 105,000-gallon atmospheric storage tank. The maximum elevation of the overflow in the proposed 105,000-gallon atmospheric storage tanks is 589 ft msl. This configuration results in a lift of 152 feet under a static condition and 261 feet under a pumping condition for the pump in Well 3. Friction losses associated with pumping the water from the well to the 105,000-gallon atmospheric storage tank are approximately 3 feet. This results in a total head loss of 192 feet under a static condition and 300 feet under a pumping condition. A 10% safety factor (19 feet under static condition and 30 feet under a pumping condition) has been included which results in a TDH of approximately 211 feet under a static condition and 331 feet under a pumping condition. A Goulds Model 35GS50 submersible pump has been selected and is capable of pumping up 30 gpm at 500 feet of TDH. This pump will need to operate with induced backpressure to prevent over pumping the well. The total dynamic head calculation is included in Appendix VIII.

The total depth of Well 6A is 625 feet and based on a 72-hour yield test, the well is artesian and the safe yield is 43 gpm at a stabilized pumping water level of 109 feet below land surface (320 ft msl). The pump in Well 6A will be set at 150 feet below land surface. Well 6A is constructed with a 6-inch diameter casing to a depth of 61 feet and the land surface elevation in the area of Well 6A is approximately 429 ft msl. The submersible well pump will convey groundwater from the well through the proposed treatment equipment and into the 105,000-gallon atmospheric storage tank. The maximum elevation of the overflow in the proposed below-grade 105,000-gallon atmospheric storage tank is 589 ft msl. This configuration results in a lift of 160 feet under a static condition and 269 feet under a pumping condition for the pump in Well 6A. Friction losses associated with pumping the water from the well to the 105,000-gallon atmospheric storage tank are approximately 7 feet. This results in a head loss of 204 feet under a static condition and 313 feet under a pumping condition. A 10% safety factor (20 feet under a static condition and 31 feet under a pumping condition) has been included which results in a TDH of approximately 225 under a static condition and 345 under a pumping condition. A Goulds Model 45GS50 submersible pump has been selected and is capable of pumping up to 50 gpm at 300 feet of TDH. The total dynamic head calculation is included in Appendix VIII.

4.2 Cartridge Filtration System

The cartridge filtration system will consist of two filter housings equipped with cartridge filters. The primary and secondary filters will be Harmsco MUNI-3-4L-304 positioned in series. The primary filter housing is rated for a maximum flow rate of 450 gpm and will include a 5-micron cartridge filter (HC/170-5). The second housing is also rated for a maximum of 300 gpm when equipped with a LT2 cartridge filter (HC/170-LT2). Therefore, the filtration system can adequately treat the peak well output of 113 gpm from Well 1, Well 3 and Well 6A (based on the yield test) and 165 gpm, which is the combined

peak output of the submersible well pumps. Pressure gauges and sample ports will be positioned at pre-filter, mid-filter and post-filter locations to allow monitoring of differential pressure and collection of water samples (if necessary) at each stage of the filtration process. The specified filter housings and the cartridges are NSF 61 approved. Manufacturer's information sheets are included as Appendix IX.

4.3 Ultraviolet Light Disinfection System

The UV system will include two multi-lamp, medium pressure UV units that are manufactured by Evoqua, Model WF-225-8 and work in conjunction with a continuous turbidity meter and a motorized butterfly valve positioned downstream of each UV unit. The UV dose for the unit is 40 mJ/cm^2 (millijoule per square centimeter) at the end of the lamp life and each UV unit is has been validated for drinking water per USEPA UVDGM and NSF 61 certification. The lamps are rated for 9,000 hours of operation when operating continuously, the maximum flow rate through the unit is 275 gpm and the maximum pressure rating of the unit 150 psi (pounds per square inch). Two UV units have been selected for use to provide redundancy in the treatment process.

When the submersible well pump is not operating, each UV unit will be off and each motorized butterfly valve will be closed. When the supervisory control and data acquisition system (SCADA) calls for water from Well 1, Well 3 or Well 6A, one of the UV units will activate and the "3-minute warm up" period will be initiated. After the 3-minute warm up, the motorized butterfly valve that is in line with the UV unit will open and allow groundwater to flow through the UV unit. Each UV unit is equipped with a UV sensor that monitors the lamps performance which is impacted by lamp intensity, quartz fouling and water transmittance. The monitor will also assess the system performance and when to change the lamps. In the event of any service issues that would affect the water treatment, the motorized butterfly valve will close and the submersible well pump will be deactivated. In addition, an audible and visible alarm will be connected to the UV unit and will be activated in the event the UV unit fails or the UV dose drops below 40 mJ/cm2.

The UV disinfection system will be connected to the flow meter to automatically adjust the power used by the UV system. The UV system is designed to minimize power while maintaining dose and the delivered dose uses the flow input along with lamp intensity to automatically adjust the power used. The manufacture's information sheets and validation report are included in Appendix X.

4.4 Disinfection

One flow paced chemical metering pump for each submersible well pump will be used to inject sodium hypochlorite into the raw water from Well 1, Well 3 and Well 6A. Each flow paced chemical metering pump will be interlocked with the operation of the submersible pump and will activate when the submersible well activates. The chemical metering pump for Well 1 and Well 3 (Stenner Model 85MHP5) has the capacity to inject a maximum of 5 gpd (gallons per day) of the diluted sodium hypochlorite solution against 100 psi. The chemical metering pump for Well 6A (Stenner Model 45MHP10) has the capacity to inject a maximum of 5 gpd of the diluted sodium hypochlorite solution against 100 psi. This solution will come from a 55-gallon storage tank positioned within the treatment building. The chemical metering pump for Well 1, Well 3 and Well 6A will be configured to inject a diluted 12.5% sodium hypochlorite solution into the raw water pipe leading to the oversized contact pipe when the submersible well pumps activate and the output of the chemical metering pump will automatically adjust to the recorded flow rate. The sodium hypochlorite solution that will be used for disinfection of the water supply will be stored in a 55-gallon polyethylene covered storage tank and the solution will be created by mixing 10 gallons of 12.5% sodium hypochlorite solution and 44 gallons of raw water. The injection rate for each

metering pump has been calculated to maintain a chlorine residual of 1.0 ppm (parts per million) in the water leaving the oversized water main. The injection dial for the metering pumps for Well 1, Well 3 and Well 6A will set to operate at 6.2, 6.2 and 4.0, respectively (based on a scale of 0 to 10) to inject 3.1 gpd, 3.1 gpd and 4.0 gpd, respectively, of the sodium hypochlorite solution. The calculations supporting the settings of the injection pumps are included as Appendix XI.

The disinfection system is designed to provide a minimum of four-log virus inactivation in accordance with the United States Environmental Protection Agency (USEPA) Groundwater Rule. The necessary contact time is met through the travel time in the 82 feet of 24-inch C905 PVC pipe located between the atmospheric storage tank and the treatment building. Using the storage volume in the 24-inch diameter pipe, a contact time of 13.5 minutes was calculated based on the combined pumping rate from the submersible well pumps (165 gpm). The disinfection CT is the product of the residual disinfection concentration (C) and the corresponding disinfectant contact time (T). Based on the USEPA guidance, 4-log virus inactivation can be achieved with a minimum CT of 8 mg-min/l (milligram minutes per liter). Using 82 feet of 24-inch C905 pipe to provide contact time, and a minimum residual chlorine concentration of 0.6 mg/l, a CT of 8.09 mg-min/l will be achieved and the required minimum CT of 8 mg-min/l will be met. As noted above, the settings for the metering pumps have been determined to achieve a chlorine concentration of 1.0 mg-min/l at the treatment building and thereby ensure that the 0.6 mg-min/l design residual chlorine concentration will be obtained at the compliance point. The calculations supporting the concentration, time and size of this pipe are included as Appendix XII. In addition, the specification for the C905 piping is included in Appendix XII.

4.5 TRANSFER PUMPS

The total average daily demand for the development was determined to be 40,903 gpd and transfer pumps will be used to convey treated water from the treatment building to the proposed development. Based on general guidance from the Department of Health, the capacity of the transfer pumps for the proposed facility is determined by multiplying the estimated average daily demand by 10, and then converting the result to gallons per minute. Utilizing 40,903 gpd for the average daily demand of the proposed facility, the resulting transfer pump capacity is 284 gpm (40,903 x 10 / 1,440). The proposed pumping system for the domestic supply for the development will consist of three transfer pumps of equal capacity that will each have the capability of pumping 142 gpm at the calculated design pressure to equal the total capacity that is needed. The first-floor elevation of the highest point in the distribution system is at an elevation of 650.90 ft msl and the elevation at the highest point served in the distribution system is assumed to be 30 feet above the first-floor elevation (three-story structures), or 680.90 ft msl. The elevation at the lowest point in the distribution system is the water treatment building at approximately 562 ft msl, the elevation of the suction for the transfer pump is 564 ft msl and the ground floor elevation of the lowest structure would be at 633 ft msl. This configuration results in a maximum elevation difference of approximately 117 feet (50 psi) from the transfer pump suction to the high point in the distribution system. Friction losses associated with pumping the water to the furthest point in the distribution system are estimated to be approximately 4 feet. The minimum pressure at the highest point in the distribution system will be 35 psi (81 feet) and a 10% safety factor (20 feet) has been included which results in an approximate TDH of 222 feet. Three Goulds Model 33SV-3/2 pumps rated (rated for 140 gpm at 230 feet TDH) with 15-HP motors and equipped with variable frequency drives (VFD) have been chosen for this application. The three 33SV-3/2 pumps were sized to provide 142 against 222 feet. The manufacturer's information sheets and the pump curve are included as Appendix VI and the total dynamic head calculation is included as Appendix XIII. The proposed transfer pumps were also evaluated to determine the ability of multiple pumps being operated to meet the peak hour demand. The peak hour demand was estimated by multiplying the estimated average daily demand by 1/3, and then

converting the result to gallons per minute. Utilizing 40,903 gpd for the average daily demand of the proposed facility, the resulting peak hour demand is 227 gpm (40,903 x 1/3 / 60). Friction losses associated with pumping 227 gpm to the furthest point in the distribution system are estimated to be approximately 3 feet. The minimum pressure at the highest point in the distribution system will be 35 psi (81 feet) and a 10% safety factor (20 feet) has been included which results in an approximate TDH of 221 feet. Based on the pump curve, each Goulds Model 33SV-3/2 would be operating at approximately 142 gpm, which allow for one of the three transfer pumps to be out of service.

The transfer pumping system was also designed to provide the fire flow for the development. The fire flow requirement was determined based on National Fire Prevention Association (NFPA) 1 2018 Fire Code, Section 18.4.5.1, "One and Two-Family Dwellings Not Exceeding 5,000 square feet". Based on this section of the NFPA 1 Code, the fire flow requirement is 1,000 gpm for 60 minutes, or 60,000 gallons. Two high-capacity transfer pumps (high flow) were selected to meet the fire flow demand exclusive of the output of the domestic transfer pumps at a minimum pressure of 20 psi at the highpoint of the distribution system. The TDH for the fire protection transfer pumps was calculated to be 225 feet and the calculation is included in Appendix VII. Two Goulds Model 125SV-4/3B pumps (rated for 730 gpm @ 225 ft TDH) were selected and include a 50-HP motors that will be equipped VFDs have been chosen for this application. The manufacturer's product information sheets and pump curve are included in Appendix XIV.

The domestic and high-capacity pumps were selected, in part, to allow for redundancy. If one of the domestic pumps is out of service, the remining two domestic pumps can activate to meet the domestic demand. If one of the high-capacity pumps is out of service, the combination of two domestic pumps and the single high-capacity pumps can be utilized to meet the requirement of 1,000 gpm.

4.5.1 Atmospheric Storage Tank

One above-grade 105,000-gallon glass-lined atmospheric storage tank was designed to approximate the average daily demand plus the volume of water need for fire protection. The atmospheric storage tank will be positioned in the area of the proposed treatment building.

One above-grade 105,000-gallon atmospheric storage tank that are 31 feet in diameter and 26 feet tall will be utilized and the volume has been designed to approximate the average daily demand of 40,903 gpd plus 60,000 gallons for fire protection. The above-grade 105,000-gallon atmospheric storage tank will be steel-bolted glass-lined storage tanks.

5.0 METHOD OF OPERATIONS AND CONTROLS

The control panel for the water-system equipment will be located within the proposed treatment building. Each submersible well pump will have a selector switch that has both manual and automatic modes of operation. When the switch is set in the manual mode, it will override all automatic operational sensors. When the switch is set to operate in the automatic mode, the well pumps will operate in accordance with the level sensor (pressure transducer) located in the 105,000-gallon atmospheric storage tank. The pressure transducer will be hardwired to the control panel for the submersible well pump.

Under normal operating conditions, one submersible well pump will activate when the low-level setting on the pressure transducer in one of the 105,000-gallon atmospheric storage tank is activated. If the water level in the 105,000-gallons atmospheric storage tank continues to decline a second well pump will activate and if the water level continues to decline, the third well pump will activate. The well

pumps will continue to operate until the high-level setting on the pressure transducer is activated; thereby triggering the well pumps to deactivate and the lead pump will alternate.

Under normal operating conditions, the pressure measured at the hydropneumatic storage tank within the treatment building will be maintained at 85 psi (196 feet). If one transfer pump is unable to meet the demand from the water system, a second transfer pump will be activated, and additional transfer pumps will be activated as needed to maintain this pressure. In addition, the lead pump will alternate with each call for activation to allow for each transfer pump to operate. If the domestic pumps are unable to maintain the constant pressure, one or both of the high flow pumps will activate to maintain the constant pressure. Backup power will be provided for the water supply and treatment system and the backup generator will be specified by others and it will have the capability of powering all pumping equipment, treatment equipment, heating and ventilation, and lighting.

cmm
August 22, 2022
H:\Brynwood\2022\Summit Club_Engineer's Rpt\Eng. Rpt_Water-Supply System_Draft.doc

APPENDIX I

Westchester gov.com

Westchester County Department Health
Bureau of Environmental Quality

WELL COMPLETION REPORT: Well #1 WCDH File No.

This report is to be completed by well driller and submitted to Health Department, together with laboratory report of analysis of water sample indicating water is of satisfactory bacterial quality, before certificate of construction compliance is issued.

Well construction to be in accordance with Westchester County Health Dept, Rules & Regulations for the Design and Construction of Residential Subsurface Sewage Treatment System and Drilled Wells in Westchester County, NY.

Located at: 563 Bedford Rd Section: Block:

Well Location Municipality: N. Castle Lot:

Owner Last Name: Brynwood Owner First Name: C.C.

St. # 563 Street Name: Rte 22 Municipality: Armonk State: NY Zip Code: 10504

Well Driller (WD) Company Name:

Well Pit and Pump Equipment: Pitless Adapter: Other – Describe

Pump Make: Pump Type: Pump Capacity: Pump GPM:

Storage Tank Type: Storage Tank Capacity:

Well Details:

Casing Length: 57 Ft. Yield Test Type: Air Measured from Land

Casing Diameter 6 In. Yield Test Duration: 6 Hrs. Water Level, Static: 0 Ft.

Casing Material: Steel Well Yield: 75 G.P.M. Water Level, Pumped: 500 Ft.

Screen Make: Screen Diameter: Inches

Screen Length: Ft. Screen Slot Size: **TOTAL WELL DEPTH :** 575 Ft.

WELL LOG :

Depth From Ground Surface		Give description of formation penetrated, such as: peat, silt, sand, gravel, clay, hardpan, shale, sandstone, granite, etc. Include size of gravel (diameter) and sand (fine, medium, coarse), color of material, structure (loose, packed, cemented, soft, hard). For example: 0 ft. to 27 ft. fine, packed, yellow sand; 27 ft. to 134 ft. gray granite.
0 Ft. to	17 Ft.	Well Geology, 1st Strata : Hardpan & Clay
17 Ft. to	575 Ft.	Well Geology, 2nd Strata: Gray Granite
Ft. to	Ft.	Well Geology, 3rd Strata :
Ft. to	Ft.	Well Geology, 4th Strata :
Ft. to	Ft.	Well Geology, 5th Strata :

I certify that the individual water supply indicated above was installed as per the Westchester County Health Department Rules & Regulations for the Design and Construction of Residential Subsurface Sewage Treatment System and Drilled Wells in Westchester County, NY.

Date Well Was Completed: 4/25/13 Date of Signature 5/29/13

NYSDEC Registration #: 10318 Well Driller Signature : Duane Ford

Revised 1/18/05

Westchester County Department Health
Bureau of Environmental Quality

WELL COMPLETION REPORT: Well #273 WCDH File No.

This report is to be completed by well driller and submitted to Health Department, together with laboratory report of analysis of water sample indicating water is of satisfactory bacterial quality, before certificate of construction compliance is issued.

Well construction to be in accordance with Westchester County Health Dept, Rules & Regulations for the Design and Construction of Residential Subsurface Sewage Treatment System and Drilled Wells in Westchester County, NY.

Located at: 568 Bedford Rd Section: Block:

Well Location Municipality: N. CASTLE Lot:

Owner Last Name: BRINWOOD Owner First Name: C.C.

St. # 568 Street Name: Rte 22 Municipality: ARMONK State: NY Zip Code: 10504

Well Driller (WD) Company Name:

Well Pit and Pump Equipment: Pitless Adapter: Other – Describe

Pump Make: Pump Type: Pump Capacity: Pump GPM:

Storage Tank Type: Storage Tank Capacity:

Well Details:

Casing Length: 100 Ft. Yield Test Type: Air Measured from Land

Casing Diameter: 6 In. Yield Test Duration: 6 Hrs. Water Level, Static: 0 Ft.

Casing Material: Steel Well Yield: 20 G.P.M. Water Level, Pumped: 500 Ft.

Screen Make: Screen Diameter: Inches

Screen Length: Ft. Screen Slot Size: **TOTAL WELL DEPTH :** 545 Ft.

WELL LOG :

Depth From Ground Surface	Give description of formation penetrated, such as: peat, silt, sand, gravel, clay, hardpan, shale, sandstone, granite, etc. Include size of gravel (diameter) and sand (fine, medium, coarse), color of material, structure (loose, packed, cemented, soft, hard). For example: 0 ft. to 27 ft. fine, packed, yellow sand; 27 ft. to 134 ft. grey granite.
0 Ft. to 37 Ft.	Well Geology, 1st Strata : HARDPAN + WATER
37 Ft. to 88 Ft.	Well Geology, 2nd Strata: SOFT CAVING ROCK
88 Ft. to 545 Ft.	Well Geology, 3rd Strata : GRAY GRANITE
Ft. to Ft.	Well Geology, 4th Strata :
Ft. to Ft.	Well Geology, 5th Strata :

I certify that the individual water supply indicated above was installed as per the Westchester County Health Department Rules & Regulations for the Design and Construction of Residential Subsurface Sewage Treatment System and Drilled Wells in Westchester County, NY.

Date Well Was Completed: 4/23/13 Date of Signature 5/29/13

NYSDEC Registration #: 10318 Well Driller Signature : for Paul

Revised 1/18/08

Westchester gov.com

Westchester County Department Health
Bureau of Environmental Quality

WELL COMPLETION REPORT: Well #3

WCDH File No.

This report is to be completed by well driller and submitted to Health Department, together with laboratory report of analysis of water sample indicating water is of satisfactory bacterial quality, before certificate of construction compliance is issued.

Well construction to be in accordance with Westchester County Health Dept, Rules & Regulations for the Design and Construction of Residential Subsurface Sewage Treatment System and Drilled Wells in Westchester County, NY.

Located at: 568 Bedford Rd Section: Block:

Well Location Municipality: N. Castle Lot:

Owner Last Name: Brfnwood Owner First Name: C.C.

St. #: 563 Street Name: Rte 22 Municipality: Armonk State: NY Zip Code: 10504

Well Driller (WD) Company Name:

Well Pit and Pump Equipment: Pitless Adapter: Other – Describe

Pump Make: Pump Type: Pump Capacity: Pump GPM:

Storage Tank Type: Storage Tank Capacity:

Well Details:

Casing Length: 61 Ft. Yield Test Type: Air Measured from Land

Casing Diameter 6 In. Yield Test Duration: 6 Hrs. Water Level, Static: 0 Ft.

Casing Material: Steel Well Yield: 40 G.P.M. Water Level, Pumped: 600 Ft.

Screen Make: Screen Diameter: Inches

Screen Length: Ft. Screen Slot Size: TOTAL WELL DEPTH : 645 Ft.

WELL LOG :

Depth From Ground Surface	Give description of formation penetrated, such as: peat, silt, sand, gravel, clay, hardpan, shale, sandstone, granite, etc. Include size of gravel (diameter) and sand (fine, medium, coarse), color of material, structure (loose, packed, cemented, soft, hard). For example: 0 ft. to 27 ft. fine, packed, yellow sand; 27 ft. to 134 ft. gray granite.
0 Ft. to 27 Ft.	Well Geology, 1st Strata : HARDPAN & CLAY
27 Ft. to 645 Ft.	Well Geology, 2nd Strata: GRAY GRANITE
Ft. to Ft.	Well Geology, 3rd Strata :
Ft. to Ft.	Well Geology, 4th Strata :
Ft. to Ft.	Well Geology, 5th Strata :

I certify that the individual water supply indicated above was installed as per the Westchester County Health Department Rules & Regulations for the Design and Construction of Residential Subsurface Sewage Treatment System and Drilled Wells in Westchester County, NY.

Date Well Was Completed: 1/30/13 Date of Signature 5/29/13

NYSDEC Registration #: 10318 Well Driller Signature :

Revised 1/18/06

Westchester County Department Health
Bureau of Environmental Quality

WELL COMPLETION REPORT: Well #4 WCDH File No.

This report is to be completed by well driller and submitted to Health Department, together with laboratory report of analysis of water sample indicating water is of satisfactory bacterial quality, before certificate of construction compliance is issued.

Well construction to be in accordance with Westchester County Health Dept, Rules & Regulations for the Design and Construction of Residential Subsurface Sewage Treatment System and Drilled Wells in Westchester County, NY

Located at: 568 Bedford Rd Section: Block:

Well Location Municipality: N. CASTLE Lot:

Owner Last Name: BRYNWOOD Owner First Name: C.C.

St. #: 568 Street Name: Rte 22 Municipality: ARMONK State: NY Zip Code: 10504

Well Driller (WD) Company Name:

Well Pit and Pump Equipment: Pitless Adapter: Other – Describe

Pump Make: Pump Type: Pump Capacity: Pump GPM:

Storage Tank Type: Storage Tank Capacity:

Well Details:

Casing Length: 61 Ft. Yield Test Type: Air — Measured from Land

Casing Diameter 6 In. Yield Test Duration: 6 Hrs. Water Level, Static: 0 Ft.

Casing Material: Steel Well Yield: 7 G.P.M. Water Level, Pumped: 500 Ft.

Screen Make: Screen Diameter: Inches

Screen Length: Ft. Screen Slot Size: **TOTAL WELL DEPTH :** 545 Ft.

WELL LOG :

Depth From Ground Surface	Give description of formation penetrated, such as: peat, silt, sand, gravel, clay, hardpan, shale, sandstone, granite, etc. Include size of gravel (diameter) and sand (fine, medium, coarse), color of material, structure (loose, packed, cemented, soft, hard). For example: 0 ft. to 27 ft. fine, packed, yellow sand; 27 ft. to 134 ft. grey granite.
0 Ft. to 4 Ft.	Well Geology, 1st Strata : HARDPAN
4 Ft. to 545 Ft.	Well Geology, 2nd Strata: GRAY GRANITE
Ft. to Ft.	Well Geology, 3rd Strata :
Ft. to Ft.	Well Geology, 4th Strata :
Ft. to Ft.	Well Geology, 5th Strata :

I certify that the individual water supply indicated above was installed as per the Westchester County Health Department Rules & Regulations for the Design and Construction of Residential Subsurface Sewage Treatment System and Drilled Wells in Westchester County, NY.

Date Well Was Completed: 2/1/13 Date of Signature 5/29/13

NYSDEC Registration #: 10317 Well Driller Signature : C Torlish

Revised 1/13/08

Westchester County Department Health
Bureau of Environmental Quality

WELL COMPLETION REPORT: Well # 5 WCDH File No.

This report is to be completed by well driller and submitted to Health Department, together with laboratory report of analysis of water sample indicating water is of satisfactory bacterial quality, before certificate of construction compliance is issued.

Well construction to be in accordance with Westchester County Health Dept. Rules & Regulations for the Design and Construction of Residential Subsurface Sewage Treatment System and Drilled Wells in Westchester County, NY.

Located at: 568 Bedford Rd Section: Block:

Well Location Municipality N. CASTLE Lot:

Owner Last Name: BRINWOOD Owner First Name: C. C.

St. # 568 Street Name: Rte 22 Municipality: ARMONK State: NY Zip Code: 10504

Well Driller (WD) Compar / Name:

Well Pit and Pump Equipment: Pitless Adapter: Other – Describe

Pump Make: Pump Type: Pump Capacity: Pump GPM:

Storage Tank Type: Storage Tank Capacity:

Well Details:

Casing Length: 61 Ft. Yield Test Type: Air Measured from Land

Casing Diameter 6 In. Yield Test Duration: 6 Hrs. Water Level, Static: 20 Ft.

Casing Material: Steel Well Yield: 25 G.P.M. Water Level, Pumped: 500 Ft.

Screen Make: Screen Diameter: Inches

Screen Length: Ft. Screen Slot Size: **TOTAL WELL DEPTH :** 540 Ft.

WELL LOG :

Depth From Ground Surface	Give description of formation penetrated, such as: peat, silt, sand, gravel, clay, hardpan, shale, sandstone, granite, etc. Include size of gravel (diameter) and sand (fine, medium, coarse), color of material, structure (loose, packed, cemented, soft, hard). For example: 0 ft. to 27 ft. fine, packed, yellow sand; 27 ft. to 134 ft. gray granite.
0 Ft. to 7 Ft.	Well Geology, 1st Strata : HARDPAN
7 Ft. to 540 Ft.	Well Geology, 2nd Strata: GRAY GRANITE
Ft. to Ft.	Well Geology, 3rd Strata :
Ft. to Ft.	Well Geology, 4th Strata :
Ft. to Ft.	Well Geology, 5th Strata :

I certify that the individual water supply indicated above was installed as per the Westchester County Health Department Rules & Regulations for the Design and Construction of Residential Subsurface Sewage Treatment System and Drilled Wells in Westchester County, NY.

Date Well Was Completed: 5/6/13 Date of Signature 5/29/13

NYSDEC Registration #: 10318 Well Driller Signature :

Revised 1/18/02

Westchester County Department Health
Bureau of Environmental Quality

WELL COMPLETION REPORT: WELL # 6A WCDH File No.

This report is to be completed by well driller and submitted to Health Department, together with laboratory report of analysis of water sample indicating water is of satisfactory bacterial quality, before certificate of construction compliance is issued.

Well construction to be in accordance with Westchester County Health Dept, Rules & Regulations for the Design and Construction of Residential Subsurface Sewage Treatment System and Drilled Wells in Westchester County, NY.

Located at: 568 Bedford Rd Section: Block:

Well Location Municipality: N. CASTLE Lot:

Owner Last Name: BRYNWOOD Owner First Name: C.C.

St. # 568 Street Name: Rte 22 Municipality: ARMONK State: NY Zip Code: 10504

Well Driller (WD) Company Name:

Well Pit and Pump Equipment: Pitless Adapter: Other – Describe

Pump Make: Pump Type: Pump Capacity: Pump GPM:

Storage Tank Type: Storage Tank Capacity:

Well Details:

Casing Length: 61 Ft. Yield Test Type: Air Measured from Land

Casing Diameter 6 In. Yield Test Duration: 6 Hrs. Water Level, Static: 0 Ft.

Casing Material Steel Well Yield: 30 G.P.M. Water Level, Pumped: 600 Ft.

Screen Make: Screen Diameter: Inches

Screen Length: Ft. Screen Slot Size: TOTAL WELL DEPTH : Ft.

WELL LOG :

Depth From Ground Surface	Give description of formation penetrated, such as: peat, silt, sand, gravel, clay, hardpan, shale, sandstone, granite, etc. Include size of gravel (diameter) and sand (fine, medium, coarse), color of material, structure (loose, packed, cemented, soft, hard). For example: 0 ft. to 27 ft. fine, packed, yellow sand; 27 ft. to 134 ft. gray granite.
0 Ft. to 20 Ft.	Well Geology, 1st Strata : HARDPAN & CLAY
20 Ft. to 675 Ft.	Well Geology, 2nd Strata: GRAY GRANITE
Ft. to Ft.	Well Geology, 3rd Strata :
Ft. to Ft.	Well Geology, 4th Strata :
Ft. to Ft.	Well Geology, 5th Strata :

I certify that the individual water supply indicated above was installed as per the Westchester County Health Department Rules & Regulations for the Design and Construction of Residential Subsurface Sewage Treatment System and Drilled Wells in Westchester County, NY.

Date Well Was Completed: 5/13/13 Date of Signature 5/29/13

NYSDEC Registration #: 10318 Well Driller Signature : James Torlish

Revised 1/18/08

APPENDIX II

INADVERTENT RETURNS CONTINGENCY PLAN FOR HORIZONTAL DIRECTIONAL DRILLING

1.0 INTRODUCTION AND PURPOSE

Horizontal directional bore operations have a potential to release drilling fluids into the surface environment through inadvertent returns (an inadvertent return is the condition where drilling mud is released through fractured soil into the surrounding formation and travels toward the surface). Because drilling muds consist of a bentonite clay-water mixture, they are not classified as toxic or hazardous substances. Prior to the start of horizontal drilling, the contractor's field supervisor shall document existing conditions in the work area and surrounding area to establish baseline conditions.

While drilling fluid seepage associated with an inadvertent return is most likely to occur near the bore entry and exit points where the drill head is shallow, inadvertent returns can occur at any location along a directional bore. This Inadvertent Returns Contingency Plan (IRCP) establishes operational procedures and responsibilities for the prevention, containment, and cleanup of inadvertent returns associated with the proposed directional drilling project. All personnel and sub-contractors responsible for the work must adhere to this plan during the directional drilling process.

The specific objectives of this plan are to:

1. Minimize the potential for inadvertent returns associated with horizontal directional drilling activities;
2. Provide for the timely detection of inadvertent returns;
3. Protect areas that are considered environmentally sensitive (streams, wetlands, other biological sources, cultural resources)
4. Ensure an organized, timely, and "minimum-impact" response in the event of inadvertent returns and release of drilling bentonite; and
5. Ensure that all notifications are made to the appropriate parties at the Summit Club (Summit) and their representatives immediately and to appropriate regulatory agencies within 24 hours and that documentation is completed.

2.0 DESCRIPTION OF WORK- SUMMARY

The project will entail horizontal directional drilling (HDD) from the area where the proposed treatment building will be located to the general area where the wells are located. A raw water main will be installed and connected to Well 1, Well 3 and Well 6A.

The project has been designed, and is proposed to be constructed, such that there will be limited disturbance to the property. To minimize site disturbance, the Summit proposes to use the HDD method of pipeline installation to install the raw water transmission line and electrical conduit a minimum of 10 feet below land surface and below the wetland and surface water bodies. This depth will be maintained except at the entry pit and the exist pit where the minimum depth of the raw water transmission lies will be 4 feet below land surface. HDD is recognized as the least environmentally disturbing construction technique available for installing pipelines. The primary alternative to HDD would be trenching.

HDD uses drilling fluid to facilitate the drilling of the bore hole (initial hole), and installation of the lines. The fluid also serves to stabilize the surrounding formations and provides a seal that reduces the risk of inadvertent returns.

To prevent or mitigate potential impacts from inadvertent returns, drilling operations will be halted by the drill rig operators immediately upon detection of a drop in drilling pressure or other evidence of inadvertent returns. The clean-up of all spills shall begin immediately. Summit shall be notified immediately of any spills and shall be consulted regarding clean-up procedures. A spill kit shall be onsite and used if inadvertent returns occurs. A vacuum trailer and containment materials, such as straw bales, shall also be on-site prior to and during all operations. In the event of an inadvertent returns, the on-site foreman/supervisor will conduct an evaluation of the situation and direct recommended mitigation actions, based on the following guidelines:

a. If the inadvertent return is minor, easily contained, or has not reached the surface and is not an immediate threat to nearby sensitive resources, drilling operations may resume after use of a leak-stopping compound or redirection of the bore;

b. If the inadvertent return has reached the surface, any material contaminated with bentonite shall be removed by hand, contained and properly disposed of, as required by law. Summit shall be responsible for ensuring that the bentonite is either properly disposed of at an approved disposal facility or properly recycled in an approved manner. The Site Supervisor shall notify and take any necessary follow-up response actions in coordination with agency representatives. The Site Supervisor will coordinate the mobilization of equipment stored at offsite locations (e.g., vacuum trucks) on an as-needed basis.

3.0 SITE SUPERVISOR/FOREMAN RESPONSIBILITIES

The Site Supervisor/Foreman will have overall responsibility and the necessary knowledge/training for implementing this IRCP. The Site Supervisor/Foreman will ensure that all employees are trained prior to drilling activities. The Site Supervisor/Foreman shall notify Summit personnel immediately when an inadvertent return is detected. The Site Supervisor/Foreman will be responsible for ensuring that the safety department is aware of the inadvertent return, coordinating personnel, response, cleanup, regulatory agency notification and disposal of recovered material and timely reporting of the incident. The Site Supervisor/Foreman shall ensure all waste materials are properly containerized, labeled, and removed from the site to an approved disposal facility by personnel experienced in the removal, transport and disposal of drilling mud.

The Site Supervisor/Foreman shall be familiar with all aspects of the drilling activity, the contents of this IRCP and the conditions of approval under which the activity is permitted to take place. The Site Supervisor/Foreman shall have the authority to stop work and commit the resources (personnel and equipment) necessary to implement this plan. The Site Supervisor/Foreman shall ensure that a copy of this plan is available onsite and accessible to all construction personnel. The Site Supervisor/Foreman shall ensure that all workers are properly trained and familiar with the necessary procedures for response to an inadvertent return, prior to commencement of drilling operations.

3.1 Design Engineer Observation

WSP engineering staff will provide full-time observation during the horizontal drilling work.

4.0 EQUIPMENT

The Contractor, including the Site Supervisor shall ensure that:

- All equipment and vehicles are inspected and maintained daily;
- Spill kits and spill containment materials are available onsite at all times and that the equipment is in good working order;
- Equipment required to contain and clean up an inadvertent returns release will be available at the work site;
- A vacuum trailer shall be staged at a location from which it can be mobilized and relocated so that any place along the drill pathway, can be reached by the apparatus in a timely manner; and
- Construction personnel shall have appropriate operational communication onsite at all times during construction.

5.0 TRAINING

Prior to the start of construction, the Site Supervisor/Foreman, shall ensure that the crew members receive training in the following:

- The provisions of the IRCP, equipment maintenance and site-specific permit and monitoring requirements;
- Inspection procedures for release prevention and containment with the available equipment and materials;
- Contractor/crew obligation to immediately stop the drilling operation upon first evidence of the occurrence of an inadvertent return and to immediately report any inadvertent returns release to the Site Supervisor/Foreman;
- Contractor/crew member responsibilities in the event of a release;
- Operation of release prevention and control equipment and the location of release control materials, as necessary and appropriate; and
- Protocols for communication with agency representatives who might be onsite during the clean-up effort. List of contact names, phone numbers and lines of authority and notifications shall be kept onsite.

6.0 DRILLING AND RESPONSE PROCEDURES

The following procedures shall be followed each day, prior to, and during the drilling process:

- The IRCP shall be available onsite during all construction.
- The Site Supervisor/Foreman shall be on-site at any time that drilling is occurring.
- The Site Supervisor/Foreman shall ensure that a job briefing meeting is held at the start of each day of drilling to review the appropriate procedures to be followed in case of an inadvertent return. Questions shall be answered and clarification given on any point over which the drilling crew or other project staff has concerns.
- The Site Supervisor/Foreman will be responsible as full-time monitor of observable inadvertent returns conditions or lowered pressure readings on the drilling equipment.

Drilling pressures shall be closely monitored so they do not exceed those needed to penetrate the formation. Pressure levels shall be monitored constantly by the operator. Maximum pressure levels shall be set at a level to prevent inadvertent returns.

6.1 Precautions

A site inspection will be conducted of the drilling entry and exit areas, surrounding work areas, and the drilling route on the surface for familiarization purposes.

Where present, sensitive cultural and biological resources will be flagged for avoidance or construction limits will be clearly marked. Barriers (straw bales or sedimentation fences) will be erected between the bore site and nearby sensitive resources prior to drilling, as appropriate, to prevent released material from reaching the resource. The silt fence and haybale locations and details are provided on the attached plans.

Exit and entry pits shall be clearly marked, and surrounded by construction fencing, silt fencing and straw barriers to minimize the potential for migration of bentonite. Excavation at all entry points will receive full-time monitoring. Early detection is key to minimizing the potential of an inadvertent return.

Access and egress locations will be designated and clearly marked. A spill kit shall be onsite and used if an inadvertent return occurs. A vacuum truck shall be readily available prior to and during all drilling operations. Containment materials (straw, silt fencing, sand bags, inadvertent returns spill kits, etc.) shall be staged onsite at a location where they are readily available and easily mobilized for immediate use in the event of an accidental release of drilling mud (inadvertent returns).

6.2 Field Response to Inadvertent returns Occurrence

Once the drill rig is in place, and drilling begins, the drill operator shall stop work whenever the pressure in the drill rig drops, or there is a lack of returns in the entrance pit. At this time, the Summit Site Supervisor/Foreman shall be informed of a potential inadvertent return. If a potential inadvertent return is confirmed, all work will stop. The Site Supervisor/Foreman and the drill rig operator(s) shall work to coordinate the likely location of the potential inadvertent returns. The location of the potential inadvertent return shall be recorded and notes made regarding the location and measures taken to address the concern.

Water containing mud, silt, bentonite from equipment washing or other activities, shall not be allowed to enter the wetland. The bentonite used in the drilling process shall be either disposed of at an approved disposal facility or recycled in an approved manner. Other construction materials and wastes shall be recycled, or disposed of, as appropriate.

The response of the field crew to an inadvertent returns release shall be immediate and in accordance with procedures identified in this Plan. All appropriate emergency actions that do not pose additional threats to sensitive resources will be taken, as follows:

a. Directional boring will stop immediately;
b. The drill pipe will be pulled back to relieve pressure on inadvertent returns;
c. Determine the location & extent of the inadvertent returns; the surface path of the crossing shall be inspected;

d. The Site Supervisor/Foreman will be notified to ensure that management and the safety department is notified, adequate response actions are taken and notifications made;
e. The Site Supervisor/Foreman shall evaluate the situation and recommend the type and level of response warranted, including the level of notification required;
f. If the inadvertent returns is minor, easily contained, has not reached the surface and is not threatening sensitive resources, a leak-stopping compound shall be used to block the inadvertent returns. If the use of leak-stopping compound is not fully successful, the bore stem shall be redirected to a new location along the desired drill path where an inadvertent returns has not occurred.

6.2.1 Inadvertent Release Response on Land

If a release of drilling mud occurs at a fracture on land:

- Isolate the area with coir logs (coconut fiber logs), hay bales, sand bags, and/or silt fencing to surround and contain the drilling mud.
- Consult with all parties to monitor for inadvertent returns regarding next appropriate action among the following:
    - A mobile vacuum truck will be used to pump the drilling mud from the contained area and recycled to the return pit.
    - The drilling mud will be left in place to avoid potential damage from vehicles entering the area; or
    - The usage of approved loss circulation materials will be added to the fluid mixture;
- Once excess drilling mud is removed, the area will be seeded and/or replanted using species similar to those in the adjacent area, or allowed to re-grow from existing vegetation.

6.2.2 Inadvertent Release Response in Water

If a release of drilling mud occurs at a fracture in water:

- Monitor the inadvertent return for four hours to determine if the drilling mud congeals. (Bentonite will usually harden, effectively sealing the inadvertent returns location).
- Consult with the environmental inspector to monitor for inadvertent returns regarding next appropriate action among the following:
    - If drilling mud congeals, take no other action that would potentially suspend sediments in the water column.
    - If drilling mud does not congeal, erect isolation/containment environment (underwater boom and curtain).
    - If the fracture becomes excessively large, call a spill response team in to contain and clean up excess drilling mud in the water. Maintain updated phone numbers of spill response teams in the area onsite.
    - If the spill affects an area that is vegetated, the area will be seeded and/or replanted using species similar to those in the adjacent area, or allowed to re-grow from existing vegetation.
- Revegetated areas will be monitored twice a year for the first year subsequent to inadvertent returns to confirm revegetation is successful.

6.3 Response Close-out Procedures

As discussed in Section 1.0, document existing conditions prior to beginning directional drilling. After an inadvertent return is stabilized and any required removal is completed, document post-cleanup conditions with photographs and prepare an inadvertent returns incident report describing time, place, actions taken to remediate inadvertent returns and measures implemented to prevent re-occurrence.

When the release has been contained and cleaned up, response closeout activities will be conducted at the direction of the Site Supervisor/Foreman and shall include the following:

a. The recovered drilling fluid will either be recycled or hauled to an approved facility for disposal. No recovered drilling fluids will be discharged to land surface or into streams, storm drains or any other water source;
b. All inadvertent returns excavation and clean-up sites will be returned to pre-project contours using clean fill, as necessary; and
c. All containment measures (fiber rolls, straw bale, etc.) will be removed, unless otherwise specified by the Site Supervisor/Foreman.

6.4 Construction Re-Start

For small releases not requiring external notification, drilling may continue (following Summit's approval), if 100-percent containment is achieved through the use of a leak-stopping compound or redirection of the bore and the clean-up crew remains at the inadvertent returns location throughout the construction period.

For releases requiring external notification and/or other agencies, construction activities will not restart without prior approval from all required parties.

6.5 Bore Abandonment

Abandonment of the bore will only be required when all efforts to control the inadvertent return within the existing directional bore have failed. As part of the evaluation to abandon the borehole, Summit, and NYSDEC shall be notified of the situation and shall contribute to the decision-making process to determine whether the borehole should be abandoned or not.

7.0 NOTIFICATION

In the event of an inadvertent return that reaches a water source, the Site Supervisor/Foreman will notify the key project personnel in the Emergency Contact List provided as Attachment 1 of this appendix so they can notify the appropriate resources and/or agencies, as required. All agency notifications will occur within 24 hours of discovery of inadvertent returns and proper documentation will be accomplished in a timely and complete manner. The information supplied will include all items listed below:

- Date, location and time of release;
- Description of how the release occurred;
- An estimate of the amount of drilling mud released;
- Size of the area impacted;
- Name and telephone number of person reporting;

- The type of activity that was occurring around the area of the inadvertent returns;
- Description of any sensitive areas, and their location in relation to the inadvertent returns;
- Description of the methods used to clean up or secure the site;
- Success of the clean-up action; and
- A listing of the current permits obtained for the project.

8.0 DOCUMENTATION

Summit's Site Supervisor/Foreman shall record the inadvertent returns event in his or her daily log. The log will include all items listed in Section 7.0 above, along with photo documentation.

9.0 PROJECT COMPLETION AND CLEAN-UP

a. All materials and any rubbish-construction debris shall be removed from the construction zone at the end of each workday;
b. Sump pits at bore entry and exits will be filled and returned to natural grade; and
c. All protective measures (fiber rolls, straw bale, silt fence, etc.) will be removed unless otherwise specified by the Site Supervisor/Foremen.

THE SUMMIT CLUB
NORTH CASTLE, NEW YORK

EMERGENCY CONTACT LIST

1. Key Project Personnel:

Michael Shortell, WSP	(475) 882-1720 (office) (203) 767-0284 (cell, emergency)

2. WCDOH – Spill Reporting (914) 813-5000
   (notify within 2 hours for any size spill)

3. NYSDEC – Spill Hotline (spill >= 5 gallons) 1-800-457-7362

   Note: you do not need to notify NYSDEC if **all** of the following are true:
   a) the spill is less than 5 gallons;
   b) the spill is contained and under control;
   c) the spill has not reached the land (unpaved areas) or surface water; and,
   d) the spill is cleaned up within two hours of discovery.

4. National Response Center (notify if release enters surface water or stormwater catch basins) 1-800-424-8802

5. North Castle, NY Police & Fire Departments
   911 (Emergency)
   (914) 273-9500 (Police)
   (914) 273-3292 (Fire)

7. New York State Police 911 (Emergency)

8. Northern Westchester Hospital
   (914) 666-1254 (Emergency Services)
   (914) 666-1200 (General Information)

9. EPA – Region 2 Administrator (212) 637-3660

APPENDIX III

72-HOUR PUMPING TEST REPORT

SUMMIT COUNTRY CLUB WELLS 1, 3 AND 6A

Summit Club

Town of North Castle

Westchester County, New York

PROJECT NO.: 31403576.002
DATE: AUGUST 2022

WSP USA INC.
4 RESEARCH DRIVE, SUITE 204
SHELTON, CT 06484

PHONE: +1 (203) 929-8555
FAX: +1 (203) 926-9140
wsp.com

SIGNATURES

PREPARED BY:

Stacy Stieber, CPG, PG (NY)
Senior Lead Hydrogeologist

PREPARED BY:

Thomas P. Cusack, CPG, PG (NY)
Vice President

This report was prepared by WSP USA (WSP) for the account of Summit Club Manor, in accordance with the professional services agreement. The disclosure of any information contained in this report is the sole responsibility of the intended recipient. The material in it reflects WSP's best judgement in light of the information available to it at the time of preparation. Any use that a third party makes of this report, or any reliance on or decisions to be made based on it, are the responsibility of such third parties. WSP accepts no responsibility for damages, if any, suffered by any third party as a result of decisions made or actions based on this report. This limitations statement is considered part of this report.

TABLE OF CONTENTS

Page

1.0 INTRODUCTION 1

2.0 WATER DEMAND 1

3.0 JUNE 2022 72-HOUR PUMPING TEST PROGRAM 2
- 3.1 Well 1 4
- 3.2 Well 3 5
- 3.3 Well 6A 5
- 3.4 June 2022 72-Hour Pumping Test Yield Summary 6

4.0 ONSITE MONITORING WELLS 6

5.0 OFFSITE MONITORING WELLS 7

6.0 PIEZOMETER LOCATIONS 10

7.0 WATER-QUALITY RESULTS 11
- 7.1 Well 1 11
- 7.2 Well 3 11
- 7.3 Well 6A 12
- 7.4 Physical Parameter Measurements 12

8.0 CONCLUSIONS 12

TABLES

PAGE

TABLE 1: Summit Club Potable Water Demand Calculation 2
TABLE 2: Daily Precipitation Totals..... 3
TABLE 3: Monthly Precipitation and Precipitation Normal from 1991-2020 4
TABLE 4: Drawdown Measured During June 2022 Pumping Test in Onsite Monitoring Wells..... 7
TABLE 5: Properties Contacted in 2022 With Request for Well Monitoring..... 7
TABLE 6: Drawdown Measured During June 2022 Pumping Test in Offsite Monitoring Wells..... 9
TABLE 7: Drawdown Measured During May 2013 Pumping Test in the Offsite Monitoring Wells 10

FIGURES

FIGURE 1: Site Location Map
FIGURE 2: Site Map and Onsite Well Locations
FIGURE 3: Offsite Well Monitoring Program

APPENDICES

I Westchester County Department of Health, Pumping Test Plan Acknowledgement
II Well Completion Reports
III Pumping Wells 1, 3 and 6A Hydrographs, 180-Day Drawdown Projection Graphs and Water-Level Summary Tables
IV Onsite Monitoring Well Hydrographs and Water Level Summary Table
V Offsite Monitoring Well Hydrographs and Water Level Summary Table
VI Piezometer Hydrograph and Water-Level Summary Table
VII Laboratory Reports, Wells 1, 3 and 6A
VIII Physical Parameter Graphs and Tables

CD (at end of report)

Water-Level Data

1.0 INTRODUCTION

The following are the results of the combined 72-hour pumping test conducted on the Summit Country Club Wells 1, 3 and 6A by WSP USA Inc., and related company Hydrogeologic, Architecture, Land Surveying, Landscape Architecture Services, P.C. (WSP), in June 2022. The Summit Country Club is located at 568 Bedford Road in North Castle, New York (Figure 1). The pumping test was conducted at the recommendation of the Westchester County Department of Health (WCDH) to confirm that the yield capacity of the proposed residential potable supply wells could meet the current water demand needs of the proposed residential development on the project site. A Pumping Test Plan was prepared and submitted to the WCDH in January 2022. Comments were received from WCDH in February 2022 and a revised plan was prepared and resubmitted in March 2022. WCDH acknowledged and accepted the revised plan in an email dated March 10, 2022 (Appendix I).

A groundwater exploration program was conducted for the Summit Country Club (formerly Brynwood Golf & Country Club) in 2013 to develop an onsite potable water source that could meet the water demand of a proposed residential development on the project site. Bedrock well locations were selected on the property that meet the New York State Department of Health (NYSDOH) well siting requirement for community public water-supply wells. The proposed well locations were submitted to the WCDH for review and approval prior to drilling. Upon receipt of approval of the well locations from WCDH, the well drilling program was conducted and sufficient yields were encountered in several of the bedrock test wells to proceed with a pumping test program and water-quality sample analysis. Copies of the Well Completion Reports for Wells 1, 2B, 3, 4 and 5 drilled during the groundwater exploration program are included in Appendix II.

Wells 1, 3 and 6A were previously yield tested in May 2013. Following the completion of the groundwater exploration program, a 72-hour pumping test program was conducted on onsite bedrock Wells 1, 2B, 3, 5, 6A and Irrigation Wells 4 and 5 (Figure 2). Well 4 was not included as a pumping well in the 2013 pumping test program but was measured as an onsite monitoring well during the test period. Wells 1, 2B, 3, 5, Irrigation Well 4 and Irrigation Well 5 were pumped concurrently to demonstrate their combined yield capacity and to assess potential pumping-related drawdown effects in the aquifer. An individual 72-hour pumping test was conducted on Well 6A to demonstrate it as the best well (out of service) to meet the NYSDOH requirement of providing twice a project's average water demand with the best well out of service. The individual yields of Wells 1, 2B, 3, 5 and Irrigation Wells 4 and 5 from the simultaneous pumping test were 50 gpm (gallons per minute), 12 gpm, 32 gpm, 19.5 gpm, 32 gpm and 40 gpm, respectively, for a combined yield of 185.5 gpm. The yield of Well 6A from the individual pumping test conducted was 55 gpm. The report with the results of the May 2013 pumping test program has been previously submitted to the WCDH, New York State Department of Environmental Conservation (NYSDEC) and Town of North Castle.

After the completion of the 2013 well testing program, as SEQR Lead Agency, the Town of North Castle recommended that Summit Club evaluate connection of the proposed project to the Windmill Farms Water District #2. The Summit Club pursued additional groundwater exploration at the Windmill Farms well field to develop supplemental water to supply the proposed Summit Club development. However, the results of the groundwater exploration program at the Windmill Farms well field did not produce sufficient surplus capacity to meet the requirements of the proposed Summit Club project. Therefore, the Summit Club is now pursuing the use of their own onsite wells to meet their potable water-supply needs.

2.0 WATER DEMAND

The table below is a summary of the estimated potable water demand for the Summit Club project. This calculation was used to select the minimum target pumping rates for Wells 1, 3 and 6A during the June 2022 72-hour

pumping test program. Per the comments received from WCDH, the non-residential water usages have been adjusted for hours of operation in the calculations and no 20% reduction for water-saving fixtures has been applied. The goal of the 72-hour pumping test was to demonstrate the wells could meet twice the projects maximum daily water demand with the best well out of service.

Table 1: Summit Club Potable Water Demand Calculation

Usage Type	Subcategory	Number	Water Usage Rate	Hour of Operation (hours)	Water Demand (gpd)	Water Demand (gpm)
Townhomes	--	198 bedrooms	110 gpd/bedroom	24	21,780	15.1
Guest Cottages	--	40 bedrooms	110 gpd/bedroom	24	4,400	3.1
Restaurant	--	252 seats	35 gpd/seat	18	11,025	7.7
Bar/Lounge	--	35 seats	20 gpd/seat	18	875	0.6
Country Club	Employees	20 employees	15 gpd/employee	18	375	0.3
	Pool	257 swimmers	10 gpd/swimmer	18	3,213	2.2
	Spa/Jacuzzi	24 patrons	10 gpd/swimmer	18	300	0.2
	Excess Pool Deck	170 swimmers	10 gpd/swimmer	18	2,125	1.5
Golf Rounds	--	144 rounds	20 gpd/round	18	3,600	2.5
Golf Course Maintenance Facility	Employees	15 employees	15 gpd/employee	18	281	0.2
	Seasonal Staff Dormitory Accommodations	12 staff	75 gpd/staff	24	900	0.6
Wastewater Treatment Plant Usage	--	--	55 gpd	24	55	0.0
				Average Water Demand	48,929	34.0
				Maximum Daily Demand	97,858	68.0

gpm gallons per minute
gpd gallons per day

3.0 JUNE 2022 72-HOUR PUMPING TEST PROGRAM

The combined 72-hour pumping test program on Wells 1, 3 and 6A was conducted between June 20 through 23, 2022. The three wells were pumped concurrently and the well pumps were started in a staggered manner with a minimum two hours between the start of each well pump. The pump in Well 6A was started first, followed by Well 1, and the pump in Well 3 was started last. The wells were pumped concurrently for a minimum of 72 hours following the start of the pump in the final well (Well 3).

During the 72-hour pumping test program, water-level measurements were collected from the onsite pumping Wells 1, 3, and 6A; onsite monitoring Wells 2B, 5, 9, 10, Irrigation Well 4, Irrigation Well 5, and former Irrigation Well 3; and 13 offsite wells located near the project site. The hydrographs, 180-day drawdown projection graphs and summary tables of water-level measurements collected from the pumping Wells 1, 3 and 6A are provided in Appendix III. The hydrographs and summary tables of water-level measurements collected from onsite monitoring wells are provided in Appendix IV and for the offsite monitoring wells are provided in Appendix V. The onsite and offsite well locations are shown on Figures 2 and 3. The raw water-level data collected from all locations are provided on the attached excel spreadsheet.

In addition to the wells, water-level measurements were collected from a piezometer location, PZ-1, installed near Wells 1 and 6A. The hydrographs and a table of the water-level measurements collected from the piezometer location is included in Appendix VI. The piezometer location is shown on Figure 2.

The water from Wells 1, 3 and 6A was discharged to waste during the pumping test. The discharge locations are shown on Figure 2. The locations were positioned downgradient of the onsite wells and surface-water monitoring location to prevent artificial recharge of the groundwater during the test period.

Daily precipitation was measured at the well field and monitored at other nearby weather stations. Daily precipitation measurements from a weather station in Armonk have been overlain on the hydrographs for reference. Daily precipitation totals from the station are also included on the table below.

Table 2: Daily Precipitation Totals

Date	Daily Precipitation (inches)
6/14/2022	0
6/15/2022	0
6/16/2022	0.18
6/17/2022	0.02
6/18/2022	0.03
6/19/2022	0
6/20/2022	0
6/21/2022	0
6/22/2022	0.11
6/23/2022	0.07
6/24/2022	0.15
6/25/2022	0
6/26/2022	0
6/27/2022	0.10

Total monthly precipitation for the Westchester County AP station and 30-year normal for the 12-month period prior to the pumping test in June 2022 are provided in the table below. In the months leading up to the June 2022 72-hour pumping test, with the exception of April 2022, precipitation has been below normal since November 2021.

Table 3: Monthly Precipitation and Precipitation Normal from 1991-2020

Date	Total Precipitation (inches)	Monthly Precipitation Normals (1991-2020) (inches)
July 2021	4.44	4.07
August 2021	4.54	4.36
September 2021	8.54	4.94
October 2021	5.99	4.33
November 2021	1.11	3.64
December 2021	1.11	4.18
January 2022	2.60	3.20
February 2022	2.58	2.53
March 2022	2.09	4.11
April 2022	5.91	4.20
May 2022	3.40	3.94
June 2022	3.72	4.25

Water samples were collected from Wells 1, 3 and 6A at the end of the 72-hour test for analysis for NYSDOH Sanitary Code Part 5, Subpart 5-1 parameters for community, public water-supply wells listed in Tables 8A, 8B, 8C, 8D, 9B, 9C (including the extras dioxin, endothall, diquat and glyphosate), 9D, 10A, 11A, 12, lead, copper, total coliform, perfluorinated compounds (18 compound list) and radon. Microscopic particulate analysis (MPA), giardia, cryptosporidium samples were also collected from Wells 1 and 6A during the test period because these wells are located within 200 feet of surface water. The laboratory reports for the Part 5 and MPA samples are included in Appendix VII. Measurements of pH, temperature and conductivity were also collected from the Wells 1 and 6A discharge water and the nearby surface water as part of the preliminary groundwater under the direct influence of surface water (GWUDI) assessment. A graph and tables of the physical parameter measurements collected are provided in Appendix VIII.

3.1 Well 1

The pump in Well 1 was started at 12:21 on June 20, 2022. Prior to the start of pumping in any of the onsite wells, the water level in Well 1 was flowing artesian over the top of casing. The pump in Well 6A was started before Well 1 at 10:45. During the intervening period between the start of pumping in Well 6A and the start of pumping in Well 1, the water level in Well 1 declined to 3.05 ft btoc (feet below top of casing).

Following the start of pumping in Well 1, the pumping rate in the well was adjusted to 46 gpm. As the test progressed and the pumping water level in the well declined, the pumping rate decreased to 37 gpm on June 22. The pumping rate remained at 37 gpm for the last 24 hours of the test period.

The pump in Well 1 was shut down at 17:00 on June 23 after 76 hours and 39 minutes of continuous pumping. The final pumping water level in Well 1 at the end of the test was 244.65 ft btoc, for a total drawdown of 244.65 feet. The water-level change over the last six hours of pumping in Well 1 was 1.0 foot, which meets the stabilization criteria of less than 0.5 foot per 100 feet of available drawdown in the well. The water-level trend was slightly downward at the end of the test period, therefore, a 180-day water-level drawdown projection has been completed for Well 1 to assess the water level in the well after 180 days of continuous pumping. A copy of the 180-day water-level drawdown projection graph is included in Appendix III. Based on the projection, the water level in the well after 180 days of continuous pumping is 296.12 ft btoc. The projection data support that the pumping rate of 37 gpm is a sustainable yield capacity for Well 1 pumping concurrently with both Wells 3 and 6A.

Water-level recovery in Well 1 was measured for five days after shutdown of the test. The water level in the well reached 90% approximately 5.7 hours (339 minutes) after shutdown of the pump and the well was flowing artesian again approximately 14 hours after the end of the test.

3.2 Well 3

The pump in Well 3 was started at 16:38 on June 20, 2022. Prior to the start of pumping in any of the onsite wells, the water level in Well 3 was flowing artesian over the top of casing. The pumps in Wells 1 and 6A were started before Well 3. However, no drawdown was measured in Well 3 during the intervening period and the water level in Well 3 was still artesian just prior to the start of the well pump.

Following the start of pumping in Well 3, the pumping rate in the well was adjusted to 38 gpm and manually decreased to 36 gpm at 17:32. As the test progressed and the pumping water level in the well declined, the pumping rate decreased to 33 gpm on June 21. The pumping rate remained at 33 gpm for the duration of the test period.

The pump in Well 3 was shut down at 17:00 on June 23 after 72 hours and 22 minutes of continuous pumping. The final pumping water level in Well 3 at the end of the test was 107.77 ft btoc, for a total drawdown of 107.77 feet. The water-level change over the last six hours of pumping in Well 3 was 1.09 feet, which meets the stabilization criteria of less than 0.5 foot per 100 feet of available drawdown in the well. The water-level trend was slightly downward at the end of the test period, therefore, a 180-day water-level drawdown projection has been completed for Well 3 to assess the water level in the well after 180 days of continuous pumping. A copy of the 180-day water-level drawdown projection graph is included in Appendix III. Based on the projection, the water level in the well after 180 days of continuous pumping is 177.26 ft btoc. The projection data support that the pumping rate of 33 gpm is a sustainable yield capacity for Well 3 pumping concurrently with both Wells 1 and 6A.

Water-level recovery in Well 3 was measured for five days after shutdown of the test. The water level in the well reached 90% approximately 24.3 hours (1,457 minutes) after shutdown of the pump and the well was flowing artesian again approximately 39 hours after the end of the test.

3.3 Well 6A

The pump in Well 6A was started at 10:45 on June 20, 2022. Prior to the start of pumping, the static water level in Well 6A was flowing artesian over the top of casing. Following the start of the pump in Well 6A, the pumping rate in the well was adjusted to 45 gpm. As the test progressed and the pumping water level in the well declined, the pumping rate decreased to 43 gpm on June 22. The pumping rate remained at 43 gpm for the duration of the test period.

The pump in Well 6A was shut down at 17:00 on June 23 after 78 hours and 15 minutes of continuous pumping. The final pumping water level in Well 6A at the end of the test was 108.72 ft btoc, for a total drawdown of 108.72 feet. The water-level change over the last six hours of pumping in Well 6A was 1.10 foot, which meets the stabilization criteria of less than 0.5 foot per 100 feet of available drawdown in the well. The water-level trend was slightly downward at the end of the test period, therefore a 180-day water-level drawdown projection has been completed for Well 6A to assess the water level in the well after 180 days of continuous pumping. A copy of the 180-day water-level drawdown projection graph is included in Appendix III. Based on the projection, the water level in the well after 180 days of continuous pumping is 152.78 ft btoc. The projection data support that the pumping rate of 43 gpm is a sustainable yield capacity for Well 6A pumping concurrently with both Wells 1 and 3.

Water-level recovery in Well 6A was measured for five days after shutdown of the test. The water level in the well reached 90% approximately 8.5 hours (511 minutes) after shutdown of the pump and the well was flowing artesian again approximately 16 hours after the end of the test.

3.4 June 2022 72-Hour Pumping Test Yield Summary

The June 2022 72-hour pumping test demonstrated stabilized yields and water-level drawdown in Wells 1, 3 and 6A at pumping rates of 37 gpm, 33 gpm and 43 gpm, for a combined 113 gpm (162,720 gpd (gallons per day)). Similar to the May 2013 pumping test, Well 6A was the best well. Therefore, excluding the pumping volume of Well 6A, Wells 1 and 3 demonstrated that they can pump at a combined yield of 70 gpm or (100,800 gpd) during the June 2022 pumping test. This data are supported by the results from the prior May 2013 pumping test program which showed that Wells 1, 2B, 3, 5 and Irrigation Wells 4 and 5 can pump simultaneously at 50 gpm, 12 gpm, 32 gpm, 19.5 gpm, 32 gpm and 40 gpm, respectively, for a combined yield of 185.5 gpm.

The combined yield capacity of Wells 1 and 3 of 70 gpm (100,800 gpd) can support an average water demand of 50,400 gpd with the best well out of service which is more than sufficient to meet the water demand calculated in the table above (48,929 gpd). In the future, the use of all three well (Wells 1, 3 and 6A) concurrently is not likely to occur. The combined pumping rate of 113 gpm was 3.3 times the project's proposed average water demand. However, the pumping test has demonstrated that the proposed supply wells can be operated concurrently in any pumping combination warranted in the future to meet the water system's well service and maintenance needs.

4.0 ONSITE MONITORING WELLS

Water-level measurements were collected from seven onsite monitoring wells during the pumping test period. The hydrographs and a summary table of water-level measurements collected from the onsite monitoring wells are provided in Appendix IV and the well locations are shown on Figure 2.

Well 2B, Well 5 and former Irrigation Well 3 were flowing artesian prior to the start of the pumping test. Pressure transducers were installed in Wells 2B and former Irrigation Well 3 to measure water levels during the test period. Well 5 is capped with an outlet pipe which controls and diverts the overflow from this well. Therefore, the overflow rate was measured on Well 5 during the data collection period in lieu of water-level measurements to assess potential pumping-related impact.

Pressure transducers were also installed in Wells 9 and 10 and Irrigation Wells 4 and 5. Water levels were shallow in these wells, but the wells were not flowing during the test period. A slight declining water level trend is noted in the background water-level data in Irrigation Wells 4 and 5 and in Well 10. The continuation of this naturally declining trend during the test period and into the recovery period is evident in the wells.

Water-level drawdown that is attributed to Wells 1, 3 and 6A pumping was measured in Wells 2B, Irrigation Well 4 and Irrigation Well 5. Taking into account the natural declining trend observed in the background water-level data, the drawdown measured in Well 2B was approximately 9.1 feet, in Irrigation Well 4 approximately 1.6 feet, and in Irrigation Well 5 approximately 3.5 feet. The water level in these three wells fully recovered after the pumping test ended. Well 2B resumed artesian flow two days after the end of the test and Irrigation Wells 4 and 5 were 90% recovered within three days and resumed a slight declining water level on trend with the pre-test water levels approximately four days after the end of the test period.

No discernible drawdown that was attributed to Wells 1, 3 and 6A pumping was measured in Wells 5, 9, 10 or former Irrigation Well 3.

The table below is a summary of the drawdown observed in the onsite monitoring wells during the June 2022 72-hour pumping test.

Table 4: Drawdown Measured During June 2022 Pumping Test in Onsite Monitoring Wells

Address	Drawdown Measured During June 2022 Pumping Test (feet)
Well 2B	9.1
Well 5	ND
Well 9	ND
Well 10	ND
Former Irrigation Well 3	ND
Irrigation Well 4	1.6
Irrigation Well 5	3.5

ND None discernible

The drawdown measured in the onsite wells decreased with increasing distance from the pumping wells. In addition, the drawdown measured in the Irrigation Wells 4 and 5 was not significant and in line with the expected well interference based on the data from the May 2013 72-hour pumping test program.

5.0 OFFSITE MONITORING WELLS

The table below is a list of all properties that were contacted with a request to measure their well during the 2022 pumping test.

Table 5: Properties Contacted in 2022 With Request for Well Monitoring

Property Address	Comments
6 Evan Place	No response, form returned to WSP.
7 Evan Place	No response, form returned to WSP.
9 Evan Place	No response, form returned to WSP.
5 Norman Place	No response, form returned to WSP.
6 Norman Place (mailing address 113 Cold Springs Rd, Fishkill, NY 12524)	No response, form returned to WSP.
182 Byram Lake Road	No response, form returned to WSP.
82 Old Byram Lake Road	No response, form returned to WSP.
76 Old Byram Lake Road	No response, form returned to WSP.
74 Old Byram Lake Road	No response, form returned to WSP.
7 Willow Pond Lane	No response, form returned to WSP.
18 Blair Road	No response, form returned to WSP.
12 Blair Road	No response, form returned to WSP.
26 Blair Road	No response, form returned to WSP.
24 Blair Road	No response, form returned to WSP.
538 Bedford Road	No response, form returned to WSP.
3 Colonial Court	No response, form returned to WSP.
4 Colonial Court	No response, form returned to WSP.

Property Address	Comments
5 Colonial Court	No response, form returned to WSP.
7 Colonial Ct (mailing address 60 Knightbridge Rd, Great Neck, NY	No response, form returned to WSP.
5 Evan Place	No response, form returned to WSP.
3 Oregon Road	Property owner declined participation.
68 Old Byram Lake Road	Property owner declined participation.
66 Old Byram Lake Road	Property owner declined participation.
1 Colonial Court	Property owner declined participation.
8 Byram Hill Road	Property owner declined participation.
80 Old Byram Lake Road	Property owner declined participation.
7 Oregon Road	Property owner declined participation.
10 Evan Place	Property owner declined participation.
3 Willow Pond Lane	Property owner declined participation.
11 Blair Road	Signed permission form returned, well measured during June 2022 pumping test.
8 Embassy Court	Signed permission form returned, well measured during June 2022 pumping test.
10 Byram Hill Road	Signed permission form returned, well measured during June 2022 pumping test.
34 Blair Road	Signed permission form returned, well measured during June 2022 pumping test.
30 Blair Road	Signed permission form returned, well measured during June 2022 pumping test.
10 Willow Pond Lane	Signed permission form returned, well measured during June 2022 pumping test.
14 Willow Pond Lane	Signed permission form returned, well measured during June 2022 pumping test.
8 Colonial Court	Signed permission form returned, well measured during June 2022 pumping test.
8 Evan Place	Signed permission form returned, well measured during June 2022 pumping test.
198 Byram Lake Road	Signed permission form returned, well measured during June 2022 pumping test.
4 Norman Place	Signed permission form returned, well measured during June 2022 pumping test.
6 Byram Hill Road	Signed permission form returned, well measured during June 2022 pumping test.
188 Byram Lake Road	Signed permission form returned, but permission rescinded.
70 Old Byram Lake Road	Signed permission form returned, well measured during June 2022 pumping test.
19 Blair Road	Signed permission form returned, well could not be measured.

Water-level measurements were ultimately collected from 13 offsite monitoring wells during the pumping test period. The hydrographs and a summary table of water-level measurements collected from the offsite monitoring wells are provided in Appendix V and the well locations are shown on Figure 3.

Pressure transducers were installed in all of the offsite wells measured. A slight declining water-level trend is noted in the background water-level data in several of the offsite wells, similar to the trend observed in onsite

Irrigation Wells 4 and 5 and Well 10. The continuation of this naturally-declining trend during the test period and into the recovery period is also evident in the wells.

Water-level drawdown that was attributed to pumping Wells 1, 3 and 6A during the June 2022 testing program was measured in 3 of the 13 wells monitored. Drawdown of approximately 1.0 foot was measured in the well at 10 Willow Pond Lane and, taking into account the natural declining trend observed in the background water-level data, the drawdown measured in the wells at 30 Blair Road and 34 Blair Road was 5.8 feet in both wells. The water-level drawdown trends in all three wells were stable at the end of the 72-hour pumping test period.

No discernible drawdown that was attributed to Wells 1, 3 and 6A pumping was measured in the remaining 10 offsite wells measured during the June 2022 pumping test. The table below is a summary of the drawdown measured during the June 2022 pumping test.

Table 6: Drawdown Measured During June 2022 Pumping Test in Offsite Monitoring Wells

Address	Drawdown Measured During June 2022 Pumping Test (feet)
11 Blair Road	ND
8 Embassy Court	ND
10 Byram Hill Road	ND
34 Blair Road	5.8
30 Blair Road	5.8
10 Willow Pond Lane	1.0
14 Willow Pond Lane	ND
8 Colonial Court	ND
8 Evan Place	ND
198 Byram Lake Road	ND
4 Norman Place	ND
6 Byram Hill Road	ND
70 Old Byram Lake Road	ND

ND None discernible

The drawdown measured in the three offsite wells during the June 2022 72-hour pumping test occurred with Wells 1, 3 and 6A pumping currently at rates of 37 gpm, 33 gpm and 43 gpm, for a combined 113 gpm for 72+ hours continuously during a dry period. This combined pumping rate of 113 gpm is 3.3 times the project's proposed average water demand. In the future, the use of all three wells (Wells 1, 3 and 6A) concurrently is not likely to occur, and with the proposed supply wells used in rotation and cycling on and off, the drawdown in the offsite wells will likely be less that what was measured during the June 2022 pumping test and the future use of these wells should not be affected by the use of the Summit Club supply wells.

The reported pump setting at 30 Blair Road is 80 feet and in 34 Blair Road is 200 feet (reported to WSP by the property owners). Based on the static water level height at the end of the 72-hour test period, this leaves approximately 45 feet of drawdown available in the well at 30 Blair Road and 160 feet of drawdown in the well at 34 Blair Road. The June 2022 pumping test was conducted during an extended dry period and at a combined rate 3+ times the project's average water demand. Despite the minor well interference observed, with the remaining available drawdown in these wells there should be no effect on their capacity to supply the associated homes in the future.

The 2022 offsite well monitoring results are similar to the findings from the May 2013 pumping test conducted. The table below is a summary of the wells measured and the drawdown observed.

Table 7: Drawdown Measured During May 2013 Pumping Test in the Offsite Monitoring Wells

Address	Drawdown Measured During May 2013 Pumping Test (feet) Test on Wells 1, 2B, 3, 5 and Irrigation Wells 4 and 5/Test on Well 6A
19 Ilana Court	ND/ND
12 Ilana Court	ND/ND
8 Embassy Court	11/7[1/]
4 Embassy Court	ND/ND
3 Embassy Court	ND/ND
6 Colonial Court	ND/ND
34 Blair Road	13/ND
30 Blair Road	13/ND
26 Blair Road	1/ND
70 Old Byram Lake Road	ND/ND
198 Byram Lake Road	ND/NM
9 Oregon Road	ND/ND
11 Oregon Road	ND/ND
4 Norman Place	ND/ND
3 Norman Place	ND/ND

[1/] The drawdown measured during the simultaneous pumping test was attributed to Well 5 pumping on the project site. The drawdown reported during the Well 6A pumping test period was a questionable correlation to Well 6A pumping but was reported to be conservative.

ND None discernible.

NM Not measured.

The water-level drawdown observed at 34 Blair Road and 30 Blair Road during the May 2013 was mainly attributed to pumping of existing Irrigation Wells 4 and 5, and the water-level drawdown observed occurred with Wells 1, 2B, 3 and 5 and Irrigation Wells 4 and 5 pumping at a combined rate of 185.5 gpm.

6.0 PIEZOMETER LOCATIONS

Water-level measurements were collected from a piezometer location, PZ-1, near Wells 1 and 6A during the June 2022 pumping test (Figure 2). A nested-pair of piezometers was installed at this location with one piezometer screen set shallower and the adjacent one set deeper. The hydrograph and a table of the water-level measurements collected from the piezometer locations are included in Appendix VI.

The groundwater level in the deeper piezometer showed a relatively steady, slightly declining trend throughout the background, pumping and recovery data collection periods. The groundwater level in the shallower screened piezometer was also on an overall declining trend; however, the water level showed a slight rising response to the rain events on June 16, June 22 and 23, and June 27. After the precipitation ended, the declining trend resumed. The deeper groundwater level was higher than the shallow groundwater level throughout the data collection period, indicating an upward vertical gradient at this monitoring location. Neither piezometer showed water-level drawdown in response to pumping in the onsite wells and no water-level recovery was observed after pumping ended, indicating no discernible pumping-related effects in the piezometers during the test.

7.0 WATER-QUALITY RESULTS

Water samples were collected from Wells 1, 3 and 6A at the end of the 72-hour test for analysis for NYSDOH Sanitary Code Part 5, Subpart 5-1 parameters for community, public water-supply wells listed in Tables 8A, 8B, 8C, 8D, 9B, 9C (including the extras dioxin, endothall, diquat and glyphosate), 9D, 10A, 11A, 12, lead, copper, total coliform, perfluorinated compounds (18 compound list) and radon. MPA, giardia, cryptosporidium samples were also collected from Wells 1 and 6A during the test period because these wells are located within 200 feet of surface water. The laboratory reports for the Part 5 and MPA samples are included in Appendix VII. Measurements of pH, temperature and conductivity were also collected from the Wells 1 and 6A discharge water and the nearby surface water as part of the preliminary GWUDI assessment. A graph and tables of the physical parameter measurements collected are provided in Appendix VIII.

7.1 Well 1

The Part 5 sample results for Well 1 met all NYSDOH drinking water standards with the exception of a detection of propylene glycol. The reported concentration was 1.5 mg/L (milligrams per liter) which exceeds the MCL (maximum contaminant level) of 1.0 mg/L.

The sodium concentration in Well 1 was reported at 29.4 mg/L which exceeds the NYSDOH reporting limit for people on severely sodium restricted diets but is below the recommended limit for sodium of 270 mg/L. The associated chloride concentration in Well 1 was 21.2 mg/L which is below the MCL for chloride of 250 mg/L.

Detections of PFOS (perfluorooctane sulfonic acid) and PFOA (perfluorooctanoic acid) were reported in the samples collected from Well 1. The PFOS concentration was 4.00 ng/L (nanograms per liter) and the PFOA concentration was 4.70 ng/L. Both detections were below their respective MCL values of 10 ng/L.

The MPA, giardia and cryptosporidium sample from Well 1 reported a low-risk potential for GWUDI and giardia and cryptosporidium were not detected.

7.2 Well 3

The Part 5 sample results for Well 3 met all NYSDOH drinking water standards with the exception of a detection of propylene glycol and the presence of total coliform. The reported concentration propylene glycol was 1.1 mg/L which exceeds the MCL of 1.0 mg/L.

Total coliform was reported present in the sample collected; E.coli was absent.

The Langlier Index value reported for Well 3 was -0.6 which is outside of the desired range of 0.5 to -0.5 and should be taken into consideration during the water system treatment design.

Detections of PFOS and PFOA were reported in the samples collected from Well 3. The PFOS concentration was 2.05 ng/L and the PFOA concentration was 3.35 ng/L. Both detections were below their respective MCL values of 10 ng/L.

7.3 Well 6A

The Part 5 sample results for Well 6A met all NYSDOH drinking water standards with the exception of a detection of propylene glycol and the presence of total coliform. The reported concentration propylene glycol was 1.1 mg/L which exceeds the MCL of 1.0 mg/L.

Total coliform was reported present in the sample collected; E.coli was absent.

The Langlier Index value reported for Well 6A was -0.56 which is outside of the desired range of 0.5 to -0.5 and should be taken into consideration during the water system treatment design.

Detections of PFOS and PFOA were reported in the samples collected from Well 6A. The PFOS concentration was 2.29 ng/L and the PFOA concentration was 3.38 ng/L. Both detections were below their respective MCL values of 10 ng/L.

The MPA, giardia and cryptosporidium sample from Well 6A reported a low-risk potential for GWUDI and giardia and cryptosporidium were not detected.

7.4 Physical Parameter Measurements

Measurements of pH, temperature and conductivity were collected from Wells 1 and 6A discharge water and the nearby surface water as part of the preliminary GWUDI assessment. The graphs and summary tables of the measurements collected are provided in Appendix VIII.

The conductivity values in Wells 1 and 6A were generally consistent throughout the pumping test period and overall were higher than the values measured in the nearby surface water. The pH values in Wells 1 and 6A were also higher overall than the surface water values. The temperature values in Wells 1 and 6A were lower than the surface water temperature and showed no significant oscillation up or down during the test period.

The physical parameter data supports the MPA's reported low risk potential for GWUDI in Wells 1 and 6A.

8.0 CONCLUSIONS

- A combined 72-hour pumping test was conducted on Wells 1, 3 and 6A on the Summit Club property from June 20 through 23, 2022. Wells 1, 3 and 6A demonstrated stabilized yield and water-level drawdown at pumping rates of 37 gpm, 33 gpm and 43 gpm, respectively, at the end of the test period. Additionally, the 180-day water-level drawdown projections completed for Wells 1, 3, and 6A using the pumping test data support that these are sustainable long-term yields for the wells.
- Following the end of pumping, water-level recovery reached 90% of the pre-test level in Well 1 within 5.7 hours, in Well 3 within 24.3 hours and in Well 6A in 8.5 hours.
- The combined yield of Wells 1, 3, and 6A during the June 2022 pumping test was 113 gpm. With Well 6A out of services as the best well, Wells 1 and 3 can pump at a combined yield of 70 gpm or (100,800 gpd). This well capacity is sufficient to support an average water demand of up to 50,400 gpd.
- Water-level measurements were collected from seven onsite monitoring wells during the simultaneous pumping test. Drawdown was measured in three of the seven wells. Well 2B, Irrigation Well 5, and Irrigation Well 4, the three wells closest to Wells 1, 3 and 6A, showed 9.1 feet, 3.5 feet and 1.6 feet,

respectively. The drawdown measured decreased with increasing distance from the pumping wells, and no discernible drawdown was measured in Former Irrigation Well 3, Well 5, Well 9 and Well 10 on the project site.

- Water-level measurements were collected from 13 offsite wells during the June 2022 pumping test. Water-level drawdown that was attributed to pumping Wells 1, 3 and 6A during the June 2022 testing program was measured in three of the 13 wells monitored. Drawdown of approximately 1.0 foot was measured in the well at 10 Willow Pond Lane, and 5.8 feet of drawdown was measured in both the wells at 30 Blair Road and 34 Blair Road, respectively, and the water-level drawdown trends in all three wells were stable at the end of the 72-hour pumping test period. The drawdown measured in the three offsite wells during the June 2022 72-hour pumping test occurred with Wells 1, 3 and 6A pumping currently at rates of 37 gpm, 33 gpm and 43 gpm, for a combined 113 gpm for 72+ hours continuously during a dry period. This combined pumping rate of 113 gpm is 3.3 times the project's proposed average water demand. In the future, the use of all three well (Wells 1, 3 and 6A) concurrently is not likely to occur, and with the proposed supply wells used in rotation and cycling on and off, the drawdown in the offsite wells will likely be less that what was measured during the June 2022 pumping test. The future use of these offsite wells should not be affected by the use of the Summit Club supply wells.

  The reported pump setting at 30 Blair Road is 80 feet and in 34 Blair Road is 200 feet (reported to WSP by the property owners). Using the static water level height at the end of the 72-hour test period, this leaves approximately 45 feet of drawdown available in the well at 30 Blair Road and 160 feet of drawdown in the well at 34 Blair Road. The June 2022 pumping test was conducted during an extended dry period and at a combined rate 3+ times the project's average water demand. Despite the minor well interference observed, with the remaining available drawdown in these wells there should be no effect on their capacity to supply the associated homes in the future.

- Water-level measurements were collected from a piezometer location, PZ-1, installed near Wells 1 and 6A during the June 2022 pumping test. A nested-pair of piezometers was installed with one piezometer screen set shallower and the adjacent one set deeper. The groundwater level in the deeper piezometer showed a relatively steady, slightly declining trend throughout the background, pumping and recovery data collection periods. The groundwater level in the shallower screened piezometer was also on an overall declining trend; however, the water level showed a slight rising response to the rain events on June 16, June 22 and 23, and June 27. After the precipitation ended, the declining trend resumed. The deeper groundwater level was higher than the shallow groundwater level throughout the data collection period, indicating an upward vertical gradient at this monitoring location. Neither piezometer showed water-level drawdown in response to pumping in the onsite wells and no water-level recovery was observed after pumping ended, indicating no discernible pumping-related effects in the piezometers during the test.

- Water samples were collected from Wells 1, 3 and 6A at the end of the 72-hour test for analysis for NYSDOH Sanitary Code Part 5, Subpart 5-1 parameters for community, public water-supply wells listed in Tables 8A, 8B, 8C, 8D, 9B, 9C (including the extras dioxin, endothall, diquat and glyphosate), 9D, 10A, 11A, 12, lead, copper, total coliform, perfluorinated compounds (18 compound list) and radon.

- The Part 5 sample results for Well 1 met all NYSDOH drinking water standards with the exception of a detection of propylene glycol. The reported concentration was 1.5 mg/L which exceeds the MCL of 1.0 mg/L. The sodium concentration in Well 1 was reported at 29.4 mg/L which exceeds the NYSDOH reporting limit for people on severely sodium restricted diets but is below the recommended limit for sodium of 270 mg/L. The associated chloride concentration in Well 1 was 21.2 mg/L which is below the MCL for chloride of 250 mg/L. Detections of PFOS and PFOA were reported in the samples collected

from Well 1. The PFOS concentration was 4.00 ng/L and the PFOA concentration was 4.70 ng/L. Both detections were below their respective MCL values of 10 ng/L.

- The Part 5 sample results for Well 3 met all NYSDOH drinking water standards with the exception of a detection of propylene glycol and the presence of total coliform. The reported concentration propylene glycol was 1.1 mg/L which exceeds the MCL of 1.0 mg/L. Total coliform was reported present in the sample collected; E.coli was absent. The Langlier Index value reported for Well 3 was -0.6 which is outside of the desired range of 0.5 to -0.5 and should be taken into consideration during the water system treatment design. Detections of PFOS and PFOA were reported in the samples collected from Well 3. The PFOS concentration was 2.05 ng/L and the PFOA concentration was 3.35 ng/L. Both detections were below their respective MCL values of 10 ng/L.
- The Part 5 sample results for Well 6A met all NYSDOH drinking water standards with the exception of a detection of propylene glycol and the presence of total coliform. The reported concentration propylene glycol was 1.1 mg/L which exceeds the MCL of 1.0 mg/L. Total coliform was reported present in the sample collected; E.coli was absent. The Langlier Index value reported for Well 6A was -0.56 which is outside of the desired range of 0.5 to -0.5 and should be taken into consideration during the water system treatment design. Detections of PFOS and PFOA were reported in the samples collected from Well 6A. The PFOS concentration was 2.29 ng/L and the PFOA concentration was 3.38 ng/L. Both detections were below their respective MCL values of 10 ng/L.
- MPA, giardia, cryptosporidium samples were also collected from Wells 1 and 6A during the test period because the well is located within 200 feet of surface water. Both MPA samples were reported as low risk and giardia and cryptosporidium were absent in the samples. The comparison of the temperature, conductivity and pH values measured from Wells 1 and 6A and the surface water near PZ-1 support the MPA low-risk results.

cmm
August 26, 2022
H:\Brynwood\2022\Summit Club_72-Hour PT Rpt\Report.docx

FIGURES

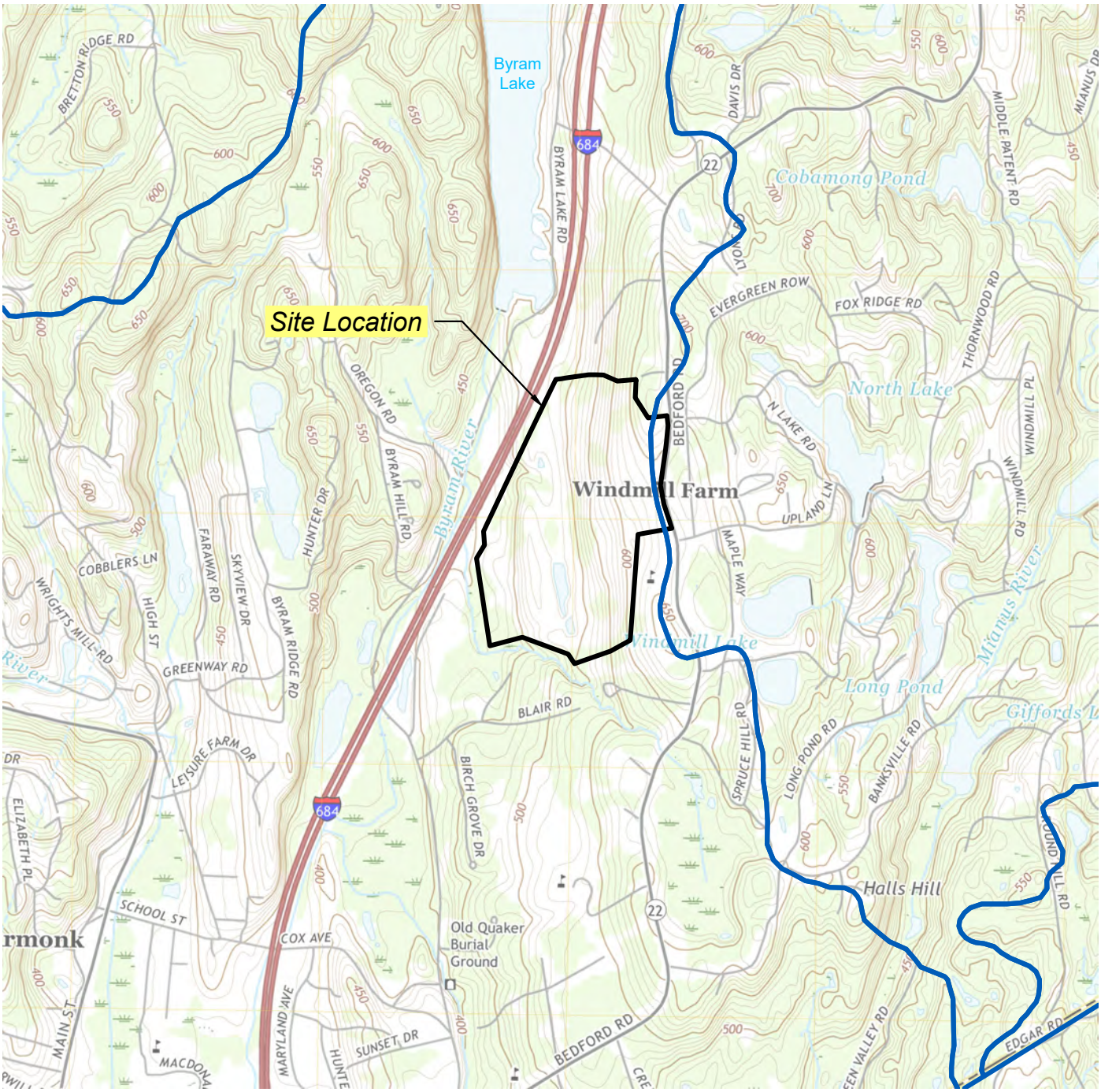

SOURCE: USGS TOPOGRAPHIC QUADRANGLE MOUNT KISCO, NEW YORK (2019).

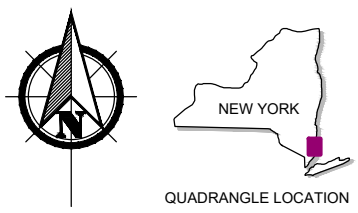

QUADRANGLE LOCATION

LEGEND

PROPERTY BOUNDARY

WATERSHED BOUNDARY LINE

0 2000

SCALE IN FEET

WSP USA, Inc. and related company
Hydrogeologic, Architecture, Land Surveying, Landscape Architecture, P.C. (WSP)
4 Research Drive
Suite 204
Shelton, Connecticut 06484
(203) 929-8555

Summit Country Club
568 Bedford Road
North Castle, New York

SITE LOCATION MAP

FIGURE 1

A | Drawn By: RAC | Checked: SS | Approved: SS | DWG Date: 09/30/21

O:\DWG\Brynwood\Summit Club\2021 NYSDEC Permit Modification\F1_SLM.dwg, Layout1, 9/30/2021 6:41:03 AM, DWG To PDF.pc3

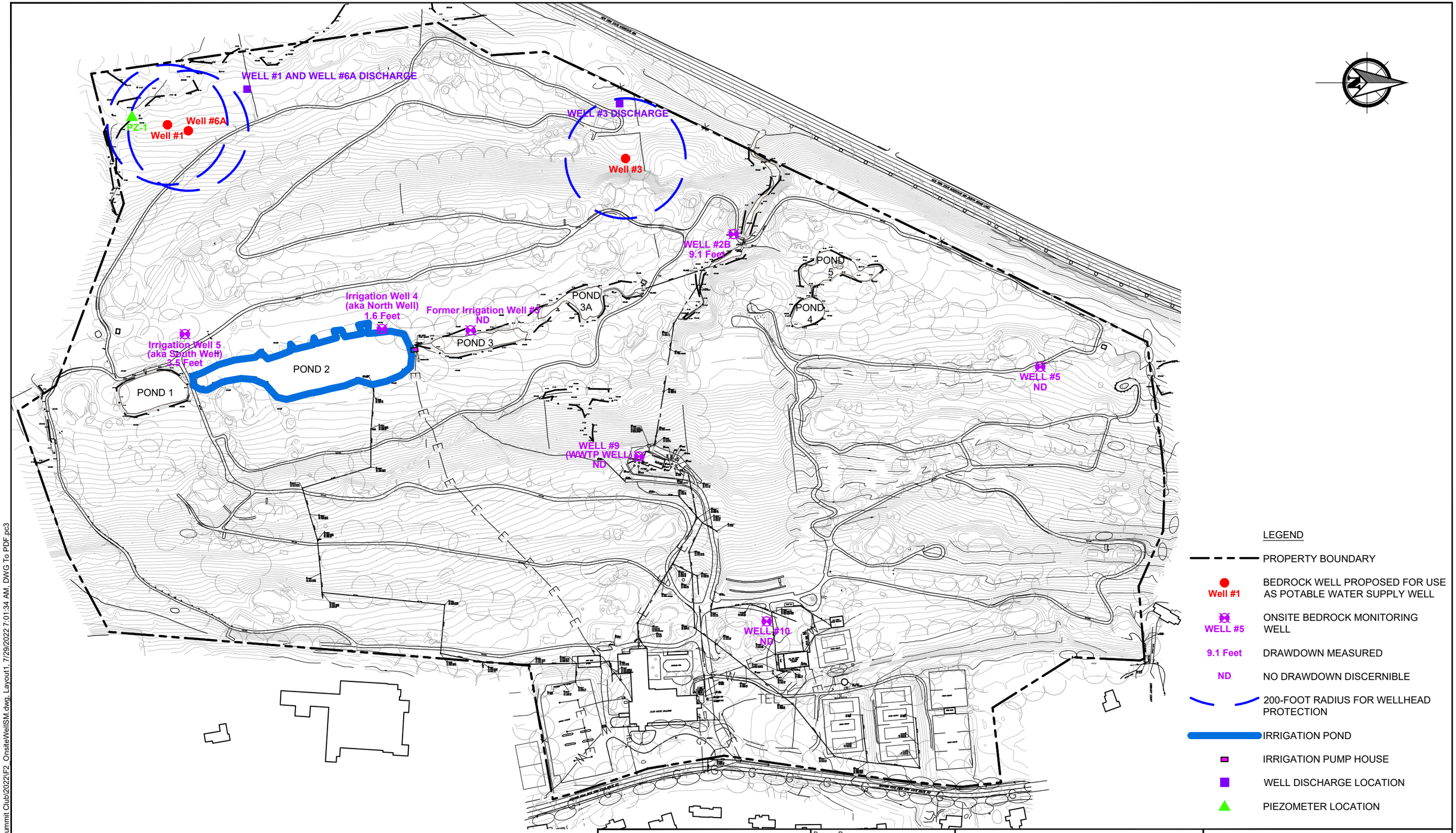

O:\DWG\Brynwood\Summit Club\2022\F2_OnsiteWellSM.dwg, Layout1, 7/29/2022 7:01:34 AM, DWG To PDF.pc3

B

SOURCE:
WATERSHED OUTLINE FOR PONDS 1 & 2 AND BASE MAP OBTAINED FROM JMC
DRAWING "EXISTING DRAINAGE AREA MAP" DRAWINGS NO. DA-1, DATED MAY 16, 2013.

0 300
SCALE IN FEET

WSP USA, Inc. and related company
Hydrogeologic, Architecture, Land Surveying, Landscape Architecture, P.C. (WSP)
4 Research Drive
Suite 204
Shelton, Connecticut 06484
(203) 929-8555

Drawn By:	RAC
Checked:	SS
Approved:	SS
DWG Date:	07/29/22

Summit Country Club
568 Bedford Road
North Castle, New York

SITE MAP AND ONSITE WELL LOCATIONS

FIGURE 2

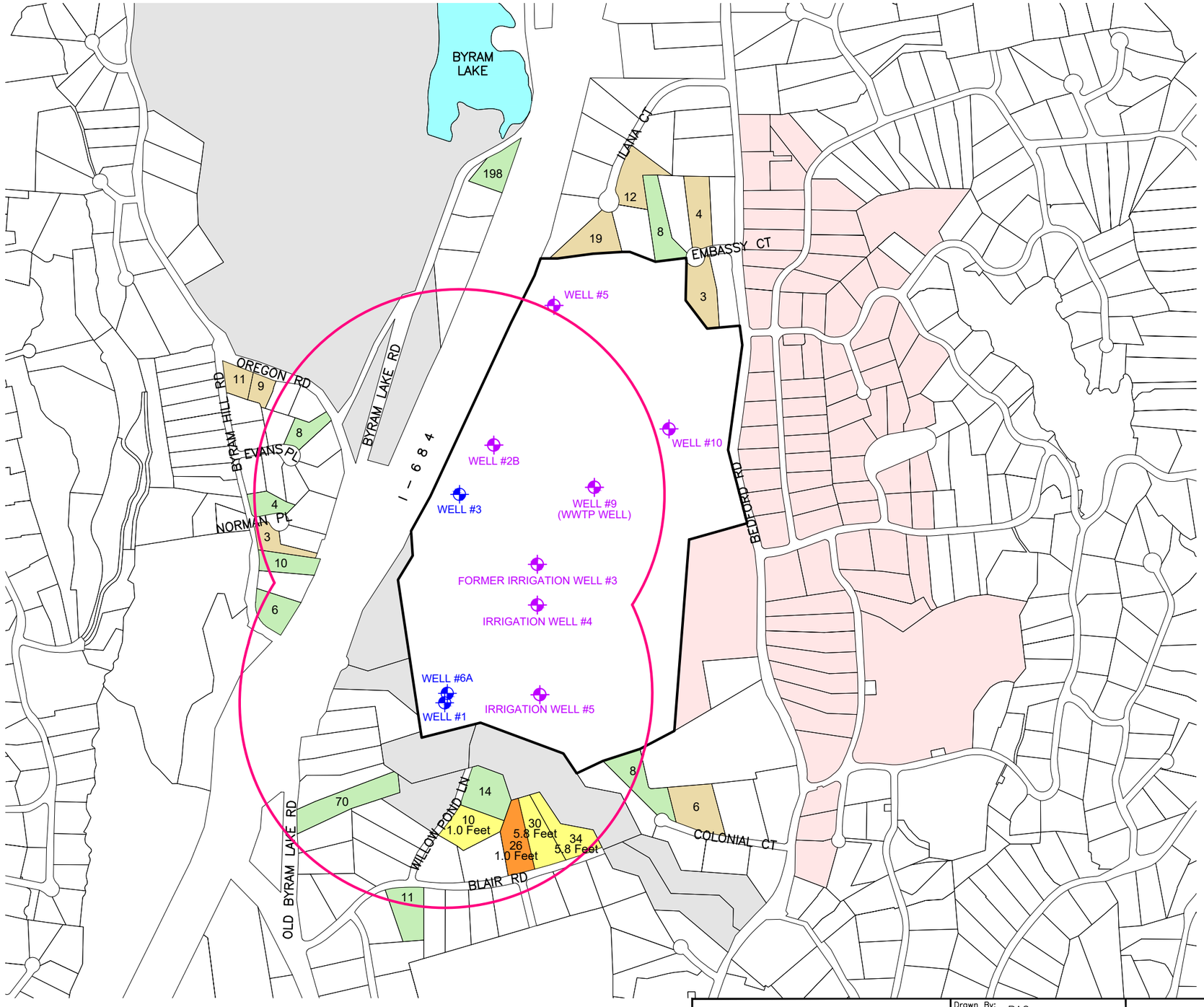

O:\DWG\Brynwood\Summit Club\2022\F3 OffsiteWellMP.dwg, Layout1, 7/29/2022 7:12:50 AM, DWG To PDF.pc3

B

WSP USA, Inc. and related company
Hydrogeologic, Architecture, Land Surveying, Landscape Architecture, P.C. (WSP)
4 Research Drive
Suite 204
Shelton, Connecticut 06484
(203) 929-8555

Drawn By:	RAC
Checked:	SS
Approved:	SS
DWG Date:	07/29/22

Summit Country Club
568 Bedford Road
North Castle, New York

OFFSITE WELL MONITORING PROGRAM

FIGURE 3

APPENDIX I

Stieber, Stacy

Subject: FW: WCDOH File I.D.: C22-014: Summit Country Club Pump Testing

From: Thein, Zaw <ztt1@westchestergov.com>
Sent: Thursday, March 10, 2022 4:27 PM
To: Stieber, Stacy <Stacy.Stieber@wsp.com>
Cc: McVeigh, Heather <hdh1@westchestergov.com>; Cusack, Thomas <Thomas.Cusack@wsp.com>; DeLucia, Peter <ppd4@westchestergov.com>; smisiti@northcastleny.com
Subject: RE: WCDOH File I.D.: C22-014: Summit Country Club Pump Testing

Stacy:

The receipt of a revised Pumping Test Plan for the above referenced facility is hereby acknowledged. This Department has no objection to the well yield test plan outlined in the revised plans dated January 26, 2022, last revised March 9, 2022 that also addresses all the comments issued in the Department email correspondence dated February 21, 2022. Please be mindful of the following items before the scheduled well yield testing and setting the pumping rates that will be used to demonstrate that the minimum source capacity requirements in accordance with the 10-States standards are met.

1. This Department does not allow 20% reduction for the use of water saving fixture in calculated water demand in designing of a water supply system.
2. Gallons per Day (GPD) to Gallons per Minutes (GPM) conversion is required to be based on the hour of operations of each facility. (e.g. residential units water demand shall be based on 24 hr. and restaurant/Bar/swimming pool/club, etc. water demand shall be based on the corresponding hours of operation of the facility).

Should you have any questions or require additional information, please feel free to contact me.

Sincerely,
Zaw

Zaw T. Thein, P.E.
Associate Engineer
Bureau of Environmental Quality
Westchester County Department of Health
25 Moore Avenue, Mt. Kisco, NY 10549
Tel: 914-864-7348
Fax: 914-813-4691
ztt1@westchestergov.com

For breaking public health news, updates and information, like us on Facebook and follow us on Twitter

From: Thein, Zaw
Sent: Monday, February 21, 2022 12:06 PM
To: 'Stieber, Stacy' <Stacy.Stieber@wsp.com>
Cc: McVeigh, Heather <hdh1@westchestergov.com>; Cusack, Thomas <Thomas.Cusack@wsp.com>; DeLucia, Peter

<ppd4@westchestergov.com>; 'smisiti@northcastleny.com' <smisiti@northcastleny.com>
Subject: WCDOH File I.D.: C22-014: Summit Country Club Pump Testing

Good Afternoon Stacy:

The receipt of your submittal for well testing plan at the above referenced facility is hereby acknowledged. The following items are required during the proposed simultaneous well testing at Well #1, Well #3 and Well #6A:

1. The wells that were monitored at the offsite properties that show effects during 2013 simultaneous yield testing must be re-monitored. That is:
    a. #8 Embassy Ct.
    b. #1 Blair Rd.
    c. #30 Blair Rd.
    d. #34 Blair Rd.
2. The properties that were solicited for well monitoring but did not response at the time and did not get their wells monitored during 2013 yield testing must be resolicited and monitored if permission granted by the owners at this time.
3. Properties that were vacant during 2013 test must be reconfirmed if they are still vacant. If any of those vacant lots are occupied at this time, solicitation to those properties must be made and well monitoring must be conducted if permission granted.
4. All onsite wells that will not be purposed for drinking water supply system but will be used for other purposes, such as irrigation and/or for fire tanks (if any) are required to be monitored.
5. In order to keep all approval records in one place, please resubmit copies of WCDOH Approval of Plans issued for those wells.
6. Please also clarify which entity will be the applicant for the water system development (i.e., owner of the proposed water supply system).

Should you have any questions or require additional information, please feel free to contact me.

Sincerely,
Zaw

Zaw T. Thein, P.E.
Associate Engineer
Bureau of Environmental Quality
Westchester County Department of Health
25 Moore Avenue, Mt. Kisco, NY 10549
Tel: 914-864-7348
Fax: 914-813-4691
ztt1@westchestergov.com

For breaking public health news, updates and information, like us on Facebook and follow us on Twitter

APPENDIX II

Westchester ov.com

Westchester County Department Health
Bureau of Environmental Quality

WELL COMPLETION REPORT: Well #1 WCDH File No.

This report is to be completed by well driller and submitted to Health Department, together with laboratory report of analysis of water sample indicating water is of satisfactory bacterial quality, before certificate of construction compliance is issued.

Well construction to be in accordance with Westchester County Health Dept, Rules & Regulations for the Design and Construction of Residential Subsurface Sewage Treatment System and Drilled Wells in Westchester County, NY.

Located at: 563 Bedford Rd Section: Block:

Well Location Municipality: N. Castle Lot:

Owner Last Name: Brynwood Owner First Name: C.C.

St. # 563 Street Name: Rte 22 Municipality: Armonk State: NY Zip Code: 10504

Well Driller (WD) Company Name:

Well Pit and Pump Equipment: Pitless Adapter: Other – Describe

Pump Make: Pump Type: Pump Capacity: Pump GPM:

Storage Tank Type: Storage Tank Capacity:

Well Details:

Casing Length: 57 Ft. Yield Test Type: Alc Measured from Land

Casing Diameter 6 In. Yield Test Duration: 6 Hrs. Water Level, Static: 0 Ft.

Casing Material: Steel Well Yield: 75 G.P.M. Water Level, Pumped: 500 Ft.

Screen Make: Screen Diameter: Inches

Screen Length: Ft. Screen Slot Size: **TOTAL WELL DEPTH :** 575 Ft.

WELL LOG :

Depth From Ground Surface		Give description of formation penetrated, such as: peat, silt, sand, gravel, clay, hardpan, shale, sandstone, granite, etc. Include size of gravel (diameter) and sand (fine, medium, coarse), color of material, structure (loose, packed, cemented, soft, hard). For example: 0 ft. to 27 ft. fine, packed, yellow sand; 27 ft. to 134 ft. gray granite.
0 Ft. to	17 Ft.	Well Geology, 1st Strata : Hardpan & Clay
17 Ft. to	575 Ft.	Well Geology, 2nd Strata: Gray Granite
Ft. to	Ft.	Well Geology, 3rd Strata :
Ft. to	Ft.	Well Geology, 4th Strata :
Ft. to	Ft.	Well Geology, 5th Strata :

I certify that the individual water supply indicated above was installed as per the Westchester County Health Department Rules & Regulations for the Design and Construction of Residential Subsurface Sewage Treatment System and Drilled Wells in Westchester County, NY.

Date Well Was Completed: 4/25/13 Date of Signature 5/29/13

NYSDEC Registration #: 10318 Well Driller Signature : Duane Ford

Revised 1/18/05

Westchester County Department Health
Bureau of Environmental Quality

WELL COMPLETION REPORT: Well #273 WCDH File No.

This report is to be completed by well driller and submitted to Health Department, together with laboratory report of analysis of water sample indicating water is of satisfactory bacterial quality, before certificate of construction compliance is issued.

Well construction to be in accordance with Westchester County Health Dept, Rules & Regulations for the Design and Construction of Residential Subsurface Sewage Treatment System and Drilled Wells in Westchester County, NY.

Located at: 568 Bedford Rd Section: Block:

Well Location Municipality: N. CASTLE Lot:

Owner Last Name: BRINWOOD Owner First Name: C.C.

St. # 568 Street Name: Rte 22 Municipality: ARMONK State: NY Zip Code: 10504

Well Driller (WD) Company Name:

Well Pit and Pump Equipment: Pitless Adapter: Other – Describe

Pump Make: Pump Type: Pump Capacity: Pump GPM:

Storage Tank Type: Storage Tank Capacity:

Well Details:

Casing Length: 100 Ft. Yield Test Type: Air Measured from Land

Casing Diameter: 6 In. Yield Test Duration: 6 Hrs. Water Level, Static: 0 Ft.

Casing Material: Steel Well Yield: 20 G.P.M. Water Level, Pumped: 500 Ft.

Screen Make: Screen Diameter: Inches

Screen Length: Ft. Screen Slot Size: **TOTAL WELL DEPTH :** 545 Ft.

WELL LOG :

Depth From Ground Surface	Give description of formation penetrated, such as: peat, silt, sand, gravel, clay, hardpan, shale, sandstone, granite, etc. Include size of gravel (diameter) and sand (fine, medium, coarse), color of material, structure (loose, packed, cemented, soft, hard). For example: 0 ft. to 27 ft. fine, packed, yellow sand; 27 ft. to 134 ft. grey granite.
0 Ft. to 32 Ft.	Well Geology, 1st Strata : HARDPAN + WATER
32 Ft. to 88 Ft.	Well Geology, 2nd Strata: SOFT CAVING ROCK
88 Ft. to 545 Ft.	Well Geology, 3rd Strata : GRAY GRANITE
Ft. to Ft.	Well Geology, 4th Strata :
Ft. to Ft.	Well Geology, 5th Strata :

I certify that the individual water supply indicated above was installed as per the Westchester County Health Department Rules & Regulations for the Design and Construction of Residential Subsurface Sewage Treatment System and Drilled Wells in Westchester County, NY.

Date Well Was Completed: 4/23/13 Date of Signature 5/29/13

NYSDEC Registration #: 10318 Well Driller Signature : for Paul

Revised 1/18/08

Westchester [redacted]ov.com

Westchester County Department Health
Bureau of Environmental Quality

WELL COMPLETION REPORT: Well #3 WCDH File No.

This report is to be completed by well driller and submitted to Health Department, together with laboratory report of analysis of water sample indicating water is of satisfactory bacterial quality, before certificate of construction compliance is issued.

Well construction to be in accordance with Westchester County Health Dept, Rules & Regulations for the Design and Construction of Residential Subsurface Sewage Treatment System and Drilled Wells in Westchester County, NY.

Located at: 568 Bedford Rd Section: Block:
Well Location Municipality: N. Castle Lot:
Owner Last Name: Brfnwood Owner First Name: C.C.
St. #: 563 Street Name: Rte 22 Municipality: Armonk State: NY Zip Code: 10504
Well Driller (WD) Company Name:

Well Pit and Pump Equipment: Pitless Adapter: Other – Describe
Pump Make: Pump Type: Pump Capacity: Pump GPM:
Storage Tank Type: Storage Tank Capacity:

Well Details:
Casing Length: 61 Ft. Yield Test Type: Air Measured from Land
Casing Diameter 6 In. Yield Test Duration: 6 Hrs. Water Level, Static: 0 Ft.
Casing Material: Steel Well Yield: 40 G.P.M. Water Level, Pumped: 600 Ft.
Screen Make: Screen Diameter: Inches
Screen Length: Ft. Screen Slot Size: TOTAL WELL DEPTH : 645 Ft.

WELL LOG :

Depth From Ground Surface	Give description of formation penetrated, such as: peat, silt, sand, gravel, clay, hardpan, shale, sandstone, granite, etc. Include size of gravel (diameter) and sand (fine, medium, coarse), color of material, structure (loose, packed, cemented, soft, hard). For example: 0 ft. to 27 ft. fine, packed, yellow sand; 27 ft. to 134 ft. gray granite.
0 Ft. to 27 Ft.	Well Geology, 1st Strata : HARDPAN + CLAY
27 Ft. to 645 Ft.	Well Geology, 2nd Strata: GRAY GRANITE
Ft. to Ft.	Well Geology, 3rd Strata :
Ft. to Ft.	Well Geology, 4th Strata :
Ft. to Ft.	Well Geology, 5th Strata :

I certify that the individual water supply indicated above was installed as per the Westchester County Health Department Rules & Regulations for the Design and Construction of Residential Subsurface Sewage Treatment System and Drilled Wells in Westchester County, NY.

Date Well Was Completed: 1/30/13 Date of Signature 5/29/13
NYSDEC Registration #: 10318 Well Driller Signature :

Revised 1/18/06

Westchester County Department Health
Bureau of Environmental Quality

WELL COMPLETION REPORT: Well #4 WCDH File No.

This report is to be completed by well driller and submitted to Health Department, together with laboratory report of analysis of water sample indicating water is of satisfactory bacterial quality, before certificate of construction compliance is issued.

Well construction to be in accordance with Westchester County Health Dept, Rules & Regulations for the Design and Construction of Residential Subsurface Sewage Treatment System and Drilled Wells in Westchester County, NY

Located at: 568 Bedford Rd Section: Block:

Well Location Municipality: N. CASTLE Lot:

Owner Last Name: BRYNWOOD Owner First Name: C.C.

St. #: 568 Street Name: Rte 22 Municipality: ARMONK State: NY Zip Code: 10504

Well Driller (WD) Company Name:

Well Pit and Pump Equipment: Pitless Adapter: Other – Describe

Pump Make: Pump Type: Pump Capacity: Pump GPM:

Storage Tank Type: Storage Tank Capacity:

Well Details:

Casing Length: 61 Ft. Yield Test Type: Air Measured from Land

Casing Diameter 6 In. Yield Test Duration: 6 Hrs. Water Level, Static: 0 Ft.

Casing Material: Steel Well Yield: 7 G.P.M. Water Level, Pumped: 500 Ft.

Screen Make: Screen Diameter: Inches

Screen Length: Ft. Screen Slot Size: **TOTAL WELL DEPTH :** 545 Ft.

WELL LOG :

Depth From Ground Surface	Give description of formation penetrated, such as: peat, silt, sand, gravel, clay, hardpan, shale, sandstone, granite, etc. Include size of gravel (diameter) and sand (fine, medium, coarse), color of material, structure (loose, packed, cemented, soft, hard). For example: 0 ft. to 27 ft. fine, packed, yellow sand; 27 ft. to 134 ft. grey granite.
0 Ft. to 4 Ft.	Well Geology, 1st Strata : HARDPAN
4 Ft. to 545 Ft.	Well Geology, 2nd Strata: GRAY GRANITE
Ft. to Ft.	Well Geology, 3rd Strata :
Ft. to Ft.	Well Geology, 4th Strata :
Ft. to Ft.	Well Geology, 5th Strata :

I certify that the individual water supply indicated above was installed as per the Westchester County Health Department Rules & Regulations for the Design and Construction of Residential Subsurface Sewage Treatment System and Drilled Wells in Westchester County, NY.

Date Well Was Completed: 2/1/13 Date of Signature 5/29/13

NYSDEC Registration #: 10317 Well Driller Signature : C Torlish

Revised 1/13/00

Westchester gov.com

Westchester County Department Health
Bureau of Environmental Quality

WELL COMPLETION REPORT: Well # 5 WCDH File No.

This report is to be completed by well driller and submitted to Health Department, together with laboratory report of analysis of water sample indicating water is of satisfactory bacterial quality, before certificate of construction compliance is issued.

Well construction to be in accordance with Westchester County Health Dept. Rules & Regulations for the Design and Construction of Residential Subsurface Sewage Treatment System and Drilled Wells in Westchester County, NY.

Located at: 568 Bedford Rd Section: Block:

Well Location Municipality N. CASTLE Lot:

Owner Last Name: BRINWOOD Owner First Name: C. C.

St. # 568 Street Name: Rte 22 Municipality: ARMONK State: N.Y. Zip Code: 10504

Well Driller (WD) Compar / Name:

Well Pit and Pump Equipment: Pitless Adapter: Other – Describe

Pump Make: Pump Type: Pump Capacity: Pump GPM:

Storage Tank Type: Storage Tank Capacity:

Well Details:

Casing Length: 61 Ft. Yield Test Type: Air Measured from Land

Casing Diameter 6 In. Yield Test Duration: 6 Hrs. Water Level, Static: 20 Ft.

Casing Material: Steel Well Yield: 25 G.P.M. Water Level, Pumped: 500 Ft.

Screen Make: Screen Diameter: Inches

Screen Length: Ft. Screen Slot Size: **TOTAL WELL DEPTH :** 540 Ft.

WELL LOG :

Depth From Ground Surface	Give description of formation penetrated, such as: peat, silt, sand, gravel, clay, hardpan, shale, sandstone, granite, etc. Include size of gravel (diameter) and sand (fine, medium, coarse), color of material, structure (loose, packed, cemented, soft, hard). For example: 0 ft. to 27 ft. fine, packed, yellow sand; 27 ft. to 134 ft. gray granite.
0 Ft. to 7 Ft.	Well Geology, 1st Strata : HARDPAN
7 Ft. to 540 Ft.	Well Geology, 2nd Strata: GRAY GRANITE
Ft. to Ft.	Well Geology, 3rd Strata :
Ft. to Ft.	Well Geology, 4th Strata :
Ft. to Ft.	Well Geology, 5th Strata :

I certify that the individual water supply indicated above was installed as per the Westchester County Health Department Rules & Regulations for the Design and Construction of Residential Subsurface Sewage Treatment System and Drilled Wells in Westchester County, NY.

Date Well Was Completed: 8/6/13 Date of Signature 5/29/13

NYSDEC Registration #: 10318 Well Driller Signature :

Revised 1/18/02

Westchester County Department Health
Bureau of Environmental Quality

WELL COMPLETION REPORT: WELL # 6A WCDH File No.

This report is to be completed by well driller and submitted to Health Department, together with laboratory report of analysis of water sample indicating water is of satisfactory bacterial quality, before certificate of construction compliance is issued.

Well construction to be in accordance with Westchester County Health Dept, Rules & Regulations for the Design and Construction of Residential Subsurface Sewage Treatment System and Drilled Wells in Westchester County, NY.

Located at: 568 Bedford Rd Section: Block:

Well Location Municipality: N. CASTLE Lot:

Owner Last Name: BRYNWOOD Owner First Name: C.C.

St. # 568 Street Name: Rte 22 Municipality: ARMONK State: N.Y. Zip Code: 10504

Well Driller (WD) Company Name:

Well Pit and Pump Equipment: Pitless Adapter: Other – Describe

Pump Make: Pump Type: Pump Capacity: Pump GPM:

Storage Tank Type: Storage Tank Capacity:

Well Details:

Casing Length: 61 Ft. Yield Test Type: Air Measured from Land

Casing Diameter 6 In. Yield Test Duration: 6 Hrs. Water Level, Static: 0 Ft.

Casing Material Steel Well Yield: 30 G.P.M. Water Level, Pumped: 600 Ft.

Screen Make: Screen Diameter: Inches

Screen Length: Ft. Screen Slot Size: TOTAL WELL DEPTH : Ft.

WELL LOG :

Depth From Ground Surface	Give description of formation penetrated, such as: peat, silt, sand, gravel, clay, hardpan, shale, sandstone, granite, etc. Include size of gravel (diameter) and sand (fine, medium, coarse), color of material, structure (loose, packed, cemented, soft, hard). For example: 0 ft. to 27 ft. fine, packed, yellow sand; 27 ft. to 134 ft. gray granite.
0 Ft. to 20 Ft.	Well Geology, 1st Strata : HARDPAN & CLAY
20 Ft. to 675 Ft.	Well Geology, 2nd Strata: GRAY GRANITE
Ft. to Ft.	Well Geology, 3rd Strata :
Ft. to Ft.	Well Geology, 4th Strata :
Ft. to Ft.	Well Geology, 5th Strata :

I certify that the individual water supply indicated above was installed as per the Westchester County Health Department Rules & Regulations for the Design and Construction of Residential Subsurface Sewage Treatment System and Drilled Wells in Westchester County, NY.

Date Well Was Completed: 5/13/13 Date of Signature 5/29/13

NYSDEC Registration #: 10318 Well Driller Signature : James Torlish

Revised 1/18/08

APPENDIX III

WELL 1

SUMMIT COUNTRY CLUB
568 BEDFORD ROAD
NORTH CASTLE, NEW YORK

Hydrograph of Water-Level Measurements Collected from Pumping Well 1 During the 72-Hour Pumping Test Conducted on Wells 1, 3 and 6A, June 2022

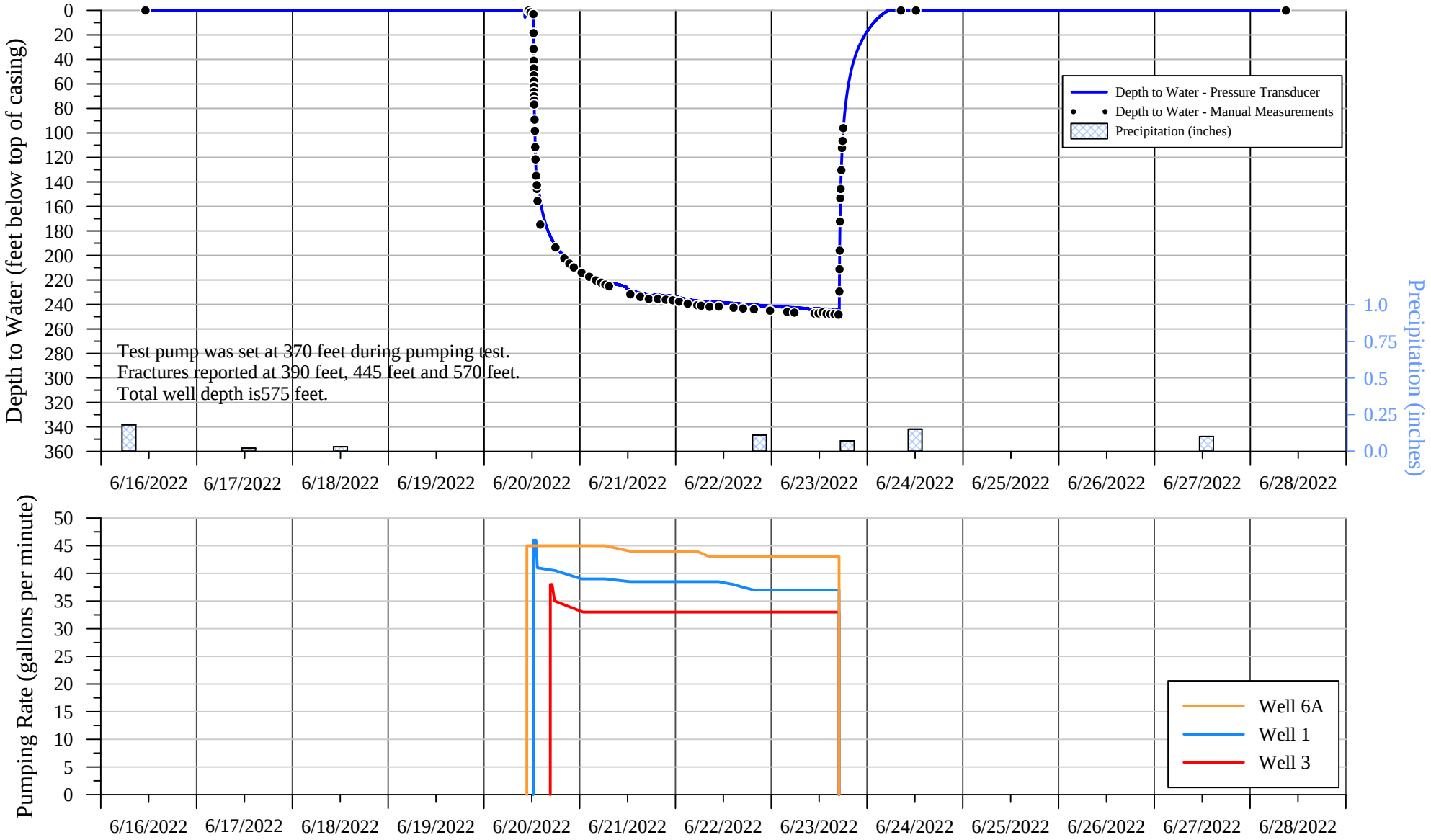

SUMMIT COUNTRY CLUB
568 BEDFORD ROAD
NORTH CASTLE, NEW YORK

180-Day Water-Level Drawdown Projection from Measurements Collected from Pumping Well 1
During the 72-Hour Pumping Test Conducted on Wells 1, 3 and 6A, June 2022

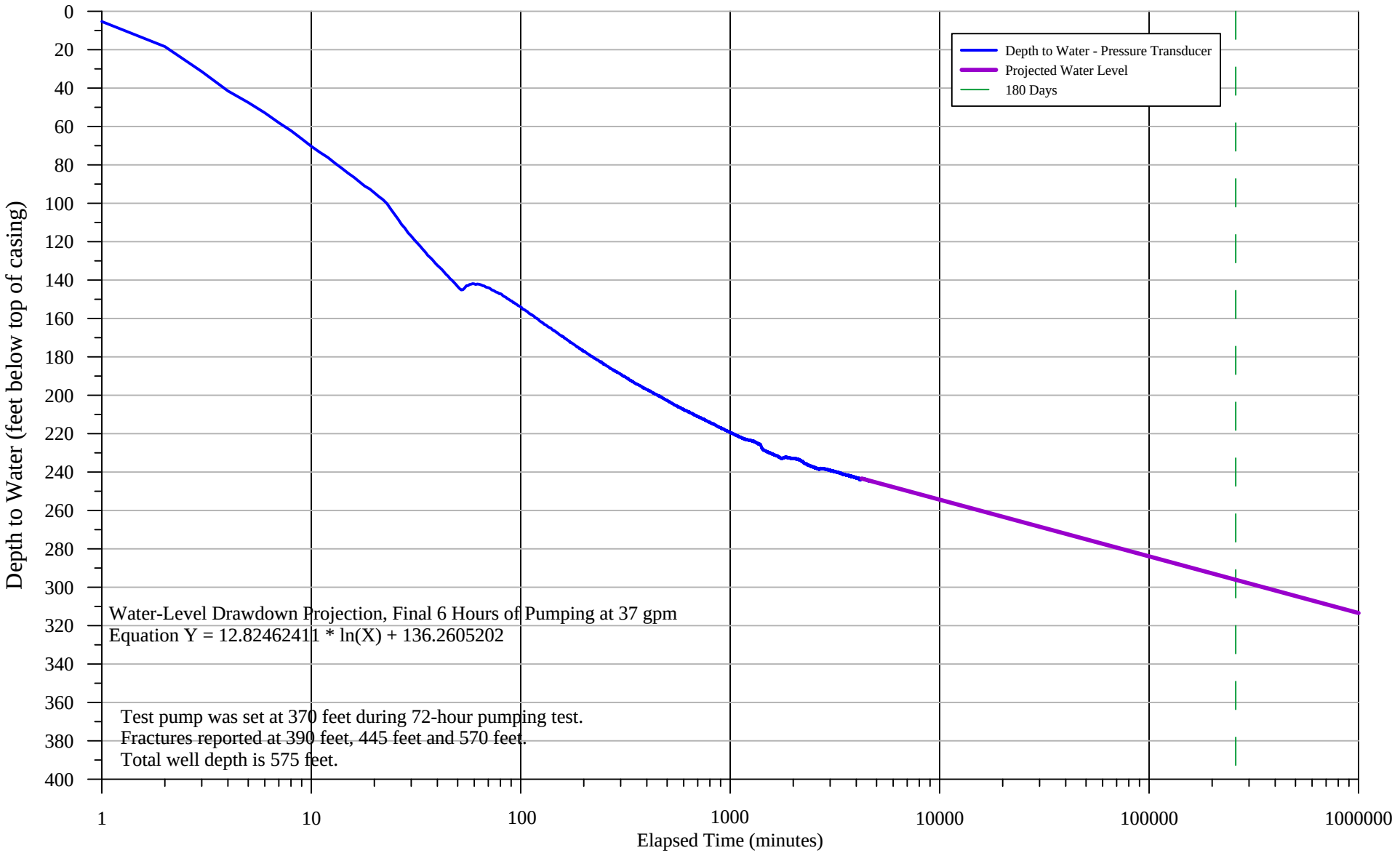

SUMMIT COUNTRY CLUB
568 BEDFORD ROAD
NORTH CASTLE, NEW YORK

Summary of Water-Level Measurements Collected from Pumping Well 1
During the 72-Hour Pumping Test Conducted on Wells 1, 3 and 6A, June 2022

Date	Time	Depth to Water (ft btoc)/ Drawdown (feet)	Elapsed Time (minutes)	Comments
6/16/2022	12:00	0.00	--	Pressure transducer installed in well.
6/16/2022	16:00	0.00	--	Well 1 flowing artesian.
6/16/2022	20:00	0.00	--	
6/17/2022	0:00	0.00	--	
6/17/2022	4:00	0.00	--	
6/17/2022	8:00	0.00	--	
6/17/2022	12:00	0.00	--	
6/17/2022	16:00	0.00	--	
6/17/2022	20:00	0.00	--	
6/18/2022	0:00	0.00	--	
6/18/2022	4:00	0.00	--	
6/18/2022	8:00	0.00	--	
6/18/2022	12:00	0.00	--	
6/18/2022	16:00	0.00	--	
6/18/2022	20:00	0.00	--	
6/19/2022	0:00	0.00	--	
6/19/2022	4:00	0.00	--	
6/19/2022	8:00	0.00	--	
6/19/2022	12:00	0.00	--	
6/19/2022	16:00	0.00	--	
6/19/2022	20:00	0.00	--	
6/20/2022	0:00	0.00	--	
6/20/2022	4:00	0.00	--	
6/20/2022	8:00	0.00	--	
6/20/2022	10:45	0.00	--	Pump in Well 6A started.
6/20/2022	11:00	0.17	--	
6/20/2022	12:00	2.48	--	
6/20/2022	12:20	3.05	--	
6/20/2022	12:21	5.35	1	Pump in Well 1 started.
6/20/2022	12:22	18.40	2	Pumping rate adjusted to 46 gpm.
6/20/2022	12:23	31.41	3	
6/20/2022	12:24	41.51	4	
6/20/2022	12:25	47.52	5	Pumping rate 46 gpm.
6/20/2022	12:26	52.91	6	
6/20/2022	12:27	58.07	7	
6/20/2022	12:28	62.20	8	
6/20/2022	12:29	66.44	9	
6/20/2022	12:30	70.34	10	Pumping rate 46 gpm.
6/20/2022	12:31	73.51	11	
6/20/2022	12:32	76.14	12	
6/20/2022	12:33	79.19	13	
6/20/2022	12:34	81.80	14	
6/20/2022	12:35	84.37	15	Pumping rate 46 gpm.
6/20/2022	12:40	94.54	20	
6/20/2022	12:45	105.82	25	Pumping rate 46 gpm.
6/20/2022	12:50	117.11	30	
6/20/2022	12:55	125.39	35	Pumping rate 46 gpm.
6/20/2022	13:00	132.36	40	
6/20/2022	13:05	138.00	45	Pumping rate 46 gpm.
6/20/2022	13:10	143.38	50	
6/20/2022	13:15	142.98	55	Pumping rate 46 gpm.
6/20/2022	13:20	142.00	60	

SUMMIT COUNTRY CLUB
568 BEDFORD ROAD
NORTH CASTLE, NEW YORK

Summary of Water-Level Measurements Collected from Pumping Well 1
During the 72-Hour Pumping Test Conducted on Wells 1, 3 and 6A, June 2022

Date	Time	Depth to Water (ft btoc)/ Drawdown (feet)	Elapsed Time (minutes)	Comments
6/20/2022	14:00	154.06	100	Pumping rate 41 gpm.
6/20/2022	15:00	169.52	160	
6/20/2022	16:00	179.90	220	Pumping rate 40.5 gpm.
6/20/2022	16:38	184.82	258	Pump in Well 3 started.
6/20/2022	17:00	187.04	280	
6/20/2022	18:00	192.88	340	Pumping rate 40 gpm.
6/20/2022	19:00	197.00	400	
6/20/2022	20:00	200.45	460	Pumping rate 40 gpm.
6/20/2022	21:00	203.78	520	
6/20/2022	22:00	206.52	580	Pumping rate 40 gpm.
6/20/2022	23:00	209.10	640	
6/21/2022	0:00	211.07	700	Pumping rate 39 gpm.
6/21/2022	1:00	212.94	760	
6/21/2022	2:00	214.81	820	Pumping rate 39 gpm.
6/21/2022	3:00	216.50	880	
6/21/2022	4:00	218.12	940	Pumping rate 39 gpm.
6/21/2022	5:00	219.39	1000	
6/21/2022	6:00	220.52	1060	Pumping rate 39 gpm.
6/21/2022	7:00	222.10	1120	
6/21/2022	8:00	222.95	1180	Pumping rate 39 gpm.
6/21/2022	9:00	223.53	1240	
6/21/2022	10:00	224.00	1300	Pumping rate 39 gpm.
6/21/2022	11:00	225.43	1360	
6/21/2022	12:00	227.92	1420	Pumping rate 38.5 gpm.
6/21/2022	13:00	229.09	1480	
6/21/2022	14:00	229.90	1540	Pumping rate 38.5 gpm.
6/21/2022	15:00	230.60	1600	
6/21/2022	16:00	231.36	1660	Pumping rate 38.5 gpm.
6/21/2022	17:00	232.21	1720	
6/21/2022	18:00	232.83	1780	Pumping rate 38.5 gpm.
6/21/2022	19:00	232.23	1840	
6/21/2022	20:00	232.53	1900	Pumping rate 38.5 gpm.
6/21/2022	21:00	232.86	1960	
6/21/2022	22:00	232.83	2020	Pumping rate 38.5 gpm.
6/21/2022	23:00	233.38	2080	
6/22/2022	0:00	233.70	2140	Pumping rate 38.5 gpm.
6/22/2022	1:00	234.38	2200	
6/22/2022	2:00	235.39	2260	Pumping rate 38.5 gpm.
6/22/2022	3:00	236.02	2320	
6/22/2022	4:00	236.64	2380	Pumping rate 38.5 gpm.
6/22/2022	5:00	236.87	2440	
6/22/2022	6:00	237.23	2500	Pumping rate 38.5 gpm.
6/22/2022	7:00	237.90	2560	
6/22/2022	8:00	238.27	2620	Pumping rate 38.5 gpm.
6/22/2022	9:00	238.25	2680	
6/22/2022	10:00	238.11	2740	Pumping rate 38.5 gpm.
6/22/2022	11:00	238.37	2800	
6/22/2022	12:00	238.73	2860	Pumping rate 38.5 gpm.
6/22/2022	13:00	238.68	2920	
6/22/2022	14:00	239.03	2980	Pumping rate 38 gpm.
6/22/2022	15:00	239.41	3040	
6/22/2022	16:00	239.64	3100	Pumping rate 37.5 gpm.

SUMMIT COUNTRY CLUB
568 BEDFORD ROAD
NORTH CASTLE, NEW YORK

Summary of Water-Level Measurements Collected from Pumping Well 1
During the 72-Hour Pumping Test Conducted on Wells 1, 3 and 6A, June 2022

Date	Time	Depth to Water (ft btoc)/ Drawdown (feet)	Elapsed Time (minutes)	Comments
6/22/2022	17:00	239.87	3160	
6/22/2022	18:00	240.14	3220	Pumping rate 37 gpm.
6/22/2022	19:00	240.10	3280	
6/22/2022	20:00	240.47	3340	Pumping rate 37 gpm.
6/22/2022	21:00	240.98	3400	
6/22/2022	22:00	241.17	3460	Pumping rate 37 gpm.
6/22/2022	23:00	241.32	3520	
6/23/2022	0:00	241.49	3580	Pumping rate 37 gpm.
6/23/2022	1:00	241.63	3640	
6/23/2022	2:00	241.83	3700	Pumping rate 37 gpm.
6/23/2022	3:00	242.16	3760	
6/23/2022	4:00	242.49	3820	Pumping rate 37 gpm.
6/23/2022	5:00	242.75	3880	
6/23/2022	6:00	242.65	3940	Pumping rate 37 gpm.
6/23/2022	7:00	243.01	4000	
6/23/2022	8:00	243.04	4060	Pumping rate 37 gpm.
6/23/2022	9:00	243.45	4120	
6/23/2022	10:00	244.31	4180	Pumping rate 37 gpm.
6/23/2022	10:59	243.65	4239	Six hours prior to shut down of test.
6/23/2022	11:00	243.79	4240	Pumping rate 37 gpm.
6/23/2022	12:00	243.28	4300	
6/23/2022	13:00	243.55	4360	Pumping rate 37 gpm.
6/23/2022	14:00	244.07	4420	
6/23/2022	15:00	244.03	4480	Pumping rate 37 gpm.
6/23/2022	16:00	244.42	4540	
6/23/2022	16:59	244.65	4599	Pumping rate 37 gpm.
6/23/2022	17:00	232.27	-1	Pump in Well 1 shut down.
6/23/2022	17:01	222.12	-2	
6/23/2022	17:02	213.61	-3	
6/23/2022	17:03	206.52	-4	
6/23/2022	17:04	200.18	-5	
6/23/2022	17:05	194.46	-6	
6/23/2022	17:06	189.36	-7	
6/23/2022	17:07	184.62	-8	
6/23/2022	17:08	180.40	-9	
6/23/2022	17:09	176.48	-10	
6/23/2022	17:10	172.75	-11	
6/23/2022	17:11	169.40	-12	
6/23/2022	17:12	166.08	-13	
6/23/2022	17:13	163.19	-14	
6/23/2022	17:14	160.40	-15	
6/23/2022	17:19	148.25	-20	
6/23/2022	17:24	138.39	-25	
6/23/2022	17:29	130.18	-30	
6/23/2022	17:34	123.23	-35	
6/23/2022	17:39	116.99	-40	
6/23/2022	17:44	111.50	-45	
6/23/2022	17:49	106.48	-50	
6/23/2022	17:54	102.01	-55	
6/23/2022	17:59	97.84	-60	
6/23/2022	18:00	97.15	-61	
6/23/2022	19:00	66.17	-121	

SUMMIT COUNTRY CLUB
568 BEDFORD ROAD
NORTH CASTLE, NEW YORK

Summary of Water-Level Measurements Collected from Pumping Well 1
During the 72-Hour Pumping Test Conducted on Wells 1, 3 and 6A, June 2022

Date	Time	Depth to Water (ft btoc)/ Drawdown (feet)	Elapsed Time (minutes)	Comments
6/23/2022	20:00	48.70	-181	
6/23/2022	21:00	37.14	-241	
6/23/2022	22:00	28.87	-301	
6/23/2022	22:38	24.46	-339	90% recovered to pre-test level.
6/23/2022	23:00	22.38	-361	
6/24/2022	0:00	16.98	-421	
6/24/2022	1:00	12.60	-481	
6/24/2022	2:00	8.62	-541	
6/24/2022	3:00	5.39	-601	
6/24/2022	4:00	2.73	-661	
6/24/2022	5:00	0.50	-721	
6/24/2022	6:00	0.01	-781	
6/24/2022	7:00	0.00	-841	Well 1 flowing artesian.
6/24/2022	8:00	0.00	-901	
6/24/2022	9:00	0.00	-961	
6/24/2022	10:00	0.00	-1021	
6/24/2022	11:00	0.00	-1081	
6/24/2022	12:00	0.00	-1141	
6/24/2022	16:00	0.00	-1381	
6/24/2022	20:00	0.00	-1621	
6/25/2022	0:00	0.00	-1861	
6/25/2022	4:00	0.00	-2101	
6/25/2022	8:00	0.00	-2341	
6/25/2022	12:00	0.00	-2581	
6/25/2022	16:00	0.00	-2821	
6/25/2022	20:00	0.00	-3061	
6/26/2022	0:00	0.00	-3301	
6/26/2022	4:00	0.00	-3541	
6/26/2022	8:00	0.00	-3781	
6/26/2022	12:00	0.00	-4021	
6/26/2022	16:00	0.00	-4261	
6/26/2022	20:00	0.00	-4501	
6/27/2022	0:00	0.00	-4741	
6/27/2022	4:00	0.00	-4981	
6/27/2022	8:00	0.00	-5221	
6/27/2022	12:00	0.00	-5461	
6/27/2022	16:00	0.00	-5701	
6/27/2022	20:00	0.00	-5941	
6/28/2022	0:00	0.00	-6181	
6/28/2022	4:00	0.00	-6421	
6/28/2022	8:00	0.00	-6661	Pressure transducer removed from well.

gpm gallons per minute
ft btoc feet below top of casing

WELL 3

SUMMIT COUNTRY CLUB
568 BEDFORD ROAD
NORTH CASTLE, NEW YORK

Hydrograph of Water-Level Measurements Collected from Pumping Well 3 During the 72-Hour Pumping Test Conducted on Wells 1, 3 and 6A, June 2022

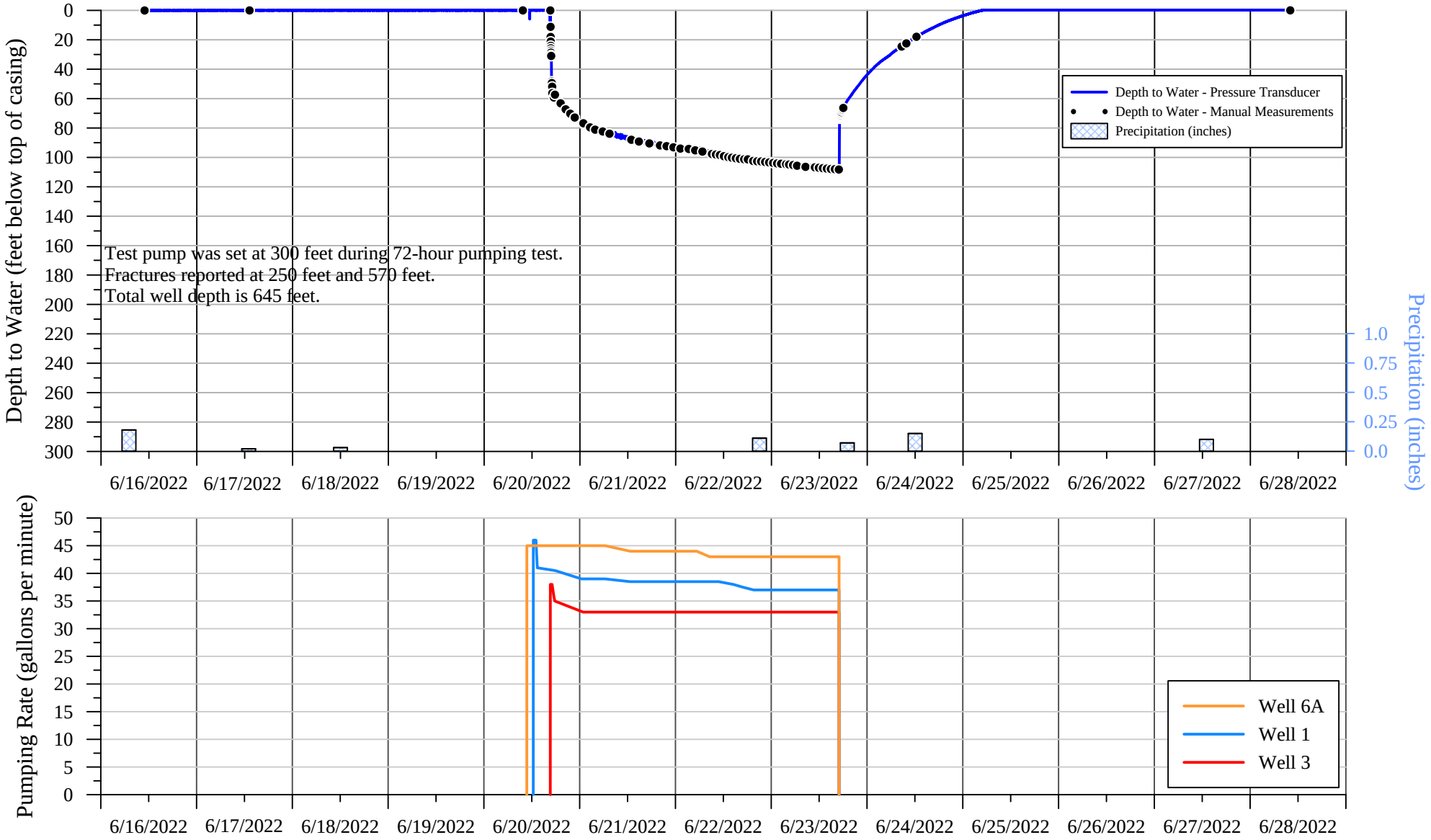

SUMMIT COUNTRY CLUB
568 BEDFORD ROAD
NORTH CASTLE, NEW YORK

180-Day Water-Level Drawdown Projection from Measurements Collected from Pumping Well 3
During the 72-Hour Pumping Test Conducted on Wells 1, 3 and 6A, June 2022

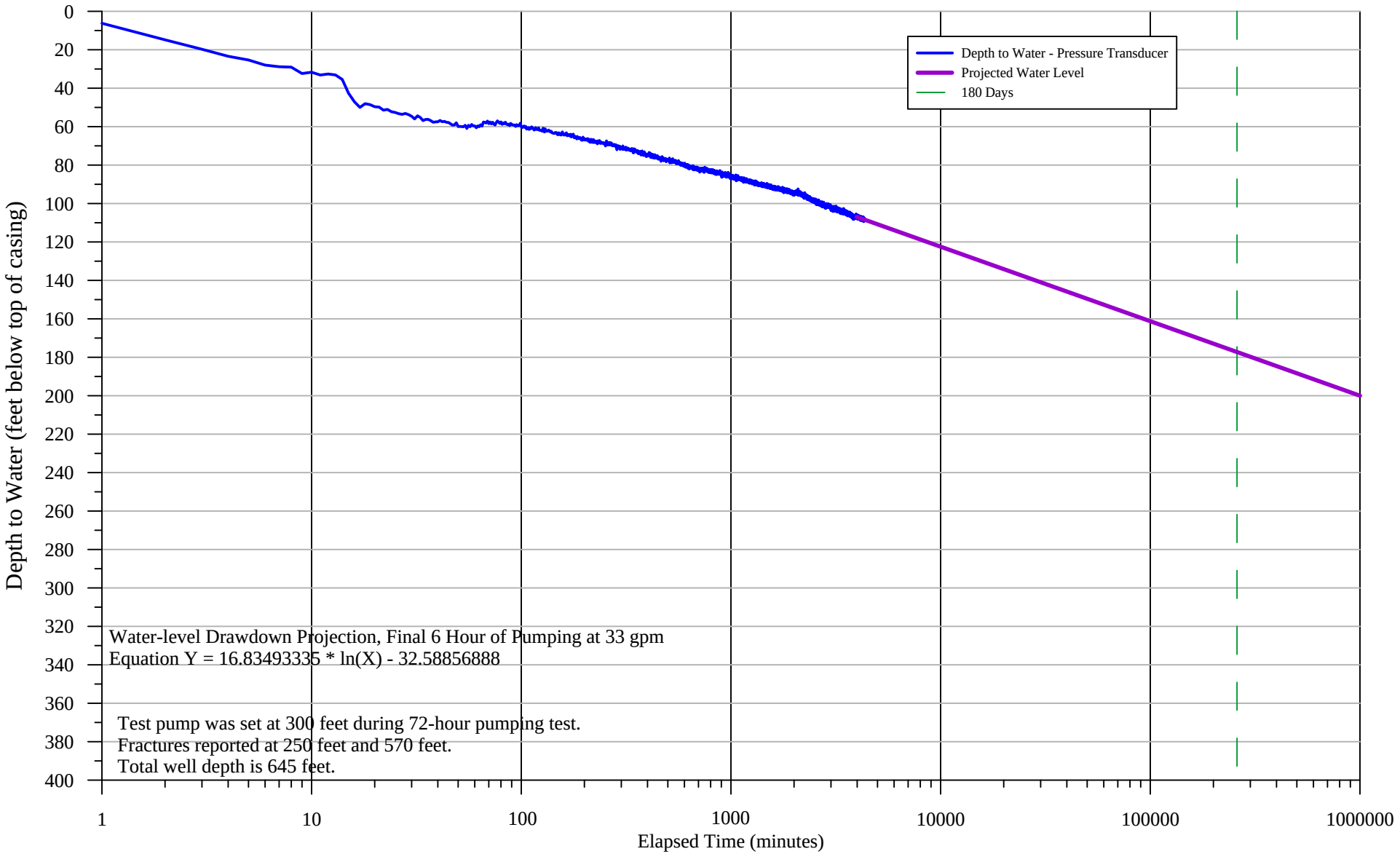

SUMMIT COUNTRY CLUB
568 BEDFORD ROAD
NORTH CASTLE, NEW YORK

Summary of Water-Level Measurements Collected from Pumping Well 3
During the 72-Hour Pumping Test Conducted on Wells 1, 3 and 6A, June 2022

Date	Time	Depth to Water (ft btoc)/ Drawdown (feet)	Elapsed Time (minutes)	Comments
6/16/2022	12:00	0.00	--	Pressure transducer installed in well.
6/16/2022	16:00	0.00	--	Well 3 flowing artesian.
6/16/2022	20:00	0.00	--	
6/17/2022	0:00	0.00	--	
6/17/2022	4:00	0.00	--	
6/17/2022	8:00	0.00	--	
6/17/2022	12:00	0.00	--	
6/17/2022	16:00	0.00	--	
6/17/2022	20:00	0.00	--	
6/18/2022	0:00	0.00	--	
6/18/2022	4:00	0.00	--	
6/18/2022	8:00	0.00	--	
6/18/2022	12:00	0.00	--	
6/18/2022	16:00	0.00	--	
6/18/2022	20:00	0.00	--	
6/19/2022	0:00	0.00	--	
6/19/2022	4:00	0.00	--	
6/19/2022	8:00	0.00	--	
6/19/2022	12:00	0.00	--	
6/19/2022	16:00	0.00	--	
6/19/2022	20:00	0.00	--	
6/20/2022	0:00	0.00	--	
6/20/2022	4:00	0.00	--	
6/20/2022	8:00	0.00	--	
6/20/2022	10:00	0.00	--	
6/20/2022	10:45	0.00	--	Pump in Well 6A started.
6/20/2022	11:00	0.00	--	
6/20/2022	12:00	0.00	--	
6/20/2022	12:21	0.00	--	Pump in Well 1 started.
6/20/2022	13:00	0.00	--	
6/20/2022	14:00	0.00	--	
6/20/2022	15:00	0.00	--	
6/20/2022	16:00	0.00	--	
6/20/2022	16:37	0.00	--	
6/20/2022	16:38	5.34	1	Pump in Well 3 started.
6/20/2022	16:39	13.95	2	Pumping rate adjusted to 38 gpm.
6/20/2022	16:40	18.86	3	
6/20/2022	16:41	22.51	4	
6/20/2022	16:42	24.44	5	Pumping rate 38 gpm.
6/20/2022	16:43	27.09	6	
6/20/2022	16:44	27.94	7	Pumping rate 38 gpm.
6/20/2022	16:45	28.16	8	
6/20/2022	16:46	31.48	9	Pumping rate 38 gpm.
6/20/2022	16:47	30.80	10	
6/20/2022	16:48	32.25	11	Pumping rate 38 gpm.
6/20/2022	16:49	31.72	12	
6/20/2022	16:50	32.22	13	Pumping rate 38 gpm.
6/20/2022	16:51	34.55	14	
6/20/2022	16:52	41.72	15	Pumping rate 38 gpm.
6/20/2022	16:57	48.75	20	
6/20/2022	17:02	51.72	25	Pumping rate 38 gpm.
6/20/2022	17:07	53.72	30	

SUMMIT COUNTRY CLUB
568 BEDFORD ROAD
NORTH CASTLE, NEW YORK

Summary of Water-Level Measurements Collected from Pumping Well 3
During the 72-Hour Pumping Test Conducted on Wells 1, 3 and 6A, June 2022

Date	Time	Depth to Water (ft btoc)/ Drawdown (feet)	Elapsed Time (minutes)	Comments
6/20/2022	17:12	55.37	35	Pumping rate 38 gpm.
6/20/2022	17:17	56.57	40	
6/20/2022	17:22	56.97	45	Pumping rate 38 gpm.
6/20/2022	17:27	59.07	50	
6/20/2022	17:32	60.08	55	Decreased rate to 36 gpm.
6/20/2022	17:37	58.72	60	
6/20/2022	18:00	57.65	83	Pumping rate 35 gpm.
6/20/2022	19:00	62.67	143	
6/20/2022	20:00	65.84	203	Pumping rate 35 gpm.
6/20/2022	21:00	68.47	263	
6/20/2022	22:00	70.89	323	Pumping rate 35 gpm.
6/20/2022	23:00	73.85	383	
6/21/2022	0:00	75.04	443	Pumping rate 33 gpm.
6/21/2022	1:00	77.08	503	
6/21/2022	2:00	77.66	563	Pumping rate 33 gpm.
6/21/2022	3:00	80.54	623	
6/21/2022	4:00	80.90	683	Pumping rate 33 gpm.
6/21/2022	5:00	81.39	743	
6/21/2022	6:00	81.40	803	Pumping rate 33 gpm.
6/21/2022	7:00	83.33	863	
6/21/2022	8:00	83.48	923	Pumping rate 33 gpm.
6/21/2022	9:00	85.07	983	
6/21/2022	10:00	85.10	1043	Pumping rate 33 gpm.
6/21/2022	11:00	86.54	1103	
6/21/2022	12:00	87.26	1163	Pumping rate 33 gpm.
6/21/2022	13:00	88.49	1223	
6/21/2022	14:00	88.33	1283	Pumping rate 33 gpm.
6/21/2022	15:00	89.09	1343	
6/21/2022	16:00	89.83	1403	Pumping rate 33 gpm.
6/21/2022	17:00	89.88	1463	
6/21/2022	18:00	89.44	1523	Pumping rate 33 gpm.
6/21/2022	19:00	91.31	1583	
6/21/2022	20:00	90.69	1643	Pumping rate 33 gpm.
6/21/2022	21:00	91.40	1703	
6/21/2022	22:00	90.62	1763	Pumping rate 33 gpm.
6/21/2022	23:00	91.86	1823	
6/22/2022	0:00	91.88	1883	Pumping rate 33 gpm.
6/22/2022	1:00	93.75	1943	
6/22/2022	2:00	94.30	2003	Pumping rate 33 gpm.
6/22/2022	3:00	93.83	2063	
6/22/2022	4:00	93.83	2123	Pumping rate 33 gpm.
6/22/2022	5:00	95.10	2183	
6/22/2022	6:00	96.09	2243	Pumping rate 33 gpm.
6/22/2022	7:00	95.61	2303	
6/22/2022	8:00	96.99	2363	Pumping rate 33 gpm.
6/22/2022	9:00	97.62	2423	
6/22/2022	10:00	98.07	2483	Pumping rate 33 gpm.
6/22/2022	11:00	98.85	2543	
6/22/2022	12:00	98.70	2603	Pumping rate 33 gpm.
6/22/2022	13:00	98.90	2663	
6/22/2022	14:00	99.54	2723	Pumping rate 33 gpm.
6/22/2022	15:00	100.23	2783	

SUMMIT COUNTRY CLUB
568 BEDFORD ROAD
NORTH CASTLE, NEW YORK

Summary of Water-Level Measurements Collected from Pumping Well 3
During the 72-Hour Pumping Test Conducted on Wells 1, 3 and 6A, June 2022

Date	Time	Depth to Water (ft btoc)/ Drawdown (feet)	Elapsed Time (minutes)	Comments
6/22/2022	16:00	100.61	2843	Pumping rate 33 gpm.
6/22/2022	17:00	100.18	2903	
6/22/2022	18:00	100.00	2963	Pumping rate 33 gpm.
6/22/2022	19:00	102.31	3023	
6/22/2022	20:00	102.26	3083	Pumping rate 33 gpm.
6/22/2022	21:00	101.98	3143	
6/22/2022	22:00	101.51	3203	Pumping rate 33 gpm.
6/22/2022	23:00	102.16	3263	
6/23/2022	0:00	103.74	3323	Pumping rate 33 gpm.
6/23/2022	1:00	102.56	3383	
6/23/2022	2:00	103.51	3443	Pumping rate 33 gpm.
6/23/2022	3:00	104.05	3503	
6/23/2022	4:00	104.30	3563	Pumping rate 33 gpm.
6/23/2022	5:00	104.44	3623	
6/23/2022	6:00	104.27	3683	Pumping rate 33 gpm.
6/23/2022	7:00	105.22	3743	
6/23/2022	8:00	106.37	3803	Pumping rate 33 gpm.
6/23/2022	9:00	105.78	3863	
6/23/2022	10:00	106.45	3923	Pumping rate 33 gpm.
6/23/2022	10:59	106.68	3982	Six hours prior to shut down of test.
6/23/2022	11:00	105.86	3983	Pumping rate 33 gpm.
6/23/2022	12:00	105.39	4043	
6/23/2022	13:00	105.88	4103	Pumping rate 33 gpm.
6/23/2022	14:00	106.74	4163	
6/23/2022	15:00	107.77	4223	Pumping rate 33 gpm.
6/23/2022	16:00	106.94	4283	
6/23/2022	16:59	107.77	4342	Pumping rate 33 gpm.
6/23/2022	17:00	100.17	-1	Pump in Well 3 shut down.
6/23/2022	17:01	87.02	-2	
6/23/2022	17:02	79.84	-3	
6/23/2022	17:03	76.14	-4	
6/23/2022	17:04	74.40	-5	
6/23/2022	17:05	73.49	-6	
6/23/2022	17:06	72.95	-7	
6/23/2022	17:07	72.51	-8	
6/23/2022	17:08	72.17	-9	
6/23/2022	17:09	71.90	-10	
6/23/2022	17:10	71.62	-11	
6/23/2022	17:11	71.40	-12	
6/23/2022	17:12	71.31	-13	
6/23/2022	17:13	71.01	-14	
6/23/2022	17:14	70.86	-15	
6/23/2022	17:19	70.10	-20	
6/23/2022	17:24	69.48	-25	
6/23/2022	17:29	68.90	-30	
6/23/2022	17:34	68.45	-35	
6/23/2022	17:39	67.91	-40	
6/23/2022	17:44	67.38	-45	
6/23/2022	17:49	66.94	-50	
6/23/2022	17:54	66.54	-55	
6/23/2022	17:59	66.06	-60	
6/23/2022	18:00	66.00	-61	

SUMMIT COUNTRY CLUB
568 BEDFORD ROAD
NORTH CASTLE, NEW YORK

Summary of Water-Level Measurements Collected from Pumping Well 3
During the 72-Hour Pumping Test Conducted on Wells 1, 3 and 6A, June 2022

Date	Time	Depth to Water (ft btoc)/ Drawdown (feet)	Elapsed Time (minutes)	Comments
6/23/2022	19:00	61.45	-121	
6/23/2022	20:00	57.61	-181	
6/23/2022	21:00	53.80	-241	
6/23/2022	22:00	50.37	-301	
6/23/2022	23:00	46.79	-361	
6/24/2022	0:00	43.66	-421	
6/24/2022	1:00	40.78	-481	
6/24/2022	2:00	38.08	-541	
6/24/2022	3:00	35.67	-601	
6/24/2022	4:00	33.57	-661	
6/24/2022	5:00	31.68	-721	
6/24/2022	6:00	29.60	-781	
6/24/2022	7:00	27.41	-841	
6/24/2022	8:00	25.49	-901	
6/24/2022	9:00	23.66	-961	
6/24/2022	10:00	21.91	-1021	
6/24/2022	11:00	20.15	-1081	
6/24/2022	12:00	18.53	-1141	
6/24/2022	13:00	16.91	-1201	
6/24/2022	14:00	15.25	-1261	
6/24/2022	15:00	13.84	-1321	
6/24/2022	16:00	12.50	-1381	
6/24/2022	17:00	11.15	-1441	
6/24/2022	17:16	10.75	-1457	90% recovered to pre-test level.
6/24/2022	18:00	9.83	-1501	
6/24/2022	19:00	8.61	-1561	
6/24/2022	20:00	7.47	-1621	
6/25/2022	0:00	3.63	-1861	
6/25/2022	4:00	0.53	-2101	
6/25/2022	8:00	0.00	-2341	Well 3 flowing artesian.
6/25/2022	12:00	0.00	-2581	
6/25/2022	16:00	0.00	-2821	
6/25/2022	20:00	0.00	-3061	
6/26/2022	0:00	0.00	-3301	
6/26/2022	4:00	0.00	-3541	
6/26/2022	8:00	0.00	-3781	
6/26/2022	12:00	0.00	-4021	
6/26/2022	16:00	0.00	-4261	
6/26/2022	20:00	0.00	-4501	
6/27/2022	0:00	0.00	-4741	
6/27/2022	4:00	0.00	-4981	
6/27/2022	8:00	0.00	-5221	
6/27/2022	12:00	0.00	-5461	
6/27/2022	16:00	0.00	-5701	
6/27/2022	20:00	0.00	-5941	
6/28/2022	0:00	0.00	-6181	
6/28/2022	4:00	0.00	-6421	
6/28/2022	8:00	0.00	-6661	Pressure transducer removed from well.

gpm gallons per minute
ft btoc feet below top of casing

WELL 6A

SUMMIT COUNTRY CLUB
568 BEDFORD ROAD
NORTH CASTLE, NEW YORK

Hydrograph of Water-Level Measurements Collected from Pumping Well 6A During the 72-Hour Pumping Test Conducted on Wells 1, 3 and 6A, June 2022

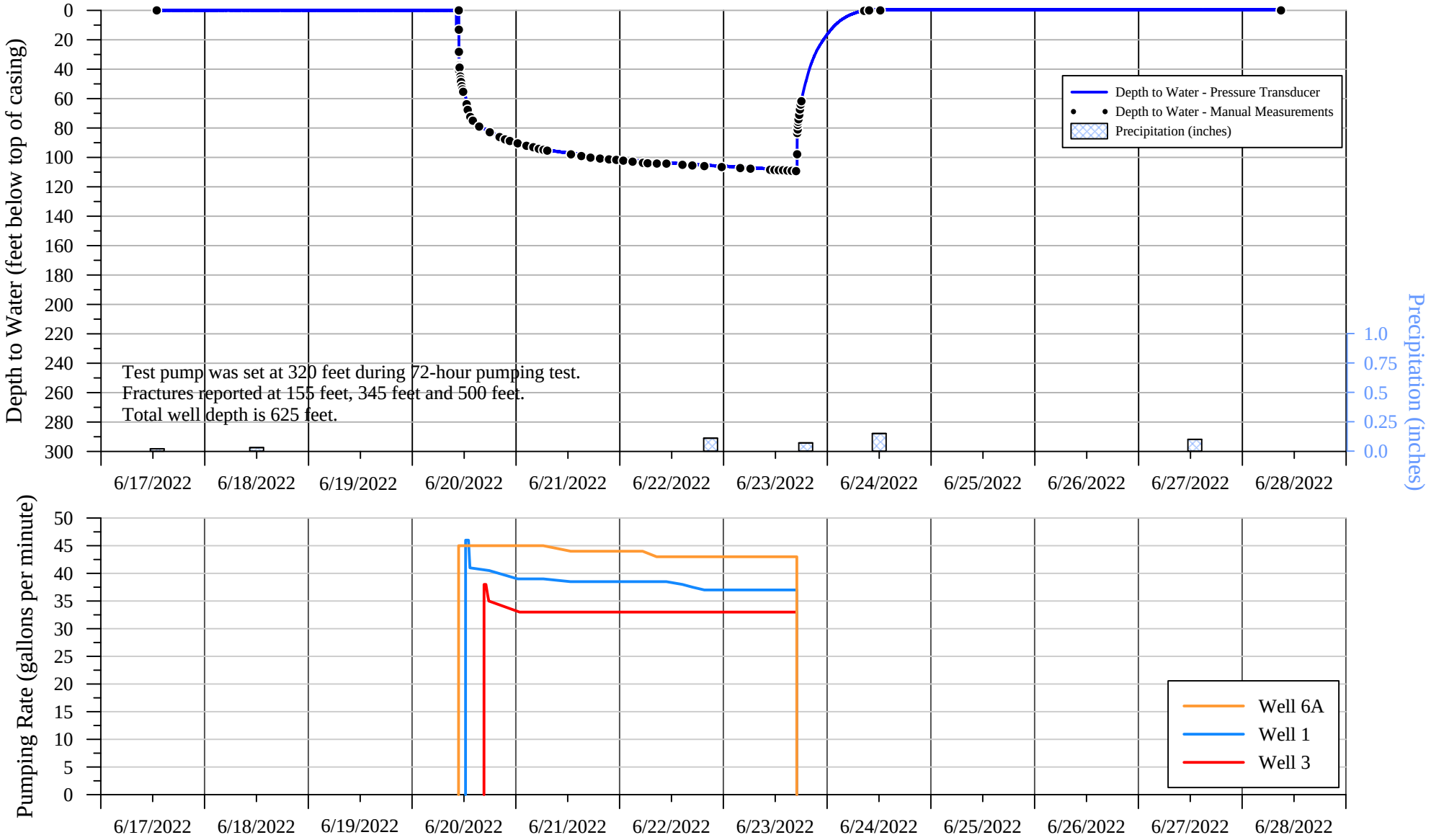

SUMMIT COUNTRY CLUB
568 BEDFORD ROAD
NORTH CASTLE, NEW YORK

180-Day Water-Level Drawdown Projection from Measurements Collected from Pumping Well 6A
During the 72-Hour Pumping Test Conducted on Wells 1, 3 and 6A, June 2022

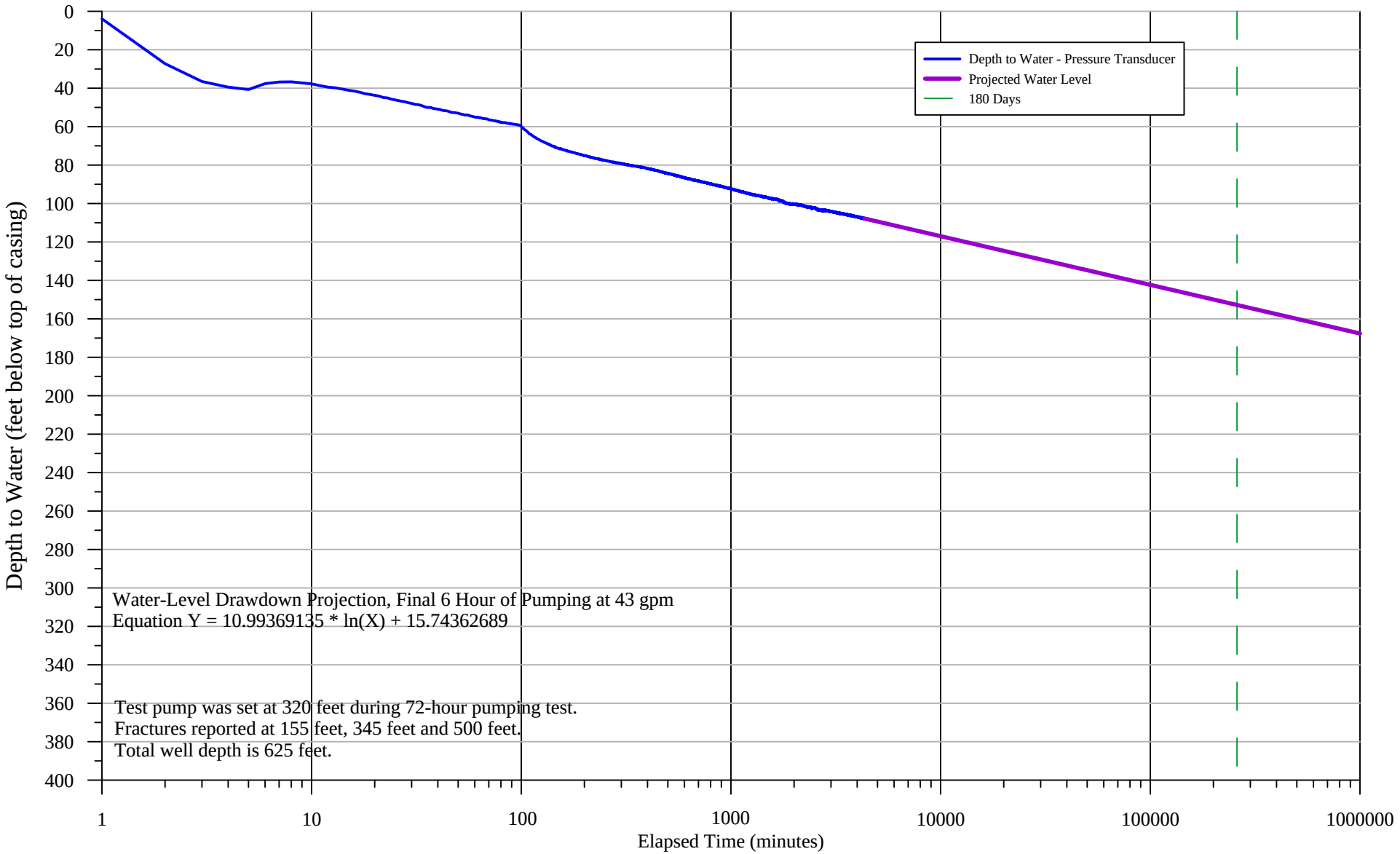

SUMMIT COUNTRY CLUB
568 BEDFORD ROAD
NORTH CASTLE, NEW YORK

Summary of Water-Level Measurements Collected from Pumping Well 6A
During the 72-Hour Pumping Test Conducted on Wells 1, 3 and 6A, June 2022

Date	Time	Depth to Water (ft btoc)/ Drawdown (feet)	Elapsed Time (minutes)	Comments
6/17/2022	16:00	0.00	--	Pressure transducer installed in well.
6/17/2022	20:00	0.00	--	Well 6A flowing artesian.
6/18/2022	0:00	0.00	--	
6/18/2022	4:00	0.00	--	
6/18/2022	8:00	0.00	--	
6/18/2022	12:00	0.00	--	
6/18/2022	16:00	0.00	--	
6/18/2022	20:00	0.00	--	
6/19/2022	0:00	0.00	--	
6/19/2022	4:00	0.00	--	
6/19/2022	8:00	0.00	--	
6/19/2022	12:00	0.00	--	
6/19/2022	16:00	0.00	--	
6/19/2022	20:00	0.00	--	
6/20/2022	0:00	0.00	--	
6/20/2022	4:00	0.00	--	
6/20/2022	8:00	0.00	--	
6/20/2022	10:44	0.00	--	
6/20/2022	10:45	3.81	1	Pump in Well 6A started.
6/20/2022	10:46	27.16	2	Pumping rate set at 45 gpm.
6/20/2022	10:47	36.42	3	
6/20/2022	10:48	39.36	4	
6/20/2022	10:49	40.59	5	Pumping rate 45 gpm.
6/20/2022	10:50	37.53	6	
6/20/2022	10:51	36.69	7	
6/20/2022	10:52	36.60	8	
6/20/2022	10:53	37.16	9	
6/20/2022	10:54	37.65	10	Pumping rate 45 gpm.
6/20/2022	10:55	38.61	11	
6/20/2022	10:56	39.39	12	
6/20/2022	10:57	39.71	13	
6/20/2022	10:58	40.35	14	
6/20/2022	10:59	40.99	15	Pumping rate 45 gpm.
6/20/2022	11:04	43.64	20	
6/20/2022	11:09	46.01	25	Pumping rate 45 gpm.
6/20/2022	11:14	47.83	30	
6/20/2022	11:19	49.77	35	Pumping rate 45 gpm.
6/20/2022	11:24	50.82	40	
6/20/2022	11:29	51.96	45	Pumping rate 45 gpm.
6/20/2022	11:34	52.91	50	
6/20/2022	11:39	53.78	55	Pumping rate 45 gpm.
6/20/2022	11:44	54.93	60	
6/20/2022	12:00	57.11	76	Pumping rate 45 gpm.
6/20/2022	12:21	58.98	97	Pump in Well 1 started.
6/20/2022	13:00	69.41	136	
6/20/2022	14:00	74.75	196	Pumping rate 45 gpm.
6/20/2022	15:00	77.68	256	
6/20/2022	16:00	79.75	316	Pumping rate 45 gpm.
6/20/2022	16:38	80.54	354	Pump in Well 3 started.
6/20/2022	17:00	80.93	376	
6/20/2022	18:00	82.59	436	Pumping rate 45 gpm.
6/20/2022	19:00	84.10	496	

SUMMIT COUNTRY CLUB
568 BEDFORD ROAD
NORTH CASTLE, NEW YORK

Summary of Water-Level Measurements Collected from Pumping Well 6A
During the 72-Hour Pumping Test Conducted on Wells 1, 3 and 6A, June 2022

Date	Time	Depth to Water (ft btoc)/ Drawdown (feet)	Elapsed Time (minutes)	Comments
6/20/2022	20:00	85.61	556	Pumping rate 45 gpm.
6/20/2022	21:00	86.79	616	
6/20/2022	22:00	87.82	676	Pumping rate 45 gpm.
6/20/2022	23:00	88.70	736	
6/21/2022	0:00	89.70	796	Pumping rate 45 gpm.
6/21/2022	1:00	90.56	856	
6/21/2022	2:00	91.36	916	Pumping rate 45 gpm.
6/21/2022	3:00	91.85	976	
6/21/2022	4:00	92.66	1036	Pumping rate 45 gpm.
6/21/2022	5:00	93.43	1096	
6/21/2022	6:00	94.04	1156	Pumping rate 45 gpm.
6/21/2022	7:00	94.80	1216	
6/21/2022	8:00	95.34	1276	Pumping rate 45 gpm.
6/21/2022	9:00	95.62	1336	
6/21/2022	10:00	96.17	1396	Pumping rate 45 gpm.
6/21/2022	11:00	96.66	1456	
6/21/2022	12:00	97.16	1516	Pumping rate 44 gpm.
6/21/2022	13:00	97.28	1576	
6/21/2022	14:00	97.73	1636	Pumping rate 44 gpm.
6/21/2022	15:00	98.68	1696	
6/21/2022	16:00	98.67	1756	Pumping rate 44 gpm.
6/21/2022	17:00	99.65	1816	
6/21/2022	18:00	100.02	1876	Pumping rate 44 gpm.
6/21/2022	19:00	100.48	1936	
6/21/2022	20:00	100.09	1996	Pumping rate 44 gpm.
6/21/2022	21:00	100.45	2056	
6/21/2022	22:00	100.54	2116	Pumping rate 44 gpm.
6/21/2022	23:00	100.67	2176	
6/22/2022	0:00	101.48	2236	Pumping rate 44 gpm.
6/22/2022	1:00	101.72	2296	
6/22/2022	2:00	101.84	2356	Pumping rate 44 gpm.
6/22/2022	3:00	102.13	2416	
6/22/2022	4:00	102.25	2476	Pumping rate 44 gpm.
6/22/2022	5:00	102.14	2536	
6/22/2022	6:00	103.07	2596	Pumping rate 44 gpm.
6/22/2022	7:00	103.40	2656	
6/22/2022	8:00	103.53	2716	Pumping rate 43 gpm.
6/22/2022	9:00	103.35	2776	
6/22/2022	10:00	103.35	2836	Pumping rate 43 gpm.
6/22/2022	11:00	103.74	2896	
6/22/2022	12:00	103.98	2956	Pumping rate 43 gpm.
6/22/2022	13:00	103.82	3016	
6/22/2022	14:00	104.32	3076	Pumping rate 43 gpm.
6/22/2022	15:00	104.45	3136	
6/22/2022	16:00	104.66	3196	Pumping rate 43 gpm.
6/22/2022	17:00	104.85	3256	
6/22/2022	18:00	105.06	3316	Pumping rate 43 gpm.
6/22/2022	19:00	105.18	3376	
6/22/2022	20:00	105.41	3436	Pumping rate 43 gpm.
6/22/2022	21:00	105.46	3496	
6/22/2022	22:00	105.63	3556	Pumping rate 43 gpm.
6/22/2022	23:00	105.80	3616	

SUMMIT COUNTRY CLUB
568 BEDFORD ROAD
NORTH CASTLE, NEW YORK

Summary of Water-Level Measurements Collected from Pumping Well 6A
During the 72-Hour Pumping Test Conducted on Wells 1, 3 and 6A, June 2022

Date	Time	Depth to Water (ft btoc)/ Drawdown (feet)	Elapsed Time (minutes)	Comments
6/23/2022	0:00	105.93	3676	Pumping rate 43 gpm.
6/23/2022	1:00	106.14	3736	
6/23/2022	2:00	106.28	3796	Pumping rate 43 gpm.
6/23/2022	3:00	106.45	3856	
6/23/2022	4:00	106.70	3916	Pumping rate 43 gpm.
6/23/2022	5:00	106.86	3976	
6/23/2022	6:00	106.94	4036	Pumping rate 43 gpm.
6/23/2022	7:00	107.10	4096	
6/23/2022	8:00	107.44	4156	Pumping rate 43 gpm.
6/23/2022	9:00	107.40	4216	
6/23/2022	10:00	107.73	4276	Pumping rate 43 gpm.
6/23/2022	10:59	107.62	4335	Six hour prior to shut down of test.
6/23/2022	11:00	107.75	4336	Pumping rate 43 gpm.
6/23/2022	12:00	107.74	4396	
6/23/2022	13:00	107.95	4456	Pumping rate 43 gpm.
6/23/2022	14:00	108.23	4516	
6/23/2022	15:00	108.56	4576	Pumping rate 43 gpm.
6/23/2022	16:00	108.61	4636	
6/23/2022	16:59	108.72	4695	Pumping rate 43 gpm.
6/23/2022	17:00	91.23	-1	Pump in Well 6A shut down.
6/23/2022	17:01	84.66	-2	
6/23/2022	17:02	82.34	-3	
6/23/2022	17:03	81.20	-4	
6/23/2022	17:04	80.53	-5	
6/23/2022	17:05	79.84	-6	
6/23/2022	17:06	79.16	-7	
6/23/2022	17:07	78.71	-8	
6/23/2022	17:08	78.24	-9	
6/23/2022	17:09	77.67	-10	
6/23/2022	17:10	77.23	-11	
6/23/2022	17:11	76.78	-12	
6/23/2022	17:12	76.44	-13	
6/23/2022	17:13	76.06	-14	
6/23/2022	17:14	75.67	-15	
6/23/2022	17:19	73.76	-20	
6/23/2022	17:24	72.12	-25	
6/23/2022	17:29	70.15	-30	
6/23/2022	17:34	68.52	-35	
6/23/2022	17:39	67.03	-40	
6/23/2022	17:44	65.46	-45	
6/23/2022	17:49	64.22	-50	
6/23/2022	17:54	62.82	-55	
6/23/2022	17:59	61.60	-60	
6/23/2022	18:00	61.26	-61	
6/23/2022	19:00	48.72	-121	
6/23/2022	20:00	38.46	-181	
6/23/2022	21:00	30.81	-241	
6/23/2022	22:00	25.11	-301	
6/23/2022	23:00	20.30	-361	
6/24/2022	0:00	16.11	-421	
6/24/2022	1:00	12.58	-481	
6/24/2022	1:30	10.85	-511	90% recovery to pre-test level.

SUMMIT COUNTRY CLUB
568 BEDFORD ROAD
NORTH CASTLE, NEW YORK

Summary of Water-Level Measurements Collected from Pumping Well 6A
During the 72-Hour Pumping Test Conducted on Wells 1, 3 and 6A, June 2022

Date	Time	Depth to Water (ft btoc)/ Drawdown (feet)	Elapsed Time (minutes)	Comments
6/24/2022	2:00	9.31	-541	
6/24/2022	3:00	6.83	-601	
6/24/2022	4:00	5.00	-661	
6/24/2022	5:00	3.42	-721	
6/24/2022	6:00	2.25	-781	
6/24/2022	7:00	1.15	-841	
6/24/2022	8:00	0.30	-901	
6/24/2022	9:00	0.00	-961	Artesian flow resumed in Well 6A.
6/24/2022	10:00	0.00	-1021	
6/24/2022	11:00	0.00	-1081	
6/24/2022	12:00	0.00	-1141	
6/24/2022	16:00	0.00	-1381	
6/24/2022	20:00	0.00	-1621	
6/25/2022	0:00	0.00	-1861	
6/25/2022	4:00	0.00	-2101	
6/25/2022	8:00	0.00	-2341	
6/25/2022	12:00	0.00	-2581	
6/25/2022	16:00	0.00	-2821	
6/25/2022	20:00	0.00	-3061	
6/26/2022	0:00	0.00	-3301	
6/26/2022	4:00	0.00	-3541	
6/26/2022	8:00	0.00	-3781	
6/26/2022	12:00	0.00	-4021	
6/26/2022	16:00	0.00	-4261	
6/26/2022	20:00	0.00	-4501	
6/27/2022	0:00	0.00	-4741	
6/27/2022	4:00	0.00	-4981	
6/27/2022	8:00	0.00	-5221	
6/27/2022	12:00	0.00	-5461	
6/27/2022	16:00	0.00	-5701	
6/27/2022	20:00	0.00	-5941	
6/28/2022	0:00	0.00	-6181	
6/28/2022	4:00	0.00	-6421	
6/28/2022	8:00	0.00	-6661	Pressure transducer removed from well.

gpm gallons per minute
ft btoc feet below top of casing

APPENDIX IV

SUMMIT COUNTRY CLUB
568 BEDFORD ROAD
NORTH CASTLE, NEW YORK

Hydrograph of Water-Level Measurements Collected from Well 2B
During the 72-Hour Pumping Test Conducted on Wells 1, 3 and 6A, June 2022

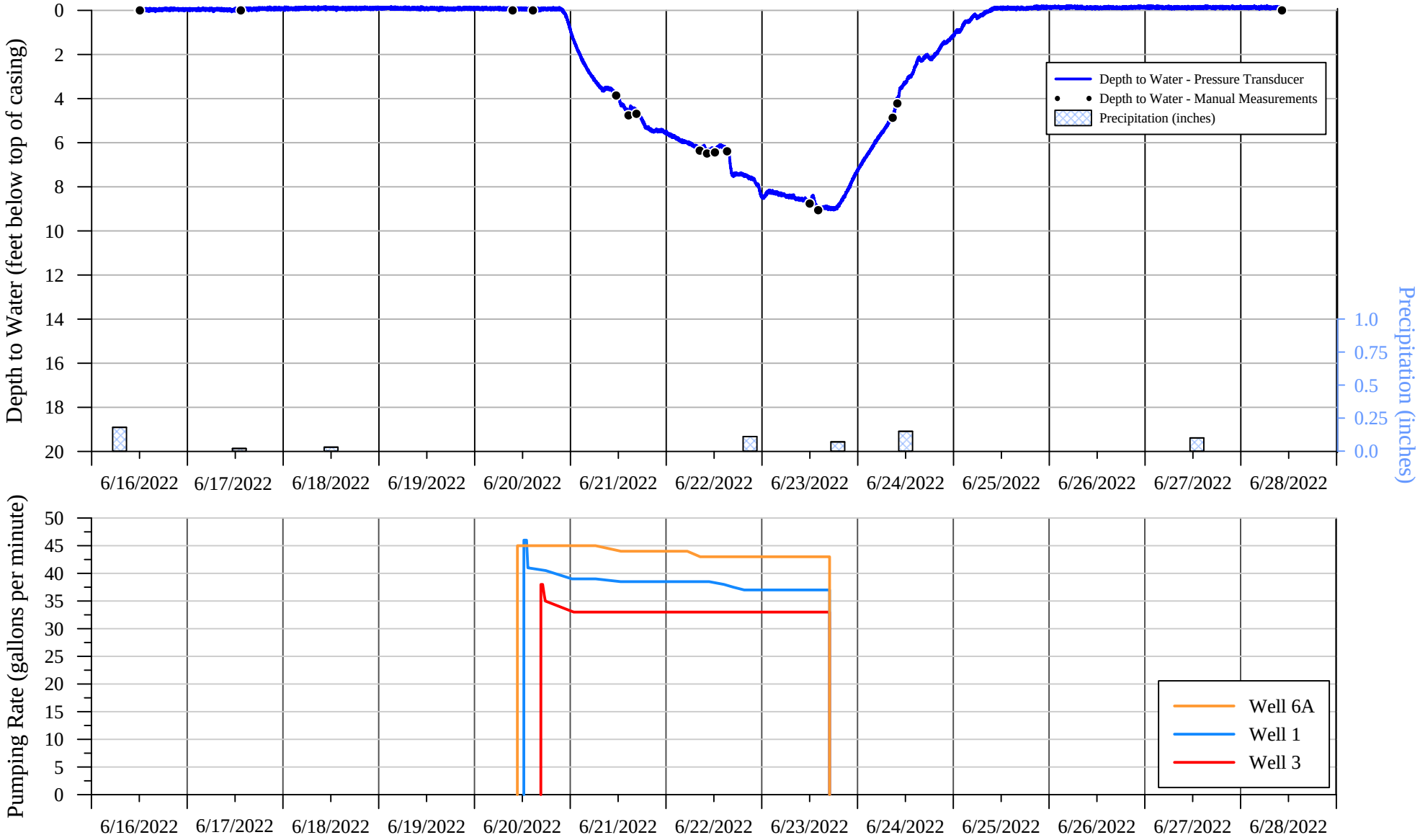

SUMMIT COUNTRY CLUB
568 BEDFORD ROAD
NORTH CASTLE, NEW YORK

Hydrograph of Artesian Discharge Rate Measurements Collected from Well 5
During the 72-Hour Pumping Test Conducted on Wells 1, 3 and 6A, June 2022

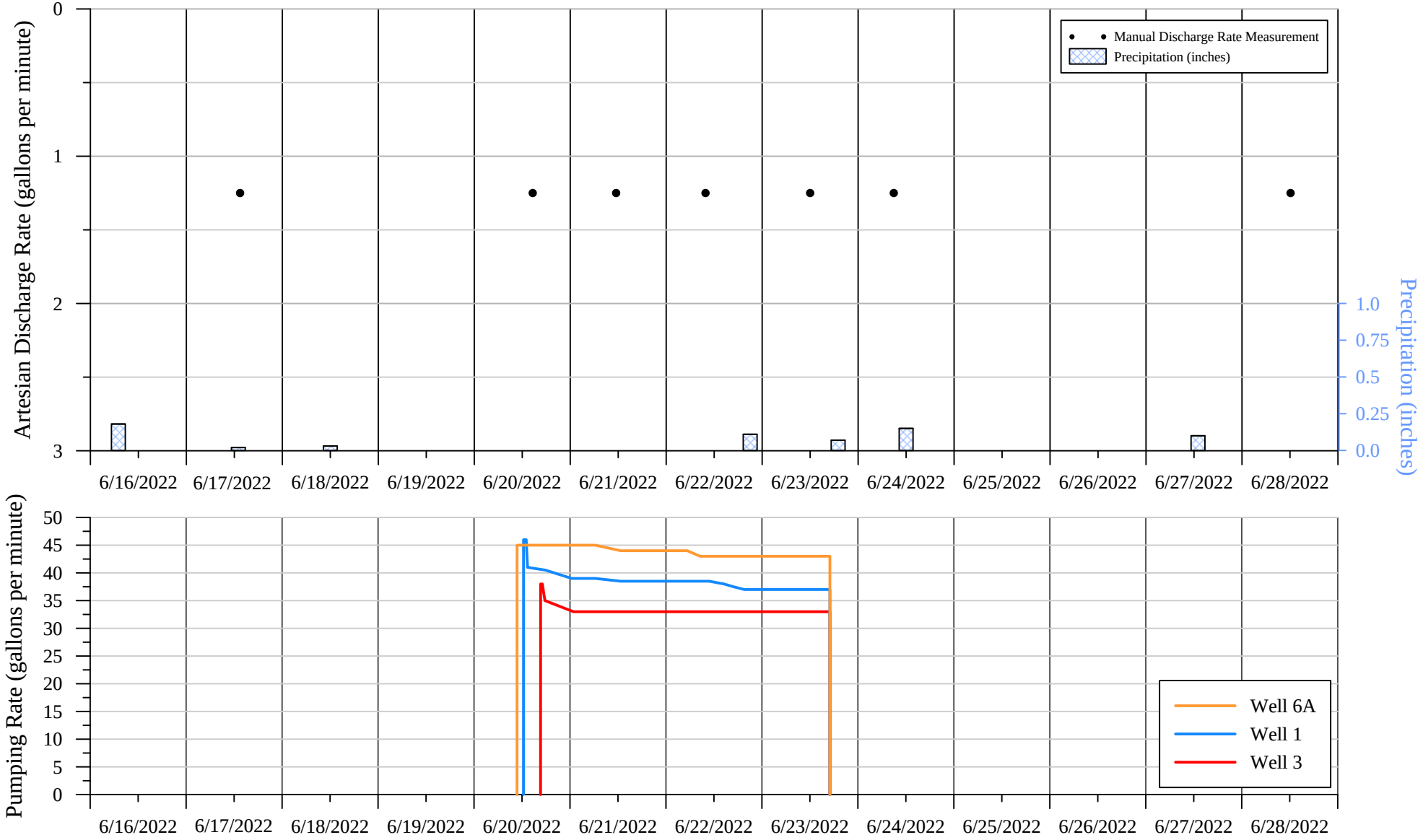

SUMMIT COUNTRY CLUB
568 BEDFORD ROAD
NORTH CASTLE, NEW YORK

Hydrograph of Water-Level Measurements Collected from Well 9 During the 72-Hour Pumping Test Conducted on Wells 1, 3 and 6A, June 2022

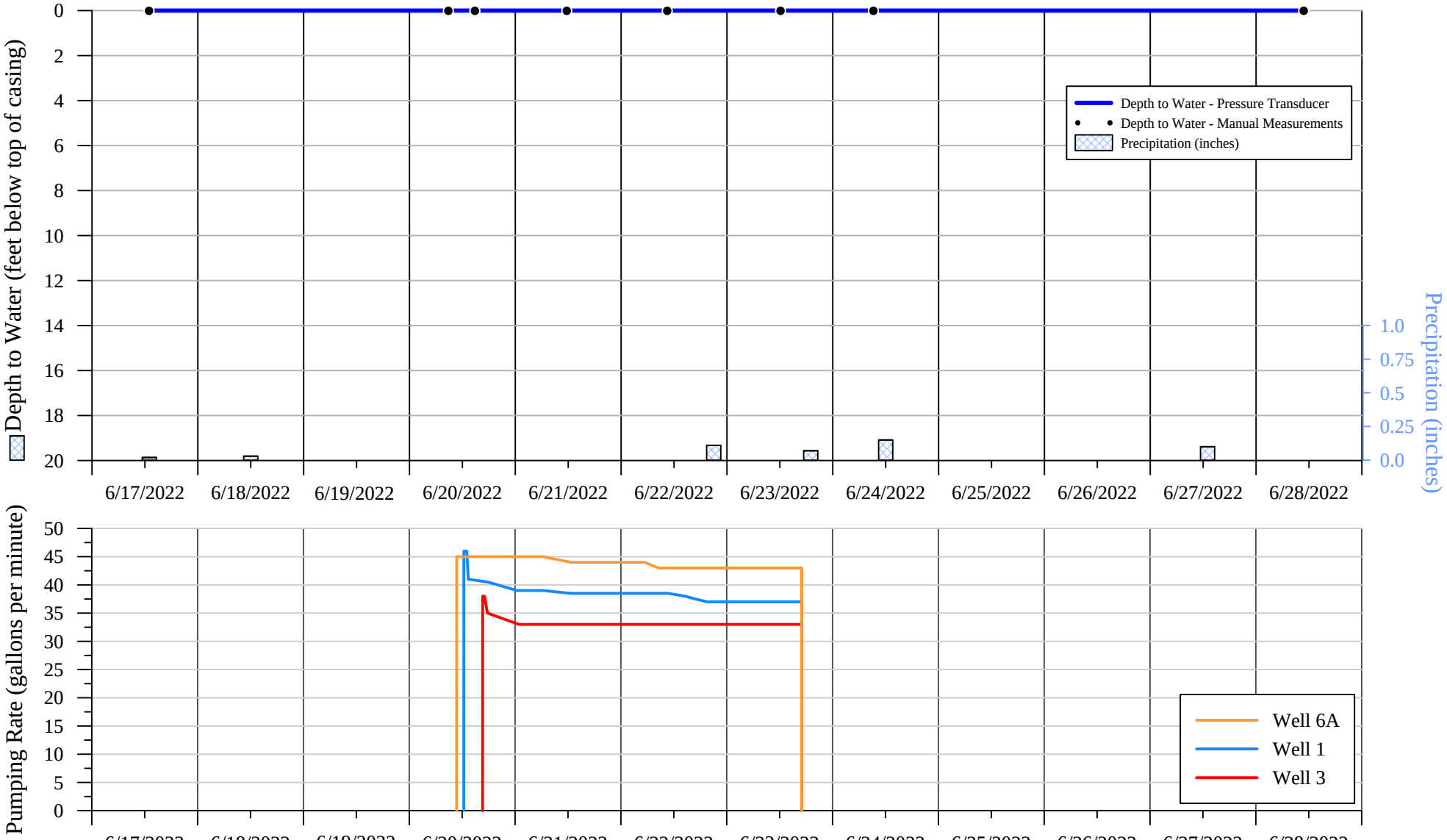

SUMMIT COUNTRY CLUB
568 BEDFORD ROAD
NORTH CASTLE, NEW YORK

Hydrograph of Water-Level Measurements Collected from Well 10 During the 72-Hour Pumping Test Conducted on Wells 1, 3 and 6A, June 2022

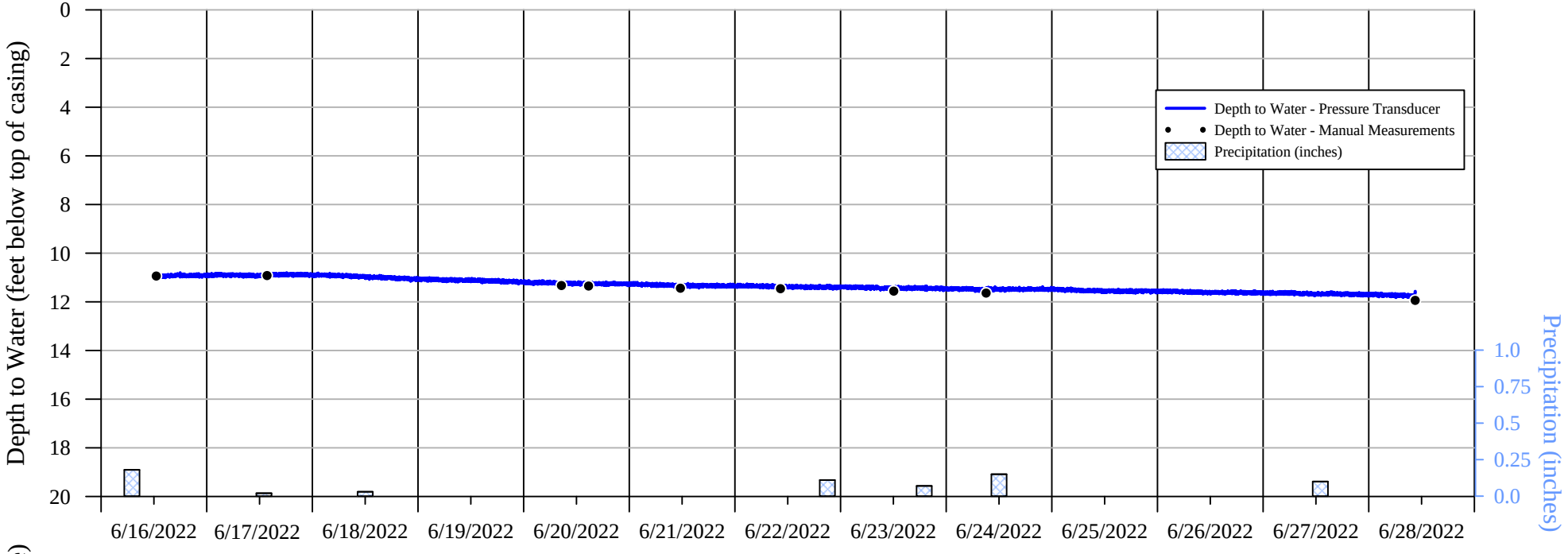

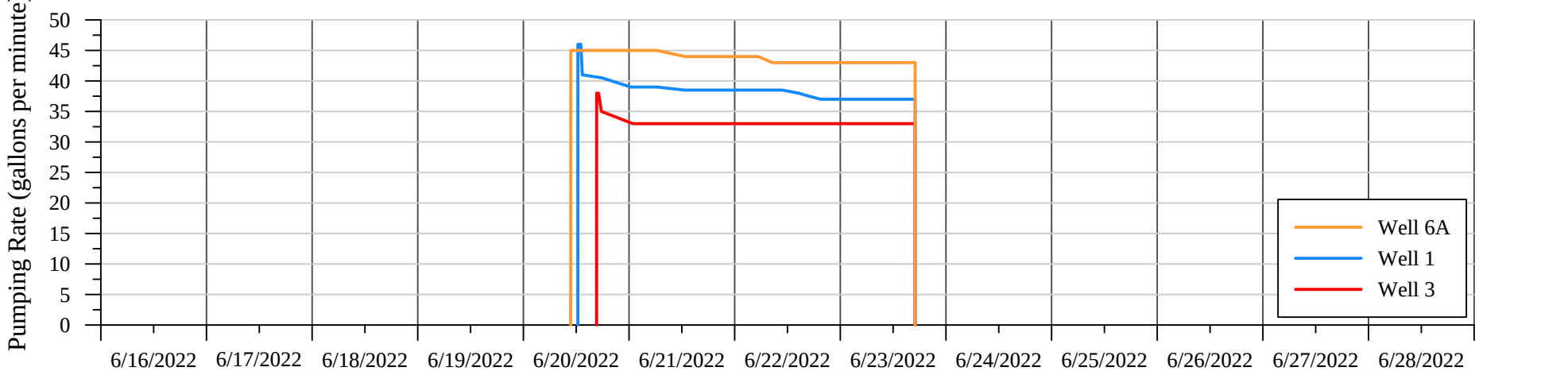

SUMMIT COUNTRY CLUB
568 BEDFORD ROAD
NORTH CASTLE, NEW YORK

Hydrograph of Water-Level Measurements Collected from Former Irrigation Well 3 During the 72-Hour Pumping Test Conducted on Wells 1, 3 and 6A, June 2022

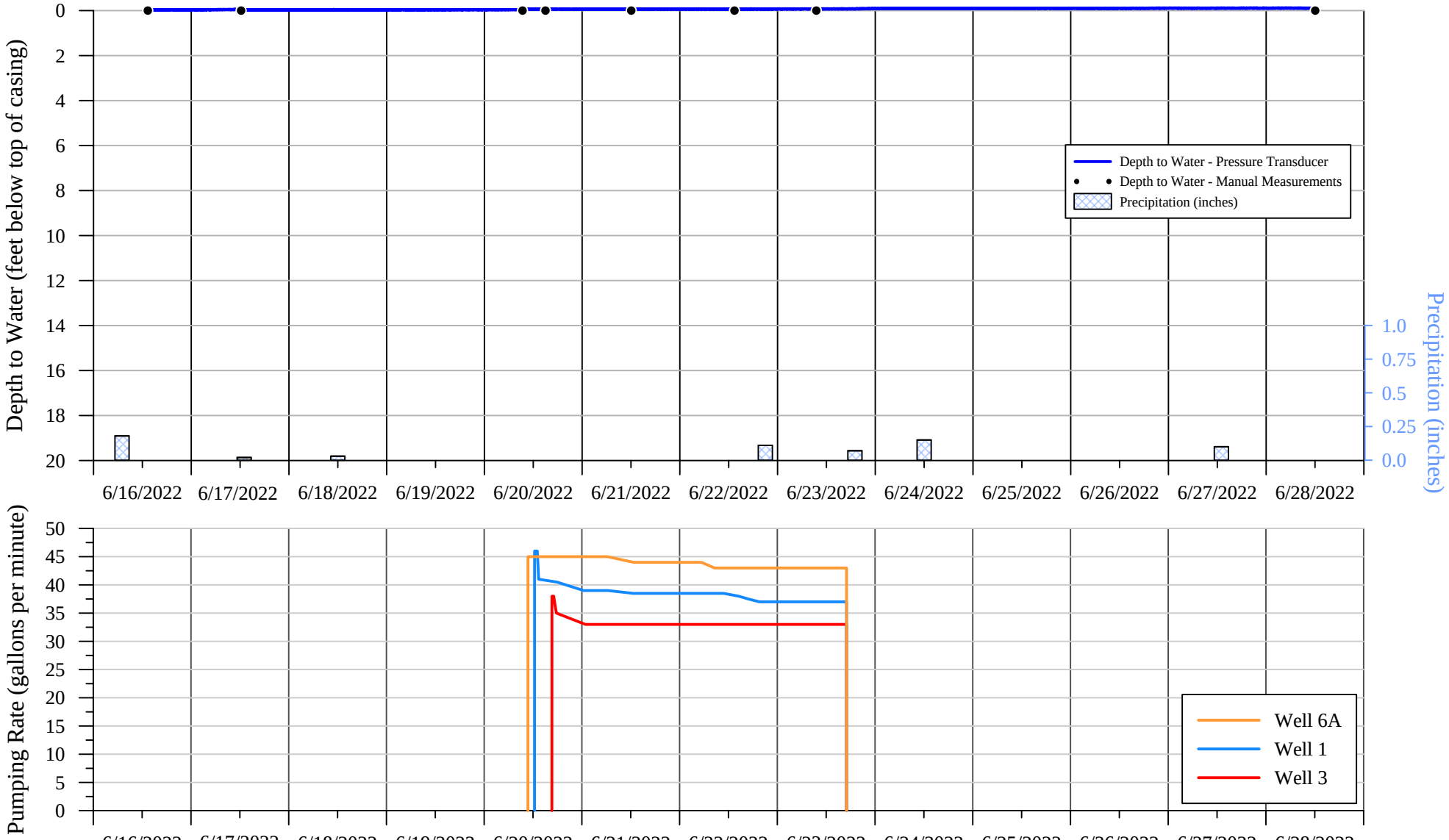

SUMMIT COUNTRY CLUB
568 BEDFORD ROAD
NORTH CASTLE, NEW YORK

Hydrograph of Water-Level Measurements Collected from Irrigation Well 4 During the 72-Hour Pumping Test Conducted on Wells 1, 3 and 6A, June 2022

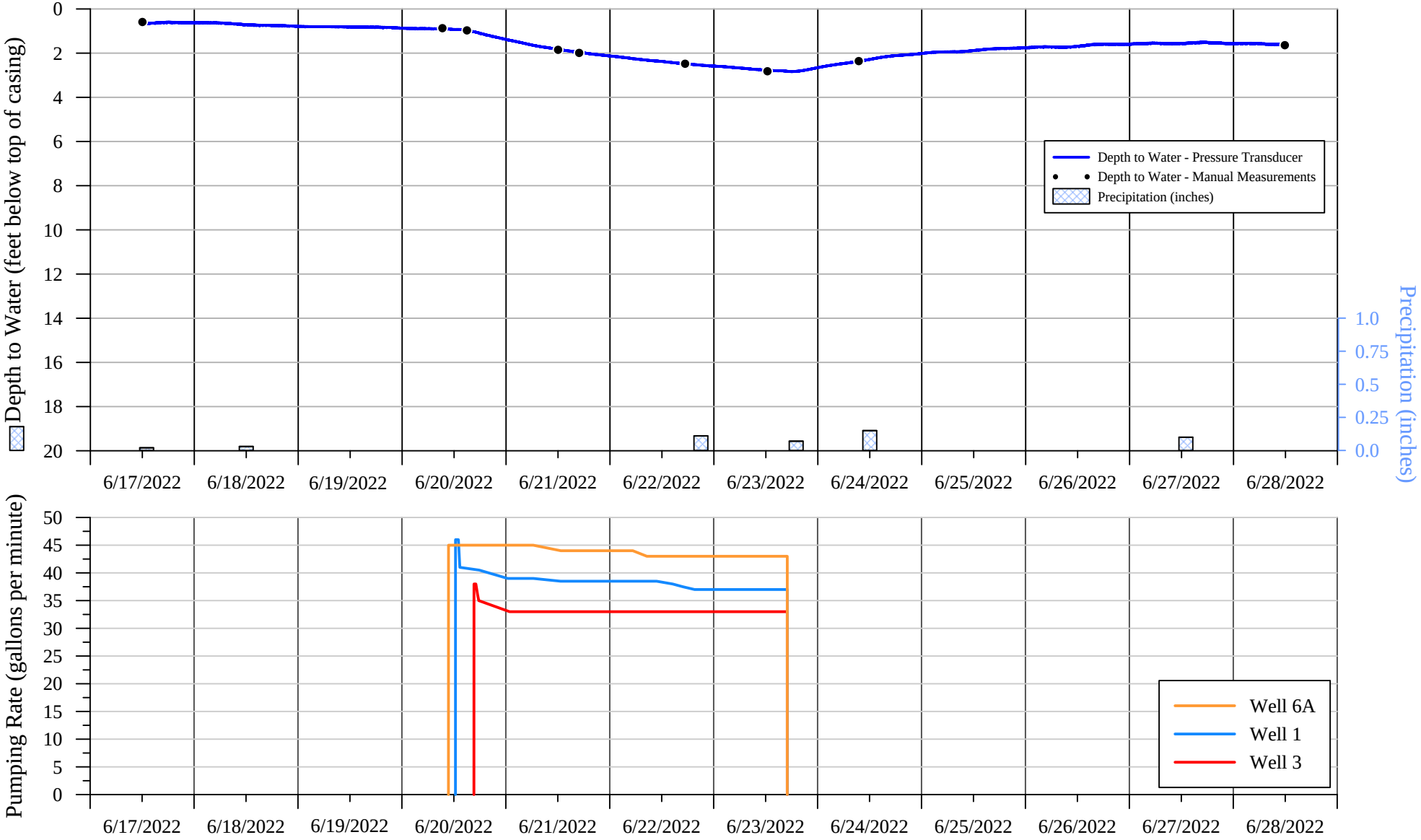

SUMMIT COUNTRY CLUB
568 BEDFORD ROAD
NORTH CASTLE, NEW YORK

Hydrograph of Water-Level Measurements Collected from Irrigation Well 5 During the 72-Hour Pumping Test Conducted on Wells 1, 3 and 6A, June 2022

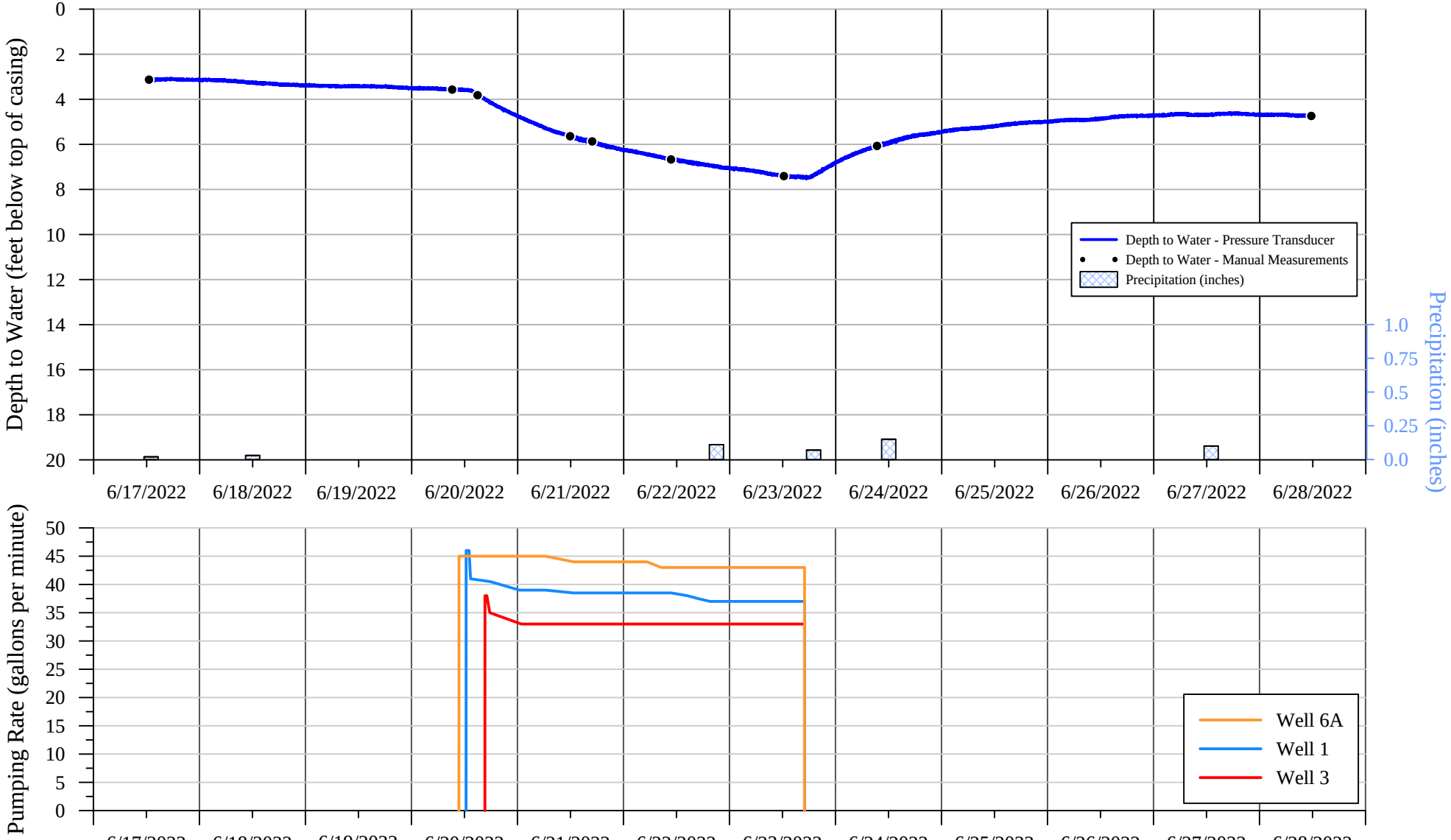

SUMMIT COUNTRY CLUB
568 BEDFORD ROAD
NORTH CASTLE, NEW YORK

Manual Water-Level Measurements Collected from Onsite Monitoring Wells
During the 72-Hour Pumping Test Conducted on Wells 1, 3 and 6A, June 2022

Date/Time	Level Depth to Water (ft btoc)
Well 2B	
6/16/2022 11:54	0[1/]
6/16/2022 12:05	0[1/]
6/17/2022 13:23	0[1/]
6/20/2022 9:30	0[1/]
6/20/2022 14:35	0[1/]
6/21/2022 11:27	3.86
6/21/2022 14:33	4.76
6/21/2022 16:32	4.69
6/22/2022 8:24	6.36
6/22/2022 10:13	6.49
6/22/2022 12:12	6.44
6/22/2022 15:15	6.39
6/23/2022 11:57	8.76
6/23/2022 14:05	9.06
6/24/2022 8:45	4.87
6/24/2022 9:55	4.22
6/28/2022 10:19	0[1/]
Former Irrigation Well 3	
6/16/2022 13:20	0[1/]
6/17/2022 12:15	0[1/]
6/20/2022 9:22	0[1/]
6/20/2022 15:00	0[1/]
6/21/2022 12:04	0[1/]
6/22/2022 13:25	0[1/]
6/23/2022 9:31	0[1/]
6/28/2022 12:03	0[1/]
Irrigation Well 4	
6/17/2022 12:01	0.59
6/20/2022 9:18	0.87
6/20/2022 14:58	0.97
6/21/2022 12:01	1.85
6/21/2022 16:53	1.99
6/22/2022 17:21	2.48
6/23/2022 12:22	2.82
6/24/2022 9:27	2.36
6/28/2022 11:51	1.64
Irrigation Well 5	
6/17/2022 12:22	3.13
6/17/2022 12:32	3.13
6/20/2022 9:10	3.57
6/20/2022 14:55	3.82
6/21/2022 11:52	5.64
6/21/2022 16:52	5.87
6/22/2022 10:43	6.67
6/23/2022 12:16	7.41
6/24/2022 9:21	6.07
6/28/2022 11:40	4.74
Well 9	
6/17/2022 12:56	0.01
6/20/2022 8:49	0.01
6/20/2022 14:50	0.01

SUMMIT COUNTRY CLUB
568 BEDFORD ROAD
NORTH CASTLE, NEW YORK

Manual Water-Level Measurements Collected from Onsite Monitoring Wells
During the 72-Hour Pumping Test Conducted on Wells 1, 3 and 6A, June 2022

Date/Time	Level Depth to Water (ft btoc)
Well 9 (continued)	
6/21/2022 11:40	0.01
6/22/2022 10:27	0.01
6/23/2022 12:09	0.01
6/24/2022 9:13	0.01
6/28/2022 10:48	0.01
Well 10	
6/16/2022 12:32	10.94
6/17/2022 13:42	10.92
6/20/2022 8:35	11.33
6/20/2022 14:45	11.35
6/21/2022 11:37	11.44
6/22/2022 10:21	11.46
6/23/2022 12:05	11.56
6/24/2022 9:04	11.64
6/28/2022 10:33	11.94
Date/Time	**Discharge Rate (gpm)[1/]**
Well 5	
6/17/2022 13:26	1.25
6/20/2022 14:37	1.25
6/21/2022 11:29	1.25
6/22/2022 9:50	1.25
6/23/2022 12:00	1.25
6/24/2022 8:55	1.25
6/28/2022 12:09	1.25

ft btoc feet below top of casing
gpm gallons per minute
[1/] Well flowing artesian.

APPENDIX V

SUMMIT COUNTRY CLUB
568 BEDFORD ROAD
NORTH CASTLE, NEW YORK

Hydrograph of Water-Level Measurements Collected from Well Located at 4 Norman Place During the 72-Hour Pumping Test Conducted on Wells 1, 3 and 6A, June 2022

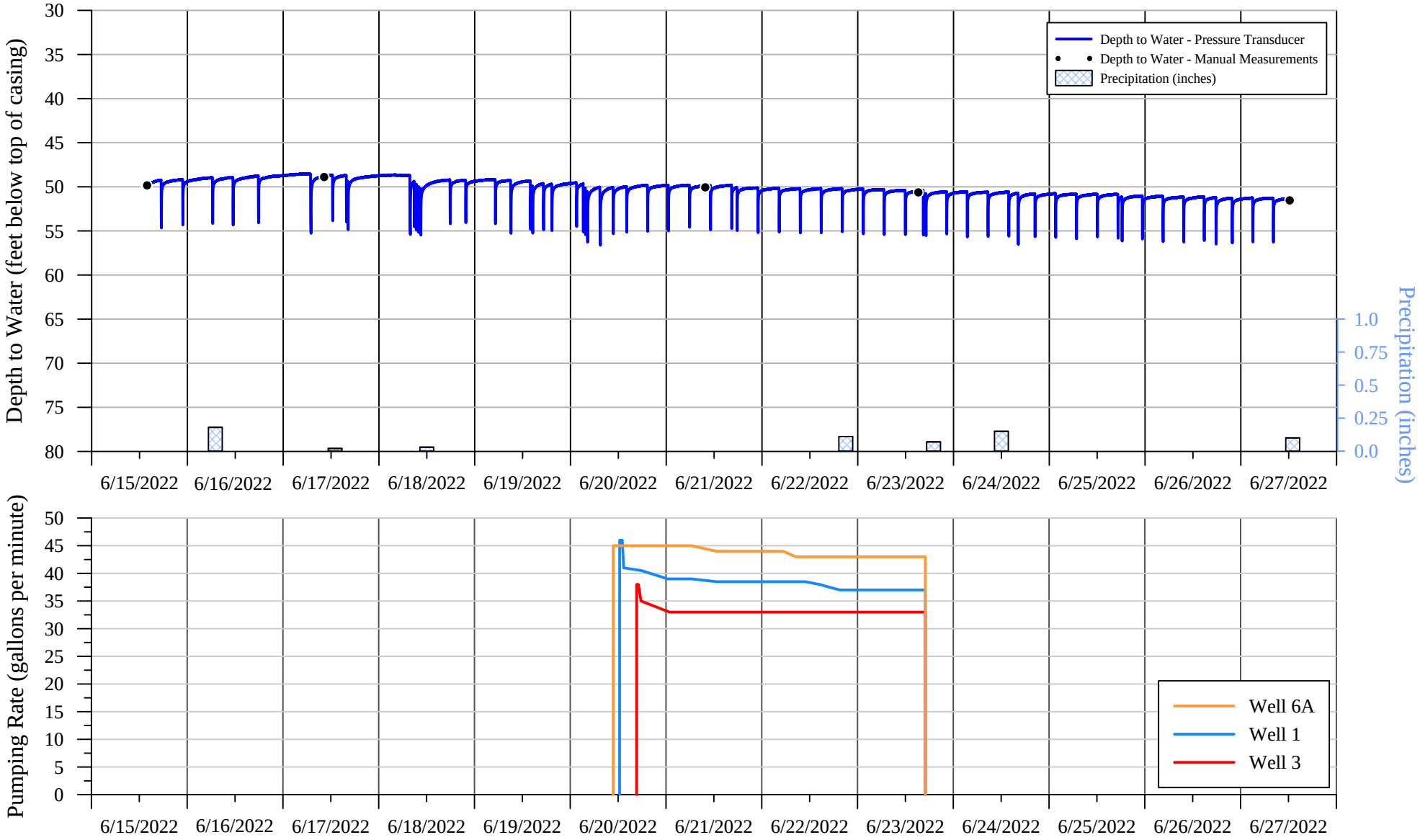

SUMMIT COUNTRY CLUB
568 BEDFORD ROAD
NORTH CASTLE, NEW YORK

Hydrograph of Water-Level Measurements Collected from Well Located at 6 Byram Hill Road
During the 72-Hour Pumping Test Conducted on Wells 1, 3 and 6A, June 2022

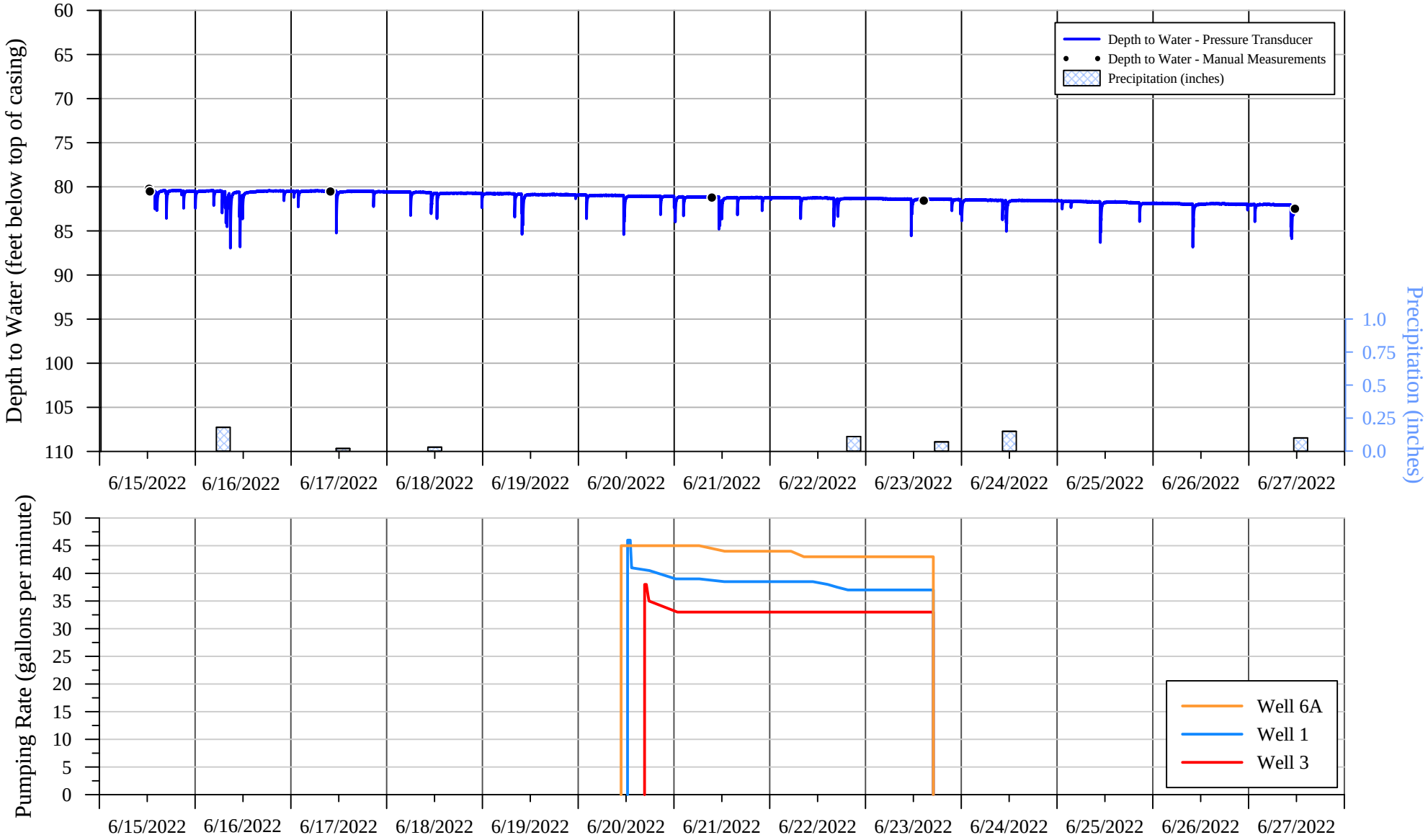

SUMMIT COUNTRY CLUB
568 BEDFORD ROAD
NORTH CASTLE, NEW YORK

Hydrograph of Water-Level Measurements Collected from Well Located at 8 Colonial Court
During the 72-Hour Pumping Test Conducted on Wells 1, 3 and 6A, June 2022

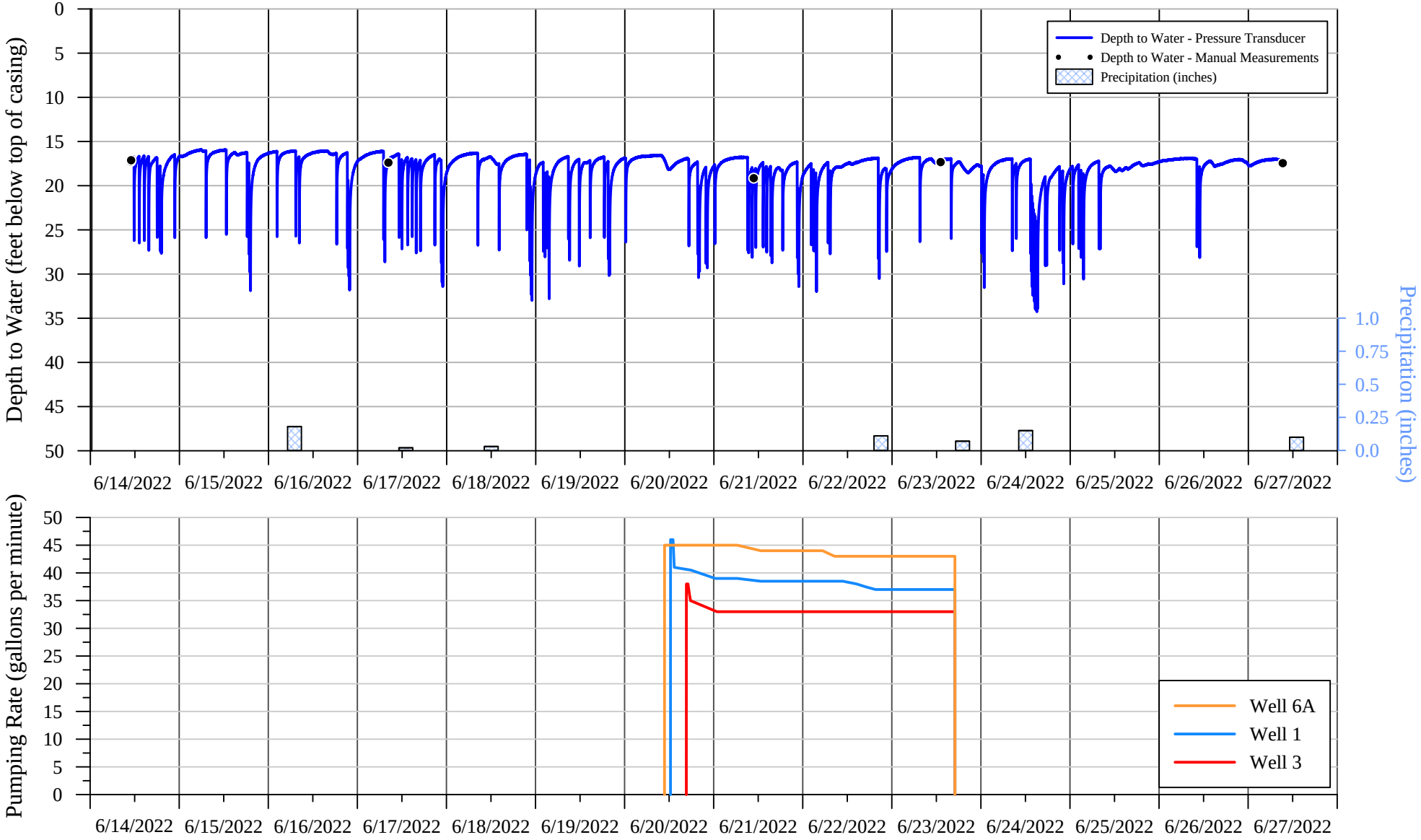

SUMMIT COUNTRY CLUB
568 BEDFORD ROAD
NORTH CASTLE, NEW YORK

Hydrograph of Water-Level Measurements Collected from Well Located at 8 Embassy Court
During the 72-Hour Pumping Test Conducted on Wells 1, 3 and 6A, June 2022

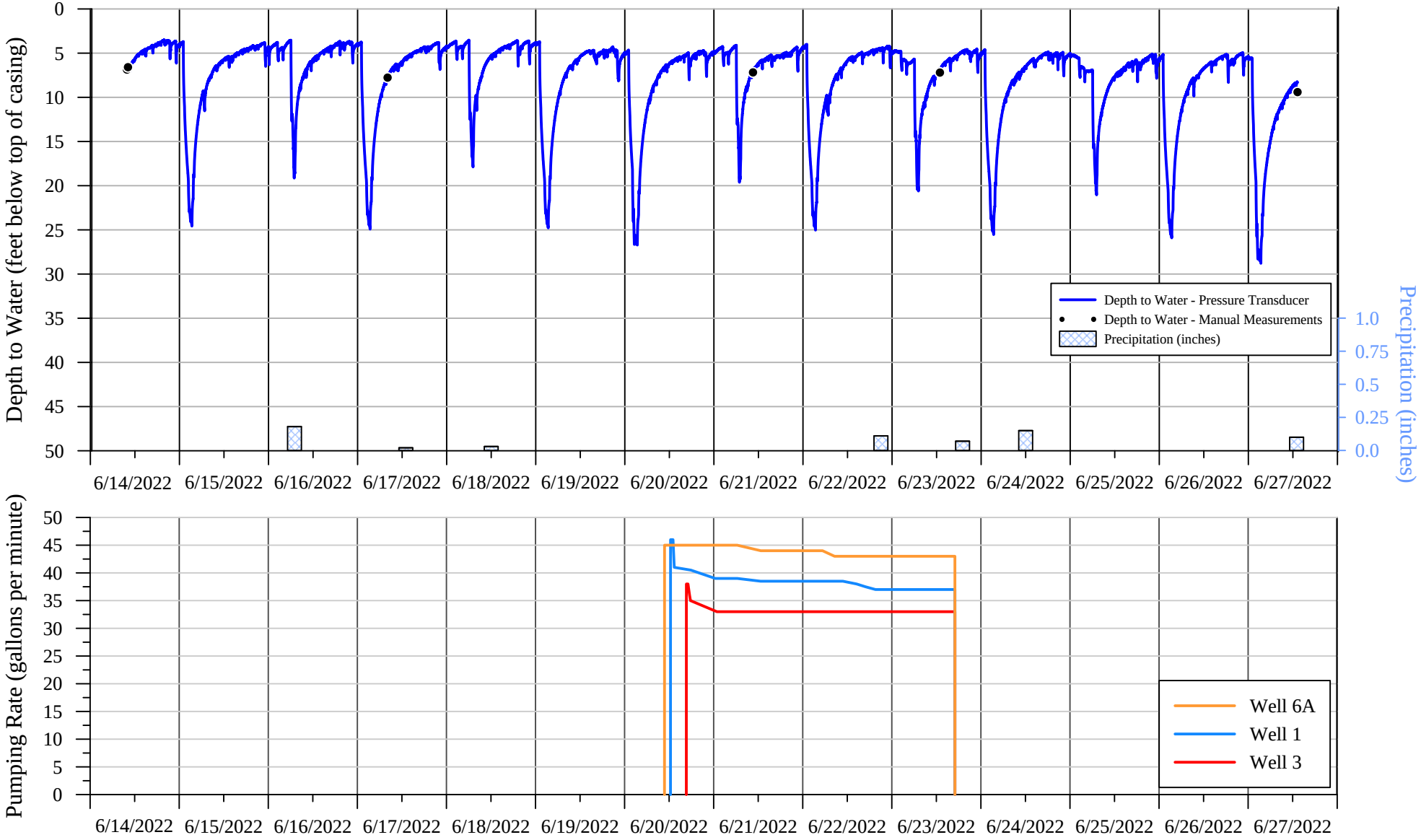

SUMMIT COUNTRY CLUB
568 BEDFORD ROAD
NORTH CASTLE, NEW YORK

Hydrograph of Water-Level Measurements Collected from Well Located at 8 Evans Place
During the 72-Hour Pumping Test Conducted on Wells 1, 3 and 6A, June 2022

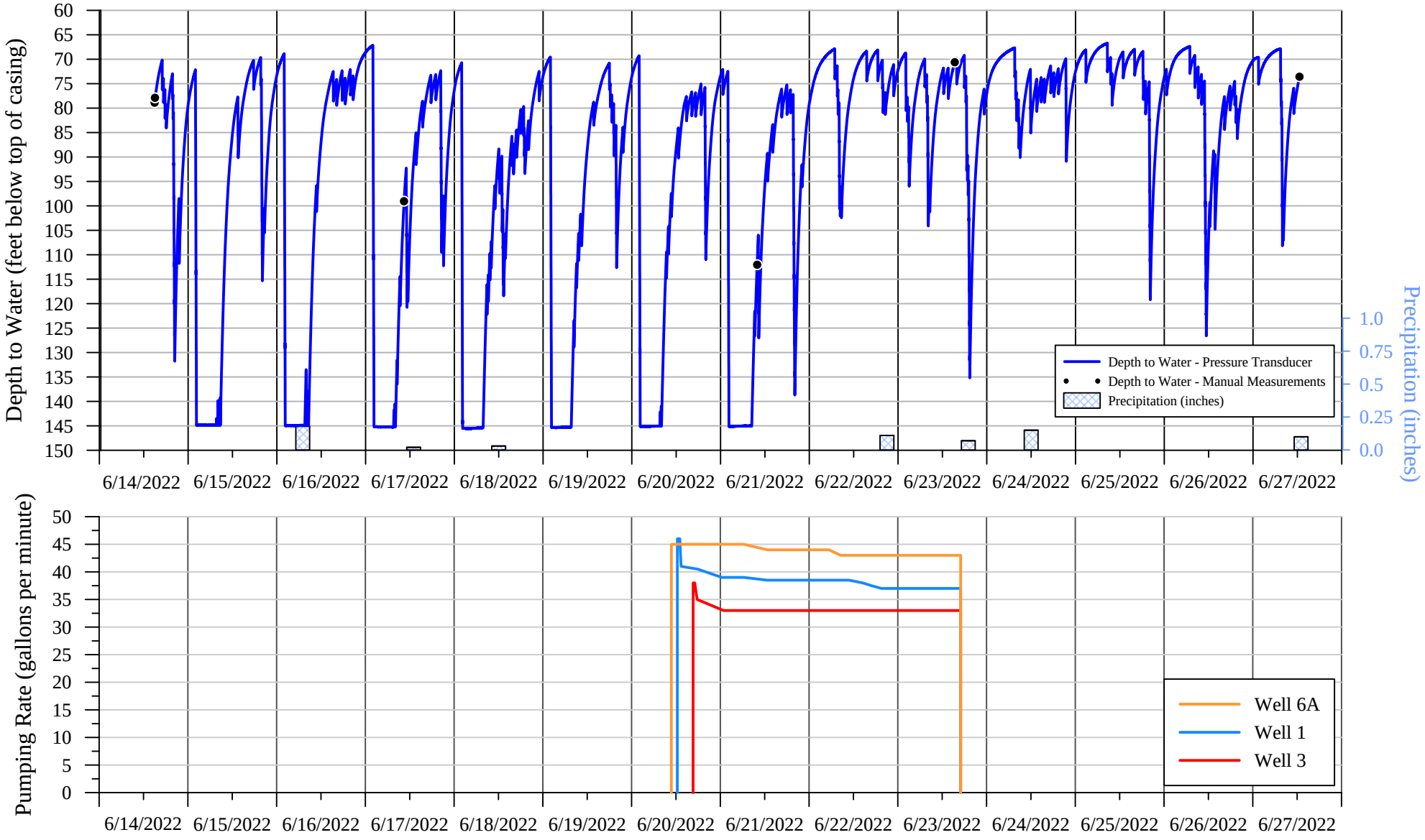

SUMMIT COUNTRY CLUB
568 BEDFORD ROAD
NORTH CASTLE, NEW YORK

Hydrograph of Water-Level Measurements Collected from Well Located at 10 Byram Hill Road
During the 72-Hour Pumping Test Conducted on Wells 1, 3 and 6A, June 2022

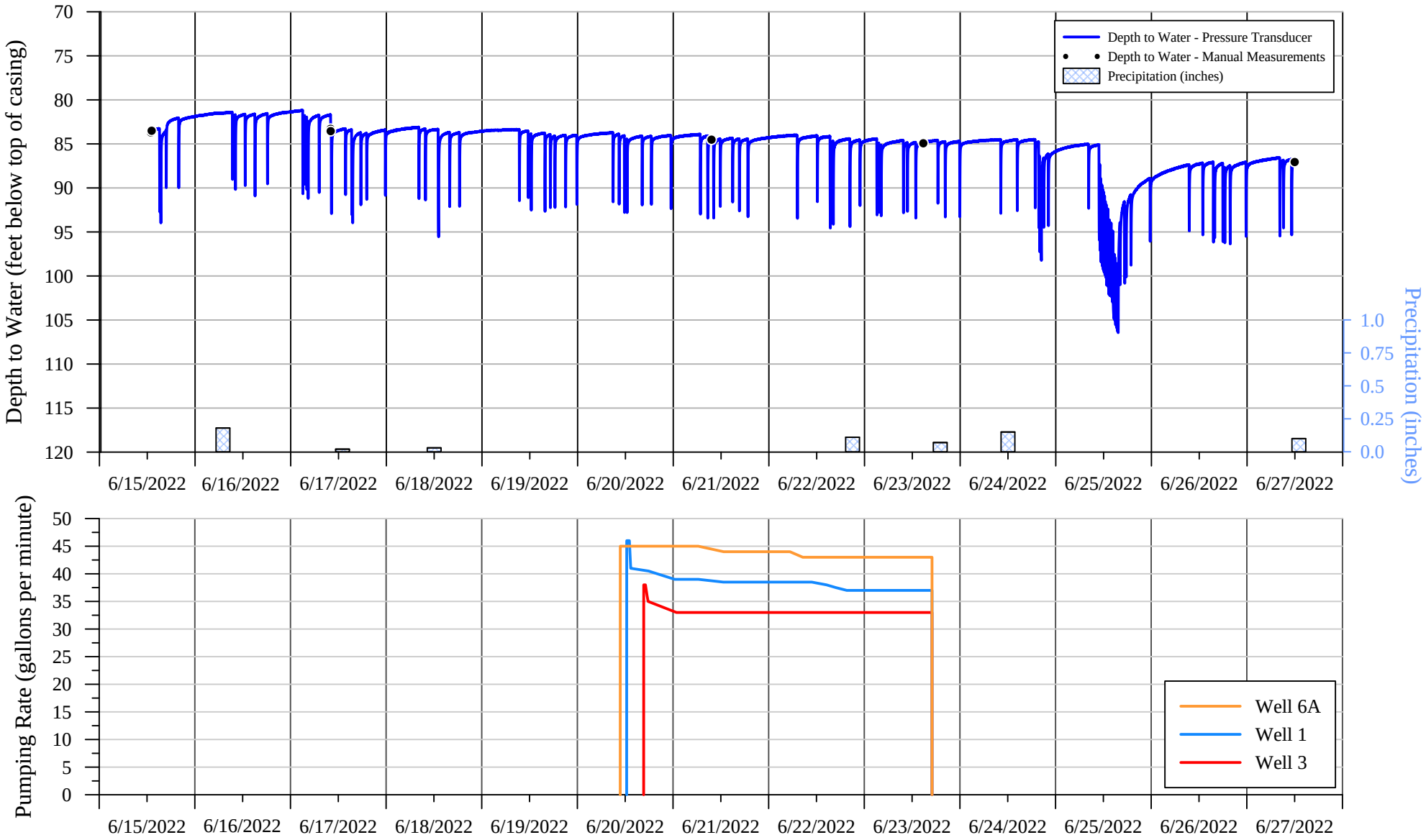

SUMMIT COUNTRY CLUB
568 BEDFORD ROAD
NORTH CASTLE, NEW YORK

Hydrograph of Water-Level Measurements Collected from Well Located at 10 Willow Pond Lane
During the 72-Hour Pumping Test Conducted on Wells 1, 3 and 6A, June 2022

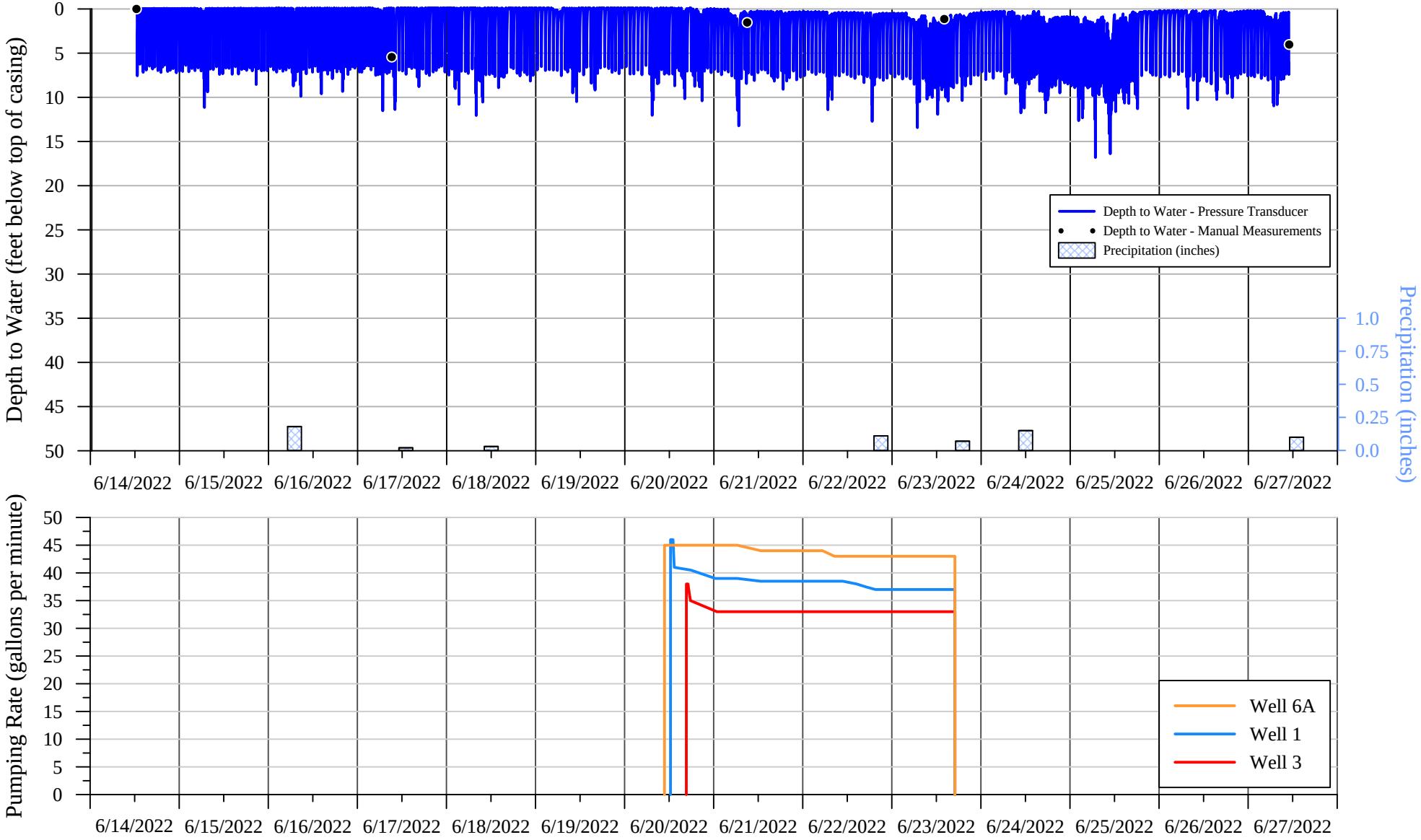

SUMMIT COUNTRY CLUB
568 BEDFORD ROAD
NORTH CASTLE, NEW YORK

Hydrograph of Water-Level Measurements Collected from Well Located at 11 Blair Road
During the 72-Hour Pumping Test Conducted on Wells 1, 3 and 6A, June 2022

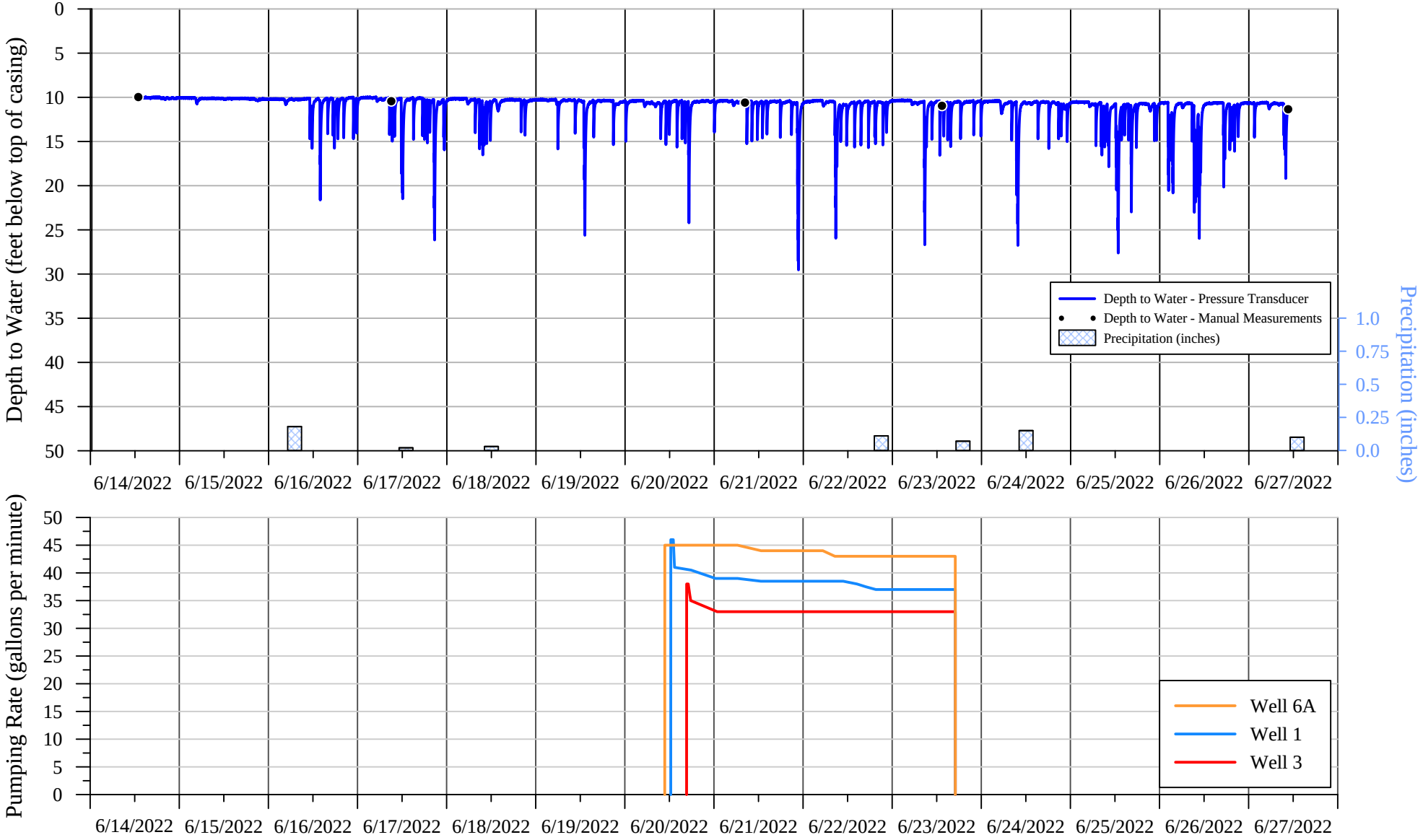

SUMMIT COUNTRY CLUB
568 BEDFORD ROAD
NORTH CASTLE, NEW YORK

Hydrograph of Water-Level Measurements Collected from Well Located at 14 Willow Pond Lane
During the 72-Hour Pumping Test Conducted on Wells 1, 3 and 6A, June 2022

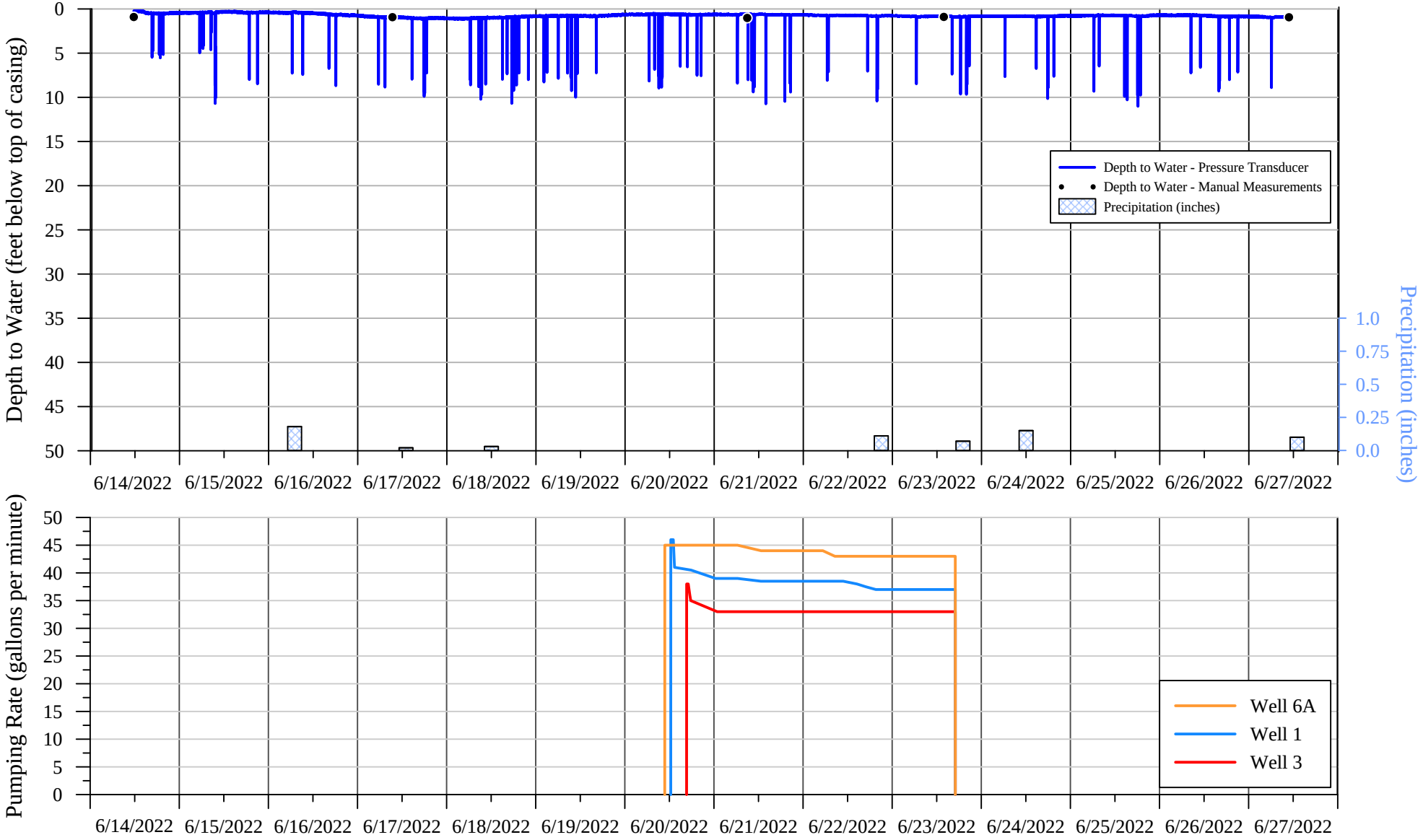

SUMMIT COUNTRY CLUB
568 BEDFORD ROAD
NORTH CASTLE, NEW YORK

Hydrograph of Water-Level Measurements Collected from Well Located at 30 Blair Road
During the 72-Hour Pumping Test Conducted on Wells 1, 3 and 6A, June 2022

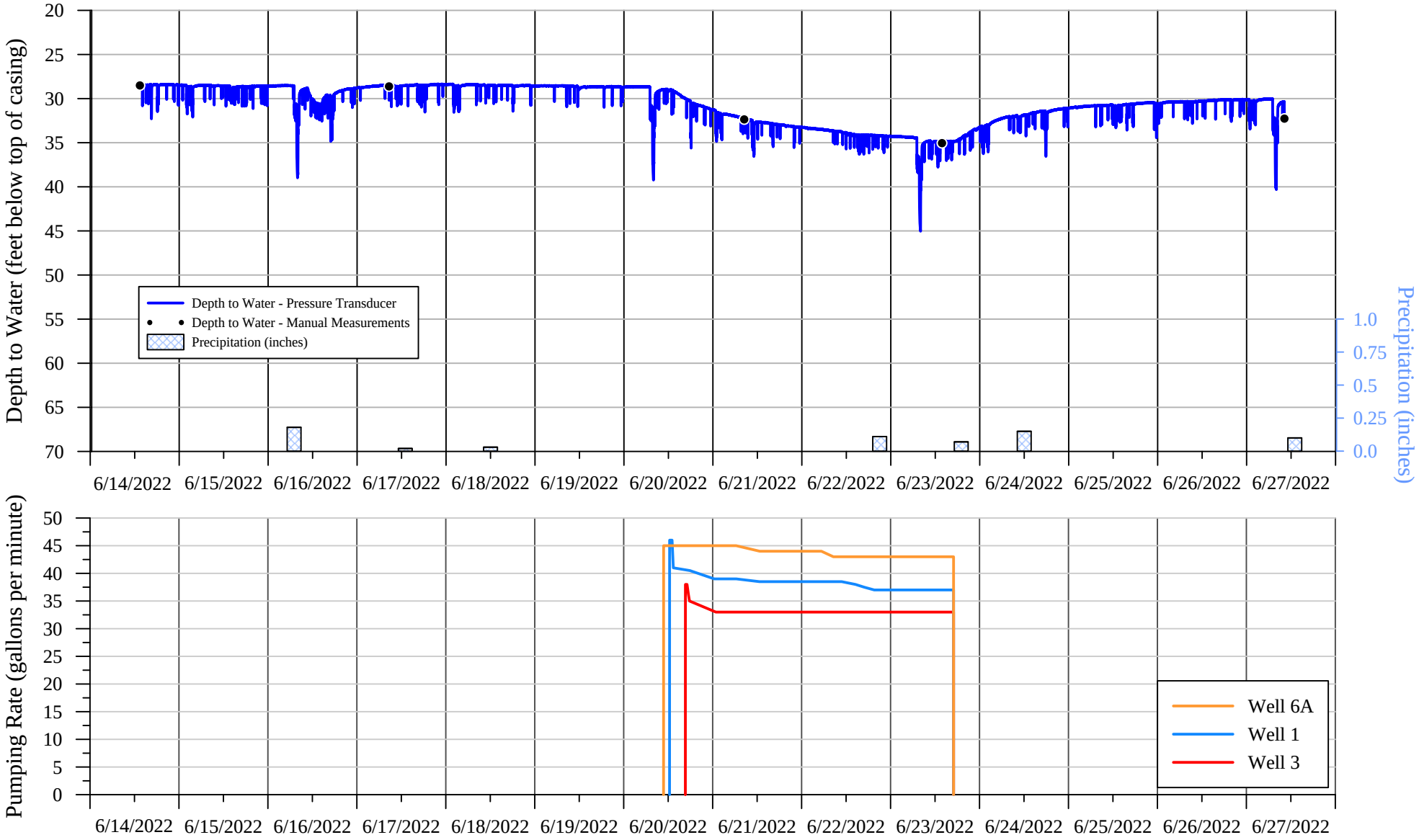

SUMMIT COUNTRY CLUB
568 BEDFORD ROAD
NORTH CASTLE, NEW YORK

Hydrograph of Water-Level Measurements Collected from Well Located at 34 Blair Road During the 72-Hour Pumping Test Conducted on Wells 1, 3 and 6A, June 2022

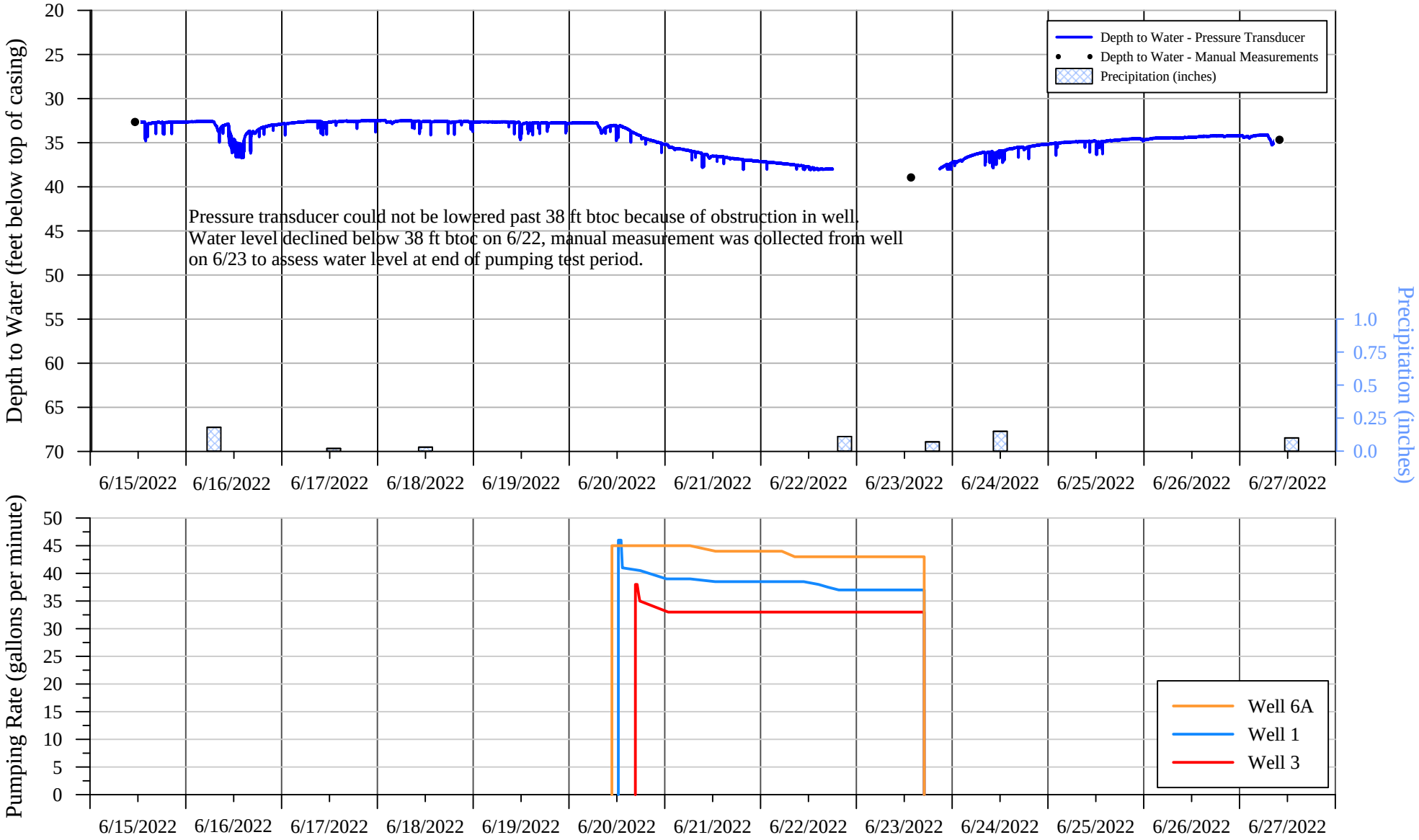

SUMMIT COUNTRY CLUB
568 BEDFORD ROAD
NORTH CASTLE, NEW YORK

Hydrograph of Water-Level Measurements Collected from Well Located at 70 Old Byram Lake Road
During the 72-Hour Pumping Test Conducted on Wells 1, 3 and 6A, June 2022

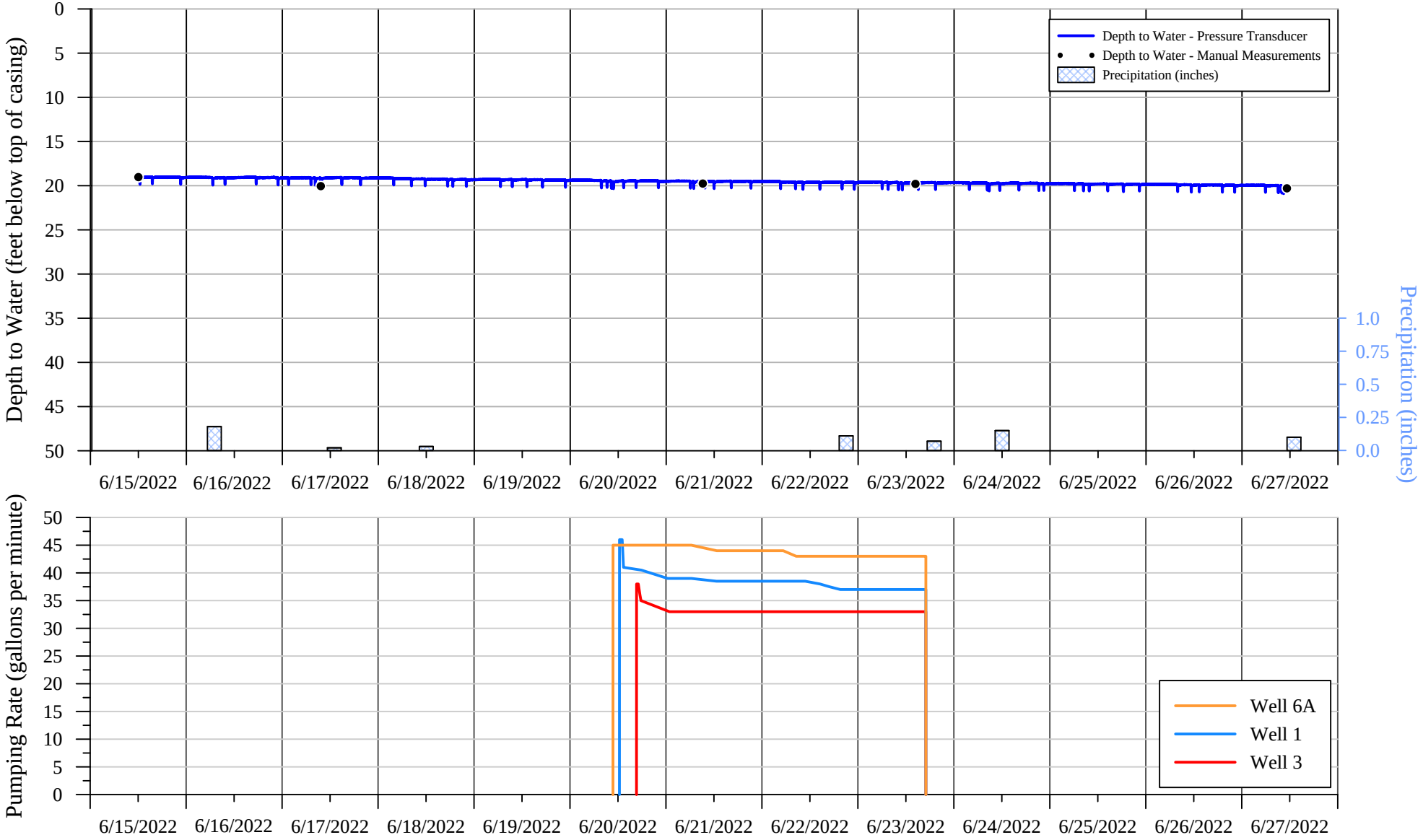

SUMMIT COUNTRY CLUB
568 BEDFORD ROAD
NORTH CASTLE, NEW YORK

Hydrograph of Water-Level Measurements Collected from Well Located at 198 Byram Lake Road
During the 72-Hour Pumping Test Conducted on Wells 1, 3 and 6A, June 2022

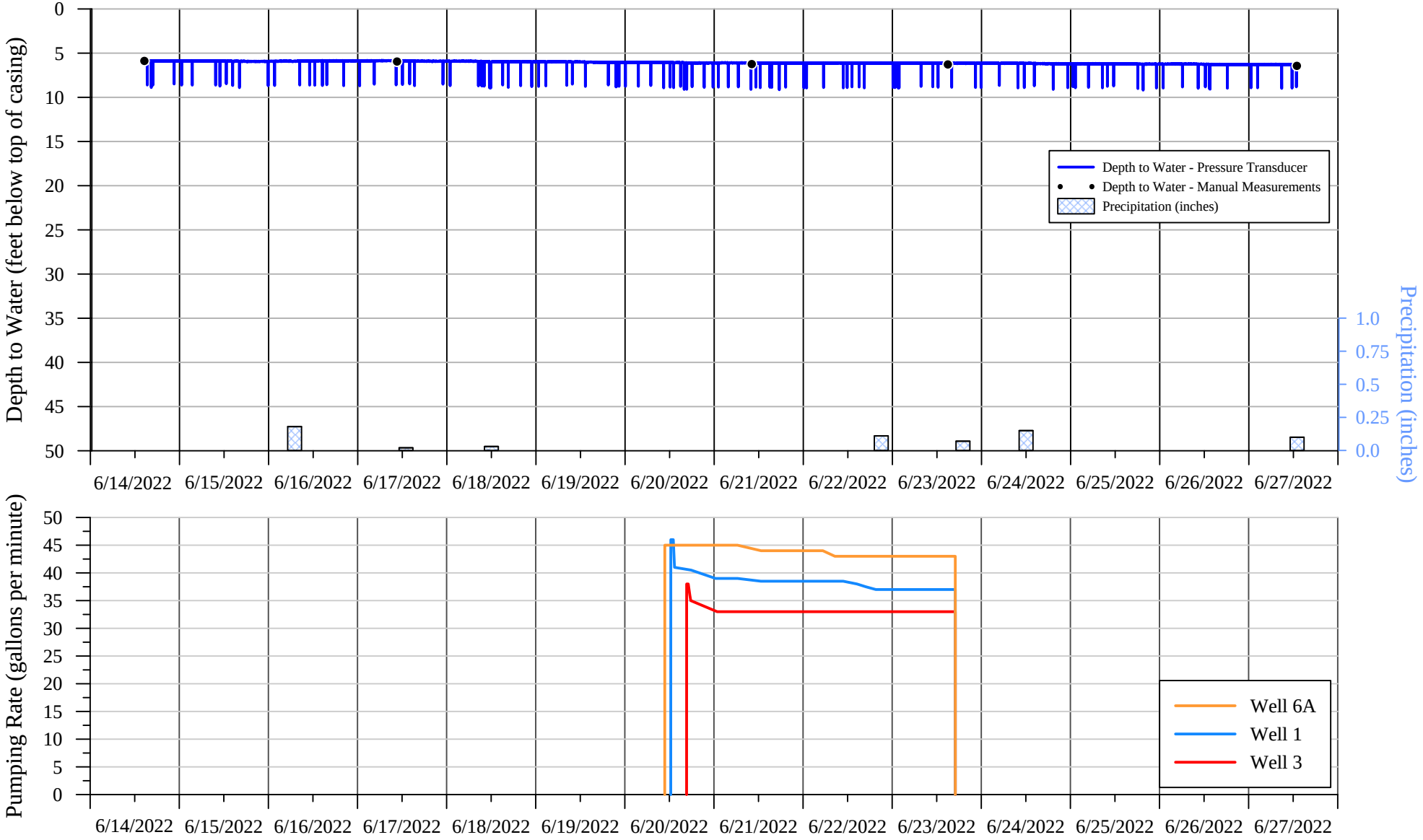

SUMMIT COUNTRY CLUB
568 BEDFORD ROAD
NORTH CASTLE, NEW YORK

Manual Water-Level Measurements Collected from Offsite Monitoring Wells
During the 72-Hour Pumping Test Conducted on Wells 1, 3 and 6A, June 2022

Date/Time	Depth to Water (ft btoc)
4 Norman Place	
6/15/2022 13:41	49.94
6/15/2022 13:54	49.84
6/17/2022 10:16	48.89
6/21/2022 9:47	50.06
6/23/2022 15:11	50.63
6/27/2022 12:15	51.54
6 Byram Hill Road	
6/15/2022 12:24	80.22
6/15/2022 12:36	80.52
6/17/2022 9:50	80.53
6/21/2022 9:26	81.22
6/23/2022 14:33	81.57
6/27/2022 11:34	82.49
8 Colonial Court	
6/14/2022 10:51	17.27
6/14/2022 10:59	17.12
6/17/2022 8:18	17.39
6/21/2022 10:44	19.15
6/23/2022 13:05	17.33
6/27/2022 9:16	17.45
8 Embassy Court	
6/14/2022 9:51	6.86
6/14/2022 10:08	6.59
6/17/2022 8:05	7.77
6/21/2022 10:32	7.18
6/23/2022 12:54	7.20
6/27/2022 13:15	9.41
8 Evans Place	
6/14/2022 14:56	78.89
6/14/2022 15:02	77.89
6/17/2022 10:23	99.05
6/21/2022 9:54	112.04
6/23/2022 15:20	70.61
6/27/2022 12:34	73.58
10 Byram Hill Road	
6/15/2022 12:55	83.70
6/15/2022 13:06	83.51
6/17/2022 10:00	83.29
6/17/2022 10:02	83.55
6/21/2022 9:36	84.52
6/23/2022 14:45	84.93
6/27/2022 11:57	87.06
10 Willow Pond Lane	
6/14/2022 12:11	0.00
6/14/2022 12:25	0.00
6/17/2022 9:12	5.44
6/21/2022 8:58	1.53
6/23/2022 14:04	1.14
6/27/2022 11:00	4.03

SUMMIT COUNTRY CLUB
568 BEDFORD ROAD
NORTH CASTLE, NEW YORK

Manual Water-Level Measurements Collected from Offsite Monitoring Wells
During the 72-Hour Pumping Test Conducted on Wells 1, 3 and 6A, June 2022

Date/Time	Depth to Water (ft btoc)
11 Blair Road	
6/14/2022 12:47	9.98
6/14/2022 12:54	9.97
6/17/2022 9:02	10.44
6/21/2022 8:18	10.60
6/23/2022 13:21	10.96
6/27/2022 10:35	11.35
14 Willow Pond Lane	
6/14/2022 11:29	0.93
6/14/2022 11:41	0.91
6/17/2022 9:19	0.93
6/17/2022 9:21	0.93
6/21/2022 8:54	1.02
6/23/2022 13:51	0.90
6/27/2022 10:48	0.94
30 Blair Road	
6/14/2022 13:17	28.51
6/14/2022 13:24	28.51
6/17/2022 8:37	28.62
6/21/2022 8:27	32.36
6/23/2022 13:49	35.05
6/27/2022 10:12	32.27
34 Blair Road	
6/15/2022 10:56	32.67
6/15/2022 11:13	32.65
6/23/2022 13:38	38.94
6/27/2022 9:57	34.67
70 Old Byram Lake Road	
6/15/2022 11:48	19.02
6/15/2022 12:00	19.03
6/17/2022 9:37	20.05
6/21/2022 9:09	19.76
6/23/2022 14:20	19.80
6/27/2022 11:14	20.30
198 Byram Lake Road	
6/14/2022 14:26	5.87
6/14/2022 14:32	5.88
6/17/2022 10:35	5.95
6/21/2022 10:07	6.24
6/23/2022 14:56	6.28
6/27/2022 12:56	6.44

ft btoc feet below top of casing

APPENDIX VI

SUMMIT COUNTRY CLUB
568 BEDFORD ROAD
NORTH CASTLE, NEW YORK

Hydrograph of Water-Level Measurements Collected from Nested Piezometer Pair PZ-1 During the 72-Hour Pumping Test Conducted on Wells 1, 3 and 6A, June 2022

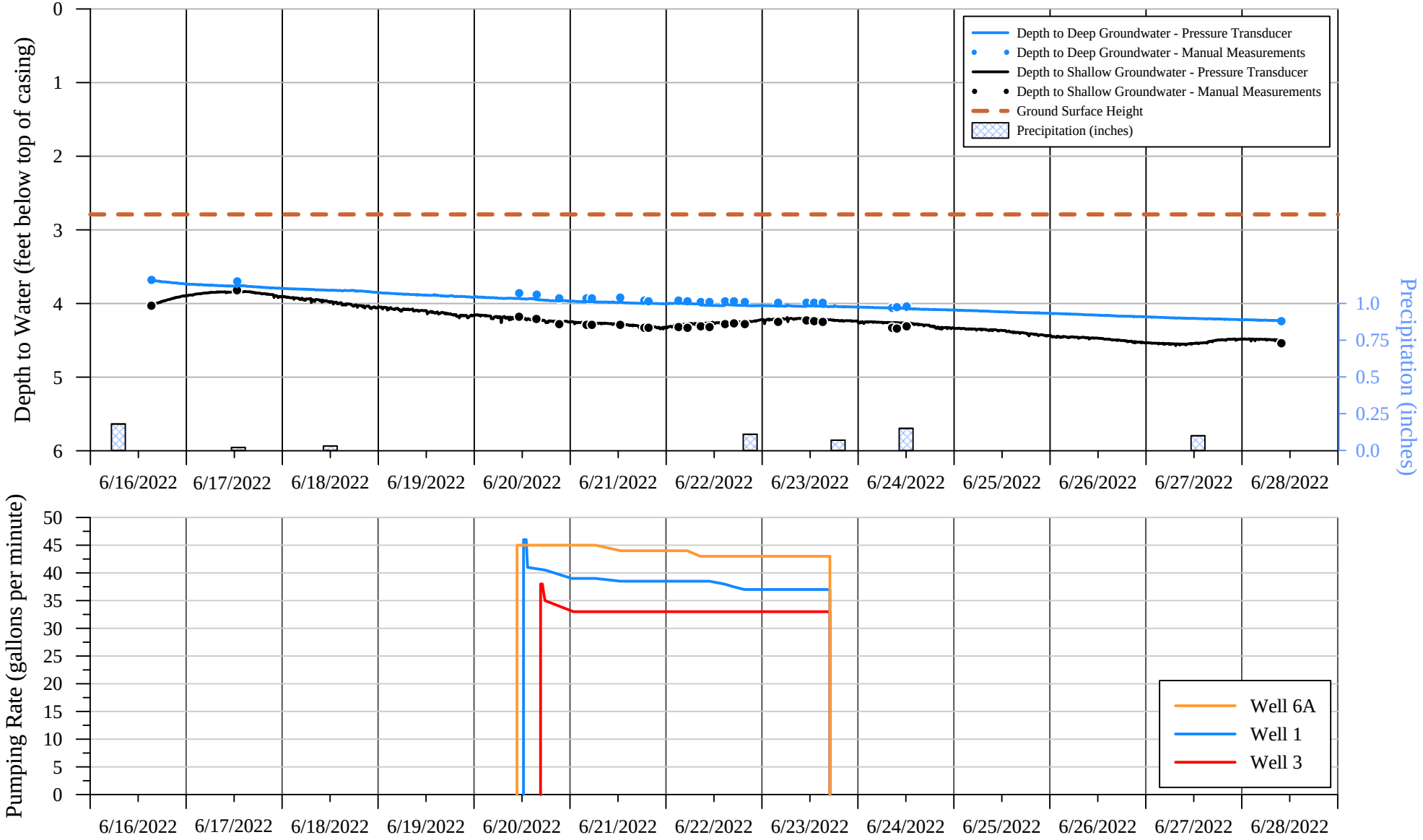

SUMMIT COUNTRY CLUB
568 BEDFORD ROAD
NORTH CASTLE, NEW YORK

Manual Water-Level Measurements Collected from Nested Piezometer Pair PZ-1
During the 72-Hour Pumping Test Conducted on Wells 1, 3 and 6A, June 2022

Date/Time	Depth to Groundwater, Shallow Screened Piezometer (ft btoc)	Depth to Groundwater, Deeper Screened Piezometer (ft btoc)[1/]	Vertical Gradient	Vertical Head Direction
6/16/2022 15:15	4.03	3.68	0.35	Upward
6/17/2022 12:40	3.82	3.70	0.12	Upward
6/20/2022 11:12	4.18	3.86	0.32	Upward
6/20/2022 15:32	4.21	3.88	0.33	Upward
6/20/2022 21:15	4.28	3.93	0.35	Upward
6/21/2022 4:05	4.29	3.93	0.36	Upward
6/21/2022 5:25	4.29	3.93	0.36	Upward
6/21/2022 12:30	4.29	3.92	0.37	Upward
6/21/2022 18:32	4.33	3.96	0.37	Upward
6/21/2022 19:35	4.33	3.97	0.36	Upward
6/22/2022 3:05	4.32	3.96	0.36	Upward
6/22/2022 5:20	4.33	3.97	0.36	Upward
6/22/2022 8:39	4.31	3.98	0.33	Upward
6/22/2022 10:50	4.32	3.98	0.34	Upward
6/22/2022 14:44	4.28	3.97	0.31	Upward
6/22/2022 16:57	4.27	3.97	0.30	Upward
6/22/2022 19:40	4.28	3.98	0.30	Upward
6/23/2022 4:00	4.25	3.99	0.26	Upward
6/23/2022 11:05	4.23	3.99	0.24	Upward
6/23/2022 13:00	4.24	3.99	0.25	Upward
6/23/2022 15:09	4.25	3.99	0.26	Upward
6/24/2022 8:30	4.33	4.06	0.27	Upward
6/24/2022 9:42	4.34	4.05	0.29	Upward
6/24/2022 12:08	4.31	4.04	0.27	Upward
6/28/2022 9:51	4.54	4.24	0.30	Upward

[1/] Measurements adjusted to match casing height of shallow piezometer.

ft btoc feet below top of casing

APPENDIX VII

WELL 1

AQUA ENVIRONMENTAL LAB
56 Church Hill Road • Newtown, CT 06470 • (203) 270-9973
A York Analytical Company
YORK

Report of Analysis

Name: WSP, USA
4 Research Dr.
Ste. 204
Shelton, CT 06484
Sample Date: 6/20/2022 2:03 PM
Receipt Date: 6/20/2022 2:03 PM
Report Date: 7/11/2022
Sample Site: Summit Well 1

Sample ID#: 288606
Sample Type: Drinking Water
Sampler: WSP

Parameter	Sample Result	Units	Limits	Method	RL	Analysis Date / Time
Biological						
Coliform Bacteria	absent	none	0	SM9223B-04	0	6/23/2022 16:30
e Coli Bacteria	absent	none	0	SM9223B-04	0	6/23/2022 16:30
Heterotrophic Plate Count	324	MPN	No Limit Set	SM9215E	0	6/23/2022 13:40
Inorganic Compounds						
Chlorine, residual	0	mg/L	4	SM4500CLG-2011	0	6/20/2022 14:03
Metals						
Arsenic	ND	mg/L	0.01	EPA 200.5	0.005	6/24/2022 13:11
Copper	ND	mg/L	1.3	EPA 200.5	0.005	6/24/2022 13:11
Iron	ND	mg/L	0.3	EPA 200.5	0.005	6/24/2022 13:11
Lead	ND	mg/L	0.015	EPA 200.5	0.001	6/24/2022 13:11
Manganese	0.008	mg/L	0.05	EPA 200.5	0.005	6/24/2022 13:11
Minerals						
Alkalinity	134	mg/L	No Limit Set	SM 2320B (-97)	5	7/5/2022 17:10
Chloride	21.2	mg/L	250	EPA 300.0	1	6/23/2022 20:14
Hardness	127	mg/L	No Limit Set	EPA 200.5	5	6/24/2022 13:11
Sodium	29.4	mg/L	100	EPA 200.5	1	6/24/2022 13:11
Sulfate	29.1	mg/L	250	EPA 300.0	2	6/23/2022 20:14
Miscellaneous/Other						
Langelier Saturation Index	-0.27 *	LSI	No Limit Set	CALCTN	0	7/6/2022 18:06
Nutrient						
Nitrate as N	ND	mg/L	10	EPA 300.0	0.5	6/23/2022 20:14
Nitrite as N	ND	mg/L	1	EPA 300.0	0.1	6/23/2022 20:14
Physical						
Color, apparent	<5	CU	15	SM 2120B-01	5	6/21/2022 13:30
Odor	0	TON	2	SM2150B-2011	0	6/23/2022 16:00

Based on the bacteriological examination, according to the Federal Safe Drinking Water Act (SDWA), this water was safe for drinking purposes at the time the sample was collected.
*Slightly corrosive but non-scale forming.

ND = Not Detected
* = Above Specified Limit

CT Lic PH-0787 NY Lic 11706

AquaEnvLab.com
YorkLab.com
203 270 9973

Analytical results relate to the samples as received at the laboratory. Report shall not be reproduced except in its entirety without written approval from the laboratory.

AQUA ENVIRONMENTAL LAB
56 Church Hill Road • Newtown, CT 06470 • (203) 270-9973
A York Analytical Company
YORK

Report of Analysis

Name: WSP, USA
4 Research Dr.
Ste. 204
Shelton, CT 06484
Sample Date: 6/20/2022 2:03 PM
Receipt Date: 6/20/2022 2:03 PM
Report Date: 7/11/2022
Sample Site: Summit Well 1

Sample ID#: 288606
Sample Type: Drinking Water
Sampler: WSP

Parameter	Sample Result	Units	Limits	Method	RL	Analysis Date / Time
Physical						
PH	8.1	pH	6.4 - 8.5	SM4500HB-2011	0	6/20/2022 14:03
Total Dissolved Solids (TDS)	254	mg/L	500	SM2540C-2011	None	6/29/2022 12:02
Turbidity	0.15	NTU	5	EPA 180.1	0.05	6/23/2022 16:00
Radiochemicals						
Water Radon(212825)	427 +/-21	pCi/L	No Limit Set	SM7500Rn-23	0	6/23/2022 16:50

Comments: Based on the bacteriological examination, according to the Federal Safe Drinking Water Act (SDWA), this water was safe for drinking purposes at the time the sample was collected.
*Slightly corrosive but non-scale forming.

ND = Not Detected
* = Above Specified Limit

Report Approved by: _____ CT Lic PH-0787 NY Lic 11706
Lab Director

AquaEnvLab.com
YorkLab.com
203 270 9973

Analytical results relate to the samples as received at the laboratory. Report shall not be reproduced except in its entirety without written approval from the laboratory.

AQUA ENVIRONMENTAL LAB
56 Church Hill Road • Newtown, CT 06470 • (203) 270-9973
A York Analytical Company
YORK

Report of Analysis

Name: WSP, USA
4 Research Dr.
Ste. 204
Shelton, CT 06484
Sample Date: 6/20/2022 2:03 PM
Receipt Date: 6/20/2022 2:03 PM
Report Date: 7/27/2022
Sample Site: Summit Well 1

Sample ID#: 288607
Sample Type: Drinking Water
Sampler: WSP

Parameter	Sample Result	Units	Limits	Method	RL	Analysis Date / Time
Metals						
Antimony	ND	mg/L	No Limit Set	EPA 200.8	0.001	6/29/2022 16:20
Arsenic	ND	mg/L	0.01	EPA 200.5	0.005	6/24/2022 13:11
Barium	0.02	mg/L	2	EPA 200.5	0.001	6/24/2022 13:11
Beryllium	ND	mg/L	0.004	EPA 200.5	0.001	6/24/2022 13:11
Cadmium	ND	mg/L	0.005	EPA 200.5	0.001	6/24/2022 13:11
Chromium(T)	ND	mg/L	0.1	EPA 200.5	0.001	6/24/2022 13:11
Cyanide	<0.005	mg/L	0.2	EPA 335.4	0.005	6/24/2022 10:38
Mercury	<0.0002	mg/L	0.002	EPA 245.2	0.0002	6/29/2022 10:35
Nickel	ND	mg/L	0.1	EPA 200.5	0.001	6/24/2022 13:11
Selenium	ND	mg/L	0.05	EPA 200.5	0.005	6/24/2022 13:11
Silver	ND	mg/L	0.1	EPA 200.5	0.002	6/24/2022 13:11
Thallium	ND	mg/L	0.002	EPA 200.8	0.001	6/29/2022 16:20
Zinc	ND	mg/L	5	EPA 200.5	0.005	6/24/2022 13:11
Minerals						
Chloride	21.2	mg/L	250	EPA 300.0	1	6/23/2022 20:14
Fluoride	0.1	mg/L	4	EPA 300.0	0.1	6/23/2022 20:14
Sodium	29.4	mg/L	100	EPA 200.5	1	6/24/2022 13:11
Sulfate	29.1	mg/L	250	EPA 300.0	2	6/23/2022 20:14

ND = Not Detected
* = Above Specified Limit

Report Approved by: _____ CT Lic PH-0787 NY Lic 11706
Lab Director

AquaEnvLab.com
YorkLab.com
203 270 9973

Analytical results relate to the samples as received at the laboratory. Report shall not be reproduced except in its entirety without written approval from the laboratory.

AQUA ENVIRONMENTAL LAB
56 Church Hill Road • Newtown, CT 06470 • (203) 270-9973
A York Analytical Company
YORK

Report of Analysis

Name: WSP, USA
4 Research Dr.
Ste. 204
Shelton, CT 06484
Sample Date: 6/20/2022 2:03 PM
Receipt Date: 6/20/2022 2:03 PM
Report Date: 7/25/2022
Sample Site: Summit Well 1

Sample ID#: 288610
Sample Type: Drinking Water
Sampler: WSP

Parameter	Sample Result	Units	Limits	Method	RL	Analysis Date / Time
Volatile Organic Compounds						
01) Benzene	ND	ug/L	5	EPA 524.2	0.5	6/24/2022 13:18
02) Bromobenzene	ND	ug/L	5	EPA 524.2	0.5	6/24/2022 13:18
03) Bromochloromethane	ND	ug/L	5	EPA 524.2	0.5	6/24/2022 13:18
04) Bromomethane	ND	ug/L	5	EPA 524.2	0.5	6/24/2022 13:18
05) n-Butylbenzene	ND	ug/L	5	EPA 524.2	0.5	6/24/2022 13:18
06) sec-Butylbenzene	ND	ug/L	5	EPA 524.2	0.5	6/24/2022 13:18
07) tert-Butylbenzene	ND	ug/L	5	EPA 524.2	0.5	6/24/2022 13:18
08) Carbon Tetrachloride	ND	ug/L	5	EPA 524.2	0.5	6/24/2022 13:18
09) Chlorobenzene	ND	ug/L	5	EPA 524.2	0.5	6/24/2022 13:18
10) Chloroethane	ND	ug/L	5	EPA 524.2	0.5	6/24/2022 13:18
11) Chloromethane	ND	ug/L	5	EPA 524.2	0.5	6/24/2022 13:18
12) 2-Chlorotoluene	ND	ug/L	5	EPA 524.2	0.5	6/24/2022 13:18
13) 4-Chlorotoluene	ND	ug/L	5	EPA 524.2	0.5	6/24/2022 13:18
14) Dibromomethane	ND	ug/L	5	EPA 524.2	0.5	6/24/2022 13:18
15) 1,2-Dichlorobenzene	ND	ug/L	5	EPA 524.2	0.5	6/24/2022 13:18
16) 1,3-Dichlorobenzene	ND	ug/L	5	EPA 524.2	0.5	6/24/2022 13:18
17) 1,4-Dichlorobenzene	ND	ug/L	5	EPA 524.2	0.5	6/24/2022 13:18
18) Dichlorodifluoromethane	ND	ug/L	5	EPA 524.2	0.5	6/24/2022 13:18
19) 1,1-Dichloroethane	ND	ug/L	5	EPA 524.2	0.5	6/24/2022 13:18
20) 1,2-Dichloroethane	ND	ug/L	5	EPA 524.2	0.5	6/24/2022 13:18
21) 1,1-Dichloroethene	ND	ug/L	5	EPA 524.2	0.5	6/24/2022 13:18
22) cis-1,2,-Dichloroethene	ND	ug/L	5	EPA 524.2	0.5	6/24/2022 13:18
23) trans-1,2-Dichloroethene	ND	ug/L	5	EPA 524.2	0.5	6/24/2022 13:18
24) 1,2-Dichloropropane	ND	ug/L	5	EPA 524.2	0.5	6/24/2022 13:18
25) 1,3-Dichloropropane	ND	ug/L	5	EPA 524.2	0.5	6/24/2022 13:18
26) 2,2-Dichloropropane	ND	ug/L	5	EPA 524.2	0.5	6/24/2022 13:18
27) 1,1-Dichloropropene	ND	ug/L	5	EPA 524.2	0.5	6/24/2022 13:18

ND = Not Detected
* = Above Specified Limit

CT Lic PH-0787 NY Lic 11706

AquaEnvLab.com
YorkLab.com
203 270 9973

Analytical results relate to the samples as received at the laboratory. Report shall not be reproduced except in its entirety without written approval from the laboratory.

AQUA ENVIRONMENTAL LAB
56 Church Hill Road • Newtown, CT 06470 • (203) 270-9973
A York Analytical Company
YORK

Report of Analysis

Name: WSP, USA
4 Research Dr.
Ste. 204
Shelton, CT 06484
Sample Date: 6/20/2022 2:03 PM
Receipt Date: 6/20/2022 2:03 PM
Report Date: 7/25/2022
Sample Site: Summit Well 1

Sample ID#: 288610
Sample Type: Drinking Water
Sampler: WSP

Parameter	Sample Result	Units	Limits	Method	RL	Analysis Date / Time
Volatile Organic Compounds						
28] cis- 1,3-Dichloropropene	ND	ug/L	5	EPA 524.2	0.5	6/24/2022 13:18
29] trans-1,3-Dichloropropene	ND	ug/L	5	EPA 524.2	0.5	6/24/2022 13:18
30) Ethylbenzene	ND	ug/L	5	EPA 524.2	0.5	6/24/2022 13:18
31) Isopropylbenzene	ND	ug/L	5	EPA 524.2	0.5	6/24/2022 13:18
32) p-Isopropyltoluene	ND	ug/L	5	EPA 524.2	0.5	6/24/2022 13:18
33) Methylene chloride	ND	ug/L	5	EPA 524.2	0.5	6/24/2022 13:18
34) n-Propylbenzene	ND	ug/L	5	EPA 524.2	0.5	6/24/2022 13:18
35) Styrene	ND	ug/L	5	EPA 524.2	0.5	6/24/2022 13:18
36) 1,1,1,2-Tetrachloroethane	ND	ug/L	5	EPA 524.2	0.5	6/24/2022 13:18
37) 1,1,2,2-Tetrachloroethane	ND	ug/L	5	EPA 524.2	0.5	6/24/2022 13:18
38) Tetrachloroethene	ND	ug/L	5	EPA 524.2	0.5	6/24/2022 13:18
39) Toluene	ND	ug/L	5	EPA 524.2	0.5	6/24/2022 13:18
40) 1,2,3-Trichlorobenzene	ND	ug/L	5	EPA 524.2	0.5	6/24/2022 13:18
41) 1,2,4-Trichlorobenzene	ND	ug/L	5	EPA 524.2	0.5	6/24/2022 13:18
42) 1,1,1-Trichloroethane	ND	ug/L	5	EPA 524.2	0.5	6/24/2022 13:18
43) 1,1,2-Trichloroethane	ND	ug/L	5	EPA 524.2	0.5	6/24/2022 13:18
44) Trichloroethene	ND	ug/L	5	EPA 524.2	0.5	6/24/2022 13:18
45) Trichlorofluoromethane	ND	ug/L	5	EPA 524.2	0.5	6/24/2022 13:18
46) 1,2,3-Trichloropropane	ND	ug/L	5	EPA 524.2	0.5	6/24/2022 13:18
47} 1,2,4-Trimethylbenzene	ND	ug/L	5	EPA 524.2	0.5	6/24/2022 13:18
48) 1,3,5-Trimethylbenzene	ND	ug/L	5	EPA 524.2	0.5	6/24/2022 13:18
49) o-Xylene	ND	ug/L	5	EPA 524.2	0.5	6/24/2022 13:18
50) Hexachlorobutadiene	ND	ug/L	5	EPA 524.2	0.5	6/24/2022 13:18
51) m+p-Xylene	ND	ug/L	5	EPA 524.2	0.5	6/24/2022 13:18
52) Methyl-tertiary-butyl-ether	ND	ug/L	10	EPA 524.2	0.5	6/24/2022 13:18
53) Vinyl chloride	ND	ug/L	2	EPA 524.2	0.5	6/24/2022 13:18

ND = Not Detected
* = Above Specified Limit

Report Approved by: _____ CT Lic PH-0787 NY Lic 11706

Lab Director

AquaEnvLab.com
YorkLab.com
203 270 9973

Analytical results relate to the samples as received at the laboratory. Report shall not be reproduced except in its entirety without written approval from the laboratory.

AQUA ENVIRONMENTAL LAB
56 Church Hill Road • Newtown, CT 06470 • (203) 270-9973
A York Analytical Company
YORK

Report of Analysis

Name: WSP, USA
4 Research Dr.
Ste. 204
Shelton, CT 06484
Sample Date: 6/20/2022 2:03 PM
Receipt Date: 6/20/2022 2:03 PM
Report Date: 7/27/2022
Sample Site: Summit Well 1

Sample ID#: 288609
Sample Type: Drinking Water
Sampler: WSP

Parameter	Sample Result	Units	Limits	Method	RL	Analysis Date / Time
Organic Compounds						
PCB	ND	mg/L	0.5	EPA 508.1	0.0002	7/25/2022 10:44
Synthetic Organic Chemicals P						
Butachlor	ND	mg/L	0	EPA 508.1	0.001	7/25/2022 10:44
Dioxin	ND	ug/L	0	EPA 1613-B	5	7/2/2022 10:44
Endothall	ND	mg/L	0	EPA 548.1	5	6/29/2022 10:44
Metribuzin	ND	mg/L	0	EPA 508.1	0.0005	7/25/2022 10:44
Propachlor	ND	mg/L	0	EPA 508.1	0.001	7/25/2022 10:44
Synthetic Organic Chemicals P						
Dalapon	ND	mg/L	200	EPA 552.2	0.002	6/29/2022 10:44
Synthetic Organic Compounds						
2,4,5-TP	ND	mg/L	50	EPA 555	0.0004	6/29/2022 10:44
2,4-D	ND	mg/L	70	EPA 555	0.0002	6/29/2022 10:44
3-Hydroxycarbofuran	ND	mg/L	No Limit Set	EPA 531.1	0.002	7/3/2022 10:44
Alachlor	ND	mg/L	2	EPA 508.1	0.0004	7/25/2022 10:44
Aldicarb	ND	mg/L	No Limit Set	EPA 531.1	0.001	7/3/2022 10:44
Aldicarb Sulfone	ND	mg/L	No Limit Set	EPA 531.1	0.0017	7/3/2022 10:44
Aldicarb Sulfoxide	ND	mg/L	No Limit Set	EPA 531.1	0.001	7/3/2022 10:44
Aldrin	ND	mg/L	0	EPA 508.1	0.0005	6/27/2022 10:44
Atrazine	ND	ug/L	3	EPA 508.1	0.0002	6/27/2022 10:44
Benzo (A) Pyrene	ND	mg/L	0.2	EPA 525.2	0	7/12/2022 10:44
Carbaryl	ND	mg/L	No Limit Set	EPA 531.1	0.004	7/3/2022 10:44
Carbofuran	ND	mg/L	40	EPA 531.1	0.0019	7/3/2022 10:44
Chlordane	ND	mg/L	2	EPA 508.1	0.0004	6/27/2022 10:44
Di (2-ethylhexyl) adipate	ND	mg/L	400	EPA 525.2	0.001	7/12/2022 10:44
Di (2-ethylhexyl) phthalates	ND	mg/L	6	EPA 525.2	0.001	7/12/2022 10:44
Dibromochloropropane(DBCP)	ND	mg/L	0.2	EPA 504.1	0	7/25/2022 10:44

ND = Not Detected
* = Above Specified Limit

CT Lic PH-0787 NY Lic 11706
AquaEnvLab.com
YorkLab.com
203 270 9973

Analytical results relate to the samples as received at the laboratory. Report shall not be reproduced except in its entirety without written approval from the laboratory.

AQUA ENVIRONMENTAL LAB
56 Church Hill Road • Newtown, CT 06470 • (203) 270-9973
A York Analytical Company
YORK

Report of Analysis

Name: WSP, USA
4 Research Dr.
Ste. 204
Shelton, CT 06484
Sample Date: 6/20/2022 2:03 PM
Receipt Date: 6/20/2022 2:03 PM
Report Date: 7/27/2022
Sample Site: Summit Well 1

Sample ID#: 288609
Sample Type: Drinking Water
Sampler: WSP

Parameter	Sample Result	Units	Limits	Method	RL	Analysis Date / Time
Synthetic Organic Compounds						
Dicamba	ND	mg/L	No Limit Set	EPA 555	0.0008	6/29/2022 10:44
Dieldrin	ND	mg/L	No Limit Set	EPA 508.1	0	6/27/2022 10:44
Dinoseb	ND	mg/L	7	EPA 555	0.0004	6/29/2022 10:44
Diquat	ND	mg/L	0	EPA 549.2	0.0008	6/28/2022 10:44
Endrin	ND	mg/L	2	EPA 508.1	0	6/27/2022 10:44
Ethylene Dibromide(EDB)	ND	mg/L	0.05	EPA 504.1	0	7/25/2022 10:44
Glyphosphate	ND	mg/L	700	EPA 547	0.01	6/27/2022 10:44
Heptachlor	ND	mg/L	0.4	EPA 508.1	0.0001	6/27/2022 10:44
Heptachlor Epoxide	ND	mg/L	No Limit Set	EPA 508.1	0.0002	7/25/2022 10:44
Hexachlorobenzene	ND	mg/L	1	EPA 508.1	0.0002	7/25/2022 10:44
Hexachlorocyclopentadiene	ND	mg/L	50	EPA 508.1	0.0002	7/25/2022 10:44
Lindane	ND	mg/L	0.2	EPA 508.1	0.0002	7/25/2022 10:44
Methomyl	ND	mg/L	0	EPA 531.1	0.004	7/3/2022 10:44
Methoxychlor	ND	mg/L	40	EPA 508.1	0.001	7/25/2022 10:44
Metolachlor	ND	mg/L	No Limit Set	EPA 508.1	0.001	7/25/2022 10:44
Oxamyl (Vydate)	ND	mg/L	200	EPA 531.1	0.004	7/3/2022 10:44
Pentachlorophenol	ND	mg/L	1	EPA 555	0.0001	6/29/2022 10:44
Picloram	ND	mg/L	500	EPA 555	0.0002	6/29/2022 10:44
Simazine	ND	mg/L	4	EPA 508.1	0.0001	7/25/2022 10:44
Toxaphene	ND	mg/L	3	EPA 508.1	0.002	7/25/2022 10:44

ND = Not Detected
* = Above Specified Limit

Report Approved by: _____ CT Lic PH-0787 NY Lic 11706

Lab Director

AquaEnvLab.com
YorkLab.com
203 270 9973

Analytical results relate to the samples as received at the laboratory. Report shall not be reproduced except in its entirety without written approval from the laboratory.

AQUA ENVIRONMENTAL LAB
56 Church Hill Road • Newtown, CT 06470 • (203) 270-9973
A York Analytical Company
YORK ANALYTICAL LABORATORIES INC

Report of Analysis

Name: WSP, USA
4 Research Dr.
Ste. 204
Shelton, CT 06484
Sample Date: 6/20/2022 2:03 PM
Receipt Date: 6/20/2022 2:03 PM
Report Date: 7/1/2022
Sample Site: Summit Well 1

Sample ID#: 288605
Sample Type: Drinking Water
Sampler: WSP

Parameter	Sample Result	Units	Limits	Method	RL	Analysis Date / Time
Miscellaneous/Other						
Asbestos	ND	MFL	0	EPA 100.2	0.19	6/30/2022 08:18

ND = Not Detected
* = Above Specified Limit

Report Approved by: _____ CT Lic PH-0787 NY Lic 11706
Lab Director

AquaEnvLab.com
YorkLab.com
203 270 9973

Analytical results relate to the samples as received at the laboratory. Report shall not be reproduced except in its entirety without written approval from the laboratory.

AQUA ENVIRONMENTAL LAB
56 Church Hill Road • Newtown, CT 06470 • (203) 270-9973
A York Analytical Company
YORK

Report of Analysis

Name: WSP, USA
4 Research Dr.
Ste. 204
Shelton, CT 06484
Sample Date: 6/20/2022 2:03 PM
Receipt Date: 6/20/2022 2:03 PM
Report Date: 7/26/2022
Sample Site: Summit Well 1

Sample ID#: 288611
Sample Type: Drinking Water
Sampler: WSP

Parameter	Sample Result	Units	Limits	Method	RL	Analysis Date / Time
Radiochemicals						
Gross Beta	3.48+/-0.995	pCi/L	No Limit Set	EPA 900.0	None	7/18/2022 08:35
Radium 226	0.531+/-0.417	pCi/L	5	EPA 903.0	1	7/21/2022 14:03
Radium 228	0.390+/-0.305	pCi/L	5	EPA 904.0	1	7/21/2022 11:57
Total Gross Alpha	2.44+/-1.68	pCi/L	No Limit Set	EPA 900.0	3	7/18/2022 08:35
Uranium	1.9	ug/L	30	EPA 200.8	1	6/29/2022 16:20

ND = Not Detected
* = Above Specified Limit

Report Approved by: _____
Lab Director

CT Lic PH-0787 NY Lic 11706

AquaEnvLab.com
YorkLab.com
203 270 9973

Analytical results relate to the samples as received at the laboratory. Report shall not be reproduced except in its entirety without written approval from the laboratory.

AQUA ENVIRONMENTAL LAB
56 Church Hill Road • Newtown, CT 06470 • (203) 270-9973
A York Analytical Company

Report of Analysis

Name: WSP, USA
4 Research Dr.
Ste. 204
Shelton, CT 06484
Sample Date: 6/21/2022 8:39 AM
Receipt Date: 6/21/2022 8:39 AM
Report Date: 7/6/2022
Sample Site: Summit Well 1

Sample ID#: 288673
Sample Type: Drinking Water
Sampler: WSP

Parameter	Sample Result	Units	Limits	Method	RL	Analysis Date / Time
Organic Compounds						
1,4-Dioxane	ND	ug/L	1	EPA 522	0.2	6/24/2022 07:43
PerFluoroButaneSulfonic Acid	ND	ng/L	No Limit Set	EPA 537	1.34	7/1/2022 11:13
PerFluoroHeptanoic Acid	ND	ng/L	No Limit Set	EPA 537	1.34	7/1/2022 11:13
PerFluoroHexaneSulfonic Acid	2.22	ng/L	49	EPA 537	1.34	7/1/2022 11:13
PerFluoroHexanoic Acid	4.48	ng/L	No Limit Set	EPA 537	1.34	7/1/2022 11:13
PerFluoroNonanoic Acid	ND	ng/L	12	EPA 537	1.34	7/1/2022 11:13
PerFluoroOctaneSulfonic Acid	4.00	ng/L	10	EPA 537	1.34	7/1/2022 11:13
PerFluoroOctanoic Acid	4.70	ng/L	16	EPA 537	1.34	7/1/2022 11:13

ND = Not Detected
* = Above Specified Limit

Report Approved by: _____ CT Lic PH-0787 NY Lic 11706
Lab Director

AquaEnvLab.com
YorkLab.com
203 270 9973

Analytical results relate to the samples as received at the laboratory. Report shall not be reproduced except in its entirety without written approval from the laboratory.

Technical Report
Perfluoroalkyl Substances (PFAS)

prepared for:

Aqua Environmental Lab
56 Church Hill Road
Newtown CT, 06470
Attention: T. Braun

Report Date: 07/05/2022
Client Project ID: 288625/288617/288673
York Project (SDG) No.: 22F1242

Report Date: 07/05/2022
Client Project ID: 288625/288617/288673
York Project (SDG) No.: 22F1242

Aqua Environmental Lab
56 Church Hill Road
Newtown CT, 06470
Attention: T. Braun

Purpose and Results

This report contains the analytical data for the sample(s) identified on the attached chain-of-custody received in our laboratory on June 23, 2022 and listed below. The project was identified as your project: **288625/288617/288673**.

The analyses were conducted utilizing appropriate EPA methods as detailed in the data summary tables.

All samples were received in proper condition meeting the customary acceptance requirements for environmental samples except those indicated under the Sample and Analysis Qualifiers section of this report.

All analyses met the method and laboratory standard operating procedure requirements except as indicated by any data flags, the meaning of which are explained in the Sample and Data Qualifiers Relating to This Work Order section of this report and case narrative if applicable.

Please contact Client Services at 203.325.1371 with any questions regarding this report or e-mail clientservices@yorklab.com.

York Sample ID	Client Sample ID	Matrix	Date Collected	Date Received
22F1242-01	288625	Drinking Water	06/23/2022	06/23/2022
22F1242-02	288617	Drinking Water	06/23/2022	06/23/2022
22F1242-03	288673	Drinking Water	06/23/2022	06/23/2022
22F1242-04	288625-PFAS-Field Blank	Drinking Water	06/23/2022	06/23/2022
22F1242-05	288617-PFAS-Field Blank	Drinking Water	06/23/2022	06/23/2022
22F1242-06	288673-PFAS-Field Blank	Drinking Water	06/23/2022	06/23/2022

General Notes for York Project (SDG) No.: 22F1242

1. The RLs and MDLs (Reporting Limit and Method Detection Limit respectively) reported are adjusted for any dilution necessary due to the levels of target and/or non-target analytes and matrix interference. The RL(REPORTING LIMIT) is based upon the lowest standard utilized for the calibration where applicable.
2. Samples are retained for a period of thirty days after submittal of report, unless other arrangements are made.
3. York's liability for the above data is limited to the dollar value paid to York for the referenced project.
4. This report shall not be reproduced without the written approval of York Analytical Laboratories, Inc.
5. All analyses conducted met method or Laboratory SOP requirements. See the Sample and Data Qualifiers Section for further information.
6. It is noted that no analyses reported herein were subcontracted to another laboratory, unless noted in the report.
7. This report reflects results that relate only to the samples submitted on the attached chain-of-custody form(s) received by York.
8. Analyses conducted at York Analytical Laboratories, Inc. Stratford, CT are indicated by NY Cert. No. 10854; those conducted at York Analytical Laboratories, Inc., Richmond Hill, NY are indicated by NY Cert. No. 12058.

Approved By: Cassie L. Mosher

Cassie L. Mosher
Laboratory Manager

Date: 07/05/2022

Sample Information

Client Sample ID: 288625 **York Sample ID:** 22F1242-01

York Project (SDG) No.	Client Project ID	Matrix	Collection Date/Time	Date Received
22F1242	288625/288617/288673	Drinking Water	June 23, 2022 8:00 am	06/23/2022

1,4-Dioxane by GC/MS/SIM EPA 522

Log-in Notes:

Sample Notes:

Sample Prepared by Method: EPA 522

CAS No.	Parameter	Result	Flag	Maximum Contaminant Level MCL, ng/L	Units	Reported to LOQ	Reference Method	Date/Time Analyzed	Analyst
123-91-1	1,4-Dioxane	ND		1	ug/L	0.200	EPA 522	06/24/2022 07:43	KH
					Certifications:		NELAC-NY10854	06/27/2022 15:05	
1693-74-9	*** Tetrahydrofuran-d8**	**0.500**		**0**	ug/mL		EPA 522	06/24/2022 07:43	KH
					Certifications:			06/27/2022 15:05	

	Surrogate Recoveries	Result	Acceptance Range
17647-74-4	*Surrogate: 1,4-Dioxane-d8*	*80.0 %*	*70-130*

PFAS, EPA 537.1 List

Well 3

Log-in Notes:

Sample Notes:

Sample Prepared by Method: EPA 537.1 SPE DVB

CAS No.	Parameter	Result	Flag	Maximum Contaminant Level MCL, ng/L	Units	Reported to LOQ	Reference Method	Date/Time Analyzed	Analyst
375-73-5	* Perfluorobutanesulfonic acid (PFBS)	ND		0	ng/L	1.35	EPA 537.1	07/01/2022 11:13	WEL
					Certifications:			07/05/2022 13:50	
307-24-4	*** Perfluorohexanoic acid (PFHxA)**	**1.49**		**0**	ng/L	1.35	EPA 537.1	07/01/2022 11:13	WEL
					Certifications:			07/05/2022 13:50	
375-85-9	* Perfluoroheptanoic acid (PFHpA)	ND		0	ng/L	1.35	EPA 537.1	07/01/2022 11:13	WEL
					Certifications:			07/05/2022 13:50	
355-46-4	*** Perfluorohexanesulfonic acid (PFHxS)**	**1.46**		**0**	ng/L	1.35	EPA 537.1	07/01/2022 11:13	WEL
					Certifications:			07/05/2022 13:50	
335-67-1	**Perfluorooctanoic acid (PFOA)**	**3.35**		**10**	ng/L	1.35	EPA 537.1	07/01/2022 11:13	WEL
					Certifications:		NELAC-NY12058	07/05/2022 13:50	
1763-23-1	**Perfluorooctanesulfonic acid (PFOS)**	**2.05**		**10**	ng/L	1.35	EPA 537.1	07/01/2022 11:13	WEL
					Certifications:		NELAC-NY12058	07/05/2022 13:50	
375-95-1	* Perfluorononanoic acid (PFNA)	ND		0	ng/L	1.35	EPA 537.1	07/01/2022 11:13	WEL
					Certifications:			07/05/2022 13:50	
335-76-2	* Perfluorodecanoic acid (PFDA)	ND		0	ng/L	1.35	EPA 537.1	07/01/2022 11:13	WEL
					Certifications:			07/05/2022 13:50	
2058-94-8	* Perfluoroundecanoic acid (PFUnA)	ND		0	ng/L	1.35	EPA 537.1	07/01/2022 11:13	WEL
					Certifications:			07/05/2022 13:50	
307-55-1	* Perfluorododecanoic acid (PFDoA)	ND		0	ng/L	1.35	EPA 537.1	07/01/2022 11:13	WEL
					Certifications:			07/05/2022 13:50	
72629-94-8	* Perfluorotridecanoic acid (PFTrDA)	ND		0	ng/L	1.35	EPA 537.1	07/01/2022 11:13	WEL
					Certifications:			07/05/2022 13:50	
376-06-7	* Perfluorotetradecanoic acid (PFTA)	ND		0	ng/L	1.35	EPA 537.1	07/01/2022 11:13	WEL
					Certifications:			07/05/2022 13:50	
2355-31-9	* N-MeFOSAA	ND		0	ng/L	1.35	EPA 537.1	07/01/2022 11:13	WEL
					Certifications:			07/05/2022 13:50	
2991-50-6	* N-EtFOSAA	ND		0	ng/L	1.35	EPA 537.1	07/01/2022 11:13	WEL
					Certifications:			07/05/2022 13:50	

Sample Information

Client Sample ID: 288625 **York Sample ID:** 22F1242-01

York Project (SDG) No.	Client Project ID	Matrix	Collection Date/Time	Date Received
22F1242	288625/288617/288673	Drinking Water	June 23, 2022 8:00 am	06/23/2022

PFAS, EPA 537.1 List

Log-in Notes:

Sample Notes:

Sample Prepared by Method: EPA 537.1 SPE DVB

CAS No.	Parameter	Result	Flag	Maximum Contaminant Level MCL, ng/L	Units	Reported to LOQ	Reference Method	Date/Time Analyzed	Analyst
756426-58-1	* 9CL-PF3ONS	ND		0	ng/L	1.35	EPA 537.1	07/01/2022 11:13	WEL
					Certifications:			07/05/2022 13:50	
763051-92-9	* 11CL-PF3OUdS	ND		0	ng/L	1.35	EPA 537.1	07/01/2022 11:13	WEL
					Certifications:			07/05/2022 13:50	
13252-13-6	* HFPO-DA (Gen-X)	ND		0	ng/L	1.35	EPA 537.1	07/01/2022 11:13	WEL
					Certifications:			07/05/2022 13:50	
919005-14-4	* ADONA	ND		0	ng/L	1.35	EPA 537.1	07/01/2022 11:13	WEL
					Certifications:			07/05/2022 13:50	

Surrogate Recoveries	Result	Acceptance Range
Surrogate: d5-N-EtFOSAA	*107 %*	*70-130*
Surrogate: 13C-PFDA	*90.5 %*	*70-130*
Surrogate: 13C-PFHxA	*104 %*	*70-130*
Surrogate: M3HFPO-DA	*96.7 %*	*70-130*

Sample Information

Client Sample ID: 288617 **York Sample ID:** 22F1242-02

York Project (SDG) No.	Client Project ID	Matrix	Collection Date/Time	Date Received
22F1242	288625/288617/288673	Drinking Water	June 23, 2022 9:00 am	06/23/2022

1,4-Dioxane by GC/MS/SIM EPA 522

Log-in Notes:

Sample Notes:

Sample Prepared by Method: EPA 522

CAS No.	Parameter	Result	Flag	Maximum Contaminant Level MCL, ng/L	Units	Reported to LOQ	Reference Method	Date/Time Analyzed	Analyst
123-91-1	1,4-Dioxane	ND		1	ug/L	0.200	EPA 522	06/24/2022 07:43	KH
					Certifications:	NELAC-NY10854		06/27/2022 15:25	
1693-74-9	*** Tetrahydrofuran-d8**	**0.500**		**0**	ug/mL		EPA 522	06/24/2022 07:43	KH
					Certifications:			06/27/2022 15:25	

	Surrogate Recoveries	Result	Acceptance Range
17647-74-4	*Surrogate: 1,4-Dioxane-d8*	*80.0 %*	*70-130*

PFAS, EPA 537.1 List Well 6A

Log-in Notes:

Sample Notes:

Sample Prepared by Method: EPA 537.1 SPE DVB

CAS No.	Parameter	Result	Flag	Maximum Contaminant Level MCL, ng/L	Units	Reported to LOQ	Reference Method	Date/Time Analyzed	Analyst
375-73-5	* Perfluorobutanesulfonic acid (PFBS)	ND		0	ng/L	1.43	EPA 537.1	07/01/2022 11:13	WEL
					Certifications:			07/05/2022 14:03	

Sample Information

Client Sample ID: 288617 **York Sample ID:** 22F1242-02

York Project (SDG) No.	Client Project ID	Matrix	Collection Date/Time	Date Received
22F1242	288625/288617/288673	Drinking Water	June 23, 2022 9:00 am	06/23/2022

PFAS, EPA 537.1 List

Log-in Notes:

Sample Notes:

Sample Prepared by Method: EPA 537.1 SPE DVB

CAS No.	Parameter	Result	Flag	Maximum Contaminant Level MCL, ng/L	Units	Reported to LOQ	Reference Method	Date/Time Analyzed	Analyst
307-24-4	*** Perfluorohexanoic acid (PFHxA)**	**1.78**		**0**	ng/L	1.43	EPA 537.1	07/01/2022 11:13	WEL
					Certifications:			07/05/2022 14:03	
375-85-9	* Perfluoroheptanoic acid (PFHpA)	ND		0	ng/L	1.43	EPA 537.1	07/01/2022 11:13	WEL
					Certifications:			07/05/2022 14:03	
355-46-4	*** Perfluorohexanesulfonic acid (PFHxS)**	**1.54**		**0**	ng/L	1.43	EPA 537.1	07/01/2022 11:13	WEL
					Certifications:			07/05/2022 14:03	
335-67-1	**Perfluorooctanoic acid (PFOA)**	**3.88**		**10**	ng/L	1.43	EPA 537.1	07/01/2022 11:13	WEL
					Certifications:	NELAC-NY12058		07/05/2022 14:03	
1763-23-1	**Perfluorooctanesulfonic acid (PFOS)**	**2.29**		**10**	ng/L	1.43	EPA 537.1	07/01/2022 11:13	WEL
					Certifications:	NELAC-NY12058		07/05/2022 14:03	
375-95-1	* Perfluorononanoic acid (PFNA)	ND		0	ng/L	1.43	EPA 537.1	07/01/2022 11:13	WEL
					Certifications:			07/05/2022 14:03	
335-76-2	* Perfluorodecanoic acid (PFDA)	ND		0	ng/L	1.43	EPA 537.1	07/01/2022 11:13	WEL
					Certifications:			07/05/2022 14:03	
2058-94-8	* Perfluoroundecanoic acid (PFUnA)	ND		0	ng/L	1.43	EPA 537.1	07/01/2022 11:13	WEL
					Certifications:			07/05/2022 14:03	
307-55-1	* Perfluorododecanoic acid (PFDoA)	ND		0	ng/L	1.43	EPA 537.1	07/01/2022 11:13	WEL
					Certifications:			07/05/2022 14:03	
72629-94-8	* Perfluorotridecanoic acid (PFTrDA)	ND		0	ng/L	1.43	EPA 537.1	07/01/2022 11:13	WEL
					Certifications:			07/05/2022 14:03	
376-06-7	* Perfluorotetradecanoic acid (PFTA)	ND		0	ng/L	1.43	EPA 537.1	07/01/2022 11:13	WEL
					Certifications:			07/05/2022 14:03	
2355-31-9	* N-MeFOSAA	ND		0	ng/L	1.43	EPA 537.1	07/01/2022 11:13	WEL
					Certifications:			07/05/2022 14:03	
2991-50-6	* N-EtFOSAA	ND		0	ng/L	1.43	EPA 537.1	07/01/2022 11:13	WEL
					Certifications:			07/05/2022 14:03	
756426-58-1	* 9CL-PF3ONS	ND		0	ng/L	1.43	EPA 537.1	07/01/2022 11:13	WEL
					Certifications:			07/05/2022 14:03	
763051-92-9	* 11CL-PF3OUdS	ND		0	ng/L	1.43	EPA 537.1	07/01/2022 11:13	WEL
					Certifications:			07/05/2022 14:03	
13252-13-6	* HFPO-DA (Gen-X)	ND		0	ng/L	1.43	EPA 537.1	07/01/2022 11:13	WEL
					Certifications:			07/05/2022 14:03	
919005-14-4	* ADONA	ND		0	ng/L	1.43	EPA 537.1	07/01/2022 11:13	WEL
					Certifications:			07/05/2022 14:03	

Surrogate Recoveries	Result	Acceptance Range
Surrogate: d5-N-EtFOSAA	*102 %*	*70-130*
Surrogate: 13C-PFDA	*96.1 %*	*70-130*
Surrogate: 13C-PFHxA	*109 %*	*70-130*
Surrogate: M3HFPO-DA	*101 %*	*70-130*

Sample Information

Client Sample ID: 288673 **York Sample ID:** 22F1242-03

York Project (SDG) No.	Client Project ID	Matrix	Collection Date/Time	Date Received
22F1242	288625/288617/288673	Drinking Water	June 23, 2022 9:20 am	06/23/2022

1,4-Dioxane by GC/MS/SIM EPA 522

Log-in Notes:

Sample Notes:

Sample Prepared by Method: EPA 522

CAS No.	Parameter	Result	Flag	Maximum Contaminant Level MCL, ng/L	Units	Reported to LOQ	Reference Method	Date/Time Analyzed	Analyst
123-91-1	1,4-Dioxane	ND		1	ug/L	0.200	EPA 522	06/24/2022 07:43	KH
					Certifications:	NELAC-NY10854		06/27/2022 15:44	
1693-74-9	*** Tetrahydrofuran-d8**	**0.500**		**0**	ug/mL		EPA 522	06/24/2022 07:43	KH
					Certifications:			06/27/2022 15:44	

	Surrogate Recoveries	Result	Acceptance Range
17647-74-4	*Surrogate: 1,4-Dioxane-d8*	*80.0 %*	*70-130*

PFAS, EPA 537.1 List

Well 1

Log-in Notes:

Sample Notes:

Sample Prepared by Method: EPA 537.1 SPE DVB

CAS No.	Parameter	Result	Flag	Maximum Contaminant Level MCL, ng/L	Units	Reported to LOQ	Reference Method	Date/Time Analyzed	Analyst
375-73-5	* Perfluorobutanesulfonic acid (PFBS)	ND		0	ng/L	1.11	EPA 537.1	07/01/2022 11:13	WEL
					Certifications:			07/05/2022 14:15	
307-24-4	*** Perfluorohexanoic acid (PFHxA)**	**4.48**		**0**	ng/L	1.11	EPA 537.1	07/01/2022 11:13	WEL
					Certifications:			07/05/2022 14:15	
375-85-9	* Perfluoroheptanoic acid (PFHpA)	ND		0	ng/L	1.11	EPA 537.1	07/01/2022 11:13	WEL
					Certifications:			07/05/2022 14:15	
355-46-4	*** Perfluorohexanesulfonic acid (PFHxS)**	**2.22**		**0**	ng/L	1.11	EPA 537.1	07/01/2022 11:13	WEL
					Certifications:			07/05/2022 14:15	
335-67-1	**Perfluorooctanoic acid (PFOA)**	**4.70**		**10**	ng/L	1.11	EPA 537.1	07/01/2022 11:13	WEL
					Certifications:	NELAC-NY12058		07/05/2022 14:15	
1763-23-1	**Perfluorooctanesulfonic acid (PFOS)**	**4.00**		**10**	ng/L	1.11	EPA 537.1	07/01/2022 11:13	WEL
					Certifications:	NELAC-NY12058		07/05/2022 14:15	
375-95-1	* Perfluorononanoic acid (PFNA)	ND		0	ng/L	1.11	EPA 537.1	07/01/2022 11:13	WEL
					Certifications:			07/05/2022 14:15	
335-76-2	* Perfluorodecanoic acid (PFDA)	ND		0	ng/L	1.11	EPA 537.1	07/01/2022 11:13	WEL
					Certifications:			07/05/2022 14:15	
2058-94-8	* Perfluoroundecanoic acid (PFUnA)	ND		0	ng/L	1.11	EPA 537.1	07/01/2022 11:13	WEL
					Certifications:			07/05/2022 14:15	
307-55-1	* Perfluorododecanoic acid (PFDoA)	ND		0	ng/L	1.11	EPA 537.1	07/01/2022 11:13	WEL
					Certifications:			07/05/2022 14:15	
72629-94-8	* Perfluorotridecanoic acid (PFTrDA)	ND		0	ng/L	1.11	EPA 537.1	07/01/2022 11:13	WEL
					Certifications:			07/05/2022 14:15	
376-06-7	* Perfluorotetradecanoic acid (PFTA)	ND		0	ng/L	1.11	EPA 537.1	07/01/2022 11:13	WEL
					Certifications:			07/05/2022 14:15	
2355-31-9	* N-MeFOSAA	ND		0	ng/L	1.11	EPA 537.1	07/01/2022 11:13	WEL
					Certifications:			07/05/2022 14:15	
2991-50-6	* N-EtFOSAA	ND		0	ng/L	1.11	EPA 537.1	07/01/2022 11:13	WEL
					Certifications:			07/05/2022 14:15	
756426-58-1	* 9CL-PF3ONS	ND		0	ng/L	1.11	EPA 537.1	07/01/2022 11:13	WEL
					Certifications:			07/05/2022 14:15	

Sample Information

Client Sample ID: 288673 **York Sample ID:** 22F1242-03

York Project (SDG) No.	Client Project ID	Matrix	Collection Date/Time	Date Received
22F1242	288625/288617/288673	Drinking Water	June 23, 2022 9:20 am	06/23/2022

PFAS, EPA 537.1 List **Log-in Notes:** **Sample Notes:**

Sample Prepared by Method: EPA 537.1 SPE DVB

CAS No.	Parameter	Result	Flag	Maximum Contaminant Level MCL, ng/L	Units	Reported to LOQ	Reference Method	Date/Time Analyzed	Analyst
763051-92-9	* 11CL-PF3OUdS	ND		0	ng/L	1.11	EPA 537.1	07/01/2022 11:13	WEL
					Certifications:			07/05/2022 14:15	
13252-13-6	* HFPO-DA (Gen-X)	ND		0	ng/L	1.11	EPA 537.1	07/01/2022 11:13	WEL
					Certifications:			07/05/2022 14:15	
919005-14-4	* ADONA	ND		0	ng/L	1.11	EPA 537.1	07/01/2022 11:13	WEL
					Certifications:			07/05/2022 14:15	

Surrogate Recoveries	Result	Acceptance Range
Surrogate: d5-N-EtFOSAA	*96.0 %*	*70-130*
Surrogate: 13C-PFDA	*84.4 %*	*70-130*
Surrogate: 13C-PFHxA	*97.8 %*	*70-130*
Surrogate: M3HFPO-DA	*92.7 %*	*70-130*

Sample Information

Client Sample ID: 288625-PFAS-Field Blank **York Sample ID:** 22F1242-04

York Project (SDG) No.	Client Project ID	Matrix	Collection Date/Time	Date Received
22F1242	288625/288617/288673	Drinking Water	June 23, 2022 8:00 am	06/23/2022

PFAS, EPA 537.1 List **Log-in Notes:** **Sample Notes:**

Sample Prepared by Method: EPA 537.1 SPE DVB

CAS No.	Parameter	Result	Flag	Maximum Contaminant Level MCL, ng/L	Units	Reported to LOQ	Reference Method	Date/Time Analyzed	Analyst
375-73-5	* Perfluorobutanesulfonic acid (PFBS)	ND		0	ng/L	1.52	EPA 537.1	07/01/2022 11:13	WEL
					Certifications:			07/05/2022 14:27	
307-24-4	* Perfluorohexanoic acid (PFHxA)	ND		0	ng/L	1.52	EPA 537.1	07/01/2022 11:13	WEL
					Certifications:			07/05/2022 14:27	
375-85-9	* Perfluoroheptanoic acid (PFHpA)	ND		0	ng/L	1.52	EPA 537.1	07/01/2022 11:13	WEL
					Certifications:			07/05/2022 14:27	
355-46-4	* Perfluorohexanesulfonic acid (PFHxS)	ND		0	ng/L	1.52	EPA 537.1	07/01/2022 11:13	WEL
					Certifications:			07/05/2022 14:27	
335-67-1	Perfluorooctanoic acid (PFOA)	ND		10	ng/L	1.52	EPA 537.1	07/01/2022 11:13	WEL
					Certifications:	NELAC-NY12058		07/05/2022 14:27	
1763-23-1	Perfluorooctanesulfonic acid (PFOS)	ND		10	ng/L	1.52	EPA 537.1	07/01/2022 11:13	WEL
					Certifications:	NELAC-NY12058		07/05/2022 14:27	
375-95-1	* Perfluorononanoic acid (PFNA)	ND		0	ng/L	1.52	EPA 537.1	07/01/2022 11:13	WEL
					Certifications:			07/05/2022 14:27	
335-76-2	* Perfluorodecanoic acid (PFDA)	ND		0	ng/L	1.52	EPA 537.1	07/01/2022 11:13	WEL
					Certifications:			07/05/2022 14:27	
2058-94-8	* Perfluoroundecanoic acid (PFUnA)	ND		0	ng/L	1.52	EPA 537.1	07/01/2022 11:13	WEL
					Certifications:			07/05/2022 14:27	

Sample Information

Client Sample ID: 288625-PFAS-Field Blank **York Sample ID:** 22F1242-04

York Project (SDG) No.	Client Project ID	Matrix	Collection Date/Time	Date Received
22F1242	288625/288617/288673	Drinking Water	June 23, 2022 8:00 am	06/23/2022

PFAS, EPA 537.1 List

Log-in Notes:

Sample Notes:

Sample Prepared by Method: EPA 537.1 SPE DVB

CAS No.	Parameter	Result	Flag	Maximum Contaminant Level MCL, ng/L	Units	Reported to LOQ	Reference Method	Date/Time Analyzed	Analyst
307-55-1	* Perfluorododecanoic acid (PFDoA)	ND		0	ng/L	1.52	EPA 537.1	07/01/2022 11:13	WEL
					Certifications:			07/05/2022 14:27	
72629-94-8	* Perfluorotridecanoic acid (PFTrDA)	ND		0	ng/L	1.52	EPA 537.1	07/01/2022 11:13	WEL
					Certifications:			07/05/2022 14:27	
376-06-7	* Perfluorotetradecanoic acid (PFTA)	ND		0	ng/L	1.52	EPA 537.1	07/01/2022 11:13	WEL
					Certifications:			07/05/2022 14:27	
2355-31-9	* N-MeFOSAA	ND		0	ng/L	1.52	EPA 537.1	07/01/2022 11:13	WEL
					Certifications:			07/05/2022 14:27	
2991-50-6	* N-EtFOSAA	ND		0	ng/L	1.52	EPA 537.1	07/01/2022 11:13	WEL
					Certifications:			07/05/2022 14:27	
756426-58-1	* 9CL-PF3ONS	ND		0	ng/L	1.52	EPA 537.1	07/01/2022 11:13	WEL
					Certifications:			07/05/2022 14:27	
763051-92-9	* 11CL-PF3OUdS	ND		0	ng/L	1.52	EPA 537.1	07/01/2022 11:13	WEL
					Certifications:			07/05/2022 14:27	
13252-13-6	* HFPO-DA (Gen-X)	ND		0	ng/L	1.52	EPA 537.1	07/01/2022 11:13	WEL
					Certifications:			07/05/2022 14:27	
919005-14-4	* ADONA	ND		0	ng/L	1.52	EPA 537.1	07/01/2022 11:13	WEL
					Certifications:			07/05/2022 14:27	

Surrogate Recoveries	Result	Acceptance Range
Surrogate: d5-N-EtFOSAA	*107 %*	*70-130*
Surrogate: 13C-PFDA	*95.5 %*	*70-130*
Surrogate: 13C-PFHxA	*104 %*	*70-130*
Surrogate: M3HFPO-DA	*105 %*	*70-130*

Sample Information

Client Sample ID: 288617-PFAS-Field Blank **York Sample ID:** 22F1242-05

York Project (SDG) No.	Client Project ID	Matrix	Collection Date/Time	Date Received
22F1242	288625/288617/288673	Drinking Water	June 23, 2022 9:00 am	06/23/2022

PFAS, EPA 537.1 List

Log-in Notes:

Sample Notes:

Sample Prepared by Method: EPA 537.1 SPE DVB

CAS No.	Parameter	Result	Flag	Maximum Contaminant Level MCL, ng/L	Units	Reported to LOQ	Reference Method	Date/Time Analyzed	Analyst
375-73-5	* Perfluorobutanesulfonic acid (PFBS)	ND		0	ng/L	1.92	EPA 537.1	07/01/2022 11:13	WEL
					Certifications:			07/05/2022 15:04	
307-24-4	* Perfluorohexanoic acid (PFHxA)	ND		0	ng/L	1.92	EPA 537.1	07/01/2022 11:13	WEL
					Certifications:			07/05/2022 15:04	
375-85-9	* Perfluoroheptanoic acid (PFHpA)	ND		0	ng/L	1.92	EPA 537.1	07/01/2022 11:13	WEL
					Certifications:			07/05/2022 15:04	

Sample Information

Client Sample ID: 288617-PFAS-Field Blank **York Sample ID:** 22F1242-05

York Project (SDG) No.	Client Project ID	Matrix	Collection Date/Time	Date Received
22F1242	288625/288617/288673	Drinking Water	June 23, 2022 9:00 am	06/23/2022

PFAS, EPA 537.1 List **Log-in Notes:** **Sample Notes:**

Sample Prepared by Method: EPA 537.1 SPE DVB

CAS No.	Parameter	Result	Flag	Maximum Contaminant Level MCL, ng/L	Units	Reported to LOQ	Reference Method	Date/Time Analyzed	Analyst
355-46-4	* Perfluorohexanesulfonic acid (PFHxS)	ND		0	ng/L	1.92	EPA 537.1	07/01/2022 11:13	WEL
					Certifications:			07/05/2022 15:04	
335-67-1	Perfluorooctanoic acid (PFOA)	ND		10	ng/L	1.92	EPA 537.1	07/01/2022 11:13	WEL
					Certifications:	NELAC-NY12058		07/05/2022 15:04	
1763-23-1	Perfluorooctanesulfonic acid (PFOS)	ND		10	ng/L	1.92	EPA 537.1	07/01/2022 11:13	WEL
					Certifications:	NELAC-NY12058		07/05/2022 15:04	
375-95-1	* Perfluorononanoic acid (PFNA)	ND		0	ng/L	1.92	EPA 537.1	07/01/2022 11:13	WEL
					Certifications:			07/05/2022 15:04	
335-76-2	* Perfluorodecanoic acid (PFDA)	ND		0	ng/L	1.92	EPA 537.1	07/01/2022 11:13	WEL
					Certifications:			07/05/2022 15:04	
2058-94-8	* Perfluoroundecanoic acid (PFUnA)	ND		0	ng/L	1.92	EPA 537.1	07/01/2022 11:13	WEL
					Certifications:			07/05/2022 15:04	
307-55-1	* Perfluorododecanoic acid (PFDoA)	ND		0	ng/L	1.92	EPA 537.1	07/01/2022 11:13	WEL
					Certifications:			07/05/2022 15:04	
72629-94-8	* Perfluorotridecanoic acid (PFTrDA)	ND		0	ng/L	1.92	EPA 537.1	07/01/2022 11:13	WEL
					Certifications:			07/05/2022 15:04	
376-06-7	* Perfluorotetradecanoic acid (PFTA)	ND		0	ng/L	1.92	EPA 537.1	07/01/2022 11:13	WEL
					Certifications:			07/05/2022 15:04	
2355-31-9	* N-MeFOSAA	ND		0	ng/L	1.92	EPA 537.1	07/01/2022 11:13	WEL
					Certifications:			07/05/2022 15:04	
2991-50-6	* N-EtFOSAA	ND		0	ng/L	1.92	EPA 537.1	07/01/2022 11:13	WEL
					Certifications:			07/05/2022 15:04	
756426-58-1	* 9CL-PF3ONS	ND		0	ng/L	1.92	EPA 537.1	07/01/2022 11:13	WEL
					Certifications:			07/05/2022 15:04	
763051-92-9	* 11CL-PF3OUdS	ND		0	ng/L	1.92	EPA 537.1	07/01/2022 11:13	WEL
					Certifications:			07/05/2022 15:04	
13252-13-6	* HFPO-DA (Gen-X)	ND		0	ng/L	1.92	EPA 537.1	07/01/2022 11:13	WEL
					Certifications:			07/05/2022 15:04	
919005-14-4	* ADONA	ND		0	ng/L	1.92	EPA 537.1	07/01/2022 11:13	WEL
					Certifications:			07/05/2022 15:04	

Surrogate Recoveries	Result	Acceptance Range
Surrogate: d5-N-EtFOSAA	*95.7 %*	*70-130*
Surrogate: 13C-PFDA	*82.6 %*	*70-130*
Surrogate: 13C-PFHxA	*87.4 %*	*70-130*
Surrogate: M3HFPO-DA	*91.1 %*	*70-130*

Sample Information

Client Sample ID: 288673-PFAS-Field Blank **York Sample ID:** 22F1242-06

York Project (SDG) No.	Client Project ID	Matrix	Collection Date/Time	Date Received
22F1242	288625/288617/288673	Drinking Water	June 23, 2022 9:20 am	06/23/2022

Sample Information

Client Sample ID: 288673-PFAS-Field Blank **York Sample ID:** 22F1242-06

York Project (SDG) No.	Client Project ID	Matrix	Collection Date/Time	Date Received
22F1242	288625/288617/288673	Drinking Water	June 23, 2022 9:20 am	06/23/2022

PFAS, EPA 537.1 List **Log-in Notes:** **Sample Notes:**

Sample Prepared by Method: EPA 537.1 SPE DVB

CAS No.	Parameter	Result	Flag	Maximum Contaminant Level MCL, ng/L	Units	Reported to LOQ	Reference Method	Date/Time Analyzed	Analyst
375-73-5	* Perfluorobutanesulfonic acid (PFBS)	ND		0	ng/L	2.00	EPA 537.1	07/01/2022 11:13	WEL
					Certifications:			07/05/2022 15:18	
307-24-4	* Perfluorohexanoic acid (PFHxA)	ND		0	ng/L	2.00	EPA 537.1	07/01/2022 11:13	WEL
					Certifications:			07/05/2022 15:18	
375-85-9	* Perfluoroheptanoic acid (PFHpA)	ND		0	ng/L	2.00	EPA 537.1	07/01/2022 11:13	WEL
					Certifications:			07/05/2022 15:18	
355-46-4	* Perfluorohexanesulfonic acid (PFHxS)	ND		0	ng/L	2.00	EPA 537.1	07/01/2022 11:13	WEL
					Certifications:			07/05/2022 15:18	
335-67-1	Perfluorooctanoic acid (PFOA)	ND		10	ng/L	2.00	EPA 537.1	07/01/2022 11:13	WEL
					Certifications:		NELAC-NY12058	07/05/2022 15:18	
1763-23-1	Perfluorooctanesulfonic acid (PFOS)	ND		10	ng/L	2.00	EPA 537.1	07/01/2022 11:13	WEL
					Certifications:		NELAC-NY12058	07/05/2022 15:18	
375-95-1	* Perfluorononanoic acid (PFNA)	ND		0	ng/L	2.00	EPA 537.1	07/01/2022 11:13	WEL
					Certifications:			07/05/2022 15:18	
335-76-2	* Perfluorodecanoic acid (PFDA)	ND		0	ng/L	2.00	EPA 537.1	07/01/2022 11:13	WEL
					Certifications:			07/05/2022 15:18	
2058-94-8	* Perfluoroundecanoic acid (PFUnA)	ND		0	ng/L	2.00	EPA 537.1	07/01/2022 11:13	WEL
					Certifications:			07/05/2022 15:18	
307-55-1	* Perfluorododecanoic acid (PFDoA)	ND		0	ng/L	2.00	EPA 537.1	07/01/2022 11:13	WEL
					Certifications:			07/05/2022 15:18	
72629-94-8	* Perfluorotridecanoic acid (PFTrDA)	ND		0	ng/L	2.00	EPA 537.1	07/01/2022 11:13	WEL
					Certifications:			07/05/2022 15:18	
376-06-7	* Perfluorotetradecanoic acid (PFTA)	ND		0	ng/L	2.00	EPA 537.1	07/01/2022 11:13	WEL
					Certifications:			07/05/2022 15:18	
2355-31-9	* N-MeFOSAA	ND		0	ng/L	2.00	EPA 537.1	07/01/2022 11:13	WEL
					Certifications:			07/05/2022 15:18	
2991-50-6	* N-EtFOSAA	ND		0	ng/L	2.00	EPA 537.1	07/01/2022 11:13	WEL
					Certifications:			07/05/2022 15:18	
756426-58-1	* 9CL-PF3ONS	ND		0	ng/L	2.00	EPA 537.1	07/01/2022 11:13	WEL
					Certifications:			07/05/2022 15:18	
763051-92-9	* 11CL-PF3OUdS	ND		0	ng/L	2.00	EPA 537.1	07/01/2022 11:13	WEL
					Certifications:			07/05/2022 15:18	
13252-13-6	* HFPO-DA (Gen-X)	ND		0	ng/L	2.00	EPA 537.1	07/01/2022 11:13	WEL
					Certifications:			07/05/2022 15:18	
919005-14-4	* ADONA	ND		0	ng/L	2.00	EPA 537.1	07/01/2022 11:13	WEL
					Certifications:			07/05/2022 15:18	

Surrogate Recoveries	Result	Acceptance Range
Surrogate: d5-N-EtFOSAA	*96.6 %*	*70-130*
Surrogate: 13C-PFDA	*91.1 %*	*70-130*
Surrogate: 13C-PFHxA	*107 %*	*70-130*
Surrogate: M3HFPO-DA	*113 %*	*70-130*

Analytical Batch Summary

Batch ID: BF21540 **Preparation Method:** EPA 522 **Prepared By:** SJB

YORK Sample ID	Client Sample ID	Preparation Date
22F1242-01	288625	06/24/22
22F1242-02	288617	06/24/22
22F1242-03	288673	06/24/22
BF21540-BLK1	Blank	06/24/22
BF21540-BS1	LCS	06/24/22
BF21540-BS2	LCS	06/24/22
BF21540-DUP1	Duplicate	06/24/22
BF21540-MS1	Matrix Spike	06/24/22

Batch ID: BG20029 **Preparation Method:** EPA 537.1 SPE DVB **Prepared By:** WEL

YORK Sample ID	Client Sample ID	Preparation Date
22F1242-01	288625	07/01/22
22F1242-02	288617	07/01/22
22F1242-03	288673	07/01/22
22F1242-04	288625-PFAS-Field Blank	07/01/22
22F1242-05	288617-PFAS-Field Blank	07/01/22
22F1242-06	288673-PFAS-Field Blank	07/01/22
BG20029-BLK1	Blank	07/01/22
BG20029-BS1	LCS	07/01/22
BG20029-DUP1	Duplicate	07/01/22
BG20029-MS1	Matrix Spike	07/01/22

Semivolatile Organic Compounds by GC/MS/SIM - Quality Control Data

York Analytical Laboratories, Inc.

Analyte	Result	Reporting Limit	Units	Spike Level	Source* Result	%REC	%REC Limits	Flag	RPD	RPD Limit	Flag
Batch BF21540 - EPA 522											
Blank (BF21540-BLK1)									Prepared: 06/24/2022 Analyzed: 06/27/2022		
1,4-Dioxane	ND	0.200	ug/L								
Surrogate: 1,4-Dioxane-d8	*2.80*		*"*	*2.50*		*112*	*70-130*				
LCS (BF21540-BS1)									Prepared: 06/24/2022 Analyzed: 06/27/2022		
1,4-Dioxane	4.66	0.200	ug/L	5.00		93.2	70-130				
Surrogate: 1,4-Dioxane-d8	*2.20*		*"*	*2.50*		*88.0*	*70-130*				
LCS (BF21540-BS2)									Prepared: 06/24/2022 Analyzed: 06/27/2022		
1,4-Dioxane	8.86	0.200	ug/L	10.0		88.6	70-130				
Surrogate: 1,4-Dioxane-d8	*2.20*		*"*	*2.50*		*88.0*	*70-130*				
Duplicate (BF21540-DUP1)	*Source sample: 22F0847-01 (Duplicate)								Prepared: 06/24/2022 Analyzed: 06/27/2022		
1,4-Dioxane	ND	0.200	ug/L		ND					30	
Surrogate: 1,4-Dioxane-d8	*2.60*		*"*	*2.50*		*104*	*70-130*				
Matrix Spike (BF21540-MS1)	*Source sample: 22F0765-01 (Matrix Spike)								Prepared: 06/24/2022 Analyzed: 06/27/2022		
1,4-Dioxane	4.17	0.200	ug/L	5.00	ND	83.4	70-130				
Surrogate: 1,4-Dioxane-d8	*2.40*		*"*	*2.50*		*96.0*	*70-130*				

Analyte	Result	Reporting Limit	Units	Spike Level	Source* Result	%REC	%REC Limits	Flag	RPD	RPD Limit	Flag
Batch BG20029 - EPA 537.1 SPE DVB											
Blank (BG20029-BLK1)									Prepared: 07/01/2022 Analyzed: 07/05/2022		
Perfluorobutanesulfonic acid (PFBS)	ND	2.00	ng/L								
Perfluorohexanoic acid (PFHxA)	ND	2.00	"								
Perfluoroheptanoic acid (PFHpA)	ND	2.00	"								
Perfluorohexanesulfonic acid (PFHxS)	ND	2.00	"								
Perfluorooctanoic acid (PFOA)	ND	2.00	"								
Perfluorooctanesulfonic acid (PFOS)	ND	2.00	"								
Perfluorononanoic acid (PFNA)	ND	2.00	"								
Perfluorodecanoic acid (PFDA)	ND	2.00	"								
Perfluoroundecanoic acid (PFUnA)	ND	2.00	"								
Perfluorododecanoic acid (PFDoA)	ND	2.00	"								
Perfluorotridecanoic acid (PFTrDA)	ND	2.00	"								
Perfluorotetradecanoic acid (PFTA)	ND	2.00	"								
N-MeFOSAA	ND	2.00	"								
N-EtFOSAA	ND	2.00	"								
9CL-PF3ONS	ND	2.00	"								
11CL-PF3OUdS	ND	2.00	"								
HFPO-DA (Gen-X)	ND	2.00	"								
ADONA	ND	2.00	"								
Surrogate: d5-N-EtFOSAA	*287*		"	*320*		*89.5*	*70-130*				
Surrogate: 13C-PFDA	*69.4*		"	*80.0*		*86.8*	*70-130*				
Surrogate: 13C-PFHxA	*75.8*		"	*80.0*		*94.7*	*70-130*				
Surrogate: M3HFPO-DA	*73.2*		"	*80.0*		*91.5*	*70-130*				
LCS (BG20029-BS1)									Prepared: 07/01/2022 Analyzed: 07/05/2022		
Perfluorobutanesulfonic acid (PFBS)	32.3	2.00	ng/L	35.4		91.1	70-130				
Perfluorohexanoic acid (PFHxA)	34.8	2.00	"	40.0		87.0	70-130				
Perfluoroheptanoic acid (PFHpA)	36.5	2.00	"	40.0		91.2	70-130				
Perfluorohexanesulfonic acid (PFHxS)	35.4	2.00	"	38.0		93.0	70-130				
Perfluorooctanoic acid (PFOA)	37.9	2.00	"	40.0		94.7	70-130				
Perfluorooctanesulfonic acid (PFOS)	37.2	2.00	"	38.4		96.9	70-130				
Perfluorononanoic acid (PFNA)	38.4	2.00	"	40.0		95.9	70-130				
Perfluorodecanoic acid (PFDA)	32.7	2.00	"	40.0		81.7	70-130				
Perfluoroundecanoic acid (PFUnA)	36.4	2.00	"	40.0		91.0	70-130				
Perfluorododecanoic acid (PFDoA)	36.4	2.00	"	40.0		91.1	70-130				
Perfluorotridecanoic acid (PFTrDA)	31.3	2.00	"	40.0		78.2	70-130				
Perfluorotetradecanoic acid (PFTA)	32.5	2.00	"	40.0		81.2	70-130				
N-MeFOSAA	37.4	2.00	"	40.0		93.5	70-130				
N-EtFOSAA	37.5	2.00	"	40.0		93.6	70-130				
9CL-PF3ONS	33.9	2.00	"	37.4		90.6	60-130				
11CL-PF3OUdS	31.1	2.00	"	37.8		82.3	60-130				
HFPO-DA (Gen-X)	33.8	2.00	"	40.0		84.6	60-130				
ADONA	32.7	2.00	"	37.8		86.5	60-130				
Surrogate: d5-N-EtFOSAA	*337*		"	*320*		*105*	*70-130*				
Surrogate: 13C-PFDA	*74.7*		"	*80.0*		*93.3*	*70-130*				
Surrogate: 13C-PFHxA	*83.2*		"	*80.0*		*104*	*70-130*				
Surrogate: M3HFPO-DA	*78.9*		"	*80.0*		*98.6*	*70-130*				

PFAS Target compounds by LC/MS-MS - Quality Control Data

York Analytical Laboratories, Inc.

Analyte	Result	Reporting Limit	Units	Spike Level	Source* Result	%REC	%REC Limits	Flag	RPD	RPD Limit	Flag
Batch BG20029 - EPA 537.1 SPE DVB											
Duplicate (BG20029-DUP1)	*Source sample: 22F1242-04 (288625-PFAS-Field Blank)								Prepared: 07/01/2022 Analyzed: 07/05/2022		
Perfluorobutanesulfonic acid (PFBS)	ND	2.17	ng/L		ND					25	
Perfluorohexanoic acid (PFHxA)	ND	2.17	"		ND					25	
Perfluoroheptanoic acid (PFHpA)	ND	2.17	"		ND					25	
Perfluorohexanesulfonic acid (PFHxS)	ND	2.17	"		ND					25	
Perfluorooctanoic acid (PFOA)	ND	2.17	"		ND					25	
Perfluorooctanesulfonic acid (PFOS)	ND	2.17	"		ND					25	
Perfluorononanoic acid (PFNA)	ND	2.17	"		ND					25	
Perfluorodecanoic acid (PFDA)	ND	2.17	"		ND					25	
Perfluoroundecanoic acid (PFUnA)	ND	2.17	"		ND					25	
Perfluorododecanoic acid (PFDoA)	ND	2.17	"		ND					25	
Perfluorotridecanoic acid (PFTrDA)	ND	2.17	"		ND					25	
Perfluorotetradecanoic acid (PFTA)	ND	2.17	"		ND					25	
N-MeFOSAA	ND	2.17	"		ND					25	
N-EtFOSAA	ND	2.17	"		ND					25	
9CL-PF3ONS	ND	2.17	"		ND					25	
11CL-PF3OUdS	ND	2.17	"		ND					25	
HFPO-DA (Gen-X)	ND	2.17	"		ND					25	
ADONA	ND	2.17	"		ND					25	
Surrogate: d5-N-EtFOSAA	*348*		*"*	*348*		*100*	*70-130*				
Surrogate: 13C-PFDA	*77.2*		*"*	*87.0*		*88.8*	*70-130*				
Surrogate: 13C-PFHxA	*87.6*		*"*	*87.0*		*101*	*70-130*				
Surrogate: M3HFPO-DA	*84.0*		*"*	*87.0*		*96.6*	*70-130*				
Matrix Spike (BG20029-MS1)	*Source sample: 22F1306-01 (Matrix Spike)								Prepared: 07/01/2022 Analyzed: 07/05/2022		
Perfluorobutanesulfonic acid (PFBS)	58.9	2.00	ng/L	70.8	ND	83.1	70-130				
Perfluorohexanoic acid (PFHxA)	64.6	2.00	"	80.0	ND	80.7	70-130				
Perfluoroheptanoic acid (PFHpA)	69.6	2.00	"	80.0	ND	87.0	70-130				
Perfluorohexanesulfonic acid (PFHxS)	71.2	2.00	"	76.0	ND	93.7	70-130				
Perfluorooctanoic acid (PFOA)	72.3	2.00	"	80.0	ND	90.4	70-130				
Perfluorooctanesulfonic acid (PFOS)	68.0	2.00	"	76.8	ND	88.6	70-130				
Perfluorononanoic acid (PFNA)	68.4	2.00	"	80.0	ND	85.5	70-130				
Perfluorodecanoic acid (PFDA)	65.0	2.00	"	80.0	ND	81.2	70-130				
Perfluoroundecanoic acid (PFUnA)	67.1	2.00	"	80.0	ND	83.9	70-130				
Perfluorododecanoic acid (PFDoA)	64.8	2.00	"	80.0	ND	81.0	70-130				
Perfluorotridecanoic acid (PFTrDA)	60.5	2.00	"	80.0	ND	75.6	70-130				
Perfluorotetradecanoic acid (PFTA)	63.2	2.00	"	80.0	ND	79.0	70-130				
N-MeFOSAA	73.5	2.00	"	80.0	ND	91.8	70-130				
N-EtFOSAA	69.6	2.00	"	80.0	ND	87.0	70-130				
9CL-PF3ONS	67.2	2.00	"	74.8	ND	89.9	70-130				
11CL-PF3OUdS	59.4	2.00	"	75.6	ND	78.5	70-130				
HFPO-DA (Gen-X)	59.2	2.00	"	80.0	ND	74.0	70-130				
ADONA	60.6	2.00	"	75.6	ND	80.2	50-130				
Surrogate: d5-N-EtFOSAA	*304*		*"*	*320*		*94.9*	*70-130*				
Surrogate: 13C-PFDA	*70.4*		*"*	*80.0*		*88.0*	*70-130*				
Surrogate: 13C-PFHxA	*77.0*		*"*	*80.0*		*96.2*	*70-130*				
Surrogate: M3HFPO-DA	*72.0*		*"*	*80.0*		*90.0*	*70-130*				

Sample and Data Qualifiers Relating to This Work Order

Definitions and Other Explanations

*	Analyte is not certified or the state of the samples origination does not offer certification for the Analyte.
ND	NOT DETECTED - the analyte is not detected at the Reported to level (LOQ/RL or LOD/MDL)
RL	REPORTING LIMIT - the minimum reportable value based upon the lowest point in the analyte calibration curve.
LOQ	LIMIT OF QUANTITATION - the minimum concentration of a target analyte that can be reported within a specified degree of confidence. This is the lowest point in an analyte calibration curve that has been subjected to all steps of the processing/analysis and verified to meet defined criteria. This is based upon NELAC 2009 Standards and applies to all analyses.
LOD	LIMIT OF DETECTION - a verified estimate of the minimum concentration of a substance in a given matrix that an analytical process can reliably detect. This is based upon NELAC 2009 Standards and applies to all analyses conducted under the auspices of EPA SW-846.
MDL	METHOD DETECTION LIMIT - a statistically derived estimate of the minimum amount of a substance an analytical system can reliably detect with a 99% confidence that the concentration of the substance is greater than zero. This is based upon 40 CFR Part 136 Appendix B and applies only to EPA 600 and 200 series methods.
Reported to	This indicates that the data for a particular analysis is reported to either the LOD/MDL, or the LOQ/RL. In cases where the "Reported to" is located above the LOD/MDL, any value between this and the LOQ represents an estimated value which is "J" flagged accordingly. This applies to volatile and semi-volatile target compounds only.
NR	Not reported
RPD	Relative Percent Difference
Wet	The data has been reported on an as-received (wet weight) basis
Low Bias	Low Bias flag indicates that the recovery of the flagged analyte is below the laboratory or regulatory lower control limit. The data user should take note that this analyte may be biased low but should evaluate multiple lines of evidence including the LCS and site-specific MS/MSD data to draw bias conclusions. In cases where no site-specific MS/MSD was requested, only the LCS data can be used to evaluate such bias.
High Bias	High Bias flag indicates that the recovery of the flagged analyte is above the laboratory or regulatory upper control limit. The data user should take note that this analyte may be biased high but should evaluate multiple lines of evidence including the LCS and site-specific MS/MSD data to draw bias conclusions. In cases where no site-specific MS/MSD was requested, only the LCS data can be used to evaluate such bias.
Non-Dir.	Non-dir. flag (Non-Directional Bias) indicates that the Relative Percent Difference (RPD) (a measure of precision) among the MS and MSD data is outside the laboratory or regulatory control limit. This alerts the data user where the MS and MSD are from site-specific samples that the RPD is high due to either non-homogeneous distribution of target analyte between the MS/MSD or indicates poor reproducibility for other reasons.
MCL	This is the Maximum Contaminant Level in ng/L (ppt) establised by the NYSDOH for these compounds wheree an MCL is reported. Exceedences are flagged according.

Field Chain-of-Custody Record

YORK
ANALYTICAL LABORATORIES INC

York Analytical Laboratories, Inc. (YORK)'s Standard Terms & Conditions are listed on the back side of this document.
This document serves as your written authorization for YORK to proceed with the analyses requested below.
Your signature binds you to YORK's Standard Terms & Conditions.

YORK Project No. 22F1242

120 Research Drive Stratford, CT 06615 | 132-02 89th Ave Queens, NY 11418 | clientservices@yorklab.com | www.yorklab.com | 800-306-YORK | 800-306-9675 | Page ____ of ____

YOUR Information	Report To:	Invoice To:	YOUR Project Number	Turn-Around Time
Company:	Company: Agua Environmental Lab	Company:		RUSH - Next Day
Address:	Address:	Address:	YOUR Project Name	RUSH - Two Day
Phone.:	Phone.:	Phone.:		RUSH - Three Day
Contact:	Contact:	Contact:		RUSH - Four Day
E-mail:	E-mail:	E-mail:	YOUR PO#:	Standard (5-7 Day)

Please print clearly and legibly. All information must be complete. Samples will not be logged in and the turn-around-time clock will not begin until any questions by YORK are resolved.

Samples Collected by: (print AND sign your name)

Matrix Codes
S - soil / solid
GW - groundwater
DW - drinking water
WW - wastewater
O - Oil | Other

Samples From
New York ✓
New Jersey
Connecticut
Pennsylvania
Other:

Report / EDD Type (circle selections)
Summary Report | CT RCP | Standard Excel EDD
QA Report | CT RCP DQA/DUE | EQuIS (Standard)
NY ASP A Package | NJDEP Reduced Deliverables | NYSDEC EQuIS
NY ASP B Package | NJDEP SRP HazSite
NJDKQP | Other:

YORK Reg. Comp.
Compared to the following Regulation(s): (please fill in)

Sample Identification	Sample Matrix	Date/Time Sampled	Analysis Requested	Container Description
288625	DW	6/23/22 8:40 am	PFAS Method 537 18 Compound +	1,4 Dioxane
288617	DW	6/23/22 9:40 am	PFAS Method 537 18 Compound +	1,4 Dioxane
288623	DW	6/23/22 9:20 am	PFAS Method 537 18 Compound +	1,4 Dioxane

Comments:

Preservation: (check all that apply)
HCl ____ MeOH ____ HNO3 ____ H2SO4 ____ NaOH ____
ZnAc ____ Ascorbic Acid ____ Other: ____

Special Instruction
Field Filtered
Lab to Filter

Samples iced/chilled at time of lab pickup? circle Yes or No

Samples Relinquished by / Company	Date/Time	Samples Received by / Company	Date/Time	Samples Relinquished by / Company	Date/Time
[illegible]	6/23/22 12:55 pm	1.		2. S Beaman 6/23	13:55
Samples Received by / Company	Date/Time	3. Samples Relinquished by / Company	Date/Time	3. Samples Received by / Company	Date/Time
Samples Relinquished by / Company	Date/Time	4. Samples Received by / Company	Date/Time	Samples Received in LAB by	Date/Time 6/24/22 1317 Temperature 1.0 Degrees C

AQUA ENVIRONMENTAL LAB
56 Church Hill Road • Newtown, CT 06470 • (203) 270-9973
A York Analytical Company
YORK ANALYTICAL LABORATORIES INC

Report of Analysis

Name: WSP, USA
4 Research Dr.
Ste. 204
Shelton, CT 06484
Sample Date: 6/20/2022 2:03 PM
Receipt Date: 6/20/2022 2:03 PM
Report Date: 7/25/2022
Sample Site: Summit Well 1

Sample ID#: 288608
Sample Type: Drinking Water
Sampler: WSP

Parameter	Sample Result	Units	Limits	Method	RL	Analysis Date / Time
Organic Compounds						
Propylene Glycol	1.5	mg/L	No Limit Set	SW8015	1	6/27/2022 14:05

ND = Not Detected
* = Above Specified Limit

Report Approved by: _____ CT Lic PH-0787 NY Lic 11706
Lab Director

AquaEnvLab.com
YorkLab.com
203 270 9973

Analytical results relate to the samples as received at the laboratory. Report shall not be reproduced except in its entirety without written approval from the laboratory.

EnviroTest Laboratories Inc.

ANALYTICAL REPORT

Job Number: 420-227330-1

SDG Number: Summit Club Well 1

Job Description: WSP USA

For:
WSP USA
4 Research Drive
Shelton, CT 06464

Attention: Stacy Stieber

Mary Hernandez
Customer Service Manager
reports@envirotestlaboratories.com
08/16/2022

NYSDOH ELAP does not certify for all parameters. EnviroTest Laboratories does hold certification for all analytes where certification is offered by ELAP unless otherwise specified in the Certification Information section of this report. Pursuant to NELAP, this report may not be reproduced, except in full, without written approval of the laboratory. EnviroTest Laboratories LLC certifies that the analytical results contained herein apply only to the samples tested as received by our laboratory. All questions regarding this report should be directed to the EnviroTest Customer Service Representative. All services performed by EnviroTest Laboratories LLC are subject to our Terms and Conditions available at Envirotestlabs/terms.com. As of 12/23/19, EnviroTest Laboratories LLC acquired substantially all of the lab and testing assets of EnviroTest Laboratories Inc, including its name.

EnviroTest Laboratories, LLC. Certifications and Approvals: NYSDOH 10142, NJDEP NY015, CTDOPH PH-0554

METHOD SUMMARY

Client: WSP USA

Job Number: 420-227330-1
SDG Number: Summit Club Well 1

Description	Lab Location	Method	Preparation Method
Matrix: Water			
General Sub Contract Method		Subcontract	

Lab References:

=

Method References:

SAMPLE SUMMARY

Client: WSP USA

Job Number: 420-227330-1
SDG Number: Summit Club Well 1

Lab Sample ID	Client Sample ID	Client Matrix	Date/Time Sampled	Date/Time Received
420-227330-1	Well 1	Water	06/22/2022 0850	06/22/2022 1145

Analytical Services, Inc.

CHAIN OF CUSTODY RECORD

Ship to: Analytical Services, Inc., 130 Allen Brook Lane, Williston, VT 05495, Attn: Sample Management
Phone: 1-800-723-4432 or 802-878-5138 • Fax: 802-878-6765 *Web site: www.analyticalservices.com*

Submitted By: WSP USA 4 Research Drive, Ste 204 Shelton, CT 06484 Phone: 475-882-1703 Email: stacy.stober@wsp.com	Report To: Stacy Stober WSP USA 4 Research Drive, Ste 204 Shelton CT 06484 Phone: 475-882-1703 Email: stacy.stober@wsp.com
Project Name: Summit Club Job Site: P.O. Number: 31403576.002	Invoice To: Phone: ___ Email: ___

Sample Identification*	Sample Collection			Sample Matrix (check one)						Analysis Requested	Lab Use Only
	Date (Start)	Time (Start)	Sampler Initials	Water - Raw	Water - Finished	Waste Water	Biosolids	Soil/Sediment	Other		Temp (°C)
Well 1	6/22/22	850	SS	X						NPA w/ IFA	

*Sample ID should match ID written on the sample containers and data sheets. Sample ID will appear on the report for identification.

Relinquished By (signature)	Date/Time	Received By (signature)	Date/Time
[signature]	6/22/22 1145	[signature]	6/22/22 1145

Field Comments:	Lab Comments:

White – To accompany samples • Yellow – Sampler Copy

LOGIN SAMPLE RECEIPT CHECK LIST

Client: WSP USA

Job Number: 420-227330-1
SDG Number: Summit Club Well 1

Login Number: **227330**

Question	T/F/NA	Comment
Samples were collected by ETL employee as per SOP-SAM-1	NA	
The cooler's custody seal, if present, is intact.	NA	
The cooler or samples do not appear to have been compromised or tampered with.	True	
Samples were received on ice.	True	
Cooler Temperature is recorded.	True	2.2C
Cooler Temp. is within method specified range.(0-4 C PW, 0-6 C NPW, or BAC <10 C	True	
If false, was sample received on ice within 6 hours of collection.	NA	
Based on above criteria cooler temperature is acceptable.	True	
COC is present.	True	
COC is filled out in ink and legible.	True	
COC is filled out with all pertinent information.	True	
There are no discrepancies between the sample IDs on the containers and the COC.	True	
Samples are received within Holding Time.	True	
Sample containers have legible labels.	True	
Containers are not broken or leaking.	True	
Sample collection date/times are provided.	True	
Appropriate sample containers are used.	True	
Sample bottles are completely filled.	True	
There is sufficient vol. for all requested analyses, incl. any requested MS/MSDs	True	
VOA sample vials do not have headspace or bubble is <6mm (1/4") in diameter.	NA	
If necessary, staff have been informed of any short hold time or quick TAT needs	True	
Multiphasic samples are not present.	True	
Samples do not require splitting or compositing.	True	

ANALYTICAL SERVICES, INC.
Microbiological Testing, Research and Consulting

130 Allen Brook Ln., PO Box 515, Williston, VT 05495 USA
1.800.723.4432 / 802.878.5138 Fax: 802.878.6765
www.analyticalservices.com

8/15/2022

Ron Bayer
EnviroTest Laboratories
315 Fullerton Ave
Newburgh, NY 12550

Subj.: ASI Report 69086

Dear Ron,

Enclosed please find the results of Microscopic Particulate Analysis (MPA) performed by Analytical Services, Inc. (ASI).

Sample(s) covered in this report were received at ASI on: 6/23/2022

This report contains the following number of pages (total): 5

This report concerns only the samples referenced herein. These results were generated under ASI's quality system, which is in accordance with the NELAC (TNI) standard. Deviations, if any, are noted.

Exceptions: NA

This report shall not be reproduced, except in full, without ASI's written permission.

Thank you for using ASI for your microbiological testing needs. If you have any questions, please contact us at 800-723-4432.

Sincerely,
ANALYTICAL SERVICES, INC. (ASI)

Harry D. Christman, Ph.D.
Technical Director

P 1/1

Microscopic Particulate Analysis (MPA)

Sample Information

Client	EnviroTest Laboratories	Volume Sampled (gal)	788.4
Site	Summit Club	Filter Color	Off-White
Water Type	Raw/Well	Sediment Volume (mL)	0.3
Client Sample ID	Well 1	Analysis Start	6/23/22 12:00
ASI Sample #	69086-01	Analysis End	8/4/22

MPA Data (data per 100 gal.)

Vol. Examined at 150x (gal.)	100	Detection Limit at 150X =	1.0
Vol. Examined at 300x (gal.)	NA	Detection Limit at 300X =	NA
Amorphous Debris	Uniform	Iron Bacteria	ND
Vegetative Debris w/ chlorophyll	ND	Crustaceans	ND
Veg. Debris w/o chlorophyll	1	Crustacean Parts/Eggs	ND
Diatoms w/ chlorophyll (300X)	ND	Water Mites	ND
Diatoms w/o chlorophyll (300X)	ND	Gastrotrichs	ND
Other Algae (300X, see below)	ND	Tardigrades	ND
Coccidia (300x)	ND	Nematodes/N. Eggs	ND
Rotifiers / Rotifier Eggs	ND	Invertebrate Eggs	ND
Spores	ND	Annelids	ND
Pollen	ND	Amoeba	ND
Insects/Larvae	ND	Protozoa (300X, non-Crypto/Giardia)	ND

Cryptosporidium and Giardia Data

		RESULTS	
Volume Examined (gal.)	394.2	Examined	Per 100gal
	Cryptosporidium Oocysts:	0	<0.25
	Giardia Cysts:	0	<0.25

MPA Risk Rating Score (per EPA Consensus Method)

Numerical Score	0	Risk Rating	Low

Other

Algae Observed	NA
Comments	NA

Methods: MPA - SOP based on EPA Consensus Method (EPA 910/9-92-029)

Cryptosporidium & Giardia - SOP based on purification, staining & exam procedures in EPA 1623/1623.1

Notes MPA Risk Rating Tables were developed by USEPA Region 10 from limited data; interpret with caution.

MPA Risk Rating Score - if less than 100 gallons was examined, interpret with caution.

Microscopic Particulate Analysis (MPA)

Sample Information

Client	EnviroTest Laboratories	Volume Sampled (gal)	562.2
Site	Summit Club	Filter Color	Off-White
Water Type	Raw/Well	Sediment Volume (mL)	0.2
Client Sample ID	Well 6A	Analysis Start	6/23/22 12:35
ASI Sample #	69086-02	Analysis End	8/4/22

MPA Data (data per 100 gal.)

Vol. Examined at 150x (gal.)	100	Detection Limit at 150X =	1.0
Vol. Examined at 300x (gal.)	NA	Detection Limit at 300X =	NA
Amorphous Debris	Uniform	Iron Bacteria	ND
Vegetative Debris w/ chlorophyll	ND	Crustaceans	ND
Veg. Debris w/o chlorophyll	4	Crustacean Parts/Eggs	ND
Diatoms w/ chlorophyll (300X)	ND	Water Mites	ND
Diatoms w/o chlorophyll (300X)	ND	Gastrotrichs	ND
Other Algae (300X, see below)	ND	Tardigrades	ND
Coccidia (300x)	ND	Nematodes/N. Eggs	ND
Rotifiers / Rotifier Eggs	ND	Invertebrate Eggs	ND
Spores	ND	Annelids	ND
Pollen	ND	Amoeba	ND
Insects/Larvae	ND	Protozoa (300X, non-Crypto/Giardia)	ND

Cryptosporidium and Giardia Data

		RESULTS	
Volume Examined (gal.)	281.1	Examined	Per 100gal
	Cryptosporidium Oocysts:	0	<0.36
	Giardia Cysts:	0	<0.36

MPA Risk Rating Score (per EPA Consensus Method)

Numerical Score	0	Risk Rating	Low

Other

Algae Observed	NA
Comments	NA

Methods: MPA - SOP based on EPA Consensus Method (EPA 910/9-92-029)

Cryptosporidium & Giardia - SOP based on purification, staining & exam procedures in EPA 1623/1623.1

Notes MPA Risk Rating Tables were developed by USEPA Region 10 from limited data; interpret with caution.

MPA Risk Rating Score - if less than 100 gallons was examined, interpret with caution.

227330

Page ___ of ___

Analytical Services, Inc.

CHAIN OF CUSTODY RECORD

Ship to: Analytical Services, Inc., 130 Allen Brook Lane, Williston, VT 05495, Attn: Sample Management
Phone: 1-800-723-4432 or 802-878-5138 • Fax: 802-878-6765 *Web site: www.analyticalservices.com*

Submitted By: WSP USA 4 Research Drive, Ste 204 Shelton, CT 06484 Phone: 475-882-1723 Email: stacy.stieber@wsp.com	Report To: Stacy Stieber WSP USA 4 Research Drive, Ste 204 Shelton, CT 06484 Phone: 475-882-1723 Email: stacy.stieber@wsp.com
Project Name: Summit Club Job Site: P.O. Number: 31403576.002	Invoice To: Phone: ___ Email: ___

Sample Identification*	Sample Collection			Sample Matrix (check one)						Analysis Requested	Lab Use Only
	Date (Start)	Time (Start)	Sampler Initials	Water - Raw	Water - Finished	Waste Water	Biosolids	Soil/Sediment	Other		Temp (°C)
Well 1	6/22/22	850	SZ	X						MPA w/ IFA	8.7°

*Sample ID should match ID written on the sample containers and data sheets. Sample ID will appear on the report for identification.

Relinquished By (signature)	Date/Time	Received By (signature)	Date/Time
	6/22/22 1145		6/22/22 1145
	6/22/22 1525		6/23/22 1040

Field Comments:

Lab Comments:

1/5

White – To accompany samples • Yellow – Sampler Copy

227328

Page ___ of ___

Analytical Services, Inc.

CHAIN OF CUSTODY RECORD

Ship to: Analytical Services, Inc., 130 Allen Brook Lane, Williston, VT 05495, Attn: Sample Management
Phone: 1-800-723-4432 or 802-878-5138 • Fax: 802-878-6765 *Web site: www.analyticalservices.com*

Submitted By: WSP USA 4 Research Drive, Suite 204 Shelton, CT 06484 Phone: 475-882-1723 Email: stacy.stieber@wsp.com	Report To: Stacy Stieber WSP USA Shelton 4 Research Drive Shelton, CT 06484 Phone: 475-882-1723 Email: stacy.stieber@wsp.com
Project Name: Summit Club Job Site: 31403576.002 P.O. Number:	Invoice To: Phone: Email:

Sample Identification*	Sample Collection			Sample Matrix (check one)						Analysis Requested	Lab Use Only
	Date (Start)	Time (Start)	Sampler Initials	Water - Raw	Water - Finished	Waste Water	Biosolids	Soil/Sediment	Other		Temp (°C)
Well 6A	6/22/22	855	SZ	X						MPA w/ IFA	6.0

*Sample ID should match ID written on the sample containers and data sheets. Sample ID will appear on the report for identification.

Relinquished By (signature)	Date/Time	Received By (signature)	Date/Time
	6/22/22 1145		6/22/22 1145
	6/22/22 1520		6/23/22 1040

Field Comments:

Lab Comments:

T/A

White – To accompany samples • Yellow – Sampler Copy

WELL 3

AQUA ENVIRONMENTAL LAB
56 Church Hill Road • Newtown, CT 06470 • (203) 270-9973
A York Analytical Company
YORK

Report of Analysis

Name: WSP, USA
4 Research Dr.
Ste. 204
Shelton, CT 06484
Sample Date: 6/20/2022 2:03 PM
Receipt Date: 6/20/2022 2:03 PM
Report Date: 7/11/2022
Sample Site: Summit Well 3

Sample ID#: 288621
Sample Type: Drinking Water
Sampler: WSP

Parameter	Sample Result	Units	Limits	Method	RL	Analysis Date / Time
Biological						
Coliform Bacteria	present *	none	0	SM9223B-04	0	6/23/2022 16:30
e Coli Bacteria	absent	none	0	SM9223B-04	0	6/23/2022 16:30
Heterotrophic Plate Count	195	MPN	No Limit Set	SM9215E	0	6/23/2022 13:40
Inorganic Compounds						
Chlorine, residual	0	mg/L	4	SM4500CLG-2011	0	6/20/2022 14:03
Metals						
Arsenic	ND	mg/L	0.01	EPA 200.5	0.005	6/24/2022 13:11
Copper	ND	mg/L	1.3	EPA 200.5	0.005	6/24/2022 13:11
Iron	ND	mg/L	0.3	EPA 200.5	0.005	6/24/2022 13:11
Lead	ND	mg/L	0.015	EPA 200.5	0.001	6/24/2022 13:11
Manganese	ND	mg/L	0.05	EPA 200.5	0.005	6/24/2022 13:11
Minerals						
Alkalinity	144	mg/L	No Limit Set	SM 2320B (-97)	5	7/5/2022 17:10
Chloride	8.0	mg/L	250	EPA 300.0	1	6/23/2022 21:42
Hardness	169	mg/L	No Limit Set	EPA 200.5	5	6/24/2022 13:11
Sodium	7.6	mg/L	100	EPA 200.5	1	6/24/2022 13:11
Sulfate	25.5	mg/L	250	EPA 300.0	2	6/23/2022 21:42
Miscellaneous/Other						
Langelier Saturation Index	-0.60 *	LSI	No Limit Set	CALCTN	None	7/6/2022 18:10
Nutrient						
Nitrate as N	1.0	mg/L	10	EPA 300.0	0.5	6/23/2022 21:42
Nitrite as N	ND	mg/L	1	EPA 300.0	0.1	6/23/2022 21:42
Physical						
Color, apparent	<5	CU	15	SM 2120B-01	5	6/21/2022 13:30
Odor	0	TON	2	SM2150B-2011	0	6/23/2022 16:00

Based on the bacteriological examination, according to the Federal Safe Drinking Water Act (SDWA), this water was unsafe for drinking purpose at the time the sample was collected. Corrective measures, followed by re-examination, are recommended.
*Serious corrosion.

ND = Not Detected
* = Above Specified Limit

CT Lic PH-0787 NY Lic 11706

AquaEnvLab.com
YorkLab.com
203 270 9973

Analytical results relate to the samples as received at the laboratory. Report shall not be reproduced except in its entirety without written approval from the laboratory.

AQUA ENVIRONMENTAL LAB
56 Church Hill Road • Newtown, CT 06470 • (203) 270-9973
A York Analytical Company
YORK

Report of Analysis

Name: WSP, USA
4 Research Dr.
Ste. 204
Shelton, CT 06484
Sample Date: 6/20/2022 2:03 PM
Receipt Date: 6/20/2022 2:03 PM
Report Date: 7/11/2022
Sample Site: Summit Well 3

Sample ID#: 288621
Sample Type: Drinking Water
Sampler: WSP

Parameter	Sample Result	Units	Limits	Method	RL	Analysis Date / Time
Physical						
PH	7.6	pH	6.4 - 8.5	SM4500HB-2011	0	6/20/2022 14:03
Total Dissolved Solids (TDS)	246	mg/L	500	SM2540C-2011	None	6/29/2022 12:03
Turbidity	0.30	NTU	5	EPA 180.1	0.05	6/23/2022 16:00
Radiochemicals						
Water Radon(212835)	813 +/-30	pCi/L	No Limit Set	SM7500Rn-23	0	6/23/2022 16:50

Comments: Based on the bacteriological examination, according to the Federal Safe Drinking Water Act (SDWA), this water was unsafe for drinking purpose at the time the sample was collected. Corrective measures, followed by re-examination, are recommended.
*Serious corrosion.

ND = Not Detected
* = Above Specified Limit

Report Approved by: _____ CT Lic PH-0787 NY Lic 11706
Lab Director

AquaEnvLab.com
YorkLab.com
203 270 9973

Analytical results relate to the samples as received at the laboratory. Report shall not be reproduced except in its entirety without written approval from the laboratory.

AQUA ENVIRONMENTAL LAB
56 Church Hill Road • Newtown, CT 06470 • (203) 270-9973
A York Analytical Company
YORK

Report of Analysis

Name: WSP, USA
4 Research Dr.
Ste. 204
Shelton, CT 06484
Sample Date: 6/20/2022 2:03 PM
Receipt Date: 6/20/2022 2:03 PM
Report Date: 7/27/2022
Sample Site: Summit Well 3

Sample ID#: 288622
Sample Type: Drinking Water
Sampler: WSP

Parameter	Sample Result	Units	Limits	Method	RL	Analysis Date / Time
Metals						
Antimony	ND	mg/L	0.006	EPA 200.5	0.005	6/24/2022 13:11
Arsenic	ND	mg/L	0.01	EPA 200.5	0.005	6/24/2022 13:11
Barium	0.04	mg/L	2	EPA 200.5	0.001	6/24/2022 13:11
Beryllium	ND	mg/L	0.004	EPA 200.5	0.001	6/24/2022 13:11
Cadmium	ND	mg/L	0.005	EPA 200.5	0.001	6/24/2022 13:11
Chromium(T)	ND	mg/L	0.1	EPA 200.5	0.001	6/24/2022 13:11
Cyanide	<0.005	mg/L	0.2	EPA 335.4	0.005	6/24/2022 10:38
Mercury	<0.0002	mg/L	0.002	EPA 245.2	0.0002	6/29/2022 10:36
Nickel	ND	mg/L	0.1	EPA 200.5	0.001	6/24/2022 13:11
Selenium	ND	mg/L	0.05	EPA 200.5	0.005	6/24/2022 13:11
Silver	ND	mg/L	0.1	EPA 200.5	0.002	6/24/2022 13:11
Thallium	ND	mg/L	0.002	EPA 200.8	0.001	6/29/2022 16:21
Zinc	ND	mg/L	5	EPA 200.5	0.005	6/24/2022 13:11
Minerals						
Chloride	8.0	mg/L	250	EPA 300.0	1	6/23/2022 21:42
Fluoride	ND	mg/L	4	EPA 300.0	0.1	6/23/2022 21:42
Sodium	7.6	mg/L	100	EPA 200.5	1	6/24/2022 13:11
Sulfate	25.5	mg/L	250	EPA 300.0	2	6/23/2022 21:42

ND = Not Detected
* = Above Specified Limit

Report Approved by: _____ Lab Director

CT Lic PH-0787 NY Lic 11706

AquaEnvLab.com
YorkLab.com
203 270 9973

Analytical results relate to the samples as received at the laboratory. Report shall not be reproduced except in its entirety without written approval from the laboratory.

AQUA ENVIRONMENTAL LAB
56 Church Hill Road • Newtown, CT 06470 • (203) 270-9973
A York Analytical Company
YORK

Report of Analysis

Name: WSP, USA
4 Research Dr.
Ste. 204
Shelton, CT 06484
Sample Date: 6/20/2022 2:03 PM
Receipt Date: 6/20/2022 2:03 PM
Report Date: 7/25/2022
Sample Site: Summit Well 3

Sample ID#: 288626
Sample Type: Drinking Water
Sampler: WSP

Parameter	Sample Result	Units	Limits	Method	RL	Analysis Date / Time
Volatile Organic Compounds						
01) Benzene	ND	ug/L	5	EPA 524.2	0.5	6/27/2022 09:11
02) Bromobenzene	ND	ug/L	5	EPA 524.2	0.5	6/27/2022 09:11
03) Bromochloromethane	ND	ug/L	5	EPA 524.2	0.5	6/27/2022 09:11
04) Bromomethane	ND	ug/L	5	EPA 524.2	0.5	6/27/2022 09:11
05) n-Butylbenzene	ND	ug/L	5	EPA 524.2	0.5	6/27/2022 09:11
06) sec-Butylbenzene	ND	ug/L	5	EPA 524.2	0.5	6/27/2022 09:11
07) tert-Butylbenzene	ND	ug/L	5	EPA 524.2	0.5	6/27/2022 09:11
08) Carbon Tetrachloride	ND	ug/L	5	EPA 524.2	0.5	6/27/2022 09:11
09) Chlorobenzene	ND	ug/L	5	EPA 524.2	0.5	6/27/2022 09:11
10) Chloroethane	ND	ug/L	5	EPA 524.2	0.5	6/27/2022 09:11
11) Chloromethane	ND	ug/L	5	EPA 524.2	0.5	6/27/2022 09:11
12) 2-Chlorotoluene	ND	ug/L	5	EPA 524.2	0.5	6/27/2022 09:11
13) 4-Chlorotoluene	ND	ug/L	5	EPA 524.2	0.5	6/27/2022 09:11
14) Dibromomethane	ND	ug/L	5	EPA 524.2	0.5	6/27/2022 09:11
15) 1,2-Dichlorobenzene	ND	ug/L	5	EPA 524.2	0.5	6/27/2022 09:11
16) 1,3-Dichlorobenzene	ND	ug/L	5	EPA 524.2	0.5	6/27/2022 09:11
17) 1,4-Dichlorobenzene	ND	ug/L	5	EPA 524.2	0.5	6/27/2022 09:11
18) Dichlorodifluoromethane	ND	ug/L	5	EPA 524.2	0.5	6/27/2022 09:11
19) 1,1-Dichloroethane	ND	ug/L	5	EPA 524.2	0.5	6/27/2022 09:11
20) 1,2-Dichloroethane	ND	ug/L	5	EPA 524.2	0.5	6/27/2022 09:11
21) 1,1-Dichloroethene	ND	ug/L	5	EPA 524.2	0.5	6/27/2022 09:11
22) cis-1,2,-Dichloroethene	ND	ug/L	5	EPA 524.2	0.5	6/27/2022 09:11
23) trans-1,2-Dichloroethene	ND	ug/L	5	EPA 524.2	0.5	6/27/2022 09:11
24) 1,2-Dichloropropane	ND	ug/L	5	EPA 524.2	0.5	6/27/2022 09:11
25) 1,3-Dichloropropane	ND	ug/L	5	EPA 524.2	0.5	6/27/2022 09:11
26) 2,2-Dichloropropane	ND	ug/L	5	EPA 524.2	0.5	6/27/2022 09:11
27) 1,1-Dichloropropene	ND	ug/L	5	EPA 524.2	0.5	6/27/2022 09:11

ND = Not Detected
* = Above Specified Limit

CT Lic PH-0787 NY Lic 11706

AquaEnvLab.com
YorkLab.com
203 270 9973

Analytical results relate to the samples as received at the laboratory. Report shall not be reproduced except in its entirety without written approval from the laboratory.

AQUA ENVIRONMENTAL LAB
56 Church Hill Road • Newtown, CT 06470 • (203) 270-9973
A York Analytical Company
YORK

Report of Analysis

Name: WSP, USA
4 Research Dr.
Ste. 204
Shelton, CT 06484
Sample Date: 6/20/2022 2:03 PM
Receipt Date: 6/20/2022 2:03 PM
Report Date: 7/25/2022
Sample Site: Summit Well 3

Sample ID#: 288626
Sample Type: Drinking Water
Sampler: WSP

Parameter	Sample Result	Units	Limits	Method	RL	Analysis Date / Time
Volatile Organic Compounds						
28] cis- 1,3-Dichloropropene	ND	ug/L	5	EPA 524.2	0.5	6/27/2022 09:11
29] trans-1,3-Dichloropropene	ND	ug/L	5	EPA 524.2	0.5	6/27/2022 09:11
30) Ethylbenzene	ND	ug/L	5	EPA 524.2	0.5	6/27/2022 09:11
31) Isopropylbenzene	ND	ug/L	5	EPA 524.2	0.5	6/27/2022 09:11
32) p-Isopropyltoluene	ND	ug/L	5	EPA 524.2	0.5	6/27/2022 09:11
33) Methylene chloride	ND	ug/L	5	EPA 524.2	0.5	6/27/2022 09:11
34) n-Propylbenzene	ND	ug/L	5	EPA 524.2	0.5	6/27/2022 09:11
35) Styrene	ND	ug/L	5	EPA 524.2	0.5	6/27/2022 09:11
36) 1,1,1,2-Tetrachloroethane	ND	ug/L	5	EPA 524.2	0.5	6/27/2022 09:11
37) 1,1,2,2-Tetrachloroethane	ND	ug/L	5	EPA 524.2	0.5	6/27/2022 09:11
38) Tetrachloroethene	ND	ug/L	5	EPA 524.2	0.5	6/27/2022 09:11
39) Toluene	ND	ug/L	5	EPA 524.2	0.5	6/27/2022 09:11
40) 1,2,3-Trichlorobenzene	ND	ug/L	5	EPA 524.2	0.5	6/27/2022 09:11
41) 1,2,4-Trichlorobenzene	ND	ug/L	5	EPA 524.2	0.5	6/27/2022 09:11
42) 1,1,1-Trichloroethane	ND	ug/L	5	EPA 524.2	0.5	6/27/2022 09:11
43) 1,1,2-Trichloroethane	ND	ug/L	5	EPA 524.2	0.5	6/27/2022 09:11
44) Trichloroethene	ND	ug/L	5	EPA 524.2	0.5	6/27/2022 09:11
45) Trichlorofluoromethane	ND	ug/L	5	EPA 524.2	0.5	6/27/2022 09:11
46) 1,2,3-Trichloropropane	ND	ug/L	5	EPA 524.2	0.5	6/27/2022 09:11
47} 1,2,4-Trimethylbenzene	ND	ug/L	5	EPA 524.2	0.5	6/27/2022 09:11
48) 1,3,5-Trimethylbenzene	ND	ug/L	5	EPA 524.2	0.5	6/27/2022 09:11
49) o-Xylene	ND	ug/L	5	EPA 524.2	0.5	6/27/2022 09:11
50) Hexachlorobutadiene	ND	ug/L	5	EPA 524.2	0.5	6/27/2022 09:11
51) m+p-Xylene	ND	ug/L	5	EPA 524.2	0.5	6/27/2022 09:11
52) Methyl-tertiary-butyl-ether	ND	ug/L	10	EPA 524.2	0.5	6/27/2022 09:11
53) Vinyl chloride	ND	ug/L	2	EPA 524.2	0.5	6/27/2022 09:11

ND = Not Detected
* = Above Specified Limit

Report Approved by: _____ CT Lic PH-0787 NY Lic 11706

Lab Director

AquaEnvLab.com
YorkLab.com
203 270 9973

Analytical results relate to the samples as received at the laboratory. Report shall not be reproduced except in its entirety without written approval from the laboratory.

AQUA ENVIRONMENTAL LAB
56 Church Hill Road • Newtown, CT 06470 • (203) 270-9973
A York Analytical Company
YORK

Report of Analysis

Name: WSP, USA
4 Research Dr.
Ste. 204
Shelton, CT 06484
Sample Date: 6/20/2022 2:03 PM
Receipt Date: 6/20/2022 2:03 PM
Report Date: 7/27/2022
Sample Site: Summit Well 3

Sample ID#: 288624
Sample Type: Drinking Water
Sampler: WSP

Parameter	Sample Result	Units	Limits	Method	RL	Analysis Date / Time
Organic Compounds						
PCB	ND	mg/L	0.5	EPA 508.1	0.0002	6/27/2022 10:55
Synthetic Organic Chemicals P						
Butachlor	ND	mg/L	0	EPA 508.1	0.001	6/27/2022 10:55
Dioxin	ND	ug/L	0	EPA 1613-B	5	7/2/2022 10:55
Endothall	ND	mg/L	0	EPA 548.1	5	6/29/2022 10:55
Metribuzin	ND	mg/L	0	EPA 508.1	0.0005	6/27/2022 10:55
Propachlor	ND	mg/L	0	EPA 508.1	0.001	6/27/2022 10:55
Synthetic Organic Chemicals P						
Dalapon	ND	mg/L	200	EPA 552.2	0.002	6/29/2022 10:55
Synthetic Organic Compounds						
2,4,5-TP	ND	mg/L	50	EPA 555	0.0004	6/29/2022 10:55
2,4-D	ND	mg/L	70	EPA 555	0.0002	6/29/2022 10:55
3-Hydroxycarbofuran	ND	mg/L	No Limit Set	EPA 531.1	0.002	7/8/2022 10:55
Alachlor	ND	mg/L	2	EPA 508.1	0.0004	6/27/2022 10:55
Aldicarb	ND	mg/L	No Limit Set	EPA 531.1	0.001	7/8/2022 10:55
Aldicarb Sulfone	ND	mg/L	No Limit Set	EPA 531.1	0.0017	7/8/2022 10:55
Aldicarb Sulfoxide	ND	mg/L	No Limit Set	EPA 531.1	0.001	7/8/2022 10:55
Aldrin	ND	mg/L	0	EPA 508.1	0.0005	6/27/2022 10:55
Atrazine	ND	ug/L	3	EPA 508.1	0.0002	6/27/2022 10:55
Benzo (A) Pyrene	ND	mg/L	0.2	EPA 525.2	0	7/12/2022 10:55
Carbaryl	ND	mg/L	No Limit Set	EPA 531.1	0.004	7/8/2022 10:55
Carbofuran	ND	mg/L	40	EPA 531.1	0.0019	7/8/2022 10:55
Chlordane	ND	mg/L	2	EPA 508.1	0.0004	6/27/2022 10:55
Di (2-ethylhexyl) adipate	ND	mg/L	400	EPA 525.2	0.001	7/12/2022 10:55
Di (2-ethylhexyl) phthalates	ND	mg/L	6	EPA 525.2	0.001	7/12/2022 10:55
Dibromochloropropane(DBCP)	ND	mg/L	0.2	EPA 504.1	0	6/29/2022 10:55

ND = Not Detected
* = Above Specified Limit

CT Lic PH-0787 NY Lic 11706

AquaEnvLab.com
YorkLab.com
203 270 9973

Analytical results relate to the samples as received at the laboratory. Report shall not be reproduced except in its entirety without written approval from the laboratory.

AQUA ENVIRONMENTAL LAB
56 Church Hill Road • Newtown, CT 06470 • (203) 270-9973
A York Analytical Company
YORK

Report of Analysis

Name: WSP, USA
4 Research Dr.
Ste. 204
Shelton, CT 06484
Sample Date: 6/20/2022 2:03 PM
Receipt Date: 6/20/2022 2:03 PM
Report Date: 7/27/2022
Sample Site: Summit Well 3

Sample ID#: 288624
Sample Type: Drinking Water
Sampler: WSP

Parameter	Sample Result	Units	Limits	Method	RL	Analysis Date / Time
Synthetic Organic Compounds						
Dicamba	ND	mg/L	No Limit Set	EPA 555	0.0008	6/29/2022 10:55
Dieldrin	ND	mg/L	No Limit Set	EPA 508.1	0	6/27/2022 10:55
Dinoseb	ND	mg/L	7	EPA 555	0.0004	6/29/2022 10:55
Diquat	ND	mg/L	0	EPA 549.2	0.0008	6/28/2022 10:55
Endrin	ND	mg/L	2	EPA 508.1	0	6/27/2022 10:55
Ethylene Dibromide(EDB)	ND	mg/L	0.05	EPA 504.1	0	6/29/2022 10:55
Glyphosphate	ND	mg/L	700	EPA 547	0.01	6/28/2022 10:55
Heptachlor	ND	mg/L	0.4	EPA 508.1	0.0001	6/27/2022 10:55
Heptachlor Epoxide	ND	mg/L	No Limit Set	EPA 508.1	0.0002	6/27/2022 10:55
Hexachlorobenzene	ND	mg/L	1	EPA 508.1	0.0002	6/27/2022 10:55
Hexachlorocyclopentadiene	ND	mg/L	50	EPA 508.1	0.0002	6/27/2022 10:55
Lindane	ND	mg/L	0.2	EPA 508.1	0.0002	6/27/2022 10:55
Methomyl	ND	mg/L	0	EPA 531.1	0.004	7/8/2022 10:55
Methoxychlor	ND	mg/L	40	EPA 508.1	0.001	6/27/2022 10:55
Metolachlor	ND	mg/L	No Limit Set	EPA 508.1	0.001	6/27/2022 10:55
Oxamyl (Vydate)	ND	mg/L	200	EPA 531.1	0.004	7/8/2022 10:55
Pentachlorophenol	ND	mg/L	1	EPA 555	0.0001	6/29/2022 10:55
Picloram	ND	mg/L	500	EPA 555	0.0002	6/29/2022 10:55
Simazine	ND	mg/L	4	EPA 508.1	0.0001	6/27/2022 10:55
Toxaphene	ND	mg/L	3	EPA 508.1	0.002	6/27/2022 10:55

ND = Not Detected
* = Above Specified Limit

Report Approved by: _____ Lab Director

CT Lic PH-0787 NY Lic 11706

AquaEnvLab.com
YorkLab.com
203 270 9973

Analytical results relate to the samples as received at the laboratory. Report shall not be reproduced except in its entirety without written approval from the laboratory.

AQUA ENVIRONMENTAL LAB
56 Church Hill Road • Newtown, CT 06470 • (203) 270-9973
A York Analytical Company

Report of Analysis

Name: WSP, USA
4 Research Dr.
Ste. 204
Shelton, CT 06484
Sample Date: 6/20/2022 2:03 PM
Receipt Date: 6/20/2022 2:03 PM
Report Date: 7/26/2022
Sample Site: Summit Well 3

Sample ID#: 288627
Sample Type: Drinking Water
Sampler: WSP

Parameter	Sample Result	Units	Limits	Method	RL	Analysis Date / Time
Radiochemicals						
Gross Beta	2.74+/-1.06	pCi/L	No Limit Set	EPA 900.0	None	7/18/2022 08:36
Radium 226	0.129+/-0.222	pCi/L	5	EPA 903.0	1	7/21/2022 14:03
Radium 228	0.468+/-0.305	pCi/L	5	EPA 904.0	1	7/21/2022 11:58
Total Gross Alpha	3.35+/-1.75	pCi/L	No Limit Set	EPA 900.0	3	7/18/2022 08:36
Uranium	1.3	ug/L	30	EPA 200.8	1	6/29/2022 16:21

ND = Not Detected
* = Above Specified Limit

Report Approved by: _____ CT Lic PH-0787 NY Lic 11706

Lab Director

AquaEnvLab.com
YorkLab.com
203 270 9973

Analytical results relate to the samples as received at the laboratory. Report shall not be reproduced except in its entirety without written approval from the laboratory.

AQUA ENVIRONMENTAL LAB
56 Church Hill Road • Newtown, CT 06470 • (203) 270-9973
A York Analytical Company
YORK ANALYTICAL LABORATORIES INC

Report of Analysis

Name: WSP, USA
4 Research Dr.
Ste. 204
Shelton, CT 06484
Sample Date: 6/20/2022 2:03 PM
Receipt Date: 6/20/2022 2:03 PM
Report Date: 7/1/2022
Sample Site: Summit Well 3

Sample ID#: 288620
Sample Type: Drinking Water
Sampler: WSP

Parameter	Sample Result	Units	Limits	Method	RL	Analysis Date / Time
Miscellaneous/Other						
Asbestos	ND	MFL	0	EPA 100.2	0.19	6/30/2022 08:19

ND = Not Detected
* = Above Specified Limit

Report Approved by: _____ CT Lic PH-0787 NY Lic 11706
Lab Director

AquaEnvLab.com
YorkLab.com
203 270 9973

Analytical results relate to the samples as received at the laboratory. Report shall not be reproduced except in its entirety without written approval from the laboratory.

AQUA ENVIRONMENTAL LAB
56 Church Hill Road • Newtown, CT 06470 • (203) 270-9973
A York Analytical Company
YORK ANALYTICAL LABORATORIES INC

Report of Analysis

Name: WSP, USA
4 Research Dr.
Ste. 204
Shelton, CT 06484
Sample Date: 6/20/2022 2:03 PM
Receipt Date: 6/20/2022 2:03 PM
Report Date: 7/25/2022
Sample Site: Summit Well 3

Sample ID#: 288623
Sample Type: Drinking Water
Sampler: WSP

Parameter	Sample Result	Units	Limits	Method	RL	Analysis Date / Time
Organic Compounds						
Propylene Glycol	1.1	mg/L	No Limit Set	SW8015	1	6/27/2022 14:03

ND = Not Detected
* = Above Specified Limit

Report Approved by: _____ CT Lic PH-0787 NY Lic 11706
Lab Director

AquaEnvLab.com
YorkLab.com
203 270 9973

Analytical results relate to the samples as received at the laboratory. Report shall not be reproduced except in its entirety without written approval from the laboratory.

AQUA ENVIRONMENTAL LAB
56 Church Hill Road • Newtown, CT 06470 • (203) 270-9973
A York Analytical Company

Report of Analysis

Name: WSP, USA
4 Research Dr.
Ste. 204
Shelton, CT 06484
Sample Date: 6/20/2022 2:03 PM
Receipt Date: 6/20/2022 2:03 PM
Report Date: 7/6/2022
Sample Site: Summit Well 3

Sample ID#: 288625
Sample Type: Drinking Water
Sampler: WSP

Parameter	Sample Result	Units	Limits	Method	RL	Analysis Date / Time
Organic Compounds						
1,4-Dioxane	ND	ug/L	1	EPA 522	0.2	6/24/2022 07:43
PerFluoroButaneSulfonic Acid	ND	ng/L	No Limit Set	EPA 537	1.34	7/1/2022 11:13
PerFluoroHeptanoic Acid	ND	ng/L	No Limit Set	EPA 537	1.34	7/1/2022 11:13
PerFluoroHexaneSulfonic Acid	1.46	ng/L	49	EPA 537	1.34	7/1/2022 11:13
PerFluoroHexanoic Acid	1.49	ng/L	No Limit Set	EPA 537	1.34	7/1/2022 11:13
PerFluoroNonanoic Acid	ND	ng/L	12	EPA 537	1.34	7/1/2022 11:13
PerFluoroOctaneSulfonic Acid	2.05	ng/L	10	EPA 537	1.34	7/1/2022 11:13
PerFluoroOctanoic Acid	3.35	ng/L	16	EPA 537	1.34	7/1/2022 11:13

ND = Not Detected
* = Above Specified Limit

Report Approved by: _____
Lab Director

CT Lic PH-0787 NY Lic 11706

AquaEnvLab.com
YorkLab.com
203 270 9973

Analytical results relate to the samples as received at the laboratory. Report shall not be reproduced except in its entirety without written approval from the laboratory.

Technical Report
Perfluoroalkyl Substances (PFAS)

prepared for:

Aqua Environmental Lab
56 Church Hill Road
Newtown CT, 06470
Attention: T. Braun

Report Date: 07/05/2022
Client Project ID: 288625/288617/288673
York Project (SDG) No.: 22F1242

Report Date: 07/05/2022
Client Project ID: 288625/288617/288673
York Project (SDG) No.: 22F1242

Aqua Environmental Lab
56 Church Hill Road
Newtown CT, 06470
Attention: T. Braun

Purpose and Results

This report contains the analytical data for the sample(s) identified on the attached chain-of-custody received in our laboratory on June 23, 2022 and listed below. The project was identified as your project: **288625/288617/288673**.

The analyses were conducted utilizing appropriate EPA methods as detailed in the data summary tables.

All samples were received in proper condition meeting the customary acceptance requirements for environmental samples except those indicated under the Sample and Analysis Qualifiers section of this report.

All analyses met the method and laboratory standard operating procedure requirements except as indicated by any data flags, the meaning of which are explained in the Sample and Data Qualifiers Relating to This Work Order section of this report and case narrative if applicable.

Please contact Client Services at 203.325.1371 with any questions regarding this report or e-mail clientservices@yorklab.com.

York Sample ID	Client Sample ID	Matrix	Date Collected	Date Received
22F1242-01	288625	Drinking Water	06/23/2022	06/23/2022
22F1242-02	288617	Drinking Water	06/23/2022	06/23/2022
22F1242-03	288673	Drinking Water	06/23/2022	06/23/2022
22F1242-04	288625-PFAS-Field Blank	Drinking Water	06/23/2022	06/23/2022
22F1242-05	288617-PFAS-Field Blank	Drinking Water	06/23/2022	06/23/2022
22F1242-06	288673-PFAS-Field Blank	Drinking Water	06/23/2022	06/23/2022

General Notes for York Project (SDG) No.: 22F1242

1. The RLs and MDLs (Reporting Limit and Method Detection Limit respectively) reported are adjusted for any dilution necessary due to the levels of target and/or non-target analytes and matrix interference. The RL(REPORTING LIMIT) is based upon the lowest standard utilized for the calibration where applicable.
2. Samples are retained for a period of thirty days after submittal of report, unless other arrangements are made.
3. York's liability for the above data is limited to the dollar value paid to York for the referenced project.
4. This report shall not be reproduced without the written approval of York Analytical Laboratories, Inc.
5. All analyses conducted met method or Laboratory SOP requirements. See the Sample and Data Qualifiers Section for further information.
6. It is noted that no analyses reported herein were subcontracted to another laboratory, unless noted in the report.
7. This report reflects results that relate only to the samples submitted on the attached chain-of-custody form(s) received by York.
8. Analyses conducted at York Analytical Laboratories, Inc. Stratford, CT are indicated by NY Cert. No. 10854; those conducted at York Analytical Laboratories, Inc., Richmond Hill, NY are indicated by NY Cert. No. 12058.

Approved By: Cassie L. Mosher

Cassie L. Mosher
Laboratory Manager

Date: 07/05/2022

Sample Information

Client Sample ID: 288625 **York Sample ID:** 22F1242-01

York Project (SDG) No.	Client Project ID	Matrix	Collection Date/Time	Date Received
22F1242	288625/288617/288673	Drinking Water	June 23, 2022 8:00 am	06/23/2022

1,4-Dioxane by GC/MS/SIM EPA 522

Log-in Notes:

Sample Notes:

Sample Prepared by Method: EPA 522

CAS No.	Parameter	Result	Flag	Maximum Contaminant Level MCL, ng/L	Units	Reported to LOQ	Reference Method	Date/Time Analyzed	Analyst
123-91-1	1,4-Dioxane	ND		1	ug/L	0.200	EPA 522	06/24/2022 07:43	KH
					Certifications:		NELAC-NY10854	06/27/2022 15:05	
1693-74-9	*** Tetrahydrofuran-d8**	**0.500**		**0**	ug/mL		EPA 522	06/24/2022 07:43	KH
					Certifications:			06/27/2022 15:05	

	Surrogate Recoveries	Result	Acceptance Range
17647-74-4	*Surrogate: 1,4-Dioxane-d8*	*80.0 %*	*70-130*

PFAS, EPA 537.1 List

Well 3

Log-in Notes:

Sample Notes:

Sample Prepared by Method: EPA 537.1 SPE DVB

CAS No.	Parameter	Result	Flag	Maximum Contaminant Level MCL, ng/L	Units	Reported to LOQ	Reference Method	Date/Time Analyzed	Analyst
375-73-5	* Perfluorobutanesulfonic acid (PFBS)	ND		0	ng/L	1.35	EPA 537.1	07/01/2022 11:13	WEL
					Certifications:			07/05/2022 13:50	
307-24-4	*** Perfluorohexanoic acid (PFHxA)**	**1.49**		**0**	ng/L	1.35	EPA 537.1	07/01/2022 11:13	WEL
					Certifications:			07/05/2022 13:50	
375-85-9	* Perfluoroheptanoic acid (PFHpA)	ND		0	ng/L	1.35	EPA 537.1	07/01/2022 11:13	WEL
					Certifications:			07/05/2022 13:50	
355-46-4	*** Perfluorohexanesulfonic acid (PFHxS)**	**1.46**		**0**	ng/L	1.35	EPA 537.1	07/01/2022 11:13	WEL
					Certifications:			07/05/2022 13:50	
335-67-1	**Perfluorooctanoic acid (PFOA)**	**3.35**		**10**	ng/L	1.35	EPA 537.1	07/01/2022 11:13	WEL
					Certifications:		NELAC-NY12058	07/05/2022 13:50	
1763-23-1	**Perfluorooctanesulfonic acid (PFOS)**	**2.05**		**10**	ng/L	1.35	EPA 537.1	07/01/2022 11:13	WEL
					Certifications:		NELAC-NY12058	07/05/2022 13:50	
375-95-1	* Perfluorononanoic acid (PFNA)	ND		0	ng/L	1.35	EPA 537.1	07/01/2022 11:13	WEL
					Certifications:			07/05/2022 13:50	
335-76-2	* Perfluorodecanoic acid (PFDA)	ND		0	ng/L	1.35	EPA 537.1	07/01/2022 11:13	WEL
					Certifications:			07/05/2022 13:50	
2058-94-8	* Perfluoroundecanoic acid (PFUnA)	ND		0	ng/L	1.35	EPA 537.1	07/01/2022 11:13	WEL
					Certifications:			07/05/2022 13:50	
307-55-1	* Perfluorododecanoic acid (PFDoA)	ND		0	ng/L	1.35	EPA 537.1	07/01/2022 11:13	WEL
					Certifications:			07/05/2022 13:50	
72629-94-8	* Perfluorotridecanoic acid (PFTrDA)	ND		0	ng/L	1.35	EPA 537.1	07/01/2022 11:13	WEL
					Certifications:			07/05/2022 13:50	
376-06-7	* Perfluorotetradecanoic acid (PFTA)	ND		0	ng/L	1.35	EPA 537.1	07/01/2022 11:13	WEL
					Certifications:			07/05/2022 13:50	
2355-31-9	* N-MeFOSAA	ND		0	ng/L	1.35	EPA 537.1	07/01/2022 11:13	WEL
					Certifications:			07/05/2022 13:50	
2991-50-6	* N-EtFOSAA	ND		0	ng/L	1.35	EPA 537.1	07/01/2022 11:13	WEL
					Certifications:			07/05/2022 13:50	

Sample Information

Client Sample ID: 288625 **York Sample ID:** 22F1242-01

York Project (SDG) No.	Client Project ID	Matrix	Collection Date/Time	Date Received
22F1242	288625/288617/288673	Drinking Water	June 23, 2022 8:00 am	06/23/2022

PFAS, EPA 537.1 List

Log-in Notes:

Sample Notes:

Sample Prepared by Method: EPA 537.1 SPE DVB

CAS No.	Parameter	Result	Flag	Maximum Contaminant Level MCL, ng/L	Units	Reported to LOQ	Reference Method	Date/Time Analyzed	Analyst
756426-58-1	* 9CL-PF3ONS	ND		0	ng/L	1.35	EPA 537.1	07/01/2022 11:13	WEL
					Certifications:			07/05/2022 13:50	
763051-92-9	* 11CL-PF3OUdS	ND		0	ng/L	1.35	EPA 537.1	07/01/2022 11:13	WEL
					Certifications:			07/05/2022 13:50	
13252-13-6	* HFPO-DA (Gen-X)	ND		0	ng/L	1.35	EPA 537.1	07/01/2022 11:13	WEL
					Certifications:			07/05/2022 13:50	
919005-14-4	* ADONA	ND		0	ng/L	1.35	EPA 537.1	07/01/2022 11:13	WEL
					Certifications:			07/05/2022 13:50	

Surrogate Recoveries	Result	Acceptance Range
Surrogate: d5-N-EtFOSAA	*107 %*	*70-130*
Surrogate: 13C-PFDA	*90.5 %*	*70-130*
Surrogate: 13C-PFHxA	*104 %*	*70-130*
Surrogate: M3HFPO-DA	*96.7 %*	*70-130*

Sample Information

Client Sample ID: 288617 **York Sample ID:** 22F1242-02

York Project (SDG) No.	Client Project ID	Matrix	Collection Date/Time	Date Received
22F1242	288625/288617/288673	Drinking Water	June 23, 2022 9:00 am	06/23/2022

1,4-Dioxane by GC/MS/SIM EPA 522

Log-in Notes:

Sample Notes:

Sample Prepared by Method: EPA 522

CAS No.	Parameter	Result	Flag	Maximum Contaminant Level MCL, ng/L	Units	Reported to LOQ	Reference Method	Date/Time Analyzed	Analyst
123-91-1	1,4-Dioxane	ND		1	ug/L	0.200	EPA 522	06/24/2022 07:43	KH
					Certifications:	NELAC-NY10854		06/27/2022 15:25	
1693-74-9	*** Tetrahydrofuran-d8**	**0.500**		**0**	ug/mL		EPA 522	06/24/2022 07:43	KH
					Certifications:			06/27/2022 15:25	

	Surrogate Recoveries	Result	Acceptance Range
17647-74-4	*Surrogate: 1,4-Dioxane-d8*	*80.0 %*	*70-130*

PFAS, EPA 537.1 List Well 6A

Log-in Notes:

Sample Notes:

Sample Prepared by Method: EPA 537.1 SPE DVB

CAS No.	Parameter	Result	Flag	Maximum Contaminant Level MCL, ng/L	Units	Reported to LOQ	Reference Method	Date/Time Analyzed	Analyst
375-73-5	* Perfluorobutanesulfonic acid (PFBS)	ND		0	ng/L	1.43	EPA 537.1	07/01/2022 11:13	WEL
					Certifications:			07/05/2022 14:03	

Sample Information

Client Sample ID: 288617 **York Sample ID:** 22F1242-02

York Project (SDG) No.	Client Project ID	Matrix	Collection Date/Time	Date Received
22F1242	288625/288617/288673	Drinking Water	June 23, 2022 9:00 am	06/23/2022

PFAS, EPA 537.1 List

Log-in Notes:

Sample Notes:

Sample Prepared by Method: EPA 537.1 SPE DVB

CAS No.	Parameter	Result	Flag	Maximum Contaminant Level MCL, ng/L	Units	Reported to LOQ	Reference Method	Date/Time Analyzed	Analyst
307-24-4	*** Perfluorohexanoic acid (PFHxA)**	**1.78**		**0**	ng/L	1.43	EPA 537.1	07/01/2022 11:13	WEL
					Certifications:			07/05/2022 14:03	
375-85-9	* Perfluoroheptanoic acid (PFHpA)	ND		0	ng/L	1.43	EPA 537.1	07/01/2022 11:13	WEL
					Certifications:			07/05/2022 14:03	
355-46-4	*** Perfluorohexanesulfonic acid (PFHxS)**	**1.54**		**0**	ng/L	1.43	EPA 537.1	07/01/2022 11:13	WEL
					Certifications:			07/05/2022 14:03	
335-67-1	**Perfluorooctanoic acid (PFOA)**	**3.88**		**10**	ng/L	1.43	EPA 537.1	07/01/2022 11:13	WEL
					Certifications:	NELAC-NY12058		07/05/2022 14:03	
1763-23-1	**Perfluorooctanesulfonic acid (PFOS)**	**2.29**		**10**	ng/L	1.43	EPA 537.1	07/01/2022 11:13	WEL
					Certifications:	NELAC-NY12058		07/05/2022 14:03	
375-95-1	* Perfluorononanoic acid (PFNA)	ND		0	ng/L	1.43	EPA 537.1	07/01/2022 11:13	WEL
					Certifications:			07/05/2022 14:03	
335-76-2	* Perfluorodecanoic acid (PFDA)	ND		0	ng/L	1.43	EPA 537.1	07/01/2022 11:13	WEL
					Certifications:			07/05/2022 14:03	
2058-94-8	* Perfluoroundecanoic acid (PFUnA)	ND		0	ng/L	1.43	EPA 537.1	07/01/2022 11:13	WEL
					Certifications:			07/05/2022 14:03	
307-55-1	* Perfluorododecanoic acid (PFDoA)	ND		0	ng/L	1.43	EPA 537.1	07/01/2022 11:13	WEL
					Certifications:			07/05/2022 14:03	
72629-94-8	* Perfluorotridecanoic acid (PFTrDA)	ND		0	ng/L	1.43	EPA 537.1	07/01/2022 11:13	WEL
					Certifications:			07/05/2022 14:03	
376-06-7	* Perfluorotetradecanoic acid (PFTA)	ND		0	ng/L	1.43	EPA 537.1	07/01/2022 11:13	WEL
					Certifications:			07/05/2022 14:03	
2355-31-9	* N-MeFOSAA	ND		0	ng/L	1.43	EPA 537.1	07/01/2022 11:13	WEL
					Certifications:			07/05/2022 14:03	
2991-50-6	* N-EtFOSAA	ND		0	ng/L	1.43	EPA 537.1	07/01/2022 11:13	WEL
					Certifications:			07/05/2022 14:03	
756426-58-1	* 9CL-PF3ONS	ND		0	ng/L	1.43	EPA 537.1	07/01/2022 11:13	WEL
					Certifications:			07/05/2022 14:03	
763051-92-9	* 11CL-PF3OUdS	ND		0	ng/L	1.43	EPA 537.1	07/01/2022 11:13	WEL
					Certifications:			07/05/2022 14:03	
13252-13-6	* HFPO-DA (Gen-X)	ND		0	ng/L	1.43	EPA 537.1	07/01/2022 11:13	WEL
					Certifications:			07/05/2022 14:03	
919005-14-4	* ADONA	ND		0	ng/L	1.43	EPA 537.1	07/01/2022 11:13	WEL
					Certifications:			07/05/2022 14:03	

Surrogate Recoveries	Result	Acceptance Range
Surrogate: d5-N-EtFOSAA	*102 %*	*70-130*
Surrogate: 13C-PFDA	*96.1 %*	*70-130*
Surrogate: 13C-PFHxA	*109 %*	*70-130*
Surrogate: M3HFPO-DA	*101 %*	*70-130*

Sample Information

Client Sample ID: 288673 **York Sample ID:** 22F1242-03

York Project (SDG) No.	Client Project ID	Matrix	Collection Date/Time	Date Received
22F1242	288625/288617/288673	Drinking Water	June 23, 2022 9:20 am	06/23/2022

1,4-Dioxane by GC/MS/SIM EPA 522

Log-in Notes:

Sample Notes:

Sample Prepared by Method: EPA 522

CAS No.	Parameter	Result	Flag	Maximum Contaminant Level MCL, ng/L	Units	Reported to LOQ	Reference Method	Date/Time Analyzed	Analyst
123-91-1	1,4-Dioxane	ND		1	ug/L	0.200	EPA 522	06/24/2022 07:43	KH
					Certifications:	NELAC-NY10854		06/27/2022 15:44	
1693-74-9	*** Tetrahydrofuran-d8**	**0.500**		**0**	ug/mL		EPA 522	06/24/2022 07:43	KH
					Certifications:			06/27/2022 15:44	

	Surrogate Recoveries	Result	Acceptance Range
17647-74-4	*Surrogate: 1,4-Dioxane-d8*	*80.0 %*	*70-130*

PFAS, EPA 537.1 List

Well 1

Log-in Notes:

Sample Notes:

Sample Prepared by Method: EPA 537.1 SPE DVB

CAS No.	Parameter	Result	Flag	Maximum Contaminant Level MCL, ng/L	Units	Reported to LOQ	Reference Method	Date/Time Analyzed	Analyst
375-73-5	* Perfluorobutanesulfonic acid (PFBS)	ND		0	ng/L	1.11	EPA 537.1	07/01/2022 11:13	WEL
					Certifications:			07/05/2022 14:15	
307-24-4	*** Perfluorohexanoic acid (PFHxA)**	**4.48**		**0**	ng/L	1.11	EPA 537.1	07/01/2022 11:13	WEL
					Certifications:			07/05/2022 14:15	
375-85-9	* Perfluoroheptanoic acid (PFHpA)	ND		0	ng/L	1.11	EPA 537.1	07/01/2022 11:13	WEL
					Certifications:			07/05/2022 14:15	
355-46-4	*** Perfluorohexanesulfonic acid (PFHxS)**	**2.22**		**0**	ng/L	1.11	EPA 537.1	07/01/2022 11:13	WEL
					Certifications:			07/05/2022 14:15	
335-67-1	**Perfluorooctanoic acid (PFOA)**	**4.70**		**10**	ng/L	1.11	EPA 537.1	07/01/2022 11:13	WEL
					Certifications:	NELAC-NY12058		07/05/2022 14:15	
1763-23-1	**Perfluorooctanesulfonic acid (PFOS)**	**4.00**		**10**	ng/L	1.11	EPA 537.1	07/01/2022 11:13	WEL
					Certifications:	NELAC-NY12058		07/05/2022 14:15	
375-95-1	* Perfluorononanoic acid (PFNA)	ND		0	ng/L	1.11	EPA 537.1	07/01/2022 11:13	WEL
					Certifications:			07/05/2022 14:15	
335-76-2	* Perfluorodecanoic acid (PFDA)	ND		0	ng/L	1.11	EPA 537.1	07/01/2022 11:13	WEL
					Certifications:			07/05/2022 14:15	
2058-94-8	* Perfluoroundecanoic acid (PFUnA)	ND		0	ng/L	1.11	EPA 537.1	07/01/2022 11:13	WEL
					Certifications:			07/05/2022 14:15	
307-55-1	* Perfluorododecanoic acid (PFDoA)	ND		0	ng/L	1.11	EPA 537.1	07/01/2022 11:13	WEL
					Certifications:			07/05/2022 14:15	
72629-94-8	* Perfluorotridecanoic acid (PFTrDA)	ND		0	ng/L	1.11	EPA 537.1	07/01/2022 11:13	WEL
					Certifications:			07/05/2022 14:15	
376-06-7	* Perfluorotetradecanoic acid (PFTA)	ND		0	ng/L	1.11	EPA 537.1	07/01/2022 11:13	WEL
					Certifications:			07/05/2022 14:15	
2355-31-9	* N-MeFOSAA	ND		0	ng/L	1.11	EPA 537.1	07/01/2022 11:13	WEL
					Certifications:			07/05/2022 14:15	
2991-50-6	* N-EtFOSAA	ND		0	ng/L	1.11	EPA 537.1	07/01/2022 11:13	WEL
					Certifications:			07/05/2022 14:15	
756426-58-1	* 9CL-PF3ONS	ND		0	ng/L	1.11	EPA 537.1	07/01/2022 11:13	WEL
					Certifications:			07/05/2022 14:15	

Sample Information

Client Sample ID: 288673 **York Sample ID:** 22F1242-03

York Project (SDG) No.	Client Project ID	Matrix	Collection Date/Time	Date Received
22F1242	288625/288617/288673	Drinking Water	June 23, 2022 9:20 am	06/23/2022

PFAS, EPA 537.1 List **Log-in Notes:** **Sample Notes:**

Sample Prepared by Method: EPA 537.1 SPE DVB

CAS No.	Parameter	Result	Flag	Maximum Contaminant Level MCL, ng/L	Units	Reported to LOQ	Reference Method	Date/Time Analyzed	Analyst
763051-92-9	* 11CL-PF3OUdS	ND		0	ng/L	1.11	EPA 537.1	07/01/2022 11:13	WEL
					Certifications:			07/05/2022 14:15	
13252-13-6	* HFPO-DA (Gen-X)	ND		0	ng/L	1.11	EPA 537.1	07/01/2022 11:13	WEL
					Certifications:			07/05/2022 14:15	
919005-14-4	* ADONA	ND		0	ng/L	1.11	EPA 537.1	07/01/2022 11:13	WEL
					Certifications:			07/05/2022 14:15	

Surrogate Recoveries	Result	Acceptance Range
Surrogate: d5-N-EtFOSAA	*96.0 %*	*70-130*
Surrogate: 13C-PFDA	*84.4 %*	*70-130*
Surrogate: 13C-PFHxA	*97.8 %*	*70-130*
Surrogate: M3HFPO-DA	*92.7 %*	*70-130*

Sample Information

Client Sample ID: 288625-PFAS-Field Blank **York Sample ID:** 22F1242-04

York Project (SDG) No.	Client Project ID	Matrix	Collection Date/Time	Date Received
22F1242	288625/288617/288673	Drinking Water	June 23, 2022 8:00 am	06/23/2022

PFAS, EPA 537.1 List **Log-in Notes:** **Sample Notes:**

Sample Prepared by Method: EPA 537.1 SPE DVB

CAS No.	Parameter	Result	Flag	Maximum Contaminant Level MCL, ng/L	Units	Reported to LOQ	Reference Method	Date/Time Analyzed	Analyst
375-73-5	* Perfluorobutanesulfonic acid (PFBS)	ND		0	ng/L	1.52	EPA 537.1	07/01/2022 11:13	WEL
					Certifications:			07/05/2022 14:27	
307-24-4	* Perfluorohexanoic acid (PFHxA)	ND		0	ng/L	1.52	EPA 537.1	07/01/2022 11:13	WEL
					Certifications:			07/05/2022 14:27	
375-85-9	* Perfluoroheptanoic acid (PFHpA)	ND		0	ng/L	1.52	EPA 537.1	07/01/2022 11:13	WEL
					Certifications:			07/05/2022 14:27	
355-46-4	* Perfluorohexanesulfonic acid (PFHxS)	ND		0	ng/L	1.52	EPA 537.1	07/01/2022 11:13	WEL
					Certifications:			07/05/2022 14:27	
335-67-1	Perfluorooctanoic acid (PFOA)	ND		10	ng/L	1.52	EPA 537.1	07/01/2022 11:13	WEL
					Certifications:	NELAC-NY12058		07/05/2022 14:27	
1763-23-1	Perfluorooctanesulfonic acid (PFOS)	ND		10	ng/L	1.52	EPA 537.1	07/01/2022 11:13	WEL
					Certifications:	NELAC-NY12058		07/05/2022 14:27	
375-95-1	* Perfluorononanoic acid (PFNA)	ND		0	ng/L	1.52	EPA 537.1	07/01/2022 11:13	WEL
					Certifications:			07/05/2022 14:27	
335-76-2	* Perfluorodecanoic acid (PFDA)	ND		0	ng/L	1.52	EPA 537.1	07/01/2022 11:13	WEL
					Certifications:			07/05/2022 14:27	
2058-94-8	* Perfluoroundecanoic acid (PFUnA)	ND		0	ng/L	1.52	EPA 537.1	07/01/2022 11:13	WEL
					Certifications:			07/05/2022 14:27	

Sample Information

Client Sample ID: 288625-PFAS-Field Blank **York Sample ID:** 22F1242-04

York Project (SDG) No.	Client Project ID	Matrix	Collection Date/Time	Date Received
22F1242	288625/288617/288673	Drinking Water	June 23, 2022 8:00 am	06/23/2022

PFAS, EPA 537.1 List

Log-in Notes:

Sample Notes:

Sample Prepared by Method: EPA 537.1 SPE DVB

CAS No.	Parameter	Result	Flag	Maximum Contaminant Level MCL, ng/L	Units	Reported to LOQ	Reference Method	Date/Time Analyzed	Analyst
307-55-1	* Perfluorododecanoic acid (PFDoA)	ND		0	ng/L	1.52	EPA 537.1	07/01/2022 11:13	WEL
					Certifications:			07/05/2022 14:27	
72629-94-8	* Perfluorotridecanoic acid (PFTrDA)	ND		0	ng/L	1.52	EPA 537.1	07/01/2022 11:13	WEL
					Certifications:			07/05/2022 14:27	
376-06-7	* Perfluorotetradecanoic acid (PFTA)	ND		0	ng/L	1.52	EPA 537.1	07/01/2022 11:13	WEL
					Certifications:			07/05/2022 14:27	
2355-31-9	* N-MeFOSAA	ND		0	ng/L	1.52	EPA 537.1	07/01/2022 11:13	WEL
					Certifications:			07/05/2022 14:27	
2991-50-6	* N-EtFOSAA	ND		0	ng/L	1.52	EPA 537.1	07/01/2022 11:13	WEL
					Certifications:			07/05/2022 14:27	
756426-58-1	* 9CL-PF3ONS	ND		0	ng/L	1.52	EPA 537.1	07/01/2022 11:13	WEL
					Certifications:			07/05/2022 14:27	
763051-92-9	* 11CL-PF3OUdS	ND		0	ng/L	1.52	EPA 537.1	07/01/2022 11:13	WEL
					Certifications:			07/05/2022 14:27	
13252-13-6	* HFPO-DA (Gen-X)	ND		0	ng/L	1.52	EPA 537.1	07/01/2022 11:13	WEL
					Certifications:			07/05/2022 14:27	
919005-14-4	* ADONA	ND		0	ng/L	1.52	EPA 537.1	07/01/2022 11:13	WEL
					Certifications:			07/05/2022 14:27	

Surrogate Recoveries	Result	Acceptance Range
Surrogate: d5-N-EtFOSAA	*107 %*	*70-130*
Surrogate: 13C-PFDA	*95.5 %*	*70-130*
Surrogate: 13C-PFHxA	*104 %*	*70-130*
Surrogate: M3HFPO-DA	*105 %*	*70-130*

Sample Information

Client Sample ID: 288617-PFAS-Field Blank **York Sample ID:** 22F1242-05

York Project (SDG) No.	Client Project ID	Matrix	Collection Date/Time	Date Received
22F1242	288625/288617/288673	Drinking Water	June 23, 2022 9:00 am	06/23/2022

PFAS, EPA 537.1 List

Log-in Notes:

Sample Notes:

Sample Prepared by Method: EPA 537.1 SPE DVB

CAS No.	Parameter	Result	Flag	Maximum Contaminant Level MCL, ng/L	Units	Reported to LOQ	Reference Method	Date/Time Analyzed	Analyst
375-73-5	* Perfluorobutanesulfonic acid (PFBS)	ND		0	ng/L	1.92	EPA 537.1	07/01/2022 11:13	WEL
					Certifications:			07/05/2022 15:04	
307-24-4	* Perfluorohexanoic acid (PFHxA)	ND		0	ng/L	1.92	EPA 537.1	07/01/2022 11:13	WEL
					Certifications:			07/05/2022 15:04	
375-85-9	* Perfluoroheptanoic acid (PFHpA)	ND		0	ng/L	1.92	EPA 537.1	07/01/2022 11:13	WEL
					Certifications:			07/05/2022 15:04	

Sample Information

Client Sample ID: 288617-PFAS-Field Blank **York Sample ID:** 22F1242-05

York Project (SDG) No.	Client Project ID	Matrix	Collection Date/Time	Date Received
22F1242	288625/288617/288673	Drinking Water	June 23, 2022 9:00 am	06/23/2022

PFAS, EPA 537.1 List **Log-in Notes:** **Sample Notes:**

Sample Prepared by Method: EPA 537.1 SPE DVB

CAS No.	Parameter	Result	Flag	Maximum Contaminant Level MCL, ng/L	Units	Reported to LOQ	Reference Method	Date/Time Analyzed	Analyst
355-46-4	* Perfluorohexanesulfonic acid (PFHxS)	ND		0	ng/L	1.92	EPA 537.1	07/01/2022 11:13	WEL
					Certifications:			07/05/2022 15:04	
335-67-1	Perfluorooctanoic acid (PFOA)	ND		10	ng/L	1.92	EPA 537.1	07/01/2022 11:13	WEL
					Certifications:	NELAC-NY12058		07/05/2022 15:04	
1763-23-1	Perfluorooctanesulfonic acid (PFOS)	ND		10	ng/L	1.92	EPA 537.1	07/01/2022 11:13	WEL
					Certifications:	NELAC-NY12058		07/05/2022 15:04	
375-95-1	* Perfluorononanoic acid (PFNA)	ND		0	ng/L	1.92	EPA 537.1	07/01/2022 11:13	WEL
					Certifications:			07/05/2022 15:04	
335-76-2	* Perfluorodecanoic acid (PFDA)	ND		0	ng/L	1.92	EPA 537.1	07/01/2022 11:13	WEL
					Certifications:			07/05/2022 15:04	
2058-94-8	* Perfluoroundecanoic acid (PFUnA)	ND		0	ng/L	1.92	EPA 537.1	07/01/2022 11:13	WEL
					Certifications:			07/05/2022 15:04	
307-55-1	* Perfluorododecanoic acid (PFDoA)	ND		0	ng/L	1.92	EPA 537.1	07/01/2022 11:13	WEL
					Certifications:			07/05/2022 15:04	
72629-94-8	* Perfluorotridecanoic acid (PFTrDA)	ND		0	ng/L	1.92	EPA 537.1	07/01/2022 11:13	WEL
					Certifications:			07/05/2022 15:04	
376-06-7	* Perfluorotetradecanoic acid (PFTA)	ND		0	ng/L	1.92	EPA 537.1	07/01/2022 11:13	WEL
					Certifications:			07/05/2022 15:04	
2355-31-9	* N-MeFOSAA	ND		0	ng/L	1.92	EPA 537.1	07/01/2022 11:13	WEL
					Certifications:			07/05/2022 15:04	
2991-50-6	* N-EtFOSAA	ND		0	ng/L	1.92	EPA 537.1	07/01/2022 11:13	WEL
					Certifications:			07/05/2022 15:04	
756426-58-1	* 9CL-PF3ONS	ND		0	ng/L	1.92	EPA 537.1	07/01/2022 11:13	WEL
					Certifications:			07/05/2022 15:04	
763051-92-9	* 11CL-PF3OUdS	ND		0	ng/L	1.92	EPA 537.1	07/01/2022 11:13	WEL
					Certifications:			07/05/2022 15:04	
13252-13-6	* HFPO-DA (Gen-X)	ND		0	ng/L	1.92	EPA 537.1	07/01/2022 11:13	WEL
					Certifications:			07/05/2022 15:04	
919005-14-4	* ADONA	ND		0	ng/L	1.92	EPA 537.1	07/01/2022 11:13	WEL
					Certifications:			07/05/2022 15:04	

Surrogate Recoveries	Result	Acceptance Range
Surrogate: d5-N-EtFOSAA	*95.7 %*	*70-130*
Surrogate: 13C-PFDA	*82.6 %*	*70-130*
Surrogate: 13C-PFHxA	*87.4 %*	*70-130*
Surrogate: M3HFPO-DA	*91.1 %*	*70-130*

Sample Information

Client Sample ID: 288673-PFAS-Field Blank **York Sample ID:** 22F1242-06

York Project (SDG) No.	Client Project ID	Matrix	Collection Date/Time	Date Received
22F1242	288625/288617/288673	Drinking Water	June 23, 2022 9:20 am	06/23/2022

Sample Information

Client Sample ID: 288673-PFAS-Field Blank **York Sample ID:** 22F1242-06

York Project (SDG) No.	Client Project ID	Matrix	Collection Date/Time	Date Received
22F1242	288625/288617/288673	Drinking Water	June 23, 2022 9:20 am	06/23/2022

PFAS, EPA 537.1 List **Log-in Notes:** **Sample Notes:**

Sample Prepared by Method: EPA 537.1 SPE DVB

CAS No.	Parameter	Result	Flag	Maximum Contaminant Level MCL, ng/L	Units	Reported to LOQ	Reference Method	Date/Time Analyzed	Analyst
375-73-5	* Perfluorobutanesulfonic acid (PFBS)	ND		0	ng/L	2.00	EPA 537.1	07/01/2022 11:13	WEL
					Certifications:			07/05/2022 15:18	
307-24-4	* Perfluorohexanoic acid (PFHxA)	ND		0	ng/L	2.00	EPA 537.1	07/01/2022 11:13	WEL
					Certifications:			07/05/2022 15:18	
375-85-9	* Perfluoroheptanoic acid (PFHpA)	ND		0	ng/L	2.00	EPA 537.1	07/01/2022 11:13	WEL
					Certifications:			07/05/2022 15:18	
355-46-4	* Perfluorohexanesulfonic acid (PFHxS)	ND		0	ng/L	2.00	EPA 537.1	07/01/2022 11:13	WEL
					Certifications:			07/05/2022 15:18	
335-67-1	Perfluorooctanoic acid (PFOA)	ND		10	ng/L	2.00	EPA 537.1	07/01/2022 11:13	WEL
					Certifications:		NELAC-NY12058	07/05/2022 15:18	
1763-23-1	Perfluorooctanesulfonic acid (PFOS)	ND		10	ng/L	2.00	EPA 537.1	07/01/2022 11:13	WEL
					Certifications:		NELAC-NY12058	07/05/2022 15:18	
375-95-1	* Perfluorononanoic acid (PFNA)	ND		0	ng/L	2.00	EPA 537.1	07/01/2022 11:13	WEL
					Certifications:			07/05/2022 15:18	
335-76-2	* Perfluorodecanoic acid (PFDA)	ND		0	ng/L	2.00	EPA 537.1	07/01/2022 11:13	WEL
					Certifications:			07/05/2022 15:18	
2058-94-8	* Perfluoroundecanoic acid (PFUnA)	ND		0	ng/L	2.00	EPA 537.1	07/01/2022 11:13	WEL
					Certifications:			07/05/2022 15:18	
307-55-1	* Perfluorododecanoic acid (PFDoA)	ND		0	ng/L	2.00	EPA 537.1	07/01/2022 11:13	WEL
					Certifications:			07/05/2022 15:18	
72629-94-8	* Perfluorotridecanoic acid (PFTrDA)	ND		0	ng/L	2.00	EPA 537.1	07/01/2022 11:13	WEL
					Certifications:			07/05/2022 15:18	
376-06-7	* Perfluorotetradecanoic acid (PFTA)	ND		0	ng/L	2.00	EPA 537.1	07/01/2022 11:13	WEL
					Certifications:			07/05/2022 15:18	
2355-31-9	* N-MeFOSAA	ND		0	ng/L	2.00	EPA 537.1	07/01/2022 11:13	WEL
					Certifications:			07/05/2022 15:18	
2991-50-6	* N-EtFOSAA	ND		0	ng/L	2.00	EPA 537.1	07/01/2022 11:13	WEL
					Certifications:			07/05/2022 15:18	
756426-58-1	* 9CL-PF3ONS	ND		0	ng/L	2.00	EPA 537.1	07/01/2022 11:13	WEL
					Certifications:			07/05/2022 15:18	
763051-92-9	* 11CL-PF3OUdS	ND		0	ng/L	2.00	EPA 537.1	07/01/2022 11:13	WEL
					Certifications:			07/05/2022 15:18	
13252-13-6	* HFPO-DA (Gen-X)	ND		0	ng/L	2.00	EPA 537.1	07/01/2022 11:13	WEL
					Certifications:			07/05/2022 15:18	
919005-14-4	* ADONA	ND		0	ng/L	2.00	EPA 537.1	07/01/2022 11:13	WEL
					Certifications:			07/05/2022 15:18	

Surrogate Recoveries	Result	Acceptance Range
Surrogate: d5-N-EtFOSAA	*96.6 %*	*70-130*
Surrogate: 13C-PFDA	*91.1 %*	*70-130*
Surrogate: 13C-PFHxA	*107 %*	*70-130*
Surrogate: M3HFPO-DA	*113 %*	*70-130*

Analytical Batch Summary

Batch ID: BF21540 **Preparation Method:** EPA 522 **Prepared By:** SJB

YORK Sample ID	Client Sample ID	Preparation Date
22F1242-01	288625	06/24/22
22F1242-02	288617	06/24/22
22F1242-03	288673	06/24/22
BF21540-BLK1	Blank	06/24/22
BF21540-BS1	LCS	06/24/22
BF21540-BS2	LCS	06/24/22
BF21540-DUP1	Duplicate	06/24/22
BF21540-MS1	Matrix Spike	06/24/22

Batch ID: BG20029 **Preparation Method:** EPA 537.1 SPE DVB **Prepared By:** WEL

YORK Sample ID	Client Sample ID	Preparation Date
22F1242-01	288625	07/01/22
22F1242-02	288617	07/01/22
22F1242-03	288673	07/01/22
22F1242-04	288625-PFAS-Field Blank	07/01/22
22F1242-05	288617-PFAS-Field Blank	07/01/22
22F1242-06	288673-PFAS-Field Blank	07/01/22
BG20029-BLK1	Blank	07/01/22
BG20029-BS1	LCS	07/01/22
BG20029-DUP1	Duplicate	07/01/22
BG20029-MS1	Matrix Spike	07/01/22

Semivolatile Organic Compounds by GC/MS/SIM - Quality Control Data

York Analytical Laboratories, Inc.

Analyte	Result	Reporting Limit	Units	Spike Level	Source* Result	%REC	%REC Limits	Flag	RPD	RPD Limit	Flag
Batch BF21540 - EPA 522											
Blank (BF21540-BLK1)									Prepared: 06/24/2022 Analyzed: 06/27/2022		
1,4-Dioxane	ND	0.200	ug/L								
Surrogate: 1,4-Dioxane-d8	*2.80*		*"*	*2.50*		*112*	*70-130*				
LCS (BF21540-BS1)									Prepared: 06/24/2022 Analyzed: 06/27/2022		
1,4-Dioxane	4.66	0.200	ug/L	5.00		93.2	70-130				
Surrogate: 1,4-Dioxane-d8	*2.20*		*"*	*2.50*		*88.0*	*70-130*				
LCS (BF21540-BS2)									Prepared: 06/24/2022 Analyzed: 06/27/2022		
1,4-Dioxane	8.86	0.200	ug/L	10.0		88.6	70-130				
Surrogate: 1,4-Dioxane-d8	*2.20*		*"*	*2.50*		*88.0*	*70-130*				
Duplicate (BF21540-DUP1)	*Source sample: 22F0847-01 (Duplicate)								Prepared: 06/24/2022 Analyzed: 06/27/2022		
1,4-Dioxane	ND	0.200	ug/L		ND					30	
Surrogate: 1,4-Dioxane-d8	*2.60*		*"*	*2.50*		*104*	*70-130*				
Matrix Spike (BF21540-MS1)	*Source sample: 22F0765-01 (Matrix Spike)								Prepared: 06/24/2022 Analyzed: 06/27/2022		
1,4-Dioxane	4.17	0.200	ug/L	5.00	ND	83.4	70-130				
Surrogate: 1,4-Dioxane-d8	*2.40*		*"*	*2.50*		*96.0*	*70-130*				

Analyte	Result	Reporting Limit	Units	Spike Level	Source* Result	%REC	%REC Limits	Flag	RPD	RPD Limit	Flag
Batch BG20029 - EPA 537.1 SPE DVB											
Blank (BG20029-BLK1)									Prepared: 07/01/2022 Analyzed: 07/05/2022		
Perfluorobutanesulfonic acid (PFBS)	ND	2.00	ng/L								
Perfluorohexanoic acid (PFHxA)	ND	2.00	"								
Perfluoroheptanoic acid (PFHpA)	ND	2.00	"								
Perfluorohexanesulfonic acid (PFHxS)	ND	2.00	"								
Perfluorooctanoic acid (PFOA)	ND	2.00	"								
Perfluorooctanesulfonic acid (PFOS)	ND	2.00	"								
Perfluorononanoic acid (PFNA)	ND	2.00	"								
Perfluorodecanoic acid (PFDA)	ND	2.00	"								
Perfluoroundecanoic acid (PFUnA)	ND	2.00	"								
Perfluorododecanoic acid (PFDoA)	ND	2.00	"								
Perfluorotridecanoic acid (PFTrDA)	ND	2.00	"								
Perfluorotetradecanoic acid (PFTA)	ND	2.00	"								
N-MeFOSAA	ND	2.00	"								
N-EtFOSAA	ND	2.00	"								
9CL-PF3ONS	ND	2.00	"								
11CL-PF3OUdS	ND	2.00	"								
HFPO-DA (Gen-X)	ND	2.00	"								
ADONA	ND	2.00	"								
Surrogate: d5-N-EtFOSAA	*287*		"	*320*		*89.5*	*70-130*				
Surrogate: 13C-PFDA	*69.4*		"	*80.0*		*86.8*	*70-130*				
Surrogate: 13C-PFHxA	*75.8*		"	*80.0*		*94.7*	*70-130*				
Surrogate: M3HFPO-DA	*73.2*		"	*80.0*		*91.5*	*70-130*				
LCS (BG20029-BS1)									Prepared: 07/01/2022 Analyzed: 07/05/2022		
Perfluorobutanesulfonic acid (PFBS)	32.3	2.00	ng/L	35.4		91.1	70-130				
Perfluorohexanoic acid (PFHxA)	34.8	2.00	"	40.0		87.0	70-130				
Perfluoroheptanoic acid (PFHpA)	36.5	2.00	"	40.0		91.2	70-130				
Perfluorohexanesulfonic acid (PFHxS)	35.4	2.00	"	38.0		93.0	70-130				
Perfluorooctanoic acid (PFOA)	37.9	2.00	"	40.0		94.7	70-130				
Perfluorooctanesulfonic acid (PFOS)	37.2	2.00	"	38.4		96.9	70-130				
Perfluorononanoic acid (PFNA)	38.4	2.00	"	40.0		95.9	70-130				
Perfluorodecanoic acid (PFDA)	32.7	2.00	"	40.0		81.7	70-130				
Perfluoroundecanoic acid (PFUnA)	36.4	2.00	"	40.0		91.0	70-130				
Perfluorododecanoic acid (PFDoA)	36.4	2.00	"	40.0		91.1	70-130				
Perfluorotridecanoic acid (PFTrDA)	31.3	2.00	"	40.0		78.2	70-130				
Perfluorotetradecanoic acid (PFTA)	32.5	2.00	"	40.0		81.2	70-130				
N-MeFOSAA	37.4	2.00	"	40.0		93.5	70-130				
N-EtFOSAA	37.5	2.00	"	40.0		93.6	70-130				
9CL-PF3ONS	33.9	2.00	"	37.4		90.6	60-130				
11CL-PF3OUdS	31.1	2.00	"	37.8		82.3	60-130				
HFPO-DA (Gen-X)	33.8	2.00	"	40.0		84.6	60-130				
ADONA	32.7	2.00	"	37.8		86.5	60-130				
Surrogate: d5-N-EtFOSAA	*337*		"	*320*		*105*	*70-130*				
Surrogate: 13C-PFDA	*74.7*		"	*80.0*		*93.3*	*70-130*				
Surrogate: 13C-PFHxA	*83.2*		"	*80.0*		*104*	*70-130*				
Surrogate: M3HFPO-DA	*78.9*		"	*80.0*		*98.6*	*70-130*				

PFAS Target compounds by LC/MS-MS - Quality Control Data

York Analytical Laboratories, Inc.

Analyte	Result	Reporting Limit	Units	Spike Level	Source* Result	%REC	%REC Limits	Flag	RPD	RPD Limit	Flag
Batch BG20029 - EPA 537.1 SPE DVB											
Duplicate (BG20029-DUP1)	*Source sample: 22F1242-04 (288625-PFAS-Field Blank)								Prepared: 07/01/2022 Analyzed: 07/05/2022		
Perfluorobutanesulfonic acid (PFBS)	ND	2.17	ng/L		ND					25	
Perfluorohexanoic acid (PFHxA)	ND	2.17	"		ND					25	
Perfluoroheptanoic acid (PFHpA)	ND	2.17	"		ND					25	
Perfluorohexanesulfonic acid (PFHxS)	ND	2.17	"		ND					25	
Perfluorooctanoic acid (PFOA)	ND	2.17	"		ND					25	
Perfluorooctanesulfonic acid (PFOS)	ND	2.17	"		ND					25	
Perfluorononanoic acid (PFNA)	ND	2.17	"		ND					25	
Perfluorodecanoic acid (PFDA)	ND	2.17	"		ND					25	
Perfluoroundecanoic acid (PFUnA)	ND	2.17	"		ND					25	
Perfluorododecanoic acid (PFDoA)	ND	2.17	"		ND					25	
Perfluorotridecanoic acid (PFTrDA)	ND	2.17	"		ND					25	
Perfluorotetradecanoic acid (PFTA)	ND	2.17	"		ND					25	
N-MeFOSAA	ND	2.17	"		ND					25	
N-EtFOSAA	ND	2.17	"		ND					25	
9CL-PF3ONS	ND	2.17	"		ND					25	
11CL-PF3OUdS	ND	2.17	"		ND					25	
HFPO-DA (Gen-X)	ND	2.17	"		ND					25	
ADONA	ND	2.17	"		ND					25	
Surrogate: d5-N-EtFOSAA	*348*		*"*	*348*		*100*	*70-130*				
Surrogate: 13C-PFDA	*77.2*		*"*	*87.0*		*88.8*	*70-130*				
Surrogate: 13C-PFHxA	*87.6*		*"*	*87.0*		*101*	*70-130*				
Surrogate: M3HFPO-DA	*84.0*		*"*	*87.0*		*96.6*	*70-130*				
Matrix Spike (BG20029-MS1)	*Source sample: 22F1306-01 (Matrix Spike)								Prepared: 07/01/2022 Analyzed: 07/05/2022		
Perfluorobutanesulfonic acid (PFBS)	58.9	2.00	ng/L	70.8	ND	83.1	70-130				
Perfluorohexanoic acid (PFHxA)	64.6	2.00	"	80.0	ND	80.7	70-130				
Perfluoroheptanoic acid (PFHpA)	69.6	2.00	"	80.0	ND	87.0	70-130				
Perfluorohexanesulfonic acid (PFHxS)	71.2	2.00	"	76.0	ND	93.7	70-130				
Perfluorooctanoic acid (PFOA)	72.3	2.00	"	80.0	ND	90.4	70-130				
Perfluorooctanesulfonic acid (PFOS)	68.0	2.00	"	76.8	ND	88.6	70-130				
Perfluorononanoic acid (PFNA)	68.4	2.00	"	80.0	ND	85.5	70-130				
Perfluorodecanoic acid (PFDA)	65.0	2.00	"	80.0	ND	81.2	70-130				
Perfluoroundecanoic acid (PFUnA)	67.1	2.00	"	80.0	ND	83.9	70-130				
Perfluorododecanoic acid (PFDoA)	64.8	2.00	"	80.0	ND	81.0	70-130				
Perfluorotridecanoic acid (PFTrDA)	60.5	2.00	"	80.0	ND	75.6	70-130				
Perfluorotetradecanoic acid (PFTA)	63.2	2.00	"	80.0	ND	79.0	70-130				
N-MeFOSAA	73.5	2.00	"	80.0	ND	91.8	70-130				
N-EtFOSAA	69.6	2.00	"	80.0	ND	87.0	70-130				
9CL-PF3ONS	67.2	2.00	"	74.8	ND	89.9	70-130				
11CL-PF3OUdS	59.4	2.00	"	75.6	ND	78.5	70-130				
HFPO-DA (Gen-X)	59.2	2.00	"	80.0	ND	74.0	70-130				
ADONA	60.6	2.00	"	75.6	ND	80.2	50-130				
Surrogate: d5-N-EtFOSAA	*304*		*"*	*320*		*94.9*	*70-130*				
Surrogate: 13C-PFDA	*70.4*		*"*	*80.0*		*88.0*	*70-130*				
Surrogate: 13C-PFHxA	*77.0*		*"*	*80.0*		*96.2*	*70-130*				
Surrogate: M3HFPO-DA	*72.0*		*"*	*80.0*		*90.0*	*70-130*				

Sample and Data Qualifiers Relating to This Work Order

Definitions and Other Explanations

*	Analyte is not certified or the state of the samples origination does not offer certification for the Analyte.
ND	NOT DETECTED - the analyte is not detected at the Reported to level (LOQ/RL or LOD/MDL)
RL	REPORTING LIMIT - the minimum reportable value based upon the lowest point in the analyte calibration curve.
LOQ	LIMIT OF QUANTITATION - the minimum concentration of a target analyte that can be reported within a specified degree of confidence. This is the lowest point in an analyte calibration curve that has been subjected to all steps of the processing/analysis and verified to meet defined criteria. This is based upon NELAC 2009 Standards and applies to all analyses.
LOD	LIMIT OF DETECTION - a verified estimate of the minimum concentration of a substance in a given matrix that an analytical process can reliably detect. This is based upon NELAC 2009 Standards and applies to all analyses conducted under the auspices of EPA SW-846.
MDL	METHOD DETECTION LIMIT - a statistically derived estimate of the minimum amount of a substance an analytical system can reliably detect with a 99% confidence that the concentration of the substance is greater than zero. This is based upon 40 CFR Part 136 Appendix B and applies only to EPA 600 and 200 series methods.
Reported to	This indicates that the data for a particular analysis is reported to either the LOD/MDL, or the LOQ/RL. In cases where the "Reported to" is located above the LOD/MDL, any value between this and the LOQ represents an estimated value which is "J" flagged accordingly. This applies to volatile and semi-volatile target compounds only.
NR	Not reported
RPD	Relative Percent Difference
Wet	The data has been reported on an as-received (wet weight) basis
Low Bias	Low Bias flag indicates that the recovery of the flagged analyte is below the laboratory or regulatory lower control limit. The data user should take note that this analyte may be biased low but should evaluate multiple lines of evidence including the LCS and site-specific MS/MSD data to draw bias conclusions. In cases where no site-specific MS/MSD was requested, only the LCS data can be used to evaluate such bias.
High Bias	High Bias flag indicates that the recovery of the flagged analyte is above the laboratory or regulatory upper control limit. The data user should take note that this analyte may be biased high but should evaluate multiple lines of evidence including the LCS and site-specific MS/MSD data to draw bias conclusions. In cases where no site-specific MS/MSD was requested, only the LCS data can be used to evaluate such bias.
Non-Dir.	Non-dir. flag (Non-Directional Bias) indicates that the Relative Percent Difference (RPD) (a measure of precision) among the MS and MSD data is outside the laboratory or regulatory control limit. This alerts the data user where the MS and MSD are from site-specific samples that the RPD is high due to either non-homogeneous distribution of target analyte between the MS/MSD or indicates poor reproducibility for other reasons.
MCL	This is the Maximum Contaminant Level in ng/L (ppt) establised by the NYSDOH for these compounds wheree an MCL is reported. Exceedences are flagged according.

Field Chain-of-Custody Record

YORK
ANALYTICAL LABORATORIES INC

York Analytical Laboratories, Inc. (YORK)'s Standard Terms & Conditions are listed on the back side of this document.
This document serves as your written authorization for YORK to proceed with the analyses requested below.
Your signature binds you to YORK's Standard Terms & Conditions.

YORK Project No. 22F1242

120 Research Drive Stratford, CT 06615 | 132-02 89th Ave Queens, NY 11418 | clientservices@yorklab.com | www.yorklab.com | 800-306-YORK | 800-306-9675 | Page ____ of ____

YOUR Information	Report To:	Invoice To:	YOUR Project Number	Turn-Around Time
Company:	Company: Agua Environmental Lab	Company:		RUSH - Next Day
Address:	Address:	Address:	YOUR Project Name	RUSH - Two Day
Phone.:	Phone.:	Phone.:		RUSH - Three Day
Contact:	Contact:	Contact:		RUSH - Four Day
E-mail:	E-mail:	E-mail:	YOUR PO#:	Standard (5-7 Day)

Please print clearly and legibly. All information must be complete. Samples will not be logged in and the turn-around-time clock will not begin until any questions by YORK are resolved.

Samples Collected by: (print AND sign your name)

Matrix Codes
S - soil / solid
GW - groundwater
DW - drinking water
WW - wastewater
O - Oil | Other

Samples From
New York ✓
New Jersey
Connecticut
Pennsylvania
Other:

Report / EDD Type (circle selections)
Summary Report | CT RCP | Standard Excel EDD
QA Report | CT RCP DQA/DUE | EQuIS (Standard)
NY ASP A Package | NJDEP Reduced Deliverables | NYSDEC EQuIS
NY ASP B Package | NJDEP SRP HazSite
NJDKQP | Other:

YORK Reg. Comp.
Compared to the following Regulation(s): (please fill in)

Sample Identification	Sample Matrix	Date/Time Sampled	Analysis Requested	Container Description
288625	DW	6/23/22 8:40 am	PFAS Method 537 18 Compound +	1,4 Dioxane
288617	DW	6/23/22 9:40 am	PFAS Method 537 18 Compound +	1,4 Dioxane
288623	DW	6/23/22 9:20 am	PFAS Method 537 18 Compound +	1,4 Dioxane

Comments:

Preservation: (check all that apply)
HCl ____ MeOH ____ HNO3 ____ H2SO4 ____ NaOH ____
ZnAc ____ Ascorbic Acid ____ Other: ____

Special Instruction
Field Filtered
Lab to Filter

Samples iced/chilled at time of lab pickup? circle Yes or No

Samples Relinquished by / Company	Date/Time	Samples Received by / Company	Date/Time	Samples Relinquished by / Company	Date/Time
[illegible]	6/23/22 12:55 pm	1.		2. S Beaman 6/23	13:55
Samples Received by / Company	Date/Time	3. Samples Relinquished by / Company	Date/Time	3. Samples Received by / Company	Date/Time
Samples Relinquished by / Company	Date/Time	4. Samples Received by / Company	Date/Time	Samples Received in LAB by	Date/Time 6/24/22 1317 Temperature 1.0 Degrees C

WELL 6A

AQUA ENVIRONMENTAL LAB
56 Church Hill Road • Newtown, CT 06470 • (203) 270-9973
A York Analytical Company
YORK

Report of Analysis

Name: WSP, USA
4 Research Dr.
Ste. 204
Shelton, CT 06484
Sample Date: 6/20/2022 2:03 PM
Receipt Date: 6/20/2022 2:03 PM
Report Date: 7/11/2022
Sample Site: Summit Well 6A

Sample ID#: 288613
Sample Type: Drinking Water
Sampler: WSP

Parameter	Sample Result	Units	Limits	Method	RL	Analysis Date / Time
Biological						
Coliform Bacteria	present *	none	0	SM9223B-04	0	6/23/2022 16:30
e Coli Bacteria	absent	none	0	SM9223B-04	0	6/23/2022 16:30
Heterotrophic Plate Count	53	MPN	No Limit Set	SM9215E	0	6/23/2022 13:40
Inorganic Compounds						
Chlorine, residual	0	mg/L	4	SM4500CLG-2011	0	6/20/2022 14:03
Metals						
Arsenic	ND	mg/L	0.01	EPA 200.5	0.005	6/24/2022 13:11
Copper	ND	mg/L	1.3	EPA 200.5	0.005	6/24/2022 13:11
Iron	0.02	mg/L	0.3	EPA 200.5	0.005	6/24/2022 13:11
Lead	ND	mg/L	0.015	EPA 200.5	0.001	6/24/2022 13:11
Manganese	0.05	mg/L	0.05	EPA 200.5	0.005	6/24/2022 13:11
Minerals						
Alkalinity	138	mg/L	No Limit Set	SM 2320B (-97)	5	7/5/2022 17:10
Chloride	12.6	mg/L	250	EPA 300.0	1	6/23/2022 20:32
Hardness	151	mg/L	No Limit Set	EPA 200.5	5	6/24/2022 13:11
Sodium	16.7	mg/L	100	EPA 200.5	1	6/24/2022 13:11
Sulfate	30.7	mg/L	250	EPA 300.0	2	6/23/2022 20:32
Miscellaneous/Other						
Langelier Saturation Index	-0.56 *	LSI	No Limit Set	CALCTN	None	7/6/2022 18:09
Nutrient						
Nitrate as N	ND	mg/L	10	EPA 300.0	0.5	6/23/2022 20:32
Nitrite as N	ND	mg/L	1	EPA 300.0	0.1	6/23/2022 20:32
Physical						
Color, apparent	<5	CU	15	SM 2120B-01	5	6/21/2022 13:30
Odor	2	TON	2	SM2150B-2011	0	6/23/2022 16:00

Based on the bacteriological examination, according to the Federal Safe Drinking Water Act (SDWA), this water was unsafe for drinking purpose at the time the sample was collected. Corrective measures, followed by re-examination, are recommended.
*Serious corrosion.

ND = Not Detected
* = Above Specified Limit

CT Lic PH-0787 NY Lic 11706

AquaEnvLab.com
YorkLab.com
203 270 9973

Analytical results relate to the samples as received at the laboratory. Report shall not be reproduced except in its entirety without written approval from the laboratory.

AQUA ENVIRONMENTAL LAB
56 Church Hill Road • Newtown, CT 06470 • (203) 270-9973
A York Analytical Company
YORK ANALYTICAL LABORATORIES INC

Report of Analysis

Name: WSP, USA
4 Research Dr.
Ste. 204
Shelton, CT 06484
Sample Date: 6/20/2022 2:03 PM
Receipt Date: 6/20/2022 2:03 PM
Report Date: 7/11/2022
Sample Site: Summit Well 6A

Sample ID#: 288613
Sample Type: Drinking Water
Sampler: WSP

Parameter	Sample Result	Units	Limits	Method	RL	Analysis Date / Time
Physical						
PH	7.6	pH	6.4 - 8.5	SM4500HB-2011	0	6/20/2022 14:03
Total Dissolved Solids (TDS)	254	mg/L	500	SM2540C-2011	None	6/29/2022 12:02
Turbidity	0.17	NTU	5	EPA 180.1	0.05	6/23/2022 16:00
Radiochemicals						
Water Radon	1,340 +/-38	pCi/L	No Limit Set	SM7500Rn-23	0	6/23/2022 16:50

Comments: Based on the bacteriological examination, according to the Federal Safe Drinking Water Act (SDWA), this water was unsafe for drinking purpose at the time the sample was collected. Corrective measures, followed by re-examination, are recommended.
*Serious corrosion.

ND = Not Detected
* = Above Specified Limit

Report Approved by: _____
Lab Director

CT Lic PH-0787 NY Lic 11706

AquaEnvLab.com
YorkLab.com
203 270 9973

Analytical results relate to the samples as received at the laboratory. Report shall not be reproduced except in its entirety without written approval from the laboratory.

AQUA ENVIRONMENTAL LAB
56 Church Hill Road • Newtown, CT 06470 • (203) 270-9973
A York Analytical Company
YORK

Report of Analysis

Name: WSP, USA
4 Research Dr.
Ste. 204
Shelton, CT 06484
Sample Date: 6/20/2022 2:03 PM
Receipt Date: 6/20/2022 2:03 PM
Report Date: 7/27/2022
Sample Site: Summit Well 6A

Sample ID#: 288614
Sample Type: Drinking Water
Sampler: WSP

Parameter	Sample Result	Units	Limits	Method	RL	Analysis Date / Time
Metals						
Antimony	ND	mg/L	No Limit Set	EPA 200.8	0.001	6/29/2022 16:21
Arsenic	ND	mg/L	0.01	EPA 200.5	0.005	6/24/2022 13:11
Barium	0.007	mg/L	2	EPA 200.5	0.001	6/24/2022 13:11
Beryllium	ND	mg/L	0.004	EPA 200.5	0.001	6/24/2022 13:11
Cadmium	ND	mg/L	0.005	EPA 200.5	0.001	6/24/2022 13:11
Chromium(T)	ND	mg/L	0.1	EPA 200.5	0.001	6/24/2022 13:11
Cyanide	<0.005	mg/L	0.2	EPA 335.4	0.005	6/24/2022 10:38
Mercury	<0.0002	mg/L	0.002	EPA 245.2	0.0002	6/29/2022 10:35
Nickel	ND	mg/L	0.1	EPA 200.5	0.001	6/24/2022 13:11
Selenium	ND	mg/L	0.05	EPA 200.5	0.005	6/24/2022 13:11
Silver	ND	mg/L	0.1	EPA 200.5	0.002	6/24/2022 13:11
Thallium	ND	mg/L	0.002	EPA 200.8	0.001	6/29/2022 16:21
Zinc	ND	mg/L	5	EPA 200.5	0.005	6/24/2022 13:11
Minerals						
Chloride	12.6	mg/L	250	EPA 300.0	1	6/23/2022 20:32
Fluoride	ND	mg/L	4	EPA 300.0	0.1	6/23/2022 20:32
Sodium	16.7	mg/L	100	EPA 200.5	1	6/24/2022 13:11
Sulfate	30.7	mg/L	250	EPA 300.0	2	6/23/2022 20:32

ND = Not Detected
* = Above Specified Limit

Report Approved by: _____ CT Lic PH-0787 NY Lic 11706
Lab Director

AquaEnvLab.com
YorkLab.com
203 270 9973

Analytical results relate to the samples as received at the laboratory. Report shall not be reproduced except in its entirety without written approval from the laboratory.

AQUA ENVIRONMENTAL LAB
56 Church Hill Road • Newtown, CT 06470 • (203) 270-9973
A York Analytical Company
YORK

Report of Analysis

Name: WSP, USA
4 Research Dr.
Ste. 204
Shelton, CT 06484
Sample Date: 6/20/2022 2:03 PM
Receipt Date: 6/20/2022 2:03 PM
Report Date: 7/25/2022
Sample Site: Summit Well 6A

Sample ID#: 288618
Sample Type: Drinking Water
Sampler: WSP

Parameter	Sample Result	Units	Limits	Method	RL	Analysis Date / Time
Volatile Organic Compounds						
01) Benzene	ND	ug/L	5	EPA 524.2	0.5	6/27/2022 20:44
02) Bromobenzene	ND	ug/L	5	EPA 524.2	0.5	6/27/2022 20:44
03) Bromochloromethane	ND	ug/L	5	EPA 524.2	0.5	6/27/2022 20:44
04) Bromomethane	ND	ug/L	5	EPA 524.2	0.5	6/27/2022 20:44
05) n-Butylbenzene	ND	ug/L	5	EPA 524.2	0.5	6/27/2022 20:44
06) sec-Butylbenzene	ND	ug/L	5	EPA 524.2	0.5	6/27/2022 20:44
07) tert-Butylbenzene	ND	ug/L	5	EPA 524.2	0.5	6/27/2022 20:44
08) Carbon Tetrachloride	ND	ug/L	5	EPA 524.2	0.5	6/27/2022 20:44
09) Chlorobenzene	ND	ug/L	5	EPA 524.2	0.5	6/27/2022 20:44
10) Chloroethane	ND	ug/L	5	EPA 524.2	0.5	6/27/2022 20:44
11) Chloromethane	ND	ug/L	5	EPA 524.2	0.5	6/27/2022 20:44
12) 2-Chlorotoluene	ND	ug/L	5	EPA 524.2	0.5	6/27/2022 20:44
13) 4-Chlorotoluene	ND	ug/L	5	EPA 524.2	0.5	6/27/2022 20:44
14) Dibromomethane	ND	ug/L	5	EPA 524.2	0.5	6/27/2022 20:44
15) 1,2-Dichlorobenzene	ND	ug/L	5	EPA 524.2	0.5	6/27/2022 20:44
16) 1,3-Dichlorobenzene	ND	ug/L	5	EPA 524.2	0.5	6/27/2022 20:44
17) 1,4-Dichlorobenzene	ND	ug/L	5	EPA 524.2	0.5	6/27/2022 20:44
18) Dichlorodifluoromethane	ND	ug/L	5	EPA 524.2	0.5	6/27/2022 20:44
19) 1,1-Dichloroethane	ND	ug/L	5	EPA 524.2	0.5	6/27/2022 20:44
20) 1,2-Dichloroethane	ND	ug/L	5	EPA 524.2	0.5	6/27/2022 20:44
21) 1,1-Dichloroethene	ND	ug/L	5	EPA 524.2	0.5	6/27/2022 20:44
22) cis-1,2,-Dichloroethene	ND	ug/L	5	EPA 524.2	0.5	6/27/2022 20:44
23) trans-1,2-Dichloroethene	ND	ug/L	5	EPA 524.2	0.5	6/27/2022 20:44
24) 1,2-Dichloropropane	ND	ug/L	5	EPA 524.2	0.5	6/27/2022 20:44
25) 1,3-Dichloropropane	ND	ug/L	5	EPA 524.2	0.5	6/27/2022 20:44
26) 2,2-Dichloropropane	ND	ug/L	5	EPA 524.2	0.5	6/27/2022 20:44
27) 1,1-Dichloropropene	ND	ug/L	5	EPA 524.2	0.5	6/27/2022 20:44

ND = Not Detected
* = Above Specified Limit

CT Lic PH-0787 NY Lic 11706

AquaEnvLab.com
YorkLab.com
203 270 9973

Analytical results relate to the samples as received at the laboratory. Report shall not be reproduced except in its entirety without written approval from the laboratory.

AQUA ENVIRONMENTAL LAB
56 Church Hill Road • Newtown, CT 06470 • (203) 270-9973
A York Analytical Company
YORK

Report of Analysis

Name: WSP, USA
4 Research Dr.
Ste. 204
Shelton, CT 06484
Sample Date: 6/20/2022 2:03 PM
Receipt Date: 6/20/2022 2:03 PM
Report Date: 7/25/2022
Sample Site: Summit Well 6A

Sample ID#: 288618
Sample Type: Drinking Water
Sampler: WSP

Parameter	Sample Result	Units	Limits	Method	RL	Analysis Date / Time
Volatile Organic Compounds						
28] cis- 1,3-Dichloropropene	ND	ug/L	5	EPA 524.2	0.5	6/27/2022 20:44
29] trans-1,3-Dichloropropene	ND	ug/L	5	EPA 524.2	0.5	6/27/2022 20:44
30) Ethylbenzene	ND	ug/L	5	EPA 524.2	0.5	6/27/2022 20:44
31) Isopropylbenzene	ND	ug/L	5	EPA 524.2	0.5	6/27/2022 20:44
32) p-Isopropyltoluene	ND	ug/L	5	EPA 524.2	0.5	6/27/2022 20:44
33) Methylene chloride	ND	ug/L	5	EPA 524.2	0.5	6/27/2022 20:44
34) n-Propylbenzene	ND	ug/L	5	EPA 524.2	0.5	6/27/2022 20:44
35) Styrene	ND	ug/L	5	EPA 524.2	0.5	6/27/2022 20:44
36) 1,1,1,2-Tetrachloroethane	ND	ug/L	5	EPA 524.2	0.5	6/27/2022 20:44
37) 1,1,2,2-Tetrachloroethane	ND	ug/L	5	EPA 524.2	0.5	6/27/2022 20:44
38) Tetrachloroethene	ND	ug/L	5	EPA 524.2	0.5	6/27/2022 20:44
39) Toluene	ND	ug/L	5	EPA 524.2	0.5	6/27/2022 20:44
40) 1,2,3-Trichlorobenzene	ND	ug/L	5	EPA 524.2	0.5	6/27/2022 20:44
41) 1,2,4-Trichlorobenzene	ND	ug/L	5	EPA 524.2	0.5	6/27/2022 20:44
42) 1,1,1-Trichloroethane	ND	ug/L	5	EPA 524.2	0.5	6/27/2022 20:44
43) 1,1,2-Trichloroethane	ND	ug/L	5	EPA 524.2	0.5	6/27/2022 20:44
44) Trichloroethene	ND	ug/L	5	EPA 524.2	0.5	6/27/2022 20:44
45) Trichlorofluoromethane	ND	ug/L	5	EPA 524.2	0.5	6/27/2022 20:44
46) 1,2,3-Trichloropropane	ND	ug/L	5	EPA 524.2	0.5	6/27/2022 20:44
47} 1,2,4-Trimethylbenzene	ND	ug/L	5	EPA 524.2	0.5	6/27/2022 20:44
48) 1,3,5-Trimethylbenzene	ND	ug/L	5	EPA 524.2	0.5	6/27/2022 20:44
49) o-Xylene	ND	ug/L	5	EPA 524.2	0.5	6/27/2022 20:44
50) Hexachlorobutadiene	ND	ug/L	5	EPA 524.2	0.5	6/27/2022 20:44
51) m+p-Xylene	ND	ug/L	5	EPA 524.2	0.5	6/27/2022 20:44
52) Methyl-tertiary-butyl-ether	ND	ug/L	10	EPA 524.2	0.5	6/27/2022 20:44
53) Vinyl chloride	ND	ug/L	2	EPA 524.2	0.5	6/27/2022 20:44

ND = Not Detected
* = Above Specified Limit

Report Approved by: _____ CT Lic PH-0787 NY Lic 11706
Lab Director

AquaEnvLab.com
YorkLab.com
203 270 9973

Analytical results relate to the samples as received at the laboratory. Report shall not be reproduced except in its entirety without written approval from the laboratory.

AQUA ENVIRONMENTAL LAB
56 Church Hill Road • Newtown, CT 06470 • (203) 270-9973
A York Analytical Company
YORK

Report of Analysis

Name: WSP, USA
4 Research Dr.
Ste. 204
Shelton, CT 06484
Sample Date: 6/20/2022 2:03 PM
Receipt Date: 6/20/2022 2:03 PM
Report Date: 7/27/2022
Sample Site: Summit Well 6A

Sample ID#: 288616
Sample Type: Drinking Water
Sampler: WSP

Parameter	Sample Result	Units	Limits	Method	RL	Analysis Date / Time
Organic Compounds						
PCB	ND	mg/L	0.5	EPA 508.1	0.0002	6/27/2022 10:50
Synthetic Organic Chemicals P						
Butachlor	ND	mg/L	0	EPA 508.1	0.001	6/27/2022 10:50
Dioxin	ND	ug/L	0	EPA 1613-B	5	7/2/2022 10:50
Endothall	ND	mg/L	0	EPA 548.1	5	6/29/2022 10:50
Metribuzin	ND	mg/L	0	EPA 508.1	0.0005	6/27/2022 10:50
Propachlor	ND	mg/L	0	EPA 508.1	0.001	6/27/2022 10:50
Synthetic Organic Chemicals P						
Dalapon	ND	mg/L	200	EPA 552.2	0.002	6/29/2022 10:50
Synthetic Organic Compounds						
2,4,5-TP	ND	mg/L	50	EPA 555	0.0004	6/29/2022 10:50
2,4-D	ND	mg/L	70	EPA 555	0.0002	6/29/2022 10:50
3-Hydroxycarbofuran	ND	mg/L	No Limit Set	EPA 531.1	0.002	7/3/2022 10:50
Alachlor	ND	mg/L	2	EPA 508.1	0.0004	6/27/2022 10:50
Aldicarb	ND	mg/L	No Limit Set	EPA 531.1	0.001	7/3/2022 10:50
Aldicarb Sulfone	ND	mg/L	No Limit Set	EPA 531.1	0.0017	7/3/2022 10:50
Aldicarb Sulfoxide	ND	mg/L	No Limit Set	EPA 531.1	0.001	7/3/2022 10:50
Aldrin	ND	mg/L	0	EPA 508.1	0.0005	6/27/2022 10:50
Atrazine	ND	ug/L	3	EPA 508.1	0.0002	6/27/2022 10:50
Benzo (A) Pyrene	ND	mg/L	0.2	EPA 525.2	0	7/12/2022 10:50
Carbaryl	ND	mg/L	No Limit Set	EPA 531.1	0.004	7/3/2022 10:50
Carbofuran	ND	mg/L	40	EPA 531.1	0.0019	7/3/2022 10:50
Chlordane	ND	mg/L	2	EPA 508.1	0.0004	6/27/2022 10:50
Di (2-ethylhexyl) adipate	ND	mg/L	400	EPA 525.2	0.001	7/12/2022 10:50
Di (2-ethylhexyl) phthalates	ND	mg/L	6	EPA 525.2	0.001	7/12/2022 10:50
Dibromochloropropane(DBCP)	ND	mg/L	0.2	EPA 504.1	0	6/29/2022 10:50

ND = Not Detected
* = Above Specified Limit

CT Lic PH-0787 NY Lic 11706

AquaEnvLab.com
YorkLab.com
203 270 9973

Analytical results relate to the samples as received at the laboratory. Report shall not be reproduced except in its entirety without written approval from the laboratory.

AQUA ENVIRONMENTAL LAB
56 Church Hill Road • Newtown, CT 06470 • (203) 270-9973
A York Analytical Company
YORK

Report of Analysis

Name: WSP, USA
4 Research Dr.
Ste. 204
Shelton, CT 06484
Sample Date: 6/20/2022 2:03 PM
Receipt Date: 6/20/2022 2:03 PM
Report Date: 7/27/2022
Sample Site: Summit Well 6A

Sample ID#: 288616
Sample Type: Drinking Water
Sampler: WSP

Parameter	Sample Result	Units	Limits	Method	RL	Analysis Date / Time
Synthetic Organic Compounds						
Dicamba	ND	mg/L	No Limit Set	EPA 555	0.0008	6/29/2022 10:50
Dieldrin	ND	mg/L	No Limit Set	EPA 508.1	0	6/27/2022 10:50
Dinoseb	ND	mg/L	7	EPA 555	0.0004	6/29/2022 10:50
Diquat	ND	mg/L	0	EPA 549.2	0.0008	6/28/2022 10:50
Endrin	ND	mg/L	2	EPA 508.1	0	6/27/2022 10:50
Ethylene Dibromide(EDB)	ND	mg/L	0.05	EPA 504.1	0	6/29/2022 10:50
Glyphosphate	ND	mg/L	700	EPA 547	0.01	6/28/2022 10:50
Heptachlor	ND	mg/L	0.4	EPA 508.1	0.0001	6/27/2022 10:50
Heptachlor Epoxide	ND	mg/L	No Limit Set	EPA 508.1	0.0002	6/27/2022 10:50
Hexachlorobenzene	ND	mg/L	1	EPA 508.1	0.0002	6/27/2022 10:50
Hexachlorocyclopentadiene	ND	mg/L	50	EPA 508.1	0.0002	6/27/2022 10:50
Lindane	ND	mg/L	0.2	EPA 508.1	0.0002	6/27/2022 10:50
Methomyl	ND	mg/L	0	EPA 531.1	0.004	7/3/2022 10:50
Methoxychlor	ND	mg/L	40	EPA 508.1	0.001	6/27/2022 10:50
Metolachlor	ND	mg/L	No Limit Set	EPA 508.1	0.001	6/27/2022 10:50
Oxamyl (Vydate)	ND	mg/L	200	EPA 531.1	0.004	7/3/2022 10:50
Pentachlorophenol	ND	mg/L	1	EPA 555	0.0001	6/29/2022 10:50
Picloram	ND	mg/L	500	EPA 555	0.0002	6/29/2022 10:50
Simazine	ND	mg/L	4	EPA 508.1	0.0001	6/27/2022 10:50
Toxaphene	ND	mg/L	3	EPA 508.1	0.002	6/27/2022 10:50

ND = Not Detected
* = Above Specified Limit

Report Approved by: _____ CT Lic PH-0787 NY Lic 11706
Lab Director

AquaEnvLab.com
YorkLab.com
203 270 9973

Analytical results relate to the samples as received at the laboratory. Report shall not be reproduced except in its entirety without written approval from the laboratory.

AQUA ENVIRONMENTAL LAB
56 Church Hill Road • Newtown, CT 06470 • (203) 270-9973
A York Analytical Company
YORK

Report of Analysis

Name: WSP, USA
4 Research Dr.
Ste. 204
Shelton, CT 06484
Sample Date: 6/20/2022 2:03 PM
Receipt Date: 6/20/2022 2:03 PM
Report Date: 7/26/2022
Sample Site: Summit Well 6A

Sample ID#: 288619
Sample Type: Drinking Water
Sampler: WSP

Parameter	Sample Result	Units	Limits	Method	RL	Analysis Date / Time
Radiochemicals						
Gross Beta	1.50+/-0.830	pCi/L	No Limit Set	EPA 900.0	None	7/18/2022 08:36
Radium 226	0.216+/-0.300	pCi/L	5	EPA 903.0	1	7/21/2022 14:03
Radium 228	0.193+/-0.303	pCi/L	5	EPA 904.0	1	7/21/2022 11:57
Total Gross Alpha	1.84+/-1.46	pCi/L	No Limit Set	EPA 900.0	3	7/18/2022 08:36
Uranium	1.3	ug/L	30	EPA 200.8	1	6/29/2022 16:21

ND = Not Detected
* = Above Specified Limit

Report Approved by: _____ CT Lic PH-0787 NY Lic 11706
Lab Director

AquaEnvLab.com
YorkLab.com
203 270 9973

Analytical results relate to the samples as received at the laboratory. Report shall not be reproduced except in its entirety without written approval from the laboratory.

AQUA ENVIRONMENTAL LAB
56 Church Hill Road • Newtown, CT 06470 • (203) 270-9973
A York Analytical Company
YORK ANALYTICAL LABORATORIES INC

Report of Analysis

Name: WSP, USA
4 Research Dr.
Ste. 204
Shelton, CT 06484
Sample Date: 6/20/2022 2:03 PM
Receipt Date: 6/20/2022 2:03 PM
Report Date: 7/1/2022
Sample Site: Summit Well 6A

Sample ID#: 288612
Sample Type: Drinking Water
Sampler: WSP

Parameter	Sample Result	Units	Limits	Method	RL	Analysis Date / Time
Miscellaneous/Other						
Asbestos	ND	MFL	0	EPA 100.2	0.19	6/30/2022 08:18

ND = Not Detected
* = Above Specified Limit

Report Approved by: _____ CT Lic PH-0787 NY Lic 11706
Lab Director

AquaEnvLab.com
YorkLab.com
203 270 9973

Analytical results relate to the samples as received at the laboratory. Report shall not be reproduced except in its entirety without written approval from the laboratory.

AQUA ENVIRONMENTAL LAB
56 Church Hill Road • Newtown, CT 06470 • (203) 270-9973
A York Analytical Company
YORK ANALYTICAL LABORATORIES INC

Report of Analysis

Name: WSP, USA
4 Research Dr.
Ste. 204
Shelton, CT 06484
Sample Date: 6/20/2022 2:03 PM
Receipt Date: 6/20/2022 2:03 PM
Report Date: 7/25/2022
Sample Site: Summit Well 6A

Sample ID#: 288615
Sample Type: Drinking Water
Sampler: WSP

Parameter	Sample Result	Units	Limits	Method	RL	Analysis Date / Time
Organic Compounds						
Propylene Glycol	1.1	mg/L	No Limit Set	SW8015	1	7/25/2022 14:00

ND = Not Detected
* = Above Specified Limit

Report Approved by: _____ CT Lic PH-0787 NY Lic 11706
Lab Director

AquaEnvLab.com
YorkLab.com
203 270 9973

Analytical results relate to the samples as received at the laboratory. Report shall not be reproduced except in its entirety without written approval from the laboratory.

AQUA ENVIRONMENTAL LAB
56 Church Hill Road • Newtown, CT 06470 • (203) 270-9973
A York Analytical Company
YORK

Report of Analysis

Name: WSP, USA
4 Research Dr.
Ste. 204
Shelton, CT 06484
Sample Date: 6/20/2022 2:03 PM
Receipt Date: 6/20/2022 2:03 PM
Report Date: 7/6/2022
Sample Site: Summit Well 6A

Sample ID#: 288617
Sample Type: Drinking Water
Sampler: WSP

Parameter	Sample Result	Units	Limits	Method	RL	Analysis Date / Time
Organic Compounds						
1,4-Dioxane	ND	ug/L	1	EPA 522	0.2	6/24/2022 07:43
PerFluoroButaneSulfonic Acid	ND	ng/L	No Limit Set	EPA 537	1.34	7/1/2022 11:13
PerFluoroHeptanoic Acid	ND	ng/L	No Limit Set	EPA 537	1.34	7/1/2022 11:13
PerFluoroHexaneSulfonic Acid	1.54	ng/L	49	EPA 537	1.34	7/1/2022 11:13
PerFluoroHexanoic Acid	1.78	ng/L	No Limit Set	EPA 537	1.34	7/1/2022 11:13
PerFluoroNonanoic Acid	ND	ng/L	12	EPA 537	1.34	7/1/2022 11:13
PerFluoroOctaneSulfonic Acid	2.29	ng/L	10	EPA 537	1.34	7/1/2022 11:13
PerFluoroOctanoic Acid	3.88	ng/L	16	EPA 537	1.34	7/1/2022 11:13

ND = Not Detected
* = Above Specified Limit

Report Approved by: _____
Lab Director

CT Lic PH-0787 NY Lic 11706

AquaEnvLab.com
YorkLab.com
203 270 9973

Analytical results relate to the samples as received at the laboratory. Report shall not be reproduced except in its entirety without written approval from the laboratory.

Technical Report
Perfluoroalkyl Substances (PFAS)

prepared for:

Aqua Environmental Lab
56 Church Hill Road
Newtown CT, 06470
Attention: T. Braun

Report Date: 07/05/2022
Client Project ID: 288625/288617/288673
York Project (SDG) No.: 22F1242

Report Date: 07/05/2022
Client Project ID: 288625/288617/288673
York Project (SDG) No.: 22F1242

Aqua Environmental Lab
56 Church Hill Road
Newtown CT, 06470
Attention: T. Braun

Purpose and Results

This report contains the analytical data for the sample(s) identified on the attached chain-of-custody received in our laboratory on June 23, 2022 and listed below. The project was identified as your project: **288625/288617/288673**.

The analyses were conducted utilizing appropriate EPA methods as detailed in the data summary tables.

All samples were received in proper condition meeting the customary acceptance requirements for environmental samples except those indicated under the Sample and Analysis Qualifiers section of this report.

All analyses met the method and laboratory standard operating procedure requirements except as indicated by any data flags, the meaning of which are explained in the Sample and Data Qualifiers Relating to This Work Order section of this report and case narrative if applicable.

Please contact Client Services at 203.325.1371 with any questions regarding this report or e-mail clientservices@yorklab.com.

York Sample ID	Client Sample ID	Matrix	Date Collected	Date Received
22F1242-01	288625	Drinking Water	06/23/2022	06/23/2022
22F1242-02	288617	Drinking Water	06/23/2022	06/23/2022
22F1242-03	288673	Drinking Water	06/23/2022	06/23/2022
22F1242-04	288625-PFAS-Field Blank	Drinking Water	06/23/2022	06/23/2022
22F1242-05	288617-PFAS-Field Blank	Drinking Water	06/23/2022	06/23/2022
22F1242-06	288673-PFAS-Field Blank	Drinking Water	06/23/2022	06/23/2022

General Notes for York Project (SDG) No.: 22F1242

1. The RLs and MDLs (Reporting Limit and Method Detection Limit respectively) reported are adjusted for any dilution necessary due to the levels of target and/or non-target analytes and matrix interference. The RL(REPORTING LIMIT) is based upon the lowest standard utilized for the calibration where applicable.
2. Samples are retained for a period of thirty days after submittal of report, unless other arrangements are made.
3. York's liability for the above data is limited to the dollar value paid to York for the referenced project.
4. This report shall not be reproduced without the written approval of York Analytical Laboratories, Inc.
5. All analyses conducted met method or Laboratory SOP requirements. See the Sample and Data Qualifiers Section for further information.
6. It is noted that no analyses reported herein were subcontracted to another laboratory, unless noted in the report.
7. This report reflects results that relate only to the samples submitted on the attached chain-of-custody form(s) received by York.
8. Analyses conducted at York Analytical Laboratories, Inc. Stratford, CT are indicated by NY Cert. No. 10854; those conducted at York Analytical Laboratories, Inc., Richmond Hill, NY are indicated by NY Cert. No. 12058.

Approved By: Cassie L. Mosher

Cassie L. Mosher
Laboratory Manager

Date: 07/05/2022

Sample Information

Client Sample ID: 288625 **York Sample ID:** 22F1242-01

York Project (SDG) No.	Client Project ID	Matrix	Collection Date/Time	Date Received
22F1242	288625/288617/288673	Drinking Water	June 23, 2022 8:00 am	06/23/2022

1,4-Dioxane by GC/MS/SIM EPA 522

Log-in Notes:

Sample Notes:

Sample Prepared by Method: EPA 522

CAS No.	Parameter	Result	Flag	Maximum Contaminant Level MCL, ng/L	Units	Reported to LOQ	Reference Method	Date/Time Analyzed	Analyst
123-91-1	1,4-Dioxane	ND		1	ug/L	0.200	EPA 522	06/24/2022 07:43	KH
					Certifications:		NELAC-NY10854	06/27/2022 15:05	
1693-74-9	*** Tetrahydrofuran-d8**	**0.500**		**0**	ug/mL		EPA 522	06/24/2022 07:43	KH
					Certifications:			06/27/2022 15:05	

	Surrogate Recoveries	Result	Acceptance Range
17647-74-4	*Surrogate: 1,4-Dioxane-d8*	*80.0 %*	*70-130*

PFAS, EPA 537.1 List

Well 3

Log-in Notes:

Sample Notes:

Sample Prepared by Method: EPA 537.1 SPE DVB

CAS No.	Parameter	Result	Flag	Maximum Contaminant Level MCL, ng/L	Units	Reported to LOQ	Reference Method	Date/Time Analyzed	Analyst
375-73-5	* Perfluorobutanesulfonic acid (PFBS)	ND		0	ng/L	1.35	EPA 537.1	07/01/2022 11:13	WEL
					Certifications:			07/05/2022 13:50	
307-24-4	*** Perfluorohexanoic acid (PFHxA)**	**1.49**		**0**	ng/L	1.35	EPA 537.1	07/01/2022 11:13	WEL
					Certifications:			07/05/2022 13:50	
375-85-9	* Perfluoroheptanoic acid (PFHpA)	ND		0	ng/L	1.35	EPA 537.1	07/01/2022 11:13	WEL
					Certifications:			07/05/2022 13:50	
355-46-4	*** Perfluorohexanesulfonic acid (PFHxS)**	**1.46**		**0**	ng/L	1.35	EPA 537.1	07/01/2022 11:13	WEL
					Certifications:			07/05/2022 13:50	
335-67-1	**Perfluorooctanoic acid (PFOA)**	**3.35**		**10**	ng/L	1.35	EPA 537.1	07/01/2022 11:13	WEL
					Certifications:		NELAC-NY12058	07/05/2022 13:50	
1763-23-1	**Perfluorooctanesulfonic acid (PFOS)**	**2.05**		**10**	ng/L	1.35	EPA 537.1	07/01/2022 11:13	WEL
					Certifications:		NELAC-NY12058	07/05/2022 13:50	
375-95-1	* Perfluorononanoic acid (PFNA)	ND		0	ng/L	1.35	EPA 537.1	07/01/2022 11:13	WEL
					Certifications:			07/05/2022 13:50	
335-76-2	* Perfluorodecanoic acid (PFDA)	ND		0	ng/L	1.35	EPA 537.1	07/01/2022 11:13	WEL
					Certifications:			07/05/2022 13:50	
2058-94-8	* Perfluoroundecanoic acid (PFUnA)	ND		0	ng/L	1.35	EPA 537.1	07/01/2022 11:13	WEL
					Certifications:			07/05/2022 13:50	
307-55-1	* Perfluorododecanoic acid (PFDoA)	ND		0	ng/L	1.35	EPA 537.1	07/01/2022 11:13	WEL
					Certifications:			07/05/2022 13:50	
72629-94-8	* Perfluorotridecanoic acid (PFTrDA)	ND		0	ng/L	1.35	EPA 537.1	07/01/2022 11:13	WEL
					Certifications:			07/05/2022 13:50	
376-06-7	* Perfluorotetradecanoic acid (PFTA)	ND		0	ng/L	1.35	EPA 537.1	07/01/2022 11:13	WEL
					Certifications:			07/05/2022 13:50	
2355-31-9	* N-MeFOSAA	ND		0	ng/L	1.35	EPA 537.1	07/01/2022 11:13	WEL
					Certifications:			07/05/2022 13:50	
2991-50-6	* N-EtFOSAA	ND		0	ng/L	1.35	EPA 537.1	07/01/2022 11:13	WEL
					Certifications:			07/05/2022 13:50	

Sample Information

Client Sample ID: 288625 **York Sample ID:** 22F1242-01

York Project (SDG) No.	Client Project ID	Matrix	Collection Date/Time	Date Received
22F1242	288625/288617/288673	Drinking Water	June 23, 2022 8:00 am	06/23/2022

PFAS, EPA 537.1 List

Log-in Notes:

Sample Notes:

Sample Prepared by Method: EPA 537.1 SPE DVB

CAS No.	Parameter	Result	Flag	Maximum Contaminant Level MCL, ng/L	Units	Reported to LOQ	Reference Method	Date/Time Analyzed	Analyst
756426-58-1	* 9CL-PF3ONS	ND		0	ng/L	1.35	EPA 537.1	07/01/2022 11:13	WEL
					Certifications:			07/05/2022 13:50	
763051-92-9	* 11CL-PF3OUdS	ND		0	ng/L	1.35	EPA 537.1	07/01/2022 11:13	WEL
					Certifications:			07/05/2022 13:50	
13252-13-6	* HFPO-DA (Gen-X)	ND		0	ng/L	1.35	EPA 537.1	07/01/2022 11:13	WEL
					Certifications:			07/05/2022 13:50	
919005-14-4	* ADONA	ND		0	ng/L	1.35	EPA 537.1	07/01/2022 11:13	WEL
					Certifications:			07/05/2022 13:50	

Surrogate Recoveries	Result	Acceptance Range
Surrogate: d5-N-EtFOSAA	*107 %*	*70-130*
Surrogate: 13C-PFDA	*90.5 %*	*70-130*
Surrogate: 13C-PFHxA	*104 %*	*70-130*
Surrogate: M3HFPO-DA	*96.7 %*	*70-130*

Sample Information

Client Sample ID: 288617 **York Sample ID:** 22F1242-02

York Project (SDG) No.	Client Project ID	Matrix	Collection Date/Time	Date Received
22F1242	288625/288617/288673	Drinking Water	June 23, 2022 9:00 am	06/23/2022

1,4-Dioxane by GC/MS/SIM EPA 522

Log-in Notes:

Sample Notes:

Sample Prepared by Method: EPA 522

CAS No.	Parameter	Result	Flag	Maximum Contaminant Level MCL, ng/L	Units	Reported to LOQ	Reference Method	Date/Time Analyzed	Analyst
123-91-1	1,4-Dioxane	ND		1	ug/L	0.200	EPA 522	06/24/2022 07:43	KH
					Certifications:	NELAC-NY10854		06/27/2022 15:25	
1693-74-9	*** Tetrahydrofuran-d8**	**0.500**		**0**	ug/mL		EPA 522	06/24/2022 07:43	KH
					Certifications:			06/27/2022 15:25	

	Surrogate Recoveries	Result	Acceptance Range
17647-74-4	*Surrogate: 1,4-Dioxane-d8*	*80.0 %*	*70-130*

PFAS, EPA 537.1 List Well 6A

Log-in Notes:

Sample Notes:

Sample Prepared by Method: EPA 537.1 SPE DVB

CAS No.	Parameter	Result	Flag	Maximum Contaminant Level MCL, ng/L	Units	Reported to LOQ	Reference Method	Date/Time Analyzed	Analyst
375-73-5	* Perfluorobutanesulfonic acid (PFBS)	ND		0	ng/L	1.43	EPA 537.1	07/01/2022 11:13	WEL
					Certifications:			07/05/2022 14:03	

Sample Information

Client Sample ID: 288617 **York Sample ID:** 22F1242-02

York Project (SDG) No.	Client Project ID	Matrix	Collection Date/Time	Date Received
22F1242	288625/288617/288673	Drinking Water	June 23, 2022 9:00 am	06/23/2022

PFAS, EPA 537.1 List

Log-in Notes:

Sample Notes:

Sample Prepared by Method: EPA 537.1 SPE DVB

CAS No.	Parameter	Result	Flag	Maximum Contaminant Level MCL, ng/L	Units	Reported to LOQ	Reference Method	Date/Time Analyzed	Analyst
307-24-4	*** Perfluorohexanoic acid (PFHxA)**	**1.78**		**0**	ng/L	1.43	EPA 537.1	07/01/2022 11:13	WEL
					Certifications:			07/05/2022 14:03	
375-85-9	* Perfluoroheptanoic acid (PFHpA)	ND		0	ng/L	1.43	EPA 537.1	07/01/2022 11:13	WEL
					Certifications:			07/05/2022 14:03	
355-46-4	*** Perfluorohexanesulfonic acid (PFHxS)**	**1.54**		**0**	ng/L	1.43	EPA 537.1	07/01/2022 11:13	WEL
					Certifications:			07/05/2022 14:03	
335-67-1	**Perfluorooctanoic acid (PFOA)**	**3.88**		**10**	ng/L	1.43	EPA 537.1	07/01/2022 11:13	WEL
					Certifications:	NELAC-NY12058		07/05/2022 14:03	
1763-23-1	**Perfluorooctanesulfonic acid (PFOS)**	**2.29**		**10**	ng/L	1.43	EPA 537.1	07/01/2022 11:13	WEL
					Certifications:	NELAC-NY12058		07/05/2022 14:03	
375-95-1	* Perfluorononanoic acid (PFNA)	ND		0	ng/L	1.43	EPA 537.1	07/01/2022 11:13	WEL
					Certifications:			07/05/2022 14:03	
335-76-2	* Perfluorodecanoic acid (PFDA)	ND		0	ng/L	1.43	EPA 537.1	07/01/2022 11:13	WEL
					Certifications:			07/05/2022 14:03	
2058-94-8	* Perfluoroundecanoic acid (PFUnA)	ND		0	ng/L	1.43	EPA 537.1	07/01/2022 11:13	WEL
					Certifications:			07/05/2022 14:03	
307-55-1	* Perfluorododecanoic acid (PFDoA)	ND		0	ng/L	1.43	EPA 537.1	07/01/2022 11:13	WEL
					Certifications:			07/05/2022 14:03	
72629-94-8	* Perfluorotridecanoic acid (PFTrDA)	ND		0	ng/L	1.43	EPA 537.1	07/01/2022 11:13	WEL
					Certifications:			07/05/2022 14:03	
376-06-7	* Perfluorotetradecanoic acid (PFTA)	ND		0	ng/L	1.43	EPA 537.1	07/01/2022 11:13	WEL
					Certifications:			07/05/2022 14:03	
2355-31-9	* N-MeFOSAA	ND		0	ng/L	1.43	EPA 537.1	07/01/2022 11:13	WEL
					Certifications:			07/05/2022 14:03	
2991-50-6	* N-EtFOSAA	ND		0	ng/L	1.43	EPA 537.1	07/01/2022 11:13	WEL
					Certifications:			07/05/2022 14:03	
756426-58-1	* 9CL-PF3ONS	ND		0	ng/L	1.43	EPA 537.1	07/01/2022 11:13	WEL
					Certifications:			07/05/2022 14:03	
763051-92-9	* 11CL-PF3OUdS	ND		0	ng/L	1.43	EPA 537.1	07/01/2022 11:13	WEL
					Certifications:			07/05/2022 14:03	
13252-13-6	* HFPO-DA (Gen-X)	ND		0	ng/L	1.43	EPA 537.1	07/01/2022 11:13	WEL
					Certifications:			07/05/2022 14:03	
919005-14-4	* ADONA	ND		0	ng/L	1.43	EPA 537.1	07/01/2022 11:13	WEL
					Certifications:			07/05/2022 14:03	

Surrogate Recoveries	Result	Acceptance Range
Surrogate: d5-N-EtFOSAA	*102 %*	*70-130*
Surrogate: 13C-PFDA	*96.1 %*	*70-130*
Surrogate: 13C-PFHxA	*109 %*	*70-130*
Surrogate: M3HFPO-DA	*101 %*	*70-130*

Sample Information

Client Sample ID: 288673 **York Sample ID:** 22F1242-03

York Project (SDG) No.	Client Project ID	Matrix	Collection Date/Time	Date Received
22F1242	288625/288617/288673	Drinking Water	June 23, 2022 9:20 am	06/23/2022

1,4-Dioxane by GC/MS/SIM EPA 522

Log-in Notes:

Sample Notes:

Sample Prepared by Method: EPA 522

CAS No.	Parameter	Result	Flag	Maximum Contaminant Level MCL, ng/L	Units	Reported to LOQ	Reference Method	Date/Time Analyzed	Analyst
123-91-1	1,4-Dioxane	ND		1	ug/L	0.200	EPA 522	06/24/2022 07:43	KH
					Certifications:	NELAC-NY10854		06/27/2022 15:44	
1693-74-9	*** Tetrahydrofuran-d8**	**0.500**		**0**	ug/mL		EPA 522	06/24/2022 07:43	KH
					Certifications:			06/27/2022 15:44	

	Surrogate Recoveries	Result	Acceptance Range
17647-74-4	*Surrogate: 1,4-Dioxane-d8*	*80.0 %*	*70-130*

PFAS, EPA 537.1 List

Well 1

Log-in Notes:

Sample Notes:

Sample Prepared by Method: EPA 537.1 SPE DVB

CAS No.	Parameter	Result	Flag	Maximum Contaminant Level MCL, ng/L	Units	Reported to LOQ	Reference Method	Date/Time Analyzed	Analyst
375-73-5	* Perfluorobutanesulfonic acid (PFBS)	ND		0	ng/L	1.11	EPA 537.1	07/01/2022 11:13	WEL
					Certifications:			07/05/2022 14:15	
307-24-4	*** Perfluorohexanoic acid (PFHxA)**	**4.48**		**0**	ng/L	1.11	EPA 537.1	07/01/2022 11:13	WEL
					Certifications:			07/05/2022 14:15	
375-85-9	* Perfluoroheptanoic acid (PFHpA)	ND		0	ng/L	1.11	EPA 537.1	07/01/2022 11:13	WEL
					Certifications:			07/05/2022 14:15	
355-46-4	*** Perfluorohexanesulfonic acid (PFHxS)**	**2.22**		**0**	ng/L	1.11	EPA 537.1	07/01/2022 11:13	WEL
					Certifications:			07/05/2022 14:15	
335-67-1	**Perfluorooctanoic acid (PFOA)**	**4.70**		**10**	ng/L	1.11	EPA 537.1	07/01/2022 11:13	WEL
					Certifications:	NELAC-NY12058		07/05/2022 14:15	
1763-23-1	**Perfluorooctanesulfonic acid (PFOS)**	**4.00**		**10**	ng/L	1.11	EPA 537.1	07/01/2022 11:13	WEL
					Certifications:	NELAC-NY12058		07/05/2022 14:15	
375-95-1	* Perfluorononanoic acid (PFNA)	ND		0	ng/L	1.11	EPA 537.1	07/01/2022 11:13	WEL
					Certifications:			07/05/2022 14:15	
335-76-2	* Perfluorodecanoic acid (PFDA)	ND		0	ng/L	1.11	EPA 537.1	07/01/2022 11:13	WEL
					Certifications:			07/05/2022 14:15	
2058-94-8	* Perfluoroundecanoic acid (PFUnA)	ND		0	ng/L	1.11	EPA 537.1	07/01/2022 11:13	WEL
					Certifications:			07/05/2022 14:15	
307-55-1	* Perfluorododecanoic acid (PFDoA)	ND		0	ng/L	1.11	EPA 537.1	07/01/2022 11:13	WEL
					Certifications:			07/05/2022 14:15	
72629-94-8	* Perfluorotridecanoic acid (PFTrDA)	ND		0	ng/L	1.11	EPA 537.1	07/01/2022 11:13	WEL
					Certifications:			07/05/2022 14:15	
376-06-7	* Perfluorotetradecanoic acid (PFTA)	ND		0	ng/L	1.11	EPA 537.1	07/01/2022 11:13	WEL
					Certifications:			07/05/2022 14:15	
2355-31-9	* N-MeFOSAA	ND		0	ng/L	1.11	EPA 537.1	07/01/2022 11:13	WEL
					Certifications:			07/05/2022 14:15	
2991-50-6	* N-EtFOSAA	ND		0	ng/L	1.11	EPA 537.1	07/01/2022 11:13	WEL
					Certifications:			07/05/2022 14:15	
756426-58-1	* 9CL-PF3ONS	ND		0	ng/L	1.11	EPA 537.1	07/01/2022 11:13	WEL
					Certifications:			07/05/2022 14:15	

Sample Information

Client Sample ID: 288673 **York Sample ID:** 22F1242-03

York Project (SDG) No.	Client Project ID	Matrix	Collection Date/Time	Date Received
22F1242	288625/288617/288673	Drinking Water	June 23, 2022 9:20 am	06/23/2022

PFAS, EPA 537.1 List **Log-in Notes:** **Sample Notes:**

Sample Prepared by Method: EPA 537.1 SPE DVB

CAS No.	Parameter	Result	Flag	Maximum Contaminant Level MCL, ng/L	Units	Reported to LOQ	Reference Method	Date/Time Analyzed	Analyst
763051-92-9	* 11CL-PF3OUdS	ND		0	ng/L	1.11	EPA 537.1	07/01/2022 11:13	WEL
					Certifications:			07/05/2022 14:15	
13252-13-6	* HFPO-DA (Gen-X)	ND		0	ng/L	1.11	EPA 537.1	07/01/2022 11:13	WEL
					Certifications:			07/05/2022 14:15	
919005-14-4	* ADONA	ND		0	ng/L	1.11	EPA 537.1	07/01/2022 11:13	WEL
					Certifications:			07/05/2022 14:15	

Surrogate Recoveries	Result	Acceptance Range
Surrogate: d5-N-EtFOSAA	*96.0 %*	*70-130*
Surrogate: 13C-PFDA	*84.4 %*	*70-130*
Surrogate: 13C-PFHxA	*97.8 %*	*70-130*
Surrogate: M3HFPO-DA	*92.7 %*	*70-130*

Sample Information

Client Sample ID: 288625-PFAS-Field Blank **York Sample ID:** 22F1242-04

York Project (SDG) No.	Client Project ID	Matrix	Collection Date/Time	Date Received
22F1242	288625/288617/288673	Drinking Water	June 23, 2022 8:00 am	06/23/2022

PFAS, EPA 537.1 List **Log-in Notes:** **Sample Notes:**

Sample Prepared by Method: EPA 537.1 SPE DVB

CAS No.	Parameter	Result	Flag	Maximum Contaminant Level MCL, ng/L	Units	Reported to LOQ	Reference Method	Date/Time Analyzed	Analyst
375-73-5	* Perfluorobutanesulfonic acid (PFBS)	ND		0	ng/L	1.52	EPA 537.1	07/01/2022 11:13	WEL
					Certifications:			07/05/2022 14:27	
307-24-4	* Perfluorohexanoic acid (PFHxA)	ND		0	ng/L	1.52	EPA 537.1	07/01/2022 11:13	WEL
					Certifications:			07/05/2022 14:27	
375-85-9	* Perfluoroheptanoic acid (PFHpA)	ND		0	ng/L	1.52	EPA 537.1	07/01/2022 11:13	WEL
					Certifications:			07/05/2022 14:27	
355-46-4	* Perfluorohexanesulfonic acid (PFHxS)	ND		0	ng/L	1.52	EPA 537.1	07/01/2022 11:13	WEL
					Certifications:			07/05/2022 14:27	
335-67-1	Perfluorooctanoic acid (PFOA)	ND		10	ng/L	1.52	EPA 537.1	07/01/2022 11:13	WEL
					Certifications:	NELAC-NY12058		07/05/2022 14:27	
1763-23-1	Perfluorooctanesulfonic acid (PFOS)	ND		10	ng/L	1.52	EPA 537.1	07/01/2022 11:13	WEL
					Certifications:	NELAC-NY12058		07/05/2022 14:27	
375-95-1	* Perfluorononanoic acid (PFNA)	ND		0	ng/L	1.52	EPA 537.1	07/01/2022 11:13	WEL
					Certifications:			07/05/2022 14:27	
335-76-2	* Perfluorodecanoic acid (PFDA)	ND		0	ng/L	1.52	EPA 537.1	07/01/2022 11:13	WEL
					Certifications:			07/05/2022 14:27	
2058-94-8	* Perfluoroundecanoic acid (PFUnA)	ND		0	ng/L	1.52	EPA 537.1	07/01/2022 11:13	WEL
					Certifications:			07/05/2022 14:27	

Sample Information

Client Sample ID: 288625-PFAS-Field Blank **York Sample ID:** 22F1242-04

York Project (SDG) No.	Client Project ID	Matrix	Collection Date/Time	Date Received
22F1242	288625/288617/288673	Drinking Water	June 23, 2022 8:00 am	06/23/2022

PFAS, EPA 537.1 List

Log-in Notes:

Sample Notes:

Sample Prepared by Method: EPA 537.1 SPE DVB

CAS No.	Parameter	Result	Flag	Maximum Contaminant Level MCL, ng/L	Units	Reported to LOQ	Reference Method	Date/Time Analyzed	Analyst
307-55-1	* Perfluorododecanoic acid (PFDoA)	ND		0	ng/L	1.52	EPA 537.1	07/01/2022 11:13	WEL
					Certifications:			07/05/2022 14:27	
72629-94-8	* Perfluorotridecanoic acid (PFTrDA)	ND		0	ng/L	1.52	EPA 537.1	07/01/2022 11:13	WEL
					Certifications:			07/05/2022 14:27	
376-06-7	* Perfluorotetradecanoic acid (PFTA)	ND		0	ng/L	1.52	EPA 537.1	07/01/2022 11:13	WEL
					Certifications:			07/05/2022 14:27	
2355-31-9	* N-MeFOSAA	ND		0	ng/L	1.52	EPA 537.1	07/01/2022 11:13	WEL
					Certifications:			07/05/2022 14:27	
2991-50-6	* N-EtFOSAA	ND		0	ng/L	1.52	EPA 537.1	07/01/2022 11:13	WEL
					Certifications:			07/05/2022 14:27	
756426-58-1	* 9CL-PF3ONS	ND		0	ng/L	1.52	EPA 537.1	07/01/2022 11:13	WEL
					Certifications:			07/05/2022 14:27	
763051-92-9	* 11CL-PF3OUdS	ND		0	ng/L	1.52	EPA 537.1	07/01/2022 11:13	WEL
					Certifications:			07/05/2022 14:27	
13252-13-6	* HFPO-DA (Gen-X)	ND		0	ng/L	1.52	EPA 537.1	07/01/2022 11:13	WEL
					Certifications:			07/05/2022 14:27	
919005-14-4	* ADONA	ND		0	ng/L	1.52	EPA 537.1	07/01/2022 11:13	WEL
					Certifications:			07/05/2022 14:27	

Surrogate Recoveries	Result	Acceptance Range
Surrogate: d5-N-EtFOSAA	*107 %*	*70-130*
Surrogate: 13C-PFDA	*95.5 %*	*70-130*
Surrogate: 13C-PFHxA	*104 %*	*70-130*
Surrogate: M3HFPO-DA	*105 %*	*70-130*

Sample Information

Client Sample ID: 288617-PFAS-Field Blank **York Sample ID:** 22F1242-05

York Project (SDG) No.	Client Project ID	Matrix	Collection Date/Time	Date Received
22F1242	288625/288617/288673	Drinking Water	June 23, 2022 9:00 am	06/23/2022

PFAS, EPA 537.1 List

Log-in Notes:

Sample Notes:

Sample Prepared by Method: EPA 537.1 SPE DVB

CAS No.	Parameter	Result	Flag	Maximum Contaminant Level MCL, ng/L	Units	Reported to LOQ	Reference Method	Date/Time Analyzed	Analyst
375-73-5	* Perfluorobutanesulfonic acid (PFBS)	ND		0	ng/L	1.92	EPA 537.1	07/01/2022 11:13	WEL
					Certifications:			07/05/2022 15:04	
307-24-4	* Perfluorohexanoic acid (PFHxA)	ND		0	ng/L	1.92	EPA 537.1	07/01/2022 11:13	WEL
					Certifications:			07/05/2022 15:04	
375-85-9	* Perfluoroheptanoic acid (PFHpA)	ND		0	ng/L	1.92	EPA 537.1	07/01/2022 11:13	WEL
					Certifications:			07/05/2022 15:04	

Sample Information

Client Sample ID: 288617-PFAS-Field Blank **York Sample ID:** 22F1242-05

York Project (SDG) No.	Client Project ID	Matrix	Collection Date/Time	Date Received
22F1242	288625/288617/288673	Drinking Water	June 23, 2022 9:00 am	06/23/2022

PFAS, EPA 537.1 List **Log-in Notes:** **Sample Notes:**

Sample Prepared by Method: EPA 537.1 SPE DVB

CAS No.	Parameter	Result	Flag	Maximum Contaminant Level MCL, ng/L	Units	Reported to LOQ	Reference Method	Date/Time Analyzed	Analyst
355-46-4	* Perfluorohexanesulfonic acid (PFHxS)	ND		0	ng/L	1.92	EPA 537.1	07/01/2022 11:13	WEL
					Certifications:			07/05/2022 15:04	
335-67-1	Perfluorooctanoic acid (PFOA)	ND		10	ng/L	1.92	EPA 537.1	07/01/2022 11:13	WEL
					Certifications:	NELAC-NY12058		07/05/2022 15:04	
1763-23-1	Perfluorooctanesulfonic acid (PFOS)	ND		10	ng/L	1.92	EPA 537.1	07/01/2022 11:13	WEL
					Certifications:	NELAC-NY12058		07/05/2022 15:04	
375-95-1	* Perfluorononanoic acid (PFNA)	ND		0	ng/L	1.92	EPA 537.1	07/01/2022 11:13	WEL
					Certifications:			07/05/2022 15:04	
335-76-2	* Perfluorodecanoic acid (PFDA)	ND		0	ng/L	1.92	EPA 537.1	07/01/2022 11:13	WEL
					Certifications:			07/05/2022 15:04	
2058-94-8	* Perfluoroundecanoic acid (PFUnA)	ND		0	ng/L	1.92	EPA 537.1	07/01/2022 11:13	WEL
					Certifications:			07/05/2022 15:04	
307-55-1	* Perfluorododecanoic acid (PFDoA)	ND		0	ng/L	1.92	EPA 537.1	07/01/2022 11:13	WEL
					Certifications:			07/05/2022 15:04	
72629-94-8	* Perfluorotridecanoic acid (PFTrDA)	ND		0	ng/L	1.92	EPA 537.1	07/01/2022 11:13	WEL
					Certifications:			07/05/2022 15:04	
376-06-7	* Perfluorotetradecanoic acid (PFTA)	ND		0	ng/L	1.92	EPA 537.1	07/01/2022 11:13	WEL
					Certifications:			07/05/2022 15:04	
2355-31-9	* N-MeFOSAA	ND		0	ng/L	1.92	EPA 537.1	07/01/2022 11:13	WEL
					Certifications:			07/05/2022 15:04	
2991-50-6	* N-EtFOSAA	ND		0	ng/L	1.92	EPA 537.1	07/01/2022 11:13	WEL
					Certifications:			07/05/2022 15:04	
756426-58-1	* 9CL-PF3ONS	ND		0	ng/L	1.92	EPA 537.1	07/01/2022 11:13	WEL
					Certifications:			07/05/2022 15:04	
763051-92-9	* 11CL-PF3OUdS	ND		0	ng/L	1.92	EPA 537.1	07/01/2022 11:13	WEL
					Certifications:			07/05/2022 15:04	
13252-13-6	* HFPO-DA (Gen-X)	ND		0	ng/L	1.92	EPA 537.1	07/01/2022 11:13	WEL
					Certifications:			07/05/2022 15:04	
919005-14-4	* ADONA	ND		0	ng/L	1.92	EPA 537.1	07/01/2022 11:13	WEL
					Certifications:			07/05/2022 15:04	

Surrogate Recoveries	Result	Acceptance Range
Surrogate: d5-N-EtFOSAA	*95.7 %*	*70-130*
Surrogate: 13C-PFDA	*82.6 %*	*70-130*
Surrogate: 13C-PFHxA	*87.4 %*	*70-130*
Surrogate: M3HFPO-DA	*91.1 %*	*70-130*

Sample Information

Client Sample ID: 288673-PFAS-Field Blank **York Sample ID:** 22F1242-06

York Project (SDG) No.	Client Project ID	Matrix	Collection Date/Time	Date Received
22F1242	288625/288617/288673	Drinking Water	June 23, 2022 9:20 am	06/23/2022

Sample Information

Client Sample ID: 288673-PFAS-Field Blank **York Sample ID:** 22F1242-06

York Project (SDG) No.	Client Project ID	Matrix	Collection Date/Time	Date Received
22F1242	288625/288617/288673	Drinking Water	June 23, 2022 9:20 am	06/23/2022

PFAS, EPA 537.1 List **Log-in Notes:** **Sample Notes:**

Sample Prepared by Method: EPA 537.1 SPE DVB

CAS No.	Parameter	Result	Flag	Maximum Contaminant Level MCL, ng/L	Units	Reported to LOQ	Reference Method	Date/Time Analyzed	Analyst
375-73-5	* Perfluorobutanesulfonic acid (PFBS)	ND		0	ng/L	2.00	EPA 537.1	07/01/2022 11:13	WEL
					Certifications:			07/05/2022 15:18	
307-24-4	* Perfluorohexanoic acid (PFHxA)	ND		0	ng/L	2.00	EPA 537.1	07/01/2022 11:13	WEL
					Certifications:			07/05/2022 15:18	
375-85-9	* Perfluoroheptanoic acid (PFHpA)	ND		0	ng/L	2.00	EPA 537.1	07/01/2022 11:13	WEL
					Certifications:			07/05/2022 15:18	
355-46-4	* Perfluorohexanesulfonic acid (PFHxS)	ND		0	ng/L	2.00	EPA 537.1	07/01/2022 11:13	WEL
					Certifications:			07/05/2022 15:18	
335-67-1	Perfluorooctanoic acid (PFOA)	ND		10	ng/L	2.00	EPA 537.1	07/01/2022 11:13	WEL
					Certifications:		NELAC-NY12058	07/05/2022 15:18	
1763-23-1	Perfluorooctanesulfonic acid (PFOS)	ND		10	ng/L	2.00	EPA 537.1	07/01/2022 11:13	WEL
					Certifications:		NELAC-NY12058	07/05/2022 15:18	
375-95-1	* Perfluorononanoic acid (PFNA)	ND		0	ng/L	2.00	EPA 537.1	07/01/2022 11:13	WEL
					Certifications:			07/05/2022 15:18	
335-76-2	* Perfluorodecanoic acid (PFDA)	ND		0	ng/L	2.00	EPA 537.1	07/01/2022 11:13	WEL
					Certifications:			07/05/2022 15:18	
2058-94-8	* Perfluoroundecanoic acid (PFUnA)	ND		0	ng/L	2.00	EPA 537.1	07/01/2022 11:13	WEL
					Certifications:			07/05/2022 15:18	
307-55-1	* Perfluorododecanoic acid (PFDoA)	ND		0	ng/L	2.00	EPA 537.1	07/01/2022 11:13	WEL
					Certifications:			07/05/2022 15:18	
72629-94-8	* Perfluorotridecanoic acid (PFTrDA)	ND		0	ng/L	2.00	EPA 537.1	07/01/2022 11:13	WEL
					Certifications:			07/05/2022 15:18	
376-06-7	* Perfluorotetradecanoic acid (PFTA)	ND		0	ng/L	2.00	EPA 537.1	07/01/2022 11:13	WEL
					Certifications:			07/05/2022 15:18	
2355-31-9	* N-MeFOSAA	ND		0	ng/L	2.00	EPA 537.1	07/01/2022 11:13	WEL
					Certifications:			07/05/2022 15:18	
2991-50-6	* N-EtFOSAA	ND		0	ng/L	2.00	EPA 537.1	07/01/2022 11:13	WEL
					Certifications:			07/05/2022 15:18	
756426-58-1	* 9CL-PF3ONS	ND		0	ng/L	2.00	EPA 537.1	07/01/2022 11:13	WEL
					Certifications:			07/05/2022 15:18	
763051-92-9	* 11CL-PF3OUdS	ND		0	ng/L	2.00	EPA 537.1	07/01/2022 11:13	WEL
					Certifications:			07/05/2022 15:18	
13252-13-6	* HFPO-DA (Gen-X)	ND		0	ng/L	2.00	EPA 537.1	07/01/2022 11:13	WEL
					Certifications:			07/05/2022 15:18	
919005-14-4	* ADONA	ND		0	ng/L	2.00	EPA 537.1	07/01/2022 11:13	WEL
					Certifications:			07/05/2022 15:18	

Surrogate Recoveries	Result	Acceptance Range
Surrogate: d5-N-EtFOSAA	*96.6 %*	*70-130*
Surrogate: 13C-PFDA	*91.1 %*	*70-130*
Surrogate: 13C-PFHxA	*107 %*	*70-130*
Surrogate: M3HFPO-DA	*113 %*	*70-130*

Analytical Batch Summary

Batch ID: BF21540 **Preparation Method:** EPA 522 **Prepared By:** SJB

YORK Sample ID	Client Sample ID	Preparation Date
22F1242-01	288625	06/24/22
22F1242-02	288617	06/24/22
22F1242-03	288673	06/24/22
BF21540-BLK1	Blank	06/24/22
BF21540-BS1	LCS	06/24/22
BF21540-BS2	LCS	06/24/22
BF21540-DUP1	Duplicate	06/24/22
BF21540-MS1	Matrix Spike	06/24/22

Batch ID: BG20029 **Preparation Method:** EPA 537.1 SPE DVB **Prepared By:** WEL

YORK Sample ID	Client Sample ID	Preparation Date
22F1242-01	288625	07/01/22
22F1242-02	288617	07/01/22
22F1242-03	288673	07/01/22
22F1242-04	288625-PFAS-Field Blank	07/01/22
22F1242-05	288617-PFAS-Field Blank	07/01/22
22F1242-06	288673-PFAS-Field Blank	07/01/22
BG20029-BLK1	Blank	07/01/22
BG20029-BS1	LCS	07/01/22
BG20029-DUP1	Duplicate	07/01/22
BG20029-MS1	Matrix Spike	07/01/22

Semivolatile Organic Compounds by GC/MS/SIM - Quality Control Data

York Analytical Laboratories, Inc.

Analyte	Result	Reporting Limit	Units	Spike Level	Source* Result	%REC	%REC Limits	Flag	RPD	RPD Limit	Flag
Batch BF21540 - EPA 522											
Blank (BF21540-BLK1)									Prepared: 06/24/2022 Analyzed: 06/27/2022		
1,4-Dioxane	ND	0.200	ug/L								
Surrogate: 1,4-Dioxane-d8	*2.80*		*"*	*2.50*		*112*	*70-130*				
LCS (BF21540-BS1)									Prepared: 06/24/2022 Analyzed: 06/27/2022		
1,4-Dioxane	4.66	0.200	ug/L	5.00		93.2	70-130				
Surrogate: 1,4-Dioxane-d8	*2.20*		*"*	*2.50*		*88.0*	*70-130*				
LCS (BF21540-BS2)									Prepared: 06/24/2022 Analyzed: 06/27/2022		
1,4-Dioxane	8.86	0.200	ug/L	10.0		88.6	70-130				
Surrogate: 1,4-Dioxane-d8	*2.20*		*"*	*2.50*		*88.0*	*70-130*				
Duplicate (BF21540-DUP1)	*Source sample: 22F0847-01 (Duplicate)								Prepared: 06/24/2022 Analyzed: 06/27/2022		
1,4-Dioxane	ND	0.200	ug/L		ND					30	
Surrogate: 1,4-Dioxane-d8	*2.60*		*"*	*2.50*		*104*	*70-130*				
Matrix Spike (BF21540-MS1)	*Source sample: 22F0765-01 (Matrix Spike)								Prepared: 06/24/2022 Analyzed: 06/27/2022		
1,4-Dioxane	4.17	0.200	ug/L	5.00	ND	83.4	70-130				
Surrogate: 1,4-Dioxane-d8	*2.40*		*"*	*2.50*		*96.0*	*70-130*				

Analyte	Result	Reporting Limit	Units	Spike Level	Source* Result	%REC	%REC Limits	Flag	RPD	RPD Limit	Flag
Batch BG20029 - EPA 537.1 SPE DVB											
Blank (BG20029-BLK1)									Prepared: 07/01/2022 Analyzed: 07/05/2022		
Perfluorobutanesulfonic acid (PFBS)	ND	2.00	ng/L								
Perfluorohexanoic acid (PFHxA)	ND	2.00	"								
Perfluoroheptanoic acid (PFHpA)	ND	2.00	"								
Perfluorohexanesulfonic acid (PFHxS)	ND	2.00	"								
Perfluorooctanoic acid (PFOA)	ND	2.00	"								
Perfluorooctanesulfonic acid (PFOS)	ND	2.00	"								
Perfluorononanoic acid (PFNA)	ND	2.00	"								
Perfluorodecanoic acid (PFDA)	ND	2.00	"								
Perfluoroundecanoic acid (PFUnA)	ND	2.00	"								
Perfluorododecanoic acid (PFDoA)	ND	2.00	"								
Perfluorotridecanoic acid (PFTrDA)	ND	2.00	"								
Perfluorotetradecanoic acid (PFTA)	ND	2.00	"								
N-MeFOSAA	ND	2.00	"								
N-EtFOSAA	ND	2.00	"								
9CL-PF3ONS	ND	2.00	"								
11CL-PF3OUdS	ND	2.00	"								
HFPO-DA (Gen-X)	ND	2.00	"								
ADONA	ND	2.00	"								
Surrogate: d5-N-EtFOSAA	*287*		"	*320*		*89.5*	*70-130*				
Surrogate: 13C-PFDA	*69.4*		"	*80.0*		*86.8*	*70-130*				
Surrogate: 13C-PFHxA	*75.8*		"	*80.0*		*94.7*	*70-130*				
Surrogate: M3HFPO-DA	*73.2*		"	*80.0*		*91.5*	*70-130*				
LCS (BG20029-BS1)									Prepared: 07/01/2022 Analyzed: 07/05/2022		
Perfluorobutanesulfonic acid (PFBS)	32.3	2.00	ng/L	35.4		91.1	70-130				
Perfluorohexanoic acid (PFHxA)	34.8	2.00	"	40.0		87.0	70-130				
Perfluoroheptanoic acid (PFHpA)	36.5	2.00	"	40.0		91.2	70-130				
Perfluorohexanesulfonic acid (PFHxS)	35.4	2.00	"	38.0		93.0	70-130				
Perfluorooctanoic acid (PFOA)	37.9	2.00	"	40.0		94.7	70-130				
Perfluorooctanesulfonic acid (PFOS)	37.2	2.00	"	38.4		96.9	70-130				
Perfluorononanoic acid (PFNA)	38.4	2.00	"	40.0		95.9	70-130				
Perfluorodecanoic acid (PFDA)	32.7	2.00	"	40.0		81.7	70-130				
Perfluoroundecanoic acid (PFUnA)	36.4	2.00	"	40.0		91.0	70-130				
Perfluorododecanoic acid (PFDoA)	36.4	2.00	"	40.0		91.1	70-130				
Perfluorotridecanoic acid (PFTrDA)	31.3	2.00	"	40.0		78.2	70-130				
Perfluorotetradecanoic acid (PFTA)	32.5	2.00	"	40.0		81.2	70-130				
N-MeFOSAA	37.4	2.00	"	40.0		93.5	70-130				
N-EtFOSAA	37.5	2.00	"	40.0		93.6	70-130				
9CL-PF3ONS	33.9	2.00	"	37.4		90.6	60-130				
11CL-PF3OUdS	31.1	2.00	"	37.8		82.3	60-130				
HFPO-DA (Gen-X)	33.8	2.00	"	40.0		84.6	60-130				
ADONA	32.7	2.00	"	37.8		86.5	60-130				
Surrogate: d5-N-EtFOSAA	*337*		"	*320*		*105*	*70-130*				
Surrogate: 13C-PFDA	*74.7*		"	*80.0*		*93.3*	*70-130*				
Surrogate: 13C-PFHxA	*83.2*		"	*80.0*		*104*	*70-130*				
Surrogate: M3HFPO-DA	*78.9*		"	*80.0*		*98.6*	*70-130*				

PFAS Target compounds by LC/MS-MS - Quality Control Data

York Analytical Laboratories, Inc.

Analyte	Result	Reporting Limit	Units	Spike Level	Source* Result	%REC	%REC Limits	Flag	RPD	RPD Limit	Flag
Batch BG20029 - EPA 537.1 SPE DVB											
Duplicate (BG20029-DUP1)	*Source sample: 22F1242-04 (288625-PFAS-Field Blank)								Prepared: 07/01/2022 Analyzed: 07/05/2022		
Perfluorobutanesulfonic acid (PFBS)	ND	2.17	ng/L		ND					25	
Perfluorohexanoic acid (PFHxA)	ND	2.17	"		ND					25	
Perfluoroheptanoic acid (PFHpA)	ND	2.17	"		ND					25	
Perfluorohexanesulfonic acid (PFHxS)	ND	2.17	"		ND					25	
Perfluorooctanoic acid (PFOA)	ND	2.17	"		ND					25	
Perfluorooctanesulfonic acid (PFOS)	ND	2.17	"		ND					25	
Perfluorononanoic acid (PFNA)	ND	2.17	"		ND					25	
Perfluorodecanoic acid (PFDA)	ND	2.17	"		ND					25	
Perfluoroundecanoic acid (PFUnA)	ND	2.17	"		ND					25	
Perfluorododecanoic acid (PFDoA)	ND	2.17	"		ND					25	
Perfluorotridecanoic acid (PFTrDA)	ND	2.17	"		ND					25	
Perfluorotetradecanoic acid (PFTA)	ND	2.17	"		ND					25	
N-MeFOSAA	ND	2.17	"		ND					25	
N-EtFOSAA	ND	2.17	"		ND					25	
9CL-PF3ONS	ND	2.17	"		ND					25	
11CL-PF3OUdS	ND	2.17	"		ND					25	
HFPO-DA (Gen-X)	ND	2.17	"		ND					25	
ADONA	ND	2.17	"		ND					25	
Surrogate: d5-N-EtFOSAA	*348*		*"*	*348*		*100*	*70-130*				
Surrogate: 13C-PFDA	*77.2*		*"*	*87.0*		*88.8*	*70-130*				
Surrogate: 13C-PFHxA	*87.6*		*"*	*87.0*		*101*	*70-130*				
Surrogate: M3HFPO-DA	*84.0*		*"*	*87.0*		*96.6*	*70-130*				
Matrix Spike (BG20029-MS1)	*Source sample: 22F1306-01 (Matrix Spike)								Prepared: 07/01/2022 Analyzed: 07/05/2022		
Perfluorobutanesulfonic acid (PFBS)	58.9	2.00	ng/L	70.8	ND	83.1	70-130				
Perfluorohexanoic acid (PFHxA)	64.6	2.00	"	80.0	ND	80.7	70-130				
Perfluoroheptanoic acid (PFHpA)	69.6	2.00	"	80.0	ND	87.0	70-130				
Perfluorohexanesulfonic acid (PFHxS)	71.2	2.00	"	76.0	ND	93.7	70-130				
Perfluorooctanoic acid (PFOA)	72.3	2.00	"	80.0	ND	90.4	70-130				
Perfluorooctanesulfonic acid (PFOS)	68.0	2.00	"	76.8	ND	88.6	70-130				
Perfluorononanoic acid (PFNA)	68.4	2.00	"	80.0	ND	85.5	70-130				
Perfluorodecanoic acid (PFDA)	65.0	2.00	"	80.0	ND	81.2	70-130				
Perfluoroundecanoic acid (PFUnA)	67.1	2.00	"	80.0	ND	83.9	70-130				
Perfluorododecanoic acid (PFDoA)	64.8	2.00	"	80.0	ND	81.0	70-130				
Perfluorotridecanoic acid (PFTrDA)	60.5	2.00	"	80.0	ND	75.6	70-130				
Perfluorotetradecanoic acid (PFTA)	63.2	2.00	"	80.0	ND	79.0	70-130				
N-MeFOSAA	73.5	2.00	"	80.0	ND	91.8	70-130				
N-EtFOSAA	69.6	2.00	"	80.0	ND	87.0	70-130				
9CL-PF3ONS	67.2	2.00	"	74.8	ND	89.9	70-130				
11CL-PF3OUdS	59.4	2.00	"	75.6	ND	78.5	70-130				
HFPO-DA (Gen-X)	59.2	2.00	"	80.0	ND	74.0	70-130				
ADONA	60.6	2.00	"	75.6	ND	80.2	50-130				
Surrogate: d5-N-EtFOSAA	*304*		*"*	*320*		*94.9*	*70-130*				
Surrogate: 13C-PFDA	*70.4*		*"*	*80.0*		*88.0*	*70-130*				
Surrogate: 13C-PFHxA	*77.0*		*"*	*80.0*		*96.2*	*70-130*				
Surrogate: M3HFPO-DA	*72.0*		*"*	*80.0*		*90.0*	*70-130*				

Sample and Data Qualifiers Relating to This Work Order

Definitions and Other Explanations

*	Analyte is not certified or the state of the samples origination does not offer certification for the Analyte.
ND	NOT DETECTED - the analyte is not detected at the Reported to level (LOQ/RL or LOD/MDL)
RL	REPORTING LIMIT - the minimum reportable value based upon the lowest point in the analyte calibration curve.
LOQ	LIMIT OF QUANTITATION - the minimum concentration of a target analyte that can be reported within a specified degree of confidence. This is the lowest point in an analyte calibration curve that has been subjected to all steps of the processing/analysis and verified to meet defined criteria. This is based upon NELAC 2009 Standards and applies to all analyses.
LOD	LIMIT OF DETECTION - a verified estimate of the minimum concentration of a substance in a given matrix that an analytical process can reliably detect. This is based upon NELAC 2009 Standards and applies to all analyses conducted under the auspices of EPA SW-846.
MDL	METHOD DETECTION LIMIT - a statistically derived estimate of the minimum amount of a substance an analytical system can reliably detect with a 99% confidence that the concentration of the substance is greater than zero. This is based upon 40 CFR Part 136 Appendix B and applies only to EPA 600 and 200 series methods.
Reported to	This indicates that the data for a particular analysis is reported to either the LOD/MDL, or the LOQ/RL. In cases where the "Reported to" is located above the LOD/MDL, any value between this and the LOQ represents an estimated value which is "J" flagged accordingly. This applies to volatile and semi-volatile target compounds only.
NR	Not reported
RPD	Relative Percent Difference
Wet	The data has been reported on an as-received (wet weight) basis
Low Bias	Low Bias flag indicates that the recovery of the flagged analyte is below the laboratory or regulatory lower control limit. The data user should take note that this analyte may be biased low but should evaluate multiple lines of evidence including the LCS and site-specific MS/MSD data to draw bias conclusions. In cases where no site-specific MS/MSD was requested, only the LCS data can be used to evaluate such bias.
High Bias	High Bias flag indicates that the recovery of the flagged analyte is above the laboratory or regulatory upper control limit. The data user should take note that this analyte may be biased high but should evaluate multiple lines of evidence including the LCS and site-specific MS/MSD data to draw bias conclusions. In cases where no site-specific MS/MSD was requested, only the LCS data can be used to evaluate such bias.
Non-Dir.	Non-dir. flag (Non-Directional Bias) indicates that the Relative Percent Difference (RPD) (a measure of precision) among the MS and MSD data is outside the laboratory or regulatory control limit. This alerts the data user where the MS and MSD are from site-specific samples that the RPD is high due to either non-homogeneous distribution of target analyte between the MS/MSD or indicates poor reproducibility for other reasons.
MCL	This is the Maximum Contaminant Level in ng/L (ppt) establised by the NYSDOH for these compounds wheree an MCL is reported. Exceedences are flagged according.

Field Chain-of-Custody Record

YORK
ANALYTICAL LABORATORIES INC

York Analytical Laboratories, Inc. (YORK)'s Standard Terms & Conditions are listed on the back side of this document.
This document serves as your written authorization for YORK to proceed with the analyses requested below.
Your signature binds you to YORK's Standard Terms & Conditions.

YORK Project No. 22F1242

120 Research Drive Stratford, CT 06615 | 132-02 89th Ave Queens, NY 11418 | clientservices@yorklab.com | www.yorklab.com | 800-306-YORK | 800-306-9675 | Page ____ of ____

YOUR Information	Report To:	Invoice To:	YOUR Project Number	Turn-Around Time
Company:	Company: Agua Environmental Lab	Company:		RUSH - Next Day
Address:	Address:	Address:	YOUR Project Name	RUSH - Two Day
Phone.:	Phone.:	Phone.:		RUSH - Three Day
Contact:	Contact:	Contact:		RUSH - Four Day
E-mail:	E-mail:	E-mail:	YOUR PO#:	Standard (5-7 Day)

Please print clearly and legibly. All information must be complete. Samples will not be logged in and the turn-around-time clock will not begin until any questions by YORK are resolved.

Samples Collected by: (print AND sign your name)

Matrix Codes
S - soil / solid
GW - groundwater
DW - drinking water
WW - wastewater
O - Oil | Other

Samples From
New York ✓
New Jersey
Connecticut
Pennsylvania
Other:

Report / EDD Type (circle selections)
Summary Report | CT RCP | Standard Excel EDD
QA Report | CT RCP DQA/DUE | EQuIS (Standard)
NY ASP A Package | NJDEP Reduced Deliverables | NYSDEC EQuIS
NY ASP B Package | NJDEP SRP HazSite
NJDKQP | Other:

YORK Reg. Comp.
Compared to the following Regulation(s): (please fill in)

Sample Identification	Sample Matrix	Date/Time Sampled	Analysis Requested	Container Description
288625	DW	6/23/22 8:40 am	PFAS Method 537 18 Compound +	1,4 Dioxane
288617	DW	6/23/22 9:40 am	PFAS Method 537 18 Compound +	1,4 Dioxane
288623	DW	6/23/22 9:20 am	PFAS Method 537 18 Compound +	1,4 Dioxane

Comments:

Preservation: (check all that apply)
HCl ____ MeOH ____ HNO3 ____ H2SO4 ____ NaOH ____
ZnAc ____ Ascorbic Acid ____ Other: ____

Special Instruction
Field Filtered
Lab to Filter

Samples iced/chilled at time of lab pickup? circle Yes or No

Samples Relinquished by / Company	Date/Time	Samples Received by / Company	Date/Time	Samples Relinquished by / Company	Date/Time
[illegible]	6/23/22 12:55 pm	1.		2. S Beaman 6/23	13:55
Samples Received by / Company	Date/Time	3. Samples Relinquished by / Company	Date/Time	3. Samples Received by / Company	Date/Time
Samples Relinquished by / Company	Date/Time	4. Samples Received by / Company	Date/Time	Samples Received in LAB by	Date/Time 6/24/22 1317 Temperature 1.0 Degrees C

EnviroTest Laboratories Inc.

ANALYTICAL REPORT

Job Number: 420-227328-1

SDG Number: Summit Club Well 6A

Job Description: WSP USA

For:
WSP USA
4 Research Drive
Shelton, CT 06464

Attention: Stacy Stieber

Mary Hernandez
Customer Service Manager
reports@envirotestlaboratories.com
08/17/2022

NYSDOH ELAP does not certify for all parameters. EnviroTest Laboratories does hold certification for all analytes where certification is offered by ELAP unless otherwise specified in the Certification Information section of this report. Pursuant to NELAP, this report may not be reproduced, except in full, without written approval of the laboratory. EnviroTest Laboratories LLC certifies that the analytical results contained herein apply only to the samples tested as received by our laboratory. All questions regarding this report should be directed to the EnviroTest Customer Service Representative. All services performed by EnviroTest Laboratories LLC are subject to our Terms and Conditions available at Envirotestlabs/terms.com. As of 12/23/19, EnviroTest Laboratories LLC acquired substantially all of the lab and testing assets of EnviroTest Laboratories Inc, including its name.

EnviroTest Laboratories, LLC. Certifications and Approvals: NYSDOH 10142, NJDEP NY015, CTDOPH PH-0554

METHOD SUMMARY

Client: WSP USA

Job Number: 420-227328-1
SDG Number: Summit Club Well 6A

Description	Lab Location	Method	Preparation Method
Matrix: Water			
General Sub Contract Method		Subcontract	

Lab References:

=

Method References:

SAMPLE SUMMARY

Client: WSP USA

Job Number: 420-227328-1
SDG Number: Summit Club Well 6A

Lab Sample ID	Client Sample ID	Client Matrix	Date/Time Sampled	Date/Time Received
420-227328-1	Well 6A	Water	06/22/2022 0855	06/22/2022 1145

CC1320

Page ___ of ___

Analytical Services, Inc.

CHAIN OF CUSTODY RECORD

Ship to: Analytical Services, Inc., 130 Allen Brook Lane, Williston, VT 05495, Attn: Sample Management
Phone: 1-800-723-4432 or 802-878-5138 • Fax: 802-878-6765 *Web site: www.analyticalservices.com*

Submitted By: WSP USA 4 Research Drive, Suite 204 Shelton, CT 06484 Phone: 475-882-1723 Email: stacy.stieber@wsp.com	Report To: Stacy Stieber WSP USA ~~Shelton~~ 4 Research Drive Shelton, CT 06484 Phone: 475-882-1723 Email: stacy.stieber@wsp.com
Project Name: Summit Club	Invoice To:
Job Site: 31403576.002	
P.O. Number:	Phone: Email:

Sample Identification*	Sample Collection: Date (Start)	Time (Start)	Sampler Initials	Sample Matrix (check one): Water - Raw	Water - Finished	Waste Water	Biosolids	Soil/Sediment	Other	Analysis Requested	Lab Use Only Temp (°C)
Well 6A	6/22/22	855	SZ	X						MPA w/ IFA	

*Sample ID should match ID written on the sample containers and data sheets. Sample ID will appear on the report for identification.

Relinquished By (signature)	Date/Time	Received By (signature)	Date/Time
[signature]	6/22/22 1145	[signature]	6/22/22 1145

Field Comments:	Lab Comments:

White – To accompany samples • Yellow – Sampler Copy

LOGIN SAMPLE RECEIPT CHECK LIST

Client: WSP USA

Job Number: 420-227328-1
SDG Number: Summit Club Well 6A

Login Number: **227328**

Question	T/F/NA	Comment
Samples were collected by ETL employee as per SOP-SAM-1	NA	
The cooler's custody seal, if present, is intact.	NA	
The cooler or samples do not appear to have been compromised or tampered with.	True	
Samples were received on ice.	True	
Cooler Temperature is recorded.	True	2.2C
Cooler Temp. is within method specified range.(0-4 C PW, 0-6 C NPW, or BAC <10 C	True	
If false, was sample received on ice within 6 hours of collection.	NA	
Based on above criteria cooler temperature is acceptable.	True	
COC is present.	True	
COC is filled out in ink and legible.	True	
COC is filled out with all pertinent information.	True	
There are no discrepancies between the sample IDs on the containers and the COC.	True	
Samples are received within Holding Time.	True	
Sample containers have legible labels.	True	
Containers are not broken or leaking.	True	
Sample collection date/times are provided.	True	
Appropriate sample containers are used.	True	
Sample bottles are completely filled.	True	
There is sufficient vol. for all requested analyses, incl. any requested MS/MSDs	True	
VOA sample vials do not have headspace or bubble is <6mm (1/4") in diameter.	NA	
If necessary, staff have been informed of any short hold time or quick TAT needs	True	
Multiphasic samples are not present.	True	
Samples do not require splitting or compositing.	True	

ANALYTICAL SERVICES, INC.
Microbiological Testing, Research and Consulting

130 Allen Brook Ln., PO Box 515, Williston, VT 05495 USA
1.800.723.4432 / 802.878.5138 Fax: 802.878.6765
www.analyticalservices.com

8/15/2022

Ron Bayer
EnviroTest Laboratories
315 Fullerton Ave
Newburgh, NY 12550

Subj.: ASI Report 69086

Dear Ron,

Enclosed please find the results of Microscopic Particulate Analysis (MPA) performed by Analytical Services, Inc. (ASI).

Sample(s) covered in this report were received at ASI on: 6/23/2022

This report contains the following number of pages (total): 5

This report concerns only the samples referenced herein. These results were generated under ASI's quality system, which is in accordance with the NELAC (TNI) standard. Deviations, if any, are noted.

Exceptions: NA

This report shall not be reproduced, except in full, without ASI's written permission.

Thank you for using ASI for your microbiological testing needs. If you have any questions, please contact us at 800-723-4432.

Sincerely,
ANALYTICAL SERVICES, INC. (ASI)

Harry D. Christman, Ph.D.
Technical Director

P 1/1

Microscopic Particulate Analysis (MPA)

Sample Information

Client	EnviroTest Laboratories	Volume Sampled (gal)	788.4
Site	Summit Club	Filter Color	Off-White
Water Type	Raw/Well	Sediment Volume (mL)	0.3
Client Sample ID	Well 1	Analysis Start	6/23/22 12:00
ASI Sample #	69086-01	Analysis End	8/4/22

MPA Data (data per 100 gal.)

Vol. Examined at 150x (gal.)	100	Detection Limit at 150X =	1.0
Vol. Examined at 300x (gal.)	NA	Detection Limit at 300X =	NA
Amorphous Debris	Uniform	Iron Bacteria	ND
Vegetative Debris w/ chlorophyll	ND	Crustaceans	ND
Veg. Debris w/o chlorophyll	1	Crustacean Parts/Eggs	ND
Diatoms w/ chlorophyll (300X)	ND	Water Mites	ND
Diatoms w/o chlorophyll (300X)	ND	Gastrotrichs	ND
Other Algae (300X, see below)	ND	Tardigrades	ND
Coccidia (300x)	ND	Nematodes/N. Eggs	ND
Rotifiers / Rotifier Eggs	ND	Invertebrate Eggs	ND
Spores	ND	Annelids	ND
Pollen	ND	Amoeba	ND
Insects/Larvae	ND	Protozoa (300X, non-Crypto/Giardia)	ND

Cryptosporidium and Giardia Data

		RESULTS	
Volume Examined (gal.)	394.2	Examined	Per 100gal
	Cryptosporidium Oocysts:	0	<0.25
	Giardia Cysts:	0	<0.25

MPA Risk Rating Score (per EPA Consensus Method)

Numerical Score	0	Risk Rating	Low

Other

Algae Observed	NA
Comments	NA

Methods: MPA - SOP based on EPA Consensus Method (EPA 910/9-92-029)

Cryptosporidium & Giardia - SOP based on purification, staining & exam procedures in EPA 1623/1623.1

Notes MPA Risk Rating Tables were developed by USEPA Region 10 from limited data; interpret with caution.

MPA Risk Rating Score - if less than 100 gallons was examined, interpret with caution.

Microscopic Particulate Analysis (MPA)

Sample Information

Client	EnviroTest Laboratories	Volume Sampled (gal)	562.2
Site	Summit Club	Filter Color	Off-White
Water Type	Raw/Well	Sediment Volume (mL)	0.2
Client Sample ID	Well 6A	Analysis Start	6/23/22 12:35
ASI Sample #	69086-02	Analysis End	8/4/22

MPA Data (data per 100 gal.)

Vol. Examined at 150x (gal.)	100	Detection Limit at 150X =	1.0
Vol. Examined at 300x (gal.)	NA	Detection Limit at 300X =	NA
Amorphous Debris	Uniform	Iron Bacteria	ND
Vegetative Debris w/ chlorophyll	ND	Crustaceans	ND
Veg. Debris w/o chlorophyll	4	Crustacean Parts/Eggs	ND
Diatoms w/ chlorophyll (300X)	ND	Water Mites	ND
Diatoms w/o chlorophyll (300X)	ND	Gastrotrichs	ND
Other Algae (300X, see below)	ND	Tardigrades	ND
Coccidia (300x)	ND	Nematodes/N. Eggs	ND
Rotifiers / Rotifier Eggs	ND	Invertebrate Eggs	ND
Spores	ND	Annelids	ND
Pollen	ND	Amoeba	ND
Insects/Larvae	ND	Protozoa (300X, non-Crypto/Giardia)	ND

Cryptosporidium and Giardia Data

		RESULTS	
Volume Examined (gal.)	281.1	Examined	Per 100gal
	Cryptosporidium Oocysts:	0	<0.36
	Giardia Cysts:	0	<0.36

MPA Risk Rating Score (per EPA Consensus Method)

Numerical Score	0	Risk Rating	Low

Other

Algae Observed	NA
Comments	NA

Methods: MPA - SOP based on EPA Consensus Method (EPA 910/9-92-029)

Cryptosporidium & Giardia - SOP based on purification, staining & exam procedures in EPA 1623/1623.1

Notes MPA Risk Rating Tables were developed by USEPA Region 10 from limited data; interpret with caution.

MPA Risk Rating Score - if less than 100 gallons was examined, interpret with caution.

227330

Page ___ of ___

Analytical Services, Inc.

CHAIN OF CUSTODY RECORD

Ship to: Analytical Services, Inc., 130 Allen Brook Lane, Williston, VT 05495, Attn: Sample Management
Phone: 1-800-723-4432 or 802-878-5138 • Fax: 802-878-6765 *Web site: www.analyticalservices.com*

Submitted By: WSP USA 4 Research Drive, Ste 204 Shelton, CT 06484 Phone: 475-882-1723 Email: stacy.stieber@wsp.com	Report To: Stacy Stieber WSP USA 4 Research Drive, Ste 204 Shelton, CT 06484 Phone: 475-882-1723 Email: stacy.stieber@wsp.com
Project Name: Summit Club Job Site: P.O. Number: 31403576.002	Invoice To: Phone: ___ Email: ___

Sample Identification*	Sample Collection			Sample Matrix (check one)						Analysis Requested	Lab Use Only
	Date (Start)	Time (Start)	Sampler Initials	Water - Raw	Water - Finished	Waste Water	Biosolids	Soil/Sediment	Other		Temp (°C)
Well 1	6/22/22	850	SZ	X						MPA w/ IFA	8.7°

*Sample ID should match ID written on the sample containers and data sheets. Sample ID will appear on the report for identification.

Relinquished By (signature)	Date/Time	Received By (signature)	Date/Time
	6/22/22 1145		6/22/22 1145
	6/22/22 1525		6/23/22 1040

Field Comments:

Lab Comments:

1/5

White – To accompany samples • Yellow – Sampler Copy

227328

Page ___ of ___

Analytical Services, Inc.

CHAIN OF CUSTODY RECORD

Ship to: Analytical Services, Inc., 130 Allen Brook Lane, Williston, VT 05495, Attn: Sample Management
Phone: 1-800-723-4432 or 802-878-5138 • Fax: 802-878-6765 *Web site: www.analyticalservices.com*

Submitted By: WSP USA 4 Research Drive, Suite 204 Shelton, CT 06484 Phone: 475-882-1723 Email: stacy.stieber@wsp.com	Report To: Stacy Stieber WSP USA Shelton 4 Research Drive Shelton, CT 06484 Phone: 475-882-1723 Email: stacy.stieber@wsp.com
Project Name: Summit Club Job Site: 31403576.002 P.O. Number:	Invoice To: Phone: Email:

Sample Identification*	Sample Collection			Sample Matrix (check one)						Analysis Requested	Lab Use Only
	Date (Start)	Time (Start)	Sampler Initials	Water - Raw	Water - Finished	Waste Water	Biosolids	Soil/Sediment	Other		Temp (°C)
Well 6A	6/22/22	855	SZ	X						MPA w/ IFA	6.0

*Sample ID should match ID written on the sample containers and data sheets. Sample ID will appear on the report for identification.

Relinquished By (signature)	Date/Time	Received By (signature)	Date/Time
	6/22/22 1145		6/22/22 1145
	6/22/22 1520		6/23/22 1040

Field Comments:

Lab Comments:

T/A

White – To accompany samples • Yellow – Sampler Copy

APPENDIX VIII

SUMMIT COUNTRY CLUB
568 BEDFORD ROAD
NORTH CASTLE, NEW YORK

Graphs of Physical Parameter Measurements Collected from Pumping Well 1, 6A, and Nearby Surface Water During 72 Hour Pumping Test Program Conducted on Wells 1, 3, and 6A, June 2022

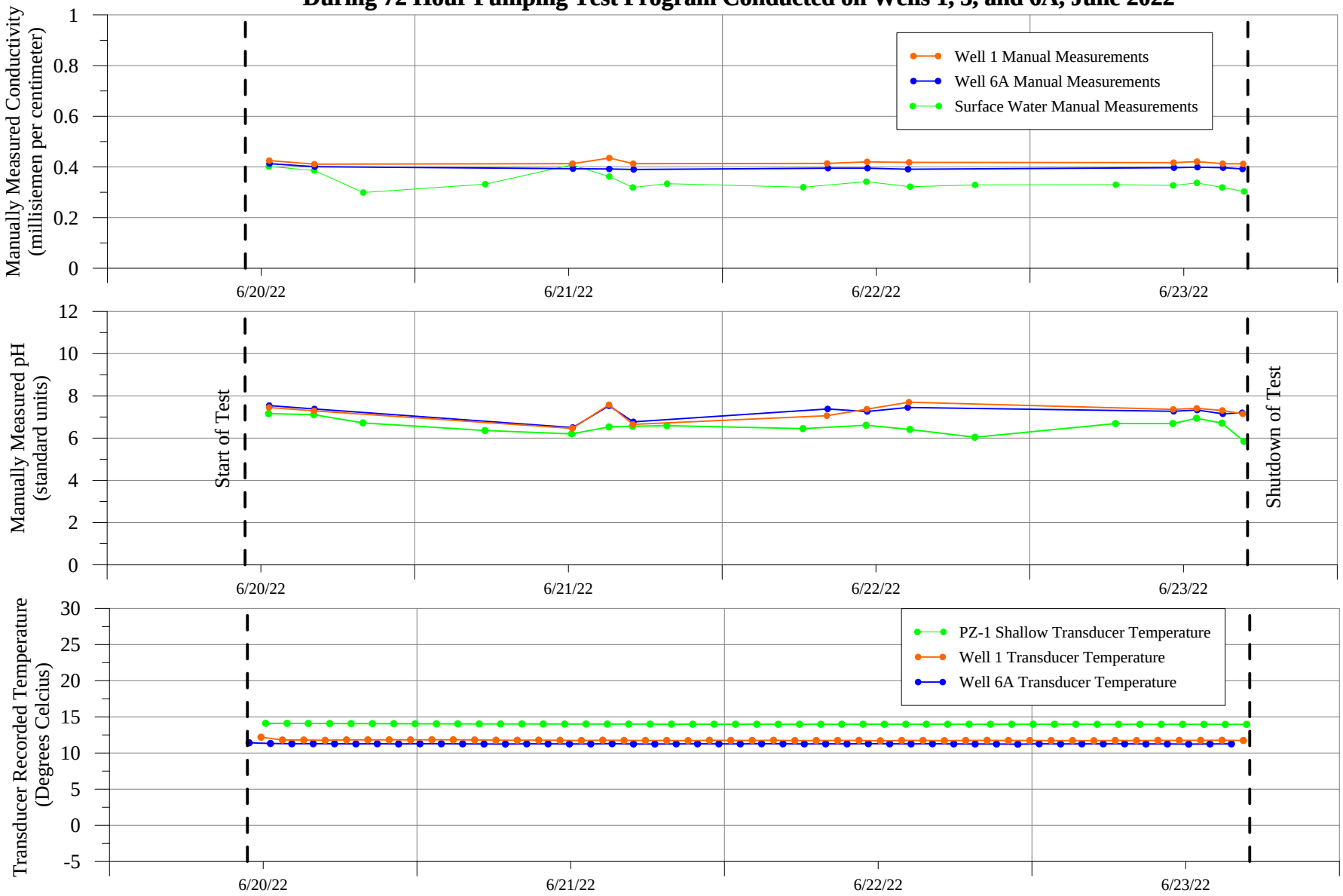

SUMMIT COUNTRY CLUB
568 BEDFORD ROAD
NORTH CASTLE, NEW YORK

Physical Parameter pH and Conductivity Measurements Collected from Pumping Wells 1 and 6A and Nearby Surface Water During the 72-Hour Pumping Test Conducted on Wells 1, 3 and 6A, June 2022

Date/Time	pH (S.U.)	Conductivity (mS/cm)
Well 1		
6/20/2022 12:38	7.45	0.425
6/20/2022 16:09	7.29	0.411
6/21/2022 12:18	6.46	0.413
6/21/2022 15:10	7.58	0.435
6/21/2022 17:02	6.65	0.413
6/22/2022 8:10	7.06	0.414
6/22/2022 11:17	7.37	0.420
6/22/2022 14:34	7.70	0.418
6/23/2022 11:12	7.36	0.417
6/23/2022 13:02	7.41	0.421
6/23/2022 15:02	7.31	0.413
6/23/2022 16:38	7.15	0.412
Well 6A		
6/20/2022 12:39	7.54	0.413
6/20/2022 16:11	7.38	0.401
6/21/2022 12:20	6.50	0.393
6/21/2022 15:10	7.53	0.392
6/21/2022 17:04	6.77	0.390
6/22/2022 8:14	7.38	0.395
6/22/2022 11:19	7.26	0.395
6/22/2022 14:29	7.45	0.391
6/23/2022 11:14	7.27	0.397
6/23/2022 13:04	7.33	0.399
6/23/2022 15:04	7.15	0.397
6/23/2022 16:35	7.20	0.392
Surface Water		
6/20/2022 12:36	7.16	0.402
6/20/2022 16:08	7.11	0.386
6/20/2022 19:58	6.72	0.299
6/21/2022 5:29	6.36	0.332
6/21/2022 12:15	6.20	0.408
6/21/2022 15:10	6.53	0.362
6/21/2022 17:00	6.56	0.319
6/21/2022 19:41	6.59	0.334
6/22/2022 6:18	6.45	0.320
6/22/2022 11:14	6.61	0.342
6/22/2022 14:39	6.41	0.322
6/22/2022 19:43	6.04	0.329
6/23/2022 6:42	6.69	0.330
6/23/2022 11:10	6.69	0.327
6/23/2022 13:01	6.94	0.337
6/23/2022 15:00	6.71	0.319
6/23/2022 16:43	5.85	0.303

S.U. standard units
mS/cm microSiemen per centimeter

SUMMIT COUNTRY CLUB
568 BEDFORD ROAD
NORTH CASTLE, NEW YORK

Temperature Measurements Collected from Pumping Wells 1 and 6A
and Shallow Groundwater at PZ-1 During the 72-Hour Pumping Test Conducted on Wells 1, 3 and 6A, June 2022

Date	Time	Well 1 Temperature (degrees Celsius)	Well 6 Temperature (degrees Celsius)	PZ-1 Temperature (degrees Celsius)
6/20/2022	11:00	12.07	11.37	14.11
6/20/2022	12:00	12.22	11.31	14.11
6/20/2022	13:00	11.85	11.29	14.10
6/20/2022	14:00	11.82	11.30	14.10
6/20/2022	15:00	11.76	11.28	14.09
6/20/2022	16:00	11.73	11.29	14.09
6/20/2022	17:00	11.83	11.29	14.08
6/20/2022	18:00	11.85	11.27	14.08
6/20/2022	19:00	11.83	11.27	14.07
6/20/2022	20:00	11.82	11.26	14.07
6/20/2022	21:00	11.85	11.26	14.06
6/20/2022	22:00	11.81	11.28	14.06
6/20/2022	23:00	11.82	11.27	14.05
6/21/2022	0:00	11.80	11.27	14.04
6/21/2022	1:00	11.81	11.28	14.04
6/21/2022	2:00	11.82	11.26	14.04
6/21/2022	3:00	11.80	11.27	14.04
6/21/2022	4:00	11.80	11.26	14.03
6/21/2022	5:00	11.77	11.28	14.03
6/21/2022	6:00	11.80	11.27	14.03
6/21/2022	7:00	11.78	11.26	14.02
6/21/2022	8:00	11.75	11.26	14.02
6/21/2022	9:00	11.79	11.29	14.02
6/21/2022	10:00	11.73	11.28	14.02
6/21/2022	11:00	11.75	11.26	14.02
6/21/2022	12:00	11.73	11.26	14.01
6/21/2022	13:00	11.75	11.28	14.01
6/21/2022	14:00	11.74	11.26	14.00
6/21/2022	15:00	11.71	11.27	14.00
6/21/2022	16:00	11.74	11.26	14.00
6/21/2022	17:00	11.72	11.26	14.00
6/21/2022	18:00	11.74	11.27	14.00
6/21/2022	19:00	11.73	11.31	13.99
6/21/2022	20:00	11.76	11.26	13.99
6/21/2022	21:00	11.75	11.26	13.99
6/21/2022	22:00	11.74	11.24	13.99
6/21/2022	23:00	11.77	11.28	13.98
6/22/2022	0:00	11.75	11.27	13.98
6/22/2022	1:00	11.76	11.25	13.98
6/22/2022	2:00	11.77	11.29	13.98
6/22/2022	3:00	11.75	11.27	13.98
6/22/2022	4:00	11.76	11.26	13.98
6/22/2022	5:00	11.74	11.26	13.98
6/22/2022	6:00	11.74	11.27	13.98
6/22/2022	7:00	11.73	11.28	13.98
6/22/2022	8:00	11.72	11.27	13.98
6/22/2022	9:00	11.73	11.25	13.98
6/22/2022	10:00	11.72	11.27	13.98
6/22/2022	11:00	11.74	11.26	13.98
6/22/2022	12:00	11.72	11.26	13.98
6/22/2022	13:00	11.73	11.27	13.98
6/22/2022	14:00	11.71	11.26	13.98

SUMMIT COUNTRY CLUB
568 BEDFORD ROAD
NORTH CASTLE, NEW YORK

Temperature Measurements Collected from Pumping Wells 1 and 6A
and Shallow Groundwater at PZ-1 During the 72-Hour Pumping Test Conducted on Wells 1, 3 and 6A, June 2022

Date	Time	Well 1 Temperature (degrees Celsius)	Well 6 Temperature (degrees Celsius)	PZ-1 Temperature (degrees Celsius)
6/22/2022	15:00	11.74	11.27	13.99
6/22/2022	16:00	11.73	11.25	13.98
6/22/2022	17:00	11.75	11.25	13.98
6/22/2022	18:00	11.74	11.26	13.98
6/22/2022	19:00	11.73	11.27	13.98
6/22/2022	20:00	11.73	11.26	13.98
6/22/2022	21:00	11.72	11.27	13.98
6/22/2022	22:00	11.75	11.27	13.98
6/22/2022	23:00	11.74	11.25	13.98
6/23/2022	0:00	11.71	11.26	13.98
6/23/2022	1:00	11.73	11.27	13.98
6/23/2022	2:00	11.73	11.28	13.98
6/23/2022	3:00	11.74	11.27	13.98
6/23/2022	4:00	11.75	11.23	13.97
6/23/2022	5:00	11.73	11.26	13.98
6/23/2022	6:00	11.75	11.27	13.98
6/23/2022	7:00	11.75	11.27	13.97
6/23/2022	8:00	11.74	11.26	13.97
6/23/2022	9:00	11.74	11.27	13.97
6/23/2022	10:00	11.75	11.27	13.97
6/23/2022	11:00	11.75	11.25	13.97
6/23/2022	12:00	11.76	11.25	13.97
6/23/2022	13:00	11.76	11.25	13.97
6/23/2022	14:00	11.75	11.26	13.96
6/23/2022	15:00	11.73	11.27	13.96
6/23/2022	16:00	11.77	11.24	13.96
6/23/2022	17:00	11.90	11.31	13.96

APPENDIX IV

Standard Pitless Units - NSF 61 Certified

(./App III - Standard Pitless Units _ Industrial Pitless Units_ Pitless Units _ Baker Water Systems Division_files/StandardPitlessUnit.jpg)

Click the images to view full size

(https://www.bakermonitor.com/sites/default/files/standardpitless2.jpg)

(https://www.bakermonitor.com/sites/default/files/standardpitless3.jpg)

(https://www.bakermonitor.com/sites/default/files/standardpitless4.jpg)

(https://www.bakermonitor.com/sites/default/files/standard_industrial.gif)

The Monitor Standard Pitless Unit is a specialized piece of equipment manufactured specifically for the purpose of completing a Municipal / Industrial water well. The Monitor Standard Industrial Pitless Unit attaches to the well casing and provides a sanitary underground discharge to the water treatment facility. The Standard Pitless Units are available for the following well diameters: 6" (http://www.bakermonitor.com/content/standard-pitless-units/6-id-standard-industrial-pitless-units), 6.6" (http://www.bakermonitor.com/content/standard-pitless-units/66-id-standard-industrial-pitless-units), 8" (http://www.bakermonitor.com/content/standard-pitless-units/8-id-standard-industrial-pitless-units), 10" (http://www.bakermonitor.com/content/standard-pitless-units/10-id-standard-industrial-pitless-units), 12" (http://www.bakermonitor.com/content/standard-pitless-units/12-pitless-units), 14" (http://www.bakermonitor.com/content/standard-pitless-units/14-pitless-units), and 16" (http://www.bakermonitor.com/content/standard-pitless-units/16-pitless-units).

Monitor Industrial Pitless Unit Features and Options

The Standard Pitless Unit is manufactured using a cast spool and discharge Body. The spool and discharge body are galvanized using Lead-Free Zinc for long term corrosion protection. Monitor Standard Pitless Units are shipped as complete factory pressure tested pitless unit including the Watertight Premium Well Cap, Upper Bury Depth Casing Extension, Discharge Body, Spool, Discharge and Drop Connection, Lift-Out Bail, and Hold-Down Assembly.

Standard Industrial Pitless Unit Available Options

- ***NSF 61 Approved***
- Epoxy Coating
- API Drop Pipe and Discharge Threads
- Cap Cable Seals
- Locking Seal Caps
- Flowing Well Spools
- Flanged Upper Casing
- Water Sampler Valves
- Wire Seals
- Probe Tubes
- Additional conduit entrance connections for signal wires

Installation Instructions (https://www.bakermonitor.com/content/standard-pitless-units-installation-instructions)

Shipping Weights (https://www.bakermonitor.com/content/shipping-weights)

Spools And Cable Seals (https://www.bakermonitor.com/content/spools-spool-cable-seals)

O-Ring Selection Guide (https://www.bakermonitor.com/content/o-ring-selection-guide)

Application Photos (https://www.bakermonitor.com/content/standard-pitless-unit-application-photos)

For CAD drawing contact sales at 800-356-5130 or e-mail monitorsales@baker-mfg.com.

Features | Specifications | Parts Breakdown | Component Materials | Ordering Instructions

Monitor Standard Pitless Units are shipped as complete factory pressure tested pitless unit including:

- Watertight Premium Well Cap
- Upper Bury Depth Casing Extension
- Discharge Body, Spool
- Discharge and Drop Connection
- Lift-Out Bail
- Hold-Down Assembly

Available options:

- Epoxy coating
- API drop pipe and discharge threads
- Cap cable seals
- Locking seal caps
- Flowing well spools
- Flanged upper casing

- Water sampler valves
- Wire seals
- Probe tubes
- Additional conduit entrance connections for signal wires.

Monitor units conform to the Recommended Standards for Water Works, Great Lakes Upper Mississippi River Board of State Public Health & Environmental Managers, Water Systems Council and PAS-97 (04) Standards.

©2020Baker Water Systems Division | 133 Enterprise Street | Evansville, WI 53536 | Phone: 800-356-5130 | Fax: 608-882-3777 | monitorsales@baker-mfg.com

Industrial Marketing Solutions by Naveo Marketing

Sitemap

6" I.D. STANDARD INDUSTRIAL PITLESS UNITS

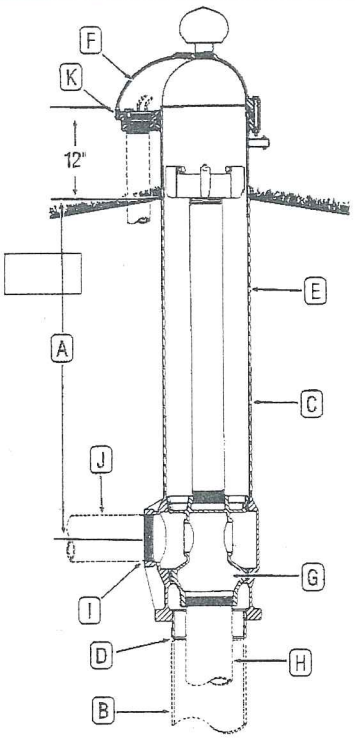

DESCRIPTION - ORDERING NUMBERS

A	3	Bury Depth in Feet	
	PS	Pitless Unit for Submersible Pump	
B	6	Well Size - Ins.	
C	7	Upper Case Size - Ins.	
D	W	Attachment to Well Casing W–Welded N–Compression	
E	B	Black Upper Case	
F	W	Watertight Cap w/Screened Air Vent	
	E	Pressure Equalizing Spool Passages	
G	2	No. of Check Valves: (0 or 2)	
H	3	Drop Pipe I.D. Ins.	
I	T	Threaded NPT Std. Connection	Accessory Discharge Connections
		Flange, ASA 150#	
		Welded	
		Mech. Joint w/transition sleeve	
J	3	Discharge I.D. Ins.	
K	S	Elec. Cable Seal (S) O.D. 3 Wire____ O.D. Grounding Wire_____	
OPTIONS		Flowing Well (F)	
		Special Provision (X)	

EXPLANATION OF PITLESS UNIT

ORDERING NUMBERS

The diagram illustrates the meaning of the various letters and numerals used in Monitor Standard Industrial Pitless Unit ordering numbers. A typical order number and the pitless unit it stands for are shown.

Typical Order Number

3PS67WBWE23T3S

3 — **A.** The first numeral in the order number indicates the bury depth, in feet. Bury depth on all units is measured from the center of the discharge line to ground level. The top of the pitless case extends 12" above ground level as is required by many codes. However, any length can be manufactured.

PS — These letters indicate the type of pump the pitless unit is designed for. The unit shown is a PS for submersible pumps.

6 — **B.** This numeral indicates the well casing size, 6" I.D.

7 — **C.** This numeral indicates the upper pitless case size, 7" I.D.

W — **D.** Indicates the attachment to the well casing is a welded joint ("N" for KwiKonect - 6" I.D. & 8" I.D. only).

B — **E.** Indicates the upper pitless case is black pipe.

W — **F.** Indicates the unit has a watertight cap with screened vent installed.

E — **G.** Indicates spool has pressure equalizing passages, for venting well.

2 — This numeral indicates the type of spool which the pitless unit has. In this case it is a spool having two silent check valves.

3 — **H.** Indicates the size of drop pipe in inches.

T — **I.** Indicates the discharge connection is threaded.

3 — **J.** Indicates the size of discharge pipe in inches.

S — **K.** Sealed Conduit Connection. (Optional)

Baker Manufacturing Co., LLC/Monitor Division • Evansville, WI 53536
Phone: 800-356-5130 • Fax: 608-882-3777 • Website: bakermonitor.com

TECHNICAL BROCHURE
B35-85GS

FEATURES

Powered for Continuous Operation: All ratings are within the working limits of the motor as recommended by the motor manufacturer. Pump can be operated continuously without damage to the motor.

Field Serviceable: Units have left hand threads and are field serviceable with common tools and readily available repair parts.

Sand Handling Design: Our face clearance, floating impeller stack has proven itself for over 50 years as a superior sand handling, durable pump design.

FDA Compliant Non-Metallic Parts: Impellers, diffusers and bearing spiders are constructed of glass filled engineered composites. They are corrosion resistant and non-toxic.

Discharge Head/Check Valve: Cast 303 stainless steel for strength and durability. Two cast-in safety line loops for installer convenience. The built-in check valve is constructed of stainless steel and FDA compliant BUNA rubber for abrasion resistance and quiet operation.

Motor Adapter: Cast 303 stainless steel for rigid, accurate alignment of pump and motor. Easy access to motor mounting nuts using standard open end wrench.

Stainless Steel Casing: Polished stainless steel is strong and corrosion resistant.

Hex Shaft Design: Six sided shafts for positive impeller drive.

Engineered Polymer Bearings: The proprietary, engineered polymer bearing material is strong and resistant to abrasion and wear. The enclosed upper bearing is mounted in a durable Noryl® bearing spider for excellent abrasion resistance.

e-GS

35GS, 45GS, 65GS & 85GS

35-85 GPM 1-10HP, 60 HZ, SUBMERSIBLE PUMPS

GOULDS WATER TECHNOLOGY
a xylem brand

WATER END DATA

Series	Model	Required HP	Stages	Water End	
				Length (in)	Weight (lbs)
35GS	35GS10	1	6	14.2	8
	35GS15	1.5	8	16.6	9
	35GS20	2	10	19.1	10
	35GS30	3	14	24.0	13
	35GS50	5	23	36.4	20
	35GS75	7.5	36	53.0	28
	35GS100	10	46	65.2	34
45GS	45GS15	1.5	5	12.9	8
	45GS20	2	7	15.4	9
	45GS30	3	10	19.0	10
	45GS50	5	17	27.7	15
	45GS75	7.5	25	38.9	21
	45GS100	10	34	50.6	27
65GS	65GS15	1.5	6	19.1	10
	65GS20	2	7	21.2	11
	65GS30	3	10	27.4	12
	65GS50	5	16	41.2	18
	65GS75	7.5	26	62.3	35
	65GS100	10	33	76.8	42
85GS	85GS30	3	8	29.4	13
	85GS50	5	14	42.8	18
	85GS75	7.5	21	63.8	35
	85GS100	10	27	79.9	41

NOMENCLATURE - SOLD AS WATER ENDS ONLY

35 GS 20

GPM at — 35, 45, 65, 85
Best Efficiency

GS Pump Series

Horsepower Code

10 = 1
15 = 1 1/2
20 = 2
30 = 3
50 = 5
75 = 7 1/2
100 = 10

SPECIFICATIONS

Model	Flow Range GPM	Horse-Power Range	Best Efficiency GPM	Discharge Connection	Minimum Well Size	Rotation
35GS	10-50	1.0 - 10	35	2"	4"	CCW
45GS	20 - 65	1.5 - 10	45	2"	4"	CCW
65GS	30 - 80	1.5 - 10	65	2"	4"	CCW
85GS	40 - 120	3.0 - 10	85	2"	4"	CCW

"GS" SERIES MATERIALS OF CONSTRUCTION

Part Name	Material
Discharge Head	AISI 303 SS
Check Valve Poppet	AISI 303 SS
Check Valve Seal	BUNA, FDA Compliant
Check Valve Seat	AISI 304 SS
Check Valve Retaining Ring	AISI 302 SS
Bearing Spider - Upper	Noryl
Bearing	Proprietary Engineered Polymer
Klipring	AISI 301 SS
Diffuser	Noryl
Impeller	Noryl
Bowl	AISI 304 SS
Intermediate Sleeve*	AISI 304 SS, Powder Metal
Intermediate Shaft Coupling*	AISI 304 SS, Powder Metal
Intermediate Bearing Spider*	Noryl
Intermediate Bearing Spider*	AISI 303 SS
Shim	AISI 304 SS
Screws - Cable Guard	AISI 304 SS
Motor Adapter	AISI 303 SS
Casing	AISI 304 SS
Shaft	17-4 PH Stainless Steel
Coupling	AISI 304 SS, Powder Metal
Cable Guard	AISI 304 SS
Suction Screen	AISI 304 SS

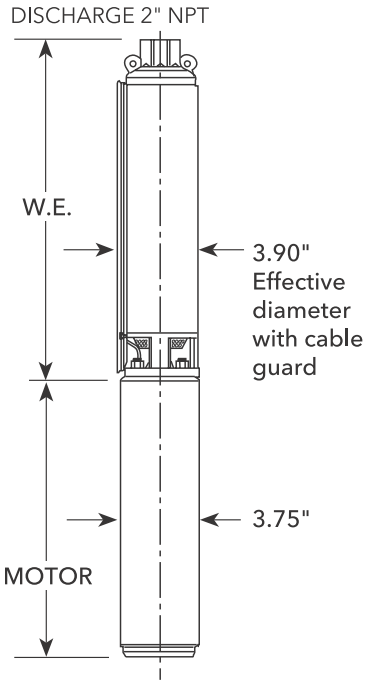

CENTRIPRO 4" SINGLE-PHASE MOTORS

Order No.	Type	HP	Volts	Length in. (mm)	Weight lb. (kg.)
M10422	2-wire PSC	1	230	13.3 (337)	24.5 (11.1)
M15422		1.5		14.9 (378)	28.9 (13.1)
M10412	3-wire	1	230	11.7 (297)	23.1 (10.5)
M15412		1.5		13.6 (345)	27.4 (12.4)
M20412		2		15.1 (383)	31.0 (14.1)
M30412		3		18.3 (466)	40.0 (18.1)
M50412		5		27.7 (703)	70.0 (31.8)

CENTRIPRO 4" THREE-PHASE MOTORS

Order No.	HP	Volts	Length in. (mm)	Weight lb. (kg.)
M10430	1	200	11.7 (297)	22 (10.4)
M15430	1.5		11.7 (297)	22 (10.4)
M20430	2		13.8 (351)	28 (12.7)
M30430	3		15.3 (389)	32 (14.5)
M50430	5		21.7 (550)	55 (24.9)
M75430	7.5		27.7 (703)	70 (31.8)
M10432	1	230	11.7 (297)	23 (10.4)
M15432	1.5		11.7 (297)	23 (10.4)
M20432	2		13.8 (351)	28 (12.7)
M30432	3		15.3 (389)	32 (14.5)
M50432	5		21.7 (550)	55 (24.9)
M75432	7.5		27.7 (703)	70 (31.8)
M10434	1	460	11.7 (297)	23 (10.4)
M15434	1.5		11.7 (297)	23 (10.4)
M20434	2		13.8 (351)	28 (12.7)
M30434	3		15.3 (389)	32 (14.5)
M50434	5		21.7 (550)	55 (24.9)
M75434	7.5		27.7 (703)	70 (31.8)
M100434	10		–	–
M15437	1.5	575	11.7 (297)	23 (10.4)
M20437	2		15.3 (389)	32 (14.5)
M30437	3		15.3 (389)	32 (14.5)
M50437	5		27.7 (703)	70 (31.8)
M75437	7.5		27.7 (703)	70 (31.8)

NEMA MOTOR

- Corrosion resistant stainless steel construction.
- Built-in surge arrestor is provided on single phase motors through 5 HP.
- Stainless steel splined shaft.
- Hermetically sealed windings.
- Replaceable motor lead assembly.
- NEMA mounting dimensions.
- Control box is required with 3 wire single phase units.
- Three phase units require a magnetic starter with three leg Class 10 overload protection.

AGENCY LISTINGS

CentriPro Motor - tested to UL778 and CAN 22.2 by CSA International (Canadian Standards Association)

CentriPro Motor - Certified to NSF/ANSI 61, Annex G, Drinking Water System Components 4P49

NSF/ANSI 372 – Drinking Water System Components – Lead Content

CLASS 6853 01 - Low Lead Content Certification Program - - Plumbing Products

Model 35GS

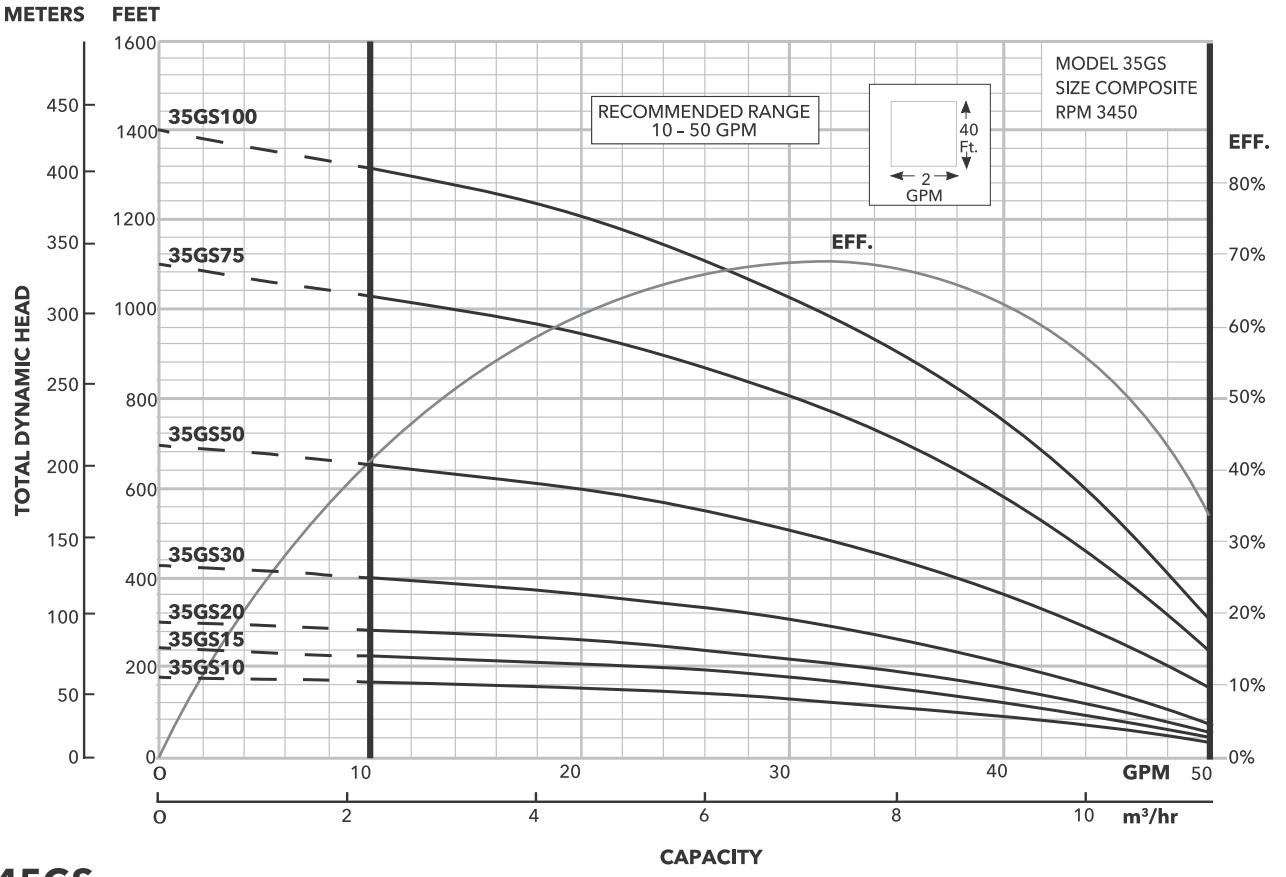

Model 45GS

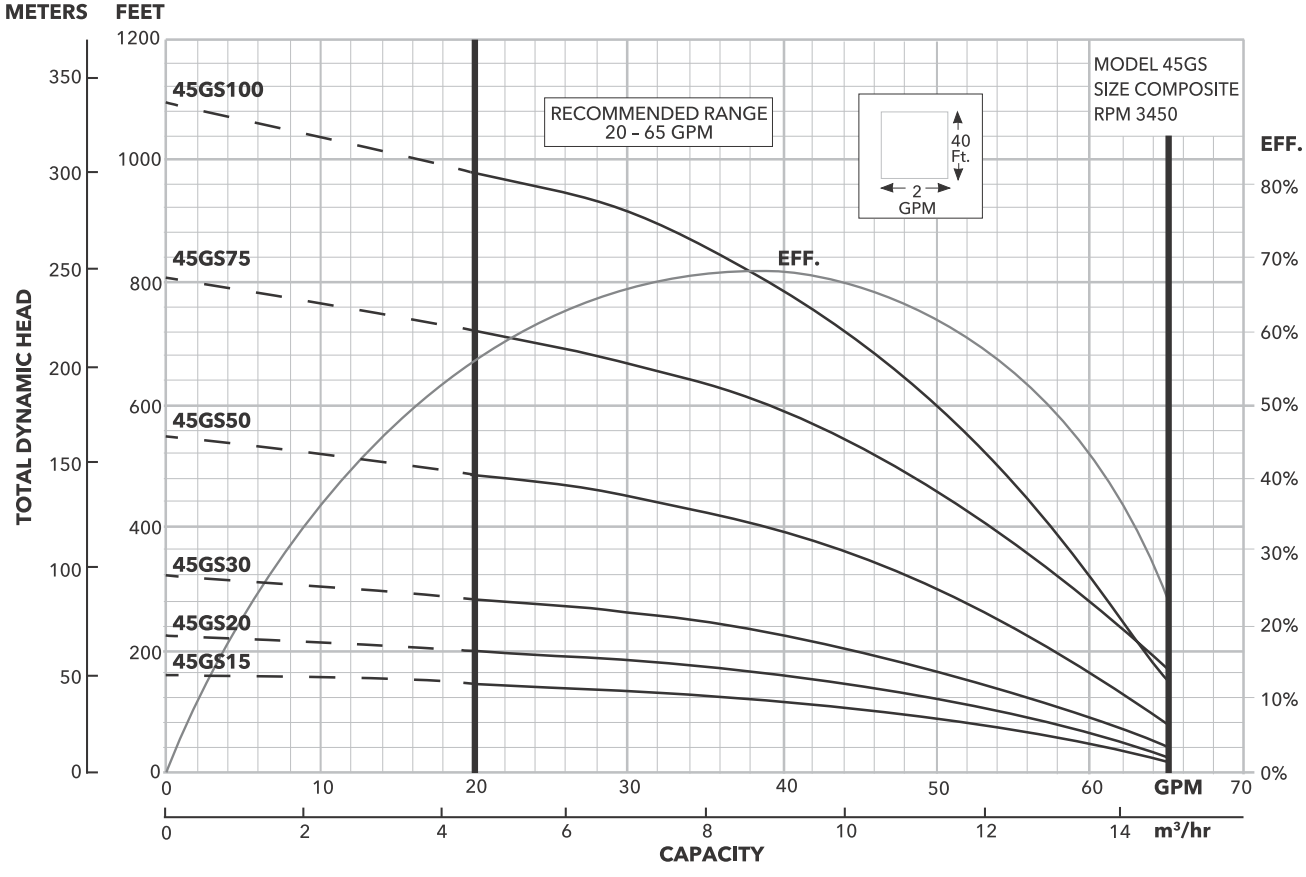

Model 65GS

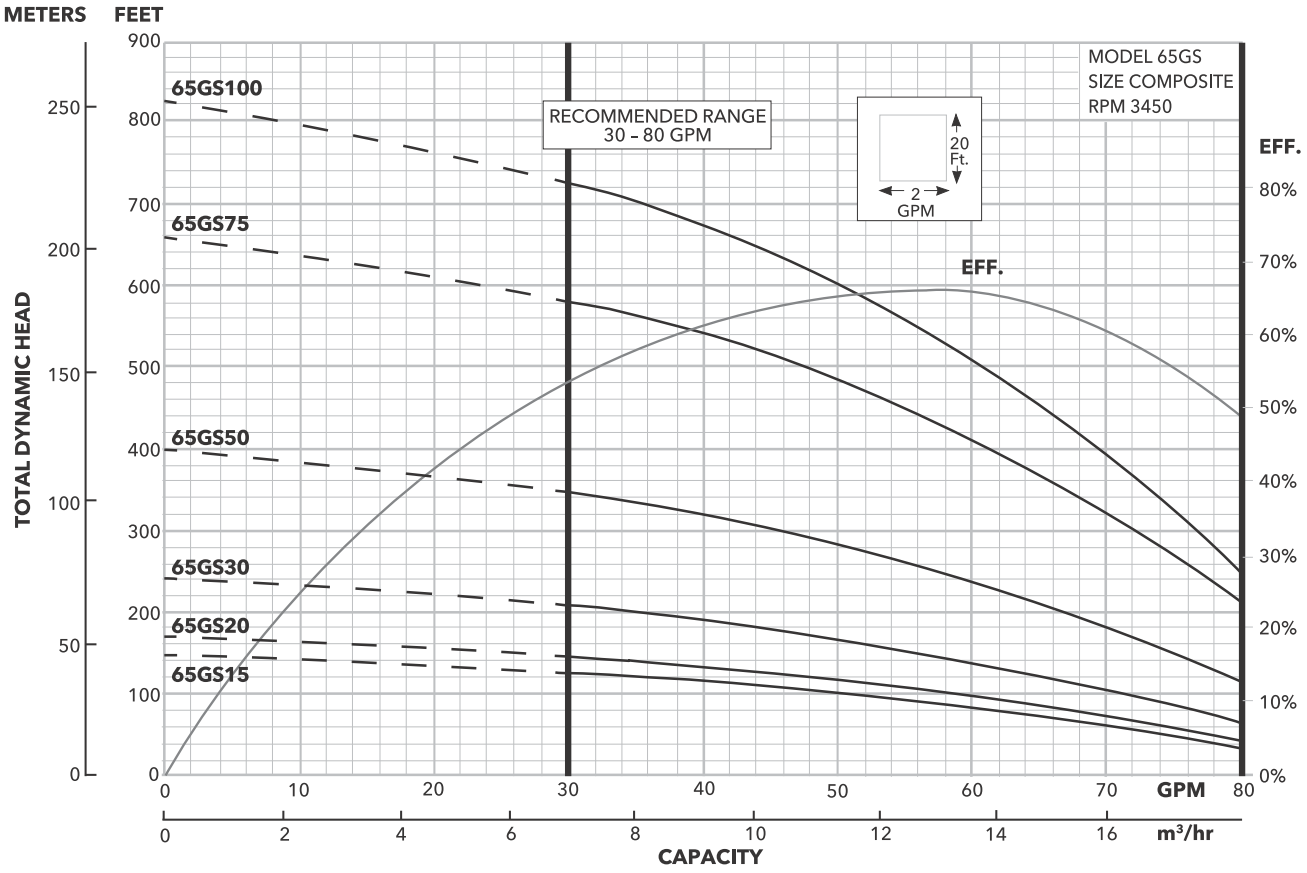

Model 85GS

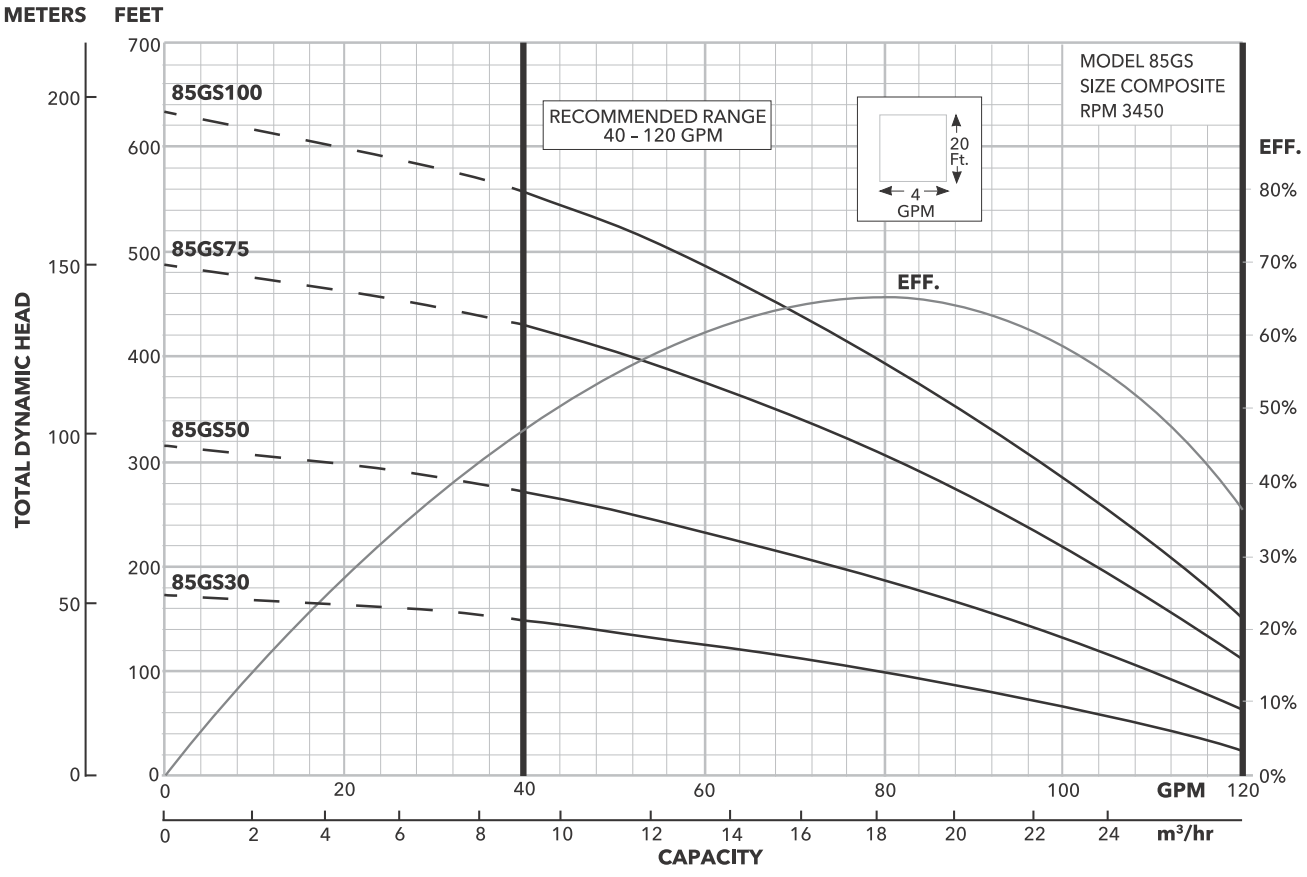

MODEL 35GS

SELECTION CHART

Horsepower Range 1 – 3, Recommended Range 10 – 50 GPM, 60 Hz, 3450 RPM

Pump Model	HP	PSI	Depth to Water in Feet/Ratings in GPM (Gallons per Minute)																											
			20	40	60	80	100	120	140	160	180	200	220	240	260	280	300	320	340	360	380	400	420	440	460	480	520	560	600	
35GS10	1	0		49	46	42	38	33	26	15																				
		20	44	40	36	31	23	11																						
		30	40	36	30	22																								
		40	35	29	20																									
		50	28	18																										
		60	16																											
Shut-off PSI			69	60	52	43	34	26	17	8																				
35GS15	1½	0			48	46	43	40	37	33	29	23	14																	
		20	47	45	43	39	36	32	28	21	10																			
		30	45	42	39	35	32	27	19																					
		40	42	38	35	31	26	18																						
		50	38	34	30	25	16																							
		60	34	29	24	15																								
Shut-off PSI			97	88	79	71	62	53	45	36	27	19	10																	
35GS20	2	0			50	48	46	44	42	39	37	34	30	26	20	12														
		20	49	47	45	43	41	38	36	33	29	24	17																	
		30	47	45	43	40	38	35	32	28	23	16																		
		40	44	42	40	38	35	32	27	22	15																			
		50	42	40	37	34	31	27	21	14																				
		60	39	37	34	30	26	20	12																					
Shut-off PSI			123	114	105	97	88	79	71	62	53	45	36	27	19	10														
35GS30	3	0				50	48	47	45	44	42	41	39	38	36	34	31	28	25	21	16	10								
		20		49	48	46	45	43	42	40	39	37	35	33	30	27	24	19	14											
		30	49	47	46	45	43	42	40	39	37	35	33	30	27	23	18	13												
		40	47	46	44	43	41	40	38	37	35	32	30	26	22	18	12													
		50	46	44	43	41	40	38	36	34	32	29	26	22	17	11														
		60	44	42	41	39	38	36	34	31	29	25	21	16	10															
Shut-off PSI			176	168	159	150	142	133	124	116	107	98	90	81	72	64	55	46	38	29	20	12								

Horsepower Range 5-10, Recommended Range 10 – 50 GPM, 60 Hz, 3450 RPM

Pump Model	HP	PSI	Depth to Water in Feet/Ratings in GPM (Gallons per Minute)																											
			50	100	150	200	250	300	350	400	450	500	550	600	650	700	750	800	850	900	950	1000	1050	1100	1150	1200	1250	1300	1350	
35GS50	5	0			50	48	46	43	41	38	35	31	26	19	11															
		20		50	48	46	44	41	38	35	31	26	20	12																
		30		49	47	45	42	40	37	33	29	24	16																	
		40	50	48	46	44	41	38	35	31	27	20	12																	
		50	49	47	45	43	40	37	34	29	24	17																		
			48	46	44	41	39	35	32	27	21	13																		
Shut-off PSI			280	259	237	215	194	172	150	129	107	85	64	42																
35GS75	7½	0					50	48	47	46	44	43	41	39	37	35	33	30	27	24	19	14								
		20				50	49	47	46	44	43	41	39	37	35	33	31	28	24	20	14									
		30			50	49	48	47	45	44	42	40	38	37	34	32	29	26	22	17	12									
		40			50	49	47	46	44	43	41	39	38	36	33	31	28	24	20	15										
		50		50	49	48	47	45	44	42	40	39	37	35	32	30	26	22	18	12										
				50	49	47	46	45	43	41	40	38	36	34	31	28	25	20	15											
Shut-off PSI			453	431	410	388	366	345	323	301	280	258	236	215	193	171	150	128	106	85	63	42								
35GS100	10	0							49	48	47	46	45	44	42	41	40	38	37	35	33	31	29	26	24	20	16	11		
		20						49	48	47	46	45	44	42	41	40	38	37	35	33	31	29	27	24	20	16	12			
		30						49	48	47	45	44	43	42	40	39	38	36	34	32	30	28	25	22	19	14				
		40					49	48	47	46	45	44	43	41	40	38	37	35	34	32	29	27	24	21	17	12				
		50					49	48	47	46	44	43	42	41	39	38	36	34	33	31	28	26	23	19	15	10				
						49	48	47	46	45	44	43	41	40	39	37	35	34	32	30	27	24	21	17	13					
Shut-off PSI			583	561	540	518	496	475	453	431	410	388	366	345	323	302	280	258	237	215	193	172	150	128	107	85	63	42		

MODEL 45GS

SELECTION CHART

Horsepower Range 1½ – 5, Recommended Range 20 – 65 GPM, 60 Hz, 3450 RPM

Pump Model	HP	PSI	Depth to Water in Feet/Ratings in GPM (Gallons per Minute)																									
			20	40	60	80	100	120	140	160	180	200	220	240	260	280	300	320	340	360	380	400	440	480	520	560	600	640
45GS15	1½	0	64	61	57	52	46	37	23																			
		20	55	50	44	34																						
		30	49	43	32																							
		40	41	30																								
		50	27																									
		60																										
Shut-off PSI			61	52	44	35	26	18	9																			
45GS20	2	0		62	60	57	53	49	45	40	32																	
		20	59	56	52	48	43	38	28																			
		30	55	51	47	43	36	26																				
		40	51	47	42	35	25																					
		50	46	41	34	22																						
		60	40	46	37	38	28	29																				
Shut-off PSI			88	80	71	63	54	45	37	28	19																	
45GS30	3	0		65	62	60	59	56	53	50	47	45	41	37	30	21												
		20	62	60	58	55	52	49	47	44	40	35	28															
		30	60	58	55	52	49	46	43	39	34	26																
		40	57	54	51	49	46	42	38	33	25																	
		50	54	51	48	45	42	38	32	23																		
		60	51	48	45	41	37	31	22																			
Shut-off PSI			130	121	113	104	95	87	78	69	61	52	43	35	26	17												
45GS50	5	0				65	63	62	61	60	59	58	56	55	53	51	50	48	46	44	42	39	32	22				
		20		64	63	61	60	59	58	57	56	54	53	51	49	47	46	43	41	38	35	31	20					
		30	64	62	61	60	59	58	57	55	54	52	51	49	47	45	43	41	38	34	30	25						
		40	62	61	60	59	58	57	55	54	52	50	49	47	45	43	40	37	33	29	24							
		50	61	60	59	58	56	55	53	52	50	48	47	45	42	40	37	33	28	23								
		60	60	59	58	56	55	53	52	50	48	46	44	42	39	36	32	28	22									
Shut-off PSI			228	220	211	202	194	185	176	168	159	150	142	133	124	116	107	98	90	81	72	64	46	29				

Horsepower Range 7½ – 10, Recommended Range 20-65 GPM, 3450 RPM

Pump Model	HP	PSI	Depth to Water in Feet/Ratings in GPM (Gallons per Minute)																									
			40	80	120	160	200	240	280	320	360	400	440	480	520	560	600	640	680	720	760	800	840	880	920	960	1000	1040
45GS75	7½	0					63	62	60	58	56	53	51	48	46	43	39	34	28	21								
		20				63	61	60	57	55	53	50	48	45	42	38	33	27	19									
		30			64	62	60	58	56	54	51	49	46	43	40	35	30	23										
		40		65	63	61	59	57	55	52	50	47	45	41	37	32	26											
		50		64	62	60	58	56	54	51	49	46	43	39	35	29	21											
		60	65	63	61	59	57	55	52	50	47	44	41	37	31	25												
Shut-off PSI			332	315	298	280	263	246	228	211	194	177	159	142	125	107	90	73	55	38								
45GS100	10	0				65	64	63	61	60	58	57	55	54	53	51	50	48	46	44	42	39	36	32	28	23		
		20			65	64	63	61	60	58	57	55	54	52	51	49	48	46	44	42	39	36	32	27	22			
		30		65	64	63	62	60	59	57	56	54	53	52	50	49	47	45	43	40	37	33	29	24				
		40		65	64	62	61	60	58	56	55	54	52	51	49	48	46	44	41	38	35	31	26	21				
		50	65	64	63	62	60	59	57	56	54	53	51	50	48	47	45	42	40	36	33	28	23					
		60	65	64	62	61	59	58	56	55	53	52	50	49	47	45	43	41	38	34	30	26	20					
Shut-off PSI			456	439	422	404	387	370	353	335	318	301	283	266	249	231	214	197	179	162	145	127	110	93	75	58		

MODEL 65GS

SELECTION CHART

Horsepower Range 1½ – 5, Recommended Range 30 – 80 GPM, 60 Hz, 3450 RPM

Pump Model	HP	PSI	Depth to Water in Feet/Ratings in GPM (Gallons per Minute)																					
			20	40	60	80	100	120	140	160	180	200	220	240	260	280	300	320	340	360	380	400	440	480
65GS15	1½	0		78	70	61	51	36																
		20	68	58	47	30																		
		30	57	45																				
		40	42																					
		50																						
		60																						
Shut-off PSI			55	46	38	29	20	12																
65GS20	2	0		81	74	67	59	48	35															
		20	72	64	56	45	30																	
		30	63	54	43																			
		40	53	41																				
		50	39																					
		60																						
Shut-off PSI			65	56	48	39	30	22	13															
65GS30	3	0			81	76	71	66	59	53	45	35												
		20	80	75	69	64	57	51	42	32														
		30	74	69	63	56	49	41	30															
		40	68	62	55	48	39																	
		50	61	54	47	38																		
		60	53	46	36																			
Shut-off PSI			96	87	79	70	61	53	44	35	27	18												
65GS50	5	0						80	77	73	70	67	63	59	55	50	45	39	32					
		20				79	76	72	69	66	62	58	54	49	44	37	30							
		30			78	75	72	69	65	61	57	53	48	43	36									
		40		78	75	71	68	64	61	57	52	47	42	35										
		50	77	74	71	67	64	60	56	52	47	41	34											
		60	74	70	67	63	59	55	51	46	40	33												
Shut-off PSI			164	155	147	138	129	121	112	103	95	86	77	69	60	51	43	34	26					

Horsepower Range 7½ – 10, Recommended Range 30 – 80 GPM, 60 Hz, 3450 RPM

Pump Model	HP	PSI	Depth to Water in Feet/Ratings in GPM (Gallons per Minute)																					
			40	80	120	160	200	240	280	320	360	400	440	480	520	560	600	640	680	720	760	800	840	880
65GS75	7½	0						78	74	70	66	61	56	50	44	35								
		20				80	77	73	69	65	60	55	50	42	33									
		30				79	75	71	67	62	57	52	46	38										
		40			80	77	73	69	64	60	54	49	41	32										
		50			78	75	70	66	62	57	51	45	36											
		60		79	76	72	68	64	59	54	48	40	30											
Shut-off PSI			268	251	233	216	199	181	164	147	129	112	95	77	60	43								
65GS100	10	0						80	78	75	72	69	66	62	58	54	50	45	39	31				
		20					80	78	75	72	69	65	62	58	54	49	44	37	30					
		30					79	76	73	70	67	63	59	55	51	46	40	33						
		40				80	77	74	71	68	65	61	57	53	48	43	36							
		50				78	76	73	69	66	63	59	55	50	45	39	32							
		60			79	77	74	71	68	64	60	57	52	48	42	35								
Shut-off PSI			339	322	305	288	270	253	236	218	201	184	166	149	132	114	97	80	62	45				

APPENDIX V

CLASSIC - SINGLE HEAD ADJUSTABLE SPECIFICATIONS

STENNER PUMPS®

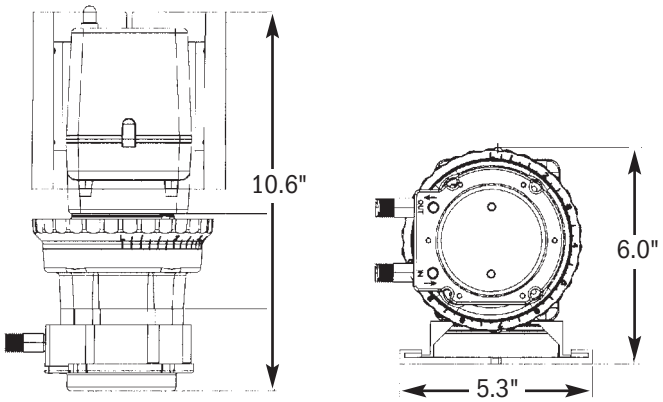

SHIPPING WEIGHT 9 lbs (4 kg)

METERING PUMP
UL LISTED
96F0

METERING PUMP
LR79585
C SA US

IPX4

THIS PUMP IS TESTED AND CERTIFIED BY WQA ACCORDING TO NSF/ANSI 61 FOR CONTACT WITH SODIUM HYPOCHLORITE AND WATER ONLY AND NSF/ANSI 372.
C USA

Intertek
94247
CONFORMS TO ANSI/NSF STD. 50
Equipment for swimming pools, spas, hot tubs and other recreational water facilities.

Agency listings vary by model. Contact factory for details.

FEATURES

- 3-point roller design assists in anti-siphon protection
- Pump head requires no valves, allows for easy maintenance
- Self-priming against maximum working pressure, foot valve not required
- Pump does not lose prime or vapor lock
- Pumps off-gassing solutions and can run dry
- Output volume is not affected by back pressure
- Injection check valve included with models rated 100 psi (6.9 bar) maximum
- Easy to change pump tube; lubrication is not required
- Pump tubes and pump heads interchange between models
- Models (Santoprene® only) tested by Water Quality Association to conform to ANSI/NSF STD 61
- Adjustable models (Santoprene® only) tested by ETL to conform to ANSI/NSF STD 50

This information is not intended for specific application purposes. Stenner Pump Company reserves the right to make changes to prices, products, and specifications at any time without prior notice.

© Stenner Pump Company All Rights Reserved

CLASSIC - SINGLE HEAD ADJUSTABLE SPECIFICATIONS

STENNER PUMPS®

OUTPUT CONTROL
Adjustable models only, external dial ring adjustment from 5%-100% in 2.5% increments

MAXIMUM WORKING PRESSURE
100 psi (6.9 bar) 45MHP2, 45MHP10, 45MHP22, 85MHP5, 85MHP17, 85MHP40
25 psi (1.7 bar) 45M1, 45M2, 45M3, 45M4, 45M5, 85M1, 85M2, 85M3, 85M4, 85M5

MAXIMUM OPERATING TEMPERATURE
125° F (52° C)

MAXIMUM SUCTION LIFT
25 ft (7.6 m) vertical lift, based on water

MOTOR TYPE
1/30 HP, shaded pole, class B

APPROXIMATE GEAR MOTOR RPM
26

DUTY CYCLE
Continuous

MOTOR VOLTAGE (AMP DRAW)
120V 60Hz 1PH (1.7)
220V 60Hz 1PH (0.9)
230V 50Hz 1PH (0.9) *International*
250V 50Hz 1PH (0.9) *International*

POWER CORD TYPE
SJTOW

POWER CORD PLUG END
120V 60Hz NEMA 5/15
220V 60Hz NEMA 6/15
230V 50Hz CEE 7/VII
250V 50Hz CEE 7/VII

MATERIALS OF CONSTRUCTION
All Housings Polycarbonate
Pump Tube
Santoprene®*, FDA approved or Versilon®**
Check Valve Duckbill
Santoprene®*, FDA approved or Pellethane®†
Pump Head Rollers Polyethylene
Roller Bushings Oil impregnated bronze
Suction/Discharge Tubing, Ferrules
Polyethylene, FDA approved
Tube and Injection Fittings
PVC or Polypropylene, NSF listed
Check Valve Fittings
Type 1 Rigid PVC, NSF listed
Connecting Nuts PVC, NSF Listed
3/8" Adapter PVC or Polypropylene, NSF listed
Suction Line Strainer
PVC, NSF listed, with ceramic weight
All Fasteners Stainless steel
Pump Head Latches Polypropylene

ACCESSORY KIT SHIPPED WITH EACH PUMP
3 connecting nuts 1/4" or 3/8"
3 ferrules 1/4" or 6 mm *Europe*
1 injection check valve 100 psi (6.9 bar)
OR 1 injection fitting 25 psi (1.7 bar)
1 weighted suction line strainer
1/4", 3/8" or 6 mm *Europe*
1 20' roll suction/discharge tubing
1/4" or 3/8", white or UV black
OR 6 mm white *Europe*
1 additional pump tube
2 additional latches
1 mounting bracket
1 manual

* Santoprene® is a registered trademark of Exxon Mobil Corporation.

** Versilon® is a registered trademark of Saint-Gobain Performance Plastics.

† Pellethane® is a registered trademark of Lubrizol Advanced Materials, Inc.

45 Series – Adjustable Output Pump

			Approximate Output @ 60Hz						Approximate Output @ 50Hz		
Single Head Model	Maximum Pressure	Pump Tube Number	Gallons per Day	Liters per Day	Gallons per Hour	Liters per Hour	Ounces per Minute	Milliliters per Minute	Liters per Day	Liters per Hour	Milliliters per Minute
45MHP2*	100 psi (6.9 bar) max.	#1	0.2 to 3.0	0.8 to 11.4	0.01 to 0.13	0.03 to 0.48	0.02 to 0.27	0.56 to 7.92	0.6 to 9.1	0.03 to 0.38	0.31 to 6.32
45M1	25 psi (1.7 bar) max.	#1									
45MHP10*	100 psi (6.9 bar) max.	#2	0.5 to 10.0	1.9 to 37.9	0.02 to 0.42	0.08 to 1.58	0.04 to 0.89	1.32 to 26.32	1.5 to 30.3	0.06 to 1.26	1.04 to 21.04
45M2	25 psi (1.7 bar) max.	#2									
45MHP22*	100 psi (6.9 bar) max.	#7	1.1 to 22.0	4.2 to 83.3	0.05 to 0.92	0.18 to 3.47	0.10 to 1.96	2.92 to 57.85	3.3 to 66.6	0.14 to 2.78	2.29 to 46.25
45M3	25 psi (1.7 bar) max.	#3									
45M4	25 psi (1.7 bar) max.	#4	1.7 to 35.0	6.4 to 132.5	0.07 to 1.46	0.27 to 5.52	0.15 to 3.11	4.44 to 92.01	5.1 to 106.0	0.21 to 4.42	3.54 to 73.61
45M5	25 psi (1.7 bar) max.	#5	2.5 to 50.0	9.5 to 189.3	0.10 to 2.08	0.40 to 7.89	0.22 to 4.44	6.60 to 131.43	7.6 to 151.4	0.32 to 6.31	5.28 to 105.14

85 Series – Adjustable Output Pump

			Approximate Output @ 60Hz						Approximate Output @ 50Hz		
Single Head Model	Maximum Pressure	Pump Tube Number	Gallons per Day	Liters per Day	Gallons per Hour	Liters per Hour	Ounces per Minute	Milliliters per Minute	Liters per Day	Liters per Hour	Milliliters per Minute
85MHP5*	100 psi (6.9 bar) max.	#1	0.3 to 5.0	1.1 to 18.9	0.01 to 0.21	0.05 to 0.79	0.03 to 0.44	0.76 to 13.13	0.9 to 15.1	0.04 to 0.63	0.52 to 10.49
85M1	25 psi (1.7 bar) max.	#1									
85MHP17*	100 psi (6.9 bar) max.	#2	0.8 to 17.0	3.0 to 64.4	0.03 to 0.71	0.13 to 2.68	0.07 to 1.51	2.08 to 44.65	2.4 to 51.5	0.10 to 2.15	1.67 to 35.76
85M2	25 psi (1.7 bar) max.	#2									
85MHP40*	100 psi (6.9 bar) max.	#7	2.0 to 40.0	7.6 to 151.4	0.08 to 1.67	0.32 to 6.31	0.18 to 3.55	5.27 to 105.14	6.1 to 121.1	0.25 to 5.05	4.24 to 84.10
85M3	25 psi (1.7 bar) max.	#3									
85M4	25 psi (1.7 bar) max.	#4	3.0 to 60.0	11.4 to 227.1	0.13 to 2.50	0.48 to 9.46	0.27 to 5.33	7.92 to 157.71	9.1 to 181.7	0.38 to 7.57	6.32 to 126.18
85M5	25 psi (1.7 bar) max.	#5	4.3 to 85.0	16.3 to 321.8	0.18 to 3.54	0.68 to 13.40	0.38 to 7.55	11.32 to 223.40	13.0 to 257.4	0.54 to 10.73	9.03 to 178.75

*Injection check valve included with pumps rated 100 psi (6.9 bar) maximum.

NOTICE: The information within this chart is solely intended for use as a guide. The output data is an approximation based on pumping water under a controlled testing environment. Many variables can affect the output of the pump. Stenner Pump Company recommends that all metering pumps undergo field calibration by means of analytical testing to confirm their outputs. The information contained in this flyer is not intended for specific application purposes. Stenner Pump Company reserves the right to make changes to prices, products, and specifications at any time without prior notice.

PCM - SPECIFICATIONS

STENNER PUMPS

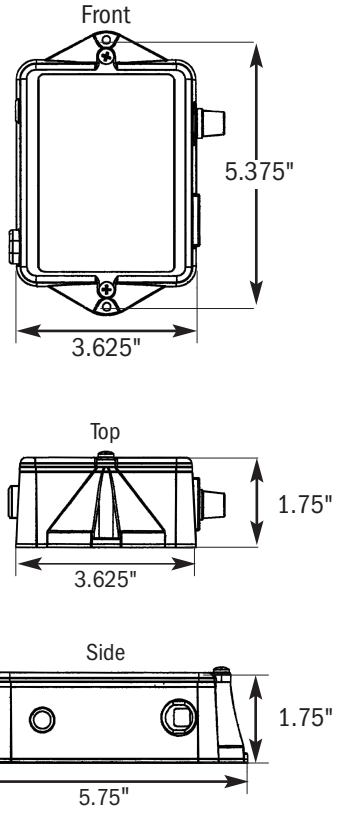

SHIPPING WEIGHT 2 lbs (0.9 kg)

The Pump Control Module (PCM) is a time adjusted controller that powers the pump. A pulsing flow meter sends a signal to the PCM which actuates the pump to deliver the desired dose based upon water volume. The PCM has a locking feature on the adjustment knob.

TIME RANGE IN SECONDS

PCM1: 0.1–1.0

PCM5: 0.5–5.0

PCM10: 1.0–10.0

PCM20: 2.0–20.0

NOTE: The time range can be changed by adjusting the internal jumper setting as indicated above.

INTERCHANGEABLE TIME RANGE SETTINGS

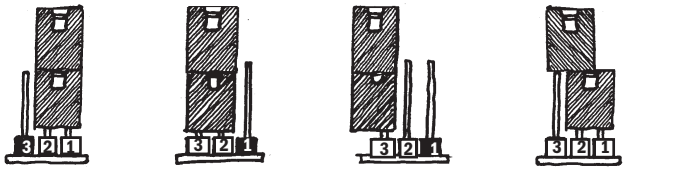

0.1–1 second (Jumper 2 & 1) | 0.5–5 seconds (Jumper 3 & 2) | 1–10 seconds (Jumper 3) | 2–20 seconds (Jumper 3 & 2, 2 & 1)

Timer Microcontroller with triac output

Turndown Ratio 10:1

Input Signal Non-voltage dry contact, water meter

Reset Time Immediate

Minimum Signal Durations 10 milliseconds

Input Electrical 120V 60Hz

No Load Current 0.45mA AC maximum

Output Electrical Maximum device load, 1.8 amp at 120V

Housing Material Polycarbonate plastic

BOX Dimensions L x W x H 8 x 8 x 6 in. (20.3 x 20.3 x 15.2 cm)

This information is not intended for specific application purposes. Stenner Pump Company reserves the right to make changes to prices, products, and specifications at any time without prior notice.

© Stenner Pump Company All Rights Reserved

SSM® SERIES METERS

NSF / ANSI 372

SSM® METER

SSMRS® METER

The SSM® series have stainless steel meter bodies, tested and certified to NSF/ANSI 372 for lead free compliance and meet or exceed AWWA specifications. The SSM® Multi-Jet meter has a long meter life and good tolerance to contaminants. The series is well suited for industrial, commercial and residential applications. The dry sealed registers are easy to read and will retain their clear view display. The SSM® series meter is available in sizes from ⅝" x ½" to 2" with maximum flow rates up to 160 GPM and pressures up to 150 psi. Registrations are available in gallons, cubic feet, or liters/cubic meters.

The SSM® meter is a totalizing multi-jet meter for those applications that only need to read the totalized flow at the meter. The SSMRS® which is equipped with a reed switch for a dry contact electrical output.

CARLON METER

1710 EATON DRIVE • GRAND HAVEN, MICHIGAN 49417
PHONE (616) 842-0420 • FAX (616) 842-1265
E-MAIL CARLON@CARLONMETER.COM • WEBSITE WWW.CARLONMETER.COM

METER SELECTION CHART

METER / PIPE SIZE	MODEL	*CONTINUOUS FLOW	FLOW RANGE	WEIGHT	LENGTH	HEIGHT	WIDTH	CONNECTION LENGTH (X2)
⅝" X ½"	625SSM	8 GPM	¼ - 20 GPM	3.3 lbs.	7 ½"	4 ¼"	3 ⅝"	2"
⅝" X ¾"	6251SSM	10 GPM	¼ - 20 GPM	3.3 lbs.	7 ½"	4 ¼"	3 ⅝"	2"
¾" X ¾"	750SSM	15 GPM	½ - 30 GPM	3.4 lbs.	7 ½"	4 ⅝"	3 ⅞"	2"
1"	1000SSM	25 GPM	¾ - 50 GPM	5.7 lbs.	10 ¼"	4 ⅝"	3 ⅞"	2 ¼"
1½"	150SSM	50 GPM	2 - 100 GPM	10.6 lbs.	11 ⅞"	5 ½"	4 ⅞"	2 ½"
2"	200SSM	80 GPM	2 - 160 GPM	13 lbs.	11 ⅞"	5 ½"	4 ⅞"	2 ¾"

***Continuous Flow:** The size of meter selected should be based upon continuous flow, GPM, as opposed to pipe size. For example, if it is determined that continuous flow is 25 GPM, a 1" meter should be selected rather than a ¾" meter.

ORDERING INFORMATION: Select the meter model number from the Meter Selection Chart above.
Add a **G** for Gallon reading or a **C** for Cubic Feet reading or an **L** for Liters reading.
Example: 1½" Meter with Cubic Feet register = 150SSMC.

X = AVAILABLE CONTACT SETTINGS

(All contact settings are pre-set at the factory to your specification)

GPC = Gallons Per Contact • LPC = Liters Per Contact • CFPC = Cubic Feet Per Contact

METER / PIPE SIZE	MODEL	0.1 GPC	1 GPC	10 GPC	100 GPC	.01 CFPC	0.1 CFPC	1 CFPC	10 CFPC	1 LPC	10 LPC	100 LPC	1000 LPC
⅝" X ½"	625SSMRS	X	X	X	X	X	X	X	X	X	X	X	X
⅝" X ¾"	6251SSMRS	X	X	X	X	X	X	X	X	X	X	X	X
¾" X ¾"	750SSMRS	X	X	X	X	N/A	X	X	X	N/A	X	X	X
1"	1000SSMRS	X	X	X	X	N/A	X	X	X	N/A	X	X	X
1½"	150SSMRS	N/A	X	X	X	N/A	X	X	X	N/A	X	X	X
2"	200SSMRS	N/A	X	X	X	N/A	X	X	X	N/A	X	X	X

SSM® METER SPECIFICATIONS

Reed Switch: Dry contact type, normally open, 24V, 100mA maximum
Pressure Rating: Maximum 150 psi.
Temperature Range: 35° - 122°F. Protect the meter from freezing.
PH Level Range: 6.5 – 8.0
Accuracy: +/- 1.5% of maximum flow when operating between minimum and maximum flow range.
Register Options: U.S. Gallons, Cubic Feet, and Metric.

Installation Instructions:

1. Flush the line thoroughly after all plumbing changes to prevent contaminates from entering the meter.
2. Install horizontally with the register facing up and inlet port facing the water supply line.
3. For outdoor installation, protect meter from direct exposure to the elements.
4. Protect meter from backflow of water opposite of indicted flow direction.

Helpful Hints:

- Install a Carlon Slow-Closing Valve downstream of your water meter. This will eliminate possible meter damage from water hammer in your system.
- Install a Carlon Strainer upstream of your water meter to protect the meter and any other in-line process equipment from becoming jammed by particulate matter in your system.

Warranty: Carlon Meter, Inc. warrants its products to be free of defect in material or workmanship for a period of twelve months from the date of purchase. Contact us to obtain a copy of our complete statement of warranty.

SNYDER INDUSTRIES, INC.

COUNTRY OF ORIGIN ★USA★

Snyder® Open-Top Tanks

- **Durable 1.9 specific gravity HDLPE for more aggressive chemicals**
- **Complies with FDA regulation 177.1520; NSF/ANSI 61 certified**

Snyder's extremely durable open-top tanks are made from 100% HDLPE, ensuring optimal rigidity and long life. They feature permanent gallon and liter indication marks that are molded into the surface.

Ordering info: Factory installed fittings can be ordered with your tank. Contact USABlueBook for more information.

Includes: tank lid. Optional tank stands are available.

Note: Contact USABlueBook if using with chemicals at 100°F or above. Chemical compatibility may vary.

Shipping: Ships motor freight.

Extremely durable open-top tanks are made from 100% HDLPE

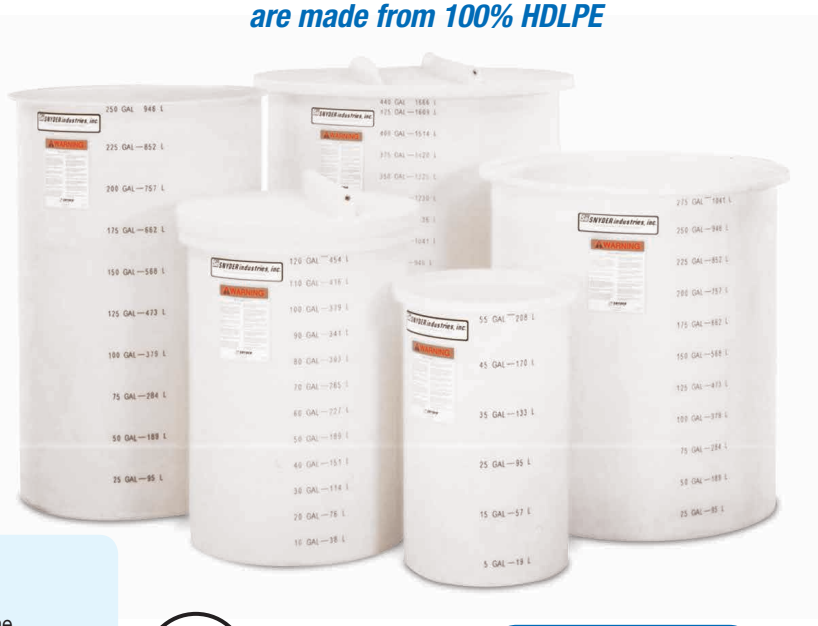

Specific gravity:	1.9
Materials of construction	
Opaque (sodium hypochlorite):	high-density linear polyethylene (HDLPE) with #880059 resin
Translucent (sulfuric acid):	high-density linear polyethylene (HDLPE) with #880046 resin
Translucent (general purpose):	high-density linear polyethylene (HDLPE)

NSF Certified to NSF/ANSI 61

SHIPS MOTOR FREIGHT

Selected sizes in stock and ready to ship!

Tanks suitable for use with:

Opaque (sodium hypochlorite): 16.5% sodium hypochlorite (indoor and outdoor storage); **Translucent (sulfuric acid):** 98% sulfuric acid; **Translucent (general purpose):** 6% aluminum sulfate (alum), 40% ammonium sulfate, 60% ferric sulfate, 26% fluoride, 37% hydrochloric acid, 50% hydrogen peroxide, methanol, 50% sodium hydroxide (caustic), 16.5% sodium hypochlorite (indoor storage only). **Call us with questions about compatibility with any chemicals not on this list!**

CAPACITY (GALLONS)	DIMENSIONS (DIA x H)	OPAQUE TANKS (SODIUM HYPOCHLORITE)* STOCK #	EACH	TRANSLUCENT TANKS (SULFURIC ACID) STOCK #	EACH	TRANSLUCENT TANKS (GENERAL PURPOSE) STOCK #	EACH
30	22" x 31"	38745**	$	38746	$	38744	$
55	26" x 37"	41031**		26361		27932**	
90	34" x 36"	41032		26362		27933**	
120	34" x 47"	41033		26363		27934**	
150	34" x 57"	41034		26364		27935**	
200	40" x 53"	41035		26365		27936**	
250	40" x 65"	41036		26366		27937**	
275	47" x 53"	41037		26367		27938	
330	47" x 63"	41038		26368		27939	
360	53" x 53"	41039		26369		27940	
440	53" x 64"	41040		26370		27941	
500	53" x 72"	41041		26371		27942	

***Sodium Hypochlorite tanks not NSF/ANSI 61 certified.** ****These models are usually kept in stock at USABlueBook.**

Optional Tank Stands

Stands are made from heavy-duty corrosion-proof plastic. Choose from models that elevate tanks either 12" or 18" off the floor. Stands can be easily lifted with a forklift.

FIT TANK CAPACITY	12" HIGH STOCK #	EACH	18" HIGH STOCK #	EACH
30 & 55 Gallons	27086	$	27091	$
90, 120 & 150 Gallons	27087		27092	
200 & 250 Gallons	27088		27093	
275 & 330 Gallons	27089		27094	
360, 440 & 500 Gallons	27090		27095	

Optional Mixer Mount

Use with all tank stands listed above.

DESCRIPTION	STOCK #	EACH
Mixer Mount	27096	$

Tank stand shown with optional mixer mount.

Optional Tank Stands

APPENDIX VI

AQUASTORE®

Glass Tanks with a Heart of Steel™

Glass Tanks with a Heart of Steel™

Not All Liquid Storage Tanks Are Created Equal

CST Storage (CST) has a long and storied history of turning raw steel into the finest storage tanks available.

Our unique glass-fused-to-steel technology was introduced more than 50 years ago for dry bulk agricultural applications. Today, CST is dedicated to the design, fabrication and installation of glass-fused-to-steel sectional tanks. More than 100,000 glass-fused-to-steel tanks have been installed in over 70 countries around the world.

The glass-fused-to-steel technology was introduced to the liquid storage market in the mid-1970's as "Aquastore®." After more than 30 years of proven performance, Aquastore tanks have become the preferred choice for potable water storage and many other liquid applications. With tens of thousands of satisfied customers, Aquastore tanks are "engineered" to be the very best.

Glass-fused-to-steel has become the premium water and liquid storage technology leader. Aquastore owners choose glass-fused-to-steel technology over other tank designs for several reasons:

- **Lowest maintenance requirements over tank life**
- **Greater lifetime value versus welded or concrete tanks**
- **Faster construction – Easy assembly without cranes or special equipment**
- **Expandable to accommodate future requirements**
- **Available in diameters from 11 feet (3.3 m) to 204 feet (62.2 m) and capacity from 20,000 gallons (75 cu m) to over 6 million gallons (22,700 cu m)**
- **Specific tank designs, options and accessories to meet customer needs**

CST designs and manufactures a wide range of tanks in an ISO 9001:2000 certified facility to meet a wide range of standards, including AWWA D103 – Bolted Steel Water Storage Tanks, AISC, IBC, NBCC, FM and NFPA Standard 22.

An Aquastore tank means assurance.

Assurance you will receive the highest engineered quality, best service, **longest product life and greatest value** in liquid storage tanks.

Sludge stabilization and sludge storage facility.

Multiple potable ground storage tank facility.

Assurance

Holiday testing.

Glass-Fused-to-Steel
Factory "Engineered" Technology

Glass-fused-to-steel is the premium technology in the tank market. Glass coating's physical properties are specially suited to municipal and industrial storage applications. The factory-applied silica glass coating on Aquastore tanks forms a hard, inert barrier for both the interior and exterior tank surfaces to guard against weather and corrosion. Glass-fused-to-steel is impermeable to liquids and vapors, controls undercutting caused by corrosion and offers excellent impact and abrasion resistance. The color won't fade or chalk and most graffiti can easily be removed. **It never needs painting!**

A multi-step process is the heart of the glass-fused-to-steel technology system

- Fabricated sheets are grit blasted to a uniform, near white surface
- Proprietary formulations of borosilicate, minerals, water and clays are blended into a sprayable slurry called "slip"
- After inspection, the slurry is fused to the steel sheets at temperatures above 1,500° F (815° C) to produce the distinctive glossy Aquastore glass finish
- The molten glass reacts with the profiled steel surface to form an inert, inorganic chemical and mechanical bond

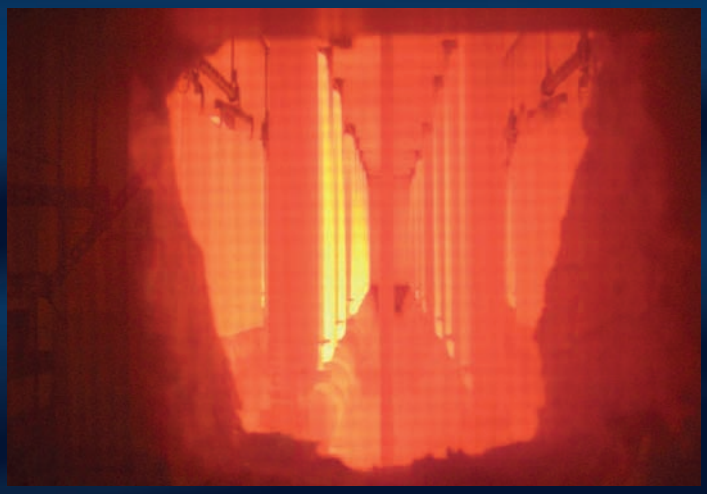

▲
State-of-the-art porcelain enameling furnace installed in 2006.

A new, state-of-the-art porcelain enameling furnace was installed at CST in 2006. The world's largest and highest efficiency porcelain enamel furnace, it improves quality, saves energy, increases production and speeds delivery of glass-fused-to-steel products to customers. In all, five advanced temperature control zones regulate the coating process to produce extremely high quality sheets every time.

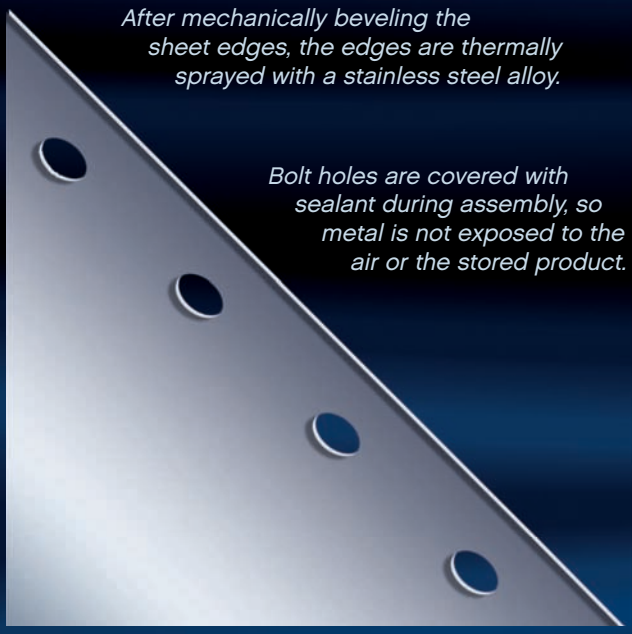

After mechanically beveling the sheet edges, the edges are thermally sprayed with a stainless steel alloy.

Bolt holes are covered with sealant during assembly, so metal is not exposed to the air or the stored product.

Edgecoat® Protection
CST's proprietary Edgecoat® process thermally sprays the sheet edge with a protective stainless steel alloy before the glass finish is applied to the entire sheet for maximum protection.

▲
Glass-fused-to-steel panels on the production line.

Peace of Mind

Vitrium Technology

CST's unending commitment to product improvement has resulted in the development of CST's newest glass innovation – Vitrium™. This coating combines the outstanding chemical and physical resistant properties of titanium-enhanced glass with a highly engineered, ultra-fine glass bubble structure. This process results in high performance glass-fused-to-steel technology. Vitrium features and benefits include:

- Tough TiO_2 glass formulations provide longer life
- Electrostatic base coat application ensures consistent quality
- Maximum coating effectiveness without requiring increased coating thickness
- Unique process technologies provide factory certified "holiday-free" sheets
- Process efficiencies lead to competitive pricing
- Ideal for both cold and hot climates

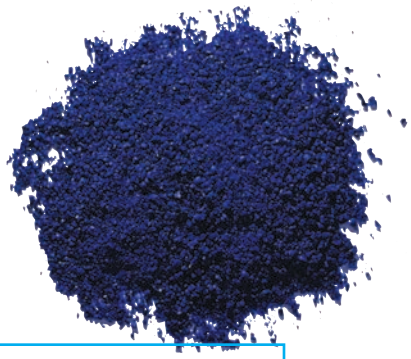

Glass frit is specially formulated to produce the distinctive cobalt blue Aquastore glass coating.

Physical Properties – Glass-Fused-to-Steel Vitrium Technology

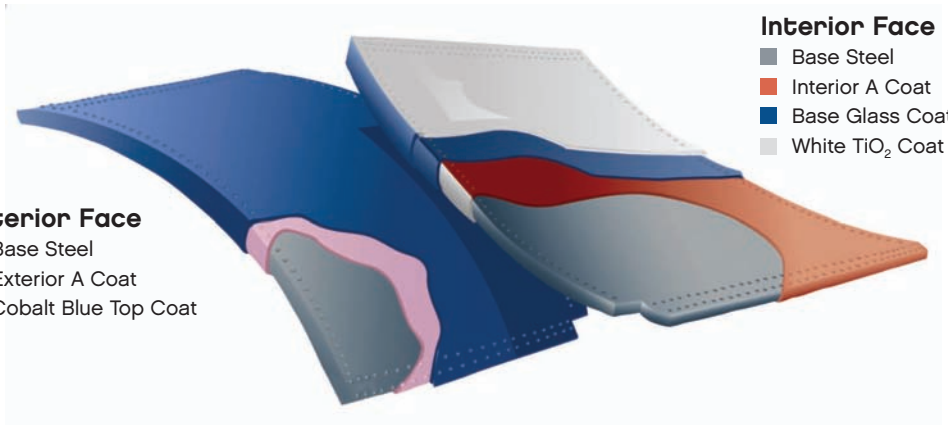

Inside Sheet Color	White
Outside Sheet Color	Cobalt Blue, Desert Tan, Forest Green, Sky Blue, White
Nominal Thickness	**Interior:** 10-18 mils, 260-460 microns **Exterior:** 7-15 mils, 180-380 microns
Service Range	140° F (60° C) @ 2-11 pH-subject to verification, depending on specific products stored
Abrasion Resistance	Taber-8 mg loss (CS-17, 100g, 100 cycles)
Elasticity	Young's Modulus 12 x 10^6
Permeability	Impermeable to gases and liquids within normal operating temperature ranges
Thermal Conductivity	20.4 BTU in/hr ft^2 °F
Cleanability	Smooth, inert, glossy, anti-stick
Hardness	6.0 Mohs
Adherence	Over 5,000 psi to base steel
Impact Resistance	24 inch-lb.
Corrosion Resistance ASTM B-117	Excellent, virtually unaffected by most waste waters, brines, sea water, sour crude, salt spray, organic and inorganic chemicals

From the Top Down, Faster Construction

Every Aquastore tank is factory engineered to customer specifications. Since all components are manufactured in the factory and easily assembled, Aquastore tanks can be installed in many types of weather conditions when field-welded steel and concrete tanks cannot. Tanks are assembled from the top down by factory trained building crews with a jacking system that progressively elevates the structure without the need for expensive cranes and extensive scaffolding. Erection crews can stay safely on the ground. This construction method enables rapid, logical progress for timely completion.

Floors

Aquastore floors can be glass-fused-to-steel or reinforced concrete. A flat steel floor is lined with Aquastore glass-fused-to-steel sheets. When using concrete, Aquastore walls are embedded in the foundation. Authorized Aquastore Dealers can provide site preparation and foundation installation.

Sidewalls

Sidewall erection is completed using a series of specially designed motorized jacks. Each glass-fused-to-steel panel is bolted and sealed into place. Upon completion, the motorized jacks raise the sidewall ring so subsequent rings can be erected. Erecting an Aquastore tank does not require heavy-load cranes or lifting equipment on-site. This unique installation process allows for construction in remote regions as well as metropolitan areas.

Roofs or Domes

All geodesic roofs or domes are free span (do not require columns to support) and are installed on the tanks in the initial phase of construction. Glass-fused-to-steel roofs are available up to 31' in diameter and aluminum geodesic domes are available in all sizes.

Glass-fused-to-steel roofs are manufactured with hard tooling and include radially sectioned steel panels. The roofs are assembled using the same sealant and bolting techniques as the sidewall panels.

Free span, aluminum geodesic domes are available for the complete range of Aquastore tanks. They are constructed with non-corrugated triangular aluminum panels interlocked by a truss system with wide flange extrusions. Domes can be designed to each individual customer's needs, taking into account wind, snow loadings, seismic and design codes.

Sealants

Aquastore tanks feature sealants specifically formulated for chemical resistance appropriate to the application. Each sealant is inspected on a batch-by-batch basis to ensure quality. The sealant is suitable for contact with potable water and is certified to meet ANSI/NSF Additives Standard 61 for indirect additives and is chlorine resistant. Sealants cure to a rubber-like consistency, have excellent adhesion to the glass coating, low shrinkage and are suitable for interior and exterior use.

Tank Economics and Lifetime Value

The biggest economic advantage is that an Aquastore tank never needs painting!

All tanks are not created equal! The glass-fused-to-steel technology in an Aquastore tank delivers greater lifetime value than welded or concrete tanks. When you add up tank benefits over its life cycle, the advantages of Aquastore are hard to beat. It is simply the best quality, lowest maintenance and most flexible tank available.

Consider these advantages:

- **NEVER NEEDS PAINTING**
- Minimal maintenance required over tank life
- Will not corrode or rust
- A guaranteed tank performance warranty
- Turn-key services by an Authorized Aquastore Dealer from approval drawings to tank testing
- No need for cranes or other large equipment for erection
- Erect Aquastore in remote, secluded locations
- Minimize lost construction days due to weather delays or field-applied coatings
- Design Aquastore for future expansion or relocation
- Remove most graffiti easily

The biggest economic advantage is that an Aquastore tank never needs painting! The budgeted dollars that may be used to repair a concrete tank or repaint a welded tank every 8 – 12 years can be diverted to other municipal or industrial needs.

Concrete tanks are expensive, involve long construction periods, need lots of room to build and are not always “maintenance free”. Design specifications allow for a small level of leaking, and some level of cracking is basically expected. Concrete tanks usually take longer to construct than an Aquastore.

Welded tanks can have long lead and construction times. They are limited by external environmental factors when being erected and field-coated. Welded tanks can have high maintenance costs and must be painted multiple times over their life cycle. Their warranty is typically only one year after installation.

Low Maintenance

Tank Designs to Meet Specific Application Needs

Ground Storage Tank

Composite Elevated

Standpipe

Leachate

Wastewater

Clarifier / Sludge / Storage / Mixing

Anaerobic Digestion

Authorized Aquastore Dealers

Authorized Aquastore Dealers offer a turn-key package to customers providing service, support and expertise from start to finish. In addition to selling and erecting an Aquastore tank, dealer sales and service specialists can offer the following:

- **Value engineering – total cost analysis**
- **Tank configuration and layout data**
- **Budgeting**
- **Product engineering specifications**
- **Design criteria assistance**
- **Tank layout drawings**
- **Approval drawings**
- **Certified drawings**
- **Site preparation and layout**
- **Tank construction scheduling**
- **Structural calculations**
- **Tank testing and commissioning**
- **Tank inspection and repair**
- **Maintenance services**
- **Relocation or expansion**
- **Concrete work**
- **Pipe work *(inlet, outlet, overflow, decant, etc.)***
- **Insulation *(spray foam, battens, etc.)***
- **Dome installations**
- **Turn-key tank construction**
- **After sale service**

An Aquastore tank requires minimal maintenance over its life cycle and CST Authorized Dealers can provide complete service packages tailored to your application needs. Most importantly, the glass-fused-to-steel technology experiences little environmental impact and never needs painting, saving hundreds of thousands of dollars over time.

Turn-key package from site preparation to completed and tested tank.

Commitment

Features & Accessories

The Aquastore basic system consists of:

- **Glass-fused-to-steel sidewalls**
- **Ladder, cage and platform**
- **Cathodic protection**
- **Gravity vent**
- **Glass-fused-to-steel roofs or aluminum geodesic domes**
- **Roof, dome and sidewall manways**
- **Overflow pipes**
- **Hardware and sealant required to assemble the tank**

1 Cathodic Protection

An Aquastore tank's cathodic protection system uses sacrificial anodes to protect the reinforcing bars, mitigate corrosion and provide protection to internal submerged surfaces of the tank. It is incorporated into the Aquastore tank's warranty.

2 Gravity Vent

Aquastore tank gravity vents are designed to allow for air exchange during filling and emptying. They are equipped with corrosion-resistant bird and insect screens.

3 Ladder, Cage and Platform

Aquastore tank ladders are constructed of aluminum rails and rungs with hot-dip galvanized cages and step off platforms. Ladders with locking safety cage doors are available.

4 Sidewall Manways

Aquastore tank manways are designed in accordance with AWWA D103 Standards. They are 24 inches (61 cm), 30 inches (76 cm) or 36 inches (91 cm) in diameter and are manufactured with hot-dip galvanized or stainless steel.

5 Hardware and Sealants

The hardware and sealants for Aquastore assembly are supplied with each order. Specific types, such as chlorine resistant sealants or hardware with protective covers, are made for the individual application. Heavy duty plastic bolt caps are also available for added protection.

Additional options and accessories.

Additional accessories are available to meet use and specification needs. Accessories include:

- Colors
- Caps and sealer
- Nozzles
- Baffles
- Roof walkways, railings and staircases
- Level indicators

Colors

Aquastore glass coatings are available in standard cobalt blue or four other exterior colors. Forest green, sky blue, desert tan or white colors are available. Inquire for custom colors. Interior color is always white.

Exterior Colors:

Cobalt Blue

Sky Blue

Tan

Forest Green

White

*Colors represented are not exact reproductions but are good representations of available colors.

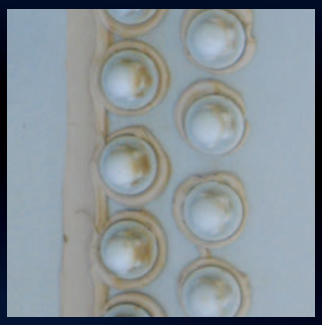

Caps and Sealer

Durable plastic bolt caps offer added protection against weather and corrosion. For specialized applications, sealer alternatives are available.

Nozzles and Baffles

Nozzles and baffles are available depending on tank use and specifications. Engineering flexibility allows these accessories to be incorporated into overall tank design.

Walkways, Railings and Staircases

An option to the standard ladder and cage is a walkway and staircase. Aquastore walkways are hot-dip galvanized steel and are appropriate for situations when regular overhead tank access is required. Both walkways and staircases are available from your local Authorized Dealer.

Level Indicators

Durable and functional, the liquid level indicator is a utilitarian option that can be installed as part of the assembly operation.

Service

“Best in Industry” Warranty

For more than 60 years, CST Storage has offered the most comprehensive manufacturer’s warranty in the industry. The field-proven performance history of Aquastore tanks is one more indication that our products are built to last.

Authorized Aquastore Dealers

CST delivers Aquastore tanks through a network of Authorized Aquastore Dealers. These organizations and their sales representatives are available to discuss project requirements from inception to completion. Experience in your region and application knowledge are valuable during all stages, from project development to specification to erection to the completed and tested tank.

Pricing, budget estimates, foundation layouts, project scheduling, approval drawings and foundation construction are just a few of the areas where Authorized Dealers can help. Our customers deal with one source from start to finish, including service after installation. Dealers are trained to provide superior customer service.

Find your nearest Aquastore dealer in the dealer locator section at **www.aquastore.com.**

AQUASTORE®

Glass Tanks with a Heart of Steel™

CST STORAGE

345 Harvestore Drive, DeKalb, Illinois 60115
Phone: 815-756-1551, Fax: 815-756-1659
www.aquastore.com
e-mail: **sales@aquastore.com**

© 2011. Aquastore and Edgecoat are registered trademarks of CST Storage.
Vitrium is a trademark of CST Storage.

WELL-X-TROL®

Diaphragm Well Tanks: WX-400 Series Non-ASME

150 PSIG Working Pressure

Construction

Shell	Steel
Diaphragm	Heavy Duty Butyl
Liner	Antimicrobial Polypropylene w/ Anti-Legionella Protection
System Connection	Malleable Iron (NPTF)
Finish	Red Oxide Primer
Water Circulator	Turbulator™
Air Valve	Schrader Valve w/EPDM Seat
Factory Precharge	25 PSIG (1.7 bar)

Performance

Maximum Operating Temperature	200°F (93°C)
Maximum Working Pressure	150 PSIG (10.3 bar)
Warranty	1-Year

Application

- For use in commercial well water and booster pump systems.
- Fixed diaphragm construction.
- Tested to JIS Z 2801 for reduction of Legionella, Staphylococcus and E. coli.
- Follows ASHRAE 188 Anti-Legionella guidelines.
- Sight glass and seismic restraint options available.

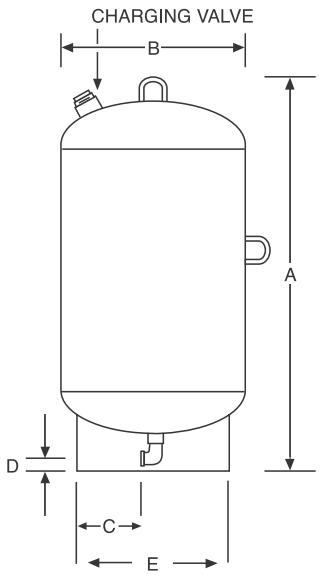

Non-ASME Models

Model Number	Tank Volume		Max. Accept. Volume		A Tank Height		B Tank Diameter		C Sys. Conn. Inset		D Sys. Conn. Centerline		E Stand Diameter		System Conn. (NPTF)	Shipping Weight	
	Gal	Lit	Gal	Lit	In	mm	In	mm	In	mm	In	mm	In	mm	In	Lbs	Kg
WX-401	18	68	11	42	31	787	16	406	5	124	1½	38	12¾	324	1	96	44
WX-402	25	95	11	42	40	1016	16	406	5	124	1½	38	12¾	324	1	113	51
WX-403	34	129	11	42	49	1245	16	406	5	124	1½	38	12¾	324	1	120	54
WX-404	68	258	34	129	48	1219	24	610	6	159	1⅝	41	16	406	1¼	232	105
WX-405	90	341	34	129	59	1499	24	610	6	159	1⅝	41	16	406	1¼	255	116
WX-406	110	417	34	129	70	1778	24	610	6	159	1⅝	41	16	406	1¼	335	152
WX-407	132	500	46	175	57	1448	30	762	10	254	1¾	44	24	610	1¼	450	204

All dimensions and weights are approximate.

Job Name _____ Notes _____

Engineer _____ _____

Contractor _____ _____

P.O. No. _____ _____

Sales Rep. _____ _____

Model No. _____ _____

188 AntiLegionella

Antimicrobial

Turbulator

NSF CERTIFIED TO NSF/ANSI 61

ISO 9001:2015 CERTIFIED

MADE IN USA

LOW-LEAD IAPMO R&T

Worthington Industries Inc., 1400 Division Road, West Warwick, RI 02893 USA T: 401.884.6300 **www.amtrol.com**
MC4400 (06/19)

APPENDIX VII

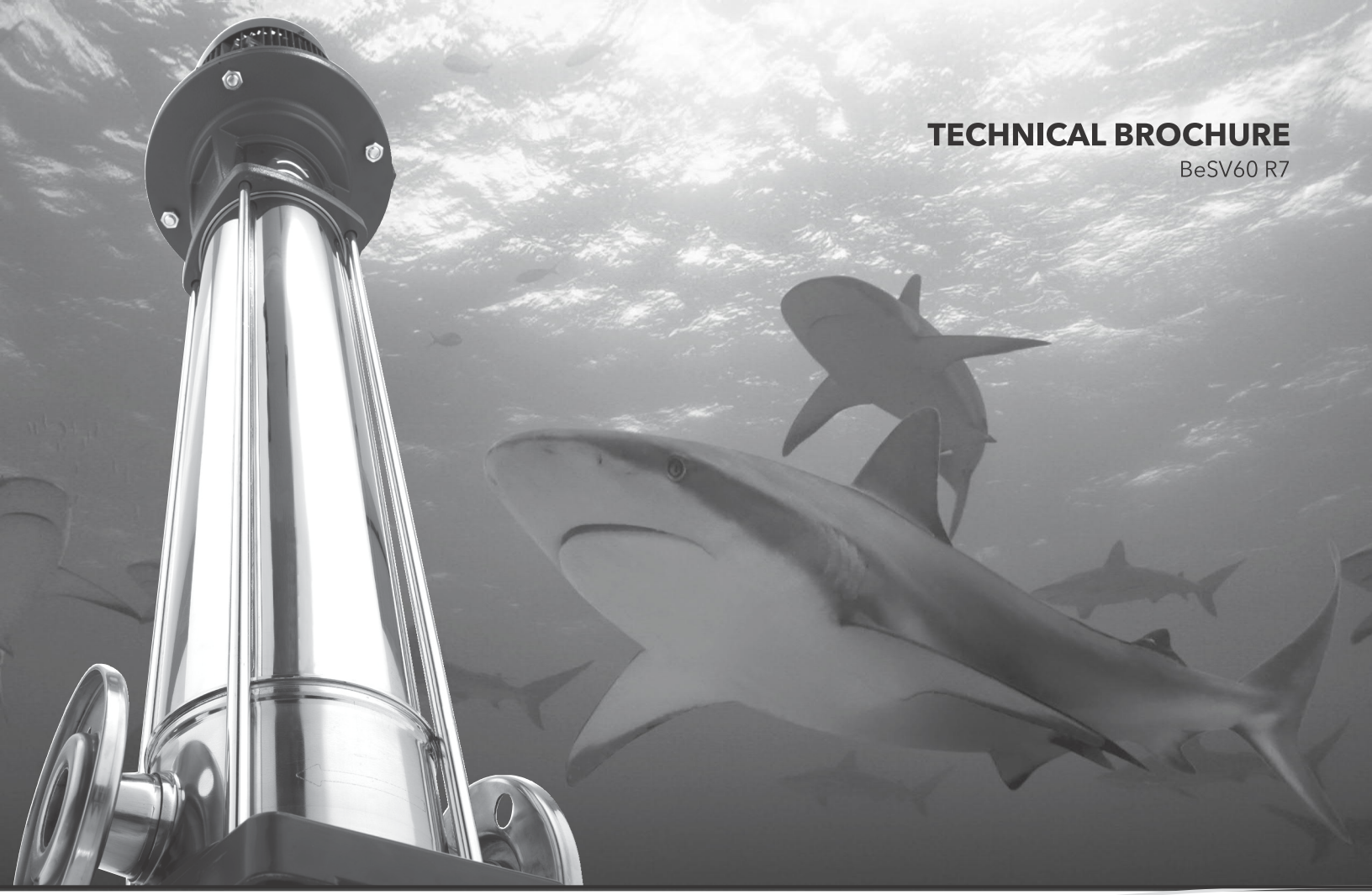

TECHNICAL BROCHURE
BeSV60 R7

e-SV™ 60 Hz Technical Manual

E-SV SERIES VERTICAL MULTI-STAGE PUMPS

GOULDS WATER TECHNOLOGY
a xylem brand

Contents

Coverage Curves. . . . 4
General Market Specifications . . . 5
Characteristics of 1-22SV Series . . . 6
Characteristics of 33-125SV Series. . . . 6
General Characteristics . . . 7
Typical Applications of e-SV Pumps . . . 8
e-SV Nomenclature . . . 9-12
1-22SV Series Pump Cross Section and Main Components. . . . 13-14
33-92SV Series Pump Cross Section and Main Components . . . 15-16
125SV Series Pump Cross Section and Main Components . . . 17-18
e-SV Mechanical Seals . . . 19
Maximum Allowable Working Pressure Charts . . . 20
Maximum Inlet Pressure / Motor Data - Starts Per Hour . . . 21
Motor Data . . . 21-25
3500 RPM Curves, Dimensions and Weights . . . 26-47
1750 RPM Curves, Dimensions and Weights . . . 48-69
Horizontal Mounting Options . . . 70-73
Table of Hydraulic Performances at 3500 RPM. . . . 74-79
Table of Hydraulic Performances at 1750 RPM. . . . 80-85
Technical Appendix . . . 86-88

e-SV Rating Plate

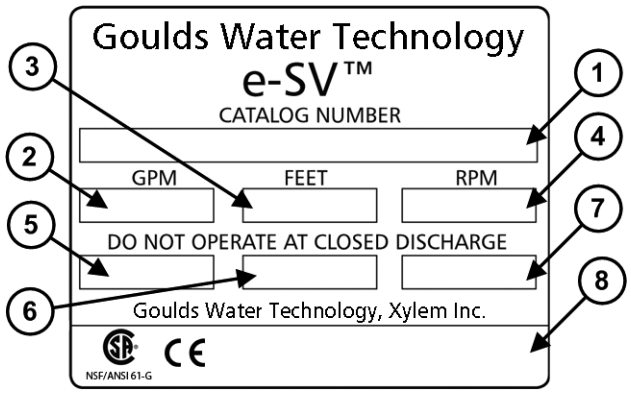

1	Goulds Water Technology Catalog Number
2	Capacity Range
3	TDH Range
4	Rated Speed
5	Rated Horsepower
6	Maximum Operating Pressure
7	Maximum Operating Temperature
8	Pump Serial Number

e-SV Coverage Curve

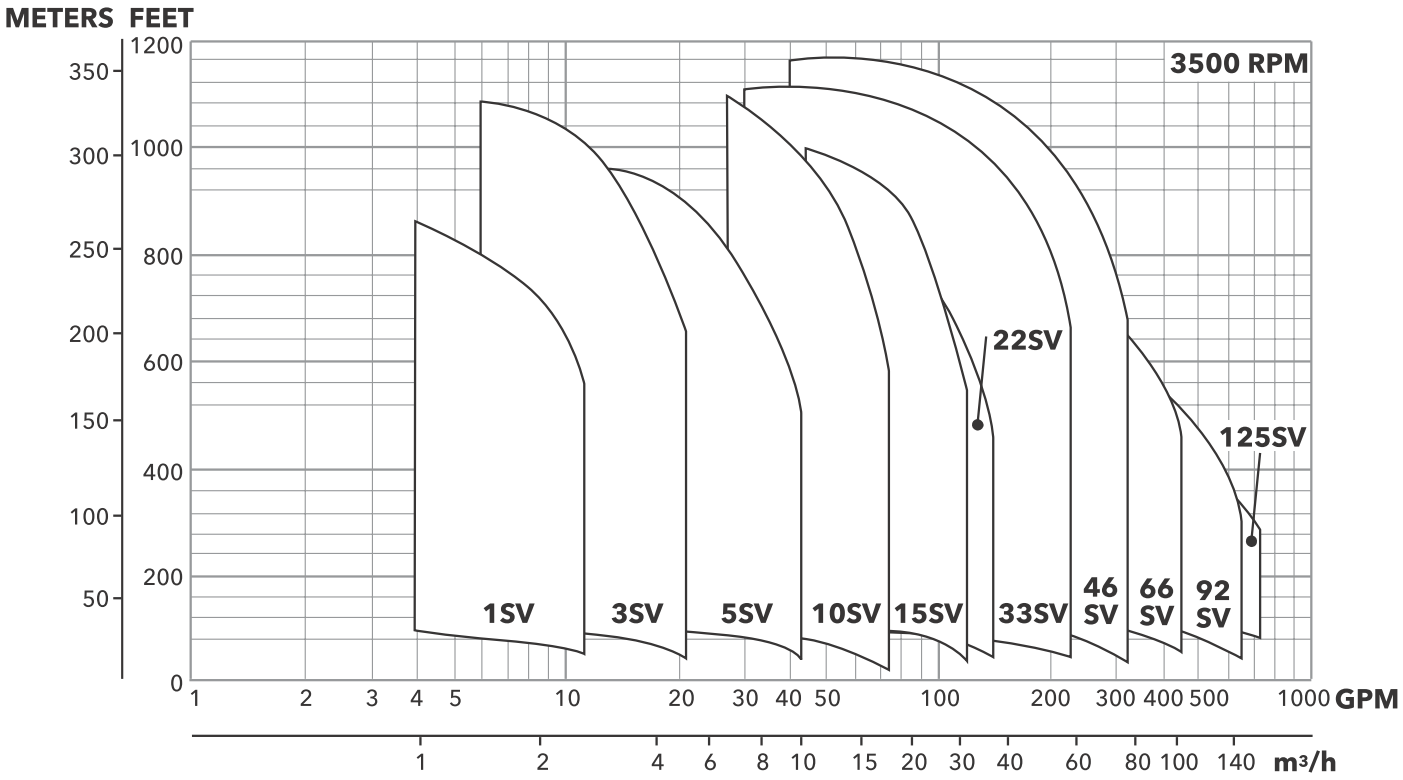

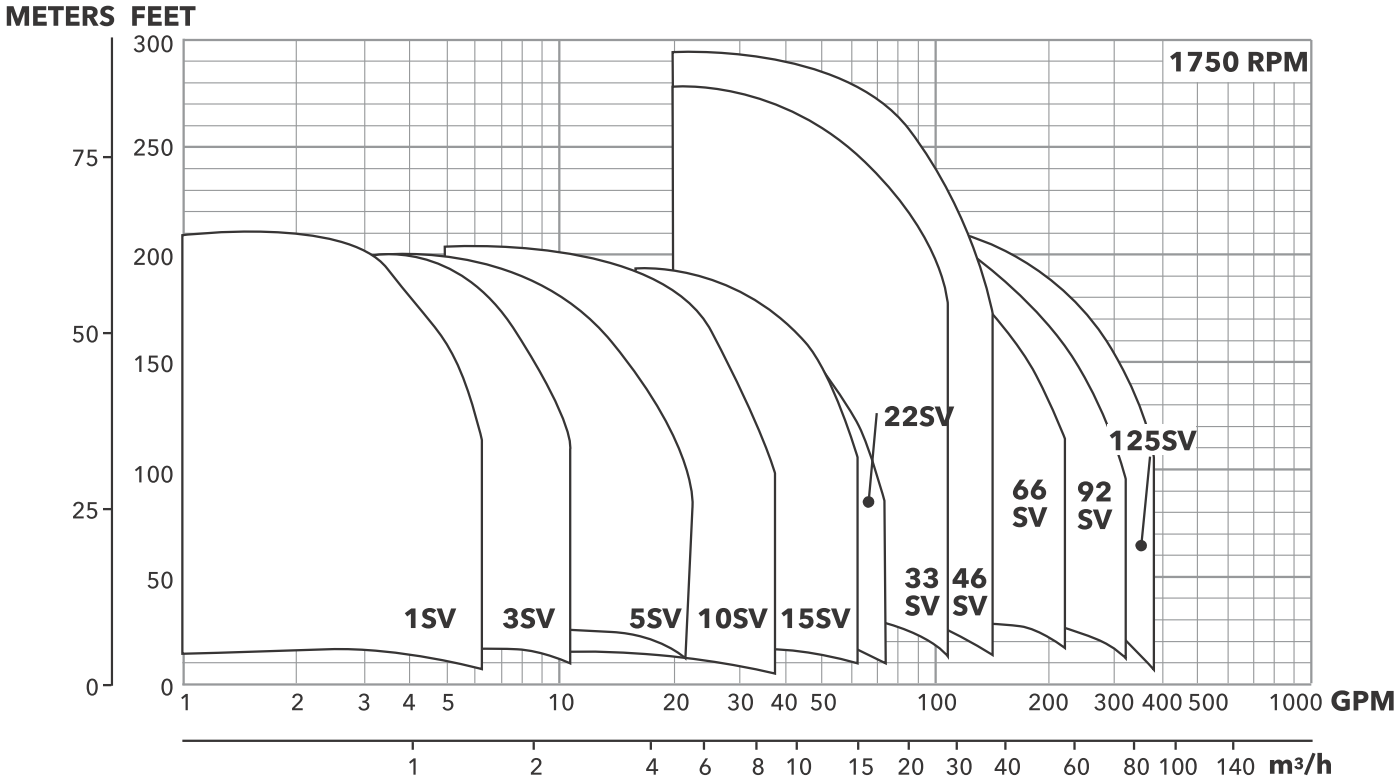

e-SV General Market Specifications

MUNICIPAL, AGRICULTURAL, LIGHT INDUSTRY,
WATER TREATMENT, HEATING AND AIR CONDITIONING

Applications

- Handling of water, free of suspended solids, in the municipal, industrial and agricultural markets
- Pressure boosting and water supply systems
- Fire fighting jockey pumps
- Irrigation systems
- Wash systems
- Water treatment plants: reverse osmosis
- Handling of moderately aggressive liquids, demineralized water, water and glycol, etc.
- Circulation of hot and cold water for heating, cooling and conditioning systems
- Boiler feed

Specifications

PUMP

The e-SV pump is a non-self priming vertical multistage pump coupled to a standard motor.
The liquid end, located between the upper cover and the pump casing, is held in place by tie rods. The pump casing is available with different configurations and connection types.

- Delivery: up to 725 GPM
- Head: up to 1200 feet
- Temperature of pumped liquid:
  -20°F to 250°F (-30°C to 120°C) standard version
- Optional temperature range up to 300°F (149°C) high temperature version
- Maximum operating pressure
  – SV1-22 with oval flanges: 230 PSI (16 bar)
  – SV1-22 with round flanges or Victaulic: 360 or 575 PSI (25 or 40 bar)
  – SV33, 46: 360 or 580 PSI (25 or 40 bar)*
  – SV 66, 92: 360 or 580 PSI (25 or 40 bar)*
  – SV 125: 360 or 580 PSI (25 or 40 bar)
- Direction of rotation: clockwise looking at the pump from the top down (marked with an arrow on the adapter and on the coupling).

MOTOR

- Standard NEMA TC Frame motors in open drip proof or totally enclosed fan cooled.
- 3500 RPM nominal
- Standard voltage:
  - Single phase version: 115-208/230 V, 60 Hz up to 3 HP or 208-230 V for 5 HP
  - Three phase version, 2 pole: 208-230/460 V, 60 Hz up 75 HP

* Based on pump staging

e-SV Characteristics

1SV, 3SV, 5SV, 10SV, 15SV, 22SV Series

- Vertical multistage centrifugal pump. All metal parts in contact with the pumped liquid are made of stainless steel.
- The following versions are available:

  F – ANSI flanges, in-line delivery and suction ports, AISI 304

  T – Oval flanges (NPT), in-line delivery and suction ports, AISI 304

  R – ANSI flanges, delivery port above the suction port, with four adjustable positions, AISI 304

  N – ANSI flanges, in-line delivery and suction ports, AISI 316

  P – Victaulic couplings, in-line delivery and suction ports, AISI 316

  G – ANSI flange, in-line delivery and suction ports, Class 35/40B cast iron.

  C – ISO clamp, AISI 316

- Innovative axial load compensation system on pumps with higher head. This ensures reduced axial thrusts and enables the use of standard NEMA TC motors that are easily found in the market.
- Seal housing chamber designed to prevent the accumulation of air in the critical area next to the mechanical seal
- Mechanical seal according to EN 12756 (ex DIN 24960) and ISO 3069
- Versions with ANSI flanges that can be coupled to ANSI raised face counter-flanges
- Threaded oval counter-flanges made of stainless steel are standard supply for the T versions
- Easy maintenance. No special tools required for assembly or disassembly
- Standard version for temperatures ranging from: -20°F to 250°F (30°C to 120°C)

33SV, 46SV, 66SV, 92SV, 125SV Series

- Vertical multistage centrifugal pump with impellers, diffusers and outer sleeve made entirely of stainless steel, and with pump casing and motor adapter made of cast iron in the standard version
- Rotating components made entirely of AISI 316 stainless steel
- High heads and capacities five sizes: 33SV, 46SV, 66SV, 92SV, 125SV
- Re-designed liquid end provides improved efficiency and energy savings
- Innovative axial load compensation system on pumps with higher head. This ensures reduced axial thrusts and enables the use of standard NEMA TC motors that are easily found in the market.
- Balanced mechanical seal according to EN 12756 (ex DIN 24960) and ISO 3069, which can be replaced without removing the motor from the pump
- Seal housing chamber designed to prevent the accumulation of air in the critical area next to the mechanical seal
- Standard version for temperature ranging from: -20°F to 250°F (-30°C to 120°C)
- Pump body fitted with taps for installing pressure gauges on both suction and delivery flanges
- In-line ports with ANSI flanges that can be coupled to counter-flanges, in compliance with ANSI raised face.
- Mechanical sturdiness and easy maintenance. No special tools required for assembly or disassembly.

Optional Features

- Horizontal version
- Special voltages, 50 Hz frequency
- Special materials for the mechanical seal, gaskets and elastomers
- Tropicalized motors
- Premium E and explosion proof motors
- 1750 RPM, 4 pole motors
- Passivation

General Characteristics – 2-pole

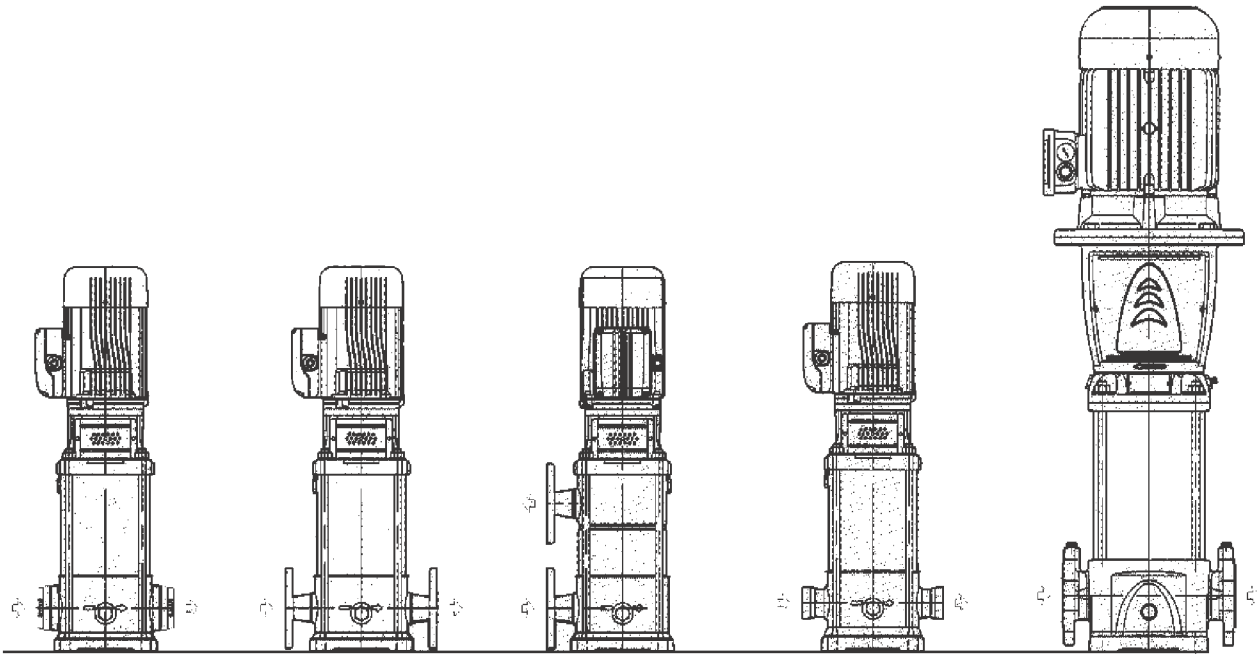

SERIES SVT
1SV, 3SV, 5SV, 10SV, 15SV, 22SV

SERIES SVF, SVN
1SV, 3SV, 5SV, 10SV, 15SV, 22SV

SERIES SVR
1SV, 3SV, 5SV, 10SV, 15SV, 22SV

SERIES SVP
VICTAULIC
1SV, 3SV, 5SV, 10SV, 15SV, 22SV

SERIES SVG, SVN
33SV, 46SV, 66SV, 92SV, 125SV

e-SV Product Range	1SV	3SV	5SV	10SV	15SV	22SV	33SV	46SV	66SV	92SV	125SV
Nominal Flow (GPM)	9	15	30	50	80	110	150	220	350	450	600
Flow Range(GPM)	2-12	3-22	7-45	9-75	18-125	21-150	30-195	45-285	70-420	90-580	120-700
Max. Head (Ft)	860	1085	975	1150	1060	880	1125	1210	850	715	570
Max. Working Pressure (PSIG)	580					360/580					
Temperature Range (°F)	Standard -20°F - 250°F (-30°C - 121°C)										
High Temp Option	up to 300°F (150°C)						-				
Motor Power [HP]	½ – 5 HP	½ – 7½	¾ – 10	¾ – 20	2 – 25	3 – 30	3 – 60	7½ – 75	10 – 75	15 – 75	20 – 75
Max Pump Efficiency	51%	60%	70%	70%	70%	71%	76%	78%	78%	80%	79%
Materials of Construction											
SVT	304 SS						-				
SVF	304 SS						-				
SVN	316L SS						Cast Stainless Steel / 316L SS				
SVR	304 SS						-				
SVP	316L SS						-				
SVC	316L SS						-				
SVG	ASTM Class 35/40B Cast Iron / 304 SS										
Connection Sizes											
SVT - Oval NPT	1¼"	1¼"	1¼"	2"	2"	2"	-				
SVF - Round ANSI Size/Class	1¼" 300#	1¼" 300#	1¼" 300#	2" 300#	2" 300#	2" 300#	-				
SVN - Round ANSI Size/Class	1¼" 300#	1¼" 300#	1¼" 300#	2" 300#	2" 300#	2" 300#	2½" 150/300#	3" 150/300#	4" 150/300#	4" 150/300#	5" 150/300#
SVR - Top/Bottom Round ANSI Size/Class	1¼" 300#	1¼" 300#	1¼" 300#	2" 300#	2" 300#	2" 300#	-				
SVP - Victaulic	1¼"	1¼"	1¼"	2"	2"	2"	-				
SVC - Clamp	1½"	1½"	1½"	2"	2"	2"	-				
SVG - Cast Iron Size/Class	1¼" 250#	1¼" 250#	1¼" 250#	2" 250#	2" 250#	2" 250#	2½" 125/250#	3" 125/250#	4" 125/ 250#	4" 125/ 250#	5" 125/250#

Typical Applications of e-SV Series Multi-Stage Pumps

Water Supply and Pressure Boosting

- Pressure boosting in buildings, hotels, residential complexes
- Pressure booster stations, supply of water networks
- Booster packages

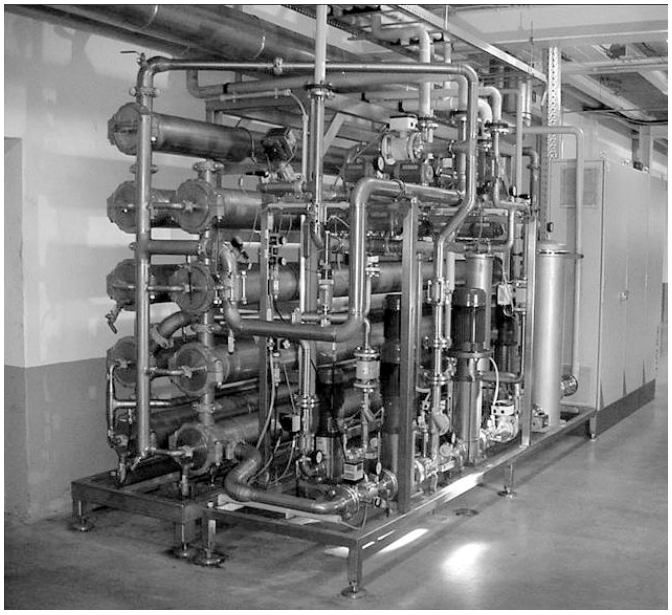

Water Treatment

- Ultra filtration systems
- Reverse osmosis systems
- Water softeners and de-mineralization
- Distillation systems
- Filtration

Light Industry

- Washing and cleaning plants (washing and degreasing of mechanical parts, car and truck wash tunnels, washing of electronic industry circuits)
- Commercial washers
- Fire fighting system pumps

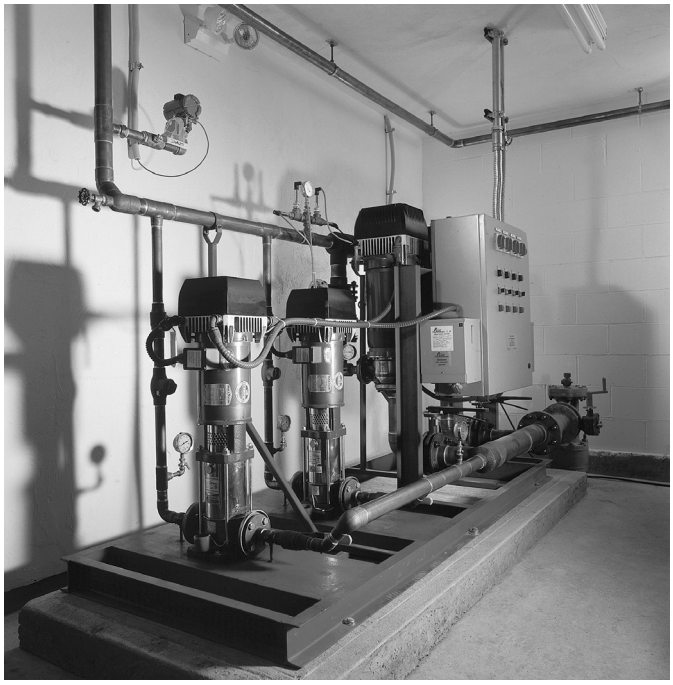

Irrigation and Agriculture

- Greenhouses
- Humidifiers
- Sprinkler irrigation

Heating, Ventilation and Air Conditioning (HVAC)

- Cooling towers and systems
- Temperature control systems
- Refrigerators
- Induction heating
- Heat exchangers
- Boilers
- Water recirculation and heating

e-SV Product Line
Numbering System for 1 – 22SV Liquid End Only

The various versions of the e-SV line are identified by a product code number on the pump label. This number is also the catalog number for the pump. The meaning of each digit in the product code number is shown below.
Note: Not all combinations are possible.

Example Product Code

22 SV 0 2 F E 3 0 _ _

Special Configurations (optional Characters)

A = Cooling Chamber only
B = Cooling Chamber + Passivation
C = Cooling Chamber + Low NPSH
F = Destaged - 1 stage
G = Destaged - 2 stage
H = Horizontal mount only
J = Horizontal mount + Passivation
K = Horizontal mount + Low NPSH
L = Horizontal mount + High Pressure
N = Low NPSH only
P = Passivation only
S = Customized Configuration
Z = High pressure only

Seal Material

0 = Carb-SilCar-Viton (Standard)
1 = Carb-SilCar-AFLAS (HighTemp)
2 = SilCar-SilCar-Viton
4 = SilCar-SilCar-EPR
6 = Carb-SilCar-EPR

Pole-Hz

1 = 2–50
2 = 4–50
3 = 2–60
4 = 4–60

Motor Frame (NEMA)

A = 56C
B = 180TC
C = 210TC
D = 250TC
E = 280TC

Configuration

C = Clamp-316
F = Round-304 (SVB)
G = CI-304
N = Round-316 (SVD)
P = Victaulic-316
T = Oval-304 (SVA)

	Top / Bottom	Suction discharge location
R =	(SVC) 12Suct-12Disch	
W =	(SVC) 12Suct-03Disch	
X =	(SVC) 12Suct-06Disch	
Y =	(SVC) 12Suct-09Disch	

Total Number of Impeller Stages (may be 1 or 2 characters)

Product Line:

SV – Stainless Vertical

Nominal Flow:

1 = 5 GPM
3 = 16 GPM
5 = 26 GPM
10 = 53 GPM
15 = 80 GPM
22 = 116 GPM

e-SV Product Line
Numbering System for 33 – 125SV Liquid End Only

The various versions of the e-SV line are identified by a product code number on the pump label. This number is also the catalog number for the pump. The meaning of each digit in the product code number is shown below.
Note: Not all combinations are possible.

Example Product Code

125 SV 8 1 2 B F E 2 0

Special Configurations (optional Characters)
- H = Horizontal mount only
- J = Horizontal mount + Passivation
- K = Horizontal mount + Low NPSH (33, 46 and 66 only)
- L = Horizontal mount + High Pressure
- N = Low NPSH only (33, 46 and 66 only)
- S = Customized Configuration
- Z = High pressure (250/300# pump body)

Seal Material
- 0 = Carb-SilCar-Viton
- 2 = SilCar-SilCar-Viton
- 4 = SilCar-SilCar-EPR
- 6 = Carb-SilCar-EPR
- 7 = Carb-SilCar-Viton (Cart)
- 8 = SilCar-SilCar-EPR (Cart)

Pole-Hz
- 1 = 2–50
- 2 = 4–50
- 3 = 2–60
- 4 = 4–60

Motor Frame (NEMA)
- B = 180TC
- C = 210TC
- D = 250TC
- E = 280TC
- F = 320TSC
- G = 360TSC

Configuration
- G = Round-CI-304
- N = Round-316

125SV ONLY
Reduced Trim Diameter A = 141 mm B = 136 mm C = 145 mm (full dia.)
Blank if 33-92SV

Number of Reduced Trim Impellers

Total Number of Impellers/Stages

Product Line: SV – Stainless Vertical

Nominal Flow:
- 33 = 175 GPM
- 46 = 240 GPM
- 66 = 350 GPM
- 92 = 485 GPM
- 125 = 660 GPM

e-SV Product Line
Numbering System for 1 – 22SV Pump & Motor Combination

The various versions of the e-SV line are identified by a product code number on the pump label. This number is also the catalog number for the pump. The meaning of each digit in the product code number is shown below.
Note: Not all combinations are possible.

Example Product Code

2 SV 2 2 F A 2 F 5 1 A H

Special Configurations (1 or 2 Characters)

A = Cooling Chamber only	K = Horizontal mount + Low NPSH
B = Cooling Chamber + Passivation	L = Horizontal mount + High Pressure
C = Cooling Chamber + Low NPSH	M = i-Alert
F = Destaged - 1 stage	N = Low NPSH only
G = Destaged - 2 stage	P = Passivation only
H = Horizontal mount only	S = Customized Configuration
J = Horizontal mount + Passivation	Z = High Press (250/300# pump body)

Seal Material

0 = Carb-SilCar-Viton	4 = SilCar-SilCar-EPR
1 = Carb-SilCar-AFLAS (HighTemp)	6 = Carb-SilCar-EPR
2 = SilCar-SilCar-Viton	

Motor Enclosure

1 = ODP	5 = Prem-ODP	9 = Marine
2 = TEFC	6 = Prem-TEFC	A = Chem
3 = X-Proof	7 = Prem-XP	B = Prem-Chem
4 = WD - Tropical	8 = Prem-WD	C = Class 1 Div 2

Voltage

A = 115/230	H = 190/380	R = 220
B = 230	J = 115/208-230	S = 415
C = 230/460	K = 208	T = 220/380 WYE
D = 460	L = 208-230	U = 380-660 WYE
E = 575	M = 190-380/415	V = 208-230/460 WYE
F = 208-230/460	N = 380	W = 220/380/440
G = 200	P = 110/220	

Pole-Hz-Phase

1 = 2-50-1	5 = 4-50-1
2 = 2-50-3	6 = 4-50-3
3 = 2-60-1	7 = 4-60-1
4 = 2-60-3	8 = 4-60-3

HP Rating

A = 0.50	F = 3	L = 20	S = 60
B = 0.75	G = 5	M = 25	T = 75
C = 1.00	H = 7.5	N = 30	U = 100
D = 1.50	J = 10	P = 40	
E = 2	K = 15	R = 50	

Configuration OPTION

		Top / Bottom	
C = Clamp-316			
F = Round-304 (SVB)	R =	(SVC) 12Suct-12Disch	Suction discharge location
G = CI-304	W =	(SVC) 12Suct-03Disch	
N = Round-316 (SVD)	X =	(SVC) 12Suct-06Disch	
P = Victaulic-316	Y =	(SVC) 12Suct-09Disch	
T = Oval-304 (SVA)			

Total Number of Impeller Stages (may be 1 or 2 characters)

Product Line:

SV – Stainless Vertical

Nominal Flow:

1 = 5 GPM	10 = 53 GPM
3 = 16 GPM	15 = 80 GPM
5 = 26 GPM	22 = 116 GPM

e-SV Product Line
Numbering System for 33 – 125SV Pump & Motor Combination

The various versions of the e-SV line are identified by a product code number on the pump label. This number is also the catalog number for the pump. The meaning of each digit in the product code number is shown below.
Note: Not all combinations are possible.

Example Product Code

125 SV 8 2 A G K 3 F 2 0

Special Configurations (1 or 2 Characters)

H = Horizontal mount only	N = Low NPSH only (33, 46 and 66 only)
J = Horizontal mount + Passivation	P = Passivation only
K = Horizontal mount + Low NPSH	S = Customized Configuration
L = Horizontal mount + High Pressure	Z = High Press (250/300# pump body/Casing)
M = i-Alert	

Seal Material

0 = Carb-SilCar-Viton	6 = Carb-SilCar-EPR
2 = SilCar-SilCar-Viton	7 = Carb-SilCar-Viton (Cart)
4 = SilCar-SilCar-EPR	8 = SilCar-SilCar-EPR (Cart)

Motor Enclosure

1 = ODP	5 = Prem-ODP	9 = Marine
2 = TEFC	6 = Prem-TEFC	A = Chem
3 = X-Proof	7 = Prem-XP	B = Prem-Chem
4 = WD - Tropical	8 = Prem-WD	C = Class 1 Div 2

Voltage

A = 115/230	H = 190/380	R = 220
B = 230	J = 115/208-230	S = 415
C = 230/460	K = 208	T = 220/380 WYE
D = 460	L = 208-230	U = 380-660 WYE
E = 575	M = 190-380/415	V = 208-230/460 WYE
F = 208-230/460	N = 380	
G = 200	P = 110/220	

Pole-Hz-Phase

1 = 2-50-1	4 = 2-60-3	7 = 4-60-1
2 = 2-50-3	5 = 4-50-1	8 = 4-60-3
3 = 2-60-1	6 = 4-50-3	

HP Rating

F = 3	L = 20	R = 50
G = 5	M = 25	S = 60
H = 7.5	N = 30	T = 75
J = 10	P = 40	U = 100
K = 15		

Configuration

G = Round-CI-304 N = Round-316

125SV ONLY

Reduced Trim Diameter A = 141 mm B = 136 mm C = 145 mm (full dia.)
Blank if 33-92SV

Number of Reduced Trin Impeller

Total Number of Impeller Stages (may be 1 or 2 characters)

Product Line:

SV – Stainless Vertical

Nominal Flow:

33 = 175 GPM	92 = 485 GPM
46 = 240 GPM	125 = 660 GPM
66 = 350 GPM	

Base Models: 1-22SV – Major Components

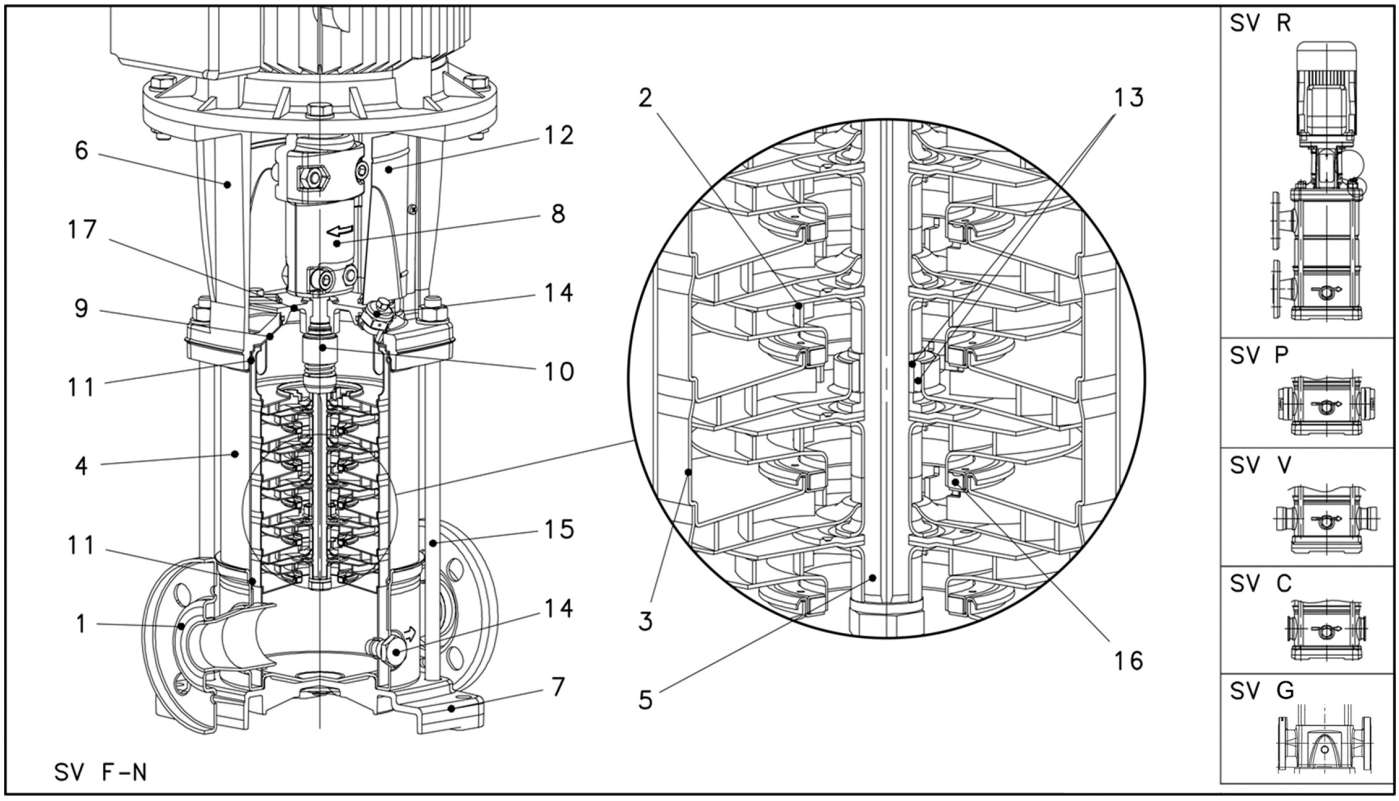

Base Models: 1-22SV – Major Components

F, G, P, R VERSIONS

Ref. No.	Name	Material	Reference Standards	
			USA	Europe
1	Pump Body	Stainless Steel (F, P, R)	AISI 304	EN 10088-1-X5-CrNi18-10 (1.4301)
		Cast Iron (G)	ASTM Class 35/40B	EN 1561 GJL 250 (JL1040)
2	Impeller	Stainless Steel	AISI 304	EN 10088-1-X5-CrNi18-10 (1.4301)
3	Diffuser	Stainless Steel	AISI 304	EN 10088-1-X5-CrNi18-10 (1.4301)
4	Casing	Stainless Steel	AISI 316L	EN 10088-1-X2-CrNiMo17-12-2 (1.4404)
5	Shaft	Stainless Steel	AISI 316	EN 10088-1-X2-CrNiMo17-12-2 (1.4401)
6	Adapter	Cast Iron	ASTM Class 35/40B	EN 1561-GJL-250 (JL1040)
7	Base	Aluminum (F, P, R)	A384.0-F	EN 1706-AC-AlSi11Cu2(Fe) (AC46100)
		N/A (G)	N/A	N/A
8	Coupling	Aluminum	A384.0-F	EN 1706-AC-AlSi11Cu2(Fe) (AC46100)
9	Seal Plate	Stainless Steel	AISI 316L	EN 10088-1-X2-CrNi17-12-2 (1.4404)
10	Mechanical Seal	Silicon Carbide / Carbon / Viton (opt. EPDM)		
11	Elastomers	Viton (opt. EPDM)		
12	Coupling Guard	Stainless Steel	AISI 304	EN 10088-1-X5-CrNi18-10 (1.4301)
13	Shaft Sleeve and Bushing	Tungsten Carbide		
14	Fill/Drain Plugs	Stainless Steel	AISI 316	EN 10088-1-X2-CrNiMo17-12-2 (1.4401)
15	Tie Rods	Carbon Steel / Zinc Plated	A29 Gr. 1045	EN 10277
16	Wear Ring	PPS		
17	Seal Gland	Stainless Steel	AISI 316	EN 10088-1-X2-CrNiMo17-12-2 (1.4401)

N, P, C VERSIONS

Ref. No.	Name	Material	Reference Standards	
			USA	Europe
1	Pump Body	Stainless Steel	AISI 316L	EN 10088-1-X2-CrNiMo17-12-2 (1.4404)
2	Impeller	Stainless Steel	AISI 316L	EN 10088-1-X2-CrNiMo17-12-2 (1.4404)
3	Diffuser	Stainless Steel	AISI 316L	EN 10088-1-X2-CrNiMo17-12-2 (1.4404)
4	Casing	Stainless Steel	AISI 316L	EN 10088-1-X2-CrNiMo17-12-2 (1.4404)
5	Shaft	Stainless Steel	AISI 316	EN 10088-1-X2-CrNiMo17-12-2 (1.4401)
6	Adapter	Cast Iron	ASTM Class 35/40B	EN 1561-GJL-250 (JL1040)
7	Base	Aluminum	A384.0-F	EN 1706-AC-AlSi11Cu2(Fe) (AC46100)
8	Coupling	Aluminum	A384.0-F	EN 1706-AC-AlSi11Cu2(Fe) (AC46100)
9	Seal Plate	Stainless Steel	AISI 316L	EN 10088-1-X2-CrNi17-12-2 (1.4404)
10	Mechanical Seal	Silicon Carbide / Carbon / Viton (opt. EPDM)		
11	Elastomers	Viton (opt. EPDM)		
12	Coupling Guard	Stainless Steel	AISI 304	EN 10088-1-X5-CrNi18-10 (1.4301)
13	Shaft Sleeve and Bushing	Tungsten Carbide		
14	Fill/Drain Plugs	Stainless Steel	AISI 316	EN 10088-1-X2-CrNiMo17-12-2 (1.4401)
15	Tie Rods	Carbon Steel / Zinc Plated	A29 Gr. 1045	EN 10277
16	Wear Ring	PPS		
17	Seal Gland	Stainless Steel	AISI 316	EN 10088-1-X2-CrNiMo17-12-2 (1.4401)

Base Model: 33SV, 46SV, 66SV and 92SV – Major Components

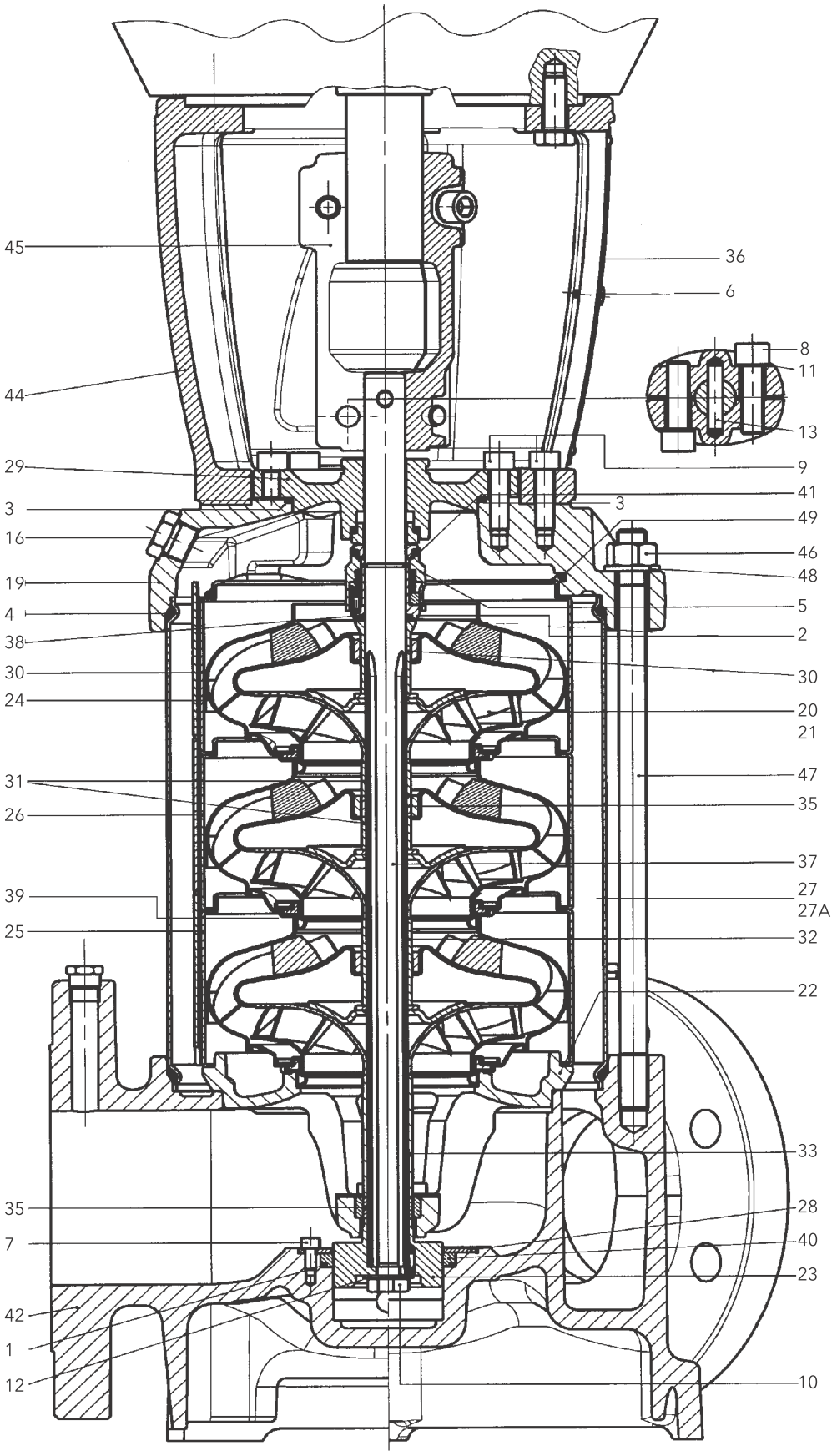

SV G-N

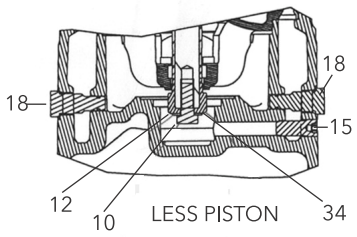

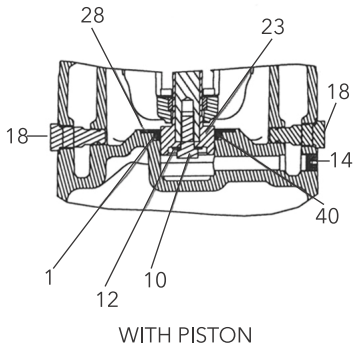

Base Model: 33SV, 46SV, 66SV and 92SV – Major Components

No.	Description	SVG (33 - 92SV)			SVN (33 - 92SV)		
		Material	ASTM	DIN	Material	ASTM	DIN
1	O-Ring, Piston Seal	Viton (std) EPDM (opt)			Viton (std) EPDM (opt)		
2	O-Ring, Mechanical Seal Sleeve	Viton (std) EPDM (opt)			Viton (std) EPDM (opt)		
3	O-Ring, Seal housing	Viton (std) EPDM (opt)			Viton (std) EPDM (opt)		
4	O-Ring, Sleeve	Viton (std) EPDM (opt)			Viton (std) EPDM (opt)		
5	Mechanical Seal	See Seal Materials Chart for Complete Detail			See Seal Materials Chart for Complete Details		
5A	Cartridge Seal (not shown)						
6	Screw, Guard	Stainless Steel	A193-304	1.4301	Stainless Steel	A193-304	1.4301
7	Screw, Piston Holding Disc	Stainless Steel	A193-316	1.4401	Stainless Steel	A193-316	1.4401
8	Screw, Coupling	Zinc Plated Steel	B363		Zinc Plated Steel	B633	
9	Screw, MA and Seal Housing	Zinc Plated Steel	B633		Zinc Plated Steel	B633	
10	Screw, Impeller	Stainless Steel	A193-316	1.4401	Stainless Steel	A193-316	1.4401
11	Washer, Coupling	Carbon Steel	A108		Carbon Steel	A108	
12	Washer, Impeller	Stainless Steel	A193-316	1.4401	Stainless Steel	A193-316	1.4401
13	Pin, Coupling	Carbon Steel	A108		Carbon Steel	A108	
14	Plug, with Piston	Stainless Steel	A193-316	1.4401	Stainless Steel	A193-316	1.4401
15	Plug, without Piston	Stainless Steel	A193-316	1.4401	Stainless Steel	A193-316	1.4401
16	Plug, Fill	Stainless Steel/O-Ring	A193-316	1.4401	Stainless Steel/O-Ring	A193-316	1.4401
17	Plug, Vent (not shown)	Stainless Steel/O-Ring	A193-316	1.4401	Stainless Steel/O-Ring	A193-316	1.4401
18	Plug, Drain	Stainless Steel/O-Ring	A193-316	1.4401	Stainless Steel/O-Ring	A193-316	1.4401
19	Pump Head	Cast Iron	A48 Class 35	JL1030	Stainless Steel	316 CF8M	1.4408
20	Impeller, Full Diameter	Stainless Steel	A193-316L	1.4404	Stainless Steel	A193-316L	1.4404
21	Impeller, Reduced Diameter	Stainless Steel	A193-316L	1.4404	Stainless Steel	A193-316L	1.4404
22	Lower Bearing Assembly	SS/Cast Iron	A193-316L/A48 Class 35	1.4404/JL1030	Stainless Steel	A193-316L/316 CF8M	1.4404/1.4408
23	Piston	Duplex SS	A182-F51	1.4462	Duplex SS	A182-F51	1.4462
24	Diffuser, Final	Stainless Steel	A193-316L	1.4404	Stainless Steel	A193-316L	1.4404
25	Diffuser with Carbon Bushing	Stainless Steel	A193-316L	1.4404	Stainless Steel	A193-316L	1.4404
26	Diffuser with Tungsten Bushing	Stainless Steel	A193-316L	1.4404	Stainless Steel	A193-316L	1.4404
27	Outer Sleeve, 25 Bar	Stainless Steel	A193-316L	1.4404	Stainless Steel	A193-316L	1.4404
27A	Outer Sleeve, 40 Bar	Stainless Steel	A193-316L	1.4404	Stainless Steel	A193-316L	1.4404
28	Holding Disc, Piston Seal	Stainless Steel	A193-316L	1.4404	Stainless Steel	A193-316L	1.4404
29	Seal Housing	Cast Iron	A48 Class 35	JL1030	Stainless Steel	316 CF8M	1.4408
30	Spacer, Impeller Final	Stainless Steel	A193-316	1.4401	Stainless Steel	A193-316	1.4401
31	Spacer, Shaft Bushing	Stainless Steel	A193-316	1.4401	Stainless Steel	A193-316	1.4401
32	Spacer, Impeller	Stainless Steel	A193-316	1.4401	Stainless Steel	A193-316	1.4401
33	Spacer, Impeller Lower (66-92SV)	Stainless Steel	A193-316	1.4401	Stainless Steel	A193-316	1.4401
34	Bushing, Non-Piston	Stainless Steel	A193-316	1.4401	Stainless Steel	A193-316	1.4401
35	Tungsten Carbide Bushing	Tungsten Carbide			Tungsten Carbide		
36	Coupling Guard	Stainless Steel	A193-304	1.4301	Stainless Steel	304	1.4301
37	Shaft	Duplex SS	A182-F51	1.4462	Duplex SS	A183-F51	1.4462
38	Mechanical Seal Shaft Sleeve	Stainless Steel	A193-316	1.4401	Stainless Steel	A193-316	1.4401
39	Wear Ring, Impeller	PPS Glass Filled			PPS Glass Filled		
40	Piston Seal	Impregnated Carbon			Impregnated Carbon		
41	Stop Ring, Impeller	Stainless Steel	A193-316	1.4401	Stainless Steel	A193-316	1.4401
42	Pump Body	Cast Iron	A48 Class 35	JL1030	Stainless Steel	316 CF8M	1.4408
43	Motor Adapter Plate (not shown)	Cast Iron	A48 Class 25	JL1030	Cast Iron	A48 Class 25	JL1030
44	Motor Adapter	Cast Iron	A48 Class 25	JL1030	Cast Iron	A48 Class 25	JL1030
45	Coupling, Half	Cast Iron	A48 Class 25	JL1030	Cast Iron	A48 Class 25	JL1030
46	Nut, Tie-Rod	Zinc Plated Steel	B633		Zinc Plated Steel	B633	
47	Tie-Rod	Zinc Plated Steel	B633		Zinc Plated Steel	B633	
48	Washer, Tie-Rod	Zinc Plated Steel	B633		Zinc Plated Steel	B633	
49	Spring, Final Diffuser	Stainless Steel	A193-316	1.4401	Stainless Steel	A193-316	1.4401

Base Models: 125SV – Major Components

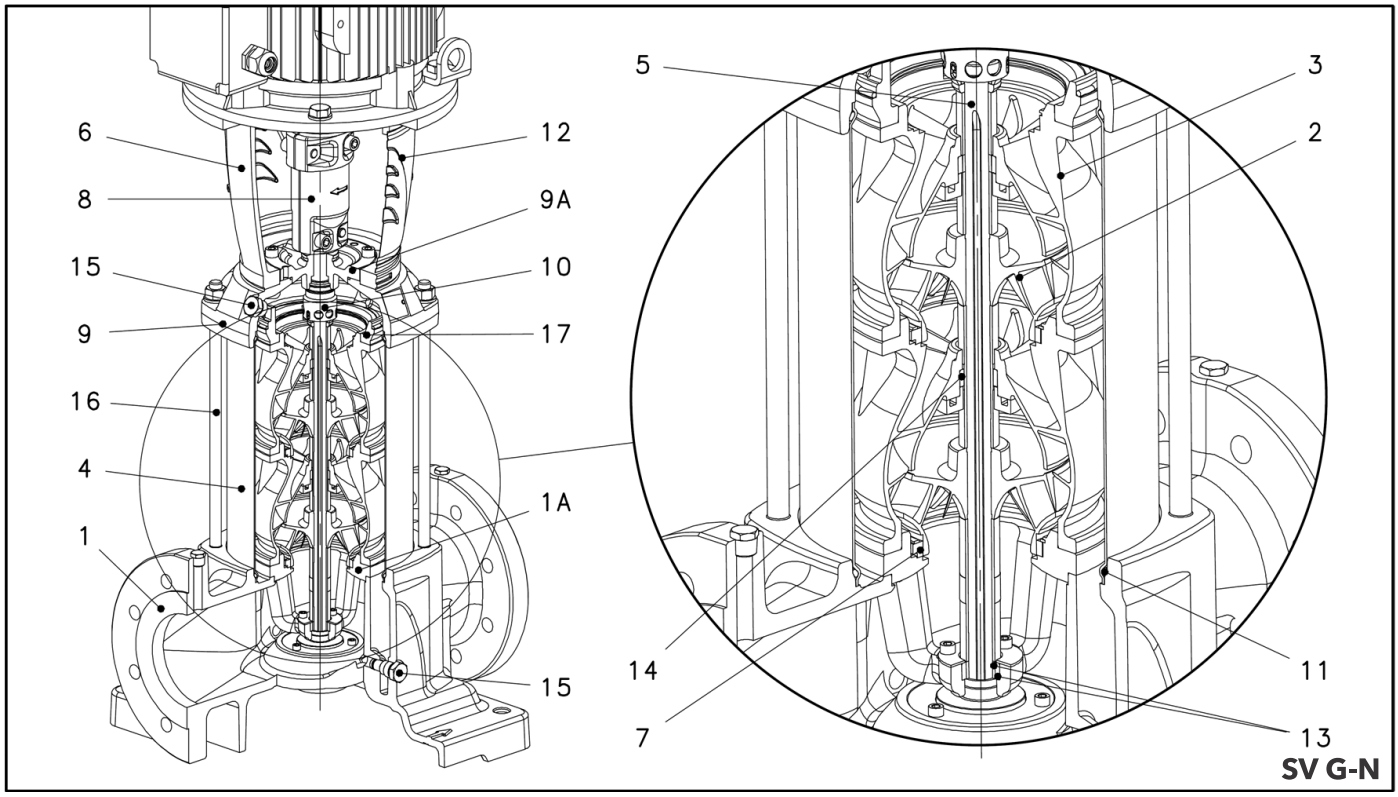

Base Models: 125SV – Major Components

G VERSIONS

Ref. No.	Name	Material	Reference Standards	
			USA	Europe
1	Pump Body	Cast Iron	ASTM Class 35/40B	EN 1561-GJL-250 (JL1040)
2	Impeller	Stainless Steel	AISI 304	EN 10088-1-X5-CrNi18-10 (1.4301)
3	Diffuser	Stainless Steel	AISI 304	EN 10088-1-X5-CrNi18-10 (1.4301)
4	Casing	Stainless Steel	AISI 316L	EN 10088-1-X2-CrNiMo17-12-2 (1.4404)
5	Shaft	Duplex Stainless Steel	UNS S 31803	EN 10088-1-X17-CrNiMoN22-5-3 (1.4507)
6	Adapter (up to 40HP)	Cast Iron	ASTM Class 25	EN 1561-GJL-200 (JL1040)
	Adapter (50HP and higher)		ASTM Class A536	EN 1561-GJL-500-7 (JS1050)
7	Wear Ring	PPS		
8	Coupling (up to 40HP)	Cast Iron	A384.0-F	EN 1706-AC-AlSi11Cu2(Fe) (AC46100)
	Coupling (50HP and higher)			
9-9A	Upper Head / Seal Housing	Cast Iron	ASTM Class 35/40B	EN 1561-GJL-250 (JL1040)
10	Mechanical Seal	Silicon Carbide / Carbon / Viton (opt. EPDM)		
11	Elastomers	Viton (opt. EPDM)		
12	Coupling Guard	Stainless Steel	AISI 304	EN 10088-1-X5-CrNi18-10 (1.4301)
13	Shaft Sleeve and Bushing	Tungsten Carbide		
14	Bushing for Diffuser	Carbon		
15	Fill/Drain Plugs	Stainless Steel	AISI 316	EN 10088-1-X2-CrNiMo17-12-2 (1.4401)
16	Tie Rods	Carbon Steel / Zinc Plated	A29 Gr. 1045	EN 10277
17	Adapter Ring	Stainless Steel	AISI 304	EN 10088-1-X5-CrNi18-10 (1.4301)

N VERSIONS

Ref. No.	Name	Material	Reference Standards	
			USA	Europe
1	Pump Body	Stainless Steel	AISI 316	EN 10088-1-X2-CrNiMo17-12-2 (1.4401)
2	Impeller	Stainless Steel	AISI 316	EN 10088-1-X2-CrNiMo17-12-2 (1.4401)
3	Diffuser	Stainless Steel	AISI 316	EN 10088-1-X2-CrNiMo17-12-2 (1.4401)
4	Casing	Stainless Steel	AISI 316L	EN 10088-1-X2-CrNiMo17-12-2 (1.4404)
5	Shaft	Duplex Stainless Steel	UNS S 31803	EN 10088-1-X17-CrNiMoN22-5-3 (1.4507)
6	Adapter (up to 40HP)	Cast Iron	ASTM Class 25	EN 1561-GJL-200 (JL1040)
	Adapter (50HP and higher)		ASTM Class A536	EN 1561-GJL-500-7 (JS1050)
7	Wear Ring	PPS		
8	Coupling (up to 40HP)	Cast Iron	A384.0-F	EN 1706-AC-AlSi11Cu2(Fe) (AC46100)
	Coupling (50HP and higher)			
9-9A	Upper Head / Seal Housing	Stainless Steel	AISI 316	EN 10088-1-X2-CrNiMo17-12-2 (1.4401)
10	Mechanical Seal	Silicon Carbide / Carbon / Viton (opt. EPDM)		
11	Elastomers	Viton (opt. EPDM)		
12	Coupling Guard	Stainless Steel	AISI 304	EN 10088-1-X5-CrNi18-10 (1.4301)
13	Shaft Sleeve and Bushing	Tungsten Carbide		
14	Bushing for Diffuser	Carbon		
15	Fill/Drain Plugs	Stainless Steel	AISI 316	EN 10088-1-X2-CrNiMo17-12-2 (1.4401)
16	Tie Rods	Carbon Steel / Zinc Plated	A29 Gr. 1045	EN 10277
17	Adapter Ring	Stainless Steel	AISI 304	EN 10088-1-X5-CrNi18-10 (1.4301)

e-SV Mechanical Seals

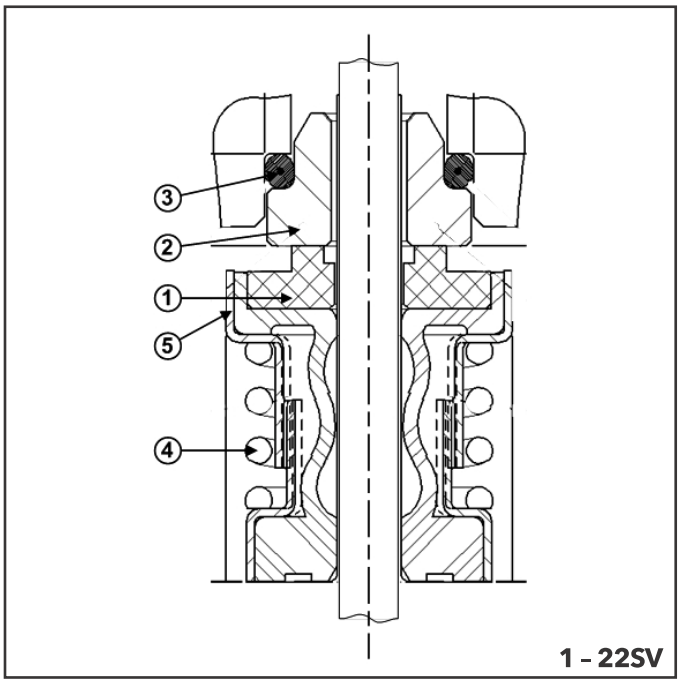

1 – 22SV

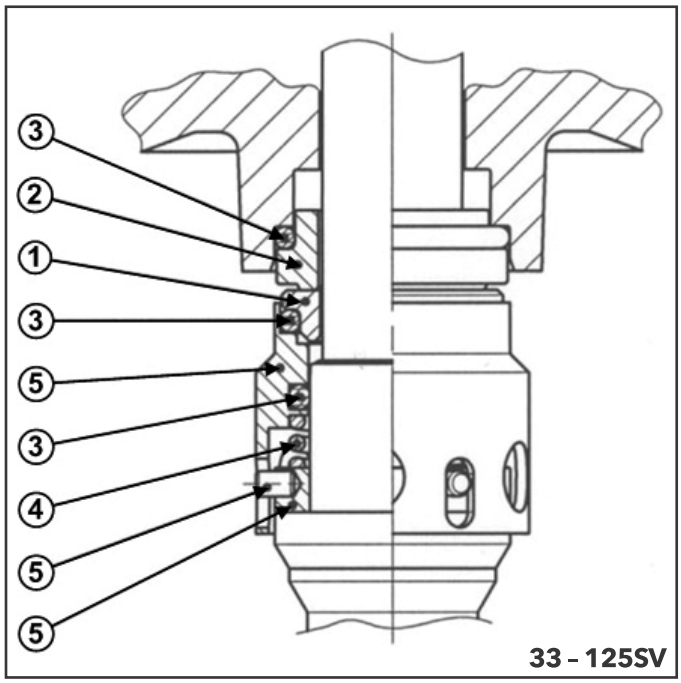

33 – 125SV

Pump	Code	Rotating Face 1	Stationary Face 2	Elastomers 3	Spring 4	Metal Components 5	Elastomer Temp Limits °F (°C)	Seal Temp Limits °F (°C)	Max. Working Pressure	Application
1SV thru 22SV	0	Carbon	Silicon Carbide Graphite Filled	Viton	316SS	316SS	-14 - 392°F (-10 - 200°C)	-22 - 250°F	580 psi (40 bar)	General Service
	2	Silicon Carbide Graphite Filled								Severe Duty
	4			EPR			-30 - 300°F (-34 - 150°C)			Severe Duty Boiler Feed
	6	Carbon								General Service Boiler Feed
	1	FDA Grade Carbon		AFLAS			-14 - 392°F (-10 - 200°C)	up to 300°F (149°C)	255 psi (17.6 bar)	Boiler Feed
33SV thru 125SV	0	Carbon	Silicon Carbide Graphite Filled	Viton	316SS	316SS	-14 - 392°F (-10 - 200°C)	-22 - 250°F (-30 - 120°C)	580 psi (40 bar)	General Service
	2	Silicon Carbide Graphite Filled								Severe Duty
	4			EPR			-22 - 250°F (-30 - 120°C)			Severe Duty Boiler Feed
	6	Carbon								General Service Boiler Feed

Pump	Rotating Face 1	Stationary Face 2	Elastomers 3	Spring 4	Sleeve 5	Set Screw 6	Locking Collar
33SV	Silicon Carbide	Carbon	Viton	316SS	316SS	300SS	316SS
46SV							
66SV		Silicon Carbide	EPR				
92SV							

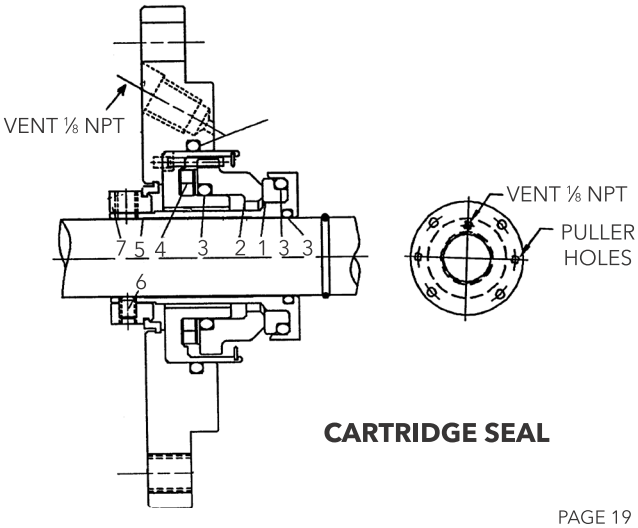

CARTRIDGE SEAL

Maximum Allowable Working Pressure Charts

1SV-22SV

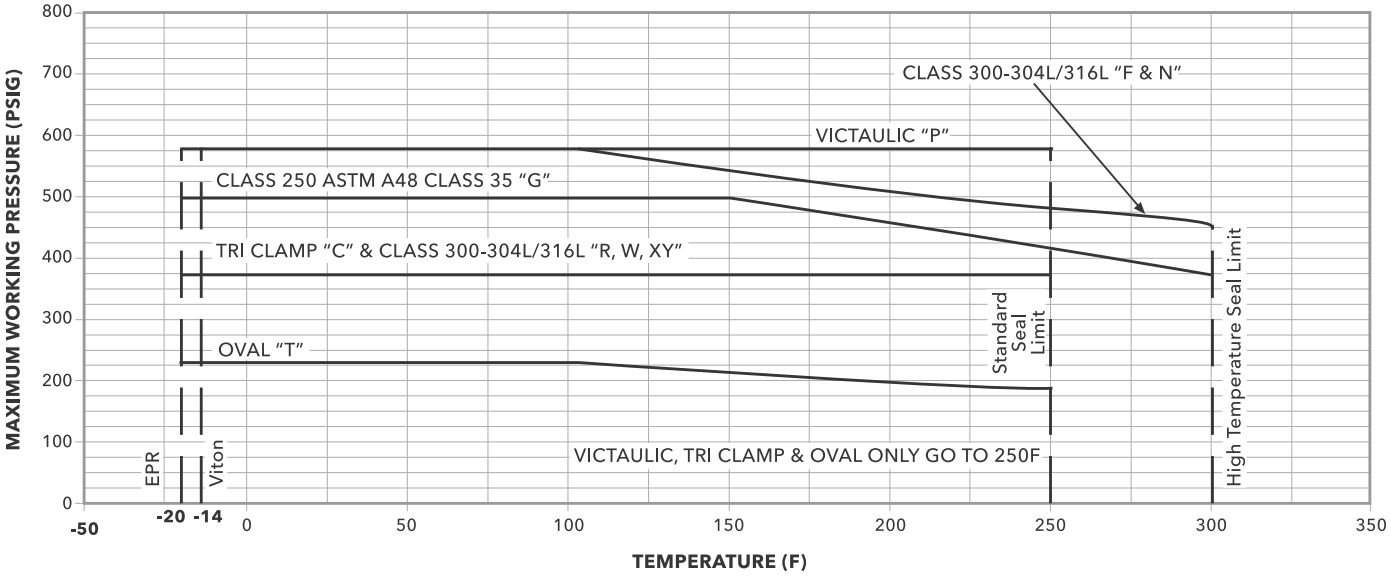

33SV-125SV

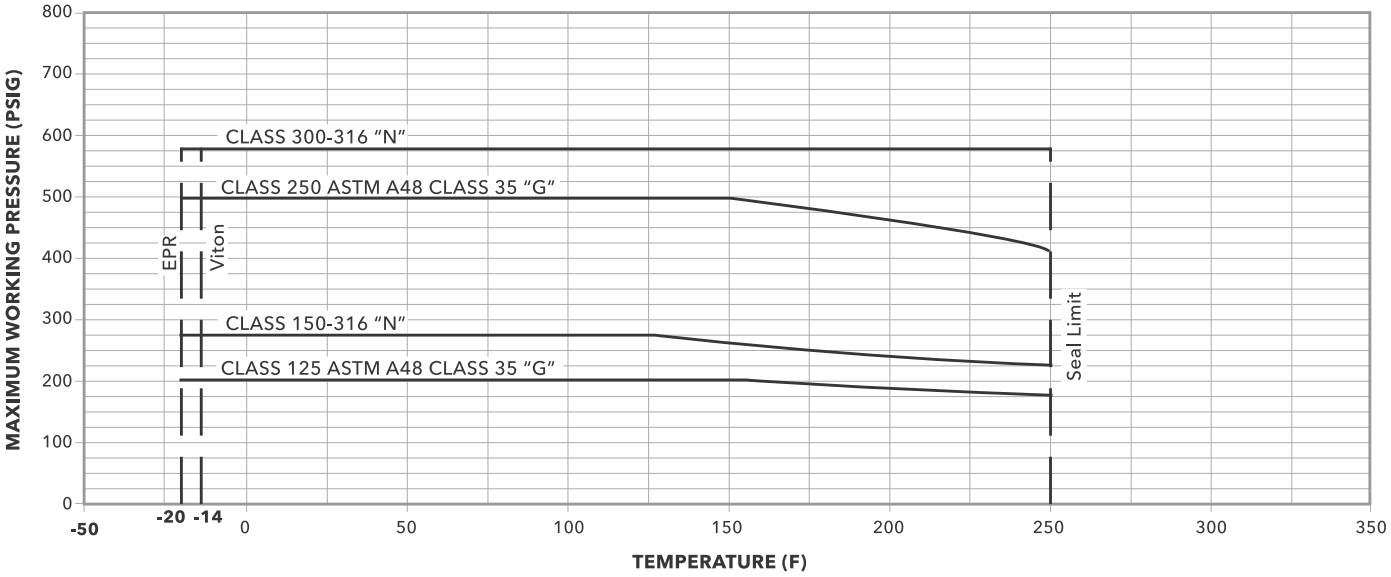

Maximum Inlet Pressure

The following table shows the maximum permissible inlet pressure. However, the actual inlet pressure + pressure against a closed valve must always be lower than the maximum permissible operating pressure.

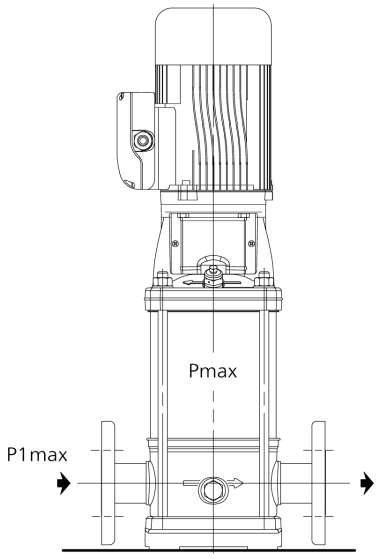

$p_{1max} \leq PN - pmax$

Having the following meaning of the symbols:

p_{max} = Maximum pressure delivered by the pump

p_{1max} = Maximum inlet pressure

PN = Maximum operating pressure

Motor Data – Starts per Hour / Minimum Run Time

HP	Maximum Starts per Hour*	Minimum run time between starts (seconds)
0.5	24	120
0.75	24	120
1	15	75
1.5	13	76
2	12	77
3	9	30
5	8	83
7.5	7	88
10	6	92
15	5	100
20	5	110
25	5	115
30	4	120
40	4	130
50	3	145
60	3	170
75	3	180

NOTE(S)

1) Recommended motor starts per hour and minimum run time calculated based on NEMA standards MG1-12.44 in accordance to manufacturers allowable tolerance for heat rise and insulation breakdown.
2) Applied voltage and frequency in accordance with NEMA MG1-12.44
3) Starts based on NEMA three phase design A and design B AC induction motors.
4) External load WK2 is equal to or less than the values listed in NEMA MG1-12.54
5) Applicable to all NEMA (JM, JP, T and TC frame) motors used for Goulds Water Technology products.
6) Applicable to three phase motors only.

Motor Data

3500 RPM, 60Hz

HP	Phase	Voltage	FLA	Enclosure	Order No.	SF	Frame Size
½	1	115/208-230	7/4.1-3.5	DP	V04721	1.25	56C
		115/208-230		TEFC	V04722	1.25	
	3	208-230/460	2.6-2/1	DP	V04A32E1BB3S	1.25	
		575	0.8		V04779	1.25	
		208-230/460	1.5/.75	DPE	V04A32E4BB2S	1.25	
		230/460	2.6-2/1	TEFC	V04A32F2BB3S	1.25	
		575	0.8		V04789	1.25	
		208-230/460	1.5/.75	TPE	V04A32E5BB3S	1.25	
		208-230/460	2.4-2.2/1.1	XP	V04A32E3BB1S	1.00	
¾	1	115/208-230	9.4/5.8-4.7	DP	V05721	1.25	
		115/208-230	9.6/6.1-4.8	TEFC	V05A12A2BB3S	1.25	
	3	230/460	2.7-2.6/1.3	DP	V05A32F1BB3S	1.25	
		575	0.96		V05779	1.25	
		208-230/460	2.7-2.6/1.3	DPE	V05A32E4BB2S	1.25	
		208-230/460		TEFC	V05A32E2BB3S	1.25	
		575	.96		V05789	1.25	
		208-230/460	2.5-2.2/1.1	TPE	V05A32E5BB3S	1.25	
		208-230/460	2.7-2.6/1.3	XP	V05A32E3BB1S	1.00	
1	1	115/208-230	15/7.9-7.5	DP	V06721	1.25	
		115/230	12/6	TEFC	V06A12B2BB3S	1.25	
	3	208-230/460	3.7-3.6/1.8	DP	V06A32E1BB3S	1.25	
		575	1.4		V06A32H1BB2S	1.25	
		208-230/460	3.7-3.6/1.8	DPE	V06A32E4BB2S	1.25	
		208-230/460		TEFC	V06A32E2BB3S	1.25	
		575	1.4		V06A32H2BB3S	1.25	
		230/460	2.8/1.4	TPE	V06A32F5BB3S	1.25	
		208-230/460	3.7-3.6/1.8	XP	V06A32E3BB1S	1.00	
1½	1	115/208-230	12.8/7-6.4	DP	V07721	1.15	
		115/208-230	16/8.4-8	TEFC	V07722	1.15	
	3	208-230/460	4.9-4.6/2.3	DP	V07A32E1BB2S	1.15	
		575	1.8		V07A32H1BB2S	1.15	
		208-230/460	4.5-4.2/2.1	DPE	V07741PE	1.15	
		208-230/460	4.9-4.6/2.3	TEFC	V07A32E2BB2S	1.15	
		575	1.8		V07789	1.15	
		208-230/460	4.3-4/2	TPE	V07742PE	1.15	
		208-230/460	5-4.6/2.3	XP	V07743	1.00	

Motor Data

3500 RPM, 60Hz

HP	Phase	Voltage	FLA	Enclosure	Order No.	SF	Frame Size
2	1	115/208-230	26/12.4-13	DP	V08721	1.15	56C
		115/208-230	23/12-11.5	TEFC	V08722	1.15	
		575	2.2		V08779	1.15	
		208-230/460	5.5-5/2.5	DPE	V08A32E4BB2S	1.15	
		208-230/460	6.2-5.8/2.9	TEFC	V08A32E2BB2S	1.15	
		575	2.2		V08A32H2BB2S	1.15	
		208-230/460	5.4-5/2.5	TPE	V08A32E5BB2S	1.15	
		208-230/460	5.7-5.4/2.7	XP	V08743	1.00	
3	1	208-230	13.9-13	DP	V09721	1.15	
		115/208-230	26/13.8-13	TEFC	V09A12A2BB2S	1.15	
		575	3.2		V09A32H1BB2S	1.15	
		230/460	8-7.4/3.7	DPE	V09A32F4BB2S	1.15	
		208-230/460	8.1-7.6/3.8	TEFC	V09A32E2BB2S	1.15	
		575	3		V09A32H2BB2S	1.15	
		208-230/460	7/3.5	TPE	V09A32E5BD2S	1.15	182TC
		208-230/460	7.8-7.4/3.7	XP	V09743	1.00	56C
5	1	208-230	24-23	DP	V10721A	1.15	184TC
		208-230	23.5-21.7	TEFC	V10A12D2BD2S	1.15	
	3	208-230/460	13.1-11.5/5.7	DP	V10A32E1BD2S	1.15	182TC
		575	4.8		V10A32H1BD2S	1.15	
		208-230/460	12.3-11.2/5.6	DPE	V10741APE	1.15	184TC
		208-230/460	13.2-12/6	TEFC	V10A32E2BD2S	1.15	
		575	4.8		V10A32H2BD2S	1.15	
		230/460	11.2/5.6	TPE	V10A32F5BD2S	1.15	
		208-230/460	13.2-12/6	XP	V10A32E3BD1S	1.00	
7½	1	230	29	DP	V11721	1.15	213TC
		230	33	TEFC *	V11722	1.15	
	3	208-230/460	19-18/9	DP	V11A32E1BD2S	1.15	184TC
		575	7.2		V11A32H1BB2S	1.15	
		208-230/460	18.5-16.8/8.4	DPE	V11741APE	1.15	
		208-230/460	18.5-17.4/8.7	TEFC	V11A32E2BD2S	1.15	
		575	7		V11A32H2BD2S	1.15	
		230/460	17.8/8.9	TPE	V11742APE	1.15	213TC
		230/460	17.6/8.8	XP	V11743A	1.00	184TC

Motor Data

3500 RPM, 60Hz

HP	Phase	Voltage	FLA	Enclosure	Order No.	SF	Frame Size
10	1	208-230	48-46	DP	V12A12C1BE2S	1.15	215TC
		208-230	42-40	TEFC *	V12722	1.15	
	3	208-230/460	25.6-23.2/11.6	DP	V12A32E1BE2S	1.15	213TC
		575	10		V12A32H1BE2S	1.15	
		208-230/460	24-23/11.5	DPE	V12A32E4BE2S	1.15	
		208-230/460	26.2-23.8/11.9	TEFC	V12A32E2BE2S	1.15	215TC
		575	9.6		V12789	1.15	
		230/460	23.8/11.9	TPE	V12A32F5BE2S	1.15	
		208-230/460	28-26/13	XP	V12743	1.00	
15		208-230/460	39-37/18.5	DP	V13A32E1BE2S	1.15	
		575	14.5		V13779	1.15	
		208-230/460	36.7-34/17	DPE	V13A32E4BE2S	1.15	
		208-230/460	38-35/17.5	TEFC	V13A32E2BK2S	1.15	254TC
		575	14		V13A32H2BK2S	1.15	
		208-230/460	37-34.4/17.2	TPE	V13A32E5BK2S	1.15	
		208-230/460	37-33.6/16.8	XP	V13A32E3BK2S	1.00	
20		230/460	46/23	DP	V14A32F1BK2S	1.15	
		575	18		V14A32H1BK2S	1.15	
		230/460	58/29	DPE	V14A32F4BK2S	1.15	
		208-230/460	50-46/23	TEFC	V14742	1.15	256TC
		575	18.5		V14A32H2BK2S	1.15	
		208-230/460	49-45/22.5	TPE	V14A32E5BK2S	1.15	
		208-230/460	49-45/22.5	XP	V14743	1.00	
25		208-230/460	65-60/30	DP	V15A32E1BK2S	1.15	254TC
		575	24		V15A32H1BK2S	1.15	
		230/460	58/29	DPE	V15A32F4BK2S	1.15	256TC
		208-230/460	61-57/28.5	TEFC	V15A32E2BL2S	1.15	284TC
		575	22.5		V15789	1.15	
		208-230/460	60-56/28	TPE	V15742PE	1.15	
		230/460	57/28.5	XP	V15743	1.15	
30		230/460	70/35	DP	V16741	1.15	
		575	27		V16A32H1BB2S	1.15	
		230/460	68/34	DPE	V16A32F4BL2S	1.15	286TC
		208-230/460	74-68/34	TEFC	V16742	1.15	
		575	27		V16A32H2BL2S	1.15	
		208-230/460	76-68/34	TPE	V16A32E5BL2S	1.15	284TC
		208-230/460	74-70/35	XP	V16743	1.15	286TC

Motor Data

3500 RPM, 60Hz

HP	Phase	Voltage	FLA	Enclosure	Order No.	SF	Frame Size
40		208-230/460	102-96/48	DP	V17741	1.15	286TC
		575	37		V17A32H1BL2S	1.15	
		230/460	90/45	DPE	V17A32F4BL2S	1.15	
		208-230/460	100-90/45	TEFC	V17A32E2BL2S	1.15	
		575	35		V17789	1.15	
		230/460	95.7-88/44	TPE	X17A32F5BM2S	1.15	324TSC
		208-230/460	100-90/45	XP	X17A32F3BM2S	1.15	
50	3	230/460	118/59	DP	V18741S	1.15	324TSC
		575	48		V18779S	1.15	
		230/460	110/55	DPE	V18741SPE	1.15	
		208-230/460	126-112/56	TEFC	X18A32E2BM2S	1.15	326TSC
		575	45		V18789S	1.15	
		208-230/460	119-108/54	TPE	X18A32E5BM2S	1.15	
		230/460	112/56	XP	X18A32F3BM2S	1.15	
60		208-230/460	148-136/68	DP	V19741S	1.15	
		575	55		V19779S	1.15	
		230/460	130/65	DPE	V19741SPE	1.15	
		230/460	138/69	TEFC	X19A32F2BP2S	1.15	364TSC
		575	56		V19789S	1.15	
		208-230/460	150-134/67	TPE	X19A32F5BP2S	1.15	
		230/460	134/67	XP	X19A32F3BP2S	1.15	
75		230/460	176/88	DP	V20741S	1.15	
		575	75		V20779S	1.15	
		230/460	174/87	DPE	X20A32F4BP2S	1.15	
		208-230/460	182-166/83	TEFC	X20A32F2BP2S	1.15	
		575	67		V20789S	1.15	
		230/460	166/83	TPE	X20A32F5BP2S	1.15	365TSC
		230/460		XP	X20A32F3BP2S	1.15	

NOTES:

* Standard DP and TE Motors have a 1.15 Service Factor except for 7.5 HP and 10 HP, single-phase, TE Motors which are 1.0 S.F.

EXPLOSION-PROOF (XP) Motors above have a 1.15 Service Factor, min. Class B insulation, and a UL Class 1, Div. 1, Group D rating.

For availability consult factory. Goulds Water Technology choice of vendor.

Dimensions and Weights

10SV Series 3500 RPM

60 Hz

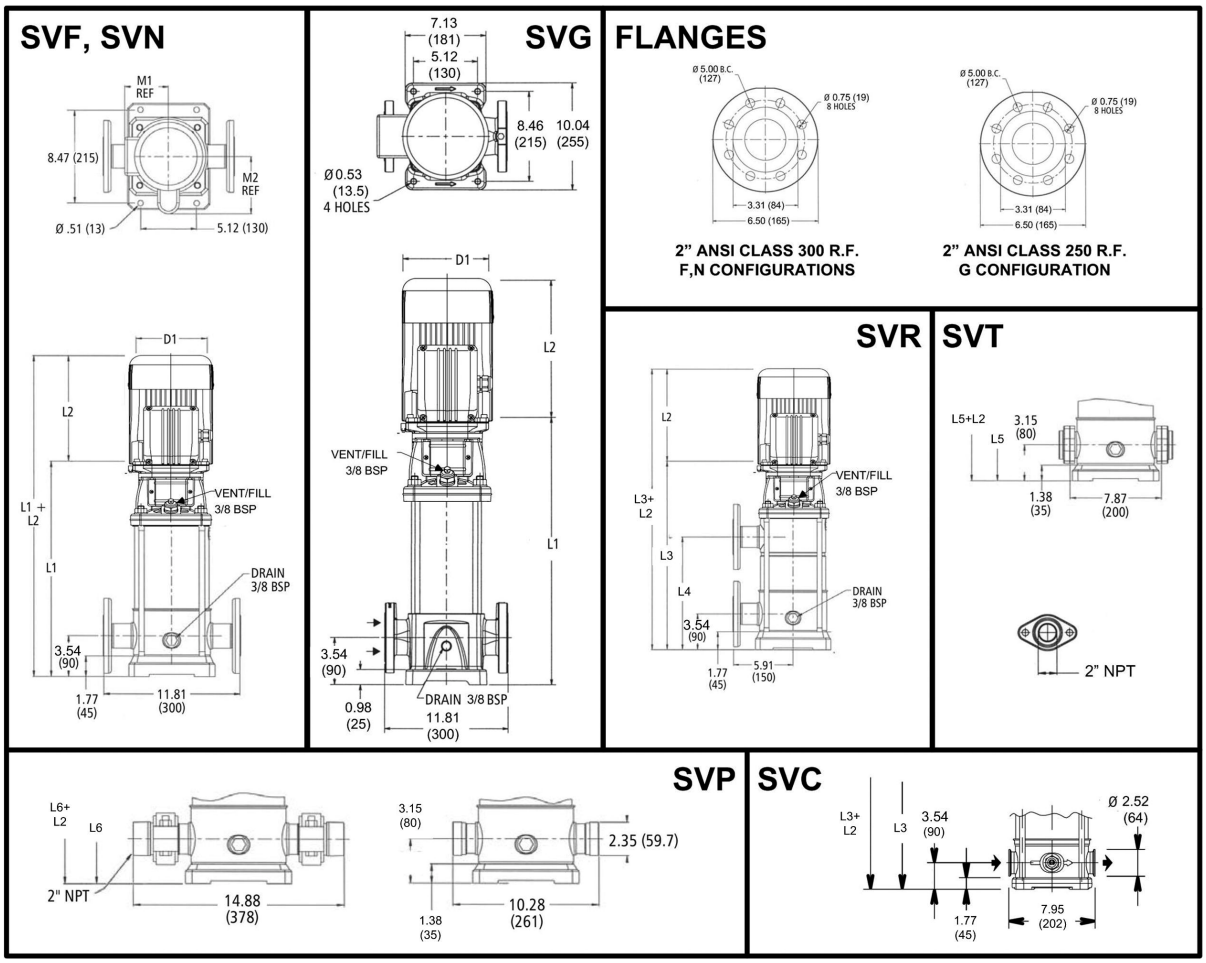

All dimensions are in inches (mm).

10SV SERIES – 60Hz, 3500 RPM ODP/TEFC Enclosures

Pump Type Stages	Motor					Dimensions (in)																Weight (lbs.)								
		NEMA Frame					L2									D1 (max.)						Motor				Pump/Motor				
	HP	ODP 1Ø	TEFC 1Ø	ODP 3Ø	TEFC 3Ø	L1	ODP 1Ø	TEFC 1Ø	ODP 3Ø	TEFC 3Ø	L3	L4	L5	L6	M (Ref.)	ODP 1Ø	TEFC 1Ø	ODP 3Ø	TEFC 3Ø	D2	Pump Only	ODP 1Ø	TEFC 1Ø	ODP 3Ø	TEFC 3Ø	ODP 1Ø	TEFC 1Ø	ODP 3Ø	TEFC 3Ø
10SV-01	0.75	56C				16.56	10.79	9.91	9.16	9.29	-	-	16.17	16.17	5.19	6.19	6.19	6.19	6.19	4.13	36	27	29	21	21	63	65	57	57
10SV-02	2					16.56	11.18	12.06	11.16	10.79	-	-	16.17	16.17	5.74	7.19	7.19	6.19	6.19	4.72	38	43	51	32	33	81	89	70	71
10SV-03	3					17.82	11.57	13.44	11.18	11.16	-	-	17.43	17.43	5.75	6.50	7.19	7.16	7.19	5.51	40	49	64	41	44	89	104	81	84
10SV-04	5	184TC		182TC	184TC	19.58	13.93	15.43	12.55	13.93	-	-	19.19	19.19	6.87	8.88	8.86	9.02	8.86	5.51	46	81	92	62	69	127	138	108	115
10SV-05						20.84	13.93	15.43	12.55	13.93	20.84	10.20	20.45	20.45	6.87	8.88	8.86	9.02	8.86	5.51	48	81	92	62	69	129	140	110	117
10SV-06						22.10	13.93	15.43	12.55	13.93	22.10	11.46	21.71	21.71	6.87	8.88	8.86	9.02	8.86	5.51	50	81	92	62	69	131	142	112	119
10SV-07	7.5	213TC		184TC		23.36	13.88	15.53	13.93	15.43	23.36	12.72	22.97	22.97	8.05	8.89	10.62	8.88	8.86	5.51	52	100	120	75	85	152	172	127	137
10SV-08						24.62	13.88	15.53	13.93	15.43	24.62	13.98	24.22	24.22	8.05	8.89	10.62	8.88	8.86	5.51	54	100	120	75	85	154	174	129	139
10SV-09						25.88	13.88	15.53	13.93	15.43	25.88	15.24	25.48	25.48	8.05	8.89	10.62	8.88	8.86	5.51	56	100	120	75	85	156	176	131	141
10SV-10	10	215TC		213TC	215TC	27.71	16.63	16.68	15.55	15.51	27.71	16.50	-	27.31	8.77	10.62	10.18	10.18	10.28	5.51	66	132	145	107	122	198	211	173	188
10SV-11						28.97	16.63	16.68	15.55	15.51	28.97	17.76	-	28.57	8.77	10.62	10.18	10.18	10.28	5.51	68	132	145	107	122	200	213	175	190
10SV-12						29.44	16.63	16.68	15.55	15.51	29.44	19.02	-	29.05	8.77	10.62	10.18	10.18	10.28	5.51	70	132	145	107	122	202	215	177	192
10SV-13						31.51	16.63	16.68	15.55	15.51	31.51	20.28	-	31.11	8.77	10.62	10.18	10.18	10.28	5.51	75	132	145	107	122	207	220	182	197
10SV-14						32.85	16.63	16.68	15.55	15.51	32.85	21.54	-	32.45	8.77	10.62	10.18	10.18	10.28	5.51	77	132	145	107	122	209	222	184	199
10SV-15	15	-		215TC	254TC	34.66	-	-	15.55	16.57	-	-	-	34.26	9.22	-	-	10.18	10.28	5.51	84	-	-	125	195	-	-	209	279
10SV-16						35.92	-	-	15.55	16.57	-	-	-	35.52	9.22	-	-	10.18	10.28	5.51	86	-	-	125	195	-	-	211	281
10SV-17						37.18	-	-	15.55	16.57	-	-	-	36.78	9.22	-	-	10.18	10.28	5.51	88	-	-	125	195	-	-	213	283
10SV-18						38.44	-	-	15.55	16.57	-	-	-	38.04	9.22	-	-	10.18	10.28	5.51	90	-	-	125	195	-	-	215	285
10SV-19						39.78	-	-	15.55	16.57	-	-	-	39.38	9.22	-	-	10.18	10.28	5.51	92	-	-	125	195	-	-	217	287
10SV-20	20			254TC	256TC	40.96	-	-	16.66	20.08	-	-	-	40.56	9.5	-	-	10.18	13.13	5.51	94	-	-	144	285	-	-	238	379

Performance Curve

10SV 3500 RPM

60 Hz

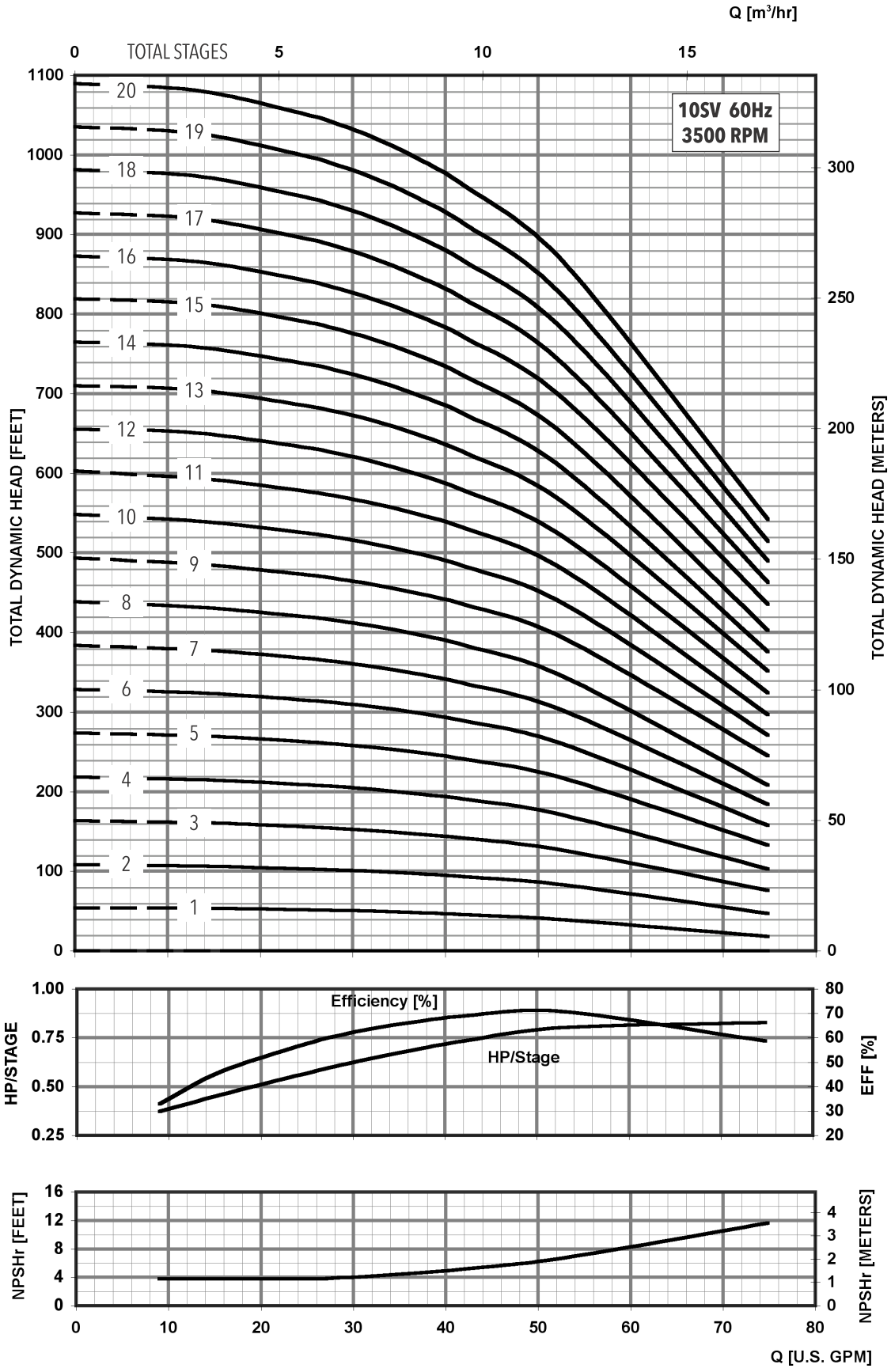

MINIMUM FLOW RATE: 9 GPM [2 m³/hr]

Dimensions and Weights

33SV Series 3500 RPM

60 Hz

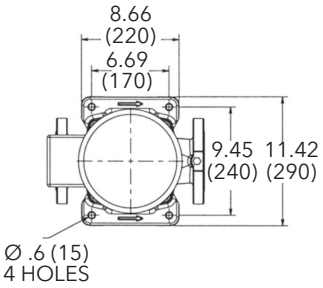

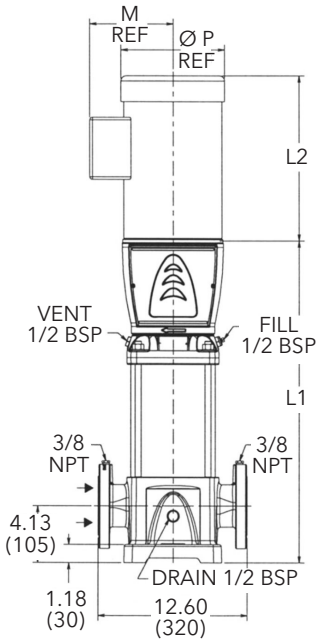

All dimensions are in inches (mm).

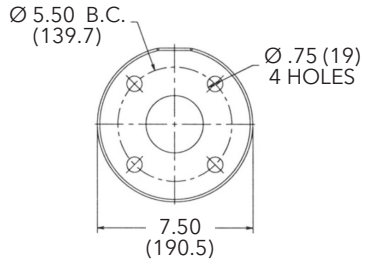

Cast Iron
2½" Class 125 F.F.

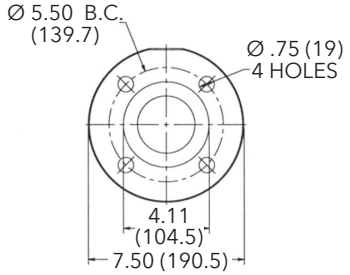

316SS
2½" Class 150 R.F.

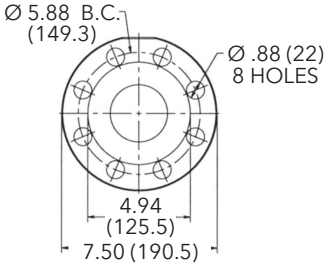

Cast Iron
2½" Class 250 R.F.

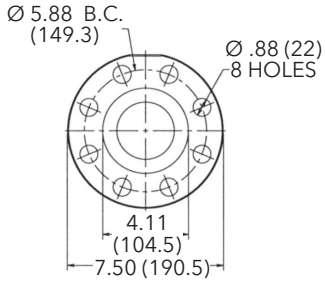

316SS
2½" Class 300 R.F.

33SV SERIES – 60Hz, 3500 RPM ODP/TEFC Enclosures

Pump Type Stages	Motor					Dimensions (in)											Weight (lbs.)								
		NEMA Frame					L2					D1 (max.)						Motor					Pump/Motor			
	HP	ODP 1Ø	TEFC 1Ø	ODP 3Ø	TEFC 3Ø	L1	ODP 1Ø	TEFC 1Ø	ODP 3Ø	TEFC 3Ø	M (Ref.)	ODP 1Ø	TEFC 1Ø	ODP 3Ø	TEFC 3Ø	D2	Pump Only	ODP 1Ø	TEFC 1Ø	ODP 3Ø	TEFC 3Ø	ODP 1Ø	TEFC 1Ø	ODP 3Ø	TEFC 3Ø
33SV-1	5	184TC		182TC	184TC	20.62	13.93	15.43	12.55	13.93	6.87	8.88	8.86	9.02	8.86	5.51	132	81	92	62	69	213	224	194	201
33SV-2/2	7.5	213TC		184TC		23.58	13.88	15.53	13.93	15.43	8.05	8.89	10.62	8.88	8.86	5.51	143	100	120	75	85	243	263	218	228
33SV-2/1	10	215TC		213TC	215TC	23.58	16.63	16.68	15.55	15.51	8.77	10.62	10.18	10.18	10.28	4.13	143	132	145	107	122	275	288	250	265
33SV-2						23.58	16.63	16.68	15.55	15.51	8.77	10.62	10.18	10.18	10.28	4.13	143	132	145	107	122	275	288	250	265
33SV-3/2	15	-	-	215TC	254TC	26.54	-	-	15.55	16.57	9.22	-	-	10.18	10.28	4.72	152	-	-	125	195	-	-	277	347
33SV-3/1		-	-			26.54	-	-	15.55	16.57	9.22	-	-	10.18	10.28	4.72	152	-	-	125	195	-	-	277	347
33SV-3		-	-			26.54	-	-	15.55	16.57	9.22	-	-	10.18	10.28	4.72	152	-	-	125	195	-	-	277	347
33SV-4/2	20	-	-	254TC	256TC	29.50	-	-	16.66	20.08	9.50	-	-	10.18	13.13	5.51	161	-	-	144	285	-	-	305	446
33SV-4/1		-	-			29.50	-	-	16.66	20.08	9.50	-	-	10.18	13.13	5.51	161	-	-	144	285	-	-	305	446
33SV-4		-	-			29.50	-	-	16.66	20.08	9.50	-	-	10.18	13.13	5.51	161	-	-	144	285	-	-	305	446
33SV-5/2	25	-	-	254TC	284TC	32.44	-	-	21.44	19.54	12.94	-	-	11.63	12.94	5.51	172	-	-	185	283	-	-	357	455
33SV-5/1		-	-			32.44	-	-	21.44	19.54	12.94	-	-	11.63	12.94	5.51	172	-	-	185	283	-	-	357	455
33SV-5		-	-			32.44	-	-	21.44	19.54	12.94	-	-	11.63	12.94	5.51	186	-	-	185	283	-	-	371	469
33SV-6/2	30	-	-	284TC	286TC	35.40	-	-	21.75	19.54	12.21	-	-	13.25	12.94	5.51	194	-	-	296	382	-	-	490	576
33SV-6/1		-	-			35.40	-	-	21.75	19.54	12.21	-	-	13.25	12.94	5.51	194	-	-	296	382	-	-	490	576
33SV-6		-	-			35.40	-	-	21.75	19.54	12.21	-	-	13.25	12.94	5.51	194	-	-	296	382	-	-	490	576
33SV-7/2	40	-	-	286TC		38.55	-	-	21.75	23.18	13.11	-	-	13.25	15.56	5.51	204	-	-	315	446	-	-	519	650
33SV-7/1		-	-			38.55	-	-	21.75	23.18	13.11	-	-	13.25	15.56	5.51	204	-	-	315	446	-	-	519	650
33SV-7		-	-			38.55	-	-	21.75	23.18	13.11	-	-	13.25	15.56	5.51	204	-	-	315	446	-	-	519	650
33SV-8/2		-	-			41.30	-	-	21.75	23.18	13.11	-	-	13.25	15.56	5.51	221	-	-	315	446	-	-	536	667
33SV-8/1		-	-			41.30	-	-	21.75	23.18	13.11	-	-	13.25	15.56	5.51	229	-	-	315	446	-	-	544	675
33SV-8		-	-			41.30	-	-	21.75	23.18	13.11	-	-	13.25	15.56	5.51	229	-	-	315	446	-	-	544	675
33SV-9/2	50	-	-	324TSC	326TSC	44.25	-	-	22.75	23.19	12.21	-	-	13.03	15.69	5.51	238	-	-	320	450	-	-	558	688
33SV-9/1		-	-			44.25	-	-	22.75	23.19	12.21	-	-	13.03	15.69	5.51	238	-	-	320	450	-	-	558	688
33SV-9		-	-			44.25	-	-	22.75	23.19	12.21	-	-	13.03	15.69	5.51	238	-	-	320	450	-	-	558	688
33SV-10/2		-	-			47.20	-	-	22.75	23.19	12.21	-	-	13.03	15.69	5.51	249	-	-	320	450	-	-	569	699
33SV-10/1		-	-			47.20	-	-	22.75	23.19	12.21	-	-	13.03	15.69	5.51	249	-	-	320	450	-	-	569	699
33SV-10		-	-			47.20	-	-	22.75	23.19	12.21	-	-	13.03	15.69	5.51	249	-	-	320	450	-	-	569	699

Performance Curve

33SV 3500 RPM

60 Hz

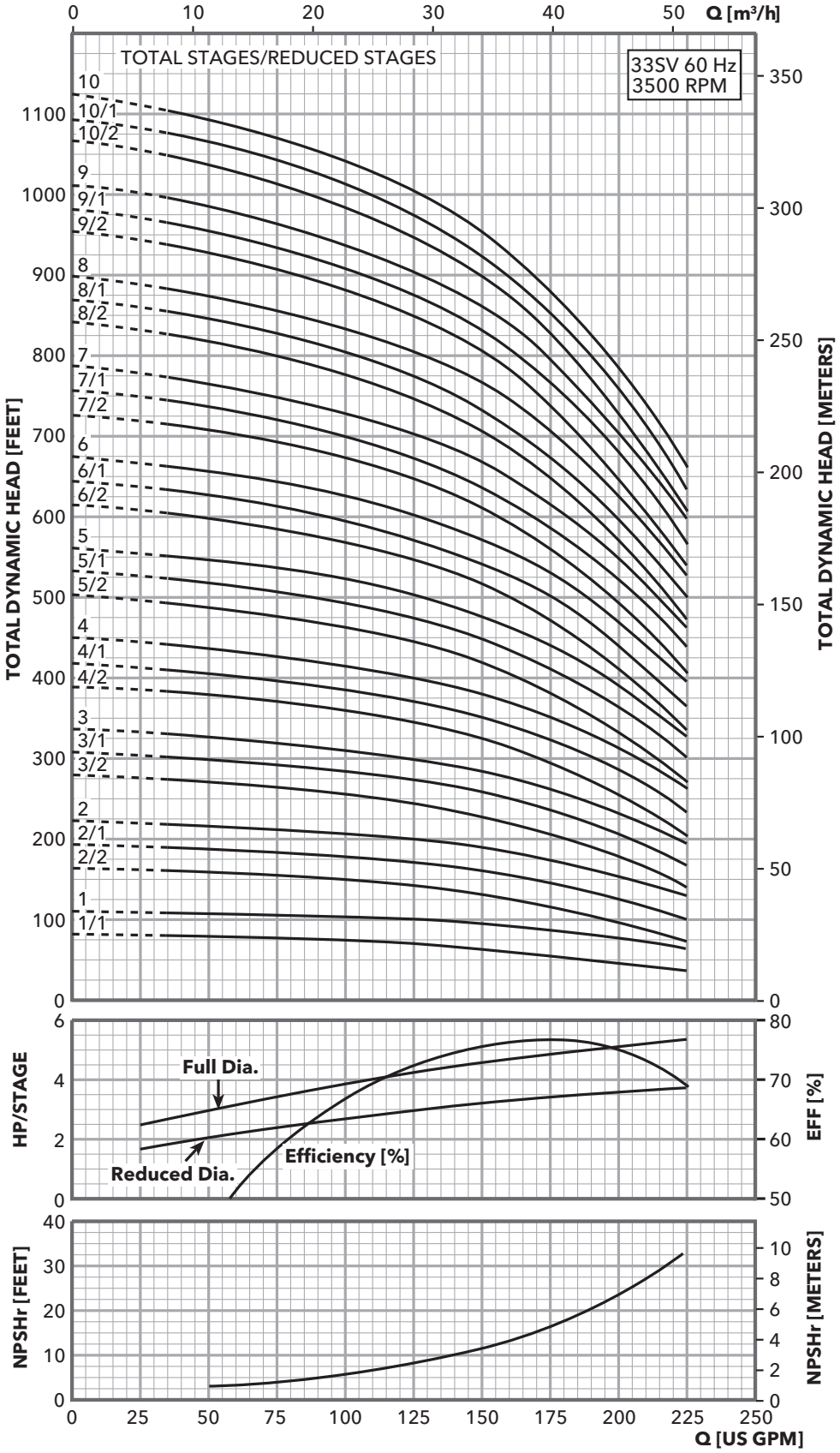

MINIMUM FLOW RATE: 35 GPM [8 m³/hr]

Dimensions and Weights

125SV Series 3500 RPM

60 Hz

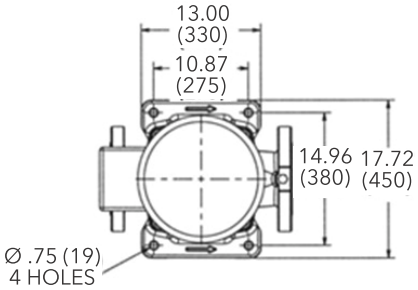

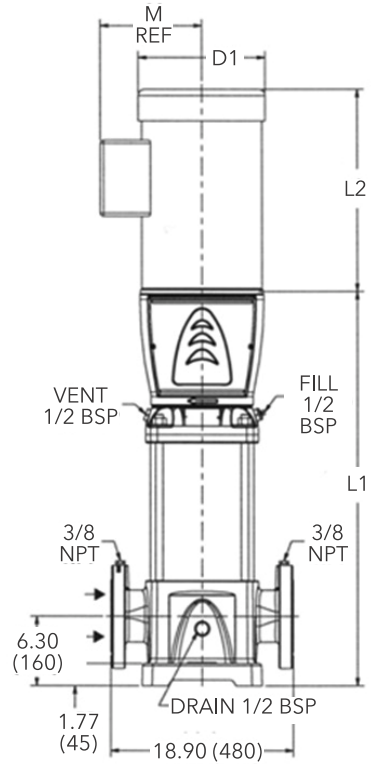

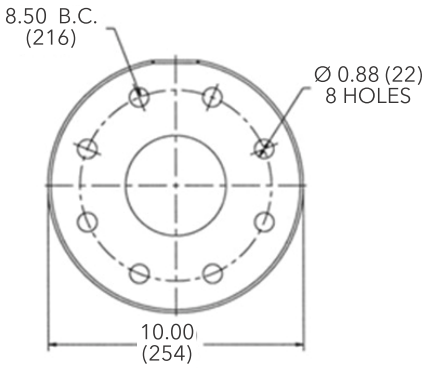

Cast Iron
5" Class 125 F.F.

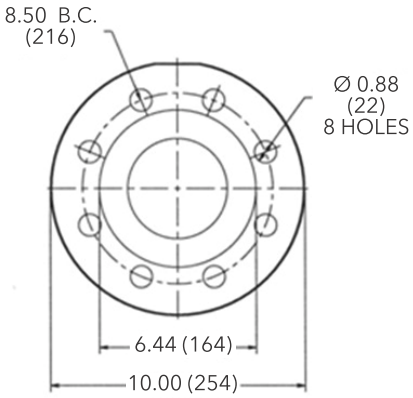

316SS
5" Class 150 R.F.

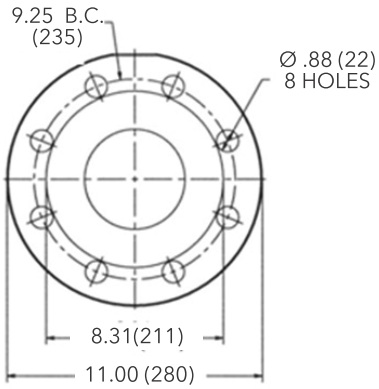

Cast Iron
5" Class 250 R.F.

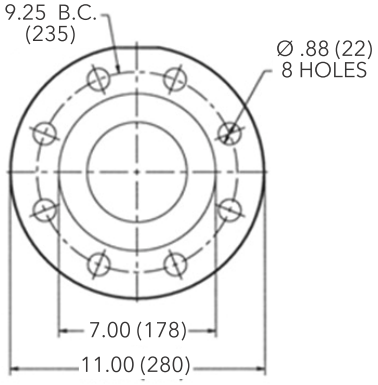

316SS
5" Class 300 R.F.

All dimensions are in inches (mm).

125SV SERIES – 60Hz, 3500 RPM ODP/TEFC Enclosures

	Motor					Dimensions (in)															Weight (lbs.)								
		NEMA Frame					L2									D1 (max.)						Motor				Pump/Motor			
Pump Type	HP	ODP 1Ø	TEFC 1Ø	ODP 3Ø	TEFC 3Ø	L1	ODP 1Ø	TEFC 1Ø	ODP 3Ø	TEFC 3Ø	L3	L4	L5	L6	M (Ref.)	ODP 1Ø	TEFC 1Ø	ODP 3Ø	TEFC 3Ø	D2	Pump	ODP 1Ø	TEFC 1Ø	ODP 3Ø	TEFC 3Ø	ODP 1Ø	TEFC 1Ø	ODP 3Ø	TEFC 3Ø
125SV1/0C	15	-	-	215TC	254TC	27.30	-	-	15.55	16.57	-	-	-	-	9.22	-	-	10.18	10.28	4.72	256	-	-	125	195	-	-	381	451
125SV2/0C	30	-	-	284TC	286TC	34.57	-	-	21.75	19.54	-	-	-	-	12.21	-	-	13.25	12.94	5.51	289	-	-	296	382	-	-	585	671
125SV3/3A	40	-	-	286TC	286TC	40.47	-	-	21.75	23.18	-	-	-	-	13.11	-	-	13.25	15.56	5.51	315	-	-	315	446	-	-	630	761
125SV4/3B	50	-	-	324TSC	326TSC	46.40	-	-	22.75	23.19	-	-	-	-	12.21	-	-	13.03	15.69	5.51	355	-	-	320	450	-	-	675	805
125SV5/5B	60	-	-	324TSC	326TSC	52.30	-	-	22.75	30.69	-	-	-	-	14.95	-	-	13.03	19.25	5.51	379	-	-	372	689	-	-	751	1068
125SV5/0C	75	-	-	364TSC	365TSC	52.28	-	-	24.38	30.69	-	-	-	-	14.95	-	-	15.13	19.25	5.51	379	-	-	447	747	-	-	826	1126

Performance Curve

125SV 3500 RPM

60 Hz

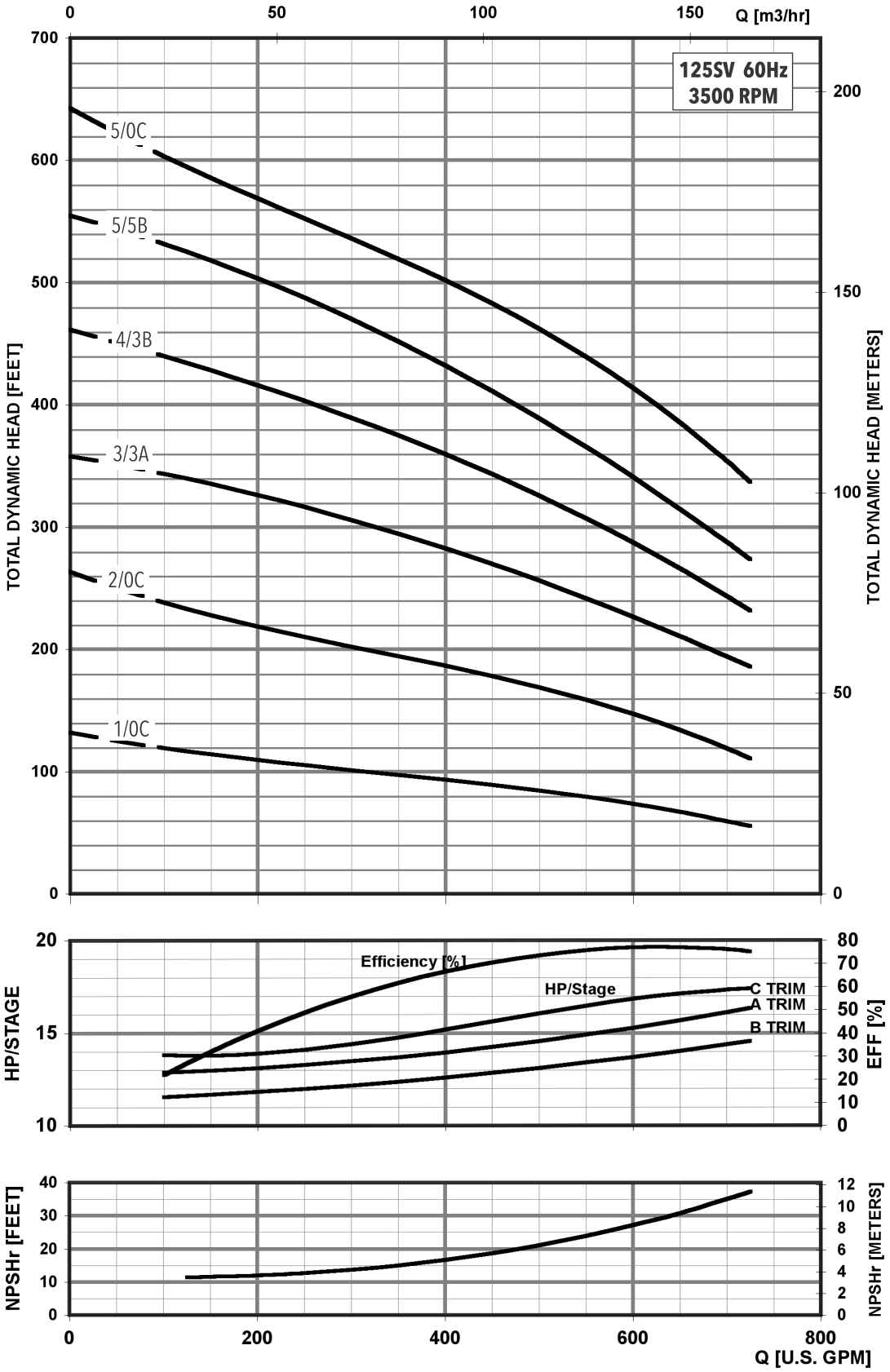

MINIMUM FLOW RATE: 100 GPM [20 m³/hr]

Dimensions and Weights

1SV Series 1750 RPM

60 Hz

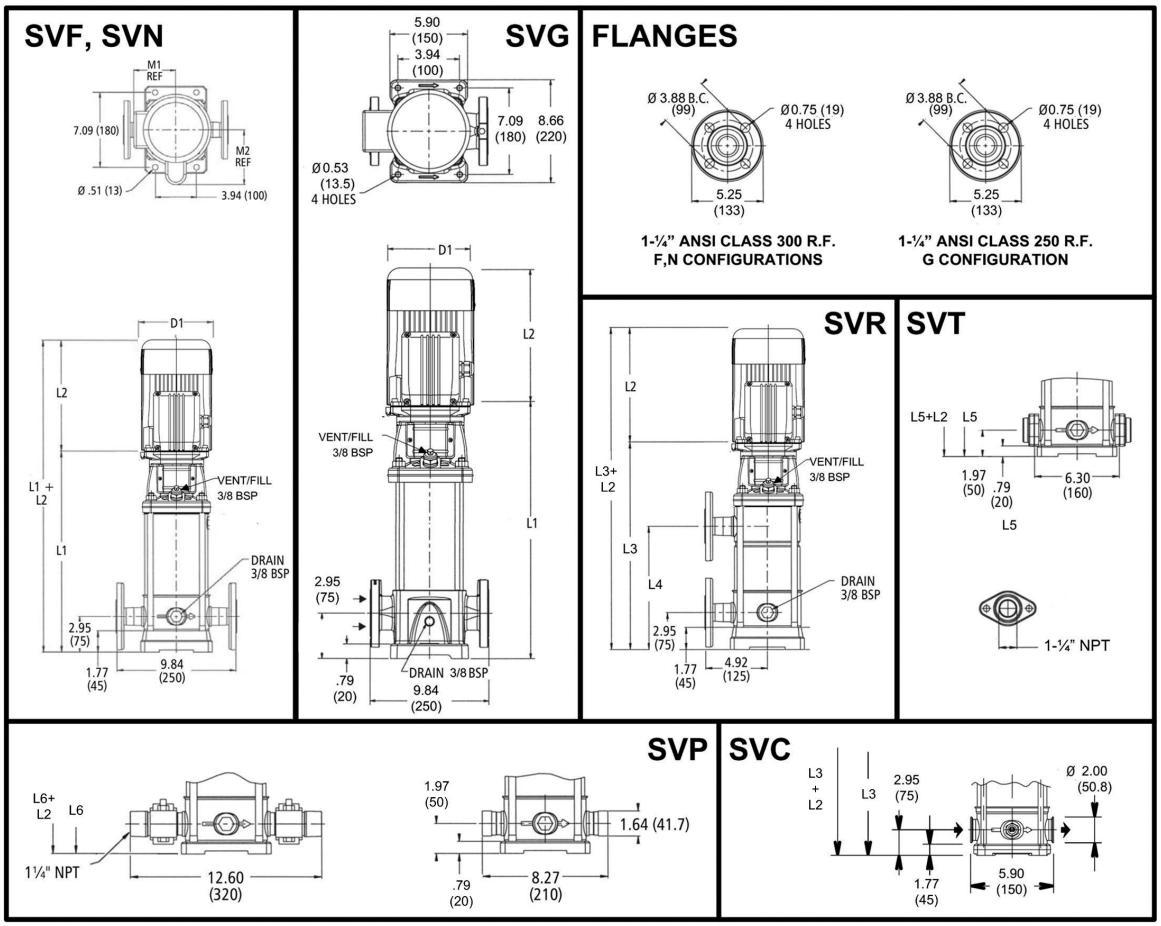

All dimensions are in inches (mm).

1SV SERIES – 60Hz, 1750 RPM ODP/TEFC Enclosures

Pump Type Stages	Motor					Dimensions (in)																Weight (lbs.)								
	HP	NEMA Frame				L1	L2				L3	L4	L5	L6	M (Ref.)	D1 (max.)				D2	Pump Only	Motor				Pump/Motor			
		ODP 1Ø	TEFC 1Ø	ODP 3Ø	TEFC 3Ø		ODP 1Ø	TEFC 1Ø	ODP 3Ø	TEFC 3Ø						ODP 1Ø	TEFC 1Ø	ODP 3Ø	TEFC 3Ø			ODP 1Ø	TEFC 1Ø	ODP 3Ø	TEFC 3Ø	ODP 1Ø	TEFC 1Ø	ODP 3Ø	TEFC 3Ø
1SV-02						13.27	9.16	9.29	9.16	9.29	-	-	12.29	12.29	5.19	6.19	6.19	6.19	6.19	4.13	25	21	21	19	19	46	46	44	44
1SV-03						13.27	9.16	9.29	9.16	9.29	-	-	12.29	12.29	5.19	6.19	6.19	6.19	6.19	4.13	26	21	21	19	19	47	47	45	45
1SV-04						14.06	9.16	9.29	9.16	9.29	-	-	13.07	13.07	5.19	6.19	6.19	6.19	6.19	4.13	27	21	21	19	19	48	48	46	46
1SV-05						14.85	9.16	9.29	9.16	9.29	-	-	13.86	13.86	5.19	6.19	6.19	6.19	6.19	4.13	28	21	21	19	19	49	49	47	47
1SV-06						15.63	9.16	9.29	9.16	9.29	-	-	14.65	14.65	5.19	6.19	6.19	6.19	6.19	4.13	28	21	21	19	19	49	49	47	47
1SV-07						16.42	9.16	9.29	9.16	9.29	-	-	15.44	15.44	5.19	6.19	6.19	6.19	6.19	4.13	29	21	21	19	19	50	50	48	48
1SV-08						17.21	9.16	9.29	9.16	9.29	17.21	8.94	16.22	16.22	5.19	6.19	6.19	6.19	6.19	4.13	30	21	21	19	19	51	51	49	49
1SV-09						18.00	9.16	9.29	9.16	9.29	18.00	9.72	17.01	17.01	5.19	6.19	6.19	6.19	6.19	4.13	31	21	21	19	19	52	52	50	50
1SV-10						18.78	9.16	9.29	9.16	9.29	18.78	10.51	17.80	17.80	5.19	6.19	6.19	6.19	6.19	4.13	32	21	21	19	19	53	53	51	51
1SV-11						19.57	9.16	9.29	9.16	9.29	19.57	11.30	18.59	18.59	5.19	6.19	6.19	6.19	6.19	4.13	33	21	21	19	19	54	54	52	52
1SV-12						20.36	9.16	9.29	9.16	9.29	20.36	12.09	19.37	19.37	5.19	6.19	6.19	6.19	6.19	4.13	34	21	21	19	19	55	55	53	53
1SV-13						21.14	9.16	9.29	9.16	9.29	21.14	12.87	20.16	20.16	5.19	6.19	6.19	6.19	6.19	4.13	35	21	21	19	19	56	56	54	54
1SV-14						21.93	9.16	9.29	9.16	9.29	21.93	13.66	20.95	20.95	5.19	6.19	6.19	6.19	6.19	4.13	36	21	21	19	19	57	57	55	55
1SV-15						22.72	9.16	9.29	9.16	9.29	22.72	14.45	21.74	21.74	5.19	6.19	6.19	6.19	6.19	4.13	37	21	21	19	19	58	58	56	56
1SV-16	0.5		56C			23.51	9.16	9.29	9.16	9.29	23.51	15.24	22.52	22.52	5.19	6.19	6.19	6.19	6.19	4.13	38	21	21	19	19	59	59	57	57
1SV-17						24.29	9.16	9.29	9.16	9.29	24.29	16.02	23.31	23.31	5.19	6.19	6.19	6.19	6.19	4.13	38	21	21	19	19	59	59	57	57
1SV-18						25.08	9.16	9.29	9.16	9.29	25.08	16.81	24.10	24.10	5.19	6.19	6.19	6.19	6.19	4.13	39	21	21	19	19	60	60	58	58
1SV-19						25.87	9.16	9.29	9.16	9.29	25.87	17.60	24.89	24.89	5.19	6.19	6.19	6.19	6.19	4.13	40	21	21	19	19	61	61	59	59
1SV-20						26.66	9.16	9.29	9.16	9.29	26.66	18.39	25.67	25.67	5.19	6.19	6.19	6.19	6.19	4.13	41	21	21	19	19	62	62	60	60
1SV-21						27.44	9.16	9.29	9.16	9.29	27.44	19.17	26.46	26.46	5.19	6.19	6.19	6.19	6.19	4.13	42	21	21	19	19	63	63	61	61
1SV-22						28.23	9.16	9.29	9.16	9.29	28.23	19.96	27.25	27.25	5.19	6.19	6.19	6.19	6.19	4.13	43	21	21	19	19	64	64	62	62
1SV-23						29.02	9.16	9.29	9.16	9.29	29.02	20.75	28.03	28.03	5.19	6.19	6.19	6.19	6.19	4.13	45	21	21	19	19	66	66	64	64
1SV-24						29.81	9.16	9.29	9.16	9.29	29.81	21.54	28.82	28.82	5.19	6.19	6.19	6.19	6.19	4.13	46	21	21	19	19	67	67	65	65
1SV-25						30.59	9.16	9.29	9.16	9.29	30.59	22.32	29.61	29.61	5.19	6.19	6.19	6.19	6.19	4.13	47	21	21	19	19	68	68	66	66
1SV-26						31.38	9.16	9.29	9.16	9.29	31.38	23.11	30.40	30.40	5.19	6.19	6.19	6.19	6.19	4.13	47	21	21	19	19	68	68	66	66
1SV-27						32.17	9.16	9.29	9.16	9.29	32.17	23.90	31.18	31.18	5.19	6.19	6.19	6.19	6.19	4.13	48	21	21	19	19	69	69	67	67
1SV-28						32.96	9.16	9.29	9.16	9.29	32.96	24.68	31.97	31.97	5.19	6.19	6.19	6.19	6.19	4.13	49	21	21	19	19	70	70	68	68
1SV-29						34.14	9.16	9.29	9.16	9.29	34.14	25.47	33.15	33.15	5.19	6.19	6.19	6.19	6.19	4.13	50	21	21	19	19	71	71	69	69
1SV-30						34.53	9.16	9.29	9.16	9.29	34.53	26.26	33.55	33.55	5.19	6.19	6.19	6.19	6.19	4.13	51	21	21	19	19	72	72	70	70

APPENDIX VIII

SUMMIT CLUB **Date: August 2022**
NORTH CASTLE, NY

CALCULATION OF TOTAL DYNAMIC HEAD - WELL 1
Calculated by: Michael Shortell
Reviewed by: Stephen Rupar

PROBLEM STATEMENT
Calculate the total dynamic head from Well 1 to the overflow of the atmospheric storage tank under a static water level condition.

PROCESS DESCRIPTION
The headloss for the pump in Well 1 is determined by summing the minor losses associated with flow through the piping and lift between the pump in the well to atmospheric storage tank.

ASSUMPTIONS
1. The maximum design pumping rate from the well is 37 gpm.
2. The land surface elevation at Well 1 is approximately 425 ft msl, the well is artesian therefore the static water level is 0 feet below land surface (425 feet msl).
3. The submersible well pump will convey groundwater from the water-supply well to the atmospheric storage tank. The overflow elevation for the atmospheric storage tank is approximately 589 ft msl.
4. Three-inch galvanized steel pipe will be used for the riser pipe, 4-inch HDPE pipe will be used from the well to the treatment building (below-grade), 4-inch ductile iron pipe will be used within the treatment building and 4-inch HDPE pipe will be used from the treatment building to the atmospheric storage tank.
5. The inside diameter of the 3-inch galvanized pipe, the 4-inch HDPE pipe and 4-inch ductile iron pipe and the 4-inch HDPE pipe is 3.068 inches, 3.633 inches, 4.026 inches and 3.633 inches, respectively.
6. The pump setting is 275 ft bg, the length of 3-inch piping between well and the treatment building is approximately 1,925 feet and the length of the 4-inch HDPE pipe between the treatment building and the atmospheric storage tank is approximately 50 feet.
7. Approximately 50 feet of 4-inch ductile iron pipe is used within the treatment building.

Acceleration due to gravity =	32.2	ft/sec^2
Elevation of the overflow for the tank =	589	ft msl
elevation at the well head =	425	ft msl
well pumping water elevation =	425	ft msl
Hazen Williams Roughness Coefficient (Steel), C =	100	
Hazen Williams Roughness Coefficient (Plastic), C =	130	
3-inch steel pipe length, L1 =	271	ft
4-inch HDPE pipe length, L2 =	1925	ft
4-inch ductile iron pipe length (within building), L3 =	50	ft
4-inch HDPE pipe length, L4 =	50	ft
3-inch steel pipe diameter, d1 =	3.068	in
4-inch HDPE pipe diameter, d2 =	3.633	in
4-inch ductile iron pipe diameter, d3 =	4.026	in
4-inch HDPE pipe diameter, d4 =	3.633	in
Flowrate, Q1 =	37	gpm
1 gpm =	0.00223	ft3/sec

CALCULATION

1. Flow Velocity - Continuity Equation

$$Q = V \times A$$

$$v = \frac{Q \times 0.00223}{[(3.1459/4) \times (d/12)^2]}$$

v(Q1, d1) =	1.605	ft/sec
v(Q1, d2) =	1.145	ft/sec
v(Q1, d3) =	0.932	ft/sec
v(Q1, d4) =	1.145	ft/sec

2. Calculate velocity head and entrance loss

$$\text{Velocity head, VH} = \frac{v^2}{2 \times g}$$

VH(v(Q1, d1)) =	0.0249		
Entrance loss, EL =	k x (v^2/2 x g)		k=1
Entrance Loss =	0.0249		

3. Calculate equivalent lengths

3-inch check valve =	25.50	ft	
3-inch 90 degree elbow =	7.90	ft	
Number of check valves =	1.00	ft	
Number of 90 degree elbows =	1.00	ft	
EQ1 (3-inch steel riser pipe) =	33.40	ft	
4-inch 90 check valve =	11.00	ft	
4-inch 90 degree elbow =	8.00	ft	
Number of check valves =	2.00	ft	
Number of 90 degree elbows =	8.00	ft	
EQ2 (4-inch HDPE from well) =	86.00	ft	
4-inch check valve =	17.00	ft	
4-inch tee =	15.00	ft	
4-inch gate valve =	4.00	ft	
4-inch 90 degree elbow =	14.00	ft	
Flow meter =	10.00	ft	
Number of check valves =	2.00		
Number of 4-inch tees =	3.00		
Number of gate valves =	8.00		
Number of 90 degree elbows =	20.00		
Number of flow meters =	1.00		
EQ3 (4-inch ductile iron) =	356.00		
4-inch 90 degree elbow =	14.00	ft	
Number of check valves =	2.00	ft	3.068
Number of 90 degree elbows =	8.00	ft	
EQ4 (4-inch HDPE to tank) =	92.00	ft	

4. Calculate the friction loss using the Hazen-Williams Equation

$$hf = \frac{10.44 \times L \times Q^{1.85}}{C^{1.85} \times d^{4.87}}$$

hf1 (3-inch steel pipe)=	2.15	ft
hf2 (4-inch HDPE pipe) =	3.84	ft
hf3 (4-inch ductile iron steel pipe) =	0.47	ft
hf4 (3-inch HDPE pipe) =	0.77	ft
Summation =	6.46	ft

5. Summation of lift

Lift at Well = Elevation at highest point in system - pumping water level

Lift at Well =	164	ft	
Backpressure from 5-micron filter =	16	ft	(7 psi)
Backpressure from LT2 filter =	16	ft	(7 psi)
Backpressure from UV unit =	5	ft	(2 psi)
Total Lift (including backpressure) =	201		

6. Calculate total dynamic head

The total dynamic head is determined by summing all the losses associated with the operation of the pump with the total lift

Head =	207.51
Factor of safety (10% TDH) =	20.8
Total dynamic head =	228.26

CONCLUSION

The total dynamic head under a static water level condition that the pump in Well 1 will work against is 228 feet.

SUMMIT CLUB **Date: August 2022**
NORTH CASTLE, NY

CALCULATION OF TOTAL DYNAMIC HEAD - WELL 1
Calculated by: Michael Shortell
Reviewed by: Stephen Rupar

PROBLEM STATEMENT
Calculate the total dynamic head from Well 1 to the overflow of the atmospheric storage tank.

PROCESS DESCRIPTION
The headloss for the pump in Well 1 is determined by summing the minor losses associated with flow through the piping and lift between the pump in the well to atmospheric storage tank.

ASSUMPTIONS
1. The maximum design pumping rate from the well is 37 gpm.
2. The land surface elevation at Well 1 is approximately 425 ft msl, the pumping water level is 248 feet below land surface (177 feet msl).
3. The submersible well pump will convey groundwater from the water-supply well to the atmospheric storage tank. The overflow elevation for the atmospheric storage tank is approximately 589 ft msl.
4. Three-inch galvanized steel pipe will be used for the riser pipe, 4-inch HDPE pipe will be used from the well to the treatment building (below-grade), 4-inch ductile iron pipe will be used within the treatment building and 4-inch HDPE pipe will be used from the treatment building to the atmospheric storage tank.
5. The inside diameter of the 3-inch galvanized pipe, the 4-inch HDPE pipe and 4-inch ductile iron pipe and the 4-inch HDPE pipe is 3.068 inches, 3.633 inches, 4.026 inches and 3.633 inches, respectively.
6. The pump setting is 275 ft bg, the length of 3-inch piping between well and the treatment building is approximately 1,925 feet and the length of the 4-inch HDPE pipe between the treatment building and the atmospheric storage tank is approximately 50 feet.
7. Approximately 50 feet of 4-inch ductile iron pipe is used within the building.

Acceleration due to gravity =	32.2	ft/sec^2
Elevation of the overflow for the tank =	589	ft msl
elevation at the well head =	425	ft msl
well pumping water elevation =	177	ft msl
Hazen Williams Roughness Coefficient (Steel), C =	100	
Hazen Williams Roughness Coefficient (Plastic), C =	130	
3-inch steel pipe length, L1 =	271	ft
4-inch HDPE pipe length, L2 =	1925	ft
4-inch ductile iron pipe length (within building), L3 =	50	ft
4-inch HDPE pipe length, L4 =	50	ft
3-inch steel pipe diameter, d1 =	3.068	in
4-inch HDPE pipe diameter, d2 =	3.633	in
4-inch ductile iron pipe diameter, d3 =	4.026	in
4-inch HDPE pipe diameter, d4 =	3.633	in
Flowrate, Q1 =	37	gpm
1 gpm =	0.00223	ft3/sec

CALCULATION

1. Flow Velocity - Continuity Equation

$$Q = V \times A$$

$$v = \frac{Q \times 0.00223}{[(3.1459/4) \times (d/12)^2]}$$

v(Q1, d1) =	1.605	ft/sec
v(Q1, d2) =	1.145	ft/sec
v(Q1, d3) =	0.932	ft/sec
v(Q1, d4) =	1.145	ft/sec

2. Calculate velocity head and entrance loss

$$\text{Velocity head, VH} = \frac{v^2}{2 \times g}$$

VH(v(Q1, d1)) =	0.0249		
Entrance loss, EL =	k x (v^2/2 x g)	k=1	
Entrance Loss =	0.0249		

3. Calculate equivalent lengths

3-inch check valve =	25.50	ft	
3-inch 90 degree elbow =	7.90	ft	
Number of check valves =	1.00	ft	
Number of 90 degree elbows =	1.00	ft	
EQ1 (3-inch steel riser pipe) =	33.40	ft	
4-inch 90 check valve =	11.00	ft	
4-inch 90 degree elbow =	8.00	ft	
Number of check valves =	2.00	ft	
Number of 90 degree elbows =	8.00	ft	
EQ2 (4-inch HDPE from well) =	86.00	ft	
4-inch check valve =	17.00	ft	
4-inch tee =	15.00	ft	
4-inch gate valve =	4.00	ft	
4-inch 90 degree elbow =	14.00	ft	
Flow meter =	10.00	ft	
Number of check valves =	2.00		
Number of 4-inch tees =	3.00		
Number of gate valves =	8.00		
Number of 90 degree elbows =	20.00		
Number of flow meters =	1.00		
EQ3 (4-inch ductile iron) =	356.00		
4-inch 90 degree elbow =	14.00	ft	
Number of check valves =	2.00	ft	3.068
Number of 90 degree elbows =	8.00	ft	
EQ4 (4-inch HDPE to tank) =	92.00	ft	

4. Calculate the friction loss using the Hazen-Williams Equation

$$hf = \frac{10.44 \times L \times Q^{1.85}}{C^{1.85} \times d^{4.87}}$$

hf1 (3-inch steel pipe)=	2.15	ft
hf2 (4-inch HDPE pipe) =	3.84	ft
hf3 (4-inch ductile pipe) =	0.47	ft
hf4 (3-inch HDPE pipe) =	0.77	ft
Summation =	6.46	ft

5. Summation of lift

Lift at Well = Elevation at highest point in system - pumping water level

Lift at Well =	412	ft	
Backpressure from 5-micron filter =	16	ft	(7 psi)
Backpressure from LT2 filter =	16	ft	(7 psi)
Backpressure from UV unit =	5	ft	(2 psi)
Total Lift (including backpressure) =	449		

6. Calculate total dynamic head

The total dynamic head is determined by summing all the losses associated with the operation of the pump with the total lift

Head =	455.51
Factor of safety (10% TDH) =	45.6
Total dynamic head =	501.06

CONCLUSION

The total dynamic head that the pump in Well 1 will work against is 500 feet.

SUMMIT CLUB **Date: August 2022**
NORTH CASTLE, NY

CALCULATION OF TOTAL DYNAMIC HEAD - WELL 3
Calculated by: Michael Shortell
Reviewed by: Stephen Rupar

PROBLEM STATEMENT
Calculate the total dynamic head from Well 3 to the overflow of the atmospheric storage tank under a static water level condition.

PROCESS DESCRIPTION
The headloss for the pump in Well 3 is determined by summing the minor losses associated with flow through the piping and lift between the pump in the well to atmospheric storage tank.

ASSUMPTIONS
1. The maximum design pumping rate from the well is 33 gpm.
2. The land surface elevation at Well 3 is approximately 437 ft msl, the well is artesian; therefore, the static water level is 0 feet below land surface (437 feet msl).
3. The submersible well pump will convey groundwater from the water-supply well to the atmospheric storage tank. The overflow elevation for the atmospheric storage tank is approximately 589 ft msl.
4. Three-inch galvanized steel pipe will be used for the riser pipe, 4-inch HDPE pipe will be used from the well to the treatment building (below-grade), 4-inch ductile iron pipe will be used within the treatment building and 4-inch HDPE pipe will be used from the treatment building to the atmospheric storage tank.
5. The inside diameter of the 3-inch galvanized pipe, the 4-inch HDPE pipe and 4-inch ductile iron pipe and the 4-inch HDPE pipe is 3.068 inches, 3.633 inches, 4.026 inches and 3.633 inches, respectively.
6. The pump setting is 150 ft bg, the length of 3-inch piping between well and the treatment building is approximately 1,925 feet and the length of the 4-inch HDPE pipe between the treatment building and the atmospheric storage tank is approximately 50 feet.
7. Approximately 50 feet of 4-inch ductile iron pipe is used within the building.

Acceleration due to gravity =	32.2	ft/sec^2
Elevation of the overflow for the tank =	589	ft msl
elevation at the well head =	437	ft msl
well pumping water elevation =	437	ft msl
Hazen Williams Roughness Coefficient (Steel), C =	100	
Hazen Williams Roughness Coefficient (Plastic), C =	130	
3-inch steel pipe length, L1 =	146	ft
4-inch HDPE pipe length, L2 =	1000	ft
4-inch ductile iron pipe length (within building), L3 =	50	ft
4-inch HDPE pipe length, L4 =	50	ft
3-inch steel pipe diameter, d1 =	3.068	in
4-inch HDPE pipe diameter, d2 =	3.633	in
4-inch ductile iron pipe diameter, d3 =	4.026	in
4-inch HDPE pipe diameter, d4 =	3.633	in
Flowrate, Q1 =	33	gpm
1 gpm =	0.00223	ft3/sec

CALCULATION

1. Flow Velocity - Continuity Equation

$$Q = V \times A$$

$$v = \frac{Q \times 0.00223}{[(3.1459/4) \times (d/12)^2]}$$

v(Q1, d1) =	1.431	ft/sec
v(Q1, d2) =	1.021	ft/sec
v(Q1, d3) =	0.831	ft/sec
v(Q1, d4) =	1.021	ft/sec

2. Calculate velocity head and entrance loss

$$\text{Velocity head, VH} = \frac{v^2}{2 \times g}$$

VH(v(Q1, d1)) =	0.0222		
Entrance loss, EL =	k x (v^2/2 x g)	k=1	
Entrance Loss =	0.0222		

3. Calculate equivalent lengths

3-inch check valve =	25.50	ft	
3-inch 90 degree elbow =	7.90	ft	
Number of check valves =	1.00	ft	
Number of 90 degree elbows =	1.00	ft	
EQ1 (3-inch steel riser pipe) =	33.40	ft	
4-inch 90 check valve =	11.00	ft	
4-inch 90 degree elbow =	8.00	ft	
Number of check valves =	2.00	ft	
Number of 90 degree elbows =	8.00	ft	
EQ2 (4-inch HDPE from well) =	86.00	ft	
4-inch check valve =	17.00	ft	
4-inch tee =	15.00	ft	
4-inch gate valve =	4.00	ft	
4-inch 90 degree elbow =	14.00	ft	
Flow meter =	10.00	ft	
Number of check valves =	2.00		
Number of 4-inch tees =	3.00		
Number of gate valves =	8.00		
Number of 90 degree elbows =	20.00		
Number of flow meters =	1.00		
EQ3 (4-inch ductile iron) =	356.00		
4-inch 90 degree elbow =	14.00	ft	
Number of check valves =	2.00	ft	3.068
Number of 90 degree elbows =	8.00	ft	
EQ4 (4-inch HDPE to tank) =	92.00	ft	

4. Calculate the friction loss using the Hazen-Williams Equation

$$hf = \frac{10.44 \times L \times Q^{1.85}}{C^{1.85} \times d^{4.87}}$$

hf1 (3-inch steel pipe)=	1.03	ft
hf2 (4-inch HDPE pipe) =	1.68	ft
hf3 (4-inch ductile pipe) =	0.38	ft
hf4 (3-inch HDPE pipe) =	0.63	ft
Summation =	3.08	ft

5. Summation of lift

Lift at Well = Elevation at highest point in system - pumping water level

Lift at Well =	152	ft	
Backpressure from 5-micron filter =	16	ft	(7 psi)
Backpressure from LT2 filter =	16	ft	(7 psi)
Backpressure from UV unit =	5	ft	(2 psi)
Total Lift (including backpressure) =	189		

6. Calculate total dynamic head

The total dynamic head is determined by summing all the losses associated with the operation of the pump with the total lift

Head =	192.13
Factor of safety (10% TDH) =	19.2
Total dynamic head =	211.34

CONCLUSION

The total dynamic head under a static water level condition Well 3 will work against is 211 feet.

SUMMIT CLUB **Date: August 2022**
NORTH CASTLE, NY

CALCULATION OF TOTAL DYNAMIC HEAD - WELL 3
Calculated by: Michael Shortell
Reviewed by: Stephen Rupar

PROBLEM STATEMENT
Calculate the total dynamic head from Well 3 to the overflow of the atmospheric storage tank.

PROCESS DESCRIPTION
The headloss for the pump in Well 3 is determined by summing the minor losses associated with flow through the piping and lift between the pump in the well to atmospheric storage tank.

ASSUMPTIONS
1. The maximum design pumping rate from the well is 33 gpm.
2. The land surface elevation at Well 3 is approximately 437 ft msl, the pumping water level is 109 feet below land surface (328 feet msl).
3. The submersible well pump will convey groundwater from the water-supply well to the atmospheric storage tank. The overflow elevation for the atmospheric storage tank is approximately 589 ft msl.
4. Three-inch galvanized steel pipe will be used for the riser pipe, 4-inch HDPE pipe will be used from the well to the treatment building (below-grade), 4-inch ductile iron pipe will be used within the treatment building and 4-inch HDPE pipe will be used from the treatment building to the atmospheric storage tank.
5. The inside diameter of the 3-inch galvanized pipe, the 4-inch HDPE pipe and 4-inch ductile iron pipe and the 4-inch HDPE pipe is 3.068 inches, 3.633 inches, 4.026 inches and 3.633 inches, respectively.
6. The pump setting is 150 ft bg, the length of 3-inch piping between well and the treatment building is approximately 1,925 feet and the length of the 4-inch HDPE pipe between the treatment building and the atmospheric storage tank is approximately 50 feet.
7. Approximately 50 feet of 4-inch ductile iron pipe is used within the building.

Acceleration due to gravity =	32.2	ft/sec^2
Elevation of the overflow for the tank =	589	ft msl
elevation at the well head =	437	ft msl
well pumping water elevation =	328	ft msl
Hazen Williams Roughness Coefficient (Steel), C =	100	
Hazen Williams Roughness Coefficient (Plastic), C =	130	
3-inch steel pipe length, L1 =	146	ft
4-inch HDPE pipe length, L2 =	1000	ft
4-inch ductile pipe length (within building), L3 =	50	ft
4-inch HDPE pipe length, L4 =	50	ft
3-inch steel pipe diameter, d1 =	3.068	in
4-inch HDPE pipe diameter, d2 =	3.633	in
4-inch ductile pipe diameter, d3 =	4.026	in
4-inch HDPE pipe diameter, d4 =	3.633	in
Flowrate, Q1 =	33	gpm
1 gpm =	0.00223	ft3/sec

CALCULATION

1. Flow Velocity - Continuity Equation

$$Q = V \times A$$

$$v = \frac{Q \times 0.00223}{[(3.1459/4) \times (d/12)^2]}$$

v(Q1, d1) =	1.431	ft/sec
v(Q1, d2) =	1.021	ft/sec
v(Q1, d3) =	0.831	ft/sec
v(Q1, d4) =	1.021	ft/sec

2. Calculate velocity head and entrance loss

$$\text{Velocity head, VH} = \frac{v^2}{2 \times g}$$

VH(v(Q1, d1)) =	0.0222		
Entrance loss, EL =	k x (v^2/2 x g)		k=1
Entrance Loss =	0.0222		

3. Calculate equivalent lengths

3-inch check valve =	25.50	ft	
3-inch 90 degree elbow =	7.90	ft	
Number of check valves =	1.00	ft	
Number of 90 degree elbows =	1.00	ft	
EQ1 (3-inch steel riser pipe) =	33.40	ft	
4-inch 90 check valve =	11.00	ft	
4-inch 90 degree elbow =	8.00	ft	
Number of check valves =	2.00	ft	
Number of 90 degree elbows =	8.00	ft	
EQ2 (4-inch HDPE from well) =	86.00	ft	
4-inch check valve =	17.00	ft	
4-inch tee =	15.00	ft	
4-inch gate valve =	4.00	ft	
4-inch 90 degree elbow =	14.00	ft	
Flow meter =	10.00	ft	
Number of check valves =	2.00		
Number of 4-inch tees =	3.00		
Number of gate valves =	8.00		
Number of 90 degree elbows =	20.00		
Number of flow meters =	1.00		
EQ3 (4-inch ductile) =	356.00		
4-inch 90 degree elbow =	14.00	ft	
Number of check valves =	2.00	ft	3.068
Number of 90 degree elbows =	8.00	ft	
EQ4 (4-inch HDPE to tank) =	92.00	ft	

4. Calculate the friction loss using the Hazen-Williams Equation

$$hf = \frac{10.44 \times L \times Q^{1.85}}{C^{1.85} \times d^{4.87}}$$

hf1 (3-inch steel pipe)=	1.03	ft
hf2 (4-inch HDPE pipe) =	1.68	ft
hf3 (4-inch ductile pipe) =	0.38	ft
hf4 (3-inch HDPE pipe) =	0.63	ft
Summation =	3.08	ft

5. Summation of lift

Lift at Well = Elevation at highest point in system - pumping water level

Lift at Well =	261	ft	
Backpressure from 5-micron filter =	16	ft	(7 psi)
Backpressure from LT2 filter =	16	ft	(7 psi)
Backpressure from UV unit =	5	ft	(2 psi)
Total Lift (including backpressure) =	298		

6. Calculate total dynamic head

The total dynamic head is determined by summing all the losses associated with the operation of the pump with the total lift

Head =	301.13
Factor of safety (10% TDH) =	30.1
Total dynamic head =	331.24

CONCLUSION

The total dynamic head that the pump in Well 3 will work against is 331 feet.

SUMMIT CLUB **Date: August 2022**
NORTH CASTLE, NY

CALCULATION OF TOTAL DYNAMIC HEAD - WELL 6A
Calculated by: Michael Shortell
Reviewed by: Stephen Rupar

PROBLEM STATEMENT
Calculate the total dynamic head from Well 6A to the overflow of the atmospheric storage tank under a static water level condition.

PROCESS DESCRIPTION
The headloss for the pump in Well 6A is determined by summing the minor losses associated with flow through the piping and lift between the pump in the well to atmospheric storage tank.

Well 6A
Static level, flowing artesian
Stabilized pumping rate 43 gpm
Pumping Water Level 109.3 ft btoc

ASSUMPTIONS
1. The maximum design pumping rate from the well is 43 gpm.
2. The land surface elevation at Well 1 is approximately 429 ft msl, the well is artesian; therefore, the static water level is 0 feet below land surface (429 feet msl).
3. The submersible well pump will convey groundwater from the water-supply well to the atmospheric storage tank. The overflow elevation for the atmospheric storage tank is approximately 589 ft msl.
4. Three-inch galvanized steel pipe will be used for the riser pipe, 4-inch HDPE pipe will be used from the well to the treatment building (below-grade), 4-inch ductile iron pipe will be used within the treatment building and 4-inch HDPE pipe will be used from the treatment building to the atmospheric storage tank.
5. The inside diameter of the 3-inch galvanized pipe, the 4-inch HDPE pipe and 4-inch ductile iron pipe and the 4-inch HDPE pipe is 3.068 inches, 3.633 inches, 4.026 inches and 3.633 inches, respectively.
6. The pump setting is 150 ft bg, the length of 3-inch piping between well and the treatment building is approximately 1,925 feet and the length of the 4-inch HDPE pipe between the treatment building and the atmospheric storage tank is approximately 50 feet.
7. Approximately 50 feet of 4-inch ductile iron pipe is used within the building.

Acceleration due to gravity =	32.2	ft/sec^2
Elevation of the overflow for the tank =	589	ft msl
elevation at the well head =	429	ft msl
well pumping water elevation =	429	ft msl
Hazen Williams Roughness Coefficient (Steel), C =	100	
Hazen Williams Roughness Coefficient (Plastic), C =	130	
3-inch steel pipe length, L1 =	146	ft
4-inch HDPE pipe length, L2 =	1925	ft
4-inch ductile pipe length (within building), L3 =	50	ft
4-inch HDPE pipe length, L4 =	50	ft
3-inch steel pipe diameter, d1 =	3.068	in
4-inch HDPE pipe diameter, d2 =	3.633	in
4-inch ductile pipe diameter, d3 =	4.026	in
4-inch HDPE pipe diameter, d4 =	3.633	in
Flowrate, Q1 =	43	gpm
1 gpm =	0.00223	ft3/sec

CALCULATION

1. Flow Velocity - Continuity Equation

$$Q = V \times A$$

$$v = \frac{Q \times 0.00223}{[(3.1459/4) \times (d/12)^2]}$$

v(Q1, d1) =	1.865	ft/sec
v(Q1, d2) =	1.330	ft/sec
v(Q1, d3) =	1.083	ft/sec
v(Q1, d4) =	1.330	ft/sec

2. Calculate velocity head and entrance loss

$$\text{Velocity head, VH} = \frac{v^2}{2 \times g}$$

VH(v(Q1, d1)) =	0.0290		
Entrance loss, EL =	k x (v^2/2 x g)		k=1
Entrance Loss =	0.0290		

3. Calculate equivalent lengths

3-inch check valve =	25.50	ft	
3-inch 90 degree elbow =	7.90	ft	
Number of check valves =	1.00	ft	
Number of 90 degree elbows =	1.00	ft	
EQ1 (3-inch steel riser pipe) =	33.40	ft	
4-inch 90 check valve =	11.00	ft	
4-inch 90 degree elbow =	8.00	ft	
Number of check valves =	2.00	ft	
Number of 90 degree elbows =	8.00	ft	
EQ2 (4-inch HDPE from well) =	86.00	ft	
4-inch check valve =	17.00	ft	
4-inch tee =	15.00	ft	
4-inch gate valve =	4.00	ft	
4-inch 90 degree elbow =	14.00	ft	
Flow meter =	10.00	ft	
Number of check valves =	2.00		
Number of 4-inch tees =	3.00		
Number of gate valves =	8.00		
Number of 90 degree elbows =	20.00		
Number of flow meters =	1.00		
EQ3 (4-inch ductile iron) =	356.00		
4-inch 90 degree elbow =	14.00	ft	
Number of check valves =	2.00	ft	3.068
Number of 90 degree elbows =	8.00	ft	
EQ4 (4-inch HDPE to tank) =	92.00	ft	

4. Calculate the friction loss using the Hazen-Williams Equation

$$hf = \frac{10.44 \times L \times Q^{1.85}}{C^{1.85} \times d^{4.87}}$$

hf1 (3-inch steel pipe)=	1.67	ft	
hf2 (4-inch HDPE pipe) =	5.07	ft	
hf3 (4-inch ductile pipe) =	0.62	ft	
hf4 (3-inch HDPE pipe) =	1.02	ft	
Summation =	7.36	ft	

5. Summation of lift

Lift at Well = Elevation at highest point in system - pumping water level

Lift at Well =	160	ft	
Backpressure from 5-micron filter =	16	ft	(7 psi)
Backpressure from LT2 filter =	16	ft	(7 psi)
Backpressure from UV unit =	5	ft	(2 psi)
Total Lift (including backpressure) =	197		

6. Calculate total dynamic head

The total dynamic head is determined by summing all the losses associated with the operation of the pump with the total lift

Head =	204.42
Factor of safety (10% TDH) =	20.4
Total dynamic head =	224.86

CONCLUSION

The total dynamic head under a static water level condition that the pump in Well 1 will work against is 225 feet.

SUMMIT CLUB **Date: August 2022**
NORTH CASTLE, NY

CALCULATION OF TOTAL DYNAMIC HEAD - WELL 6A
Calculated by: Michael Shortell
Reviewed by: Stephen Rupar

PROBLEM STATEMENT
Calculate the total dynamic head from Well 6A to the overflow of the atmospheric storage tank.

PROCESS DESCRIPTION
The headloss for the pump in Well 6A is determined by summing the minor losses associated with flow through the piping and lift between the pump in the well to atmospheric storage tank.

Well 6A
Static level, flowing artesian
Stabilized pumping rate 43 gpm
Pumping Water Level 109.3 ft btoc

ASSUMPTIONS
1. The maximum design pumping rate from the well is 43 gpm.
2. The land surface elevation at Well 1 is approximately 429 ft msl, the pumping water level is 109 feet below land surface (320 feet msl).
3. The submersible well pump will convey groundwater from the water-supply well to the atmospheric storage tank. The overflow elevation for the atmospheric storage tank is approximately 589 ft msl.
4. Three-inch galvanized steel pipe will be used for the riser pipe, 4-inch HDPE pipe will be used from the well to the treatment building (below-grade), 4-inch ductile iron pipe will be used within the treatment building and 4-inch HDPE pipe will be used from the treatment building to the atmospheric storage tank.
5. The inside diameter of the 3-inch galvanized pipe, the 4-inch HDPE pipe and 4-inch ductile iron pipe and the 4-inch HDPE pipe is 3.068 inches, 3.633 inches, 4.026 inches and 3.633 inches, respectively.
6. The pump setting is 150 ft bg, the length of 3-inch piping between well and the treatment building is approximately 1,925 feet and the length of the 4-inch HDPE pipe between the treatment building and the atmospheric storage tank is approximately 50 feet.
7. Approximately 50 feet of 4-inch ductile iron pipe is used within the building.

Acceleration due to gravity =	32.2	ft/sec^2
Elevation of the overflow for the tank =	589	ft msl
elevation at the well head =	429	ft msl
well pumping water elevation =	320	ft msl
Hazen Williams Roughness Coefficient (Steel), C =	100	
Hazen Williams Roughness Coefficient (Plastic), C =	130	
3-inch steel pipe length, L1 =	146	ft
4-inch HDPE pipe length, L2 =	1925	ft
4-inch ductile pipe length (within building), L3 =	50	ft
4-inch HDPE pipe length, L4 =	50	ft
3-inch steel pipe diameter, d1 =	3.068	in
4-inch HDPE pipe diameter, d2 =	3.633	in
4-inch ductile pipe diameter, d3 =	4.026	in
4-inch HDPE pipe diameter, d4 =	3.633	in
Flowrate, Q1 =	43	gpm
1 gpm =	0.00223	ft3/sec

CALCULATION

1. Flow Velocity - Continuity Equation

$$Q = V \times A$$

$$v = \frac{Q \times 0.00223}{[(3.1459/4) \times (d/12)^2]}$$

v(Q1, d1) =	1.865	ft/sec
v(Q1, d2) =	1.330	ft/sec
v(Q1, d3) =	1.083	ft/sec
v(Q1, d4) =	1.330	ft/sec

2. Calculate velocity head and entrance loss

$$\text{Velocity head, VH} = \frac{v^2}{2 \times g}$$

VH(v(Q1, d1)) =	0.0290		
Entrance loss, EL =	k x (v^2/2 x g)		k=1
Entrance Loss =	0.0290		

3. Calculate equivalent lengths

3-inch check valve =	25.50	ft	
3-inch 90 degree elbow =	7.90	ft	
Number of check valves =	1.00	ft	
Number of 90 degree elbows =	1.00	ft	
EQ1 (3-inch steel riser pipe) =	33.40	ft	
4-inch 90 check valve =	11.00	ft	
4-inch 90 degree elbow =	8.00	ft	
Number of check valves =	2.00	ft	
Number of 90 degree elbows =	8.00	ft	
EQ2 (4-inch HDPE from well) =	86.00	ft	
4-inch check valve =	17.00	ft	
4-inch tee =	15.00	ft	
4-inch gate valve =	4.00	ft	
4-inch 90 degree elbow =	14.00	ft	
Flow meter =	10.00	ft	
Number of check valves =	2.00		
Number of -inch tees =	3.00		
Number of gate valves =	8.00		
Number of 90 degree elbows =	20.00		
Number of flow meters =	1.00		
EQ3 (4-inch ductile iron) =	356.00		
4-inch 90 degree elbow =	14.00	ft	
Number of check valves =	2.00	ft	3.068
Number of 90 degree elbows =	8.00	ft	
EQ4 (4-inch HDPE to tank) =	92.00	ft	

4. Calculate the friction loss using the Hazen-Williams Equation

$$hf = \frac{10.44 \times L \times Q^{1.85}}{C^{1.85} \times d^{4.87}}$$

hf1 (3-inch steel pipe)=	1.67	ft
hf2 (4-inch HDPE pipe) =	5.07	ft
hf3 (4-inch ductile pipe) =	0.62	ft
hf4 (3-inch HDPE pipe) =	1.02	ft
Summation =	7.36	ft

5. Summation of lift

Lift at Well = Elevation at highest point in system - pumping water level

Lift at Well =	269	ft	
Backpressure from 5-micron filter =	16	ft	(7 psi)
Backpressure from LT2 filter =	16	ft	(7 psi)
Backpressure from UV unit =	5	ft	(2 psi)
Total Lift (including backpressure) =	306		

6. Calculate total dynamic head

The total dynamic head is determined by summing all the losses associated with the operation of the pump with the total lift

Head =	313.42
Factor of safety (10% TDH) =	31.3
Total dynamic head =	344.76

CONCLUSION

The total dynamic head that the pump in Well 1 will work against is 345 feet.

APPENDIX IX

HARMSCO® MUNICIPAL

Filtration Systems

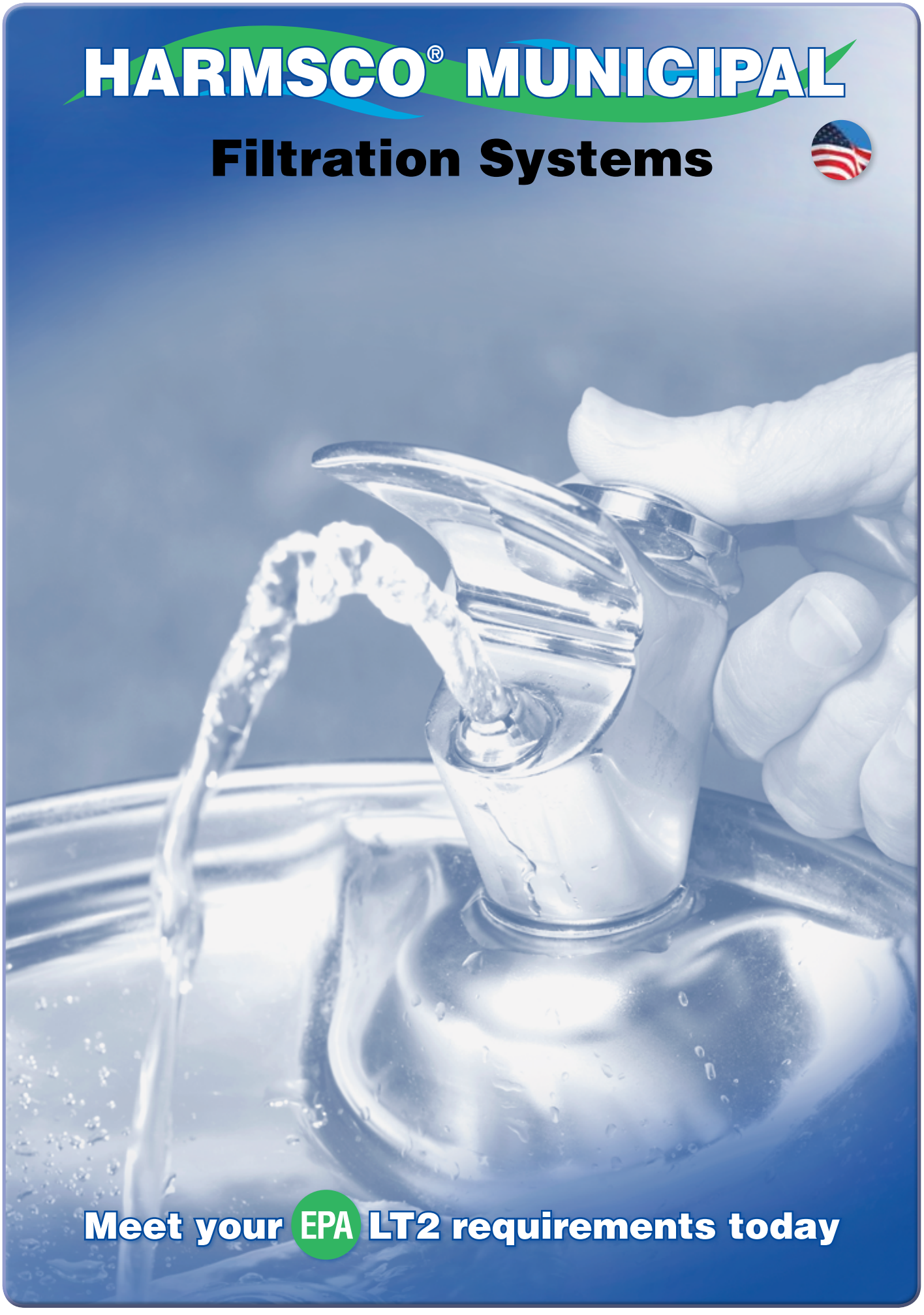

Meet your EPA LT2 requirements today

Harmsco's Cost-effective Solutions for LT2 Compliance

FACTS

What is Long Term 2 Enhanced Surface Water Treatment Rule (LT2 Rule)?

The EPA has developed the LT2 ESWTR (LT2 Rule) to improve your drinking water quality and provide additional protection from disease-causing microorganisms and contaminants.

Why is the EPA concerned about *Cryptosporidium*?

Cryptosporidium is a significant concern in drinking water because it contaminates most drinking water sources, it is resistant to chlorine and other disinfectants, and has caused waterborne disease outbreaks. Consuming water with ***Cryptosporidium*** can cause gastrointestinal illness which may be severe and sometimes fatal for people with weakened immune systems including infants and the elderly. The EPA estimates that full compliance with LT2 ESWTR will reduce the incidence of cryptosporidiosis by 89,000 to 1,459,000 cases per year, with an associated reduction of 20 to 314 premature deaths.

Who does this rule apply to?

The LT2 ESWTR applies to all public water systems that use surface water, or ground water under the direct influence of surface water. This includes about 14,000 systems serving approximately 180 million people.

LT2 ESWTR Toolbox Manual (April, 2010)

COMPLIANCE

- All components used in drinking water treatment process should be evaluated for contaminant leaching and Certified under **ANSI/NSF Standard 61**.
- The **filter housing and cartridge** must be challenge tested per **LT2 ESWTR Toolbox Guidance Manual** with specific instructions regarding:
  - Full scale filter testing, challenge particulate, test solution concentration, challenge test duration, water quality of test solution, maximum design flow rate, challenge particulate seeding method and concentration, sampling procedures and calculation of log removal.
- Testing is product specific, not site specific, meaning it does not have to be tested at every water system seeking removal credit. Instead, a manufacturer or independent third party would challenge test each of its products in order to obtain a 2.0- or 2.5-log Cryptosporidium removal rating:
  - Up to 2.0-log removal for individual cartridge filters showing a minimum of 3.0-log removal in challenge testing.
  - Up to 2.5-log removal for cartridge filters in series showing a minimum of 3.0-log removal in challenge testing.
- A minimum of two (2) bag or cartridge filter housings should be provided to ensure continuous water treatment in the event of failure in the filter operation and to allow for filter maintenance and replacement.

For more information, please visit: http://water.epa.gov/lawsregs/rulesregs/sdwa/lt2/basicinformation.cfm

Harmsco® LT2 Cartridges for Cyst-free Drinking Water

Harmsco® LT2 cartridges and housings exceed the three-log (99.9%) removal requirement described in LT2 ESWTR Toolbox Guidance Manual 8.4.1. for cyst-sized particles. For this reason, Harmsco® LT2 filter cartridge elements are ideal to control cryptosporidium, giardia cysts and other harmful microorganisms to help ensure safe drinking water.

Independent Lab Validated

To verify the performance of the Harmsco® LT2 cartridge and NSF filter housing, Pace/IBR, highly respected independent testing facilities, were selected to conduct challenge tests as outlined in the LT2 ESWTR Toolbox Guidance Manual 8.4.1. This defines the maximum challenge particulate based on detection limit and acceptable cryptosporidium surrogate…2 microns in these tests. The "terminal" pressure drop was determined by Harmsco® to be 30 psi. The Harmsco® LT2 cartridges were tested via single pass protocol per the EPA at 3 separate points: 1.) after initial flushing (clean cartridge), 2.) at 50% of terminal pressure drop (15 psid) and 3.) after terminal pressure loss has been reached (30 psid).

Results of Challenge Test Conducted by IBR

Cartridge Tested	Filter Housing	Tested Flow Rate	Sample Point	Minimum Log Removal
HC/170-LT2	MUNI-1-2FL-304	100 GPM	Initial Efficiency	3.6
			50% Terminal Pressure Drop: 15 psi	3.8
			100% Terminal Pressure Drop: 30 psi	3.7

Features & Benefits

- NSF-61 Listed cartridge filter system removes cyst-sized particles providing safe drinking water
- Pleated microfiber media provides exceptional surface area for longer filter life and increased particle removal
- Patented Dual Durometer end caps ensure positive end cap sealing
- End caps, center tubes and media are thermally bonded as one integral component for added strength while providing superior sealing
- 120 sq. ft. media (surface area) in a single cartridge design
- FDA Listed Materials: Manufactured from materials which are listed for food contact applications in Title 21 of the U.S. Code of Federal Regulations

LT2 Cartridge
Length and O.D.

Low Pressure Drop

Initial pressure drop using HC/170-LT2 cartridges is exceptionally low due to our pleated design and increased surface area. Pressure drop data is shown below, calculated for new cartridges in clear water.

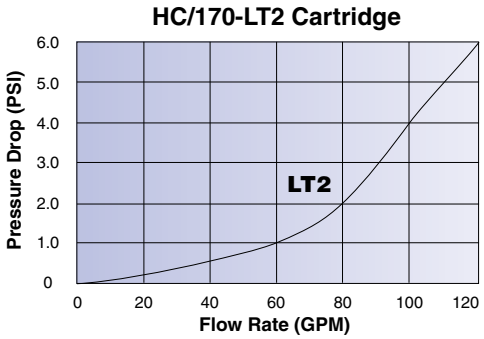

Specifications

- **Filter Media:** FDA borosilicate microglass with acrylic binder
- **Support Media:** spun-bonded polyester laminated on both upstream and downstream sides
- **Center Tubes:** rigid PVC with perforations
- **End Caps:** plastisol (pliable PVC)
- **Heat-seal Bags:** standard on HC/170-LT2 cartridge
- **Flow Rate:** 100 GPM (recommended) per HC/170-LT2 cartridge; > 3.6 Log removal
- **Temperature:** 140˚F (60˚C) max*
  * Temperature limits vary and depend on pressure and time under load.
- **Maximum Change Out:** 30 PSI (2.07 Bar) ΔP
- **Surface Area:** 120 sq. ft. (HC/170-LT2)
- **Dimensions:** 7-3/4" O.D.; 4" I.D.; 30-3/4" L.
- **pH:** 3 to 11

HARMSCO® MUNICIPAL Filtration Systems

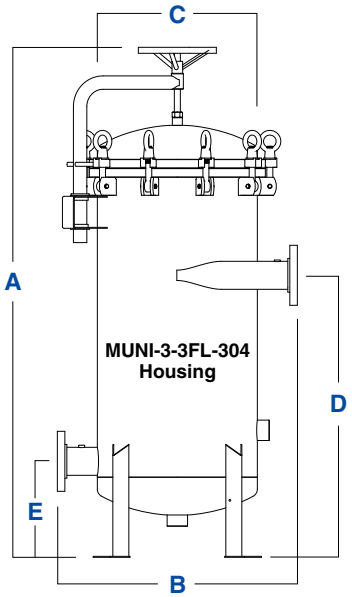

Certified to ANSI-NSF 61

Certified: NSF/ANSI Standard 61

Drinking Water System Components - Health Effects

MUNI-1-2FL-304 MUNI-3-3FL-304 MUNI-5-4FL-304 MUNI-8-6FL-304

Filter Model	A Filter Height	B Width	C Diameter	D Inlet	E Outlet	Pipe Size I/O NPS	Drain Size NPT	Floor Space	Service Height	Shipping Wt. (lbs.)
MUNI-1-2FL-304	48”	15-1/2”	11”	23-5/8”	9-3/4”	2” Flange	3/4”	1.6 ft²	77”	150
MUNI-3-3FL-304	64”	30”	20”	35-1/4”	12”	3” Flange	1-1/2”	4.5 ft²	98-1/2”	420
MUNI-5-4FL-304	74”	37-1/2”	30”	38”	14-1/8”	4” Flange	1-1/2”	8.5 ft²	98-1/2”	1,100
MUNI-8-6FL-304	84”	45-1/4”	35-3/8”	44-1/4”	20-1/2”	6” Flange	1-1/2”	14 ft²	104-1/2”	1,600

Design Recommendations

Pre-filtration is always recommended due to potential changes in environmental conditions. Turbidity must not exceed 1-NTU prior to final filtration stage (HC/170-LT2 cartridge). For more information please contact Harmsco Filtration Products.

Pre-Filtration

Filter Model	NO. of Cartridges	Pleated Media Area (sq.ft.)	Max Flow Rate (GPM)	Max Flow Rate (LPM)	Max Flow Rate (M³/HR)
MUNI-1-2FL-304	1	170	150	568	34
MUNI-3-3FL-304	3	510	450	1,703	102
MUNI-5-4FL-304	5	850	750	2,839	170
MUNI-8-6FL-304	8	1,360	1,200	4,542	272

Final Stage

Filter Model	NO. of Cartridges	Pleated Media Area (sq.ft.)	Max Flow Rate (GPM)	Max Flow Rate (LPM)	Max Flow Rate (M³/HR)
MUNI-1-2FL-304	1	120	100	378	23
MUNI-3-3FL-304	3	360	300	1,135	68
MUNI-5-4FL-304	5	600	500	1,892	113
MUNI-8-6FL-304	8	960	800	3,028	181

Filter Specifications

- 304L or 316L stainless steel, electropolished
- Built to ASME design standards (not code stamped)
- Standpipe - 304L or 316L stainless steel
- Inlet/Outlet - flanged connections
- NSF 61 Listed Ball Valves (2) - 316 stainless steel
- O-ring housing seal, swing bolt closure
- NSF 61 Listed Pressure Gauges (2) - 316 stainless steel
- Pressure - 150 psi (10 bar) max.
- Temperature* - up to 140˚F (60˚C) with standard cartridges

* Temperature ratings based on pressure and time under load.

Note: This publication is to be used as a guide. The data within has been obtained from many sources and is considered to be accurate. Harmsco does not assume liability for the accuracy and/or completeness of this data. Changes to the data can be made without notification. Temperature, Pressure, Flow Rates, Differential Pressures, Chemical Combinations and other unknown factors can affect performance in unknown ways. **Limited Warranty:** Harmsco warrants their products to be free of material and workmanship defects. Determination of suitability of Harmsco products for uses and applications contemplated by Buyer shall be the sole responsibility of Buyer. The end user/installer/buyer shall be liable for the product's performance and suitability regarding their specific intended applications. End users should perform their own tests to determine suitability for each application.

HARMSCO® MUNICIPAL Filtration Systems
P.O. Box 14066, North Palm Beach, FL 33408
(561) 848-9628 • Toll-free: (800) 327-3248 • Fax: (561) 845-2474 • E-mail: sales@harmsco.com
www.harmsco.com

Made in USA

© Harmsco, Inc.

APPENDIX X

ETS-UV
an EVOQUA brand

BUDGET PROPOSAL
ETS - UV SYSTEM

Project Name:	Summit Club
Project Location:	Armonk, NY
Proposal No.:	22 UV 026 MS0
Proposal Date:	2-Dec-2021
Proposal Expires:	2-Mar-2022

Applications Engineer:	Martin Smith
Sales Manager:	Joe Ciurlino
Manufacturers Rep:	Carlsen Systems
Contact:	Tim Bezler
Phone:	(203) 731-4318
email:	tbezler@carlsensystems.com
Consultant:	WSP
Contact:	Michael Shortell
Phone:	203 929 8555

SCOPE OF SUPPLY

Qty	Description
	DESIGN CONSIDERATIONS
	Flowrate: 210 gpm
	Transmittance (1 cm light cell): 85%
	Dose: 40 mJ/cm2
	Configuration: 2 x WF-225-8 (100% redundancy)
	WF-225-8
	UV Chamber
2	ETS-UV WF-225-8 UV systems complete with:
	8" ANSI flange connections, 316L SS
	(2) 2.5 kW Medium pressure UV lamps pependicular to flow
	(2) Quartz sleeve
	Temperature sensor
	Automatic/Mechanical cleaning
	(1) UV intensity sensor
	(1) Operation and maintenance manual
	Power/Control Cabinet
2	Wall mounted power/control cabinets, epoxy coated painted steel, complete with:
	Spectra 3, 7" touch screen
	Electronic ballast
	Dimensions: H 32 x W 24 x D 12-in
	Power supply: 380 - 480V, 3ø, 3-wire + GND, 50/60Hz
	NEMA-12 enclosure
	Cable - UV chamber to power/control cabinet
4	50 ft molded lamp cables
2	50 ft cable kits (sensors / motor)
	Spares
2	UV lamps
1	Electronic ballast
2	Quartz sleeves
2	O Ring seals
2	Wiper rings for quartz sleeve
1	Wiper flap for UV intensity monitor

SCOPE OF ENGINEERING

The following documentation shall be provided by Evoqua:

- Shop Drawing Submittal
  - Detailed Scope of Supply
  - Comments & Clarifications
  - Project Schedule
  - Technical Information / Equipment / Drawings
    Catalog Cutsheets
    Dimensional Drawings / General Assembly Drawings
    Functional Schematics / Piping and Instrumentation Diagrams (when applicable)
    Electrical Schematics (when applicable)
    Control Panel Layouts, Ladder Logic Diagrams (when applicable)
  - Receiving, Handling and Storage
  - Warranty Statement
- Operation and Maintenance Manuals
  - Ordering Information
  - Warranty Statement
  - Introduction
  - Safety Precautions
  - Preventive Maintenance General Information
  - Maintenance Record Card
  - Regional Offices
  - Technical Data
  - Installation
  - Operation
  - Service
  - Illustrations
  - Preventive Maintenance Kits and Spare Parts List
  - Additional Literature

NOTE - In an effort to be environmentally responsible, one (1) hard copy of the submittal and O+M will be supplied and up to eight (8) copies will be supplied on flash drive(s). Additional hardcopies of the submittal and O+M can be supplied at a cost of $50.00 each.

CLARIFICATIONS & EXCEPTIONS

Section	Part	Description
NOTICE		The scope of supply and pricing are based on Evoqua's standard equipment selection, standard terms of sale and warranty terms. Any variations from these standards may affect this quotation.

Variations from Evoqua's standard Terms and Conditions of Sale and the Clarifications/Exceptions identified above can be negotiated on an individual, as needed basis prior to award of contract. However, please note that this proposal is expressly conditioned upon: (i) acceptance by the Owner or Contractor of the Terms and Conditions of Sale and the Clarifications/Exceptions as described within this proposal, without modification or addition, or a mutually agreed upon set of commercial and technical terms; and (ii) Evoqua's satisfactory completion of an anti-corruption due diligence review of the purchaser.

ITEMS NOT INCLUDED IN SCOPE

- Mechanical and electrical installation labor
- Civil work including supply of anchor bolts
- Interconnecting piping
- Interconnecting wiring (unless detailed above)
- Valves, fittings, appurtenances not specifically listed above
- Installation supervision
- All taxes, fees, lien waivers, certificates, bonds and licenses
- Room ventilation, air conditioning, or lighting
- Videotaping (unless a videotape agreement is signed)

COMMERCIAL OFFERING

Payment Terms: 30% Due on Approval of Submittals
60% Due on Shipment of Equipment
10% Due on Startup (not to exceed 90 days after Equipment Shipment
All payments are due 30 days from date of invoice and are not subject to retention.
FOB: Factory
Freight to Job Site: Included
Submittal: 4-6 weeks after receipt and approval of purchase order
Shipment: 12-14 weeks after receipt of full information and approved drawings (when required)
Startup: 3 On-site day(s) included over 2 Trip(s)
Training: Concurrent with startup
Extended Warranty: Not Included
Price: **$82,584**

Other Conditions:

1) Evoqua Water Technolgies, LLC (Evoqua) proposes to furnish materials, and/or equipment for the project identified at the beginning of this proposal. Any items not shown above as detailed under (i) 'SCOPE OF SUPPLY', (ii) 'SCOPE OF ENGINEERING', or (iii) other attachments to this proposal, are EXCLUDED. In addition:
   a. Evoqua' price will be held valid for a period of 90 days from the date of this proposal ("Proposal Date"); provided, however, in the event (A) Evoqua receives an order from Buyer within 90 days from the Proposal Date and the percentage change in the U.S. Department of Labor Consumer's Price Index (all items) (the "Index") as it existed two months prior to the Proposal Date and the Index as it existed two months preceding the month in which Evoqua receives Buyer's order is greater than 10%, then Evoqua shall have the right to reprice this proposal or (B) Buyer's order is received more than 90 days

specifications) (the "Information") is confidential and/or proprietary and has been prepared for your use solely in evaluating the purchase of the equipment and/or services described herein. Transmission of all or any part of the Information to others, or use by you for any purpose other than such evaluation, is expressly prohibited without Evoqua' prior written consent.

4) Please address & send your purchase order to:

Neptune Benson Inc.
Warwick, RI 02886-1286
Attn: Martin Smith
ph: 401.262.4731
fax: 401.821.7129
email: martin.smith@evoqua.com

Standard Terms & Conditions of Sale

1-May-15

1. Applicable Terms. These terms govern the purchase and sale of equipment, products, related services, leased products, and media goods if any (collectively herein "Work"), referred to in Seller's proposal ("Seller's Documentation"). Whether these terms are included in an offer or an acceptance by Seller, such offer or acceptance is expressly conditioned on Buyer's assent to these terms. Seller rejects all additional or different terms in any of Buyer's forms or documents.

2. Payment. Buyer shall pay Seller the full purchase price as set forth in Seller's Documentation. Unless Seller's Documentation specifically provides otherwise, freight, storage, insurance and all taxes, levies, duties, tariffs, permits or license fees or other governmental charges relating to the Work or any incremental increases thereto shall be paid by Buyer. If Seller is required to pay any such charges, Buyer shall immediately reimburse Seller. If Buyer claims a tax or other exemption or direct payment permit, it shall provide Seller with a valid exemption certificate or permit and indemnify, defend and hold Seller harmless from any taxes, costs and penalties arising out of same. All payments are due within 30 days after receipt of invoice. Buyer shall be charged the lower of 1 ½% interest per month or the maximum legal rate on all amounts not received by the due date and shall pay all of Seller's reasonable costs (including attorneys' fees) of collecting amounts due but unpaid. All orders are subject to credit approval by Seller. Back charges without Seller's prior written approval shall not be accepted.

3. Delivery. Delivery of the Work shall be in material compliance with the schedule in Seller's Documentation. Unless Seller's Documentation provides otherwise, delivery terms are ExWorks Seller's factory (Incoterms 2010). Title to all Work shall pass upon receipt of payment for the Work under the respective invoice. Unless otherwise agreed to in writing by Seller, shipping dates are approximate only and Seller shall not be liable for any loss or expense (consequential or otherwise) incurred by Buyer or Buyer's customer if Seller fails to meet the specified delivery schedule.

4. Ownership of Materials and Licenses. All devices, designs (including drawings, plans and specifications), estimates, prices, notes, electronic data, software and other documents or information prepared or disclosed by Seller, and all related intellectual property rights, shall remain Seller's property. Seller grants Buyer a non-exclusive, non-transferable license to use any such material solely for Buyer's use of the Work. Buyer shall not disclose any such material to third parties without Seller's prior written consent. Buyer grants Seller a non-exclusive, non-transferable license to use Buyer's name and logo for marketing purposes, including but not limited to, press releases, marketing and promotional materials, and web site content.

5. Changes. Neither party shall implement any changes in the scope of Work described in Seller's Documentation without a mutually agreed upon change order. Any change to the scope of the Work, delivery schedule for the Work, any Force Majeure Event, any law, rule, regulation, order, code, standard or requirement which requires any change hereunder shall entitle Seller to an equitable adjustment in the price and time of performance.

6. Force Majeure Event. Neither Buyer nor Seller shall have any liability for any breach or delay (except for breach of payment obligations) caused by a Force Majeure Event. If a Force Majeure Event exceeds six (6) months in duration, the Seller shall have the right to terminate the Agreement without liability, upon fifteen (15) days written notice to Buyer, and shall be entitled to payment for work performed prior to the date of termination. "Force Majeure Event" shall mean events or circumstances that are beyond the affected party's control and could not reasonably have been easily avoided or overcome by the affected party and are not substantially attributable to the other party. Force Majeure Event may include, but is not limited to, the following circumstances or events: war, act of foreign enemies, terrorism, riot, strike, or lockout by persons other than by Seller or its sub-suppliers, natural catastrophes or (with respect to on-site work), unusual weather conditions.

7. Warranty. Subject to the following sentence, Seller warrants to Buyer that the (i) Work shall materially conform to the description in Seller's Documentation and shall be free from defects in material and workmanship and (ii) the Services shall be performed in a timely and workmanlike manner. Determination of suitability of treated water for any use by Buyer shall be the sole and exclusive responsibility of Buyer. The foregoing warranty shall not apply to any Work that is specified or otherwise demanded by Buyer and is not manufactured or selected by Seller, as to which (i) Seller hereby assigns to Buyer, to the extent assignable, any warranties made to Seller and (ii) Seller shall have no other liability to Buyer under warranty, tort or any other legal theory. The Seller warrants the Work, or any components thereof, through the earlier of (i) eighteen (18) months from delivery of the Work or (ii) twelve (12) months from initial operation of the Work or ninety (90) days from the performance of services (the "Warranty Period"). If Buyer gives Seller prompt written notice of breach of this warranty within the Warranty Period, Seller shall, at its sole option and as Buyer's sole and exclusive remedy, repair or replace the subject parts, re-perform the Service or refund the purchase price. Unless otherwise agreed to in writing by Seller, (i) Buyer shall be responsible for any labor required to gain access to the Work so that Seller can assess the available remedies and (ii) Buyer shall be responsible for all costs of installation of repaired or replaced Work. If Seller determines that any claimed breach is not, in fact, covered by this warranty, Buyer shall pay Seller its then customary charges for any repair or replacement made by Seller. Seller's warranty is conditioned on Buyer's (a) operating and maintaining the Work in accordance with Seller's instructions, (b) not making any unauthorized repairs or alterations, and (c) not being in default of any payment obligation to Seller. Seller's warranty does not cover (i) damage caused by chemical action or abrasive material, misuse or improper installation (unless installed by Seller) and (ii) media goods (such as, but not limited to, resin, membranes, or granular activated carbon media) once media goods are installed. THE WARRANTIES SET FORTH IN THIS SECTION 7 ARE THE SELLER'S SOLE AND EXCLUSIVE WARRANTIES AND ARE SUBJECT TO THE LIMITATION OF LIABILITY PROVISION BELOW. SELLER MAKES NO OTHER WARRANTIES OF ANY KIND, EXPRESS OR IMPLIED, INCLUDING WITHOUT LIMITATION, ANY WARRANTY OF MERCHANTABILITY OR FITNESS FOR PURPOSE.

8. Indemnity. Seller shall indemnify, defend and hold Buyer harmless from any claim, cause of action or liability incurred by Buyer as a result of third party claims for personal injury, death or damage to tangible property, to the extent caused by Seller's negligence. Seller shall have the sole authority to direct the defense of and settle any indemnified claim. Seller's indemnification is conditioned on Buyer (a) promptly, within the Warranty Period, notifying Seller of any claim, and (b) providing reasonable cooperation in the defense of any claim.

9. Assignment. Neither party may assign this Agreement, in whole or in part, nor any rights or obligations hereunder without the prior written consent of the other party; provided, however, the Seller may assign its rights and obligations under these terms to its affiliates or in connection with the sale or transfer of the Seller's business and Seller may grant a security interest in the Agreement and/or assign proceeds of the agreement without Buyer's consent.

10. Termination. Either party may terminate this agreement, upon issuance of a written notice of breach and a thirty (30) day cure period, for a material breach (including but not limited to, filing of bankruptcy, or failure to fulfill the material obligations of this agreement). If Buyer suspends an order without a change order for ninety (90) or more days, Seller may thereafter terminate this Agreement without liability, upon fifteen (15) days written notice to Buyer, and shall be entitled to payment for work performed, whether delivered or undelivered, prior to the date of termination.

11. Dispute Resolution. Seller and Buyer shall negotiate in good faith to resolve any dispute relating hereto. If, despite good faith efforts, the parties are unable to resolve a dispute or claim arising out of or relating to this Agreement or its breach, termination, enforcement, interpretation or validity, the parties will first seek to agree on a forum for mediation to be held in a mutually agreeable site. If the parties are unable to resolve the dispute through mediation, then any dispute, claim or controversy arising out of or relating to this Agreement or the breach, termination, enforcement, interpretation or validity thereof, including the determination of the scope or applicability of this agreement to arbitrate, shall be determined by arbitration in Pittsburgh, Pennsylvania before three arbitrators who are lawyers experienced in the discipline that is the subject of the dispute and shall be jointly selected by Seller and Buyer. The arbitration shall be administered by JAMS pursuant to its Comprehensive Arbitration Rules and Procedures. The Arbitrators shall issue a reasoned decision of a majority of the arbitrators, which shall be the decision of the panel. Judgment may be entered upon the arbitrators' decision in any court of competent jurisdiction. The substantially prevailing party as determined by the arbitrators shall be reimbursed by the other party for all costs, expenses and charges, including without limitation reasonable attorneys' fees, incurred by the prevailing party in connection with the arbitration. For any order shipped outside of the United States, any dispute shall be referred to and finally determined by the International Center for Dispute Resolution in accordance with the provisions of its International Arbitration Rules, enforceable under the New York Convention (Convention on the Recognition and Enforcement of Foreign Arbitral Awards) and the governing language shall be English.

12. Export Compliance. Buyer acknowledges that Seller is required to comply with applicable export laws and regulations relating to the sale, exportation, transfer, assignment, disposal and usage of the Work provided under this Agreement, including any export license requirements. Buyer agrees that such Work shall not at any time directly or indirectly be used, exported, sold, transferred, assigned or otherwise disposed of in a manner which will result in non-compliance with such applicable export laws and regulations. It shall be a condition of the continuing performance by Seller of its obligations hereunder that compliance with such export laws and regulations be maintained at all times. BUYER AGREES TO INDEMNIFY AND HOLD SELLER HARMLESS FROM ANY AND ALL COSTS, LIABILITIES, PENALTIES, SANCTIONS AND FINES RELATED TO NON-COMPLIANCE WITH APPLICABLE EXPORT LAWS AND REGULATIONS.

13. LIMITATION OF LIABILITY. NOTWITHSTANDING ANYTHING ELSE TO THE CONTRARY, SELLER SHALL NOT BE LIABLE FOR ANY CONSEQUENTIAL, INCIDENTAL, SPECIAL, PUNITIVE OR OTHER INDIRECT DAMAGES, AND SELLER'S TOTAL LIABILITY ARISING AT ANY TIME FROM THE SALE OR USE OF THE WORK, INCLUDING WITHOUT LIMITATION ANY LIABILITY FOR MECHANICAL WARRANTY CLAIMS OR FOR ANY BREACH OR FAILURE TO PERFORM ANY OBLIGATION UNDER THE CONTRACT, SHALL NOT EXCEED THE PURCHASE PRICE PAID FOR THE WORK. THESE LIMITATIONS APPLY WHETHER THE LIABILITY IS BASED ON CONTRACT, TORT, STRICT LIABILITY OR ANY OTHER THEORY.

14. Rental Equipment / Services. Any leased or rented equipment ("Leased Equipment") provided by Seller shall at all times be the property of Seller with the exception of certain miscellaneous installation materials purchased by the Buyer, and no right or property interest is transferred to the Buyer, except the right to use any such Leased Equipment as provided herein. Buyer agrees that it shall not pledge, lend, or create a security interest in, part with possession of, or relocate the Leased Equipment. Buyer shall be responsible to maintain the Leased Equipment in good and efficient working order. At the end of the initial term specified in the order, the terms shall automatically renew for the identical period unless canceled in writing by Buyer or Seller not sooner than three (3) months nor later than one (1) month from termination of the initial order or any renewal terms. Upon any renewal, Seller shall have the right to issue notice of increased pricing which shall be effective for any renewed terms unless Buyer objects in writing within fifteen (15) days of issuance of said notice. If Buyer timely cancels service in writing prior to the end of the initial or any renewal term this shall not relieve Buyer of its obligations under the order for the monthly rental service charge which shall continue to be due and owing. Upon the expiration or termination of this Agreement, Buyer shall promptly make any Leased Equipment available to Seller for removal. Buyer hereby agrees that it shall grant Seller access to the Leased Equipment location and shall permit Seller to take possession of and remove the Leased Equipment without resort to legal process and hereby releases Seller from any claim or right of action for trespass or damages caused by reason of such entry and removal.

15. Miscellaneous. These terms, together with any Contract Documents issued or signed by the Seller, comprise the complete and exclusive statement of the agreement between the parties (the "Agreement") and supersede any terms contained in Buyer's documents, unless separately signed by Seller. No part of the Agreement may be changed or cancelled except by a written document signed by Seller and Buyer. No course of dealing or performance, usage of trade or failure to enforce any term shall be used to modify the Agreement. To the extent the Agreement is considered a subcontract under Buyer's prime contract with an agency of the United States government, in case of Federal Acquisition Regulations (FARs) flow down terms, Seller will be in compliance with Section 44.403 of the FAR relating to commercial items and those additional clauses as specifically listed in 52.244-6, Subcontracts for Commercial Items (OCT 2014). If any of these terms is unenforceable, such term shall be limited only to the extent necessary to make it enforceable, and all other terms shall remain in full force and effect. The Agreement shall be governed by the laws of the Commonwealth of Pennsylvania without regard to its conflict of laws provisions. Both Buyer and Seller reject the applicability of the United Nations Convention on Contracts for the international sales of goods to the relationship between the parties and to all transactions arising from said relationship.

NAM

Certification/Approvals: USEPA UVDGM, NSF61, CE Marked, MET UL Certified, NSF 50 - 3 Log Crypto, NVI

Common Option Features

Features	Standard Chamber Specification	Options
Lamp Life	9,000 Hours	
Lamp design	TWISTLOK™ Quick Release, Enhanced Safety - Medium Pressure	
Lamp and Wiper Access	Single Ended Access	
Design Pressure	150 psi Design (225 psi test)	
Number of Sensors	1-off (2-off for model WF-430-12)	
Variable Power	100% to 30% Power (automatic dose pacing)	
Connection Type	ANSI 150	
Generator Material	316L Stainless Steel	Superduplex (25Cr) Stainless Steel
Internal / External Finish	Electropolished	
Internal Surface Finish	125 Ra	
Quartz Type	High Purity Quartz	TiO2 Doped quartz
Mounting	Fixed Brackets	
Cleaning system	Automatic Wiper System	
Temperature Probe	AT-487 (PT-100)	
Vent Port	1/2" NPT (air release valve supplied for horizontal installations)	
Drain Port	1/4" NPT	
Sacrificial Anode - COMPONENT EXTRA	Included (aquatics applications only)	
Installation	Horizontal or Vertical (lamps must be horizontal)	

Common Option Features (continued)

Features	Standard Cabinet Specification	Options
Material	Epoxy Coated Mild steel - RAL 7035	Stainless Steel (304)
Control Type	Spectra 3 Microprocessor	
Power supply	Electronic Ballast	
Protection	NEMA12	NEMA4X
Ventilation	Forced Air (fan)	
Interface	Spectra Touch	Spectra Membrane
Communication	Modbus (RS-422 / RS-485)	Profibus DP, Modbus TCP, Ethernet IP
Protection	Door Locked MCCB Isolator	
Operating Temperature	Max Working Ambient 113°F	
Digital Inputs	3-off selectable	Additional 3-off selectable
Digital Outputs	3-off selectable	Additional 3-off selectable
Analogue Inputs	1-off selectable	Additional 1-off selectable
Analogue Outputs	1-off selectable	Additional 1-off selectable

Unique Features

UV System	WF-115-3-N	WF-115-4-N	WF-125-6-N	WF-215-6-N	WF-215-8-N	WF-225-8-N	WF-230-10-N	WF-430-12-N
Number of Lamps	1	1	1	2	2	2	2	4
Connection Size (inch/mm)	ANSI/DN 3/80	ANSI/DN 4/100	ANSI/DN 6/150	ANSI/DN 6/150	ANSI/8/2 6/150	ANSI/DN 8/200	ANSI/DN 10/250	ANSI/DN 12/300
Power Consumption (variable)	0.7 - 1.6 kW	0.7 - 1.6 kW	1.1 - 2.7 kW	1.3 - 3.3 kW	1.3 - 3.3 kW	2.0 - 5.5 kW	2.6 - 6.6 kW	4.0 - 13.0 kW
200v - 50/60hz	Standard	Standard	Standard	Standard	Standard	N/A	N/A	N/A
208 - 240v 50/60hz	Standard	Standard	Standard	Standard	Standard	Standard	N/A	N/A
380v - 480v 50/60hz	N/A	N/A	N/A	N/A	N/A	Option	Standard	Standard
Cable length								
30 feet	Standard	Standard	Standard	Standard	Standard	Standard	Standard	Standard
45 feet	Option	Option	Option	Option	Option	Option	Option	Option
90 feet	Option	Option	Option	Requires local JB	Requires local JB	Option	Option	Option

Dimensions

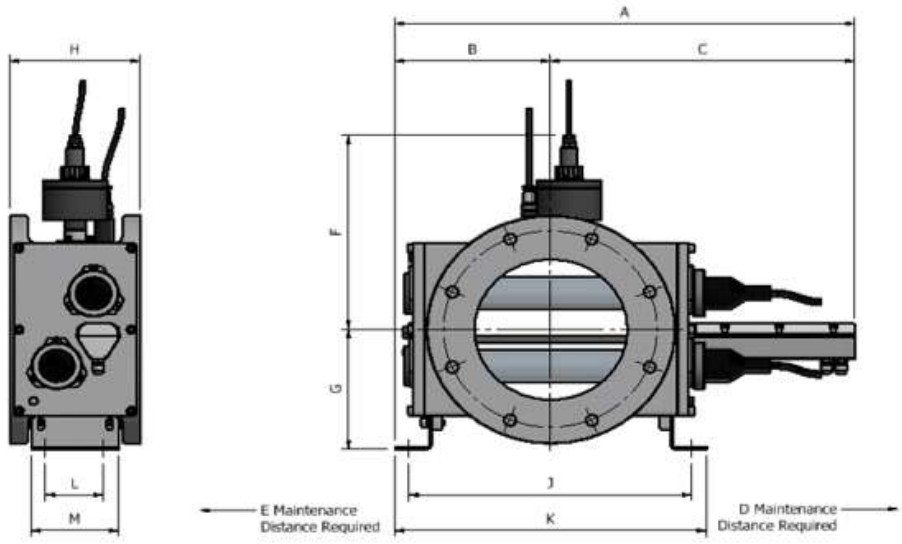

UV System	WF-115-3-N	WF115-4-N	WF-125-6-N	WF-215-6-N	WF-215-8-N	WF-225-8-N	WF-230-10-N	WF-430-12-N
Chamber Dimensions								
A (mm / inches)	520 / 20.3	520 / 20.3	635 / 24.8	635 / 24.8	635 / 24.8	635 / 24.8	795 / 31.0	795 / 31.0
B (mm / inches)	158 / 6.2	158 / 6.2	215 / 8.4	215 / 8.4	215 / 8.4	215 / 8.4	305 / 11.9	305 / 11.9
C (mm / inches)	362 / 14.1	362 / 14.1	420 / 16.4	420 / 16.4	420 / 16.4	420 / 16.4	490 / 19.1	490 / 19.1
D (mm / inches)	370 / 14.4	370 / 14.4	485 / 18.9	485 / 18.9	485 / 18.9	485 / 18.9	625 / 24.4	625 / 24.4
E (mm / inches)	250 / 9.8	250 / 9.8	250 / 9.8	250 / 9.8	250 / 9.8	250 / 9.8	250 / 9.8	250 / 9.8
F (mm / inches)	167 / 6.5	167 / 6.5	226 / 8.8	226 / 8.8	226 / 8.8	226 / 8.8	242 / 9.4	267 / 10.4
G (mm / inches)	122 / 4.8	122 / 4.8	180 / 7.0	180 / 7.0	180 / 7.0	180 / 7.0	233 / 9.1	258 / 10.1
H (mm / inches)	160 / 6.2	160 / 6.2	180 / 7.0	180 / 7.0	180 / 7.0	180 / 7.0	190 / 7.4	190 / 7.4
J (mm / inches)	275 / 10.7	275 / 10.7	390 / 15.2	390 / 15.2	390 / 15.2	390 / 15.2	560 / 21.8	560 / 21.8
K (mm / inches)	315 / 12.3	315 / 12.3	430 / 16.8	430 / 16.8	430 / 16.8	430 / 16.8	610 / 23.8	610 / 23.8
L (mm / inches)	80 / 3.1	80 / 3.1	80 / 3.1	80 / 3.1	80 / 3.1	80 / 3.1	140 / 5.5	140 / 5.5
M (mm / inches)	120 / 4.7	120 / 4.7	120 / 4.7	120 / 4.7	120 / 4.7	120 / 4.7	180 / 7.0	180 / 7.0
Dry Weight (kg / lbs)	27 / 60	26 / 57	57 / 126	58 / 128	53 / 117	53 / 117	78 / 172	88 / 194
Wet Weight (kg / lbs)	30 / 66	28 / 62	67 / 148	68 / 150	64 / 141	64 / 141	99 / 218	112 / 247
Cabinet Dimensions (NEMA12)								
Width (mm / inches)	500 / 20	500 / 20	600 / 24	600 / 24	600 / 24	600 / 24	600 / 24	600 / 24
Height (mm / inches)	500 / 20	500 / 20	800 / 32	800 / 32	800 / 32	800 / 32	800 / 32	1200 / 48
Depth (mm / inches)	250 / 10	250 / 10	300 / 12	300 / 12	300 / 12	300 / 12	300 / 12	300 / 12
Weight (kg / lbs)	30 / 66	30 / 66	50 / 110	50 / 110	50 / 110	55 / 121	55 / 121	90 / 199

210 Sixth Avenue #3300, Pittsburgh, PA 15222, United States

+1-724-772-0044 www.evoqua.com

Wafer and Twistlok are trademarks of Evoqua Water Technologies LLC, its subsidiaries or affiliates, in some countries

All information presented herein is believed reliable and in accordance with accepted engineering practices. Evoqua makes no warranties as to the completeness of this information. Users are responsible for evaluating individual product suitability for specific applications. Evoqua assumes no liability whatsoever for any special, indirect or consequential damages arising from the sale, resale or misuse of its products.

© 2021 Evoqua Water Technologies Subject to change without notice. DS-WF-EN-US-DS-0921

NAM

Certification/Approvals: USEPA UVDGM, NSF61, CE Marked, MET UL Certified, NSF 50 - 3 Log Crypto, NVI

Common Option Features

Features	Standard Chamber Specification	Options
Lamp Life	9,000 Hours	
Lamp design	TWISTLOK™ Quick Release, Enhanced Safety - Medium Pressure	
Lamp and Wiper Access	Single Ended Access	
Design Pressure	150 psi Design (225 psi test)	
Number of Sensors	1-off (2-off for model WF-430-12)	
Variable Power	100% to 30% Power (automatic dose pacing)	
Connection Type	ANSI 150	
Generator Material	316L Stainless Steel	Superduplex (25Cr) Stainless Steel
Internal / External Finish	Electropolished	
Internal Surface Finish	125 Ra	
Quartz Type	High Purity Quartz	TiO2 Doped quartz
Mounting	Fixed Brackets	
Cleaning system	Automatic Wiper System	
Temperature Probe	AT-487 (PT-100)	
Vent Port	1/2" NPT (air release valve supplied for horizontal installations)	
Drain Port	1/4" NPT	
Sacrificial Anode - COMPONENT EXTRA	Included (aquatics applications only)	
Installation	Horizontal or Vertical (lamps must be horizontal)	

Common Option Features (continued)

Features	Standard Cabinet Specification	Options
Material	Epoxy Coated Mild steel - RAL 7035	Stainless Steel (304)
Control Type	Spectra 3 Microprocessor	
Power supply	Electronic Ballast	
Protection	NEMA12	NEMA4X
Ventilation	Forced Air (fan)	
Interface	Spectra Touch	Spectra Membrane
Communication	Modbus (RS-422 / RS-485)	Profibus DP, Modbus TCP, Ethernet IP
Protection	Door Locked MCCB Isolator	
Operating Temperature	Max Working Ambient 113°F	
Digital Inputs	3-off selectable	Additional 3-off selectable
Digital Outputs	3-off selectable	Additional 3-off selectable
Analogue Inputs	1-off selectable	Additional 1-off selectable
Analogue Outputs	1-off selectable	Additional 1-off selectable

Unique Features

UV System	WF-115-3-N	WF-115-4-N	WF-125-6-N	WF-215-6-N	WF-215-8-N	WF-225-8-N	WF-230-10-N	WF-430-12-N
Number of Lamps	1	1	1	2	2	2	2	4
Connection Size (inch/mm)	ANSI/DN 3/80	ANSI/DN 4/100	ANSI/DN 6/150	ANSI/DN 6/150	ANSI/8/2 6/150	ANSI/DN 8/200	ANSI/DN 10/250	ANSI/DN 12/300
Power Consumption (variable)	0.7 - 1.6 kW	0.7 - 1.6 kW	1.1 - 2.7 kW	1.3 - 3.3 kW	1.3 - 3.3 kW	2.0 - 5.5 kW	2.6 - 6.6 kW	4.0 - 13.0 kW
200v - 50/60hz	Standard	Standard	Standard	Standard	Standard	N/A	N/A	N/A
208 - 240v 50/60hz	Standard	Standard	Standard	Standard	Standard	Standard	N/A	N/A
380v - 480v 50/60hz	N/A	N/A	N/A	N/A	N/A	Option	Standard	Standard
Cable length								
30 feet	Standard	Standard	Standard	Standard	Standard	Standard	Standard	Standard
45 feet	Option	Option	Option	Option	Option	Option	Option	Option
90 feet	Option	Option	Option	Requires local JB	Requires local JB	Option	Option	Option

Dimensions

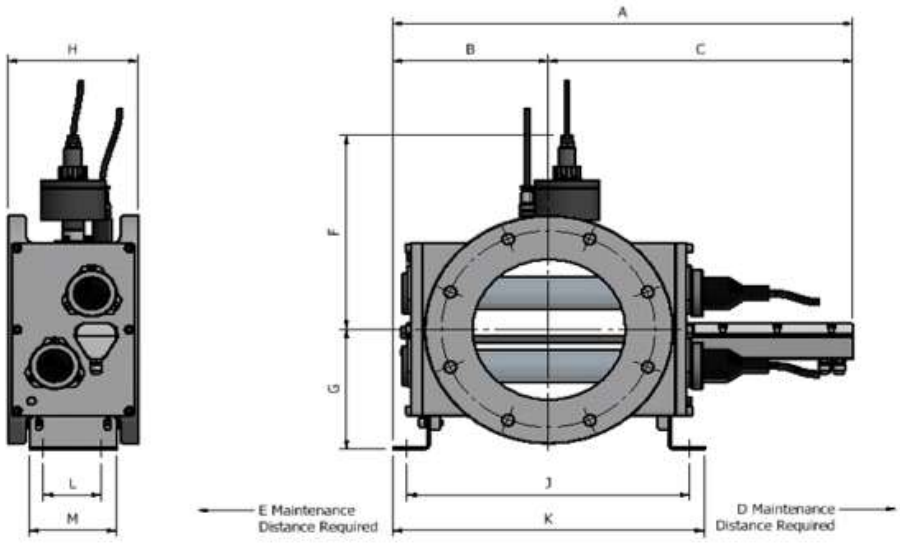

UV System	WF-115-3-N	WF115-4-N	WF-125-6-N	WF-215-6-N	WF-215-8-N	WF-225-8-N	WF-230-10-N	WF-430-12-N
Chamber Dimensions								
A (mm / inches)	520 / 20.3	520 / 20.3	635 / 24.8	635 / 24.8	635 / 24.8	635 / 24.8	795 / 31.0	795 / 31.0
B (mm / inches)	158 / 6.2	158 / 6.2	215 / 8.4	215 / 8.4	215 / 8.4	215 / 8.4	305 / 11.9	305 / 11.9
C (mm / inches)	362 / 14.1	362 / 14.1	420 / 16.4	420 / 16.4	420 / 16.4	420 / 16.4	490 / 19.1	490 / 19.1
D (mm / inches)	370 / 14.4	370 / 14.4	485 / 18.9	485 / 18.9	485 / 18.9	485 / 18.9	625 / 24.4	625 / 24.4
E (mm / inches)	250 / 9.8	250 / 9.8	250 / 9.8	250 / 9.8	250 / 9.8	250 / 9.8	250 / 9.8	250 / 9.8
F (mm / inches)	167 / 6.5	167 / 6.5	226 / 8.8	226 / 8.8	226 / 8.8	226 / 8.8	242 / 9.4	267 / 10.4
G (mm / inches)	122 / 4.8	122 / 4.8	180 / 7.0	180 / 7.0	180 / 7.0	180 / 7.0	233 / 9.1	258 / 10.1
H (mm / inches)	160 / 6.2	160 / 6.2	180 / 7.0	180 / 7.0	180 / 7.0	180 / 7.0	190 / 7.4	190 / 7.4
J (mm / inches)	275 / 10.7	275 / 10.7	390 / 15.2	390 / 15.2	390 / 15.2	390 / 15.2	560 / 21.8	560 / 21.8
K (mm / inches)	315 / 12.3	315 / 12.3	430 / 16.8	430 / 16.8	430 / 16.8	430 / 16.8	610 / 23.8	610 / 23.8
L (mm / inches)	80 / 3.1	80 / 3.1	80 / 3.1	80 / 3.1	80 / 3.1	80 / 3.1	140 / 5.5	140 / 5.5
M (mm / inches)	120 / 4.7	120 / 4.7	120 / 4.7	120 / 4.7	120 / 4.7	120 / 4.7	180 / 7.0	180 / 7.0
Dry Weight (kg / lbs)	27 / 60	26 / 57	57 / 126	58 / 128	53 / 117	53 / 117	78 / 172	88 / 194
Wet Weight (kg / lbs)	30 / 66	28 / 62	67 / 148	68 / 150	64 / 141	64 / 141	99 / 218	112 / 247
Cabinet Dimensions (NEMA12)								
Width (mm / inches)	500 / 20	500 / 20	600 / 24	600 / 24	600 / 24	600 / 24	600 / 24	600 / 24
Height (mm / inches)	500 / 20	500 / 20	800 / 32	800 / 32	800 / 32	800 / 32	800 / 32	1200 / 48
Depth (mm / inches)	250 / 10	250 / 10	300 / 12	300 / 12	300 / 12	300 / 12	300 / 12	300 / 12
Weight (kg / lbs)	30 / 66	30 / 66	50 / 110	50 / 110	50 / 110	55 / 121	55 / 121	90 / 199

210 Sixth Avenue #3300, Pittsburgh, PA 15222, United States

+1-724-772-0044 www.evoqua.com

Wafer and Twistlok are trademarks of Evoqua Water Technologies LLC, its subsidiaries or affiliates, in some countries

All information presented herein is believed reliable and in accordance with accepted engineering practices. Evoqua makes no warranties as to the completeness of this information. Users are responsible for evaluating individual product suitability for specific applications. Evoqua assumes no liability whatsoever for any special, indirect or consequential damages arising from the sale, resale or misuse of its products.

© 2021 Evoqua Water Technologies Subject to change without notice. DS-WF-EN-US-DS-0921

NAM

Certification/Approvals: USEPA UVDGM, NSF61, CE Marked, MET UL Certified, NSF 50 - 3 Log Crypto, NVI

Common Option Features

Features	Standard Chamber Specification	Options
Lamp Life	9,000 Hours	
Lamp design	TWISTLOK™ Quick Release, Enhanced Safety - Medium Pressure	
Lamp and Wiper Access	Single Ended Access	
Design Pressure	150 psi Design (225 psi test)	
Number of Sensors	1-off (2-off for model WF-430-12)	
Variable Power	100% to 30% Power (automatic dose pacing)	
Connection Type	ANSI 150	
Generator Material	316L Stainless Steel	Superduplex (25Cr) Stainless Steel
Internal / External Finish	Electropolished	
Internal Surface Finish	125 Ra	
Quartz Type	High Purity Quartz	TiO2 Doped quartz
Mounting	Fixed Brackets	
Cleaning system	Automatic Wiper System	
Temperature Probe	AT-487 (PT-100)	
Vent Port	1/2" NPT (air release valve supplied for horizontal installations)	
Drain Port	1/4" NPT	
Sacrificial Anode - COMPONENT EXTRA	Included (aquatics applications only)	
Installation	Horizontal or Vertical (lamps must be horizontal)	

Common Option Features (continued)

Features	Standard Cabinet Specification	Options
Material	Epoxy Coated Mild steel - RAL 7035	Stainless Steel (304)
Control Type	Spectra 3 Microprocessor	
Power supply	Electronic Ballast	
Protection	NEMA12	NEMA4X
Ventilation	Forced Air (fan)	
Interface	Spectra Touch	Spectra Membrane
Communication	Modbus (RS-422 / RS-485)	Profibus DP, Modbus TCP, Ethernet IP
Protection	Door Locked MCCB Isolator	
Operating Temperature	Max Working Ambient 113°F	
Digital Inputs	3-off selectable	Additional 3-off selectable
Digital Outputs	3-off selectable	Additional 3-off selectable
Analogue Inputs	1-off selectable	Additional 1-off selectable
Analogue Outputs	1-off selectable	Additional 1-off selectable

Unique Features

UV System	WF-115-3-N	WF-115-4-N	WF-125-6-N	WF-215-6-N	WF-215-8-N	WF-225-8-N	WF-230-10-N	WF-430-12-N
Number of Lamps	1	1	1	2	2	2	2	4
Connection Size (inch/mm)	ANSI/DN 3/80	ANSI/DN 4/100	ANSI/DN 6/150	ANSI/DN 6/150	ANSI/8/2 6/150	ANSI/DN 8/200	ANSI/DN 10/250	ANSI/DN 12/300
Power Consumption (variable)	0.7 - 1.6 kW	0.7 - 1.6 kW	1.1 - 2.7 kW	1.3 - 3.3 kW	1.3 - 3.3 kW	2.0 - 5.5 kW	2.6 - 6.6 kW	4.0 - 13.0 kW
200v - 50/60hz	Standard	Standard	Standard	Standard	Standard	N/A	N/A	N/A
208 - 240v 50/60hz	Standard	Standard	Standard	Standard	Standard	Standard	N/A	N/A
380v - 480v 50/60hz	N/A	N/A	N/A	N/A	N/A	Option	Standard	Standard
Cable length								
30 feet	Standard	Standard	Standard	Standard	Standard	Standard	Standard	Standard
45 feet	Option	Option	Option	Option	Option	Option	Option	Option
90 feet	Option	Option	Option	Requires local JB	Requires local JB	Option	Option	Option

Dimensions

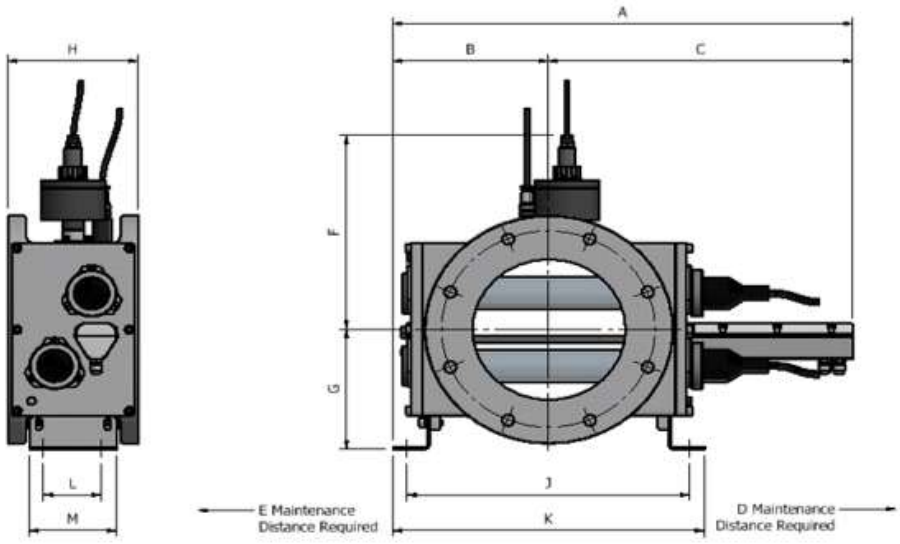

UV System	WF-115-3-N	WF115-4-N	WF-125-6-N	WF-215-6-N	WF-215-8-N	WF-225-8-N	WF-230-10-N	WF-430-12-N
Chamber Dimensions								
A (mm / inches)	520 / 20.3	520 / 20.3	635 / 24.8	635 / 24.8	635 / 24.8	635 / 24.8	795 / 31.0	795 / 31.0
B (mm / inches)	158 / 6.2	158 / 6.2	215 / 8.4	215 / 8.4	215 / 8.4	215 / 8.4	305 / 11.9	305 / 11.9
C (mm / inches)	362 / 14.1	362 / 14.1	420 / 16.4	420 / 16.4	420 / 16.4	420 / 16.4	490 / 19.1	490 / 19.1
D (mm / inches)	370 / 14.4	370 / 14.4	485 / 18.9	485 / 18.9	485 / 18.9	485 / 18.9	625 / 24.4	625 / 24.4
E (mm / inches)	250 / 9.8	250 / 9.8	250 / 9.8	250 / 9.8	250 / 9.8	250 / 9.8	250 / 9.8	250 / 9.8
F (mm / inches)	167 / 6.5	167 / 6.5	226 / 8.8	226 / 8.8	226 / 8.8	226 / 8.8	242 / 9.4	267 / 10.4
G (mm / inches)	122 / 4.8	122 / 4.8	180 / 7.0	180 / 7.0	180 / 7.0	180 / 7.0	233 / 9.1	258 / 10.1
H (mm / inches)	160 / 6.2	160 / 6.2	180 / 7.0	180 / 7.0	180 / 7.0	180 / 7.0	190 / 7.4	190 / 7.4
J (mm / inches)	275 / 10.7	275 / 10.7	390 / 15.2	390 / 15.2	390 / 15.2	390 / 15.2	560 / 21.8	560 / 21.8
K (mm / inches)	315 / 12.3	315 / 12.3	430 / 16.8	430 / 16.8	430 / 16.8	430 / 16.8	610 / 23.8	610 / 23.8
L (mm / inches)	80 / 3.1	80 / 3.1	80 / 3.1	80 / 3.1	80 / 3.1	80 / 3.1	140 / 5.5	140 / 5.5
M (mm / inches)	120 / 4.7	120 / 4.7	120 / 4.7	120 / 4.7	120 / 4.7	120 / 4.7	180 / 7.0	180 / 7.0
Dry Weight (kg / lbs)	27 / 60	26 / 57	57 / 126	58 / 128	53 / 117	53 / 117	78 / 172	88 / 194
Wet Weight (kg / lbs)	30 / 66	28 / 62	67 / 148	68 / 150	64 / 141	64 / 141	99 / 218	112 / 247
Cabinet Dimensions (NEMA12)								
Width (mm / inches)	500 / 20	500 / 20	600 / 24	600 / 24	600 / 24	600 / 24	600 / 24	600 / 24
Height (mm / inches)	500 / 20	500 / 20	800 / 32	800 / 32	800 / 32	800 / 32	800 / 32	1200 / 48
Depth (mm / inches)	250 / 10	250 / 10	300 / 12	300 / 12	300 / 12	300 / 12	300 / 12	300 / 12
Weight (kg / lbs)	30 / 66	30 / 66	50 / 110	50 / 110	50 / 110	55 / 121	55 / 121	90 / 199

210 Sixth Avenue #3300, Pittsburgh, PA 15222, United States

+1-724-772-0044 www.evoqua.com

Wafer and Twistlok are trademarks of Evoqua Water Technologies LLC, its subsidiaries or affiliates, in some countries

All information presented herein is believed reliable and in accordance with accepted engineering practices. Evoqua makes no warranties as to the completeness of this information. Users are responsible for evaluating individual product suitability for specific applications. Evoqua assumes no liability whatsoever for any special, indirect or consequential damages arising from the sale, resale or misuse of its products.

© 2021 Evoqua Water Technologies Subject to change without notice. DS-WF-EN-US-DS-0921

ATG UV TECHNOLOGY

THIRD-PARTY VALIDATION OF THE WF-115-4, WF-125-6, and WF-225-8 UV Reactors

February 2020

CONFIDENTIAL
NOT FOR DISTRIBUTION

carollo
Engineers...Working Wonders With Water®

12592 WEST EXPLORER DRIVE • SUITE 200 • BOISE, IDAHO 83713 • (208) 376-2288 • FAX (208) 376-2251

ATG UV TECHNOLOGY

THIRD-PARTY VALIDATION OF THE WF-115-4, WF-125-6, and WF-225-8 UV REACTORS

TABLE OF CONTENTS

Page No.

SECTION 1 1-1

SUMMARY 1-1

1.1 UV SENSOR, POWER, AND DOSE ALGORITHMS 1-4
1.1.1 Power Equation 1-4
1.1.2 UV Sensor Equation 1-5
1.1.3 UV Dose Equation 1-6
1.1.4 Calculated Dose Approach without UVT monitoring 1-7
1.1.5 UV Dose Monitoring 1-7
1.2 VALIDATED RANGE 1-9
1.3 INACTIVATION CREDIT 1-16
1.3.1 RED Bias Factor 1-17
1.3.2 Uncertainty of Validation 1-17
1.3.2.1 Uncertainty of Interpolation 1-17
1.3.2.2 Uncertainty of UV Dose Response 1-18
1.3.2.3 Uncertainty of UV Sensors 1-19
1.3.3 Polychromatic Bias 1-19
1.4 VALIDATED UV DOSE FOR PATHOGEN CREDIT 1-20
1.4.1 MS2 Equations that do not Use a UVT Monitor 1-26
1.4.2 Validated UV Dose for *Cryptosporidium*, Giardia, and Adenovirus Credit with a UVT monitor 1-28
1.5 UVDGM COMPLIANCE 1-38

SECTION 2 2-1

UV REACTOR DOCUMENTATION 2-1

2.1 REACTOR 2-1
2.2 LAMPS 2-19
2.3 LAMP SLEEVES 2-20
2.4 UV BALLASTS 2-22
2.5 UV INTENSITY SENSORS 2-22
2.6 REFERENCE UV INTENSITY SENSORS 2-23
2.7 UV SENSOR PORT 2-23

SECTION 3 3-1

VALIDATION FACILITIES 3-1

3.1 TEST TRAIN 3-1
3.2 PRODUCTION OF CHALLENGE MICROORGANISMS 3-13

3.3 ENUMERATION OF CHALLENGE MICROBES 3-13
3.4 COLLIMATED BEAM APPARATUS 3-13
3.5 THIRD PARTY OVERSIGHT 3-14

SECTION 4 4-1

METHODS 4-1

4.1 WATER QUALITY MEASUREMENTS 4-1
4.1.1 UVT Measurements 4-1
4.1.2 Total Chlorine 4-1
4.2 UV SENSOR PERFORMANCE 4-1
4.2.1 Reference UV Sensor Checks 4-2
4.2.2 Dependence of Measured UV Intensity on Ballast Power Setting and UVT 4-2
4.3 BIODOSIMETRY 4-2
4.4 QUALITY ASSURANCE AND QUALITY CONTROL 4-3
4.4.1 UV Spectrophotometer Calibration Check 4-4
4.4.2 Flowmeter 4-4
4.4.3 Microbial Controls and Blanks 4-4
4.4.4 Microbial Stability 4-5
4.4.5 Steady State Conditions 4-5

SECTION 5 5-1

RESULTS 5-1

5.1 WATER QUALITY 5-1
5.2 ELECTRICAL POWER CONSUMPTION 5-1
5.3 UV SENSOR PERFORMANCE 5-2
5.3.1 Reference UV Sensor Calibration 5-3
5.3.2 Reference UV Sensor Checks 5-3
5.3.3 UV Intensity as a Function of Ballast Power Setting and UVT 5-4
5.3.4 Relative Lamp Output 5-8
5.4 BIODOSIMETRY 5-9
5.4.1 Challenge Microbe UV Dose-Response 5-10
5.4.2 Biodosimetry Data Analysis 5-20
5.4.3 Calculated Dose Approach without UVT monitoring 5-28
5.4.4 Prediction of RED 5-32
5.4.5 Validated Range 5-34
5.5 UV DOSE MONITORING 5-41
5.5.1 Log Inactivation Calculation Example 1 5-44
5.5.2 Log Inactivation Calculation Example 2 5-45
5.6 VALIDATION EQUATION QA/QC 5-47

SECTION 6 6-1

VALIDATION FACTORS AND UV DOSE MONITORING FOR DISINFECTION CREDIT 6-1

6.1 REQUIRED UV DOSE 6-1
6.2 VALIDATION FACTORS 6-1
6.2.1 RED Bias 6-2
6.2.2 Uncertainty of Validation 6-2

6.2.2.1 Uncertainty of Interpolation 6-2
6.2.2.2 Uncertainty of UV Sensors 6-3
6.2.2.3 Uncertainty of UV Dose Response....6-4
6.2.3 Polychromatic Bias....6-6
6.2.3.1 Action Spectra 6-7
6.2.3.2 Lamp Aging and Fouling 6-15
6.3 VALIDATED UV DOSE FOR PATHOGEN CREDIT 6-16
6.3.1 MS2 Equations that do not Use a UVT Monitor....6-21
6.3.2 Validated UV Dose for *Cryptosporidium*, Giardia, and Adenovirus Credit 6-23
6.3.3 Example Calculations....6-24

SECTION 7 7-1

UVDGM COMPLIANCE....7-1

Appendix A: Functional and Biodosimetric Test Data
Appendix B: UV Sensor Data Sheets
Appendix C: Accreditation Certificates and Microbial Analysis Methods
Appendix D: Collimated Beam Procedures, UV Radiometer Calibration Certificates
Appendix E: UV Spectrophotometer Performance Certificates and Calibration Checks
Appendix F: Flow Meter and Power Meter Calibration Certificates
Appendix G: Data Sheets for WF-115-4, WF-125-6, and WF-225-8 Reactors and Components
Appendix H: Dose-Response QA/QC Bounds
Appendix I: Calculating the Uncertainty of the UV Dose Response Fit

LIST OF TABLES

Table 1.1 Range of Power Settings, Flow Rate, UVT used During Testing 1-4
Table 1.2 UV Sensor Equation Coefficient Values (Equation 1.2) 1-6
Table 1.3 Model Coefficients for Equation 1.3 Obtained Using Multivariate Non-Linear Regression 1-6
Table 1.4 Coefficients for Equation 1.5 1-7
Table 1.5 Model Coefficients for Equation 1.10 and 1.11....1-8
Table 1.6 Coefficients for Linear Interpolation of UV Sensitivity....1-9
Table 1.7 Validation Envelope Bounds for Figure 1.4 (WF-115-4)....1-10
Table 1.8 Validation Envelope Bounds for Figure 1.5 (WF-125-6)....1-10
Table 1.9 Validation Envelope Bounds for Figure 1.6 (WF-225-8)....1-11
Table 1.10 UV Dose Requirements for Pathogen Inactivation Credit as Defined by the LT2ESWTR 1-16
Table 1.11 Uncertainty of Interpolation for Equation 1.3 1-18
Table 1.12 U_{DR} at 1-log Inactivation 1-18
Table 1.13 Coefficient Values for Predicting ASCF (Equation 1.20) 1-20
Table 1.14 Cryptosporidium, Giardia, and Adenovirus Coefficients for Equation 1.22....1-21
Table 1.15 Minimum *Crypto* RED (mJ/cm^2) Required for *Crypto* Log Inactivation Credits for the WF-115-4 1-29
Table 1.16 Minimum Giardia RED (mJ/cm^2) Required for Giardia Log

	Inactivation Credits for the WF-115-4	1-30
Table 1.17	Minimum Adenovirus RED (mJ/cm^2) Required for Adenovirus Log Inactivation Credits for the WF-115-4	1-31
Table 1.18	Minimum *Crypto* RED (mJ/cm^2) Required for *Crypto* Log Inactivation Credits for the WF-125-6	1-32
Table 1.19	Minimum Giardia RED (mJ/cm^2) Required for Giardia Log Inactivation Credits for the WF-125-6	1-33
Table 1.20	Minimum Adenovirus RED (mJ/cm^2) Required for Adenovirus Log Inactivation Credits for the WF-125-6	1-34
Table 1.21	Minimum *Crypto* RED (mJ/cm^2) Required for *Crypto* Log Inactivation Credits for the WF-225-8	1-35
Table 1.22	Minimum Giardia RED (mJ/cm^2) Required for Giardia Log Inactivation Credits for the WF-225-8	1-36
Table 1.23	Minimum Adenovirus RED (mJ/cm^2) Required for Adenovirus Log Inactivation Credits for the WF-225-8	1-37
Table 2.1	Key dimensions for the WF-115-4 UV Reactor	2-10
Table 2.2	Key dimensions for the WF-125-6 UV Reactor	2-13
Table 2.3	Key dimensions for the WF-225-8 UV Reactor	2-16
Table 2.4	Germicidal Output of the MP UV lamps used During Validation Testing	2-20
Table 3.1	UV Radiometers and Detectors Used by the Microbiology Lab	3-14
Table 5.1	UV Reference Sensor Information	5-2
Table 5.2	UV Sensor Equation Coefficient Values (Equation 5.2)	5-4
Table 5.3	Results of MS2 Phage Dose-Response Regression Analysis	5-12
Table 5.4	Results of T1UV Phage Dose-Response Regression Analysis	5-12
Table 5.5	Model Coefficients for Equation 5.6 Obtained Using Multivariate Non-Linear Regression	5-20
Table 5.6	Grubb's Statistics and Standard Deviation of the Residuals with the Best Fit to Equation 5.6	5-24
Table 5.7	Biodosimetry Data Identified as Outliers or not enumerated by GAP	5-24
Table 5.8	Coefficients for Equation 5.16	5-30
Table 5.9	Validation Envelope Bounds for Figure 5.15	5-38
Table 5.10	Validation Envelope Bounds for Figure 5.16	5-38
Table 5.11	Validation Envelope Bounds for Figure 5.17	5-38
Table 5.12	Coefficients for Calculating the UV sensitivity of MS2 and T1UV phage	5-41
Table 5.13	Coefficients for Linear Interpolation of UV Sensitivity	5-42
Table 5.14	Example 1 Calculations for *Cryptosporidium*	5-45
Table 5.15	Example 1: Predicted Log Inactivation, RED and D_L of Target Microbes at 50 m^3/hr, 90% UVT and S/S_0 = 0.87 for the WF-115-4	5-45
Table 5.16	Example 2 Calculations for *Cryptosporidium*	5-46
Table 5.17	Example 2: Predicted Log Inactivation, RED and D_L of Target Microbes at 50 m^3/hr, 90% UVT and S/S_0 = 0.87 for the WF-115-4	5-46
Table 6.1	UV Dose Requirements for Pathogen Inactivation Credit as Defined by the LT2ESWTR	6-1
Table 6.2	Uncertainty of Interpolation for Predicting Log Inactivation	6-3
Table 6.3	U_{DR} at 1-log Inactivation	6-6
Table 6.4	ASCF Weighting Factors Associated with Each Water Type	6-11
Table 6.5	ASCF Values for Cryptosporidium and Giardia Credit	6-12
Table 6.6	ASCF Values for Adenovirus Credit	6-13
Table 6.7	ASCF Values for MS2 Credit	6-14
Table 6.8	Average Weighted ASCF Values	6-15
Table 6.9	Coefficient Values for Predicting ASCF (Equation 6.13)	6-15

Table 6.10 Cryptosporidium, Giardia, and Adenovirus Coefficients for Equation 6.15....6-16
Table 6.11 Calculation of *Cryptosporidium* Credit with Example 3....6-25
Table 6.12a Minimum *Crypto* RED (mJ/cm^2) Required for *Crypto* Log Inactivation Credits for the WF 115-4....6-26
Table 6.12b Validation Factors Required for *Crypto* Log Inactivation Credits for the WF-115-4....6-27
Table 6.13a Minimum Giardia RED (mJ/cm^2) Required for Giardia Log Inactivation Credits for the WF-115-4....6-28
Table 6.13b Validation Factors Required for Giardia Log Inactivation Credits for the WF-115-4....6-29
Table 6.14a Minimum Adenovirus RED (mJ/cm^2) Required for Adenovirus Log Inactivation Credits for the WF-115-4....6-30
Table 6.14b Validation Factors Required for Adenovirus Log Inactivation Credits for the WF-115-4....6-31
Table 6.15a Minimum *Crypto* RED (mJ/cm^2) Required for *Crypto* Log Inactivation Credits for the WF-125-6....6-32
Table 6.15b Validation Factors Required for *Crypto* Log Inactivation Credits for the WF-125-6....6-33
Table 6.16a Minimum Giardia RED (mJ/cm^2) Required for Giardia Log Inactivation Credits for the WF-125-6....6-34
Table 6.16b Validation Factors Required for Giardia Log Inactivation Credits for the WF-125-6....6-35
Table 6.17a Minimum Adenovirus RED (mJ/cm^2) Required for Adenovirus Log Inactivation Credits for the WF-125-6....6-36
Table 6.17b Validation Factors Required for Adenovirus Log Inactivation Credits for the WF-125-6....6-37
Table 6.18a Minimum *Crypto* RED (mJ/cm^2) Required for *Crypto* Log Inactivation Credits for the WF-225-8....6-38
Table 6.18b Validation Factors Required for *Crypto* Log Inactivation Credits for the WF-225-8....6-39
Table 6.19a Minimum Giardia RED (mJ/cm^2) Required for Giardia Log Inactivation Credits for the WF-225-8....6-40
Table 6.19b Validation Factors Required for Giardia Log Inactivation Credits for the WF-225-8....6-41
Table 6.20a Minimum Adenovirus RED (mJ/cm^2) Required for Adenovirus Log Inactivation Credits for the WF-225-8....6-42
Table 6.20b Validation Factors Required for Adenovirus Log Inactivation Credits for the WF-225-8....6-43
Table 7.1 Compliance to UVDGM Checklist 5.1: UV Reactor Documentation....7-2
Table 7.2 Compliance to UVDGM Checklist 5.2: Validation Test Plan....7-3
Table 7.3 Compliance to UVDGM Checklist 5.3: Validation Report....7-4
Table 7.4 Compliance to UVDGM Checklist 5.4: QA/QC....7-5
Table 7.5 Compliance to UVDGM Checklist 5.5: Validation Report Review....7-7

LIST OF FIGURES

Figure 1.1a ATG WF-115-4 UV Reactor, isometric view. (Source: ATG).....1-1
Figure 1.1b ATG WF-125-6 UV Reactor, isometric view. (Source: ATG).....1-2
Figure 1.1c ATG WF-225-8 UV Reactor, isometric view. (Source: ATG).....1-2
Figure 1.2 ATG Piping Configuration as Installed at the Validation Site in Portland 1-3
Figure 1.3 UV Reactor Power Consumption Measured as a Function of the Ballast Power Setting 1-5
Figure 1.4a Validated Range of UVT versus Flow for the WF-115-4 1-11
Figure 1.4b Validated Range of Predicted Log Removal versus UVT for WF-115-4....1-12
Figure 1.5a Validated Range of UVT versus Flow for the WF-125-6 1-12
Figure 1.5b Validated Range of Predicted Log Removal versus UVT for WF-125-6....1-13
Figure 1.6a Validated Range of UVT versus Flow for the WF-225-8 1-13
Figure 1.6b Validated Range of Predicted Log Removal versus UVT for WF-225-8....1-14
Figure 1.7 Measured log inactivation as a function of $S/S_0/Q/D_L$ for the WF-115-4 ...1-15
Figure 1.8 Measured log inactivation as a function of $S/S_0/Q/D_L$ for the WF-125-6 ...1-15
Figure 1.9 Measured log inactivation as a function of $S/S_0/Q/D_L$ for the WF-225-8 ...1-16
Figure 1.10a Cryptosporidium Validated Dose as a function of S/Q for the WF-115-4. *Dashed line shows minimum validated dose as a function of S/Q.*.....1-21
Figure 1.10b Giardia Validated Dose as a function of S/Q for the WF-115-4. *Dashed line shows minimum validated dose as a function of S/Q.* 1-22
Figure 1.10c Adenovirus Validated Dose as a function of S/Q for the WF-115-4. *Dashed line shows minimum validated dose as a function of S/Q.* 1-22
Figure 1.11a Cryptosporidium Validated Dose as a function of S/Q for the WF-125-6. *Dashed line shows minimum validated dose as a function of S/Q.*.....1-23
Figure 1.11b Giardia Validated Dose as a function of S/Q for the WF-125-6. *Dashed line shows minimum validated dose as a function of S/Q.* 1-23
Figure 1.11c Adenovirus Validated Dose as a function of S/Q for the WF-125-6. *Dashed line shows minimum validated dose as a function of S/Q.* 1-24
Figure 1.12a Cryptosporidium Validated Dose as a function of S/Q for the WF-225-8. *Dashed line shows minimum validated dose as a function of S/Q.*.....1-24
Figure 1.12b Giardia Validated Dose as a function of S/Q for the WF-225-8. *Dashed line shows minimum validated dose as a function of S/Q.* 1-25
Figure 1.12c Adenovirus Validated Dose as a function of S/Q for the WF-225-8. *Dashed line shows minimum validated dose as a function of S/Q.* 1-25
Figure 1.13 MS2 Dose as a function of S/Q for the WF-115-4. *Dashed line shows minimum validated dose as a function of S/Q*. 1-26
Figure 1.14 MS2 Dose as a function of S/Q for the WF-125-6. *Dashed line shows minimum validated dose as a function of S/Q.* 1-27
Figure 1.15 MS2 Dose as a function of S/Q for the WF-225-8. *Dashed line shows minimum validated dose as a function of S/Q.* 1-27
Figure 2.1a ATG WF-115-4 Reactor, isometric view. (Source: ATG).....2-2
Figure 2.1b ATG WF-125-6 Reactor, isometric view. (Source: ATG).....2-2
Figure 2.1c ATG WF-225-8 Reactor, isometric view. (Source: ATG).....2-3
Figure 2.2a ATG WF-115-4 Reactor, cross-sectional view. (Source: ATG) 2-3
Figure 2.2b ATG WF-125-6 Reactor, cross-sectional view. (Source: ATG) 2-4
Figure 2.2c ATG WF-225-8 Reactor, cross-sectional view. (Source: ATG) 2-4
Figure 2.3a ATG WF-115-4 Reactor, top view. (Source: ATG) 2-5
Figure 2.3b ATG WF-125-6 Reactor, top view. (Source: ATG) 2-5
Figure 2.3c ATG WF-225-8 Reactor, top view. (Source: ATG) 2-6
Figure 2.4a ATG WF-115-4 Reactor, end view, upstream side. (Source: ATG).....2-6

Figure 2.4b ATG WF-125-6 Reactor, end view, upstream side. (Source: ATG).....2-7
Figure 2.4c ATG WF-225-8 Reactor, end view, upstream side. (Source: ATG).....2-7
Figure 2.5a Wiper Shaft for the ATG WF-115-4 Reactor. (Source: ATG) 2-8
Figure 2.5b Wiper Shaft for the ATG WF-125-6 and WF-225-8 Reactors. (Source: ATG) 2-8
Figure 2.6a Wiper Carriage for the ATG WF-115-4 and WF-125-6 Reactors. (Source: ATG) 2-8
Figure 2.6b ATG WF-225-8 Reactor, wiper carriage. (Source: ATG).....2-9
Figure 2.7 Spectral Output for the MP UV lamps used during Validation Testing (Source: ATG) 2-19
Figure 2.8a Quartz Sleeve Detail for the WF-115-4 Reactor. All dimensions in mm. (Source: ATG) 2-21
Figure 2.8b Quartz Sleeve Detail for the WF-125-6 and the WF-225-8. All dimensions in mm. (Source: ATG) 2-21
Figure 2.9 Quartz Sleeve Transmittance Characteristics Detail. (Source: GE).....2-21
Figure 2.10 UV Sensor Detail. All dimensions in mm. (Source: ATG).....2-22
Figure 3.1 Portland Validation Site Treatment Train Layout.....3-2
Figure 3.2 Plan View of the Inlet and Outlet Piping to the ATG WF UV Reactors.....3-3
Figure 3.3 Common inlet piping from injection point to inlet sample tap 3-4
Figure 3.4 Low-flow and high-flow configurations for Testing the WF-115-4, WF-125-6, and WF-225-8 Reactors 3-4
Figure 3.5 WF 225-8 Validation Piping Detail.....3-7
Figure 3.6 WF 125-6 Validation Piping Detail.....3-9
Figure 3.7 WF 115-4 Validation Piping Detail.....3-11
Figure 5.1 UV Reactor Power Consumption Measured by the Fluke 434 Power Quality Analyzer as a Function of the Ballast Power Setting.....5-2
Figure 5.2 Relationship between All Reference and Duty UV Sensor Measurements Obtained during the WF-115-4, WF-125-6, and WF-225-8 Reactor Validations 5-3
Figure 5.3a Relation between the Measured and Predicted UV Intensities for the WF-115-4 Reactor 5-5
Figure 5.3b Prediction Residuals versus Predicted UV Sensor Readings for the WF-115-4 Reactor 5-5
Figure 5.4a Relation between the Measured and Predicted UV Intensities for the WF-125-6 Reactor 5-6
Figure 5.4b Prediction Residuals versus Predicted UV Sensor Readings for the WF-125-6 Reactor 5-6
Figure 5.5a Relation between the Measured and Predicted UV Intensities for the WF-225-8 Reactor 5-7
Figure 5.5b Prediction Residuals versus Predicted UV Sensor Readings for the WF-225-8 Reactor 5-7
Figure 5.6 Relative Lamp Output as a Function of Ballast Power Setting Predicted by Equation 5.3.....5-9
Figure 5.7a UV Dose-Response of MS2 Phage Measured on January 8, 2019 5-13
Figure 5.7b UV Dose-Response of MS2 Phage Measured on January 16, 2019 5-14
Figure 5.7c UV Dose-Response of MS2 Phage Measured on March 13, 2019 5-15
Figure 5.7d UV Dose-Response of MS2 Phage Measured on March 14, 2019 5-16
Figure 5.7e UV Dose-Response of MS2 Phage Measured on March 19, 2019 5-17
Figure 5.8a UV Dose-Response of T1UV Phage Measured on March 12, 2019 5-18
Figure 5.8b UV Dose-Response of T1UV Phage Measured on April 12, 2017 5-19
Figure 5.9a Measured vs. Predicted Log Removal for the WF-115-4 5-25

Figure 5.9b Model Residuals vs. Predicted Log Removal for the WF-115-4 5-25
Figure 5.10a Measured vs. Predicted Log Removal for the WF-125-6 5-26
Figure 5.10b Model Residuals vs. Predicted Log Removal for the WF-125-6 5-26
Figure 5.11a Measured vs. Predicted Log Removal for the WF-225-8 5-27
Figure 5.11b Model Residuals vs. Predicted Log Removal for the WF-225-8 5-27
Figure 5.12a Measured Log Inactivation as a function of $S/Q/D_L$ for the WF-115-4 5-28
Figure 5.12b Measured Log Inactivation as a function of $S/Q/D_L$ for the WF-125-6 5-29
Figure 5.12c Measured Log Inactivation as a function of $S/Q/D_L$ for the WF-225-8 5-29
Figure 5.13a Measured Log Inactivation as a function of $S/Q/D_L$ for the WF-115-4 5-30
Figure 5.13b Measured Log Inactivation as a function of $S/Q/D_L$ for the WF-125-6 5-31
Figure 5.13c Measured Log Inactivation as a function of $S/Q/D_L$ for the WF-225-8 5-31
Figure 5.14a Measured Versus Predicted RED for the WF-115-4 5-32
Figure 5.14b Measured Versus Predicted RED for the WF-125-6 5-33
Figure 5.14c Measured Versus Predicted RED for the WF-225-8 5-33
Figure 5.15a Validated Range of UVT versus Flow for the WF-115-4 5-35
Figure 5.15b Validated Range of Predicted Log Removal versus UVT for the WF-115-4 5-35
Figure 5.16a Validated Range of UVT versus Flow for the WF-125-6 5-36
Figure 5.16b Validated Range of Predicted Log Removal versus UVT for the WF-125-6 5-36
Figure 5.17a Validated Range of UVT versus Flow for the WF-225-8 5-37
Figure 5.17b Validated Range of Predicted Log Removal versus UVT for the WF-225-8 5-37
Figure 5.18 Measured log inactivation as a function of $S/S_0/Q/D_L$ for the WF-115-4 5-39
Figure 5.19 Measured log inactivation as a function of $S/S_0/Q/D_L$ for the WF-125-6 5-40
Figure 5.20 Measured log inactivation as a function of $S/S_0/Q/D_L$ for the WF-225-8 5-40
Figure 5.21 D_L as a function of UV dose for *Cryptosporidium*, *Giardia*, and adenovirus 5-43
Figure 5.22a Comparison of MS2 Predicted Log Inactivation and T1UV Predicted Log Inactivation for the WF-115-4 5-48
Figure 5.22b Comparison of MS2 Predicted Log Inactivation and T1UV Predicted Log Inactivation for the WF-125-6 5-48
Figure 5.22c Comparison of MS2 Predicted Log Inactivation and T1UV Predicted Log Inactivation for the WF-225-8 5-49
Figure 5.23a Comparison of Equations Calibrated for High and Low S/S_0 values for the WF-115-4 5-50
Figure 5.23b Comparison of Equations Calibrated for High and Low S/S_0 values for the WF-125-6 5-50
Figure 5.23c Comparison of Equations Calibrated for High and Low S/S_0 values for the WF-225-8 5-51
Figure 6.1a Uncertainty of the UV Dose-Response of MS2 as a Function of log i 6-5
Figure 6.1b Uncertainty of the UV Dose-Response of T1UV as a Function of log i 6-5
Figure 6.1c Uncertainty of the UV Dose-Response as a Function of log i for all microbes 6-6
Figure 6.2 Comparison of wavelength response of MS2 phage and *Cryptosporidium* (Source: WRF Project 4376) 6-7
Figure 6.3 Averaged UV Absorbance Spectra Measured during this Validation 6-9
Figure 6.4a UV Absorbance Spectra of Combination Water from WRF Project 4376

and UV Absorbance Spectra of Water Measured during this Validation 6-9
Figure 6.4b UV Absorbance Spectra of Combination Water from WRF Project 4376 and UV Absorbance Spectra of Water Measured during this Validation ...6-10
Figure 6.5 UV Transmittance of the Type 214 Quartz Sleeves used during Validation and Type 219 Quartz Sleeves used in Project 4376 6-10
Figure 6.6a *Cryptosporidium* Validated Dose as a function of S/Q for the WF-115-4. *Dashed line shows minimum validated dose as a function of S/Q.* 6-17
Figure 6.6b Giardia Validated Dose as a function of S/Q for the WF-115-4. *Dashed line shows minimum validated dose as a function of S/Q.* 6-17
Figure 6.6c Adenovirus Validated Dose as a function of S/Q for the WF-115-4. *Dashed line shows minimum validated dose as a function of S/Q.* 6-18
Figure 6.7a *Cryptosporidium* Validated Dose as a function of S/Q for the WF-125-6. *Dashed line shows minimum validated dose as a function of S/Q.* 6-18
Figure 6.7b Giardia Validated Dose as a function of S/Q for the WF-125-6. *Dashed line shows minimum validated dose as a function of S/Q.* 6-19
Figure 6.7c Adenovirus Validated Dose as a function of S/Q for the WF-125-6. *Dashed line shows minimum validated dose as a function of S/Q.* 6-19
Figure 6.8a *Cryptosporidium* Validated Dose as a function of S/Q for the WF-225-8. *Dashed line shows minimum validated dose as a function of S/Q.* 6-20
Figure 6.8b Giardia Validated Dose as a function of S/Q for the WF-225-8. *Dashed line shows minimum validated dose as a function of S/Q.* 6-20
Figure 6.8c Adenovirus Validated Dose as a function of S/Q for the WF-225-8. *Dashed line shows minimum validated dose as a function of S/Q.* 6-21
Figure 6.9 MS2 Dose as a function of S/Q for the WF-115-4. *Dashed line shows minimum validated dose as a function of S/Q.* 6-22
Figure 6.10 MS2 Dose as a function of S/Q for the WF-125-6. *Dashed line shows minimum validated dose as a function of S/Q.* 6-22
Figure 6.11 MS2 Dose as a function of S/Q for the WF-225-8. *Dashed line shows minimum validated dose as a function of S/Q.* 6-23

SUMMARY

The ATG WF-115-4, WF-125-6, and WF-225-8 closed-vessel ultraviolet (UV) disinfection systems were validated at a test facility located at the Groundwater Pumping Station of the Columbia Southshore Wellfield in Portland, Oregon. The results were analyzed in accordance with the UV Disinfection Guidance Manual (UVDGM) as part of the Long Term 2 Enhanced Surface Water Treatment Rule (LT2ESWTR), published by the United States Environmental Protection Agency (USEPA, 2006).

Figures 1.1a through 1.1c show an elevation view of the upstream side of the WF-115-4, WF-125-6, and WF-225-8 UV reactors, respectively. The WF-115-4 system uses one 1.5 kW medium-pressure (MP) lamp oriented perpendicular to the bulk flow. The WF-125-6 system uses one 2.5 kW MP lamp oriented perpendicular to the bulk flow. The WF-225-8 system uses two 2.5 kW MP lamps oriented perpendicular to the bulk flow. In each reactor, the quartz sleeve surrounding each lamp is equipped with a mechanical wiping mechanism to remove foulants that accumulate on the external surfaces of the sleeves. Each reactor was equipped with a single UV intensity sensor that monitored the output of the lamp(s). Each reactor used a control panel and external magnetic ballast to control system operation and monitor performance. Figure 1.2 shows a schematic of the installation piping at the validation facility in Portland.

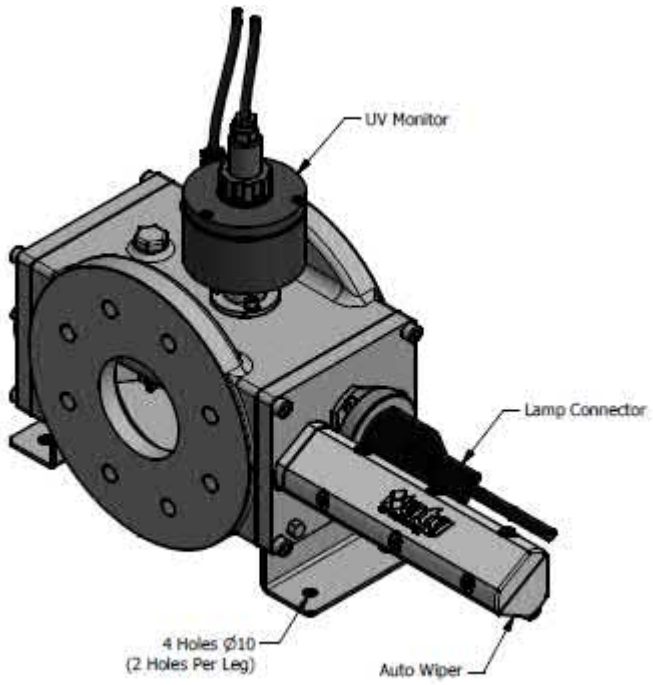

Figure 1.1a ATG WF-115-4 UV Reactor, isometric view. (Source: ATG)

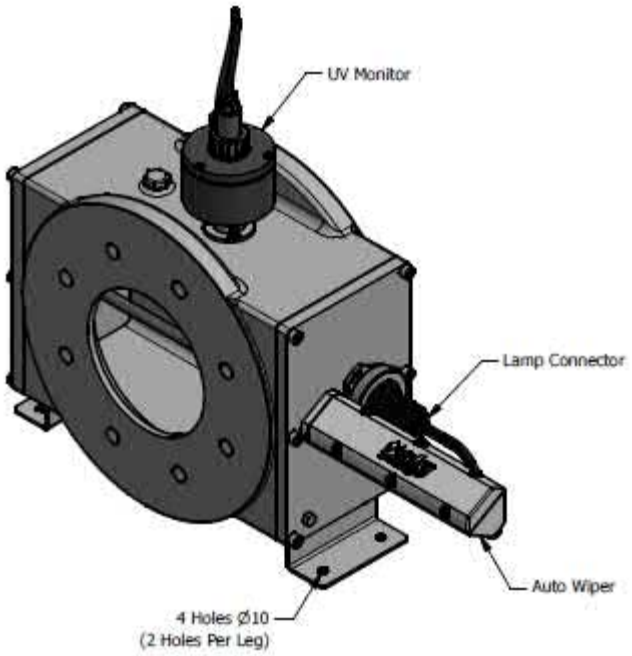

Figure 1.1b ATG WF-125-6 UV Reactor, isometric view. (Source: ATG)

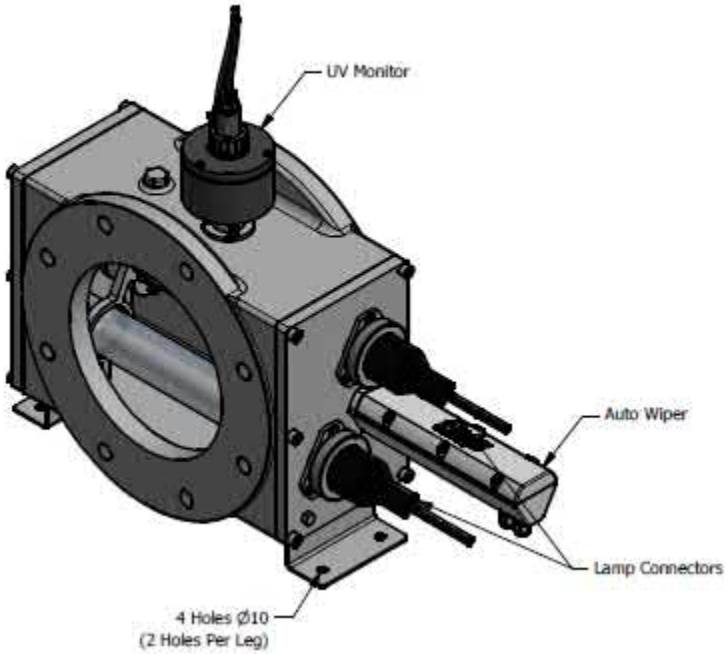

Figure 1.1c ATG WF-225-8 UV Reactor, isometric view. (Source: ATG)

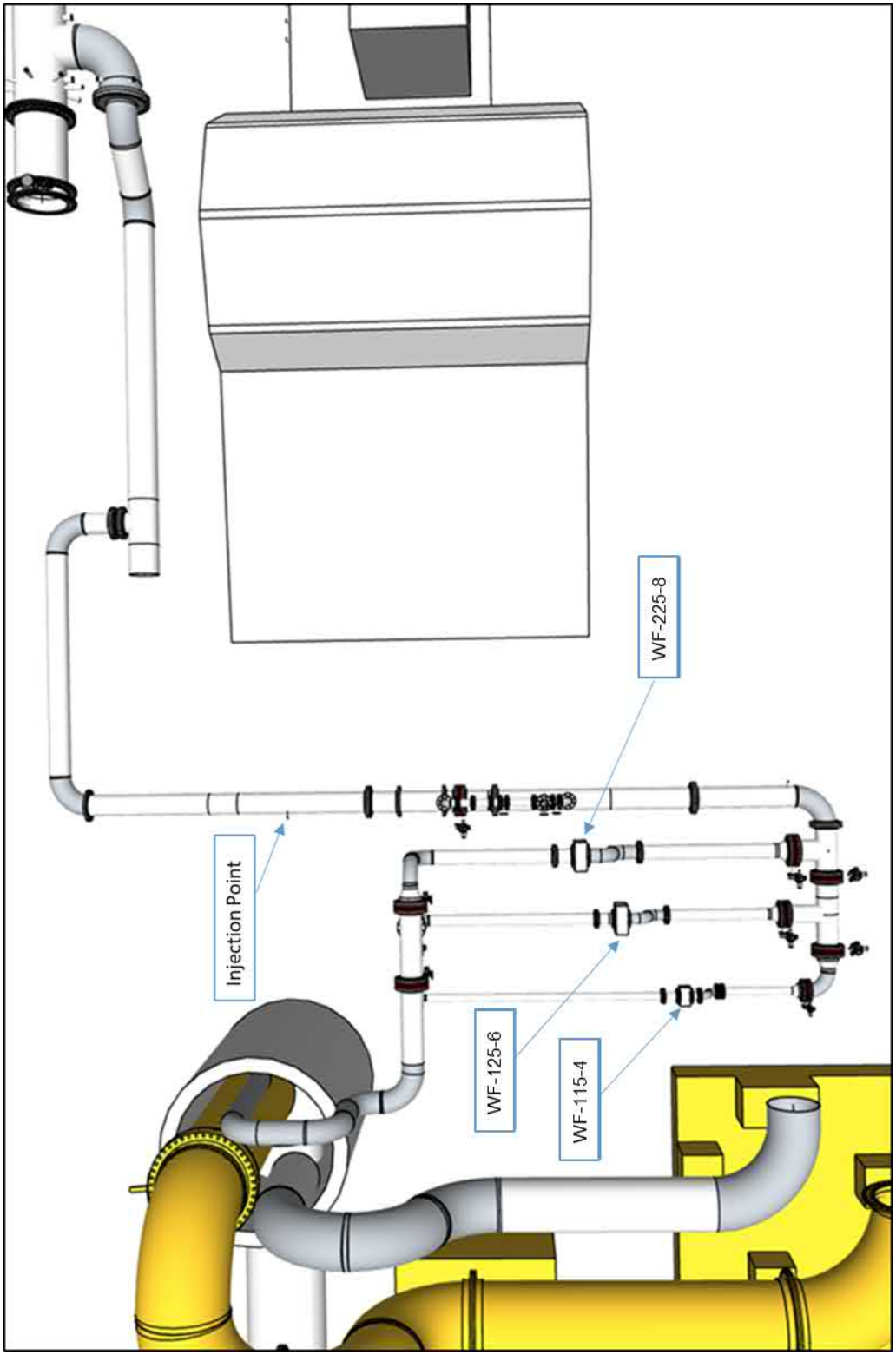

Figure 1.2 ATG Piping Configuration as Installed at the Validation Site in Portland

Functional testing of the ATG WF-115-4, WF-125-6, and WF-225-8 UV reactors was conducted on April 18, 2019. Biodosimetric testing was conducted on January 8, 9, 16, 2019, and March 12, 13, 14, 19, 2019. The UV reactors were validated under the third party oversight of Carollo Engineers, P.C. (Carollo). Microbial analysis was provided by GAP EnviroMicrobial Services (GAP) (London, Ontario, Canada). The challenge microbes were MS2 and T1UV phage and the UV absorber was calcium lignosulfonate (LSA) (Borregaard LignoTech of Rothschild, WI, USA). Analysis of the validation data was undertaken in accordance with the USEPA UVDGM (2006).

The test conditions of flow rate, UV transmittance (UVT), and lamp output were designed to validate the dose delivery by the UV reactors. UV intensity and log inactivation of MS2 and T1UV phage were measured at a range of lamp power settings (measured as lamp ampere), flow rates, and UVT. Table 1.1 provides the range of power settings, flow rates, and UVT used during the testing for each UV reactor. Table 1.1 also includes the range of MS2 and T1UV REDs measured during testing.

Table 1.1 Range of Power Settings, Flow Rate, UVT used During Testing

Reactors	Lamp Ampere Setting	Flow (m^3/hr)	UVT (%)	MS2 RED (mJ/cm^2)	T1UV RED (mJ/cm^2)
WF-115-4	5.1 – 11.0	5.1 – 114	65.4 – 99.3	13.6 – 181	4.50 – 25.7
WF-125-6	4.7 – 10.0	9.9 – 230	68.2 – 99.2	13.4 – 181	4.20 – 21.9
WF-225-8	4.6 – 10.0	14.6 – 503	69.9 – 99.6	5.02 – 227	6.14 – 29.9

1.1 UV SENSOR, POWER, AND DOSE ALGORITHMS

1.1.1 Power Equation

The power to the ATG WF-115-4, WF-125-6, and WF-225-8 UV reactors was monitored using a Fluke 434 power quality analyzer. The power relationship between power consumption (P, in W) and lamp ampere setting (P_L, A) is described in Equation 1.1a through 1.1c for the WF-115-4, WF-125-6, and WF-225-8, respectively:

$$P = 0.0768 \times P_L^{1.2966} \quad \textbf{Equation 1.1a}$$

$$P = 0.1639 \times P_L^{1.2022} \quad \textbf{Equation 1.1b}$$

$$P = 0.2812 \times P_L^{1.2630} \quad \textbf{Equation 1.1c}$$

Figure 1.3 presents the power consumption of the UV reactors as a function of the lamp ampere setting.

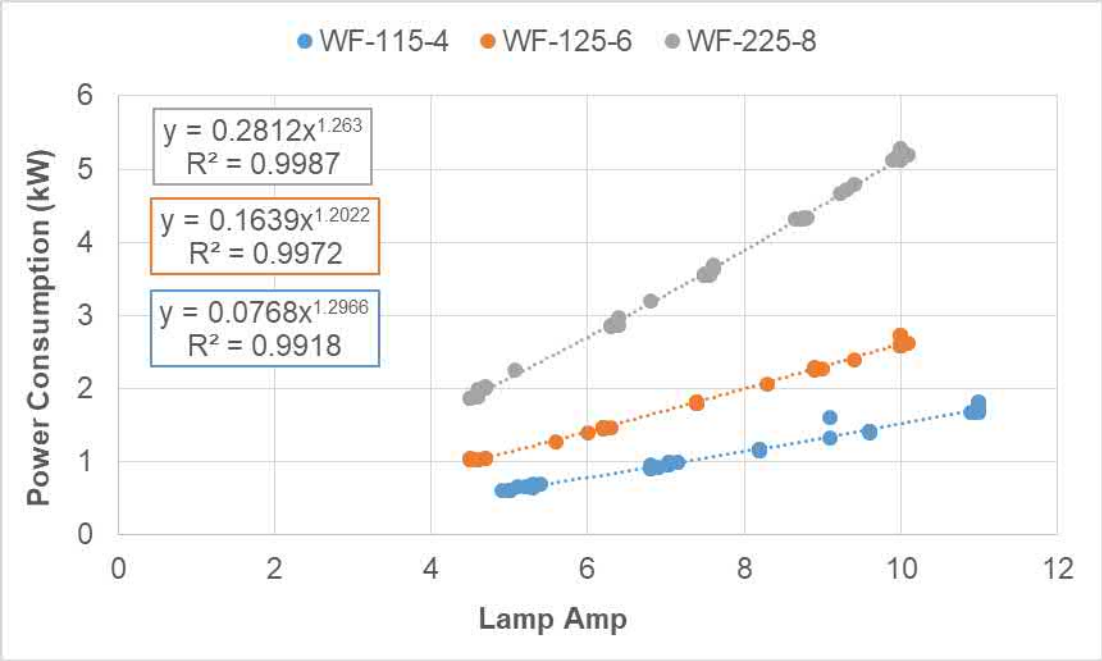

Figure 1.3 UV Reactor Power Consumption Measured as a Function of the Ballast Power Setting

1.1.2 UV Sensor Equation

The calibration of each reactor's duty UV sensor was checked by comparison with three reference UV sensors. The slope of the relation between average duty and reference UV sensor readings for all three reactors was 1.0383. The three reference UV sensors were tested for linearity and calibration at uv-technik Speziallampen GmbH in Wolfsberg, Germany.

The relationship between UV intensity, lamp ampere setting, and UVT was modelled using:

$$S = 10^{A} \times {P_L}^{B} \times (UVA - C)^{D}$$ **Equation 1.2**

where S is UV sensor intensity (W/m^2), UVA is the UV absorbance per cm of the test water at 254 nm, P_L is lamp ampere setting (A), and A through D are empirical coefficients provided in Table 1.2.

Table 1.2 UV Sensor Equation Coefficient Values (Equation 1.2)			
Constants	**WF-115-4**	**WF-125-6**	**WF-225-8**
A	17.202	-3.2676	-1.5978
B	1.5144	1.4761	1.5282
C	-3.8897	-0.20198	-0.11559
D	-27.891	-5.4742	-2.5972
100% lamp power	11 Amperes	10 Amperes	10 Amperes

1.1.3 UV Dose Equation

The log inactivation, log *i*, measured during biodosimetric validation was modeled using:

$$\log i = 10^{A + B \times UVA} \times UVA^{C + D \times UVA} \times \left(\frac{S/S_0}{Q \times D_L} \right)^{E + F \times UVA + G \times UVA^2} \quad \textbf{Equation 1.3}$$

where D_L is the UV sensitivity (mJ/cm^2/log *i*), S/S_0 is the relative lamp output, Q is the flow rate (m^3/hr), and A through G are empirical coefficients presented in Table 1.3.

Table 1.3 Model Coefficients for Equation 1.3 Obtained Using Multivariate Non-Linear Regression			
Coefficient	**WF-115-4**	**WF-125-6**	**WF-225-8**
A	2.6794	3.5360	3.8127
B	-2.5083	0	0
C	-0.17837	0	0
D	0	11.970	9.6997
E	0.86151	0.88478	0.86730
F	0	-2.0396	-1.2419
G	0	4.8188	2.9679
R-squared	0.9900	0.9939	0.9969
St. Dev. of Residuals (log units)	0.18318	0.14416	0.11966

1.1.4 Calculated Dose Approach without UVT monitoring

If the UV sensor is optimally positioned, the relationships between the log inactivation and a combined variable (defined as $S/Q/D_L$) at different UVTs tend to align on top of each other. If those relationships align on top of each other, a single relationship between log inactivation and the combined variable can be defined for efficient UV dose monitoring that does not require an online UVT monitor as:

$$\log i = f\left(\frac{S}{Q \times D_L}\right) \qquad \textbf{Equation 1.4}$$

where *f* is a mathematical function that describes the relation between the log inactivation and the combined variable ($S/Q/D_L$).

Depending on the UV reactor, the minimum log inactivation at a given value of $S/Q/D_L$ occurred at an intermediate UVT or at the minimum UVT (70 percent). Above and below that intermediate UVT value and above the minimum value, the measured log inactivation is larger. A UV dose monitoring algorithm that does not require UVT as an input can be defined by those minimum log i values. The relationship between minimum log inactivation and $S/Q/D_L$ for each reactor was best fit with a power function:

$$\log i = A' \times \left(\frac{S}{Q \times D_L}\right)^{B'} \qquad \textbf{Equation 1.5}$$

where S is the measured UV sensor value (W/m^2), Q is the flow rate (m^3/hr), D_L is the UV sensitivity of the microbe, and the coefficients A' and B' are provided in Table 1.4.

Table 1.4 Coefficients for Equation 1.5

Reactor	A'	B'	Maximum log i	Max Log I + U_{in}
WF-115-4	6.8279	0.85699	6.08	6.44
WF-125-6	39.482	0.83263	6.21	6.50
WF-225-8	40.400	0.82730	6.91	7.15

1.1.5 UV Dose Monitoring

The reduction equivalent dose (RED) delivered by the UV reactors can be predicted using:

$$RED = \log i \times D_L \qquad \textbf{Equation 1.6}$$

If Equation 1.3 is used to predict log inactivation, the RED is expressed as:

$$RED = log\ i \times D_L = 10^{A + B \times UVA} \times UVA^{C + D \times UVA} \times \left(\frac{S/S_0}{Q \times D_L}\right)^{E + F \times UVA + G \times UVA^2} \times D_L$$

Equation 1.7

If Equation 1.5 is used to predict log inactivation, the RED is expressed as:

$$RED = logi \times D_L = \left[A' \times \left(\frac{S}{Q \times D_L}\right)^{B'}\right] \times D_L$$ **Equation 1.8**

The relative lamp output used in Equations 1.3 and 1.7 is determined from the UV sensor readings using the following approach:

Step 1. Calculate the value S_0 as the UV sensor reading predicted using Equation 1.2 with P_L set to 11 for the WF-115-4, and P_L set to 10 for the WF-125-6 and WF-225-8.

Step 2. Calculate the relative lamp output (S/S_0), where S is the measured UV intensity.

The UV sensitivity, D_L is determined using:

$$D_L = D/log\ i$$ **Equation 1.9**

where log *i* is the predicted log inactivation obtained using Equation 1.3, and D is the UV dose associated with that log inactivation determined using the UV dose-response curve of the microbe.

The UV dose-response of MS2 and T1UV phage measured during validation was modeled using:

$$Dose = A \times logi + B \times logi^2$$ **Equation 1.10**

where A and B are constants given in Table 1.5.

Substituting Equation 1.10 into Equation 1.9, the UV sensitivity of MS2 and T1UV phage is given as:

$$D_L = A + B \times \log i$$ **Equation 1.11**

Table 1.5 also provides the maximum log inactivation measured with the challenge microbe UV dose-response curves. Equations 1.9, 1.10, and 1.11 should not be extrapolated beyond the upper bound.

Table 1.5 Model Coefficients for Equation 1.10 and 1.11

Microbe	Coefficient A	Coefficient B	log *i* Upper Limit
MS2	16.112	2.0267	7.65 log
T1UV	4.5809	0.077114	6.20 log

Equations 1.3 and 1.7 or 1.5 and 1.8 will predict the log inactivation and RED of *Cryptosporidium*, Giardia and adenovirus if the value of D_L used in the equation is determined using the UV dose requirements for those pathogens specified by the Long Term 2 Enhanced Surface Water Treatment Rule. Using linear interpolation of the UV dose

requirements, the UV sensitivity of *Cryptosporidium*, Giardia, and viruses for log inactivation from 0.0 to 6.0 log can be determined using:

$$D_L = m \times D + b \qquad \textbf{Equation 1.12}$$

where m and b are coefficients tabulated in Table 1.6 and D is the UV dose that corresponds to the range of log inactivation values of interest. The UV dose-response of *Cryptosporidium,* Giardia, and adenovirus beyond 6.0 log can be conservatively estimated by extrapolating Equation 1.12 using the coefficients in Table 1.6 for 5.5 to 6.0 log inactivation.

Table 1.6 Coefficients for Linear Interpolation of UV Sensitivity

Log I	UV Dose (mJ/cm²)	*Crypto*		UV Dose (mJ/cm²)	*Giardia*		UV Dose (mJ/cm²)	Adenovirus	
		m	b		m	b		m	b
0 - 0.5	0.0 to 1.6	0.0000	3.200	0.0 to 1.5	0.0000	3.000	0.0 to 39	0.000	78.00
0.5 - 1.0	1.6 to 2.5	-0.7777	4.444	1.5 to 2.1	-1.500	5.250	39 to 58	-1.052	119.0
1.0 - 1.5	2.5 to 3.9	0.07143	2.321	2.1 to 3.0	-0.1111	2.333	58 to 79	-0.2539	72.73
1.5 - 2.0	3.9 to 5.8	0.1578	1.984	3.0 to 5.2	0.2727	1.181	79 to 100	-0.1269	62.69
2.0 - 2.5	5.8 to 8.5	0.1851	1.825	5.2 to 7.7	0.1920	1.601	100 to 121	-0.07619	57.61
2.5 - 3.0	8.5 to 12	0.1714	1.942	7.7 to 11	0.1777	1.711	121 to 143	-0.03333	52.43
3.0 - 3.5	12 to 15	0.09524	2.857	12 to 15	0.1547	1.964	143 to 163	-0.05476	55.49
3.5 - 4.0	15 to 22	0.1734	1.683	15 to 22	0.1734	1.683	163 to 186	-0.003106	47.07
4.0 - 4.5	22 to 30	0.1458	2.292	22 to 28	0.1204	2.852	186 to 208	-0.01263	48.85
4.5 - 5.0	30 to 45	0.1556	2.000	28 to 42	0.1556	1.867	208 to 231	-0.00097	46.42
5.0 - 5.5	45 to 64	0.1388	2.756	42 to 60	0.1394	2.545	231 to 253	-0.00909	48.30
5.5 - 6.0	64 to 85	0.1205	3.925	60 to 84	0.1288	3.182	253 to 276	0.00000	46.00

Since the value of D_L depends on the predicted log i, the value of log i predicted using Equation 1.3 or 1.5 must be determined using an iterative approach. Section 5.5 of this report describes an approach for conducting the iteration with example calculations.

1.2 VALIDATED RANGE

Figures 1.4 through 1.6 provide the validated range of UVT as a function of flow and the validated range of predicted log inactivation as a function of UVT for the WF-115-4, WF-125-6, and WF-225-8 UV reactors, respectively. If Equation 1.3 is used for UV dose monitoring, the figures define the validated range for the reactor. Note that the upper limit of the validated range of log i is defined as predicted log i plus the uncertainty of interpolation as defined in section 1.3.2.1. Tables 1.7 through 1.9 provide the coordinates for the bounds of the validated range boundaries.

If Equation 1.5 is used for dose monitoring and the measured flow rate is less than the validated range, the lower limit of the flow rate should be used as an input to Equation 1.5. However, Equation 1.5 provides valid predictions of log inactivation at all UVTs lower and higher than that value. If the calculated log inactivation is greater than the upper bound of the log inactivation range given in Table 1.4, the upper limit should be reported as the delivered log inactivation. The UV system operation is off specification if the flow rate is greater than the maximum validated flow rate.

Table 1.7 Validation Envelope Bounds for Figure 1.4 (WF-115-4)

Figure 1.4a		Figure 1.4b		
Q (m^3/hr)	**UVT (%)**	**UVT (%)**	**log i**	**log I plus U_{in}**
5.94	65.36	69.46	0.00	-
5.14	69.30	69.46	1.15	-
5.23	97.42	65.36	3.30	3.66
50.63	99.15	69.30	4.09	4.45
105.20	99.25	86.52	6.08	6.44
114.14	87.90	97.42	5.27	5.63
100.39	70.13	98.73	4.81	-
-	-	99.15	3.04	-
-	-	99.15	0.00	-

Table 1.8 Validation Envelope Bounds for Figure 1.5 (WF-125-6)

Figure 1.5a		Figure 1.5b		
Q (m^3/hr)	**UVT (%)**	**UVT (%)**	**log i**	**log I plus U_{in}**
9.86	71.45	68.23	0.00	-
10.14	85.91	68.23	1.32	-
22.56	95.35	69.80	3.31	-
28.46	97.84	69.98	4.31	4.60
76.39	98.18	85.91	5.42	5.71
198.47	99.23	95.35	5.79	6.08
230.28	87.89	97.84	6.21	6.50
200.57	70.17	99.23	3.38	-
30.67	68.23	99.23	0.00	-

Table 1.9 Validation Envelope Bounds for Figure 1.6 (WF-225-8)				
Figure 1.6a		Figure 1.6b		
Q (m^3/hr)	UVT (%)	UVT (%)	log i	log I plus U_{in}
14.61	69.91	69.91	0.00	-
24.54	94.18	69.91	2.57	-
261.3	97.99	70.01	6.04	6.27
498.94	99.64	87.63	6.60	6.83
500.25	87.49	94.18	6.91	7.15
496.84	70.84	99.64	5.71	5.9594
-	-	99.06	1.89	-
-	-	99.06	0.00	-

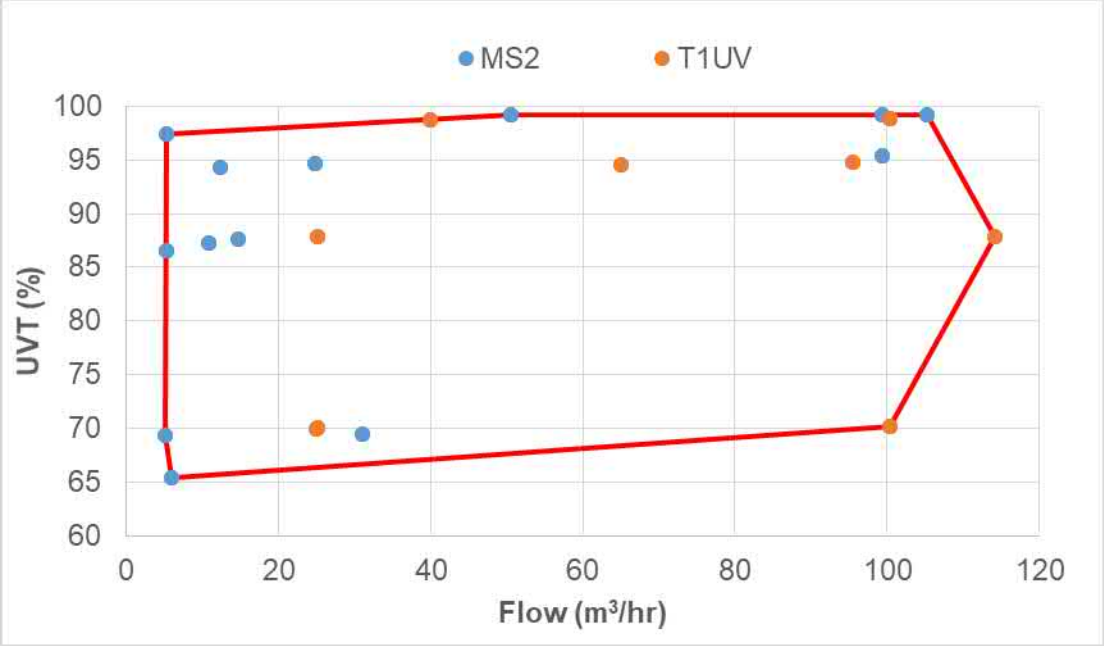

Figure 1.4a Validated Range of UVT versus Flow for the WF-115-4

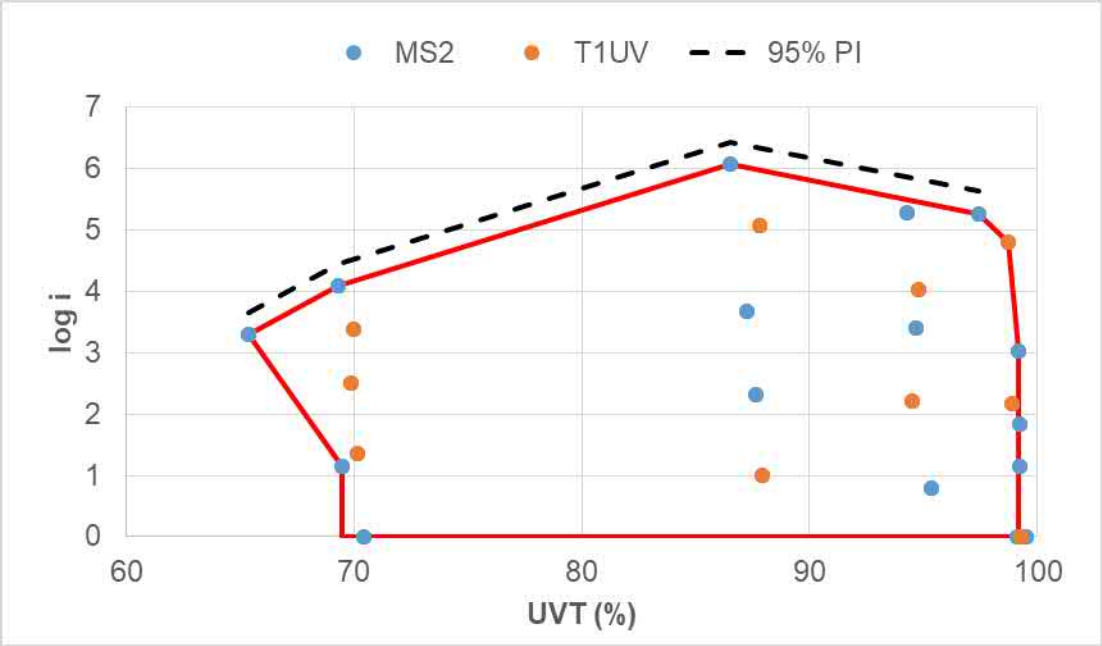

Figure 1.4b Validated Range of Predicted Log Removal versus UVT for WF-115-4

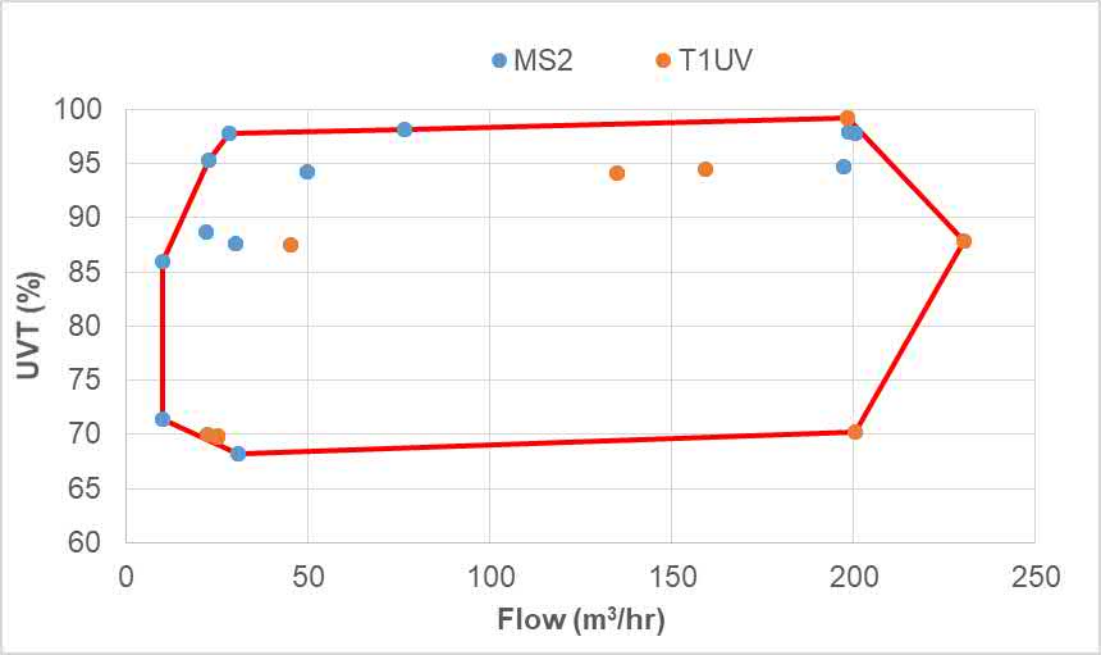

Figure 1.5a Validated Range of UVT versus Flow for the WF-125-6

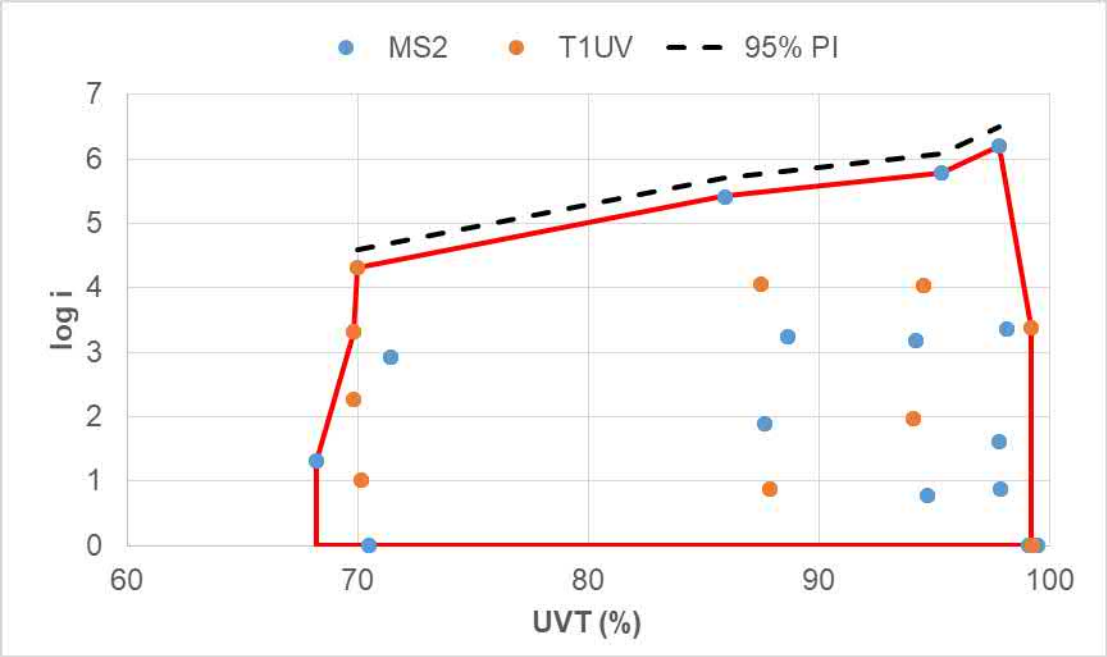

Figure 1.5b Validated Range of Predicted Log Removal versus UVT for WF-125-6

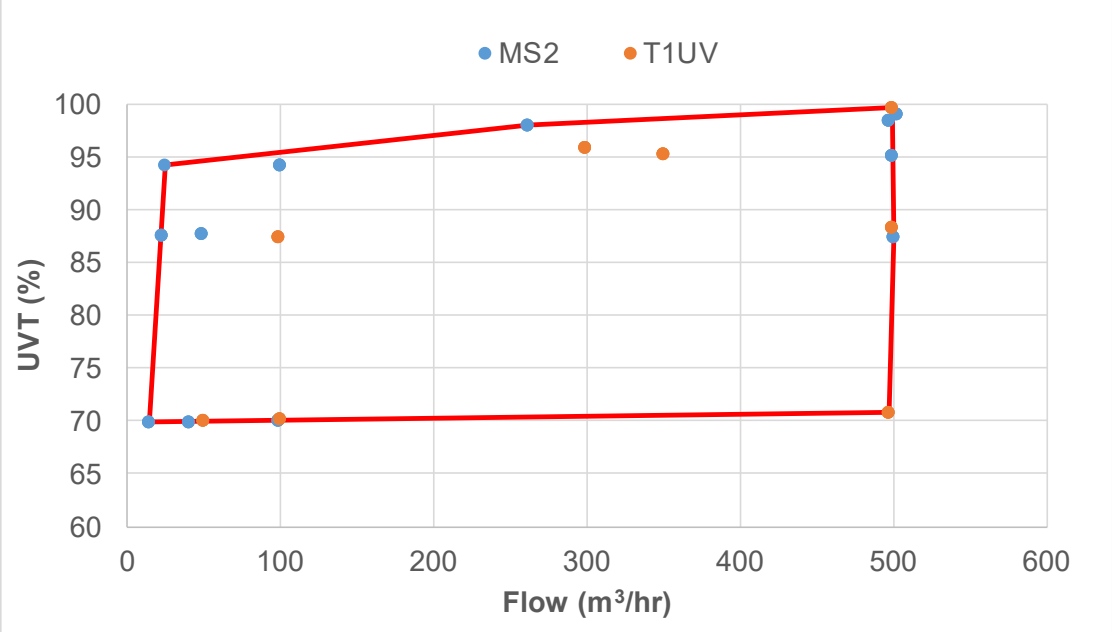

Figure 1.6a Validated Range of UVT versus Flow for the WF-225-8

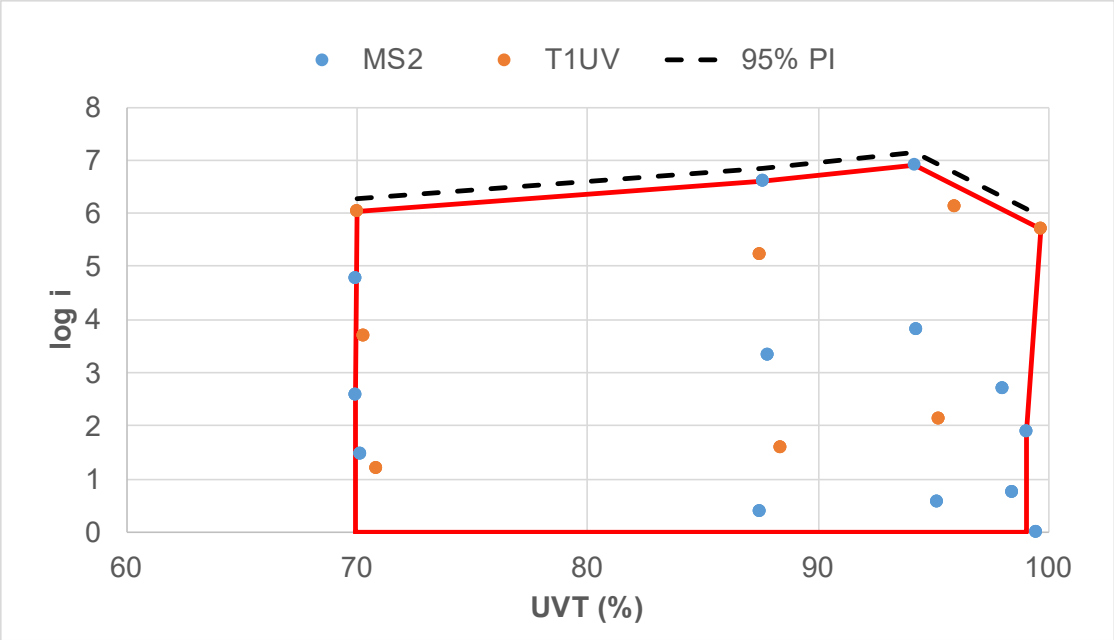

Figure 1.6b Validated Range of Predicted Log Removal versus UVT for WF-225-8

The UVDGM (Table 6-6) defines the validated range for the calculated dose approach in terms of flow rate, UVT and RED but not relative lamp output, S/S_0. The validation data set includes control samples measured with the lamps turned off (i.e. $S/S_0 = 0$) that show no log reduction. The validation analysis also shows that log inactivation is predicted as a function of a combined variable $S/S_0/Q/D_L$ for a given UVT with a single relationship that passes through the origin, as shown in Figures 1.7 through 1.9 for the WF-115-4, WF-125-6, and WF-225-8, respectively. The analysis shows that log inactivation can be interpolated along this curve, including values of S/S_0 down to zero.

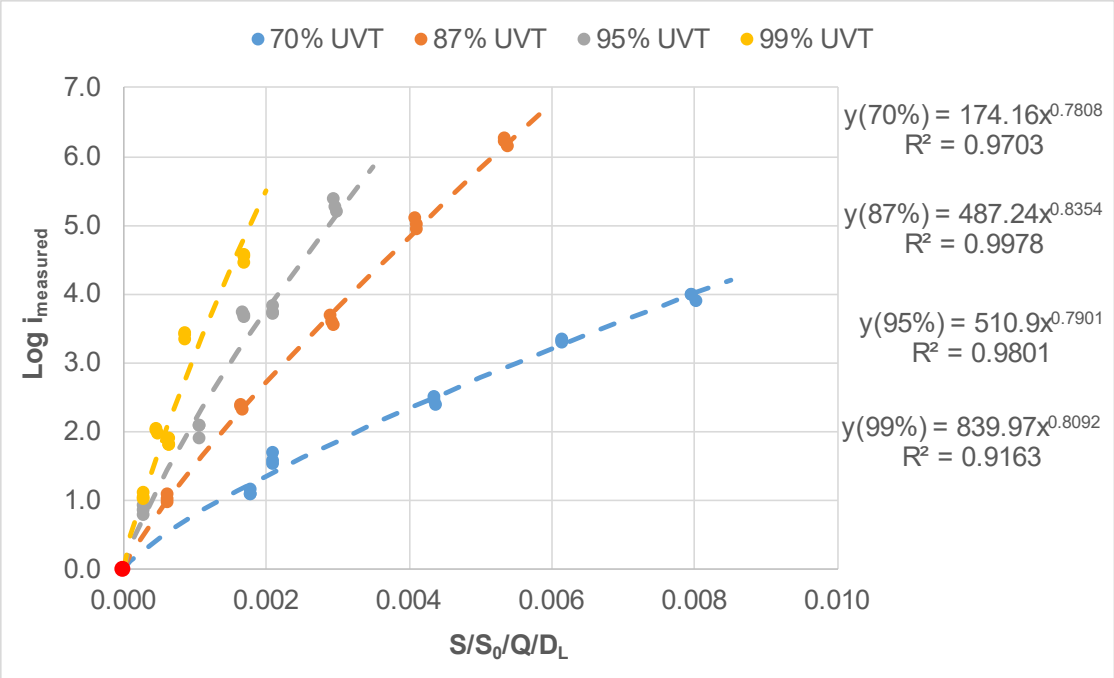

Figure 1.7 Measured log inactivation as a function of $S/S_0/Q/D_L$ for the WF-115-4

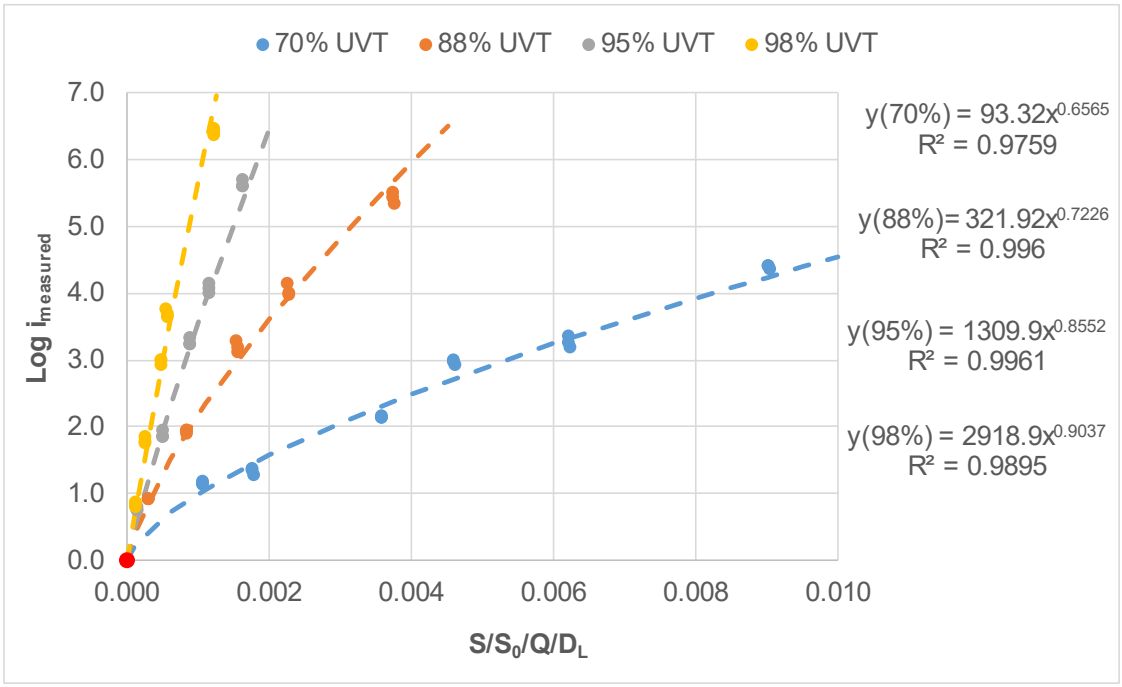

Figure 1.8 Measured log inactivation as a function of $S/S_0/Q/D_L$ for the WF-125-6

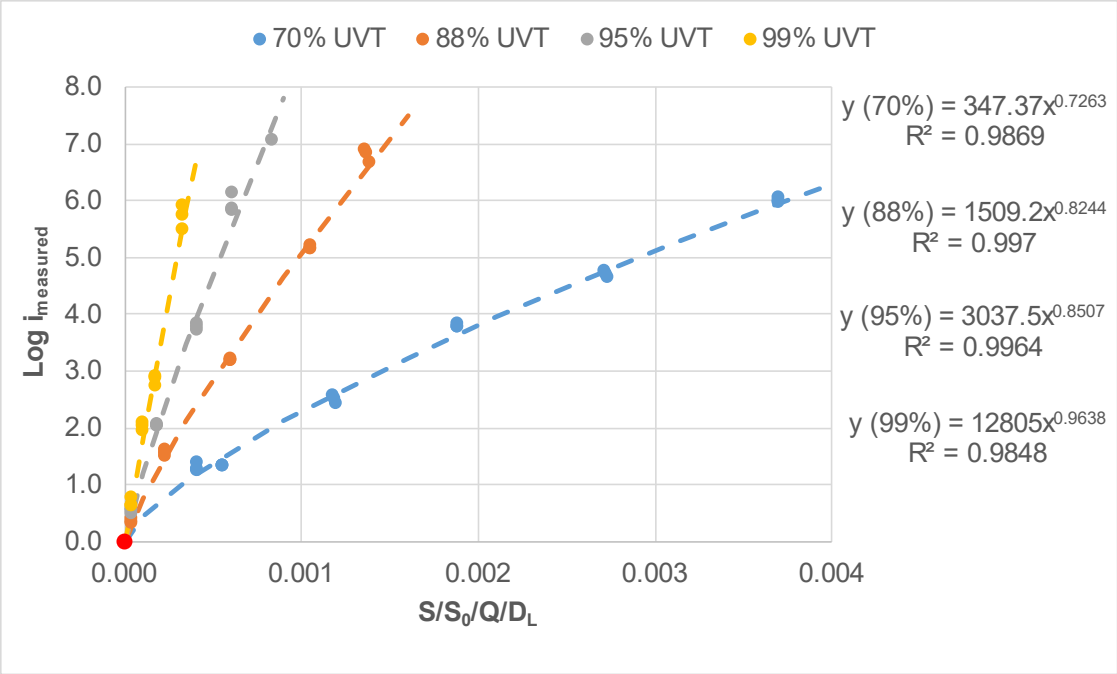

Figure 1.9 Measured log inactivation as a function of $S/S_0/Q/D_L$ for the WF-225-8

1.3 INACTIVATION CREDIT

Table 1.10 tabulates the UV dose requirements given by the Long Term 2 Enhanced Surface Water Treatment Rule (LT2ESWTR) and the USEPA draft document entitled "Innovative Approaches for Validation of Ultraviolet Disinfection Reactors for Drinking Water Systems" for various levels of *Cryptosporidium*, Giardia, and virus inactivation credit.

Table 1.10 UV Dose Requirements for Pathogen Inactivation Credit as Defined by the LT2ESWTR

Target Pathogens	UV dose (mJ/cm²) required for a log inactivation of:											
	0.5 log	1.0 log	1.5 log	2.0 log	2.5 log	3.0 log	3.5 log	4.0 log	4.5 log	5.0 log	5.5 log	6.0 log
Cryptosporidium	1.6	2.5	3.9	5.8	8.5	12	15	22	30	45	64	85
Giardia	1.5	2.1	3.0	5.2	7.7	11	15	22	28	42	60	84
Adenovirus	39	58	79	100	121	143	163	186	208	231	253	276

To obtain disinfection credit, the UV reactor must deliver a validated dose, D_{val}, that is equal to or greater than the dose requirement specified by the LT2ESWTR. The USEPA UVDGM (2006) states that the validated dose is determined using:

$$D_{val} = RED / VF \qquad \textbf{Equation 1.13}$$

where VF is the validation factor and RED is predicted using Equations 1.7 or 1.8.

The validation factor is determined using:

$$VF = B_{RED} \times \left(1 + {U_{val}}/{100}\right) \qquad \textbf{Equation 1.14}$$

where B_{RED} is the RED bias factor and U_{val} is the percent uncertainty of validation.

1.3.1 RED Bias Factor

Equations 1.7 or 1.8 predict RED accounting for the UV sensitivity of the microbe, D_L. These equations can be used to predict the RED of the test microbes MS2 and T1UV phage by setting the value of D_L to the value expected with those microbes. Alternatively, these equations can be used to predict the RED of the target pathogen (e.g. *Cryptosporidium*) by setting the value of D_L to the value expected with that pathogen. With this analysis, it is assumed that the RED is predicted using the value of D_L set to UV sensitivity of the target pathogen. Section 5.8.1 (page 5-30) of the UVDGM states that if the validation equations are used to predict the RED delivered to the target pathogen, the RED bias can be set to 1.0.

1.3.2 Uncertainty of Validation

The uncertainty of validation, U_{val}, is calculated using:

$$U_{val} = \sqrt{U_{IN}^2 + U_{DR}^2 + U_S^2} \qquad \textbf{Equation 1.15}$$

where U_{IN} is the uncertainty of interpolation of the dose monitoring equation, U_{DR} is the uncertainty of the fit to the UV dose-response data of the test microbes, and U_S is the uncertainty of the UV sensors used during validation.

1.3.2.1 Uncertainty of Interpolation

The uncertainty of interpolation is calculated using:

$$U_{IN} = \frac{t \times D_L \times SD'}{RED} \times 100\% \qquad \textbf{Equation 1.16}$$

where t is a Student's t-statistic at a 95 percent confidence level, SD is the standard deviation of the differences between the log inactivation measured during validation and the log inactivation predicted by Equation 1.3, and D_L is the UV sensitivity of the microbe.

The uncertainty of interpolation in units of log inactivation is:

$$U'_{IN} = t \times SD' \qquad \textbf{Equation 1.17}$$

Table 1.11 presents the values of *t* and *SD* used in Equation 1.17.

Table 1.11 Uncertainty of Interpolation for Equation 1.3			
Parameter	**WF-115-4**	**WF-125-6**	**WF-225-8**
Number of Data Points, N	78	75	61
Number of Parameters, P	4	5	5
Student's t-statistic	1.9925	1.9944	2.0032
Equation 1.3 St. Dev.	0.18318	0.14416	0.11966
U_{IN}	0.36499	0.28753	0.23971

1.3.2.2 Uncertainty of UV Dose Response

The UVDGM states that the uncertainty of the fit of the test microbe dose-response can be determined using:

$$U_{DR} = \frac{CI}{UVDose} \times 100\% \qquad \textbf{Equation 1.18}$$

where CI is the confidence interval at the specified dose calculated using statistical approaches (e.g., Draper and Smith, 1998). The UV Dose value should be predicted as a function of log i and the UV dose response coefficients (A and B) of the collimated beam dose response curve, as tabulated in Table 1.12.

The uncertainty of the UV dose-response for MS2 and T1UV phage is calculated as a confidence interval using the statistical approach provided in Appendix I. Table 1.12 shows the value of U_{DR} at 1 log. Since the uncertainty of all of the UV dose-response curves was less than 15 percent the most conservative uncertainty was modeled using a quadratic fit:

$$U_{DR} = A + B(\log i) + C(\log i)^2 \qquad \textbf{Equation 1.19}$$

where A = 12.34, B = -3.514, and C = 0.3197.

If the U_{DR}, calculated using Equation 1.19, is greater than 15 percent, then the calculated U_{DR} is used in Equation 1.15. If the U_{DR} is less than 15 percent, then the U_{DR} value in Equation 1.15 will be zero.

Table 1.12 U_{DR} at 1-log Inactivation					
Test Microbe	**Date**	**Sample ID**	**U_{DR} at 1-log (%)**	**Coefficient A**	**Coefficient B**
MS2	1/8/2019	101	4.60	15.626	2.023
MS2	1/16/2019	409	5.80	15.302	2.283
MS2	3/13/2019	407	5.46	16.351	2.013
MS2	3/14/2019	617	7.11	16.530	1.795
MS2	3/19/2019	819	9.10	14.725	2.465
T1UV	3/12/2019	416	5.37	4.5337	0.097917
T1UV	3/19/2019	820	8.70	4.8749	0.00

1.3.2.3 Uncertainty of UV Sensors

The UVDGM states the value of the uncertainty of the UV sensors used in Equation 1.15 can be set to zero if the uncertainty is less than 10 percent. The UVDGM also states that the uncertainty of the UV sensors can be defined as the largest difference observed between the duty and reference UV sensors during validation.

In the case of the WF-115-4, WF-125-6, and WF-225-8 UV reactors, differences between the average duty UV sensors and the average reference UV sensor reading had an average and standard deviation of -1.34 and 2.42 percent, respectively, and ranged from -6.34 to 1.31 percent. The differences were all within the 10 percent criteria for reference UV sensor checks given in the 2006 UVDGM, and the value of U_S was set to zero.

1.3.3 Polychromatic Bias

The polychromatic bias accounts for spectral differences between validation and operation of the UV system for pathogen inactivation credit at the water treatment plant. The polychromatic bias only occurs with UV systems using polychromatic lamps and can be caused by:

1. Differences in the spectral response or action spectra of the test microbes used during validation and the target pathogen.
2. Spectral changes in UV lamp output due to lamp and quartz sleeve aging and fouling.
3. Differences in the UV absorbance spectra during validation and with application at the WTP

1.3.3.1 Action Spectra

Water Research Foundation (WRF) Project 4376 found that while the action spectra of MS2 and *Cryptosporidium* at wavelengths above 240 nm are similar, the action spectrum of MS2 phage is greater than that of *Cryptosporidium* at wavelengths below 240 nm. If wavelengths below 240 nm significantly contribute to UV dose delivery measured during validation, validation conducted using MS2 phage will overstate the inactivation expected with *Cryptosporidium*. A similar issue with action spectra differences exists with T1UV phage and *Cryptosporidium*.

The difference between the action spectra of MS2 and *Cryptosporidium* at wavelengths below 240 nm is not addressed by the UVDGM. Instead, the UVDGM states that the action spectra of *Cryptosporidium* and MS2 phage are similar enough that no action spectra correction factor is required. However, this conclusion is based on an analysis of the germicidal UV output of MP lamps as provided in the 2003 draft UVDGM. That analysis was based on a MP lamp that had negligible UV output (below 240 nm) and is not applicable with today's MP lamps.

The UVDGM approach for calculating the ASCF does not account for the impact of the sleeve UV transmittance (UVT) and the UV absorbance of the water during validation. To address this issue, WRF Project 4376 developed tables of ASCF values that can be generally applied to UV systems using polychromatic medium-pressure lamps. Appendix B of the final report for Project 4376 provides ASCF values for Cryptosporidium and Giardia credit for five validation water types, four of which are used at the Portland UV Validation Facility. With each water Type, ASCF values are provided for the UV reactor equipped with Type 219, Type 214, or synthetic quartz sleeves. With each water and sleeve type, ASCF values are provided for six validation test microbes, including MS2 and T1UV phage.

Based on the analysis of the absorbance of the water, the transmittance of the quartz sleeves, and the output of the MP UV lamps used during this validation, average ASCF values were determined for UVTs ranging from 70 to 98 percent. In order to define the ASCF at any UVT within the validated range the average ASCF was modeled as a function of UVT as shown in Figure 1.20. This process is explained in Section 6.2.3. The coefficients for predicting the ASCF for *Cryptosporidium/*Giardia, adenovirus, and MS2 are provided in Table 1.13.

$$ASCF = A \times UVT^5 + B \times UVT^4 + C \times UVT^3 + D \times UVT^2 + E \times UVT + F$$ **Equation 1.20**

Table 1.13 Coefficient Values for Predicting ASCF (Equation 1.20)

Coefficient	*Cryptosporidium*/ Giardia	Adenovirus	MS2
A	-3.9384 x 10^{-8}	-3.2526 x 10^{-8}	-2.5855 x 10^{-8}
B	1.7789 x 10^{-5}	1.5011 x 10^{-5}	1.2579 x 10^{-5}
C	-3.1495 x 10^{-03}	-2.7035 x 10^{-03}	-2.3525 x 10^{-03}
D	2.7477 x 10^{-01}	2.3923 x 10^{-01}	2.1434 x 10^{-01}
E	-1.1846 x 10^{+01}	-1.0445 x 10^{+01}	-9.5819 x 10^{+00}
F	2.0327 x 10^{+02}	1.8141 x 10^{+02}	1.6989 x 10^{+02}

The ASCF values are applied during the calculation of the validation factor:

$$VF = B_{RED} \times U_{Val} \times ASCF$$ **Equation 1.21**

1.4 VALIDATED UV DOSE FOR PATHOGEN CREDIT

Figures 1.10a, 1.10b, and 1.10c show the validated doses for *Cryptosporidium*, Giardia, and adenovirus, respectively, as a function of S/Q at UVTs of 70 to 98 percent for the WF-115-4 UV reactor. Figures 1.11 and 1.12 show similar validated doses for the WF-125-6 and WF-225-8 UV reactors, respectively.

Equation 1.22 and the coefficients in Table 1.14 define the minimum validated dose as a function of S/Q for *Cryptosporidium*, Giardia, and adenovirus. These equations can be used for UV dose monitoring for disinfection credit.

$$Validated\ Dose = a \times \left({}^{S}/_{Q}\right)^{b}$$ **Equation 1.22**

Table 1.14 Cryptosporidium, Giardia, and Adenovirus Coefficients for Equation 1.22						
UV Reactor	***Cryptosporidium* Coefficients**		**Giardia Coefficients**		**Adenovirus Coefficients**	
	a	**b**	**a**	**b**	**a**	**b**
WF-115-4	6.9873	0.97461	6.9587	0.97672	8.4427	0.94635
WF-125-6	37.222	0.97339	37.211	0.97597	45.247	0.91387
WF-225-8	40.791	0.96694	40.784	0.97009	50.728	0.89337

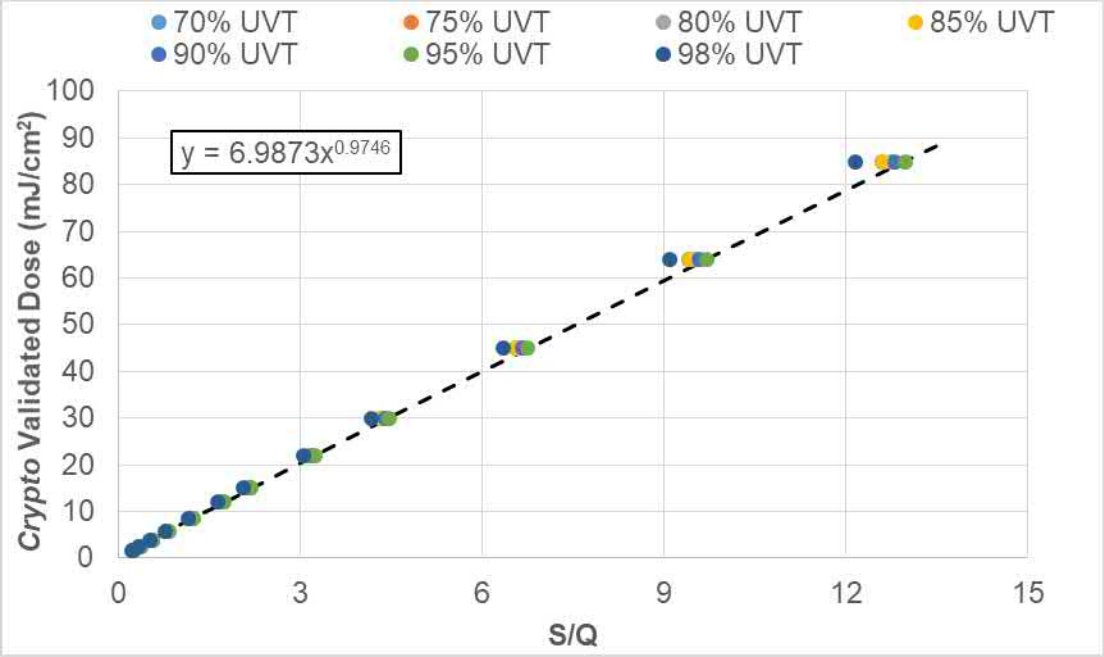

Figure 1.10a Cryptosporidium Validated Dose as a function of S/Q for the WF-115-4. ***Dashed line shows minimum validated dose as a function of S/Q.***

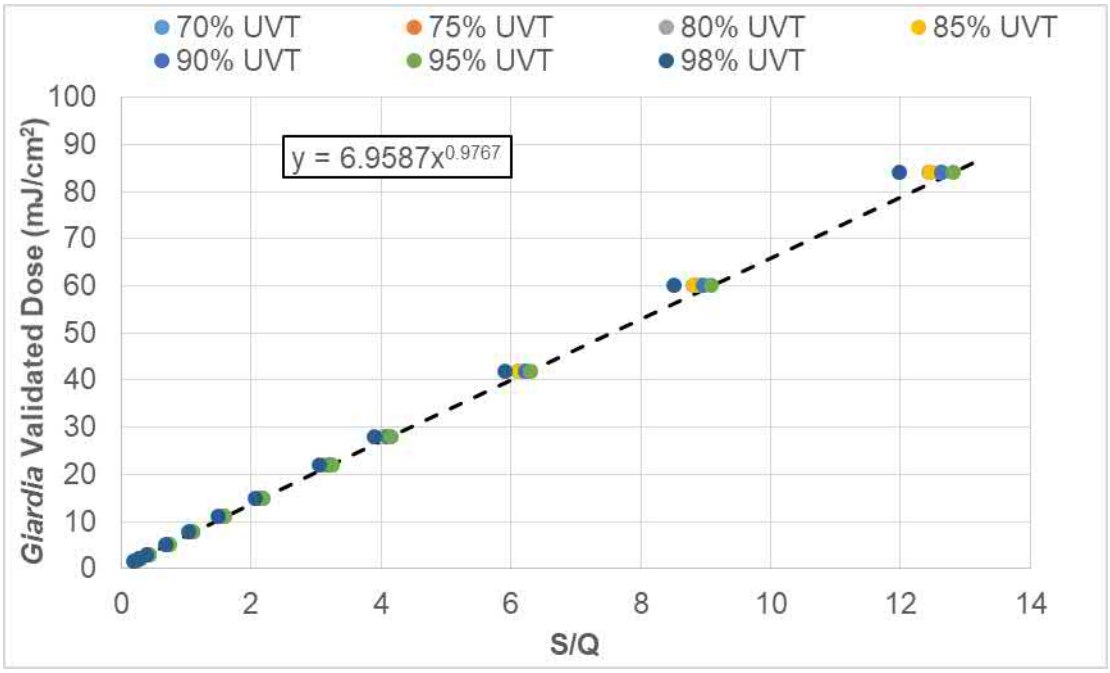

Figure 1.10b Giardia Validated Dose as a function of S/Q for the WF-115-4. ***Dashed line shows minimum validated dose as a function of S/Q.***

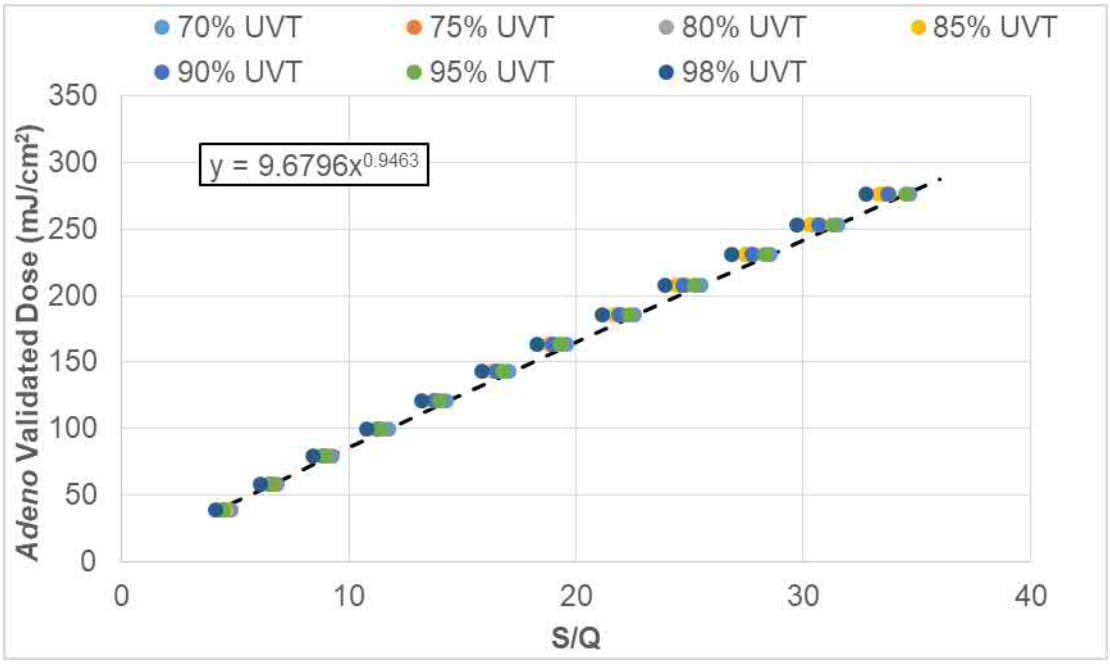

Figure 1.10c Adenovirus Validated Dose as a function of S/Q for the WF-115-4. ***Dashed line shows minimum validated dose as a function of S/Q.***

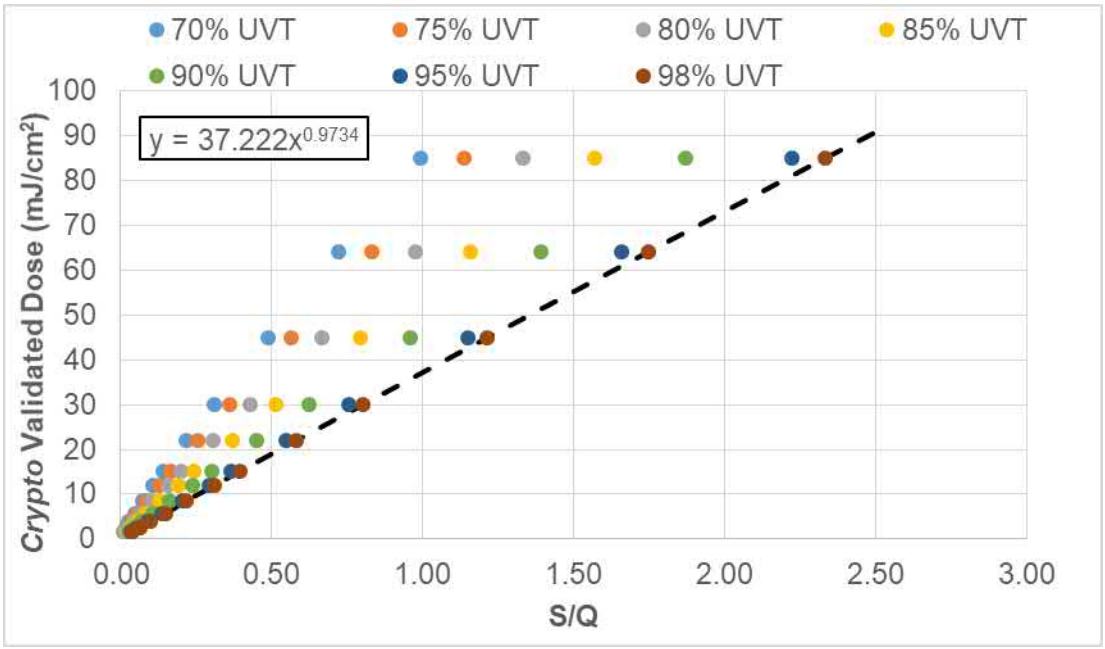

Figure 1.11a Cryptosporidium Validated Dose as a function of S/Q for the WF-125-6. ***Dashed line shows minimum validated dose as a function of S/Q.***

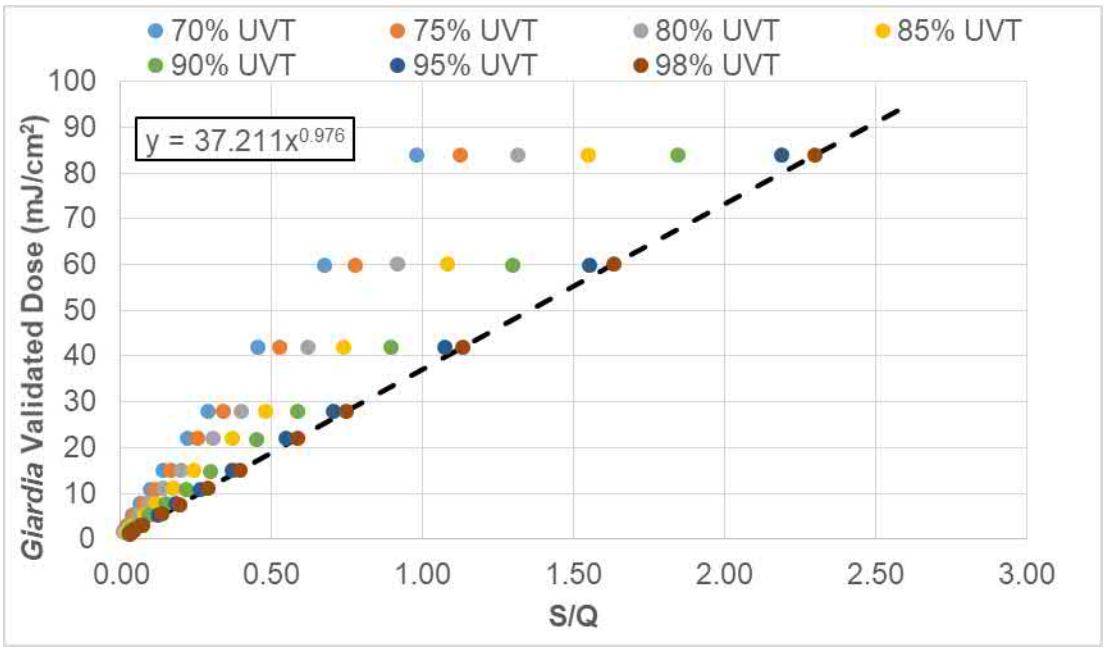

Figure 1.11b Giardia Validated Dose as a function of S/Q for the WF-125-6. ***Dashed line shows minimum validated dose as a function of S/Q.***

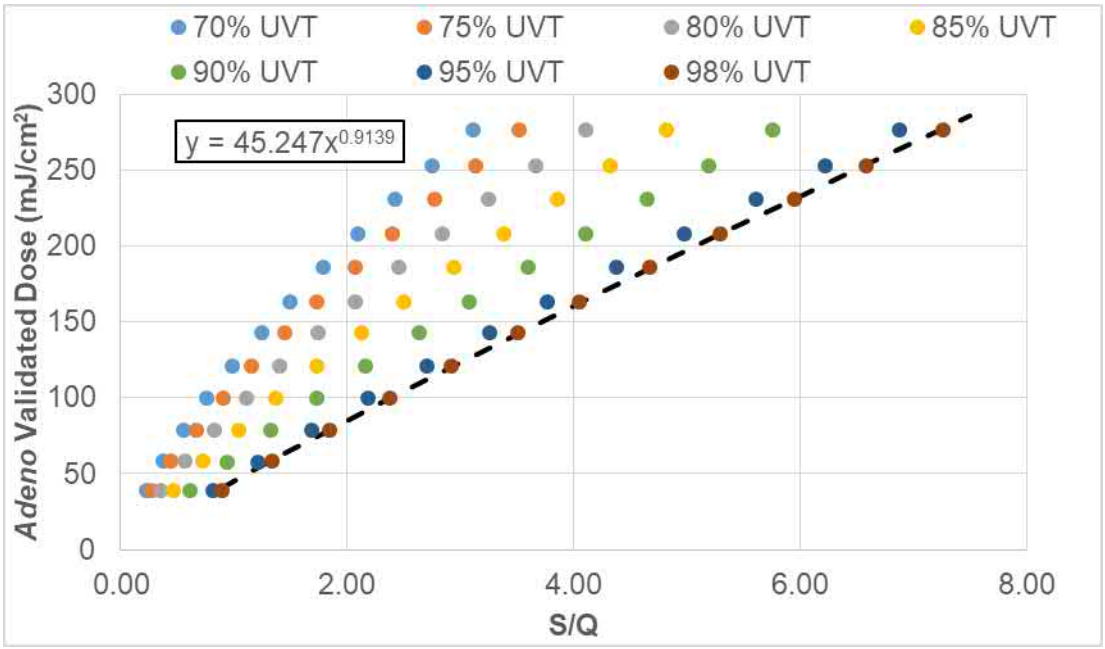

Figure 1.11c Adenovirus Validated Dose as a function of S/Q for the WF-125-6.
Dashed line shows minimum validated dose as a function of S/Q.

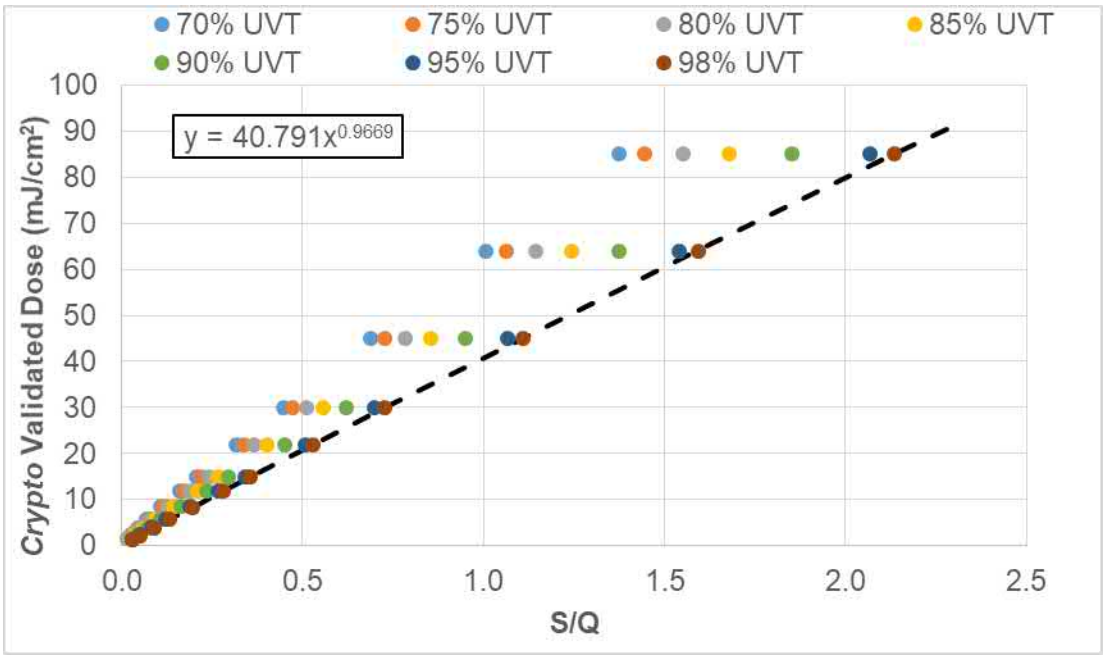

Figure 1.12a Cryptosporidium Validated Dose as a function of S/Q for the WF-225-8.
Dashed line shows minimum validated dose as a function of S/Q.

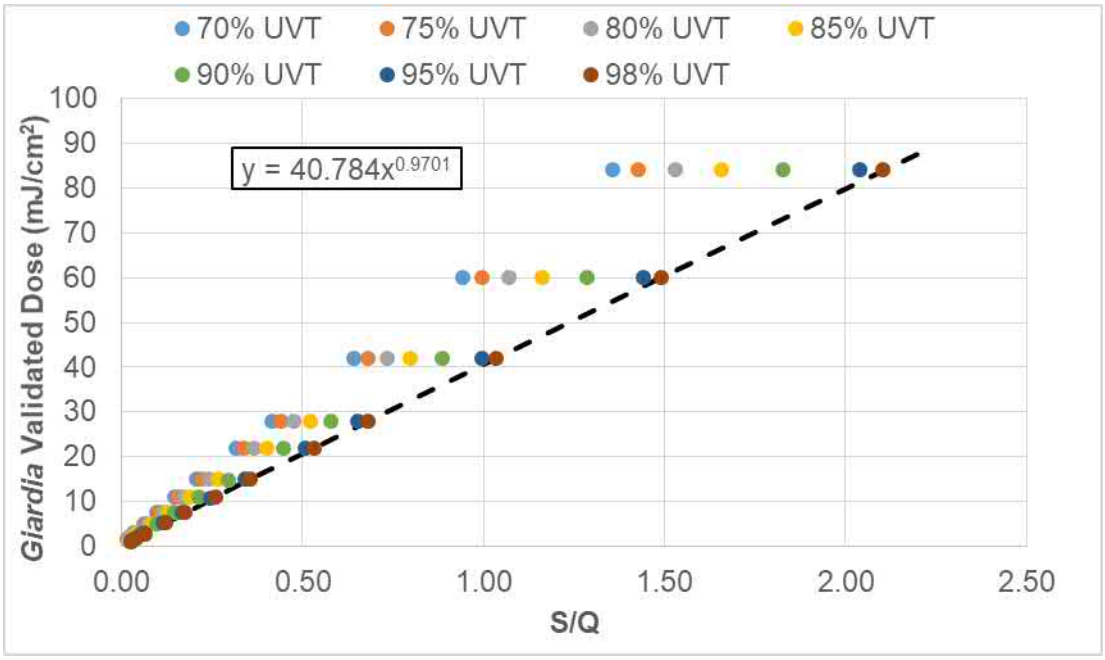

Figure 1.12b Giardia Validated Dose as a function of S/Q for the WF-225-8. ***Dashed line shows minimum validated dose as a function of S/Q.***

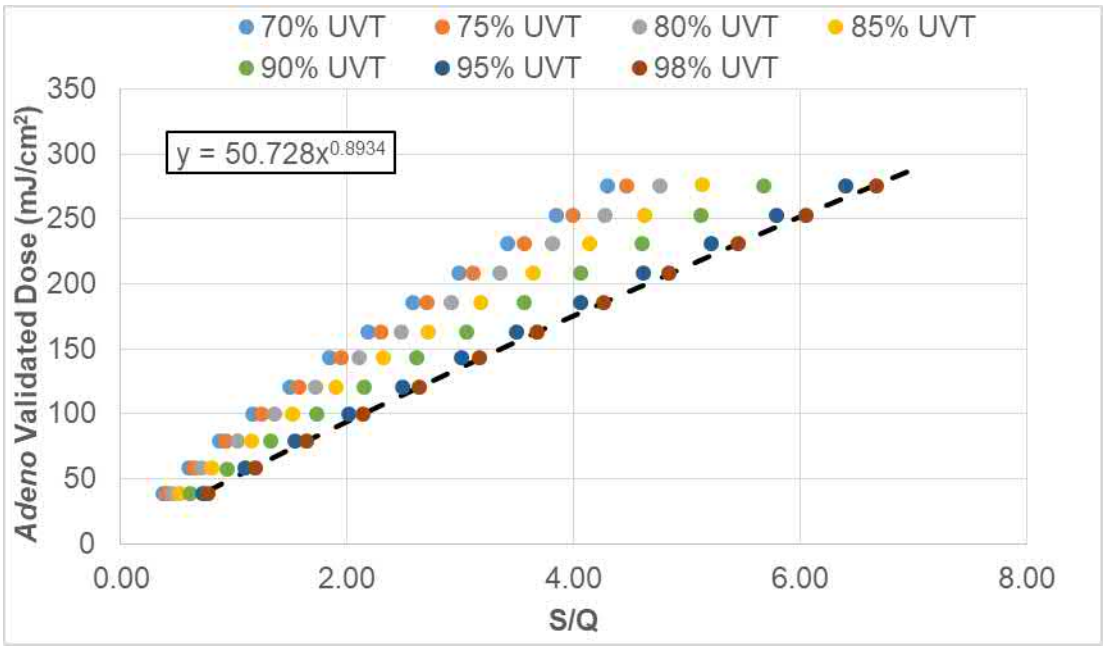

Figure 1.12c Adenovirus Validated Dose as a function of S/Q for the WF-225-8. ***Dashed line shows minimum validated dose as a function of S/Q.***

1.4.1 MS2 Equations that do not Use a UVT Monitor

Figures 1.13 through 1.15 show the doses for direct prediction of MS2, as a function of S/Q at UVTs of 70 to 98 percent for the WF-115-4, WF-125-6, and WF-225-8, respectively. The figures also show the relation and equation that defines the minimum validated dose as a function of S/Q. These can be used for UV dose monitoring for disinfection credit.

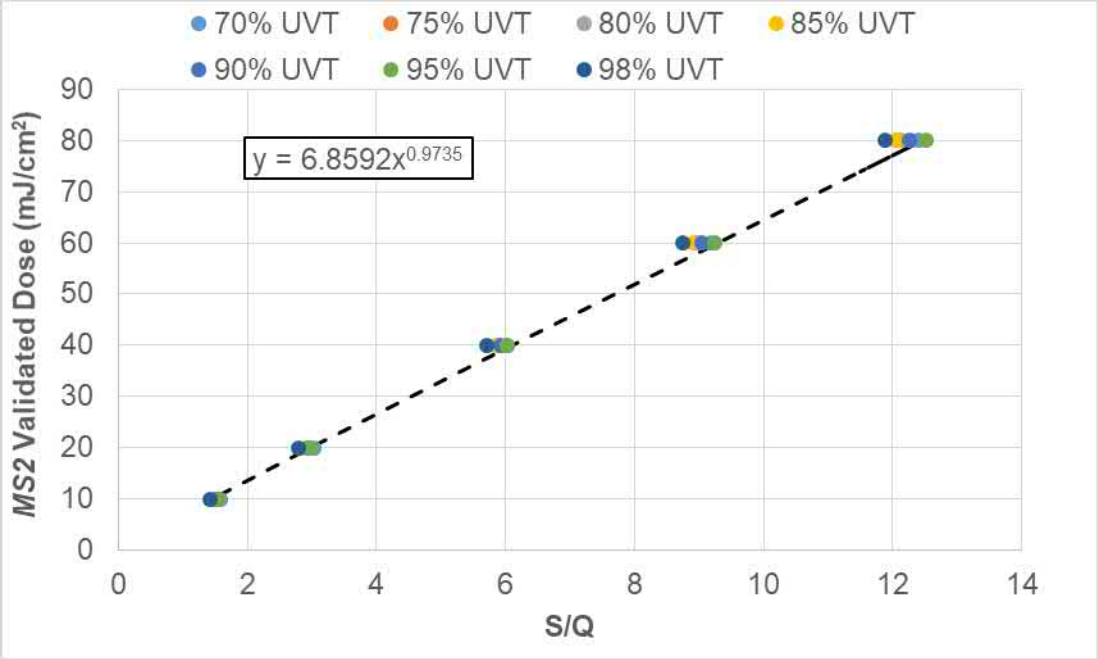

Figure 1.13 MS2 Dose as a function of S/Q for the WF-115-4. *Dashed line shows minimum validated dose as a function of S/Q*.

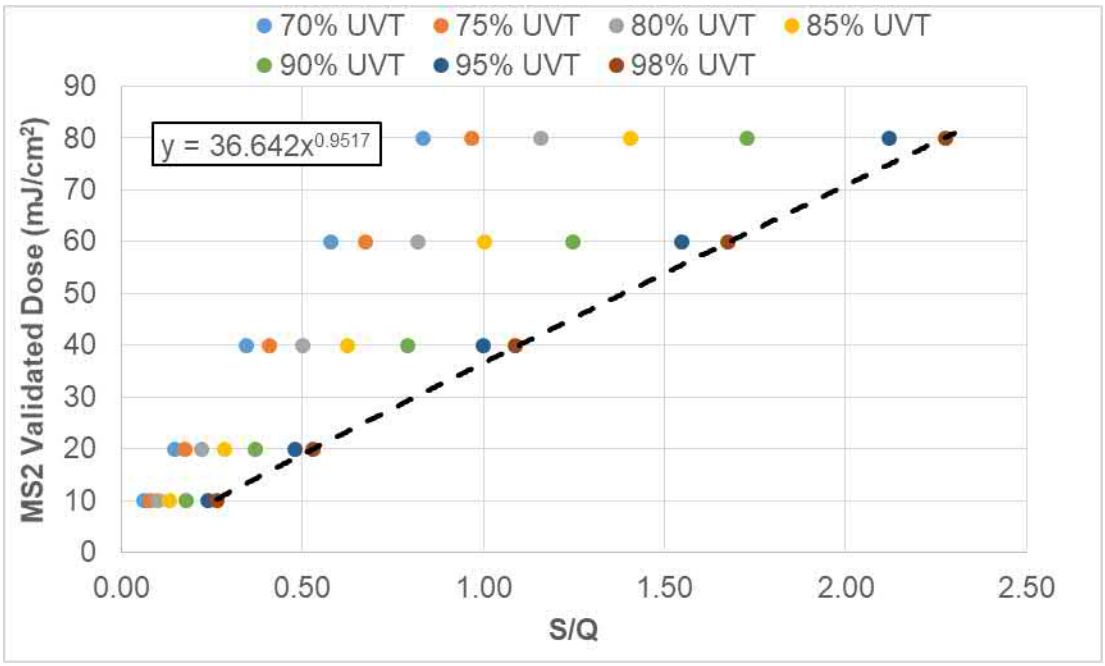

Figure 1.14 **MS2 Dose as a function of S/Q for the WF-125-6.** ***Dashed line shows minimum validated dose as a function of S/Q.***

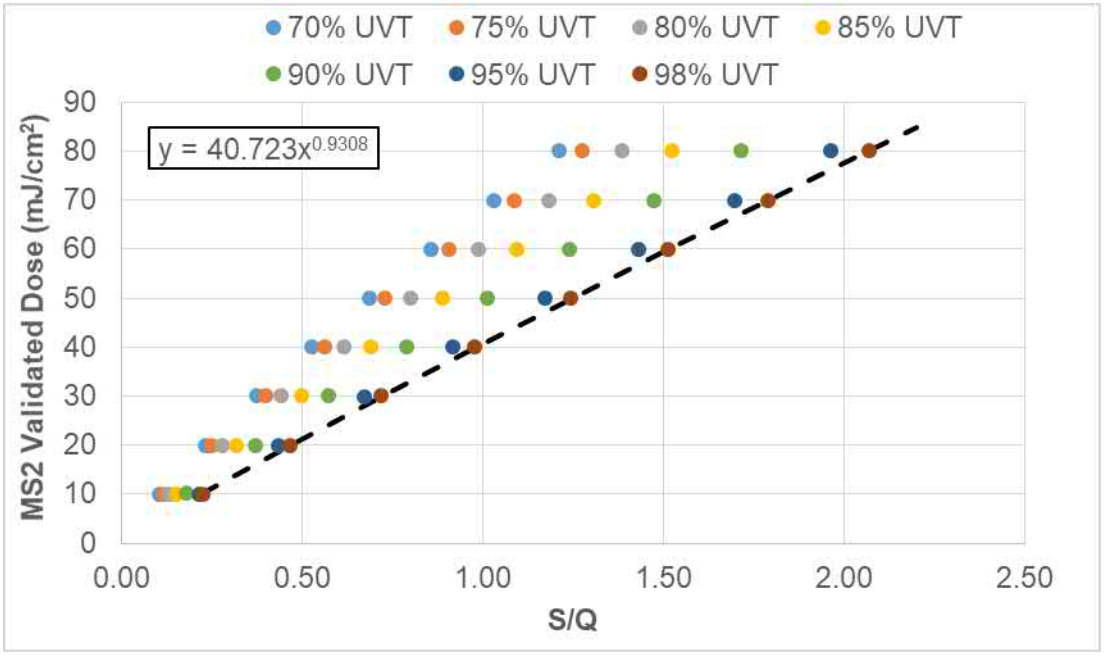

Figure 1.15 **MS2 Dose as a function of S/Q for the WF-225-8.** ***Dashed line shows minimum validated dose as a function of S/Q.***

1.4.2 Validated UV Dose for *Cryptosporidium*, Giardia, and Adenovirus Credit with a UVT monitor

Tables 1.15, 1.16, and 1.17 report the target *Cryptosporidium*, Giardia and adenovirus REDs required for *Cryptosporidium*, Giardia, and adenovirus credit, respectively, for the WF-115-4 UV reactor. Tables 1.18, 1.19, and 1.20 report the target *Cryptosporidium*, Giardia and adenovirus REDs required for *Cryptosporidium*, Giardia, and adenovirus credit, respectively, for the WF-125-6 UV reactor. Tables 1.21, 1.22, and 1.23 report the target *Cryptosporidium*, Giardia and adenovirus REDs required for *Cryptosporidium*, Giardia, and adenovirus credit, respectively, for the WF-225-8 UV reactor.

Table 1.15 Minimum *Crypto* RED (mJ/cm^2) Required for *Crypto* Log Inactivation Credits for the WF-115-4												
UVT	**Log Inactivation Credit of:**											
	0.5	**1**	**1.5**	**2**	**2.5**	**3**	**3.5**	**4**	**4.5**	**5**	**5.5**	**6**
66	2.32	3.29	4.82	6.91	9.87	13.65	16.89	24.49	33.14	49.35	69.76	92.21
67	2.30	3.25	4.77	6.83	9.76	13.50	16.69	24.20	32.74	48.76	68.92	91.10
68	2.29	3.23	4.74	6.79	9.69	13.40	16.57	24.02	32.50	48.39	68.40	90.41
69	2.28	3.22	4.72	6.76	9.65	13.35	16.50	23.93	32.37	48.21	68.14	90.07
70	2.28	3.22	4.72	6.76	9.65	13.34	16.49	23.92	32.35	48.17	68.10	90.01
71	2.29	3.23	4.73	6.77	9.66	13.37	16.52	23.96	32.41	48.26	68.22	90.17
72	2.29	3.24	4.74	6.79	9.70	13.41	16.58	24.05	32.53	48.44	68.48	90.51
73	2.30	3.25	4.77	6.83	9.75	13.48	16.67	24.18	32.70	48.70	68.84	90.99
74	2.31	3.27	4.79	6.87	9.81	13.56	16.77	24.33	32.91	49.01	69.27	91.57
75	2.32	3.29	4.82	6.91	9.88	13.66	16.89	24.50	33.14	49.36	69.77	92.23
76	2.33	3.31	4.86	6.96	9.95	13.76	17.02	24.69	33.40	49.74	70.31	92.95
77	2.35	3.33	4.89	7.02	10.03	13.86	17.16	24.89	33.68	50.15	70.89	93.71
78	2.36	3.36	4.93	7.08	10.11	13.98	17.31	25.10	33.97	50.58	71.50	94.52
79	2.37	3.38	4.97	7.14	10.20	14.10	17.46	25.32	34.27	51.04	72.14	95.38
80	2.39	3.41	5.02	7.20	10.29	14.22	17.62	25.56	34.59	51.51	72.82	96.27
81	2.41	3.44	5.06	7.27	10.39	14.36	17.79	25.81	34.93	52.02	73.53	97.23
82	2.42	3.47	5.11	7.34	10.49	14.50	17.98	26.07	35.30	52.57	74.31	98.25
83	2.44	3.50	5.16	7.42	10.60	14.66	18.18	26.36	35.69	53.16	75.14	99.36
84	2.46	3.54	5.22	7.50	10.73	14.83	18.40	26.68	36.13	53.81	76.06	100.6
85	2.48	3.58	5.28	7.60	10.87	15.02	18.64	27.04	36.61	54.53	77.08	101.9
86	2.51	3.62	5.35	7.70	11.02	15.24	18.91	27.43	37.16	55.34	78.22	103.5
87	2.54	3.68	5.43	7.82	11.20	15.48	19.22	27.88	37.77	56.25	79.51	105.2
88	2.58	3.73	5.52	7.96	11.39	15.76	19.57	28.38	38.45	57.27	80.96	107.1
89	2.63	3.80	5.63	8.11	11.61	16.07	19.96	28.95	39.23	58.44	82.60	109.3
90	2.67	3.87	5.74	8.28	11.87	16.43	20.40	29.59	40.11	59.75	84.46	111.7
91	2.73	3.96	5.87	8.48	12.15	16.83	20.90	30.32	41.11	61.24	86.56	114.5
92	2.79	4.05	6.02	8.70	12.46	17.28	21.47	31.15	42.23	62.91	88.92	117.7
93	2.86	4.16	6.19	8.94	12.81	17.79	22.10	32.07	43.49	64.79	91.58	121.2
94	2.94	4.28	6.38	9.22	13.21	18.36	22.81	33.11	44.91	66.88	94.56	125.1
95	3.02	4.41	6.59	9.53	13.65	18.99	23.59	34.27	46.47	69.22	97.88	129.6
96	3.12	4.56	6.82	9.87	14.13	19.70	24.46	35.55	48.21	71.81	101.6	134.4
97	3.22	4.73	7.07	10.25	14.67	20.48	25.43	36.97	50.13	74.67	105.6	139.9
98	3.34	4.91	7.35	10.66	15.27	21.33	26.49	38.52	52.25	77.82	110.1	145.8

Table 1.16 Minimum Giardia RED (mJ/cm^2) Required for Giardia Log Inactivation Credits for the WF-115-4												
UVT	**Log Inactivation Credit of:**											
	0.5	**1**	**1.5**	**2**	**2.5**	**3**	**3.5**	**4**	**4.5**	**5**	**5.5**	**6**
66	2.10	2.73	3.73	6.20	8.95	12.54	16.89	24.47	30.93	46.06	65.41	91.15
67	2.08	2.71	3.69	6.13	8.84	12.40	16.69	24.19	30.56	45.51	64.63	90.04
68	2.07	2.69	3.67	6.09	8.78	12.31	16.57	24.01	30.33	45.16	64.14	89.36
69	2.07	2.68	3.65	6.06	8.75	12.26	16.50	23.92	30.21	44.99	63.90	89.02
70	2.07	2.68	3.65	6.06	8.74	12.25	16.49	23.90	30.19	44.96	63.85	88.96
71	2.07	2.68	3.66	6.07	8.76	12.28	16.52	23.95	30.25	45.04	63.97	89.13
72	2.08	2.69	3.67	6.09	8.79	12.32	16.58	24.03	30.36	45.21	64.21	89.46
73	2.08	2.70	3.69	6.12	8.83	12.38	16.67	24.16	30.52	45.45	64.55	89.94
74	2.09	2.72	3.71	6.16	8.89	12.46	16.77	24.31	30.72	45.74	64.96	90.51
75	2.10	2.73	3.73	6.20	8.95	12.55	16.89	24.48	30.94	46.07	65.43	91.16
76	2.11	2.75	3.76	6.25	9.01	12.64	17.02	24.67	31.18	46.43	65.93	91.88
77	2.12	2.77	3.79	6.30	9.09	12.74	17.16	24.86	31.43	46.81	66.48	92.64
78	2.14	2.79	3.82	6.35	9.16	12.85	17.31	25.07	31.70	47.21	67.05	93.44
79	2.15	2.81	3.85	6.40	9.24	12.96	17.46	25.29	31.98	47.63	67.65	94.28
80	2.17	2.83	3.89	6.46	9.32	13.08	17.62	25.53	32.28	48.08	68.29	95.17
81	2.19	2.85	3.92	6.52	9.41	13.20	17.79	25.77	32.60	48.55	68.96	96.12
82	2.21	2.88	3.96	6.58	9.51	13.34	17.98	26.04	32.94	49.06	69.69	97.13
83	2.22	2.91	4.00	6.65	9.61	13.48	18.18	26.33	33.31	49.62	70.48	98.23
84	2.25	2.94	4.05	6.73	9.72	13.64	18.40	26.64	33.72	50.22	71.34	99.44
85	2.27	2.97	4.10	6.81	9.85	13.82	18.64	26.99	34.17	50.90	72.30	100.8
86	2.30	3.00	4.15	6.91	9.99	14.02	18.91	27.39	34.68	51.65	73.37	102.3
87	2.33	3.05	4.22	7.02	10.15	14.24	19.22	27.83	35.25	52.50	74.58	104.0
88	2.36	3.10	4.29	7.14	10.33	14.50	19.57	28.33	35.89	53.46	75.94	105.9
89	2.40	3.16	4.37	7.28	10.53	14.78	19.96	28.90	36.62	54.54	77.49	108.0
90	2.44	3.22	4.46	7.43	10.76	15.11	20.40	29.55	37.44	55.77	79.23	110.5
91	2.49	3.30	4.57	7.61	11.01	15.47	20.90	30.28	38.37	57.16	81.21	113.3
92	2.55	3.38	4.69	7.80	11.30	15.89	21.47	31.10	39.42	58.72	83.43	116.4
93	2.61	3.47	4.82	8.03	11.63	16.35	22.10	32.03	40.60	60.47	85.93	119.9
94	2.67	3.58	4.97	8.27	11.99	16.88	22.80	33.07	41.91	62.43	88.73	123.8
95	2.75	3.69	5.13	8.55	12.40	17.46	23.58	34.22	43.38	64.62	91.85	128.2
96	2.84	3.82	5.31	8.86	12.85	18.10	24.44	35.50	45.00	67.05	95.32	133.0
97	2.93	3.96	5.51	9.19	13.34	18.82	25.40	36.92	46.79	69.73	99.14	138.4
98	3.03	4.12	5.72	9.57	13.89	19.60	26.45	38.48	48.76	72.67	103.4	144.3

Table 1.17 Minimum Adenovirus RED (mJ/cm^2) Required for Adenovirus Log Inactivation Credits for the WF-115-4												
UVT	**Log Inactivation Credit of:**											
	0.5	**1**	**1.5**	**2**	**2.5**	**3**	**3.5**	**4**	**4.5**	**5**	**5.5**	**6**
66	55.00	73.74	94.73	115.8	136.9	158.9	179.0	202.2	224.4	247.5	269.6	292.8
67	54.46	72.85	93.51	114.2	135.0	156.7	176.5	199.3	221.1	243.9	265.7	288.5
68	54.07	72.23	92.66	113.1	133.7	155.1	174.7	197.3	218.8	241.4	262.9	285.5
69	53.82	71.83	92.11	112.4	132.8	154.1	173.6	196.0	217.4	239.8	261.1	283.5
70	53.69	71.61	91.80	112.0	132.4	153.6	172.9	195.3	216.6	238.9	260.2	282.5
71	53.64	71.54	91.70	111.9	132.2	153.4	172.7	195.0	216.3	238.6	259.9	282.1
72	53.67	71.58	91.76	112.0	132.3	153.5	172.8	195.2	216.5	238.8	260.0	282.3
73	53.75	71.71	91.95	112.2	132.6	153.9	173.2	195.6	217.0	239.3	260.6	283.0
74	53.88	71.92	92.23	112.6	133.0	154.4	173.8	196.3	217.7	240.1	261.6	284.0
75	54.04	72.18	92.59	113.0	133.6	155.0	174.6	197.1	218.7	241.2	262.7	285.2
76	54.23	72.49	93.01	113.6	134.2	155.8	175.4	198.1	219.8	242.4	264.1	286.7
77	54.44	72.82	93.47	114.2	134.9	156.6	176.4	199.2	221.0	243.8	265.6	288.3
78	54.66	73.19	93.97	114.8	135.7	157.5	177.5	200.4	222.3	245.3	267.2	290.1
79	54.91	73.59	94.51	115.5	136.6	158.5	178.6	201.7	223.8	246.9	268.9	292.0
80	55.17	74.01	95.10	116.2	137.5	159.5	179.8	203.1	225.3	248.6	270.8	294.1
81	55.45	74.47	95.73	117.0	138.4	160.7	181.1	204.6	227.0	250.4	272.9	296.3
82	55.75	74.97	96.42	117.9	139.5	161.9	182.6	206.2	228.8	252.5	275.1	298.7
83	56.09	75.53	97.18	118.9	140.7	163.3	184.2	208.0	230.9	254.7	277.5	301.4
84	56.47	76.15	98.03	119.9	142.0	164.9	185.9	210.0	233.1	257.2	280.3	304.4
85	56.89	76.84	98.99	121.2	143.5	166.6	187.9	212.3	235.7	260.1	283.4	307.8
86	57.38	77.64	100.1	122.6	145.1	168.7	190.2	214.9	238.6	263.3	286.9	311.7
87	57.93	78.54	101.3	124.2	147.1	170.9	192.8	217.9	241.9	267.0	291.0	316.1
88	58.64	79.59	102.8	126.0	149.3	173.6	195.8	221.3	245.7	271.2	295.6	321.1
89	59.48	80.82	104.4	128.1	151.8	176.6	199.2	225.2	250.1	276.1	300.9	326.9
90	60.43	82.22	106.4	130.5	154.7	180.1	203.2	229.7	255.1	281.7	307.0	333.6
91	61.52	83.83	108.5	133.3	158.0	184.0	207.7	234.9	260.8	288.0	314.0	341.2
92	62.76	85.65	111.0	136.5	161.8	188.5	212.8	240.7	267.4	295.3	322.0	349.9
93	64.16	87.72	113.8	140.0	166.1	193.7	218.6	247.4	274.8	303.6	331.0	359.7
94	65.74	90.06	117.0	144.1	171.0	199.4	225.2	254.9	283.3	312.9	341.3	370.9
95	67.51	92.69	120.6	148.6	176.5	205.9	232.7	263.4	292.7	323.4	352.8	383.5
96	69.49	95.62	124.6	153.7	182.7	213.3	241.0	272.9	303.4	335.2	365.7	397.5
97	71.69	98.89	129.1	159.3	189.7	221.4	250.3	283.5	315.2	348.4	380.1	413.2
98	74.12	102.5	134.1	165.6	197.3	230.5	260.6	295.2	328.3	363.0	396.1	430.6

Table 1.18 Minimum *Crypto* RED (mJ/cm^2) Required for *Crypto* Log Inactivation Credits for the WF-125-6												
UVT	**Log Inactivation Credit of:**											
	0.5	**1**	**1.5**	**2**	**2.5**	**3**	**3.5**	**4**	**4.5**	**5**	**5.5**	**6**
66	2.22	3.15	4.66	6.72	9.64	13.38	16.57	24.09	32.63	48.67	68.87	91.12
67	2.20	3.12	4.61	6.64	9.53	13.22	16.38	23.80	32.24	48.08	68.04	90.02
68	2.19	3.10	4.58	6.59	9.46	13.13	16.25	23.62	32.00	47.72	67.53	89.34
69	2.18	3.09	4.56	6.57	9.42	13.08	16.19	23.53	31.88	47.53	67.27	89.00
70	2.18	3.09	4.56	6.57	9.42	13.07	16.18	23.52	31.85	47.50	67.23	88.94
71	2.18	3.09	4.57	6.58	9.43	13.09	16.21	23.56	31.91	47.59	67.35	89.10
72	2.19	3.10	4.58	6.60	9.47	13.14	16.27	23.65	32.03	47.77	67.61	89.44
73	2.20	3.12	4.61	6.63	9.51	13.21	16.36	23.77	32.20	48.02	67.96	89.91
74	2.21	3.14	4.63	6.68	9.57	13.29	16.46	23.92	32.41	48.33	68.40	90.49
75	2.22	3.16	4.66	6.72	9.64	13.38	16.58	24.09	32.64	48.67	68.89	91.14
76	2.23	3.18	4.70	6.77	9.71	13.48	16.70	24.28	32.89	49.05	69.42	91.85
77	2.24	3.20	4.73	6.82	9.79	13.59	16.84	24.48	33.16	49.46	70.00	92.61
78	2.26	3.22	4.77	6.88	9.87	13.70	16.98	24.68	33.45	49.88	70.60	93.42
79	2.27	3.25	4.81	6.94	9.96	13.82	17.14	24.90	33.75	50.33	71.23	94.26
80	2.29	3.28	4.85	7.00	10.05	13.94	17.29	25.14	34.07	50.81	71.90	95.15
81	2.30	3.30	4.90	7.07	10.14	14.08	17.46	25.38	34.40	51.31	72.62	96.09
82	2.32	3.33	4.94	7.14	10.25	14.22	17.65	25.65	34.77	51.85	73.38	97.11
83	2.34	3.37	5.00	7.21	10.36	14.37	17.84	25.94	35.16	52.44	74.21	98.21
84	2.36	3.40	5.05	7.30	10.48	14.54	18.06	26.25	35.59	53.08	75.12	99.42
85	2.38	3.44	5.12	7.39	10.62	14.73	18.30	26.60	36.07	53.79	76.13	100.8
86	2.41	3.49	5.19	7.50	10.77	14.94	18.57	26.99	36.60	54.59	77.26	102.3
87	2.44	3.54	5.26	7.61	10.94	15.19	18.87	27.43	37.21	55.49	78.54	104.0
88	2.47	3.59	5.35	7.75	11.14	15.46	19.21	27.93	37.89	56.51	79.97	105.9
89	2.50	3.66	5.45	7.90	11.35	15.77	19.60	28.49	38.66	57.66	81.60	108.0
90	2.55	3.73	5.57	8.07	11.60	16.12	20.04	29.13	39.53	58.96	83.44	110.5
91	2.61	3.81	5.70	8.26	11.88	16.51	20.53	29.85	40.51	60.43	85.52	113.2
92	2.67	3.90	5.84	8.48	12.20	16.96	21.09	30.67	41.62	62.09	87.87	116.3
93	2.73	4.01	6.01	8.72	12.55	17.46	21.72	31.58	42.87	63.95	90.50	119.8
94	2.81	4.13	6.19	8.99	12.94	18.02	22.42	32.61	44.27	66.02	93.45	123.8
95	2.89	4.26	6.40	9.30	13.37	18.65	23.20	33.75	45.82	68.34	96.74	128.1
96	2.99	4.41	6.62	9.63	13.85	19.35	24.06	35.01	47.54	70.90	100.4	133.0
97	3.09	4.57	6.88	10.00	14.39	20.11	25.01	36.42	49.44	73.74	104.4	138.3
98	3.20	4.74	7.15	10.41	14.97	20.96	26.06	37.96	51.53	76.86	108.9	144.2

Table 1.19 Minimum Giardia RED (mJ/cm^2) Required for Giardia Log Inactivation Credits for the WF-125-6												
UVT	**Log Inactivation Credit of:**											
	0.5	**1**	**1.5**	**2**	**2.5**	**3**	**3.5**	**4**	**4.5**	**5**	**5.5**	**6**
66	2.02	2.63	3.60	6.03	8.73	12.28	16.57	24.07	30.46	45.42	64.58	90.07
67	2.01	2.60	3.56	5.96	8.63	12.14	16.38	23.79	30.09	44.87	63.80	88.98
68	2.00	2.59	3.54	5.91	8.57	12.05	16.25	23.61	29.86	44.53	63.32	88.30
69	1.99	2.58	3.52	5.89	8.54	12.00	16.19	23.52	29.75	44.37	63.08	87.96
70	1.99	2.58	3.52	5.89	8.53	12.00	16.18	23.51	29.73	44.34	63.03	87.90
71	1.99	2.58	3.53	5.90	8.55	12.02	16.21	23.55	29.79	44.42	63.15	88.06
72	2.00	2.59	3.54	5.92	8.58	12.06	16.27	23.64	29.90	44.58	63.39	88.40
73	2.00	2.60	3.56	5.95	8.62	12.12	16.36	23.76	30.05	44.82	63.72	88.87
74	2.01	2.62	3.58	5.99	8.67	12.20	16.46	23.91	30.25	45.10	64.13	89.44
75	2.02	2.63	3.60	6.03	8.73	12.28	16.58	24.08	30.46	45.43	64.59	90.08
76	2.03	2.65	3.63	6.07	8.80	12.38	16.70	24.26	30.70	45.78	65.10	90.79
77	2.04	2.67	3.66	6.12	8.87	12.48	16.84	24.46	30.95	46.16	65.63	91.54
78	2.05	2.69	3.69	6.17	8.94	12.58	16.98	24.67	31.22	46.56	66.20	92.34
79	2.07	2.71	3.72	6.22	9.02	12.69	17.14	24.89	31.50	46.98	66.80	93.17
80	2.08	2.73	3.75	6.28	9.10	12.81	17.29	25.12	31.80	47.42	67.43	94.05
81	2.09	2.75	3.79	6.34	9.19	12.93	17.46	25.36	32.11	47.89	68.10	94.99
82	2.11	2.78	3.82	6.40	9.28	13.07	17.65	25.62	32.45	48.39	68.81	95.99
83	2.13	2.80	3.87	6.47	9.39	13.21	17.84	25.91	32.82	48.94	69.59	97.09
84	2.15	2.83	3.91	6.55	9.50	13.37	18.06	26.22	33.22	49.54	70.45	98.28
85	2.17	2.86	3.96	6.63	9.62	13.54	18.30	26.57	33.66	50.21	71.40	99.61
86	2.20	2.90	4.02	6.72	9.76	13.74	18.57	26.96	34.16	50.95	72.46	101.1
87	2.23	2.94	4.08	6.83	9.92	13.96	18.87	27.40	34.73	51.79	73.66	102.8
88	2.26	2.98	4.15	6.95	10.09	14.21	19.21	27.89	35.36	52.74	75.01	104.7
89	2.30	3.04	4.23	7.08	10.29	14.49	19.60	28.45	36.08	53.82	76.54	106.8
90	2.34	3.10	4.32	7.24	10.52	14.81	20.04	29.09	36.89	55.03	78.27	109.2
91	2.39	3.18	4.42	7.41	10.77	15.18	20.53	29.82	37.81	56.40	80.22	112.0
92	2.44	3.26	4.54	7.61	11.06	15.58	21.09	30.63	38.85	57.95	82.42	115.0
93	2.50	3.35	4.66	7.82	11.38	16.04	21.72	31.55	40.01	59.69	84.90	118.5
94	2.57	3.45	4.81	8.07	11.74	16.56	22.42	32.57	41.32	61.63	87.67	122.4
95	2.65	3.56	4.97	8.34	12.14	17.13	23.19	33.71	42.77	63.79	90.76	126.7
96	2.73	3.69	5.15	8.64	12.58	17.77	24.04	34.98	44.37	66.20	94.20	131.5
97	2.82	3.83	5.34	8.98	13.07	18.47	24.99	36.38	46.15	68.85	97.99	136.8
98	2.92	3.98	5.56	9.34	13.61	19.25	26.03	37.92	48.10	71.77	102.2	142.7

Table 1.20	Minimum Adenovirus RED (mJ/cm^2) Required for Adenovirus Log Inactivation Credits for the WF-125-6											
UVT	**Log Inactivation Credit of:**											
	0.5	**1**	**1.5**	**2**	**2.5**	**3**	**3.5**	**4**	**4.5**	**5**	**5.5**	**6**
66	52.70	71.06	91.91	112.9	133.9	155.9	176.0	199.1	221.2	244.3	266.4	289.5
67	52.15	70.18	90.69	111.3	132.0	153.7	173.4	196.2	218.0	240.7	262.5	285.3
68	51.76	69.56	89.84	110.2	130.7	152.1	171.6	194.2	215.7	238.2	259.7	282.2
69	51.51	69.16	89.29	109.5	129.9	151.1	170.5	192.9	214.2	236.6	258.0	280.3
70	51.37	68.94	88.99	109.1	129.4	150.6	169.9	192.2	213.4	235.7	257.0	279.3
71	51.33	68.86	88.89	109.0	129.2	150.4	169.7	191.9	213.2	235.4	256.7	278.9
72	51.35	68.91	88.95	109.1	129.3	150.5	169.8	192.1	213.3	235.6	256.9	279.1
73	51.44	69.04	89.14	109.3	129.6	150.9	170.2	192.5	213.8	236.1	257.5	279.8
74	51.57	69.25	89.42	109.7	130.0	151.4	170.8	193.2	214.6	237.0	258.4	280.8
75	51.73	69.51	89.77	110.1	130.6	152.0	171.5	194.0	215.5	238.0	259.5	282.0
76	51.92	69.81	90.19	110.7	131.2	152.8	172.4	195.0	216.6	239.3	260.9	283.5
77	52.13	70.15	90.65	111.3	132.0	153.6	173.3	196.1	217.9	240.6	262.4	285.1
78	52.36	70.51	91.15	111.9	132.7	154.5	174.4	197.3	219.2	242.1	264.0	286.9
79	52.60	70.91	91.69	112.6	133.6	155.5	175.5	198.6	220.6	243.7	265.7	288.8
80	52.86	71.33	92.28	113.3	134.5	156.6	176.7	200.0	222.2	245.4	267.6	290.8
81	53.15	71.79	92.90	114.1	135.4	157.7	178.0	201.5	223.9	247.3	269.6	293.1
82	53.46	72.29	93.59	115.0	136.5	158.9	179.5	203.1	225.7	249.3	271.9	295.5
83	53.80	72.84	94.35	116.0	137.7	160.3	181.1	204.9	227.7	251.5	274.3	298.2
84	54.18	73.46	95.20	117.0	139.0	161.9	182.8	206.9	230.0	254.0	277.1	301.2
85	54.61	74.16	96.16	118.3	140.5	163.6	184.8	209.2	232.5	256.9	280.2	304.6
86	55.10	74.95	97.25	119.6	142.2	165.6	187.1	211.8	235.4	260.1	283.7	308.4
87	55.65	75.85	98.49	121.2	144.1	167.9	189.7	214.8	238.7	263.8	287.8	312.8
88	56.29	76.89	99.92	123.1	146.3	170.5	192.7	218.2	242.5	268.0	292.4	317.9
89	57.02	78.08	101.6	125.2	148.8	173.5	196.1	222.1	246.9	272.9	297.7	323.7
90	57.85	79.45	103.5	127.6	151.7	177.0	200.1	226.6	251.9	278.4	303.8	330.3
91	58.91	81.04	105.6	130.3	155.0	180.9	204.5	231.7	257.7	284.8	310.8	337.9
92	60.14	82.86	108.1	133.5	158.8	185.4	209.7	237.6	264.2	292.1	318.7	346.6
93	61.53	84.92	110.9	137.0	163.1	190.6	215.5	244.2	271.6	300.3	327.8	356.5
94	63.10	87.25	114.1	141.1	168.0	196.3	222.1	251.7	280.0	309.7	338.0	367.6
95	64.86	89.87	117.7	145.6	173.5	202.8	229.5	260.2	289.5	320.2	349.5	380.2
96	66.83	92.80	121.7	150.7	179.7	210.1	237.8	269.7	300.1	332.0	362.4	394.2
97	69.02	96.06	126.2	156.3	186.6	218.3	247.1	280.2	311.9	345.1	376.8	409.9
98	71.44	99.68	131.1	162.6	194.2	227.3	257.4	292.0	325.1	359.7	392.7	427.3

Table 1.21 Minimum *Crypto* RED (mJ/cm^2) Required for *Crypto* Log Inactivation Credits for the WF-225-8												
UVT	**Log Inactivation Credit of:**											
	0.5	**1**	**1.5**	**2**	**2.5**	**3**	**3.5**	**4**	**4.5**	**5**	**5.5**	**6**
66	2.15	3.07	4.56	6.60	9.49	13.21	16.38	23.83	32.32	48.24	68.33	90.45
67	2.13	3.04	4.51	6.52	9.38	13.05	16.18	23.55	31.93	47.66	67.50	89.36
68	2.12	3.02	4.48	6.47	9.31	12.96	16.06	23.37	31.69	47.30	66.99	88.68
69	2.11	3.01	4.46	6.45	9.27	12.91	16.00	23.28	31.57	47.12	66.73	88.34
70	2.11	3.00	4.46	6.45	9.27	12.90	15.99	23.27	31.55	47.09	66.69	88.28
71	2.11	3.01	4.47	6.46	9.28	12.92	16.02	23.31	31.60	47.17	66.81	88.44
72	2.12	3.02	4.48	6.48	9.32	12.97	16.08	23.40	31.72	47.35	67.06	88.78
73	2.13	3.03	4.51	6.51	9.37	13.04	16.16	23.52	31.89	47.60	67.42	89.25
74	2.14	3.05	4.53	6.55	9.42	13.12	16.26	23.67	32.09	47.90	67.85	89.82
75	2.15	3.07	4.56	6.60	9.49	13.21	16.38	23.84	32.33	48.25	68.34	90.47
76	2.16	3.09	4.60	6.65	9.56	13.31	16.51	24.02	32.58	48.63	68.87	91.18
77	2.17	3.11	4.63	6.70	9.64	13.41	16.64	24.22	32.85	49.03	69.44	91.93
78	2.19	3.14	4.67	6.76	9.72	13.53	16.78	24.43	33.13	49.45	70.04	92.73
79	2.20	3.16	4.71	6.81	9.80	13.64	16.93	24.65	33.43	49.90	70.67	93.57
80	2.22	3.19	4.75	6.88	9.89	13.77	17.09	24.88	33.74	50.37	71.34	94.45
81	2.23	3.22	4.79	6.94	9.99	13.90	17.26	25.12	34.08	50.87	72.05	95.39
82	2.25	3.25	4.84	7.01	10.09	14.04	17.44	25.38	34.44	51.40	72.81	96.40
83	2.27	3.28	4.89	7.09	10.20	14.20	17.64	25.67	34.83	51.99	73.63	97.50
84	2.29	3.31	4.95	7.17	10.32	14.37	17.85	25.98	35.25	52.63	74.54	98.70
85	2.31	3.35	5.01	7.26	10.46	14.55	18.09	26.33	35.73	53.34	75.54	100.0
86	2.34	3.40	5.08	7.37	10.61	14.76	18.36	26.72	36.26	54.13	76.67	101.5
87	2.37	3.45	5.16	7.48	10.78	15.00	18.66	27.16	36.86	55.02	77.93	103.2
88	2.40	3.50	5.24	7.62	10.97	15.27	19.00	27.65	37.53	56.03	79.36	105.1
89	2.44	3.57	5.34	7.76	11.19	15.58	19.38	28.21	38.30	57.17	80.98	107.3
90	2.48	3.64	5.46	7.93	11.44	15.93	19.81	28.84	39.16	58.47	82.81	109.7
91	2.53	3.72	5.59	8.12	11.72	16.32	20.30	29.56	40.14	59.93	84.88	112.4
92	2.59	3.81	5.73	8.34	12.03	16.76	20.86	30.37	41.24	61.57	87.21	115.5
93	2.65	3.91	5.89	8.58	12.38	17.26	21.48	31.27	42.48	63.43	89.83	119.0
94	2.73	4.03	6.07	8.85	12.77	17.82	22.18	32.29	43.87	65.49	92.76	122.9
95	2.81	4.16	6.28	9.15	13.20	18.44	22.95	33.42	45.41	67.79	96.04	127.3
96	2.90	4.31	6.50	9.48	13.68	19.13	23.80	34.68	47.12	70.34	99.67	132.1
97	3.00	4.47	6.75	9.85	14.21	19.89	24.75	36.07	49.01	73.17	103.7	137.4
98	3.12	4.64	7.03	10.26	14.79	20.73	25.79	37.60	51.09	76.27	108.1	143.3

Table 1.22 Minimum Giardia RED (mJ/cm^2) Required for Giardia Log Inactivation Credits for the WF-225-8												
UVT	**Log Inactivation Credit of:**											
	0.5	**1**	**1.5**	**2**	**2.5**	**3**	**3.5**	**4**	**4.5**	**5**	**5.5**	**6**
66	1.97	2.56	3.52	5.92	8.60	12.12	16.38	23.82	30.16	45.02	64.06	89.40
67	1.95	2.54	3.48	5.85	8.50	11.98	16.18	23.54	29.80	44.48	63.29	88.31
68	1.94	2.52	3.46	5.80	8.43	11.89	16.06	23.36	29.57	44.14	62.81	87.64
69	1.94	2.51	3.44	5.78	8.40	11.84	16.00	23.28	29.46	43.98	62.57	87.31
70	1.94	2.51	3.44	5.78	8.40	11.84	15.99	23.26	29.44	43.95	62.53	87.25
71	1.94	2.51	3.45	5.79	8.41	11.86	16.02	23.30	29.50	44.03	62.64	87.41
72	1.94	2.52	3.46	5.81	8.44	11.90	16.08	23.39	29.61	44.19	62.88	87.74
73	1.95	2.53	3.48	5.84	8.49	11.96	16.16	23.51	29.76	44.43	63.21	88.20
74	1.96	2.55	3.50	5.88	8.54	12.04	16.26	23.66	29.95	44.71	63.62	88.77
75	1.97	2.56	3.52	5.92	8.60	12.12	16.38	23.83	30.17	45.03	64.07	89.41
76	1.98	2.58	3.55	5.96	8.66	12.21	16.51	24.01	30.41	45.38	64.58	90.12
77	1.99	2.60	3.57	6.01	8.73	12.31	16.64	24.21	30.66	45.76	65.11	90.86
78	2.00	2.62	3.60	6.06	8.81	12.42	16.78	24.41	30.92	46.16	65.67	91.65
79	2.01	2.64	3.64	6.11	8.88	12.53	16.93	24.63	31.20	46.57	66.27	92.48
80	2.03	2.66	3.67	6.17	8.96	12.64	17.09	24.86	31.49	47.01	66.89	93.36
81	2.04	2.68	3.70	6.22	9.05	12.76	17.26	25.10	31.81	47.48	67.56	94.29
82	2.05	2.71	3.74	6.29	9.14	12.90	17.44	25.36	32.14	47.98	68.27	95.29
83	2.07	2.73	3.78	6.36	9.24	13.04	17.64	25.65	32.51	48.52	69.05	96.37
84	2.09	2.76	3.82	6.43	9.36	13.20	17.85	25.96	32.90	49.12	69.90	97.57
85	2.11	2.79	3.87	6.51	9.48	13.37	18.09	26.31	33.35	49.78	70.84	98.89
86	2.13	2.83	3.93	6.61	9.62	13.57	18.36	26.69	33.84	50.52	71.90	100.4
87	2.16	2.87	3.99	6.71	9.77	13.78	18.66	27.13	34.40	51.36	73.09	102.0
88	2.20	2.92	4.06	6.83	9.94	14.03	19.00	27.62	35.03	52.30	74.43	103.9
89	2.23	2.97	4.14	6.96	10.14	14.31	19.38	28.18	35.75	53.36	75.95	106.0
90	2.28	3.03	4.23	7.12	10.37	14.63	19.81	28.81	36.55	54.57	77.67	108.4
91	2.32	3.10	4.33	7.29	10.62	14.99	20.30	29.53	37.47	55.93	79.61	111.2
92	2.38	3.18	4.44	7.48	10.90	15.40	20.86	30.34	38.49	57.47	81.80	114.2
93	2.44	3.27	4.57	7.70	11.22	15.85	21.48	31.24	39.65	59.20	84.26	117.7
94	2.51	3.37	4.71	7.94	11.58	16.36	22.17	32.26	40.94	61.13	87.02	121.5
95	2.58	3.48	4.87	8.21	11.97	16.93	22.94	33.39	42.39	63.28	90.09	125.8
96	2.66	3.60	5.05	8.51	12.42	17.56	23.79	34.65	43.98	65.67	93.50	130.6
97	2.76	3.74	5.24	8.84	12.90	18.26	24.73	36.04	45.74	68.31	97.27	135.9
98	2.86	3.89	5.45	9.20	13.44	19.03	25.77	37.57	47.68	71.21	101.4	141.7

Table 1.23	Minimum Adenovirus RED (mJ/cm^2) Required for Adenovirus Log Inactivation Credits for the WF-225-8											
UVT	**Log Inactivation Credit of:**											
	0.5	**1**	**1.5**	**2**	**2.5**	**3**	**3.5**	**4**	**4.5**	**5**	**5.5**	**6**
66	51.10	69.29	90.07	111.0	132.0	154.0	174.0	197.1	219.2	242.3	264.4	287.5
67	50.55	68.40	88.85	109.4	130.1	151.8	171.5	194.2	216.0	238.7	260.5	283.2
68	50.16	67.78	88.00	108.4	128.8	150.2	169.7	192.2	213.7	236.2	257.7	280.2
69	49.91	67.38	87.45	107.7	127.9	149.2	168.6	190.9	212.3	234.6	255.9	278.3
70	49.77	67.16	87.15	107.3	127.5	148.7	167.9	190.2	211.5	233.7	255.0	277.2
71	49.72	67.09	87.05	107.1	127.3	148.5	167.7	190.0	211.2	233.4	254.7	276.9
72	49.75	67.14	87.11	107.2	127.4	148.6	167.8	190.1	211.4	233.6	254.8	277.1
73	49.84	67.27	87.30	107.5	127.7	149.0	168.2	190.5	211.8	234.1	255.4	277.7
74	49.96	67.48	87.58	107.8	128.1	149.5	168.8	191.2	212.6	235.0	256.4	278.7
75	50.13	67.74	87.94	108.3	128.7	150.1	169.6	192.1	213.5	236.0	257.5	280.0
76	50.32	68.04	88.35	108.8	129.3	150.9	170.4	193.0	214.6	237.3	258.8	281.5
77	50.53	68.37	88.81	109.4	130.0	151.7	171.4	194.1	215.9	238.6	260.3	283.1
78	50.76	68.74	89.31	110.0	130.8	152.6	172.4	195.3	217.2	240.1	262.0	284.9
79	51.00	69.13	89.85	110.7	131.7	153.6	173.6	196.6	218.6	241.7	263.7	286.8
80	51.27	69.56	90.44	111.4	132.5	154.6	174.8	198.0	220.2	243.4	265.6	288.8
81	51.55	70.01	91.06	112.2	133.5	155.8	176.1	199.5	221.9	245.3	267.6	291.0
82	51.87	70.51	91.75	113.1	134.6	157.0	177.5	201.1	223.7	247.3	269.9	293.5
83	52.21	71.07	92.51	114.1	135.8	158.4	179.1	202.9	225.7	249.5	272.3	296.1
84	52.60	71.68	93.36	115.2	137.1	159.9	180.9	204.9	228.0	252.0	275.1	299.1
85	53.03	72.38	94.32	116.4	138.5	161.7	182.9	207.2	230.5	254.9	278.2	302.5
86	53.52	73.17	95.40	117.8	140.2	163.7	185.2	209.8	233.4	258.1	281.7	306.4
87	54.08	74.08	96.65	119.3	142.2	166.0	187.8	212.8	236.7	261.8	285.7	310.8
88	54.73	75.11	98.08	121.2	144.4	168.6	190.7	216.2	240.5	266.0	290.4	315.8
89	55.46	76.30	99.71	123.3	146.9	171.6	194.2	220.1	244.9	270.9	295.7	321.6
90	56.30	77.66	101.6	125.7	149.8	175.0	198.1	224.6	249.9	276.4	301.8	328.3
91	57.26	79.22	103.8	128.4	153.1	179.0	202.6	229.7	255.6	282.8	308.7	335.9
92	58.39	81.03	106.2	131.6	156.9	183.5	207.7	235.6	262.2	290.0	316.7	344.5
93	59.78	83.09	109.0	135.1	161.1	188.6	213.5	242.2	269.6	298.3	325.7	354.4
94	61.34	85.42	112.2	139.1	166.0	194.4	220.1	249.7	278.0	307.6	335.9	365.5
95	63.10	88.03	115.8	143.7	171.5	200.9	227.5	258.2	287.5	318.1	347.4	378.1
96	65.06	90.96	119.8	148.7	177.7	208.1	235.8	267.6	298.1	329.9	360.3	392.1
97	67.24	94.22	124.3	154.4	184.6	216.3	245.1	278.2	309.9	343.0	374.7	407.8
98	69.66	97.83	129.2	160.6	192.2	225.3	255.4	289.9	323.0	357.6	390.7	425.2

1.5 UVDGM COMPLIANCE

Validation testing, analysis, and reporting were conducted in accordance with the 2006 UVDGM. Chapter 7 of this report evaluates compliance of the validation to the five checklists provided in Chapter 5 of the UVDGM. The validation of the reactor meets the 2006 UVDGM with the following clarifications:

1. The Student's t-statistics tabulated in the UVDGM are incorrect because they use N degrees of freedom. The degree of freedom is defined as the number of samples minus the number of coefficients predicted in the model (*Applied Linear Regression*, 3rd Ed.). All t-statistics used in this validation were obtained using N-P degrees of freedom, where P is the number of parameters or coefficients in the model obtained from a regression analysis. For example, when dose response curves are fit using a quadratic equation, the model uses two parameters and thus N-2 degrees of freedom was used.
2. Validation equations predict log inactivation as a function of flow, UVT, UV sensor readings, and microbe UV sensitivity. Validation equations were fitted to validation data measured using MS2 and T1UV phage. Fits were obtained using a non-linear multivariate regression that minimized the sum of squares of the differences between the measured and predicted log inactivation instead of measured and predicted RED. Therefore, the uncertainty of validation was defined in units of log inactivation instead of RED.
3. The UVDGM recommends calculating the log inactivation with the UV dose-response curve as $\log(N/N_0)$ where $\log(N_0)$ is defined as the y-axis intercept of the fit to log(N) versus UV dose. Analysis showed that the value of $\log(N_0)$ obtained using this approach was biased low with most of the measured UV dose-response curves (Table A.4c in Appendix A). The bias would lead to over prediction of log inactivation by the biodosimetry analysis. Hence, $\log(N_0)$ was defined as the average of the measured value of log(N) with zero UV dose.

UV REACTOR DOCUMENTATION

The UV disinfection systems validated and herein described are the WF-115-4, WF-125-6, and WF-225-8 UV reactors manufactured by ATG UV Technology (ATG). The WF-115-4 system uses one 1.5 kW medium-pressure (MP) lamp oriented perpendicular to the bulk flow. The WF-125-6 system uses one 2.5 kW MP lamp oriented perpendicular to the bulk flow. The WF-225-8 system uses two 2.5 kW MP lamps oriented perpendicular to the bulk flow. In each reactor, a single quartz sleeve is installed over each lamp. Each quartz sleeve was equipped with a mechanical wiper mechanism to remove foulants that accumulate on the external surfaces of the sleeves. Each reactor was equipped with a single UV intensity sensor that monitored the output of the lamp. Each reactor used a control panel and external magnetic ballast to control the operation of the system and monitor performance. Unless otherwise noted, ATG provided all the information reported in this section.

2.1 REACTOR

The WF-115-4, WF-125-6, and WF-225-8 UV reactors are inline, rectangular shaped reactors comprised of a stainless steel vessel. The total length (parallel to flow) is 160 mm for the WF-115-4 and 180 mm for the WF-125-6 and WF-225-8. Figure 2.1 shows an isometric view of the reactors, Figure 2.2 shows the cross-sectional view, Figure 2.3 shows the top view, and Figure 2.4 shows the end view. The three reactors were connected to the test train piping in parallel, each connected via a bolted flange to the test train piping. Each reactor uses a single UV intensity sensor with a sensor port located on the top of the reactor vessel.

Water enter and exits the WF-115-4, WF-125-6, and WF-225-8 UV reactors though flanges with internal diameters of 108.2 mm, 161.5 mm, and 211.6 mm, respectively. The sensor port is located approximately 75 mm upstream of the outlet flange face for the WF-115-4 UV reactor and 90 mm upstream of the outlet flange face for the WF-125-6 and WF-225-8 UV reactors. The lamps are centered radially in the quartz sleeves.

All three reactors include a wiping system to clean the outer surfaces of their quartz sleeve(s). The two major components of the wiping system are the wiper shaft and wiper carriages, shown in Figures 2.5 and 2.6. Each reactor features two wiper carriages at a fixed spacing on a single wiper shaft.

All dimensions in Figures 2.1 through 2.6 are in mm unless otherwise noted. Tables 2.1, 2.2, and 2.3 summarizes key wetted dimensions of the WF-115-4, WF-125-6, and WF-225-8 UV reactors, respectively.

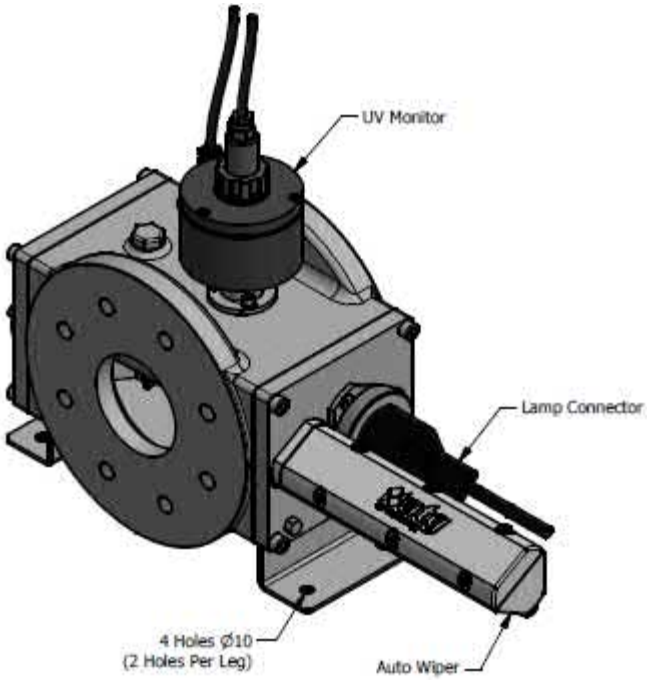

Figure 2.1a ATG WF-115-4 Reactor, isometric view. (Source: ATG)

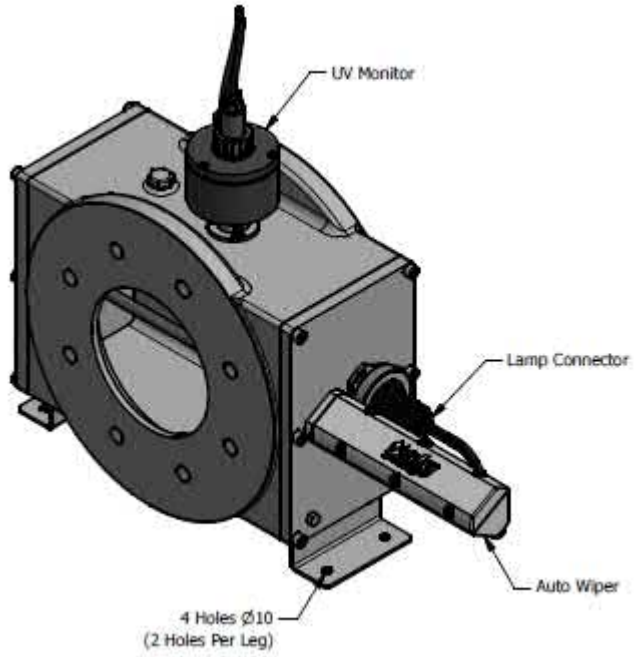

Figure 2.1b ATG WF-125-6 Reactor, isometric view. (Source: ATG)

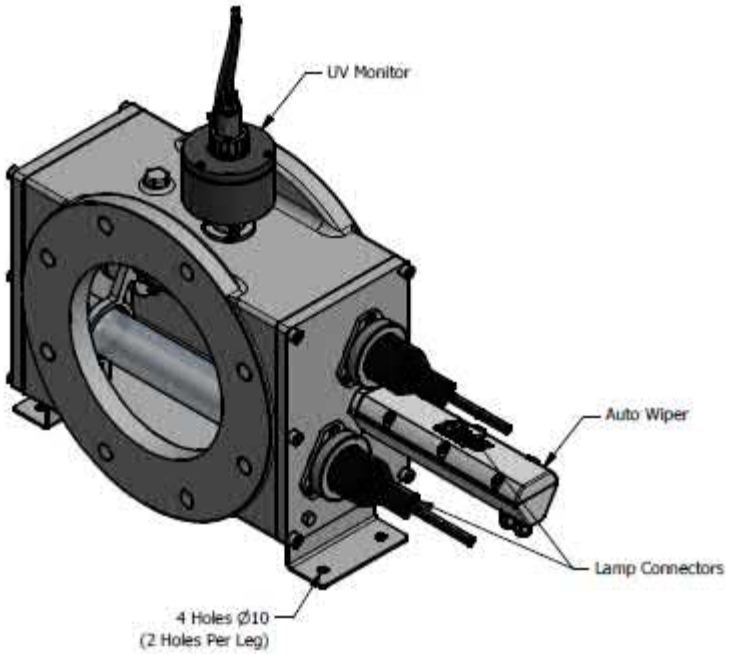

Figure 2.1c ATG WF-225-8 Reactor, isometric view. (Source: ATG)

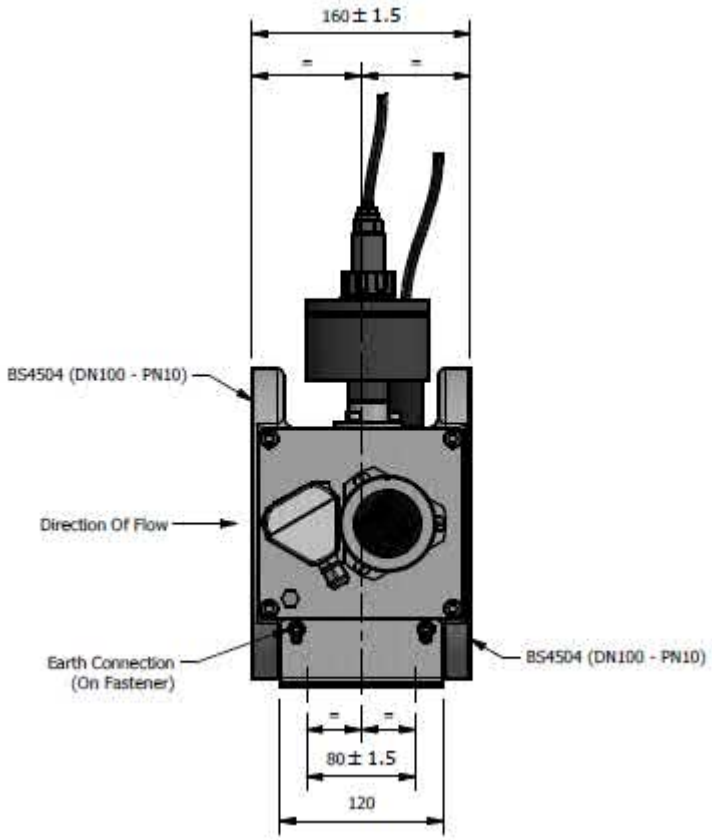

Figure 2.2a ATG WF-115-4 Reactor, cross-sectional view. (Source: ATG)

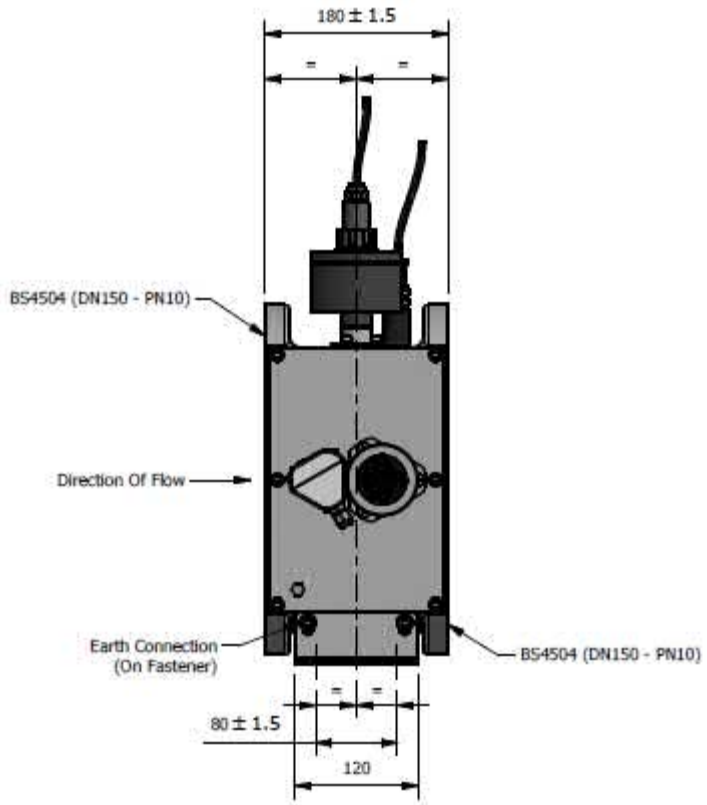

Figure 2.2b ATG WF-125-6 Reactor, cross-sectional view. (Source: ATG)

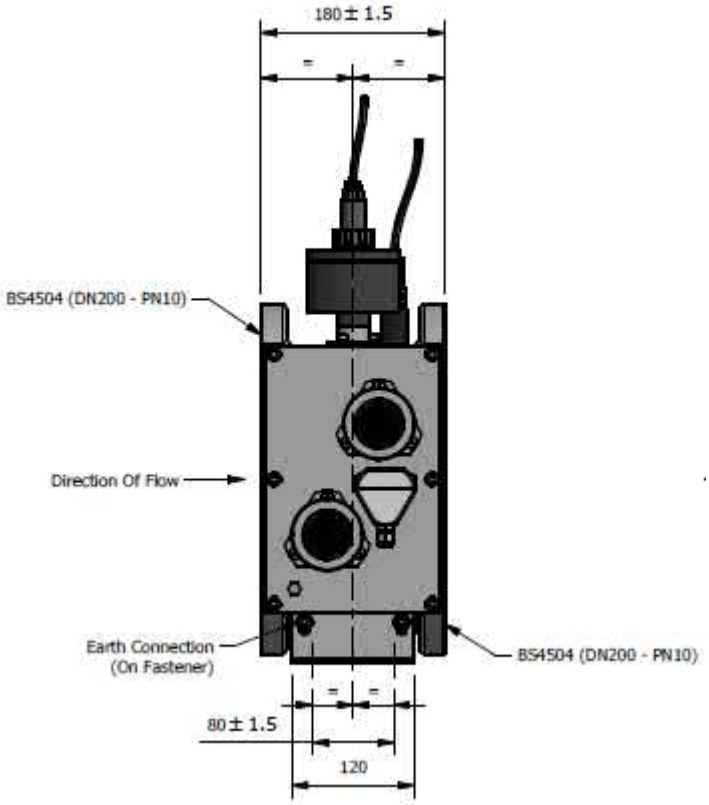

Figure 2.2c ATG WF-225-8 Reactor, cross-sectional view. (Source: ATG)

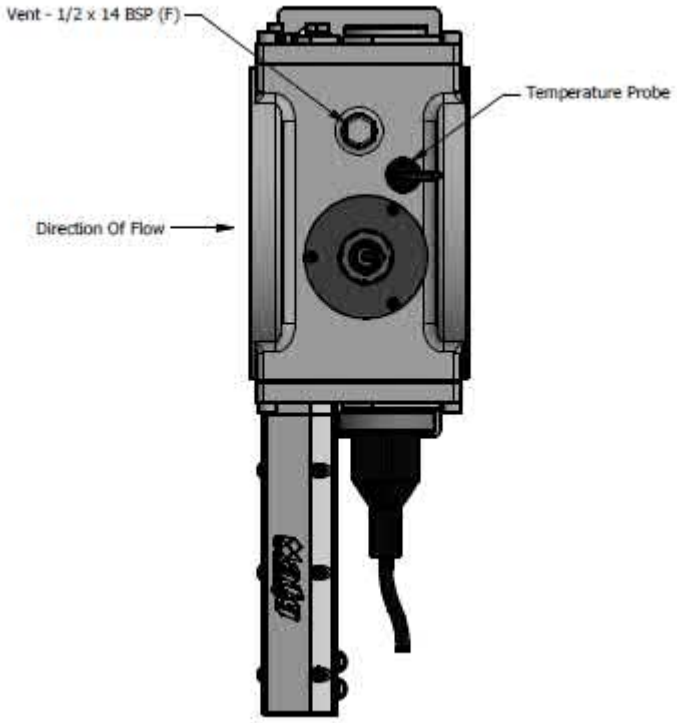

Figure 2.3a ATG WF-115-4 Reactor, top view. (Source: ATG)

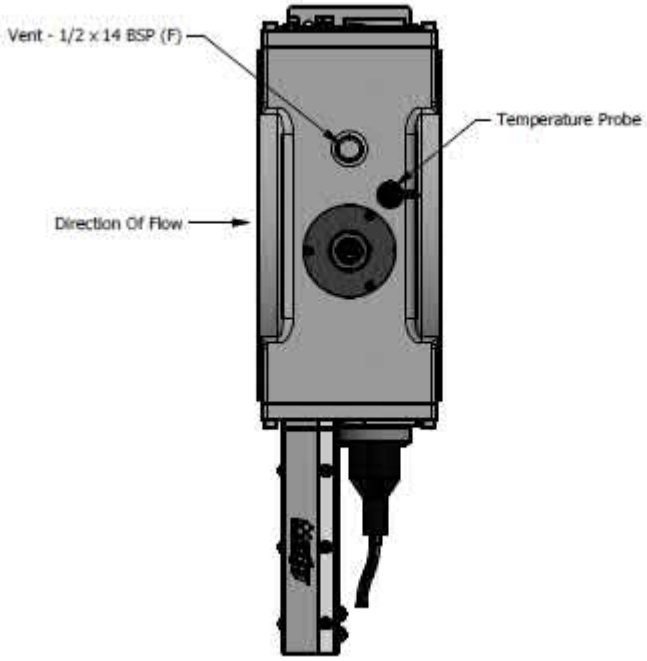

Figure 2.3b ATG WF-125-6 Reactor, top view. (Source: ATG)

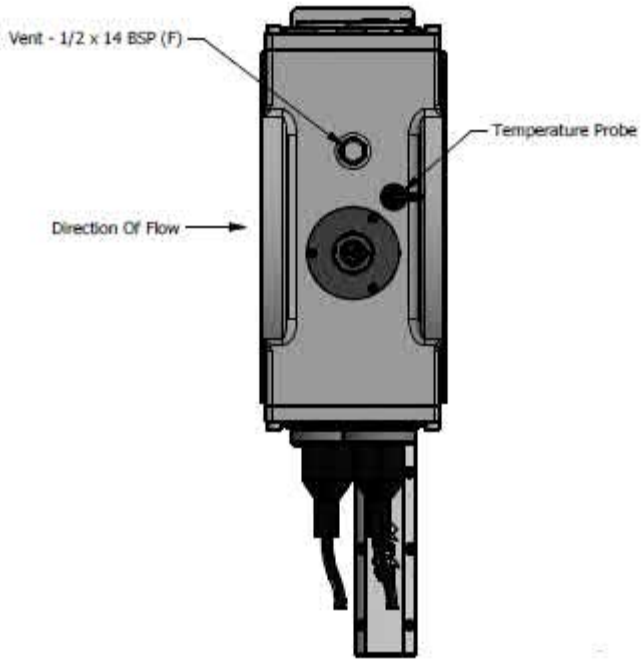

Figure 2.3c ATG WF-225-8 Reactor, top view. (Source: ATG)

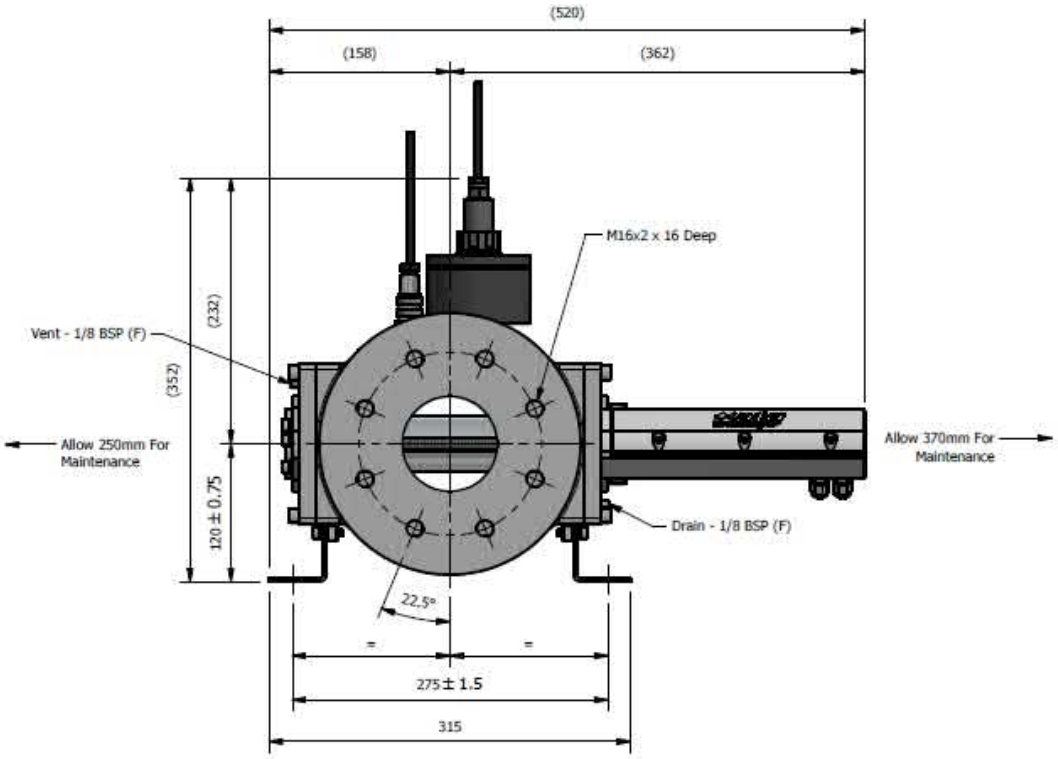

Figure 2.4a ATG WF-115-4 Reactor, end view, upstream side. (Source: ATG)

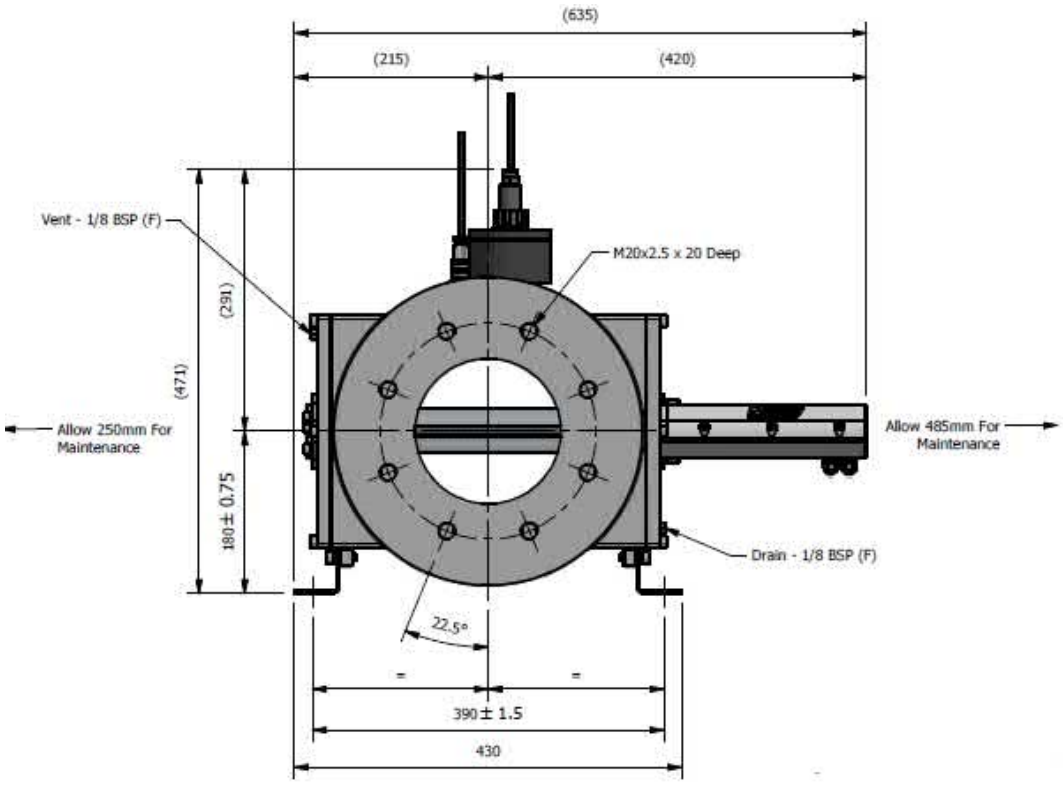

Figure 2.4b ATG WF-125-6 Reactor, end view, upstream side. (Source: ATG)

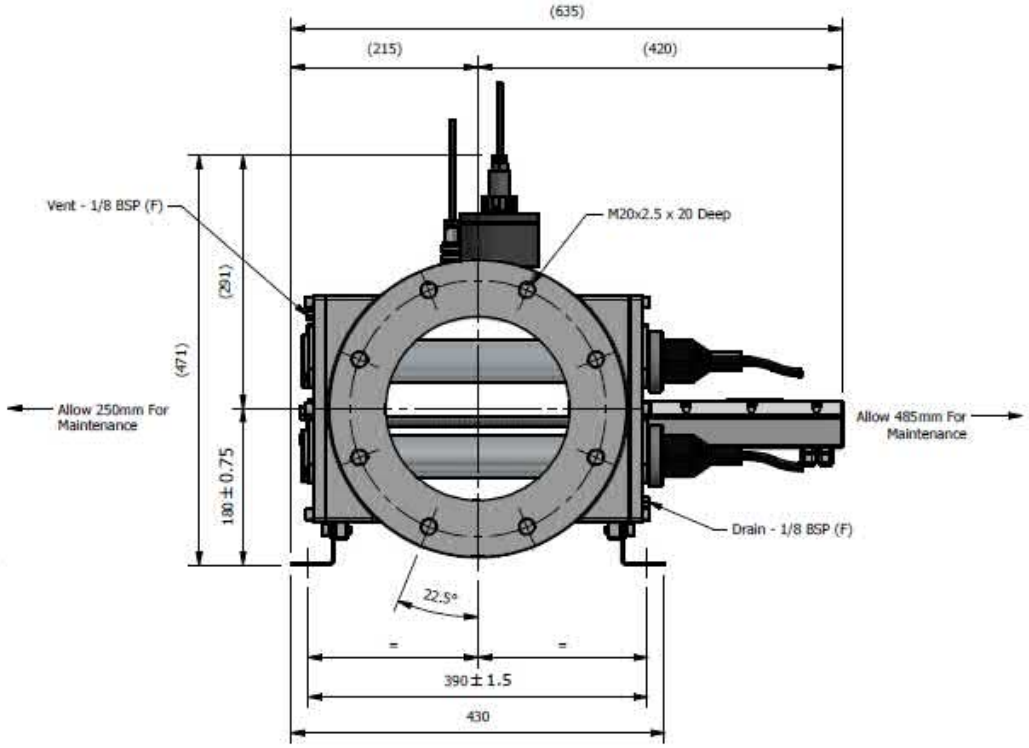

Figure 2.4c ATG WF-225-8 Reactor, end view, upstream side. (Source: ATG)

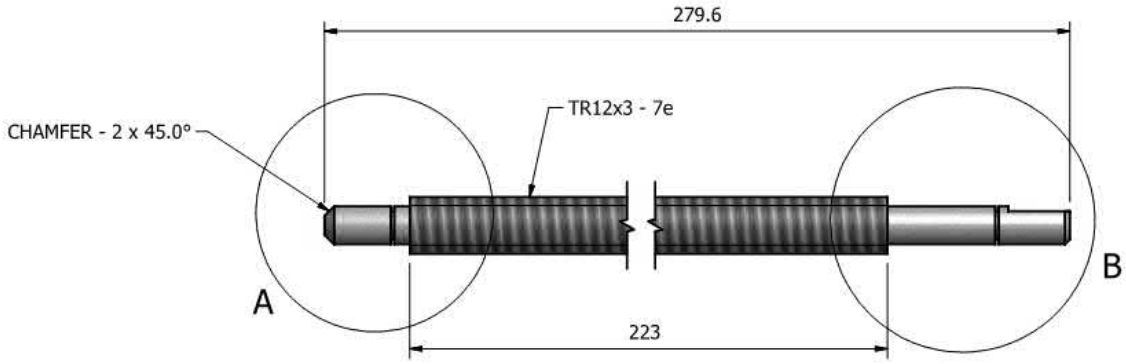

Figure 2.5a Wiper Shaft for the ATG WF-115-4 Reactor. (Source: ATG)

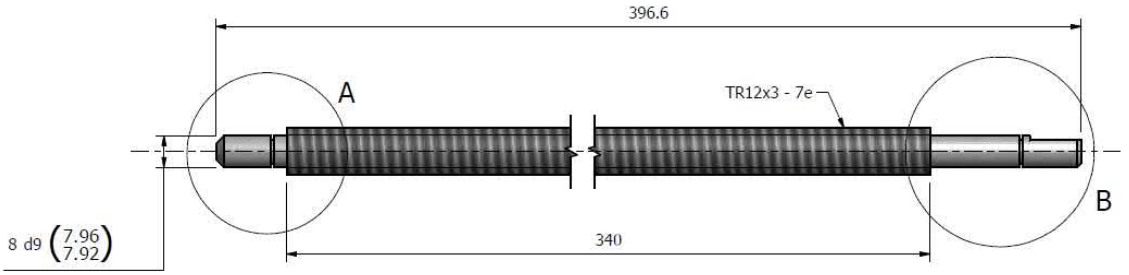

Figure 2.5b Wiper Shaft for the ATG WF-125-6 and WF-225-8 Reactors. (Source: ATG)

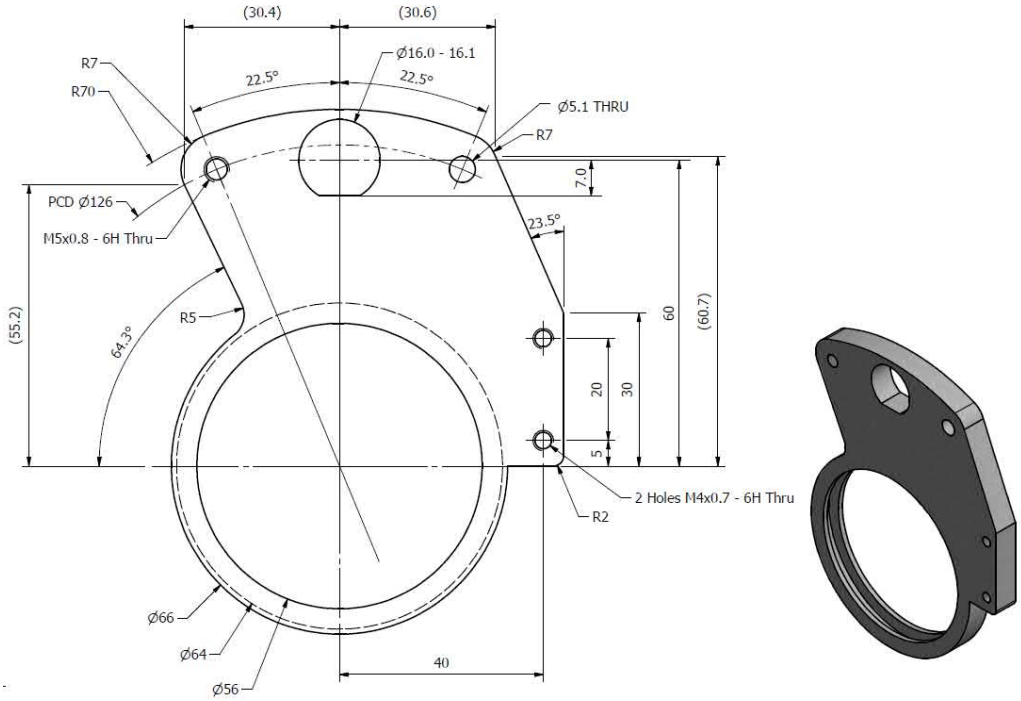

Figure 2.6a Wiper Carriage for the ATG WF-115-4 and WF-125-6 Reactors. (Source: ATG)

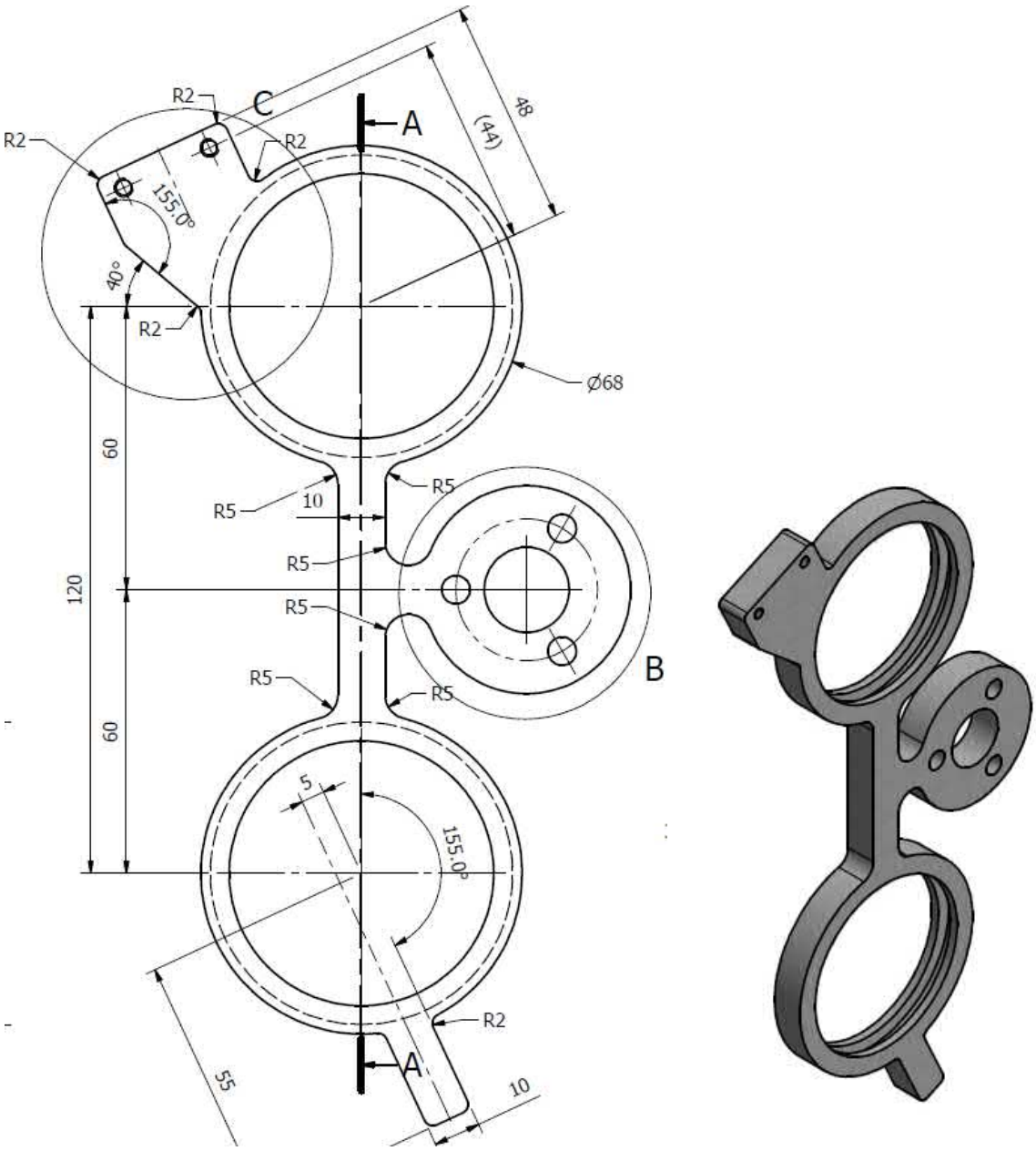

Figure 2.6b ATG WF-225-8 Reactor, wiper carriage. (Source: ATG)

Table 2.1 Key dimensions for the WF-115-4 UV Reactor						
Description	**ATG Drawing Reference**	**ATG Drawing Dimension (mm)**	**ATG Tolerance**	**Measured Dimension (mm)**	**Field Tolerance**	**Within Tolerance?**
Reactor Shell						
Length (parallel to flow, including inlet and effluent flange thickness)	CGA_WF_-115-4_33Z_N14	160	1.5	160.02	1.6	yes
Length (excluding inlet flange and effluent flange thickness)	CGA_WF_-115-4_33Z_N14	120	1.5	114.30	1.6	no
Width (along lamp, not including wiper mechanism or flange thicknesses)	CGA_WF-115-4	234	1.5	233.68	1.6	yes
Interior Height (measured at the lamp-side face of reactor)	CGA_WF-115-4	119.2	1.5	120.02	1.6	yes
Inlet & Outlet Flange Inner Diameter	CGA_WF-115-4	108.2	1.5	114.30	1.6	no
UV Lamp						
Electrode to Electrode (Arc Length)	W1502002 V2	110	2	108	1.6	yes
Length from wetted side of reactor wall to beginning of lamp arc	1.5 kW Short Lamp (W1502002)	62	2	62.07	1.2	yes
Outer diameter of lamp	W1502002	22	0.26	22	0.3	yes

Table 2.1 Key dimensions for the WF-115-4 UV Reactor						
Description	**ATG Drawing Reference**	**ATG Drawing Dimension (mm)**	**ATG Tolerance**	**Measured Dimension (mm)**	**Field Tolerance**	**Within Tolerance?**
Lamp Quartz Sleeve						
Length	W2020101	270	0.5	269.88	1.6	yes
Outside diameter	W2020101	49	0.5	49.12	0.3	yes
Wall Thickness	CGA_WF-115-4	2	0.2	2.00	0.3	yes
Distance from inlet flange face to centerline of quartz sleeve	CGA_WF-115-4	99.5	0.1	100	1.6	yes
Sensor Position						
Distance from top view of sensor centerline to outer edge of outlet flange	CGA_WF-115-4	75	0.1	74.17	1.6	yes
Wiper Mechanism						
Wiper Carriage Thickness	W5449998	8.0	0.2	8.15	0.3	yes
Wiper Drive Screw Diameter	W5401113	12	0.1	11.90	0.3	yes
Wiper Plate Connection Shaft Diameter	W5401113	7.96	0.04	8.0	0.3	yes
Wiper Plate Spacer Diameter	W5410024	21	0.2	21	0.3	yes
Wiper Spacing (including thickness of wipers)	CGA_WF-115-4	40	0.4	40.30	0.3	yes
Wiper Screw Placement (Inlet flange face to centerline)	CGA_WF-115-4	39.5	1.5	40	1.6	yes

Table 2.1 Key dimensions for the WF-115-4 UV Reactor						
Description	**ATG Drawing Reference**	**ATG Drawing Dimension (mm)**	**ATG Tolerance**	**Measured Dimension (mm)**	**Field Tolerance**	**Within Tolerance?**
Sensor Port Quartz Window						
Overall height	W2900322	20.0	0.15	19.90	0.3	yes
Overall Width (diameter of top hat)	W2900322	19.85	0.05	19.85	0.3	yes
Height of top hat portion	W2900322	5.00	0.05	5.03	0.3	yes
Diameter of bottom portion of quartz window	W2900322	7.80	0.05	7.75	0.3	yes
Casting thickness	CGA_WF-115-4	10.4	0.1	10.65	0.3	yes
Insertion depth (length from interior of casting to end of quartz window)	CGA_WF-115-4	5.6	0.5	4.22	0.9	no
Recess depth from casting surface to machined surface	CGA_WF-115-4	1	0.2	1.47	0.3	yes
Hole in reactor for window ID	CGA_WF-115-4	8.2	0.1	8.2	0.3	yes

Table 2.2 Key dimensions for the WF-125-6 UV Reactor						
Description	**ATG Drawing Reference**	**ATG Drawing Dimension (mm)**	**ATG Tolerance**	**Measured Dimension (mm)**	**Field Tolerance**	**Within Tolerance?**
Reactor Shell						
Length (parallel to flow, including inlet and effluent flange thickness)	CGA_WF_-125-6_33Z_N14	180	1.5	180	1.6	yes
Length (excluding inlet flange and effluent flange thickness)	CGA_WF_-125-6_33Z_N14	120	1.5	130	1.6	no
Width (along lamp, not including wiper mechanism or flange thicknesses)	CGA_WF-125-6	350	1.5	347.7	1.6	yes
Interior Height (measured at the lamp-side face of reactor – top plate is pitched towards the middle)	CGA_WF-125-6	228.90	1.5	230.4	1.6	yes
Inlet & Outlet Flange Inner Diameter	CGA_WF-125-6	161.5	1.5	161.4	1.6	yes
UV Lamp						
Electrode to Electrode (Arc Length)	W1502003	220	2	219	1.6	yes
Length from wetted side of reactor wall to beginning of lamp arc	1.5 kW Long Lamp (W1502004)	67	2	60	1.2	No
Outer diameter of lamp	W1502003	22	0.26	22	0.3	yes

Table 2.2 Key dimensions for the WF-125-6 UV Reactor						
Description	**ATG Drawing Reference**	**ATG Drawing Dimension (mm)**	**ATG Tolerance**	**Measured Dimension (mm)**	**Field Tolerance**	**Within Tolerance?**
Lamp Quartz Sleeve						
Length	W2020102	385	0.5	387.35	1.6	no
Outside diameter	W2020102	49	0.5	48.97	0.3	yes
Wall Thickness	CGA_WF-125-6	2	0.2	1.99	0.3	yes
Distance from inlet flange face to centerline of quartz sleeve	CGA_WF-125-6	115	0.1	115	1.6	yes
Sensor Position						
Distance from top view of sensor centerline to outer edge of outlet flange	CGA_WF-125-6	90	0.1	90	1.6	yes
Wiper Mechanism						
Wiper Carriage Thickness	W5449998	8.0	0.2	8.0	0.3	yes
Wiper Drive Screw Diameter	W5401114	12	0.1	12	0.3	yes
Wiper Plate Connection Shaft Diameter	W5401114	7.96	0.2	8.0	0.3	yes
Wiper Plate Spacer Diameter	W5410024	21	0.2	21	0.3	yes
Wiper Spacing (including thickness of wipers)	CGA_WF-125-6	40	0.4	40.10	0.3	yes
Wiper Screw Placement (Inlet flange face to centerline)	CGA_WF-125-6	55	1.5	54	1.6	yes

Table 2.2 Key dimensions for the WF-125-6 UV Reactor						
Description	**ATG Drawing Reference**	**ATG Drawing Dimension (mm)**	**ATG Tolerance**	**Measured Dimension (mm)**	**Field Tolerance**	**Within Tolerance?**
Sensor Port Quartz Window						
Overall height	W2900322	20.0	0.15	19.90	0.3	yes
Overall Width (diameter of top hat)	W2900322	19.85	0.05	19.85	0.3	yes
Height of top hat portion	W2900322	5.00	0.05	5.0	0.3	yes
Diameter of bottom portion of quartz window	W2900322	7.80	0.05	7.75	0.3	yes
Casting thickness (has a pitched top, average thickness is recorded)	CGA_WF-125-6	13.06	0.1	13.30	0.3	yes
Insertion depth (length from interior of casting to end of quartz window)	CGA_WF-125-6	3.9	0.4	2.47	0.9	no
Recess depth from casting surface to machined surface	CGA_WF-125-6	1.5	0.2	0.87	0.3	no
Hole in reactor for window ID	CGA_WF-125-6	8.2	0.1	8.2	0.3	yes

Table 2.3 Key dimensions for the WF-225-8 UV Reactor						
Description	**ATG Drawing Reference**	**ATG Drawing Dimension (mm)**	**ATG Tolerance**	**Measured Dimension (mm)**	**Field Tolerance**	**Within Tolerance?**
Reactor Shell						
Length (parallel to flow, including inlet and effluent flange thickness)	CGA_WF_-225-8_33Z_N14	180	1.5	180	1.6	yes
Length (excluding inlet flange and effluent flange thickness)	CGA_WF_-225-8_33Z_N14	120	1.5	130	1.6	no
Width (along lamp, not including wiper mechanism or flange thicknesses)	CGA_WF-225-8	350	1.5	347.7	1.6	yes
Interior Height (measured at the lamp-side face of reactor – top plate is pitched towards the middle)	CGA_WF-225-8	228.90	1.5	231	1.6	yes
Inlet & Outlet Flange Inner Diameter	CGA_WF-225-8	211.6	1.5	211.25	1.6	yes
UV Lamp						
Electrode to Electrode (Arc Length)	W1502004	220	2	219	1.6	yes
Length from wetted side of reactor wall to beginning of lamp arc	2.5 kW Lamp (W1502003)	67	2	60	1.2	no
Outer diameter of lamp	W1502004	22	0.26	22	0.3	yes

Table 2.3 Key dimensions for the WF-225-8 UV Reactor						
Description	**ATG Drawing Reference**	**ATG Drawing Dimension (mm)**	**ATG Tolerance**	**Measured Dimension (mm)**	**Field Tolerance**	**Within Tolerance?**
Lamp Quartz Sleeve						
Length	W2020102	385	0.5	387.35	1.6	no
Outside diameter	W2020102	49	0.5	48.97	0.3	yes
Wall Thickness	CGA_WF-225-8	2	0.2	1.99	0.3	yes
Distance from outlet flange face to centerline of bottom quartz sleeve (closest to outlet flange)	CGA_WF-225-8	64.64	0.1	64.7	1.6	yes
Distance between sleeves (measured from the side of the reactor; far side of the bottom-most sleeve to the far side of the top-most sleeve)	CGA_WF-225-8	120	1.5	119.4	1.6	yes
Sensor Position						
Distance from top view of sensor centerline to outer edge of outlet flange	CGA_WF-225-8	90	0.1	90	1.6	yes
Wiper Mechanism						
Wiper Carriage Thickness	W5449999	10	0.2	10.4	0.3	yes
Wiper Drive Screw Diameter	W5401114	12	0.1	12	0.3	yes
Wiper Plate Connection Shaft Diameter	W5401114	7.96	0.2	8.0	0.3	yes
Wiper Screw Placement (Inlet flange face to centerline)	CGA_WF-225-8	58.3	1.5	58.5	1.6	yes

Table 2.3 Key dimensions for the WF-225-8 UV Reactor						
Description	**ATG Drawing Reference**	**ATG Drawing Dimension (mm)**	**ATG Tolerance**	**Measured Dimension (mm)**	**Field Tolerance**	**Within Tolerance?**
Wiper Drive Maximum Diameter	W5415000	42	0.2	42	0.3	yes
Wiper Drive Length (length includes 2 wiper body lids and 1 wiper body shaft)	W5415000 & W5415010	51.2	0.14	47.8	1.6	no
Sensor Port Quartz Window						
Overall height	W2900322	20.0	0.15	19.90	0.3	yes
Overall Width (diameter of top hat)	W2900322	19.85	0.05	19.85	0.3	yes
Height of top hat portion	W2900322	5.00	0.05	5.0	0.3	yes
Diameter of bottom portion of quartz window	W2900322	7.80	0.05	7.75	0.3	yes
Casting thickness (has a pitched top, average thickness is recorded)	CGA_WF-225-8	13.06	0.1	13.30	0.3	yes
Insertion depth (length from interior of casting to end of quartz window)	CGA_WF-225-8	3.9	0.4	2.47	0.9	no
Recess depth from casting surface to machined surface	CGA_WF-225-8	1.5	0.2	0.87	0.3	no
Hole in reactor for window ID	CGA_WF-225-8	8.2	0.1	8.2	0.3	yes

2.2 LAMPS

The WF-115-4 UV reactor used one 1.5 kW MP lamp during validation testing with a part number W1502002. The lamp has an arc length of 100 mm and a diameter of 22 mm. The lamp operates at a voltage of 160 V and a current 10.4 amps. The WF-125-6 uses one 2.5 kW MP lamp and the WF-225-8 uses two 2.5 kW MP lamps with a part number of W1502003 during validation testing. The 2.5 kW lamps have an arc length of 220 mm and a diameter of 22 mm. The lamps operate at a voltage of 280 V and a current 9.5 amps.

All lamps were manufactured by ATG. The lamp drawing sheets are provided in Appendix G. The spectral output of each lamp is shown in Figure 2.7. Table 2.4 shows the germicidal spectral output for each lamp over the range of wavelengths from 200 to 300 nm.

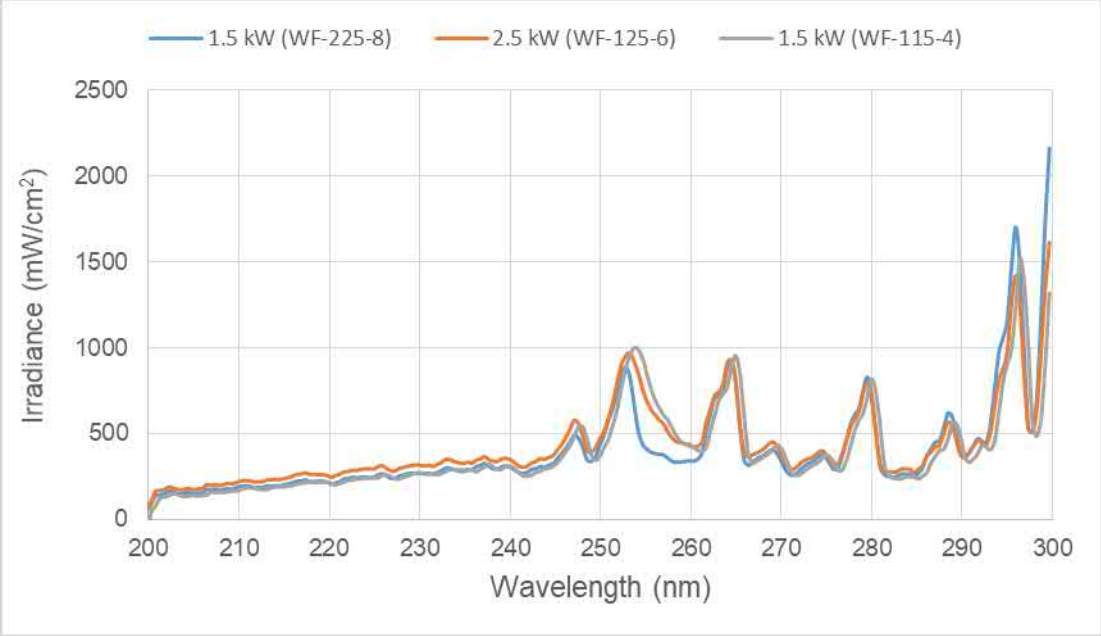

Figure 2.7 Spectral Output for the MP UV lamps used during Validation Testing (Source: ATG)

Table 2.4 Germicidal Output of the MP UV lamps used During Validation Testing			
Wavelength (nm)	**1.5 kW - WF-115-4 (mW/cm^2)**	**2.5 kW - WF-125-6 (mW/cm^2)**	**1.5 kW - WF-225-8 (mW/cm^2)**
200	90.23	106.47	80.38
205	157.90	180.40	141.12
210	188.17	218.03	175.72
215	203.07	238.53	196.25
220	206.57	246.47	201.48
225	260.93	309.27	256.48
230	272.00	319.37	273.32
235	279.53	325.87	285.62
240	304.90	348.93	298.78
245	326.67	371.93	329.18
250	430.87	471.03	419.58
255	441.47	762.63	854.25
260	342.30	438.37	420.02
265	785.20	795.80	839.45
270	372.90	416.00	399.72
275	331.70	351.07	336.65
280	828.90	798.47	819.52
285	248.40	273.80	236.45
290	377.07	373.33	363.78
295	1056.00	877.57	903.42
300	2162.97	1613.87	1687.45

2.3 LAMP SLEEVES

The sleeves used for the WF-115-4, WF-125-6, and WF-225-8 UV reactors are GE214 clear fused quartz tubes manufactured by GE. The quartz tube in the WF-115-4 UV reactor has a length of 270 mm, whereas the quartz tubes in the WF-125-6 and WF-225-8 UV reactors have a length of 385 mm. The quartz tubes have a diameter of 49 mm. Technical data on the sleeves is provided in Appendix G. Figure 2.8 shows the dimensions of the quartz sleeves, and Figure 2.9 shows the transmittance characteristics.

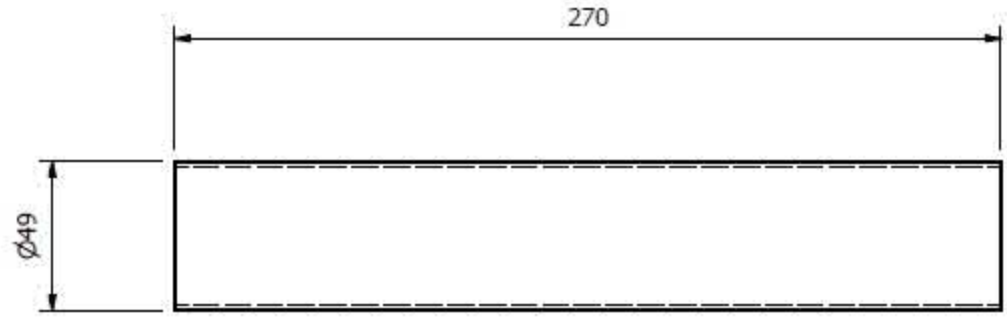

Figure 2.8a Quartz Sleeve Detail for the WF-115-4 Reactor. All dimensions in mm. (Source: ATG)

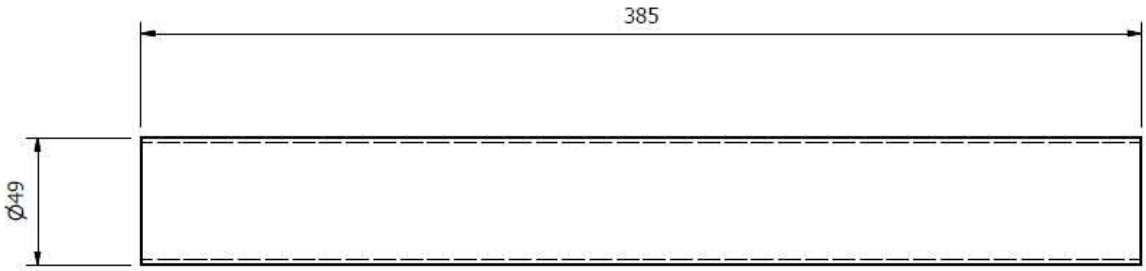

Figure 2.8b Quartz Sleeve Detail for the WF-125-6 and the WF-225-8. All dimensions in mm. (Source: ATG)

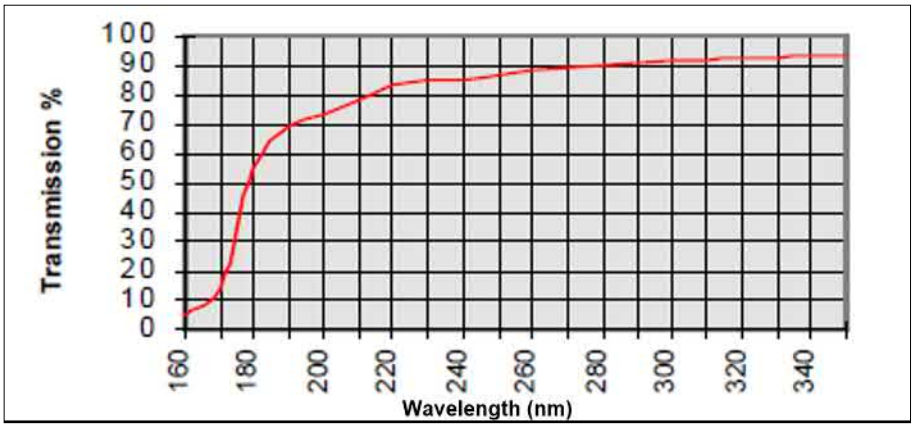

Figure 2.9 Quartz Sleeve Transmittance Characteristics Detail. (Source: GE)

2.4 UV BALLASTS

The ballasts used to operate the WF-115-4 and WF-225-8 were magnetic ballasts with a power of 1.5 kW, and supply voltages of 208 V, 220 V, and 230 V. The ballast used to operate the WF-125-6 was a magnetic ballast with a power of 2.5kW, and supply voltages of 230 V, 400 V, and 415 V. The ballasts allow for variable input power to the lamp, with selectable lamp ampere settings ranging between 5.0 and 11.0 for the WF-115-4, and 5.0 and 10.0 for the WF-125-6 and WF-225-8 UV reactors. Technical data on the ballasts is provided in Appendix G.

2.5 UV INTENSITY SENSORS

The UV intensity sensors used during validation were SUV 20.1 A2 Y2 C, manufactured by UV-technik of Gewerbegebiet, Germany. During functional and bioassay testing, the WF-115-4 and WF-225-8 used 300W sensors and the WF-125-6 used 150W sensors. Each UV sensor was designed to measure UV light in accordance with the Austrian ÖNORM M 5873-1:2001-03 Standard. According to this standard, the UV sensor has a measurement uncertainty of a maximum of 15% and is calibrated in W/m^2 by comparison with a reference UV sensor. The measurement uncertainty accounts for temperature drift and stability of the UV sensor when mounted on the reactor. Figure 2.10 shows the dimensions of the UV sensor. The data sheets for the UV sensors are provided in Appendix B.

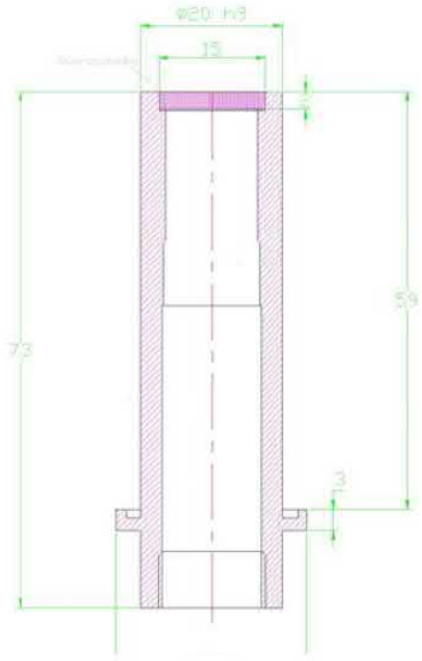

Figure 2.10 UV Sensor Detail. All dimensions in mm. (Source: ATG)

2.6 REFERENCE UV INTENSITY SENSORS

During operation of the UV reactors, reference UV sensors should be used to regularly check the operation of the duty UV sensor. The reference UV sensors are SUV 20.1 A2 Y2 C, manufactured by uv-technik Speziallampen GmbH of Wolfsberg, Germany. The reference UV sensor is designed to measure UV light in accordance with the Austrian ÖNORM M 5873-1:2001-03 Standard, which dictates that the reference UV sensor should have a measurement uncertainty of at most 15 percent. Appendix B provides a report on the calibration and linearity of the reference UV sensors used with this validation, as well as tabulated data on UV sensor measurement properties.

2.7 UV SENSOR PORT

The WF-115-4, WF-125-6, and WF-225-8 reactors are each equipped with a single UV sensor-mounting apparatus, which include threaded connections into the reactor. The UV sensor is inserted into the UV sensor port and views the lamps through a quartz window located at the end of the port. Information on the dimensions and material for the UV sensor port window can be found in Appendix G.

VALIDATION FACILITIES

The ATG WF-115-4, WF-125-6, and WF-225-8 UV reactors were validated at a test facility located at the Groundwater Pumping Station of the Columbia Southshore Wellfield in Portland, Oregon. The Columbia Wellfield is a 90 mgd supplemental drinking water supply owned and operated by the Portland Water Bureau. The groundwater typically has the following water quality:

- UVT_{254}: 98.2 percent average, 97.3 - 99.0 percent range
- TOC: <0.1 - 1.4 mg/L
- Hardness: 38 - 144 mg/L
- Alkalinity: 34 - 169 mg/L $CaCO_3$
- pH: 7.7 - 8.2
- Chlorine: below detection limit

3.1 TEST TRAIN

Figure 3.1 shows the layout of the validation facility's fixed inlet and outlet piping. The permanent test piping at the test facility includes 24- and 30-inch test trains. The 24-inch test train was used to validate the WF-115-4, WF-125-6, and WF-225-8 UV reactors. Permanent test train components included, in order:

- Two 24-inch diameter supply lines connecting the test train to the Portland water supply. Primary flow regulation is provided by butterfly valves on each 24-inch supply line
- One 30-inch check valve on each supply line, for backflow prevention
- 30-inch magnetic flowmeter with >10 and 5 pipe diameters of inlet and outlet piping (not used for the validation)
- 24-inch 90 degree elbow take off from the inlet 30-inch inlet pipe

A 120-gpm injection loop was used for spiking the UV absorber and microorganisms into the 24-inch test train. Suction and return lines were made by 3-inch flexible connections. The suction line from the main process train was located approximately 4 feet downstream from the 30-inch flowmeter on the 30-inch section of the permanent test piping. A gate valve was installed on the suction side of the recirculation system pump to allow for reduced flow to meet the needs of individual low-flow test runs. For this validation, the return line fed into a dual port cross-pipe diffuser installed located in plastic pipe upstream of the network described below.

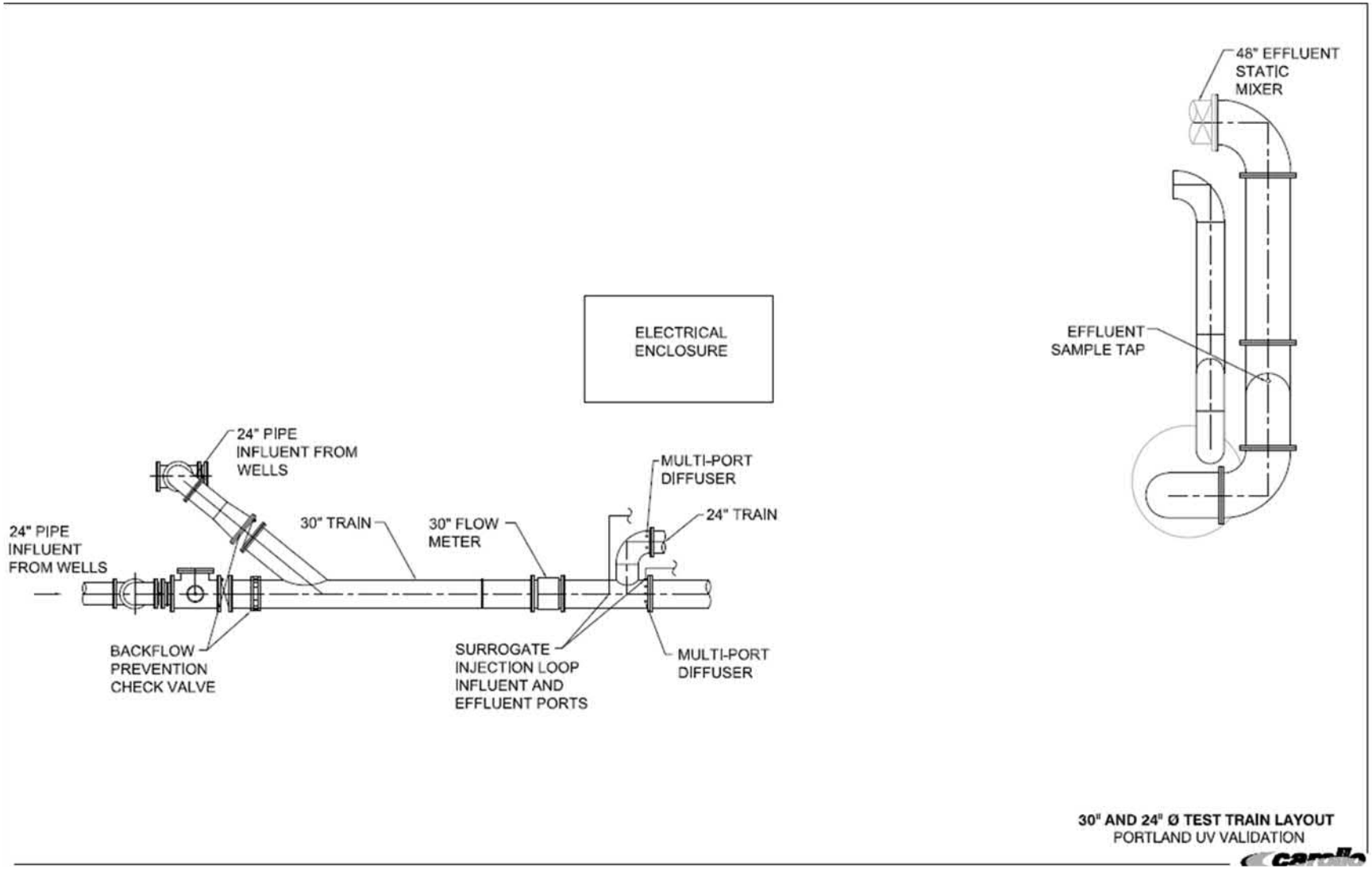

Figure 3.1 Portland Validation Site Treatment Train Layout

During validation, the WF-115-4, WF-125-6, and WF-225-8 were installed in parallel. Figure 3.2 shows a plan view of the overall piping network for the validation installation from the point of the connection with the permanent test piping to the discharge.

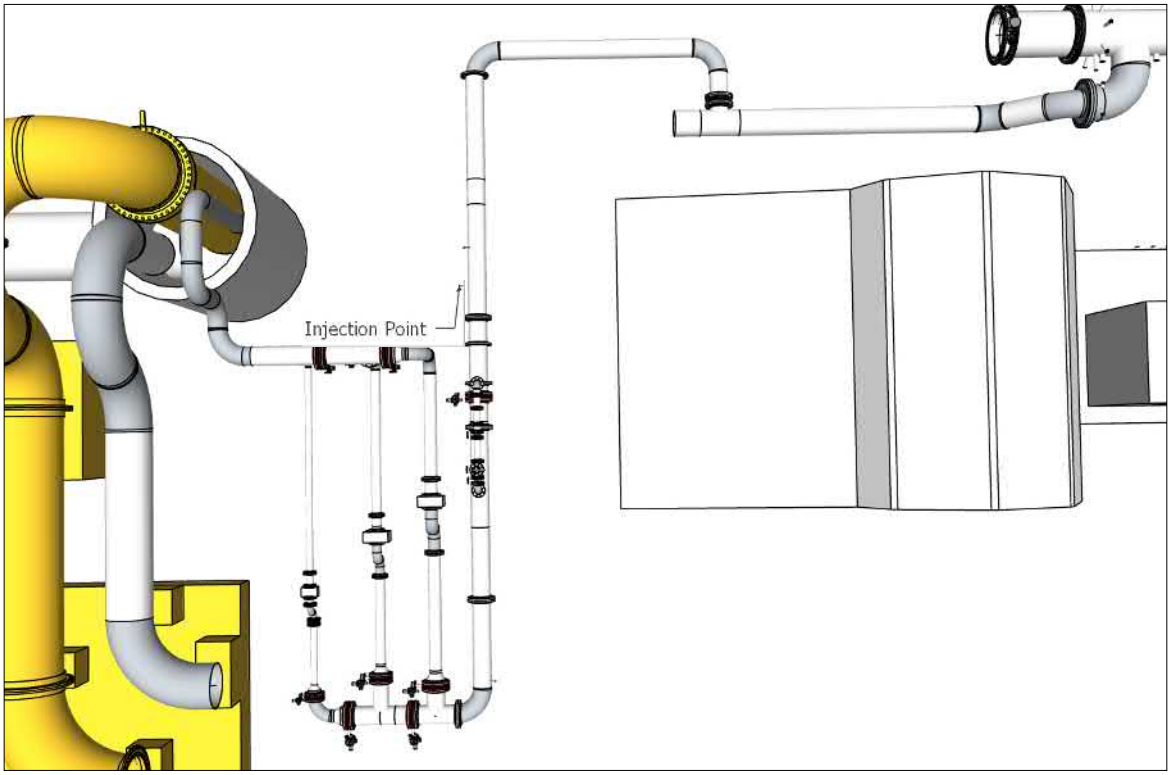

Figure 3.2 Plan View of the Inlet and Outlet Piping to the ATG WF UV Reactors

The common inlet piping feeding all UV reactors from the fixed facility piping included:

- 24” to 18” diameter companion flange
- 18” diameter 45 degree bend
- 30 inches of 18” diameter pipe
- 18” diameter 45 degree bend
- 166 inches of 18” diameter pipe
- 18”- 12” diameter Tee
- 12” diameter butterfly valve
- 15 inches of 12” diameter plastic pipe
- 12” diameter plastic 90 degree elbow
- 135 inches of 12” diameter plastic pipe
- 12” diameter plastic 90 degree elbow
- 120 inches of 12” diameter plastic to the page and UV absorber injection point

Figure 3.3 shows a detailed drawing of the pipe network from the injection point through the flow meter and static mixing network to the inlet sample tap.

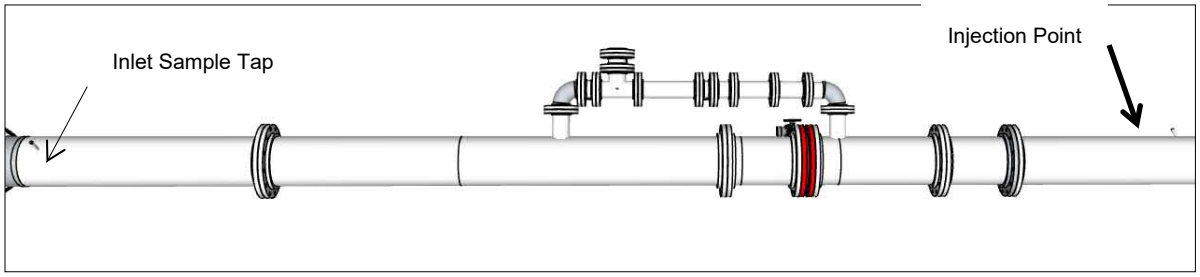

Figure 3.3 Common inlet piping from injection point to inlet sample tap

Due to the wide range of flows required for validation of the UV reactors, it was necessary to configure the inlet piping with a low-flow leg using a 4 inch magnetic flow meter and a high-flow leg using a 12 inch magnetic flow meter. This setup is shown in Figure 3.4.

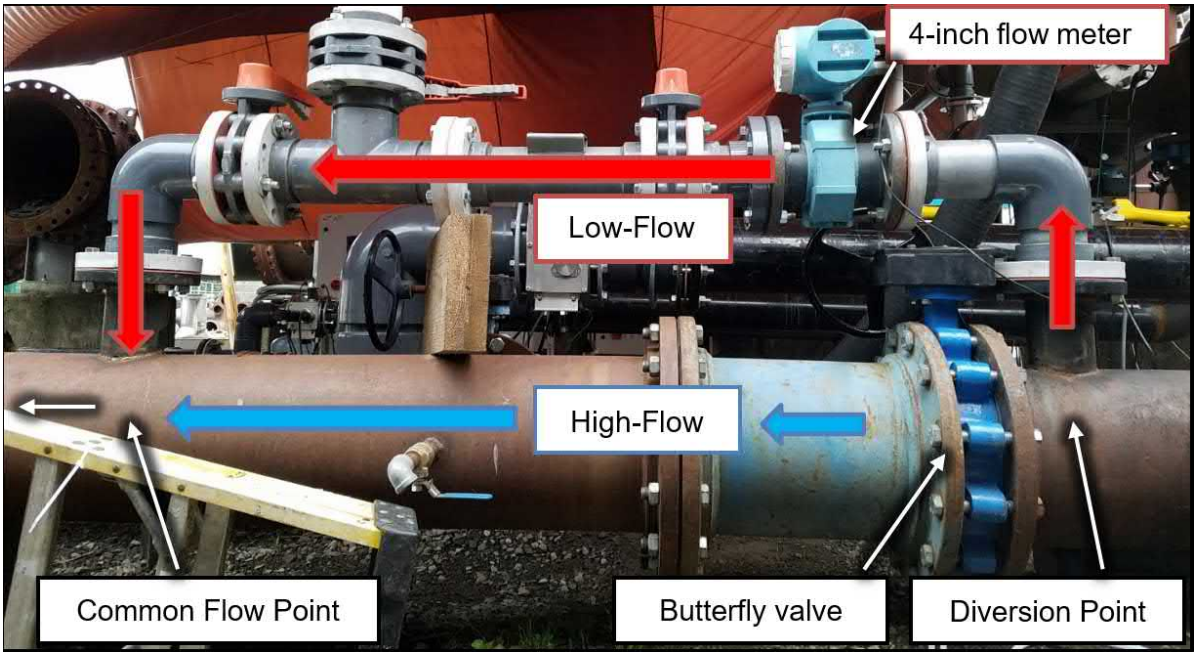

Figure 3.4 Low-flow and high-flow configurations for Testing the WF-115-4, WF-125-6, and WF-225-8 Reactors

Specific components of the high-flow shared inlet piping network shown in Figure 3.4 include:

- UV absorber and Phage injection point
- 48 inches of 12” diameter plastic pipe
- 12” diameter magnetic flow meter (18 inches in length)
- 24 inches of 12” diameter steel pipe

- 12” diameter butterfly valve
- 12” diameter static mixer (19 inches in length)
- 173 inches of 12” diameter steel pipe
- Inlet sample tap used for all reactors.

Specific components of the low-flow shared inlet piping network shown in Figure 3.4 include:

- UV absorber and Phage injection point
- 48 inches of 12” diameter plastic pipe
- 12” diameter magnetic flow meter (18 inches in length)
- 27 inches of 12” diameter steel pipe.
- 8 inch long 4” diameter riser
- 4” diameter 90 degree elbow
- 13 inches of 4” diameter PVC pipe
- 4” magnetic flow meter
- 5 inches of 4” diameter PVC pipe
- 4” diameter butterfly valve
- 4” diameter PVC static mixer (16 inches in length)
- 11 inch long 4” diameter PVC Tee.
- 4” diameter butterfly valve
- 4” diameter 90 degree PVC elbow
- 8 inch log 4” diameter riser returning to the 12” steel pipe.

Figure 3.5 shows the WF-225-8 validation piping detail. Specific components included, from the inlet sample tap:

- 6 inches of 12” diameter steel pipe
- 12” diameter 90 degree elbow
- 12” diameter Tee
- 19 inches of 12” steel pipe from Tee
- 12” diameter butterfly valve

- 12” to 8” diameter reducer
- 80 inches of 8” diameter steel pipe
- 8” diameter PVC S-bend
- WF-225-8 UV reactor
- 82 inches of 8” diameter steel pipe
- 8” diameter 90 degree elbow
- 6 inches of 8” diameter steel pipe
- 8” diameter 90 degree elbow
- 8” to 12” diameter increaser
- 12” butterfly valve
- 40 inches of 12” diameter steel pipe
- 12” butterfly valve
- 44 inches of 12” diameter steel pipe
- 12” diameter 90 degree elbow
- 12” diameter 90 degree elbow
- 15 inches of 12” diameter steel pipe
- 12” diameter 90 degree elbow with effluent sample tap located 45 degrees around the elbow

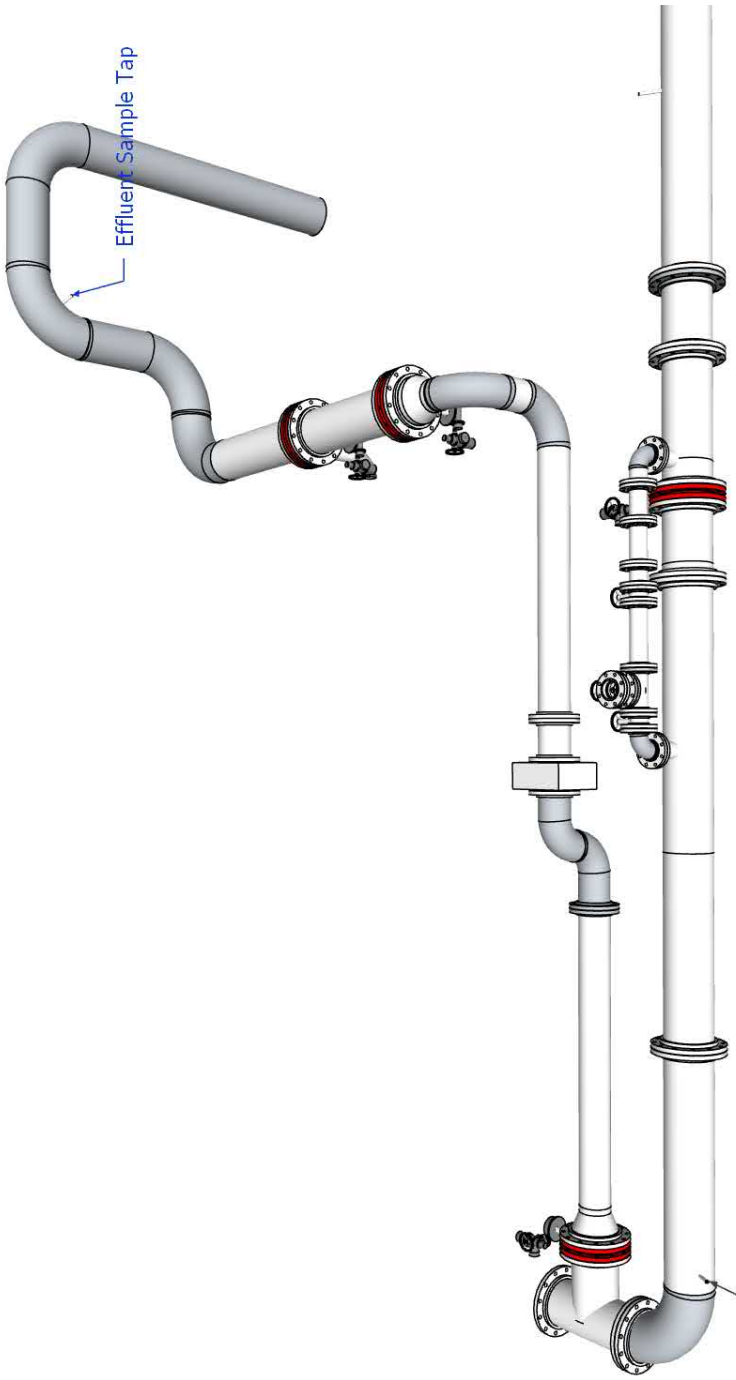

Figure 3.5 WF 225-8 Validation Piping Detail

Figure 3.6 shows the WF-125-6 validation piping detail. Specific components included, from the inlet sample tap:

- 6 inches of 12” diameter steel pipe
- 12” diameter 90 degree elbow
- 29 inches through a12” diameter Tee
- 12” diameter butterfly valve
- 20 inches of 12” diameter pipe into center of Tee
- 20 inches of 10” diameter pipe out of side of Tee
- 10” diameter butterfly valve
- 10” to 6” diameter reducer
- 60 inches of 6” diameter steel pipe
- 6” diameter PVC S-bend
- WF-125-6 UV reactor
- 108 inches of 6” diameter steel pipe
- 6” diameter 90 degree steel elbow
- 6 inches of 6” steel pipe
- 6” to 10” diameter increaser
- 10” diameter butterfly valve
- 3 inches of 10” diameter steel pipe into side of Tee
- 27 inches of 12” diameter steel out through Tee
- 12” butterfly valve
- 44 inches of 12” diameter steel pipe
- 12” diameter 90 degree elbow
- 12” diameter 90 degree elbow
- 15 inches of 12” diameter steel pipe
- 12” diameter 90 degree elbow with effluent sample tap located 45 degrees around the elbow

Figure 3.6 WF 125-6 Validation Piping Detail

Figure 3.7 shows the WF-115-4 validation piping detail. Specific components included, from the inlet sample tap:

- 6 inches of 12” diameter steel pipe
- 12” diameter 90 degree elbow
- 29 inches through a12” diameter Tee
- 12” diameter butterfly valve
- 40 inches through a 12” diameter steel Tee
- 12” diameter butterfly valve
- 12” to 8” diameter steel reducer
- 8” diameter 90 degree steel elbow
- 8” diameter butterfly valve
- 8” to 4” steel reducer
- 40 inches of 4” steel pipe
- 3 inch long 4” diameter coupling
- 4” diameter S-bend
- 5 inch long 4” diameter coupling
- WF-125-4 UV reactor
- 148 inches of 4” diameter steel pipe
- 4” diameter 90 degree elbow
- 12 inches of 4” diameter steel pipe
- 4” to 6” increaser
- 6” diameter butterfly valve
- 3 inches of 6” diameter steel riser into 12” steel pipe
- 28 inches of 12” diameter steel pipe
- 12” diameter 90 degree elbow
- 12” diameter 90 degree elbow
- 15 inches of 12” diameter steel pipe
- 12” diameter 90 degree elbow with effluent sample tap located 45 degrees around the elbow

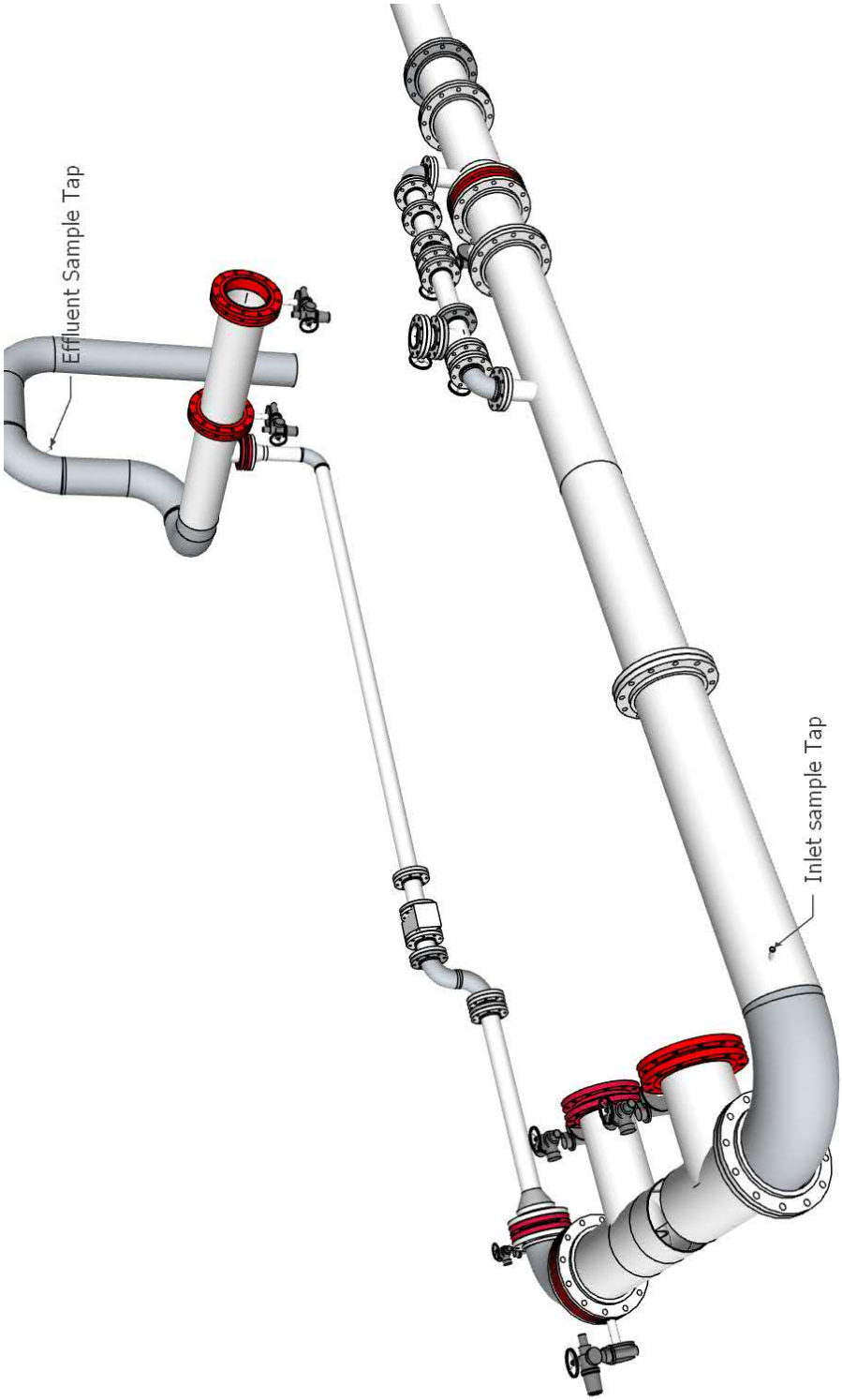

Figure 3.7 WF 115-4 Validation Piping Detail

Flow through the test train was monitored by a 12-inch flowmeter for all test runs and a 4-inch flowmeter for low-flow test runs. The 12-inch flowmeter was manufactured by Endress+Hauser Flowtec (Division USA, Greenwood, IN) included a 12-inch flow tube (Serial No. 7C00C816000) and a transmitter (Model No. PROMAG 53 W 12-inch). The recommended working range for the flow meter was 0.5 to 15.3 mgd. The measured flow was displayed on an LCD with an accuracy of ±0.5 percent at flow rates greater than 1 mgd and ±1.5 percent at flow rates between 0.25 to 1 mgd. The 4-inch magnetic flowmeter was manufactured by Endress+Hauser (Division USA, Greenwood, IN). The flowmeter included a 4” flowtube (Serial No. G315002307) and a transmitter (Model No. PROMAG 30 F 4”). The working range of the flowmeter was 5 to 620 gpm. The measured flow rate was displayed with a system accuracy of ± 0.5 percent from 26.2 to 620.8 gpm. Documentation for the flowmeters is provided in Appendix F.

An inlet static mixer used before the inlet sample port for both the low and high flow configurations. A 4-inch mixer used in the low flow configuration was manufactured by Komax Systems, Inc. of Wilmington, CA, (model 62216). A 12-inch mixer used in the high flow configuration was manufactured by Chemineer, Inc (model 12 HEV 2). An effluent static mixer was not included in the test train, however the number of pipe diameters between the downstream of the UV reactor and the downstream sample tap provided adequate mixing.

An injection system was used to add the UV absorber and test phage (challenge microbes) into the main water stream. Approximately 120 gpm of water was drawn from the main test train flow at a location 100 inches downstream from a 30-in flow meter. The UV absorber was added to the recirculation loop using one of two Allweiler progressive cavity pumps driven by a 1 or 2 HP motor powered by variable frequency drive (Lenze AC Tech series MC, Uxbridge, MA). Challenge microbes were then added to that flow using a variable speed drive equipped with a Micropump gear pump head (Cole-Parmer, Vernon Hills, IL).

After additive injections, the water was returned to the test train flow through two stab tubes located at the top of the 12-inch plastic pipe and at a 45 degree offset from the top of the pipe. The stab tubes injected the absorber and microorganisms into the middle of the pipe. All sampling was performed through brass or stainless steel sample taps. For all reactors, the inlet sample port was located approximately 21 pipe diameters downstream of the injection port. For the WF-225-8, the injection port was located and approximately 36 pipe diameters upstream of the reactor, and the effluent sample port was located approximately 19 pipe diameters downstream of the reactor. For the WF-125-6, the injection port was located and approximately 40 pipe diameters upstream of the reactor, and the effluent sample port was located approximately 26 pipe diameters downstream of the reactor. For the WF-115-4, the injection port was located and approximately 40 pipe diameters upstream of the reactor, and the effluent sample port was located approximately 46 pipe diameters downstream of the reactor.

3.2 PRODUCTION OF CHALLENGE MICROORGANISMS

GAP EnviroMicrobial Services (GAP), of London, Ontario (Canada) prepared the stock solutions of challenge microorganisms (MS2 and T1UV Bacteriophage) in accordance with the protocol entitled “Preparation and Storage of Concentrated Bacteriophage” (Revision 12, March 7, 2016). These documents are reviewed and revised as needed by the GAP Quality Manager and Laboratory Manager on an annual or more frequent basis. The documents are provided in Appendix C of this validation report.

Challenge microorganism stock solutions were stored in 1 L sterile polypropylene bottles and labeled to indicate date of preparation, batch number, titer, and technician ID. Stock solutions were stored in a refrigerator at 4 °C. A complete production history was kept for all batches.

The challenge microorganism feed solutions were diluted on-site in process water before use to assure the proper phage concentration in the reactor influent. The dilution ratios for the feed solutions were based on the most recent titer measurements.

3.3 ENUMERATION OF CHALLENGE MICROBES

Water samples collected during validation testing were stored in a cooler containing “blue ice” and shipped to GAP using an overnight express courier. The water samples were analyzed by GAP on the day of receipt using the bacteriophage enumeration methods described in the GAP documents entitled “Quantitative Recovery of Bacteriophage Used for Disinfection Equipment Validation” (Revision 35, July 5, 2017). This document is reviewed and revised as needed by the GAP Quality Manager and Laboratory Manager on an annual or more frequent basis. The documents are provided in Appendix C of this validation report.

3.4 COLLIMATED BEAM APPARATUS

The dose-response of the bacteriophage in the seeded reactor inlet samples was measured by GAP using a collimated beam apparatus equipped with a low-pressure mercury arc lamp. Irradiations were conducted in duplicate on 10 mL sub-samples taken from the inlet sample. Bacteriophage sub-samples were irradiated at UV dose values ranging from 0 to 255 mJ/cm^2, depending on the test organism. Irradiated sub-samples and controls were assayed as per Section 3.3. The standard operating procedure for the collimated beam analysis is provided in Appendix D of the validation report. Irradiance was measured by GAP using the average of four radiometers supplied by International Light Technologies, Inc. (see Table 3.1).

Table 3.1 UV Radiometers and Detectors Used by the Microbiology Lab				
Radiometer	**Detector**	**Filter**	**Input Optic**	**Manufacturer**
IL1700 #4246	SED240 #5488	QNDS2 #22469	W #9854	International Light
IL1700 #5296	SED240 #6497	QNDS2 #29167	W #12831	International Light
ILT1400A #8719	SEL240 #6498	NS254 #28012	TD #28814	International Light
X9-11 #12568M	UV-3718-4 #22603			Gigahertz Optik

3.5 THIRD PARTY OVERSIGHT

Carollo Engineers conducted biodosimetry testing under the supervision of Ms. Traci Brooks and/or Mr. Mark Heath. Dilution and injection of phage working stocks was conducted by Ms. Traci Brooks. Sampling of challenge organisms was conducted by Ms. Traci Brooks, Mr. Tyler Kane, Ms. Khalida Hassan of ATG, and/or Mr. George Foster of ATG. GAP prepared all stock solutions of the challenge microbes (MS2 or T1UV), measured challenge microbe dose responses using the collimated beam apparatus, and assayed challenge microbe concentrations under the supervision of Mr. Shawn Verhoeven. Mr. George Foster or Ms. Khalida Hassan operated the UV reactor with oversight by Carollo. Data analysis was conducted by Ms. Traci Brooks and Mr. Tyler Kane and reviewed by Mr. Harold Wright of Carollo Engineers.

METHODS

4.1 WATER QUALITY MEASUREMENTS

Water quality measurements conducted on-site included UV transmittance (UVT) at 253.7 nm and total chlorine. Measurements, sample collection time, and information relating the measurements to test conditions were manually recorded in a dedicated logbook.

4.1.1 UVT Measurements

The UVT of the test water was measured at 253.7 nm using a DR5000 UV-VIS spectrophotometer (Hach Company, Loveland, CO) and a REAL UV254 P-Series handheld spectrophotometer (Real Tech Inc. Ontario, Canada equipped with a 4-cm cell pathlength). Prior to a measurement, the spectrophotometer was zeroed using a 1-cm or 4-cm cuvette filled with distilled water. The cuvette was then rinsed three times with the test water, filled with the test water, and wiped dry. The cuvette was then placed inside the spectrophotometer and the measurement was initiated. Measured UV absorbance, sample collection time, and information relating the measurement to the test conditions were manually recorded in the logbook.

4.1.2 Total Chlorine

During biodosimetric testing, the concentration of chlorine in the test train source water was analyzed multiple times throughout the day. Water samples were taken in plastic sample vials and analyzed within two minutes of collection using a Hach DR700 pocket colorimeter. This method is equivalent to USEPA method 330.5 and Standard Method 4500-Cl G for drinking water and wastewater. The analytical procedure starts by rinsing a 10-mL vial three times with the sample water. The vial was then filled to the 10 mL mark, wiped dry, and placed in the instrument. At this time, the colorimeter was zeroed. A powder pillow containing the required reagent was then opened and poured into the vial. The vial was capped and shaken to ensure adequate mixing. The sample vial was then placed in the colorimeter and the reading was recorded three minutes after mixing.

4.2 UV SENSOR PERFORMANCE

UV sensor performance was assessed using the following three evaluations:

1. Reference UV sensor checks
2. Dependence of UV sensor measurements on ballast power setting
3. Dependence of UV sensor measurements on water UVT

4.2.1 Reference UV Sensor Checks

Measurements made by the on-line UV sensors were checked multiple times throughout validation testing using calibrated reference UV sensors (SUV 20.1 A2 Y2 C) using the following procedure:

1. Record time, water UVT, and lamp power.
2. Record the multiple measurements made by the on-line UV sensor (three readings at 5-second intervals).
3. Replace the on-line UV sensor with each of the reference UV sensors and record at least three consecutive readings after the measurement had stabilized.
4. Return the on-line UV sensor and record multiple measurements (three readings at 5-second intervals).
5. Calculate the average of the multiple measurements taken by each reference UV sensor and the on-line UV sensors. Calculate the average of the three reference UV sensor measurements from the individual averages.
6. Compare by plotting online UV sensor readings versus reference UV sensor readings.

4.2.2 Dependence of Measured UV Intensity on Ballast Power Setting and UVT

The dependence of UV intensity measurements on the ballast power setting was determined using the following procedure:

1. Record time, and water UVT.
2. Adjust ballast power to 100 percent by adjusting the lamp ampere setting to the reactor's maximum.
3. Record steady state measurements by each UV sensor.
4. Repeat steps 1 to 3 for various lamp ampere settings ranging from 5 to 10 in the WF-125-6 and WF-225-8 reactors, and 5 to 11 in the WF-115-4 reactor.
5. Repeat steps 1 to 4 at different UVTs, adjusted by addition of LSA.

4.3 BIODOSIMETRY

Biodosimetry was conducted using the following procedure:

1. Set the flow rate to the target value by adjusting the flow control valve.
2. Set the water UVT to the target value by adjusting the feed rate of the LSA pump.
3. Set the lamp ampere setting to the target value and wait 5 minutes for the lamps to stabilize.

4. Initiate injection of MS2 or T1UV.
5. Wait for at least 5 residence times to achieve steady state conditions.
6. Manually record flow rate and UV intensity, lamp ampere setting and reactor power consumption (kW).
7. Collect 3 influent and effluent challenge microbe samples spaced twenty seconds apart. Sample volumes were approximately 50 mL.
8. Collect the collimated beam sample (1 to 2 Liters) from the influent sampling port as required.
9. Collect effluent samples for measurement of UV transmittance in parallel with microbial sampling.
10. Manually record flow rate and UV intensity, lamp ampere setting and reactor power consumption (KW).

All sample vials were pre-labeled before testing in accordance with the test plan. Steps in the test sequence were recorded either in the data logbook or on data sheets. All microbiological samples were stored on ice within a cooler. Samples were shipped by overnight courier at the end of each working day for analysis of challenge microbes UV dose-response.

4.4 QUALITY ASSURANCE AND QUALITY CONTROL

All biodosimetric testing was conducted per a previously defined test plan agreed to by Carollo Engineers and ATG. The test plan was defined by a table listing test condition identification numbers and test conditions including flow rate, UVT, and ballast power levels. Carollo and ATG each had copies of the test plan during testing that they used to confirm the conditions of each test run prior to sampling. Carollo Engineers was responsible for initiating all steps associated with conducting a given test. ATG confirmed those conditions using their copies of the test plan. A typical sequence of events included, in chronological order, setting the flow rate, UVT, and the UV reactor operation, then initiating challenge microbe injection, and water sampling. Steady state for each step was confirmed by Carollo Engineers before the next step was initiated. Carollo synchronized inlet and outlet sampling by communicating a request to sample to the personnel collecting samples. All events were recorded by the computer data log and manually in the sample data sheets.

At the beginning of each day, several procedures were initiated to ensure consistency throughout the validation period. These included verification of the absence of chlorine in the test water used to prepare the bacteriophage concentrations and assessment of the stock de-ionized water UVT with organic free water (Hach, Loveland, CO). In addition, other procedures as described in this section were performed throughout testing to assess water quality, test train stability and reactor performance.

4.4.1 UV Spectrophotometer Calibration Check

UV spectrophotometer UV absorbance and wavelength accuracy was checked, respectively, using potassium dichromate, holmium oxide, and far UV rare earth standards (Starna Cells, Inc, Atascadero, CA) before each day of testing.

The potassium dichromate standard consisted of two cuvettes. One cuvette contained a 20 mg/L solution of potassium dichromate with known UV absorption coefficients at 350 nm, 313 nm, 257 nm, and 235 nm, traceable to National Institute of Standards and Technology (NIST) primary standards. The other cuvette contained a zero absorbance solution (blank). The blank solution was used to zero the spectrophotometer prior to measuring the absorption coefficient of the standard. The UV absorption coefficients of the standards measured with the Hach DR 5000 are included in Appendix E.

The holmium oxide and rare earth standard consisted of cuvettes containing solutions of holmium oxide or rare earth with absorbance peaks that occur at known wavelengths traceable to NIST primary standards. A table of the peaks from the holmium oxide and rare earth standard scans are included in Appendix E.

During each day of testing, the RealTech UVT analyzer was checked with a potassium dichromate secondary standard prepared on site from reagent grade potassium dichromate powder to an approximate absorbance 0.27 AU as determined by the DR5000 spectrophotometer set at 253.7 nm. The absorbance of the secondary standard was measured in the RealTech analyzer.

4.4.2 Flowmeter

Flow meter accuracy at the Portland Validation Facility has been verified since October 2005 by comparisons of readings made by different flow meters, by “bucket tests” at low flow rates, and by drawdown tests using the 2-million gallon groundwater storage tank located on-site. The comparison report is provided in Appendix F. In addition, the 12-inch flow meter and the 4-inch flow meter used during testing were compared against each other for additional confirmation of their accuracy. This report is also provided in Appendix F.

4.4.3 Microbial Controls and Blanks

Microbial QA/QC included collection of control and blank samples during validation testing, trip controls and method blanks, and the evaluation of the stability of the challenge microorganisms. Control samples were influent and effluent samples collected with MS2 or T1UV injection on, and the UV reactor off. Blank samples were influent and effluent samples collected with the UV reactor lamps on, halting bacteriophage or spore injection, flushing the system with groundwater for a period corresponding to five residence times of the system (injection loop, inlet piping, reactor and outlet piping). Trip controls were sent from GAP with the phage stock and returned with the samples on each day of testing.

Method blanks consisted of lab dilution water that was assayed for test microbe concentrations.

4.4.4 Microbial Stability

Influent and effluent samples for several test conditions were randomly sampled for temporal stability analysis of MS2 and T1UV concentrations used with validation. The samples were stored at 4°C and the concentrations were periodically measured over time. Results of the microbial stability tests are presented in Appendix A.

4.4.5 Steady State Conditions

Steady-state conditions of flow rate, UVT, UV system operation, and challenge microbe concentration were confirmed prior to sampling.

Steady-state flow rate essentially occurred immediately after the flow control valves were adjusted to the desired flow rate. Once the flow rate was set, it typically held constant with a standard deviation less than 1 percent.

The target UVT was typically reached after one to three iterative settings of the LSA pump speed. Steady-state was confirmed by collecting three water samples from the effluent sampling tap spaced at least one minute part and confirming that the average UVT was within 0.3 percent of the target value. Once the target UVT was reached, the value typically remained stable over multiple test conditions without the need for readjustment.

The spectrophotometer's zero-absorbance value was checked at the end of each set of transmittance measurements by measuring the UV transmittance of the distilled water. If the UV transmittance of the distilled water deviated by more than 0.2 percent from 100 percent, the spectrophotometer was re-zeroed and the UVT of the samples was re-measured. In a few cases, slight changes in raw water quality caused a drift in the UVT of the water. In that case, the LSA injection rate was adjusted to compensate and the measurements were repeated. All errors and diagnostics were recorded in the logbook.

Steady state operation of the UV lamps was evaluated by observing UV intensity displayed at the PLC following changes in lamp on/off status or power setting. Typically, steady state for the lamps was reached within 5 minutes of adjusting lamp power or of turning on the lamps.

Steady state challenge microbe concentrations were assumed to occur after a time period equal to 5 theoretical residence times plus an additional 30 seconds to account for period from the gear pump injection point to the effluent sampling point.

RESULTS

Functional testing of the ATG WF-115-4, WF-125-6, and WF-225-8 UV reactors was conducted on April 18, 2019. Biodosimetric validation was conducted on January 8, 9, 16, 2019, and March 12, 13, 14, 19, 2019.

5.1 WATER QUALITY

The source water used during functional and biodosimetric testing was groundwater, with a UVT greater than 99.0 UVT and non-detectable chlorine concentrations (all measurements were at or below the detection limit of 0.02 mg/L).

5.2 ELECTRICAL POWER CONSUMPTION

The power consumption to the ATG WF-115-4, WF-125-6, and WF-225-8 UV reactors was monitored using a Fluke 434 power quality analyzer, calibration certificates for which are provided in Appendix F. Figure 5.1 presents the UV reactor power consumption as a function of the lamp amperes. Table A.1a in Appendix A reports the reactor power consumption and power factor data for each reactor. The relationship between reactor power consumption (P, kW) and lamp amperes (P_L, A) is described in Equation 5.1a, 5.1b, and 5.1c for the lamps in the WF-115-4, WF-125-6, and WF-225-8 UV reactors, respectively:

$$P = 0.0768 \times P_L^{1.2966}$$ **Equation 5.1a**

$$P = 0.1639 \times P_L^{1.2022}$$ **Equation 5.1b**

$$P = 0.2812 \times P_L^{1.2630}$$ **Equation 5.1c**

The WF-115-4 reactor had a maximum lamp ampere setting of 11. The WF-125-6 and WF-225-8 both had a maximum lamp ampere setting of 10. Each equation fit the data with an R-squared of at least 0.9918. The power factor is calculated as the ratio between the apparent power (kVA) and true power (kW) measured for the total system consumption, where apparent power is product of the current (Amps) and voltage (V) measured from the main power lines to the UV system. The power factors ranged from 0.802 to 0.971 for the WF-115-4, 0.429 to 0.884 for the WF-125-6, and 0.416 to 0.935 for the WF-225-8.

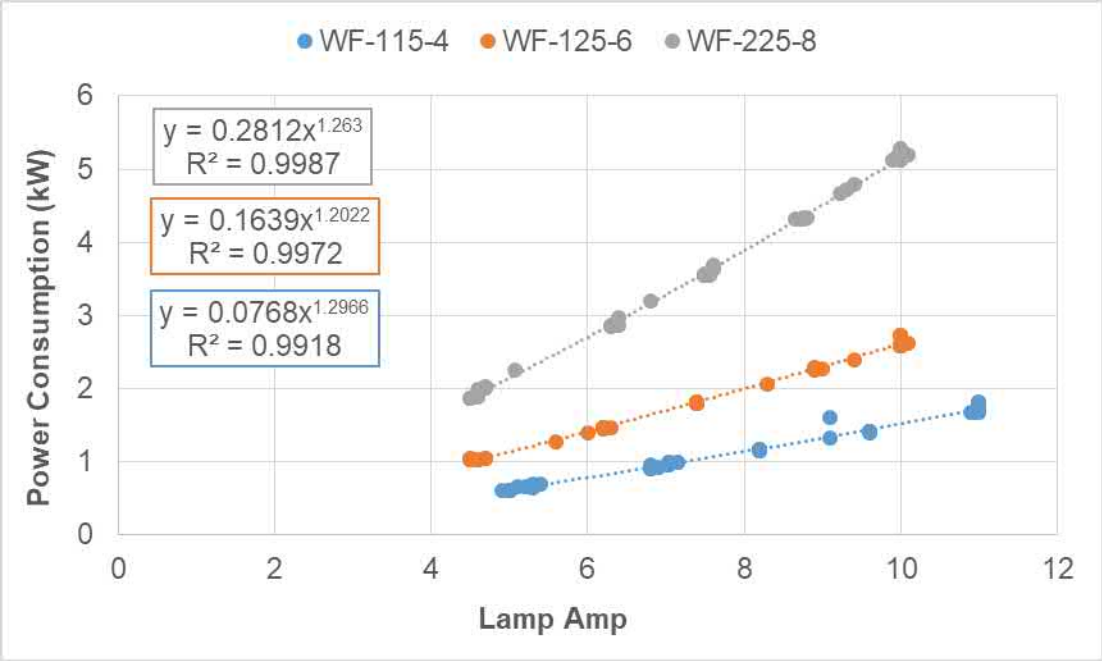

Figure 5.1 UV Reactor Power Consumption Measured by the Fluke 434 Power Quality Analyzer as a Function of the Ballast Power Setting

5.3 UV SENSOR PERFORMANCE

The performance of the UV sensors was validated during functional and biodosimetric testing by comparing duty and reference UV sensor readings at various water UVT and lamp ampere settings, and by defining the dependence of UV sensor readings on lamp ampere setting and water UVT. The UV sensor port window and quartz sleeves were chemically cleaned with CLR Calcium, Lime, and Rust Remover before testing. Table 5.1 provides serial numbers for the reference UV sensors.

Table 5.1 UV Reference Sensor Information

UV Sensors	Reference Sensor 1	Reference Sensor 2	Reference Sensor 3
Serial Number (150W sensors)	YN 109	XD 062	X4 034
Serial Number (300W sensors)	D8 126	D9 076	D9 080

5.3.1 Reference UV Sensor Calibration

The reference UV sensors were tested for linearity and calibration at uv-technik Speziallampen GmbH in Wolfsberg, Germany. Appendix B provides the calibration reports prepared by the uv-technik.

5.3.2 Reference UV Sensor Checks

The reference UV sensors were used to check the accuracy of the duty UV sensors. The test water UVTs ranged from 67.8 to 99.5 percent and the lamp ampere setting ranged from 4.5 to 11. Figure 5.2 shows the comparison between the average reference UV sensor reading and the average duty UV sensor reading for each reference sensor check. The relationship between the duty and reference UV sensor readings had a slope of 1.0383. The residuals had an average and standard deviation of -1.34 and 2.42 percent, respectively, and ranged from -6.34 to 1.31 percent. All differences were within the 10 percent criteria for reference UV sensor checks given in the 2006 UVDGM. The reference and duty UV sensor data used for the analysis are presented in Appendix A.1b. The duty sensor readings in this report were not adjusted based on the comparison of duty and reference UV sensor readings.

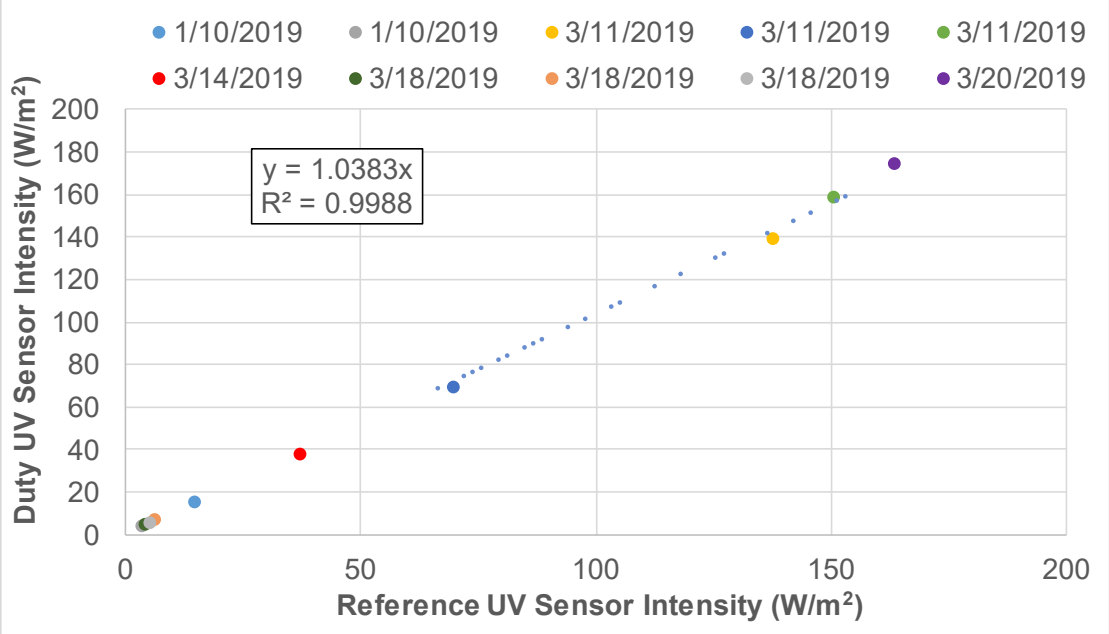

Figure 5.2 **Relationship between All Reference and Duty UV Sensor Measurements Obtained during the WF-115-4, WF-125-6, and WF-225-8 Reactor Validations**

5.3.3 UV Intensity as a Function of Ballast Power Setting and UVT

Functional testing was performed to determine the dependence of the UV sensor reading on UVT and lamp ampere setting for each reactor.

The UV sensor equation developed is described by Equation 5.2:

$$S = 10^{A} \times P_L^{B} \times (UVA - C)^{D} \qquad \textbf{Equation 5.2}$$

where S is UV sensor intensity (W/m^2), UVA is the UV absorbance per cm of the test water at 254 nm, P_L is lamp ampere setting (A), and A through D are empirical coefficients provided in Table 5.2.

Figures 5.3a, 5.4a, and 5.5a show the relation between the measured and predicted UV sensor readings using the coefficients provided in Table 5.2 for the WF-115-4, WF-125-6, and WF-225-8 UV reactors, respectively. Figures 5.3b, 5.4b, and 5.5b present the residuals as a function of the predicted UV intensity for the WF-115-4, WF-125-6, and WF-225-8 UV reactors, respectively. The relative residuals were calculated as the difference between the measured and predicted UV sensor readings divided by the predicted UV sensor reading. The average of the residuals was -0.02 percent, -0.06 percent, and -0.04 percent for the WF-115-4, WF-125-6, and the WF-225-8, respectively. The standard deviation of the residuals was 1.42 percent, 2.58 percent, and 1.99 percent for the WF-115-4, WF-125-6, and the WF-225-8, respectively. The R-squared values of the relations ranged from 0.9989 to 0.9991. The analysis shows that Equation 5.2 accurately predicts the UV sensor readings. The equation should only be used for interpolation within the bounds of the measured data set (UVT from 64.1 to 99.5 for the WF-115-4, 64.9 to 99.6 for the WF-125-6, and 66.3 to 99.8 for the WF-225-8; lamp ampere setting from 5.0 to 11.0 for the WF-115-4 and 5.0 to 10.0 for the WF-125-6 and WF-225-8).

Table 5.2 UV Sensor Equation Coefficient Values (Equation 5.2)

Constants	WF-115-4	WF-125-6	WF-225-8
A	17.202	-3.2676	-1.5978
B	1.5144	1.4761	1.5282
C	-3.8897	-0.20198	-0.11559
D	-27.891	-5.4742	-2.5972
100% lamp power	11 Amperes	10 Amperes	10 Amperes

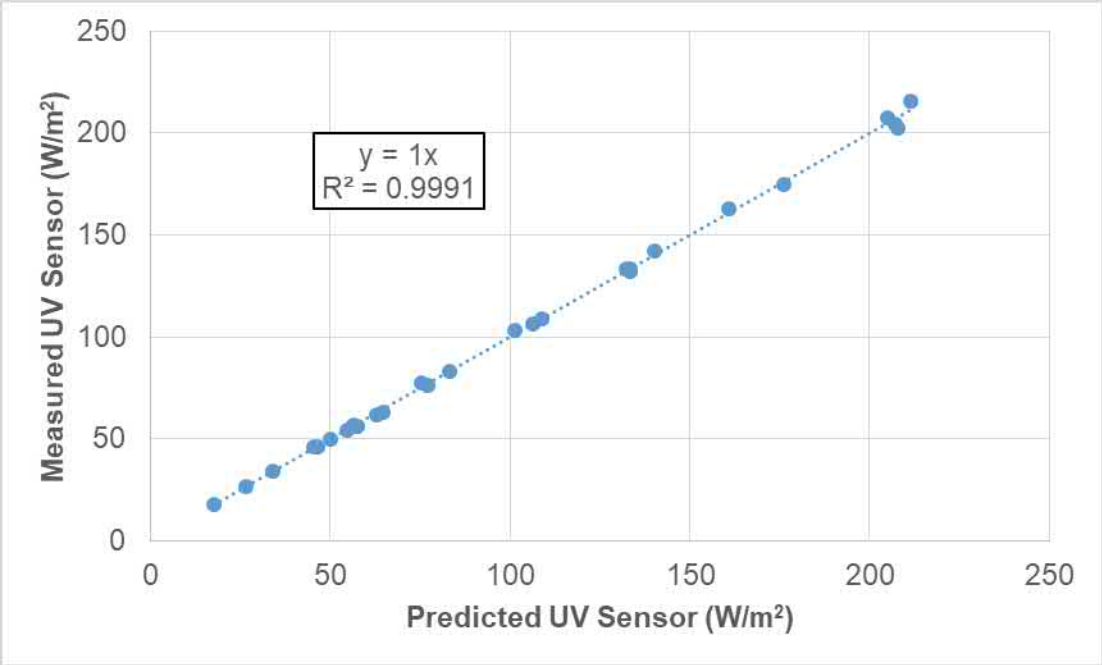

Figure 5.3a **Relation between the Measured and Predicted UV Intensities for the WF-115-4 Reactor**

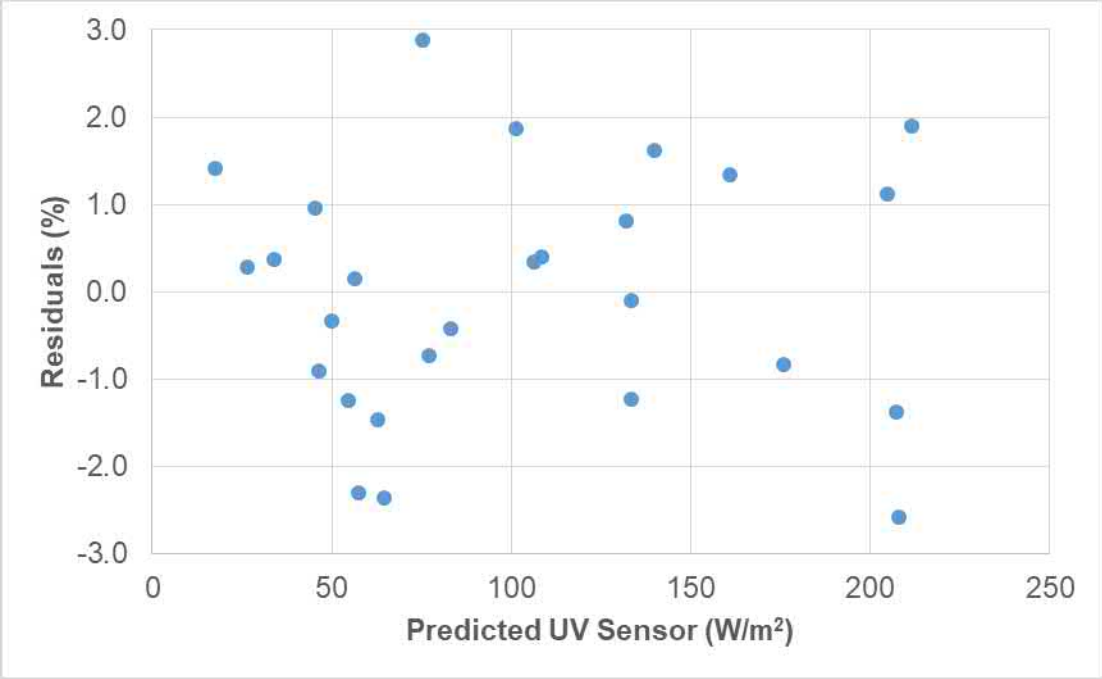

Figure 5.3b **Prediction Residuals versus Predicted UV Sensor Readings for the WF-115-4 Reactor**

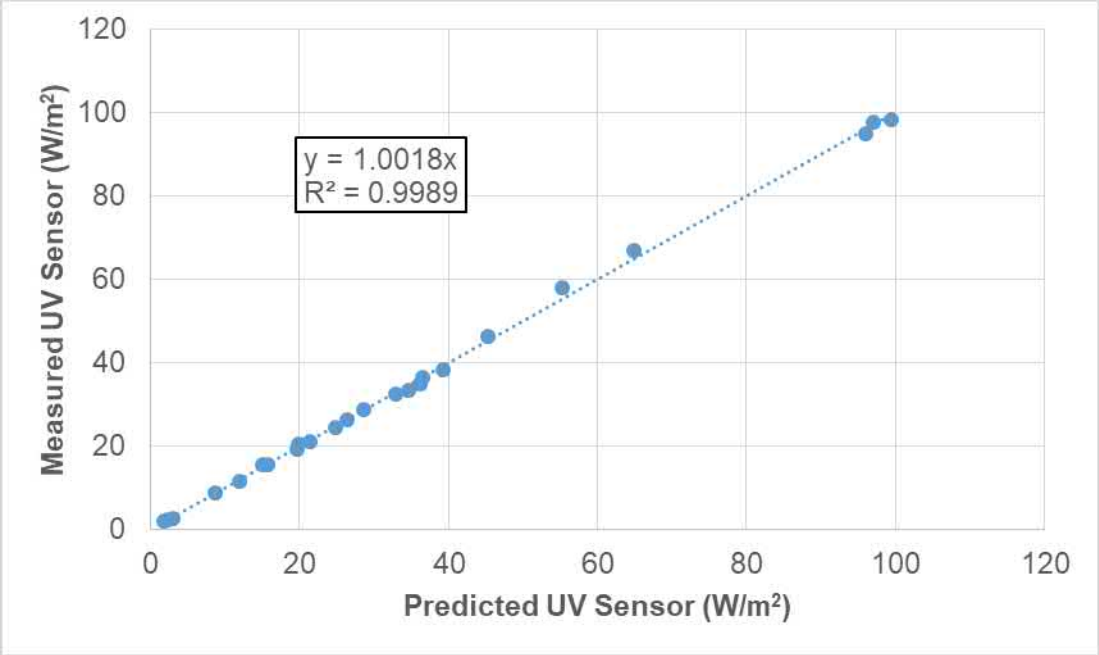

Figure 5.4a **Relation between the Measured and Predicted UV Intensities for the WF-125-6 Reactor**

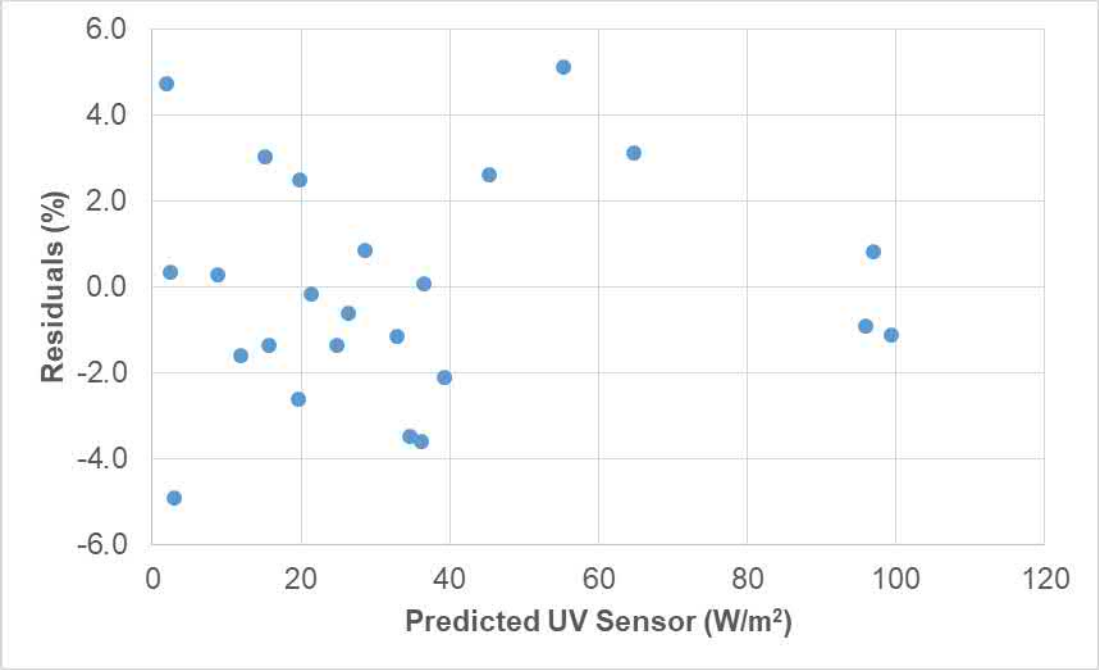

Figure 5.4b **Prediction Residuals versus Predicted UV Sensor Readings for the WF-125-6 Reactor**

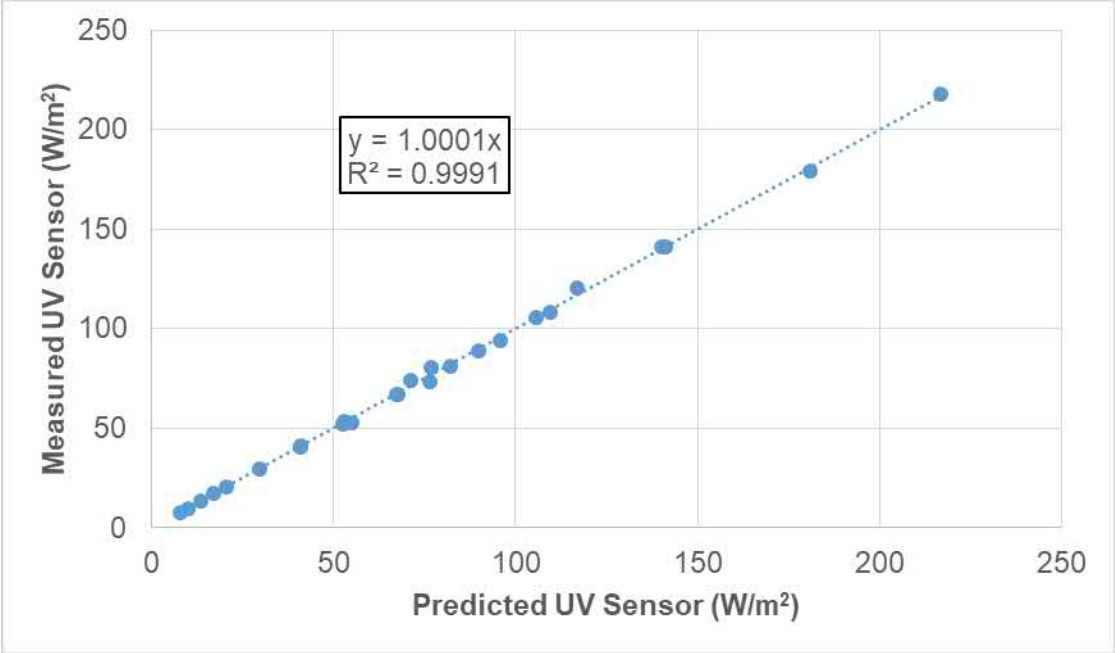

Figure 5.5a **Relation between the Measured and Predicted UV Intensities for the WF-225-8 Reactor**

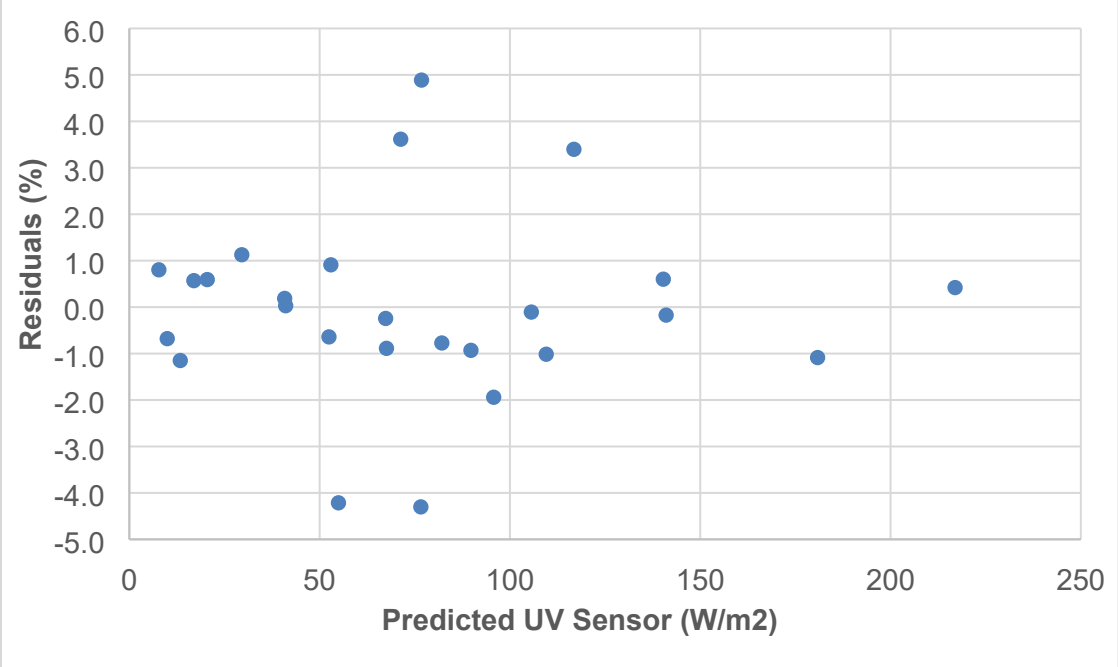

Figure 5.5b **Prediction Residuals versus Predicted UV Sensor Readings for the WF-225-8 Reactor**

5.3.4 Relative Lamp Output

The relative UV output from the lamps, accounting for lamp aging, fouling, and lamp ampere setting, can be determined by calculating the ratio S/S_0 where S is the measured UV intensity and S_0 is the UV intensity predicted by Equation 5.2 with lamp ampere setting, P_L, set to the maximum for the reactor (11 for the WF-115-4 and 10 for the WF-125-6 and WF-225-8). If the lamp ampere setting is at its maximum and the lamps are new, operating within clean quartz sleeves, being monitored by a calibrated UV sensor through a clean UV sensor port window, then the value of S/S_0 should be 1.0. If the lamps are aged or operating with a power setting less than their maximum lamp ampere setting, or if the reactor is fouled, the value of S/S_0 should be less than 1.0. The underlying assumption of the meaning of S/S_0 is that the UV sensor readings used to develop Equation 5.2 were obtained with new lamps operating within a clean, unfouled reactor. With no lamp aging and fouling, the ratio S/S_0 can be estimated using Equation 5.3a for the WF-115-4 reactor, and 5.3b for the WF-125-6 and WF-225-8 reactors.

$$\frac{S}{S_0} = \frac{{P_L}^B}{11^B}$$ **Equation 5.3a**

$$\frac{S}{S_0} = \frac{{P_L}^B}{10^B}$$ **Equation 5.3b**

Figure 5.6 shows the predicted relative lamp output as a function of the lamp ampere setting. At a maximum lamp ampere setting, the relative lamp output has a value of 1.0. At a lamp ampere setting of 5, the relative lamp output has a value of 0.303, 0.359, and 0.347 for the WF-115-4, WF-125-6 and WF-225-8, respectively.

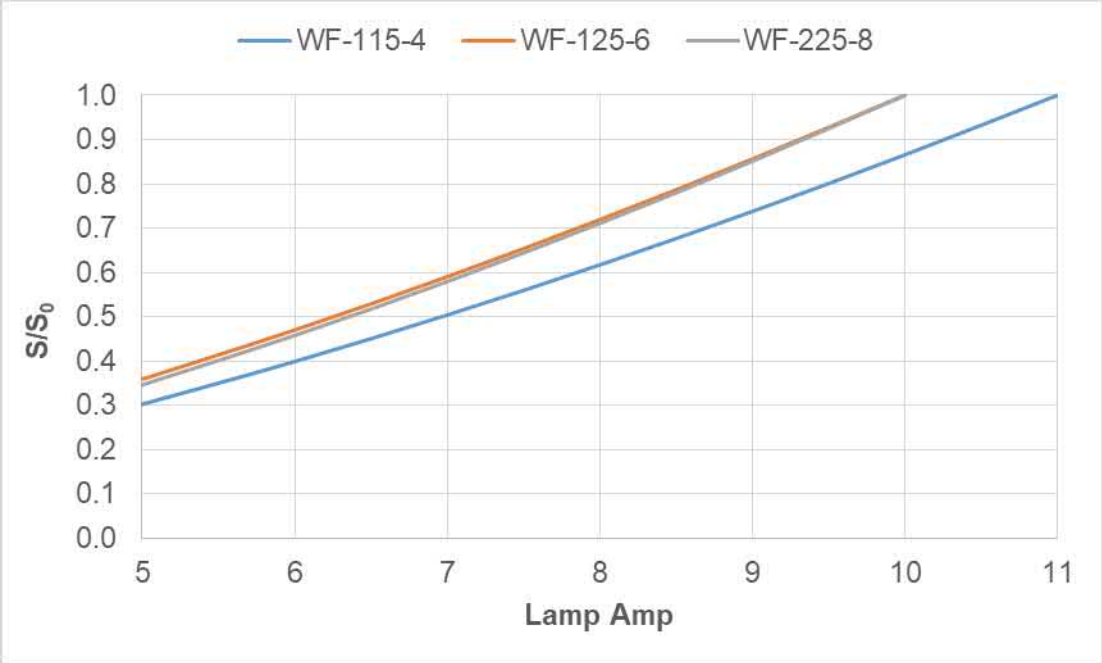

Figure 5.6 Relative Lamp Output as a Function of Ballast Power Setting Predicted by Equation 5.3

5.4 BIODOSIMETRY

Biodosimetric validation was conducted on January 8, 9, 16, 2019, and March 12, 13, 14, 19, 2019 using MS2 and T1UV phage. Log inactivation and RED was evaluated as a function of flow, UVT, and lamp ampere setting using 26 biodosimetric test conditions for the WF-115-4, 26 biodosimetric test conditions for the WF-125-6, and 23 biodosimetric test conditions for the WF-225-8. Measured data is provided in the appendices of this report as follows:

- Table A.1a UV System Power Consumption
- Table A.1b Duty UV Sensor vs Reference UV Sensor Check
- Table A.1c Functional Sensor Testing: UVT, Ballast Power, and UV Sensor Intensity Readings
- Table A.2 Test Conditions for Bioassay Testing
- Table A.3 Sample Replicates for UVT Measurements
- Table A.4a Data Collected to determine UV Dose-Response
- Table A.4b Collimated Beam UV Dose Calculations
- Table A.4c Comparison of N_0 with UVDGM method
- Table A.4d Measured and Predicted UV Doses and Prediction Residuals from Collimated Beam Analyses
- Table A.5 Biodosimetry Test Results
- Table A.6 Biodosimetry Data Analysis.

Biodosimetry QA/QC data, including controls and blanks, bacteriophage sample reproducibility, and bacteriophage stability, is included in Appendix A as well. Appendix A also contains a discussion of collimated beam dose calculation uncertainty.

5.4.1 Challenge Microbe UV Dose-Response

The UV dose-response of MS2 and T1UV phage was measured using the sample with the highest influent concentration of the microbes used for testing each day. The dose-response data was fit using the following approach:

1. For a given UV dose exposure, calculate the average of the replicate plate counts and take its log transformation. If any replicate had zero plate counts, calculate the log transform of the average of the plate counts with all replicates. If all replicates had zero plate counts, discard the data.

2. Calculate the zero-dose log concentration of the target microbe (N_o) by averaging the two observed zero-dose log concentrations of phage.

3. Calculate the log inactivation values. $\log i = \log N_o - \log N$. Plot the dose values against log i. Identify the regression equation that best fit the dose-response data. For the MS2 and T1UV phage dose-response data, the intercept was not statistically significant and the regression functions were forced through the origin (0, 0). The dose-response of MS2 and some T1UV phage showed curvature and was best fit using a quadratic function:

$$Dose = A \times (\log i) + B \times (\log i)^2 \qquad \textbf{Equation 5.4a}$$

The dose-response of some T1UV phage did not show curvature and was best fit using a linear function:

$$Dose = A \times (\log i) \qquad \textbf{Equation 5.4b}$$

4. Evaluate the collimated beam data for outliers and remove outlying data points using an iterative process. Identify outliers using a Grubb's statistic outlier test (described in Section 5.4.2). Outliers are identified when the residuals are greater than the product of the Grubb's statistic and the standard deviation of the residuals between the predicted and measured UV dose values.

Figures 5.7 and 5.8 show the UV dose-response data measured for MS2 and T1UV phage, respectively. Figures 5.7 and 5.8 also show the quality control bounds for MS2 and T1UV phage UV dose-response, as described in the discussion in Appendix I.

The fit to the UV dose-response data was within the 95th percentile quality control bounds for the MS2 and T1UV curves.

Tables 5.3 and 5.4 present the results of the regression analysis of the dose response data of MS2 and T1UV phage, respectively. Regression coefficients with MS2 and T1UV phage were significant at a 95 percent confidence level (p-statistic < 0.05). These tables also give the maximum measured log inactivation with each UV dose-response curve and uncertainty of that value defined as a 95th percent prediction interval. The maximum log inactivation is defined as the maximum measured log inactivation plus/minus a 95th percentile prediction interval. The 95th percentile prediction interval was determined using the following approach:

1. Calculate the prediction interval associated with the UV dose predicted using:

$$PI = \left(1 + \frac{1}{n} + \frac{\left(\log i - \log i_{AVG}\right)^2}{\sum_{k=1}^{n} \left(\log i_k - \log i_{AVG}\right)^2} \right)^{1/2} \times t \times \sigma \qquad \textbf{Equation 5.5}$$

   where PI is the prediction interval in units of mJ/cm^2, n is the number of data sets of dose and log inactivation used to define the UV dose response curve, log i is the maximum measured log inactivation with that dataset, log i_{Avg} is the mean value of the measured log inactivation, log i_k is the kth measured log inactivation, t is the Students t-statistic for n-1 degrees of freedom if the dose-response behavior is linear, n-2 degrees of freedom if the dose-response behavior is quadratic, and σ is the standard error of the difference between the predicted and measured dose.

2. Calculate the maximum UV dose as the UV dose (predicted using Equation 5.4 using the maximum measured log inactivation) plus the value of PI calculated in Step 1.

3. Calculate the maximum log inactivation from the maximum UV dose determined in Step 2 using Equation 5.4.

Table 5.3 Results of MS2 Phage Dose-Response Regression Analysis							
Test	Date	max log i	+ 95th % PI	Coefficient A		Coefficient B	
		(-)	(-)	Value	p-stat.	Value	p-stat.
101	1/8/2019	4.80	4.88	15.626	1×10^{-13}	2.0230	3×10^{-10}
409	1/16/2019	4.69	4.74	15.302	9×10^{-15}	2.2826	5×10^{-12}
407	3/13/2019	7.26	7.36	16.351	4×10^{-17}	2.0129	7×10^{-15}
617	3/14/2019	7.15	7.28	16.530	6×10^{-16}	1.7948	6×10^{-13}
819	3/19/2019	7.48	7.65	14.725	2×10^{-13}	2.4651	6×10^{-14}
Average				16.112	8×10^{-65}	2.0267	3×10^{-52}

Table 5.4 Results of T1UV Phage Dose-Response Regression Analysis							
Test	Date	max log i	+ 95th % PI	Coefficient A		Coefficient B	
		(-)	(-)	Value	p-stat.	Value	p-stat.
416	3/12/2019	5.90	6.09	4.5337	5×10^{-13}	0.097917	5×10^{-3}
820	3/19/2019	5.93	6.20	4.8749	2×10^{-19}	0.00	-
Average				4.5809	7×10^{-24}	0.077114	3×10^{-3}

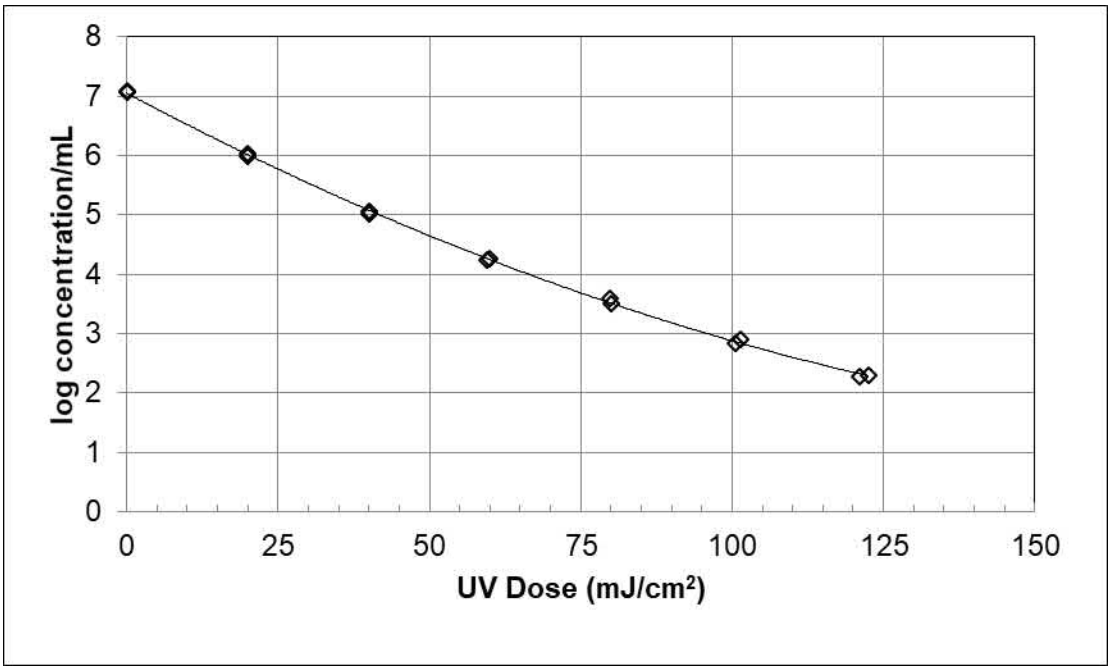

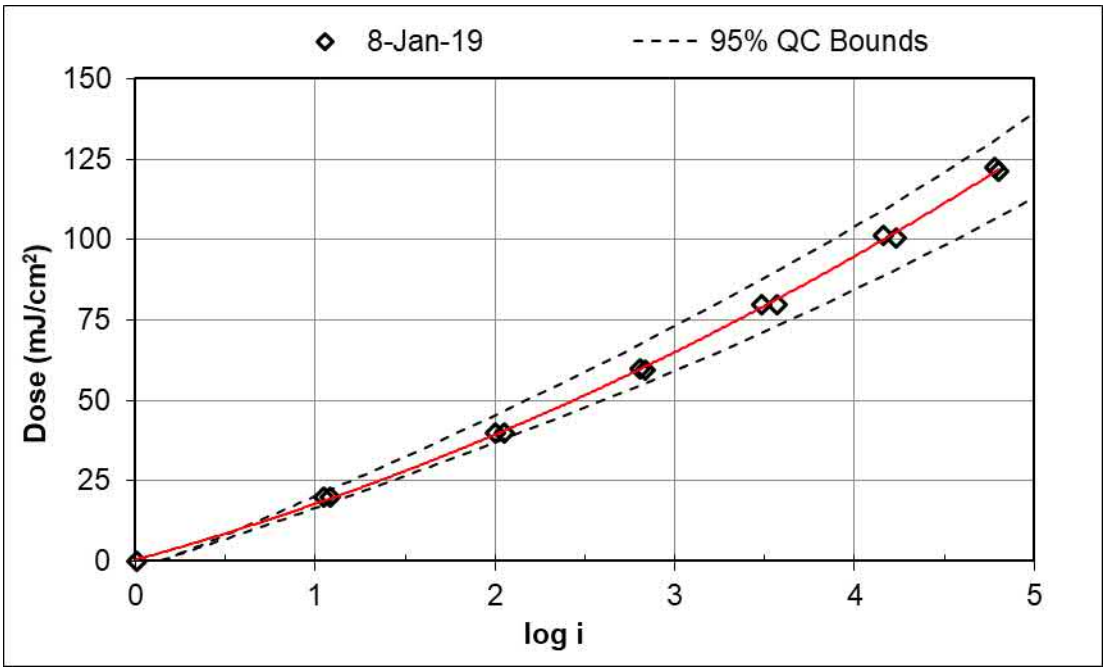

Figure 5.7a UV Dose-Response of MS2 Phage Measured on January 8, 2019

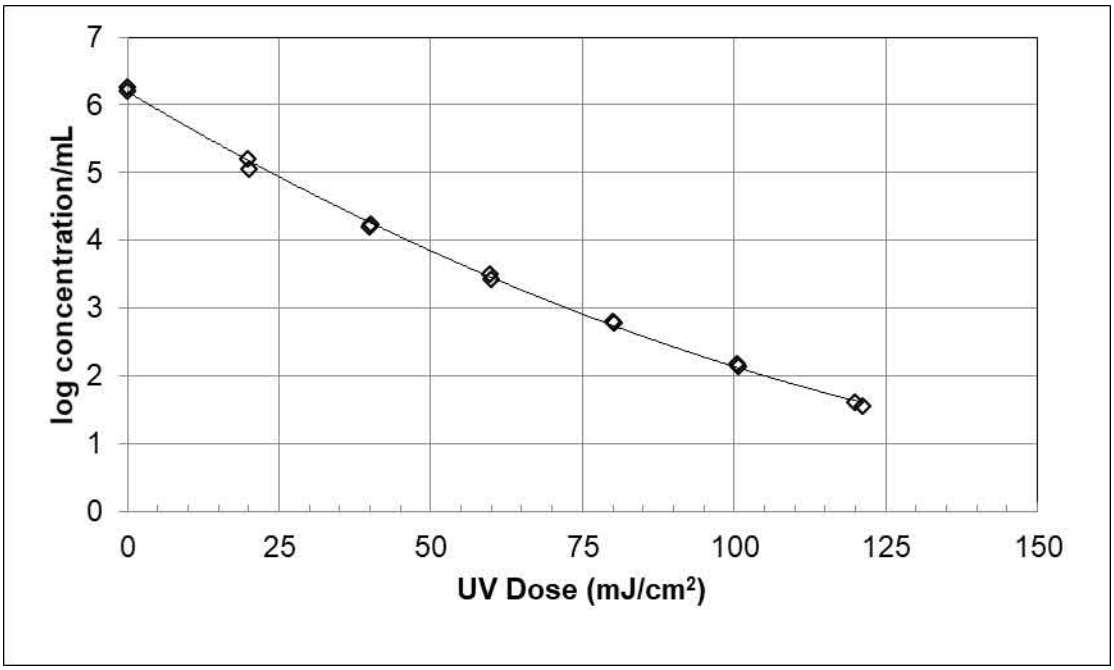

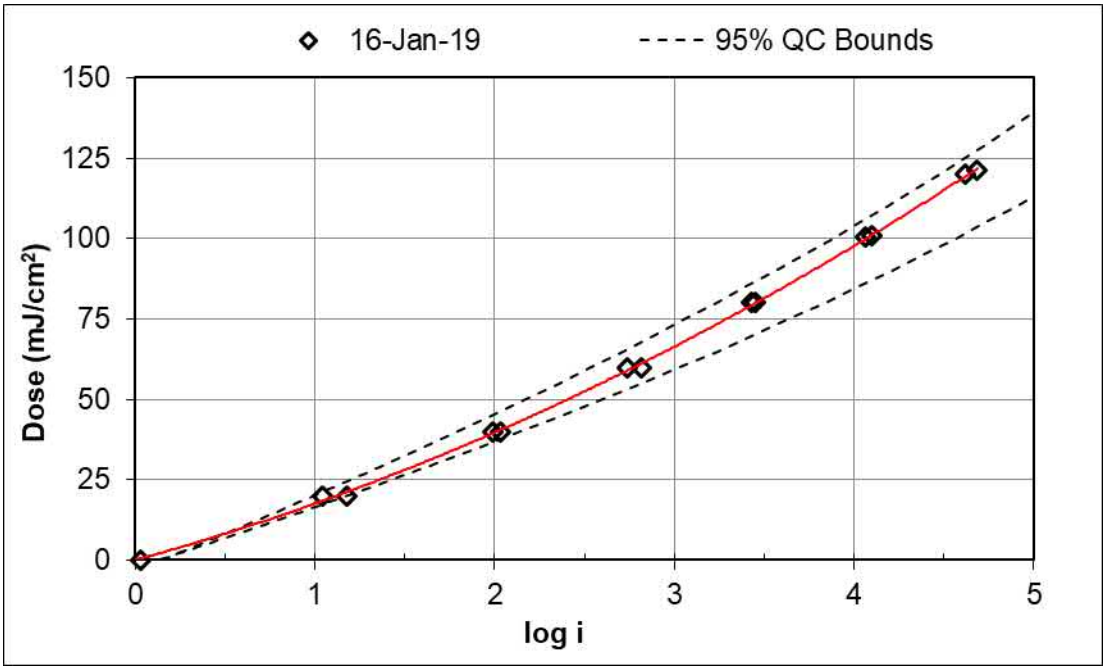

Figure 5.7b UV Dose-Response of MS2 Phage Measured on January 16, 2019

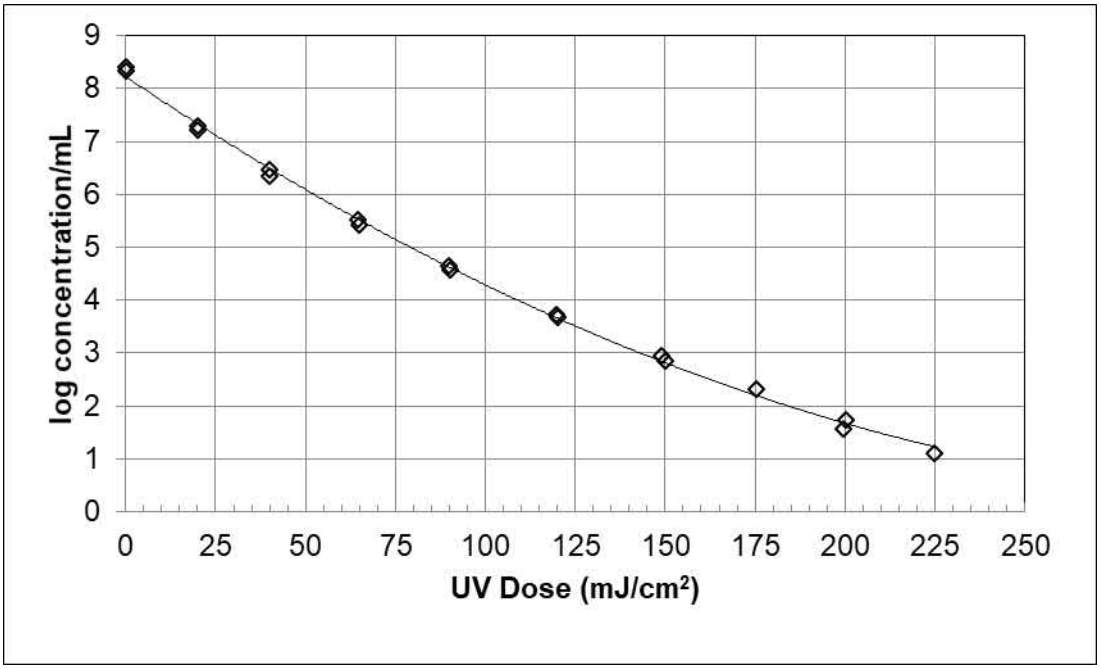

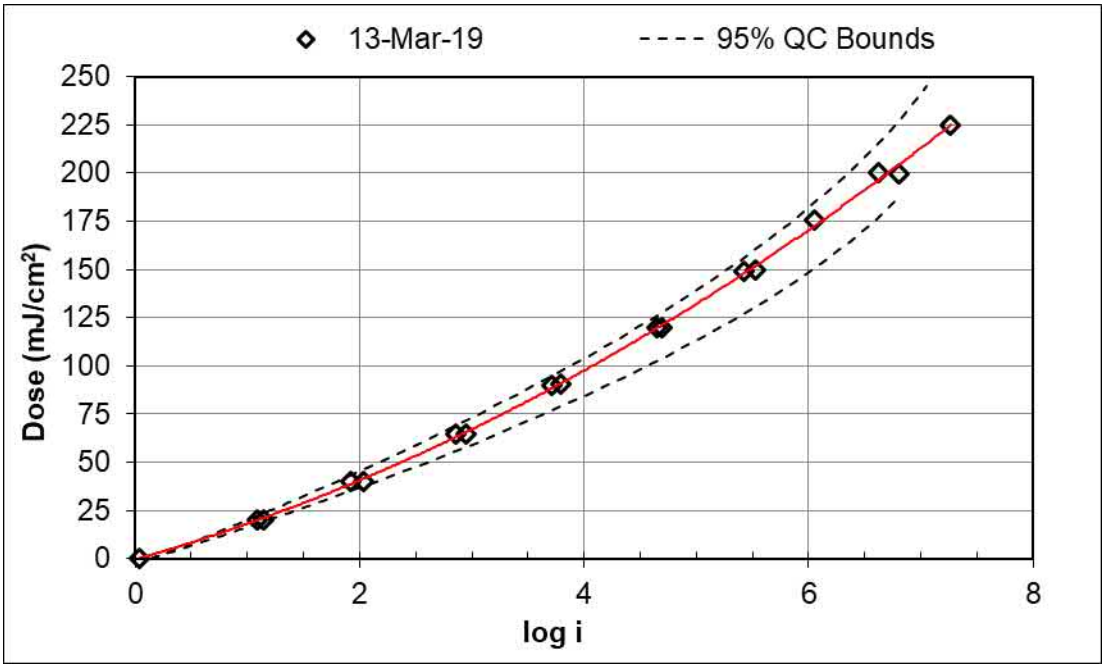

Figure 5.7c UV Dose-Response of MS2 Phage Measured on March 13, 2019

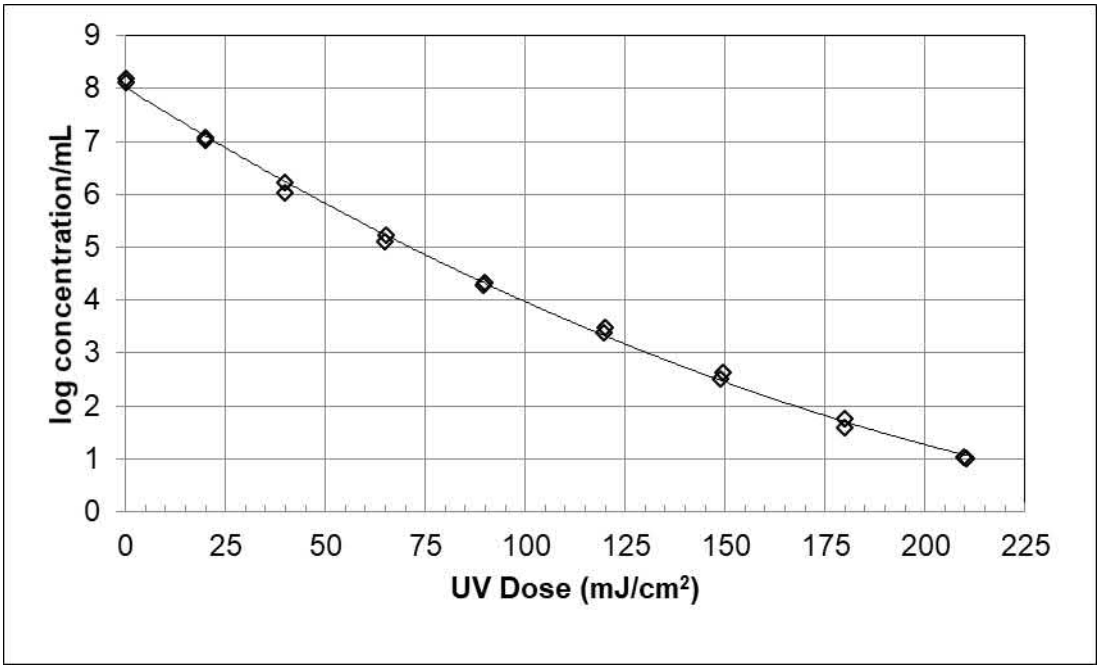

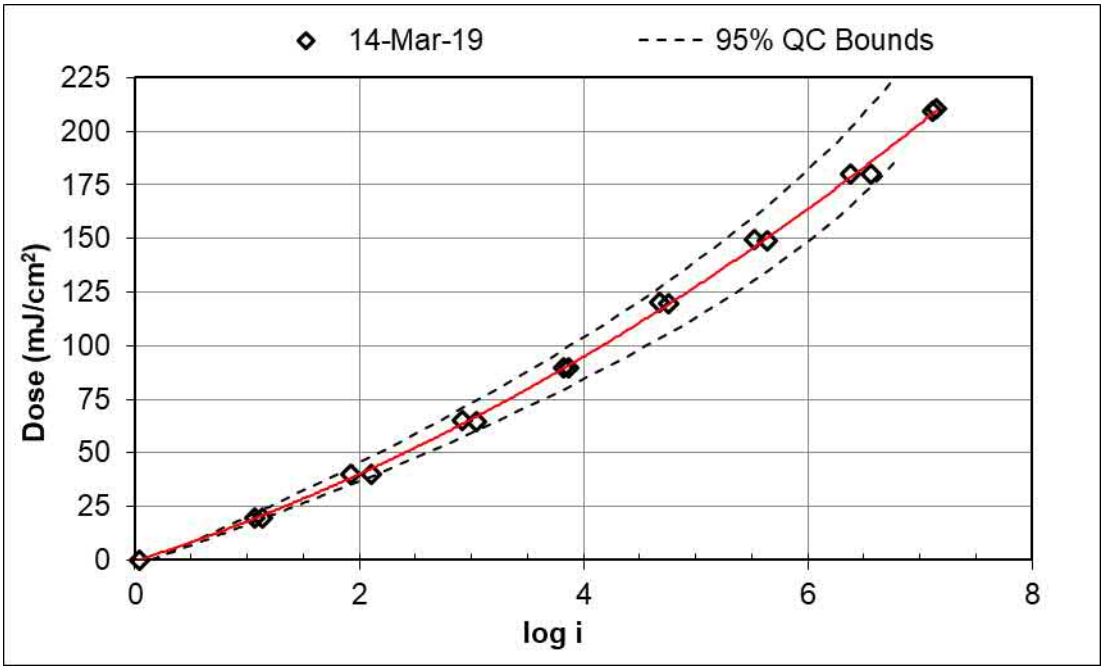

Figure 5.7d UV Dose-Response of MS2 Phage Measured on March 14, 2019

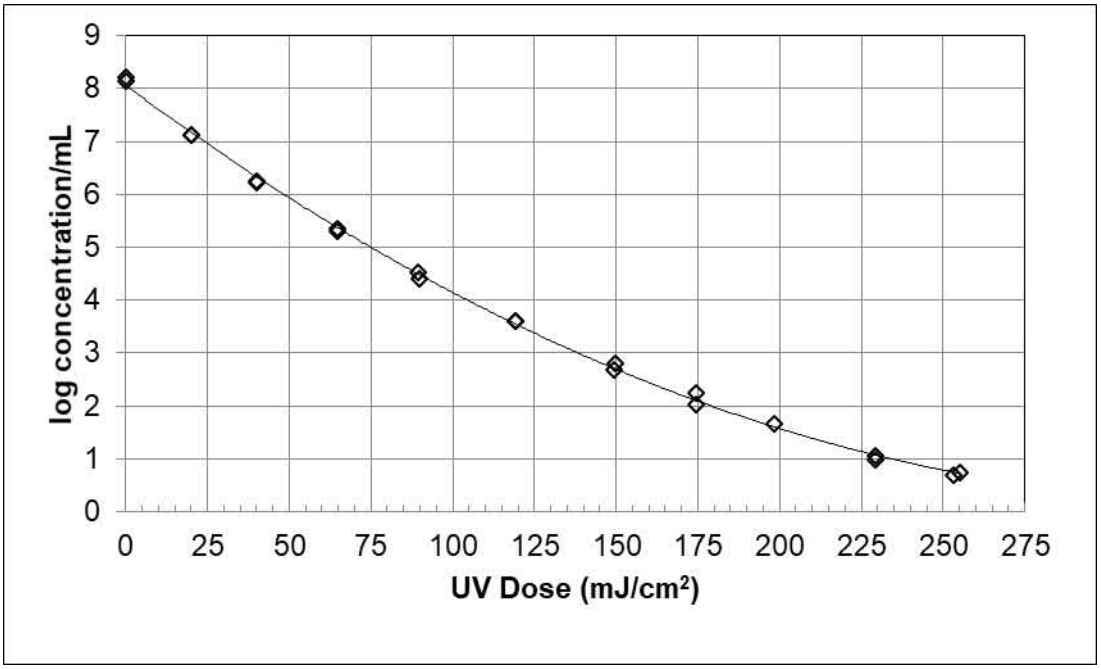

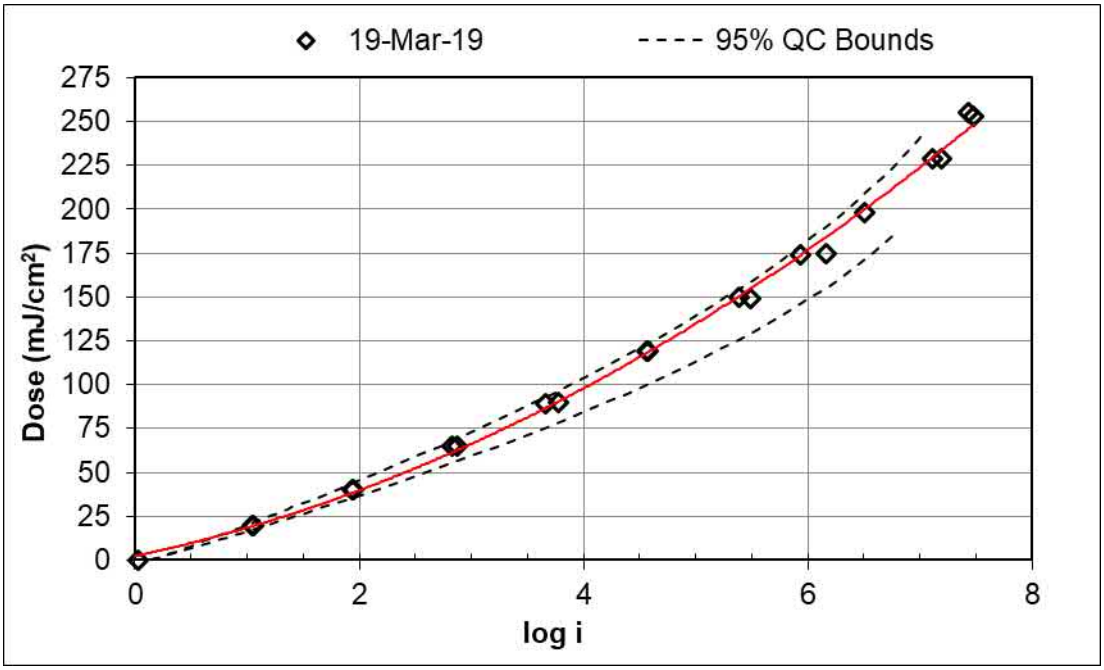

Figure 5.7e UV Dose-Response of MS2 Phage Measured on March 19, 2019

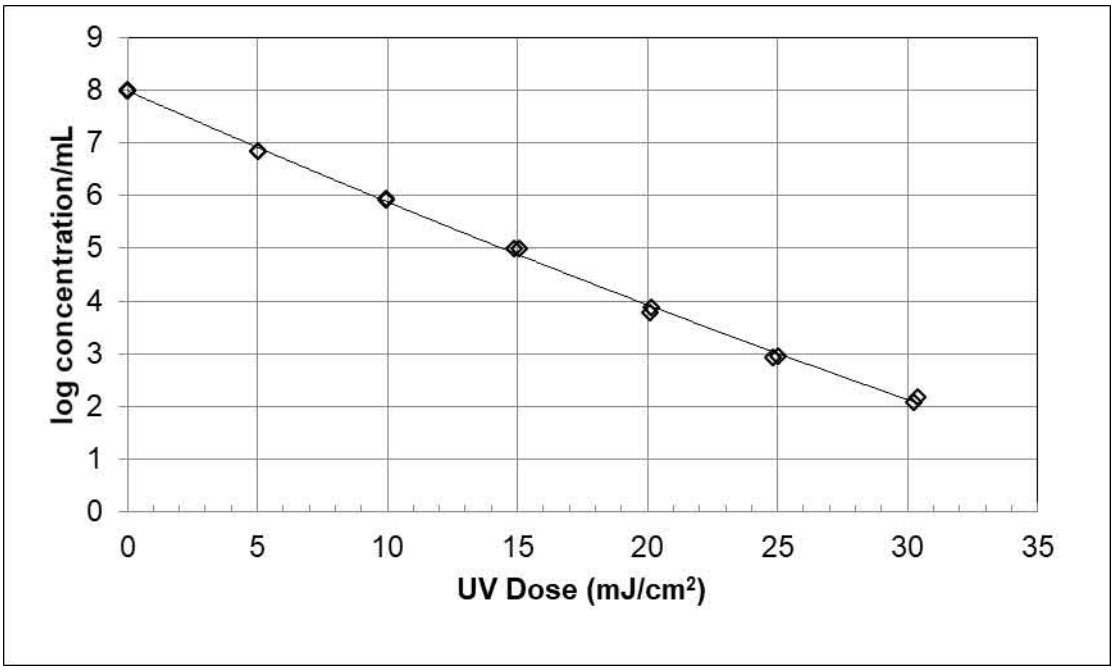

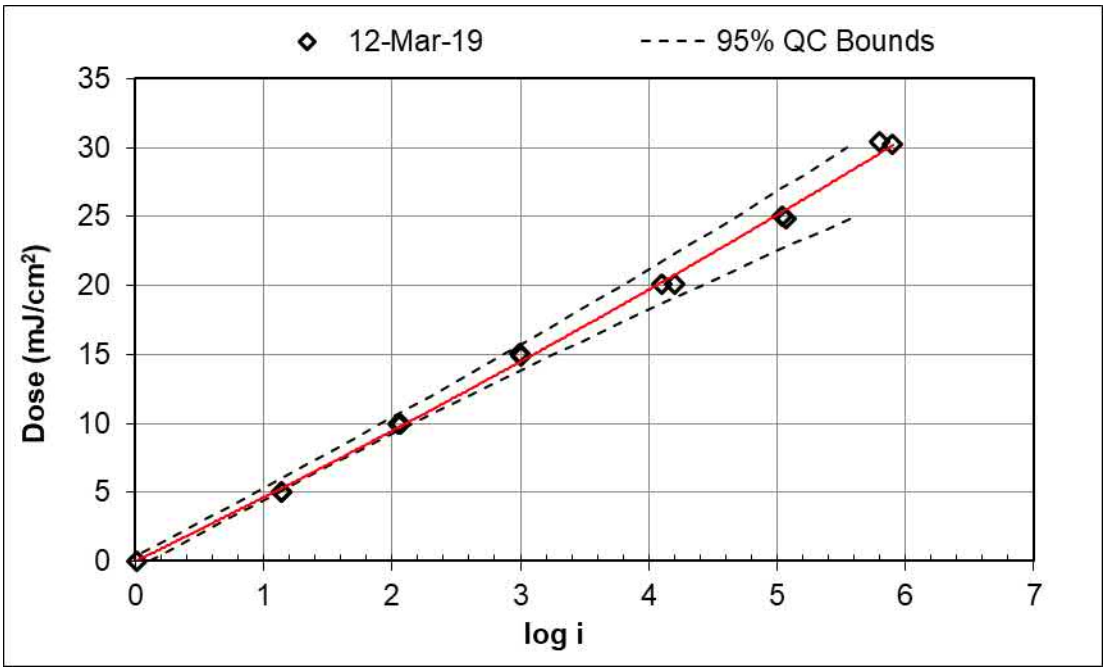

Figure 5.8a UV Dose-Response of T1UV Phage Measured on March 12, 2019

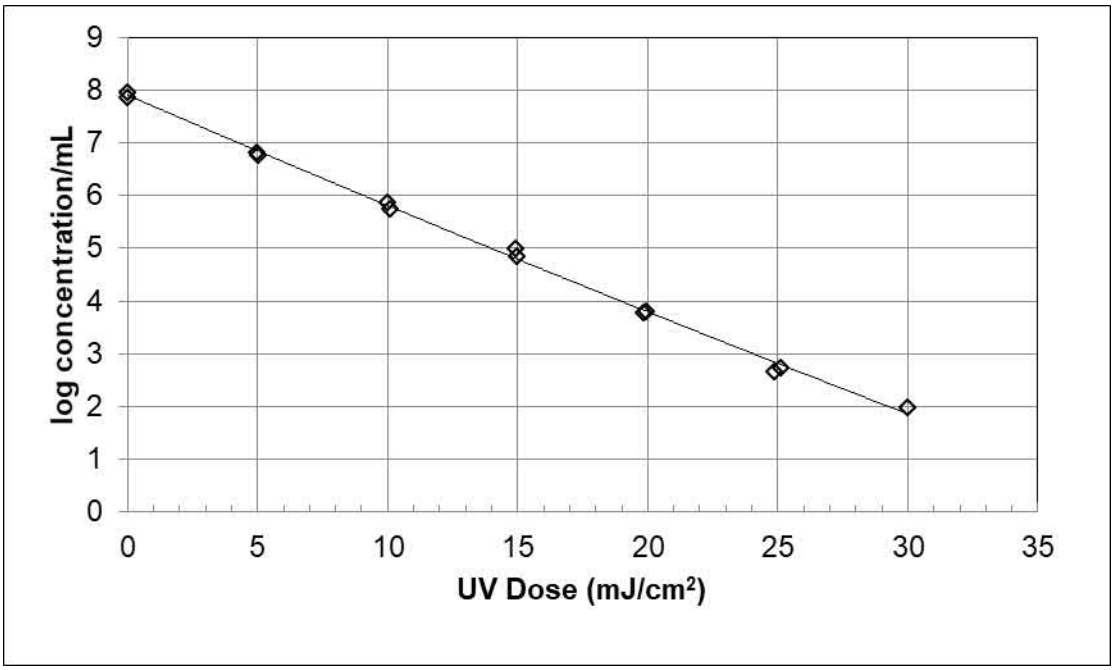

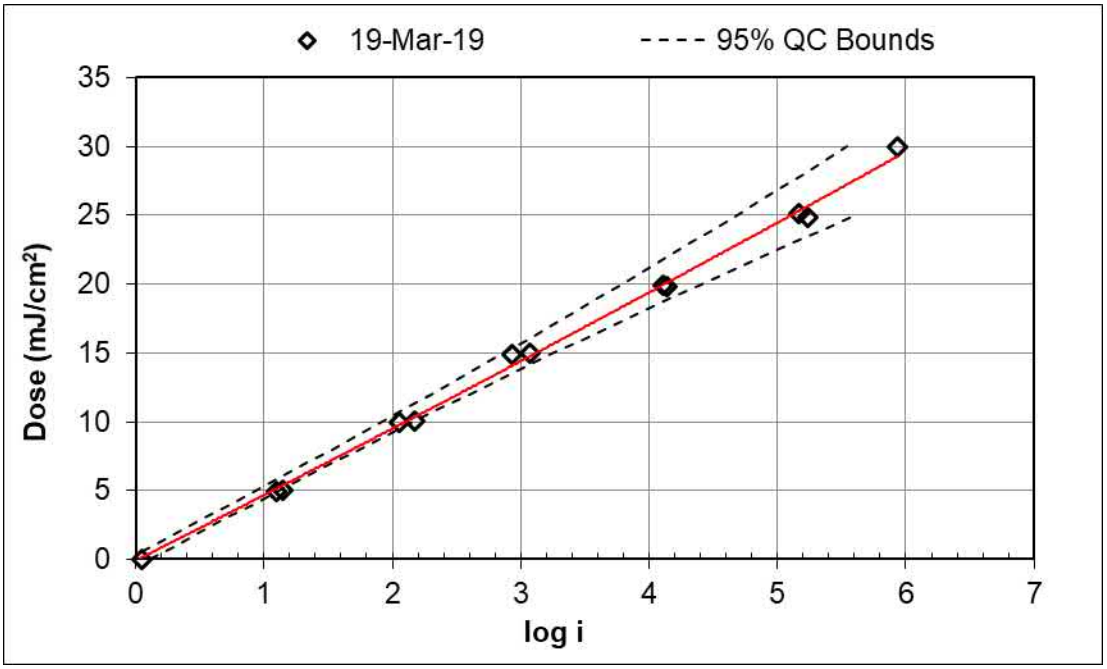

Figure 5.8b UV Dose-Response of T1UV Phage Measured on April 12, 2017

5.4.2 Biodosimetry Data Analysis

The log inactivation, log *i*, of tested microbes delivered by the UV reactor can be described using Equation 5.6.

$$\log i = 10^{A + B \times UVA} \times UVA^{C + D \times UVA} \times \left(\frac{S / S_0}{Q \times D_L} \right)^{E + F \times UVA + G \times UVA^2} \quad \textbf{Equation 5.6}$$

where UVA is the UV absorbance at 254 nm (per cm), S is the measured UV sensor value (W/m^2), S_0 is the UV sensor value (W/m^2) calculated using Equation 5.2 with lamp ampere setting to full power, Q is the flow rate (m^3/hr), D_L is the UV sensitivity of the microbe calculated as the UV dose divided by the log inactivation, as defined using the microbe's UV dose-response curve ($mJ/cm^2/log$), and A through G are constants determined by regression analysis and are presented in Table 5.5.

Table 5.5 Model Coefficients for Equation 5.6 Obtained Using Multivariate Non-Linear Regression

	WF-115-4		WF-125-6		WF-225-8	
Coefficient	Value	p-statistic	Value	p-statistic	Value	p-statistic
A	2.6794	6×10^{-53}	3.5360	7×10^{-52}	3.8127	1×10^{-53}
B	-2.5083	4×10^{-22}	0	-	0	-
C	-0.17837	6×10^{-13}	0	-	0	-
D	0	-	11.970	9×10^{-24}	9.6997	4×10^{-21}
E	0.86151	1×10^{-52}	0.88478	2×10^{-49}	0.86730	3×10^{-52}
F	0	-	-2.0396	2×10^{-10}	-1.2419	4×10^{-7}
G	0	-	4.8188	2×10^{-8}	2.9679	6×10^{-5}
R-squared	0.9900		0.9939		0.9969	
St. Dev. of Residuals (log units)	0.18318		0.14416		0.11966	

The biodosimetry test data was fitted to Equation 5.6 using the following approach:

1. Calculate the average flow measured over the duration of each test condition.
2. Calculate the average UVT (per 1 cm path length) measured over the duration of each test condition. Typically, one UVT sample was analyzed with each influent and effluent grab sample used to measure log inactivation. Calculate the average UVA from the average UVT.

3. Calculate the average UV sensor value, S, measured with the UV sensors over the duration of each test condition.
4. Calculate the value of S_0 with each test condition using Equation 5.2 and the coefficients given in Table 5.2. With this calculation, lamp ampere (P_L) in Equation 5.2 was set to full power (11 for the WF-115-4 and 10 for the WF-125-6 and WF-225-8) and UVT was set to the average UVT determined in Step 2.
5. Calculate the relative lamp outputs, S/S_0, using average measured UV sensor reading from Step 3.
6. With each test condition, calculate the log inactivation of each replicate pair of inlet and outlet samples using:

$$\log i = \log N_i - \log N_e \qquad \textbf{Equation 5.7}$$

where log N_i and log N_e are the log concentrations measured with the influent and effluent samples, respectively.

7. Remove any test conditions where the measured log inactivation is greater than the upper 95th percent prediction interval about the maximum log inactivation used to define the test microbe UV dose-response curve or where the number of plate counts is one or less. The maximum log inactivation and the 95th percent prediction interval are given in Tables 5.3 and 5.4. Since any measured log inactivation within the 95th percent prediction interval is statistically indistinguishable from the maximum log inactivation used to define the test microbe UV dose-response, any data points (T1UV Run 820, replicate A, B, and C, and T1UV Run 812, replicate C) that fell in between the maximum log inactivation and the upper limit of the 95th percent prediction interval were still included in the analysis.
8. Calculate the RED associated with each log inactivation using the UV dose response of the test microbe measured on the same day or within one day of the test condition (i.e., use Equation 5.4 with coefficients in Tables 5.3 or 5.4).
9. Using multi-variate linear regression, fit the biodosimetry data (not including controls) to the linear form of Equation 5.6 for each UV reactor:

$$log(log\ i) = A + B \times UVA + (C + D \times UVA) \times UVA + (E + F \times UVA + G \times UVA^2) \times log\left(\frac{S/S_0}{Q \times D_L}\right)$$

Equation 5.8

The UV sensitivity, D_L, is determined using:

$$D_L = \frac{RED}{Log\ i} \qquad \textbf{Equation 5.9}$$

where log *i* is the predicted log *i* obtained using Equation 5.6 and RED is the UV dose determined using Equation 5.4. Since the value of D_L depends on the predicted log *i*,

the analysis used the Newton Method to iteratively determine the predicted value of log *i* and D_L. The Newton Method for iteratively solving Equation 5.6 defines each iteration as:

$$\log i_{N+1} = \log i_N - \frac{f(\log i_N)}{f'(\log i_N)} \qquad \textbf{Equation 5.10}$$

where log i_N is the Nth iteration of log *i*, log i_{N+1} is the next iteration of log *i*, function f is defined as:

$$f = \log i - 10^{A + B \times UVA} \times UVA^{C + D \times UVA} \times \left(\frac{S/S_0}{Q \times D_L}\right)^{E + F \times UVA + G \times UVA^2} \qquad \textbf{Equation 5.11}$$

and f' is the derivative of function f with respect to log *i*. The derivative f' was approximated using:

$$f' = \frac{f(\log i_N) - f(\log i_N + \Delta \log i)}{\Delta \log i} \qquad \textbf{Equation 5.12}$$

where Δ log *i* is an infinitesimally small change in log *i*.

Substituting Equation 5.12 into Equation 5.10 gives:

$$\log i_{N+1} = \log i_N - \frac{f(\log i_N) \times \Delta \log i}{f(\log i_N) - f(\log i_N + \Delta \log i)} \qquad \textbf{Equation 5.13}$$

The iteration used a starting value of log *i* of 3.0 and a Δ log *i* value of 0.0001-log. The iteration was repeated until the absolute difference between log i_{N+1} and log i_N was less than 0.0000001.

The analysis showed which of the coefficients A through G of Equation 5.6 were statistically significant at a 95th percent confidence level (i.e. p-statistics in Table 5.5 < 0.05).

10. Using non-linear multivariate regression, biodosimetry data (including controls) was fitted to Equation 5.6. The non-linear multivariate regression used the results of Step 9 as initial values for the equation coefficients and was run to minimize the sum of the squares of the residuals defined as the difference between the predicted and measured log inactivation. The analysis used the Newton Method to iteratively solve for the predicted value of log *i* and the associated value of D_L as described in step 9.
11. Calculate the standard deviation of the residuals.
12. Calculate a Grubb's statistic for the number of test conditions and for the total number of replicates using:

$$G = \frac{N-1}{N^{1/2}} \times \left(\frac{t\left(\frac{p}{2\times N}, N-2\right)^2}{N-2+t\left(\frac{p}{2\times N}, N-2\right)^2} \right)^{1/2}$$ **Equation 5.14**

where N is the number of data points used to define the fitted equation, t is a Student's t-statistic with N-2 degrees of freedom, and p is the probability of the outlier. In this analysis, p was set to 0.1.

13. Identify data outliers as having a residual greater than the product of the Grubb's statistic and the standard deviation of the residuals. Remove the worst outlier and repeat steps 9 to 13 until no outliers are identified. In this analysis, two types of outliers are defined. Outlier test conditions are identified using the Grubb's statistic for the number of test conditions. An outlier test condition indicates that there was an error that impacted all replicates with a given test condition. Outlier replicates are identified using the Grubb's statistic for the full dataset including all replicates. An outlier replicate indicates there was an error that impacted that one replicate.

Table 5.6 summarizes the analysis including:

1. The total number of test conditions.
2. The number of test conditions removed because the log inactivation was greater than the range used to define the dose-response curves.
3. The number of test conditions with zero effluent counts or high standard deviations between the replicates.
4. The number of test conditions identified as outliers.
5. The Grubb's statistics and standard deviations of the residuals used to define those outliers.

Table 5.7 provides detail on the test conditions removed from the dataset as either outliers or having log inactivation values that exceeded the maximum log inactivation of the UV dose response curve, as well as those data points that were included in the test plan but for which results were not available from the contract lab (GAP Enviromicrobial Services).

Table 5.6 Grubb's Statistics and Standard Deviation of the Residuals with the Best Fit to Equation 5.6			
	WF-115-4	**WF-125-6**	**WF-225-8**
Total Number of Test Conditions	26	26	23
Total Number of log *i* Data Points in test plan	78	78	69
# Data Points with log *i* > CB Range or Plate Counts ≤ 1	0	0	4
# Data Points with Zero Effluent Counts	0	0	3
# Data Points with High Standard Deviations between Replicates	0	0	3
Number of Outlier Replicates based on Grubb's statistic	0	3	1
Grubb's statistic for # data points less outliers	3.2970	3.2829	3.2060
Standard Deviation of All Residuals (log units)	0.18318	0.14416	0.11966

Figures 5.9a through 5.11b compare the measured log inactivation with the inactivation predicted using Equation 5.6 and the coefficients in Table 5.5 for the WF-115-4, WF-125-6, and WF-225-8 reactors, respectively. The relation was fitted using a linear function, y = Ax, with a slopes ranging from 1.0013 to 1.0031 and R-squared values greater than 0.9900. Figures 5.9b through 5.11b show the residuals between the predicted and measured log inactivation as a function of the predicted log inactivation for the WF-115-4, WF-125-6, and WF-225-8 reactors, respectively. Since multivariate non-linear regression minimized the absolute error, the residuals in units of log inactivation appear normally distributed about zero and do not depend on the predicted log *i*.

Table 5.7 Biodosimetry Data Identified as Outliers or not enumerated by GAP			
Test	**Microbe**	**Sample**	**Comment**
607	MS2	A, B, C	Grubb's Outlier
813	MS2	B	Grubb's Outlier
813	MS2	C	Log i > log i max
806	MS2	A, B, C	Log i > log i max
807	MS2	A, B, C	Zero effluent counts
Control 7	T1UV	A, B, C	High standard deviations

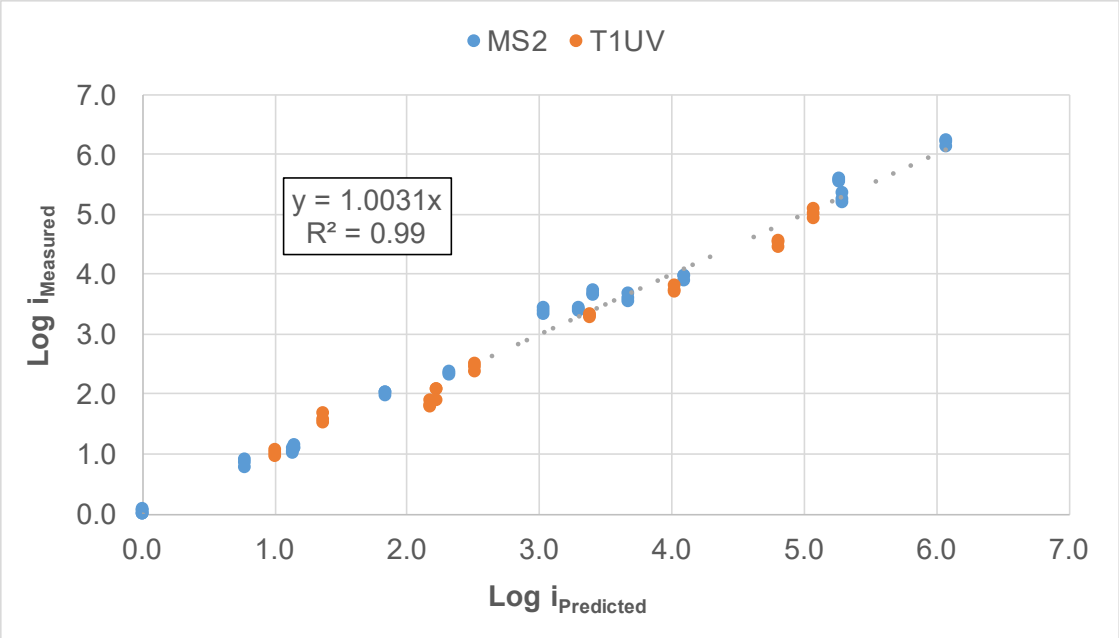

Figure 5.9a **Measured vs. Predicted Log Removal for the WF-115-4**

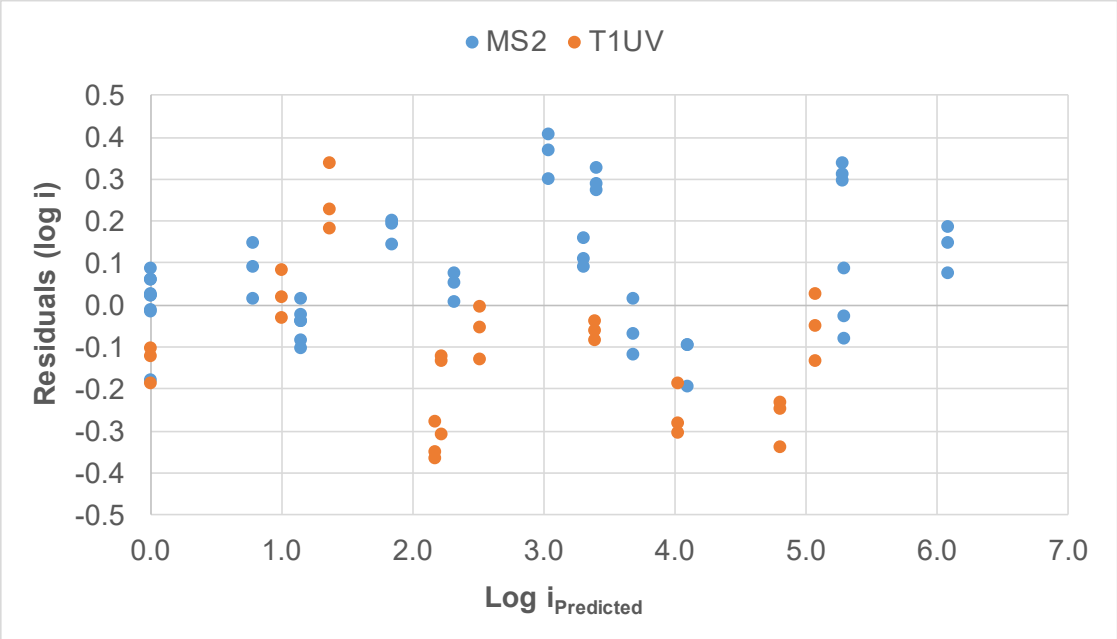

Figure 5.9b **Model Residuals vs. Predicted Log Removal for the WF-115-4**

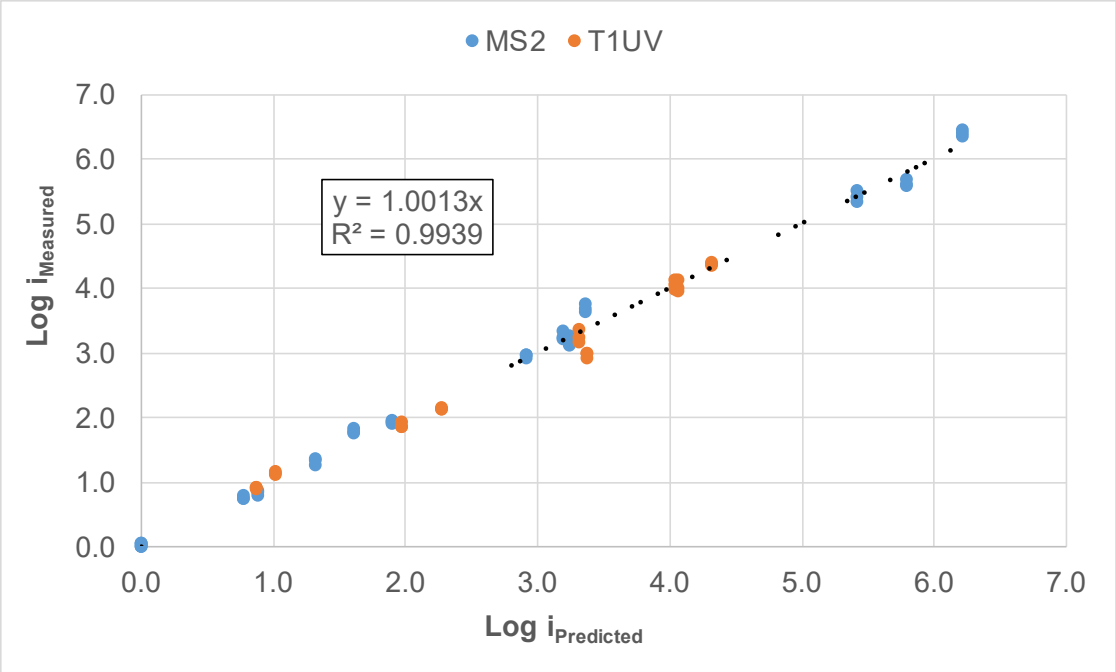

Figure 5.10a Measured vs. Predicted Log Removal for the WF-125-6

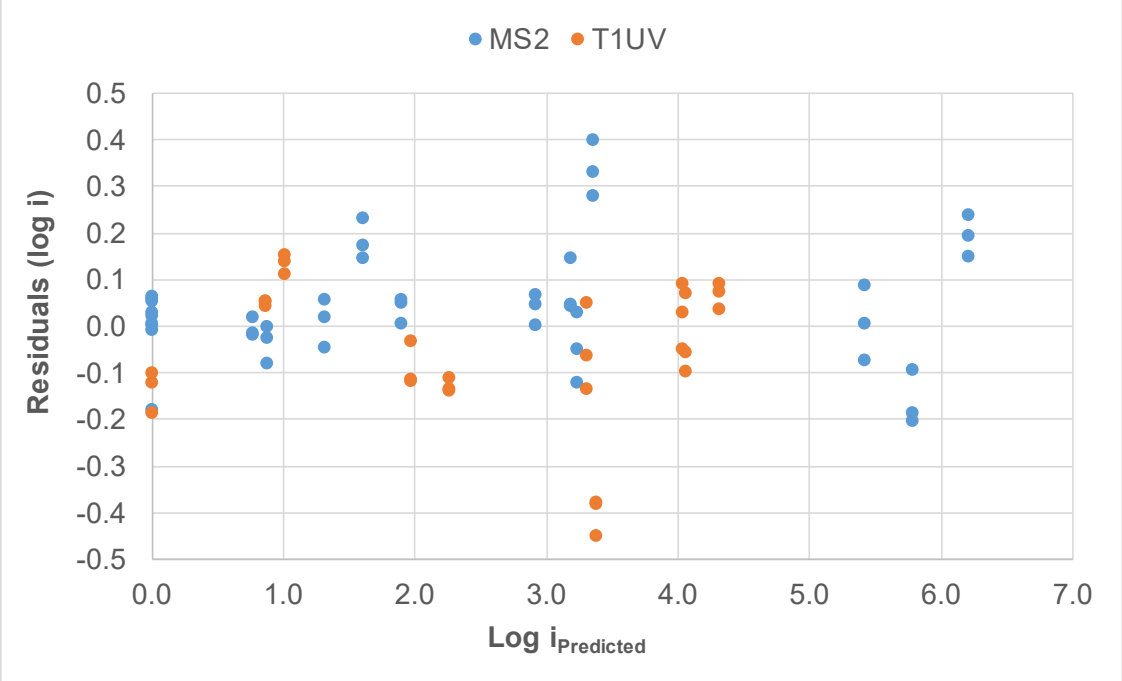

Figure 5.10b Model Residuals vs. Predicted Log Removal for the WF-125-6

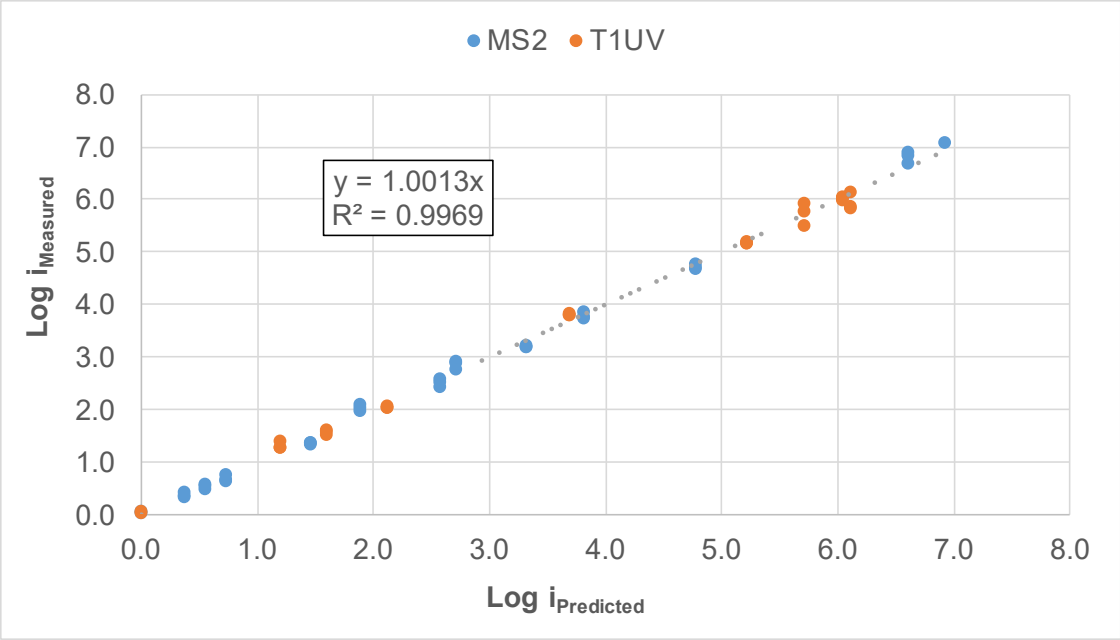

Figure 5.11a Measured vs. Predicted Log Removal for the WF-225-8

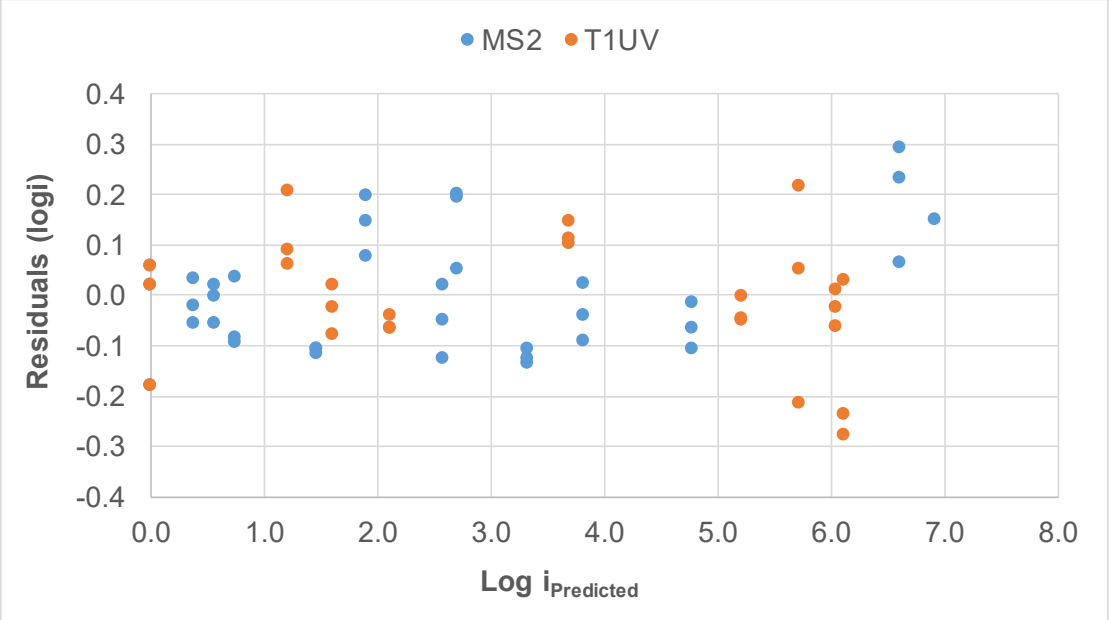

Figure 5.11b Model Residuals vs. Predicted Log Removal for the WF-225-8

5.4.3 Calculated Dose Approach without UVT monitoring

Theory and validation data with UV reactors show that log inactivation at a fixed UVT lies along a single relationship defined as a function of a combined variable, $S/Q/D_L$. If the UV sensor is optimally positioned, the relationships between the log inactivation and the combined variable at different UVTs tend to align on top of each other. If those relationships align on top of each other, a single relationship between log inactivation and the combined variable can be defined for efficient UV dose monitoring that does not require an online UVT monitor as:

$$\log i = f\left(\frac{S}{Q \times D_L}\right) \qquad \textbf{Equation 5.15}$$

where *f* is a mathematical function that describes the relation between the log inactivation and the combined variable ($S/Q/D_L$).

The WF-115-4, WF-125-6, and WF-225-8 reactors do not have the ability to adjust their water layer, so the optimal water layer could not be determined. Figure 5.12a through 5.12c show the relationships between the measured log inactivation and $S/Q/D_L$ for the WF-115-4, WF-125-6, and WF-225-8, respectively.

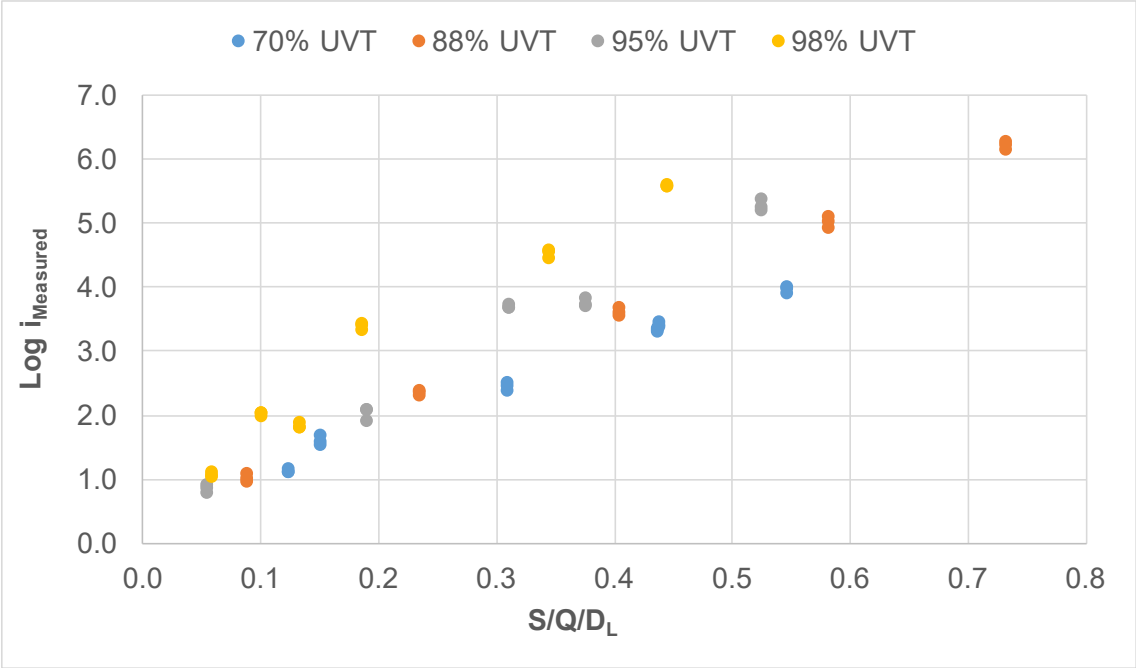

Figure 5.12a Measured Log Inactivation as a function of $S/Q/D_L$ for the WF-115-4

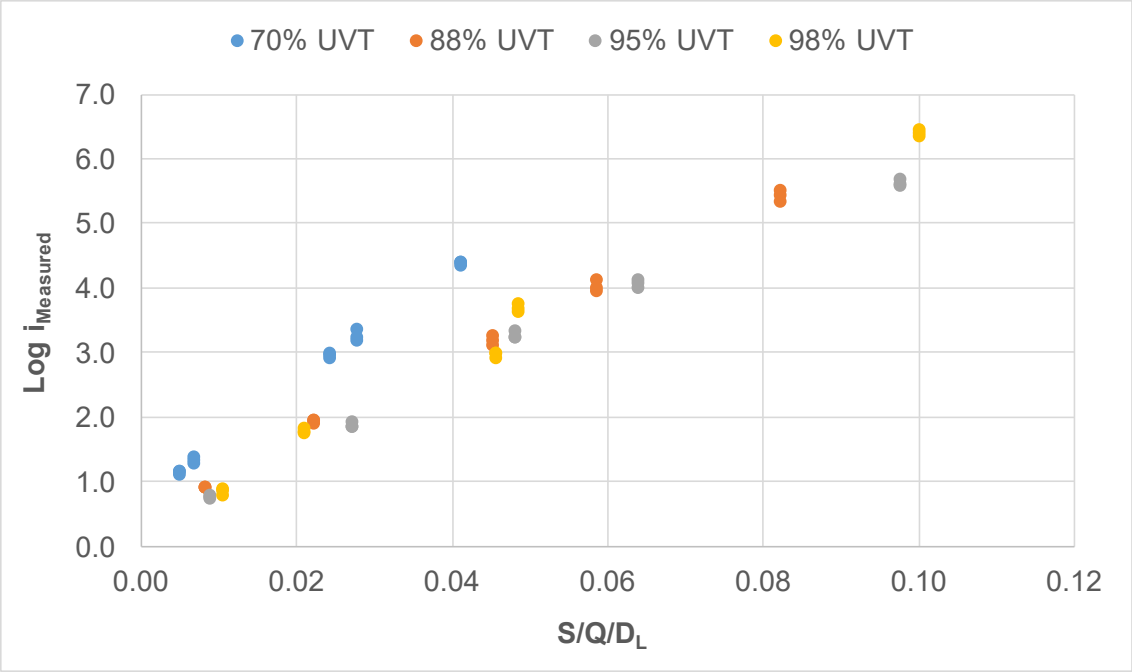

Figure 5.12b Measured Log Inactivation as a function of S/Q/D_L for the WF-125-6

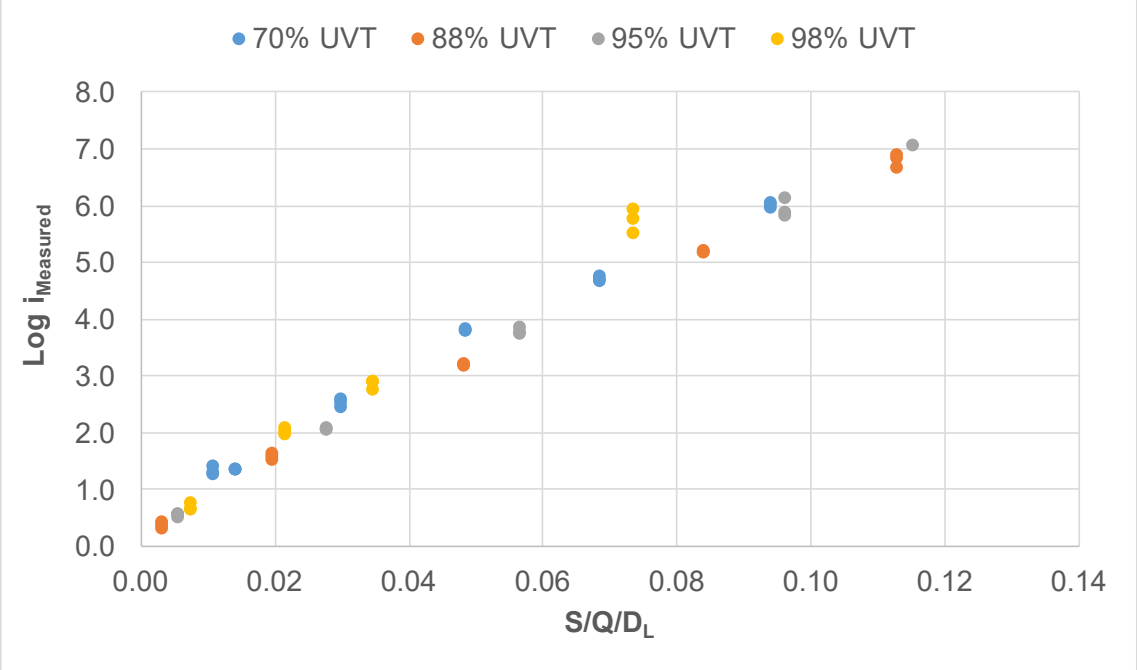

Figure 5.12c Measured Log Inactivation as a function of S/Q/D_L for the WF-225-8

Figures 5.13a through 5.13c show the UVT data that provides the minimum log i at a particular S/Q/D_L operating condition where the log inactivation is predicted using Equation 5.6. For each reactor, the relationship was best fit with a power function:

$$\log i = A' \times \left(\frac{S}{Q \times D_L}\right)^{B'}$$ **Equation 5.16**

where S is the measured UV sensor value (W/m^2), Q is the flow rate (m^3/hr), D_L is the UV sensitivity of the microbe, and the coefficients A' and B' are provided in Table 5.8.

Table 5.8 Coefficients for Equation 5.16				
Reactor	**A'**	**B'**	**Maximum log i**	**Max Log I + Uin**
WF-115-4	6.8279	0.85699	6.08	6.44
WF-125-6	39.482	0.83263	6.21	6.50
WF-225-8	40.400	0.82730	6.91	7.15

Figures 5.13a through 5.13c compare the minimum log i as a function of S/Q/D_L predicted by Equation 5.16 to the measured log inactivation data for the WF-115-4, WF125-6, and WF-225-8, respectively.

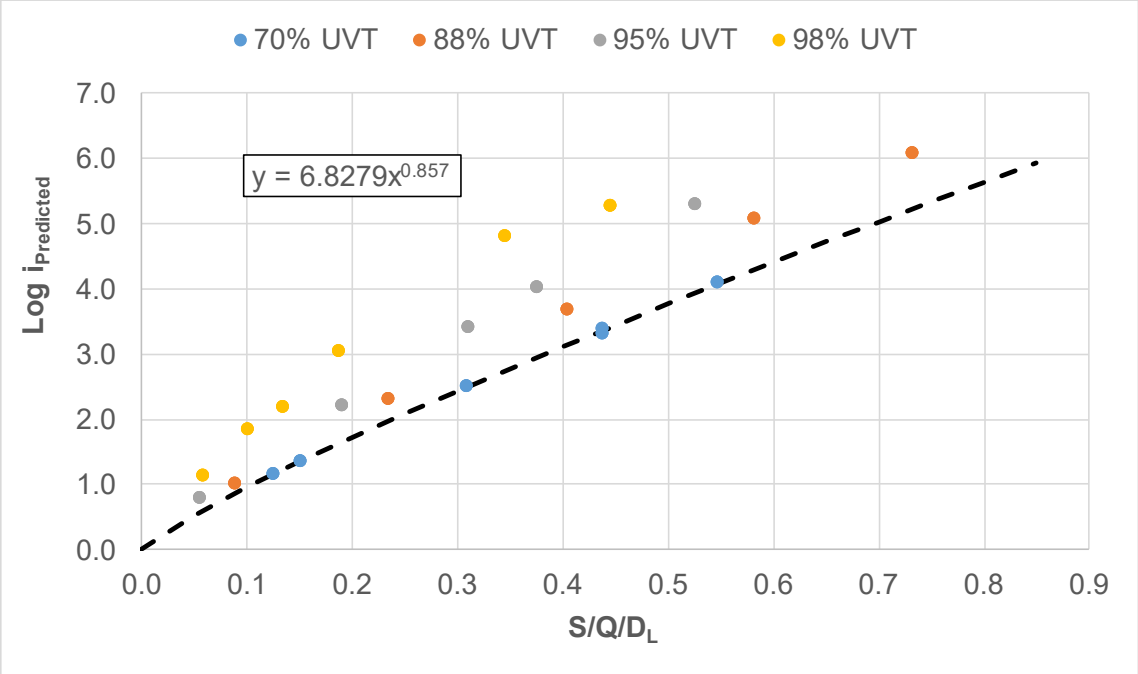

Figure 5.13a Measured Log Inactivation as a function of S/Q/D_L for the WF-115-4

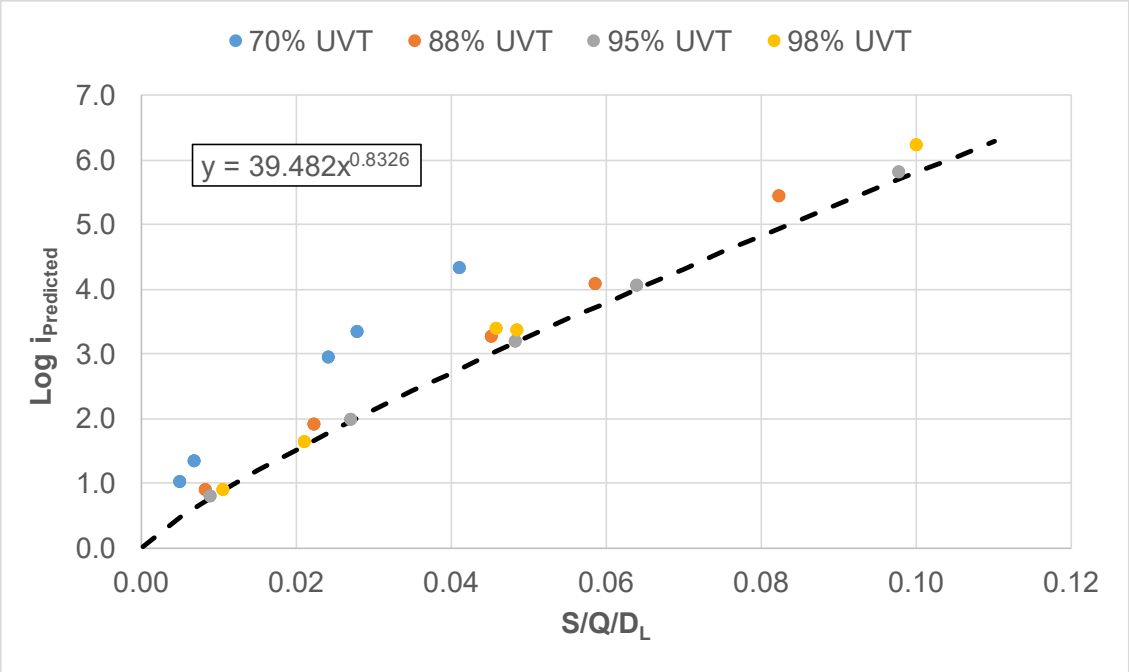

Figure 5.13b Measured Log Inactivation as a function of $S/Q/D_L$ for the WF-125-6

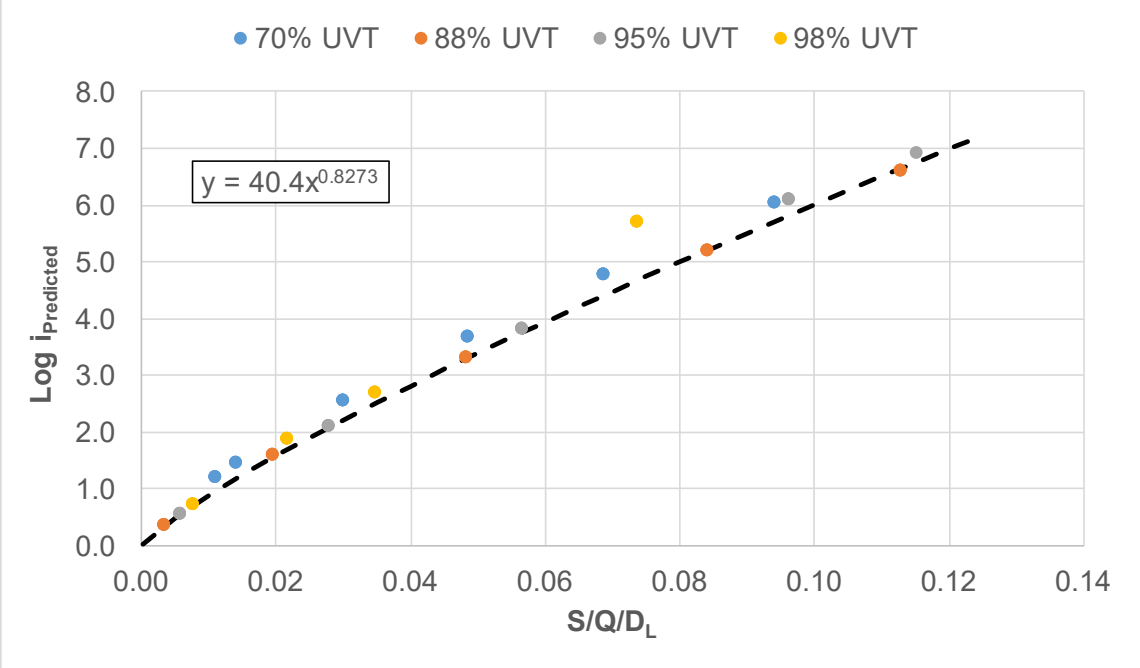

Figure 5.13c Measured Log Inactivation as a function of $S/Q/D_L$ for the WF-225-8

5.4.4 Prediction of RED

The RED delivered by the UV reactor can be predicted using:

$$RED = \log i \times D_L$$ **Equation 5.17**

If Equation 5.6 is used to predict log inactivation, the RED is expressed as:

$$RED = \log i \times D_L = 10^{A + B \times UVA} \times UVA^{C + D \times UVA} \times \left(\frac{S/S_0}{Q \times D_L}\right)^{E + F \times UVA + G \times UVA^2} \times D_L$$ **Equation 5.18**

If Equation 5.16 is used to predict log inactivation, the RED is expressed as:

$$RED = logi \times D_L = \left[A' \times \left(\frac{S}{Q \times D_L}\right)^{B'}\right] \times D_L$$ **Equation 5.19**

Figures 5.14a through 5.14c compare the measured versus predicted RED where log inactivation was predicted using Equation 5.6 for the WF-115-4, WF-125-6, and WF-225-8, respectively.

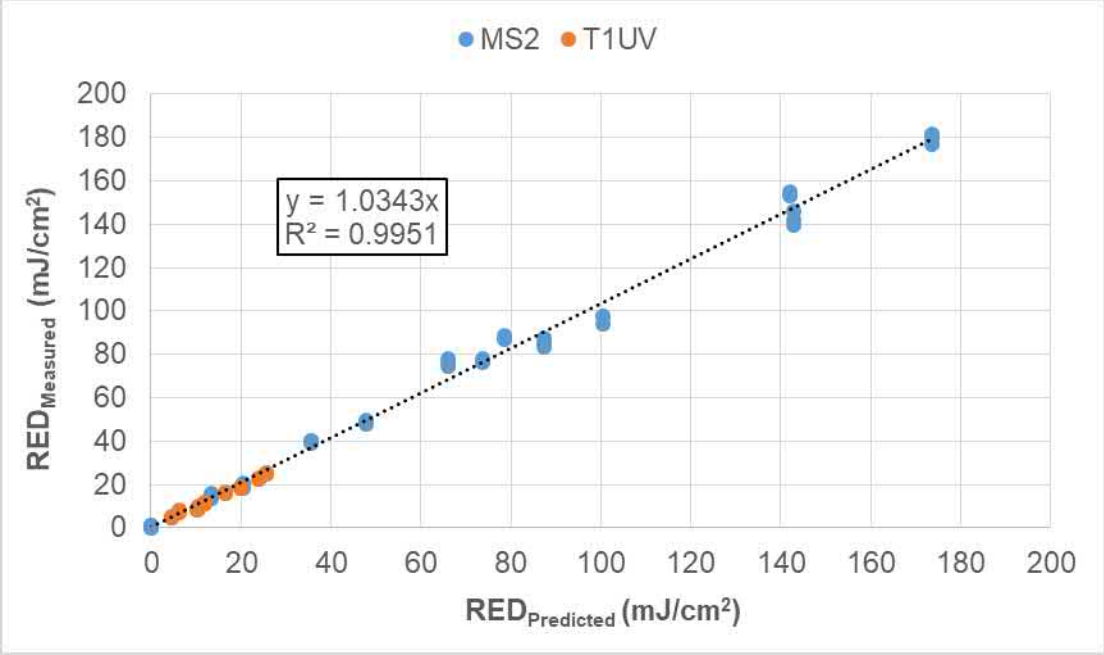

Figure 5.14a Measured Versus Predicted RED for the WF-115-4

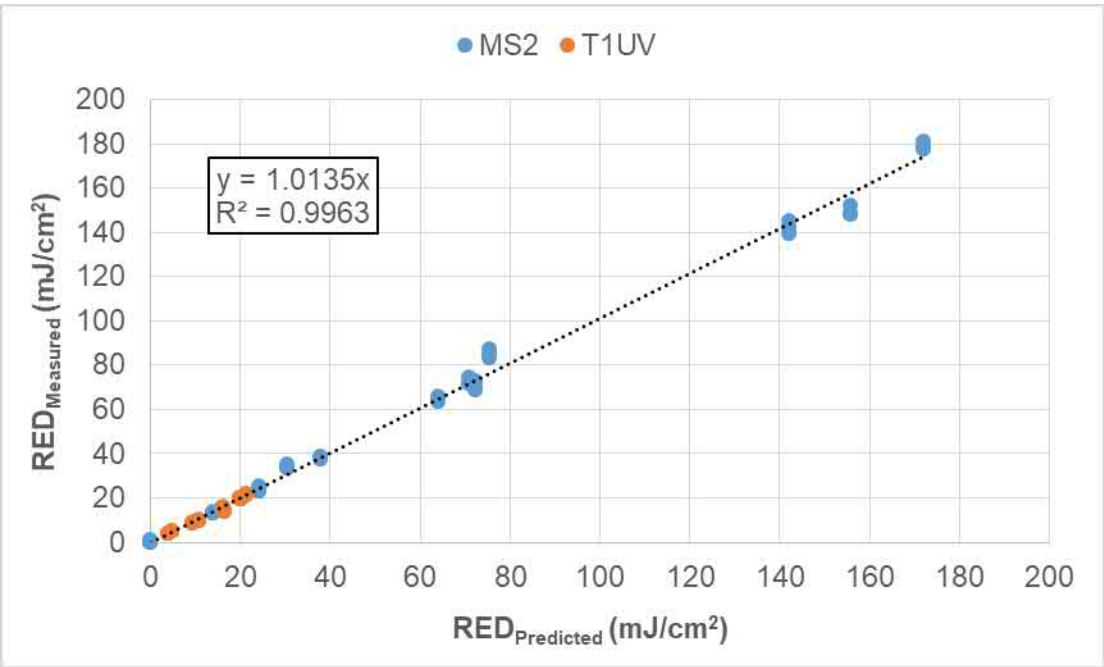

Figure 5.14b Measured Versus Predicted RED for the WF-125-6

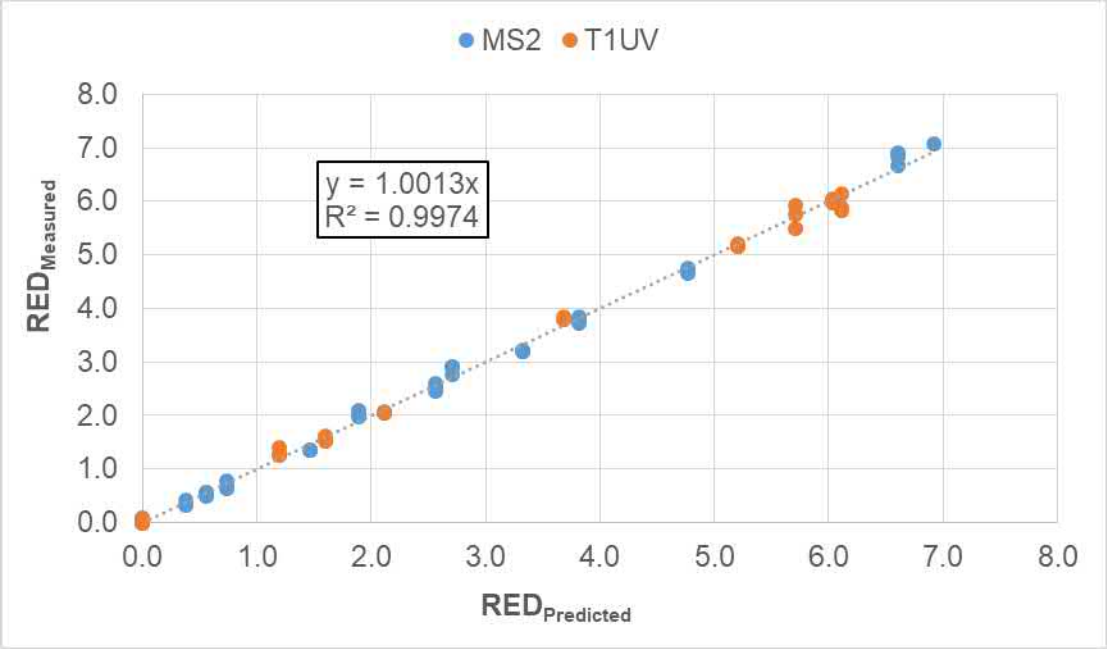

Figure 5.14c Measured Versus Predicted RED for the WF-225-8

5.4.5 Validated Range

Figures 5.15 through 5.17 show the validated range of the WF-115-4, WF-125-6, and WF-225-8 reactors using plots of UVT versus flow measured during validation and predicted log inactivation as a function of UVT. Tables 5.9 through 5.11 provide the coordinates for the bounds of the validated ranges of the WF-115-4, WF-125-6, and WF-225-8 reactors, respectively.

The validated range is used to define off-spec performance and default values for dose monitoring. If Equation 5.6 is used for dose monitoring and the measured flow rate is less than the validated range, the lower limit of the flow rate should be used as an input to Equation 5.6. If the measured UVT is above the upper limit of the validated range, then the upper limit of the UVT should be used as an input to Equation 5.6. If the calculated log inactivation is greater than the upper bound of the log inactivation range, the upper limit should be reported as the delivered log inactivation. The UV system operation is off specification if the flow rate is greater than the maximum validated flow rate or the UVT is less than the lower limit of the validated UVT.

If Equation 5.16 is used for dose monitoring and the measured flow rate is less than the validated range, the lower limit of the flow rate should be used as an input to Equation 5.16. However, since the minimum or the intermediate UVT was used to define Equation 5.16, the equation provides valid predictions of log inactivation at all UVTs lower and higher than that value. If the calculated log inactivation is greater than the upper bound of the log inactivation range given in Table 5.8, the upper limit should be reported as the delivered log inactivation. The UV system operation is off specification if the flow rate is greater than the maximum validated flow rate.

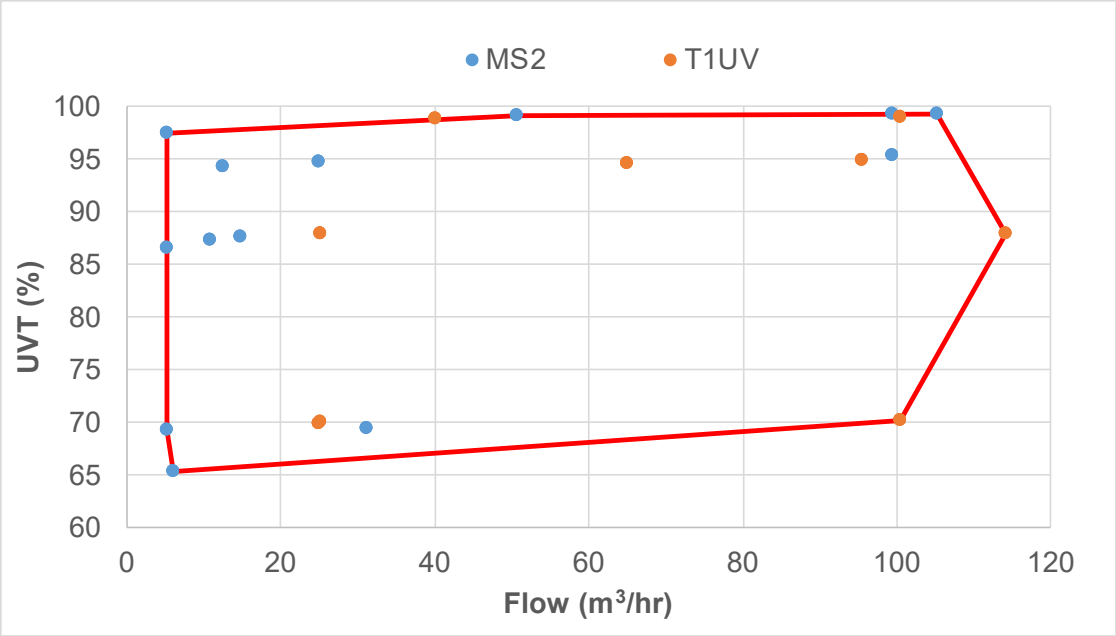

Figure 5.15a Validated Range of UVT versus Flow for the WF-115-4

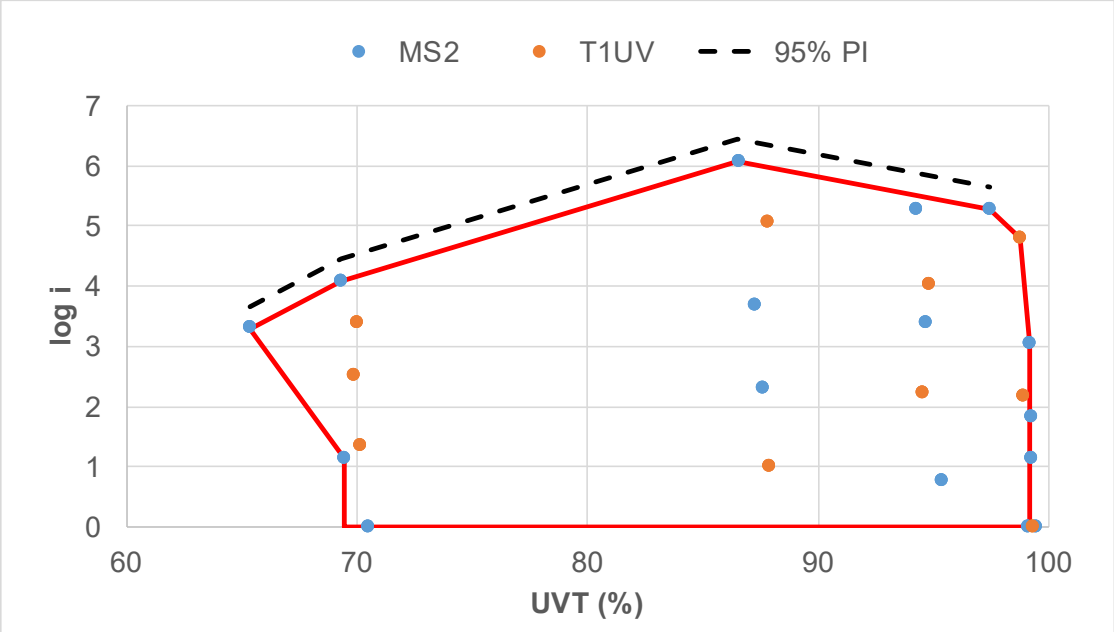

Figure 5.15b Validated Range of Predicted Log Removal versus UVT for the WF-115-4

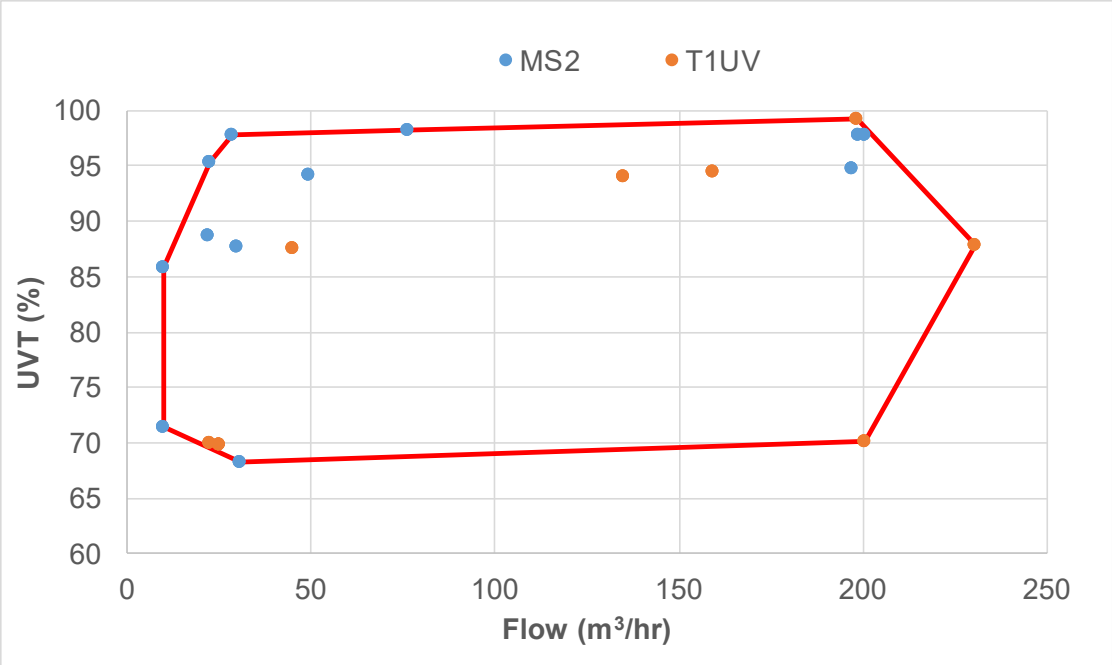

Figure 5.16a Validated Range of UVT versus Flow for the WF-125-6

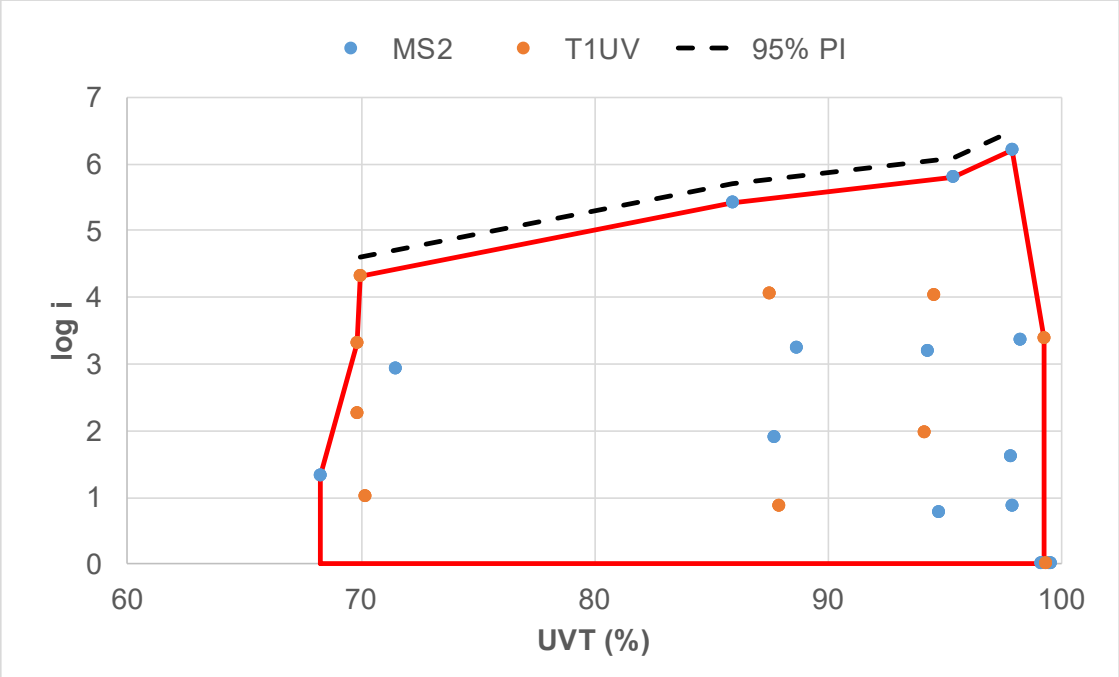

Figure 5.16b Validated Range of Predicted Log Removal versus UVT for the WF-125-6

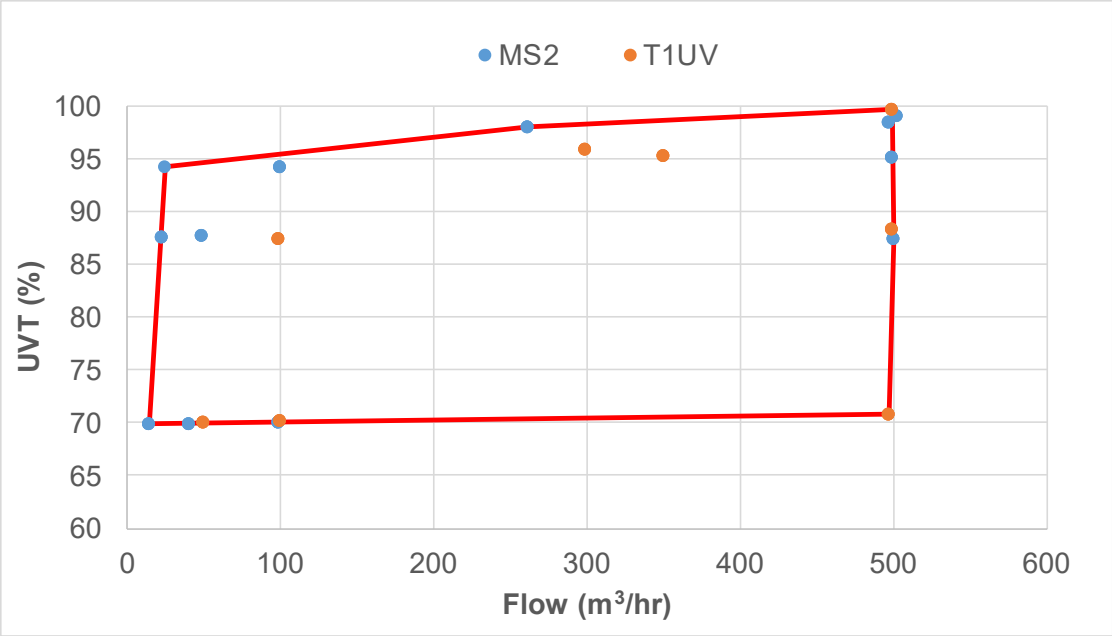

Figure 5.17a **Validated Range of UVT versus Flow for the WF-225-8**

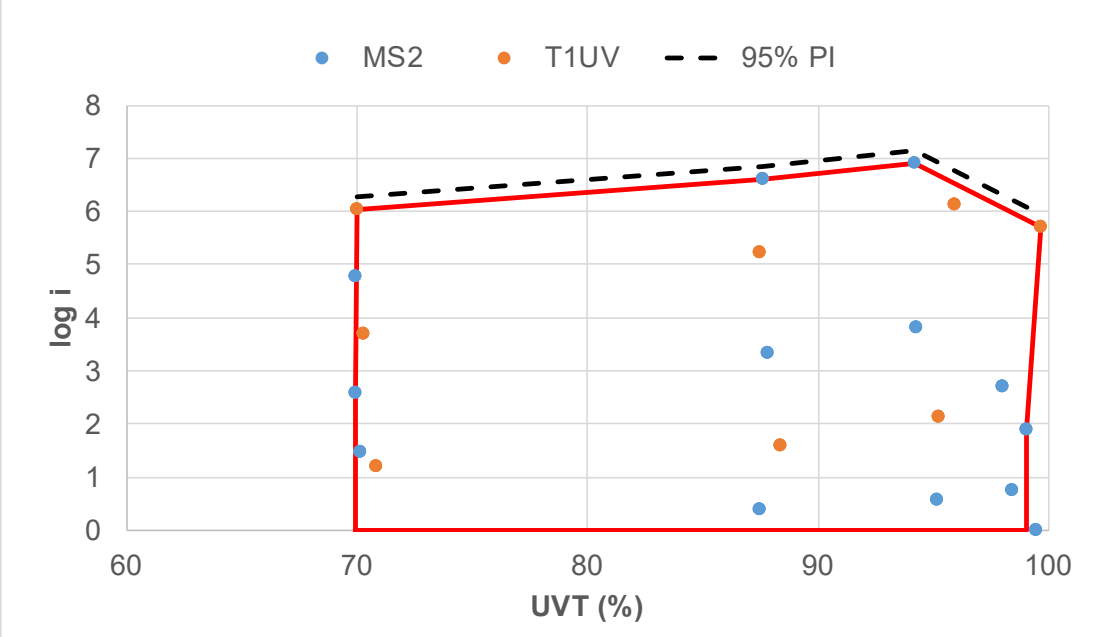

Figure 5.17b **Validated Range of Predicted Log Removal versus UVT for the WF-225-8**

Table 5.9 Validation Envelope Bounds for Figure 5.15				
Figure 5.15a		Figure 5.15b		
Q (m^3/hr)	UVT (%)	UVT (%)	log i	log I plus U_{in}
5.94	65.36	69.46	0.00	-
5.14	69.30	69.46	1.15	-
5.23	97.42	65.36	3.30	3.66
50.63	99.15	69.30	4.09	4.45
105.2	99.25	86.52	6.08	6.44
114.14	87.90	97.42	5.27	5.63
100.39	70.13	98.73	4.81	-
-	-	99.15	3.04	-
-	-	99.15	0.00	-

Table 5.10 Validation Envelope Bounds for Figure 5.16				
Figure 5.16a		Figure 5.16b		
Q (m^3/hr)	UVT (%)	UVT (%)	log i	log I plus U_{in}
9.86	71.45	68.23	0	-
10.14	85.91	68.23	1.32	-
22.56	95.35	69.80	3.31	-
28.46	97.84	69.98	4.31	4.60
76.39	98.18	85.91	5.42	5.71
198.47	99.23	95.35	5.79	6.08
230.28	87.89	97.84	6.21	6.50
200.57	70.17	99.23	3.38	-
30.67	68.23	99.23	0.00	-

Table 5.11 Validation Envelope Bounds for Figure 5.17				
Figure 5.17a		Figure 5.17b		
Q (m^3/hr)	UVT (%)	UVT (%)	log i	log I plus U_{in}
14.61	69.91	69.91	0.00	-
24.54	94.18	69.91	2.57	-
261.3	97.99	70.01	6.04	6.28
498.94	99.64	87.63	6.60	6.84
500.25	87.49	94.18	6.91	7.15
496.84	70.84	99.64	5.71	5.95
-	-	99.06	1.89	-
-	-	99.06	0.00	-

Figures 5.18 through 5.20 show the measured log inactivation as a function of the value $S/S_0/Q/D_L$ at various UVTs for the WF-115-4, WF-125-6, and WF-225-8 reactors, respectively. As the figures show, the relationships at each UVT can be fit using a power function that passes through the origin. The validation data set includes control samples measured with the lamps turned off (i.e. $S/S_0 = 0$) that show no log reduction. The validation analysis also shows that log inactivation is predicted as a function of a combined variable $S/S_0/Q/D_L$ with a single relationship that passes through the origin. The analysis shows that log inactivation can be interpolated along this curve, including values of S/S_0 down to zero.

Figures 5.18 through 5.20 and the theoretical and experimental development of the UV dose monitoring algorithm presented in Appendix H show that log inactivation at a given UVT is a function of a master variable $(S/S_0)/Q/D_L$. The analysis shows that, regardless of the combinations of S/S_0, Q, and D_L used, the equations will predict valid log inactivation for values of $(S/S_0)/Q/D_L$ from zero up to the maximum value of the validated range of $(S/S_0)/Q/D_L$. For that reason, Equations 5.6 and 5.16 can be used to directly predict the log inactivation of Cryptosporidium, Giardia and adenovirus by setting the value of D_L to that expected with those microbes. This approach is discussed in the next section.

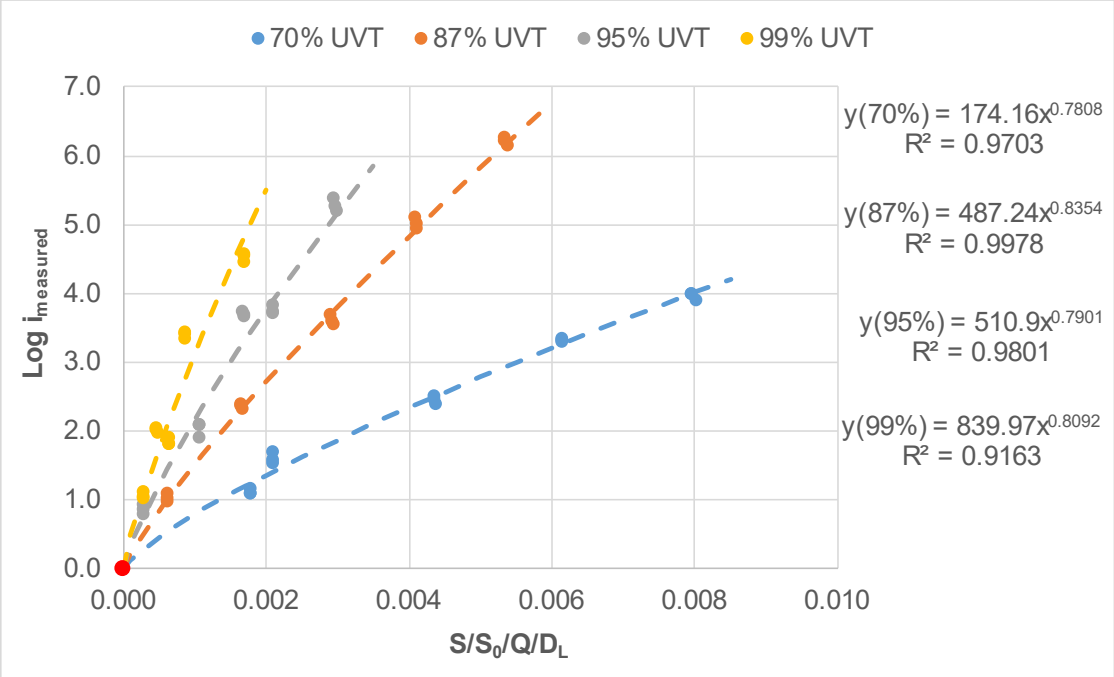

Figure 5.18 Measured log inactivation as a function of $S/S_0/Q/D_L$ for the WF-115-4

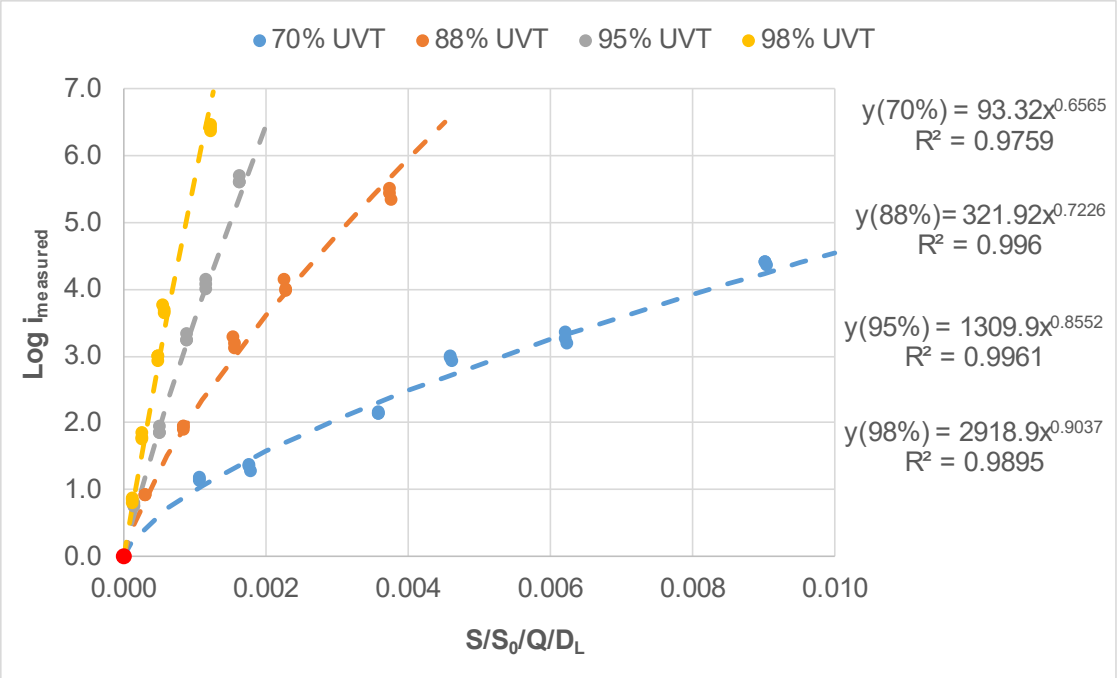

Figure 5.19 **Measured log inactivation as a function of $S/S_0/Q/D_L$ for the WF-125-6**

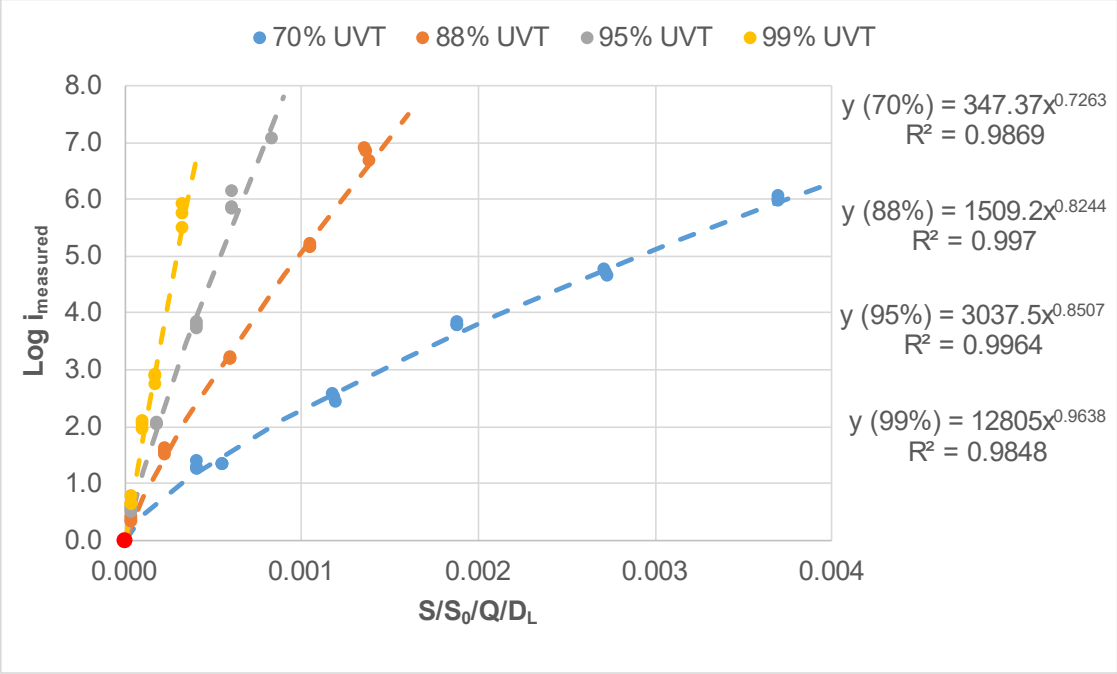

Figure 5.20 **Measured log inactivation as a function of $S/S_0/Q/D_L$ for the WF-225-8**

5.5 UV DOSE MONITORING

Equations 5.6 and 5.18 or Equations 5.16 and 5.19 may be used to predict the log inactivation and RED of the test microbes MS2 and T1UV phage by setting the value of D_L to the value expected with those microbes. Alternatively, these equations may be used to predict the log inactivation and RED of the target pathogen (e.g. *Cryptosporidium*) by setting the value of D_L to the value expected with that pathogen. This section of the report describes these approaches.

The UV sensitivity of MS2 and T1UV used can be determined using:

$$D_L = \frac{Dose}{\log i} = A + B \times \log i \qquad \textbf{Equation 5.20}$$

where A and B are coefficients describing the average dose-response of these microbes. The individual collimated beam dose-response coefficients are provided in Tables 5.3 to 5.4 while the average coefficients are summarized in Table 5.12.

Table 5.12 Coefficients for Calculating the UV sensitivity of MS2 and T1UV phage

Microbe	Coefficient A	Coefficient B	log *i* Upper Limit
MS2	16.112	2.0267	7.65 log
T1UV	4.5809	0.077114	6.20 log

The UV sensitivity of *Cryptosporidium*, *Giardia*, and adenovirus can be calculated using:

$$D_L = D \big/ \log i \qquad \textbf{Equation 5.21}$$

where D is the UV dose requirement specified by the LT2ESWTR for a log inactivation credit of log *i*. The UV sensitivity, calculated using Equations 5.21, can be interpolated as a function of UV dose using:

$$D_L = m \times D + b \qquad \textbf{Equation 5.22}$$

where m and b are coefficients tabulated in Table 5.13.

Figure 5.21 shows D_L as a function of UV dose for *Cryptosporidium*, *Giardia*, and adenovirus predicted using Equation 5.22 and the coefficients in Table 5.13. For *Cryptosporidium* and *Giardia*, the relationship between D_L and dose for log inactivation from 2.0 to 6.0 log (i.e., doses from 5 to 85 mJ/cm^2) can be approximated by a linear function. The analysis indicates that D_L above 6.0 log inactivation can be approximated by extrapolating Equation 5.22 using the coefficients in Table 5.13 for 5.5 to 6.0 log.

Table 5.13 Coefficients for Linear Interpolation of UV Sensitivity									
Log I	**UV Dose (mJ/cm^2)**	***Crypto***		**UV Dose (mJ/cm^2)**	***Giardia***		**UV Dose (mJ/cm^2)**	**Adenovirus**	
		m	**b**		**m**	**b**		**m**	**b**
0 - 0.5	0.0 to 1.6	0.0000	3.200	0.0 to 1.5	0.0000	3.000	0.0 to 39	0.000	78.00
0.5 - 1.0	1.6 to 2.5	-0.7777	4.444	1.5 to 2.1	-1.500	5.250	39 to 58	-1.052	119.0
1.0 - 1.5	2.5 to 3.9	0.07143	2.321	2.1 to 3.0	-0.1111	2.333	58 to 79	-0.2539	72.73
1.5 - 2.0	3.9 to 5.8	0.1578	1.984	3.0 to 5.2	0.2727	1.181	79 to 100	-0.1269	62.69
2.0 - 2.5	5.8 to 8.5	0.1851	1.825	5.2 to 7.7	0.1920	1.601	100 to 121	-0.07619	57.61
2.5 - 3.0	8.5 to 12	0.1714	1.942	7.7 to 11	0.1777	1.711	121 to 143	-0.03333	52.43
3.0 - 3.5	12 to 15	0.09524	2.857	12 to 15	0.1547	1.964	143 to 163	-0.05476	55.49
3.5 - 4.0	15 to 22	0.1734	1.683	15 to 22	0.1734	1.683	163 to 186	-0.003106	47.07
4.0 - 4.5	22 to 30	0.1458	2.292	22 to 28	0.1204	2.852	186 to 208	-0.01263	48.85
4.5 - 5.0	30 to 45	0.1556	2.000	28 to 42	0.1556	1.867	208 to 231	-0.00097	46.42
5.0 - 5.5	45 to 64	0.1388	2.756	42 to 60	0.1394	2.545	231 to 253	-0.00909	48.30
5.5 - 6.0	64 to 85	0.1205	3.925	60 to 84	0.1288	3.182	253 to 276	0.00000	46.00

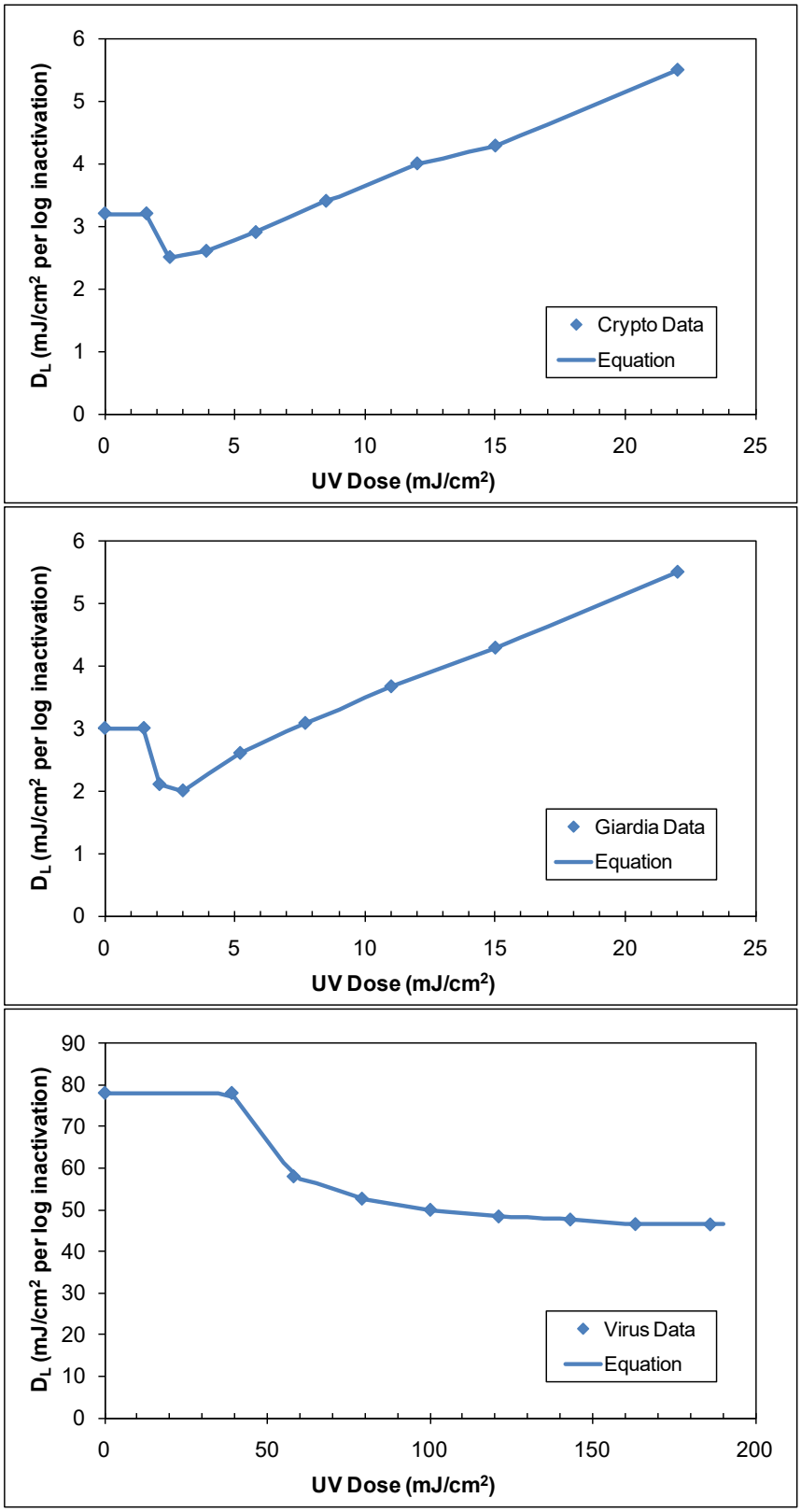

Figure 5.21 **D_L as a function of UV dose for *Cryptosporidium*, *Giardia*, and adenovirus**

5.5.1 Log Inactivation Calculation Example 1

This section of the report provides an example of log inactivation and RED calculation for MS2 phage, T1UV phage, *Cryptosporidium*, *Giardia,* and adenovirus at a fixed operating condition. In this example, the WF-115-4 reactor is operating at a flow of 50 m^3/hr, a UVT of 90 percent and a relative lamp output S/S_0 of 0.87. Log inactivation of the microbes is determined using Equation 5.6 and the coefficients presented in Table 5.5. Since the log inactivation predicted by Equation 5.6 depends on D_L, the equation is solved using an iterative approach using the following steps:

1. Define an initial value for log i_N = 2.0.
2. Determine the initial value for D_L using Equation 5.20 if the microbe of interest is MS2 or T1UV phage and Equation 5.22 if the microbe of interest is *Cryptosporidium*, *Giardia*, or adenovirus.
3. Using Equation 5.6, calculate the next value of log *i*.
4. Determine the RED using:

$$RED = D_L \times \log i \qquad \textbf{Equation 5.23}$$

5. If the microbe of interest is MS2 or T1UV, calculate the new value of D_L using Equation 5.20 and the log I value from Step 3. If the microbe of interest is *Cryptosporidium*, *Giardia*, or adenovirus, calculate the new value of D_L using Equation 5.22 and the UV dose value determine in Step 4.
6. Repeat steps 3 to 5 until the absolute difference between consecutive predicted values of log *i* is less than 0.0001.

Table 5.14 provides the values of log *i* and D_L for *Cryptosporidium* log inactivation obtained using these steps. After seven iterations, Equation 5.6 predicts a *Cryptosporidium* log inactivation of 4.198. Table 5.15 presents the log inactivation, REDs and D_L for the regulated pathogens *Cryptosporidium*, *Giardia*, and adenovirus and the test microbes MS2 and T1UV phages.

Table 5.14 Example 1 Calculations for *Cryptosporidium*			
	Log i	**RED_{crypto} (mJ/cm²)**	**D_L (mJ/cm² per log)**
Starting Value	2	22	5.4996
Iteration # 1	4.4664	24.563	5.8733
Iteration # 2	4.2204	24.788	5.9061
Iteration # 3	4.2003	24.807	5.9089
Iteration # 4	4.1986	24.809	5.9091
Iteration # 5	4.1984	24.809	5.9091
Iteration # 6	4.1984	24.809	5.9091
Iteration # 7	4.1984	24.809	5.9091

Table 5.15 Example 1: Predicted Log Inactivation, RED and D_L of Target Microbes at 50 m³/hr, 90% UVT and S/S_0 = 0.87 for the WF-115-4					
	Crypto	*Giardia*	Adeno	MS2	T1UV
log inactivation	4.198	4.245	0.4547	1.521	4.884
RED (mJ/cm²)	24.81	24.77	35.46	29.21	24.21
D_L (mJ/cm² per logi)	5.909	5.834	78.00	19.20	4.958

5.5.2 Log Inactivation Calculation Example 2

Using the same conditions as Example 1, the WF-115-4 reactor is operating at a flow of 50 m³/hr, a UVT of 90 percent and a relative lamp output S/S_0 of 0.87. Log inactivation of the microbes is determined using Equation 5.16 and the coefficients presented in Table 5.8. Since the log inactivation predicted by Equation 5.16 depends on D_L, the equation is solved using an iterative approach using the following steps:

1. Calculate the sensor value at full power (Lamp ampere setting of 11 for the WF-115-4 and lamp ampere setting of 10 for the WF-125-6 and WF-225-8)
2. Multiply the sensor value by the relative lamp output.
3. Define an initial value for log i_N = 2.0.
4. Determine the initial value for D_L using Equation 5.20 if the microbe of interest is MS2 or T1UV phage and Equation 5.22 if the microbe of interest is *Cryptosporidium*, Giardia, or adenovirus.
5. Using Equation 5.16, calculate the next value of log *i*.

6. Determine the RED Equation 5.23.
7. If the microbe of interest is MS2 or T1UV, calculate the new value of D_L using Equation 5.20 and the log i value from Step 3. If the microbe of interest is *Cryptosporidium*, Giardia, or adenovirus, calculate the new value of D_L using Equation 5.22 and the UV dose value determine in Step 4.
8. Repeat steps 3 to 5 until the absolute difference between consecutive predicted values of log *i* is less than 0.0001.

Table 5.16 provides the values of log i_N and D_L for *Cryptosporidium* log inactivation obtained using these steps. After seven iterations, Equation 5.16 predicts a *Cryptosporidium* log inactivation of 3.879. Table 5.17 presents the log inactivation, REDs and D_L for the regulated pathogens *Cryptosporidium*, *Giardia*, and adenovirus and the test microbes MS2 and T1UV phages.

Table 5.16 Example 2 Calculations for *Cryptosporidium*

	Log i	RED_{crypto} (mJ/cm^2)	D_L (mJ/cm^2 per log)
Starting Value	2	22	5.499
Iteration # 1	3.6600	20.129	5.1733
Iteration # 2	3.8570	19.953	5.1429
Iteration # 3	3.8765	19.937	5.1400
Iteration # 4	3.8784	19.935	5.1397
Iteration # 5	3.8786	19.935	5.1397
Iteration # 6	3.8786	19.935	5.1397
Iteration # 7	3.8786	19.935	5.1397

Table 5.17 Example 2: Predicted Log Inactivation, RED and D_L of Target Microbes at 50 m^3/hr, 90% UVT and S/S_0 = 0.87 for the WF-115-4

	Crypto	*Giardia*	Adeno	MS2	T1UV
log inactivation	3.879	3.879	0.3771	1.282	4.038
RED (mJ/cm^2)	19.93	19.93	29.41	23.98	19.79
D_L (mJ/cm^2 per logi)	5.140	5.140	78.00	18.71	4.893

5.6 VALIDATION EQUATION QA/QC

Section 2.1.6 of the USEPA document entitled "Innovative Approaches for Validation of Ultraviolet Disinfection Reactors for Drinking Water Systems" states that equations using the combined variable, $(S/S_0)/(Q \times D_L)$, can provide valid predictions of log inactivation whenever the combined variable is within the validated range, even if the lamp output and/or UV sensitivity of the microbe used to define the combined variable are outside of the tested range for each of those individual variables. The validation report should demonstrate this ability by providing an analysis that shows that:

1. The equation calibrated using MS2 phage predicts the same log inactivation as the equation calibrated using T1UV phage.
2. The equation calibrated using low values of S/S_0 predicts the same log inactivation as the equation calibrated using high values of S/S_0.

An underlying assumption with this proof is that each of the three UV reactors were validated using two microbes, namely MS2 and T1UV phage, and validated over a range of lamp ampere settings that results in a range of relative lamp outputs, S/S_0.

A QA/QC was performed on the validation equation showing that the validation equation calibrated by MS2 phage predicts T1UV log inactivation and vice versa. The QA/QC was completed using the following steps:

1. For each reactor, Equation 5.6 was calibrated using only MS2 data.
2. For each reactor, Equation 5.6 was calibrated using only T1UV data.
3. The log inactivation is calculated, using each equation, at UVT values ranging from 70 to 98 percent UVT in 1.0 percent increments and spans the validated range of the combined variable using 17 discrete values at each UVT.
4. Calculate the 95 percent prediction interval by adding/subtracting the U_{in} of the combined equation (provided in Table 6.2) to the predicted log i.

Figures 5.22a through 5.22c show the comparisons between the MS2 log inactivation and the T1UV log inactivation for the WF-115-4, WF-125-6, and WF-225-8 reactors, respectively. Greater than 95.3 percent of the data fell within the 95 percent prediction intervals for WF-115-4, WF-125-6, and WF-225-8 UV reactors.

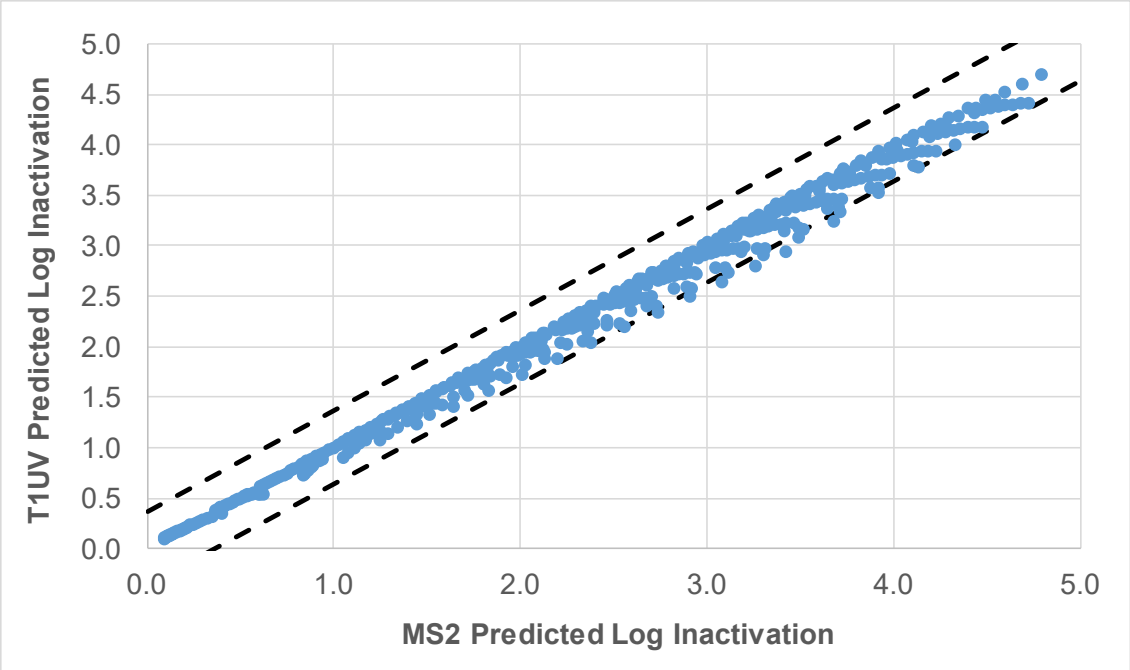

Figure 5.22a **Comparison of MS2 Predicted Log Inactivation and T1UV Predicted Log Inactivation for the WF-115-4**

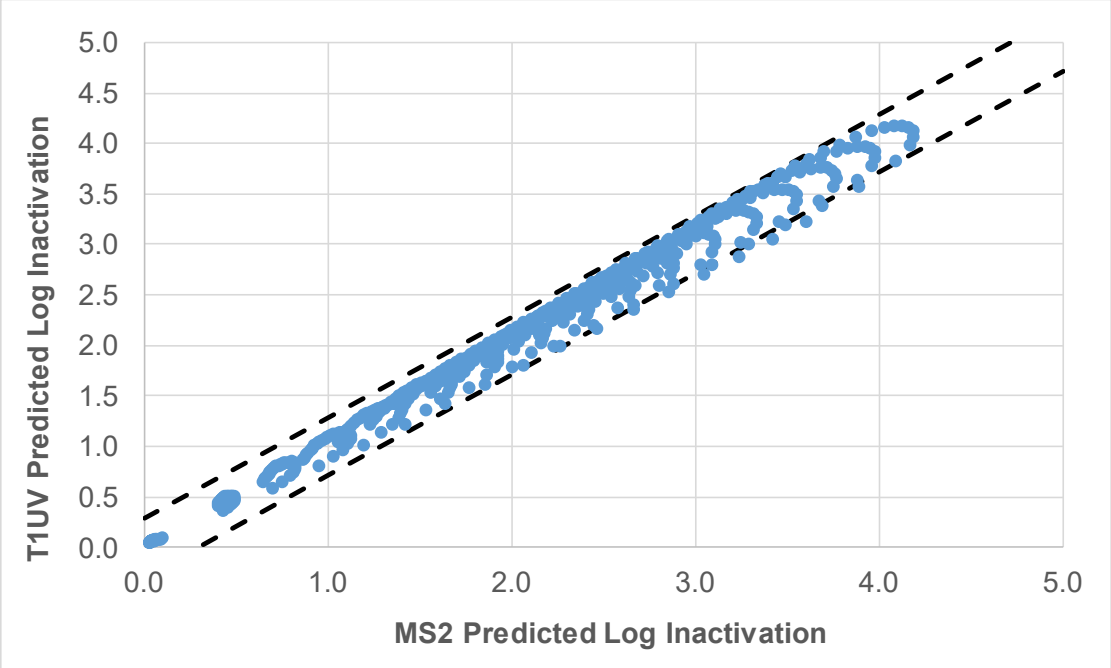

Figure 5.22b **Comparison of MS2 Predicted Log Inactivation and T1UV Predicted Log Inactivation for the WF-125-6**

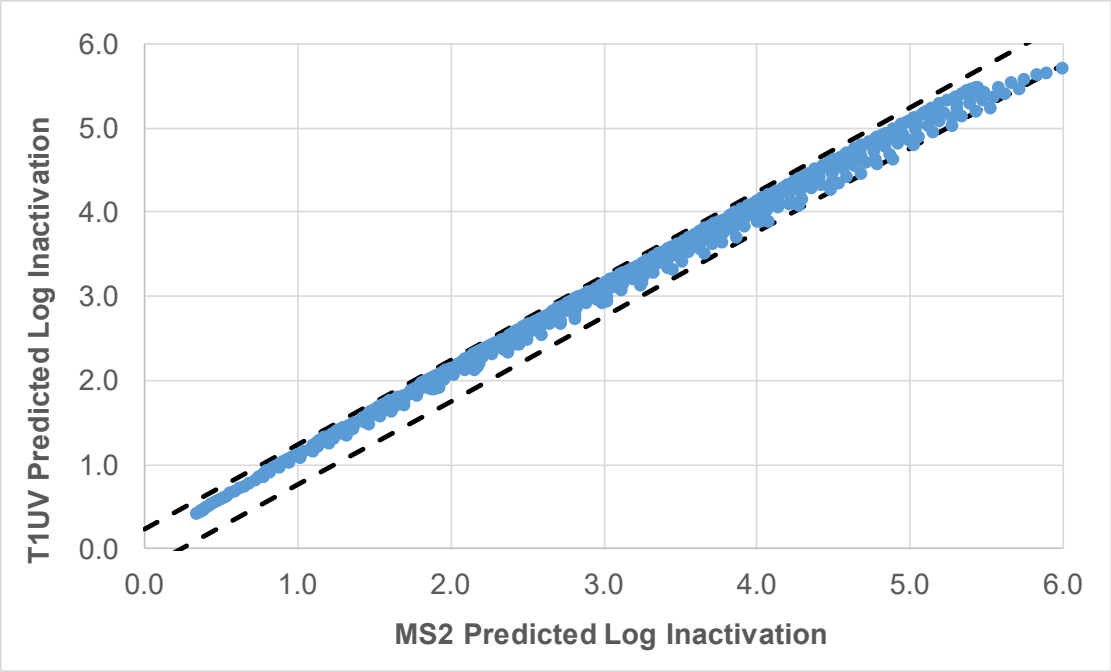

Figure 5.22c Comparison of MS2 Predicted Log Inactivation and T1UV Predicted Log Inactivation for the WF-225-8

The ability of the validation equation calibrated using data points with high values of S/S_0 to predict the log inactivation of data points with low values of S/S_0 and vice versa was evaluated using the following approach:

1. Equation 5.6 was calibrated using only data with S/S_0 values greater than 0.60 for the WF-115-4 UV reactor and greater than 0.80 for the WF-125-6 and WF-225-8 UV reactors.

2. Equation 5.6 was calibrated using only data with S/S_0 values less than 0.60 for the WF-115-4 UV reactor and greater than 0.80 for the WF-125-6 and WF-225-8 UV reactors..

3. The log inactivation was calculated using the two equations developed using Steps 1 and 2. The calculations were done over the validated range of UVTs and log inactivation common to both equations. The calculations were done from 70 to 98 percent UVT. The calculations were done in 1.0 percent UVT increments. The calculations were done at 17 discrete levels of the combined variable.

Figures 5.23a through 5.23c compare the log inactivation predicted by Equation 5.6 calibrated using data with high S/S_0 values to the log inactivation predicted by Equation 5.6 calibrated using data low S/S_0 values, for the WF-115-4, WF-125-6, and WF-225-8 reactors, respectively. The figures also includes the 95th percentile prediction interval for the predictions defined using the uncertainty of interpolation defined in Chapter 6. Greater than 95.5 percent of the data fell within the 95 percent prediction intervals for WF-115-4, WF-125-6, and WF-225-8 UV reactors.

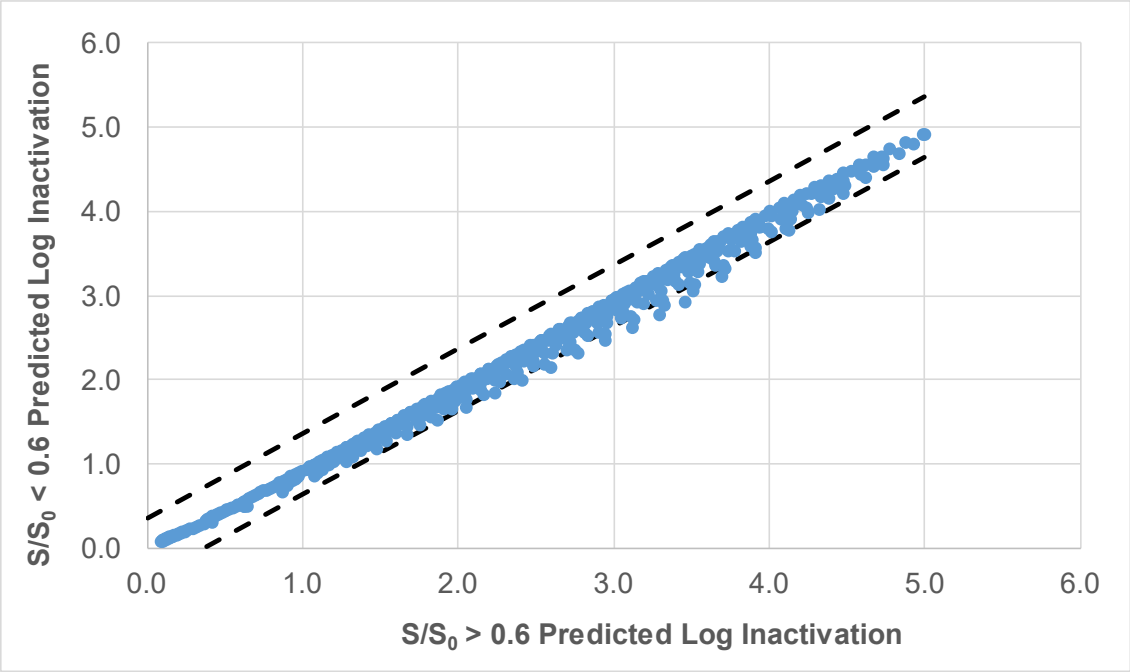

Figure 5.23a **Comparison of Equations Calibrated for High and Low S/S_0 values for the WF-115-4**

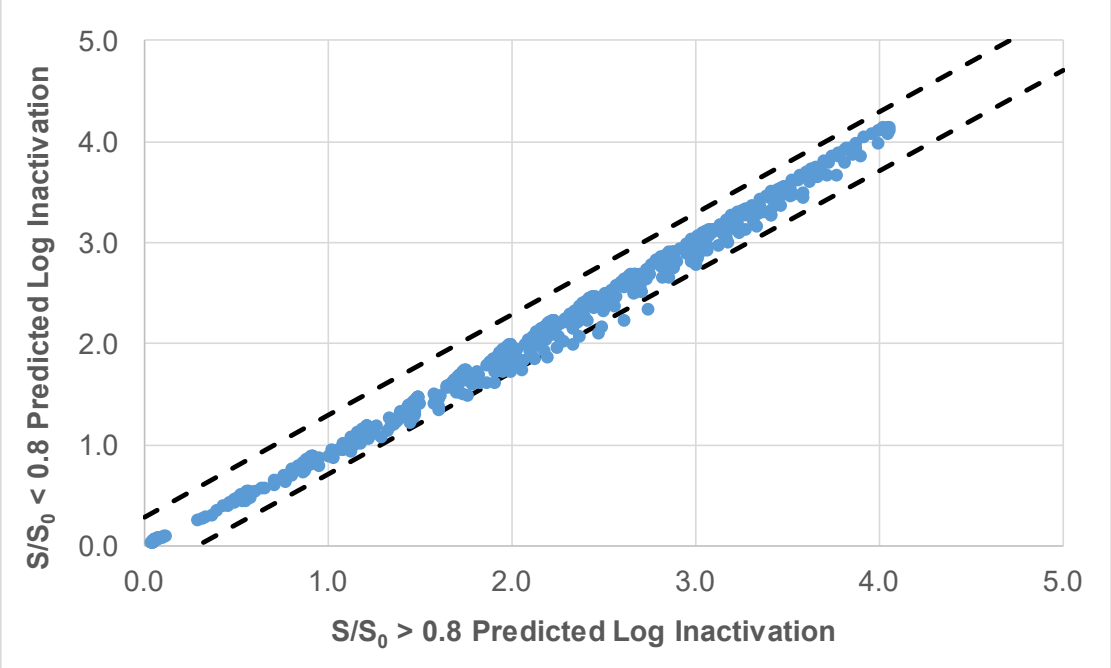

Figure 5.23b **Comparison of Equations Calibrated for High and Low S/S_0 values for the WF-125-6**

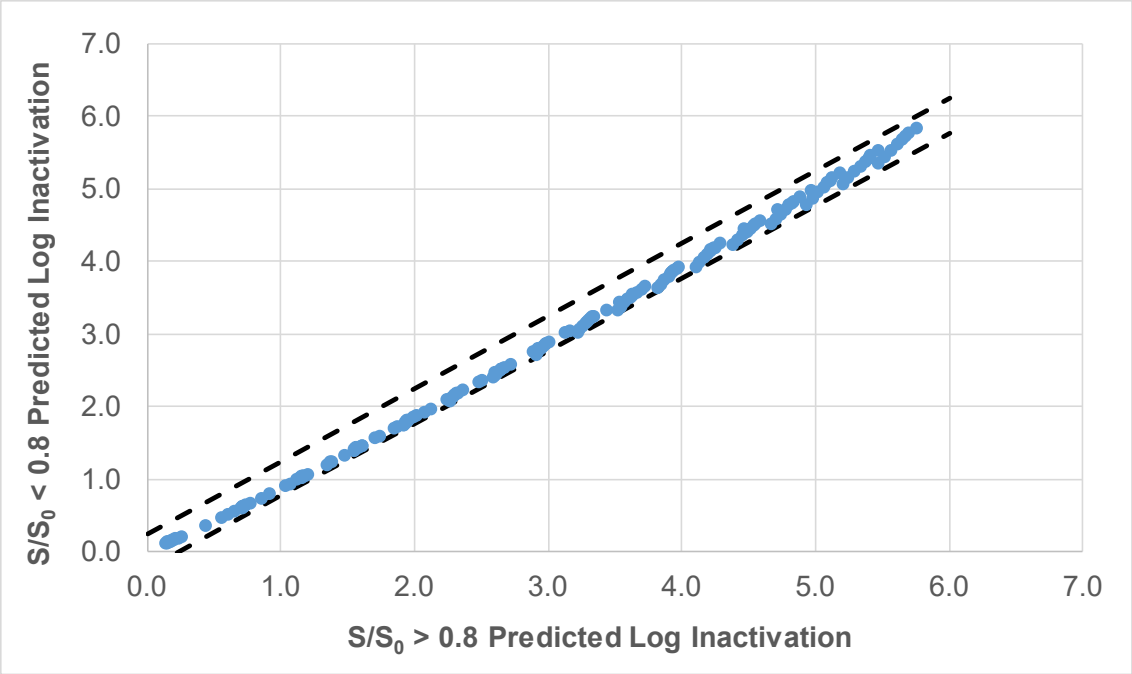

Figure 5.23c Comparison of Equations Calibrated for High and Low S/S_0 values for the WF-225-8

The USEPA document entitled "Innovative Approaches for Validation of Ultraviolet Disinfection Reactors for Drinking Water Systems" states if 95 percent of the predicted log inactivations with the comparison of the equations fall within the prediction interval, then Equation 5.6 calibrated with the full dataset can be used with confidence to provide valid predictions of log i within the validated range of log inactivation regardless of the values of D_L and S/S_0 used to define the combined variable. The evaluations provided in this section demonstrate that Equation 5.6 meets this criteria.

VALIDATION FACTORS AND UV DOSE MONITORING FOR DISINFECTION CREDIT

This chapter describes the determination of the validation factors and monitoring for obtaining UV disinfection credit using the ATG WF-115-4, WF-125-6, and WF-225-8 UV reactors.

6.1 REQUIRED UV DOSE

Table 6.1 tabulates the UV dose values required by the LT2ESWTR for 0.5 to 4.0 log inactivation of *Cryptosporidium*, Giardia, and virus. Table 6.1 also provides UV dose values for 4.5 to 6.0 log inactivation given in the USEPA draft document entitled "Innovative Approaches for Validation of Ultraviolet Disinfection Reactors for Drinking Water Systems." The LT2ESWTR states that UV reactors will achieve a given log inactivation when the validated UV dose indicated by an on-line dose monitoring system is equal to or greater than the required UV dose.

Table 6.1 UV Dose Requirements for Pathogen Inactivation Credit as Defined by the LT2ESWTR

Target Pathogens	UV dose (mJ/cm^2) required for a log inactivation of:											
	0.5 log	**1.0 log**	**1.5 log**	**2.0 log**	**2.5 log**	**3.0 log**	**3.5 log**	**4.0 log**	**4.5 log**	**5.0 log**	**5.5 log**	**6.0 log**
Cryptosporidium	1.6	2.5	3.9	5.8	8.5	12	15	22	30	45	64	85
Giardia	1.5	2.1	3.0	5.2	7.7	11	15	22	28	42	60	84
Adenovirus	39	58	79	100	121	143	163	186	208	231	253	276

6.2 VALIDATION FACTORS

To obtain disinfection credit, the UV reactor must deliver a validated dose, D_{val}, that is equal to or greater than the required dose specified by the LT2ESWTR. The 2006 UVDGM states (page 5-42) that the validated dose, D_{val}, is related to the RED using:

$$D_{val} = RED / VF \qquad \textbf{Equation 6.1}$$

where VF is the validation factor. The UVDGM also states (page 5-36) that the validation factor is determined using:

$$VF = B_{RED} \times B_{Poly} \times \left(1 + \frac{U_{Val}}{100}\right) \qquad \textbf{Equation 6.2}$$

where B_{RED} is the RED bias factor, B_{poly} is the polychromatic bias factor, and U_{val} is the percent uncertainty of validation.

Substituting Equation 6.2 into Equation 6.1 gives:

$$D_{val} = \frac{RED}{B_{RED} \times B_{Poly} \times \left(1 + {}^{U_{val}}/_{100}\right)} \qquad \textbf{Equation 6.3}$$

where the RED is predicted using Equation 5.18 or 5.19.

6.2.1 RED Bias

Equations 5.18 and 5.19 predict RED accounting for the UV sensitivity of the microbe, D_L. These equations can be used to predict the RED of the test microbes MS2 and T1UV phage by setting the value of D_L to the value expected with those microbes. Alternatively, these equations can be used to predict the RED of the target pathogen (e.g. *Cryptosporidium*) by setting the value of D_L to the value expected with that pathogen. With this analysis, it is assumed that the RED is predicted using the value of D_L set to UV sensitivity of the target pathogen. Section 5.8.1 (page 5-30) of the UVDGM states that if the validation equations are used to predict the RED delivered to the target pathogen, the RED bias can be set to 1.0.

6.2.2 Uncertainty of Validation

The UVDGM states on page 5-40 that the uncertainty of validation, U_{val}, is calculated as:

$$U_{val} = \sqrt{U_{IN}^2 + U_{DR}^2 + U_S^2} \qquad \textbf{Equation 6.4}$$

where U_{IN} is the uncertainty of interpolation using the dose monitoring equation, U_{DR} is the uncertainty of the test microbe dose response, and U_S is the uncertainty of the UV sensors during validation.

6.2.2.1 Uncertainty of Interpolation

The UVDGM states on page 5-41 that U_{IN} is determined using:

$$U_{IN} = \frac{t \times SD}{RED} \times 100\% \qquad \textbf{Equation 6.5}$$

where SD is the standard deviation of the differences between the measured and predicted REDs, and t is a t-statistic at a 95 percent confidence level for N - P degrees of freedom where N is the number of data points used with the regression analysis and P is the number of coefficients used by the UV dose monitoring equation and obtained from the regression analysis.

The validation data measured using MS2 and T1UV phage was fit using Equation 5.6. Equation 5.6 predicts log inactivation of the test microbes as opposed to RED. As such, the residuals of the fit, shown in Figures 5.9b, 5.10b, and 5.11b, are defined in terms of log inactivation units as opposed to RED units. The standard deviation of the residuals in units of RED can be determined using:

$$SD = D_L \times SD' \qquad \textbf{Equation 6.6}$$

where SD' is the standard deviation in units of log inactivation.

Substitution of Equation 6.6 into 6.5 gives:

$$U_{IN} = \frac{t \times D_L \times SD'}{RED} \times 100\% \qquad \textbf{Equation 6.7}$$

The uncertainty of interpolation in units of log inactivation is:

$$U'_{IN} = t \times SD' \qquad \textbf{Equation 6.8}$$

Table 6.2 gives the values of the standard deviation and t-statistic used as inputs to Equation 6.8. The t-statistic was calculated using P=4 for the WF-115-4 and P=5 for the WF-125-6 and WF-225-8, which is representative of the number of coefficients used with Equation 5.6 for each reactor.

Table 6.2 Uncertainty of Interpolation for Predicting Log Inactivation

Parameter	WF-115-4	WF-125-6	WF-225-8
Number of Data Points, N	78	75	61
Number of Parameters, P	4	5	5
Student's t-statistic	1.9925	1.9944	2.0032
Equation 5.6 St. Dev.	0.18318	0.14416	0.11966
U'_{IN}	0.36499	0.28753	0.23971

6.2.2.2 Uncertainty of UV Sensors

Section 5.5.4 (page 5-19) of the UVDGM states that U_S can be defined as the largest difference observed between the duty and reference UV sensors. This definition assumes that the uncertainty of the reference UV sensors is zero. Section 5.9.2 (page 5-40) of the UVDGM states that the value of U_S used in the calculation of the validation factor can be set to zero if U_S is less than 10 percent.

As shown in Figure 5.2, the differences between the average duty UV sensors and the average reference UV sensor reading had an average and standard deviation of -1.34 and 2.42 percent, respectively, and ranged from -6.34 to 1.31 percent. The differences were all

within the 10 percent criteria for reference UV sensor checks given in the 2006 UVDGM, and the value of U_S was set to zero.

6.2.2.3 Uncertainty of UV Dose Response

Section C.4 (page C-10) of the UVDGM states that the uncertainty of the test microbe dose-response can be determined using:

$$U_{DR} = \frac{CI}{UVDose} \times 100\% \qquad \textbf{Equation 6.9}$$

where CI is the confidence interval at the specified dose calculated using statistical approaches (e.g., Draper and Smith, 1998). The UV dose value is predicted as a function of log inactivation using Equation 5.6 and the UV dose coefficients of the collimated beam dose response curve, as tabulated in Tables 5.3 and 5.4. The UVDGM also states that the value of U_{DR} used in the calculation of the validation factor can be set to zero if U_{DR} calculated as a confidence interval is less than 15 percent of the RED.

Figures 6.1a and 6.1b show the uncertainty of the UV dose-response for MS2 and T1UV phage, respectively, calculated as a confidence interval using the statistical approach provided in Appendix I. Table 6.3 shows the value of U_{DR} at 1 log.

Figure 6.1c shows the uncertainty of the UV dose-response for all microbes on one plot. Since the uncertainty of all of the UV dose-response curves was less than 15 percent, the most conservative uncertainty (March 19, 2019) was modeled using a quadratic fit:

$$U_{DR} = A + B(\log i) + C(\log i)^2 \qquad \textbf{Equation 6.10}$$

where A = 12.34, B = -3.514, and C = 0.3197.

If the U_{DR}, calculated using Equation 6.10, is greater than 15 percent, then that calculated value of U_{DR} is to be used in Equation 6.4. If the U_{DR} is less than 15 percent, then the U_{DR} value in Equation 6.4 is set to zero.

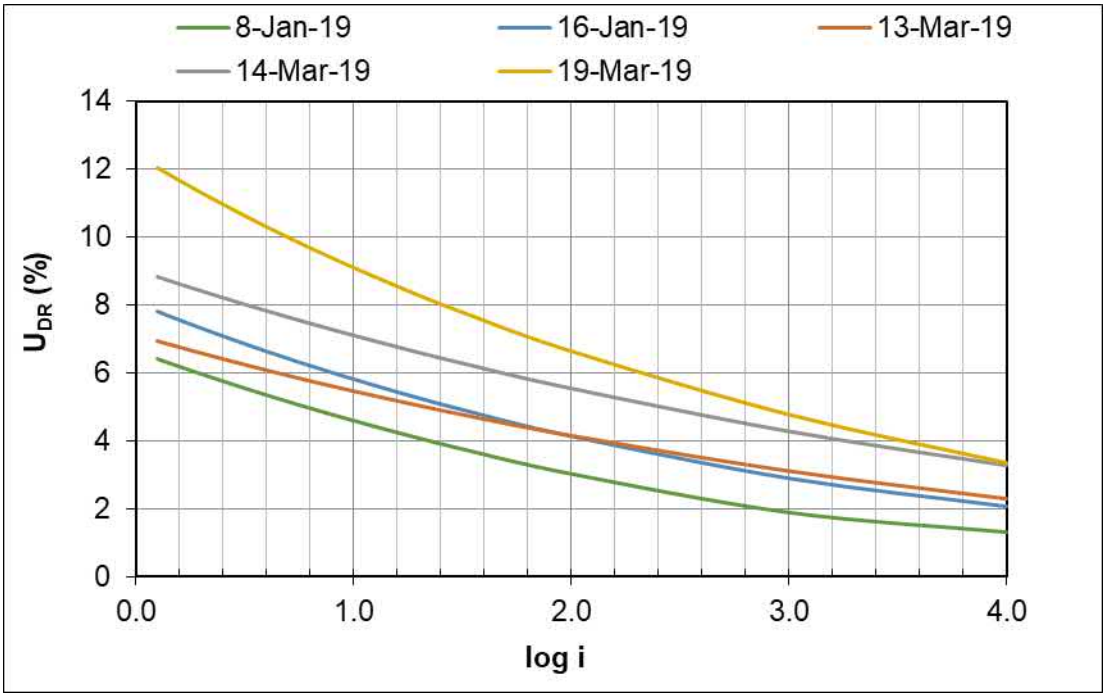

Figure 6.1a Uncertainty of the UV Dose-Response of MS2 as a Function of log i

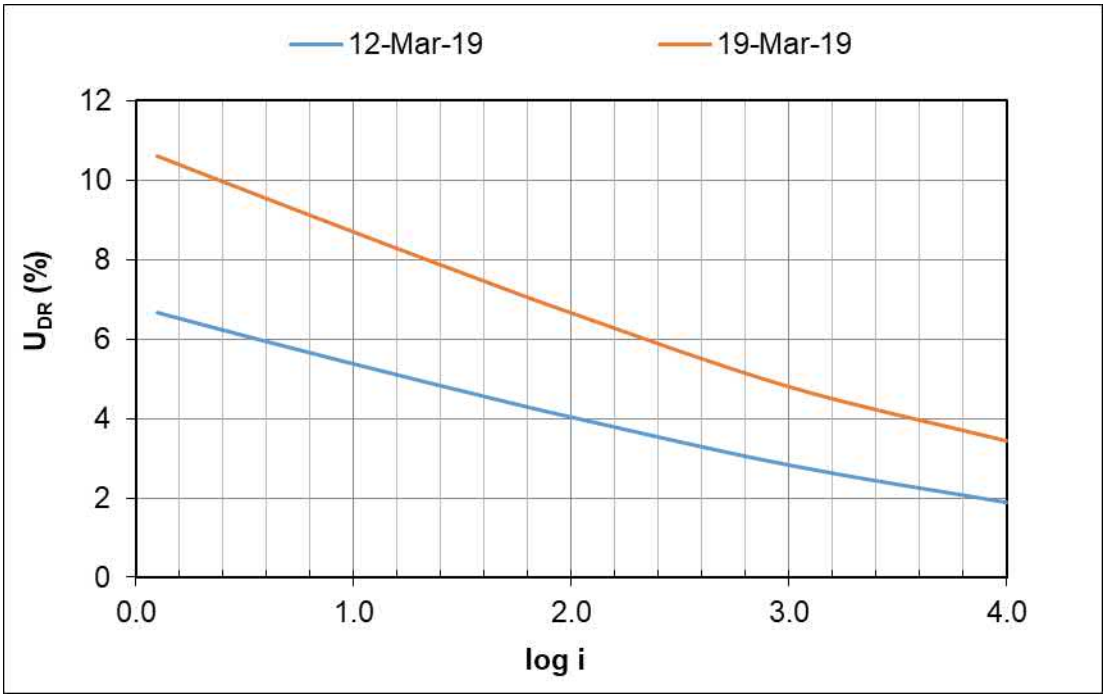

Figure 6.1b Uncertainty of the UV Dose-Response of T1UV as a Function of log i

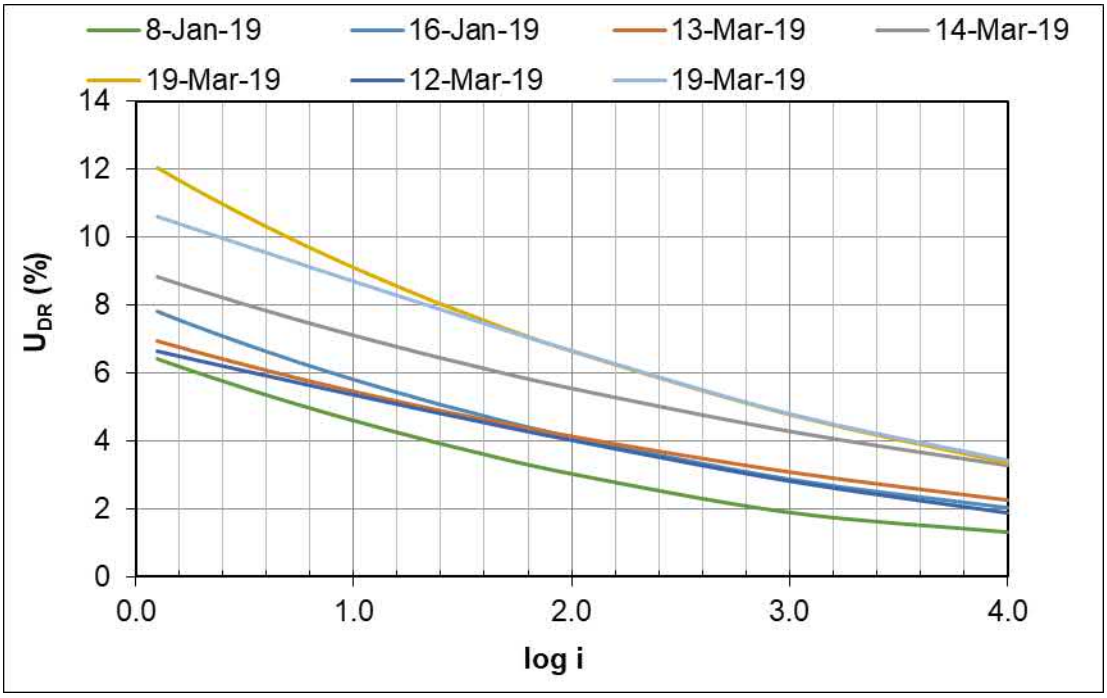

Figure 6.1c Uncertainty of the UV Dose-Response as a Function of log i for all microbes

Table 6.3 U_{DR} at 1-log Inactivation

Test Microbe	Date	Sample ID	U_{DR} at 1-log (%)	Coefficient A	Coefficient B
MS2	1/8/2019	101	4.60	15.626	2.023
MS2	1/16/2019	409	5.80	15.302	2.283
MS2	3/13/2019	407	5.46	16.351	2.013
MS2	3/14/2019	617	7.11	16.530	1.795
MS2	3/19/2019	819	9.10	14.725	2.465
T1UV	3/12/2019	416	5.37	4.534	0.97917
T1UV	3/19/2019	820	8.70	4.875	0

6.2.3 Polychromatic Bias

The polychromatic bias accounts for spectral differences between validation and operation of the UV system for pathogen inactivation credit at the water treatment plant. The polychromatic bias only occurs with UV systems using polychromatic lamps and can be caused by:

1. Differences in the spectral response or action spectra of the test microbes used during validation and the target pathogen.
2. Spectral changes in UV lamp output due to lamp and quartz sleeve aging and fouling.
3. Differences in the UV absorbance spectra during validation and with application at the WTP

6.2.3.1 Action Spectra

Water Research Foundation (WRF) Project 4376 found that while the action spectra of MS2 and *Cryptosporidium* at wavelengths above 240 nm are similar, the action spectrum of MS2 phage is greater than that of *Cryptosporidium* at wavelengths below 240 nm, as shown in Figure 6.2. If wavelengths below 240 nm significantly contribute to UV dose delivery measured during validation, validation conducted using MS2 phage will overstate the inactivation expected with *Cryptosporidium*. A similar issue with action spectra differences exists with T1UV phage and *Cryptosporidium*.

The difference between the action spectra of MS2 and *Cryptosporidium* at wavelengths below 240 nm is not addressed by the UVDGM. Instead, the UVDGM states that the action spectra of *Cryptosporidium* and MS2 phage are similar enough that no action spectra correction factor is required. However, this conclusion is based on an analysis of the germicidal UV output of MP lamps as provided in the 2003 draft UVDGM. That analysis was based on a MP lamp that had negligible UV output (below 240 nm) and is not applicable with today's MP lamps.

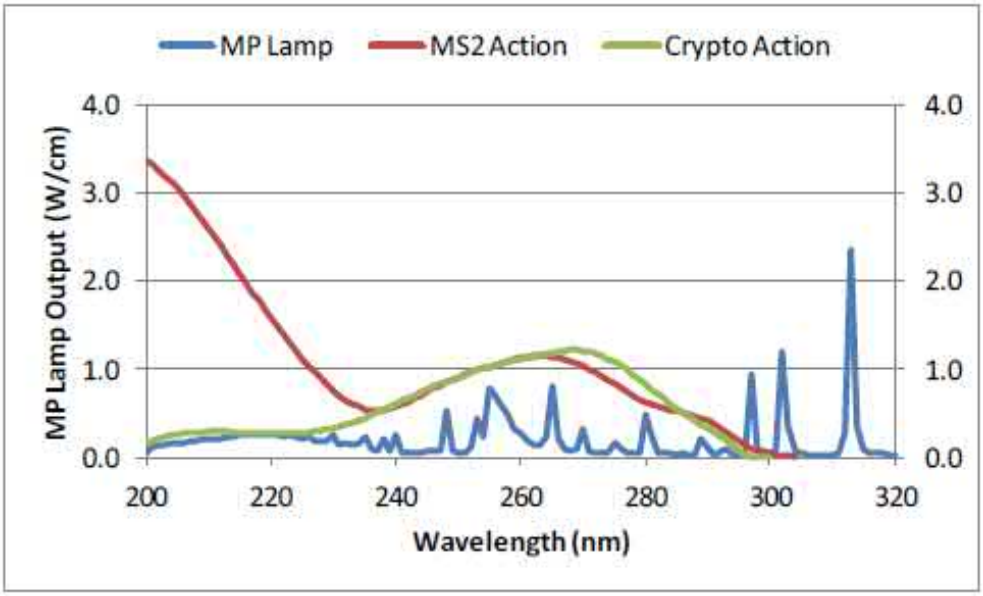

Figure 6.2 Comparison of wavelength response of MS2 phage and *Cryptosporidium* (Source: WRF Project 4376)

The action spectrum of a microbe is obtained by measuring the microbe's UV dose response at different wavelengths and plotting the UV sensitivity as a function of wavelength. The UVDGM states that the relative impact of the microbe's action spectra on dose delivery by a UV reactor may be estimated by calculating the lamp's germicidal output, Pg, using:

$$P_G = \sum_{\lambda=200nm}^{320} P(\lambda)G(\lambda)\Delta\lambda$$ **Equation 6.11**

where P(λ) is the UV output of the lamp as a function of wavelength, λ, and G(λ) is the action spectra of the microbe. The UVDGM states the ratio of the germicidal output defined using the action spectra of the validation test microbe to that defined using the action spectra of the pathogen (such as adenovirus or *Cryptosporidium*) may be used to define an action spectra correction factor (ASCF) that is applied to the UV dose algorithms developed through validation.

The UVDGM approach for calculating the ASCF does not account for the impact of the sleeve UV transmittance (UVT) and the UV absorbance of the water during validation. To address this issue, WRF Project 4376 developed tables of ASCF values that can be generally applied to UV systems using polychromatic medium-pressure lamps. Appendix B of the final report for Project 4376 provides ASCF values for Cryptosporidium and Giardia credit for five validation water types, four of which are used at the Portland UV Validation Facility. With each water type, ASCF values are provided for the UV reactor equipped with Type 219, Type 214, or synthetic quartz sleeves. With each water and sleeve type, ASCF values are provided for six validation test microbes, including MS2 and T1UV phage.

Figure 6.3 shows the average measured absorbance spectra during the validation of the WF-115-4, WF-125-6, and WF-225-8 reactors at various UVTs. When using the ASCFs from Appendix B of WRF Project 4376, the absorbance spectra of the chosen test water should closely match the absorbance spectra measured during validation. To minimize the differences in the measured absorbance spectra with this validation to the absorbance spectra of any one test water from WRF Project 4376, a combination test water was used. This method identified the degree to which the absorbance spectra of the five test waters from WRF Project 4376 were representative of the absorbance spectra measured during validation. At each UVT shown in Figure 6.3, a weighting factor between 0 and 1 was calculated for each test water to represent the degree to which it matched the absorbance spectra measured during validation. The weighting factor for each test water was then used to calculate an average weighted ASCF at each UVT.

Figures 6.4a and 6.4b show the absorbance spectra of the combination water used to calculate the ASCFs. These figures also include the average UV absorbance spectra of the water used with the validation of the WF-115-4, WF-125-6, and WF-225-8 UV reactors. As shown, the UV absorbance spectra measured with this validation matched the UV absorbance of the combination water for a given UVT. The absorbance spectra for all five test waters are provided in Appendix A of the final report for Project 4376. Those absorbance spectra were used to calculate the ASCF values tabulated in Appendix B of Project 4376.

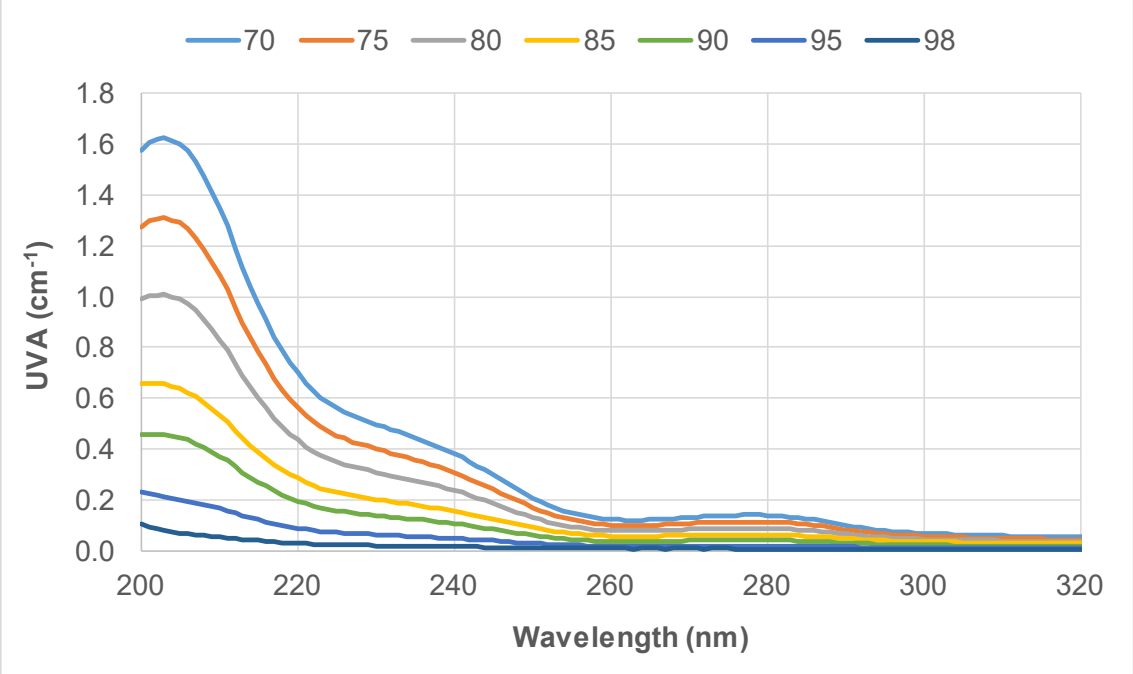

Figure 6.3 Averaged UV Absorbance Spectra Measured during this Validation

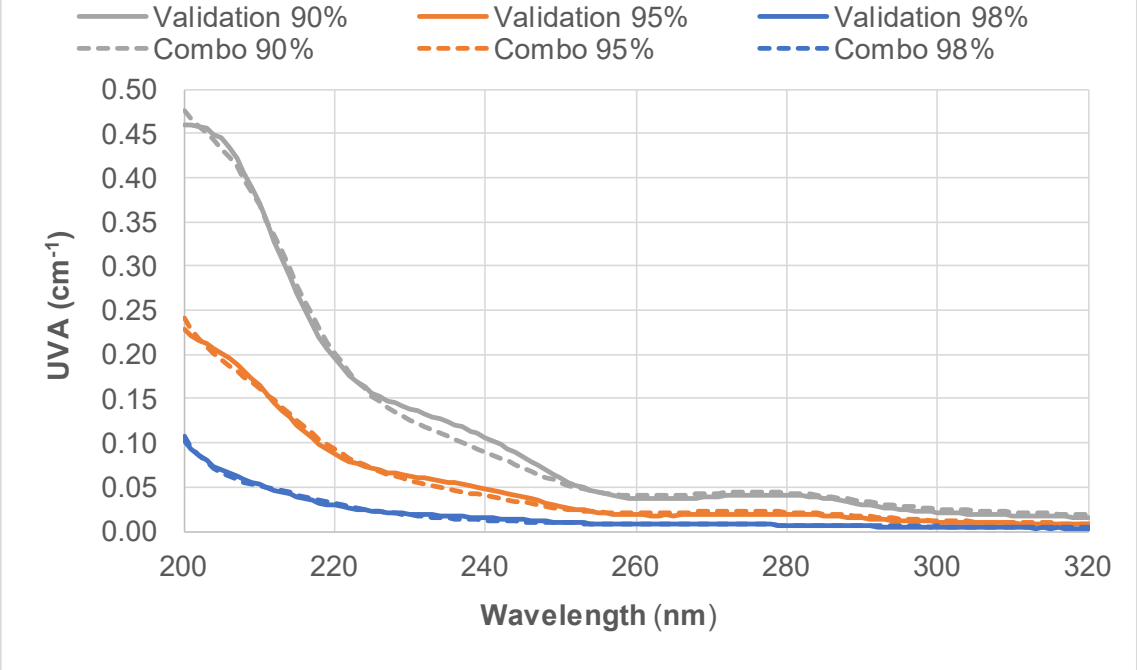

Figure 6.4a UV Absorbance Spectra of Combination Water from WRF Project 4376 and UV Absorbance Spectra of Water Measured during this Validation

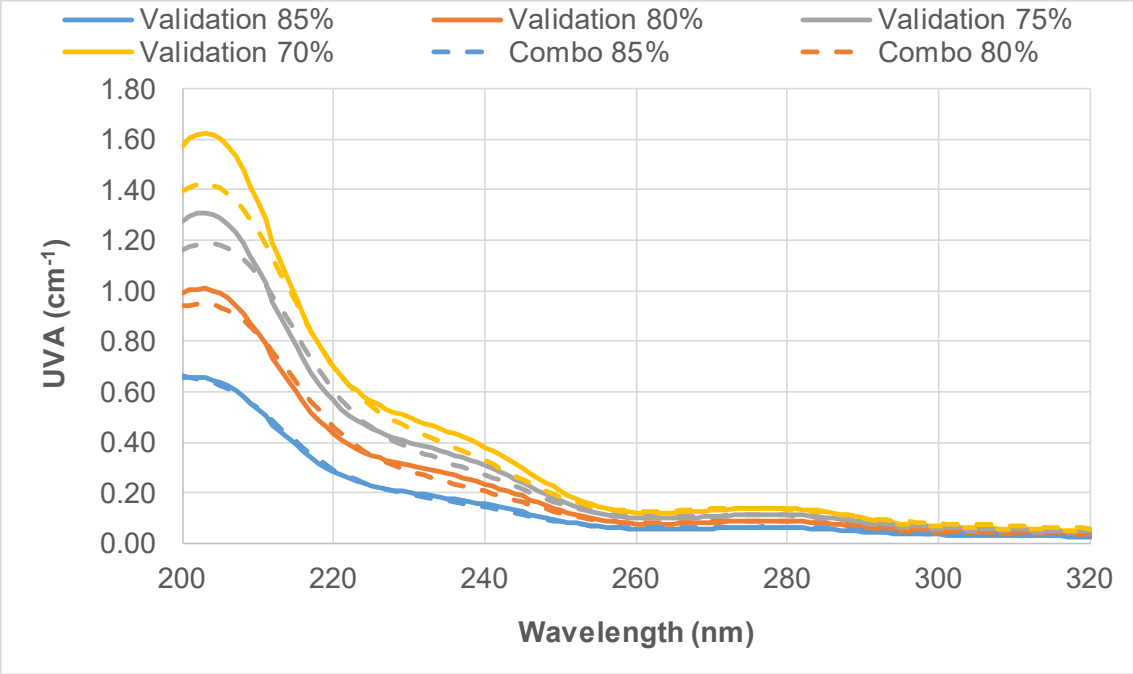

Figure 6.4b UV Absorbance Spectra of Combination Water from WRF Project 4376 and UV Absorbance Spectra of Water Measured during this Validation

The WF-115-4, WF-125-6, and WF-225-8 UV reactors used Type 214 sleeves during validation. Figure 6.5 compares the UV transmittance of the Type 214 quartz sleeves used by the reactors with this validation to the UV transmittance of the Type 214 quartz sleeve used to calculate ASCF values with Project 4376.

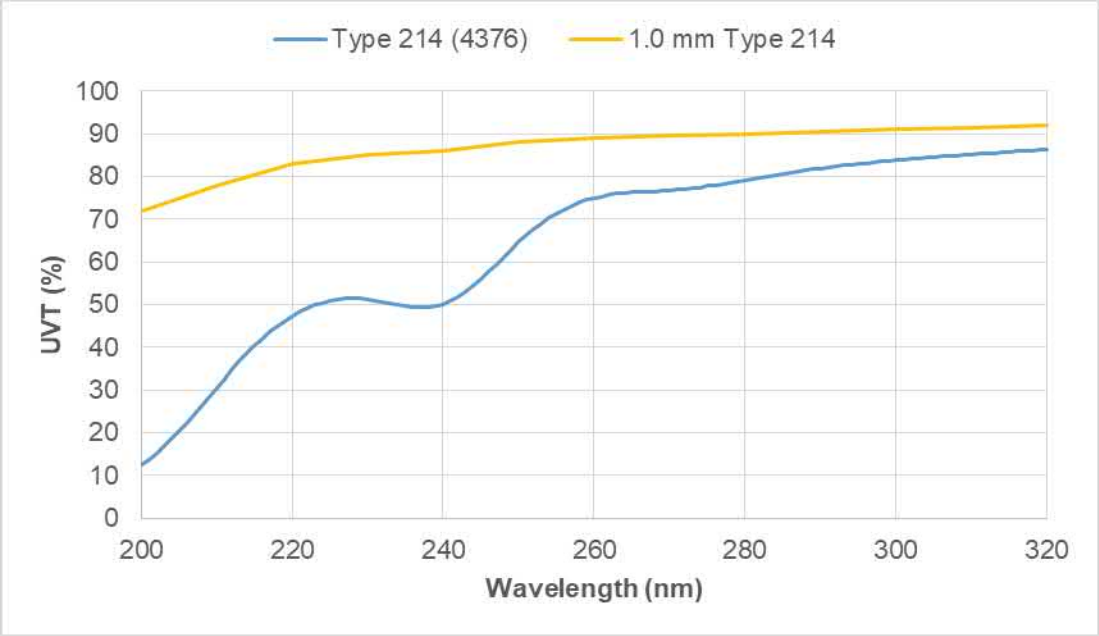

Figure 6.5 UV Transmittance of the Type 214 Quartz Sleeves used during Validation and Type 219 Quartz Sleeves used in Project 4376

Table 6.4 gives the weighted ASCF values, which are calculated for a given UVT using:

$$ASCF = \{[(ASCF_{MS2\ BLA\ SH} \times WF_1 + ASCF_{MS2\ SGA\ SH} \times WF_2 + ASCF_{MS2\ NY\ LSA} \times WF_3 + ASCF_{MS2\ BLA\ LSA} \times WF_4 + ASCI$$
$$\div (N_{MS2} + N_{T1UV})$$

Equation 6.12

$ASCF_{MS2}$ or $ASCF_{T1UV}$ represent the ASCF associated with MS2 and T1UV, respectively. These values, taken from Appendix B of WRF Project 4376, are relative to a test water, a target microbe, and a sleeve type. N_{MS2} and N_{T1UV} are the number of MS2 and T1UV runs, respectively, where an absorbance spectra scan was done. In this case, N_{MS2} is 37 and N_{T1UV} is 26. WF_1 through WF_5 are the weighting factors associated with the test water specified in that term. The weighting factors can be seen in Table 6.4.

Table 6.4 ASCF Weighting Factors Associated with Each Water Type

Weighting Factor	Water Type	UVTs						
		70.0	**75.0**	**80.0**	**85.0**	**89.2**	**94.5**	**98.1**
WF_1	BLA-SH	0	0	0	0	0	0	0.02360
WF_2	SGA-SH	0	0	0	0.00472	0	0	0.04565
WF_3	NY-LSA	0.59173	0.62901	0.74739	0.90680	0.88415	0.62999	0.09148
WF_4	BLA - LSA	0.40827	0.37068	0.25261	0	0.04565	0.02244	0.03308
WF_5	SGA-LSA	0	0	0	0.08805	0.07019	0.34649	0.81910

Equation 6.12 was used to calculate a weighted ASCF for *Cryptosporidium* and adenovirus at log inactivation values between 0.5 and 4, and at UVTs ranging from 70 percent to 98 percent. Equation 6.12 was also used to calculate a weighted ASCF for MS2 at REDs between 10 and 80 mJ/cm^2 and at UVTs ranging from 70 percent to 98 percent. Tables 6.5, 6.6, and 6.7 show the weighted ASCF values for *Cryptosporidium*, adenovirus, and MS2, respectively. The ASCF for a given UVT was defined as the average of the ASCFs calculated for various log inactivations at that UVT as shown in Table 6.8.

Table 6.5 ASCF Values for Cryptosporidium and Giardia Credit					
Credit	**UVT (%)**	**Weighted ASCF**	**Credit**	**UVT (%)**	**Weighted ASCF**
0.5	70	1.037	2.5	70	0.985
0.5	75	1.053	2.5	75	1.014
0.5	80	1.077	2.5	80	1.049
0.5	85	1.144	2.5	85	1.125
0.5	90	1.225	2.5	90	1.211
0.5	95	1.424	2.5	95	1.406
0.5	98	1.746	2.5	98	1.712
1.0	70	1.007	3.0	70	0.985
1.0	75	1.029	3.0	75	1.014
1.0	80	1.065	3.0	80	1.049
1.0	85	1.134	3.0	85	1.125
1.0	90	1.220	3.0	90	1.211
1.0	95	1.415	3.0	95	1.403
1.0	98	1.730	3.0	98	1.708
1.5	70	0.994	3.5	70	0.985
1.5	75	1.021	3.5	75	1.014
1.5	80	1.058	3.5	80	1.049
1.5	85	1.130	3.5	85	1.125
1.5	90	1.215	3.5	90	1.211
1.5	95	1.411	3.5	95	1.399
1.5	98	1.724	3.5	98	1.707
2.0	70	0.988	4.0	70	0.985
2.0	75	1.014	4.0	75	1.014
2.0	80	1.054	4.0	80	1.049
2.0	85	1.125	4.0	85	1.125
2.0	90	1.211	4.0	90	1.211
2.0	95	1.408	4.0	95	1.399
2.0	98	1.720	4.0	98	1.704

Table 6.6 ASCF Values for Adenovirus Credit					
Credit	**UVT (%)**	**Weighted ASCF**	**Credit**	**UVT (%)**	**Weighted ASCF**
0.5	70	1.013	2.5	70	0.956
0.5	75	1.009	2.5	75	0.967
0.5	80	1.020	2.5	80	0.995
0.5	85	1.069	2.5	85	1.050
0.5	90	1.135	2.5	90	1.121
0.5	95	1.317	2.5	95	1.292
0.5	98	1.609	2.5	98	1.571
1.0	70	0.987	3.0	70	0.950
1.0	75	0.989	3.0	75	0.963
1.0	80	1.007	3.0	80	0.990
1.0	85	1.060	3.0	85	1.050
1.0	90	1.131	3.0	90	1.121
1.0	95	1.307	3.0	95	1.288
1.0	98	1.593	3.0	98	1.567
1.5	70	0.975	3.5	70	0.943
1.5	75	0.979	3.5	75	0.959
1.5	80	1.001	3.5	80	0.990
1.5	85	1.054	3.5	85	1.045
1.5	90	1.125	3.5	90	1.121
1.5	95	1.303	3.5	95	1.288
1.5	98	1.583	3.5	98	1.564
2.0	70	0.961	4.0	70	0.940
2.0	75	0.975	4.0	75	0.959
2.0	80	0.997	4.0	80	0.985
2.0	85	1.054	4.0	85	1.045
2.0	90	1.125	4.0	90	1.121
2.0	95	1.297	4.0	95	1.286
2.0	98	1.579	4.0	98	1.560

Table 6.7 ASCF Values for MS2 Credit					
RED (mJ/cm^2)	**UVT (%)**	**Weighted ASCF**	**RED (mJ/cm^2)**	**UVT (%)**	**Weighted ASCF**
10	70	1.151	50	70	1.058
10	75	1.145	50	75	1.079
10	80	1.157	50	80	1.110
10	85	1.213	50	85	1.185
10	90	1.289	50	90	1.278
10	95	1.491	50	95	1.481
10	98	1.834	50	98	1.820
20	70	1.110	60	70	1.048
20	75	1.109	60	75	1.069
20	80	1.137	60	80	1.107
20	85	1.204	60	85	1.185
20	90	1.288	60	90	1.278
20	95	1.491	60	95	1.481
20	98	1.827	60	98	1.820
30	70	1.084	70	70	1.042
30	75	1.099	70	75	1.062
30	80	1.120	70	80	1.100
30	85	1.194	70	85	1.184
30	90	1.278	70	90	1.269
30	95	1.488	70	95	1.481
30	98	1.819	70	98	1.813
40	70	1.068	80	70	1.032
40	75	1.082	80	75	1.059
40	80	1.117	80	80	1.097
40	85	1.194	80	85	1.184
40	90	1.278	80	90	1.269
40	95	1.488	80	95	1.481
40	98	1.820	80	98	1.813

Table 6.8 Average Weighted ASCF Values			
UVT	***Cryptosporidium*/ Giardia**	**Adenovirus**	**MS2**
70	0.9998	0.9658	1.074
75	1.026	0.9773	1.091
80	1.065	1.005	1.127
85	1.140	1.062	1.203
90	1.239	1.147	1.304
95	1.447	1.333	1.527
98	1.627	1.501	1.728

To define the ASCF at any UVT within the validated range, the values in Table 6.8 were modelled as a function of UVT and fitted with fifth order polynomial:

$$ASCF = A \times UVT^5 + B \times UVT^4 + C \times UVT^3 + D \times UVT^2 + E \times UVT + F$$ **Equation 6.13**

where the coefficients A through F are provided in Table 6.9 for *Cryptosporidium*/Giardia, adenovirus, and MS2. The equations have R-squared values greater than 0.9996.

Table 6.9 Coefficient Values for Predicting ASCF (Equation 6.13)			
Coefficient	***Cryptosporidium*/ Giardia**	**Adenovirus**	**MS2**
A	-3.9384×10^{-8}	-3.2526×10^{-8}	-2.5855×10^{-8}
B	1.7789×10^{-5}	1.5011×10^{-5}	1.2579×10^{-5}
C	-3.1495×10^{-03}	-2.7035×10^{-03}	-2.3525×10^{-03}
D	2.7477×10^{-01}	2.3923×10^{-01}	2.1434×10^{-01}
E	$-1.1846 \times 10^{+01}$	$-1.0445 \times 10^{+01}$	$-9.5819 \times 10^{+00}$
F	$2.0327 \times 10^{+02}$	$1.8141 \times 10^{+02}$	$1.6989 \times 10^{+02}$

The ASCF values are applied during the calculation of the validation factor with:

$$VF = B_{RED} \times U_{Val} \times ASCF$$ **Equation 6.14**

6.2.3.2 Lamp Aging and Fouling

The 2003 UVDGM discusses the polychromatic bias caused by spectral changes in UV lamp output due to lamp and quartz sleeve aging. The 2003 UVDGM states the bias is minor (e.g., ~ 3 percent) if the UV reactor uses a germicidal UV sensor. As indicated in Section 2, the WF-115-4, WF-125-6, and WF-225-8 UV reactors use a germicidal UV sensor. Hence, this bias is small and can be ignored.

UVT Spectra

Section D.4.3 of the 2006 UVDGM describes approaches for evaluating and accounting for the polychromatic bias caused by differences in the UVT spectra of the test water and the water treated at the water treatment plant. The UVDGM states this bias can occur if a

germicidal UV sensor is located further from the lamps than the ideal location for dose monitoring using the UV intensity setpoint approach.

The WF-115-4, WF-125-6, and WF-225-8 reactors do not have the ability to adjust their water layer, so the optimal water layer could not be determined. If the UV sensor are at the optimal locations, the polychromatic bias caused by differences in the UVT spectra of the test water and the water treated at the water treatment plant is small and can be ignored.

6.3 VALIDATED UV DOSE FOR PATHOGEN CREDIT

Equation 5.19 was used to predict *Cryptosporidium*, Giardia, and adenovirus REDs as a function of S/Q and UVTs ranging from 70 to 98 percent in 5 percent increments. The calculations used the pathogen D_L as defined by Equation 5.22. The UV sensor values, S, were determined using Equation 5.2. The validated doses were defined using Equation 6.1. The UVT that gave the minimum validated dose was defined at each value of S/Q. The minimum validated dose was fitted as a function of S/Q using a power fit function.

Figures 6.6a, 6.6b, and 6.6c show the validated doses for *Cryptosporidium*, Giardia, and adenovirus, respectively, as a function of S/Q at UVTs of 70 to 98 percent for the WF-115-4 reactor. Figure 6.7 and 6.8 show similar validated doses for the WF-125-6 and WF-225-8, respectively. The figures also show the relation and equation that defines the minimum validated dose as a function of S/Q. These power fit equations (shown by Equation 6.15) and the coefficients in Table 6.10 can be used for UV dose monitoring for disinfection credit.

$$Validated\ Dose = a \times \left({}^{S}/_{Q}\right)^{b} \qquad \textbf{Equation 6.15}$$

Table 6.10 Cryptosporidium, Giardia, and Adenovirus Coefficients for Equation 6.15

UV Reactor	Cryptosporidium Coefficients		Giardia Coefficients		Adenovirus Coefficients	
	a	b	a	b	a	b
WF-115-4	6.9873	0.97461	6.9587	0.97672	8.4427	0.94635
WF-125-6	37.222	0.97339	37.211	0.97597	45.247	0.91387
WF-225-8	40.791	0.96694	40.784	0.97009	50.728	0.89337

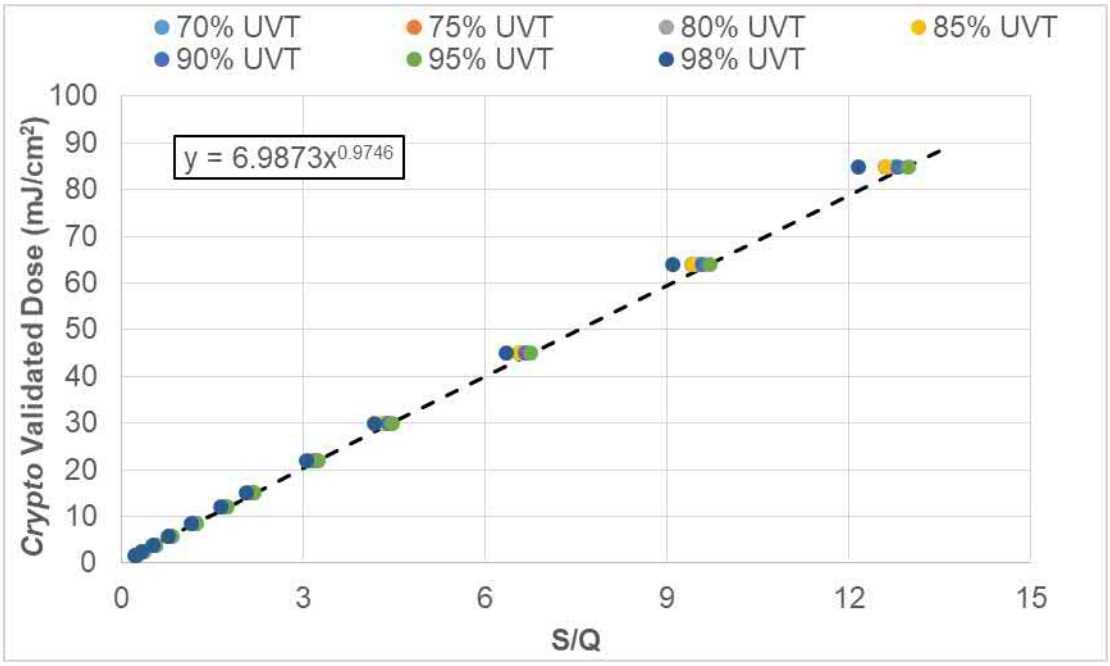

Figure 6.6a ***Cryptosporidium*** **Validated Dose as a function of S/Q for the WF-115-4.** ***Dashed line shows minimum validated dose as a function of S/Q.***

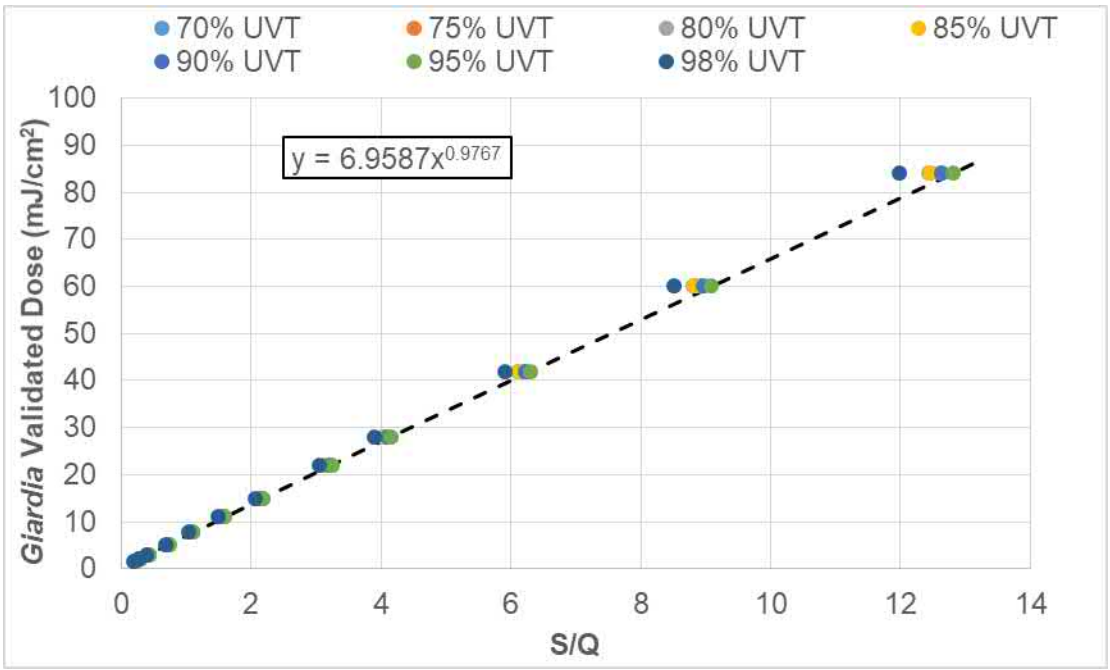

Figure 6.6b **Giardia Validated Dose as a function of S/Q for the WF-115-4.** ***Dashed line shows minimum validated dose as a function of S/Q.***

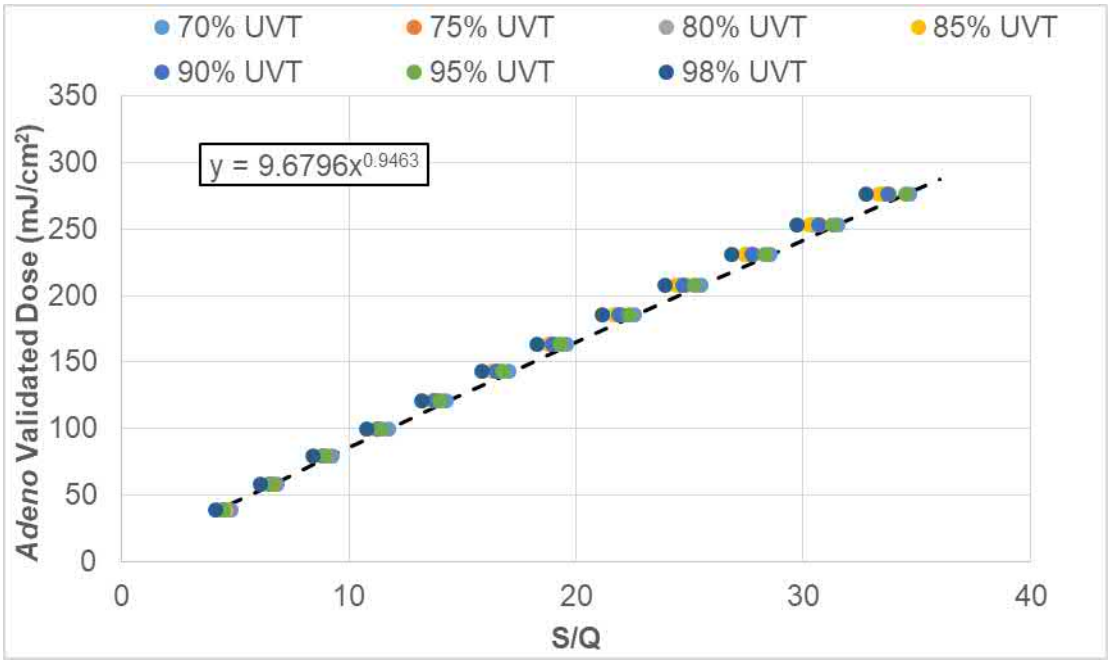

Figure 6.6c **Adenovirus Validated Dose as a function of S/Q for the WF-115-4.** ***Dashed line shows minimum validated dose as a function of S/Q.***

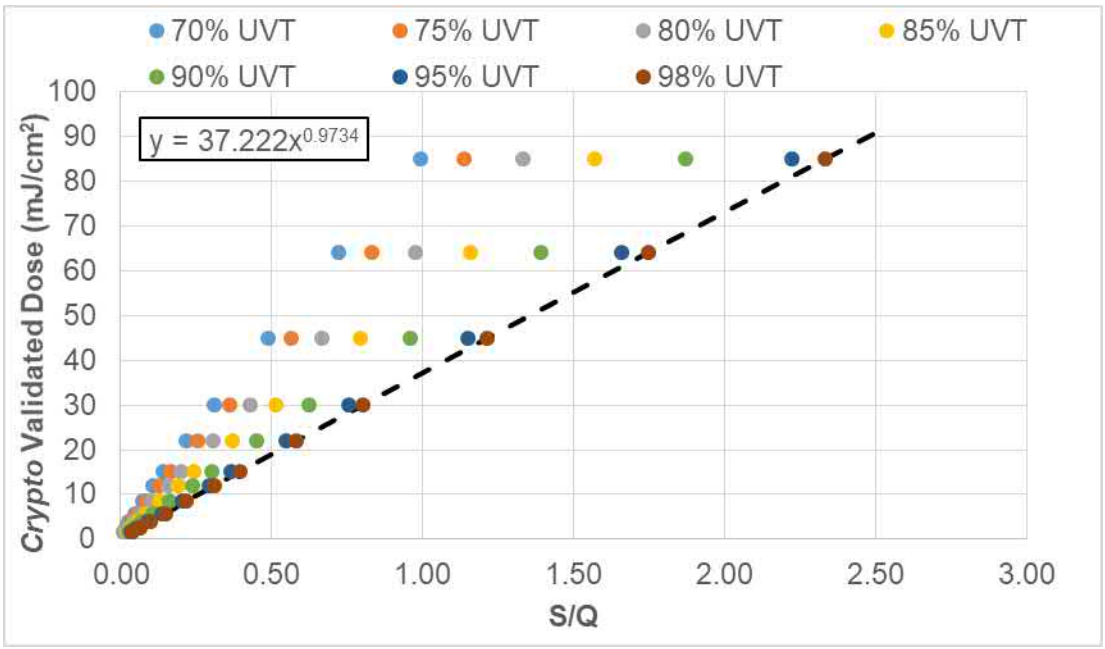

Figure 6.7a ***Cryptosporidium*** **Validated Dose as a function of S/Q for the WF-125-6.** ***Dashed line shows minimum validated dose as a function of S/Q.***

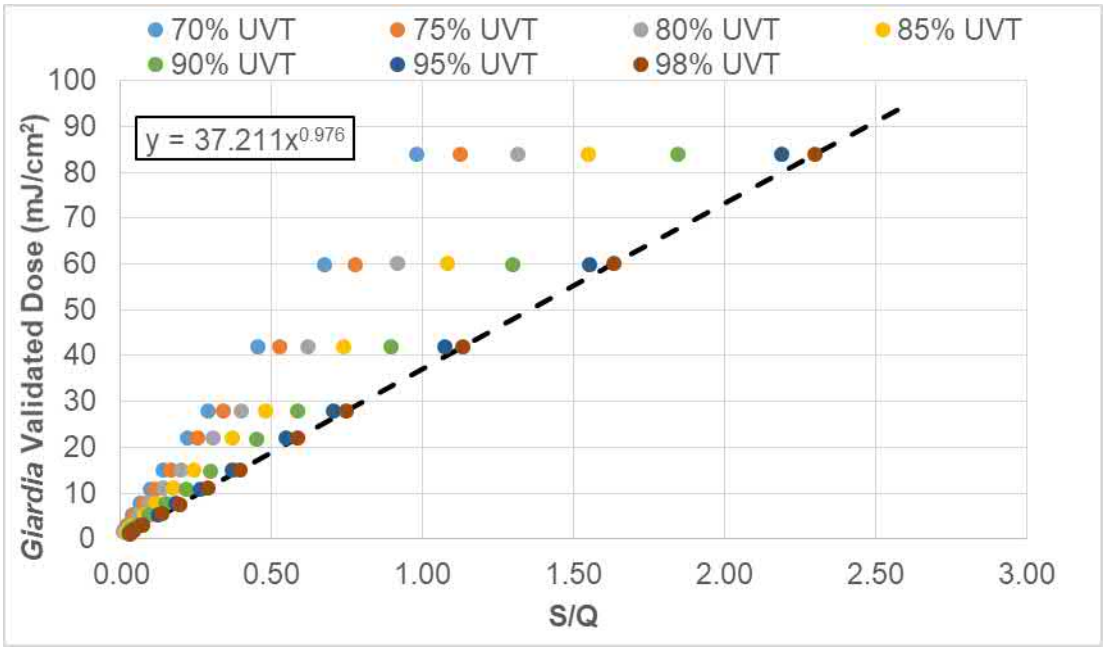

Figure 6.7b Giardia Validated Dose as a function of S/Q for the WF-125-6. ***Dashed line shows minimum validated dose as a function of S/Q.***

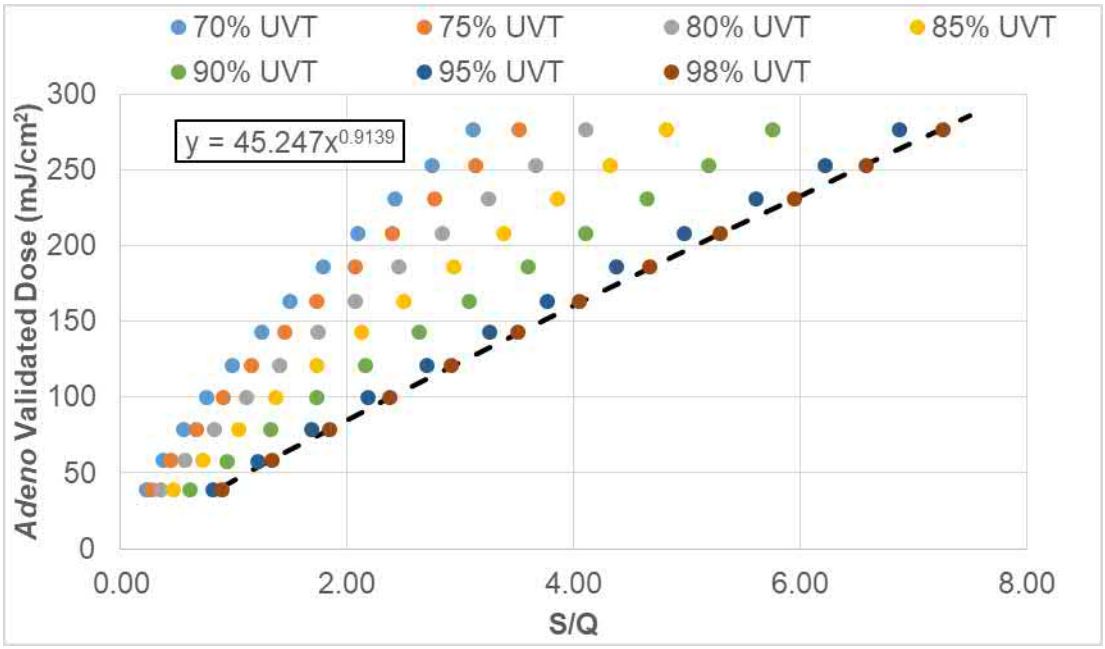

Figure 6.7c Adenovirus Validated Dose as a function of S/Q for the WF-125-6. ***Dashed line shows minimum validated dose as a function of S/Q.***

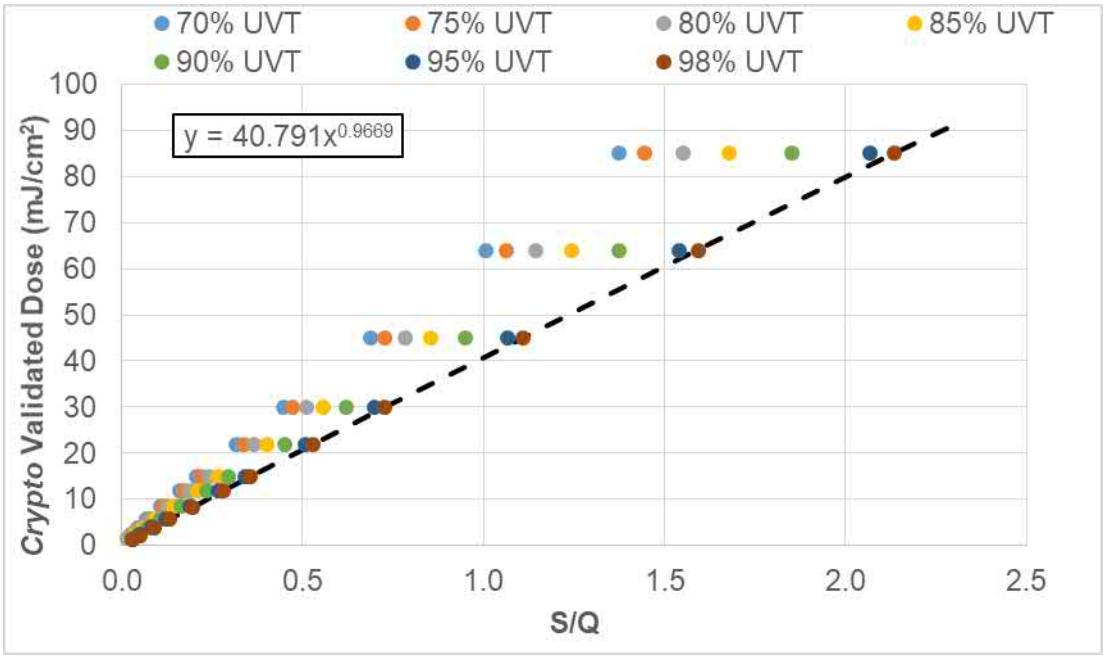

Figure 6.8a ***Cryptosporidium*** **Validated Dose as a function of S/Q for the WF-225-8.** ***Dashed line shows minimum validated dose as a function of S/Q.***

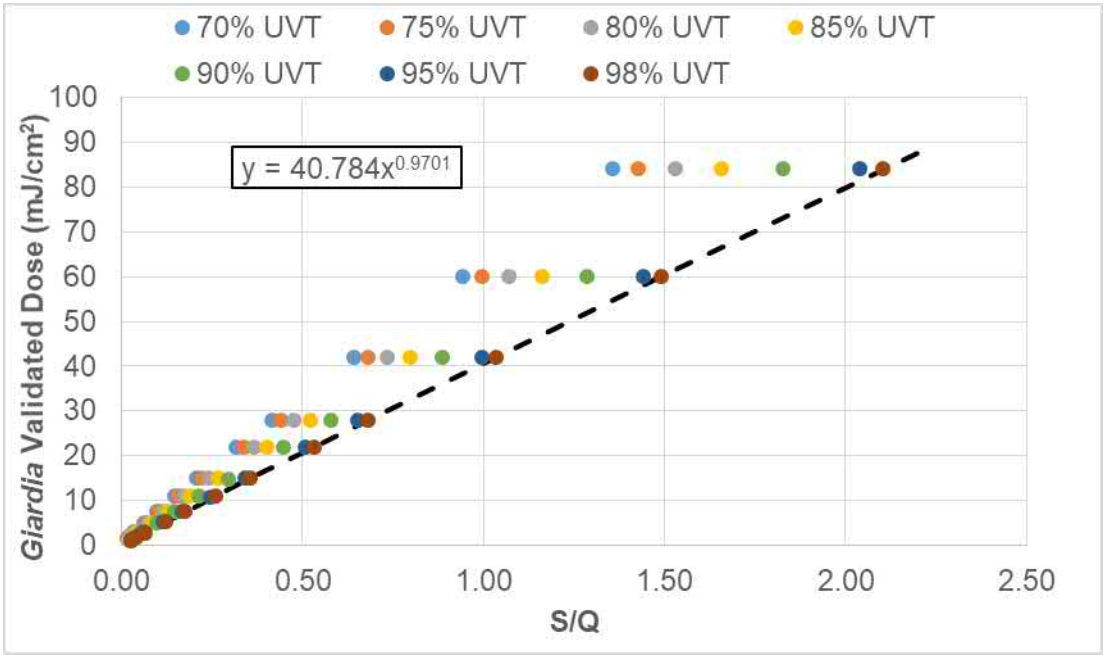

Figure 6.8b **Giardia Validated Dose as a function of S/Q for the WF-225-8.** ***Dashed line shows minimum validated dose as a function of S/Q.***

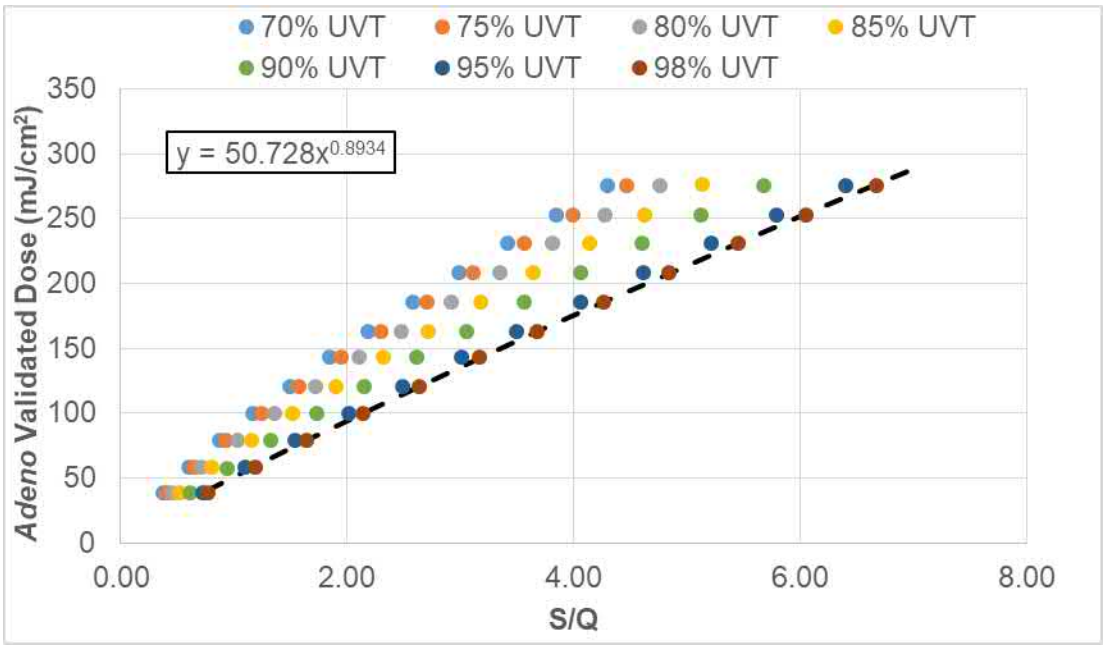

Figure 6.8c Adenovirus Validated Dose as a function of S/Q for the WF-225-8. ***Dashed line shows minimum validated dose as a function of S/Q.***

6.3.1 MS2 Equations that do not Use a UVT Monitor

Equation 5.19 was also used to predict MS2 REDs as a function of S/Q and UVTs ranging from 70 to 98 percent in 5 percent increments. The calculations used MS2 D_L as defined by Equation 5.20. The UV sensor values, S, were determined using Equation 5.2. The validated doses were defined using Equation 6.1. The UVT that gave the minimum validated dose was defined at each value of S/Q. The minimum validated dose was fitted as a function of S/Q using a power fit function.

Figures 6.9, 6.10, and 6.11 show the validated doses for MS2 as a function of S/Q at UVTs of 70 to 98 percent for the WF-115-4, WF-125-6, and WF-225-8, respectively.

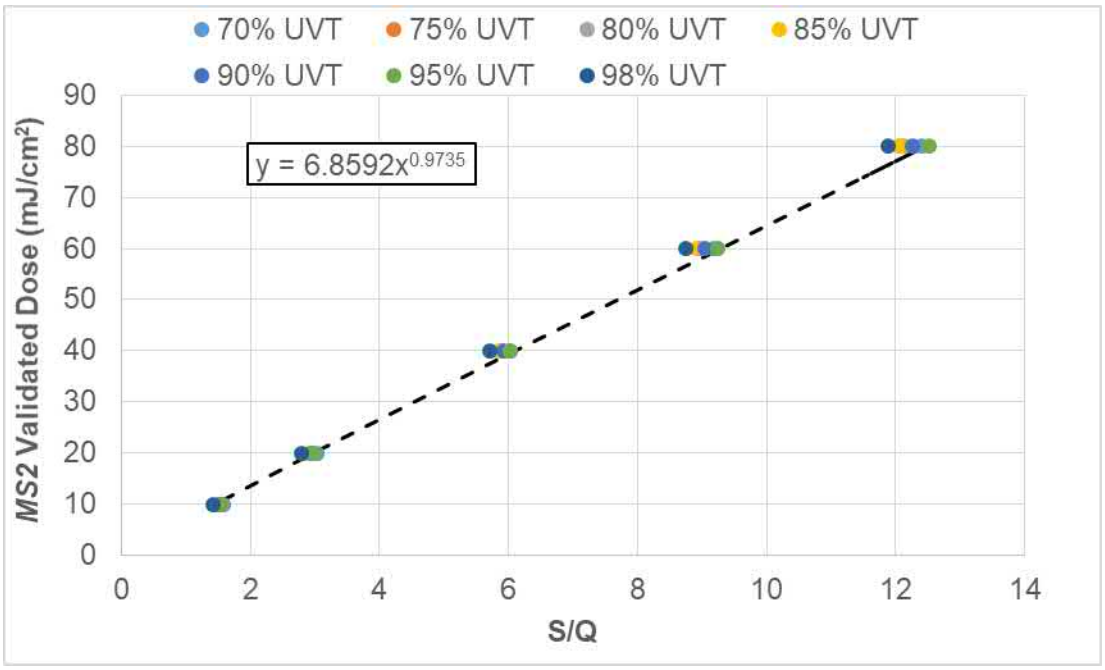

Figure 6.9 **MS2 Dose as a function of S/Q for the WF-115-4*. Dashed line shows minimum validated dose as a function of S/Q.***

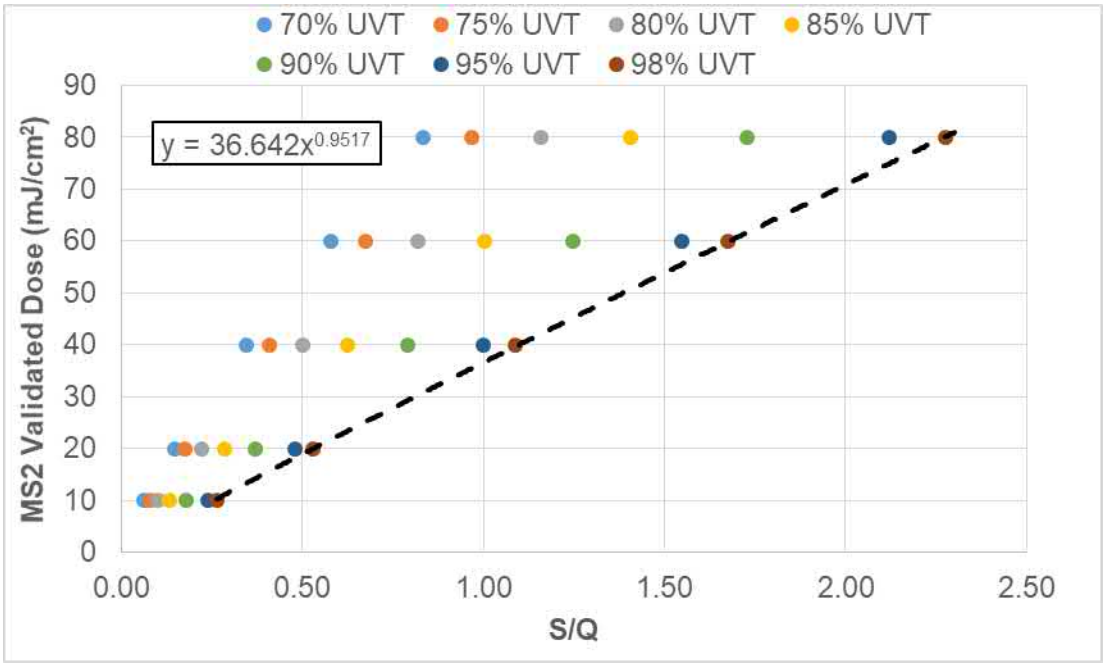

Figure 6.10 **MS2 Dose as a function of S/Q for the WF-125-6*. Dashed line shows minimum validated dose as a function of S/Q.***

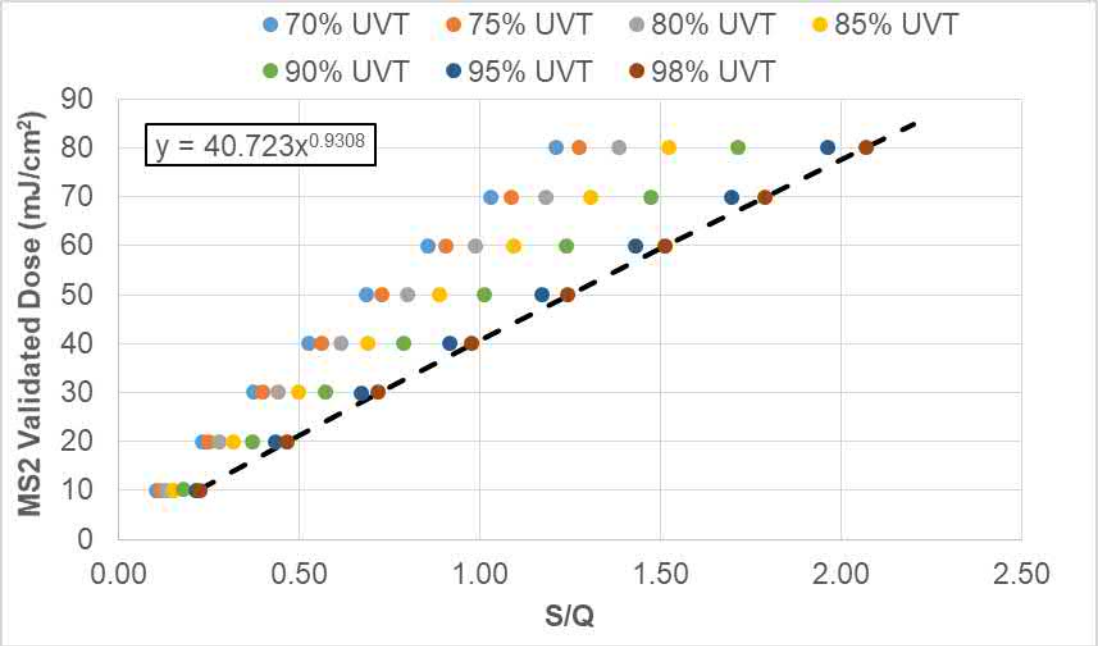

Figure 6.11 MS2 Dose as a function of S/Q for the WF-225-8*. Dashed line shows minimum validated dose as a function of S/Q.*

6.3.2 Validated UV Dose for *Cryptosporidium*, Giardia, and Adenovirus Credit

Tables 6.12a, 6.13a, and 6.14a report the target *Cryptosporidium*, Giardia and adenovirus REDs required for *Cryptosporidium*, Giardia, and adenovirus credit, respectively, for the WF-115-4 reactor. Tables 6.12b, 6.13b, and 6.14b report the validation factors associated with those target REDs. Tables 6.15a, 6.16a, and 6.17a report the target *Cryptosporidium*, Giardia and adenovirus REDs required for *Cryptosporidium*, Giardia, and adenovirus credit, respectively, for the WF-125-6 reactor. Tables 6.15b, 6.16b, and 6.17b report the validation factors associated with those target REDs. Tables 6.18a, 6.19a, and 6.20a report the target *Cryptosporidium*, Giardia and adenovirus REDs required for *Cryptosporidium*, Giardia, and adenovirus credit, respectively, for the WF-225-8 reactor. Tables 6.18b, 6.19b, and 6.20b report the validation factors associated with those target REDs.

Tables 6.12 through 6.20 are shown following Section 6.3.3.

The values in these tables were determined using the following approach:

1. Determine the UV sensitivity, DL, for the target pathogen as a function of the pathogen RED, using Equation 5.22.

2. Determine the pathogen log inactivation as the target RED divided by the DL.

3. Calculate UDR using Equations 6.10. Set the value of UDR to zero if the value is less than 15 percent.

4. Calculate UIN using Equation 6.8 and the coefficients in Table 6.2.

5. Calculate UVaI using Equation 6.4 with US set to zero.

6. Set the RED bias to a value of 1.00.

7. Calculate the ASCF using Equation 6.13 and the coefficients in Table 6.9.

8. Calculate the validation factor using Equation 6.2.

9. Calculate the validated dose using Equation 6.1.

6.3.3 Example Calculations

Continuing with Example 1 from Section 5.5.1, Examples 3 provides an example calculation of log inactivation credit for specific operating conditions.

Example 3. Calculating Log Inactivation and RED Credit

Determine the *Cryptosporidium* log inactivation credit for the WF-115-4 UV reactor described in Example 1. The flow rate is 50 m^3/hr, the UVT is 90 percent and the relative lamp output (S/S_0) is 0.87. As shown in Example 1, Equation 5.6 predicts a *Cryptosporidium* log inactivation of 4.198 log, which corresponds to a *Cryptosporidium* RED of 24.81 mJ/cm^2.

This value does not include the validation factor. According to Table 6.12a, at 90 percent UVT, the target *Cryptosporidium* REDs for 3.5 and 4.0 log inactivation credit are 20.40 and 29.59 mJ/cm^2, respectively. Therefore, the reactor operation achieves 3.5 log inactivation credit.

Alternatively, the validation factor can be calculated specifically for the reported *Cryptosporidium* RED using the equation given in this chapter. Those calculations are summarized in Table 6.11.

Table 6.11 Calculation of *Cryptosporidium* Credit with Example 3	
***Cryptosporidium* log *i* (Equation 5.6)**	4.198 log
D_L	5.909 mJ/cm^2 per log *i*
***Cryptosporidium* RED**	24.81 mJ/cm^2
B_{RED}	1.0
U_{in}	0.3624 log
U_{DR}	3.217%
U_{val}	1.087
ASCF	1.244
VF	1.352
Credited Dose	18.35 mJ/cm^2
***Crypto* inactivation credit**	3.5 logs

Example 4. Calculating Log Inactivation and RED Credit

Continuing with Example 2 from Section 5.6.1, Examples 4 provides an example calculation of log inactivation credit for specific operating conditions.

Determine the *Cryptosporidium* log inactivation credit for the WF-115-4 UV reactor described in Example 2. The flow rate is 50 m^3/hr, UVT = 90%, S/S_0 = 0.87. As shown in Example 2, Equation 5.16 predicts a *Cryptosporidium* log inactivation of 3.879 log, which corresponds to a *Cryptosporidium* RED of 19.93 mJ/cm^2.

This value does not include the validation factor. Using Equation 6.15 and the coefficients in Table 6.10, for the *Cryptosporidium* validated dose as a function of S/Q, and the flow and calculated UV sensor value used in the Example 2 calculation, the credited dose would be 18.11 mJ/cm^2.

Table 6.12a	Minimum *Crypto* RED (mJ/cm^2) Required for *Crypto* Log Inactivation Credits for the WF 115-4											
UVT	**Log Inactivation Credit of:**											
	0.5	**1**	**1.5**	**2**	**2.5**	**3**	**3.5**	**4**	**4.5**	**5**	**5.5**	**6**
66	2.32	3.29	4.82	6.91	9.87	13.65	16.89	24.49	33.14	49.35	69.76	92.21
67	2.30	3.25	4.77	6.83	9.76	13.50	16.69	24.20	32.74	48.76	68.92	91.10
68	2.29	3.23	4.74	6.79	9.69	13.40	16.57	24.02	32.50	48.39	68.40	90.41
69	2.28	3.22	4.72	6.76	9.65	13.35	16.50	23.93	32.37	48.21	68.14	90.07
70	2.28	3.22	4.72	6.76	9.65	13.34	16.49	23.92	32.35	48.17	68.10	90.01
71	2.29	3.23	4.73	6.77	9.66	13.37	16.52	23.96	32.41	48.26	68.22	90.17
72	2.29	3.24	4.74	6.79	9.70	13.41	16.58	24.05	32.53	48.44	68.48	90.51
73	2.30	3.25	4.77	6.83	9.75	13.48	16.67	24.18	32.70	48.70	68.84	90.99
74	2.31	3.27	4.79	6.87	9.81	13.56	16.77	24.33	32.91	49.01	69.27	91.57
75	2.32	3.29	4.82	6.91	9.88	13.66	16.89	24.50	33.14	49.36	69.77	92.23
76	2.33	3.31	4.86	6.96	9.95	13.76	17.02	24.69	33.40	49.74	70.31	92.95
77	2.35	3.33	4.89	7.02	10.03	13.86	17.16	24.89	33.68	50.15	70.89	93.71
78	2.36	3.36	4.93	7.08	10.11	13.98	17.31	25.10	33.97	50.58	71.50	94.52
79	2.37	3.38	4.97	7.14	10.20	14.10	17.46	25.32	34.27	51.04	72.14	95.38
80	2.39	3.41	5.02	7.20	10.29	14.22	17.62	25.56	34.59	51.51	72.82	96.27
81	2.41	3.44	5.06	7.27	10.39	14.36	17.79	25.81	34.93	52.02	73.53	97.23
82	2.42	3.47	5.11	7.34	10.49	14.50	17.98	26.07	35.30	52.57	74.31	98.25
83	2.44	3.50	5.16	7.42	10.60	14.66	18.18	26.36	35.69	53.16	75.14	99.36
84	2.46	3.54	5.22	7.50	10.73	14.83	18.40	26.68	36.13	53.81	76.06	100.6
85	2.48	3.58	5.28	7.60	10.87	15.02	18.64	27.04	36.61	54.53	77.08	101.9
86	2.51	3.62	5.35	7.70	11.02	15.24	18.91	27.43	37.16	55.34	78.22	103.5
87	2.54	3.68	5.43	7.82	11.20	15.48	19.22	27.88	37.77	56.25	79.51	105.2
88	2.58	3.73	5.52	7.96	11.39	15.76	19.57	28.38	38.45	57.27	80.96	107.1
89	2.63	3.80	5.63	8.11	11.61	16.07	19.96	28.95	39.23	58.44	82.60	109.3
90	2.67	3.87	5.74	8.28	11.87	16.43	20.40	29.59	40.11	59.75	84.46	111.7
91	2.73	3.96	5.87	8.48	12.15	16.83	20.90	30.32	41.11	61.24	86.56	114.5
92	2.79	4.05	6.02	8.70	12.46	17.28	21.47	31.15	42.23	62.91	88.92	117.7
93	2.86	4.16	6.19	8.94	12.81	17.79	22.10	32.07	43.49	64.79	91.58	121.2
94	2.94	4.28	6.38	9.22	13.21	18.36	22.81	33.11	44.91	66.88	94.56	125.1
95	3.02	4.41	6.59	9.53	13.65	18.99	23.59	34.27	46.47	69.22	97.88	129.6
96	3.12	4.56	6.82	9.87	14.13	19.70	24.46	35.55	48.21	71.81	101.6	134.4
97	3.22	4.73	7.07	10.25	14.67	20.48	25.43	36.97	50.13	74.67	105.6	139.9
98	3.34	4.91	7.35	10.66	15.27	21.33	26.49	38.52	52.25	77.82	110.1	145.8

Table 6.12b Validation Factors Required for *Crypto* Log Inactivation Credits for the WF-115-4												
UVT	**Log Inactivation Credit of:**											
	0.5	**1**	**1.5**	**2**	**2.5**	**3**	**3.5**	**4**	**4.5**	**5**	**5.5**	**6**
66	1.449	1.314	1.237	1.192	1.161	1.138	1.126	1.113	1.105	1.097	1.090	1.085
67	1.437	1.301	1.223	1.178	1.148	1.125	1.113	1.100	1.091	1.083	1.077	1.072
68	1.430	1.293	1.215	1.170	1.140	1.117	1.104	1.092	1.083	1.075	1.069	1.064
69	1.426	1.289	1.211	1.166	1.136	1.113	1.100	1.088	1.079	1.071	1.065	1.060
70	1.425	1.288	1.210	1.165	1.135	1.112	1.099	1.087	1.078	1.071	1.064	1.059
71	1.427	1.290	1.212	1.167	1.137	1.114	1.101	1.089	1.080	1.072	1.066	1.061
72	1.431	1.294	1.216	1.171	1.141	1.118	1.106	1.093	1.084	1.077	1.070	1.065
73	1.436	1.300	1.222	1.177	1.147	1.123	1.111	1.099	1.090	1.082	1.076	1.070
74	1.442	1.307	1.229	1.184	1.154	1.130	1.118	1.106	1.097	1.089	1.082	1.077
75	1.449	1.315	1.237	1.192	1.162	1.138	1.126	1.114	1.105	1.097	1.090	1.085
76	1.457	1.323	1.245	1.201	1.170	1.146	1.135	1.122	1.113	1.105	1.099	1.093
77	1.465	1.333	1.255	1.210	1.180	1.155	1.144	1.131	1.123	1.114	1.108	1.103
78	1.474	1.342	1.265	1.220	1.189	1.165	1.154	1.141	1.132	1.124	1.117	1.112
79	1.483	1.353	1.275	1.230	1.199	1.175	1.164	1.151	1.142	1.134	1.127	1.122
80	1.492	1.363	1.286	1.241	1.210	1.185	1.175	1.162	1.153	1.145	1.138	1.133
81	1.502	1.375	1.297	1.252	1.222	1.196	1.186	1.173	1.164	1.156	1.149	1.144
82	1.513	1.387	1.310	1.265	1.234	1.208	1.198	1.185	1.177	1.168	1.161	1.156
83	1.525	1.400	1.323	1.278	1.247	1.221	1.212	1.198	1.190	1.181	1.174	1.169
84	1.538	1.415	1.338	1.293	1.262	1.236	1.226	1.213	1.204	1.196	1.188	1.183
85	1.552	1.431	1.354	1.309	1.278	1.252	1.243	1.229	1.220	1.212	1.204	1.199
86	1.569	1.449	1.372	1.328	1.297	1.270	1.261	1.247	1.238	1.230	1.222	1.217
87	1.590	1.470	1.393	1.348	1.317	1.290	1.281	1.267	1.259	1.250	1.242	1.237
88	1.613	1.493	1.416	1.372	1.340	1.313	1.304	1.290	1.282	1.273	1.265	1.260
89	1.640	1.519	1.443	1.398	1.366	1.339	1.330	1.316	1.308	1.299	1.291	1.285
90	1.670	1.548	1.472	1.428	1.396	1.369	1.360	1.345	1.337	1.328	1.320	1.314
91	1.704	1.582	1.506	1.462	1.429	1.402	1.393	1.378	1.370	1.361	1.352	1.347
92	1.743	1.620	1.544	1.499	1.466	1.440	1.431	1.416	1.408	1.398	1.389	1.384
93	1.786	1.663	1.587	1.542	1.507	1.483	1.473	1.458	1.450	1.440	1.431	1.426
94	1.834	1.711	1.635	1.589	1.554	1.530	1.520	1.505	1.497	1.486	1.477	1.472
95	1.887	1.765	1.688	1.643	1.605	1.583	1.573	1.557	1.549	1.538	1.529	1.524
96	1.947	1.824	1.748	1.701	1.663	1.641	1.631	1.616	1.607	1.596	1.587	1.582
97	2.012	1.890	1.813	1.766	1.726	1.706	1.695	1.680	1.671	1.659	1.651	1.645
98	2.084	1.962	1.885	1.838	1.796	1.778	1.766	1.751	1.742	1.729	1.721	1.715

Table 6.13a Minimum Giardia RED (mJ/cm^2) Required for Giardia Log Inactivation Credits for the WF-115-4												
UVT	**Log Inactivation Credit of:**											
	0.5	**1**	**1.5**	**2**	**2.5**	**3**	**3.5**	**4**	**4.5**	**5**	**5.5**	**6**
66	2.10	2.73	3.73	6.20	8.95	12.54	16.89	24.47	30.93	46.06	65.41	91.15
67	2.08	2.71	3.69	6.13	8.84	12.40	16.69	24.19	30.56	45.51	64.63	90.04
68	2.07	2.69	3.67	6.09	8.78	12.31	16.57	24.01	30.33	45.16	64.14	89.36
69	2.07	2.68	3.65	6.06	8.75	12.26	16.50	23.92	30.21	44.99	63.90	89.02
70	2.07	2.68	3.65	6.06	8.74	12.25	16.49	23.90	30.19	44.96	63.85	88.96
71	2.07	2.68	3.66	6.07	8.76	12.28	16.52	23.95	30.25	45.04	63.97	89.13
72	2.08	2.69	3.67	6.09	8.79	12.32	16.58	24.03	30.36	45.21	64.21	89.46
73	2.08	2.70	3.69	6.12	8.83	12.38	16.67	24.16	30.52	45.45	64.55	89.94
74	2.09	2.72	3.71	6.16	8.89	12.46	16.77	24.31	30.72	45.74	64.96	90.51
75	2.10	2.73	3.73	6.20	8.95	12.55	16.89	24.48	30.94	46.07	65.43	91.16
76	2.11	2.75	3.76	6.25	9.01	12.64	17.02	24.67	31.18	46.43	65.93	91.88
77	2.12	2.77	3.79	6.30	9.09	12.74	17.16	24.86	31.43	46.81	66.48	92.64
78	2.14	2.79	3.82	6.35	9.16	12.85	17.31	25.07	31.70	47.21	67.05	93.44
79	2.15	2.81	3.85	6.40	9.24	12.96	17.46	25.29	31.98	47.63	67.65	94.28
80	2.17	2.83	3.89	6.46	9.32	13.08	17.62	25.53	32.28	48.08	68.29	95.17
81	2.19	2.85	3.92	6.52	9.41	13.20	17.79	25.77	32.60	48.55	68.96	96.12
82	2.21	2.88	3.96	6.58	9.51	13.34	17.98	26.04	32.94	49.06	69.69	97.13
83	2.22	2.91	4.00	6.65	9.61	13.48	18.18	26.33	33.31	49.62	70.48	98.23
84	2.25	2.94	4.05	6.73	9.72	13.64	18.40	26.64	33.72	50.22	71.34	99.44
85	2.27	2.97	4.10	6.81	9.85	13.82	18.64	26.99	34.17	50.90	72.30	100.8
86	2.30	3.00	4.15	6.91	9.99	14.02	18.91	27.39	34.68	51.65	73.37	102.3
87	2.33	3.05	4.22	7.02	10.15	14.24	19.22	27.83	35.25	52.50	74.58	104.0
88	2.36	3.10	4.29	7.14	10.33	14.50	19.57	28.33	35.89	53.46	75.94	105.9
89	2.40	3.16	4.37	7.28	10.53	14.78	19.96	28.90	36.62	54.54	77.49	108.0
90	2.44	3.22	4.46	7.43	10.76	15.11	20.40	29.55	37.44	55.77	79.23	110.5
91	2.49	3.30	4.57	7.61	11.01	15.47	20.90	30.28	38.37	57.16	81.21	113.3
92	2.55	3.38	4.69	7.80	11.30	15.89	21.47	31.10	39.42	58.72	83.43	116.4
93	2.61	3.47	4.82	8.03	11.63	16.35	22.10	32.03	40.60	60.47	85.93	119.9
94	2.67	3.58	4.97	8.27	11.99	16.88	22.80	33.07	41.91	62.43	88.73	123.8
95	2.75	3.69	5.13	8.55	12.40	17.46	23.58	34.22	43.38	64.62	91.85	128.2
96	2.84	3.82	5.31	8.86	12.85	18.10	24.44	35.50	45.00	67.05	95.32	133.0
97	2.93	3.96	5.51	9.19	13.34	18.82	25.40	36.92	46.79	69.73	99.14	138.4
98	3.03	4.12	5.72	9.57	13.89	19.60	26.45	38.48	48.76	72.67	103.4	144.3

Table 6.13b Validation Factors Required for Giardia Log Inactivation Credits for the WF-115-4												
UVT	**Log Inactivation Credit of:**											
	0.5	**1**	**1.5**	**2**	**2.5**	**3**	**3.5**	**4**	**4.5**	**5**	**5.5**	**6**
66	1.398	1.301	1.244	1.192	1.162	1.140	1.126	1.112	1.105	1.097	1.090	1.085
67	1.388	1.288	1.230	1.179	1.148	1.127	1.113	1.099	1.091	1.083	1.077	1.072
68	1.381	1.281	1.221	1.170	1.140	1.119	1.104	1.091	1.083	1.075	1.069	1.064
69	1.378	1.277	1.217	1.166	1.136	1.115	1.100	1.087	1.079	1.071	1.065	1.060
70	1.378	1.276	1.216	1.165	1.135	1.114	1.099	1.086	1.078	1.071	1.064	1.059
71	1.379	1.278	1.219	1.167	1.137	1.116	1.101	1.088	1.080	1.072	1.066	1.061
72	1.382	1.282	1.223	1.172	1.141	1.120	1.106	1.092	1.084	1.077	1.070	1.065
73	1.387	1.287	1.229	1.177	1.147	1.126	1.111	1.098	1.090	1.082	1.076	1.071
74	1.393	1.294	1.236	1.184	1.154	1.133	1.118	1.105	1.097	1.089	1.083	1.077
75	1.398	1.301	1.244	1.192	1.162	1.140	1.126	1.113	1.105	1.097	1.090	1.085
76	1.407	1.310	1.253	1.201	1.171	1.149	1.135	1.121	1.113	1.105	1.099	1.094
77	1.416	1.319	1.263	1.210	1.180	1.158	1.144	1.130	1.123	1.114	1.108	1.103
78	1.425	1.328	1.273	1.220	1.190	1.168	1.154	1.140	1.132	1.124	1.117	1.112
79	1.435	1.338	1.284	1.231	1.200	1.178	1.164	1.150	1.142	1.134	1.128	1.122
80	1.446	1.348	1.295	1.241	1.211	1.189	1.175	1.160	1.153	1.145	1.138	1.133
81	1.457	1.359	1.307	1.253	1.222	1.200	1.186	1.172	1.164	1.156	1.149	1.144
82	1.469	1.371	1.319	1.265	1.234	1.212	1.198	1.184	1.177	1.168	1.161	1.156
83	1.482	1.383	1.333	1.279	1.248	1.226	1.212	1.197	1.190	1.181	1.175	1.169
84	1.497	1.397	1.349	1.294	1.263	1.240	1.226	1.211	1.204	1.196	1.189	1.184
85	1.513	1.413	1.366	1.310	1.279	1.256	1.243	1.227	1.220	1.212	1.205	1.200
86	1.530	1.430	1.384	1.328	1.297	1.274	1.261	1.245	1.238	1.230	1.223	1.218
87	1.550	1.452	1.406	1.349	1.318	1.295	1.281	1.265	1.259	1.250	1.243	1.238
88	1.573	1.476	1.430	1.372	1.341	1.318	1.304	1.288	1.282	1.273	1.266	1.261
89	1.598	1.503	1.457	1.399	1.367	1.344	1.330	1.314	1.308	1.299	1.291	1.286
90	1.627	1.534	1.488	1.429	1.397	1.373	1.360	1.343	1.337	1.328	1.321	1.315
91	1.660	1.569	1.522	1.463	1.430	1.407	1.393	1.376	1.370	1.361	1.353	1.348
92	1.696	1.608	1.562	1.501	1.468	1.444	1.431	1.414	1.408	1.398	1.390	1.385
93	1.737	1.653	1.606	1.543	1.510	1.487	1.473	1.456	1.450	1.440	1.432	1.427
94	1.782	1.702	1.655	1.591	1.557	1.534	1.520	1.503	1.497	1.487	1.479	1.474
95	1.833	1.757	1.710	1.644	1.610	1.587	1.572	1.555	1.549	1.539	1.531	1.526
96	1.889	1.818	1.770	1.703	1.668	1.646	1.630	1.614	1.607	1.596	1.589	1.583
97	1.951	1.886	1.836	1.768	1.733	1.710	1.693	1.678	1.671	1.660	1.652	1.647
98	2.021	1.960	1.908	1.840	1.804	1.782	1.763	1.749	1.742	1.730	1.723	1.717

Table 6.14a Minimum Adenovirus RED (mJ/cm^2) Required for Adenovirus Log Inactivation Credits for the WF-115-4												
UVT	**Log Inactivation Credit of:**											
	0.5	**1**	**1.5**	**2**	**2.5**	**3**	**3.5**	**4**	**4.5**	**5**	**5.5**	**6**
66	55.00	73.74	94.73	115.8	136.9	158.9	179.0	202.2	224.4	247.5	269.6	292.8
67	54.46	72.85	93.51	114.2	135.0	156.7	176.5	199.3	221.1	243.9	265.7	288.5
68	54.07	72.23	92.66	113.1	133.7	155.1	174.7	197.3	218.8	241.4	262.9	285.5
69	53.82	71.83	92.11	112.4	132.8	154.1	173.6	196.0	217.4	239.8	261.1	283.5
70	53.69	71.61	91.80	112.0	132.4	153.6	172.9	195.3	216.6	238.9	260.2	282.5
71	53.64	71.54	91.70	111.9	132.2	153.4	172.7	195.0	216.3	238.6	259.9	282.1
72	53.67	71.58	91.76	112.0	132.3	153.5	172.8	195.2	216.5	238.8	260.0	282.3
73	53.75	71.71	91.95	112.2	132.6	153.9	173.2	195.6	217.0	239.3	260.6	283.0
74	53.88	71.92	92.23	112.6	133.0	154.4	173.8	196.3	217.7	240.1	261.6	284.0
75	54.04	72.18	92.59	113.0	133.6	155.0	174.6	197.1	218.7	241.2	262.7	285.2
76	54.23	72.49	93.01	113.6	134.2	155.8	175.4	198.1	219.8	242.4	264.1	286.7
77	54.44	72.82	93.47	114.2	134.9	156.6	176.4	199.2	221.0	243.8	265.6	288.3
78	54.66	73.19	93.97	114.8	135.7	157.5	177.5	200.4	222.3	245.3	267.2	290.1
79	54.91	73.59	94.51	115.5	136.6	158.5	178.6	201.7	223.8	246.9	268.9	292.0
80	55.17	74.01	95.10	116.2	137.5	159.5	179.8	203.1	225.3	248.6	270.8	294.1
81	55.45	74.47	95.73	117.0	138.4	160.7	181.1	204.6	227.0	250.4	272.9	296.3
82	55.75	74.97	96.42	117.9	139.5	161.9	182.6	206.2	228.8	252.5	275.1	298.7
83	56.09	75.53	97.18	118.9	140.7	163.3	184.2	208.0	230.9	254.7	277.5	301.4
84	56.47	76.15	98.03	119.9	142.0	164.9	185.9	210.0	233.1	257.2	280.3	304.4
85	56.89	76.84	98.99	121.2	143.5	166.6	187.9	212.3	235.7	260.1	283.4	307.8
86	57.38	77.64	100.1	122.6	145.1	168.7	190.2	214.9	238.6	263.3	286.9	311.7
87	57.93	78.54	101.3	124.2	147.1	170.9	192.8	217.9	241.9	267.0	291.0	316.1
88	58.64	79.59	102.8	126.0	149.3	173.6	195.8	221.3	245.7	271.2	295.6	321.1
89	59.48	80.82	104.4	128.1	151.8	176.6	199.2	225.2	250.1	276.1	300.9	326.9
90	60.43	82.22	106.4	130.5	154.7	180.1	203.2	229.7	255.1	281.7	307.0	333.6
91	61.52	83.83	108.5	133.3	158.0	184.0	207.7	234.9	260.8	288.0	314.0	341.2
92	62.76	85.65	111.0	136.5	161.8	188.5	212.8	240.7	267.4	295.3	322.0	349.9
93	64.16	87.72	113.8	140.0	166.1	193.7	218.6	247.4	274.8	303.6	331.0	359.7
94	65.74	90.06	117.0	144.1	171.0	199.4	225.2	254.9	283.3	312.9	341.3	370.9
95	67.51	92.69	120.6	148.6	176.5	205.9	232.7	263.4	292.7	323.4	352.8	383.5
96	69.49	95.62	124.6	153.7	182.7	213.3	241.0	272.9	303.4	335.2	365.7	397.5
97	71.69	98.89	129.1	159.3	189.7	221.4	250.3	283.5	315.2	348.4	380.1	413.2
98	74.12	102.5	134.1	165.6	197.3	230.5	260.6	295.2	328.3	363.0	396.1	430.6

Table 6.14b Validation Factors Required for Adenovirus Log Inactivation Credits for the WF-115-4												
UVT	**Log Inactivation Credit of:**											
	0.5	**1**	**1.5**	**2**	**2.5**	**3**	**3.5**	**4**	**4.5**	**5**	**5.5**	**6**
66	1.410	1.271	1.199	1.158	1.131	1.111	1.098	1.087	1.079	1.071	1.066	1.061
67	1.396	1.256	1.184	1.142	1.116	1.096	1.083	1.072	1.063	1.056	1.050	1.045
68	1.386	1.245	1.173	1.131	1.105	1.085	1.072	1.061	1.052	1.045	1.039	1.034
69	1.380	1.238	1.166	1.124	1.098	1.078	1.065	1.054	1.045	1.038	1.032	1.027
70	1.377	1.235	1.162	1.120	1.094	1.074	1.061	1.050	1.041	1.034	1.028	1.023
71	1.375	1.233	1.161	1.119	1.093	1.073	1.060	1.049	1.040	1.033	1.027	1.022
72	1.376	1.234	1.162	1.120	1.093	1.074	1.060	1.049	1.041	1.034	1.028	1.023
73	1.378	1.236	1.164	1.122	1.096	1.076	1.063	1.052	1.043	1.036	1.030	1.025
74	1.382	1.240	1.167	1.126	1.099	1.080	1.066	1.055	1.047	1.040	1.034	1.029
75	1.386	1.245	1.172	1.130	1.104	1.084	1.071	1.060	1.051	1.044	1.038	1.033
76	1.390	1.250	1.177	1.136	1.109	1.089	1.076	1.065	1.057	1.049	1.044	1.039
77	1.396	1.256	1.183	1.142	1.115	1.095	1.082	1.071	1.063	1.055	1.050	1.045
78	1.402	1.262	1.190	1.148	1.122	1.102	1.089	1.077	1.069	1.062	1.056	1.051
79	1.408	1.269	1.196	1.155	1.129	1.108	1.096	1.084	1.076	1.069	1.063	1.058
80	1.414	1.276	1.204	1.162	1.136	1.116	1.103	1.092	1.083	1.076	1.070	1.065
81	1.422	1.284	1.212	1.170	1.144	1.124	1.111	1.100	1.091	1.084	1.078	1.074
82	1.430	1.293	1.220	1.179	1.153	1.132	1.120	1.109	1.100	1.093	1.087	1.082
83	1.438	1.302	1.230	1.189	1.163	1.142	1.130	1.118	1.110	1.103	1.097	1.092
84	1.448	1.313	1.241	1.199	1.173	1.153	1.141	1.129	1.121	1.114	1.108	1.103
85	1.459	1.325	1.253	1.212	1.186	1.165	1.153	1.142	1.133	1.126	1.120	1.115
86	1.471	1.339	1.267	1.226	1.200	1.179	1.167	1.156	1.147	1.140	1.134	1.129
87	1.485	1.354	1.283	1.242	1.215	1.195	1.183	1.172	1.163	1.156	1.150	1.145
88	1.504	1.372	1.301	1.260	1.234	1.214	1.201	1.190	1.181	1.174	1.168	1.163
89	1.525	1.393	1.322	1.281	1.254	1.235	1.222	1.211	1.202	1.195	1.189	1.185
90	1.550	1.418	1.346	1.305	1.278	1.259	1.246	1.235	1.226	1.219	1.214	1.209
91	1.577	1.445	1.374	1.333	1.306	1.287	1.274	1.263	1.254	1.247	1.241	1.236
92	1.609	1.477	1.405	1.365	1.337	1.318	1.305	1.294	1.286	1.278	1.273	1.268
93	1.645	1.512	1.441	1.400	1.373	1.354	1.341	1.330	1.321	1.314	1.308	1.303
94	1.686	1.553	1.481	1.441	1.413	1.395	1.382	1.370	1.362	1.355	1.349	1.344
95	1.731	1.598	1.526	1.486	1.459	1.440	1.427	1.416	1.407	1.400	1.394	1.389
96	1.782	1.649	1.577	1.537	1.510	1.491	1.478	1.467	1.458	1.451	1.445	1.440
97	1.838	1.705	1.634	1.593	1.567	1.548	1.535	1.524	1.515	1.508	1.502	1.497
98	1.900	1.768	1.698	1.656	1.631	1.612	1.599	1.587	1.579	1.571	1.565	1.560

Table 6.15a Minimum *Crypto* RED (mJ/cm^2) Required for *Crypto* Log Inactivation Credits for the WF-125-6

UVT	Log Inactivation Credit of:											
	0.5	1	1.5	2	2.5	3	3.5	4	4.5	5	5.5	6
66	2.22	3.15	4.66	6.72	9.64	13.38	16.57	24.09	32.63	48.67	68.87	91.12
67	2.20	3.12	4.61	6.64	9.53	13.22	16.38	23.80	32.24	48.08	68.04	90.02
68	2.19	3.10	4.58	6.59	9.46	13.13	16.25	23.62	32.00	47.72	67.53	89.34
69	2.18	3.09	4.56	6.57	9.42	13.08	16.19	23.53	31.88	47.53	67.27	89.00
70	2.18	3.09	4.56	6.57	9.42	13.07	16.18	23.52	31.85	47.50	67.23	88.94
71	2.18	3.09	4.57	6.58	9.43	13.09	16.21	23.56	31.91	47.59	67.35	89.10
72	2.19	3.10	4.58	6.60	9.47	13.14	16.27	23.65	32.03	47.77	67.61	89.44
73	2.20	3.12	4.61	6.63	9.51	13.21	16.36	23.77	32.20	48.02	67.96	89.91
74	2.21	3.14	4.63	6.68	9.57	13.29	16.46	23.92	32.41	48.33	68.40	90.49
75	2.22	3.16	4.66	6.72	9.64	13.38	16.58	24.09	32.64	48.67	68.89	91.14
76	2.23	3.18	4.70	6.77	9.71	13.48	16.70	24.28	32.89	49.05	69.42	91.85
77	2.24	3.20	4.73	6.82	9.79	13.59	16.84	24.48	33.16	49.46	70.00	92.61
78	2.26	3.22	4.77	6.88	9.87	13.70	16.98	24.68	33.45	49.88	70.60	93.42
79	2.27	3.25	4.81	6.94	9.96	13.82	17.14	24.90	33.75	50.33	71.23	94.26
80	2.29	3.28	4.85	7.00	10.05	13.94	17.29	25.14	34.07	50.81	71.90	95.15
81	2.30	3.30	4.90	7.07	10.14	14.08	17.46	25.38	34.40	51.31	72.62	96.09
82	2.32	3.33	4.94	7.14	10.25	14.22	17.65	25.65	34.77	51.85	73.38	97.11
83	2.34	3.37	5.00	7.21	10.36	14.37	17.84	25.94	35.16	52.44	74.21	98.21
84	2.36	3.40	5.05	7.30	10.48	14.54	18.06	26.25	35.59	53.08	75.12	99.42
85	2.38	3.44	5.12	7.39	10.62	14.73	18.30	26.60	36.07	53.79	76.13	100.8
86	2.41	3.49	5.19	7.50	10.77	14.94	18.57	26.99	36.60	54.59	77.26	102.3
87	2.44	3.54	5.26	7.61	10.94	15.19	18.87	27.43	37.21	55.49	78.54	104.0
88	2.47	3.59	5.35	7.75	11.14	15.46	19.21	27.93	37.89	56.51	79.97	105.9
89	2.50	3.66	5.45	7.90	11.35	15.77	19.60	28.49	38.66	57.66	81.60	108.0
90	2.55	3.73	5.57	8.07	11.60	16.12	20.04	29.13	39.53	58.96	83.44	110.5
91	2.61	3.81	5.70	8.26	11.88	16.51	20.53	29.85	40.51	60.43	85.52	113.2
92	2.67	3.90	5.84	8.48	12.20	16.96	21.09	30.67	41.62	62.09	87.87	116.3
93	2.73	4.01	6.01	8.72	12.55	17.46	21.72	31.58	42.87	63.95	90.50	119.8
94	2.81	4.13	6.19	8.99	12.94	18.02	22.42	32.61	44.27	66.02	93.45	123.8
95	2.89	4.26	6.40	9.30	13.37	18.65	23.20	33.75	45.82	68.34	96.74	128.1
96	2.99	4.41	6.62	9.63	13.85	19.35	24.06	35.01	47.54	70.90	100.4	133.0
97	3.09	4.57	6.88	10.00	14.39	20.11	25.01	36.42	49.44	73.74	104.4	138.3
98	3.20	4.74	7.15	10.41	14.97	20.96	26.06	37.96	51.53	76.86	108.9	144.2

Table 6.15b Validation Factors Required for *Crypto* Log Inactivation Credits for the WF-125-6												
UVT	**Log Inactivation Credit of:**											
	0.5	**1**	**1.5**	**2**	**2.5**	**3**	**3.5**	**4**	**4.5**	**5**	**5.5**	**6**
66	1.385	1.261	1.196	1.158	1.134	1.115	1.105	1.095	1.088	1.081	1.076	1.072
67	1.373	1.248	1.182	1.145	1.120	1.102	1.092	1.082	1.075	1.068	1.063	1.059
68	1.366	1.240	1.174	1.137	1.112	1.094	1.084	1.074	1.067	1.060	1.055	1.051
69	1.362	1.236	1.170	1.133	1.108	1.090	1.079	1.070	1.063	1.056	1.051	1.047
70	1.361	1.235	1.169	1.132	1.108	1.089	1.079	1.069	1.062	1.056	1.050	1.046
71	1.363	1.237	1.171	1.134	1.109	1.091	1.081	1.071	1.064	1.058	1.052	1.048
72	1.367	1.241	1.175	1.138	1.114	1.095	1.085	1.075	1.068	1.062	1.056	1.052
73	1.372	1.247	1.181	1.144	1.119	1.101	1.090	1.080	1.073	1.067	1.062	1.058
74	1.378	1.254	1.188	1.151	1.126	1.107	1.097	1.087	1.080	1.074	1.069	1.065
75	1.385	1.262	1.196	1.159	1.134	1.115	1.105	1.095	1.088	1.082	1.076	1.072
76	1.393	1.270	1.204	1.167	1.142	1.123	1.114	1.103	1.096	1.090	1.085	1.081
77	1.401	1.279	1.213	1.176	1.151	1.132	1.123	1.112	1.105	1.099	1.094	1.090
78	1.410	1.289	1.223	1.186	1.161	1.142	1.132	1.122	1.115	1.109	1.103	1.099
79	1.419	1.299	1.233	1.196	1.171	1.152	1.142	1.132	1.125	1.118	1.113	1.109
80	1.428	1.310	1.244	1.207	1.182	1.162	1.153	1.143	1.136	1.129	1.123	1.119
81	1.438	1.321	1.255	1.218	1.193	1.173	1.164	1.154	1.147	1.140	1.135	1.131
82	1.449	1.333	1.267	1.230	1.205	1.185	1.176	1.166	1.159	1.152	1.147	1.142
83	1.461	1.346	1.281	1.244	1.218	1.198	1.189	1.179	1.172	1.165	1.160	1.155
84	1.474	1.361	1.295	1.258	1.233	1.212	1.204	1.193	1.186	1.180	1.174	1.170
85	1.488	1.376	1.311	1.274	1.249	1.228	1.220	1.209	1.202	1.195	1.190	1.185
86	1.504	1.394	1.329	1.292	1.267	1.245	1.238	1.227	1.220	1.213	1.207	1.203
87	1.522	1.414	1.350	1.313	1.287	1.265	1.258	1.247	1.240	1.233	1.227	1.223
88	1.542	1.437	1.372	1.336	1.310	1.288	1.281	1.270	1.263	1.256	1.250	1.245
89	1.565	1.463	1.398	1.362	1.336	1.314	1.307	1.295	1.289	1.281	1.275	1.271
90	1.595	1.492	1.428	1.391	1.365	1.343	1.336	1.324	1.318	1.310	1.304	1.300
91	1.628	1.525	1.461	1.424	1.398	1.376	1.369	1.357	1.350	1.343	1.336	1.332
92	1.666	1.562	1.498	1.462	1.435	1.413	1.406	1.394	1.387	1.380	1.373	1.369
93	1.708	1.604	1.540	1.503	1.476	1.455	1.448	1.435	1.429	1.421	1.414	1.410
94	1.755	1.651	1.587	1.550	1.522	1.502	1.494	1.482	1.476	1.467	1.460	1.456
95	1.808	1.704	1.640	1.603	1.573	1.554	1.546	1.534	1.527	1.519	1.512	1.507
96	1.866	1.762	1.698	1.661	1.630	1.612	1.604	1.592	1.585	1.576	1.569	1.564
97	1.930	1.826	1.763	1.725	1.693	1.676	1.667	1.655	1.648	1.639	1.632	1.628
98	2.000	1.897	1.834	1.795	1.762	1.746	1.737	1.725	1.718	1.708	1.701	1.697

Table 6.16a Minimum Giardia RED (mJ/cm^2) Required for Giardia Log Inactivation Credits for the WF-125-6												
UVT	**Log Inactivation Credit of:**											
	0.5	**1**	**1.5**	**2**	**2.5**	**3**	**3.5**	**4**	**4.5**	**5**	**5.5**	**6**
66	2.02	2.63	3.60	6.03	8.73	12.28	16.57	24.07	30.46	45.42	64.58	90.07
67	2.01	2.60	3.56	5.96	8.63	12.14	16.38	23.79	30.09	44.87	63.80	88.98
68	2.00	2.59	3.54	5.91	8.57	12.05	16.25	23.61	29.86	44.53	63.32	88.30
69	1.99	2.58	3.52	5.89	8.54	12.00	16.19	23.52	29.75	44.37	63.08	87.96
70	1.99	2.58	3.52	5.89	8.53	12.00	16.18	23.51	29.73	44.34	63.03	87.90
71	1.99	2.58	3.53	5.90	8.55	12.02	16.21	23.55	29.79	44.42	63.15	88.06
72	2.00	2.59	3.54	5.92	8.58	12.06	16.27	23.64	29.90	44.58	63.39	88.40
73	2.00	2.60	3.56	5.95	8.62	12.12	16.36	23.76	30.05	44.82	63.72	88.87
74	2.01	2.62	3.58	5.99	8.67	12.20	16.46	23.91	30.25	45.10	64.13	89.44
75	2.02	2.63	3.60	6.03	8.73	12.28	16.58	24.08	30.46	45.43	64.59	90.08
76	2.03	2.65	3.63	6.07	8.80	12.38	16.70	24.26	30.70	45.78	65.10	90.79
77	2.04	2.67	3.66	6.12	8.87	12.48	16.84	24.46	30.95	46.16	65.63	91.54
78	2.05	2.69	3.69	6.17	8.94	12.58	16.98	24.67	31.22	46.56	66.20	92.34
79	2.07	2.71	3.72	6.22	9.02	12.69	17.14	24.89	31.50	46.98	66.80	93.17
80	2.08	2.73	3.75	6.28	9.10	12.81	17.29	25.12	31.80	47.42	67.43	94.05
81	2.09	2.75	3.79	6.34	9.19	12.93	17.46	25.36	32.11	47.89	68.10	94.99
82	2.11	2.78	3.82	6.40	9.28	13.07	17.65	25.62	32.45	48.39	68.81	95.99
83	2.13	2.80	3.87	6.47	9.39	13.21	17.84	25.91	32.82	48.94	69.59	97.09
84	2.15	2.83	3.91	6.55	9.50	13.37	18.06	26.22	33.22	49.54	70.45	98.28
85	2.17	2.86	3.96	6.63	9.62	13.54	18.30	26.57	33.66	50.21	71.40	99.61
86	2.20	2.90	4.02	6.72	9.76	13.74	18.57	26.96	34.16	50.95	72.46	101.1
87	2.23	2.94	4.08	6.83	9.92	13.96	18.87	27.40	34.73	51.79	73.66	102.8
88	2.26	2.98	4.15	6.95	10.09	14.21	19.21	27.89	35.36	52.74	75.01	104.7
89	2.30	3.04	4.23	7.08	10.29	14.49	19.60	28.45	36.08	53.82	76.54	106.8
90	2.34	3.10	4.32	7.24	10.52	14.81	20.04	29.09	36.89	55.03	78.27	109.2
91	2.39	3.18	4.42	7.41	10.77	15.18	20.53	29.82	37.81	56.40	80.22	112.0
92	2.44	3.26	4.54	7.61	11.06	15.58	21.09	30.63	38.85	57.95	82.42	115.0
93	2.50	3.35	4.66	7.82	11.38	16.04	21.72	31.55	40.01	59.69	84.90	118.5
94	2.57	3.45	4.81	8.07	11.74	16.56	22.42	32.57	41.32	61.63	87.67	122.4
95	2.65	3.56	4.97	8.34	12.14	17.13	23.19	33.71	42.77	63.79	90.76	126.7
96	2.73	3.69	5.15	8.64	12.58	17.77	24.04	34.98	44.37	66.20	94.20	131.5
97	2.82	3.83	5.34	8.98	13.07	18.47	24.99	36.38	46.15	68.85	97.99	136.8
98	2.92	3.98	5.56	9.34	13.61	19.25	26.03	37.92	48.10	71.77	102.2	142.7

Table 6.16b Validation Factors Required for Giardia Log Inactivation Credits for the WF-125-6												
UVT	**Log Inactivation Credit of:**											
	0.5	**1**	**1.5**	**2**	**2.5**	**3**	**3.5**	**4**	**4.5**	**5**	**5.5**	**6**
66	1.347	1.252	1.201	1.159	1.134	1.117	1.105	1.094	1.088	1.081	1.076	1.072
67	1.336	1.240	1.187	1.145	1.121	1.103	1.092	1.081	1.075	1.068	1.063	1.059
68	1.330	1.232	1.179	1.137	1.112	1.095	1.084	1.073	1.067	1.060	1.055	1.051
69	1.326	1.228	1.174	1.133	1.108	1.091	1.079	1.069	1.063	1.056	1.051	1.047
70	1.326	1.227	1.174	1.132	1.108	1.091	1.079	1.068	1.062	1.056	1.051	1.046
71	1.327	1.229	1.176	1.134	1.110	1.092	1.081	1.070	1.064	1.058	1.052	1.048
72	1.331	1.233	1.180	1.138	1.114	1.096	1.085	1.074	1.068	1.062	1.056	1.052
73	1.335	1.238	1.186	1.144	1.119	1.102	1.090	1.080	1.073	1.067	1.062	1.058
74	1.341	1.245	1.193	1.151	1.126	1.109	1.097	1.087	1.080	1.074	1.069	1.065
75	1.347	1.252	1.201	1.159	1.134	1.117	1.105	1.094	1.088	1.082	1.077	1.072
76	1.354	1.261	1.210	1.167	1.143	1.125	1.114	1.103	1.096	1.090	1.085	1.081
77	1.361	1.269	1.219	1.177	1.152	1.134	1.123	1.112	1.105	1.099	1.094	1.090
78	1.369	1.279	1.229	1.186	1.161	1.144	1.132	1.121	1.115	1.109	1.103	1.099
79	1.377	1.288	1.239	1.196	1.171	1.154	1.142	1.131	1.125	1.119	1.113	1.109
80	1.385	1.298	1.250	1.207	1.182	1.164	1.153	1.142	1.136	1.129	1.124	1.120
81	1.394	1.309	1.262	1.219	1.193	1.176	1.164	1.153	1.147	1.140	1.135	1.131
82	1.405	1.321	1.274	1.231	1.206	1.188	1.176	1.165	1.159	1.152	1.147	1.143
83	1.417	1.334	1.288	1.244	1.219	1.201	1.189	1.178	1.172	1.165	1.160	1.156
84	1.432	1.347	1.303	1.259	1.233	1.215	1.204	1.192	1.186	1.180	1.174	1.170
85	1.447	1.363	1.320	1.275	1.249	1.231	1.220	1.208	1.202	1.195	1.190	1.186
86	1.465	1.380	1.338	1.293	1.267	1.249	1.238	1.225	1.220	1.213	1.208	1.204
87	1.485	1.399	1.359	1.313	1.288	1.269	1.258	1.245	1.240	1.233	1.228	1.223
88	1.507	1.421	1.382	1.336	1.310	1.292	1.281	1.268	1.263	1.256	1.250	1.246
89	1.532	1.447	1.409	1.362	1.336	1.317	1.307	1.293	1.289	1.281	1.276	1.271
90	1.560	1.477	1.439	1.392	1.366	1.347	1.336	1.322	1.318	1.310	1.304	1.300
91	1.592	1.512	1.473	1.425	1.399	1.379	1.369	1.355	1.350	1.343	1.337	1.333
92	1.628	1.550	1.512	1.462	1.436	1.417	1.406	1.392	1.387	1.380	1.374	1.370
93	1.669	1.593	1.555	1.504	1.478	1.458	1.448	1.434	1.429	1.421	1.415	1.411
94	1.714	1.642	1.603	1.551	1.524	1.505	1.494	1.480	1.476	1.467	1.461	1.457
95	1.764	1.696	1.657	1.604	1.576	1.557	1.546	1.532	1.527	1.519	1.513	1.509
96	1.820	1.756	1.716	1.662	1.634	1.615	1.603	1.590	1.585	1.576	1.570	1.566
97	1.882	1.822	1.781	1.726	1.698	1.679	1.666	1.654	1.648	1.639	1.633	1.629
98	1.949	1.894	1.852	1.797	1.768	1.750	1.735	1.724	1.718	1.709	1.703	1.698

Table 6.17a Minimum Adenovirus RED (mJ/cm^2) Required for Adenovirus Log Inactivation Credits for the WF-125-6												
UVT	**Log Inactivation Credit of:**											
	0.5	**1**	**1.5**	**2**	**2.5**	**3**	**3.5**	**4**	**4.5**	**5**	**5.5**	**6**
66	52.70	71.06	91.91	112.9	133.9	155.9	176.0	199.1	221.2	244.3	266.4	289.5
67	52.15	70.18	90.69	111.3	132.0	153.7	173.4	196.2	218.0	240.7	262.5	285.3
68	51.76	69.56	89.84	110.2	130.7	152.1	171.6	194.2	215.7	238.2	259.7	282.2
69	51.51	69.16	89.29	109.5	129.9	151.1	170.5	192.9	214.2	236.6	258.0	280.3
70	51.37	68.94	88.99	109.1	129.4	150.6	169.9	192.2	213.4	235.7	257.0	279.3
71	51.33	68.86	88.89	109.0	129.2	150.4	169.7	191.9	213.2	235.4	256.7	278.9
72	51.35	68.91	88.95	109.1	129.3	150.5	169.8	192.1	213.3	235.6	256.9	279.1
73	51.44	69.04	89.14	109.3	129.6	150.9	170.2	192.5	213.8	236.1	257.5	279.8
74	51.57	69.25	89.42	109.7	130.0	151.4	170.8	193.2	214.6	237.0	258.4	280.8
75	51.73	69.51	89.77	110.1	130.6	152.0	171.5	194.0	215.5	238.0	259.5	282.0
76	51.92	69.81	90.19	110.7	131.2	152.8	172.4	195.0	216.6	239.3	260.9	283.5
77	52.13	70.15	90.65	111.3	132.0	153.6	173.3	196.1	217.9	240.6	262.4	285.1
78	52.36	70.51	91.15	111.9	132.7	154.5	174.4	197.3	219.2	242.1	264.0	286.9
79	52.60	70.91	91.69	112.6	133.6	155.5	175.5	198.6	220.6	243.7	265.7	288.8
80	52.86	71.33	92.28	113.3	134.5	156.6	176.7	200.0	222.2	245.4	267.6	290.8
81	53.15	71.79	92.90	114.1	135.4	157.7	178.0	201.5	223.9	247.3	269.6	293.1
82	53.46	72.29	93.59	115.0	136.5	158.9	179.5	203.1	225.7	249.3	271.9	295.5
83	53.80	72.84	94.35	116.0	137.7	160.3	181.1	204.9	227.7	251.5	274.3	298.2
84	54.18	73.46	95.20	117.0	139.0	161.9	182.8	206.9	230.0	254.0	277.1	301.2
85	54.61	74.16	96.16	118.3	140.5	163.6	184.8	209.2	232.5	256.9	280.2	304.6
86	55.10	74.95	97.25	119.6	142.2	165.6	187.1	211.8	235.4	260.1	283.7	308.4
87	55.65	75.85	98.49	121.2	144.1	167.9	189.7	214.8	238.7	263.8	287.8	312.8
88	56.29	76.89	99.92	123.1	146.3	170.5	192.7	218.2	242.5	268.0	292.4	317.9
89	57.02	78.08	101.6	125.2	148.8	173.5	196.1	222.1	246.9	272.9	297.7	323.7
90	57.85	79.45	103.5	127.6	151.7	177.0	200.1	226.6	251.9	278.4	303.8	330.3
91	58.91	81.04	105.6	130.3	155.0	180.9	204.5	231.7	257.7	284.8	310.8	337.9
92	60.14	82.86	108.1	133.5	158.8	185.4	209.7	237.6	264.2	292.1	318.7	346.6
93	61.53	84.92	110.9	137.0	163.1	190.6	215.5	244.2	271.6	300.3	327.8	356.5
94	63.10	87.25	114.1	141.1	168.0	196.3	222.1	251.7	280.0	309.7	338.0	367.6
95	64.86	89.87	117.7	145.6	173.5	202.8	229.5	260.2	289.5	320.2	349.5	380.2
96	66.83	92.80	121.7	150.7	179.7	210.1	237.8	269.7	300.1	332.0	362.4	394.2
97	69.02	96.06	126.2	156.3	186.6	218.3	247.1	280.2	311.9	345.1	376.8	409.9
98	71.44	99.68	131.1	162.6	194.2	227.3	257.4	292.0	325.1	359.7	392.7	427.3

Table 6.17b Validation Factors Required for Adenovirus Log Inactivation Credits for the WF-125-6												
UVT	**Log Inactivation Credit of:**											
	0.5	**1**	**1.5**	**2**	**2.5**	**3**	**3.5**	**4**	**4.5**	**5**	**5.5**	**6**
66	1.351	1.225	1.163	1.129	1.107	1.090	1.080	1.070	1.063	1.058	1.053	1.049
67	1.337	1.210	1.148	1.113	1.091	1.075	1.064	1.055	1.048	1.042	1.037	1.034
68	1.327	1.199	1.137	1.102	1.080	1.064	1.053	1.044	1.037	1.031	1.027	1.023
69	1.321	1.192	1.130	1.095	1.073	1.057	1.046	1.037	1.030	1.024	1.020	1.016
70	1.317	1.189	1.126	1.091	1.069	1.053	1.042	1.033	1.026	1.020	1.016	1.012
71	1.316	1.187	1.125	1.090	1.068	1.052	1.041	1.032	1.025	1.019	1.014	1.011
72	1.317	1.188	1.126	1.091	1.069	1.053	1.042	1.033	1.026	1.020	1.015	1.011
73	1.319	1.190	1.128	1.093	1.071	1.055	1.044	1.035	1.028	1.022	1.018	1.014
74	1.322	1.194	1.132	1.097	1.075	1.059	1.048	1.039	1.032	1.026	1.021	1.017
75	1.326	1.198	1.136	1.101	1.079	1.063	1.052	1.043	1.036	1.030	1.026	1.022
76	1.331	1.204	1.142	1.107	1.085	1.068	1.057	1.048	1.042	1.036	1.031	1.027
77	1.337	1.209	1.147	1.113	1.091	1.074	1.063	1.054	1.047	1.042	1.037	1.033
78	1.342	1.216	1.154	1.119	1.097	1.081	1.070	1.061	1.054	1.048	1.043	1.039
79	1.349	1.223	1.161	1.126	1.104	1.087	1.077	1.068	1.061	1.055	1.050	1.046
80	1.355	1.230	1.168	1.133	1.111	1.095	1.084	1.075	1.068	1.062	1.058	1.054
81	1.363	1.238	1.176	1.141	1.119	1.103	1.092	1.083	1.076	1.070	1.066	1.062
82	1.371	1.246	1.185	1.150	1.128	1.111	1.101	1.092	1.085	1.079	1.075	1.071
83	1.379	1.256	1.194	1.160	1.138	1.121	1.111	1.102	1.095	1.089	1.084	1.080
84	1.389	1.267	1.205	1.170	1.149	1.132	1.122	1.112	1.106	1.100	1.095	1.091
85	1.400	1.279	1.217	1.183	1.161	1.144	1.134	1.125	1.118	1.112	1.107	1.103
86	1.413	1.292	1.231	1.196	1.175	1.158	1.148	1.139	1.132	1.126	1.121	1.117
87	1.427	1.308	1.247	1.212	1.191	1.174	1.164	1.155	1.148	1.142	1.137	1.133
88	1.443	1.326	1.265	1.231	1.209	1.192	1.182	1.173	1.166	1.160	1.156	1.152
89	1.462	1.346	1.286	1.252	1.230	1.214	1.203	1.194	1.187	1.181	1.177	1.173
90	1.483	1.370	1.310	1.276	1.254	1.238	1.227	1.218	1.211	1.205	1.201	1.197
91	1.510	1.397	1.337	1.303	1.281	1.265	1.255	1.246	1.239	1.233	1.228	1.224
92	1.542	1.429	1.368	1.335	1.312	1.297	1.286	1.277	1.270	1.264	1.260	1.256
93	1.578	1.464	1.404	1.370	1.348	1.333	1.322	1.313	1.306	1.300	1.296	1.291
94	1.618	1.504	1.444	1.411	1.388	1.373	1.363	1.353	1.346	1.341	1.336	1.332
95	1.663	1.549	1.489	1.456	1.434	1.418	1.408	1.399	1.392	1.386	1.381	1.377
96	1.714	1.600	1.540	1.507	1.485	1.469	1.459	1.450	1.443	1.437	1.432	1.428
97	1.770	1.656	1.597	1.563	1.542	1.526	1.516	1.507	1.500	1.494	1.489	1.485
98	1.832	1.719	1.660	1.626	1.605	1.590	1.579	1.570	1.563	1.557	1.552	1.548

Table 6.18a Minimum *Crypto* RED (mJ/cm^2) Required for *Crypto* Log Inactivation Credits for the WF-225-8												
UVT	**Log Inactivation Credit of:**											
	0.5	**1**	**1.5**	**2**	**2.5**	**3**	**3.5**	**4**	**4.5**	**5**	**5.5**	**6**
66	2.15	3.07	4.56	6.60	9.49	13.21	16.38	23.83	32.32	48.24	68.33	90.45
67	2.13	3.04	4.51	6.52	9.38	13.05	16.18	23.55	31.93	47.66	67.50	89.36
68	2.12	3.02	4.48	6.47	9.31	12.96	16.06	23.37	31.69	47.30	66.99	88.68
69	2.11	3.01	4.46	6.45	9.27	12.91	16.00	23.28	31.57	47.12	66.73	88.34
70	2.11	3.00	4.46	6.45	9.27	12.90	15.99	23.27	31.55	47.09	66.69	88.28
71	2.11	3.01	4.47	6.46	9.28	12.92	16.02	23.31	31.60	47.17	66.81	88.44
72	2.12	3.02	4.48	6.48	9.32	12.97	16.08	23.40	31.72	47.35	67.06	88.78
73	2.13	3.03	4.51	6.51	9.37	13.04	16.16	23.52	31.89	47.60	67.42	89.25
74	2.14	3.05	4.53	6.55	9.42	13.12	16.26	23.67	32.09	47.90	67.85	89.82
75	2.15	3.07	4.56	6.60	9.49	13.21	16.38	23.84	32.33	48.25	68.34	90.47
76	2.16	3.09	4.60	6.65	9.56	13.31	16.51	24.02	32.58	48.63	68.87	91.18
77	2.17	3.11	4.63	6.70	9.64	13.41	16.64	24.22	32.85	49.03	69.44	91.93
78	2.19	3.14	4.67	6.76	9.72	13.53	16.78	24.43	33.13	49.45	70.04	92.73
79	2.20	3.16	4.71	6.81	9.80	13.64	16.93	24.65	33.43	49.90	70.67	93.57
80	2.22	3.19	4.75	6.88	9.89	13.77	17.09	24.88	33.74	50.37	71.34	94.45
81	2.23	3.22	4.79	6.94	9.99	13.90	17.26	25.12	34.08	50.87	72.05	95.39
82	2.25	3.25	4.84	7.01	10.09	14.04	17.44	25.38	34.44	51.40	72.81	96.40
83	2.27	3.28	4.89	7.09	10.20	14.20	17.64	25.67	34.83	51.99	73.63	97.50
84	2.29	3.31	4.95	7.17	10.32	14.37	17.85	25.98	35.25	52.63	74.54	98.70
85	2.31	3.35	5.01	7.26	10.46	14.55	18.09	26.33	35.73	53.34	75.54	100.0
86	2.34	3.40	5.08	7.37	10.61	14.76	18.36	26.72	36.26	54.13	76.67	101.5
87	2.37	3.45	5.16	7.48	10.78	15.00	18.66	27.16	36.86	55.02	77.93	103.2
88	2.40	3.50	5.24	7.62	10.97	15.27	19.00	27.65	37.53	56.03	79.36	105.1
89	2.44	3.57	5.34	7.76	11.19	15.58	19.38	28.21	38.30	57.17	80.98	107.3
90	2.48	3.64	5.46	7.93	11.44	15.93	19.81	28.84	39.16	58.47	82.81	109.7
91	2.53	3.72	5.59	8.12	11.72	16.32	20.30	29.56	40.14	59.93	84.88	112.4
92	2.59	3.81	5.73	8.34	12.03	16.76	20.86	30.37	41.24	61.57	87.21	115.5
93	2.65	3.91	5.89	8.58	12.38	17.26	21.48	31.27	42.48	63.43	89.83	119.0
94	2.73	4.03	6.07	8.85	12.77	17.82	22.18	32.29	43.87	65.49	92.76	122.9
95	2.81	4.16	6.28	9.15	13.20	18.44	22.95	33.42	45.41	67.79	96.04	127.3
96	2.90	4.31	6.50	9.48	13.68	19.13	23.80	34.68	47.12	70.34	99.67	132.1
97	3.00	4.47	6.75	9.85	14.21	19.89	24.75	36.07	49.01	73.17	103.7	137.4
98	3.12	4.64	7.03	10.26	14.79	20.73	25.79	37.60	51.09	76.27	108.1	143.3

Table 6.18b Validation Factors Required for *Crypto* Log Inactivation Credits for the WF-225-8												
UVT	**Log Inactivation Credit of:**											
	0.5	**1**	**1.5**	**2**	**2.5**	**3**	**3.5**	**4**	**4.5**	**5**	**5.5**	**6**
66	1.341	1.227	1.169	1.137	1.116	1.100	1.092	1.083	1.077	1.072	1.068	1.064
67	1.329	1.214	1.156	1.124	1.103	1.088	1.079	1.070	1.064	1.059	1.055	1.051
68	1.322	1.206	1.148	1.116	1.095	1.080	1.071	1.062	1.056	1.051	1.047	1.043
69	1.318	1.202	1.144	1.112	1.091	1.076	1.067	1.058	1.052	1.047	1.043	1.039
70	1.317	1.201	1.143	1.111	1.090	1.075	1.066	1.058	1.052	1.046	1.042	1.039
71	1.319	1.203	1.145	1.113	1.092	1.077	1.068	1.059	1.053	1.048	1.044	1.040
72	1.323	1.207	1.149	1.117	1.096	1.081	1.072	1.063	1.057	1.052	1.048	1.044
73	1.328	1.213	1.155	1.123	1.102	1.086	1.077	1.069	1.063	1.058	1.053	1.050
74	1.334	1.220	1.162	1.130	1.109	1.093	1.084	1.076	1.070	1.065	1.060	1.057
75	1.341	1.227	1.170	1.137	1.116	1.101	1.092	1.083	1.077	1.072	1.068	1.064
76	1.349	1.236	1.178	1.146	1.125	1.109	1.100	1.092	1.086	1.081	1.076	1.073
77	1.357	1.245	1.187	1.155	1.134	1.118	1.109	1.101	1.095	1.089	1.085	1.082
78	1.366	1.254	1.197	1.165	1.143	1.127	1.119	1.110	1.104	1.099	1.094	1.091
79	1.375	1.264	1.207	1.175	1.153	1.137	1.129	1.120	1.114	1.109	1.104	1.101
80	1.384	1.275	1.217	1.185	1.164	1.147	1.139	1.131	1.125	1.119	1.115	1.111
81	1.394	1.286	1.228	1.196	1.175	1.158	1.151	1.142	1.136	1.130	1.126	1.122
82	1.405	1.298	1.241	1.209	1.187	1.170	1.163	1.154	1.148	1.142	1.138	1.134
83	1.417	1.311	1.254	1.222	1.200	1.183	1.176	1.167	1.161	1.155	1.150	1.147
84	1.430	1.325	1.268	1.236	1.215	1.197	1.190	1.181	1.175	1.169	1.165	1.161
85	1.444	1.341	1.284	1.252	1.230	1.213	1.206	1.197	1.191	1.185	1.180	1.177
86	1.460	1.359	1.302	1.270	1.248	1.230	1.224	1.214	1.209	1.203	1.198	1.194
87	1.478	1.379	1.322	1.290	1.268	1.250	1.244	1.234	1.229	1.223	1.218	1.214
88	1.498	1.401	1.345	1.313	1.291	1.272	1.266	1.257	1.251	1.245	1.240	1.237
89	1.521	1.426	1.370	1.338	1.317	1.298	1.292	1.282	1.277	1.271	1.265	1.262
90	1.547	1.455	1.399	1.368	1.346	1.327	1.321	1.311	1.305	1.299	1.294	1.290
91	1.578	1.488	1.432	1.400	1.378	1.360	1.354	1.343	1.338	1.332	1.326	1.323
92	1.615	1.524	1.469	1.438	1.415	1.397	1.390	1.380	1.375	1.368	1.363	1.359
93	1.657	1.566	1.511	1.479	1.456	1.438	1.432	1.422	1.416	1.409	1.404	1.400
94	1.704	1.612	1.557	1.526	1.502	1.485	1.478	1.468	1.462	1.455	1.449	1.446
95	1.755	1.664	1.609	1.578	1.553	1.536	1.530	1.519	1.514	1.506	1.501	1.497
96	1.813	1.722	1.667	1.635	1.609	1.594	1.587	1.576	1.571	1.563	1.557	1.554
97	1.877	1.786	1.731	1.699	1.672	1.657	1.650	1.640	1.634	1.626	1.620	1.616
98	1.946	1.856	1.801	1.768	1.740	1.727	1.719	1.709	1.703	1.695	1.689	1.685

Table 6.19a Minimum Giardia RED (mJ/cm^2) Required for Giardia Log Inactivation Credits for the WF-225-8												
UVT	**Log Inactivation Credit of:**											
	0.5	**1**	**1.5**	**2**	**2.5**	**3**	**3.5**	**4**	**4.5**	**5**	**5.5**	**6**
66	1.97	2.56	3.52	5.92	8.60	12.12	16.38	23.82	30.16	45.02	64.06	89.40
67	1.95	2.54	3.48	5.85	8.50	11.98	16.18	23.54	29.80	44.48	63.29	88.31
68	1.94	2.52	3.46	5.80	8.43	11.89	16.06	23.36	29.57	44.14	62.81	87.64
69	1.94	2.51	3.44	5.78	8.40	11.84	16.00	23.28	29.46	43.98	62.57	87.31
70	1.94	2.51	3.44	5.78	8.40	11.84	15.99	23.26	29.44	43.95	62.53	87.25
71	1.94	2.51	3.45	5.79	8.41	11.86	16.02	23.30	29.50	44.03	62.64	87.41
72	1.94	2.52	3.46	5.81	8.44	11.90	16.08	23.39	29.61	44.19	62.88	87.74
73	1.95	2.53	3.48	5.84	8.49	11.96	16.16	23.51	29.76	44.43	63.21	88.20
74	1.96	2.55	3.50	5.88	8.54	12.04	16.26	23.66	29.95	44.71	63.62	88.77
75	1.97	2.56	3.52	5.92	8.60	12.12	16.38	23.83	30.17	45.03	64.07	89.41
76	1.98	2.58	3.55	5.96	8.66	12.21	16.51	24.01	30.41	45.38	64.58	90.12
77	1.99	2.60	3.57	6.01	8.73	12.31	16.64	24.21	30.66	45.76	65.11	90.86
78	2.00	2.62	3.60	6.06	8.81	12.42	16.78	24.41	30.92	46.16	65.67	91.65
79	2.01	2.64	3.64	6.11	8.88	12.53	16.93	24.63	31.20	46.57	66.27	92.48
80	2.03	2.66	3.67	6.17	8.96	12.64	17.09	24.86	31.49	47.01	66.89	93.36
81	2.04	2.68	3.70	6.22	9.05	12.76	17.26	25.10	31.81	47.48	67.56	94.29
82	2.05	2.71	3.74	6.29	9.14	12.90	17.44	25.36	32.14	47.98	68.27	95.29
83	2.07	2.73	3.78	6.36	9.24	13.04	17.64	25.65	32.51	48.52	69.05	96.37
84	2.09	2.76	3.82	6.43	9.36	13.20	17.85	25.96	32.90	49.12	69.90	97.57
85	2.11	2.79	3.87	6.51	9.48	13.37	18.09	26.31	33.35	49.78	70.84	98.89
86	2.13	2.83	3.93	6.61	9.62	13.57	18.36	26.69	33.84	50.52	71.90	100.4
87	2.16	2.87	3.99	6.71	9.77	13.78	18.66	27.13	34.40	51.36	73.09	102.0
88	2.20	2.92	4.06	6.83	9.94	14.03	19.00	27.62	35.03	52.30	74.43	103.9
89	2.23	2.97	4.14	6.96	10.14	14.31	19.38	28.18	35.75	53.36	75.95	106.0
90	2.28	3.03	4.23	7.12	10.37	14.63	19.81	28.81	36.55	54.57	77.67	108.4
91	2.32	3.10	4.33	7.29	10.62	14.99	20.30	29.53	37.47	55.93	79.61	111.2
92	2.38	3.18	4.44	7.48	10.90	15.40	20.86	30.34	38.49	57.47	81.80	114.2
93	2.44	3.27	4.57	7.70	11.22	15.85	21.48	31.24	39.65	59.20	84.26	117.7
94	2.51	3.37	4.71	7.94	11.58	16.36	22.17	32.26	40.94	61.13	87.02	121.5
95	2.58	3.48	4.87	8.21	11.97	16.93	22.94	33.39	42.39	63.28	90.09	125.8
96	2.66	3.60	5.05	8.51	12.42	17.56	23.79	34.65	43.98	65.67	93.50	130.6
97	2.76	3.74	5.24	8.84	12.90	18.26	24.73	36.04	45.74	68.31	97.27	135.9
98	2.86	3.89	5.45	9.20	13.44	19.03	25.77	37.57	47.68	71.21	101.4	141.7

Table 6.19b Validation Factors Required for Giardia Log Inactivation Credits for the WF-225-8												
UVT	**Log Inactivation Credit of:**											
	0.5	**1**	**1.5**	**2**	**2.5**	**3**	**3.5**	**4**	**4.5**	**5**	**5.5**	**6**
66	1.311	1.220	1.173	1.137	1.116	1.102	1.092	1.083	1.077	1.072	1.068	1.064
67	1.300	1.207	1.160	1.124	1.103	1.089	1.079	1.070	1.064	1.059	1.055	1.051
68	1.293	1.200	1.151	1.116	1.095	1.081	1.071	1.062	1.056	1.051	1.047	1.043
69	1.290	1.196	1.147	1.112	1.091	1.077	1.067	1.058	1.052	1.047	1.043	1.039
70	1.289	1.195	1.147	1.111	1.090	1.076	1.066	1.057	1.052	1.046	1.042	1.039
71	1.291	1.197	1.149	1.113	1.092	1.078	1.068	1.059	1.053	1.048	1.044	1.041
72	1.294	1.201	1.153	1.117	1.096	1.082	1.072	1.063	1.057	1.052	1.048	1.045
73	1.299	1.206	1.158	1.123	1.102	1.087	1.077	1.069	1.063	1.058	1.053	1.050
74	1.304	1.213	1.165	1.130	1.109	1.094	1.084	1.075	1.070	1.065	1.060	1.057
75	1.311	1.220	1.173	1.138	1.117	1.102	1.092	1.083	1.077	1.072	1.068	1.064
76	1.318	1.228	1.182	1.146	1.125	1.110	1.100	1.091	1.086	1.081	1.076	1.073
77	1.325	1.237	1.191	1.155	1.134	1.119	1.109	1.100	1.095	1.089	1.085	1.082
78	1.333	1.246	1.201	1.165	1.144	1.129	1.119	1.110	1.104	1.099	1.095	1.091
79	1.341	1.256	1.211	1.175	1.154	1.139	1.129	1.120	1.114	1.109	1.104	1.101
80	1.350	1.266	1.222	1.185	1.164	1.149	1.139	1.130	1.125	1.119	1.115	1.111
81	1.359	1.277	1.234	1.197	1.175	1.160	1.151	1.141	1.136	1.130	1.126	1.122
82	1.368	1.288	1.246	1.209	1.187	1.172	1.163	1.153	1.148	1.142	1.138	1.134
83	1.379	1.301	1.259	1.222	1.201	1.185	1.176	1.166	1.161	1.155	1.151	1.147
84	1.390	1.315	1.274	1.236	1.215	1.200	1.190	1.180	1.175	1.169	1.165	1.161
85	1.404	1.330	1.290	1.252	1.231	1.215	1.206	1.196	1.191	1.185	1.181	1.177
86	1.421	1.347	1.309	1.270	1.249	1.233	1.224	1.213	1.209	1.203	1.198	1.195
87	1.441	1.366	1.329	1.290	1.269	1.253	1.244	1.233	1.229	1.223	1.218	1.215
88	1.463	1.388	1.352	1.313	1.291	1.276	1.266	1.255	1.251	1.245	1.240	1.237
89	1.488	1.413	1.379	1.339	1.317	1.301	1.292	1.281	1.277	1.271	1.266	1.262
90	1.516	1.441	1.408	1.368	1.346	1.330	1.321	1.310	1.305	1.299	1.294	1.291
91	1.548	1.475	1.442	1.401	1.379	1.363	1.354	1.342	1.338	1.332	1.327	1.323
92	1.584	1.513	1.480	1.438	1.416	1.399	1.390	1.379	1.375	1.368	1.363	1.360
93	1.624	1.556	1.522	1.480	1.457	1.441	1.432	1.420	1.416	1.409	1.404	1.401
94	1.669	1.603	1.570	1.526	1.503	1.487	1.478	1.466	1.462	1.455	1.450	1.447
95	1.719	1.657	1.623	1.578	1.555	1.539	1.529	1.518	1.514	1.507	1.501	1.498
96	1.775	1.716	1.682	1.636	1.612	1.597	1.586	1.575	1.571	1.564	1.558	1.555
97	1.836	1.781	1.747	1.700	1.676	1.660	1.649	1.638	1.634	1.626	1.621	1.618
98	1.903	1.853	1.817	1.770	1.745	1.730	1.718	1.708	1.703	1.695	1.690	1.687

Table 6.20a Minimum Adenovirus RED (mJ/cm^2) Required for Adenovirus Log Inactivation Credits for the WF-225-8												
UVT	**Log Inactivation Credit of:**											
	0.5	**1**	**1.5**	**2**	**2.5**	**3**	**3.5**	**4**	**4.5**	**5**	**5.5**	**6**
66	51.10	69.29	90.07	111.0	132.0	154.0	174.0	197.1	219.2	242.3	264.4	287.5
67	50.55	68.40	88.85	109.4	130.1	151.8	171.5	194.2	216.0	238.7	260.5	283.2
68	50.16	67.78	88.00	108.4	128.8	150.2	169.7	192.2	213.7	236.2	257.7	280.2
69	49.91	67.38	87.45	107.7	127.9	149.2	168.6	190.9	212.3	234.6	255.9	278.3
70	49.77	67.16	87.15	107.3	127.5	148.7	167.9	190.2	211.5	233.7	255.0	277.2
71	49.72	67.09	87.05	107.1	127.3	148.5	167.7	190.0	211.2	233.4	254.7	276.9
72	49.75	67.14	87.11	107.2	127.4	148.6	167.8	190.1	211.4	233.6	254.8	277.1
73	49.84	67.27	87.30	107.5	127.7	149.0	168.2	190.5	211.8	234.1	255.4	277.7
74	49.96	67.48	87.58	107.8	128.1	149.5	168.8	191.2	212.6	235.0	256.4	278.7
75	50.13	67.74	87.94	108.3	128.7	150.1	169.6	192.1	213.5	236.0	257.5	280.0
76	50.32	68.04	88.35	108.8	129.3	150.9	170.4	193.0	214.6	237.3	258.8	281.5
77	50.53	68.37	88.81	109.4	130.0	151.7	171.4	194.1	215.9	238.6	260.3	283.1
78	50.76	68.74	89.31	110.0	130.8	152.6	172.4	195.3	217.2	240.1	262.0	284.9
79	51.00	69.13	89.85	110.7	131.7	153.6	173.6	196.6	218.6	241.7	263.7	286.8
80	51.27	69.56	90.44	111.4	132.5	154.6	174.8	198.0	220.2	243.4	265.6	288.8
81	51.55	70.01	91.06	112.2	133.5	155.8	176.1	199.5	221.9	245.3	267.6	291.0
82	51.87	70.51	91.75	113.1	134.6	157.0	177.5	201.1	223.7	247.3	269.9	293.5
83	52.21	71.07	92.51	114.1	135.8	158.4	179.1	202.9	225.7	249.5	272.3	296.1
84	52.60	71.68	93.36	115.2	137.1	159.9	180.9	204.9	228.0	252.0	275.1	299.1
85	53.03	72.38	94.32	116.4	138.5	161.7	182.9	207.2	230.5	254.9	278.2	302.5
86	53.52	73.17	95.40	117.8	140.2	163.7	185.2	209.8	233.4	258.1	281.7	306.4
87	54.08	74.08	96.65	119.3	142.2	166.0	187.8	212.8	236.7	261.8	285.7	310.8
88	54.73	75.11	98.08	121.2	144.4	168.6	190.7	216.2	240.5	266.0	290.4	315.8
89	55.46	76.30	99.71	123.3	146.9	171.6	194.2	220.1	244.9	270.9	295.7	321.6
90	56.30	77.66	101.6	125.7	149.8	175.0	198.1	224.6	249.9	276.4	301.8	328.3
91	57.26	79.22	103.8	128.4	153.1	179.0	202.6	229.7	255.6	282.8	308.7	335.9
92	58.39	81.03	106.2	131.6	156.9	183.5	207.7	235.6	262.2	290.0	316.7	344.5
93	59.78	83.09	109.0	135.1	161.1	188.6	213.5	242.2	269.6	298.3	325.7	354.4
94	61.34	85.42	112.2	139.1	166.0	194.4	220.1	249.7	278.0	307.6	335.9	365.5
95	63.10	88.03	115.8	143.7	171.5	200.9	227.5	258.2	287.5	318.1	347.4	378.1
96	65.06	90.96	119.8	148.7	177.7	208.1	235.8	267.6	298.1	329.9	360.3	392.1
97	67.24	94.22	124.3	154.4	184.6	216.3	245.1	278.2	309.9	343.0	374.7	407.8
98	69.66	97.83	129.2	160.6	192.2	225.3	255.4	289.9	323.0	357.6	390.7	425.2

Table 6.20b Validation Factors Required for Adenovirus Log Inactivation Credits for the WF-225-8												
UVT	**Log Inactivation Credit of:**											
	0.5	**1**	**1.5**	**2**	**2.5**	**3**	**3.5**	**4**	**4.5**	**5**	**5.5**	**6**
66	1.310	1.195	1.140	1.110	1.091	1.077	1.068	1.060	1.054	1.049	1.045	1.042
67	1.296	1.179	1.125	1.094	1.075	1.061	1.052	1.044	1.038	1.033	1.030	1.026
68	1.286	1.169	1.114	1.084	1.064	1.051	1.041	1.033	1.027	1.023	1.019	1.015
69	1.280	1.162	1.107	1.077	1.057	1.044	1.034	1.026	1.020	1.016	1.012	1.008
70	1.276	1.158	1.103	1.073	1.054	1.040	1.030	1.023	1.017	1.012	1.008	1.004
71	1.275	1.157	1.102	1.071	1.052	1.039	1.029	1.021	1.015	1.011	1.007	1.003
72	1.276	1.157	1.103	1.072	1.053	1.039	1.030	1.022	1.016	1.011	1.007	1.004
73	1.278	1.160	1.105	1.075	1.055	1.042	1.032	1.024	1.018	1.014	1.010	1.006
74	1.281	1.163	1.109	1.078	1.059	1.045	1.036	1.028	1.022	1.017	1.013	1.010
75	1.285	1.168	1.113	1.083	1.064	1.050	1.040	1.033	1.027	1.022	1.018	1.014
76	1.290	1.173	1.118	1.088	1.069	1.055	1.046	1.038	1.032	1.027	1.023	1.020
77	1.296	1.179	1.124	1.094	1.075	1.061	1.051	1.044	1.038	1.033	1.029	1.026
78	1.301	1.185	1.131	1.100	1.081	1.067	1.058	1.050	1.044	1.039	1.035	1.032
79	1.308	1.192	1.137	1.107	1.088	1.074	1.065	1.057	1.051	1.046	1.042	1.039
80	1.315	1.199	1.145	1.114	1.095	1.081	1.072	1.064	1.059	1.054	1.050	1.046
81	1.322	1.207	1.153	1.122	1.103	1.089	1.080	1.073	1.067	1.062	1.058	1.054
82	1.330	1.216	1.161	1.131	1.112	1.098	1.089	1.081	1.075	1.070	1.067	1.063
83	1.339	1.225	1.171	1.141	1.122	1.108	1.099	1.091	1.085	1.080	1.076	1.073
84	1.349	1.236	1.182	1.152	1.133	1.118	1.110	1.102	1.096	1.091	1.087	1.084
85	1.360	1.248	1.194	1.164	1.145	1.131	1.122	1.114	1.108	1.103	1.099	1.096
86	1.372	1.262	1.208	1.178	1.159	1.145	1.136	1.128	1.122	1.117	1.113	1.110
87	1.387	1.277	1.223	1.193	1.175	1.161	1.152	1.144	1.138	1.133	1.129	1.126
88	1.403	1.295	1.241	1.212	1.193	1.179	1.170	1.162	1.156	1.152	1.148	1.144
89	1.422	1.316	1.262	1.233	1.214	1.200	1.191	1.183	1.177	1.173	1.169	1.165
90	1.444	1.339	1.286	1.257	1.238	1.224	1.215	1.207	1.201	1.197	1.193	1.189
91	1.468	1.366	1.313	1.284	1.265	1.252	1.243	1.235	1.229	1.224	1.220	1.217
92	1.497	1.397	1.345	1.316	1.296	1.283	1.274	1.266	1.260	1.256	1.252	1.248
93	1.533	1.433	1.380	1.351	1.332	1.319	1.310	1.302	1.296	1.291	1.287	1.284
94	1.573	1.473	1.420	1.391	1.372	1.359	1.350	1.342	1.337	1.332	1.328	1.324
95	1.618	1.518	1.466	1.437	1.418	1.405	1.396	1.388	1.382	1.377	1.373	1.370
96	1.668	1.568	1.516	1.487	1.469	1.456	1.447	1.439	1.433	1.428	1.424	1.421
97	1.724	1.624	1.573	1.544	1.526	1.512	1.504	1.496	1.490	1.485	1.481	1.478
98	1.786	1.687	1.636	1.606	1.589	1.576	1.567	1.559	1.553	1.548	1.544	1.541

UVDGM COMPLIANCE

Validation testing, analysis, and reporting were conducted in accordance with the 2006 UVDGM. Tables 7.1 to 7.5 evaluate compliance of the validation to the five checklists provided in Chapter 5 of the UVDGM. The validation of the reactor meets the 2006 UVDGM with the following clarifications:

1. The Student's t-statistics tabulated in the UVDGM are incorrect because they use N degrees of freedom. The degree of freedom is defined as the number of samples minus the number of coefficients predicted in the model (*Applied Linear Regression*, 3rd Ed.). All t-statistics used in this validation were obtained using N-P degrees of freedom, where P is the number of parameters or coefficients in the model obtained from a regression analysis. For example, when dose response curves are fit using a quadratic equation, the model uses two parameters and thus N-2 degrees of freedom was used.
2. Validation equations predict log inactivation as a function of flow, UVT, UV sensor readings, and microbe UV sensitivity. Validation equations were fitted to validation data measured using MS2 and T1UV phage. Fits were obtained using a non-linear multi-variate regression that minimized the sum of squares of the differences between the measured and predicted log inactivation instead of measured and predicted REDs. Accordingly, the uncertainty of validation was defined in units of log inactivation instead of RED. The corresponding uncertainty in units of RED is obtained by multiplying the log inactivation uncertainty by the UV sensitivity (D_L) of the organism.
3. The UVDGM recommends calculating the log inactivation for the UV dose-response curve as $\log(N/N_0)$ where $\log(N_0)$ is defined as the y-axis intercept of the fit to log(N) versus UV dose. Analysis showed that the value of $\log(N_0)$ obtained using this approach was biased low for most of the measured UV dose-response curves. The bias would lead to over predictions of log inactivation by the biodosimetry analysis. Hence, $\log(N_0)$ was defined as the average of the measured value of log(N) with zero UV dose. These differences are tabulated in Appendix A Table A.4c.

Table 7.1 Compliance to UVDGM Checklist 5.1: UV Reactor Documentation	
Dimensions and placement of all wetted components (e.g., lamps, sleeves, UV sensors, baffles, and cleaning mechanisms) within the reactor.	Tables 2.1, 2,2 and 2,3 describe the wetted dimensions of the reactors.
A technical description of lamp placement within the sleeve.	Section 2.1 describes the positioning of the lamp within the sleeves.
Specifications for the UV sensor port indicating all dimensions and tolerances that impact the positioning of the UV sensor relative to the lamps. If the UV sensor port contains a monitoring window separate from the UV sensor, specifications giving the window material, thickness and UV transmittance.	Figures 2.4, as well as Tables 2.1, 2.2, and 2.3, describe the location of UV sensor ports relative to lamps. Section 2.7 describes material of the UV sensor port window, and Appendix G shows the dimensions of the window.
Lamp Specifications: Technical description, manufacturer, and product number, electrical power rating, electrode-to-electrode length, spectral output, mercury content, and envelope diameter.	Section 2.2 and Appendix G provides all information except mercury content.
Lamp Sleeve Specifications: Technical description, sleeve dimensions, material, and UV transmittance (200 to 300 nm).	Section 2.3 and Appendix G provides all information.
Reference and Duty UV Sensor Specifications: Manufacturer and product number, technical description, external dimensions, total measurement uncertainty, working range, spectral and angular response, linearity, calibration factor, temperature stability, long-term stability.	Sections 2.5 and 2.6 and Appendix B provides all information.
Installation and Operation Documentation: Flowrate, headloss, and pressure rating of reactor, assembly and installation instructions, electrical requirements including line frequency, voltage, amperage, and power, O&M manuals and safety requirements.	Section 5.2 describes power consumption. Contact ATG for all other information.

Table 7.2 Compliance to UVDGM Checklist 5.2: Validation Test Plan	
Purpose of Validation Testing. General description of why the tests are being done and how the data will be used.	Test plan was defined by Carollo and ATG prior to testing. Test plan defined target flow, UVT, lamp power, and expected REDs. Purpose of validation was to define UV dose algorithms applicable over the validated range in accordance with the 2006 UVDGM.
Roles and Responsibilities. Key personnel over seeing and performing the full-scale reactor testing and collimated beam testing, including their qualifications.	Section 3.5 describes personnel who conducted validation testing and collimated beam testing.
Location and Schedule. Location for conducting full scale reactor testing and collimated beam testing. Planned schedule for conducting the tests and performing the data analysis.	Validation was conducted at the Portland test facility. Test plan defined the schedule of testing. Portland test facility and methods and materials described in Sections 3 and 4.
Plan for state review.	Not applicable. Validation not conducted for a specific application.
Design of the Biodosimetry Test Stand: Inlet/outlet piping design including backflow prevention, mixing, sample ports, pumps, additives.	Biodosimetry test stand described in Section 3.
Collimated Beam Testing: Lamp type, collimated tube aperture, distance from light source to sample surface, radiometer make and model.	Collimated beam apparatus and protocol described in Appendix D.
Monitoring Equipment Specifications and Verifications of Equipment Accuracy: Flow meters, UVT analyzers, UV Spectrophotometers, power measurement, UV sensors, and radiometer make, model, and calibration.	Sections 3 and 4 describe equipment specifications and verification of accuracy. Section 5.3.2 provides reference UV sensor test results. Appendix B provides UV sensor calibration certificates. Appendix D provides radiometer calibration certificates. Appendix E provides UV spectrophotometer calibration certificates and accuracy test data. Appendix F provides flowmeter calibration data.
Experimental Test Conditions: Number of tests, UVT, flowrate, lamp power, and lamp status for each test condition; lamp fouling factor, use of new or aged lamps; and influent concentration of challenge microorganisms for each test condition, QA/QC Plan	Appendix A provides test plan including target flowrate, UVT, lamp power, and test microbe. Validation conducted using new lamps. Fouling factor depends on site specific design criteria. QA/QC plan in Section 4.

Table 7.3 Compliance to UVDGM Checklist 5.3: Validation Report	
Detailed reactor documentation, including drawings and serial numbers and procedures used to verify reactor properties.	Section 2 describes documentation provided by ATG and measurements confirming wetted dimensions.
Validation test plan	Appendix A describes the validation test plan.
Full Scale Reactor Testing Results: Flowrate, measured UV Intensity, UVT, lamp power, lamp status, and inlet and outlet microorganism concentrations	All biodosimetry data tabulated in Appendix A.
Collimated Beam Testing Results: Volume and depth of microbial suspension, UVA of microbial suspension, irradiance measured before and after each exposure, Petri factor calculations, UV dose calculations, and derivation of UV dose-response equation including statistical methods and confidence intervals.	Collimated beam data tabulated in Appendix A includes UV dose calculations (Petri factors, suspension depth, UVA, and measured irradiance) and measured log inactivation of replicates. Analysis of collimated beam data to derive dose response curves provided in Section 5.4.1.
QA/QC Checks: Challenge microorganism QA/QC including blanks, controls, and stability analysis; measurement uncertainty of radiometer, data of most recent calibration, and results of reference checks; measurement uncertainty of UV sensors and results of reference UV sensor checks; measurements uncertainty if flowmeter, UV spectrophotometer, and any other measuring equipment used during full-scale testing.	Microbial QA/QC including blanks, controls, and stability data given in Appendix A. Chlorine measurement data given in Section 5.1. Measurement uncertainty of the radiometer provided in Appendix D. UV sensor measurement uncertainty discussed in Sections 2.5. Reference check data provided in Appendix A. Measurement uncertainty of flowmeter provided in Section 3 and verified in Appendix F. UV spectrophotometer QA/QC data given in Appendix E.
Calculation of the Validated Dose, Log Inactivation Credit and Validated Operating conditions: RED, VF, dose monitoring equation, log inactivation credit for target pathogens, validated operating conditions.	Calculated log inactivation and RED values provided in Appendix A. Validated range provided in Section 5.4.5.

Table 7.4 Compliance to UVDGM Checklist 5.4: QA/QC	
Uncertainty in Measuring Equipment: Flow meter, UV spectro-photometer, UV sensors, radiometer.	• Flowmeter - Section 3. The working range of the 12-in flowmeter was 0.5 to 15.3 MGD. The measured flow was displayed on an LCD with an accuracy of ±0.5 percent at flow rates greater than 1 mgd and ±1.5 percent at flow rates between 0.25 to 1 mgd. The working range of the 4-in flowmeter was 5 to 620 GPM. The measured flow rate was displayed on an LCD with a system accuracy of ± 0.5 percent from 26.2 to 620.8 GPM. Uncertainty meets 5 percent UVDGM criteria. • UV spectrophotometer - Appendix E. Accuracy confirmed using NIST wavelength and absorbance standards. Uncertainty meets 10 percent UVDGM criterion. • UV sensors - Section 5.3.2 shows that duty UV sensors were shown to be within -6.34 to 1.31 percent of the average reference UV sensor reading. Uncertainty meets 10 percent UVDGM criteria. • Radiometer - Appendix D. Measurement uncertainty within tolerance. Radiometer measurement verified by two other radiometers.
QA/QC of Microbial Samples: Reactor controls, reactor blanks.	Results are included in Appendix A. Controls: The differences in the log concentration between individual effluent and influent control samples ranged from -0.138 to 0.031 log and averaged -0.020 log, indicating that there was no change in test microbe concentration through the UV reactor when the lamps were turned off. Blanks: The influent MS2 blanks had concentrations that ranged from 1.94 to 66,333 PFU per mL, which would have added a maximum of 1.07 log to the minimum influent concentration measured during biodosimetry testing. This amount would have been measured during the collection of the influent samples. The T1UV phage concentration in the influent blanks ranged from 0.0 to 1.72 PFU/mL, which was at most 0.17 percent of the minimum concentration used during biodosimetry testing. The MS2 phage concentrations in the effluent blanks ranged from 0.11 to 4.33 PFU/mL. The T1UV concentrations in the effluent blanks ranged from 0 PFU/mL to 0.17. 13.5 percent of the validation data has effluent counts below 10 PFU/mL. If the background concentration of test microbes in the effluent was significant, the log inactivation through the reactor would be underestimated leading to conservative validation or the data would have been identified as an outlier and removed from the dataset.

Table 7.4 Compliance to UVDGM Checklist 5.4: QA/QC	
QA/QC of Microbial Samples: Stability samples, trip controls, method blanks.	Results are included in Appendix A. Method Blanks: 29 of 33 method blanks had no enumerable plaques or colonies, while one samples resulted in 0.1 PFU/mL, and three resulted in 0.5 PFU/mL, indicating that dilution waters were test microbe free and that there was little if any cross contamination of lab samples. Trip Controls: Trip controls showed changes of test microbe log concentrations ranging from -0.59 to 0.66 percent, meeting the UVDGM 3 to 5 percent criteria. Stability: MS2 influent and effluent concentrations changed at an average rate of 0.022 and 0.021 log per day, respectively. T1UV influent and effluent concentrations changed at an average rate of -0.002 and 0.004 log per day, respectively. These results indicate the samples were stable over the course of validation.
Uncertainty of Collimated Beam Testing Data: Depth of suspension, incidence irradiance, Petri factor, L/(d+L), time, and $(1-10^{-ad})/ad$	• Depth of suspension (d) ± 4.4% (UVDGM <10%) • Average incident irradiance (E_s) ± 6.6% (UVDGM <8%) • Petri Factor (P_f) ± 1% (UVDGM <5%) • L/(d + L) ± 1.7% (UVDGM <1%) • Time (t) ± 3.3% (UVDGM <5%) • $(1 – 10^{-ad})/ad$ < 0.77% (UVDGM <5%) • The overall uncertainty for the UV dose calculation, calculated as the square root of the sum of squares of the individual uncertainties, is estimated as 7%, less than the 12% uncertainty expected based on the UVDGM criteria. i.e. 12% = $(8^2+5^2+1^2+5^2+5^2)^{0.5}$
Uncertainty of the dose response.	• Uncertainty of the UV dose-response curve is described in Chapter 6. U_{DR} defined as a confidence interval using the statistical approach presented in Appendix J. The dose response curve with the most conservative uncertainty (March 19, 2019) is used for determining the value of the U_{DR} as a function of the log inactivation.

Table 7.5 Compliance to UVDGM Checklist 5.5: Validation Report Review	
Does validation meet QA/QC criteria?	Validation met QA/QC criteria evaluated.
Does mixing and sample port location meet recommendations?	Yes. A static mixer was used before the inlet sample port. The inlet sample port was located 21 pipe diameters downstream of the injection port through both the low and high flow configurations. Although there was no static mixer downstream of the reactors, the outlet sample port was located approximately 46, 26, and 19 pipe diameters downstream from the WF-115-4, WF-125-6, and WF-225-8 reactors, respectively. This gave time for adequate mixing. Inlet and outlet sample ports were not impacted by UV light from reactor. See Sections 3 and 4 for details.
Do inlet and outlet piping at the WTP result in dose delivery equal to or better than validation?	Compliance depends on UV system piping used at WTP.
Were the collimated beam test results and full-scale reactor tests performed on the same day for a given test condition and using the same stock of challenge microorganisms?	Yes. Stock solutions of a given microorganism prepared by GAP were combined to give a single stock solution. Dose-response measured each day of testing. See Section 5.4.1.
Is the UV sensitivity of the challenge microorganism and the overall shape of the dose-response curve consistent with the expected inactivation behavior of that challenge microorganism?	MS2 and T1UV UV dose-response was found to be consistent with expected UV dose-response based on previous validations. See confidence bands in dose-response figures provided in Section 5 and Appendix I.
Does the validation test design account for lamp fouling and aging, minimum UVT, and maximum flow rate expected to occur at the WTP?	Compliance depends on UV system design criteria and water quality at WTP.
Is the reactor equipped with a germicidal UV sensor? Is the polychromatic bias incorporated into the validation factor?	Reactors use germicidal UV sensors. The lamps used in the WF-115-4, WF-125-6, and WF-225-8 UV reactors are polychromatic, so a polychromatic bias factor was incorporated into the validation factor for each reactor. See Section 6 for details.
Was validation testing conducted using an organism other than MS2 phage and *B. subtilis*? If yes, was a correction factor assessed and applied to the validation results?	Validation was conducted using MS2 and T1UV phage. Correction factor for action spectra was applied. See Section 6 for details.

Table 7.5 Compliance to UVDGM Checklist 5.5: Validation Report Review	
Was the minimum number of test conditions evaluated as specified in section 5.6.2?	Yes. Test conditions selected to evaluate dose delivery at multiple flows, UVTs, and lamp power settings. See Appendix A.
Was the empirical equation developed using standard statistical methods (e.g. multivariate linear regression)?	Yes. Appropriate equation identified using multi-variate linear regressions. Final equation developed using non-linear regression that minimized sum square of absolute errors in units of log inactivation. See Section 5.4.2.
Does the validation report include an analysis of goodness of fit and bias for the dose monitoring equation?	Yes. p-statistics used to define statistically valid terms in dose monitoring equation (see Table 5.5). Comparison of predicted and measured log i showed no bias.
Does the validation factor include both the B_{RED} and U_{IN}?	RED bias is set to 1.0 with target *Cryptosporidium*, *Giardia*, and adenovirus. See Section 6. U_{IN} incorporated into validation factor. See Section 6.
If U_S or U_{DR} did not meet the QA/QC criteria, were they also included in the VF calculation?	U_S met UVDGM criteria of 10%. U_{DR} met UVDGM criteria of 15%, and was not incorporated into the validation factor calculations for MS2, T1UV, or *Giardia/Cryptosporidium* REDs since the calculated value did not exceeded 15 percent.
For the range of UVT values and flowrates expected to occur at the water system, is the validated dose ≥ required dose for the system's target pathogen and log inactivation?	Compliance depends on UV system design criteria and water quality at WTP.

Appendix A

FUNCTIONAL AND BIODOSIMETRIC TEST DATA

Table A.1a UV System Power Consumption					
Reactor	**Date**	**Lamp Ampere**	**Total Power (kW)**	**Total Apparent Power (kVA)**	**Power Factor**
WF-115-4	1/10/2019	11.00	1.69	2.10	0.80
WF-115-4	1/10/2019	8.20	1.16	1.40	0.83
WF-115-4	1/10/2019	6.80	0.91	1.06	0.86
WF-115-4	1/10/2019	5.00	0.60	0.63	0.95
WF-115-4	1/10/2019	9.60	1.42	1.75	0.81
WF-115-4	1/10/2019	8.20	1.16	1.40	0.83
WF-115-4	1/10/2019	9.60	1.42	1.74	0.82
WF-115-4	1/10/2019	4.90	0.60	0.63	0.95
WF-115-4	1/10/2019	6.80	0.92	1.07	0.86
WF-115-4	1/10/2019	11.00	1.70	2.12	0.80
WF-115-4	1/10/2019	8.20	1.16	1.41	0.82
WF-115-4	1/10/2019	6.80	0.95	1.11	0.86
WF-115-4	1/10/2019	9.60	1.41	1.75	0.81
WF-115-4	1/10/2019	5.00	0.61	0.63	0.97
WF-115-4	1/10/2019	11.00	1.70	2.12	0.80
WF-115-4	1/10/2019	11.00	1.70	2.10	0.81
WF-115-4	1/10/2019	9.60	1.40	1.74	0.80
WF-115-4	1/10/2019	5.00	0.61	0.64	0.95
WF-115-4	1/10/2019	6.80	0.92	1.05	0.88
WF-115-4	1/10/2019	8.20	1.15	1.40	0.82
WF-115-4	1/10/2019	9.60	1.41	1.74	0.81
WF-115-4	1/10/2019	8.20	1.16	1.40	0.83
WF-115-4	1/10/2019	9.60	1.42	1.75	0.81
WF-115-4	1/10/2019	8.20	1.15	1.40	0.82
WF-115-4	1/10/2019	6.90	0.92	1.05	0.88
WF-115-4	1/10/2019	6.80	0.91	1.06	0.86
WF-115-4	1/10/2019	11.00	1.68	2.09	0.80
WF-115-4	1/10/2019	5.30	0.64	0.68	0.94
WF-115-4	1/10/2019	11.00	1.70	2.10	0.81
WF-115-4	1/9/2019	11.00	1.81	2.19	0.83
WF-115-4	1/9/2019	11.00	1.81	2.19	0.83
WF-115-4	1/9/2019	11.00	1.80	2.19	0.82
WF-115-4	1/9/2019	11.00	1.80	2.18	0.83
WF-115-4	1/16/2019	11.00	1.70	2.09	0.81
WF-115-4	1/16/2019	11.00	1.70	2.10	0.81
WF-115-4	1/16/2019	7.04	0.96	1.12	0.86
WF-115-4	1/16/2019	7.04	0.96	1.12	0.86
WF-115-4	1/16/2019	7.04	0.99	1.13	0.88
WF-115-4	1/16/2019	7.04	0.99	1.15	0.86
WF-115-4	3/12/2019	5.10	0.66	0.68	0.97
WF-115-4	3/12/2019	5.40	0.69	0.73	0.95
WF-115-4	3/12/2019	5.30	0.68	0.72	0.94
WF-115-4	3/12/2019	5.30	0.69	0.72	0.96
WF-115-4	3/12/2019	10.90	1.68	2.09	0.80

Table A.1a UV System Power Consumption					
Reactor	**Date**	**Lamp Ampere**	**Total Power (kW)**	**Total Apparent Power (kVA)**	**Power Factor**
WF-115-4	3/12/2019	7.15	0.99	1.12	0.88
WF-115-4	3/12/2019	7.15	0.99	1.12	0.88
WF-115-4	3/12/2019	9.10	1.33	1.61	0.83
WF-115-4	3/12/2019	10.95	1.68	2.06	0.82
WF-115-4	3/13/2019	5.20	0.66	0.70	0.94
WF-115-4	3/13/2019	9.60	1.41	1.72	0.82
WF-115-4	3/13/2019	11.00	1.71	2.08	0.82
WF-115-4	3/13/2019	11.00	1.71	2.07	0.83
WF-115-4	3/13/2019	11.00	1.71	2.07	0.83
WF-115-4	3/13/2019	9.10	1.61	2.00	0.81
WF-125-6	1/10/2019	10.00	2.60	2.96	0.88
WF-125-6	1/10/2019	10.10	2.62	2.98	0.88
WF-125-6	1/10/2019	7.40	1.80	2.27	0.79
WF-125-6	1/10/2019	9.00	2.27	2.60	0.87
WF-125-6	1/10/2019	7.40	1.80	2.26	0.80
WF-125-6	1/10/2019	8.90	2.27	2.61	0.87
WF-125-6	1/10/2019	6.20	1.45	2.20	0.66
WF-125-6	1/10/2019	6.20	1.46	2.20	0.66
WF-125-6	1/10/2019	4.60	1.03	2.38	0.43
WF-125-6	1/10/2019	7.40	1.81	2.27	0.80
WF-125-6	1/10/2019	8.90	2.28	2.61	0.87
WF-125-6	1/10/2019	10.00	2.60	2.95	0.88
WF-125-6	1/10/2019	4.50	1.03	2.38	0.43
WF-125-6	1/10/2019	6.20	1.47	2.20	0.67
WF-125-6	1/10/2019	10.00	2.60	2.96	0.88
WF-125-6	1/10/2019	8.90	2.28	2.62	0.87
WF-125-6	1/10/2019	7.40	1.80	2.26	0.80
WF-125-6	1/10/2019	4.60	1.03	2.40	0.43
WF-125-6	1/10/2019	6.20	1.46	2.20	0.66
WF-125-6	1/10/2019	10.00	2.59	2.93	0.88
WF-125-6	1/10/2019	8.90	2.27	2.60	0.87
WF-125-6	1/10/2019	7.40	1.81	2.27	0.80
WF-125-6	1/10/2019	4.50	1.04	2.41	0.43
WF-125-6	1/10/2019	6.20	1.46	2.20	0.66
WF-125-6	1/10/2019	8.90	2.26	2.59	0.87
WF-125-6	1/10/2019	7.40	1.81	2.27	0.80
WF-125-6	1/10/2019	10.00	2.58	2.93	0.88
WF-125-6	1/10/2019	6.20	1.46	2.18	0.67
WF-125-6	1/10/2019	4.50	1.04	2.40	0.43
WF-125-6	1/10/2019	7.40	1.81	2.27	0.80
WF-125-6	1/9/2019	10.00	2.73	3.11	0.88
WF-125-6	1/9/2019	10.00	2.73	3.11	0.88
WF-125-6	1/9/2019	10.00	2.73	3.11	0.88
WF-125-6	1/9/2019	10.00	2.73	3.11	0.88

Table A.1a UV System Power Consumption					
Reactor	**Date**	**Lamp Ampere**	**Total Power (kW)**	**Total Apparent Power (kVA)**	**Power Factor**
WF-125-6	1/16/2019	10.00	2.59	2.95	0.88
WF-125-6	3/12/2019	6.00	1.40	2.08	0.67
WF-125-6	3/12/2019	4.70	1.04	2.22	0.47
WF-125-6	3/12/2019	4.70	1.04	2.22	0.47
WF-125-6	3/12/2019	9.40	2.40	2.72	0.88
WF-125-6	3/12/2019	4.70	1.04	2.22	0.47
WF-125-6	3/12/2019	6.30	1.47	2.09	0.70
WF-125-6	3/12/2019	5.60	1.28	2.11	0.61
WF-125-6	3/12/2019	8.30	2.06	2.40	0.86
WF-125-6	3/12/2019	10.00	2.58	2.94	0.88
WF-125-6	3/12/2019	10.00	2.59	2.93	0.88
WF-125-6	3/12/2019	10.00	2.58	2.97	0.87
WF-225-8	1/10/2019	6.40	2.87	4.07	0.71
WF-225-8	1/10/2019	4.50	1.87	4.44	0.42
WF-225-8	1/10/2019	10.10	5.19	5.57	0.93
WF-225-8	1/10/2019	7.50	3.54	4.26	0.83
WF-225-8	1/10/2019	8.75	4.32	4.78	0.90
WF-225-8	1/10/2019	6.30	2.86	4.07	0.70
WF-225-8	1/10/2019	7.50	3.55	4.27	0.83
WF-225-8	1/10/2019	4.60	1.88	4.40	0.43
WF-225-8	1/10/2019	8.75	4.32	4.78	0.90
WF-225-8	1/10/2019	10.00	5.12	5.50	0.93
WF-225-8	1/10/2019	10.00	5.12	5.50	0.93
WF-225-8	1/10/2019	7.50	3.55	4.26	0.83
WF-225-8	1/10/2019	6.35	2.86	4.07	0.70
WF-225-8	1/10/2019	4.55	1.89	4.42	0.43
WF-225-8	1/10/2019	8.75	4.32	4.77	0.91
WF-225-8	1/10/2019	4.55	1.88	4.42	0.43
WF-225-8	1/10/2019	6.30	2.85	4.08	0.70
WF-225-8	1/10/2019	10.00	5.14	5.52	0.93
WF-225-8	1/10/2019	8.80	4.33	4.78	0.91
WF-225-8	1/10/2019	7.55	3.55	4.27	0.83
WF-225-8	1/10/2019	6.35	2.86	4.09	0.70
WF-225-8	1/10/2019	4.50	1.86	4.47	0.42
WF-225-8	1/10/2019	7.50	3.56	4.27	0.83
WF-225-8	1/10/2019	8.75	4.33	4.79	0.90
WF-225-8	1/10/2019	10.00	5.14	5.51	0.93
WF-225-8	1/8/2019	10.00	5.28	5.65	0.93
WF-225-8	1/8/2019	10.00	5.28	5.66	0.93
WF-225-8	3/19/2019	9.30	4.72	5.16	0.91
WF-225-8	3/19/2019	6.40	2.97	4.00	0.74
WF-225-8	3/19/2019	9.40	4.79	5.20	0.92
WF-225-8	3/19/2019	5.08	2.25	4.18	0.54
WF-225-8	3/19/2019	9.23	4.66	5.11	0.91

Table A.1a UV System Power Consumption					
Reactor	**Date**	**Lamp Ampere**	**Total Power (kW)**	**Total Apparent Power (kVA)**	**Power Factor**
WF-225-8	3/19/2019	4.70	2.02	4.27	0.47
WF-225-8	3/19/2019	8.65	4.31	4.77	0.90
WF-225-8	3/19/2019	6.80	3.20	4.04	0.79
WF-225-8	3/19/2019	9.90	5.13	5.58	0.92
WF-225-8	3/19/2019	9.95	5.16	5.61	0.92
WF-225-8	3/19/2019	9.95	5.15	5.61	0.92
WF-225-8	3/19/2019	9.95	5.16	5.61	0.92
WF-225-8	3/19/2019	7.60	3.68	4.25	0.87
WF-225-8	3/19/2019	9.95	5.16	5.63	0.92
WF-225-8	3/19/2019	7.60	3.63	4.25	0.85
WF-225-8	3/19/2019	4.65	1.99	4.30	0.46
WF-225-8	3/19/2019	4.60	1.99	4.30	0.46
WF-225-8	3/19/2019	4.70	2.01	4.22	0.48
WF-225-8	3/19/2019	4.70	2.02	4.26	0.47

Table A.1b Duty UV Sensor vs. Reference UV Sensor Checks

Date	Reactor	Average UVT (%)	Lamp Ampere	Sensor Range (W/m^2)	Reference Sensor 1 (W/m^2)	Reference Sensor 2 (W/m^2)	Reference Sensor 3 (W/m^2)	Duty Sensor Before (W/m^2)	Duty Sensor After (W/m^2)	Average Reference Sensor (W/m^2)	Average Duty Sensor (W/m^2)
1/10/2019	WF-115-4	67.92	5	300	15.15	14.91	14.56	14.80	14.74	14.89	14.69
					15.23	15.03	14.53	14.91	14.33		
					15.17	14.94	14.45	14.97	14.39		
1/10/2019	WF-225-8	67.81	4.5	150	3.82	3.78	3.52	3.85	3.80	3.72	3.82
					3.91	3.74	3.57	3.80	3.85		
					3.85	3.74	3.51	3.82	3.81		
3/11/2019	WF-115-4	99.32	11	300	139.2	139.1	134.4	140.3	137.5	137.85	138.94
					139.5	139.4	135	139.7	137.9		
					139.6	139.8	134.9	140.5	137.9		
					139.3	138.8	135.1	140.0	137.8		
					139.3	139.6	134.8	140.2	137.6		
3/11/2019	WF-125-6	99.32	10	150	71.5	68.5	69.6	69.4	68.1	69.93	69.11
					71.7	68.5	69.6	69.0	68.5		
					71.9	68.5	69.6	70.2	68.5		
					71.4	68.5	69.7	69.9	68.6		
					71.6	68.7	69.7	70.2	68.7		
3/11/2019	WF-225-8	99.32	10	300	154.1	149.2	148.0	158.5	157.1	150.61	157.86
					154.1	149.2	148.2	158.5	157.1		
					154.3	149.3	148.2	158.6	157.4		
					154.2	149.0	148.7	158.6	157.3		
					154.5	149.4	148.7	158.4	157.1		
3/14/2019	WF-125-6	99.53	6.7	150	38.7	36.7	37.1	37.9	37	37.44	37.40
					38.7	36.7	37.1	38.1	37		
					38.6	36.7	36.9	37.6	37.2		
					38.5	36.6	37.0	37.8	36.6		
					38.5	36.6	37.2	37.9	36.9		
3/18/2019	WF-125-6	70.24	9.8	150	4.42	4.42	4.40	4.40	4.40	4.41	4.40
3/18/2019	WF-225-8	70.03	10	150	6.41	6.33	6.23	6.37	6.40	6.32	6.39
3/18/2019	WF-225-8	70.03	10	300	5.29	5.26	5.26	5.30	5.30	5.27	5.30
3/20/2019	WF-225-8	99.22	10	300	166.5	159.9	163.1	178.4	168.1	163.60	173.97
					166.8	160.7	163.9	178.8	169.1		
					167.1	160.6	163.8	178.7	170.7		

Table A.1c		Functional Sensor Testing: UVT, Lamp Ampere, and UV Sensor Intensity Readings			
Reactor	**UVT (%)**	**Lamp Ampere**	**Sensor Measured (W/m^2)**	**S_{pred} (W/m^2)**	**Residuals (%)**
WF-115-4	65.11	11.0	56.04	57.36	-2.30
WF-115-4	64.66	9.7	46.02	46.45	-0.92
WF-115-4	64.66	7.9	34.16	34.04	0.36
WF-115-4	64.73	6.7	26.68	26.61	0.28
WF-115-4	64.07	5.2	17.83	17.58	1.41
WF-115-4	86.96	5.3	45.90	45.47	0.95
WF-115-4	87.03	6.1	56.48	56.39	0.15
WF-115-4	86.98	7.9	82.92	83.28	-0.43
WF-115-4	86.88	9.3	106.60	106.24	0.34
WF-115-4	86.94	10.8	131.88	133.53	-1.23
WF-115-4	91.55	11.0	163.08	160.93	1.34
WF-115-4	91.61	9.7	133.16	133.29	-0.10
WF-115-4	91.55	8.1	103.13	101.24	1.87
WF-115-4	91.35	6.7	77.62	75.44	2.88
WF-115-4	91.46	5.1	49.92	50.09	-0.34
WF-115-4	94.95	5.0	53.89	54.58	-1.26
WF-115-4	94.77	6.3	76.43	76.99	-0.73
WF-115-4	94.82	7.9	109.08	108.64	0.40
WF-115-4	94.52	9.4	142.25	139.99	1.62
WF-115-4	94.68	10.9	174.61	176.09	-0.84
WF-115-4	99.42	10.9	207.20	204.92	1.11
WF-115-4	99.19	8.2	133.28	132.20	0.81
WF-115-4	99.35	5.0	61.89	62.81	-1.47
WF-115-4	99.33	11.0	204.32	207.19	-1.38
WF-115-4	99.45	11.0	202.60	207.97	-2.58
WF-115-4	99.55	11.1	215.50	211.50	1.89
WF-115-4	99.32	5.1	63.14	64.67	-2.36
WF-125-6	65.24	10.1	2.80	2.94	-4.92
WF-125-6	64.97	8.9	2.39	2.38	0.33
WF-125-6	64.87	7.5	1.92	1.83	4.75
WF-125-6	86.93	5.0	8.76	8.73	0.29
WF-125-6	87.08	6.1	11.71	11.90	-1.59
WF-125-6	87.05	7.4	15.56	15.78	-1.37
WF-125-6	87.06	8.6	19.20	19.71	-2.61
WF-125-6	87.11	10.0	24.42	24.76	-1.37
WF-125-6	91.47	10.0	38.46	39.29	-2.11
WF-125-6	91.43	8.9	32.58	32.96	-1.14
WF-125-6	91.55	7.6	26.28	26.44	-0.62
WF-125-6	91.47	6.3	20.37	19.88	2.49
WF-125-6	91.55	5.2	15.56	15.10	3.03
WF-125-6	94.69	5.2	21.27	21.31	-0.18
WF-125-6	94.80	6.3	28.88	28.63	0.86

Table A.1c		Functional Sensor Testing: UVT, Lamp Ampere, and UV Sensor Intensity Readings			
Reactor	**UVT (%)**	**Lamp Ampere**	**Sensor Measured (W/m^2)**	**S_{pred} (W/m^2)**	**Residuals (%)**
WF-125-6	94.85	7.4	36.54	36.51	0.07
WF-125-6	94.80	8.6	46.51	45.33	2.60
WF-125-6	94.59	10.0	58.16	55.33	5.12
WF-125-6	99.52	10.0	97.86	97.06	0.83
WF-125-6	99.21	7.8	66.90	64.86	3.14
WF-125-6	99.33	5.2	34.85	36.15	-3.61
WF-125-6	99.42	10.0	95.05	95.93	-0.92
WF-125-6	99.60	10.1	98.30	99.42	-1.13
WF-125-6	99.46	5.0	33.44	34.64	-3.47
WF-225-8	66.56	5.25	7.82	7.76	0.80
WF-225-8	66.27	6.25	9.89	9.96	-0.68
WF-225-8	66.39	7.55	13.23	13.38	-1.15
WF-225-8	66.28	8.85	17.05	16.95	0.57
WF-225-8	66.31	10.00	20.59	20.47	0.59
WF-225-8	87.78	10.00	81.47	82.10	-0.77
WF-225-8	87.78	8.80	66.96	67.56	-0.89
WF-225-8	87.66	7.50	52.11	52.45	-0.64
WF-225-8	87.87	6.30	40.89	40.81	0.19
WF-225-8	87.47	5.20	29.88	29.55	1.13
WF-225-8	91.74	5.20	41.09	41.08	0.03
WF-225-8	91.40	6.25	53.43	52.95	0.91
WF-225-8	91.44	7.30	67.18	67.34	-0.24
WF-225-8	91.57	8.75	88.92	89.76	-0.93
WF-225-8	91.70	9.90	108.42	109.53	-1.01
WF-225-8	94.87	9.80	141.14	140.30	0.60
WF-225-8	94.55	8.85	120.78	116.81	3.40
WF-225-8	95.06	7.55	93.87	95.73	-1.94
WF-225-8	94.71	6.35	73.88	71.30	3.62
WF-225-8	95.40	5.15	52.63	54.95	-4.21
WF-225-8	99.37	5.05	73.30	76.59	-4.30
WF-225-8	99.08	5.15	80.52	76.77	4.89
WF-225-8	99.58	6.15	105.51	105.62	-0.11
WF-225-8	99.54	7.45	140.80	141.04	-0.17
WF-225-8	99.75	8.65	178.87	180.83	-1.09
WF-225-8	99.50	9.90	217.87	216.96	0.42

Table A.2 Test Conditions for Bioassay Testing						
Reactor	**Sensor Range (W/m^2)**	**Microbe**	**Test ID**	**UVT (%)**	**Lamp Ampere**	**Flow (m^3/hr)**
WF-115-4	300	MS2	402	99.25	11.0	105.2
WF-115-4	300	MS2	401	99.15	11.0	50.63
WF-115-4	300	MS2	404	69.46	11.0	31.09
WF-115-4	300	MS2	403	65.36	11.0	5.94
WF-115-4	300	MS2	409	94.66	11.0	24.88
WF-115-4	300	MS2	422	99.22	7.0	99.35
WF-115-4	300	MS2	408	95.35	7.0	99.36
WF-115-4	300	MS2	413	87.62	7.0	14.77
WF-115-4	300	T1UV	405	98.89	5.1	100.3
WF-115-4	300	T1UV	406	98.73	5.4	40.01
WF-115-4	300	T1UV	410	94.50	5.3	64.98
WF-115-4	300	T1UV	414	87.90	5.3	114.1
WF-115-4	300	T1UV	411	94.77	10.9	95.42
WF-115-4	300	T1UV	416	87.83	7.2	25.18
WF-115-4	300	T1UV	419	69.89	7.2	24.95
WF-115-4	300	T1UV	420	70.00	9.1	25.10
WF-115-4	300	T1UV	423	70.13	11.0	100.4
WF-115-4	300	MS2	407	97.42	5.2	5.229
WF-115-4	300	MS2	417	86.52	9.6	5.255
WF-115-4	300	MS2	421	69.30	11.0	5.138
WF-115-4	300	MS2	412	94.28	11.0	12.42
WF-115-4	300	MS2	415	87.22	9.1	10.83
WF-125-6	150	MS2	602	97.82	10.0	200.6
WF-125-6	150	MS2	601	98.18	10.0	76.39
WF-125-6	150	MS2	604	68.23	10.0	30.67
WF-125-6	150	MS2	603	71.45	10.0	9.856
WF-125-6	150	T1UV	605	99.23	6.0	198.5
WF-125-6	150	T1UV	607	97.76	4.7	70.19
WF-125-6	150	T1UV	610	94.11	4.7	134.8
WF-125-6	150	T1UV	611	94.54	9.4	159.3
WF-125-6	150	T1UV	614	87.89	4.7	230.3
WF-125-6	150	T1UV	616	87.50	6.3	45.14
WF-125-6	150	T1UV	619	69.81	5.6	25.03
WF-125-6	150	T1UV	620	69.80	8.3	25.16
WF-125-6	150	T1UV	621	69.98	10.0	22.32
WF-125-6	150	T1UV	622	70.17	10.0	200.6
WF-125-6	150	MS2	617	85.91	10.0	10.14
WF-125-6	150	MS2	612	95.35	9.9	22.56
WF-125-6	150	MS2	606	97.84	9.9	28.46
WF-125-6	150	MS2	615	88.65	8.3	21.94
WF-125-6	150	MS2	613	87.68	6.3	29.94
WF-125-6	150	MS2	609	94.23	10.0	49.65
WF-125-6	150	MS2	608	94.72	6.8	197.1
WF-125-6	150	MS2	623	97.87	6.0	198.7
WF-225-8	300	MS2	802	99.06	10.0	502.6
WF-225-8	300	MS2	801	97.99	10.0	261.3
WF-225-8	300	MS2	804	70.11	10.0	98.26

Table A.2 Test Conditions for Bioassay Testing						
Reactor	**Sensor Range (W/m^2)**	**Microbe**	**Test ID**	**UVT (%)**	**Lamp Ampere**	**Flow (m^3/hr)**
WF-225-8	300	MS2	803	69.91	10.0	14.61
WF-225-8	300	T1UV	820	70.01	9.3	49.74
WF-225-8	300	T1UV	817	87.48	6.4	99.10
WF-225-8	300	T1UV	821	70.28	9.4	99.39
WF-225-8	300	T1UV	807	99.17	5.1	140.6
WF-225-8	300	T1UV	812	95.93	9.2	299.2
WF-225-8	300	T1UV	811	95.26	4.7	349.9
WF-225-8	300	T1UV	805	99.64	8.7	498.9
WF-225-8	300	T1UV	815	88.34	6.8	498.7
WF-225-8	300	T1UV	822	70.84	9.9	496.8
WF-225-8	300	MS2	818	87.63	10.0	23.03
WF-225-8	300	MS2	806	99.10	10.0	41.74
WF-225-8	300	MS2	810	94.26	10.0	99.89
WF-225-8	300	MS2	813	94.18	7.6	24.54
WF-225-8	300	MS2	819	69.91	10.0	39.95
WF-225-8	300	MS2	816	87.78	7.6	48.93
WF-225-8	300	MS2	808	98.39	4.7	496.8
WF-225-8	300	MS2	809	95.15	4.6	499.2
WF-225-8	300	MS2	814	87.49	4.7	500.3
WF-125-6	150	T1UV	Control	99.29	0	198.7
WF-125-6	150	MS2	Control 1	99.45	0	61.71
WF-115-4	300	MS2	Control 4	99.11	0	100.2
WF-115-4	300	MS2	Control 5	70.47	0	49.26
WF-125-6	150	MS2	Control 6	99.50	0	198.7
WF-225-8	300	T1UV	Control 7	99.59	0	494.5

Table A.3 Sample Replicates for UVT Measurements						
Date	ID	UVT (%)				
		1	2	3	Average	Standard Deviation
1/9/2019	402	99.28	99.27	99.20	99.25	0.04
1/9/2019	401	99.18	99.12	99.14	99.15	0.03
1/9/2019	404	69.53	69.43	69.41	69.46	0.06
1/9/2019	403	65.32	65.36	65.41	65.36	0.05
1/16/2019	409	94.80	94.62	94.57	94.66	0.12
1/16/2019	422	99.23	99.24	99.18	99.22	0.03
1/16/2019	408	95.33	95.34	95.39	95.35	0.03
1/16/2019	413	87.66	87.64	87.56	87.62	0.05
3/12/2019	405	98.79	99.08	98.80	98.89	0.16
3/12/2019	406	98.76	98.74	98.68	98.73	0.04
3/12/2019	410	94.52	94.51	94.46	94.50	0.03
3/12/2019	414	87.91	87.86	87.93	87.90	0.04
3/12/2019	411	94.80	94.68	94.84	94.77	0.08
3/12/2019	416	87.94	87.76	87.80	87.83	0.09
3/12/2019	419	69.97	69.85	69.84	69.89	0.07
3/12/2019	420	70.08	69.93	70.00	70.00	0.08
3/12/2019	423	70.07	70.26	70.06	70.13	0.11
3/13/2019	407	97.43	97.43	97.41	97.42	0.01
3/13/2019	417	86.69	86.53	86.35	86.52	0.17
3/13/2019	421	69.28	69.38	69.24	69.30	0.07
3/13/2019	412	94.30	94.29	94.24	94.28	0.03
3/13/2019	415	87.22	87.26	87.19	87.22	0.04
1/9/2019	602	97.76	97.81	97.89	97.82	0.07
1/9/2019	601	98.14	98.19	98.20	98.18	0.03
1/9/2019	604	68.21	68.19	68.28	68.23	0.05
1/16/2019	603	71.68	71.33	71.33	71.45	0.20
3/12/2019	605	99.37	99.06	99.25	99.23	0.16
3/12/2019	607	97.74	97.68	97.85	97.76	0.09
3/12/2019	610	94.22	94.02	94.10	94.11	0.10
3/12/2019	611	94.49	94.59		94.54	0.07
3/12/2019	614	88.01	87.75	87.92	87.89	0.13
3/12/2019	616	87.50	87.54	87.46	87.50	0.04
3/12/2019	619	69.90	69.80	69.74	69.81	0.08
3/12/2019	620	69.72	69.78	69.90	69.80	0.09
3/12/2019	621	69.93	70.04	69.96	69.98	0.06
3/12/2019	622	70.04	70.24	70.22	70.17	0.11
3/14/2019	617	85.88	86.02	85.84	85.91	0.09
3/14/2019	612	95.30	95.20	95.54	95.35	0.17
3/14/2019	606	97.78	98.05	97.69	97.84	0.19
3/14/2019	615	88.67	88.51	88.78	88.65	0.14
3/14/2019	613	87.64	87.70	87.69	87.68	0.03
3/14/2019	609	94.24	94.24	94.20	94.23	0.02
3/14/2019	608	94.78	94.62	94.77	94.72	0.09

Table A.3 Sample Replicates for UVT Measurements						
Date	ID	UVT (%)				
		1	2	3	Average	Standard Deviation
3/14/2019	623	97.59	98.01	98.00	97.87	0.24
1/8/2019	802	99.07	99.10	99.00	99.06	0.05
1/8/2019	801	97.94	97.99	98.03	97.99	0.05
1/8/2019	804	70.04	70.21	70.08	70.11	0.09
1/8/2019	803	69.82	69.93	69.99	69.91	0.09
3/19/2019	820	70.06	70.16	69.81	70.01	0.18
3/19/2019	817	87.50	87.47	87.48	87.48	0.02
3/19/2019	821	70.32	70.29	70.22	70.28	0.05
3/19/2019	807	99.32	99.13	99.07	99.17	0.13
3/19/2019	812	95.89	95.94	95.96	95.93	0.04
3/19/2019	811	95.18	95.30	95.29	95.26	0.07
3/19/2019	805	99.67	99.62	99.64	99.64	0.03
3/19/2019	815	88.30	88.39	88.32	88.34	0.05
3/19/2019	822	70.92	70.92	70.68	70.84	0.14
3/19/2019	818	87.57	87.53	87.78	87.63	0.13
3/19/2019	806	99.02	99.07	99.20	99.10	0.09
3/19/2019	810	94.25	94.37	94.17	94.26	0.10
3/19/2019	813	94.15	94.24	94.16	94.18	0.05
3/19/2019	819	69.80	70.07	69.85	69.91	0.14
3/19/2019	816	87.73	87.72	87.89	87.78	0.10
3/19/2019	808	98.60	98.21	98.35	98.39	0.20
3/19/2019	809	95.22	95.20	95.02	95.15	0.11
3/19/2019	814	87.42	87.58	87.48	87.49	0.08
3/12/2019	Control	99.30	99.28	99.30	99.29	0.01
1/9/2019	Control 1	99.57	99.40	99.38	99.45	0.10
1/16/2019	Control 4	99.03	99.28	99.03	99.11	0.14
3/13/2019	Control 5	70.50	70.70	70.20	70.47	0.25
3/14/2019	Control 6	99.50	99.50	99.50	99.50	0.00
3/19/2019	Control 7	99.65	99.52	99.60	99.59	0.07

Table A.4a Data Collected to Determine the UV Dose Response								
Date	ID	Microbe	UV Dose (mJ/cm^2)	Rep 1	Rep 2	Rep 3	Average	log i
				PFU/mL	PFU/mL	PFU/mL	Log	
8-Jan-19	101	MS2	0.000	11200000.0	11400000.0	12100000.0	7.063	0.010
			20.064	790000.0	1120000.0	1010000.0	5.988	1.085
			39.985	120000.0	98000.0	133000.0	5.068	2.005
			59.512	19300.0	17200.0	15700.0	4.241	2.832
			79.955	2680.0	3040.0	3820.0	3.502	3.571
			100.493	765.0	605.0	725.0	2.844	4.229
			121.155	181.0	191.0	188.0	2.271	4.802
			0.000	13200000.0	11300000.0	11800000.0	7.083	-0.010
			19.927	1080000.0	1080000.0	1020000.0	6.025	1.048
			40.045	117000.0	99000.0	101000.0	5.024	2.049
			59.919	19300.0	17500.0	18600.0	4.266	2.807
			79.872	3580.0	3360.0	4720.0	3.590	3.483
			101.363	840.0	795.0	805.0	2.910	4.163
			122.487	181.0	208.0	200.0	2.293	4.780
16-Jan-19	409	MS2	0.000	1860000.0	1550000.0	1480000.0	6.212	0.031
			20.010	114000.0	112000.0	120000.0	5.062	1.181
			39.880	16700.0	16000.0	16100.0	4.211	2.031
			59.900	2600.0	2740.0	2640.0	3.425	2.818
			80.160	690.0	630.0	545.0	2.794	3.449
			100.710	135.0	144.0	139.0	2.144	4.099
			121.120	42.4	33.8	31.8	1.556	4.686
			0.000	1730000.0	2060000.0	1840000.0	6.273	-0.031
			19.890	172000.0	140000.0	168000.0	5.204	1.039
			40.040	16600.0	18000.0	19000.0	4.252	1.991
			59.660	3420.0	2560.0	3560.0	3.502	2.740
			79.970	625.0	675.0	640.0	2.811	3.432
			100.430	173.0	134.0	145.0	2.178	4.065
			119.970	42.2	42.4	41.0	1.622	4.621
13-Mar-19	407	MS2	0.000	232000000.0	208000000.0	210000000.0	8.336	0.036
			19.932	14800000.0	18000000.0	17800000.0	7.227	1.145
			39.909	2740000.0	1720000.0	2060000.0	6.337	2.035
			64.939	262000.0	280000.0	252000.0	5.423	2.949
			90.273	40800.0	38600.0	34000.0	4.577	3.795
			120.028	4300.0	5350.0	4700.0	3.680	4.692
			150.040	800.0	760.0	545.0	2.846	5.526
			199.665	31.0	42.0	39.0	1.572	6.800
			0.000	270000000.0	242000000.0	256000000.0	8.408	-0.036
			20.049	20800000.0	17600000.0	19200000.0	7.283	1.089
			40.014	2720000.0	2900000.0	2960000.0	6.456	1.916
			64.671	348000.0	302000.0	326000.0	5.512	2.860
			89.945	42600.0	46200.0	46600.0	4.654	3.718
			119.616	4500.0	5400.0	5850.0	3.720	4.652
			148.867	815.0	865.0	980.0	2.948	5.424
			175.380	184.0	220.0	220.0	2.318	6.054
			200.314	48.0	52.0	67.0	1.746	6.626
			224.958	14.0	11.5	13.0	1.108	7.264

Table A.4a Data Collected to Determine the UV Dose Response								
Date	ID	Microbe	UV Dose (mJ/cm^2)	Rep 1	Rep 2	Rep 3	Average	log i
				PFU/mL	PFU/mL	PFU/mL	Log	
14-Mar-19	617	MS2	0.000	134000000.0	140000000.0	114000000.0	8.112	0.039
			19.930	11200000.0	11800000.0	8200000.0	7.017	1.134
			39.943	1160000.0	1020000.0	1100000.0	6.039	2.112
			64.770	122000.0	154000.0	106000.0	5.105	3.046
			89.446	20800.0	17600.0	19000.0	4.282	3.869
			119.664	2740.0	2580.0	2060.0	3.391	4.760
			148.893	315.0	290.0	365.0	2.510	5.641
			179.808	37.0	45.0	35.0	1.591	6.559
			209.583	11.5	10.5	11.0	1.041	7.109
			0.000	168000000.0	122000000.0	174000000.0	8.189	-0.039
			19.973	11400000.0	12400000.0	12600000.0	7.084	1.067
			39.961	1700000.0	1680000.0	1620000.0	6.222	1.929
			65.122	152000.0	186000.0	170000.0	5.229	2.922
			89.932	21600.0	21000.0	20800.0	4.325	3.826
			119.954	3080.0	2960.0	2840.0	3.471	4.679
			149.485	340.0	475.0	460.0	2.628	5.522
			179.907	56.0	62.0	57.0	1.766	6.385
			210.448	6.5	12.0	11.5	1.000	7.151
19-Mar-19	819	MS2	0.000	132000000.0	132000000.0	154000000.0	8.144	0.035
			20.023	14400000.0	13600000.0	12200000.0	7.127	1.051
			39.981	1460000.0	1880000.0	1920000.0	6.244	1.935
			64.788	234000.0	176000.0	202000.0	5.310	2.869
			89.753	24400.0	24600.0	26400.0	4.400	3.778
			119.194	4280.0	3760.0	3920.0	3.601	4.578
			149.286	480.0	525.0	465.0	2.690	5.488
			174.551	98.0	108.0	108.0	2.020	6.159
			229.150	8.4	10.4	16.0	1.064	7.114
			255.059	4.0	6.6	6.0	0.7430	7.436
			0.000	170000000.0	158000000.0	162000000.0	8.213	-0.035
			20.038	17400000.0	10600000.0	11800000.0	7.123	1.056
			40.068	1720000.0	1760000.0	1660000.0	6.234	1.945
			64.724	250000.0	214000.0	212000.0	5.353	2.826
			89.396	33200.0	33200.0	31800.0	4.515	3.664
			119.055	3920.0	4020.0	4380.0	3.613	4.565
			149.842	550.0	640.0	665.0	2.791	5.387
			174.322	166.0	180.0	180.0	2.244	5.935
			198.379	45.5	44.0	50.0	1.667	6.511
			229.113	9.0	11.6	8.6	0.9883	7.190
			253.030	3.6	7.0	4.4	0.6990	7.480
12-Mar-19	416	T1UV	0.000	94000000.0	97000000.0	92000000.0	7.975	0.015
			5.012	6900000.0	6100000.0	8000000.0	6.845	1.144
			9.959	980000.0	790000.0	760000.0	5.926	2.063
			15.092	84000.0	106000.0	104000.0	4.991	2.998
			20.087	6000.0	5900.0	6700.0	3.792	4.197
			24.997	900.0	830.0	930.0	2.948	5.042
			30.398	150.0	154.0	158.0	2.188	5.802
			0.000	97000000.0	100000000.0	106000000.0	8.004	-0.015
			5.044	7000000.0	7100000.0	7200000.0	6.851	1.138
			9.959	760000.0	880000.0	980000.0	5.941	2.048
			14.896	92000.0	98000.0	101000.0	4.987	3.003
			20.128	6500.0	7600.0	9100.0	3.888	4.101
			24.823	830.0	920.0	770.0	2.924	5.065
			30.215	120.0	114.0	135.0	2.090	5.900

Table A.4a Data Collected to Determine the UV Dose Response								
Date	ID	Microbe	UV Dose (mJ/cm^2)	Rep 1	Rep 2	Rep 3	Average	log i
				PFU/mL	PFU/mL	PFU/mL	Log	
19-Mar-19	820	T1UV	0.000	73000000.0	73000000.0	76000000.0	7.869	0.046
			5.007	6000000.0	6400000.0	5200000.0	6.768	1.147
			10.075	580000.0	600000.0	470000.0	5.740	2.175
			14.898	103000.0	103000.0	85000.0	4.987	2.929
			19.837	5800.0	6000.0	6100.0	3.776	4.140
			24.867	550.0	430.0	440.0	2.675	5.241
			29.968	74.0	117.0	97.0	1.982	5.933
			0.000	88000000.0	84000000.0	103000000.0	7.962	-0.046
			4.952	6100000.0	6100000.0	7500000.0	6.817	1.098
			9.984	820000.0	610000.0	770000.0	5.865	2.050
			14.968	69000.0	76000.0	66000.0	4.847	3.069
			19.957	5500.0	6400.0	7200.0	3.804	4.112
			25.123	470.0	580.0	630.0	2.748	5.168

Table A.4b Collimated Beam UV Dose Calculations

Sample ID		101
Collection Date		8-Jan-19
CB Date		9-Jan-19
Stir bar volume	cm^3	0.2333
Solution volume	mL	17
Petri dish diameter	cm	4.9750
Sample depth	cm	0.8745
Distance from UV lamp to water surface	cm	45.6
Divergence Factor (DF)		0.9855
Water absorption coefficient	cm^{-1}	0.006
Petri factor (A)		0.9943
Petri factor (B)		0.9905
Petri factor (C)		0.9944
Petri factor (D)		0.9903
Reflectance factor		0.9750
Radiometer correction factor		1.00384

GAP ID	CB Device	Radiometer before (uW/cm^2)	Radiometer after (uW/cm^2)	Exposure Time (s)	UV Dose (mJ/cm^2)
37	D	123.2	123.6	172	20.06
38	C	122.0	122.2	345	39.98
39	A	128.7	126.7	491	59.51
40	B	126.5	126.3	669	79.95
41	D	122.3	123.5	865	100.49
42	C	120.0	122.2	1054	121.16
44	B	126.3	126.1	167	19.93
45	A	126.7	126.7	333	40.05
46	C	122.2	122.0	517	59.92
47	D	123.5	123.2	685	79.87
48	B	123.1	126.5	859	101.36
49	A	123.6	128.7	1023	122.49

Sample ID		409
Collection Date		15-Jan-19
CB Date		17-Jan-19
Stir bar volume	cm^3	0.2333
Solution volume	mL	17
Petri dish diameter	cm	4.9750
Sample depth	cm	0.8745
Distance from UV lamp to water surface	cm	45.6
Divergence Factor (DF)		0.9812
Water absorption coefficient	cm^{-1}	0.0214
Petri factor (A)		0.9971
Petri factor (B)		0.9915
Petri factor (C)		0.9946
Petri factor (D)		0.9898
Reflectance factor		0.9750
Radiometer correction factor		1.00442

GAP ID	CB Device	Radiometer before (uW/cm^2)	Radiometer after (uW/cm^2)	Exposure Time (s)	UV Dose (mJ/cm^2)
749	C	120.4	120.0	178	20.01
750	D	123.9	123.0	347	39.88
751	B	126.8	126.6	507	59.90
752	A	128.2	128.9	665	80.16
753	A	126.8	128.6	841	100.71
754	B	125.2	127.5	1028	121.12
756	A	128.9	128.2	165	19.89
757	B	126.6	126.7	339	40.04
758	D	123.0	121.6	524	59.66
759	C	120.0	119.8	713	79.97
760	D	123.5	124.5	870	100.43
761	C	121.1	121.1	1059	119.97

Table A.4b Collimated Beam UV Dose Calculations

Sample ID		416 T1UV
Collection Date		12-Mar-19
CB Date		13-Mar-19
Stir bar volume	cm^3	0.2333
Solution volume	mL	17
Petri dish diameter	cm	4.9750
Sample depth	cm	0.8745
Distance from UV lamp to water surface	cm	45.6
Divergence Factor (DF)		0.9812
Water absorption coefficient	cm^{-1}	0.0931
Petri factor (A)		0.9926
Petri factor (B)		0.9972
Petri factor (C)		0.9911
Petri factor (D)		0.9946
Reflectance factor		0.9750
Radiometer correction factor		1.00975

GAP ID	CB Device	Radiometer before (uW/cm^2)	Radiometer after (uW/cm^2)	Exposure Time (s)	UV Dose (mJ/cm^2)
2189	A	132.5	134.1	43	5.01
2190	B	133.6	133.2	85	9.96
2191	B	132.8	133.6	129	15.09
2192	A	131.9	133.7	173	20.09
2193	A	131.6	131.9	217	25.00
2194	B	128.9	132.3	265	30.40
2196	B	133.2	133.9	43	5.04
2197	A	134.1	133.9	85	9.96
2198	A	133.7	132.5	128	14.90
2199	B	130.6	132.8	174	20.13
2200	B	132.3	130.6	215	24.82
2201	A	130.2	131.6	264	30.21

Sample ID		407 MS2 (1 of 2)
Collection Date		13-Mar-19
CB Date		14-Mar-19
Stir bar volume	cm^3	0.2333
Solution volume	mL	17
Petri dish diameter	cm	4.9750
Sample depth	cm	0.8745
Distance from UV lamp to water surface	cm	45.6
Divergence Factor (DF)		0.9812
Water absorption coefficient	cm^{-1}	0.0136
Petri factor (A)		0.9926
Petri factor (B)		0.9972
Petri factor (C)		0.9911
Petri factor (D)		0.9946
Reflectance factor		0.9750
Radiometer correction factor		0.99877

GAP ID	CB Device	Radiometer before (uW/cm^2)	Radiometer after (uW/cm^2)	Exposure Time (s)	UV Dose (mJ/cm^2)
2305	D	131.3	131.2	162	19.93
2306	C	128.4	128.2	333	39.91
2307	D	131.2	131.2	528	64.94
2308	B	133.7	134.6	716	90.27
2309	A	135.4	135.3	948	120.03
2310	D	131.3	131.3	1219	150.04
2311	C	128.2	128.4	1461	175.10
2312	B	134.2	133.7	1586	199.66
2313	A	134.9	135.3	1783	225.36

Table A.4b Collimated Beam UV Dose Calculations

Sample ID		407 MS2 (2 of 2)
Collection Date		13-Mar-19
CB Date		14-Mar-19
Stir bar volume	cm^3	0.2333
Solution volume	mL	17
Petri dish diameter	cm	4.9750
Sample depth	cm	0.8745
Distance from UV lamp to water surface	cm	45.6
Divergence Factor (DF)		0.9812
Water absorption coefficient	cm^{-1}	0.0136
Petri factor (A)		0.9926
Petri factor (B)		0.9972
Petri factor (C)		0.9911
Petri factor (D)		0.9946
Reflectance factor		0.9750
Radiometer correction factor		1.00571

GAP ID	CB Device	Radiometer before (uW/cm^2)	Radiometer after (uW/cm^2)	Exposure Time (s)	UV Dose (mJ/cm^2)
2316	A	135.3	135.8	157	20.05
2317	A	135.8	135.6	313	40.01
2318	D	130.8	129.7	526	64.67
2319	C	128.8	128.6	743	89.95
2320	B	134.2	133.3	945	119.62
2321	A	135.6	133.6	1174	148.87
2322	B	133.6	134.2	1384	175.38
2323	C	128.4	128.8	1656	200.31
2324	D	130.8	130.8	1822	224.96

Sample ID		617
Collection Date		14-Mar-19
CB Date		18-Mar-19
Stir bar volume	cm^3	0.2333
Solution volume	mL	17
Petri dish diameter	cm	4.9750
Sample depth	cm	0.8745
Distance from UV lamp to water surface	cm	45.6
Divergence Factor (DF)		0.9812
Water absorption coefficient	cm^{-1}	0.0680
Petri factor (A)		0.9926
Petri factor (B)		0.9972
Petri factor (C)		0.9911
Petri factor (D)		0.9946
Reflectance factor		0.9750
Radiometer correction factor		1.00716

GAP ID	CB Device	Radiometer before (uW/cm^2)	Radiometer after (uW/cm^2)	Exposure Time (s)	UV Dose (mJ/cm^2)
2386	B	129.4	128.7	172	19.93
2387	A	131.2	130.9	341	39.94
2388	D	127.5	126.7	569	64.77
2389	C	125.1	123.6	806	89.45
2390	A	132.3	131.5	1015	119.66
2391	B	130.6	128.7	1279	148.89
2392	D	128.6	128.3	1563	179.81
2393	C	125.7	125.2	1872	209.58
2395	C	123.6	123.7	181	19.97
2396	D	126.7	126.1	353	39.96
2397	B	128.7	129.4	562	65.12
2398	A	131.5	131.2	766	89.93
2399	C	125.2	125.1	1074	119.95
2400	D	128.3	127.5	1305	149.48
2401	B	130.8	130.6	1533	179.91
2402	A	131.8	132.3	1783	210.45

Table A.4b Collimated Beam UV Dose Calculations

Sample ID		820 T1UV
Collection Date		19-Mar-19
CB Date		20-Mar-19
Stir bar volume	cm^3	0.2333
Solution volume	mL	17
Petri dish diameter	cm	4.9750
Sample depth	cm	0.8745
Distance from UV lamp to water surface	cm	45.6
Divergence Factor (DF)		0.9812
Water absorption coefficient	cm^{-1}	0.1900
Petri factor (A)		0.9926
Petri factor (B)		0.9972
Petri factor (C)		0.9911
Petri factor (D)		0.9946
Reflectance factor		0.9750
Radiometer correction factor		1.01166

GAP ID	CB Device	Radiometer before (uW/cm^2)	Radiometer after (uW/cm^2)	Exposure Time (s)	UV Dose (mJ/cm^2)
2838	D	127.5	128.0	49	5.01
2839	C	124.5	125.8	101	10.07
2840	B	133.5	131.9	140	14.90
2841	A	134.5	132.7	186	19.84
2842	D	129.6	128.4	241	24.87
2843	C	126.0	125.5	299	29.97
2845	B	131.5	131.3	47	4.95
2846	A	132.7	133.4	94	9.98
2847	C	125.5	124.9	150	14.97
2848	D	128.4	127.5	195	19.96
2849	B	132.1	133.4	236	25.12
2850	A	134.6	134.5	279	29.97

Sample ID		819 MS2 (1 of 2)
Collection Date		20-Mar-19
CB Date		22-Mar-19
Stir bar volume	cm^3	0.2333
Solution volume	mL	17
Petri dish diameter	cm	4.9750
Sample depth	cm	0.8745
Distance from UV lamp to water surface	cm	45.6
Divergence Factor (DF)		0.9812
Water absorption coefficient	cm^{-1}	0.1640
Petri factor (A)		0.9926
Petri factor (B)		0.9972
Petri factor (C)		0.9911
Petri factor (D)		0.9946
Reflectance factor		0.9750
Radiometer correction factor		1.01000

GAP ID	CB Device	Radiometer before (uW/cm^2)	Radiometer after (uW/cm^2)	Exposure Time (s)	UV Dose (mJ/cm^2)
2940	A	129.7	129.7	189	20.02
2941	B	127.6	127.5	382	39.98
2942	D	126.2	125.5	629	64.79
2943	C	123.5	122.7	894	89.75
2944	B	130.2	128.5	1123	119.19
2945	A	132.8	131.5	1383	149.29
2946	C	126.1	125.4	1702	174.55
2947	D	130.3	127.8	1875	198.04
2948	B	127.6	132.3	2149	229.15
2949	A	128.6	133.8	2380	255.06

Table A.4b Collimated Beam UV Dose Calculations

Sample ID		819 MS2 (2 of 2)
Collection Date		20-Mar-19
CB Date		22-Mar-19
Stir bar volume	cm^3	0.2333
Solution volume	mL	17
Petri dish diameter	cm	4.9750
Sample depth	cm	0.8745
Distance from UV lamp to water surface	cm	45.6
Divergence Factor (DF)		0.9812
Water absorption coefficient	cm^{-1}	0.1640
Petri factor (A)		0.9926
Petri factor (B)		0.9972
Petri factor (C)		0.9911
Petri factor (D)		0.9946
Reflectance factor		0.9750
Radiometer correction factor		1.01000

GAP ID	CB Device	Radiometer before (uW/cm^2)	Radiometer after (uW/cm^2)	Exposure Time (s)	UV Dose (mJ/cm^2)
2951	C	122.7	123.0	200	20.04
2952	D	125.5	126.2	389	40.07
2953	B	128.5	127.6	616	64.72
2954	A	131.5	129.7	838	89.40
2955	C	125.4	123.5	1173	119.06
2956	D	126.5	126.2	1449	149.84
2957	A	133.8	132.8	1601	174.32
2958	B	132.3	130.2	1842	198.38
2959	D	125.7	130.3	2187	229.11
2960	C	123.1	126.1	2490	253.03

Table A.4c Comparison of N_0 with UVDGM method					
Date	**Microbe**	**ID**	**Average**	**UVDGM**	**Difference**
1/8/2019	MS2	101	7.073	7.054	-0.01922
1/16/2019	MS2	409	6.243	6.196	-0.04670
3/13/2019	MS2	407	8.372	8.228	-0.1441
3/14/2019	MS2	617	8.151	8.020	-0.1309
3/19/2019	MS2	819	8.179	8.062	-0.1168
3/12/2019	T1UV	416	7.989	7.986	-0.003724
3/19/2019	T1UV	820	7.916	7.900	-0.01566

Table A.4d Measured and Predicted UV Doses and Prediction Residuals from Collimated Beam Analyses					
Date	**Sample**	**Microbe**	**Measured UV Dose (mJ/cm^2)**	**Predicted UV Dose (mJ/cm^2)**	**Residuals (mJ/cm^2)**
8-Jan-19	101	MS2	0.000	0.153	0.153
			20.064	19.330	-0.734
			39.985	39.457	-0.527
			59.512	60.488	0.977
			79.955	81.583	1.628
			100.493	102.258	1.765
			121.155	121.680	0.524
			0.000	-0.153	-0.153
			19.927	18.591	-1.336
			40.045	40.511	0.466
			59.919	59.790	-0.129
			79.872	78.977	-0.895
			101.363	100.100	-1.263
			122.487	120.912	-1.576
16-Jan-19	409	MS2	0.000	0.470	0.470
			20.010	21.252	1.242
			39.880	40.507	0.627
			59.900	61.246	1.346
			80.160	79.938	-0.222
			100.710	101.067	0.357
			121.120	121.848	0.728
			0.000	-0.466	-0.466
			19.890	18.357	-1.533
			40.040	39.509	-0.531
			59.660	59.075	-0.585
			79.970	79.407	-0.563
			100.430	99.915	-0.515
			119.970	119.452	-0.518
13-Mar-19	407	MS2	0.000	0.595	0.595
			19.932	21.360	1.428
			39.909	41.607	1.698
			64.939	65.733	0.793
			90.273	91.026	0.753
			120.028	121.042	1.014
			150.040	151.817	1.777
			199.665	204.258	4.594
			0.000	-0.590	-0.590
			20.049	20.187	0.139
			40.014	38.709	-1.305
			64.671	63.219	-1.452
			89.945	88.602	-1.343
			119.616	119.620	0.004
			148.867	147.915	-0.952
			175.380	172.760	-2.619
			200.314	196.733	-3.582
			224.958	224.970	0.011

Table A.4d Measured and Predicted UV Doses and Prediction Residuals from Collimated Beam Analyses					
Date	**Sample**	**Microbe**	**Measured UV Dose (mJ/cm^2)**	**Predicted UV Dose (mJ/cm^2)**	**Residuals (mJ/cm^2)**
14-Mar-19	617	MS2	0.000	0.645	0.645
			19.930	21.043	1.112
			39.943	42.912	2.968
			64.770	66.991	2.221
			89.446	90.813	1.367
			119.664	119.334	-0.331
			148.893	150.352	1.459
			179.808	185.650	5.842
			209.583	208.220	-1.363
			0.000	-0.639	-0.639
			19.973	19.672	-0.302
			39.961	38.557	-1.404
			65.122	63.619	-1.503
			89.932	89.503	-0.429
			119.954	116.644	-3.310
			149.485	146.010	-3.474
			179.907	178.697	-1.210
			210.448	209.964	-0.484
19-Mar-19	819	MS2	0.000	0.511	0.511
			20.023	18.208	-1.815
			39.981	37.716	-2.265
			64.788	62.535	-2.253
			89.753	90.827	1.073
			119.194	119.073	-0.121
			149.286	155.070	5.784
			174.551	184.189	9.638
			229.150	229.515	0.365
			255.059	245.778	-9.281
			0.000	-0.505	-0.505
			20.038	18.295	-1.744
			40.068	37.959	-2.109
			64.724	61.293	-3.432
			89.396	87.032	-2.364
			119.055	118.593	-0.462
			149.842	150.874	1.032
			174.322	174.211	-0.111
			198.379	200.383	2.003
			229.113	233.323	4.210
			253.030	248.045	-4.985
12-Mar-19	416	T1UV	0.000	0.067	0.067
			5.012	5.317	0.305
			9.959	9.772	-0.187
			15.092	14.473	-0.619
			20.087	20.753	0.666
			24.997	25.347	0.350
			30.398	29.601	-0.797
			0.000	-0.067	-0.067
			5.044	5.287	0.243
			9.959	9.697	-0.261
			14.896	14.496	-0.400
			20.128	20.240	0.113
			24.823	25.476	0.653
			30.215	30.155	-0.060

Table A.4d Measured and Predicted UV Doses and Prediction Residuals from Collimated Beam Analyses					
Date	**Sample**	**Microbe**	**Measured UV Dose (mJ/cm^2)**	**Predicted UV Dose (mJ/cm^2)**	**Residuals (mJ/cm^2)**
19-Mar-19	820	T1UV	0.000	0.227	0.227
			5.007	5.593	0.586
			10.075	10.605	0.530
			14.898	14.278	-0.619
			19.837	20.182	0.346
			24.867	25.547	0.681
			29.968	28.925	-1.042
			0.000	-0.227	-0.227
			4.952	5.355	0.402
			9.984	9.996	0.012
			14.968	14.959	-0.009
			19.957	20.045	0.088
			25.123	25.191	0.068

Table A.5a Biodosimetry Test Results WF-115-4

ID	In 1			In 2			In 3			Out 1			Out 2			Out 3			$\log_{10,in}$	$\log_{10,out}$	log *i*
	Dilution (log)	Aliquot (mL)	PFU	Dilution (log)	Aliquot (mL)	PFU	Dilution (log)	Aliquot (mL)	PFU	Dilution (log)	Aliquot (mL)	PFU	Dilution (log)	Aliquot (mL)	PFU	Dilution (log)	Aliquot (mL)	PFU			
401	-4	0.5	139	-4	0.5	102	-4	0.5	107	-1	1	78	-1	1	105	-1	1	90	6.365	2.959	3.406
401	-4	0.5	115	-4	0.5	106	-4	0.5	121	-1	1	110	-1	1	111	-1	1	94	6.358	3.021	3.337
401	-4	0.5	154	-4	0.5	108	-4	0.5	115	-1	1	80	-1	1	96	-1	1	95	6.400	2.956	3.444
402	-3	1	154	-3	1	139	-3	1	155	-1	1	120	-1	1	167	-1	1	130	5.174	3.143	2.031
402	-3	1	149	-3	1	146	-3	1	163	-1	1	193	-1	1	140	-1	1	145	5.184	3.202	1.981
402	-3	1	151	-3	1	133	-3	1	135	-1	1	132	-1	1	110	-1	1	143	5.145	3.108	2.037
403	-3	0.5	107	-3	0.5	94	-3	0.5	102	0	1	81	0	1	77	0	1	87	5.305	1.912	3.393
403	-3	0.5	109	-3	0.5	72	-3	0.5	134	0	1	85	0	1	85	0	1	73	5.322	1.908	3.414
403	-3	0.5	112	-3	0.5	114	-3	0.5	116	0	1	89	0	1	65	0	1	83	5.358	1.898	3.460
404	-3	2	104	-3	2	105	-3	2	81	-2	2	65	-2	2	72	-2	2	64	4.684	3.525	1.159
404	-3	2	91	-3	2	82	-3	2	107	-2	2	75	-2	2	61	-2	2	83	4.669	3.562	1.107
404	-3	2	84	-3	2	84	-3	2	79	-2	2	62	-2	2	67	-2	2	65	4.615	3.510	1.105
409	-4	1	142	-4	1	148	-4	1	143	0	0.5	122	0	0.5	141	0	0.5	138	6.159	2.427	3.732
409	-4	1	133	-4	1	147	-4	1	154	0	0.5	166	0	0.5	137	0	0.5	136	6.160	2.466	3.694
409	-4	1	148	-4	1	144	-4	1	139	0	0.5	150	0	0.5	130	0	0.5	173	6.157	2.480	3.677
422	-2	0.5	84	-2	0.5	84	-2	0.5	71	-1	1	145	-1	1	129	-1	1	144	4.202	3.144	1.058
422	-2	0.5	75	-2	0.5	81	-2	0.5	63	-1	1	142	-1	1	137	-1	1	123	4.164	3.127	1.037
422	-2	0.5	79	-2	0.5	69	-2	0.5	104	-1	1	121	-1	1	127	-1	1	137	4.225	3.108	1.117
408	-2	1	72	-2	1	73	-2	1	59	-1	1	72	-1	1	89	-1	1	80	3.833	2.905	0.9276
408	-2	1	57	-2	1	65	-2	1	62	-1	1	104	-1	1	94	-1	1	97	3.788	2.993	0.7950
408	-2	1	80	-2	1	87	-2	1	61	-1	1	109	-1	1	92	-1	1	105	3.881	3.009	0.8722
413	-3	2	85	-3	2	41	-3	2	77	0	0.5	75	0	0.5	87	0	0.5	80	4.529	2.208	2.322
413	-3	2	94	-3	2	99	-3	2	83	0	0.5	86	0	0.5	93	0	0.5	102	4.663	2.273	2.390
413	-3	2	121	-3	2	83	-3	2	86	0	0.5	95	0	0.5	91	0	0.5	123	4.684	2.314	2.370
407	-6	2	138	-6	2	118	-6	2	103	0	0.5	90	0	0.5	78	0	0.5	75	7.777	2.210	5.567
407	-6	2	161	-6	2	117	-6	2	135	0	0.5	92	0	0.5	66	0	0.5	97	7.838	2.230	5.607
407	-6	2	125	-6	2	123	-6	2	115	0	0.5	99	0	0.5	62	0	0.5	76	7.782	2.199	5.583
417	-5	1	100	-5	1	103	-5	1	96	0	10	50	0	10	55	0	10	59	6.999	0.7377	6.261
417	-5	1	92	-5	1	108	-5	1	91	0	10	61	0	10	65	0	10	48	6.987	0.7634	6.223
417	-5	1	108	-5	1	85	-5	1	90	0	10	57	0	10	68	0	10	74	6.975	0.8217	6.153
421	-4	2	203	-4	2	158	-4	2	191	0	1	92	0	1	95	0	1	93	5.964	1.970	3.994
421	-4	2	192	-4	2	205	-4	2	152	0	1	110	0	1	78	0	1	91	5.961	1.968	3.993
421	-4	2	113	-4	2	170	-4	2	124	0	1	81	0	1	79	0	1	98	5.831	1.934	3.897
412	-5	1	88	-5	1	74	-5	1	92	0	2	112	0	2	91	0	2	112	6.928	1.720	5.208
412	-5	1	101	-5	1	113	-5	1	82	0	2	99	0	2	104	0	2	121	6.994	1.732	5.262
412	-5	1	103	-5	1	121	-5	1	109	0	2	102	0	2	88	0	2	90	7.045	1.669	5.376
415	-4	0.5	112	-4	0.5	80	-4	0.5	126	-1	2	108	-1	2	107	-1	2	100	6.326	2.720	3.606
415	-4	0.5	126	-4	0.5	110	-4	0.5	103	-1	2	132	-1	2	132	-1	2	113	6.354	2.798	3.556

Table A.5a Biodosimetry Test Results WF-115-4

ID	In 1			In 2			In 3			Out 1			Out 2			Out 3			$\log_{10,in}$	$\log_{10,out}$	$\log i$
	Dilution (log)	Aliquot (mL)	PFU	Dilution (log)	Aliquot (mL)	PFU	Dilution (log)	Aliquot (mL)	PFU	Dilution (log)	Aliquot (mL)	PFU	Dilution (log)	Aliquot (mL)	PFU	Dilution (log)	Aliquot (mL)	PFU			
415	-4	0.5	120	-4	0.5	139	-4	0.5	130	-1	2	107	-1	2	125	-1	2	85	6.414	2.723	3.691
405	-2	1	72	-2	1	47	-2	1	65	0	1	89	0	1	93	0	1	103	3.788	1.978	1.810
405	-2	1	56	-2	1	65	-2	1	50	0	1	86	0	1	94	0	1	76	3.756	1.931	1.825
405	-2	1	61	-2	1	65	-2	1	64	0	1	94	0	1	88	0	1	59	3.802	1.905	1.897
406	-3	1	115	-3	1	87	-3	1	110	0	10	30	0	10	31	0	10	26	5.017	0.4624	4.555
406	-3	1	102	-3	1	93	-3	1	85	0	10	28	0	10	25	0	10	22	4.970	0.3979	4.572
406	-3	1	116	-3	1	125	-3	1	117	0	10	38	0	10	42	0	10	43	5.077	0.6128	4.464
410	-3	2	48	-3	2	41	-3	2	56	0	0.5	101	0	0.5	89	0	0.5	101	4.383	2.288	2.095
410	-3	2	57	-3	2	57	-3	2	47	0	0.5	110	0	0.5	116	0	0.5	104	4.429	2.342	2.086
410	-3	2	35	-3	2	42	-3	2	47	0	0.5	121	0	0.5	125	0	0.5	136	4.315	2.406	1.909
411	-4	2	86	-4	2	73	-4	2	60	0	1	56	0	1	72	0	1	70	5.562	1.820	3.743
411	-4	2	96	-4	2	76	-4	2	72	0	1	52	0	1	80	0	1	46	5.609	1.773	3.836
411	-4	2	65	-4	2	78	-4	2	64	0	1	62	0	1	83	0	1	53	5.538	1.820	3.718
414	-1	0.5	81	-1	0.5	88	-1	0.5	74	0	1	166	0	1	162	0	1	189	3.210	2.236	0.9731
414	-1	0.5	67	-1	0.5	77	-1	0.5	83	0	1	119	0	1	149	0	1	163	3.180	2.157	1.023
414	-1	0.5	73	-1	0.5	82	-1	0.5	80	0	1	120	0	1	145	0	1	120	3.195	2.108	1.087
416	-4	2	109	-4	2	110	-4	2	90	0	10	34	0	10	51	0	10	38	5.712	0.6128	5.099
416	-4	2	127	-4	2	124	-4	2	100	0	10	54	0	10	58	0	10	54	5.767	0.7430	5.024
416	-4	2	95	-4	2	112	-4	2	110	0	10	58	0	10	59	0	10	66	5.723	0.7853	4.938
419	-2	1	86	-2	1	84	-2	1	84	0	2	54	0	2	49	0	2	54	3.928	1.418	2.510
419	-2	1	76	-2	1	60	-2	1	50	0	2	61	0	2	54	0	2	39	3.792	1.409	2.383
419	-2	1	88	-2	1	101	-2	1	85	0	2	67	0	2	60	0	2	63	3.961	1.501	2.460
420	-3	2	85	-3	2	86	-3	2	72	0	2	36	0	2	41	0	2	44	4.607	1.305	3.303
420	-3	2	106	-3	2	91	-3	2	75	0	2	41	0	2	34	0	2	47	4.656	1.308	3.348
420	-3	2	83	-3	2	79	-3	2	71	0	2	39	0	2	33	0	2	38	4.589	1.263	3.326
423	-1	0.5	83	-1	0.5	95	-1	0.5	109	0	2	113	0	2	107	0	2	108	3.282	1.738	1.544
423	-1	0.5	85	-1	0.5	108	-1	0.5	118	0	2	101	0	2	120	0	2	98	3.317	1.726	1.591
423	-1	0.5	83	-1	0.5	96	-1	0.5	120	0	2	67	0	2	82	0	2	89	3.300	1.598	1.701
Control	-1	0.5	55	-1	0.5	79	-1	0.5	62	-1	0.5	99	-1	0.5	116	-1	0.5	88	3.116	3.305	-0.189
Control	-1	0.5	72	-1	0.5	92	-1	0.5	79	-1	0.5	94	-1	0.5	109	-1	0.5	105	3.210	3.312	-0.103
Control	-1	0.5	87	-1	0.5	69	-1	0.5	68	-1	0.5	95	-1	0.5	101	-1	0.5	101	3.174	3.297	-0.123
Control 4	-2	2	131	-2	2	110	-2	2	121	-2	2	106	-2	2	94	-2	2	115	3.781	3.720	0.060
Control 4	-2	2	95	-2	2	117	-2	2	127	-2	2	130	-2	2	106	-2	2	112	3.752	3.763	-0.011
Control 4	-2	2	123	-2	2	129	-2	2	106	-2	2	105	-2	2	115	-2	2	117	3.776	3.749	0.026
Control 5	-3	0.5	78	-3	0.5	88	-3	0.5	99	-3	0.5	106	-3	0.5	76	-3	0.5	92	5.247	5.262	-0.015
Control 5	-3	0.5	76	-3	0.5	75	-3	0.5	81	-3	0.5	79	-3	0.5	75	-3	0.5	67	5.189	5.168	0.021
Control 5	-3	0.5	89	-3	0.5	86	-3	0.5	88	-3	0.5	66	-3	0.5	62	-3	0.5	88	5.244	5.158	0.086
Control 1	-3	2	130	-3	2	155	-3	2	153	-3	2	120	-3	2	130	-3	2	132	4.863	4.804	0.059
Control 1	-3	2	157	-3	2	131	-3	2	173	-3	2	136	-3	2	167	-3	2	137	4.886	4.865	0.020
Control 1	-3	2	100	-3	2	117	-3	2	113	-3	2	163	-3	2	176	-3	2	161	4.740	4.921	-0.180

Table A.5b Biodosimetry Test Results WF-125-6

ID	In 1			In 2			In 3			Out 1			Out 2			Out 3			$\log_{10,in}$	$\log_{10,out}$	log *i*
	Dilution (log)	Aliquot (mL)	PFU	Dilution (log)	Aliquot (mL)	PFU	Dilution (log)	Aliquot (mL)	PFU	Dilution (log)	Aliquot (mL)	PFU	Dilution (log)	Aliquot (mL)	PFU	Dilution (log)	Aliquot (mL)	PFU			
601	-4	0.5	186	-4	0.5	148	-4	0.5	159	-1	1	63	-1	1	60	-1	1	50	6.517	2.761	3.756
601	-4	0.5	168	-4	0.5	149	-4	0.5	146	-1	1	70	-1	1	64	-1	1	56	6.489	2.802	3.688
601	-4	0.5	176	-4	0.5	117	-4	0.5	165	-1	1	63	-1	1	71	-1	1	78	6.485	2.849	3.636
602	-3	1	103	-3	1	129	-3	1	111	-1	0.5	93	-1	0.5	81	-1	0.5	75	5.058	3.220	1.838
602	-3	1	114	-3	1	126	-3	1	123	-1	0.5	120	-1	0.5	88	-1	0.5	93	5.083	3.302	1.780
602	-3	1	132	-3	1	91	-3	1	105	-1	0.5	111	-1	0.5	79	-1	0.5	99	5.039	3.285	1.754
604	-3	2	112	-3	2	109	-3	2	103	-1	0.5	134	-1	0.5	122	-1	0.5	178	4.732	3.461	1.271
604	-3	2	102	-3	2	115	-3	2	102	-1	0.5	113	-1	0.5	121	-1	0.5	105	4.726	3.354	1.372
604	-3	2	112	-3	2	83	-3	2	116	-1	0.5	111	-1	0.5	139	-1	0.5	111	4.715	3.381	1.333
603	-3	1	135	-3	1	137	-3	1	125	0	0.5	65	0	0.5	68	0	0.5	84	5.122	2.160	2.961
603	-3	1	114	-3	1	126	-3	1	122	0	0.5	84	0	0.5	74	0	0.5	62	5.082	2.166	2.915
603	-3	1	151	-3	1	159	-3	1	123	0	0.5	61	0	0.5	76	0	0.5	89	5.159	2.178	2.981
623	-3	1	99	-3	1	125	-3	1	90	-2	0.5	81	-2	0.5	80	-2	0.5	89	5.020	4.222	0.798
623	-3	1	108	-3	1	124	-3	1	135	-2	0.5	79	-2	0.5	81	-2	0.5	84	5.088	4.211	0.876
623	-3	1	129	-3	1	118	-3	1	123	-2	0.5	84	-2	0.5	85	-2	0.5	91	5.091	4.239	0.852
608	-3	1	119	-3	1	121	-3	1	106	-2	0.5	101	-2	0.5	91	-2	0.5	115	5.062	4.311	0.751
608	-3	1	111	-3	1	142	-3	1	135	-2	0.5	96	-2	0.5	102	-2	0.5	117	5.112	4.322	0.789
608	-3	1	126	-3	1	115	-3	1	132	-2	0.5	117	-2	0.5	110	-2	0.5	102	5.095	4.341	0.753
606	-5	1	145	-5	1	119	-5	1	122	0	5	20	0	5	27	0	5	30	7.109	0.7104	6.399
606	-5	1	114	-5	1	110	-5	1	144	0	5	15	0	5	26	0	5	25	7.089	0.6435	6.445
606	-5	1	147	-5	1	108	-5	1	100	0	5	35	0	5	21	0	5	22	7.073	0.7160	6.357
609	-4	1	66	-4	1	70	-4	1	61	-1	2	70	-1	2	65	-1	2	50	5.817	2.489	3.328
609	-4	1	60	-4	1	65	-4	1	75	-1	2	82	-1	2	70	-1	2	83	5.824	2.593	3.231
609	-4	1	56	-4	1	67	-4	1	60	-1	2	77	-1	2	70	-1	2	71	5.785	2.560	3.225
612	-5	1	114	-5	1	105	-5	1	98	0	2	61	0	2	42	0	2	57	7.024	1.426	5.598
612	-5	1	90	-5	1	103	-5	1	103	0	2	45	0	2	63	0	2	47	6.994	1.412	5.582
612	-5	1	122	-5	1	109	-5	1	103	0	2	38	0	2	54	0	2	44	7.047	1.355	5.691
613	-3	2	109	-3	2	97	-3	2	100	-1	2	106	-1	2	114	-1	2	123	4.708	2.757	1.950
613	-3	2	100	-3	2	83	-3	2	96	-1	2	110	-1	2	140	-1	2	103	4.667	2.770	1.898
613	-3	2	90	-3	2	98	-3	2	115	-1	2	120	-1	2	114	-1	2	111	4.703	2.760	1.944
617	-5	1	99	-5	1	98	-5	1	106	0	2	81	0	2	77	0	2	72	7.004	1.584	5.421
617	-5	1	82	-5	1	95	-5	1	87	0	2	74	0	2	81	0	2	87	6.944	1.606	5.339
617	-5	1	104	-5	1	88	-5	1	101	0	2	60	0	2	74	0	2	51	6.990	1.489	5.501
615	-4	1	86	-4	1	103	-4	1	93	-1	1	64	-1	1	66	-1	1	53	5.973	2.785	3.188
615	-4	1	93	-4	1	83	-4	1	73	-1	1	55	-1	1	65	-1	1	71	5.919	2.804	3.115
615	-4	1	84	-4	1	93	-4	1	90	-1	1	58	-1	1	46	-1	1	41	5.949	2.684	3.265
605	-3	2	63	-3	2	84	-3	2	49	0	2	60	0	2	76	0	2	64	4.514	1.523	2.991
605	-3	2	64	-3	2	75	-3	2	60	0	2	61	0	2	66	0	2	74	4.521	1.525	2.996
605	-3	2	61	-3	2	57	-3	2	64	0	2	73	0	2	72	0	2	72	4.482	1.558	2.924
610	-2	0.5	77	-2	0.5	75	-2	0.5	76	0	0.5	103	0	0.5	87	0	0.5	131	4.182	2.330	1.851

Table A.5b Biodosimetry Test Results WF-125-6

ID	In 1			In 2			In 3			Out 1			Out 2			Out 3			$\log_{10,in}$	$\log_{10,out}$	log *i*
	Dilution (log)	Aliquot (mL)	PFU	Dilution (log)	Aliquot (mL)	PFU	Dilution (log)	Aliquot (mL)	PFU	Dilution (log)	Aliquot (mL)	PFU	Dilution (log)	Aliquot (mL)	PFU	Dilution (log)	Aliquot (mL)	PFU			
610	-2	0.5	76	-2	0.5	89	-2	0.5	87	0	0.5	123	0	0.5	108	0	0.5	125	4.225	2.375	1.850
610	-2	0.5	95	-2	0.5	87	-2	0.5	80	0	0.5	99	0	0.5	108	0	0.5	97	4.242	2.307	1.935
611	-3	0.5	118	-3	0.5	135	-3	0.5	105	0	2	53	0	2	50	0	2	44	5.378	1.389	3.989
611	-3	0.5	124	-3	0.5	131	-3	0.5	125	0	2	40	0	2	46	0	2	27	5.404	1.275	4.129
611	-3	0.5	98	-3	0.5	121	-3	0.5	116	0	2	31	0	2	46	0	2	38	5.349	1.283	4.066
614	-1	1	125	-1	1	103	-1	1	110	0	1	135	0	1	128	0	1	146	3.052	2.135	0.917
614	-1	1	102	-1	1	108	-1	1	97	0	1	140	0	1	108	0	1	131	3.010	2.102	0.908
614	-1	1	110	-1	1	88	-1	1	101	0	1	113	0	1	106	0	1	142	2.999	2.080	0.918
616	-4	2	91	-4	2	85	-4	2	76	0	2	106	0	2	81	0	2	90	5.623	1.664	3.959
616	-4	2	90	-4	2	89	-4	2	82	0	2	76	0	2	61	0	2	57	5.638	1.510	4.129
616	-4	2	104	-4	2	71	-4	2	87	0	2	94	0	2	87	0	2	81	5.640	1.640	4.000
619	-2	0.5	92	-2	0.5	95	-2	0.5	91	0	1	142	0	1	136	0	1	113	4.268	2.115	2.153
619	-2	0.5	106	-2	0.5	77	-2	0.5	89	0	1	134	0	1	141	0	1	127	4.258	2.127	2.131
619	-2	0.5	82	-2	0.5	87	-2	0.5	97	0	1	135	0	1	126	0	1	136	4.249	2.122	2.127
620	-4	2	60	-4	2	41	-4	2	54	0	0.5	104	0	0.5	87	0	0.5	68	5.412	2.237	3.175
620	-4	2	71	-4	2	65	-4	2	69	0	0.5	69	0	0.5	82	0	0.5	74	5.534	2.176	3.358
620	-4	2	82	-4	2	63	-4	2	60	0	0.5	101	0	0.5	101	0	0.5	90	5.534	2.289	3.244
621	-4	2	64	-4	2	68	-4	2	66	0	2	36	0	2	24	0	2	29	5.519	1.171	4.347
621	-4	2	52	-4	2	54	-4	2	64	0	2	23	0	2	26	0	2	21	5.452	1.067	4.385
621	-4	2	58	-4	2	61	-4	2	60	0	2	26	0	2	18	0	2	27	5.475	1.073	4.402
622	-1	0.5	133	-1	0.5	152	-1	0.5	140	0	0.5	97	0	0.5	109	0	0.5	115	3.452	2.330	1.122
622	-1	0.5	89	-1	0.5	115	-1	0.5	86	0	0.5	72	0	0.5	61	0	0.5	72	3.286	2.136	1.151
622	-1	0.5	69	-1	0.5	79	-1	0.5	100	0	0.5	62	0	0.5	51	0	0.5	57	3.218	2.054	1.164
Control	-1	0.5	55	-1	0.5	79	-1	0.5	62	-1	0.5	99	-1	0.5	116	-1	0.5	88	3.116	3.305	-0.189
Control	-1	0.5	72	-1	0.5	92	-1	0.5	79	-1	0.5	94	-1	0.5	109	-1	0.5	105	3.210	3.312	-0.103
Control	-1	0.5	87	-1	0.5	69	-1	0.5	68	-1	0.5	95	-1	0.5	101	-1	0.5	101	3.174	3.297	-0.123
Control 4	-2	2	131	-2	2	110	-2	2	121	-2	2	106	-2	2	94	-2	2	115	3.781	3.720	0.060
Control 4	-2	2	95	-2	2	117	-2	2	127	-2	2	130	-2	2	106	-2	2	112	3.752	3.763	-0.011
Control 4	-2	2	123	-2	2	129	-2	2	106	-2	2	105	-2	2	115	-2	2	117	3.776	3.749	0.026
Control 1	-3	2	130	-3	2	155	-3	2	153	-3	2	120	-3	2	130	-3	2	132	4.863	4.804	0.059
Control 1	-3	2	157	-3	2	131	-3	2	173	-3	2	136	-3	2	167	-3	2	137	4.886	4.865	0.020
Control 1	-3	2	100	-3	2	117	-3	2	113	-3	2	163	-3	2	176	-3	2	161	4.740	4.921	-0.180
Control 6	-2	0.5	76	-2	0.5	91	-2	0.5	60	-2	0.5	80	-2	0.5	86	-2	0.5	60	4.180	4.178	0.002
Control 6	-2	0.5	75	-2	0.5	79	-2	0.5	76	-2	0.5	70	-2	0.5	95	-2	0.5	65	4.186	4.186	0.000
Control 6	-2	0.5	68	-2	0.5	89	-2	0.5	82	-2	0.5	85	-2	0.5	67	-2	0.5	60	4.202	4.150	0.052
607	-4	2	120	-4	2	118	-4	2	95	0	2	90	0	2	94	0	2	104	5.744	1.681	4.063
607	-4	2	132	-4	2	143	-4	2	139	0	2	98	0	2	120	0	2	111	5.839	1.739	4.100
607	-4	2	115	-4	2	130	-4	2	124	0	2	69	0	2	86	0	2	86	5.789	1.604	4.185

Table A.5c Biodosimetry Test Results WF-225-8

ID	In 1			In 2			In 3			Out 1			Out 2			Out 3			$\log_{10,in}$	$\log_{10,out}$	log *i*
	Dilution (log)	Aliquot (mL)	PFU	Dilution (log)	Aliquot (mL)	PFU	Dilution (log)	Aliquot (mL)	PFU	Dilution (log)	Aliquot (mL)	PFU	Dilution (log)	Aliquot (mL)	PFU	Dilution (log)	Aliquot (mL)	PFU			
801	-4	0.5	103	-4	0.5	89	-4	0.5	125	-2	2	43	-2	2	54	-2	2	61	6.325	3.421	2.904
801	-4	0.5	90	-4	0.5	68	-4	0.5	126	-2	2	42	-2	2	50	-2	2	51	6.277	3.377	2.900
801	-4	0.5	71	-4	0.5	60	-4	0.5	88	-2	2	61	-2	2	34	-2	2	58	6.164	3.407	2.758
802	-3	1	61	-3	1	59	-3	1	62	-1	2	135	-1	2	130	-1	2	126	4.783	2.814	1.969
802	-3	1	76	-3	1	87	-3	1	44	-1	2	126	-1	2	147	-1	2	106	4.839	2.800	2.038
802	-3	1	70	-3	1	73	-3	1	83	-1	2	118	-1	2	127	-1	2	123	4.877	2.788	2.089
803	-4	2	115	-4	2	93	-4	2	79	0	10	96	0	10	96	0	10	119	5.680	1.016	4.664
803	-4	2	87	-4	2	90	-4	2	121	0	10	104	0	10	98	0	10	92	5.696	0.9912	4.705
803	-4	2	95	-4	2	107	-4	2	109	0	10	91	0	10	88	0	10	93	5.715	0.9574	4.757
804	-3	2	94	-3	2	80	-3	2	80	-1	0.5	77	-1	0.5	107	-1	0.5	98	4.627	3.274	1.353
804	-3	2	86	-3	2	75	-3	2	91	-1	0.5	108	-1	0.5	91	-1	0.5	86	4.623	3.279	1.344
804	-3	2	89	-3	2	78	-3	2	54	-1	0.5	76	-1	0.5	81	-1	0.5	89	4.566	3.215	1.351
819	-3	2	74	-3	2	71	-3	2	76	0	1	104	0	1	89	0	1	93	4.566	1.979	2.587
819	-3	2	81	-3	2	80	-3	2	57	0	1	124	0	1	104	0	1	103	4.560	2.043	2.518
819	-3	2	51	-3	2	48	-3	2	60	0	1	107	0	1	100	0	1	80	4.423	1.981	2.442
816	-4	1	90	-4	1	53	-4	1	49	-1	2	68	-1	2	83	-1	2	82	5.806	2.589	3.217
816	-4	1	78	-4	1	76	-4	1	69	-1	2	106	-1	2	91	-1	2	93	5.871	2.684	3.187
816	-4	1	71	-4	1	60	-4	1	91	-1	2	91	-1	2	99	-1	2	91	5.869	2.671	3.199
808	-2	0.5	100	-2	0.5	83	-2	0.5	92	-2	2	70	-2	2	67	-2	2	49	4.263	3.491	0.772
808	-2	0.5	141	-2	0.5	117	-2	0.5	126	-2	2	110	-2	2	100	-2	2	132	4.408	3.756	0.652
808	-2	0.5	134	-2	0.5	121	-2	0.5	134	-2	2	139	-2	2	109	-2	2	105	4.414	3.770	0.644
809	-2	1	150	-2	1	138	-2	1	177	-1	0.5	274	-1	0.5	250	-1	0.5	216	4.190	3.693	0.497
809	-2	1	209	-2	1	154	-2	1	162	-1	0.5	230	-1	0.5	239	-1	0.5	234	4.243	3.671	0.572
809	-2	1	153	-2	1	159	-2	1	180	-1	0.5	244	-1	0.5	197	-1	0.5	249	4.215	3.663	0.552
814	-3	1	85	-3	1	56	-3	1	68	-2	0.5	155	-2	0.5	145	-2	0.5	196	4.843	4.519	0.324
814	-3	1	91	-3	1	78	-3	1	75	-2	0.5	137	-2	0.5	154	-2	0.5	183	4.910	4.500	0.411
814	-3	1	81	-3	1	84	-3	1	68	-2	0.5	162	-2	0.5	189	-2	0.5	162	4.890	4.534	0.356
818	-5	0.5	110	-5	0.5	103	-5	0.5	126	0	10	35	0	10	33	0	10	31	7.354	0.5185	6.836
818	-5	0.5	111	-5	0.5	145	-5	0.5	107	0	10	56	0	10	55	0	10	45	7.384	0.7160	6.668
818	-5	0.5	125	-5	0.5	110	-5	0.5	111	0	10	33	0	10	33	0	10	22	7.363	0.4674	6.896
813	-5	1	80	-5	1	83	-5	1	91	0	50	30	0	50	39	0	50	40	6.928	-0.1387	7.066
810	-4	0.5	109	-4	0.5	107	-4	0.5	128	-1	2	70	-1	2	56	-1	2	72	6.360	2.519	3.842
810	-4	0.5	114	-4	0.5	104	-4	0.5	102	-1	2	82	-1	2	75	-1	2	82	6.329	2.600	3.729
810	-4	0.5	113	-4	0.5	110	-4	0.5	103	-1	2	66	-1	2	83	-1	2	69	6.337	2.560	3.777
820	-4	0.5	100	-4	0.5	102	-4	0.5	75	0	20	29	0	20	38	0	20	41	6.266	0.2553	6.011
820	-4	0.5	92	-4	0.5	88	-4	0.5	135	0	20	38	0	20	38	0	20	37	6.322	0.2749	6.047
820	-4	0.5	91	-4	0.5	86	-4	0.5	105	0	20	41	0	20	36	0	20	43	6.274	0.3010	5.973
817	-4	1	85	-4	1	98	-4	1	103	0	10	76	0	10	67	0	10	53	5.979	0.8151	5.164
817	-4	1	82	-4	1	89	-4	1	104	0	10	60	0	10	61	0	10	50	5.962	0.7559	5.206
817	-4	1	98	-4	1	64	-4	1	84	0	10	64	0	10	61	0	10	45	5.914	0.7533	5.160

Table A.5c Biodosimetry Test Results WF-225-8

ID	In 1			In 2			In 3			Out 1			Out 2			Out 3			$\log_{10,in}$	$\log_{10,out}$	log *i*
	Dilution (log)	Aliquot (mL)	PFU	Dilution (log)	Aliquot (mL)	PFU	Dilution (log)	Aliquot (mL)	PFU	Dilution (log)	Aliquot (mL)	PFU	Dilution (log)	Aliquot (mL)	PFU	Dilution (log)	Aliquot (mL)	PFU			
821	-3	0.5	70	-3	0.5	96	-3	0.5	78	0	2	44	0	2	60	0	2	40	5.211	1.380	3.831
821	-3	0.5	57	-3	0.5	69	-3	0.5	70	0	2	50	0	2	42	0	2	36	5.116	1.329	3.787
821	-3	0.5	89	-3	0.5	86	-3	0.5	72	0	2	47	0	2	61	0	2	50	5.217	1.421	3.796
812	-4	2	61	-4	2	52	-4	2	58	0	50	23	0	50	26	0	50	14	5.455	-0.3768	5.832
812	-4	2	73	-4	2	46	-4	2	51	0	50	24	0	50	21	0	50	12	5.452	-0.4202	5.873
812	-4	2	70	-4	2	56	-4	2	78	0	50	9	0	50	19	0	50	9	5.531	-0.6079	6.139
811	-3	2	51	-3	2	42	-3	2	51	0	0.5	94	0	0.5	128	0	0.5	100	4.380	2.332	2.048
811	-3	2	48	-3	2	36	-3	2	51	0	0.5	88	0	0.5	100	0	0.5	96	4.352	2.277	2.075
811	-3	2	48	-3	2	34	-3	2	57	0	0.5	113	0	0.5	97	0	0.5	101	4.365	2.317	2.048
805	-4	2	52	-4	2	43	-4	2	45	0	10	4	0	10	3	0	10	5	5.368	-0.3979	5.766
805	-4	2	46	-4	2	47	-4	2	61	0	10	3	0	10	5	0	10	1	5.409	-0.5229	5.932
805	-4	2	59	-4	2	39	-4	2	48	0	10	7	0	10	11	0	10	5	5.386	-0.1154	5.502
815	-2	0.5	113	-2	0.5	131	-2	0.5	161	-1	2	157	-1	2	137	-1	2	139	4.431	2.858	1.573
815	-2	0.5	118	-2	0.5	118	-2	0.5	114	-1	2	139	-1	2	135	-1	2	149	4.368	2.848	1.520
815	-2	0.5	107	-2	0.5	120	-2	0.5	115	-1	2	111	-1	2	106	-1	2	112	4.358	2.739	1.619
822	-2	1	99	-2	1	109	-2	1	84	-1	2	83	-1	2	82	-1	2	63	3.988	2.580	1.408
822	-2	1	86	-2	1	85	-2	1	94	-1	2	88	-1	2	96	-1	2	107	3.946	2.686	1.260
822	-2	1	92	-2	1	70	-2	1	92	-1	2	101	-1	2	78	-1	2	82	3.928	2.638	1.289
Control 1	-3	2	130	-3	2	155	-3	2	153	-3	2	120	-3	2	130	-3	2	132	4.863	4.804	0.059
Control 1	-3	2	157	-3	2	131	-3	2	173	-3	2	136	-3	2	167	-3	2	137	4.886	4.865	0.020
Control 1	-3	2	100	-3	2	117	-3	2	113	-3	2	163	-3	2	176	-3	2	161	4.740	4.921	-0.180
813	-5	1	74	-5	1	88	-5	1	96	0	50	21	0	50	13	0	50	21	6.934	-0.4357	7.370
813	-5	1	119	-5	1	106	-5	1	82	0	50	5	0	50	4	0	50	4	7.010	-1.062	8.072
806	-5	0.5	122	-5	0.5	129	-5	0.5	125	0	50	2	0	50	0	0	50	1	7.399	-1.523	8.922
806	-5	0.5	119	-5	0.5	117	-5	0.5	131	0	50	0	0	50	0	0	50	1	7.389	-1.699	9.088
806	-5	0.5	156	-5	0.5	124	-5	0.5	94	0	50	0	0	50	0	0	50	6	7.397	-0.9208	8.318
807	-3	0.5	91	-3	0.5	91	-3	0.5	94	0	50	0	0	50	0	0	50	0	5.265	#DIV/0!	#DIV/0!
807	-3	0.5	102	-3	0.5	87	-3	0.5	80	0	50	0	0	50	0	0	50	0	5.254	#DIV/0!	#DIV/0!
807	-3	0.5	88	-3	0.5	89	-3	0.5	104	0	50	0	0	50	0	0	50	0	5.273	#DIV/0!	#DIV/0!
Control 7	0	2	21	0	2	23	0	2	21	0	2	10	0	2	15	0	2	20	1.035	0.8751	0.160
Control 7	-1	1	76	-1	1	101	-1	1	74	0	2	59	0	2	45	0	2	39	2.923	1.377	1.545
Control 7	0	2	104	0	2	135	0	2	117	-1	1	76	-1	1	73	-1	1	68	1.773	2.859	-1.086

Table A.6a Biodosimetry Data Analysis WF-115-4

Test ID	Date	Microbe	Average UVT (%)	Lamp Ampere	Average Flow (m^3/hr)	Average Sensor$_{measured}$ (W/m^2)	log $i_{measured}$	a (i)	b (i^2)	RED$_{measured}$ (mJ/cm^2)	$D_{L\ measured}$ (mJ/cm^2/logi)	S/S_o	log i_{pred}	RED$_{pred}$ (mJ/cm^2)	$D_{L,\ pred}$ (mJ/cm^2/logi)
401	1/8/2019	MS2	99.15	11.0	50.63	184.5	3.406	15.626	2.0230	76.70	22.52	1.00	3.037	66.11	21.77
401	1/8/2019	MS2	99.15	11.0	50.63	184.5	3.337	15.626	2.0230	74.66	22.38	1.00	3.037	66.11	21.77
401	1/8/2019	MS2	99.15	11.0	50.63	184.5	3.444	15.626	2.0230	77.82	22.59	1.00	3.037	66.11	21.77
402	1/8/2019	MS2	99.25	11.0	105.20	188.1	2.031	15.626	2.0230	40.08	19.73	1.00	1.837	35.54	19.34
402	1/8/2019	MS2	99.25	11.0	105.20	188.1	1.981	15.626	2.0230	38.90	19.63	1.00	1.837	35.54	19.34
402	1/8/2019	MS2	99.25	11.0	105.20	188.1	2.037	15.626	2.0230	40.22	19.75	1.00	1.837	35.54	19.34
403	1/8/2019	MS2	65.36	11.0	5.94	55.37	3.393	15.626	2.0230	76.32	22.49	1.00	3.303	73.68	22.31
403	1/8/2019	MS2	65.36	11.0	5.94	55.37	3.414	15.626	2.0230	76.92	22.53	1.00	3.303	73.68	22.31
403	1/8/2019	MS2	65.36	11.0	5.94	55.37	3.460	15.626	2.0230	78.29	22.63	1.00	3.303	73.68	22.31
404	1/8/2019	MS2	69.46	11.0	31.09	58.88	1.159	15.626	2.0230	20.83	17.97	1.00	1.145	20.55	17.94
404	1/8/2019	MS2	69.46	11.0	31.09	58.88	1.107	15.626	2.0230	19.77	17.86	1.00	1.145	20.55	17.94
404	1/8/2019	MS2	69.46	11.0	31.09	58.88	1.105	15.626	2.0230	19.73	17.86	1.00	1.145	20.55	17.94
409	1/16/2019	MS2	94.66	11.0	24.88	124.4	3.732	15.302	2.2826	88.91	23.82	1.00	3.406	78.59	23.08
409	1/16/2019	MS2	94.66	11.0	24.88	124.4	3.694	15.302	2.2826	87.67	23.73	1.00	3.406	78.59	23.08
409	1/16/2019	MS2	94.66	11.0	24.88	124.4	3.677	15.302	2.2826	87.14	23.70	1.00	3.406	78.59	23.08
422	1/16/2019	MS2	99.22	7.0	99.35	74.74	1.058	15.302	2.2826	18.75	17.72	0.509	1.142	20.46	17.91
422	1/16/2019	MS2	99.22	7.0	99.35	74.74	1.037	15.302	2.2826	18.33	17.67	0.509	1.142	20.46	17.91
422	1/16/2019	MS2	99.22	7.0	99.35	74.74	1.117	15.302	2.2826	19.94	17.85	0.509	1.142	20.46	17.91
408	1/16/2019	MS2	95.35	7.0	99.36	65.07	0.9276	15.302	2.2826	16.16	17.42	0.509	0.7810	13.34	17.09
408	1/16/2019	MS2	95.35	7.0	99.36	65.07	0.7950	15.302	2.2826	13.61	17.12	0.509	0.7810	13.34	17.09
408	1/16/2019	MS2	95.35	7.0	99.36	65.07	0.8722	15.302	2.2826	15.08	17.29	0.509	0.7810	13.34	17.09
413	1/16/2019	MS2	87.62	7.0	14.77	50.12	2.322	15.302	2.2826	47.83	20.60	0.509	2.316	47.70	20.59
413	1/16/2019	MS2	87.62	7.0	14.77	50.12	2.390	15.302	2.2826	49.61	20.76	0.509	2.316	47.70	20.59
413	1/16/2019	MS2	87.62	7.0	14.77	50.12	2.370	15.302	2.2826	49.10	20.71	0.509	2.316	47.70	20.59
407	3/13/2019	MS2	97.42	5.2	5.23	52.43	5.567	16.351	2.0129	153.4	27.56	0.322	5.271	142.1	26.96
407	3/13/2019	MS2	97.42	5.2	5.23	52.43	5.607	16.351	2.0129	155.0	27.64	0.322	5.271	142.1	26.96
407	3/13/2019	MS2	97.42	5.2	5.23	52.43	5.583	16.351	2.0129	154.0	27.59	0.322	5.271	142.1	26.96
417	3/13/2019	MS2	86.52	9.6	5.25	93.83	6.261	16.351	2.0129	181.3	28.95	0.814	6.077	173.7	28.58
417	3/13/2019	MS2	86.52	9.6	5.25	93.83	6.223	16.351	2.0129	179.7	28.88	0.814	6.077	173.7	28.58
417	3/13/2019	MS2	86.52	9.6	5.25	93.83	6.153	16.351	2.0129	176.8	28.74	0.814	6.077	173.7	28.58
421	3/13/2019	MS2	69.30	11.0	5.14	57.03	3.994	16.351	2.0129	97.41	24.39	1.00	4.090	100.6	24.58

Table A.6a Biodosimetry Data Analysis WF-115-4															
Test ID	**Date**	**Microbe**	**Average UVT (%)**	**Lamp Ampere**	**Average Flow (m^3/hr)**	**Average Sensor$_{measured}$ (W/m^2)**	**log $i_{measured}$**	**a (i)**	**b (i^2)**	**RED$_{measured}$ (mJ/cm^2)**	**$D_{L\ measured}$ (mJ/cm^2/logi)**	**S/S_o**	**log i_{pred}**	**RED$_{pred}$ (mJ/cm^2)**	**$D_{L,\ pred}$ (mJ/cm^2/logi)**
421	3/13/2019	MS2	69.30	11.0	5.14	57.03	3.993	16.351	2.0129	97.38	24.39	1.00	4.090	100.6	24.58
421	3/13/2019	MS2	69.30	11.0	5.14	57.03	3.897	16.351	2.0129	94.29	24.19	1.00	4.090	100.6	24.58
412	3/13/2019	MS2	94.28	11.0	12.42	146.5	5.208	16.351	2.0129	139.7	26.83	1.00	5.289	142.8	27.00
412	3/13/2019	MS2	94.28	11.0	12.42	146.5	5.262	16.351	2.0129	141.8	26.94	1.00	5.289	142.8	27.00
412	3/13/2019	MS2	94.28	11.0	12.42	146.5	5.376	16.351	2.0129	146.1	27.17	1.00	5.289	142.8	27.00
415	3/13/2019	MS2	87.22	9.1	10.83	86.60	3.606	16.351	2.0129	85.14	23.61	0.750	3.676	87.31	23.75
415	3/13/2019	MS2	87.22	9.1	10.83	86.60	3.556	16.351	2.0129	83.59	23.51	0.750	3.676	87.31	23.75
415	3/13/2019	MS2	87.22	9.1	10.83	86.60	3.691	16.351	2.0129	87.77	23.78	0.750	3.676	87.31	23.75
405	3/12/2019	T1UV	98.89	5.1	100.34	57.00	1.810	4.5337	0.097917	8.527	4.711	0.312	2.175	10.33	4.747
405	3/12/2019	T1UV	98.89	5.1	100.34	57.00	1.825	4.5337	0.097917	8.599	4.712	0.312	2.175	10.33	4.747
405	3/12/2019	T1UV	98.89	5.1	100.34	57.00	1.897	4.5337	0.097917	8.952	4.719	0.312	2.175	10.33	4.747
406	3/12/2019	T1UV	98.73	5.4	40.01	59.57	4.555	4.5337	0.097917	22.68	4.980	0.340	4.804	24.04	5.004
406	3/12/2019	T1UV	98.73	5.4	40.01	59.57	4.572	4.5337	0.097917	22.78	4.981	0.340	4.804	24.04	5.004
406	3/12/2019	T1UV	98.73	5.4	40.01	59.57	4.464	4.5337	0.097917	22.19	4.971	0.340	4.804	24.04	5.004
410	3/12/2019	T1UV	94.50	5.3	64.98	48.10	2.095	4.5337	0.097917	9.930	4.739	0.331	2.219	10.54	4.751
410	3/12/2019	T1UV	94.50	5.3	64.98	48.10	2.086	4.5337	0.097917	9.885	4.738	0.331	2.219	10.54	4.751
410	3/12/2019	T1UV	94.50	5.3	64.98	48.10	1.909	4.5337	0.097917	9.013	4.721	0.331	2.219	10.54	4.751
411	3/12/2019	T1UV	94.77	10.9	95.42	145.8	3.743	4.5337	0.097917	18.34	4.900	0.986	4.024	19.83	4.928
411	3/12/2019	T1UV	94.77	10.9	95.42	145.8	3.836	4.5337	0.097917	18.83	4.909	0.986	4.024	19.83	4.928
411	3/12/2019	T1UV	94.77	10.9	95.42	145.8	3.718	4.5337	0.097917	18.21	4.898	0.986	4.024	19.83	4.928
414	3/12/2019	T1UV	87.90	5.3	114.14	38.50	0.9731	4.5337	0.097917	4.505	4.629	0.331	1.005	4.657	4.632
414	3/12/2019	T1UV	87.90	5.3	114.14	38.50	1.023	4.5337	0.097917	4.738	4.634	0.331	1.005	4.657	4.632
414	3/12/2019	T1UV	87.90	5.3	114.14	38.50	1.087	4.5337	0.097917	5.042	4.640	0.331	1.005	4.657	4.632
416	3/12/2019	T1UV	87.83	7.2	25.18	63.30	5.099	4.5337	0.097917	25.66	5.033	0.521	5.073	25.52	5.030
416	3/12/2019	T1UV	87.83	7.2	25.18	63.30	5.024	4.5337	0.097917	25.25	5.026	0.521	5.073	25.52	5.030
416	3/12/2019	T1UV	87.83	7.2	25.18	63.30	4.938	4.5337	0.097917	24.77	5.017	0.521	5.073	25.52	5.030
419	3/12/2019	T1UV	69.89	7.2	24.95	31.43	2.510	4.5337	0.097917	12.00	4.779	0.521	2.513	12.01	4.780
419	3/12/2019	T1UV	69.89	7.2	24.95	31.43	2.383	4.5337	0.097917	11.36	4.767	0.521	2.513	12.01	4.780
419	3/12/2019	T1UV	69.89	7.2	24.95	31.43	2.460	4.5337	0.097917	11.75	4.775	0.521	2.513	12.01	4.780
420	3/12/2019	T1UV	70.00	9.1	25.10	45.02	3.303	4.5337	0.097917	16.04	4.857	0.750	3.389	16.49	4.866
420	3/12/2019	T1UV	70.00	9.1	25.10	45.02	3.348	4.5337	0.097917	16.28	4.862	0.750	3.389	16.49	4.866

Table A.6a Biodosimetry Data Analysis WF-115-4

Test ID	Date	Microbe	Average UVT (%)	Lamp Ampere	Average Flow (m^3/hr)	Average $Sensor_{measured}$ (W/m^2)	log $i_{measured}$	a (i)	b (i^2)	$RED_{measured}$ (mJ/cm^2)	$D_{L\ measured}$ (mJ/cm^2/logi)	S/S_o	log i_{pred}	RED_{pred} (mJ/cm^2)	$D_{L,\ pred}$ (mJ/cm^2/logi)
420	3/12/2019	T1UV	70.00	9.1	25.10	45.02	3.326	4.5337	0.097917	16.16	4.859	0.750	3.389	16.49	4.866
423	3/12/2019	T1UV	70.13	11.0	100.39	60.32	1.544	4.5337	0.097917	7.234	4.685	0.993	1.362	6.358	4.667
423	3/12/2019	T1UV	70.13	11.0	100.39	60.32	1.591	4.5337	0.097917	7.461	4.689	0.993	1.362	6.358	4.667
423	3/12/2019	T1UV	70.13	11.0	100.39	60.32	1.701	4.5337	0.097917	7.996	4.700	0.993	1.362	6.358	4.667
Control	3/12/2019	T1UV	99.29	0.0	198.73	0.0000	-0.1892	4.5337	0.097917	-0.8542	4.515	0.00	0.0000	0.000	0.000
Control	3/12/2019	T1UV	99.29	0.0	198.73	0.0000	-0.1029	4.5337	0.097917	-0.4657	4.524	0.00	0.0000	0.000	0.000
Control	3/12/2019	T1UV	99.29	0.0	198.73	0.0000	-0.1225	4.5337	0.097917	-0.5539	4.522	0.00	0.0000	0.000	0.000
Control 4	1/16/2019	MS2	99.11	0.0	100.18	0.0000	0.06040	15.302	2.2826	0.9326	15.44	0.00	0.0000	0.000	0.000
Control 4	1/16/2019	MS2	99.11	0.0	100.18	0.0000	-0.01138	15.302	2.2826	-0.1738	15.28	0.00	0.0000	0.000	0.000
Control 4	1/16/2019	MS2	99.11	0.0	100.18	0.0000	0.02625	15.302	2.2826	0.4033	15.36	0.00	0.0000	0.000	0.000
Control 5	3/13/2019	MS2	70.47	0.0	49.26	0.0000	-0.01450	16.351	2.0129	-0.2367	16.32	0.00	0.0000	0.000	0.000
Control 5	3/13/2019	MS2	70.47	0.0	49.26	0.0000	0.02110	16.351	2.0129	0.3458	16.39	0.00	0.0000	0.000	0.000
Control 5	3/13/2019	MS2	70.47	0.0	49.26	0.0000	0.08550	16.351	2.0129	1.413	16.52	0.00	0.0000	0.000	0.000
Control 1	1/8/2019	MS2	99.45	0.0	61.71	0.0000	0.059411	15.626	2.0230	0.93546	15.75	0.00	0.0000	0.000	0.000
Control 1	1/8/2019	MS2	99.45	0.0	61.71	0.0000	0.0202	15.626	2.0230	0.3172	15.67	0.00	0.0000	0.000	0.000
Control 1	1/8/2019	MS2	99.45	0.0	61.71	0.0000	-0.18046	15.626	2.0230	-2.7538	15.26	0.00	0.0000	0.000	0.000

Note: If a sample was removed from the dataset then "Measured logi, Measure DL, Measured RED, Predicted logi, Predicted DL, and Predicted RED" are shown as blanks

Table A.6b Biodosimetry Data Analysis for WF-125-6															
Test ID	**Date**	**Microbe**	**Average UVT (%)**	**Lamp Amp**	**Average Flow (m^3/hr)**	**Average Sensor$_{measured}$ (W/m^2)**	**log $i_{measured}$**	**a (i)**	**b (i^2)**	**RED$_{measured}$ (mJ/cm^2)**	**$D_{L\ measured}$ (mJ/cm^2/logi)**	**S/S_o**	**log i_{pred}**	**RED$_{pred}$ (mJ/cm^2)**	**$D_{L,\ pred}$ (mJ/cm^2/logi)**
601	1/8/2019	MS2	98.18	10.0	76.39	68.38	3.756	15.626	2.0230	87.22	23.22	1.00	3.358	75.28	22.42
601	1/8/2019	MS2	98.18	10.0	76.39	68.38	3.688	15.626	2.0230	85.14	23.09	1.00	3.358	75.28	22.42
601	1/8/2019	MS2	98.18	10.0	76.39	68.38	3.636	15.626	2.0230	83.55	22.98	1.00	3.358	75.28	22.42
602	1/8/2019	MS2	97.82	10.0	200.57	64.76	1.838	15.626	2.0230	35.56	19.34	1.00	1.610	30.41	18.88
602	1/8/2019	MS2	97.82	10.0	200.57	64.76	1.780	15.626	2.0230	34.23	19.23	1.00	1.610	30.41	18.88
602	1/8/2019	MS2	97.82	10.0	200.57	64.76	1.754	15.626	2.0230	33.63	19.17	1.00	1.610	30.41	18.88
604	1/8/2019	MS2	68.23	10.0	30.67	3.37	1.271	15.626	2.0230	23.13	18.20	1.00	1.318	24.10	18.29
604	1/8/2019	MS2	68.23	10.0	30.67	3.37	1.372	15.626	2.0230	25.24	18.40	1.00	1.318	24.10	18.29
604	1/8/2019	MS2	68.23	10.0	30.67	3.37	1.333	15.626	2.0230	24.43	18.32	1.00	1.318	24.10	18.29
603	1/16/2019	MS2	71.45	10.0	9.86	3.91	2.961	15.302	2.2826	65.33	22.06	1.00	2.917	64.05	21.96
603	1/16/2019	MS2	71.45	10.0	9.86	3.91	2.915	15.302	2.2826	64.01	21.96	1.00	2.917	64.05	21.96
603	1/16/2019	MS2	71.45	10.0	9.86	3.91	2.981	15.302	2.2826	65.91	22.11	1.00	2.917	64.05	21.96
623	3/14/2019	MS2	97.87	6.0	198.73	25.68	0.798	16.530	1.7948	14.33	17.96	0.47	0.881	15.96	18.11
623	3/14/2019	MS2	97.87	6.0	198.73	25.68	0.876	16.530	1.7948	15.86	18.10	0.47	0.881	15.96	18.11
623	3/14/2019	MS2	97.87	6.0	198.73	25.68	0.852	16.530	1.7948	15.39	18.06	0.47	0.881	15.96	18.11
608	3/14/2019	MS2	94.72	6.8	197.10	21.85	0.751	16.530	1.7948	13.42	17.88	0.56	0.772	13.83	17.91
608	3/14/2019	MS2	94.72	6.8	197.10	21.85	0.789	16.530	1.7948	14.17	17.95	0.56	0.772	13.83	17.91
608	3/14/2019	MS2	94.72	6.8	197.10	21.85	0.753	16.530	1.7948	13.47	17.88	0.56	0.772	13.83	17.91
606	3/14/2019	MS2	97.84	9.9	28.46	57.98	6.399	16.530	1.7948	179.27	28.01	0.99	6.209	171.83	27.67
606	3/14/2019	MS2	97.84	9.9	28.46	57.98	6.445	16.530	1.7948	181.10	28.10	0.99	6.209	171.83	27.67
606	3/14/2019	MS2	97.84	9.9	28.46	57.98	6.357	16.530	1.7948	177.61	27.94	0.99	6.209	171.83	27.67
609	3/14/2019	MS2	94.23	10.0	49.65	42.53	3.328	16.530	1.7948	74.90	22.50	1.00	3.185	70.86	22.25
609	3/14/2019	MS2	94.23	10.0	49.65	42.53	3.231	16.530	1.7948	72.14	22.33	1.00	3.185	70.86	22.25
609	3/14/2019	MS2	94.23	10.0	49.65	42.53	3.225	16.530	1.7948	71.98	22.32	1.00	3.185	70.86	22.25
612	3/14/2019	MS2	95.35	9.9	22.56	44.32	5.598	16.530	1.7948	148.78	26.58	0.99	5.787	155.77	26.92
612	3/14/2019	MS2	95.35	9.9	22.56	44.32	5.582	16.530	1.7948	148.19	26.55	0.99	5.787	155.77	26.92
612	3/14/2019	MS2	95.35	9.9	22.56	44.32	5.691	16.530	1.7948	152.21	26.74	0.99	5.787	155.77	26.92
613	3/14/2019	MS2	87.68	6.3	29.94	10.62	1.950	16.530	1.7948	39.07	20.03	0.51	1.895	37.77	19.93
613	3/14/2019	MS2	87.68	6.3	29.94	10.62	1.898	16.530	1.7948	37.83	19.94	0.51	1.895	37.77	19.93
613	3/14/2019	MS2	87.68	6.3	29.94	10.62	1.944	16.530	1.7948	38.91	20.02	0.51	1.895	37.77	19.93
617	3/14/2019	MS2	85.91	10.0	10.14	18.48	5.421	16.530	1.7948	142.34	26.26	1.00	5.416	142.17	26.25

Table A.6b Biodosimetry Data Analysis for WF-125-6															
Test ID	**Date**	**Microbe**	**Average UVT (%)**	**Lamp Amp**	**Average Flow (m^3/hr)**	**Average Sensor$_{measured}$ (W/m^2)**	**log $i_{measured}$**	**a (i)**	**b (i^2)**	**RED$_{measured}$ (mJ/cm^2)**	**$D_{L\ measured}$ (mJ/cm^2/logi)**	**S/S_o**	**log i_{pred}**	**RED$_{pred}$ (mJ/cm^2)**	**$D_{L,\ pred}$ (mJ/cm^2/logi)**
617	3/14/2019	MS2	85.91	10.0	10.14	18.48	5.339	16.530	1.7948	139.41	26.11	1.00	5.416	142.17	26.25
617	3/14/2019	MS2	85.91	10.0	10.14	18.48	5.501	16.530	1.7948	145.23	26.40	1.00	5.416	142.17	26.25
615	3/14/2019	MS2	88.65	8.3	21.94	17.12	3.188	16.530	1.7948	70.93	22.25	0.76	3.239	72.38	22.34
615	3/14/2019	MS2	88.65	8.3	21.94	17.12	3.115	16.530	1.7948	68.91	22.12	0.76	3.239	72.38	22.34
615	3/14/2019	MS2	88.65	8.3	21.94	17.12	3.265	16.530	1.7948	73.11	22.39	0.76	3.239	72.38	22.34
605	3/12/2019	T1UV	99.23	6.0	198.47	32.37	2.991	4.5337	0.097917	14.44	4.83	0.47	3.375	16.42	4.86
605	3/12/2019	T1UV	99.23	6.0	198.47	32.37	2.996	4.5337	0.097917	14.46	4.83	0.47	3.375	16.42	4.86
605	3/12/2019	T1UV	99.23	6.0	198.47	32.37	2.924	4.5337	0.097917	14.09	4.82	0.47	3.375	16.42	4.86
610	3/12/2019	T1UV	94.11	4.7	134.83	12.48	1.851	4.5337	0.097917	8.73	4.71	0.33	1.969	9.31	4.73
610	3/12/2019	T1UV	94.11	4.7	134.83	12.48	1.850	4.5337	0.097917	8.72	4.71	0.33	1.969	9.31	4.73
610	3/12/2019	T1UV	94.11	4.7	134.83	12.48	1.935	4.5337	0.097917	9.14	4.72	0.33	1.969	9.31	4.73
611	3/12/2019	T1UV	94.54	9.4	159.30	37.97	3.989	4.5337	0.097917	19.64	4.92	0.91	4.039	19.91	4.93
611	3/12/2019	T1UV	94.54	9.4	159.30	37.97	4.129	4.5337	0.097917	20.39	4.94	0.91	4.039	19.91	4.93
611	3/12/2019	T1UV	94.54	9.4	159.30	37.97	4.066	4.5337	0.097917	20.06	4.93	0.91	4.039	19.91	4.93
614	3/12/2019	T1UV	87.89	4.7	230.28	6.92	0.917	4.5337	0.097917	4.24	4.62	0.33	0.868	4.01	4.62
614	3/12/2019	T1UV	87.89	4.7	230.28	6.92	0.908	4.5337	0.097917	4.20	4.62	0.33	0.868	4.01	4.62
614	3/12/2019	T1UV	87.89	4.7	230.28	6.92	0.918	4.5337	0.097917	4.25	4.62	0.33	0.868	4.01	4.62
616	3/12/2019	T1UV	87.50	6.3	45.14	10.37	3.959	4.5337	0.097917	19.48	4.92	0.51	4.059	20.02	4.93
616	3/12/2019	T1UV	87.50	6.3	45.14	10.37	4.129	4.5337	0.097917	20.39	4.94	0.51	4.059	20.02	4.93
616	3/12/2019	T1UV	87.50	6.3	45.14	10.37	4.000	4.5337	0.097917	19.70	4.93	0.51	4.059	20.02	4.93
619	3/12/2019	T1UV	69.81	5.6	25.03	1.90	2.153	4.5337	0.097917	10.21	4.74	0.42	2.268	10.78	4.76
619	3/12/2019	T1UV	69.81	5.6	25.03	1.90	2.131	4.5337	0.097917	10.11	4.74	0.42	2.268	10.78	4.76
619	3/12/2019	T1UV	69.81	5.6	25.03	1.90	2.127	4.5337	0.097917	10.09	4.74	0.42	2.268	10.78	4.76
620	3/12/2019	T1UV	69.80	8.3	25.16	2.07	3.175	4.5337	0.097917	15.38	4.84	0.76	3.311	16.08	4.86
620	3/12/2019	T1UV	69.80	8.3	25.16	2.07	3.358	4.5337	0.097917	16.33	4.86	0.76	3.311	16.08	4.86
620	3/12/2019	T1UV	69.80	8.3	25.16	2.07	3.244	4.5337	0.097917	15.74	4.85	0.76	3.311	16.08	4.86
621	3/12/2019	T1UV	69.98	10.0	22.32	2.78	4.347	4.5337	0.097917	21.56	4.96	1.00	4.314	21.38	4.96
621	3/12/2019	T1UV	69.98	10.0	22.32	2.78	4.385	4.5337	0.097917	21.76	4.96	1.00	4.314	21.38	4.96
621	3/12/2019	T1UV	69.98	10.0	22.32	2.78	4.402	4.5337	0.097917	21.85	4.96	1.00	4.314	21.38	4.96
622	3/12/2019	T1UV	70.17	10.0	200.57	2.83	1.122	4.5337	0.097917	5.21	4.64	1.00	1.013	4.69	4.63
622	3/12/2019	T1UV	70.17	10.0	200.57	2.83	1.151	4.5337	0.097917	5.35	4.65	1.00	1.013	4.69	4.63

Table A.6b Biodosimetry Data Analysis for WF-125-6															
Test ID	**Date**	**Microbe**	**Average UVT (%)**	**Lamp Amp**	**Average Flow (m^3/hr)**	**Average Sensor$_{measured}$ (W/m^2)**	**log $i_{measured}$**	**a (i)**	**b (i^2)**	**RED$_{measured}$ (mJ/cm^2)**	**$D_{L\ measured}$ (mJ/cm^2/logi)**	**S/S$_o$**	**log i_{pred}**	**RED$_{pred}$ (mJ/cm^2)**	**$D_{L,\ pred}$ (mJ/cm^2/logi)**
622	3/12/2019	T1UV	70.17	10.0	200.57	2.83	1.164	4.5337	0.097917	5.41	4.65	1.00	1.013	4.69	4.63
Control	3/12/2019	T1UV	99.29	0.0	198.73	0.00	-0.189	4.5337	0.097917	-0.85	4.52	0.00	0.000	0.00	0.00
Control	3/12/2019	T1UV	99.29	0.0	198.73	0.00	-0.103	4.5337	0.097917	-0.47	4.52	0.00	0.000	0.00	0.00
Control	3/12/2019	T1UV	99.29	0.0	198.73	0.00	-0.123	4.5337	0.097917	-0.55	4.52	0.00	0.000	0.00	0.00
Control 4	1/16/2019	MS2	99.11	0.0	100.18	0.00	0.060	15.302	2.2826	0.93	15.44	0.00	0.000	0.00	0.00
Control 4	1/16/2019	MS2	99.11	0.0	100.18	0.00	-0.011	15.302	2.2826	-0.17	15.28	0.00	0.000	0.00	0.00
Control 4	1/16/2019	MS2	99.11	0.0	100.18	0.00	0.026	15.302	2.2826	0.40	15.36	0.00	0.000	0.00	0.00
Control 1	1/8/2019	MS2	99.45	0.0	61.71	0.00	0.059	15.626	2.0230	0.94	15.75	0.00	0.000	0.00	0.00
Control 1	1/8/2019	MS2	99.45	0.0	61.71	0.00	0.020	15.626	2.0230	0.32	15.67	0.00	0.000	0.00	0.00
Control 1	1/8/2019	MS2	99.45	0.0	61.71	0.00	-0.180	15.626	2.0230	-2.75	15.26	0.00	0.000	0.00	0.00
Control 6	3/14/2019	MS2	99.50	0.0	198.73	0.00	0.002	16.530	1.7948	0.03	16.53	0.00	0.000	0.00	0.00
Control 6	3/14/2019	MS2	99.50	0.0	198.73	0.00	0.000	16.530	1.7948	0.00	#DIV/0!	0.00	0.000	0.00	0.00
Control 6	3/14/2019	MS2	99.50	0.0	198.73	0.00	0.052	16.530	1.7948	0.87	16.62	0.00	0.000	0.00	0.00
607	3/12/2019	T1UV	97.76	4.7	70.19	18.13	4.063	4.5337	0.097917	20.04	4.93	0.33	-	-	-
607	3/12/2019	T1UV	97.76	4.7	70.19	18.13	4.100	4.5337	0.097917	20.23	4.94	0.33	-	-	-
607	3/12/2019	T1UV	97.76	4.7	70.19	18.13	4.185	4.5337	0.097917	20.69	4.94	0.33	-	-	-
Note: If a sample was removed from the dataset then "Predicted logi, Predicted DL, and Predicted RED" are shown as blanks															

Table A.6c Biodosimetry Data Analysis WF-225-8

Test ID	Date	Microbe	Average UVT (%)	Lamp Amp	Average Flow (m^3/hr)	Average Sensor$_{measured}$ (W/m^2)	log $i_{measured}$	a (i)	b (i^2)	RED$_{measured}$ (mJ/cm^2)	$D_{L\ measured}$ (mJ/cm^2/logi)	S/S_o	log i_{pred}	RED$_{pred}$ (mJ/cm^2)	$D_{L,\ pred}$ (mJ/cm^2/logi)
801	1/8/2019	MS2	97.99	10.0	261.30	136.4	2.904	15.626	2.0230	62.45	21.50	1.00	2.704	57.05	21.10
801	1/8/2019	MS2	97.99	10.0	261.30	136.4	2.900	15.626	2.0230	62.33	21.49	1.00	2.704	57.05	21.10
801	1/8/2019	MS2	97.99	10.0	261.30	136.4	2.758	15.626	2.0230	58.48	21.20	1.00	2.704	57.05	21.10
802	1/8/2019	MS2	99.06	10.0	502.62	142.8	1.969	15.626	2.0230	38.61	19.61	1.00	1.892	36.81	19.45
802	1/8/2019	MS2	99.06	10.0	502.62	142.8	2.038	15.626	2.0230	40.26	19.75	1.00	1.892	36.81	19.45
802	1/8/2019	MS2	99.06	10.0	502.62	142.8	2.089	15.626	2.0230	41.48	19.85	1.00	1.892	36.81	19.45
803	1/8/2019	MS2	69.91	10.0	14.61	17.31	4.664	15.626	2.0230	116.89	25.06	1.00	4.771	120.60	25.28
803	1/8/2019	MS2	69.91	10.0	14.61	17.31	4.705	15.626	2.0230	118.30	25.14	1.00	4.771	120.60	25.28
803	1/8/2019	MS2	69.91	10.0	14.61	17.31	4.757	15.626	2.0230	120.11	25.25	1.00	4.771	120.60	25.28
804	1/8/2019	MS2	70.11	10.0	98.26	17.96	1.353	15.626	2.0230	24.83	18.36	1.00	1.459	27.11	18.58
804	1/8/2019	MS2	70.11	10.0	98.26	17.96	1.344	15.626	2.0230	24.67	18.35	1.00	1.459	27.11	18.58
804	1/8/2019	MS2	70.11	10.0	98.26	17.96	1.351	15.626	2.0230	24.81	18.36	1.00	1.459	27.11	18.58
819	3/19/2019	MS2	69.91	10.0	39.95	20.90	2.587	14.725	2.4651	54.59	21.10	0.99	2.567	54.04	21.05
819	3/19/2019	MS2	69.91	10.0	39.95	20.90	2.518	14.725	2.4651	52.70	20.93	0.99	2.567	54.04	21.05
819	3/19/2019	MS2	69.91	10.0	39.95	20.90	2.442	14.725	2.4651	50.67	20.75	0.99	2.567	54.04	21.05
816	3/19/2019	MS2	87.78	7.6	48.93	44.80	3.217	14.725	2.4651	72.88	22.66	0.66	3.323	76.14	22.92
816	3/19/2019	MS2	87.78	7.6	48.93	44.80	3.187	14.725	2.4651	71.96	22.58	0.66	3.323	76.14	22.92
816	3/19/2019	MS2	87.78	7.6	48.93	44.80	3.199	14.725	2.4651	72.32	22.61	0.66	3.323	76.14	22.92
808	3/19/2019	MS2	98.39	4.7	496.84	51.55	0.772	14.725	2.4651	12.83	16.63	0.31	0.737	12.19	16.54
808	3/19/2019	MS2	98.39	4.7	496.84	51.55	0.652	14.725	2.4651	10.66	16.33	0.31	0.737	12.19	16.54
808	3/19/2019	MS2	98.39	4.7	496.84	51.55	0.644	14.725	2.4651	10.51	16.31	0.31	0.737	12.19	16.54
809	3/19/2019	MS2	95.15	4.6	499.20	38.20	0.497	14.725	2.4651	7.93	15.95	0.31	0.553	8.89	16.09
809	3/19/2019	MS2	95.15	4.6	499.20	38.20	0.572	14.725	2.4651	9.23	16.14	0.31	0.553	8.89	16.09
809	3/19/2019	MS2	95.15	4.6	499.20	38.20	0.552	14.725	2.4651	8.88	16.09	0.31	0.553	8.89	16.09
814	3/19/2019	MS2	87.49	4.7	500.25	21.38	0.324	14.725	2.4651	5.02	15.52	0.32	0.378	5.92	15.66
814	3/19/2019	MS2	87.49	4.7	500.25	21.38	0.411	14.725	2.4651	6.46	15.74	0.32	0.378	5.92	15.66
814	3/19/2019	MS2	87.49	4.7	500.25	21.38	0.356	14.725	2.4651	5.56	15.60	0.32	0.378	5.92	15.66
818	3/19/2019	MS2	87.63	10.0	23.03	70.93	6.836	14.725	2.4651	215.84	31.58	0.99	6.602	204.68	31.00
818	3/19/2019	MS2	87.63	10.0	23.03	70.93	6.668	14.725	2.4651	207.78	31.16	0.99	6.602	204.68	31.00
818	3/19/2019	MS2	87.63	10.0	23.03	70.93	6.896	14.725	2.4651	218.75	31.72	0.99	6.602	204.68	31.00
813	3/19/2019	MS2	94.18	7.6	24.54	74.03	7.066	14.725	2.4651	227.14	32.14	0.66	6.915	219.69	31.77

Table A.6c Biodosimetry Data Analysis WF-225-8

Test ID	Date	Microbe	Average UVT (%)	Lamp Amp	Average Flow (m^3/hr)	Average Sensor$_{measured}$ (W/m^2)	log $i_{measured}$	a (i)	b (i^2)	RED$_{measured}$ (mJ/cm^2)	$D_{L\ measured}$ (mJ/cm^2/logi)	S/S_o	log i_{pred}	RED$_{pred}$ (mJ/cm^2)	$D_{L,\ pred}$ (mJ/cm^2/logi)
810	3/19/2019	MS2	94.26	10.0	99.89	116.3	3.842	14.725	2.4651	92.96	24.20	0.99	3.818	92.14	24.14
810	3/19/2019	MS2	94.26	10.0	99.89	116.3	3.729	14.725	2.4651	89.18	23.92	0.99	3.818	92.14	24.14
810	3/19/2019	MS2	94.26	10.0	99.89	116.3	3.777	14.725	2.4651	90.78	24.04	0.99	3.818	92.14	24.14
820	3/19/2019	T1UV	70.01	9.3	49.74	20.03	6.011	4.8749	0.000	29.30	4.87	0.90	6.036	29.42	4.87
820	3/19/2019	T1UV	70.01	9.3	49.74	20.03	6.047	4.8749	0.000	29.48	4.87	0.90	6.036	29.42	4.87
820	3/19/2019	T1UV	70.01	9.3	49.74	20.03	5.973	4.8749	0.000	29.12	4.87	0.90	6.036	29.42	4.87
817	3/19/2019	T1UV	87.48	6.4	99.10	35.53	5.164	4.8749	0.000	25.17	4.87	0.51	5.209	25.40	4.87
817	3/19/2019	T1UV	87.48	6.4	99.10	35.53	5.206	4.8749	0.000	25.38	4.87	0.51	5.209	25.40	4.87
817	3/19/2019	T1UV	87.48	6.4	99.10	35.53	5.160	4.8749	0.000	25.16	4.87	0.51	5.209	25.40	4.87
821	3/19/2019	T1UV	70.28	9.4	99.39	21.05	3.831	4.8749	0.000	18.68	4.87	0.91	3.683	17.96	4.87
821	3/19/2019	T1UV	70.28	9.4	99.39	21.05	3.787	4.8749	0.000	18.46	4.87	0.91	3.683	17.96	4.87
821	3/19/2019	T1UV	70.28	9.4	99.39	21.05	3.796	4.8749	0.000	18.51	4.87	0.91	3.683	17.96	4.87
812	3/19/2019	T1UV	95.93	9.2	299.15	123.4	5.832	4.8749	0.000	28.43	4.87	0.88	6.110	29.79	4.87
812	3/19/2019	T1UV	95.93	9.2	299.15	123.4	5.873	4.8749	0.000	28.63	4.87	0.88	6.110	29.79	4.87
812	3/19/2019	T1UV	95.93	9.2	299.15	123.4	6.139	4.8749	0.000	29.93	4.87	0.88	6.110	29.79	4.87
811	3/19/2019	T1UV	95.26	4.7	349.89	40.07	2.048	4.8749	0.000	9.99	4.87	0.32	2.113	10.30	4.87
811	3/19/2019	T1UV	95.26	4.7	349.89	40.07	2.075	4.8749	0.000	10.12	4.87	0.32	2.113	10.30	4.87
811	3/19/2019	T1UV	95.26	4.7	349.89	40.07	2.048	4.8749	0.000	9.98	4.87	0.32	2.113	10.30	4.87
805	3/19/2019	T1UV	99.64	8.7	498.94	150.7	5.766	4.8749	0.000	28.11	4.87	0.80	5.714	27.86	4.87
805	3/19/2019	T1UV	99.64	8.7	498.94	150.7	5.932	4.8749	0.000	28.92	4.87	0.80	5.714	27.86	4.87
805	3/19/2019	T1UV	99.64	8.7	498.94	150.7	5.502	4.8749	0.000	26.82	4.87	0.80	5.714	27.86	4.87
815	3/19/2019	T1UV	88.34	6.8	498.68	39.37	1.573	4.8749	0.000	7.67	4.87	0.55	1.598	7.79	4.87
815	3/19/2019	T1UV	88.34	6.8	498.68	39.37	1.520	4.8749	0.000	7.41	4.87	0.55	1.598	7.79	4.87
815	3/19/2019	T1UV	88.34	6.8	498.68	39.37	1.619	4.8749	0.000	7.89	4.87	0.55	1.598	7.79	4.87
822	3/19/2019	T1UV	70.84	9.9	496.84	22.28	1.408	4.8749	0.000	6.87	4.87	0.98	1.200	5.85	4.87
822	3/19/2019	T1UV	70.84	9.9	496.84	22.28	1.260	4.8749	0.000	6.14	4.87	0.98	1.200	5.85	4.87
822	3/19/2019	T1UV	70.84	9.9	496.84	22.28	1.289	4.8749	0.000	6.28	4.87	0.98	1.200	5.85	4.87
Control 1	1/8/2019	MS2	99.45	0.0	61.71	0.00	0.059	15.626	2.0230	0.94	15.75	0.00	0.000	0.00	0.00
Control 1	1/8/2019	MS2	99.45	0.0	61.71	0.00	0.020	15.626	2.0230	0.32	15.67	0.00	0.000	0.00	0.00
Control 1	1/8/2019	MS2	99.45	0.0	61.71	0.00	-0.180	15.626	2.0230	-2.75	15.26	0.00	0.000	0.00	0.00
813	3/19/2019	MS2	94.18	7.6	24.54	74.03	7.370	14.725	2.4651	242.43	32.89	0.66	-	-	-

Table A.6c Biodosimetry Data Analysis WF-225-8

Test ID	Date	Microbe	Average UVT (%)	Lamp Amp	Average Flow (m^3/hr)	Average $Sensor_{measured}$ (W/m^2)	log $i_{measured}$	a (i)	b (i^2)	$RED_{measured}$ (mJ/cm^2)	$D_{L\ measured}$ (mJ/cm^2/logi)	S/S_o	log i_{pred}	RED_{pred} (mJ/cm^2)	$D_{L,\ pred}$ (mJ/cm^2/logi)
813	3/19/2019	MS2	94.18	7.6	24.54	74.03	8.072	14.725	2.4651	279.49	34.62	0.66	-	-	-
806	3/19/2019	MS2	99.10	10.0	41.74	188.83	8.922	14.725	2.4651	327.60	36.72	0.99	-	-	-
806	3/19/2019	MS2	99.10	10.0	41.74	188.83	9.088	14.725	2.4651	337.39	37.13	0.99	-	-	-
806	3/19/2019	MS2	99.10	10.0	41.74	188.83	8.318	14.725	2.4651	293.02	35.23	0.99	-	-	-
807	3/19/2019	T1UV	99.17	5.1	140.59	68.38	#DIV/0!	4.8749	0.000	#DIV/0!	#DIV/0!	0.35	-	-	-
807	3/19/2019	T1UV	99.17	5.1	140.59	68.38	#DIV/0!	4.8749	0.000	#DIV/0!	#DIV/0!	0.35	-	-	-
807	3/19/2019	T1UV	99.17	5.1	140.59	68.38	#DIV/0!	4.8749	0.000	#DIV/0!	#DIV/0!	0.35	-	-	-
Control 7	3/19/2019	T1UV	99.59	0.0	494.47	0.00	0.160	4.8749	0.000	0.78	4.87	0.00	-	-	-
Control 7	3/19/2019	T1UV	99.59	0.0	494.47	0.00	1.545	4.8749	0.000	7.53	4.87	0.00	-	-	-
Control 7	3/19/2019	T1UV	99.59	0.0	494.47	0.00	-1.086	4.8749	0.000	-5.29	4.87	0.00	-	-	-

Note: If a sample was removed from the dataset then "Predicted logi, Predicted DL, and Predicted RED" are shown as blanks

Biodosimetry QA/QC

Controls and Blanks

Control samples were influent and effluent samples collected with MS2 or T1UV injection on and the UV lamps off. Table 1 presents data on the control samples collected during reactor validation. The differences in the log concentration between individual effluent and influent samples ranged from -0.138 to 0.03 log and averaged -0.02 log, indicating that there was no change in test microbe concentration through the UV reactor when the lamps were turned off.

Table 1 Controls Collected During Validation Testing

Microbe	Date	Average Log Influent	Average Log Effluent	Δ
MS2	1/9/2019	4.83	4.86	-0.034
MS2	1/16/2019	3.77	3.74	0.025
T1UV	3/12/2019	3.17	3.30	-0.138
MS2	3/14/2019	4.19	4.17	0.018
MS2	3/13/2019	5.23	5.20	0.031
Average				-0.020

Trip controls were MS2 and T1UV samples prepared in buffered water by the microbiology lab. One aliquot of the sample was shipped to the Portland Test Facility with the stock solutions while a second aliquot remained with the lab. The aliquot shipped to Portland was shipped back to the lab with the biodosimetry samples. Upon receipt, the lab measured and compared the test microbe concentration of both aliquots. Ideally, the concentrations with both samples should be the same indicating no degradation of the test microbe solutions during shipment and storage at the Portland Test Facility.

Table 2 presents data of the trip controls. The trip controls indicated changes in test microbe concentrations ranging from -0.59 to 0.66 percent with an average of -0.05 percent. Therefore, the change in test microbe concentrations met the 3 to 5 percent UVDGM criteria.

Table 2 Trip Controls Evaluated During Validation

Date	Microbe	Log Concentration			
		Before	After	Difference	Percent Difference
1/10/2019	MS2	11.93	11.85	0.08	0.66%
3/12/2019	T1UV	10.55	10.58	-0.02	-0.21%
3/13/2019	MS2	11.86	11.93	-0.07	-0.59%
Average				-0.004	-0.05%

Blank samples were influent and effluent samples collected with the UV reactor lamps on, while halting microbe injection. Prior to sample collection, the system was flushed with groundwater for a period corresponding to five residence times of the system (injection loop, inlet piping, reactor and outlet piping). Table 3 presents data on the blank samples. Theoretically, the blanks should have zero plate counts. The MS2 phage concentration in the influent blanks ranged from 0.44 to 66,333 PFU/mL. This would have added a maximum of 1.07 log to the minimum influent concentration measured during bioassay testing. This amount, however, would have been measured during the collection of the influent samples. The T1UV phage concentration in the influent blanks ranged from 0.0 to 1.72 PFU/mL, which was at most 0.17 percent of the minimum concentration used during biodosimetry testing.

The MS2 phage concentrations in the effluent blanks ranged from 0.11 to 4.33 PFU/mL. The T1UV concentrations in the effluent blanks ranged from 0 PFU/mL to 0.17. During biodosimetry testing, the minimum measured concentrations of effluent microbes for all reactors were 0.727 PFU/mL and 0.247 PFU/mL for MS2 and T1UV, respectively. Of the 223 samples collected and used to develop the dose algorithms for the three reactors in this report, 30 effluent samples (13.5 percent of the total effluent samples) resulted in counts less than 10 PFU/mL. For these biodosimetry samples with low effluent concentrations, residual concentrations of phage will result in an underestimation of log inactivation by the UV reactor. If the underestimation was significant, the test conditions are identified as outliers and removed from the analysis that developed the dose monitoring equations for a given reactor.

Table 3 Blanks Collected During Validation Testing

Microbe	Date	Avg Influent	Avg Effluent
		PFU /mL*	
MS2	1/9/2019	3.17	0.11
MS2	1/16/2019	0.44	4.33
T1UV	3/12/2019	1.72	0.17
MS2	3/14/2019	2.9	0.72
MS2	3/13/2019	66,333	0.78
MS2	3/19/2019	1.94	0.11
T1UV	3/19/2019	0.0	0.00

*Plaque forming units per milliliter

Method blanks were sterilized dilution water that was assayed for MS2 and T1UV concentrations. Ideally, the samples have non-detect test microbe concentrations. Detectable concentrations of the test microbe indicate potential cross-contamination of samples.

Table 4 presents data on the method blanks. Each method blank was assayed three times. Of the 33 assays, 29 resulted in no enumerable plaques, while three resulted in 0.5 PFU/mL, and one resulted in 0.1 PFU/mL. The method blanks show minimal if any cross contamination was occurring with the lab assays.

Table 4 Method Blanks Collected During Validation Testing				
Microbe	**Date**	**Replicate 1 PFU/mL**	**Replicate 2 PFU/mL**	**Replicate 3 PFU/mL**
MS2	1/16/2019	0	0.5	0.5
MS2	1/16/2019	0	0	0.1
T1UV	3/14/2019	0	0	0
T1UV	3/14/2019	0	0	0
MS2	3/18/2019	0	0	0
T1UV	3/15/2019	0	0	0
T1UV	3/18/2019	0	0	0
MS2	3/20/2019	0	0	0
MS2	3/19/2019	0	0	0.5
MS2	3/20/2019	0	0	0
MS2	3/20/2019	0	0	0

Bacteriophage Sample Stability

Influent and effluent samples for several test conditions were randomly sampled for temporal stability analysis of the MS2 and T1UV bacteriophage concentrations. The samples were stored at 4°C and the MS2 and T1UV bacteriophage concentrations were periodically measured over time. Table 5 summarizes the results of the stability analyses, including the hold time, and starting and ending concentrations. The MS2 influent and effluent concentrations changed at an average rate of 0.022 and 0.021 log per day, respectively. The T1UV influent and effluent concentrations changed at an average rate of -0.002 and 0.004 log per day, respectively. The results indicate that the phage were stable over the validation test period.

Table 5 Test Conditions and Results of Stability Analysis						
Phage	**Test #**	**Date**	**Influent log**	**Effluent log**	**Influent rate of Change Per Day**	**Effluent rate of Change Per Day**
MS2	802	1/11/2019	4.83	2.80	0.023	0.028
		1/23/2019	4.55	2.46		
MS2	603	1/18/2019	5.12	2.17	0.029	0.039
		1/23/2019	4.98	1.98		
MS2	819	3/26/2019	4.51	2.05	0.004	-0.012
		3/22/2019	4.52	2.00		
MS2	609	3/19/2019	5.81	2.55	0.031	0.029
		3/29/2019	5.49	2.26		
T1UV	811	3/21/2019	4.37	2.31	-0.002	0.004
		3/29/2019	4.38	2.28		

Engineers...Working Wonders With Water™

January 5, 2010

GAP EnviroMicrobial Services
1020 Hargrieve Road, Unit 14
London, Ontario, Canada
N6E 1P5

Attention: Mr. Conrad Odegaard

Subject: GAP EnviroMicrobial Services of London, Ontario Canada - Observations, December 28, 2009

Dear Conrad Odegaard:

This letter summarizes observations made on December 28, 2009 at the laboratory facilities of GAP EnviroMicrobial Services of London, Ontario, Canada.

Collimated Beam Apparatus Measurement Uncertainty

The USEPA UV Disinfection Guidance Manual (UVDGM) provides recommendations for the measurement uncertainty for the UV dose calculated when using the collimated beam apparatus.

Depth of Suspension. The recommended uncertainty for the depth of the suspension is ≤ 10%. The depth of suspension calculated using:

$$d = \frac{V_s + V_{sb}}{\pi \times D^2/4}$$

where V_s is the suspension volume, V_{sb} is the stir bar volume, and D is the Petri dish diameter. The suspension volume is added to the dish using a pipette. The typical suspension volume is 10 mL. The uncertainty of the volume delivered by the pipette is ± 2%. The stir bar volume is 0.028 mL. The uncertainty of the stir bar volume is negligible compared to the suspension volume and can be ignored. The Petri dish diameter is measured using a ruler with 1 mm graduation marks. The Petri dish diameter is typically 5.0 cm. The measurement uncertainty of the Petri dish diameter is estimated as ± 1 mm. This uncertainty applies twice since the the ruler has to define the measurement position of two locations to define a distance. Hence, the uncertainty of the distance measured using the ruler is $(1^2+1^2)^{0.5}$=1.4 mm. The uncertainty of the diameter is estimated as 0.14/5.0 = 2.8 %. The typical suspension depth is calculated as 0.511 cm. The measurement uncertainty of the depth is estimated as $(2^2+2\times2.8^2)^{0.5}$=4.43%.

Average Incident Irradiance. The recommended uncertainty of the average incident irradiance is ≤ 8%. The irradiance is measured using an IL 1700 radiometer (PN 5296) equipped with an SED 240 sensor (PN 6497) with QNDS2 filter (PN 29167) and input optic W (PN 12831). The measurement is done before and after each irradiation using the collimated beam apparatus. The measured irradiance is corrected for the error of the radiometer estimated as the ratio of the intensity measured by the radiometer to the average value measured using three radiometers.

DRAFT

The radiometers are manufactured and calibrated by International Light of Peabody, MA. The calibration certificate states that the measurement uncertainty of the NIST standard used to calibrate the radiometer is 1% and the transfer uncertainty to the customer as ± 6.5%. Hence the total uncertainty of the radiometer is $(1^2+6.6^2)^{0.5}$=6.58%. The applied correction factor potentially reduces the measurement uncertainty by a factor of $3^{0.5}$, resulting in an uncertainty of $6.58/3^{0.5}$ = 3.80 %. However, this reduction assumes that the error on the three radiometers is randomly distributed about the true measurement.

Petri Factor. The recommended uncertainty of the Petri factor is ≤ 5%. The Petri factor is calculated as the UV intensity measured at the center of the suspension surface divided by the average of the UV intensities measured across the suspension surface. GAP uses the same radiometer to make all measurements used to calculate the Petri factor. GAP measures the UV intensity across the suspension surface using two transects located 90° apart. The data measured across the two transects is used to estimate the UV intensities across the suspension surface. This estimate makes assumptions about the pattern of the UV intensity field across the suspension surface that should be confirmed. Because the Petri factor, is calculated as the ratio of UV intensities measured using the same radiometer, the uncertainty of the Petri factor is defined by the precision of the radiometer measurements as opposed to the absolute accuracy of those measurements. GAP estimated the precision by repeating the Petri factor calculation with a given dish. The average and standard deviation of those measurements were 0.990 ± 0.005. Thus the measurement uncertainty is estimated as 2×0.005/0.990 = 1 %.

Divergence Factor. The recommended uncertainty of the divergence factor is ≤ 1%. The divergence factor is calculated as:

$$D_f = \frac{L}{d+L}$$

Where L is the distance from the UV lamps to the surface of the Petri dish. The distance L is measured by GAP using a tape measure with 1 mm gradations. The distance L is typically 41.1 cm. The measurement uncertainty of the distance L is defined by the uncertainty defining the starting and ending points. This uncertainty is likely greater than 1 mm. For this calculation, the uncertainty is estimated as 0.5 cm of 1.21%. The uncertainty of the distance d is estimated as 5 cm × 4.43 % = 0.22 cm. Hence the measurement uncertainty of the term d+L is estimated as $(0.22^2+0.5^2)^{0.5}$=0.547 cm or 1.18 %. The uncertainty of the divergence factor is estimated as $(1.21^2+1.18^2)^{0.5}$=1.70%.

Exposure Time. The recommended uncertainty of the exposure time is ≤ 5%. The exposure time is measured manually using a stop watch. The measurement uncertainty is defined by the human response time starting and stopping the stop watch at the beginning and end of each exposure. The uncertainty is estimated as ± 1 second. To meet the UVDGM criteria, exposure times should never be shorter than 20 seconds. Exposure times used by GAP are typically greater than 30 seconds. Hence, the uncertainty is estimated to be ≤ 3.33%.

Absorbance Factor. The recommended uncertainty of the absorbance factor is ≤ 5%. The absorbance factor is calculated using:

$$\frac{1 - 10^{-UVA x d}}{UVA \; x \; d \; x \; LN(10)}$$

DRAFT

where UVA is the UV absorbance of the suspension at 254 nm measured using a spectrophotometer. The accuracy of the spectrophotometer measurements is regularly assessed by GAP using potassium dichromate UV absorbance and holmium oxide wavelength UV wavelength standards. At 257 nm, the dichromate standard has a UVA of 0.285 ± 0.0037 cm^{-1}. The spectrophotometer typically measures values of 0.281 to 0.282 cm^{-1}. Thus the true value may be as much as 0.008 cm^{-1} greater than the value indicated by the spectrophotometer. The Holmium standard has a peak at 250.23 ± 0.11 nm. The spectrophotometer typically measures values of 250.4 to 250.6 nm. The wavelength error leads to an error measuring the UVA at 254 nm. That error depends on the slope of the relation between UVA and wavelength at 254 nm, which depends on the UV absorber used during validation. The following table tabulates the errors expected when using LSA as a UV absorber. The calculations assume that the UVA errors are bias errors while the errors with the measured depth are random errors.

UVT at 254 nm	UVA at 254 nm	UVA Error Based on Holmium Scan (cm^{-1})	UVA Error Based on Potassium Dichromate (cm^{-1})	Absorbance Factor without UVA Error	Absorbance Factor with UVA Error	Percentage Error
98 %	0.0087	-0.00002	+0.008	0.9948	0.9902	-0.51 to -0.42 %
90 %	0.0457	-0.00040	+0.008	0.9735	0.9692	-0.58 to -0.30 %
80 %	0.0969	-0.00096	+0.008	0.9450	0.9412	-0.67 to -0.14 %
70 %	0.154	-0.0016	+0.008	0.9141	0.9108	-0.77 to 0.04 %

UV Dose Uncertainty. The UV dose delivered by the collimated beam is calculated using:

$$UV\ Dose = E_s \times P_f \times (1 - R) \times \frac{L}{d + L} \times \frac{1 - 10^{-UVAxd}}{UVA \times d \times LN(10)} \times t$$

The uncertainty in the UV dose calculation is the square root of the uncertainties of the individual terms, which is calculated as:

$$U = \sqrt{6.58^2 + 1^2 + 1.7^2 + 0.77^2 + 3.33^2} = 7\%$$

The uncertainty in the UV dose calculation using the recommended uncertainties is:

$$U = \sqrt{8^2 + 5^2 + 1^2 + 5^2 + 5^2} = 12\%$$

Hence, while the estimated uncertainty of the divergence factor does not meet the recommended value in the UVDGM, the UV dose calculation uncertainty for the collimated beam apparatus used by GAP is well within the uncertainty expected based on UVDGM criteria. However, any improvements in the uncertainty will improve the quality of validation. Hence, the following recommendations are made:

DRAFT

1. Use a caliper to measure the Petri dish diameter, confirming the roundness of the dish.
2. Use a caliper to measure the distance from the lamps to the Petri dish surface. Using a caliper should result in a divergence factor uncertainty that meets the UVDGM criteria.
3. Calculate the Petri factor using the UV intensity measured over a two dimensional grid as opposed to across two transects.
4. Use a rare earth wavelength standard with a 253 nm wavelength peak.
5. Develop internal QA/QC criteria for the measured UV dose-response curves. The QA/QC standards should be developed as a 95th percentile prediction interval about the fits to the measured data obtained over time. Use the QA/QC criteria to evaluate each measured UV dose response curve.
6. Conduct comparisons between labs on measured UV dose response.

An important observation with UV validation testing is that UV dose-response curves developed by fitting measured dose-response data do show sample-to-sample variability. That variability may reflect true differences in measured UV dose-response from sample-to-sample or may reflect measurement uncertainty associated with the dose calculation or some other variable. Any actions taken to reduce this variability will results in improved validation testing.

Respectfuly submitted,

CAROLLO ENGINEERS, P.C.

Harold Wright
Associate

DRAFT

Appendix B
UV SENSOR DATA SHEETS

Data sheet SUV 20.1 A2 Y2 C (Ö-norm 160°)

General

This sensor is designed to be used in UV disinfection units and is suitable for monitoring of UV dose of UV lamps according Ö-norm. It is designed as a plug in sensor. Sensors of this type are very precise and have a small aging effect. They are calibrated using standards that are based on Physikalisch-Technische Bundesanstalt Braunschweig (PTB).

Technical data

	ÖNORM-Type SUV 20.1 A2 Y2 C
Related standard	M5873-1 (03/2001) for ND-lamps M5873-2 (06/2002) for MD-lamps
Compliance	Type test as measurement system with UVT16 has been done, certificate available.
Labeling	IL-M SUV20.1A2Y2C + J-M-lfd. Nr. + MMJJ + 40° + 4-20mA + measurement range in W/m²
Material of sensor body	Stainless steel 1.4404
Geometry	Plug in area ∅ 20 x 59 mm, total length 73 mm, with collar and notch for O-Ring 18,77 x 1,78 *(see drawing)*
Pressure resistance	1 bar short time *(in measuring window FUV38 up to 16 bar pressure resistant)*
Ambient temperature	Ambient temperature: 0 to 60°C (short time 100°C), Storage temperature: -40 to 70°C
Opening angle	160°, see diagram
Measuring / working range	50, 100, 200[1], 500, 1000[2] W/m² according Ö-norm *([1] standard value LP, [2] standard value MP)*
Calibration uncertainty	≤ ± 1 % compared to Reference radiometer
Selectivity	240 nm to 290 nm
Measuring uncertainty	≤ ± 5 % of end value
Linearity of working range	≤ ± 1 % of end value, see Diagram
Temperature drift	≤ ± 1,5 % in the temperature range 5°C to 35°C, in relation to 20°C
Long time stability / Aging	≤ 1 % / 1000 h related to end value
Recalibration period	24 months
Operating voltage U_B	24 V DC *(min. 12V , max. supply voltage of the used IC is 36 V DC!)*
Operating current	Max. 25 mA
Load resistance	Null up to $R_{Load\ max}$ = (U_B - 8,5 V) / 0,02 A *(R_{Load} = internal resistance of meter or PLC)*
Output signal	4 to 20 mA according to chosen measurement range
Pin assignment	+ U_B pin 1 and 2, I_{out} pin 3 and 4
Accessory cable	Z1G-I 5 m length *(longer cable on request possible),* screwed IP65

Linearity of measuring range

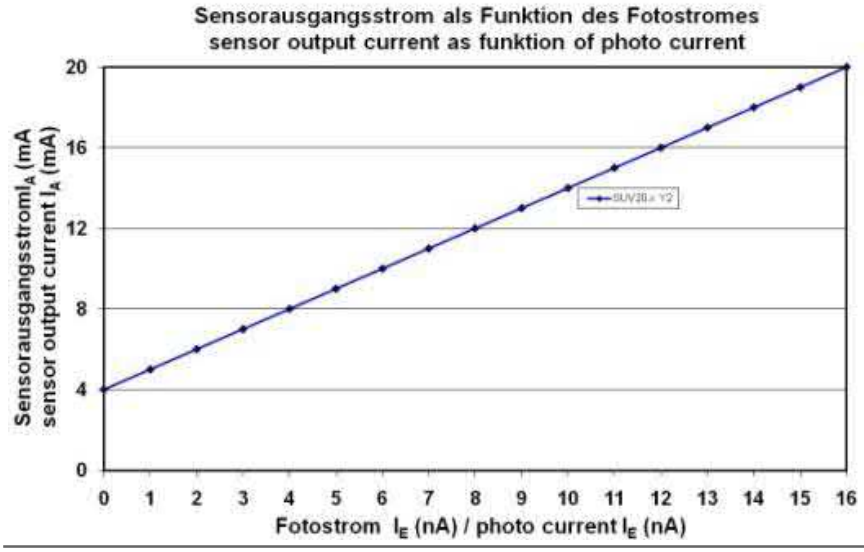

Drawing sensor housing

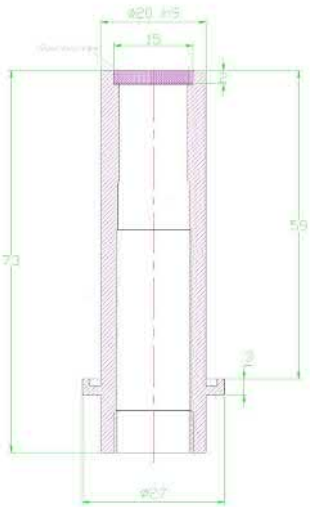

hönle group

uv-technik Speziallampen

UV-Technik
Speziallampen GmbH
Gewerbegebiet Ost 6
D-98704 Ilmenau OT Wümbach

Tel: +49-(0)36785-520-0
Fax: +49-(0)36785-520-21

e-mail: info@uvtechnik.com
www.uvtechnik.com

KALIBRIERBESCHEINIGUNG FÜR UV-SENSOR
CERTIFICATE OF CALIBRATION FOR UV-SENSOR

UV-Sensortyp *UV Sensor type*	**SUV 20.1 A2 Y2 C**
Artikel-Nummer: *Article number:*	**301 00519 0000**
Serien-Nummer: *Serial number:*	**D8 126**
Kalibrierung: *Calibration:*	**300 W/m² = 20 mA**

Kalibrierung gemäß den Werten der Referenzsensoren R9 001 und R9 004.
Verified according the values of the golden probes R9 001 and R9 004.

Geprüft an:
Verified with:

UV-Niederdruckstrahler *UV low pressure lamp*	
UV-Mitteldruckstrahler *UV medium pressure lamp*	X

Kalibrierdatum (Monat/Jahr) *Date of calibration (month/year)*	**08/18**
Rekalibrierung empfohlen nach (Betriebzeit) *Re-calibration recommended after (operating time)*	**12 Monaten** **12 month**

Hiermit bestätigen wir die Übereinstimmung des Produkts mit den genannten Angaben.
Herewith we certify the compilance of the product with the mentioned data.

Wümbach, 14.08.2018

Steffen Müller

Produktmanager / product manager

hönle group

uv-technik Speziallampen

UV-Technik
Speziallampen GmbH
Gewerbegebiet Ost 6
D-98704 Ilmenau/ OT Wümbach

Tel: +49-(0)36785-520-0
Fax: +49-(0)36785-520-21

e-mail: info@uvtechnik.com
www.uvtechnik.com

KALIBRIERBESCHEINIGUNG FÜR UV-SENSOR
CERTIFICATE OF CALIBRATION FOR UV-SENSOR

UV-Sensortyp *UV Sensor type*	**SUV 20.1 A2 Y2 C**
Artikel-Nummer: *Article number:*	**301 00525 0000**
Serien-Nummer: *Serial number:*	**YN 109**
Kalibrierung: *Calibration:*	**150 W/m² = 20 mA**

Kalibrierung gemäß den Werten der Referenzsensoren R9 001 und R9 004.
Verified according the values of the golden probes R9 001 and R9 004.

Geprüft an:
Verified with:

UV-Niederdruckstrahler *UV low pressure lamp*	
UV-Mitteldruckstrahler *UV medium pressure lamp*	**X**

Kalibrierdatum (Monat/Jahr) *Date of calibration (month/year)*	**11/18**
Rekalibrierung empfohlen nach (Betriebzeit) *Re-calibration recommended after (operating time)*	**12 Monaten** **12 month**

Hiermit bestätigen wir die Übereinstimmung des Produkts mit den genannten Angaben.
Herewith we certify the compilance of the product with the mentioned data.

Ilmenau / OT Wümbach, 02.11.2018

steffen müller

Produktmanager / product manager

hönle group

uv-technik Speziallampen

UV-Technik
Speziallampen GmbH
Gewerbegebiet Ost 6
D-98704 Ilmenau OT Wümbach

Tel: +49-(0)36785-520-0
Fax: +49-(0)36785-520-21

e-mail: info@uvtechnik.com
www.uvtechnik.com

KALIBRIERBESCHEINIGUNG FÜR UV-SENSOR
CERTIFICATE OF CALIBRATION FOR UV-SENSOR

UV-Sensortyp *UV Sensor type*	**SUV 20.1 A2 Y2 C**
Artikel-Nummer: *Article number:*	**301 00519 0000**
Serien-Nummer: *Serial number:*	**D9 076**
Kalibrierung: *Calibration:*	**300 W/m² = 20 mA**

Kalibrierung gemäß den Werten der Referenzsensoren R9 001 und R9 004.
Verified according the values of the golden probes R9 001 and R9 004.

Geprüft an:
Verified with:

UV-Niederdruckstrahler *UV low pressure lamp*	
UV-Mitteldruckstrahler *UV medium pressure lamp*	X

Kalibrierdatum (Monat/Jahr) *Date of calibration (month/year)*	**09/18**
Rekalibrierung empfohlen nach (Betriebzeit) *Re-calibration recommended after (operating time)*	**12 Monaten** **12 month**

Hiermit bestätigen wir die Übereinstimmung des Produkts mit den genannten Angaben.
Herewith we certify the compilance of the product with the mentioned data.

Wümbach, 05.09.2018

Steffen Müller
.....
Produktmanager / product manager

hönle group

uv-technik Speziallampen

UV-Technik
Speziallampen GmbH
Gewerbegebiet Ost 6
D-98704 Ilmenau OT Wümbach

Tel: +49-(0)36785-520-0
Fax: +49-(0)36785-520-21

e-mail: info@uvtechnik.com
www.uvtechnik.com

KALIBRIERBESCHEINIGUNG FÜR UV-SENSOR
CERTIFICATE OF CALIBRATION FOR UV-SENSOR

UV-Sensortyp *UV Sensor type*	**SUV 20.1 A2 Y2 C**
Artikel-Nummer: *Article number:*	**301 00519 0000**
Serien-Nummer: *Serial number:*	**D9 080**
Kalibrierung: *Calibration:*	**300 W/m² = 20 mA**

Kalibrierung gemäß den Werten der Referenzsensoren R9 001 und R9 004.
Verified according the values of the golden probes R9 001 and R9 004.

Geprüft an:
Verified with:

UV-Niederdruckstrahler *UV low pressure lamp*	
UV-Mitteldruckstrahler *UV medium pressure lamp*	X

Kalibrierdatum (Monat/Jahr) *Date of calibration (month/year)*	**09/18**
Rekalibrierung empfohlen nach (Betriebzeit) *Re-calibration recommended after (operating time)*	**12 Monaten** **12 month**

Hiermit bestätigen wir die Übereinstimmung des Produkts mit den genannten Angaben.
Herewith we certify the compilance of the product with the mentioned data.

Wümbach, 05.09.2018

Steffen Müller

Produktmanager / product manager

hönle group

uv-technik Speziallampen

UV-Technik
Speziallampen GmbH
Gewerbegebiet Ost 6
D-98704 Ilmenau/ OT Wümbach

Tel: +49-(0)36785-520-0
Fax: +49-(0)36785-520-21

e-mail: info@uvtechnik.com
www.uvtechnik.com

KALIBRIERBESCHEINIGUNG FÜR UV-SENSOR
CERTIFICATE OF CALIBRATION FOR UV-SENSOR

UV-Sensortyp *UV Sensor type*	**SUV 20.1 A2 Y2 C**
Artikel-Nummer: *Article number:*	**301 00525 0000**
Serien-Nummer: *Serial number:*	**X4 034**
Kalibrierung: *Calibration:*	**150 W/m² = 20 mA**

Kalibrierung gemäß den Werten der Referenzsensoren R9 001 und R9 004.
Verified according the values of the golden probes R9 001 and R9 004.

Geprüft an:
Verified with:

UV-Niederdruckstrahler *UV low pressure lamp*	
UV-Mitteldruckstrahler *UV medium pressure lamp*	**X**

Kalibrierdatum (Monat/Jahr) *Date of calibration (month/year)*	**11/18**
Rekalibrierung empfohlen nach (Betriebzeit) *Re-calibration recommended after (operating time)*	**12 Monaten** **12 month**

Hiermit bestätigen wir die Übereinstimmung des Produkts mit den genannten Angaben.
Herewith we certify the compilance of the product with the mentioned data.

Ilmenau / OT Wümbach, 02.11.2018

Steffen Müller
.....
Produktmanager / product manager

hönle group

uv-technik Speziallampen

UV-Technik
Speziallampen GmbH
Gewerbegebiet Ost 6
D-98704 Ilmenau/ OT Wümbach

Tel: +49-(0)36785-520-0
Fax: +49-(0)36785-520-21

e-mail: info@uvtechnik.com
www.uvtechnik.com

KALIBRIERBESCHEINIGUNG FÜR UV-SENSOR
CERTIFICATE OF CALIBRATION FOR UV-SENSOR

UV-Sensortyp *UV Sensor type*	**SUV 20.1 A2 Y2 C**
Artikel-Nummer: *Article number:*	**301 00525 0000**
Serien-Nummer: *Serial number:*	**XD 062**
Kalibrierung: *Calibration:*	**150 W/m² = 20 mA**

Kalibrierung gemäß den Werten der Referenzsensoren R9 001 und R9 004.
Verified according the values of the golden probes R9 001 and R9 004.

Geprüft an:
Verified with:

UV-Niederdruckstrahler *UV low pressure lamp*	
UV-Mitteldruckstrahler *UV medium pressure lamp*	**X**

Kalibrierdatum (Monat/Jahr) *Date of calibration (month/year)*	**11/18**
Rekalibrierung empfohlen nach (Betriebzeit) *Re-calibration recommended after (operating time)*	**12 Monaten** **12 month**

Hiermit bestätigen wir die Übereinstimmung des Produkts mit den genannten Angaben.
Herewith we certify the compilance of the product with the mentioned data.

Ilmenau / OT Wümbach, 02.11.2018

Steffen Müller
Produktmanager / product manager

hönle group

uv-technik Speziallampen

UV-Technik
Speziallampen GmbH
Gewerbegebiet Ost 6
D-98704 Ilmenau OT Wümbach

Tel: +49-(0)36785-520-0
Fax: +49-(0)36785-520-21

e-mail: info@uvtechnik.com
www.uvtechnik.com

KALIBRIERBESCHEINIGUNG FÜR UV-SENSOR
CERTIFICATE OF CALIBRATION FOR UV-SENSOR

UV-Sensortyp *UV Sensor type*	**SUV 20.1 A2 Y2 C**
Artikel-Nummer: *Article number:*	**301 00519 0000**
Serien-Nummer: *Serial number:*	**D8 117**
Kalibrierung: *Calibration:*	**300 W/m² = 20 mA**

Kalibrierung gemäß den Werten der Referenzsensoren R9 001 und R9 004.
Verified according the values of the golden probes R9 001 and R9 004.

Geprüft an:
Verified with:

UV-Niederdruckstrahler *UV low pressure lamp*	
UV-Mitteldruckstrahler *UV medium pressure lamp*	**X**

Kalibrierdatum (Monat/Jahr) *Date of calibration (month/year)*	**08/18**
Rekalibrierung empfohlen nach (Betriebzeit) *Re-calibration recommended after (operating time)*	**12 Monaten** **12 month**

Hiermit bestätigen wir die Übereinstimmung des Produkts mit den genannten Angaben.
Herewith we certify the compilance of the product with the mentioned data.

Wümbach, 14.08.2018

Steffen Müller

Produktmanager / product manager

hönle group

uv-technik Speziallampen

UV-Technik
Speziallampen GmbH
Gewerbegebiet Ost 6
D-98704 Ilmenau OT Wümbach

Tel: +49-(0)36785-520-0
Fax: +49-(0)36785-520-21

e-mail: info@uvtechnik.com
www.uvtechnik.com

KALIBRIERBESCHEINIGUNG FÜR UV-SENSOR
CERTIFICATE OF CALIBRATION FOR UV-SENSOR

UV-Sensortyp *UV Sensor type*	**SUV 20.1 A2 Y2 C**
Artikel-Nummer: *Article number:*	**301 00519 0000**
Serien-Nummer: *Serial number:*	**D8 125**
Kalibrierung: *Calibration:*	**300 W/m² = 20 mA**

Kalibrierung gemäß den Werten der Referenzsensoren R9 001 und R9 004.
Verified according the values of the golden probes R9 001 and R9 004.

Geprüft an:
Verified with:

UV-Niederdruckstrahler *UV low pressure lamp*	
UV-Mitteldruckstrahler *UV medium pressure lamp*	**X**

Kalibrierdatum (Monat/Jahr) *Date of calibration (month/year)*	**08/18**
Rekalibrierung empfohlen nach (Betriebzeit) *Re-calibration recommended after (operating time)*	**12 Monaten** **12 month**

Hiermit bestätigen wir die Übereinstimmung des Produkts mit den genannten Angaben.
Herewith we certify the compilance of the product with the mentioned data.

Wümbach, 14.08.2018

Steffen Müller

Produktmanager / product manager

hönle group

uv-technik Speziallampen

UV-Technik
Speziallampen GmbH
Gewerbegebiet Ost 6
D-98704 Ilmenau OT Wümbach

Tel: +49-(0)36785-520-0
Fax: +49-(0)36785-520-21

e-mail: info@uvtechnik.com
www.uvtechnik.com

KALIBRIERBESCHEINIGUNG FÜR UV-SENSOR
CERTIFICATE OF CALIBRATION FOR UV-SENSOR

UV-Sensortyp *UV Sensor type*	**SUV 20.1 A2 Y2 C**
Artikel-Nummer: *Article number:*	**301 00519 0000**
Serien-Nummer: *Serial number:*	**D8 124**
Kalibrierung: *Calibration:*	**300 W/m² = 20 mA**

Kalibrierung gemäß den Werten der Referenzsensoren R9 001 und R9 004.
Verified according the values of the golden probes R9 001 and R9 004.

Geprüft an:
Verified with:

UV-Niederdruckstrahler *UV low pressure lamp*	
UV-Mitteldruckstrahler *UV medium pressure lamp*	**X**

Kalibrierdatum (Monat/Jahr) *Date of calibration (month/year)*	**08/18**
Rekalibrierung empfohlen nach (Betriebzeit) *Re-calibration recommended after (operating time)*	**12 Monaten** **12 month**

Hiermit bestätigen wir die Übereinstimmung des Produkts mit den genannten Angaben.
Herewith we certify the compilance of the product with the mentioned data.

Wümbach, 14.08.2018

Steffen Müller

Produktmanager / product manager

hönle group

uv-technik Speziallampen

KALIBRIERBESCHEINIGUNG FÜR UV-SENSOR
CERTIFICATE OF CALIBRATION FOR UV-SENSOR

UV-Sensortyp *UV Sensor type*	**SUV 20.1 A2 Y2 C**
Artikel-Nummer: *Article number:*	**301 00525 0000**
Serien-Nummer: *Serial number:*	**YN 106**
Kalibrierung: *Calibration:*	**150 W/m² = 20 mA**

Kalibrierung gemäß den Werten der Referenzsensoren R9 001 und R9 004.
Verified according the values of the golden probes R9 001 and R9 004.

Geprüft an:
Verified with:

UV-Niederdruckstrahler *UV low pressure lamp*	
UV-Mitteldruckstrahler *UV medium pressure lamp*	**X**

Kalibrierdatum (Monat/Jahr) *Date of calibration (month/year)*	**11/18**
Rekalibrierung empfohlen nach (Betriebzeit) *Re-calibration recommended after (operating time)*	**12 Monaten** **12 month**

Hiermit bestätigen wir die Übereinstimmung des Produkts mit den genannten Angaben.
Herewith we certify the compilance of the product with the mentioned data.

Ilmenau / OT Wümbach, 02.11.2018

steffen müller

Produktmanager / product manager

UV-Technik
Speziallampen GmbH
Gewerbegebiet Ost 6
D-98704 Ilmenau/ OT Wümbach

Tel: +49-(0)36785-520-0
Fax: +49-(0)36785-520-21

e-mail: info@uvtechnik.com
www.uvtechnik.com

hönle group

uv-technik Speziallampen

KALIBRIERBESCHEINIGUNG FÜR UV-SENSOR
CERTIFICATE OF CALIBRATION FOR UV-SENSOR

UV-Sensortyp *UV Sensor type*	**SUV 20.1 A2 Y2 C**
Artikel-Nummer: *Article number:*	**301 00525 0000**
Serien-Nummer: *Serial number:*	**X7 142**
Kalibrierung: *Calibration:*	**150 W/m² = 20 mA**

Kalibrierung gemäß den Werten der Referenzsensoren R9 001 und R9 004.
Verified according the values of the golden probes R9 001 and R9 004.

Geprüft an:
Verified with:

UV-Niederdruckstrahler *UV low pressure lamp*	
UV-Mitteldruckstrahler *UV medium pressure lamp*	**X**

Kalibrierdatum (Monat/Jahr) *Date of calibration (month/year)*	**11/18**
Rekalibrierung empfohlen nach (Betriebzeit) *Re-calibration recommended after (operating time)*	**12 Monaten** **12 month**

Hiermit bestätigen wir die Übereinstimmung des Produkts mit den genannten Angaben.
Herewith we certify the compilance of the product with the mentioned data.

Ilmenau / OT Wümbach, 02.11.2018

Steffen Müller

Produktmanager / product manager

UV-Technik
Speziallampen GmbH
Gewerbegebiet Ost 6
D-98704 Ilmenau/ OT Wümbach

Tel: +49-(0)36785-520-0
Fax: +49-(0)36785-520-21

e-mail: info@uvtechnik.com
www.uvtechnik.com

hönle group

uv-technik Speziallampen

UV-Technik
Speziallampen GmbH
Gewerbegebiet Ost 6
D-98704 Ilmenau/ OT Wümbach

Tel: +49-(0)36785-520-0
Fax: +49-(0)36785-520-21

e-mail: info@uvtechnik.com
www.uvtechnik.com

KALIBRIERBESCHEINIGUNG FÜR UV-SENSOR
CERTIFICATE OF CALIBRATION FOR UV-SENSOR

UV-Sensortyp *UV Sensor type*	**SUV 20.1 A2 Y2 C**
Artikel-Nummer: *Article number:*	**301 00525 0000**
Serien-Nummer: *Serial number:*	**ZO 033**
Kalibrierung: *Calibration:*	**150 W/m² = 20 mA**

Kalibrierung gemäß den Werten der Referenzsensoren R9 001 und R9 004.
Verified according the values of the golden probes R9 001 and R9 004.

Geprüft an:
Verified with:

UV-Niederdruckstrahler *UV low pressure lamp*	
UV-Mitteldruckstrahler *UV medium pressure lamp*	X

Kalibrierdatum (Monat/Jahr) *Date of calibration (month/year)*	**11/18**
Rekalibrierung empfohlen nach (Betriebzeit) *Re-calibration recommended after (operating time)*	**12 Monaten** **12 month**

Hiermit bestätigen wir die Übereinstimmung des Produkts mit den genannten Angaben.
Herewith we certify the compilance of the product with the mentioned data.

Ilmenau / OT Wümbach, 02.11.2018

steffen müller

Produktmanager / product manager

Appendix C

ACCREDITATION CERTIFICATES AND MICROBIAL ANALYSIS METHODS

Joint IAF-ILAC-ISO Communiqué
on the
Management Systems Requirements of ISO/IEC 17025:2005,
General requirements for the competence of testing and calibration laboratories

A laboratory's fulfilment of the requirements of ISO/IEC 17025:2005 means the laboratory meets both the technical competence requirements and **management system requirements** that are necessary for it to consistently deliver technically valid test results and calibrations. The **management system requirements** in ISO/IEC 17025:2005 (Section 4) are written in language relevant to laboratory operations and meet the principles of ISO 9001:2008 **Quality Management Systems — Requirements** and are aligned with its pertinent requirements.

IAF Chair	**ILAC Chair**	**ISO Secretary General**

January 2009

Canadian Association for Laboratory Accreditation Inc.

CALA

Certificate of Accreditation

GAP EnviroMicrobial Services Ltd.
14-1020 Hargrieve Rd.
London, Ontario

This laboratory is accredited in accordance with the recognized International Standard ISO/IEC 17025:2005. This accreditation demonstrates technical competence for a defined scope and the operation of a laboratory quality management system (refer to joint ISO-ILAC-IAF Communiqué dated 8 January 2009).

CANADIAN ASSOCIATION FOR LABORATORY ACCREDITATION INC.
CALA

Accreditation No.: A2914
Issued On: November 10, 2015
Accreditation Date: January 3, 2005
Expiry Date: May 10, 2018

ilac-MRA

CALA

President & CEO

This certificate is the property of the Canadian Association for Laboratory Accreditation Inc. and must be returned on request; reproduction must follow policy in place at date of issue. For the specific tests to which this accreditation applies, please refer to the laboratory's scope of accreditation at www.cala.ca.

CALA Directory of Laboratories

Login
Member:
Password:
Login

Home | List All | Search Accreditation Directory

Membership Number: 2914
Laboratory Name: GAP EnviroMicrobial Services Ltd.
Parent Institution:
Address: 14-1020 Hargrieve Rd. London, Ontario N6E 1P5
Contact: Ms. Jessica Shaw
Phone: (519) 681-0571
Fax: (519) 681-7150
Email: jshaw@gaplab.com

Standard: Conforms with requirements of ISO/IEC 17025
Clients Served: All Interested Parties
Revised On: October 17, 2011
Valid To: April 17, 2014

Showing Accreditation Directory

Scope of Accreditation

Search Criteria - results highlighted in yellow
Laboratory Name contains ""

Water (Microbiology)
Bacteriophages Effluent - Water (005)
BACTPHAGE - 0001 modified from SM 9224 C AND ISO 10705-1:1995 (E)
POUR PLATE
Bacteriophages (MS2)
Bacteriophages (PhiX-174)
Bacteriophages (Q-Beta)
Bacteriophages (T1UV)
Bacteriophages (T7)
Water (Microbiology)
Escherichia coli (E. coli) - Water (008)
ECMF-0001 modified from MOE METHOD # MFMICRO/E3371, 1999 AND MOE METHOD QWPA-E3226 (2004)
MEMBRANE FILTRATION (mFC-BCIG)
Escherichia coli (E. coli)
Water (Microbiology)
Fecal (Thermotolerant) Coliforms - Water (013)
FCMF-0001 modified from SM 21ST ED. 9222 D
MEMBRANE FILTRATION (mFC)
Fecal (Thermotolerant) Coliforms
Water (Microbiology)
Legionella - Water (006)
LEG-0001 modified from AS/NZS 3896:1998 and SM 9260 J
CONCENTRATE/DIRECT PLATE
Legionella
Water (Microbiology)
Legionella - Water (014)
LEGPA-0001 IN HOUSE METHOD
P/A - PCR
Legionella
Water (Microbiology)
Total Coliforms - Water (001)
TCMF-0001 modified from MOE METHOD MFMICRO-E3371, 1999 AND MOE METHOD QWPA-E3226 (2004)
MEMBRANE FILTRATION (mENDO)
Background Count
Total Coliforms

GAP EnviroMicrobial Services Ltd.

APPROVAL FORM FOR RELEASE OF

ANALYTICAL METHOD FOR ROUTINE USE

METHOD TITLE

QUANTITATIVE RECOVERY OF BACTERIOPHAGE USED FOR DISINFECTION EQUIPMENT VALIDATION

METHOD CODE: BACTPHAGE-0001

COMPUTER FILE NAME: BACTPHAGEREV35

DATE OF REVISION: REVISION 35, July 5, 2017

PAGES IN DOCUMENT: 32

QUALITY MANAGER

APPROVAL: J. Patterson **DATE:** July 13, 2017

LABORATORY / TECHNICAL MANAGER

APPROVAL: S. Verhoeven **DATE:** July 5, 2017

DATE REVIEWED:

- **The approval of this document is valid for one year at which time it will be subject to review to determine if any updates or modifications are warranted.**

TABLE OF CONTENTS

1.0 INTRODUCTION 3
2.0 SUMMARY OF METHOD 3
3.0 PRINCIPLE OF METHOD 4
3.1 Relationship to other Methods 4
4.0 PARAMETERS MEASURED 5
5.0 SAMPLE MATRICES 5
6.0 SAMPLE REQUIREMENTS 5
6.1 Contingencies 6
7.0 SHORTCOMINGS 6
7.1 Interferences 6
7.2 Biases 6
7.3 Limitations 7
8.0 ANALYTICAL PROCESSING 7
8.1 Culture Media/Solutions/Reagents 7
8.2 Preparation of Concentrated Bacteriophage 7
8.3 Preparation for Phage Analysis 7
8.4 Sample Analysis 8
8.5 Reading/Counting 11
8.6 Stability Testing 13
9.0 CALCULATION PROCEDURES 13
10.0 REPORTING AND DATA QUALIFICATION 13
11.0 PROFICIENCY TESTING 13
12.0 CALIBRATION AND STANDARDIZATION 14
12.1 Media and Reagents 14
12.2 Incubation Parameters 14
12.3 Recording Results 14
12.4 Equipment 14
13.0 ANALYTICAL PERFORMANCE SUMMARY 14
13.1 Within-Analyst Precision 14
13.2 Among-Analyst Performance 15
14.0 METHOD VALIDATION 16
14.1 Uncertainty 17
15.0 HISTORY OF CHANGES AND REVISIONS 19
16.0 REFERENCES 23
APPENDIX I 25
APPENDIX II 26
APPENDIX III 28
APPENDIX V 32

QUANTITATIVE RECOVERY OF BACTERIOPHAGE USED FOR DISINFECTION EQUIPMENT VALIDATION

1.0 INTRODUCTION

This method describes a pour plate process with a single layer of agar (single layer plating technique) for enumerating bacteriophage.

A bacteriophage (phage) is a type of virus that infects bacteria. Phage that infect *Escherichia coli* are called coliphage, and this group is comprised of a number of different phage types including MS2, Phi X174, Q-Beta, R-17, T-7, T-1, PRD-1 and T1UV bacteriophage. MS2, Q-Beta and R-17 are known as male specific (F^+) bacteriophage because they infect cells by attaching to the F-pilus of male strains of *E. coli. E. coli* produce these pili for the exchange of genetic information during conjugation. There is another group of bacteriophage called somatic bacteriophage including T7, T1, PhiX-174 and T1UV. Somatic bacteriophage are DNA viruses that infect host cells via the outer cell membrane.

Manufacturers of UV reactors and/or the parties purchasing the reactors may require that multiple challenge organisms with various dose-response rates be evaluated to fully characterize the UV reactor.

In a typical experiment, a pure culture(s) of bacteriophage is passed through a disinfection unit, and the phage is enumerated in samples of influent and effluent water. The log reduction in bacteriophage concentration is calculated, and is used to determine the bacteriophage reduction efficacy of the unit. For UV experiments, influent water containing bacteriophage is also submitted for collimated beam analysis (SOP# 53). This allows for the creation of a dose response standard curve that can be used with the experimental log reduction value to calculate the applied dose of the disinfection unit.

2.0 SUMMARY OF METHOD

The method can be used to determine bacteriophage concentrations in inoculum stocks, in water samples taken when testing water disinfection systems, and in water samples from collimated beam analysis. However, this method only applies to analysis whereby known concentrations of laboratory harvested bacteriophage inoculum have been seeded and utilized in the form of a disinfection bioassay. This method is not intended for use in the isolation, identification and quantification of unseeded bacteriophage in various matrices such as water, wastewater, biosolid, etc.

The analysis uses various *Escherichia coli* host strains for the various bacteriophage (Table 1), and a single layer plating technique. One mL of *E. coli* broth culture is added to a culture tube containing 20 mL of molten Tryptone Yeast Extract Glucose agar (TYGA) containing triphenyl tetrazolium chloride (TTC). An appropriate volume of sample containing bacteriophage is then added to the same tube.

Alternatively, one mL of *E. coli* broth culture is added to a culture tube containing 10 mL of 2X TGYA with TTC and 10 mL of sample containing bacteriophage is added to the same tube.

After mixing gently by inversion, the molten agar containing *E. coli* and sample is poured into a sterile Petri dish. The molten agar is allowed to solidify, and the plates are incubated at 35 ± 0.5°C for 18 to 24 hours.

The plates are examined for clear, roundish zones (plaques), which indicate that the phage have lysed the *E. coli* bacterial cells.

The number of plaques per plate is recorded, and multiplied by the dilution factor. Final results are reported as plaque forming units (PFU) per millilitre (mL) of original sample.

Table 1. Summary of bacteriophage and corresponding primary *E. coli* hosts. GAP Stock number in brackets () indicates previous stock number which is still present in the collection but no longer used.

Bacteriophage Name	Bacteriophage			*E. coli*		
	Classification	GAP QC Stock No	ATCC No.	*E. coli* Host Name	ATCC No.	GAP QC Stock No.
MS2	F+ male specific	103	15597-B1	(pFamp)R	700891	285 (201)
Q-Beta	F+ male specific	204	23631-B1	(pFamp)R	700891	285 (201)
T7	Somatic	262	BAA-1025-B2	*E. coli* B or *E. coli* CN13	11303 700609	232 280 (199)
T1	Somatic	234	11303-B1	*E. coli* B	11303	232
PhiX174	Somatic	174	13706-B1	*E. coli* CN13	700609	280 (199)
T1UV	Somatic	235	HER 468*	*E. coli* CN13	700609	280 (199)

***This culture is not available from ATCC, but can be purchased from the Félix d'Hérelle Reference Center for Bacterial Viruses culture collection at the University of Laval**

3.0 PRINCIPLE OF METHOD

F-specific bacteriophages attach to the F-pilus of *E. coli* strains, and therefore will only infect strains that contain an F-factor, such as (pFamp) R or Hfr derivatives of *E. coli* K12. The other group of bacteriophage are known as somatic bacteriophage, and they infect bacteria via the cell membrane. This method is based upon the principle that bacteriophage will infect and multiply in a susceptible *E. coli* host, and eventually lyse (break apart) the cell. The released bacteriophage will subsequently infect and lyse surrounding *E. coli* cells. When bacteriophage and *E. coli* are mixed in agar, the bacteriophage will infect and produce an area of lysed *E. coli* cells that appear as clear zones (plaques). The plaques can be easily seen when surrounded by the dense growth of intact (uninfected) *E. coli* cells (see Appendix III, Figure 1).

Triphenyl Tetrazolium Chloride (TTC) is a redox indicator that turns red when bacteria use oxygen during growth. Addition of TTC to the agar results in a red colour produced by the background growth of uninfected cells. This colour production helps with plaque resolution in the agar.

3.1 Relationship to other Methods

Two different methods are available for bacteriophage enumeration, the single layer and the double layer plating method. Method BACTPHAGE-0001 uses the single layer method. The single layer technique is described in Standard Methods for the Examination of Water and Wastewater (American Public Health Association, 2012 – 9224E, Detection of Coliphages, Single-Agar-Layer Method). Similarly, the US EPA Method 1602 (US EPA, 2001) and ISO 10705-1 “Detection and enumeration of bacteriophage – enumeration of F-specific RNA bacteriophages” use a single layer agar method for the enumeration of male-specific and somatic bacteriophage with US EPA Method 1602 being one of two methods the National Water Research Institutes Ultraviolet Disinfection Guidelines suggests for enumeration of MS2 from UV biodosimetry samples.

GAP Method BACTPHAGE-0001 uses TYG broth (TYGB) and TYG agar (TYGA) formulations modified from the Standard Methods 9224E. They are also the growth media used by Havelaar and Hogeboom (1984). An exception is that GAP EnviroMicrobial Services uses a higher agar concentration to produce more defined plaques (1.0% compared to 0.6%) and has added 2,3,5-triphenyl tetrazolium chloride to the TYGA to enhance plaque resolution. The higher agar concentration does not affect the measured difference between influent and effluent plaque counts but allows the plates to set more quickly and produces smaller plaque clearing zones that is important to allow a larger counting range with somatic coliphage. The addition of tetrazolium dyes at the concentration used in Method BACTPHAGE-0001 has previously been shown to have no effect on MS2 plaque assay titre (Hurst *et al.*, 1994). GAP EnviroMicrobial Services has found similar results with other bacteriophage as well.

GAP Method BACTPHAGE-0001 does not employ an RNase control as outlined in SM 9224E.4j when analysing F-specific coliphage as all samples are spiked with a known coliphage by the client and in any case where both F-specific and somatic coliphage are added to a single sample, only coliphage that show no host cross-reactions are used.

GAP Method BACTPHAGE-0001 uses the F-specific and somatic hosts *E. coli* Famp (ATCC 700891) and *E. coli* CN13 (ATCC 700609) described in Standard Methods 9224E for MS2 and Q-beta (F-specific) and T7, Phi-X and T1UV (somatic) but employs an *E. coli* B (ATCC 11303) host for T1 bacteriophage as suggested by ATCC. The NWRI Ultraviolet Disinfection Guidelines 3rd Edition (NWRI, 2012) also recommends using MS2 bacteriophage ATCC 15597-B1 with the host strain *E. coli* ATCC 15597 (SOP#40). However, the UV industry is interested in several other bacteriophages that have different dose-response characteristics to UV, such as Q-beta, T1, T7, PhiX-174 and T1UV phages which require the use of alternate host strains of *E. coli* as described above.

4.0 PARAMETERS MEASURED

MS2, Q-beta, T1, T7, PhiX-174 and T1UV bacteriophage.

5.0 SAMPLE MATRICES

This method can be used to determine bacteriophage concentrations in inoculum stocks and in water as part of treatment validation studies (biodosimetry). This includes influent and effluent samples taken when testing disinfection systems, and in samples from collimated beam analysis.

It has not been tested for use in the enumeration of bacteriophage from environmental samples such as surface water, groundwater or wastewater.

6.0 SAMPLE REQUIREMENTS

Samples of water that contain bacteriophage shall be collected in sterile plastic containers. See **SOP#21 Quality Control Procedure for Glassware and Plastic Bottles** regarding verification of each lot of new, certified bottles. Typically, experiments using any of the bacteriophage should be performed in water without chlorine, and these samples can be collected in bottles that do or do not contain sodium thiosulfate. If the water is known to contain chlorine, the sample must be collected in a sample bottle containing sufficient sodium thiosulfate to give a final concentration of 100 mg/litre of sample. If a collimated beam test is to be performed (SOP 53) then samples must be collected without sodium thiosulphate, and therefore water must be free of chlorine.

Sample volumes typically range from 10 mL to 100 mL, depending on the experimental requirements with collimated beam samples being collected in volumes ranging from 500 mL to 4 L. Samples must be stored at 4°C, but not frozen. Samples must be shipped in a cooler with sufficient ice to ensure the samples remain cool, but not frozen, during transport to arrive at 0 to 15°C (SOP#17 & SOP#54).

Samples must be shipped to the laboratory as soon as possible after collection, and preferably on the same day. It is recommended that the time between sample collection and analysis is no more than 30 hours, please see Section 6.1, Contingencies below.

6.1 Contingencies

Analysis is initiated within 30 hours of sample collection. The Ministry of Environment Water Initiatives, Technical Brief (November 2000), allows a 48 hour holding time between sampling and analysis. Therefore, a maximum of 48 hours will be permitted between sampling and analysis in the event that delays occur due to transportation difficulties. Stability testing can be performed on a particular sample submission to extend the hold time of a given batch of samples beyond the hold time typically observed of 48 hours. See Section 8.6for stability testing procedures.

As per **SOP#24, Sample Traceability, Documentation, and Validation**, the login analyst checks for samples that may be frozen, warm, older than 48 hours, in cracked or broken bottles, contaminated or undocumented. Requested tests can be excluded from analysis or the sample may not be analyzed, if the sample age exceeds the acceptable criteria, or if the sample has been collected, transported, or otherwise submitted improperly.

The analysis of a repeat sample however, for time periods exceeding 48 hours if requested by a client or is required to obtain reliable results. The sample types analyzed using this method cannot be re-sampled in the field for a number of reasons including cost, the number of “runs” completed during a day being impractical to repeat, and short time periods set aside by clients for testing. Repeat analysis past 48 hours should only be completed if stability of the measured log reductions of the samples can be verified for a given water type and time period (see Section 8.6).

7.0 SHORTCOMINGS

7.1 Interferences

The sample and host bacteria must not be in contact for longer than 10 minutes before the agar is poured. This will prevent phage replication before the agar has solidified (US EPA, 2001).

Every effort must be made to ensure that the preparation and enumeration of concentrated phage stocks is separated by time and space from the enumeration of low titre environmental or study samples. Media room equipment, including the automatic pipetter, must never be used for sample analysis. All of these precautions must be taken to ensure that cross contamination does not occur within the lab. Section 8.4 describes laboratory practices to ensure that cross-contamination does not occur.

7.2 Biases

If an insufficient number of replicates of a bacteriophage are not produced inside a cell during the replication phase, a plaque will not necessarily form (Kutter et al 2005).

If two bacteriophage deposit themselves in close proximity to one another in the agar, only a single plaque will form. This causes a systematic under-estimation of target bacteriophage counts. Phage levels are thus reported as plaque forming units (PFU) per unit volume.

7.3 Limitations

This method is used to validate UV reactors, not for the enumeration of bacteriophage in the environment.

8.0 ANALYTICAL PROCESSING

8.1 Culture Media/Solutions/Reagents

See **Appendix I** and the Media Recipes binder. All media batch numbers are to be recorded in GAP Bench sheets (GAP-F-7).

8.2 Preparation of Concentrated Bacteriophage

This is proprietary information. GAP analysts should refer to **SOP#40, Preparation of Concentrated Bacteriophage Stocks**, for this information.

8.3 Preparation for Phage Analysis

Table 2. Summary of acceptable counting ranges for each bacteriophage and their primary hosts

Bacteriophage Stock cultures	Host *E. coli*	Acceptable Counting Range (pfu/plate)	Ideal Counting Range (pfu/mL)
MS2	*E. coli* HS (pFamp)R	20-300	50-200
Q-Beta	*E. coli* HS(pFamp)R	20-200	50-200
T7	*E. coli* B	15-150	20-80
T1	*E. coli* B	20-300	50-150
PhiX174	*E. coli* CN13	10-150	20-60
T1UV	*E. coli* CN13	20-300	50-150

Maintenance of *E. coli* hosts and bacteriophage stock cultures are described in **Appendix II**. **SOP#37, Culture Collection Maintenance** details the preparation and maintenance of all cultures used for Quality Control and **SOP#40, Preparation of Concentrated Bacteriophage Stocks** details the preparation of bacteriophage stock cultures.

8.3.1 Setting up *E. coli* host cultures

The day before any bacteriophage analysis, inoculate the appropriate *E. coli* host from a working stock culture plate into 50 mL of Tryptone Yeast Extract Glucose Broth (TYGB), and incubate the broth for 18 to 24 hours at 35 ± 0.5°C without shaking. Label each 50 mL bottle with a unique QC sample number.

Each host culture bottle is given a separate QC sample number, and listed on the bench results form. Positive and negative control results for each host bottle (Section 8.4.3) are read using the Sorcerer colony counting system (SOP 108) and the printouts are filed with the QC Bench sheets.

50 mL of host E. coli broth culture will provide a sufficient volume for inoculating about 46 tubes of TYGA. Additional 50 mL broth cultures of E. coli may be required, depending upon the number of samples and dilutions to be analyzed.

Six-hour host broth cultures may also be used if 18-24hr cultures are not available. ISO Mod TYGB bottles must be pre-warmed to room temperature prior to inoculation with working stock culture plates and incubate for at least 6 hours at 35 ± 0.5°C.

8.3.2 Melting TYGA tubes

Prior to analysis, melt the required number of TYG agar (TYGA) tubes by placing the tubes in a beaker containing boiling water until the agar has liquefied. Special precautions should be taken to make sure the agar is completely melted. *Failure to do so will cause chunks to form in the agar, making enumeration impossible the next day. Repeat analysis will then be required, which is not ideal.*

After TYGA is melted, place the tubes in a water bath set at 48.0 to 50.5°C so that the agar remains melted.

***Note**: TYGA tubes displaying any significant pink coloration or turbidity shall be discarded immediately. TYGA that are boiled or placed in the water bath for too long will cause the TTC to degrade, and may cause erroneous results. Also, any TYGA tubes that fall under water in the water bath shall be discarded, as contamination may occur. If the water bath temperature or water level is set too low the agar may start to solidify prior to pouring into petri plates. This results in an incomplete bacterial lawn where plaques are difficult to identify. If the bath is too hot, then the E. coli host and bacteriophage may be killed and unable to form plaques.*

8.3.3 Bacteriophage QC

Select the appropriate bacteriophage stock inoculum (high titre) of known concentration to be used for positive controls and for Quality Control of TYGA (typically located in the long-term storage fridge).

Dilute the bacteriophage stock in phosphate buffered water to a known final concentration in a plastic 1 L bottle without preservative, and label the bottle with the preparation date as follows, **"QC.MS2.date, QCT1 date, etc"**. Store the suspension at 4°C. This suspension is called the "Bacteriophage QC Suspension" (working suspension) and is located in the sample fridge in the main laboratory.

Determine the concentration of the bacteriophage in the QC suspension using the method described in Section 8.4.

Record the "Bacteriophage QC Suspension" information in the Phage Logbook. Include the date of preparation, the bacteriophage stock number used to prepare the stock suspension. The ideal range is outlined in Table 2, and the dilution can be adjusted over time as appropriate

8.4 Sample Analysis

Processing of environmental or study samples will be done on the centre island of the main lab, and plates are left to solidify on the surrounding counter tops in the main lab. Processing

may also be done in the back research area. Five workstations are in place for processing phage samples. When possible, phage stock suspensions, controls and other samples known to contain high concentrations of phage should be processed at a separate station and using separate equipment from those samples known to contain low concentrations of phage or may be separated by time. Surfaces and equipment must be thoroughly disinfected, as per SOP#59, Disinfection of Laboratory Bench Surfaces, Biosafety Cabinets and Laboratory Fume Hood, before use, during processing as required and at the end of each use. A clean lab coat should be worn each day while processing samples. Ideally, one analyst should conduct the analyses for *sets* of influent and effluent samples. The analyses are signed off on the bench results record forms (GAP-F-7) along with all media used (including dates prepared) and the host bottles used.

8.4.1 Processing Samples

Provide each sample for bacteriophage enumeration with a laboratory reference number and record it on the bench results record form (GAP-F-7) as described in **SOP#24, Sample Traceability, Documentation and Validation**.

Please ensure the outside of each tube is wiped with Pursue upon arrival to ensure concentrated bacteriophage is not transferred on analyst's hands during processing.

Set up two test tube racks (with towels underneath) at each station used for analysis. An additional towel should be placed at the bottom of the test tube rack used to hold the TYGA tubes to absorb water drips on the outside of the tubes.

Place a bottle containing approximately 50 mL of the appropriate overnight *E.coli* host broth culture beside the TYGA test tube rack. This bottle can be used for up to 72 hours (maximum 48 hours for *E. coli* Famp) from the time of inoculation.

Ensure micropipettes have calibration verified daily and recorded on GAP-F-120.

The sample and dilution blanks are placed in the dilution test tube rack. Samples in sample containers other than the small tubes are placed beside the test tube rack.

Prepare a dilution series for each sample in phosphate buffered water. Select 1 to 3 sample dilutions that will likely contain the appropriate number of plaque forming units (PFU) per plate (mL) as outlined in **Table 2**. Place the correct number of sterile petri plates on the bench near the TYGA rack.

Label each petri plate with the sample number and dilution; colour coded to phage type (BLACK = MS2, BLUE = T1UV, RED = T7, GREEN = other phage types). Make a record of the host bottle used for a block of samples in the bench results record form (GAP-F-7).

Place the correct number of 20 mL molten TYGA tubes (or 10mL molten 2x TYGA tubes) in the TYGA test tube rack. **Discard any TYGA tubes that exhibit significant pink colour or turbidity of any type.**

Add approximately 1 mL of the appropriate *E. coli* host culture to each tube containing TYGA. Ensure that the *E. coli* host culture does not come into contact with phage by cross-contamination and use only new unopened bags of pipettes for dispensing host cultures.

Add an appropriate volume from each sample dilution (containing phage) into the tube containing TYGA and *E. coli* host for that dilution.

Or add 10 mL from each **room temperature** sample dilution (containing phage) into the tube containing 2X TYGA and *E. coli* host for that dilution. If samples have not reached room temperature when analysis is required then 10mL of sample can be added to a sterile glass tube and submerged in a water bath for up to 1.5 minutes which will raise the temperature to no higher than 45°C.

Gently mix each tube by inversion.

Use a towel to dry the outside of the TYGA tube.

Aseptically pour the inoculated TYGA into the petri plate for that dilution.

Repeat the process until all dilutions and samples have been analyzed. Ensure that a small volume of *E. coli* host culture remains in each the bottle to be used for controls.

Ensure all dose zero samples from collimated beam analysis are plated at least in duplicate. Any plating error with these samples is propagated in the log inactivation calculations for the entire collimated beam.

Allow agar to solidify on the bench with the lids offset and covering half the plate (approximately 10 minutes). Prolonged contact on cold surfaces such as counter tops can cause the clearing zones to be small and difficult to enumerate.

After the agar has solidified, invert the plates, place them in a container (up to a maximum of 6 plates high) and incubate them for 18-24 hours at 35 ± 0.5°C or until a deep red colour has developed in the bacterial lawn such that there is contrast sufficient for counting plaques. Ensure that the plates are placed in the incubator within 30 min of being poured.

8.4.2 Controls - Method Blank

Method blank controls are done, at minimum, during each day that phage samples are analyzed, and must include each media type used during testing (i.e. TYGA and 2x TYGA), for each host type used for analysis, and using the maximum number of replicates analyzed during that particular day.

The method blank may consist of water from the experiment that was not inoculated with phage, or may consist of sterile phosphate buffered water at the lab.

Label sterile petri plates with the QC number and the volume of method blank water analyzed.

Two mL of method blank control is analyzed using 1 mL of host culture for TYGA and 10mL of method blank water with 1 mL of host culture is analyzed if using 2X TYGA.

Aseptically pour the inoculated agar into the petri dishes and allow to solidify with the lid offset

The "Method Blank" control must be completed after all analysis is complete for the day to ensure contamination has not been introduced at some point during the procedure. The Method Blank is logged and recorded in the QC binder.

8.4.3 Controls - Host

Host Controls are performed in the morning prior to the analysis of samples. An analyst will conduct a positive and negative control for each 50 mL bottle of *E.coli* host culture. Before performing these controls each host bottle is to be partially submerged in cold water to stop *E. coli* replication. An additional negative control is done after the host bottle has been used for analysis.

8.4.3.1 Negative Controls

Label sterile petri plates with the *E. coli* culture QC number, with an additional designation to indicate that it is a Start or End negative control (i.e. St 0, End 0, or equivalent). For the End control also include the last sample number analysed using that bottle.

Analyze as per 8.4.1 without addition of any sample, and covering the plate immediately after pouring.

8.4.3.2 Positive Controls

Using the appropriate Bacteriophage QC Suspension (Section 8.3.3), prepare a dilution series in phosphate buffered water. Select a dilution that has previously been shown to give the appropriate counting range of plaques per mL as shown in **Table 2**. This dilution will be used for positive controls.

Label sterile petri plates with the *E. coli* culture QC number, with the dilution of the Bacteriophage QC Suspension analyzed and with an additional designation to indicate that it is a Start control (i.e. St $\overline{1}$ or equivalent).

Analyze as per 8.4.1 adding the appropriate dilution of the Bactiophage QC suspension.

8.5 Reading/Counting

After incubation, remove all plates from the incubator.

An image of all plates must be captured by the Sorcerer colony counting system using the steps outlined in SOP 108 for MS2 and T1UV. Manual counting and recording procedures are to be used for all other phage types.

The Sorcerer must first be calibrated against manual counts as outlined in SOP 108.

Some plates may be uncountable by the Sorcerer due to streaks, clumped colonies or faint bacterial lawn. Pictures of these plates are still required but a manual count must be entered in place of the Sorcerer derived count on the Sorcerer printout/spreadsheet.

Enter an approximate count using "~" if it is not possible to get an exact count, enter ">10000" if the plate is overgrown and it is impossible to estimate the count, or enter "LA" for lab accident.

Press delete on a count where a manual count is required but is not immediately performed so that the Sorcerer count is not incorrectly transferred to a final report. This will leave the cell blank with a "MC" designation to indicate a manual count is required. All counts where the Sorcerer detects less than 20 pfu must be verified by manual counts.

Use the Quebec colony counter or another suitable light, to examine the plates for manual counting.

Count all circular clear zones as plaques. Read all plates that fall within the counting range outlined in Table 2. For an example of a plate with plaque formation, see Appendix III.

Plates with plaque counts outside of the acceptable ranges (Table 2) may also be counted or an approximate count of the plaques may also be made and recorded. This will aid in determining an appropriate dilution at which to perform repeat analysis.

The Optimax Sorcerer Image Analyzer can be used to enumerate MS2 and T1UV plaques (See SOP 108 for information on use). Alternatively, the Lemna Tec MikroBio software and camera system can be used to enumerate MS2 plaques. See SOP 85 for further direction on the use of this system.

Note: The accuracy of The Optimax Sorcerer Image Analyzer is poor when plaque counts are outside the limits outlined in Table 2. These plates should be counted manually or the count output by The Optimax Sorcerer can be verified by the user confirming the pink dots that appear on the output screen match the plaque formations on the plate .

Note: The Lemna Tec is not currently part of the monthly among analyst testing and should not be used for counting MS2 until the accuracy of the counts can be verified.

Record all results on the bench results record form (GAP-F-7) as described in **SOP#24, Sample Traceability, Documentation and Validation**, or add the notation "See Sorcerer Printouts."

On the Sorcerer printouts ensure they are signed and dated by the analyst who ran them through the Sorcerer, attach them to the chain of custody to be filed with the final report.

Positive control plates are observed for proper plaque morphology, good dispersion and are quantified by the Sorcerer to ensure the contain an appropriate number of plaques (Table 2). If all these conditions are met the analyst will record the count achieved on the plate. Historical counts on positive controls can be used to determine whether the recovery rate of the host is as expected.

The negative control plates are counted by the Sorcerer as noted above with the Sorcerer printouts containing the positive and negative control results filed in the QC binder with the notation "See Sorcerer Printouts" placed beside the QC number. Ensure that the Quality or Project Manager approves the control values. The Quality or Project Manager must ensure that the negative control is zero, or reasonably close to zero.

Note: Given the volume of samples analyzed by the laboratory, there are times when there are greater than zero plaques on the negative control plate.

Adverse control results should be brought to the attention of the Project Manager, Lab Manager, and/or Quality Manager.

Repeat analysis may be necessary and should be brought to the attention of the Project Manager, Lab Manager, and/or Quality Manager. These repeats are recorded on the

"Microbial Repeat Analysis Form" (GAP-107) and highlighted in the bench book or on the Sorcerer printout.

8.6 Stability Testing

Stability testing may be required due to a client request or to extend the allowed analysis time frame for samples that must be repeated.

Between analysis time points, samples must be stored at 4.0 ± 2.0°C.

Choose a number of samples that correspond to influent (un-dosed) samples and effluent (dosed) samples that provided acceptable counts on the first day of analysis and re-analyze them at the same dilutions using the procedures described in Section 8.4. If the samples were tested as part of a large bioassay validation then it is preferable to, at minimum, select an entire "run" of samples to re-analyse and for large projects to select at minimum two "runs" to re-analyze that encompass variations in water quality such as low UVT and high UVT (without UVT modifier if possible). Random selection of samples/runs is acceptable if water quality conditions are unknown and client selected samples/runs may also be used at the client's request.

Samples must be re-analyzed at least once (but more re-analysis is acceptable) and must encompass the entire time period that analysis took place (i.e. if samples are repeated up to 72 hours after initial analysis then stability testing must also take place at this time or later).

The results of stability testing may be included on the final report at the client's request, otherwise the results must be kept for GAP QC purposes.

9.0 CALCULATION PROCEDURES

The number of plaque forming units (PFU) per mL of sample is equal to the number of plaques on the plate divided by the volume (mL) of original sample plated.

$$\text{pfu/mL} = \frac{1}{\text{Volume analyzed}} \times \text{pfu count} \times 10^{\text{dilution factor}}$$

10.0 REPORTING AND DATA QUALIFICATION

Report the number of bacteriophage plaque forming units (PFU) and dilution log per mL. Sample counts for each dilution, and results for positive and negative controls are recorded on the bench results record forms (GAP-F-7).

The final report should be prepared and verified according to **SOP#24, Sample Traceability, Documentation and Validation**. Briefly, the report must be prepared and signed by an analyst using form Sample Results Form (GAP-F-16), 'Phage' sheet, located on the GAP I: drive. The results must be confirmed and signed by the Quality Manager, Lab Manager or a Technical Manager before they are transmitted to the client.

11.0 PROFICIENCY TESTING

New staff and students read the methods and SOPs before working on the bench, and follow **SOP#30, Training Laboratory Staff**.

After trainees have learned the basic concepts, experienced staff will train and monitor the trainee. During this process, controls and sample plates are examined to ensure that dilutions have been prepared properly, that there is good plaque formation and distribution on plates, and that plaques

are identified and counted correctly. Both the trainee and an experienced technician will count plaques to ensure that equivalent results can be obtained. Training will continue until the trainer is confident that the trainee can perform the method accurately, and until the trainee has demonstrated acceptable proficiency through participating in Among Analyst evaluation.

There is no proficiency testing provider currently available for bacteriophage analysis therefore, intra-laboratory among analyst analyses are employed to comply with the CALA proficiency testing provisio (option vi).

12.0 CALIBRATION AND STANDARDIZATION

12.1 Media and Reagents

The media and reagents are listed **Appendix I**. Every effort is made to standardize components of this process, including: the brands and quality of chemical ingredients and dehydrated culture media (GAP Chemical-Media Inventory and Storage Guidelines List), the accuracy of weighing, the temperature at which agars are heated before sterilization, if sterilization is required, the temperature and duration of sterilization, how and under what conditions media and solutions are dispensed, and Quality Control procedures for culture media and solutions. **SOP#58, Media, Solutions and Reagents Quality Control**, describes the actual QC process followed by the media room personnel, and describes the procedure that is followed before a media or solution can be used.

12.2 Incubation Parameters

Every effort is made to standardize components of this process including: incubator specifications, humidity, allowable temperature range, incubation period, the frequency and method used to monitor temperatures, uniformity of temperature within the chamber, and labelling of the containers.

12.3 Recording Results

Every effort is made to standardize components of this process including: the type of illumination, the magnification used to examine plates, plaque enumeration procedures, recording plate count results, and training the technologists receive for plaque identification and counting.

12.4 Equipment

Equipment such as incubators, refrigerators (SOP#12), pH meters (SOP#16), thermometers (SOP#27), balances (SOP#5), biosafety cabinets (SOP#13), autoclaves (SOP#4), micropipetters (SOP#57) are subject to calibration and/or monitoring by following the Standard Operating Procedures (SOPs).

13.0 ANALYTICAL PERFORMANCE SUMMARY

13.1 Within-Analyst Precision

Please see **SOP#33, Within Analyst (Duplicate) Evaluation**.

Within-Analyst (duplicate) data has been accumulated, and has been used to calculate the Mean Difference per Range (MDr) for this method. Each analyst's duplicate performance is evaluated using these MDrs, where the MDrs used in the evaluation are dependent on the

type of phage being analyzed. A duplicate MDr summary for each method (and analyst, if applicable) can be found on the GAP Quality System in the CALA, UBC, CMPT, EPA Folder.

13.2 Among-Analyst Performance

Please see **SOP#31, Among Analyst Performance Evaluation Protocol**.

The precision for among analyst evaluations for the Bacteriophage Method has been established for all the four ranges for **MS2**. The precision for each range is as follows:

Range (pfu/plate)	MS2 Bacteriophage Precision (RSD)		
	Plating Analysis	Counting Analysis	Plating /Counting Analysis Combined
0-19	0.4429	0.1247	0.4601
20-100	0.2189	0.0590	0.2267
101-200	0.1720	0.0694	0.1855
201-500	0.1257	0.0651	0.1415

The precision for among analyst evaluations for the Bacteriophage Method has been established for all the three ranges for **Q-Beta**. The precision for each range is as follows:

Range (pfu/plate)	Q-Beta Bacteriophage Precision (RSD)		
	Plating Analysis	Counting Analysis	Plating /Counting Analysis Combined
0-19	0.4659	0.1343	0.4849
20-100	0.1823	0.0845	0.2009
101-200	0.0956	0.0417	0.1043

The precision for among analyst evaluations for the Bacteriophage Method has been established for all the three ranges for **PhiX-174**. The precision for each range is as follows:

Range (pfu/plate)	PhiX-174 Bacteriophage Precision (RSD)		
	Plating Analysis	Counting Analysis	Plating /Counting Analysis Combined
0-10	0.4157	0.0664	0.4209
11-75	0.2098	0.0989	0.2319
76-101	0.1700	0.0530	0.1780

The precision for among analyst evaluations for the Bacteriophage Method has been established for all the three ranges for **T1UV**. The precision for each range is as follows:

Range (pfu/plate)	T1UV Bacteriophage Precision (RSD)		
	Plating Analysis	Counting Analysis	Plating /Counting Analysis Combined
0-19	0.4652	0.0600	0.4691
20-100	0.2123	0.0812	0.2272
101-300	0.2837	0.0800	0.2948

The precision for among analyst evaluations for the Bacteriophage Method has been established for all the three ranges for **T7**. The precision for each range is as follows:

Range (pfu/plate)	T7 Bacteriophage Precision (RSD)		
	Plating Analysis	Counting Analysis	Plating /Counting Analysis Combined
0-19	0.3456	0.1404	0.3730
20-100	0.1787	0.1112	0.2105
101-200	0.1281	0.0825	0.1523

14.0 METHOD VALIDATION

The method BACTPHAGE-0001 is fit for the intended use, modified from the following reference:

Standard Methods 9224E – see Section 3.1 Relationship to Other Methods within BACTPHAGE-0001 for specific modifications.

Published, standard or recommended methods shall be used and records maintained, which establish that any deviations from these methods are acceptable. Quality Control results must be in compliance with tolerances outlined in the Methods and SOPs before results produced by this Method are considered valid.

Quality Control results are checked routinely. The Methods and SOPs mentioned in Section 12.0 of this Method and the information they provide will be reviewed at least annually during a Management Review (see the Quality Assurance Manual). The following items will be assessed; analytical performance of the Method, Quality Control of media and equipment, comparison with other methods, and the results of any in-house validation testing. Any changes to the Method will be done according to the Quality Manual and will be approved by the Quality Manager and Laboratory Manager or Laboratory Director.

14.1 Uncertainty

GAP determines Uncertainty using the policy as outlined by CALA in their document P19-CALA Measurement Uncertainty Policy, Appendix 2 for Microbiology.

When samples are analyzed in a laboratory, various components of the pour plate method (e.g. analysts who plate and analysts who count plaques) may change and add more variation. In addition, the sample holding time before analysis, the batch of culture medium, glassware, etc. may change and contribute additional variation to the results.

The plaque counts are seldom identical when an analyst uses pour plating to analyze a sample repeatedly. There is always random variation in the plaque counts among the replicate tests even though the best methods are used, all equipment is the same, the equipment is functioning properly and the analyst follows the procedure with great care.

Uncertainty associated with plaque counts can be caused by the variation associated with field effects, which may include the variation associated with sampling or the variation in levels resulting from different conditions during sample transport to the laboratory.

After the laboratory receives the sample, there are many other components (factors) associated with laboratory effects and analysis, which can contribute significantly to uncertainty.

Laboratories are responsible for only the portion of uncertainty, contributed by the laboratory itself. Therefore, to get a good sense of the potential sources of variation, below is the list of factors which contribute to the combined uncertainty associated with laboratory effects.

- Variation in the temperature of sample storage at the laboratory
- Variation in sample holding time within the laboratory before analysis
- Variation in different batches of a culture medium made from a particular lot
- Variation in different lots of the same culture medium
- Variation in the accuracy of volume measuring devices (e.g. pipettes, graduated cylinders)
- Variation in counting equipment
- Variation in the volume of liquid in dilution blanks
- Variation associated with serial dilution
- Variation in the performance of any given analyst (within-analyst variation)
- Variation in the performance among analysts (among-analyst variation)
- Variation in temperature within an incubator
- Variation in temperature between or among incubators supposedly at the same temperature
- Variation in reading (plaque counting) for a single analyst (within-analyst reading variation)
- Variation in reading (plaque counting) among analysts (among-analyst reading variation)

For further detailed explanation on Uncertainty in Microbiology refer to our document in GAP Quality System located in the network under I:\GAP Quality System\Misc. QC\ UNCERTAINTY.

The Uncertainty for among analyst evaluations for the Bacteriophage Method has been established for all the ranges for **MS2**. The Uncertainty for each range is as follows:

MS2 Range (pfu/plate)	Uncertainty (U%) at 95% Confidence	Uncertainty for Count (C)
0-19	46	C $\pm$ 46%C
20-100	23	C $\pm$ 23%C
101-200	19	C $\pm$ 19%C
201-500	14	C $\pm$ 14%C

The Uncertainty for among analyst evaluations for the Bacteriophage Method has been established for all the ranges for **Q-Beta**. The Uncertainty for each range is as follows:

Q-Beta Range (pfu/plate)	Uncertainty (U%) at 95% Confidence	Uncertainty for Count (C)
0-19	48	C $\pm$ 48%C
20-100	20	C $\pm$ 20%C
101-200	10	C $\pm$ 10%C

The Uncertainty for among analyst evaluations for the Bacteriophage Method has been established for all the ranges for **PhiX-174**. The Uncertainty for each range is as follows:

PhiX-174 Range (pfu/plate)	Uncertainty (U%) at 95% Confidence	Uncertainty for Count (C)
0-10	42	C $\pm$ 58%C
11-75	23	C $\pm$ 47%C
76-100	18	C $\pm$ 36%C

The Uncertainty for among analyst evaluations for the Bacteriophage Method has been established for all the ranges for **T1UV**. The Uncertainty for each range is as follows:

T1UV Range (pfu/plate)	Uncertainty (U%) at 95% Confidence	Uncertainty for Count (C)
0-19	47	C $\pm$ 47%C
20-100	23	C $\pm$ 23%C
101-300	29	C $\pm$ 29%C

The Uncertainty for among analyst evaluations for the Bacteriophage Method has been established for all the ranges for **T7.** The Uncertainty for each range is as follows:

T7 Range (pfu/plate)	Uncertainty (U%) at 95% Confidence	Uncertainty for Count (C)
0-19	37	C $\pm$ 37%C
20-100	21	C $\pm$ 21%C
101-200	15	C $\pm$ 15%C

15.0 HISTORY OF CHANGES AND REVISIONS

15.1 Revision 1 – Aug 30, 2001 – The first MS2PHAGE-0001 Method at GAP EnviroMicrobial Services was written August 30, 2001.

15.2 Revision 2 – December 12, 2001 – The method of analysis was not changed with the second revision, but each section of the Method was revised to better describe the various procedures used.

15.3 Revision 3 – February 15, 2002 – Was due to some minor inaccuracies and modifications.

15.4 Revision 4 – April 11, 2002 – in response to a site visit by Clancy Environmental. Minor changes were made to clarify procedures, and a section was added outlining the importance of separating processes in the laboratory for concentrated phage stocks and environmental or study samples.

15.5 Revision 5 – February 26, 2003 – consisted of QC control changes.

15.6 Revision 6 – Unknown Date – changes the TYGB broth formulation for phage enumeration to match that of the ISO standard. The TYGB formulation for producing high titre phage stocks remains unchanged. An explanation as to why the changes were made, together with data and statistical analysis supporting these changes, are located in the method variance binder (MS2-0001, March 24, 2003). Revision 6 also makes minor modifications to the Quality Control procedures, including the preparation of QC stocks and positive and negative controls.

15.7 Revision 7 – August 27, 2003 – involved the reorganization of the appendices. The media appendix (Appendix I) was made into a list and referred to the Media Recipe binder. An appendix of the list of GAP documents was added. The numbering system was also simplified.

15.8 Revision 8 – October 7, 2003 – was done to address the items that came up during the CAEAL audit of September 11, 12 of 2003.

15.9 Revision 9 – January 6, 2005 – was completed to address some items that came up in the 2004 internal audit.

15.10 Revision 10 – July 20, 2005 – was completed to allow several bacteriophages to be included following the same method and protocols, which changed the Method title from MS2PHAGE-0001 to BACTPHAGE-0001. There is no difference in the processing of any of the bacteriophage proposed, however the appropriate host bacterium must be used for infection and preferred counting ranges were determined (Table 2). Minor modifications were also made to clarify the instructions and improve the ease of reading. Appendix VII, which was a copy of SOP #40, was removed to ensure that only the most current version is followed.

15.11 Revision 11 – Unknown Date – was done to accommodate the CAEAL 2005 audit.

15.12 Revision 12 – January 4, 2006 – done in response to the GAP 2005 internal method audit, addressed the plate and stock incubation temperature change and some minor spelling issues.

15.13 Revision 13 – April 26, 2006 – was revised due to an inquiry from a client as to why there are multiple hosts per Bacteriophage type. Table 1 on page 5 was updated to reference the use of specific hosts. The multiple, potential hosts/bacteriophage from Tables 1 and 2 were removed to indicate the most commonly used, primary hosts. Appendix II was updated to

indicate the primary hosts used while continuing to indicate the alternate hosts available. The header was also updated to accurately reflect the method title. Spelling and grammatical errors were corrected. Formatting changes were made.

15.14 Revision 14 – March 7, 2007 – was revised to correct the terminology from "cell membrane" in Section 3.0 to "cell wall". The word "roundish" was added to the statement 'The plates are examined for clear, roundish zones (plaques), which indicate that the phage have lysed the *E. coli* bacterial cells." in Section 2.0. In Section 8.4.3., the counting limits "between 20 and 300 plaques" was defined to be for MS2 and T1 phage, and "between 10 and 150 plaques" for PhiX phage due to their large plaques. **Section 13.0, Analytical Performance Summary**, **Section 14.1, Measurement of Uncertainty**, and **Appendix IV** were updated to include information and statistical data relevant to each section to note the evaluation of the analyst's performance. Reference to GAP Form #s was also made. **Section 6.3**, Contingencies, was also updated. Reference to SOP#41 was removed as it has been merged with SOP#58, Media, Solutions and Reagents Quality Control. Reference to the QA-QC Documents folder has been removed. **Section 11.0**, Proficiency Testing, was updated.

15.15 Revision 15 – May 7, 2007 – was revised to address the items that came up during the April 2007 CAEAL audit. **Section 13.0, Analytical Performance Summary**, **Section 14.1, Measurement of Uncertainty** was updated to include all the statistical data relevant to the outstanding CAEAL audit items. Removed **Section Appendix IV, Within Analyst Precision Summary** in the method to be consistent with all other accredited methods and appendixes were renamed. The location of this data is described in **Section 13.1 Within Analyst.**

15.16 Revision 16 – August 7, 2007 – was revised to address the new company name change.

15.17 Revision 17 – January 10, 2008 – was revised as a result of the 2007 internal method audit. **Appendix II** was updated to reflect the current media that is used to subculture the different *E. coli* host cultures. **Appendix II** was updated to include the procedure of how to prepare an *E. coli* Hfr host culture for bacteriophage analysis. **Section 8.3 and Appendix II** were updated to reflect the ideal counting range for PhiX174 plaques. **Section 8.3.2** was updated to include a note to discard any TYGA tubes that fall below the water line in the water bath. References to the -76°C ultra-low freezer in **Appendix II** were updated to include the following statement; "the ultra low freezer has been taken out of service temporarily. The culture collection is being stored at -20°C until a replacement ultra low freezer has been purchased". **Section 8.4.3** was updated to ensure plaques that have formed on the edges of the petri plates are included in the total plaque count. This section was also updated to include that proper plaque morphology and good dispersion are observed in the positive control plates, in addition to the confirmation of the correct quantity of plaques.

15.18 Revision 18 – September 8, 2008 – was reviewed and revised to address CAEAL name change to CALA. There were no other changes required.

15.19 Revision 19 – December 9, 2008 – was revised to include reference to a new form for repeat analysis in Section 8.4.3.

15.20 Revision 20 – January 28, 2009 – was completed as a result of the 2008 internal method audit. **Section 6.0** was updated to widen the acceptable temperature range from 4-8°C to 0-15°C. All references to labelling host bottles with a separate identification letter have been changed to reflect the current practice of assigning each host bottle a unique sample number.

Section 8.3.1 was updated to include six-hour TYGB host cultures. In **section 8.3.3**, the ideal counting range was changed from 50-150 to 30-150 PFU per plate. Clean lab coats should be worn each day bacteriophage samples are processed. This was added to **section 8.4**. In order to avoid water droplets in the petri plates, the TYGA tubes should have a towel placed underneath them, as well as dried with a towel prior to pouring (see **section 8.4.1**). **Section 8.4.1** was updated to include that petri plate labels are colour coded to phage type. This section also now includes reference to stacking petri plates up to a maximum of 6 high prior for incubation. **Section 8.4.2** was updated to include that method blanks are required for host type. **Section 8.4.3** was revised to include reference to the Lemna Tec MikroBio software and camera system for MS2 plaque enumeration. The end of **section 8.4.3** was amended to include that samples selected for repeat analysis are highlighted in the bench book. References to the out of service ultra-low freezer were removed from **Appendix II**.

15.21 Revision 21 – May 28, 2009 – was completed in response to the CALA audit. Section 11 was updated to indicate that a PT program is unavailable but that other procedures are being used to comply with the CALA provisio. Reference to SOP#21 regarding bottle sterility was added into section 6.0. Reference to the GAP equipment manuals was added to Appendix V. Section 10 was modified to include the location of GAP-F-16.

15.22 Revision 22 – January 22, 2010 – was completed as a result of the 2009 internal method audit. New references were added throughout the method to make reference to a new phage being enumerated at GAP, T7. **Section 2.0** had the drinking water system validation specificity removed to show that this method can be used for many other UV system validations. **Section 7.1** had the requirement of pipettors being labelled for either host or phage samples removed. In **section 8.4.1** a statement was added to allow for host bottles to be used for up to 48 hours from the time of inoculation, and that only new bags of pipettes are to be used for dispensing host. Also, a requirement was added for collimated beam dose 0 samples to be always plated at least in duplicate. In **section 8.4.2** the procedure for performing negative starts on bottles was changed to have host bottles be submerged in cold water before having controls performed to stop any further *E. coli* replication, and also that all negative start and end plates be covered immediately after being poured to prevent any airborne contamination. In **section 8.4.3** it was added that the Sorcerer colony counter can be used for counting MS2 and T1UV plaques. **Appendix III** had images of T1UV, Q-beta, PhiX-174 and T7 plaques added, and the image showing MS2 plaques was replaced with a new image.

15.23 Revision 23 – March 23 – 2010 was completed to revise the following sections to include using *E. coli* B as the new host for T7 and the new counting range of 15-150 PFU per plate: section 2, table 1, section 8.3, table 2, appendix II and appendix III. This is the current practice at GAP.

15.24 Revision 24 – May 11, 2010 – was complete to include a note in section 8.4.3 that indicates the necessity to manually count MS2 and T1UV petri plates that have fewer than 20 plaques. Also, the statement about counting plaques that formed at the edge of the plate was removed.

15.25 Revision 25 – June 21, 2010 – was revised to change the method reference from ‘not based on’ but to ‘modified from the reference’ in Section 14, Method Validation.

15.26 Revision 26 – August 4, 2010 – was revised to include Uncertainity at 95% confidence and Precision of counting and plating for T7. Also, the method was updated to include sample

processing using 2X TYGA and 10mL of sample. The Reporting and Data Qualification section was updated to report the dilution log per mL and PFU count, as we do not typically report PFU/mL.

15.27 Revision 27 – March 7, 2011 – Section 8.4.1 paragraph 3 stated that the host can be used up to 48 hours after inoculation. This has been extended to 72 hours. There was no difference between 48 hours and 72 hours. This allows for improved quality insurance with this extension of time. Section 13.2 precision table for Q-Beta the RSD value was changed in the counting analysis section for range 101-200 to reflect addition data.

15.28 Revision 28 – August 8, 2011 – was revised to include a further detailed explanation on Uncertainty. The chart for Precision was updated to include a combined plating/counting precision section.

15.29 Revision 29 – April 20, 2012 – Section 2.0 had clarification included that more than one host can be used for certain phage recovery. All references to Isbister et al. 1983 were removed as we do not have this reference on hand at GAP. Section 6.0 was clarified as bottles with sodium thiosulfate can be used to collect any sample that is not meant for collimated beam. Section 6.1 now allows for indefinite repeats to be completed on samples as long as stability can be verified. The water bath temperature is now a range in section 8.3.2. The method of QC stock preparation in section 8.3.3 was changed to allow more closely reflect current procedures. Section 8.4 had notes on QC of micropipettes and recording of media lots added and the current practice of using volumes other than 1 mL of sample added included (Method validation completed). Also, in this section the expiry of host bottles was updated, and the procedure for negative controls on host bottles was clarified. In 8.4.3 the SOP number for the Sorcerer colony counter was added. The GAP host numbers were updated in APPENDIX II and Table 1 (Section 2.0).

15.30 Revision 30 – May 23, 2012 – was revised to include a new reference.

15.31 Revision 31 – December 19, 2012 – Updated method references to latest version of Standard Methods (22nd Edition). Clarified what must be verified if samples are analysed past 48 hours from when they are taken (Section 6.1). Section 8.3.3 was clarified on how to treat QC stocks over time. Section 8.4.1 had a note added regarding disinfection of tube exterior upon arrival and how to warm “cold” samples requiring analysis at 10mL. Section 8.4.2 clarified how “Method Blanks” are performed and how to properly label host end negative controls. Section 8.4.3 had a reference added to include the counting range for T7 and a note on how the Lemna Tec must be verified before each use as it is not currently in routine use in the among analyst counting.

15.32 Revision 32 – August 30, 2013 – Updated section 3.1 to clarify differences as compared to the reference method. Section 14 has been updated by removing the revision date from the reference method as the method is reviewed with each new released revision of Standard Methods. The most recent Standard Methods is the 22nd edition.

15.33 Revision 33 – April 23, 2015 – Updated line formatting throughout the document. Changed “should” to “shall” in sections 6.0, 8.3.2. In section 6.1 changed “time” to “type,” this was a typo and did not change the intended meaning of the section. Section 8.3.2 updated to say “significant” pink colour as slight pick colouration of the TYGA will not affect results. Location on where to record media lot numbers updated to bench sheets in sections 8.1 and 8.4. Added “approximately 50mL” to section 8.4.1 regarding the volume of the ISO Mod TYGB.

Changed wording of one bullet in section 8.4.1 to "Place the correct number of 20 mL molten TYGA tubes (or 10mL molten 2x TYGA tubes) in the TYGA test tube rack. Discard any TYGA tubes that exhibit significant pink colour or turbidity of any type," for clarity. Also in section 8.4.1 and 8.4.2 clarified wording of one bullet to state that the lawn must be deep red in colour prior to counting. Changed wording to allow alternative designations for positive and negative controls in section 8.4.2 such as "start" and "end." Clarified the methods for counting and recording results outside allowable limits for a particular bacteriophage in section 8.4.3 including how to use the automatic counters in these ranges. Added that positive control plates are now to be counted and recorded on the GAP Benchsheets in section 8.4.3. Section 10.0 had the name of the GAP form 16 changed for clarity purposes. Section 14 had should changed to shall. None of the above changes would cause major methodology changes, all modification are for clarity and ongoing improvement only.

15.34 Revision 34 – February 24, 2016 – Formatting changes throughout including the creation of new sections to replace bullet points, the addition of headings to separate portions of sections, and re-formatting of tables. Wording clarification in the following sections 1.0, 3.1, and 6.0. In Section 6.1 a statement regarding use of stability testing to extend the sample analysis hold times. Section 8.6 added to describe stability testing. Corrected the Section references in Section 7.1 to Section 8.4 from Section 8.2 and 8.3. Changed references from GAP sample numbers to QC sample numbers for any host bottles and method blank references. Added references throughout to counting with the Sorcerer in all instances so that images of the plates are saved. These can be found in sections 8.3.1. In section 8.3.2 Added the terms "or turbidity" to indicate when TYGA tubes are to be discarded and a note was also added that high water bath temperatures may also kill off the *E. coli* host. In section 8.4 added that the host bottles used must be recorded on the bench sheets. Clarified the method blank, negative control and positive control procedures in section 8.4.2. In section 8.4.3 added the notes on how the Sorcerer is to be used for counting plates. Updated uncertainties in section 13.2 and 14.1. Removed references to "filtering" in section 14.1. Removed references to T7m as it is not part of the current CALA scope.

15.35 Revision 35 – July 5, 2017 – Hyperlinked section cross references throughout document. Removed all typed references to "ideal counting range" for phage types throughout document and referenced back to Table 2. In Section 2 added note that this method is not appropriate for "unseeded" bacteriophage samples. Added HER culture collection reference to Table 1 and Appendix II. Section 6.0 added requirement that CB samples MUST be collected without chlorine present. Added an "Ideal Counting Range" to Table 2. Section 8.3.1 for 6-hour host clarified that ISO Mod TYGB must be at room temperature before inoculating. Section 8.3.2, clarified that "set too low" pertained to both water level and temperature of the water bath. Section 8.4.1 added the colour coding for phage types. Section 8.4.3 removed duplicate text and added section cross reference on hos to process control samples. Section 8.5 corrected Form 107 title. Section 8.6 clarified that "High UVT" should be without UVT modifier where possible. Section 9.0 reformatted the calculation as a formula. Appendix II, added that mFC-BCIG is never to be used for phage host subculture.

16.0 REFERENCES

American Public Health Association. 2012. Standard Methods for the Examination of Water and Wastewater, 22th Ed. American Public Health Association, Washington, D.C.

Havelaar, A.H. and W.M. Hogeboom. 1984. A method for the enumeration of male-specific bacteriophages in sewage. Journal of Applied Bacteriology. 56:439-447.

Hurst, C.J., J.C. Blannon, R. L. Hardaway, W.C. Jackson. 1994. Differential effect of tetrazolium dyes upon bacteriophage plaque assay titres. Appl. Environ. Microbiol. 60:3462-3465.

International Organization for Standardization. 1995. ISO 10705-1, Detection and enumeration of bacteriophages. Part 1: Enumeration of F-specific RNA bacteriphages.

Kutter, E. and Sulakvelidze, A. 2005. Bacteriophages – Biology and Applications. CRC Press, USA.

NWRI. 2012. Ultraviolet disinfection guidelines for drinking water and water reuse. National Water Research Institute, NWRI-2012-04.

US EPA. 2001. Method 1602: Male-specific (F^+) and somatic bacteriophage in water by single agar layer (SAL) procedure. EPA 821-R-01-029, Office of Water, Washington DC.

APPENDIX I

CULTURE MEDIA/SOLUTIONS/REAGENTS

1) TYG Broth (TYGB)
2) TYG Agar (TYGA)
3) 2X TYG Agar (2x TYGA)
4) MacConkey Agar
5) Trypticase Soy Agar
6) Phosphate buffered water
7) KH_2PO_4 Solution
8) $MgCl_2 \cdot 6H_2O$ solution

Note: *All of the above recipes can be found in the media room binder 'Media Recipes' and the GAP computer Quality System, Media Recipes folder. These recipes refer to quality control cultures. Please see SOP#37, Culture Collection Maintenance for more information. See also the GAP Culture Collection List.*

APPENDIX II

STOCK CULTURES

Note: *All culture transfers must be logged into the GAP Culture Collection binder in Section 3. See also SOP#37***.**

Microorganisms

Bacteriophage Name	Classification	GAP QC Stock No	Bacteriophage ATCC No	*E. coli* Host Name	*E. coli* ATCC No	GAP QC Stock No.
MS2	F+ male specific	103	15597-B1	*E. coli* Hfr (c-3000), or *E. coli* HS (pFamp)R*, or *E. coli* K-12	15597 700891 23631	40 285 (201) 203
Q-Beta	F+ male specific	204	23631-B1	*E. coli* K-12, or *E. coli* HS(pFamp)R*	23631 700891	203 285 (201)
T7	Somatic	262	BAA-1025-B2	*E. coli* B*, or *E. coli* CN13	11303 700609	232 280 (199)
T1	Somatic	234	11303-B1	*E. coli* B*, or *E. coli* CN13	11303 700609	232 280 (199)
PhiX174	Somatic	174	13706-B1	*E. coli* C, or *E. coli* CN13*	13706 700609	25 280 (199)
T1UV	Somatic	235	HER 468**	*E. coli* CN13*	700609	280 (199)

** indicates the primary hosts used for the recovery of the bacteriophage. The other hosts listed can be used as alternate hosts, if required.*

***This culture is not available from ATCC, but can be purchased from the Félix d'Hérelle Reference Center for Bacterial Viruses culture collection at the University of Laval*

Maintenance of *Escherichia coli* host stock cultures

- Prepare all *E. coli* host cultures for long-term storage at -76°C as described in SOP#37.

  The culture must also be tested for phage infectivity using the appropriate phage QC stock suspension (see section 8.3).

  - Inoculate the appropriate *E. coli* host from the sub cultured agar plate into 50 mL of TYGB, and incubate for 18 to 24 hours at 35 ± 0.5°C without shaking.
  - Process the *E. coli* host culture as described in section 8.4 (experimental controls).

- Both positive and negative control procedures must be used. All host bottles are given a GAP QC number and results of this testing are recorded in the GAP Sample Binder. If the culture removed from the freezer is pure, lactose-positive (or confirmed as *E. coli* on BCIG) and found to be suitable as a host for bacteriophage analysis, it may be used in disinfection efficacy trials.

- Following recovery from the -76°C, the strain must be sub cultured weekly onto TSA or a selective agar as follows. Selective agar options include MacConkey agar for *E. coli* K-12, TSA with Ampicillin and Streptomycin for *E. coli* HS (pFamp)R, and MacConkey for *E. coli* CN13, as described in detail in SOP #37. Phage hosts MUST NEVER be sub-cultured onto mFC-BCIG, as some *E. coli* loose their ability to be infected by bacteriophage after being plated on this media.

- All maintenance and sub culturing steps are recorded on GAP-F-53 in the binder titled “GAP Culture Collection SOP 37” located in the main laboratory. All information, including monthly and weekly subculture dates, and results of the confirmation steps are recorded in this logbook.

Maintenance of bacteriophage stock cultures and inoculum

- Long term storage of MS2 ATCC 15597-B1 (GAP # 103), Q-Beta ATCC 23631-B1 (GAP #204), T1 ATCC 11303-B1 (GAP #234), PhiX-174 ATCC 13706-B1 (GAP #174) and T1UV HER 468 (GAP #235) bacteriophages is done by freezing at -76°C. A detailed protocol for this is located in SOP #40. In brief, freezer stocks are prepared by adding 1.5 mL aliquots of concentrated bacteriophage stock to 2 mL cryovials. The vials are then stored at -76°C.
- The phage stocks are prepared by ISO method 10705-1. The method for bacteriophage stock preparation is located in SOP#40. Each stock preparation is labelled with the date of preparation and a unique identification number. The stock is then stored at 4°C (long-term storage fridge).

APPENDIX III

MS2, T1 AND T1UV BACTERIOPHAGE PLAQUES

Pour plates incubated overnight should exhibit a maroon colour indicating utilization of TTC by unlysed *E. coli* cells. MS2, T1 and T1UV bacteriophage infect and lyse the *E. coli* host causing small zones of clearing known as plaques (See **Figure 1**.).

Counts are recorded from plates that have between 20 to 300 zones of clearing (plaques). The number of plaque forming units (PFU) of MS2, T1 or T1UV bacteriophage per millilitre (mL) of sample is calculated as follows:

The number of plaque forming units (PFU) per mL = total plaques per plate x dilution factor.

Figure 1. Example of MS2 bacteriophage plaques in a pour plate.

Figure 2. Example of T1UV bacteriophage plaques in a pour plate.

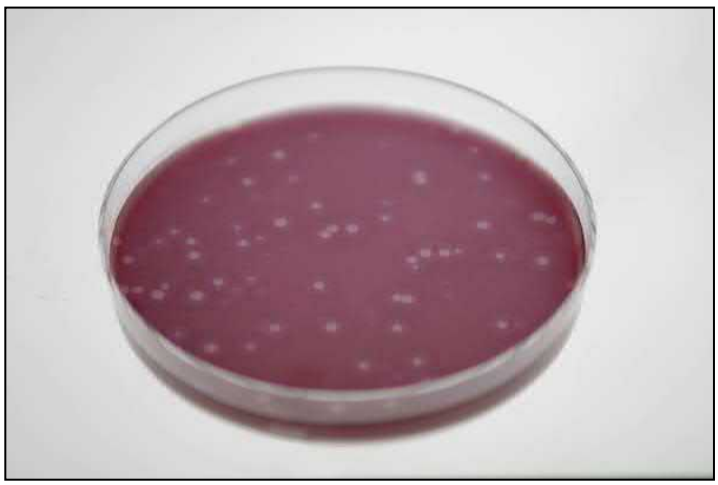

Q-BETA BACTERIOPHAGE PLAQUES

Pour plates incubated overnight should exhibit a maroon colour indicating utilization of TTC by unlysed *E. coli* cells. Q-beta bacteriophage infect and lyse the *E. coli* host causing small zones of clearing known as plaques (See Figure 1.).

Counts are recorded from plates that have between 20 to 200 zones of clearing (plaques). The number of plaque forming units (PFU) of Q-beta phage per millilitre (mL) of sample is calculated as follows:

The number of plaque forming units (PFU) per mL = total plaques per plate x dilution factor.

Figure 3. Example of Q-beta bacteriophage plaques in a pour plate.

PhiX-174 BACTERIOPHAGE PLAQUES

Pour plates incubated overnight should exhibit a maroon colour indicating utilization of TTC by unlysed *E. coli* cells. PhiX-174 bacteriophage infect and lyse the *E. coli* host causing small zones of clearing known as plaques (See Figure 1.).

Counts are recorded from plates that have between 10 to 150 zones of clearing (plaques). The number of plaque forming units (PFU) of PhiX-174 phage per millilitre (mL) of sample is calculated as follows:

The number of plaque forming units (PFU) per mL = total plaques per plate x dilution factor.

Figure 4. Example of Phi-X 174 bacteriophage plaques in a pour plate.

T7 BACTERIOPHAGE PLAQUES

Counts are recorded from plates that have between 15 to 150 zones of clearing (plaques). The number of plaque forming units (PFU) of T7 phage per millilitre (mL) of sample is calculated as follows:

The number of plaque forming units (PFU) per mL = total plaques per plate x dilution factor.

Figure 5. Example of T7 bacteriophage plaques in a pour plate.

APPENDIX IV

LIST OF ABBREVIATIONS

ATCC	American Type Culture Collection
E. coli	*Escherichia coli*
PFU	plaque forming unit
QC	quality control
SOP	standard operating procedure
TSA	tryptic soy agar
TTC	2,3,5-triphenyl tetrazolium chloride
TYGA	tryptone yeast glucose agar
TYGB	tryptone yeast glucose broth
UV	ultraviolet

APPENDIX V

LIST OF SOPs AND OTHER GAP DOCUMENTS

- SOP#4 OPERATION OF THE AMSCO AUTOCLAVES
- SOP#5 BALANCE CALIBRATION AND DAILY MONITORING
- SOP#12 QUALITY ASSURANCE & MAINTENANCE OF INCUBATORS, REFRIGERATORS AND FREEZERS
- SOP#13 OPERATION AND MAINTENANCE OF THE BIOSAFETY CABINETS AND LAMINAR FLOW HOOD
- SOP#16 OPERATION OF pH METERS
- SOP#17 SAMPLE COLLECTION FOR CLIENTS
- SOP#21 QUALITY CONTROL PROCEDURE FOR GLASSWARE & SAMPLE BOTTLES
- SOP#24 SAMPLE TRACEABILITY, DOCUMENTATION AND VALIDATION
- SOP#27 THERMOMETER CALIBRATION
- SOP#30 STANDARD OPERATING PROCEDURE FOR TRAINING LABORATORY STAFF
- SOP#31 AMONG ANALYST PERFORMANCE EVALUATION PROTOCOL
- SOP#33 WITHIN ANALYST (DUPLICATE) EVALUATION
- SOP#37 CULTURE COLLECTION MAINTENANCE
- SOP#40 PREPARATION AND STORAGE OF CONCENTRATED BACTERIOPHAGE
- SOP#53 COLLIMATED BEAM ANALYSIS
- SOP#54 INTERNATIONAL FEDEX SHIPMENTS
- SOP#57 THE OPERATION, MAINTENANCE AND BI-ANNUAL CALIBRATION OF LABORATORY MICROPIPETTERS
- SOP#58 MEDIA, SOLUTIONS AND REAGENTS QUALITY CONTROL
- SOP#59 DISINFECTION OF LABORATORY BENCH SURFACES, BIOSAFETY CABINETS AND LABORATORY FUME HOOD
- SOP#85 SET UP, OPERATION AND CALIBRATION OF LEMNA TEC MICROBIO SOFTWARE AND CAMERA SYSTEM
- SOP#108 SORCERER COLONY COUNTING SYSTEM
- GAP QUALITY MANUAL
- GAP CULTURE COLLECTION LIST
- GAP MEDIA RECIPES BINDER
- GAP EQUIPMENT INSTRUCTION MANUALS
- GAP CHEMICAL-MEDIA INVENTORY AND STORAGE GUIDELINES LIST

GAP EnviroMicrobial Services Ltd.

APPROVAL FORM FOR RELEASE OF
ANALYTICAL STANDARD OPERATING PROCEDURE (SOP) FOR ROUTINE USE

SOP #40:
PREPARATION AND STORAGE OF CONCENTRATED BACTERIOPHAGE

NOTE: THIS IS A GAP ENVIROMICROBIAL SERVICES PROPRIETARY PROCEDURE

COMPUTER FILE NAME: 40-SOP-Phage Stock Production-12

DATE OF LAST REVISION: REVISION 12, March 7, 2016

NUMBER OF PAGES IN DOCUMENT: 6

QUALITY MANAGER

APPROVAL: **Jessica Patterson** **DATE: March 7, 2016**

LABORATORY / TECHNICAL MANAGER

APPROVAL: **Shawn Verhoeven** **DATE: March 7, 2016**

DATE REVIEWED:

- **The approval of this document is valid for one year at which time it will be subject to review to determine if any updates or modifications are warranted**

STANDARD OPERATING PROCEDURE FOR PREPARING AND STORING CONCENTRATED BACTERIOPHAGE
Note: This is a proprietary procedure

1.0 SUMMARY:

1.1. Bacteriophage stock preparations typically result in concentrations that range from approximately 1×10^{10} pfu per mL to 2×10^{12} pfu per mL. Long term storage of the prepared parent/daughter stock spiking suspension is at -76°C.. Working QC stocks are stored at 4°C. All prepared stocks (both "parent" and "daughter") are evaluated using a 4-point collimated beam for Quality Assurance purposes, following **SOP#53, Collimated Beam Analysis**. "Parent" stock is the first generation from the culture obtained directly from ATCC (America Type Culture Collection), or another appropriate standard primary microorganism culture collection, and "daughter" stocks are all subsequent generations obtained from that parent culture.

2.0 PROCEDURE:

2.1. Every effort must be made to ensure that the preparation and manipulation of concentrated phage stocks is separated by time and space from the enumeration of environmental or study samples.

2.1.1. Whenever possible, preparation and manipulation of all concentrated phage stocks should be done on days when sample enumeration for phage is not taking place.

2.1.2. All manipulations of the phage suspension are conducted in the Receiving Bay area.

2.1.3. The transfer of high titre phage solutions must be done with micropipettors using filtered tips, or using pipettors labelled with "high titre phage only". All equipment and surfaces must be thoroughly disinfected with 70% isopropanol or 2% Amway Pursue solution both before and immediately after use, as per **SOP#59, Disinfection of Laboratory Bench Surfaces, Biosafety Cabinets and Laboratory Fume Hood**. A top loading balance is used when balancing centrifuge tubes for phage preparation. The balance must be thoroughly disinfected after use.

2.1.4. Processing of environmental or study samples is conducted on the centre island bench of the main lab. Three workstations are in place for processing phage samples. When possible, phage stock solutions, controls and other samples known to contain high concentrations of phage should be processed at a separate station and using separate equipment from those samples known to contain low concentrations of phage. Alternatively, they may be processed at the end when all other samples are done. Separate pipettors are labelled for use with host culture or phage samples only.

Note: *All culture transfers must be recorded in the GAP Culture Collection binder, as per* ***SOP#37, Culture Collection Maintenance****.*

2.1.5. Minor differences between each of the six bacteriophage preparations are summarized in **Tables 1, 2** and **3**. *E. coli* host and incubation requirements are summarized.

Table 1: Summary of bacteriophages and corresponding *E. coli* hosts

Bacteriophage Name	Classification	GAP QC Culture #	ATCC No.	*E. coli* Host Name	ATCC No.	GAP QC Culture No.
MS2	F+ male specific	103	15597-B1	*E. coli* Hfr (c-3000) or *E. coli* K-12	15597 23631	40 203
Q-Beta	F+ male specific	204	23631-B1	*E. coli* K-12	23631	203
T7	Somatic	233	11303-B38	*E. coli* BL21	BAA-1025	232
T1	Somatic	234	11303-B1	*E. coli* B	11303	232
PhiX174	Somatic	174	13706-B1	*E. coli* C	13706	25
T1UV	Somatic	235	GAP Isolated	*E. coli* CN13	700609	199

Table 2: Appropriate growth medium

Bacteriophage Name	Growth Broth (Day 2, step 1)
MS2	TSB
Q-Beta	TSB
T7	TSB
T1	TSB
PhiX174	TSB
T1UV	TSB

Table 3: Summary of typical growth conditions for bacteriophages

Bacteriophage Name	*E. coli* host	Amount of *E. coli* host	Concentration of bacteriophage for spike (pfu/mL)	Volume of bacteriophage spike	Time of bacteriophage spike
MS2	*E. coli* Hfr	10 mL	$5x10^{11}$-$1x10^{12}$	1 mL	4.5 hrs
MS2	*E. coli* K-12	10 mL	$5x10^{2}$-$1x10^{3}$	1 mL	1.0 hrs
Q-Beta	*E. coli* K-12	10 mL	$1x10^{12}$	2 mL	4.5 hrs
T7	*E. coli* BL21	20 mL	$3x10^{10}$	1 mL	4.5 hrs
PhiX174	*E. coli* C	10 mL	$1x10^{10}$	1 mL	4.0 hrs
T1UV	*E. coli* CN13	10 mL	$5x10^{10}$-$1x10^{11}$	1 mL	4.5 hrs

2.2. Preparation of the Host (Day 1)

2.2.1. Inoculate *Escherichia coli* host culture (**Table 1**) from the working stock plate into 50 mL of Modified ISO Tryptone Yeast Extract Glucose Broth (TYGB). This is enough to inoculate up to 5 to 6 L of broth culture (see Day 2, step 3).

2.2.2. Incubate the inoculated culture stationary at 35±0.5°C for 18 hours.

2.3. Preparation of Bacteriophage Culture (Small Scale)

2.3.1. Allow the broth to warm to room temperature (at least overnight).

2.3.2. Aseptically transfer 1 L to 1.5 L of sterile broth for growth (refer to **Table 2** for the appropriate broth) into a sterile 4 L flask, using aseptic technique to avoid contamination.

2.3.3. Add 10mL of glucose/calcium chloride solution to each litre of broth.

2.3.4. OPTIONAL If preparing MS2, 10mL of 0.1% Thiamine solution can be added to each flask.

2.3.5. Aseptically transfer 10 mL (refer to **Table 3**) of the 18 hour *E. coli* host culture into the 4 L flask containing the appropriate broth.

2.3.6. Place the flask on the shaker in the 35±0.5°C incubator.

2.3.7. Turn on the shaker to a speed of approximately 100 rpm.

2.3.8. Remove a stock vial of the appropriate bacteriophage (refer to **Table 1**) from the -76°C freezer. The concentration of the stocks range from 10^{10} to 10^{12} pfu/mL.

Note: *Ensure that the phage manipulation steps are done at the designated preparation bench.*

2.3.9. Allow the bacteriophage culture to warm to room temperature.

2.3.10. Dilute the bacteriophage stock to the appropriate concentration (refer to **Table 3**).

2.3.11. Aseptically transfer the contents of the pre-warmed vial into the 4 L flask containing 1 L of *E. coli* host culture at the appropriate time (refer to **Table 3**).

2.3.12. Continue to incubate the inoculated culture at 35±0.5°C for 18-24 hours.

Note: *For all media transfers, use only the pipettor labelled "high titre phage only".*

2.3.13. Remove the 4 L flask from the shaker and combine all similar type phage stock to the same flask and mix completely. Dispense the broth into separate 250mL conical centrifuge tubes, and balance the centrifuge tubes as described in **SOP#7, Operation of the Damon IEC DPR-6000 Centrifuge**.

2.3.14. Place the tubes in the DPR-6000 centrifuge, and centrifuge at 3,600 rpm for 30 minutes.

2.3.15. After centrifugation, carefully decant the supernatant from all the centrifuge tubes into a sterile carboy.

2.3.16. Autoclave and discard the bacterial pellets.

2.4. OPTIONAL: Filtration of Bacteriophage Stock:

2.4.1. For all phage types smaller than 0.05 µm (MS2, Phi-x174, Q-beta, and T7) filter the supernatant produced in Section 2.3 in series through a 0.45 µm cartridge filter, followed by filtration through a 0.2 µm cartridge filter (FiltaMax).

2.4.2. For phage types larger than 0.05 µm, the centrifuged supernatant is filtered through a 1.2 µm cartridge filter.

3.0 BATCH RECORDS:

3.1. Label each bottle of concentrated bacteriophage with an inventory control number, including the date of preparation and bottle number (for example MS2.07.01.29). Also, label the bottle with the initials of the analyst who prepared the concentrate.

3.2. Use the Bacteriophage Method (**BACTPHAGE-0001**) to determine the phage concentration per litre in each 1L bottle of concentrated bacteriophage. Ensure that enumeration of

high titre phage stocks is done at a separate station from low titre environmental or study samples.

3.3. Store the bottles of filtered, concentrated bacteriophage in the sample walk-in refrigerator at 4°C for up to 3 months.

3.4. To ensure that the bacteriophage is performing properly, perform a 4 point collimated beam analysis (refer to **SOP#53, Collimated Beam Analysis**) to ensure the resulting stock falls within the GAP internal quality control bounds.

3.5. A Certificate of Analysis (C of A) for each batch of prepared phage is generated that illustrates the UV dose-response using GAP-F-88. These can be provided to clients with the purchase of stocks if requested. No stock is to be provided to the client that has not passed QC.

4.0 HISTORY OF CHANGES:

4.1. Revision 6 – November 19, 2007

4.1.1. Minor formatting changes were made. The **History of Changes** and **Reference** Sections were added. Reference to the GAP Form #s was also made.

4.1.2. The procedure describing the scale-up production (10 L) of bacteriophage was added.

4.1.3. Media recipes were removed. Analysts may refer to the Media Recipes Binder when preparing media.

4.1.4. Revised to reflect company name change.

4.1.5. Section 2.3.9. was updated to reflect the addition of the glucose/calcium chloride solution just prior to bacteriophage addition.

4.2 Revision 7 – June 19, 2008

4.2.1 Revision 7, was reviewed and no changes were required.

4.3 Revision 8 -April 14, 2009

4.3.1 Ultra low freezer has been purchased and the long storage cultures are stored in the -76°freezer instead of the -20°C freezer.

4.3.2 New Table 3 was added to summarize typical growth condition for bacteriophages.

4.3.3 Currently we do not measure the culture absorbance because we have determined the appropriate time for the addition of the culture. Section 2.3 has been removed.

4.3.4 The addition of glucose/calcium chloride in Section 2.3 is added after 30 minutes instead of 15 minutes prior to the addition of the bacteriophage.

4.4 Revision 9- July 6, 2009

4.4.1 SOP was reviewed and a few grammatical changes were required.

4.5 Revision 10 – Jan 26, 2010

4.5.1 Section 2.3 was revised to include the current practice at GAP. More specifically, the addition of glucose/calcium chloride solution to each litre of broth occurs prior

to addition of host bacteria.

4.6 Revision 11 – Jan 28, 2010

4.6.1 Section 2.3 was revised to include the addition of 0.1% Thiamine solution when producing MS2.

4.7 Revision 12 – March 7, 2016

4.7.1 Two steps were changed to "Optional" steps, Section 2.3.4 and Section 2.4.

4.7.2 Section 1.1 added the option to use a culture collection other than ATCC, the University of Laval culture collection has a number of phage isolates that may be of value to GAP in the future.

4.7.3 TSB is now used instead of TYGB in producing stocks as it is easier to produce and does not produce stocks that vary in QC criteria.

4.7.4 Specific numerical values presented in Section 2.3 were changed to provide alternatives as specific values are not necessarily required.

4.7.5 Section 3.0 changed to note that batch certificates can be provided to clients on request and that no stocks that do not pass QC should be sent to clients.

5.0 REFERENCE:

5.1. In-house GAP EnviroMicrobial Services Standard Operating Procedure. This is a proprietary procedure.

Appendix D

COLLIMATED BEAM PROCEDURES, UV RADIOMETER CALIBRATION CERTIFICATES

GAP EnviroMicrobial Services Ltd.

APPROVAL FORM FOR RELEASE OF
ANALYTICAL STANDARD OPERATING PROCEDURE (SOP) FOR ROUTINE USE

SOP #53:
COLLIMATED BEAM ANALYSIS

COMPUTER FILE NAME: 53-SOP-Collimated Beam-12

DATE OF LAST REVISION: REVISION 12, Nov 10, 2015

NUMBER OF PAGES IN DOCUMENT: 10

QUALITY MANAGER

APPROVAL: Jessica Patterson DATE: Nov 10, 2015

LABORATORY / TECHNICAL MANAGER

APPROVAL: Conrad Odegaard DATE: Nov 10, 2015

DATE REVIEWED: Mar 8, 2016, August 28, 2017

- **The approval of this document is valid for one year at which time it will be subject to review to determine if any updates or modifications are warranted.**

STANDARD OPERATING PROCEDURE FOR COLLIMATED BEAM ANALYSIS

1.0 PURPOSE:

1.1. Ultra Violet (UV) disinfection systems are typically validated using bioassays. Biodosimetry uses standardized test strains and procedures to quantify the inactivation of microorganisms by UV light. UV systems for treating both drinking water and wastewater can be analyzed using these methods. The UV system is typically seeded with a surrogate microorganism, samples are taken before and after treatment, and a log inactivation is calculated. At the same time, a dose-response curve is generated using a collimated beam apparatus on the influent test water. The UV dose delivered by the test system can then be calculated by interpolation from the dose-response curve and the particular log reduction achieved during the test run.

1.2. This SOP describes the procedure for collimated beam analysis. Dose response curves are typically produced on drinking water inoculated with a bacteriophage, such as MS2 or T1UV, or with *Bacillus* spores. For wastewater, the dose response of indigenous bacteria is usually performed, using fecal indicators such as total coliforms, fecal coliforms, *E. coli* or *Enterococci*.

2.0 METHOD:

Safety Note: *UV light can cause severe damage to the eyes and exposed skin. Ensure that eye and skin protection are used when the UV light for the collimated beam apparatus is on. Eye shields that block UV light, a laboratory coat and protective gloves should be used. When the lamp is on, but measurements are not being taken, put the blocking shield in place at the base of the column, to prevent light exposure.*

2.1. Equipment Required

2.1.1. Lab timer

2.1.2. Glass petri dishes

2.1.2.1. 5.0cm diameter glass petri dishes for sample volumes up to 15 mL

2.1.2.2. 8.5cm non-reflective petri dishes volumes of 50mL to 200mL

2.1.3. Sterile sample containers without sodium thiosulphate

2.1.3.1. 15mL or 50mL centrifuge tubes

2.1.3.2. 300mL or 500mL PET sample bottles when required due to sample volume

2.1.4. Magnetic stir bars

2.1.4.1. 7x2 mm, VWR cat No. 58948-976 (for use in 5.0cm diameter petri dishes)

2.1.4.2. 15x1.5 mm, VWR cat No. 58948-411 (for use in 5.0cm diameter petri dishes)

2.1.4.3. 30x3mm, Big Science Inc cat No. SBM-3003-MIC (for use with 8.5cm non-reflective petri dishes)

2.1.5. 90% Ethanol

2.1.6. Sterile pipettes or graduated cylinders

2.1.6.1. Sterile 10mL or 25mL pipettes or 50 mL or 100 mL sterile graduated cylinders may also be used as appropriate for sample volume requirements.

2.1.7. Safety goggles (that provide UV protection)

2.1.8. Spectrophotometer

2.1.8.1. HACH DR/4000U or Ultrospec 3300 Pro

2.1.9. Potassium dichromate, holmium oxide, and rare earth standards for spectrophotometer calibration

2.1.10. Quartz cuvettes (1 cm and 5cm path length)

2.1.11. Purelab Ultrapure Deionized water

2.1.12. Collimated beam apparatus

2.1.13. Magnetic stir plate, with 0.5 cm grid markings on surface

2.1.14. Calibrated Radiometers and photodetector

2.1.14.1. IL1700, ILT1700 or ILT1400A (International Light)

2.1.14.2. X9-11 (Gigahertz Optik)

2.1.15. Computer installed with spreadsheet program Fluence-LP-Calculation template.xls [Modified from the Program developed by Dr. J. Bolton, Bolton Photosciences, Germicidal fluence (UV dose) calculations for a low pressure UV lamp (shallow), Dec. 03, 2002]. The template for this form is found on the GAP Quality System in the Forms QM folder as GAP-F-92 – FLUENCELPCALCULATIONREV_.

2.2. Equipment Notes

2.2.1. UV lamp: The collimated beam apparatus contains a low pressure UV lamp (Philips UVC TUV 30W/G30T8, lot number 9280395040 4M916-66707). The lamps should be burned for 100 hours before use. The lamps will last approximately 3000 hours, and must be replaced when the intensity drops below 50% of the initial output.

2.2.2. The UV lamps must be wiped down every 6 months using Kimwipes (Science Brand, Kimberly-Clark) to remove surface dust. The time span may be adjusted based on necessity.

2.2.3. The photo-detector probe and radiometer must be calibrated each year using NIST traceable standards. Calibration certificates are located in the Quality Assurance files. Ensure that the radiometer has been standardized with the PIR (Peak Irradiance Response Sensitivity Factor as stated on the calibration certificate of the photodetector probe that is being used).

2.2.4. Collimated beam design: Figure 1 below shows the design of the collimated beam apparatus. No collimating tube is present in GAP's design with a series of apertures used to ensure the UV light is incident on the suspension surface.

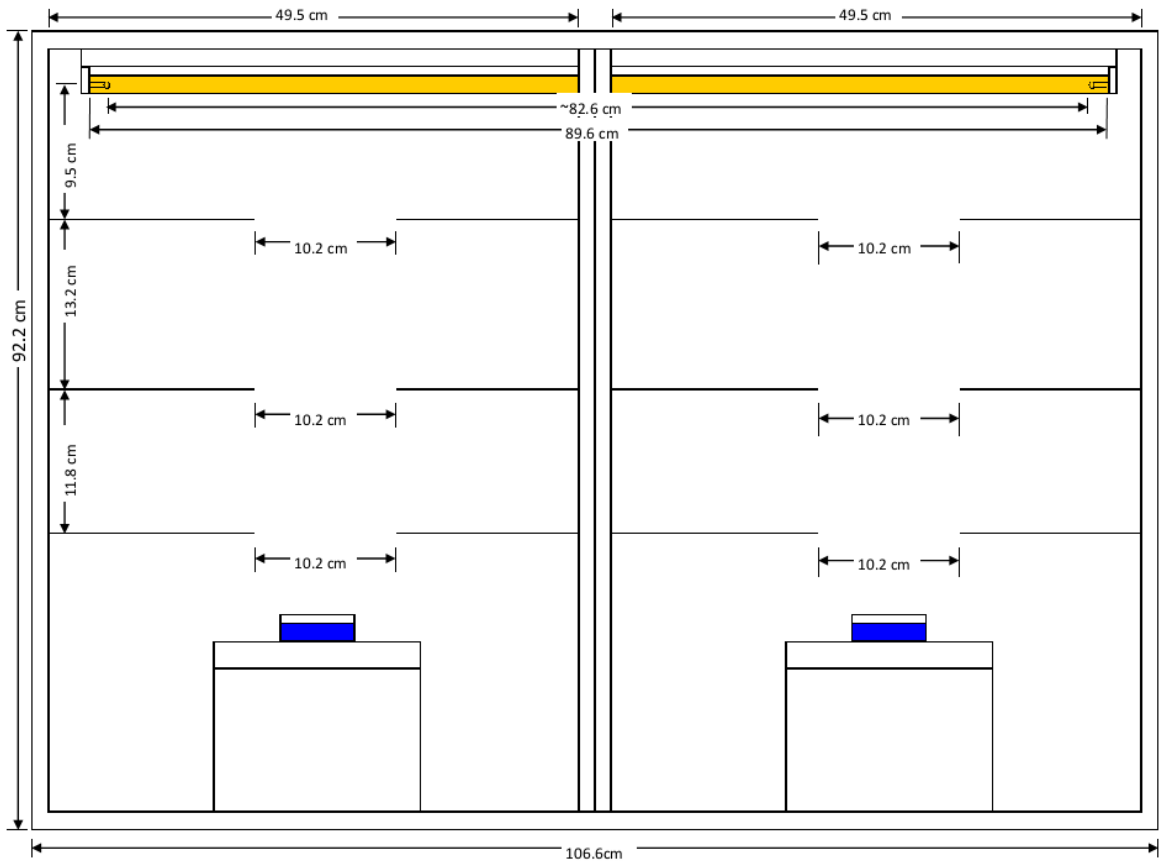

Figure 1: Schematic outlining the dimensions of GAP's collimated beam apparatus. Three apertures are present that are aligned directly above each other, all with a diameter of 10.2 cm.

2.2.5. For UV intensity measurements, the radiometer settings are as follows:

2.2.5.1. display button – red light on "data"

2.2.5.2. DC – red light on

2.2.5.3. Auto-range – red light on

2.2.5.4. 5V Bias light is ON (or leave 5V bias off if the calibration certificate states that the calibration was performed with the 5V bias off)

2.2.5.5. To check or change the PIR sensitivity factor, press the display button until the "factor shift" light is on. Press the factor select button, and toggle through or change the settings. To continue with radiometer readings, press the display button again until the red light is on "data".

2.3. Sample Measurements Using the Spectrophotometers

2.3.1. Operate the spectophotometer following **SOP#55, Operation of the HACH DR4000U Spectrophotometer** or **SOP#106 , Operation of the Ultrospec 3300 Pro**.

2.3.2. Turn on the spectrophotometer, set the wavelength for 253.7nm, and allow the lamp to warm-up.

2.3.3. Check the calibration of the spectrophotometer as follows:

2.3.3.1. Measure the absorbance of the Starna potassium dichromate standard (relative to the Starna blank) at the following wavelengths: 235, 257, 313, and 350nm. Confirm each measurement is within the limit of uncertainty stated on the calibration certificate and on GAP-F-86 specific to each spectrophotometer. Record the results of the verification on GAP-F-86. This is to be completed weekly on the spectrophotometer when used to analyze samples for Collimated Beam Analysis.

2.3.3.2. Scan the Starna holmium oxide standard over the range of wavelengths 235 nm through 285 nm. Locate the peaks and confirm each location is within the limit of uncertainty stated on the form GAP-F-86 specific to each spectrophotometer. Record the results of the verification on GAP-F-86. This is to be completed weekly on the spectrophotometer when used to analyze samples for Collimated Beam Analysis.

2.3.3.3. Scan the Starna rare earth standard over the range of wavelengths 235 nm through 285 nm. Locate the peaks and confirm each location is within the limit of uncertainty stated on the form GAP-F-86f for the HACH DR4000U or form GAP-F-86 specific to each spectrophotometer. Record the results of the verification on GAP-F-86. This is to be completed weekly on the spectrophotometer when used to analyze samples for Collimated Beam Analysis.

2.3.3.4. Verify that the water that is used to zero the spectrophotometer has an A253.7 value that is within 0.002/cm of a certified zero absorbance solution, such as reagent grade, organic free water that has been certified by the supplier to have zero UV absorbance. Record the results on the verification form (GAP-F-86).

2.3.3.4.1. A bottle of DI Water, sterilized and stored in an amber bottle at room temperature, can be used to zero the unit and is checked against the certified zero absorbance solution once per week when the Collimated Beam Analysis is being performed.

2.3.4. Measure the percent transmittance of the sample as follows:

2.3.4.1. Rinse a clean quartz cuvette (5 cm path length) several times with Purelab Ultrapure water. If the sample has a low percent transmittance (<90% per cm), use the 1 cm quartz cuvette. Measurements made with a 5cm cuvette can be converted to 1 cm UVT measurements using the following equation:

$$UVT_{1\text{-}cm} = UVT_{5\text{-}cm}^{1/5}$$

2.3.4.2. To the clean quartz cuvette, add Purelab Ultrapure Deionized water and carefully wipe the outside of the cuvette. Make sure the cuvette is warm enough so that condensation does not form on the outside of the cuvette.

2.3.4.3. Place the cuvette in the holder with the marking facing left or right. Use this to zero the spectrophotometer.

2.3.4.3.1. Ensure the marking remains in the same orientation for all subsequent measurements.

2.3.4.4. Mix the sample bottle gently by inversion as to not produce air bubbles in the sample.

2.3.4.5. Rinse the cuvette three times with the sample.

2.3.4.6. Add sample to the cuvette and wipe the outside of the cuvette. Make sure the cuvette is warm enough so that condensation does not form on the outside of the cuvette.

2.3.4.7. Place the cuvette in the holder with the marking in the same orientation as in 2.3.4.3.

2.3.4.8. Measure and record the sample % transmittance or absorbance at 253.7nm per cuvette path length.

2.3.4.9. Convert the % transmittance measurement value to absorbance per 1cm.

2.4. Collimated Beam Procedure:

2.4.1. Turn the UV lamp on to warm-up for at least 30 minutes before readings are taken.

2.4.2. Each sample to be irradiated is given a sample number and recorded on the bench sheet (GAP-F-7), as per **SOP#24, Sample Traceability, Documentation and Validation**.

2.4.3. Ensure that the correct radiometer settings and photodetector calibration factor are selected (see **Section 2.2, Equipment Notes**).

2.4.4. Turn on the radiometer. Remove the lid from the probe, and place the probe on the stir plate centered on the grid.

2.4.5. Place the UV light shield in place on the collimated beam apparatus. Zero the radiometer.

2.4.6. Open the form GAP-F-92 – FLUENCELPCALCULATIONREV_, and follow the instructions listed on the “fluence calculations” worksheet.

2.4.7. The petri factor is measured as follows:

2.4.7.1. Lower the magnetic stir plate to the measurement or dosing height.

2.4.7.2. Check to ensure the stir plate is level.

2.4.7.3. Measure the UV intensity at 0.5 cm increments along the x and y axis using the grid marked on the stir plate, and as described in the “petri factor” worksheet.

2.4.7.4. Enter the data directly into the Excel worksheet (GAP-F-92).

2.4.7.5. Enter the petri plate diameter (in cm).

2.4.8. On the "fluence calculations" worksheet (GAP-F-92), enter the required information into the highlighted cells, as all other cells are protected. The data required includes:

2.4.8.1. Sample volume

2.4.8.2. Stir bar volume

2.4.8.3. Distance from lamp to sample surface

2.4.8.4. UV absorbance per 1 cm of sample (see Section 2.3.4.).

2.4.8.5. Sample description including sampling dates and project numbers

2.4.9. Accuracy of the radiometer must be verified using two additional radiometers at the beginning and end of each sample session.

2.4.9.1. Before starting a collimated beam test take readings of the three radiometers during exposure to the UV light, ensuring that all radiometers are on the same plane of calibration on the magnetic stirrer.

2.4.9.2. Record the readings on Form (GAP-F-92), and record the C-series number in the appropriate cell for each radiometer used.

2.4.9.3. The radiometers readings should not differ more than 5%.

2.4.9.4. The radiometer selected as the "Test Radiometer" is to be used to take all UV intensity readings throughout testing, as a correction factor is applied based on the average readings recorded in 2.4.9.1.

2.4.9.5. Repeat steps 2.4.9.1. to 2.4.9.3. after the last sample is dosed.

2.4.10. The UV Dose is applied to the sample(s) as follows:

2.4.10.1. For each sample, enter the radiometer reading at the center of the petri dish ($\mu W/cm^2$). Note that a unit conversion (decimal place moved) may be required as the radiometer may display in different units such as W/cm^2.

2.4.10.2. Enter targeted dose value on (GAP-F-92).

2.4.10.2.1. The resulting exposure time for the targeted dose will be displayed, rounded to the nearest second.

2.4.10.3. Mix the sample and dispense a volume of sample into a sterile petri dish. Place the petri dish on the magnetic stir plate, and ensure that it is centered on the grid.

2.4.10.4. Remove a magnetic stir bar from the ethanol solution using forceps, and rinse well with Purelab Ultrapure Deionized water.

2.4.10.5. Place a sterile magnetic stir bar in the petri dish and set the stir plate to speed that ensures good mixing of the sample but not a speed that creates a vortex in the sample.

2.4.10.6. Adjust the height of the petri dish sample such the surface of the liquid is at the same height as the probe's center point intensity

measurement. Check the probe's calibration certificate to determine the calibration plane.

2.4.10.7. Set the timer for the calculated dose time.

2.4.10.8. Simultaneously start the timer and remove the light shield.

2.4.10.9. Replace the light shield at the end of the exposure time.

2.4.10.10. Remove the sample and record the center point intensity in the 'after exposure' column. The fluence LP program will calculate the corrected dose (or fluence) for the sample.

2.4.10.10.1. The corrected fluence is calculated from the average of the before and after radiometer readings along with the true exposure time (rounded to the nearest second) according to Equation 1 outlined below.

$$D = CF_R \times I_A \times P_f \times (1-R) \times \frac{L}{d+L} \times \frac{1-10^{-Ad}}{Ad\ln(10)}$$

Equation 1: D is the UV dose, CF_R is the correction factor applied to the dose to correct for the average of the three radiometer readings, I_A is the average UV intensity measured using a radiometer at a location corresponding to the center of the surface of the sample, P_f is termed the Petri factor defined as the ratio of the UV intensity measured at the center of the sample surface to the average intensity measured across the sample surface, 1-R is termed the reflection factor where R is the reflection of UV light at 253.7 nm at the air-surface interface (typically R = 0.025), L/(d+L) is termed the divergence factor where L is the distance from the lamp centerline to the sample surface and d is the sample depth, and $(1-10^{-Ad})/(Ad\ln(10))$ is termed the absorbance factor where A is the UV absorbance coefficient at 253.7 nm of the suspension.

$$\pi r_f^2$$

2.4.10.10.2. Ensure that the intensity measurement before and after exposure does not exceed 5%.

2.4.10.11. Transfer the irradiated sample into a sterile centrifuge tube. Label the tube with a minimum of the sample number and UV dose.

2.4.10.12. Place the magnetic stir bar back into the ethanol solution.

2.4.10.13. Repeat Section 2.4.10. for each dose required.

2.4.11. The zero dose samples must be handled in the same way as the dosed samples, but without exposure to the UV lamp.

2.4.11.1. The zero dose samples must remain on the stir plate with a stir bar mixing for at least 30 seconds with the light shield in place.

2.4.12. Save the completed form (GAP-F-92) in the Projects Folder on the I: drive in appropriate project folder.

2.4.13. Following irradiation, samples must be stored in the dark at 4±2°C until analysis.

2.4.13.1. Analyze samples as per BACTPHAGE-0001.

3.0 HISTORY OF CHANGES:

3.1. Revision 4 – February 23, 2007

3.1.1. Minor formatting changes were made. The **History of Changes** and **Reference** Sections were added.

3.1.2. Reference to the calibration of the HACH DR4000U using the Starna Standards was added, as well as the GAP Form #s for the recording of data, as per the Corrective Action Report – 01-23-07.

3.1.3. The method was updated to reflect current practices, equipment, and equipment set up and verification, following the EPA Ultraviolet Disinfection Guidance Manual for the Final Long Term 2 Enhanced Surface Water Treatment Rule.

3.2. Revision 5 – November 21, 2007

3.2.1. Section 2.3.3 was updated to reflect the limits of the Starna Standards for the calibration check of the HACH DR 4000U Spectrophotometer. Please see Corrective Action Report - ####.

3.2.2. Section 2.3.3. was updated to include that a bottle of sterilized DI Water, stored in an amber bottle, is to be checked against the certified organic free water, at least once per week.

3.2.3. Minor grammatical and formatting changes.

3.2.4. Company name change was revised.

3.3. Revision 6 - August 13, 2008

3.3.1. Revision 6, was reviewed and no changes were required.

3.4. Revision 7 – April 14, 2009

3.4.1. Section 2.3 includes the addition of the Ultrospec 3300 Pro spectophotometer for use. Different calibration forms are required for this spectophotometer as explained in this section.

3.4.2. Section 2.4.9, the accurancy of the radiometer is verified by two radiometers instead of one.

3.5. Revision 8 – Dec 30, 2009

3.5.1. Section 2.2.1 was updated to include the make, model and lot number of the bulbs used for collimated beam analysis.

3.6. Revision 9 – Jan 7, 2011

3.6.1. SOP was revised due to recent findings that a difference exists in the dose response curves for bacteriophage when irradiating 10mL samples using a 4.97cm diameter by 1.70cm tall glass petri dish compared to irradiating 50mL samples using a 8.54cm diameter by 4.90cm tall glass petri dish using the collimated beam analysis at GAP. Through experimentation at GAP and theoretical models proposed by Carollo Engineers, it has been determined that taller petri dishes are increasing the amount of UV light (UV dose) being applied to the surface of samples due to reflection off the petri dish sides. This is less of an issue in the 10mL irradiations, as there is a smaller amount of

exposed glass above the solution surface available for reflection to increase the UV dose. A correction factors for T1UV and T7 have been generated and are 1.1118323 and 1.0720978, respectively. These factors are independent of ultraviolet transmittance (UVT) levels which were verified by experimentation using T7 that showed that there was not a significant difference between the dose response curves generated at different UVT levels using either of the petri dish sizes. It has been confirmed that no additional correction factors are required.

3.6.2. Section 1.2 was updated to include T1UV instead of PhiX 174. Non-reflective 8.5cm diameter petri dishes were included Section 2.1.2.1. Large stir bars (30x3mm) were added to Section 2.1.4. UV bulbs were replaced on May 4, 2010; the lot number was updated in Section 2.2.1. References to spectrophotometer readings taken at 254nm were changed to 253.7nm in Section 2.3 to reflect current protocol.

3.7. Revision 10 – March 14, 2011

3.7.1. Section 2.1.6 updated to allow for the use of pipettes and graduated cylinders of volumes other than 10 mL.

3.7.2. Section 2.1.9 Added a reference to the use of a Rare Earth Starna Standard for the spectrophotometer calibration verification.

3.7.3. Section 2.2.3 added a description of the collimated beam apparatus including Figure 1 where a diagram is present.

3.7.4. Section 2.3.3.2 now uses a range of 235 – 285 nm to encompass the wavelengths of interest in the collimated beam testing (253.7nm)

3.7.5. Section 2.3.3.3 explains the calibration verification using the rare earth standard

3.7.6. Section 2.4.8 explains how stir bar volume and sample description must also be recorded.

3.7.7. Section 2.4.10.10 added an explanation of how the UV fluence is calculated.

3.7.8. Section 2.4.11.1 allows for zero doses to be stirred unexposed for a minimum of 30 seconds as many collimated beams have exposure times of less than 1 minute.

3.8. Revision 11 – March 13, 2015

3.8.1. Section 2.1 was re-arranged to clarify the options for petri dishes, volume measurement, sample containers, and stir bars. The way this section was laid out in the past caused some confusion, no methodological changes here.

3.8.2. Added Gigahertz Optik radiometer to section 2.1.14

3.8.3. Updated Figure 1 and remove references to specific distances from lamp to sample surface, the distance is taken into account in the dose equation so an exact value does not need to be stated.

3.8.4. Section 2.3.3 updated to remove specific references to tabs in an Excel spreadsheet for the calibration verification of the spectrophotometers.

3.8.5. Section 2.3.4 had the method for taking spectrophotometer measurements updated. Previously it stated writing must face left; this is not necessary, it must face left or right as long as the orientation remains constant between the zero reading and the sample reading.

3.8.6. Section 2.3.4.8 was changed to say % transmittance OR ABSORBANCE readings are allowed, both units of measurement provide the same results.

3.8.7. Section 2.4.8 had "blue cells" changed to "highlighted cells" in the fluence spreadsheet.

3.8.8. Section 2.4.10.1 adds a note to ensure that the analyst converts any readings that may be output by a radiometer to the correct units required in the fluence spreadsheet.

3.8.9. Section 2.4.10.5 had a redundant sentence removed.

3.8.10. Section 2.4.10.11 removed the requirement for the date to be written on each sample tube.

3.8.11. Section 2.4.12 was updated so that all fluence sheets are now saved with the project files, not in a separate fluence calculation specific folder.

3.8.12. Section 2.4. 13 had wording simplified so simply say analyze as per BACTPHAGE-0001.

3.9. Revision 12 – Nov 10, 2015

3.9.1. Section 2.2.2 was added to include wiping the UV bulbs every six months to remove surface dust. This was a result of a Preventive Action Report.

4.0 REFERENCES:

4.1. In-house GAP EnviroMicrobial Services Ltd. Standard Operating Procedure.

4.2. EPA, Ultraviolet Disinfection Guidance Manual for the Final Long Term 2 Enhanced Surface Water Treatment Rule. November 2006.

C230

InternationalLight TECHNOLOGIES

CALIBRATION CERTIFICATE

ELECTRICAL INSTRUMENTATION CALIBRATION REPORT

DUE DATE: 30-Aug-18

This document states that the instrument described below meets or exceeds all manufacturer specifications. The calibration results published in this certificate were obtained using equipment capable of producing results that are traceable to NIST and through NIST to the International System of Units (SI). ILT is Accredited to ISO/IEC 17025:2005. Calibration conforms to ANSI/NCSI Z540.1-1994 and ANSI/NCSI Z540.3-2006.

Date: 30-Aug-17 Certificate #: 1708301404E SO#: 158049

Temp: 24 Degrees C Humidity: 47 % Procedure: TP-0113:08NOV2011

Rendered To: GAP Enviromicrobial Services

InstrumentModel-S/N: IL1700 #4246

Calibration/Repair Remarks: None

Parts (If Needed): None

As Found Tolerance In	As Found Tolerance Out	As Found Readings	As Found Permissible Error	Applied Current	Adjusted Readings	Permissible Adjustment Error	As Left Tolerance In	As Left Tolerance Out
☑	☐	9.99E-4	+/- 0.5%	1.000E-3	1.000E-3	+/- 0.2%	☑	☐
☑	☐	1.000E-4	+/-0.5%	1.000E-4	1.000E-4	+/- 0.2%	☑	☐
☑	☐	9.99E-6	+/-0.7%	1.000E-5	9.99E-6	+/- 0.2%	☑	☐
☑	☐	1.001E-6	+/-1.0%	1.000E-6	1.000E-6	+/- 0.2%	☑	☐
☑	☐	1.000E-7	+/-1.0%	1.000E-7	9.99E-8	+/- 0.5%	☑	☐
☑	☐	1.002E-8	+/-1.0%	1.000E-8	1.001E-8	+/- 0.5%	☑	☐
☑	☐	9.98E-10	+/-1.0%	1.000E-9	1.001E-9	+/- 0.5%	☑	☐
☑	☐	9.95E-11	+/-1.5%	1.000E-10	1.002E-10	+/- 1.0%	☑	☐

Tolerance after repair and/or calibration: ☑ In ☐ Out

Measurement Uncertainty: 1mA=±0.065%, 100uA=±0.062%, 10uA=±0.062%, 1uA=±0.065%, 100nA=±0.073%, 10nA=±0.079%, 1nA=±0.084%, 100pA=0.26%

The above Instrument was compared to the Keithley Current Calibrator/Source Model 263 S/N 0730631 calibrated on 3/30/2017. Calibration Due: 3/30/2018

Calibrated By: _____

Electrical Calibration Tech. Chris Kucy

This certificate applies only to the item identified and shall not be reproduced other than in full, without the specific written approval by International Light Technologies, Inc.

PJLA Calibration Accreditation# 66765

International Light Technologies, Inc.
10 Technology Drive, Peabody, MA 01960 USA
978-818-6180 / 978-818-6181 *fax*
intl-lighttech.com

C230

InternationalLight TECHNOLOGIES

CALIBRATION CERTIFICATE

OPTICAL CALIBRATION CERTIFICATE

International Light Technologies certifies that the calibration results published in this certificate were obtained using equipment capable of producing results that are traceable to NIST and through NIST to the International System of Units (SI). ILT is Accredited to ISO/IEC 17025:2005. Calibration conforms to ANSI/NCSI Z540.1-1994 and ANSI/NCSI Z540.3-2006.

Rendered-to: GAP ENVIROMICROBIAL SERVICE

Detector: SED240 #5488 Input Optic: W #9854

Filter: N/A # Misc.: QNDS2 #22469

Calibrated With: IL1700 #4246 +5V Bias On

(SUV) PEAK IRRADIANCE RESPONSE SENSITIVITY FACTOR AS CALIBRATED ON: 30-Aug-2017

1.245E-5 (A)(cm2)(W-1) assuming monochromatic irradiance at 254nm

1.245E-08 (A)(cm2)(mW-1) assuming monochromatic irradiance at 254nm

1.06% *Change In Sensitivity From Previous Calibration Dated: 11-Aug-2016

Tolerance As Found: ☑ In ☐ Out Tolerance As Left: ☑ In ☐ Out

Unit will read directly in watts per square centimeter or milliWatts per square centimeter when used with the sensitivity factor above. Calibration Due: 8/30/2018

REFERENCE PLANE Groove ONE formed by filter or diffuser elements and next element, counted from front surface of assembly.

*difference includes intrinsic detector change, NIST recertification updates, lab experimental error or modifications to the hardware adjustments.

PRIMARY STANDARD: U.S. National Institute of Standards and Technology Detector Response
I219 - December 3, 2015 - NIST Test No. 685/287304-15/2 : D204 - December 2, 2015 - NIST Test No. 685/287304-15/1

INTERNATIONAL LIGHT TECHNOLOGIES PRIMARY TRANSFER STANDARDS:

SED240 #1029 N/A N/A

ILT Transfer Uncertainty to Customer = +/- 6.5% plus NIST Uncertainty of: +/- 1%

LIGHT SOURCE: R-52G Mineralight UV Lamp LAMP OUTPUT: 4.22E-4 W/cm2

INSTRUMENTATION: SED240 #1029/NS254 #25517/QNDS PROCEDURE: OP-0036

TEMPERATURE: 22.2 degrees C HUMIDITY: 44%

CALIBRATED BY: _____

Calibration Technician: Cathy Olson

THIS CERTIFICATE APPLIES ONLY TO THE ITEMS IDENTIFIED AND SHALL NOT BE REPRODUCED EXCEPT IN FULL, WITHOUT THE SPECIFIC WRITTEN APPROVAL BY INTERNATIONAL LIGHT TECHNOLOGIES, INC.

Calibration Date: 8/30/2017 Certificate No: 708308325 Sales Order #: 158049

ilac-MRA PJLA Calibration Accreditation# 66765

International Light Technologies, Inc.
10 Technology Drive, Peabody, MA 01960 USA
978-818-6180 / 978-818-6181 *fax*
intl-lighttech.com

SUV SED240 #5488/QNDS2 #22469/W #9854

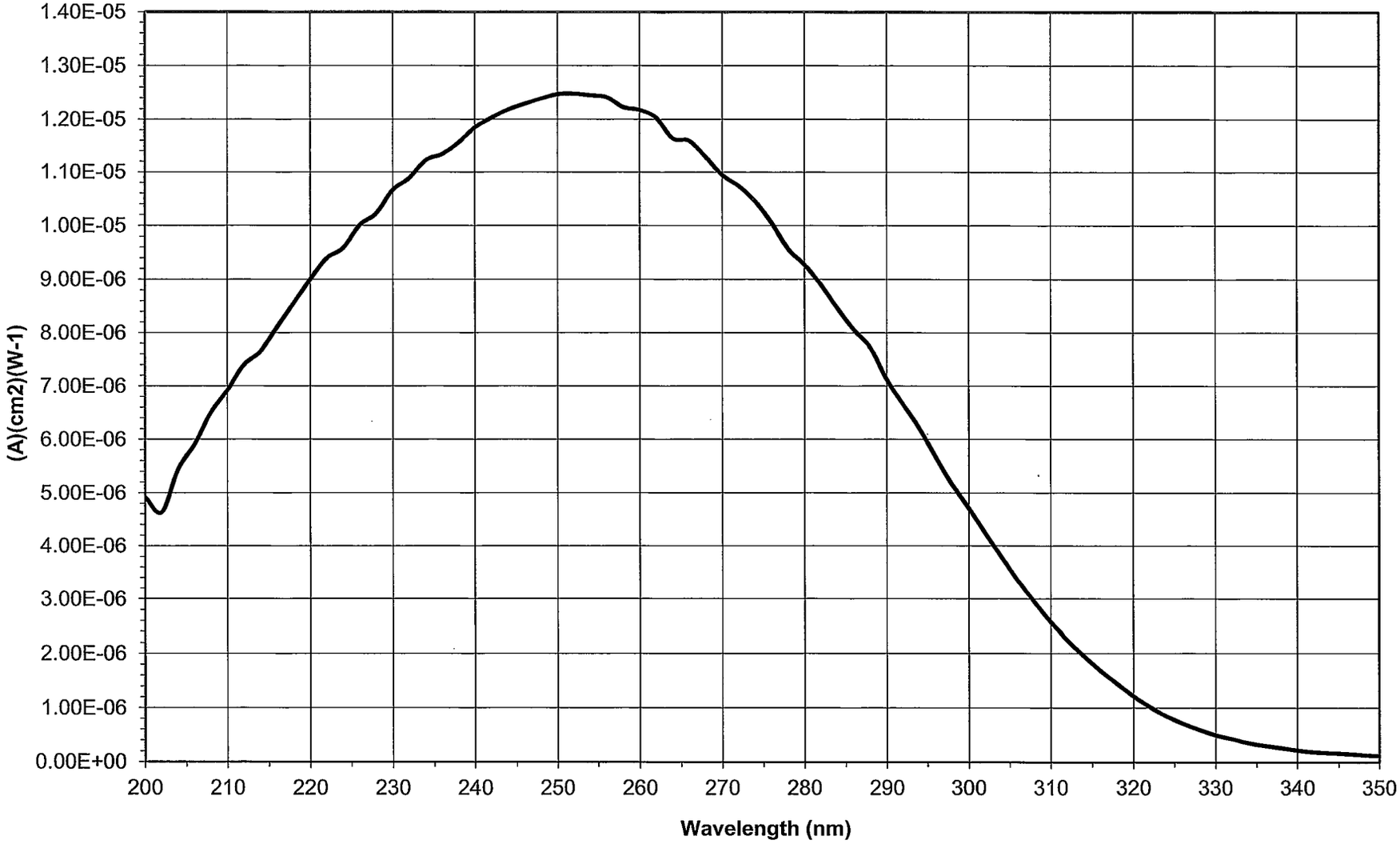

Certificate #708308325

30Aug17

Wavelength (nm)	(A)(cm2)(W-1)
298	5.160E-06
300	4.712E-06
302	4.240E-06
304	3.787E-06
306	3.336E-06
308	2.946E-06
310	2.575E-06
312	2.246E-06
314	1.951E-06
316	1.679E-06
318	1.444E-06
320	1.213E-06
322	1.016E-06
324	8.499E-07
326	7.152E-07
328	6.001E-07
330	4.988E-07
332	4.314E-07
334	3.546E-07
336	3.049E-07
338	2.653E-07
340	2.222E-07
342	1.890E-07
344	1.727E-07
346	1.569E-07
348	1.347E-07
350	1.188E-07

InternationalLight TECHNOLOGIES

CALIBRATION CERTIFICATE

OPTICAL CALIBRATION CERTIFICATE

International Light Technologies certifies that the calibration results published in this certificate were obtained using equipment capable of producing results that are traceable to NIST and through NIST to the International System of Units (SI). ILT is Accredited to ISO/IEC 17025:2005. Calibration conforms to ANSI/NCSI Z540.1-1994 and ANSI/NCSI Z540.3-2006.

Rendered-to: GAP ENVIROMICROBIAL SERVICE

Detector: SEL240 #6498 Input Optic: TD #28814

Filter: NS254 #28012 Misc.: N/A #

Calibrated With: ILT1400A #8719

(PIR) PEAK IRRADIANCE RESPONSE SENSITIVITY FACTOR AS CALIBRATED ON: 22-Feb-2018

4.27E-5 (A)(cm2)(W-1) assuming monochromatic irradiance at 254nm

4.270E-08 (A)(cm2)(mW-1) assuming monochromatic irradiance at 254nm

0.00% *Change In Sensitivity From Previous Calibration Dated: 10-Feb-2017

Tolerance As Found: ☑ In ☐ Out Tolerance As Left: ☑ In ☐ Out

Unit will read directly in watts per square centimeter or milliWatts per square centimeter when used with the sensitivity factor above. Calibration Due: 2/22/2019

REFERENCE PLANE Groove ONE formed by filter or diffuser elements and next element, counted from front surface of assembly.

*difference includes intrinsic detector change, NIST recertification updates, lab experimental error or modifications to the hardware adjustments.

PRIMARY STANDARD: U.S. National Institute of Standards and Technology Detector Response
I219 - December 3, 2015 - NIST Test No. 685/287304-15/2 : D204 - December 2, 2015 - NIST Test No. 685/287304-15/1

INTERNATIONAL LIGHT TECHNOLOGIES PRIMARY TRANSFER STANDARDS:

U522 SED400 #1490 SED400 #139

ILT Transfer Uncertainty to Customer = +/- 6.5% plus NIST Uncertainty of: +/- 1% Confidence Level of Uncertainty is 95% (k=2)

LIGHT SOURCE: 6a Low Pressure Mercury LAMP OUTPUT: 7.00E-5 W/cm2

INSTRUMENTATION: SED240 #1029 PROCEDURE: OP-0017

TEMPERATURE: 21.1 degrees C HUMIDITY: 43%

CALIBRATED BY:

Calibration Technician: Cathy Olson

THIS CERTIFICATE APPLIES ONLY TO THE ITEMS IDENTIFIED AND SHALL NOT BE REPRODUCED EXCEPT IN FULL, WITHOUT THE SPECIFIC WRITTEN APPROVAL BY INTERNATIONAL LIGHT TECHNOLOGIES, INC.

Calibration Date: 2/22/2018 Certificate No: 802228901 Sales Order #: 159695

ilac-MRA PJLA Calibration Accreditation# 66765

International Light Technologies, Inc.
10 Technology Drive, Peabody, MA 01960 USA
978-818-6180 / 978-818-6181 *fax*
intl-lighttech.com

InternationalLight TECHNOLOGIES

CALIBRATION CERTIFICATE

ELECTRICAL INSTRUMENTATION CALIBRATION REPORT

DUE DATE: 21-Feb-19

This document states that the instrument described below meets or exceeds all manufacturer specifications. The calibration results published in this certificate were obtained using equipment capable of producing results that are traceable to NIST and through NIST to the International System of Units (SI). ILT is Accredited to ISO/IEC 17025:2005. Calibration conforms to ANSI/NCSI Z540.1-1994 and ANSI/NCSI Z540.3-2006.

Date: 21-Feb-18 Certificate #: 1802211406E SO#: 159695

Temp: 24 Degrees C Humidity: 44 % Procedure: TP-0116:11FEB2013

Rendered To: GAP Enviromicrobial Services

InstrumentModel-S/N: ILT1400A #8719

Calibration/Repair Remarks: None

Parts (If Needed): None

As Found Tolerance In	As Found Tolerance Out	As Found Readings	As Found Permissible Tolerance	Applied Current	Adjusted Readings	Permissible Adjustment Error	As Left Tolerance In	As Left Tolerance Out
☑	☐	302uA	-0.7% to 1.3%	300 uA	302uA	+/- 4 uA	☑	☐
☑	☐	100.0uA	+/-0.3%	100.0 uA	100.0uA	+/- .2 uA	☑	☐
☑	☐	9.99uA	+/-0.3%	10.00 uA	10.00uA	+/- .02 uA	☑	☐
☑	☐	1.000uA	+/-0.4%	1.000 uA	1.000uA	+/-.002 uA	☑	☐
☑	☐	100.2nA	+/-3.0%	100.0 nA	99.9nA	+/- .2 nA	☑	☐
☑	☐	10.04nA	+/-3.0%	10.00 nA	10.03nA	+/- .2 nA	☑	☐
☑	☐	1.01nA	+/-4.0%	1.00 nA	1.00nA	+/- .02 nA	☑	☐

Tolerance after repair and/or calibration: ☑ In ☐ Out

Measurement Uncertainty: 300uA=±0.20%, 100uA=±0.068%, 10uA=±0.062%, 1uA=±0.064%, 100nA=±0.065%, 10nA=±0.12%, 1nA=±0.22%. Confidence Level of Uncertainty is 95% (K=2).

The above Instrument was compared to the Keithley Current Calibrator/Source Model 263 S/N 0730631 calibrated on 3/30/2017 . Calibration Due: 3/30/2018

Calibrated By: _____

Electrical Calibration Tech. Chris Kucy

This certificate applies only to the item identified and shall not be reproduced other than in full, without the specific written approval by International Light Technologies, Inc.

ilac-MRA PJLA Calibration Accreditation# 66765

International Light Technologies, Inc.
10 Technology Drive, Peabody, MA 01960 USA
978-818-6180 / 978-818-6181 *fax*
intl-lighttech.com

C398

InternationalLight TECHNOLOGIES

CALIBRATION CERTIFICATE

ELECTRICAL INSTRUMENTATION CALIBRATION REPORT

DUE DATE: 03-May-18

This document states that the instrument described below meets or exceeds all manufacturer specifications. The calibration results published in this certificate were obtained using equipment capable of producing results that are traceable to NIST and through NIST to the International System of Units (SI). ILT is Accredited to ISO/IEC 17025:2005. Calibration conforms to ANSI/NCSI Z540.1-1994 and ANSI/NCSI Z540.3-2006.

Date: 03-May-17 Certificate #: 1705031403E SO#: 156784

Temp: 22 Degrees C Humidity: 39 % Procedure: TP-0113:08NOV2011

Rendered To: GAP Enviromicrobial Services

InstrumentModel-S/N: ILT1700 #IL17005296

Calibration/Repair Remarks: None

Parts (If Needed): None

As Found Tolerance In	As Found Tolerance Out	As Found Readings	As Found Permissible Error	Applied Current	Adjusted Readings	Permissible Adjustment Error	As Left Tolerance In	As Left Tolerance Out
☑	☐	10.00E-4	+/- 0.5%	1.000E-3	1.000E-3	+/- 0.2%	☑	☐
☑	☐	1.001E-4	+/-0.5%	1.000E-4	1.000E-4	+/- 0.2%	☑	☐
☑	☐	9.99E-6	+/-0.7%	1.000E-5	9.99E-6	+/- 0.2%	☑	☐
☑	☐	9.98E-7	+/-1.0%	1.000E-6	9.99E-7	+/- 0.2%	☑	☐
☑	☐	9.99E-8	+/-1.0%	1.000E-7	1.000E-7	+/- 0.5%	☑	☐
☑	☐	9.99E-9	+/-1.0%	1.000E-8	1.000E-8	+/- 0.5%	☑	☐
☑	☐	1.000E-9	+/-1.0%	1.000E-9	1.000E-9	+/- 0.5%	☑	☐
☑	☐	9.97E-11	+/-1.5%	1.000E-10	1.000E-10	+/- 1.0%	☑	☐

Tolerance after repair and/or calibration: ☑ In ☐ Out

Measurement Uncertainty: 1mA=±0.065%, 100uA=±0.062%, 10uA=±0.062%, 1uA=±0.065%, 100nA=±0.073%, 10nA=±0.079%, 1nA=±0.084%, 100pA=0.26%

The above Instrument was compared to the Keithley Current Calibrator/Source Model 263 S/N 0730631 calibrated on 3/30/2017. Calibration Due: 3/30/2018

Calibrated By: _____

Electrical Calibration Tech. Chris Kucy

This certificate applies only to the item identified and shall not be reproduced other than in full, without the specific written approval by International Light Technologies, Inc.

PJLA Calibration Accreditation# 66765

International Light Technologies, Inc.
10 Technology Drive, Peabody, MA 01960 USA
978-818-6180 / 978-818-6181 *fax*
intl-lighttech.com

C398

InternationalLight TECHNOLOGIES

CALIBRATION CERTIFICATE

OPTICAL CALIBRATION CERTIFICATE

International Light Technologies certifies that the calibration results published in this certificate were obtained using equipment capable of producing results that are traceable to NIST and through NIST to the International System of Units (SI). ILT is Accredited to ISO/IEC 17025:2005. Calibration conforms to ANSI/NCSI Z540.1-1994 and ANSI/NCSI Z540.3-2006.

Rendered-to: GAP ENVIROMICROBIAL SERVICE

Detector: SED240 #SED2406497 Input Optic: W #12831

Filter: N/A # Misc.: QNDS2 #29167

Calibrated With: ILT1700 #IL17005296 +5V Bias On

(PIR) PEAK IRRADIANCE RESPONSE SENSITIVITY FACTOR AS CALIBRATED ON: 03-May-2017

1.617E-5 (A)(cm2)(W-1) assuming monochromatic irradiance at 254nm

1.617E-08 (A)(cm2)(mW-1) assuming monochromatic irradiance at 254nm

Unit will read directly in watts per square centimeter or milliWatts per square centimeter when used with the sensitivity factor above. Calibration Due: 5/3/2018

REFERENCE PLANE Groove ONE formed by filter or diffuser elements and next element, counted from front surface of assembly.

PRIMARY STANDARD: U.S. National Institute of Standards and Technology Detector Response
I219 - December 3, 2015 - NIST Test No. 685/287304-15/2 : D204 - December 2, 2015 - NIST Test No. 685/287304-15/1

INTERNATIONAL LIGHT TECHNOLOGIES PRIMARY TRANSFER STANDARDS:

SED240 #1029 N/A N/A

ILT Transfer Uncertainty to Customer = +/- 6.5% plus NIST Uncertainty of: +/- 1%

LIGHT SOURCE: R-52G Mineralight UV Lamp LAMP OUTPUT: 4.30E-4 W/cm2

INSTRUMENTATION: SED240 #1029/NS254 #25517/QNDS PROCEDURE: OP-0098

TEMPERATURE: 21.7 degrees C HUMIDITY: 37%

CALIBRATED BY: M. Gordon

Calibration Technician: Matthew Gordon

THIS CERTIFICATE APPLIES ONLY TO THE ITEMS IDENTIFIED AND SHALL NOT BE REPRODUCED EXCEPT IN FULL, WITHOUT THE SPECIFIC WRITTEN APPROVAL BY INTERNATIONAL LIGHT TECHNOLOGIES, INC.

Calibration Date: 5/3/2017 Certificate No: 705038004 Sales Order #: 156784

ilac-MRA PJLA Calibration Accreditation# 66765

International Light Technologies, Inc.
10 Technology Drive, Peabody, MA 01960 USA
978-818-6180 / 978-818-6181 *fax*
intl-lighttech.com

GIGAHERTZ OPTIK GMBH

Werksprüfschein
Calibration Report

Prüfzeichen
Mark

E-1742679

Gegenstand *Object*	**Optometer Anzeigegerät / *Instrument***
Hersteller *Manufacturer*	**Gigahertz-Optik GmbH**
Typ *Type*	**X9-11**
Fabrikate/Serien-Nr. *Serial number*	**12568M**
Auftraggeber *Customer*	**GAP EnviroMicrobial Services Ltd.**
Auftragsnummer *Order No.*	**2017-42679 / (PO 4298)**
Anzahl der Seiten des Prüfscheines *Number of pages of the certificate*	**2**

Dieser Kalibrierschein dokumentiert die Rückführung auf nationale Normale zur Darstellung der Einheiten in Übereinstimmung mit dem Internationalen Einheitensystem (SI). Methoden und Verfahren der Kalibrierung entsprechen den Anforderungen der ISO17025. Die internen Transfernormale werden regelmäßig gegen Normale kalibriert, welche einen DKD/DAkkS-Kalibrierschein haben oder rückführbar auf ein Normal mit DKD/DAkkS-Kalibrierschein kalibriert sind oder gegen Normale eines nationalen Metrologieinstituts kalibriert sind.

Für die Einhaltung einer angemessenen Frist zur Wiederholung der Kalibrierung ist der Benutzer verantwortlich.

This calibration certificate documents the traceability to national standards, which realise the units of measurement according to the International System of Units (SI).
Methods and procedures of calibration meet the requirements of ISO17025. The intern used transfer standards were regular calibrated against standards, which have DKD/DAkkS certificates or are traceable to a standard with DKD/DAkkS or National Metrology Institute certificate.

The user is obliged to have the object recalibrated at appropriate intervals.

Dieser Prüfschein darf nur vollständig und unverändert weiterverbreitet werden. Auszüge oder Änderungen bedürfen der Genehmigung des Kalibrierlaboratoriums der Firma Gigahertz-Optik Gesellschaft für technische Optik mbH.
Prüfscheine ohne Unterschrift und Stempel haben keine Gültigkeit.

This Certificate may not be reproduced other than in full except with the permission of the Gigahertz-Optik GmbH.
Certificates without signature and seal are not valid.

Stempel *Seal*	Datum *Date*	Mitarbeiter im Kalibrierlabor *Assistant of the calibration laboratory*
	12. Dezember 2017	Fleischmann
		Erich Fleischmann

Kalibrierlaboratorium • Gigahertz-Optik

Gigahertz-Optik GmbH • An der Kälberweide 12 • 82299 Türkenfeld • Tel. +49 (0)8193-93700-0 • Fax +49 (0)8193-93700-50 •

1. Beschreibung des Gegenstandes:
Es handelt sich um ein Anzeigegerät, Typ siehe oben zur Messung von Photoströmen. Der gemessene Photostrom kann bei Verwendung eines Kalibrierdatensteckers mit rechnerisch einem Kalibrierfaktor behaftet zur Anzeige gebracht werden. Das Gerät wurde auf Strom kalibriert.

1. Description of the Object:
The above listed instrument is able to measure photo current. The instrument was current calibrated.

2. Messverfahren:
Für jeden Messbereich wurde durch Einspeisung eines bekannten Stromes die Anzeige abgelesen.
Als Quelle diente eine Konstantstromkalibrierquelle Typ KEITHLEY 263, Se.Nr. 0704959, Kalibrierscheinnummer 086867, Rückführbarkeit D-K-15019-01-00, Kalibrierdatum 2014-07, gültig bis 2018-07. Diese ist rückführbar auf die nationalen Normale bei einem DAkkS Labor kalibriert. Das Ergebnis ist nachfolgend protokolliert.

2. Measurement:
For each range the input current was read out. The reference was a calibration standard type KEITHLEY 263, Se.Nr. 0704959, Cert no 086867, Traceability D-K-15019-01-00, Cal date 2014-07, due to 2018-07. This unit is traceable to the national standards of a DAkkS Laboratory. The results are listed above.

3. Messbedingungen:
Die Kalibrierung wurde nach einer Anwärmzeit von 5 Minuten durchgeführt. Die Messbereichsumschaltung war auf Automatik eingeschaltet. Die mögliche Offsetfunktion des Gerätes war abgeschaltet. Die Messungen erfolgten bei einer Umgebungstemperatur von (24 ± 2)° C.

3. Conditions during the calibration:
The calibration was done after 5 minutes warm up. The range was set to auto function. The Offset function was set to reset. The ambient conditions are (24 ± 2)° C.

4. Messergebnisse:
4. Result of the measurement:

Calibration Standard		Calibration Object				
Reference Current	Actual Measured Current	Deviation As Found	Deviation As Calibrated	Tolerance		
AMPERE (A)		PERCENT		PERCENT (%)	In	Out
1,00E-04	1,0011E-04	0,111%	nan*	0,5	x	
1,00E-05	1,0007E-05	0,070%	nan*	0,5	x	
1,00E-06	9,9966E-07	-0,034%	nan*	0,5	x	
1,00E-07	1,0012E-07	0,118%	nan*	0,5	x	
1,00E-08	1,0003E-08	0,034%	nan*	0,5	x	
1,00E-09	1,0003E-09	0,028%	nan*	0,5	x	
1,00E-10	9,9748E-11	-0,252%	nan*	0,5	x	

nan* = no adjustment necessary

☒ Die ermittelten Messwerte liegen innerhalb der Spezifikation.
☐ Die ermittelten Messwerte liegen außerhalb der Spezifikationen (!).

Relative Messunsicherheit beträgt *Relative uncertainty is*	± 0,3%

5. Bemerkungen:
Die oben angegebene Prüfnummer E-1742679 ist am Kalibriergegenstand angebracht. Eine Abhängigkeit von anderen als den angegebenen Betriebsbedingungen oder Einflußgrößen ist nicht untersucht worden. Eine Rekalibrierung nach 2 Jahren ist empfohlen.

5. Remarks:
The calibration mark E-1742679 was marked on the calibration object. A dependence of other as the given conditions is not examined. A recalibration after 2 years is recommended.

Kalibrierlaboratorium für optische Strahlungsmessgrößen
Calibration laboratory for optical radiometry

GIGAHERTZ-OPTIK GMBH

1742679	
Kalibrierzeichen *Calibration mark*	WERK
	2017-12

Werkskalibrierschein
Calibration Certificate

Gegenstand *Object*	**Es handelt sich um einen UV-C Messkopf** *Calibration object is a UV-C detector*	
Hersteller *Manufacturer*	**Gigahertz-Optik GmbH**	
Typ *Type*	**UV-3718-4**	**X9-11**
Fabrikate/Serien-Nr. *Serial number*	**22603**	**12568M**
Auftraggeber *Customer*	**GAP EnviroMicrobial Services Ltd.**	
Auftragsnummer *Order No.*	**2017-42679 / (4298)**	
Datum der Kalibrierung *Date of calibration*	**11. Dezember 2017**	
Anzahl der Seiten des Kalibrierscheines *Number of pages of the certificate*	**2**	

Dieser Kalibrierschein dokumentiert die Rückführung auf nationale Normale zur Darstellung der Einheiten in Übereinstimmung mit dem Internationalen Einheitensystem (SI).

Methoden und Verfahren der Kalibrierung entsprechen den Anforderungen der ISO17025. Die internen Transfernormale werden regelmäßig gegen Normale kalibriert, welche einen DKD/DAkkS-Kalibrierschein haben oder rückführbar auf ein Normal mit DKD/DAkkS-Kalibrierschein kalibriert sind oder gegen Normale eines nationalen Metrologieinstituts kalibriert sind.

Für die Einhaltung einer angemessenen Frist zur Wiederholung der Kalibrierung ist der Benutzer verantwortlich.

This calibration certificate documents the traceability to national standards, which realise the units of measurement according to the International System of Units (SI).

Methods and procedures of calibration meet the requirements of ISO17025. The intern used transfer standards were regular calibrated against standards, which have DKD/DAkkS certificates or are traceable to a standard with DKD/DAkkS or National Metrology Institute certificate.

The user is obliged to have the object recalibrated at appropriate intervals.

Dieser Kalibrierschein darf nur vollständig und unverändert weiterverbreitet werden. Auszüge oder Änderungen bedürfen der Genehmigung des Kalibrierlaboratoriums der Firma Gigahertz-Optik Gesellschaft für technische Optik mbH.
Kalibrierscheine ohne Unterschrift und Stempel haben keine Gültigkeit.
This calibration certificate may not be reproduced other than in full and with the permission of the Gigahertz-Optik GmbH. Calibration certificates without signature and seal are not valid.

Stempel *Seal*	Datum *Date*	Stellv. Leiter des Kalibrierlaboratoriums *Deputy Head of the calibration laboratory*	Mitarbeiter im Kalibrierlabor *Person of Charge*
Kalibrierlaboratorium Optische Strahlungsmessgrößen Gigahertz-Optik GmbH	12. Dezember 2017	Dipl.-Ing. (FH) Stephan Fenk	Korbinian Seiffert

1. Beschreibung des Kalibriergegenstandes:
Der UV-C Messkopf besteht aus einem Photoelement, einer berechneten Filterkombination und einem für den UV-Bereich optimierten Cos-Diffusor.

1. Description of the calibration object:
The UV-C detector consists of a photoelement with an optical filter and cosine diffuser designed for optimal response in the specified spectral range.

2. Messverfahren:
Die integrale Bestrahlungsstärke E(λ) wurde durch Vergleich mit einem Messkopf UV-3718-4, SN 4378 (GO-586-WERK-2017-11, due to 11.2018) ermittelt.

2. Measurement:
Irradiance E(λ) was measured using a laboratory standard detector type UV-3718-4, SN 4378 (GO-586-WERK-2017-11, due to 11.2018).

3. Messbedingungen:
Der UV-C Messkopf, der vollkommen überstrahlt wurde, befand sich senkrecht und zentrisch vor einer angenäherten Punktlichtquelle, erzeugt mit einer UV Lampe, Typ Osram HNS G 5 W ofr. Die Bezugsebene ist die Diffusereintrittsfläche. Der Ausgangsstrom wurde mittels Optometer X9-11, SN 12568M bei einer Umgebungstemperatur von (24 ± 2) °C gemessen.

3. Conditions during the calibration:
The UV-C detector head was set in a divergent beam of an approximate point source created from the UV lamp type Osram HNS G 5 W ofr. The beam axis has been almost perpendicular and centric. The detector head was fully overlighted. The reference surface corresponds to the surface of the cosine diffuser. The output current of the detector head was measured using an Optometer X9-11, SN 12568M . The temperature of the room was (24 ± 2) °C.

4. Messergebnisse:
4. Result of the measurement:

Wellenlänge in nm Wavelength	Integrale Bestrahlungsstärke in A / (W/cm²) Integral irradiance		Relative Messunsicherheit in % Relative uncertainty
	Alter Wert *Old value*	Neuer Wert *New value*	
254	-2,164E-05	-2,146E-05	± 6,5

5. Bemerkungen:
Die oben angegebene Kalibrier-Nr. 1742679-WERK-2017-12 ist am Messkopf UV-3718-4, Seriennummer 22603 angebracht. Der Kalibrierfaktor ist im Optometer X9-11, SN 12568M eingespeichert.
Eine Abhängigkeit der integralen Bestrahlungsstärke von anderen als den angegebenen Betriebsbedingungen oder Einflußgrößen ist nicht untersucht worden. Es ist mit einer wellenlängenabhängigen Alterung zu rechnen.
Eine Rekalibrierung innerhalb eines Jahres ist zu empfehlen.

5. Remarks:
The calibration report number 1742679-WERK-2017-12 is marked on the detector, type UV-3718-4, serial number 22603. The calibration factor is stored into the Optometer X9-11, SN 12568M . Accuracy of results of irradiance measurements made under different conditions than those specified in this certificate has not been examined. Detector components can change with time and cumulative exposure to optical radiation effecting absolute and spectral sensitivity. Therefore, recalibration on a yearly basis is recommended.

Appendix E

UV SPECTROPHOTOMETER PERFORMANCE CERTIFICATES AND CALIBRATION CHECKS

Certified Reference Materials for UV, Visible, NIR and IR Molecular Spectroscopy

RM-HL

Set Serial No: 15509

Customer Details:

Starna Cells Inc
5950 Traffic Way
Atascadero
C.A. 93422
U.S.A.

The customer information stated on this page, number 1 of 3 applies to all certificates.

UKAS accreditation applies to all Wavelength, Transmission/Absorbance, Stray Light references, and those used for Resolution measurements.

BSI REGISTERED NATIONAL ACCREDITATION OF CERTIFICATION BODIES Registered No. FM 30093

UKAS CALIBRATION 0659

UKAS REFERENCE MATERIALS 4001

Certificate of Calibration and Traceability

Calibration Lab.
Starna Scientific Ltd
52/54 Fowler Rd
HAINAULT
Essex IG6 3UT
England
Tel. +44 (0) 20 8501 5550

Email: sales@starna.com

Holmium oxide in perchloric acid sealed in a quartz cell for use as a wavelength accuracy reference in the UV and visible spectrum

Certificate Number:	**59969**
Certificate Date:	**20 October 2016**
Expiration Date:	**20 October 2018**
Analysis Number:	**HL421101**
Set Serial Number:	**15509**
Cell Serial Number:	**33344**

0659

Description of Reference Material:

This reference material consists of an aqueous solution of 4% holmium oxide in 10% perchloric acid which is permanently sealed by heat fusion in a high quality far UV quartz cell. The reference material is designed for the verification and calibration of the wavelength scales of visible and ultraviolet spectrophotometers having nominal spectral bandwidths of 5 nm or less. All procedures are implemented in accordance with ISO/IEC 17025 and ISO Guide 34. Additional information can be found on the Starna web site at www.starna.com

Certified Values of Reference Material:

The holmium oxide filled cell is measured in the absorbance mode against an air blank, over the wavelength range of 660 to 230nm. For each spectral bandwidth, a baseline correction is performed with an empty cell holder.
The 14 maximum absorption peaks are identified and certified to be within the expected wavelength range tolerance for each spectral bandwidth (SBW) as specified by the NIST reference control.

The combined analytical and instrument uncertainties at a coverage probability of 95 % is 0.11 nm.

The reported expanded uncertainty is based on a standard uncertainty multiplied by a coverage factor k=2. providing a coverage probability of approximately 95%. The uncertainty evaluation has been carried out in accordance with UKAS requirements

SBW	Wavelengths in nanometers of peak maxima as referenced to air, +/- 0.11nm													
0.10	640.41	536.42	485.20	467.78	452.02	416.02	385.36	361.27	345.46	333.48	287.03	278.15	249.78	240.97
0.25	640.41	536.43	485.21	467.79	451.98	416.04	385.39	361.27	345.45	333.47	287.04	278.15	249.79	240.98
0.50	640.43	536.45	485.21	467.80	451.91	416.07	385.45	361.27	345.43	333.47	287.08	278.15	249.81	241.02
1.00	640.50	536.56	485.23	467.82	451.45	416.25	385.61	361.25	345.38	333.48	287.22	278.13	249.89	241.12
1.50	640.62	536.71	485.26	467.86	451.33	416.42	385.70	361.18	345.38	333.49	287.40	278.11	249.98	241.13
2.00	640.79	536.86	485.25	467.90	451.32	416.57	385.80	361.12	345.42	333.47	287.52	278.10	250.03	241.12
3.00	641.15	537.21	485.21	468.11	451.36	416.89	386.00	361.11	345.53	333.47	287.57	278.05	250.07	241.04
4.00	641.42	537.58	485.26	473.53	451.41	417.07	386.31	361.14	345.57	333.47	287.64	277.98	250.11	241.00
5.00	641.66	537.91	485.25	473.35	451.40	417.32	386.44	361.13	345.58	333.47	287.78	277.93	250.15	240.97

This certification is issued in accordance with the laboratory accreditation requirements of the United Kingdom Accreditation Service. It provides traceability of measurement to recognised national standards, and to units of measurement realised at the National Physical Laboratory or other recognised standards laboratories.

Certifying Instrument Qualification:

All calibration is performed on one of a series of high performance reference spectrophotometers. The instruments are tested and qualified to the manufacturer's published specification over the analytical range used for the reference material certification.
The following primary references and fundamental procedures are used in the qualification of the reference spectrophotometers:

Absorbance:	NIST SRM 2031, 1930 & 930e, Double aperture method
Wavelength:	NIST SRM 2034, Emission lines of Hg & deuterium
Stray Light:	NIST SRM 2032, KCl, KI & lithium carbonate
Resolution:	Benzene vapor, half width of D2 656.1 nm line

Calibration Method:

The conditions of analysis used to generate the certified values on this certificate are as listed in the chart below:

Cell Pathlength:	10 +/- 0.01mm
Cell Material:	Spectrosil Quartz
Reference:	Air
Scale:	Absorbance
Range:	660 to 230 nm
Band width:	Multiple
Temperature:	23.5° C +/- 1.0 °C

Instructions for Use:

Carefully insert the holmium filled cell into the cell holder of your instrument touching only the frosted sides or by holding the top of the cell. The cell is fragile and should always be handled with care. Leave the reference cell holder empty as all measurements are to be made against air. Measurements should be made within the temperature range of 20° to 30° C. In the absorbance mode scan the cell over the required range. Find the absorbance maxima and compare them to the certified wavelengths on this certificate as indicated for the spectral bandwidth (SBW) used by your instrument. If you find any significant differences, it is recommended that a service technician inspect your instrument to determine the source of the discrepancy.

Instrument Dependencies:

The instrument to be tested should be set at a SBW not exceeding 5 nm. Consult the instrument owners handbook for this information.

Duration of Certificate:

This certificate is valid for a maximum period of two years from the date of issue or sooner if specified by the user's own protocols. Although the references are covered by a lifetime guarantee this is subject to certain conditions, see guidance notes.

Re-certification Procedure:

All reference materials are certified and supplied in a useable condition. There is no warranty for fitness beyond receipt by the customer. When references need to be re-certified or inspected for any reason, customers should return them to the Starna ISO/IEC 17025 & ISO Guide 34 accredited calibration laboratory, where all original data is collated.

On receipt by Starna Scientific the references are measured “As received”, before cleaning under the re-certification procedure. “As received” data is available on request.

Storage and Care:

References should always be stored in the box provided and handled with extreme care. Quartz cells are fragile and should be inserted and removed from the instrument by holding the cell cap, taking care not to twist or apply leverage against the cell holder, as this may crack the cells. Damage in the form of scratches may alter the certified values significantly such that they need re-certifying and may, as with cracks, require complete replacement. For cleaning see guidance notes.

Calibration performed by:

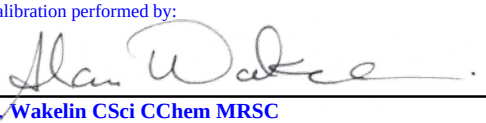

A. Wakelin CSci CChem MRSC

Approved Signatory:

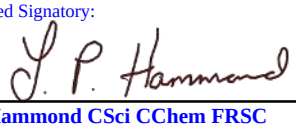

J. P. Hammond CSci CChem FRSC

All rights reserved. This certificate may not be reproduced other than in full, except with the prior written approval of the issuing laboratory This certification must not be used by a third party to claim product endorsement by the accreditation body or any agency of the U.S. or U.K. governments.

Certified Reference Materials for UV, Visible, NIR and IR Molecular Spectroscopy

RM-02

Set Serial No: 15712

Customer Details:

Starna Cells Inc
5950 Traffic Way
Atascadero
C.A. 93422
U.S.A.

The customer information stated on this page, number 1 of 3 applies to all certificates.

UKAS accreditation applies to all Wavelength, Transmission/Absorbance, Stray Light references, and those used for Resolution measurements.

BSI REGISTERED Registered No. FM 30093 NATIONAL ACCREDITATION OF CERTIFICATION BODIES

UKAS CALIBRATION 0659

UKAS REFERENCE MATERIALS 4001

Certificate of Calibration and Traceability

Calibration Lab.
Starna Scientific Ltd
52/54 Fowler Rd
HAINAULT
Essex IG6 3UT
England
Tel. +44 (0) 20 8501 5550
Email: sales@starna.com

Potassium Dichromate in Perchloric acid sealed in Far UV quartz cells for use as a linearity and photometric accuracy reference in the UV.

Certificate Number:	**59960**
Certificate Date:	**20 October 2016**
Expiration Date:	**20 October 2018**
Analysis Number:	**21018**
Set Serial Number:	**15712**
Blank Serial Number:	**33883**

0659

Description of Reference Material:

NIST SRM 935a Potassium Dichromate is used to prepare the reference solutions.These are sealed by heat fusion in high quality Far UV quartz cells. Certification is performed in accordance with the instructions that are issued with NIST SRM 935a.All procedures are implemented in accordance with ISO/IEC 17025 and ISO Guide 34. Additional information can be found on the Starna web site at www.starna.com

Certified Values of Reference Material:

The Potassium Dichromate filled cells are measured against a Perchloric acid blank. The net absorbance values are listed in the table below. Under the analytical procedures used, as outlined by NIST in the Appendix NIST Special Publication 260-54.

The combined analytical and instrument uncertainties at a coverage probability of 95 % is 0.0037 A at 20 mg/l, 0.0045 A at 40 mg/l, 0.0049 A at 60 mg/l, 0.0058 A at 80 mg/l, 0.0068 A at 100 mg/l, 0.0084 A at 120 mg/l, 0.0091 A at 140 mg/l, 0.0098 A at 160 mg/l, 0.011 A at 180 mg/l, 0.012 A at 200 mg/l, 0.013 A at 220 mg/l, 0.013 A at 240 mg/l and 0.0043 at 600 mg/l.

The reported expanded uncertainty is based on a standard uncertainty multiplied by a coverage factor k=2. providing a coverage probability of approximately 95%. The uncertainty evaluation has been carried out in accordance with UKAS requirements.

The weight shown below is the mean calculated weight of potassium dichromate in this solution using the specific absorbance values quoted on the NIST SRM 935a certificate, together with the certified absorbance values.

Nominal Concentration:	**Wavelength:**	**Absorbance:**	**Calculated Weight:**
Potassium Dichromate 20 mg/l	350 nm	0.2103	
	313 nm	0.0971	mg/l ± 0.5 mg/l (k=2)
Cell Serial No: 33429	257 nm	0.2851	
	235 nm	0.2503	20.14

This certification is issued in accordance with the laboratory accreditation requirements of the United Kingdom Accreditation Service. It provides traceability of measurement to recognised national standards, and to units of measurement realised at the National Physical Laboratory or other recognised standards laboratories.

Set Serial Number: **15712**
Starna Certificate No: **59960**
Certificate Date: **20 October 2016**
Analysis Date: **19 October 2016**

UKAS Accredited Calibration Laboratory No. 0659

Certifying Instrument Qualification:

All calibration is performed on one of a series of high performance reference spectrophotometers. The instruments are tested and qualified to the manufacturer's published specification over the analytical range used for the reference material certification.
The following primary references and fundamental procedures are used in the qualification of the reference spectrophotometers:

Absorbance:	NIST SRM 2031, 1930 & 930e, Double aperture method
Wavelength:	NIST SRM 2034, Emission lines of Hg & deuterium
Stray Light:	NIST SRM 2032, KCl, KI & lithium carbonate
Resolution:	Benzene vapor, half width of D2 656.1 nm line

Calibration Method:

The conditions of analysis used to generate the certified values on this certificate are as listed in the chart below:

Cell Pathlength:	10 mm	+/- 0.01mm
Cell Material:	Spectrosil Quartz	
Blank Solution:	0.001M Perchloric acid	
Scale:	Absorbance	
Range:	350 to 235 nm	
Band width:	1.0 nm +/- 0.2nm	
Temperature:	23.5 +/- 1.0 °C	

Instructions for Use:

Determine the absorbance of each cell against the supplied blank at each of the four listed wavelengths. Repeat several times.To test instrument linearity, plot the results on a graph of absorbance vs concentration. The graph should produce straight lines if your instrument is linear in the region. To assess photometric accuracy, compare the net absorbance reading at each concentration and wavelength to the published values on this certificate.
The absolute difference between the mean measured value and the certified value will not exceed the sum of the certified uncertainty and the specified accuracy of the instrument, if the instrument is performing correctly

Instrument Dependencies:

The instrument must be designed to be used in the ultraviolet region down to 230nm and have a spectral bandpass of 1.6nm or less. Consult your instrument owners manual for this information.

Duration of Certificate:

This certificate is valid for a maximum period of two years from the date of issue or sooner if specified by the user's own protocols. Although the references are covered by a lifetime guarantee this is subject to certain conditions, see guidance notes.

Re-certification Procedure:

All reference materials are certified and supplied in a useable condition. There is no warranty for fitness beyond receipt by the customer. When references need to be re-certified or inspected for any reason, customers should return them to the Starna ISO/IEC 17025 & ISO Guide 34 accredited calibration laboratory, where all original data is collated.

On receipt by Starna Scientific the references are measured “As received”, before cleaning under the re-certification procedure. “As received” data is available on request.

Storage and Care:

References should always be stored in the box provided and handled with extreme care. Quartz cells are fragile and should be inserted and removed from the instrument by holding the cell cap, taking care not to twist or apply leverage against the cell holder, as this may crack the cells. Damage in the form of scratches may alter the certified values significantly such that they need re-certifying and may, as with cracks, require complete replacement. For cleaning see guidance notes.

Calibration performed by:

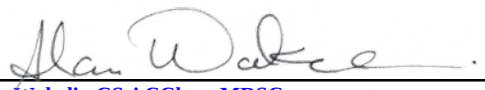

A. Wakelin CSci CChem MRSC

Approved Signatory:

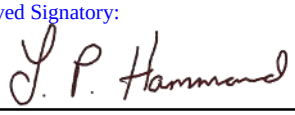

J. P. Hammond CSci CChem FRSC

All rights reserved. This certificate may not be reproduced other than in full, except with the prior written approval of the issuing laboratory This certification must not be used by a third party to claim product endorsement by the accreditation body or any agency of the U.S. or U.K. governments.

Certified Reference Materials for UV, Visible, NIR and IR Molecular Spectroscopy

RM-RE

Set Serial No: 15713

Customer Details:

Starna Cells Inc
5950 Traffic Way
Atascadero
C.A. 93422
U.S.A.

The customer information stated on this page, number 1 of 3 applies to all certificates.

UKAS accreditation applies to all Wavelength, Transmission/Absorbance, Stray Light references, and those used for Resolution measurements.

BSI REGISTERED Registered No. FM 30093 — NATIONAL ACCREDITATION OF CERTIFICATION BODIES

UKAS CALIBRATION 0659

UKAS REFERENCE MATERIALS 4001

Certificate of Calibration and Traceability

Calibration Lab.
Starna Scientific Ltd
52/54 Fowler Rd
HAINAULT
Essex IG6 3UT
England
Tel. +44 (0) 20 8501 5550

Email: sales@starna.com

Rare earth in suphuric acid sealed in a quartz cell for use as a wavelength accuracy reference in the UV and visible spectrum

Certificate Number: **59970**
Certificate Date: **20 October 2016**
Expiration Date: **20 October 2018**
Analysis Number: **RE24060801**
Set Serial Number: **15713**
Cell Serial Number: **28053**

0659

Description of Reference Material:

This reference material consists of an aqueous solution of a rare earth in sulphuric acid which is permanently sealed by heat fusion in a high quality far UV quartz cell. The reference material is designed for the verification and calibration of the wavelength scales of ultraviolet spectrophotometers having nominal spectral bandwidths of 5 nm or less. All procedures are implemented in accordance with ISO/IEC 17025 and ISO Guide 34. Additional information can be found on the Starna web site at www.starna.com

Certified Values of Reference Material:

The reference cell is measured in the absorbance mode against an air blank, over the wavelength range of 300 to 200 nm. For each spectral bandwidth, a baseline correction is performed with an empty cell holder.
The 5 maximum absorption peaks are identified and certified to be within the expected wavelength range tolerance for each spectral bandwidth (SBW) in accordance with procedures implemented under ISO/IEC 17025.

The combined analytical and instrument uncertainties at a coverage probability of 95 % is 0.20 nm.

The reported expanded uncertainty is based on a standard uncertainty multiplied by a coverage factor k=2. providing a coverage probability of approximately 95%. The uncertainty evaluation has been carried out in accordance with UKAS requirements

SBW	Wavelengths in nanometers of peak maxima as referenced to air, +/- 0.20 nm				
0.10	253.57	240.32	222.67	211.43	200.96
0.25	253.57	240.36	222.63	211.47	201.21
0.50	253.58	240.34	222.62	211.44	201.10
1.00	253.67	240.42	222.60	211.44	201.10
1.50	253.65	240.46	222.61	211.46	201.02
2.00	253.59	240.51	222.59	211.44	201.02
3.00	253.57	240.71	222.52	211.36	200.91
4.00	253.42	240.90	222.16	211.00	200.68
5.00	253.30	241.23	222.46	211.90	201.30

This certification is issued in accordance with the laboratory accreditation requirements of the United Kingdom Accreditation Service. It provides traceability of measurement to recognised national standards, and to units of measurement realised at the National Physical Laboratory or other recognised standards laboratories.

Starna Cell Serial Number: **28053**
Certificate Number: **59970**
Certificate Date: **20 October 2016**
Verification Date: **20 October 2016**

UKAS Accredited Calibration Laboratory No. 0659

Certifying Instrument Qualification:

All calibration is performed on one of a series of high performance reference spectrophotometers. The instruments are tested and qualified to the manufacturer's published specification over the analytical range used for the reference material certification. The following primary references and fundamental procedures are used in the qualification of the reference spectrophotometers:

Absorbance:	NIST SRM 2031, 1930 & 930e, Double aperture method
Wavelength:	NIST SRM 2034, Emission lines of Hg & deuterium
Stray Light:	NIST SRM 2032, KCl, KI & lithium carbonate
Resolution:	Benzene vapor, half width of D2 656.1 nm line

Calibration Method:

The conditions of analysis used to generate the certified values on this certificate are as listed in the chart below:

Cell Pathlength:	10 +/- 0.01mm	
Cell Material:	Spectrosil Quartz	
Reference:	Air	
Scale:	Absorbance	
Range:	300 to 200 nm	
Band width:	Multiple	
Temperature:	23.5° C	+/- 1.0 °C

Instructions for Use:

Carefully insert the reference cell into the cell holder of your instrument touching only the frosted sides or by holding the top of the cell. The cell is fragile and should always be handled with care. Leave the reference cell holder empty as all measurements are to be made against air. Measurements should be made within the temperature range of 20° to 30° C. In the absorbance mode scan the cell over the required range. Find the absorbance maxima and compare them to the certified wavelengths on this certificate as indicated for the spectral bandwidth (SBW) used by your instrument. If you find any significant differences, it is recommended that a service technician inspect your instrument to determine the source of the discrepancy.

Instrument Dependencies:

The instrument to be tested should have a SBW not exceeding 5 nm. Consult the instrument owners handbook for this information.

Duration of Certificate:

This certificate is valid for a maximum period of two years from the date of issue or sooner if specified by the user's own protocols. Although the references are covered by a lifetime guarantee this is subject to certain conditions, see guidance notes.

Re-certification Procedure:

All reference materials are certified and supplied in a useable condition. There is no warranty for fitness beyond receipt by the customer. When references need to be re-certified or inspected for any reason, customers should return them to the Starna ISO/IEC 17025 & ISO Guide 34 accredited calibration laboratory, where all original data is collated.

On receipt by Starna Scientific the references are measured “As received”, before cleaning under the re-certification procedure. “As received” data is available on request.

Storage and Care:

References should always be stored in the box provided and handled with extreme care. Quartz cells are fragile and should be inserted and removed from the instrument by holding the cell cap, taking care not to twist or apply leverage against the cell holder, as this may crack the cells. Damage in the form of scratches may alter the certified values significantly such that they need re-certifying and may, as with cracks, require complete replacement. For cleaning see guidance notes.

Calibration performed by:

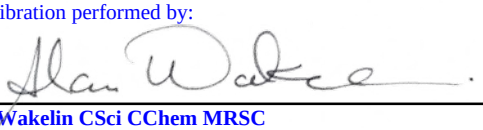

A. Wakelin CSci CChem MRSC

Approved Signatory:

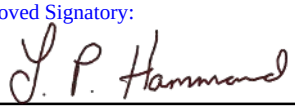

J. P. Hammond CSci CChem FRSC

All rights reserved. This certificate may not be reproduced other than in full, except with the prior written approval of the issuing laboratory This certification must not be used by a third party to claim product endorsement by the accreditation body or any agency of the U.S. or U.K. governments.

UV Spectrophotometer Calibration Check

UV spectrophotometer UV absorbance and wavelength accuracy was checked, respectively, using potassium dichromate, holmium oxide, and rare earth standards (Starna Cells, Inc, Atascadero, CA) on each day of testing. A zero absorbance solution (laboratory-grade deionized water) was used to check the absorbance of the distilled water used to zero the spectrophotometer between samples, as is recommended in Section 5.5.2 (bullet 3) of the UVDGM. All results were within the 0.002 cm^{-1} limit set by the UVDGM and are presented in Table 1.

The potassium dichromate standard consisted of two cuvettes. One cuvette contained a 20 mg/L solution of potassium dichromate with known UV absorption coefficients at 350 nm, 313 nm, 257 nm and 235 nm, traceable to National Institute of Standards and Technology (NIST) primary standards with an uncertainty of $\pm$ 0.004. The other cuvette contained a zero absorbance solution (blank). The blank solution was used to zero the spectrophotometer prior to measuring the absorption coefficient of the standard.

Table 2 compares the UV absorbance of the potassium dichromate standard measured using the DR 5000 to the expected UV absorbance stated by Starna. The UV absorbance measured at 350, 313, 257 and 235 nm differed from the expected value on average by 0.74, 2.01, 0.84, and 1.13 percent, respectively. The percent difference is calculated as the measured value minus the expected value all divided by the expected value times 100. These values are then averaged to give the average percent difference for the given wavelengths. The UV absorbance measured by the DR5000 matched the expected value within the uncertainty of the standard and within the 10 percent UVDGM criterion.

The holmium oxide standard consisted of a cuvette containing a solution of holmium oxide with absorbance peaks that occur at known wavelengths traceable to National Institute of Standards and Technology (NIST) primary standards, with an uncertainty of $\pm$ 0.11 nm (k=2). Table 3 presents the known wavelengths at which the peaks occur and the wavelengths at which the peaks occurred in each of the scans conducted during testing.

The rare earth standard consisted of a cuvette containing a solution of rare earth with absorbance peaks that occur at known wavelengths traceable to National Institute of Standards and Technology (NIST) primary standards, with an uncertainty of $\pm$ 0.11 nm (k=2). Table 4 presents the known wavelengths at which the peaks occur and the wavelengths at which the peaks occurred in the scans conducted during testing. The maximum error in UV absorbance related to the wavelength error of the spectrophotometer at 253.7 nm is 4.64 percent.

The following method was used for calculating the maximum error in UV absorbance related to the wavelength error of the spectrophotometer for the rare earth standards at 253.7 nm.

1. Calculate the difference between the measured and expected wavelengths for the Rare Earth Calibration Check Results at 253.7 nm given in Table 4

2. With each UVT scan, calculate the slope of the relation between the UV absorbance and wavelength at 254 nm. Divide that value by the UV absorbance at 254 nm

3. Multiply the largest absolute difference in the measured and expected wavelength by the largest absolute value from Step 2. Express that value as a percentage by multiplying by 100.

4. Report the results from Step 3 as the maximum error in UV absorbance related to the wavelength error of the spectrophotometer.

Because the Real Tech analyzer uses a low-pressure mercury lamp that emits UV light at 253.7 nm, there is no need to verify the wavelength accuracy of the device. The UVT measurements made by the Real Tech analyzer were used for this validation to define the UV dose monitoring algorithms. Based on the analysis of the error for each standard presented in this section, the accuracy of those measurements is within the accuracy of the Hach DR5000, which is estimated at $(0.84^2+4.64^2)^{1/2}$ = 3.92 percent, within the UVDGM criteria of 10 percent for the accuracy of UVT measurements during UV validation.

A secondary standard of potassium dichromate was prepared on site from reagent grade potassium dichromate powder to an approximate absorbance 0.27 AU as determined by the Varian spectrophotometer set at 253.7 nm. This standard was measured with the RealTech UVT analyzer and compared to the DR5000 spectrophotometer to ensure that the absorbance measurements differed at most by 0.0094 AU or 3.39 percent. Table 5 shows these results.

Table 1 Distilled Water Absorbance Check to Zero Absorbance Solution (UVA, cm^{-1})

Date	DR5000	RealTech Analyzer
1/8/2019	0.00020	0.0000
1/9/2019	0.00060	0.0000
1/16/2019	-0.0010	0.0000
3/12/2019	0.0000	0.0009
3/13/2019	0.0013	0.0007
3/14/2019	-0.0030	0.0002
3/19/2019	-0.0010	0.0002
4/18/2019	0.0014	0.0017

Table 2 Potassium Dichromate Calibration Check Results (UVA, cm^{-1})				
Date	**350 nm**	**313 nm**	**257 nm**	**235 nm**
1/8/2019	0.211	0.0980	0.286	0.252
1/9/2019	0.211	0.0990	0.287	0.252
1/16/2019	0.212	0.0990	0.287	0.253
3/12/2019	0.211	0.0980	0.286	0.252
3/13/2019	0.210	0.0980	0.285	0.251
3/14/2019	0.212	0.100	0.288	0.253
3/19/2019	0.210	0.099	0.286	0.251
4/18/2019	0.213	0.099	0.287	0.253
Expected Value	**0.210**	**0.0968**	**0.284**	**0.249**

Table 3 Holmium Oxide Calibration Check Results				
Date	**Wavelength of Measured Peak**			
1/8/2019	287.4	277.9	250.3	241.3
1/9/2019	287.3	277.9	250.3	241.3
1/16/2019	287.4	278.2	250.4	241.5
3/12/2019	287.5	278.3	250.7	241.8
3/13/2019	287.5	278.2	250.4	241.4
3/14/2019	287.5	278.2	250.7	241.8
3/19/2019	287.3	277.9	250.4	241.3
4/18/2019	287.4	277.9	250.3	241.3
Expected Value	**287.2 ± 0.11 nm**	**278.1 ± 0.11 nm**	**249.9 ± 0.11 nm**	**241.1 ± 0.11 nm**

Table 4 Rare Earth Calibration Check Results				
Date	**Wavelength of Measured Peak**			
1/8/2019	253.7	239.9	221.9	210.9
1/9/2019	253.5	240.3	221.8	210.6
1/16/2019	253.5	240.1	222.1	211.0
3/12/2019	253.8	240.2	222.2	211.2
3/13/2019	253.3	240.2	222.1	211.0
3/14/2019	253.3	240.3	222.2	211.3
3/19/2019	253.5	240.3	222.0	210.9
4/18/2019	253.6	240.3	221.9	210.9
Expected Value	**253.7 ± 0.11 nm**	**240.4 ± 0.11 nm**	**222.6 ± 0.11 nm**	**211.4 ± 0.11 nm**

Table 5 Secondary Calibration Check			
Date	**UVA**		
	Real Tech Analyzer	**DR 5000 Spectrophotometer**	**Difference**
1/8/2019	0.2729	0.2790	0.0061
1/9/2019	0.2682	0.2701	0.0019
1/16/2019	0.2744	0.2704	-0.0040
3/12/2019	0.2867	0.2773	-0.0094
3/13/2019	0.2837	0.2830	-0.0007
3/14/2019	0.2989	0.2979	-0.0010
3/19/2019	0.2641	0.2660	0.0019
4/18/2019	0.2767	0.2741	-0.0026

Table 6 Absorbance Values of Test Water			
Absorber	**LSA**	**LSA**	**LSA**
Wavelength (nm)	**99.20 % UVT**	**64.86% UVT**	**88.50 % UVT**
250	0.0035	0.2480	0.0706
251	0.0035	0.2310	0.0655
252	0.0035	0.2160	0.0615
253	0.0031	0.2020	0.0575
254	0.0035	0.1880	0.0531
255	0.0035	0.1780	0.0501
256	0.0039	0.1700	0.0477
257	0.0039	0.1630	0.0458
258	0.0035	0.1570	0.0443
259	0.0031	0.1520	0.0429
260	0.0031	0.1490	0.0424
Slope between 253 and 254 nm	**4.38×10^{-4}**	**-1.40×10^{-2}**	**-4.44×10^{-3}**

Appendix F

FLOW METER AND POWER METER CALIBRATION CERTIFICATES

Endress+Hauser

People for Process Automation

Flow Calibration with Adjustment

30240012-2815663

1000194758	FCP-9.B
Purchase order number	Calibration rig
US-3004861007-10 / Endress+Hauser Flowtec	10936.72 us.gal/min (≙ 100%)
Order N°/Manufacturer	Calibrated full scale
53W7F-UPGB1RA0BAAA	Service interface
Order code	Calibrated output
PROMAG 53 W 30"	1.1939
Transmitter/Sensor	Calibration factor
F700B116000	3
Serial N°	Zero point
–	80.1 °F
Tag N°	Water temperature

Flow [%]	Flow [us.gal/min]	Duration [s]	V target [us.gal]	V meas. [us.gal]	Δ o.r.* [%]	Outp.** [mA]
12.1	1320.1	200.0	4400.65	4396.13	-0.10	5.93
49.8	5441.0	100.1	9073.06	9085.96	0.14	11.97
100.4	10980	100.1	18313.7	18319.7	0.03	20.07
100.5	10987	100.1	18324.4	18318.8	-0.03	20.07
–	–	–	–	–	–	–
–	–	–	–	–	–	–
–	–	–	–	–	–	–
–	–	–	–	–	–	–
–	–	–	–	–	–	–
–	–	–	–	–	–	–

*o.r.: of rate

**Calculated value (4 - 20 mA)

Measured error % o.r.

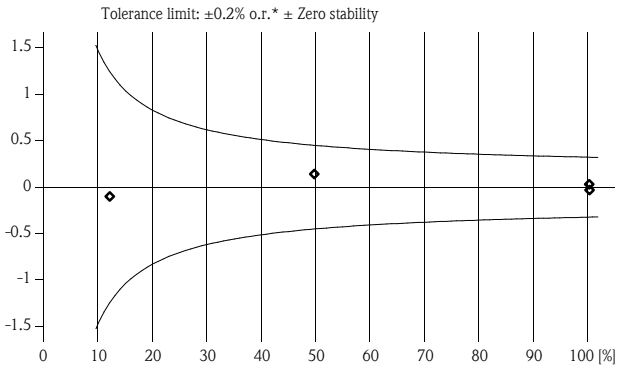

For detailed data concerning output specifications of the unit under test, see Technical Information (TI), chapter Performance characteristics.

The calibration is traceable to the N.I.S.T. through standards certified at preset intervals.

Endress+Hauser Flowtec operates ISO/IEC 17025 accredited calibration facilities in Reinach (CH), Cernay (FR), Greenwood (USA), Aurangabad (IN) and Suzhou (CN).

07-12-2012

Date of calibration

J. Westmoreland

Operator

Endress+Hauser Flowtec, Division USA
2330 Endress Place
Greenwood, IN 46143

Certified acc. to
ISO 9001, Reg.-N° 030502.2
ISO 14001, Reg.-N° EMS561046

Endress+Hauser
People for Process Automation

Flow Calibration with Adjustment

30074694-1450232

41755053
Purchase order number

US-49320691-10 / Endress+Hauser Flowtec
Order N°/Manufacturer

53W3H-UL0B1RA0BAAA
Order code

PROMAG 53 W 12"
Transmitter/Sensor

7C00C816000
Serial N°

–
Tag N°

FCP-20 LARGE
Calibration rig

5601.967 GPM (≙ 100%)
Calibrated full scale

Calibration Interface
Calibrated output

1.3044
Calibration factor

0
Zero point

71.2 °F
Water temperature

Flow [%]	Flow [GPM]	Duration [sec]	V target [US GAL]	V meas. [US GAL]	Δ o.r.* [%]	Outp.** [mA]
5.6	313.7	120.6	630.896	628.410	-0.39	4.89
39.8	2229.6	45.8	1700.27	1700.02	-0.01	10.37
40.4	2263.2	45.6	1719.19	1719.48	0.02	10.47
96.1	5381.8	20.7	1860.50	1861.29	0.04	19.38
–	–	–	–	–	–	–
–	–	–	–	–	–	–
–	–	–	–	–	–	–
–	–	–	–	–	–	–
–	–	–	–	–	–	–
–	–	–	–	–	–	–

*o.r.: of rate
**Calculated value (4 - 20 mA)

Measured error % o.r.

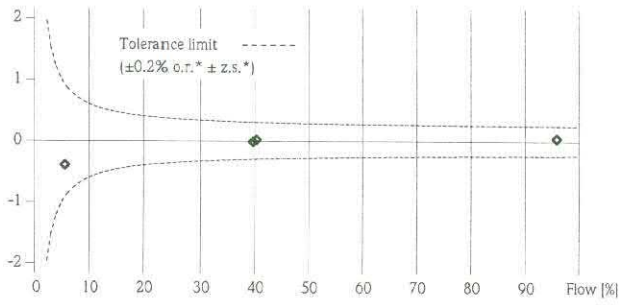

*z.s.: Zero stability

For detailed data concerning output specifications of the unit under test, see technical informations (TI), chapter Performance characteristics.
The calibration is traceable to the N.I.S.T. through standards certified at preset intervals.

12-12-2005
Date of calibration

Endress+Hauser Flowtec, Division USA
2330 Endress Place
Greenwood, IN 46143

Tim Swick
Operator

Certified acc. to
MIL-STD-45662A
ISO 9001, Reg.-N° 030502.2

Endress+Hauser
People for Process Automation

Parameter Setting

1450232

41755053 Purchase order number	PROMAG 53 W Transmitter/Sensor
US-49320691-10 / Endress+Hauser Flowtec Order N°/Manufacturer	12" Nominal diameter
53W3H-UL0B1RA0BAAA Order code	– Tag N°
7C00C816000 Serial N°	

Device Software	V2.00.00
Language Package	WEA
Communication Type	HART
Device Revision	5
Current Output 1	
Value for 0/4mA	0 USgal/min
Value for 20mA	2400 USgal/min
Current Span	4-20mA HART
Impulse Output 1	
Pulse Value	25 gal/P
Output Signal	PASSIVE/POSITIVE

The above parameters are set according to your order.
Please refer to the Operating Manual for any parameters not mentioned.

12-12-2005
Date

Endress+Hauser Flowtec, Division USA
2330 Endress Place
Greenwood, IN 46143

Endress+Hauser

People for Process Automation

Flow Calibration without Adjustment

30097751-5002307

WWRA-001303-F
Purchase order number

US-19051748-10 / Endress+Hauser Flowtec
Order N°/Manufacturer

30FT1H-MD1ED11F22B
Order code

PROMAG 30 F 4"
Transmitter/Sensor

5002307
Serial N°

–
Tag N°

FCP-20 MEDIUM
Calibration rig

625.0 GPM (≙ 100%)
Calibrated full scale

Current 4 - 20 mA
Calibrated output

1.1890
Calibration factor

-5
Zero point

72.1 °F
Water temperature

Flow [%]	Flow [GPM]	Duration [sec]	V target [US GAL]	V meas. [US GAL]	Δ o.r.* [%]	Outp.** [mA]
4.2	26.4	120.6	53.059	53.526	0.88	4.68
50.6	316.3	60.5	319.041	321.606	0.80	12.16
50.6	316.4	60.5	319.227	321.680	0.77	12.16
99.3	620.8	60.9	630.246	633.660	0.54	19.98
–	–	–	–	–	–	–
–	–	–	–	–	–	–
–	–	–	–	–	–	–
–	–	–	–	–	–	–
–	–	–	–	–	–	–
–	–	–	–	–	–	–

*o.r.: of rate
**Calculated value (4 - 20 mA)

Measured error % o.r.

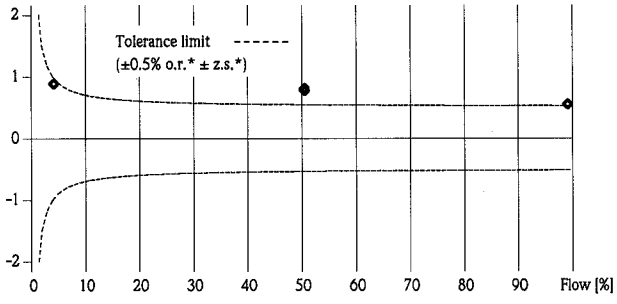

*z.s.: Zero stability

For detailed data concerning output specifications of the unit under test, see technical informations (TI), chapter Performance characteristics.
The calibration is traceable to the N.I.S.T. through standards certified at preset intervals.

03-19-2007
Date of calibration

Endress+Hauser Flowtec, Division USA
2330 Endress Place
Greenwood, IN 46143

John Monaghan
Operator

Certified acc. to
MIL-STD-45662A
ISO 9001, Reg.-N° 030502.2

Endress+Hauser

People for Process Automation

Flow Calibration with Adjustment

30097754-5002307

WWRA-001303-F
Purchase order number

US-19051748-10 / Endress+Hauser Flowtec
Order N°/Manufacturer

30FT1H-MD1ED11F22B
Order code

PROMAG 30 F 4"
Transmitter/Sensor

5002307
Serial N°

–
Tag N°

FCP-20 MEDIUM
Calibration rig

625.0 GPM (≙ 100%)
Calibrated full scale

Current 4 - 20 mA
Calibrated output

1.1814
Calibration factor

-5
Zero point

72.2 °F
Water temperature

Flow [%]	Flow [GPM]	Duration [sec]	V target [US GAL]	V meas. [US GAL]	Δ o.r.* [%]	Outp.** [mA]
4.4	27.2	120.6	54.628	54.788	0.29	4.70
49.2	307.3	60.9	311.759	311.718	-0.01	11.87
49.2	307.4	60.9	311.839	311.859	0.01	11.87
98.7	616.6	60.9	625.533	624.837	-0.11	19.77
–	–	–	–	–	–	–
–	–	–	–	–	–	–
–	–	–	–	–	–	–
–	–	–	–	–	–	–
–	–	–	–	–	–	–
–	–	–	–	–	–	–

*o.r.: of rate
**Calculated value (4 - 20 mA)

Measured error % o.r.

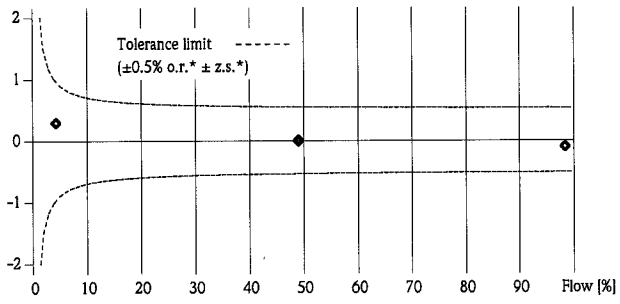

*z.s.: Zero stability

For detailed data concerning output specifications of the unit under test, see technical informations (TI), chapter Performance characteristics.
The calibration is traceable to the N.I.S.T. through standards certified at preset intervals.

03-19-2007
Date of calibration

Endress+Hauser Flowtec, Division USA
2330 Endress Place
Greenwood, IN 46143

John Monaghan
Operator

Certified acc. to
MIL-STD-45662A
ISO 9001, Reg.-N° 030502.2

Repair Authorization & Report

Endress+Hauser

People for Process Automation

RAR#WWRA-001303-F

This form is used as authorization to return equipment to Endress+Hauser and show charges for repairing equipment.
It is not an invoice.

Endress + Hauser Instruments 2350 Endress Place Greenwood, IN 46143 Sales: (888) ENDRESS Service Toll-Free: (800) 642-8737 Service Fax: (317) 535-1495	**Date RA Issued: 02/21/2007** **Issued By: Sandra Newman** **Repair Coordinator: Sandra Newman** **Date Equipment Received: 03/08/2007**

Customer Site - Shipping Address:	**Customer Billing Address:**
CAROLLO ENGIBNEERS 2700 Ygnacio Valley Rd. Ste: 300 Walnut Creek,CA 94598	CAROLLO ENGIBNEERS 2700 Ygnacio Valley Rd. Ste: 300 Walnut Creek, CA 94598

Original P.O.	Customer Contact	Customer E-Mail	Customers P.O. # for Repair
	Tavy Wade	twade@carollo.com	Po# 7319A.00(3-16-07)
Original Sales Order	Customer Phone	Sales Office	Repair Sales Order #
	925-932-1710	IPT Sales	
Original Ship Date	Customer Fax		
	925-930-0208		

	Product Details	Work Performed
1	Tag Number: Product Type: Complete Unit Product Line: Flow Technology: Electro-magnetic F Model #:30F...-> PROMAG 30 Configuration:30FT1H-MD1ED11F22B Serial Number:G315002307- Warranty: No Status: Repair Completed Rec'd by Repair: 03/08/2007 Date Inspected: 03/14/2007 Date Quoted: 03/15/2007 Date Authorized: 03/16/2007 Date Shipped:	THE UNIT HAS BEEN BENCH TEST WITH "NO DEFECTS FOUND" THE UNIT HAS BEEN CALIBRATED. * FINAL FUNCTIONAL TEST COMPLETED.

Please Contact Sandra Newman at (800) 642-8737 with any questions or concerns.

Portland UV Validation Facility: Magnetic Flow Meter Evaluations

Paired comparisons using two meters in series.

During the course of operations at the Portland UV Validation Facility, comparative testing of flow meters has been possible when two magnetic flow meters have been run in series. Testing to date has allowed pair comparisons of flow meters of 4", 10", 12", 16", 24", 30" and 48". In addition, manual bucket testing down to flow rates of 5 gpm has been performed.

Date collected from October 2005 through December 2015 are summarized in Figure 1, which shows flow meter (or bucket test) data for the smaller of the two flow meters (X-axis) compared to data from the larger of the two in the paired test (Y-axis). As shown, when all comparative data are treated as a single data set, the paired testing shows good agreement between flow meters suggesting flow meters are generally within 1 percent of each other. As shown, this testing covers the range of flows from 5 gpm to approximately 48,670 gpm (70 MGD).

While this testing is not an absolute confirmation of flow rates for each flow meter, which would require gravimetric testing not possible in the field, it does provide reasonable assurance that individual flow meters are performing according to specifications.

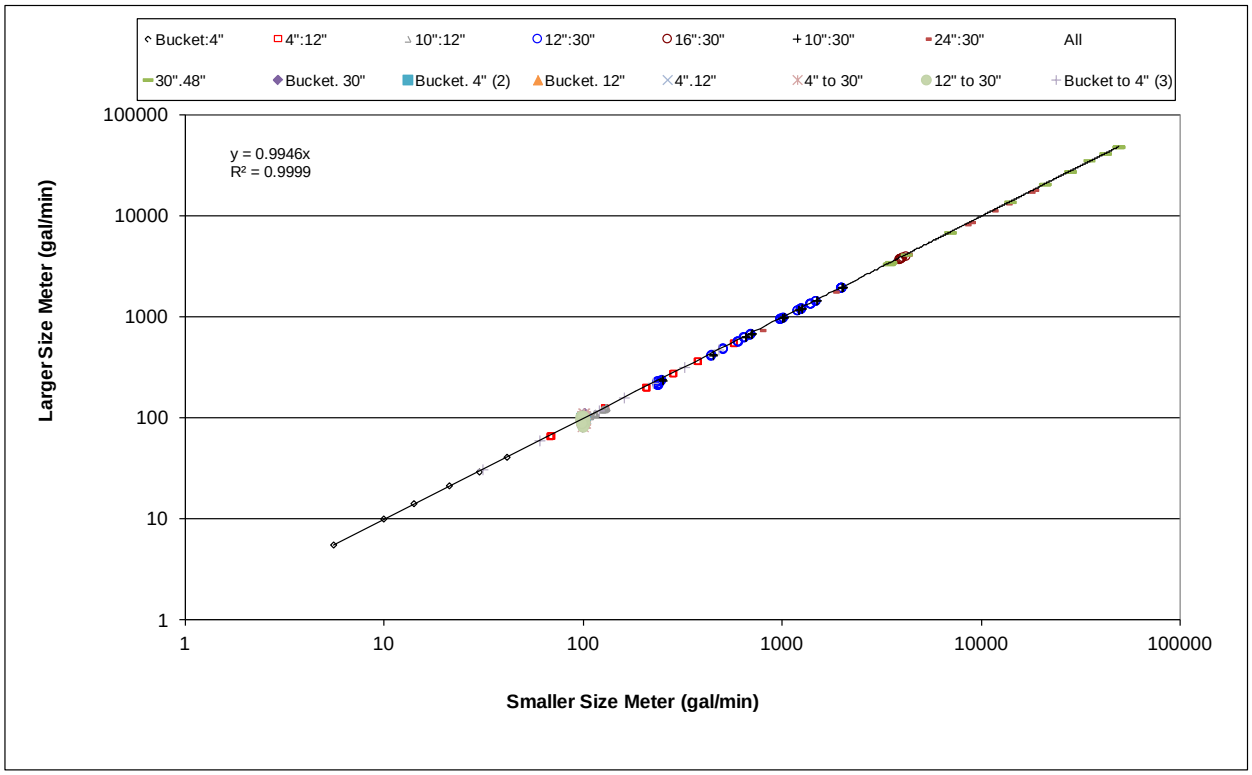

Figure 1. Summary of Paired Flowmeter Testing Conducted at Portland UV Validation Facility

Tank Draw down Testing using On-Site Water Storage Reservoir

Absolute (volumetric) flow testing has been conducted using the 12" and 30" flow meters through tank drawdown measurements. Using tank level and volume data supplied by the

Portland Water Bureau for the on-site, 2-million gallon groundwater storage tank, draw down tests have been conducted to compare the total water measured by the flow meters to a calculated value based on differential tank level and known volume of water per foot of tank level change. Data provided by the PWB indicates that for each foot of tank level change (in the straight-sided portion, from about 17.5 ft to the bottom of the tank), is equivalent to 70995 gallons of water.

The first draw down test was conducted using the 30" and 12" flow meters in series on 12 December 2008. These results are shown in Figure 2. During this test, a total of approximately 544,000 gallons of water was run through the test train. Flow meter totals from each meter were recorded over the course of the test. These readings were compared to SCADA data of tank level and flow total were calculated. As shown in Figure 2, flow rates ranged from 6 MGD to 4.5 MGD during the test. The 12" flow meter showed close agreement between calculated flow totals, with an average deviation of 0.6 percent. The 30" flow meter showed an average deviation of 4.9 percent.

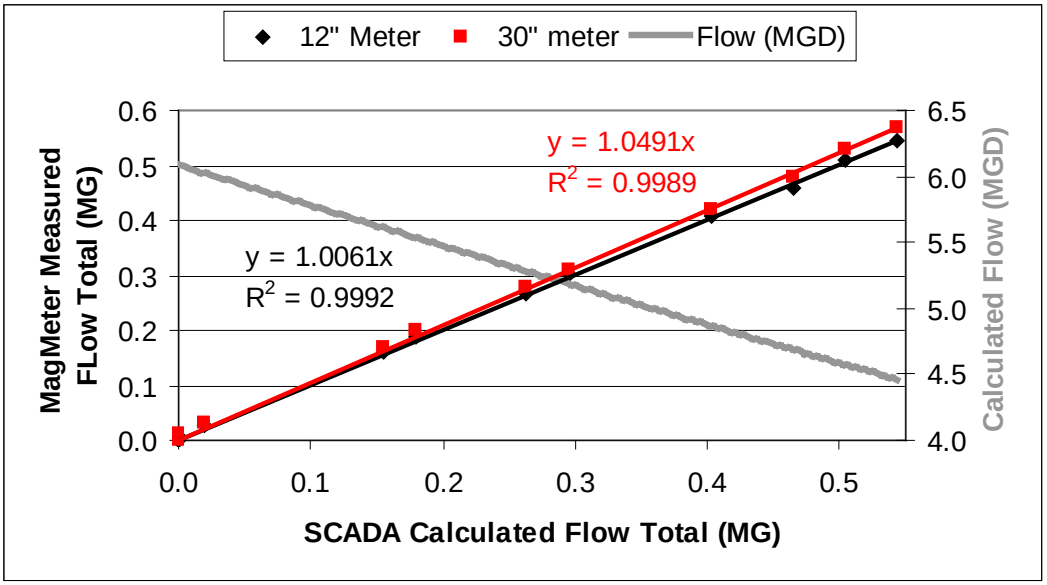

Figure 2: Tank Draw down Testing Performed 12 December 2008

During June 2009, Rosemount filed services performed a flow meter diagnostic using a calibrated flow tube simulator to confirm that the electronics of the 30" flow meter were running within specifications. At the time, it was suggested that a second drawdown test be run using only to 30" flow meter to allow for higher flows.

Draw down testing was repeated on 15 June 2009 using only the 30" flow meter at flow rates ranging from 21 to 11.5 MGD. These data, shown in Figure 3 indicate flow meter accuracy within 0.7 percent of calculated flow totals. On 7 September 2009, a third draw down test was performed using only the 30" flow meter at flows ranging from 41 to 7 MGD showed flow meter accuracy of less than 0.1 percent from calculated flow totals. (Figure 4)

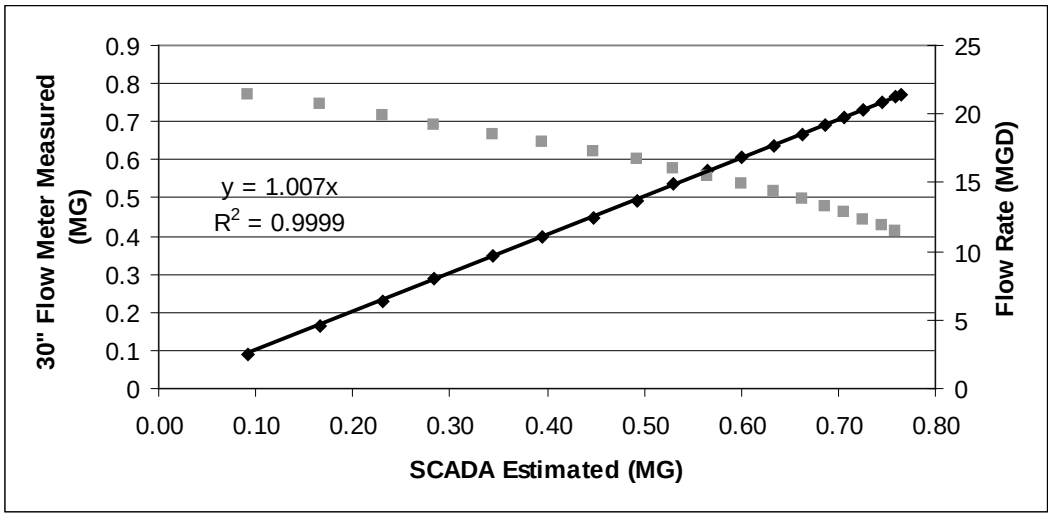

Figure 3. Tank Draw down Test Performed 15 June 2009 using 30" Flow Meter.

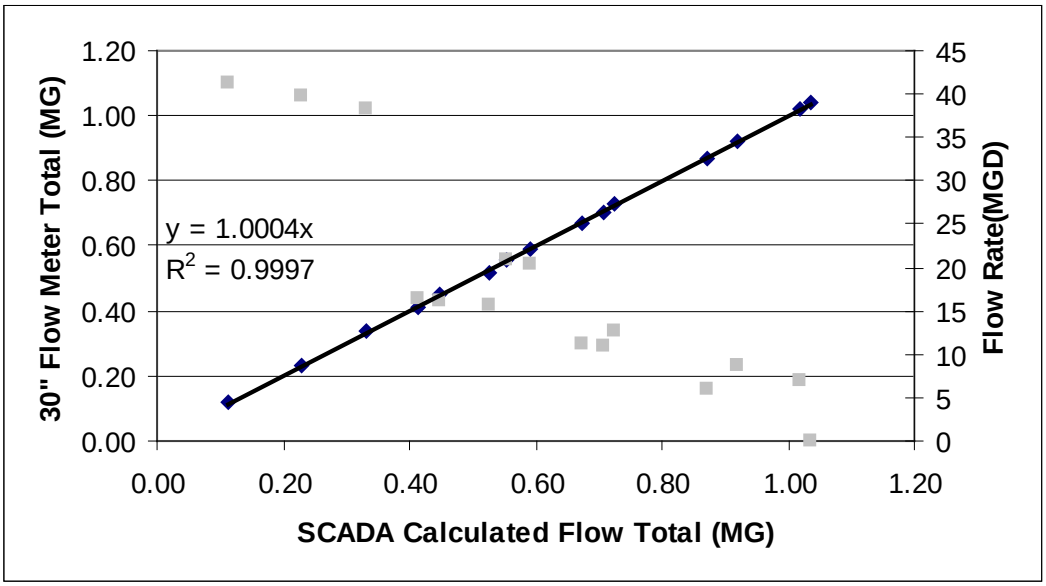

Figure 4. Tank Draw down Test Performed 7 September 2009 using 30" Flow Meter.

The most recent tank drawdown test was conducted on 27 February 2015 for the 30" flow meter only, at flows ranging from 17.08 to 6.16 MGD. The data presented in Figure 5 indicate an average variation between the flow meter and tank level calculation of 0.86 percent.

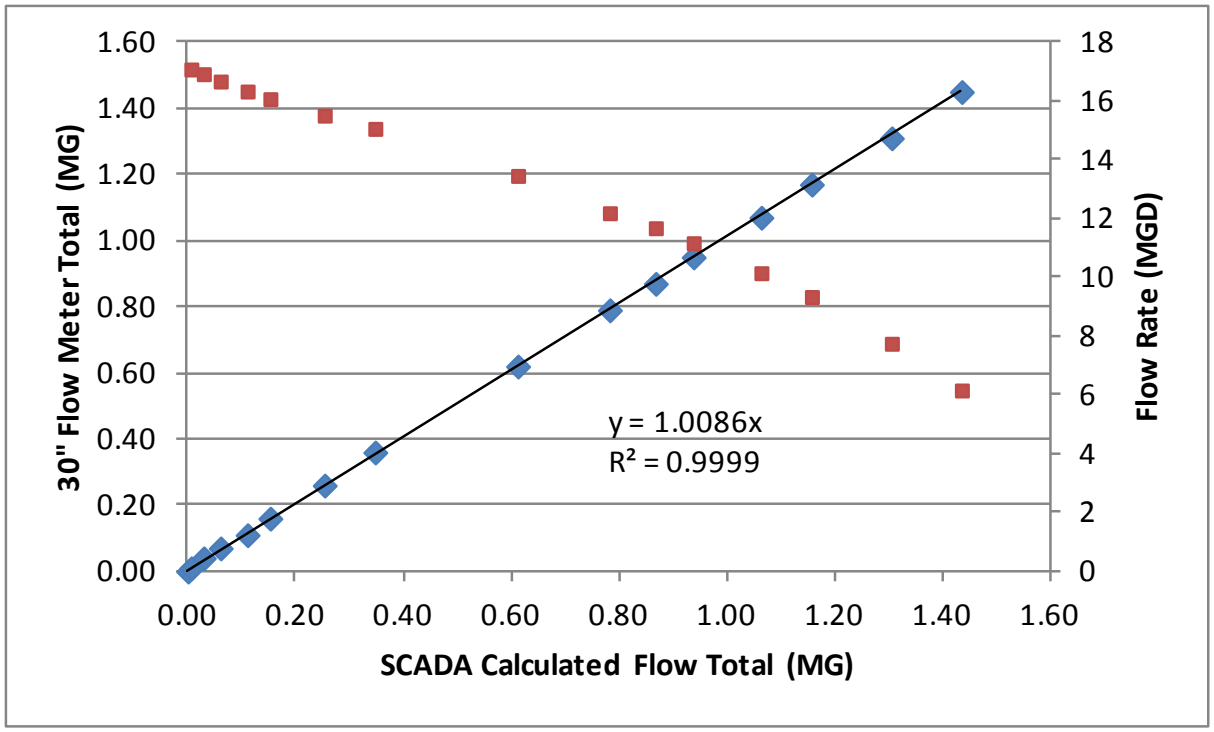

Figure 5. Tank Draw down Test Performed 27 February 2015 using 30" Flow Meter.

Based on the results of paired flow meter testing and tanks draw down testing, the body of data suggests that all flow meters are performing within manufacturer's specifications.

TRANSCAT® CERTIFICATE OF CALIBRATION

Trust in every measure

ANAB ACCREDITED ISO/IEC 17025 ANSI/NCSL Z540-1 ANAB AC-2489.01

ilac-MRA

Customer: CAROLLO ENGINEERS
720 SOUTHWEST WASHINGTON ST
SUITE 550
PORTLAND, OR 97205
PO Number: 11.02 UVV

Certificate/SO Number: 2-B5I1T-20-1 Revision 0

Manufacturer: Fluke Corporation
Model Number: 434
Description: Power Analyzer, 3 Phase
Serial Number: DM8750027
ID: 6000227

As-Found: In Tolerance
As-Left: In Tolerance

Calibration Date: Dec 21, 2017
Due Date: Dec 21, 2018

Calibrated To: Manufacturer Specification
Calibration Procedure: 1-AC51511-1

Transcat Calibration Laboratories have been audited and found in compliance with ISO/IEC 17025:2005. Accredited calibrations performed within the Lab's Scope of Accreditation are indicated by the presence of the Accrediting Body's Logo and Certificate Number. Any measurements on an accredited calibration not covered by that Lab's Scope of Accreditation are listed in the notes section of the certificate. SCC, NRC, CLAS or ANAB do not guarantee the accuracy of an individual calibration by accredited laboratories.

Transcat calibrations, as applicable, are performed in compliance with the requirements of the Transcat Quality Manual QAC-P01-000 Revision 1.0, the customer's Purchase Order and/or Quality Agreement requirements, ISO 9001:2008, ANSI/NCSL Z540.1-1994 (R2002). Complete records of work performed are maintained by Transcat and are available for inspection. Laboratory standards used in the performance of this calibration are listed below.

Transcat documents the traceability of measurements to the SI units through the National Institute of Standards and Technology (NIST), or the National Research Council of Canada (NRC), or other national measurement institutes (NMI) that are signatories to the CIPM Mutual Recognition Arrangement, or accepted fundamental and/or natural physical constants, or by the use of specified methods, consensus standards or ratio type measurements. Documentation supporting traceability information is available for review upon written request at a Transcat facility. The measured quantity and the measurement uncertainty are required for further dissemination of traceability.

Uncertainties are reported with a coverage factor k=2, providing a level of confidence of approximately 95%. All calibrations have been performed using processes having a TUR of 4:1 or better (3:1 for mass calibrations), unless otherwise noted. The Test Uncertainty Ratio (TUR) is calculated in accordance with NCSL International RP-18. For mass calibrations: Conventional mass referenced to 8.0 g/cm³.

The results in this report relate only to the item calibrated or tested. Recorded calibration data is valid at the time of calibration within the stated uncertainties at the environmental conditions noted. The determination of compliance to the specification is specific to the model/serial no./ID no. referenced above based on the tolerances shown; these tolerances are either the original equipment manufacturers (OEM's) warranted specifications or the client's requested specifications. This certificate may not be reproduced except in full, without the written approval of Transcat. Additional information, if applicable may be included on separate report(s).

As Found/As Left Data

Description	Setpoints	Accuracy	Low Limit	High Limit	As Found / As Left	OOT	TUR
AC Current Measure w/i400s							
A/L1 w/i400s 40A Range 60Hz	39.0Arms	±(1% Rdg + 5 LSD)	38.1	39.9	38.7 Arms		1.7 : 1
B/L2 w/i400s 60Hz	39.0Arms	±(1% Rdg + 5 LSD)	38.1	39.9	39.3 Arms		1.7 : 1
C/L3 w/i400s 60Hz	39.0Arms	±(1% Rdg + 5 LSD)	38.1	39.9	38.7 Arms		1.7 : 1
N w/i400s 60Hz	39.0Arms	±(1% Rdg + 5 LSD)	38.1	39.9	39.1 Arms		1.7 : 1
A/L1 w/i400s 400A Range 60Hz	390Arms	±(1% Rdg + 5 LSD)	381	399	391 Arms		2.4 : 1
B/L2 w/i400s 60Hz	390Arms	±(1% Rdg + 5 LSD)	381	399	392 Arms		2.4 : 1

Date Received: December 20, 2017
Service Level : R3

Customer Number: 1-598303-000

TRANSCAT® CERTIFICATE OF CALIBRATION

Trust in every measure

CALIBRATION SERVICE

Customer: CAROLLO ENGINEERS
720 SOUTHWEST WASHINGTON ST
SUITE 550
PORTLAND, OR 97205

PO Number: 11.02 UVV

ANAB ACCREDITED ISO/IEC 17025 ANSI/NCSL Z540-1 ANAB AC-2489.01

ilac-MRA

Certificate/SO Number: 2-B5I1T-20-1 Revision 0

As Found/As Left Data

Description	Setpoints	Accuracy	Low Limit	High Limit	As Found / As Left	OOT	TUR
AC Current Measure w/i400s							
C/L3 w/i400s 60Hz	390Arms	±(1% Rdg + 5 LSD)	381	399	388 Arms		2.4 : 1
N w/i400s 60Hz	390Arms	±(1% Rdg + 5 LSD)	381	399	387 Arms		2.4 : 1

Traceable Standards

Asset	Manufacturer	Model Number	Description	Cal Date	Due Date	Traceability Number	Use
774W	Fluke Corporation	5520A-SC1100	Multifunction Calibrator, w/Scope Option	13-Sep-17	30-Sep-18	5-&774W-9-1	AF/AL

The use of the standard is defined as: AF - used for as-found readings, AL - used for as-left readings.

Environmental Data

Temperature	Relative Humidity	Temp / RH Asset
71.71°F /22.06°C	32.10%	1012W

Calibrated At:
14058 SW Milton Ct
Portland, OR 97224

Facility Responsible:
14058 SW Milton Ct
Portland, OR 97224
800-828-1470

Calibrated By:
Electronically Signed By:
Neil Greuel

Neil Greuel — Dec 21, 2017 14:12:10 -08:00
Calibration Technician

Reviewed By:
Electronically Signed By:
Marc Jaso

Marc Jaso — Dec 21, 2017 14:43:49 -08:00
Lab Manager

Unit Barcode: 901B0099445

Date Received: December 20, 2017
Service Level : R3

Customer Number: 1-598303-000

Appendix G

DATA SHEETS FOR THE WF-115-4, WF-125-6, AND WF-225-8 UV REACTORS AND COMPONENTS

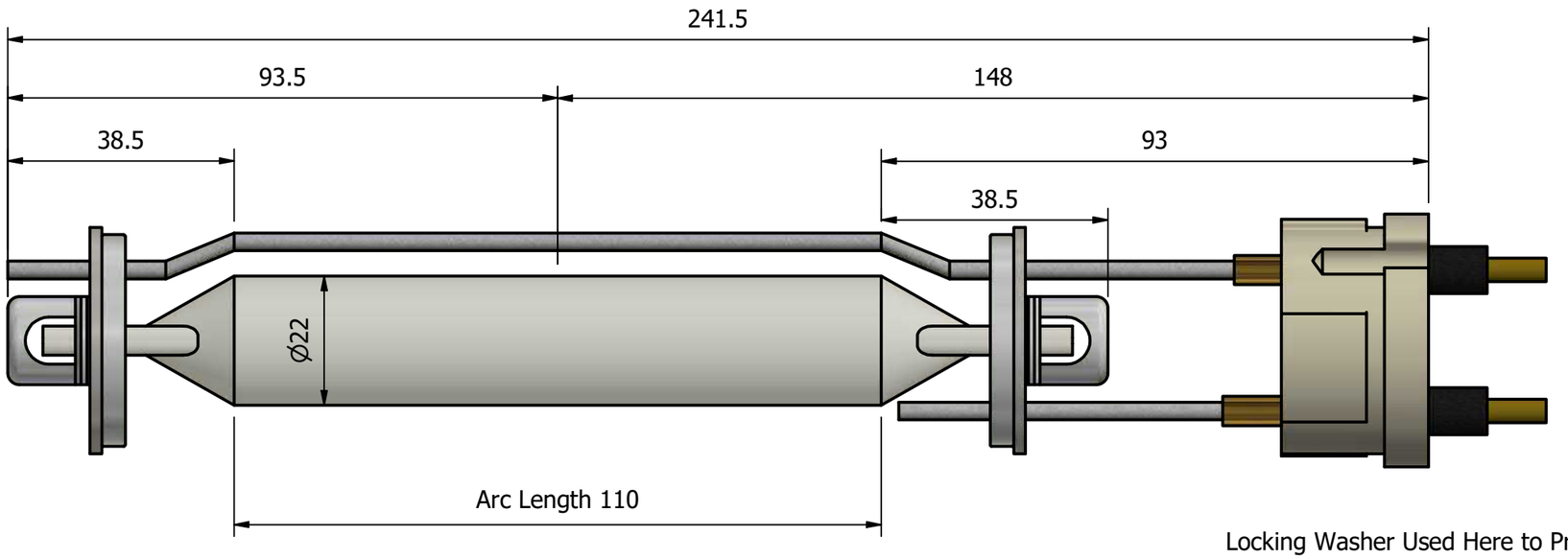

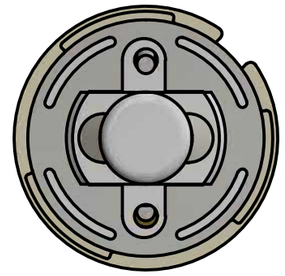

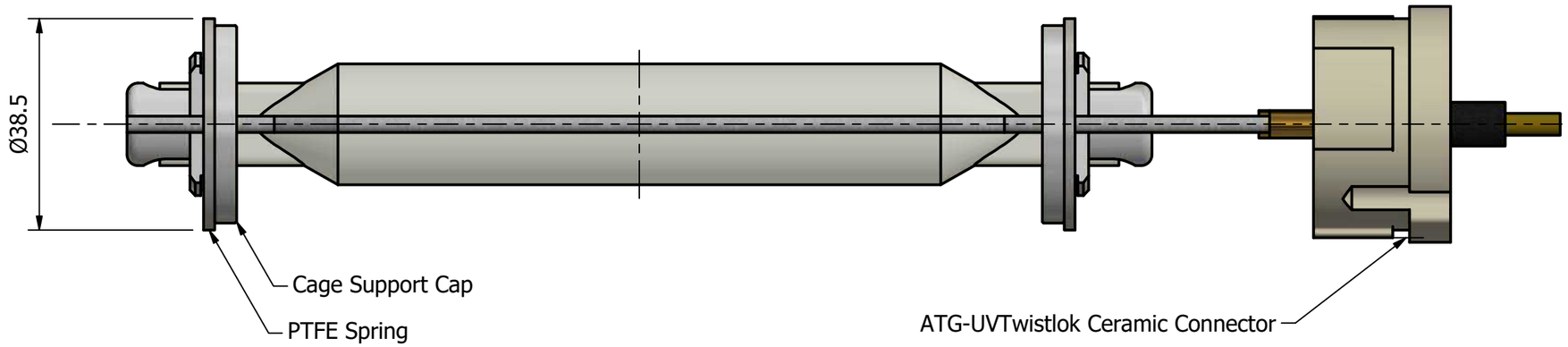

Locking Washer Used Here to Prevent Frame Rotation

ATG-UVTwistlok Ceramic Connector

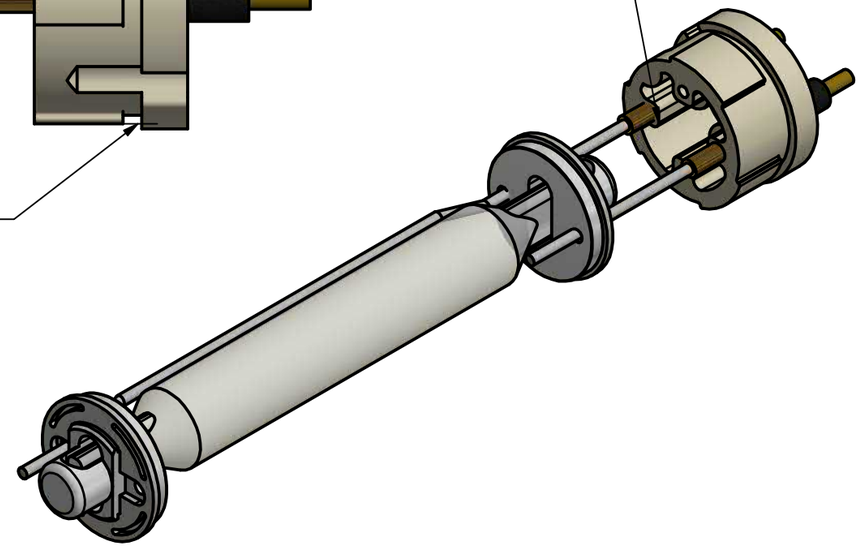

Drawing to show general assembly dimensions only
Cage and lamp geometry will not be accurate

Max Power: 1.5kW
Nominal Power: 1.0kW
Min Power: 0.5kW

Lamp Current @ Max Power: 10Amps

This drawing is the property of atg UV Technology. It is a confidential document and must not be copied, used, or its contents divulged (in whole or part) without prior written consent of the company.

atg UV Technology
LANCASHIRE
ENGLAND
Tel +44 (0) 1942 216161
Fax +44 (0) 1942 213131
www.atguv.com

CLIENT

TITLE: Caged Lamp MP15

DRAWING No: W1502002 | A3 | A

REV	DATE	DESCRIPTION	DRN	CHK	APP
A	06/03/2015	Issued for Pre-Production Prototype	R.J	R.J.	R.J.

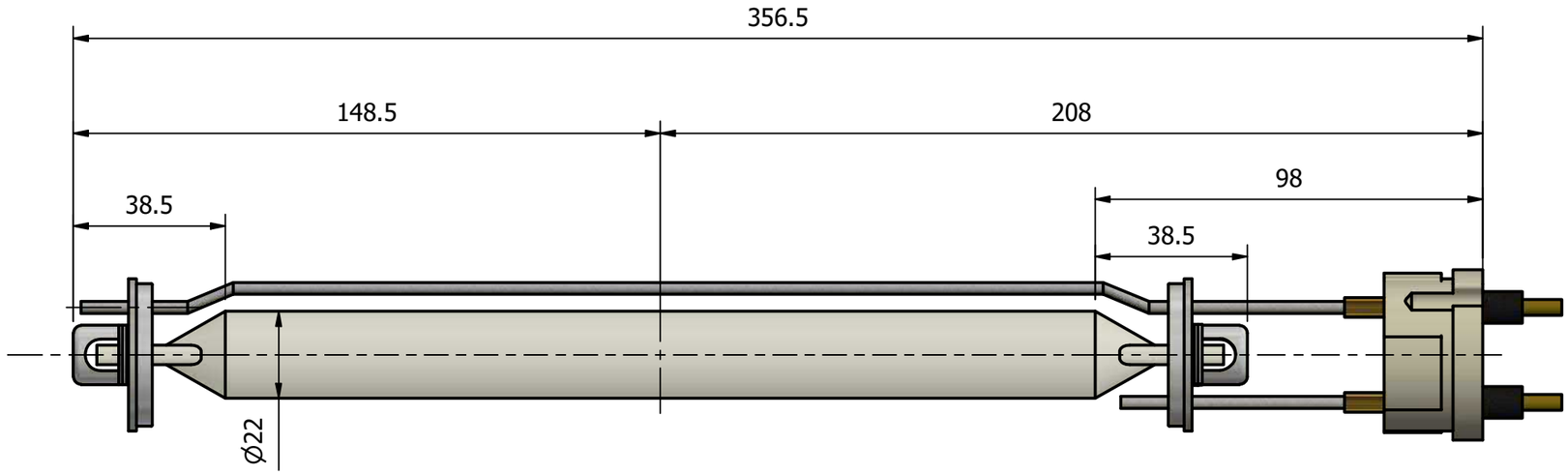

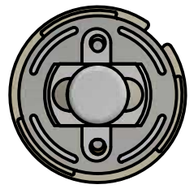

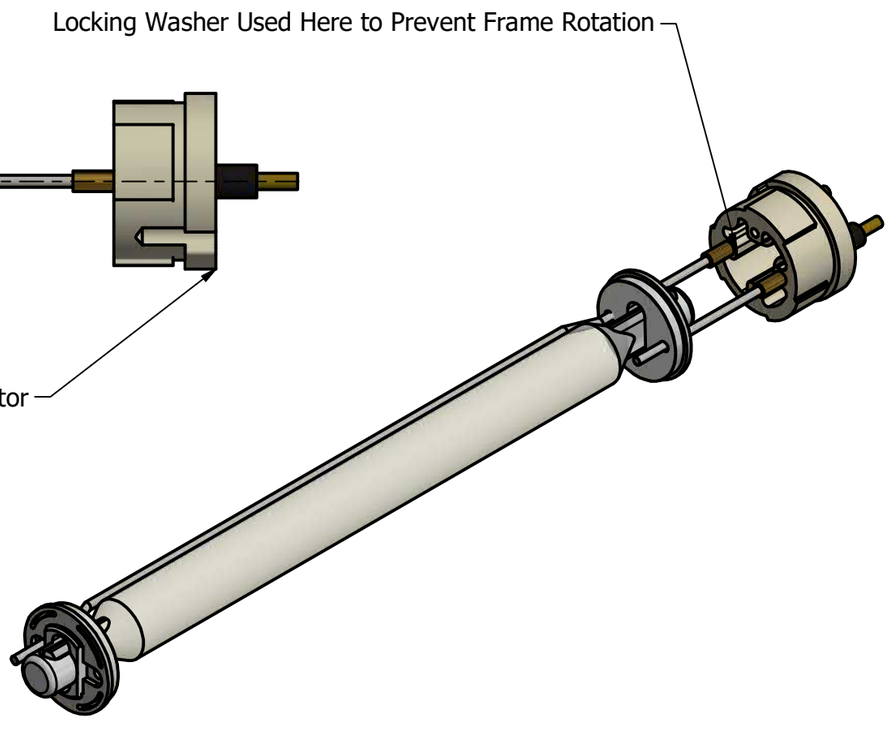

Drawing to show general assembly dimensions only
Cage and lamp geometry will not be accurate

Max Power: 2.5kW
Nominal Power: 2.0kW
Min Power: 0.75kW

Lamp Current @ Max Power: 10Amps

This drawing is the property of atg UV Technology. It is a confidential document and must not be copied, used, or its contents divulged (in whole or part) without prior written consent of the company.

atg UV Technology
LANCASHIRE
ENGLAND
Tel +44 (0) 1942 216161
Fax +44 (0) 1942 213131
www.atguv.com

CLIENT

TITLE: Caged Lamp MP25

DRAWING No: W1502003 | A3 | A

REV	DATE	DESCRIPTION	DRN	CHK	APP
A	06/03/2015	Issued for Pre-Production Prototype	R.J	R.J.	R.J.

Magnetic Ballast	
Power (kW)	1.5
Supply Voltages (V)	208, 220, 230
Supply Frequencies (Hz)	50, 60
Lamp Voltage (V)	160
Lamp Current (A)	10.4
Termination	Finger Safe
Dimensions (cm) (HxWxD)	12 x 12 x 10
Weight (kg)	10.5
Max Temp (DegC)	155

Magnetic Ballast	
Power (kW)	2.5
Supply Voltages (V)	380, 400, 415
Supply Frequencies (Hz)	50
Lamp Voltage (V)	280
Lamp Current (A)	10
Termination	Finger Safe
Dimensions (cm) (HxWxD)	16 x 16 x 14
Weight (kg)	15
Max Temp (DegC)	155

ENTERPRISE Q LTD
SILICA GLASS PRODUCTS

Fax: +44 (0) 161 777 4899
www.enterprise-q.co.uk

Tubing GE214 Clear Fused Quartz

Used worldwide by the Lamp industry for metal halide, halogen, infra-red and other lamp applications, UV Germicidal, UV Curing, Semiconductor, Thermocouple and Fibre Optic industries, whose performance and quality demands are one of the highest.

GE214 is a natural quartz grade whose high transmission, purity, thermal resistance, low OH (hydroxyl), along with its physical characteristics, and excellent visual properties, make it the ideal Quartz material.

Dimensional Control (mm)

OD	Std OD +/-	LG	Std LG +/-
3 - 6	2%	up to 2540	+19 / -0
> 6 - 20	2%	up to 3060	+19 / -0
> 20 - 40	1%	up to 3060	+75 / -0
> 40 - 50	1%	up to 3060	+75 / -0
3 - 50		Cut lengths	up to +/-0.5

WL	WL +/-
</= 2.0	10%
> 2.0	8%

OD - Outside Diameter; LG – Long; WL – Wall thickness

Typical Physical Properties

Mechanical

Density 2.2x10^3 kg/m^3
Hardness 5.5 - 6.5 Mohs' scale; 570 KHN$_{100}$
Design Tensile Strength 4.8x10^7 Pa (N/m^2);7000psi
Design Compressive Strength >1.1x10^9 Pa;160,000psi
Bulk Modulus 3.7x10^{10} Pa; 5.3x10^6 psi
Rigidity Modulus 3.1x10^{10} Pa; 4.5x10^6 psi
Young's Modulus 7.2x10^{10} Pa; 10.5x10^6 psi
Poisson's Ratio 0.17

Thermal

Coeff. of exp. (20 - 320 °C) 5.5x10^{-7} cm/cm • °C
Thermal Conductivity (20 °C) 1.4 W/m • °C
Specific Heat (20 °C) 670 J/kg • °C
Softening Point 1683 °C
Annealing Point 1215 °C
Strain Point 1120 °C

Electrical

Electrical Resistivity (350 °C) 7x10^7 ohm cm
Dielectric Constant (20 °C and 1MHz) 3.75
Dielectric Strength (20 °C and 1MHz) 5x10^7 V/m
Dielectric Loss Factor (20 °C and 1MHz) < 4x10^{-4}
Dissipation Factor (20 °C and 1MHz) < 1x10^{-4}

Index of Refraction 1.4585

Typical Trace Element Composition

(ppm by weight; analysis via Direct Reading Spectrometer)

Type	Al	As	B	Ca	Cd	Cr	Cu	Fe	K	Li	Mg	Mn	Na	Ni	P	Sb	Ti	Zr	OH
GE214	14	<0.002	<0.2	0.4	<0.01	<0.05	<0.05	0.2	0.6	0.6	0.1	<0.05	0.7	<0.1	<0.2	<0.003	1.1	0.8	<5
GE214A	14	<0.002	<0.2	0.4	<0.01	<0.05	<0.05	0.2	0.6	0.6	0.1	<0.05	0.7	<0.1	<0.2	<0.003	1.1	0.8	<1

Average Transmission

(based on 1mm thickness; includes surface loss reflection)

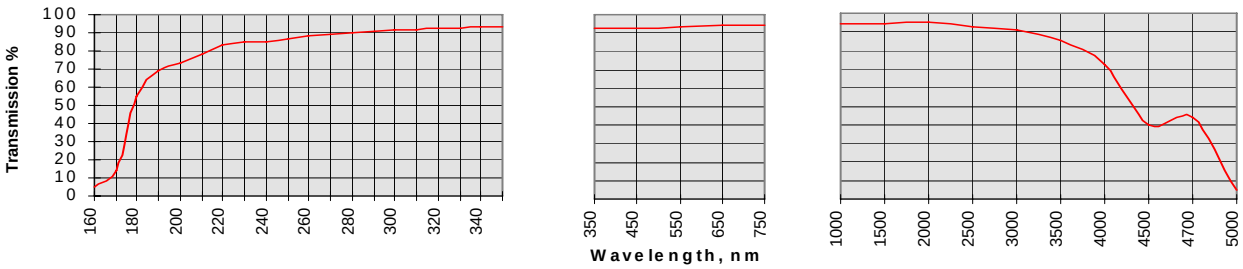

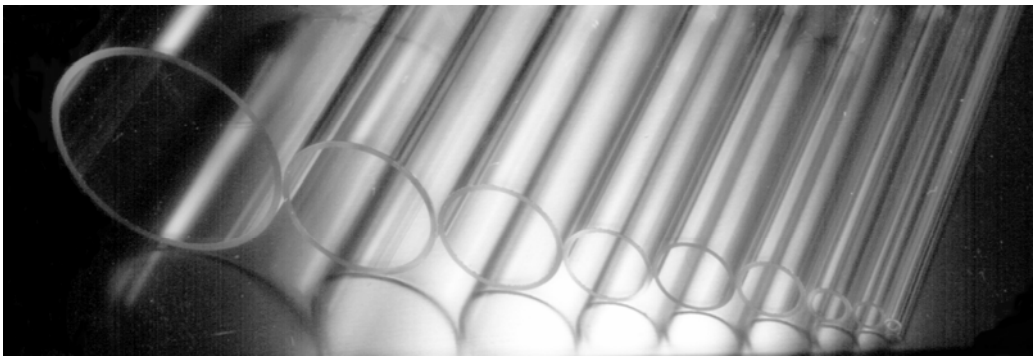

Registered Office: Laurel House, 173 Chorley New Road, Bolton, BL1 4QZ. Company Registration No: 3166763
Printed on recycled paper

AUTHORISED GE FABRICATOR & DISTRIBUTOR

FM53599

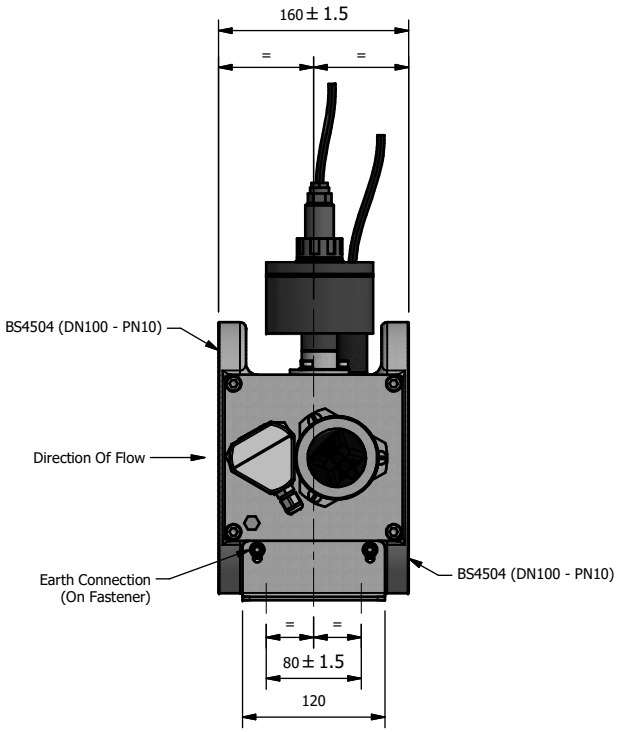

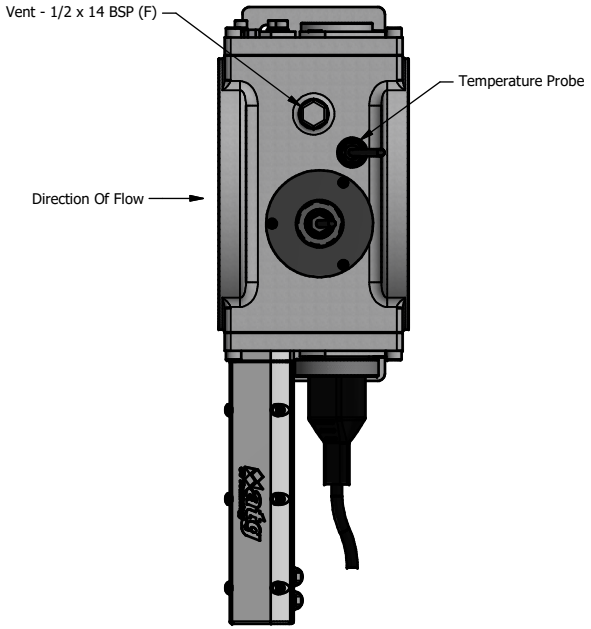

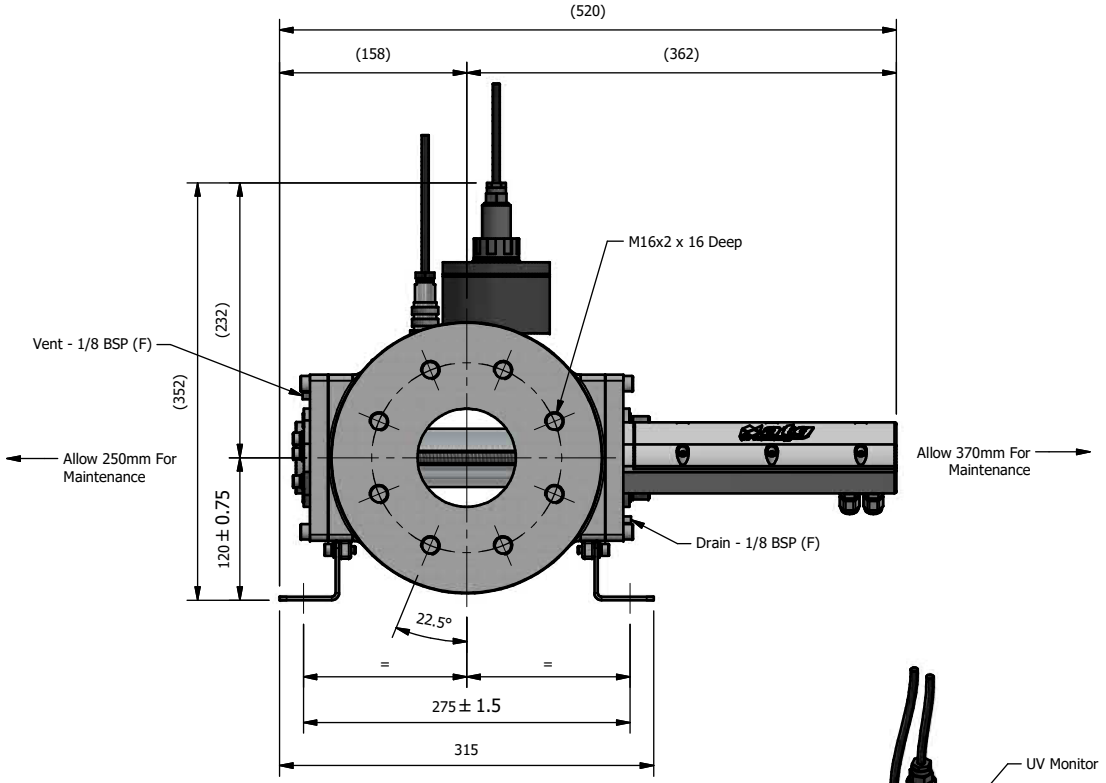

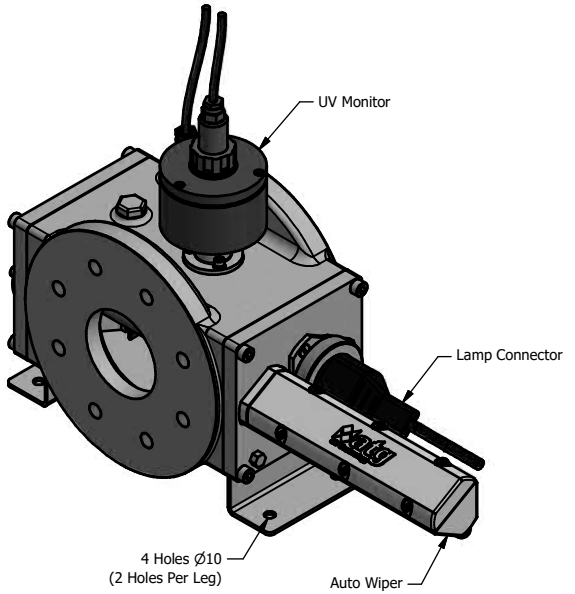

This drawing is the property of atg UV Technology. It is a confidential document and must not be copied, used, or its contents divulged (in whole or part) without prior written consent of the company.

REV	DATE	DESCRIPTION	DRN	CHK	APP
1	30/11/2017	ISSUED FOR MANUFACTURE	T.D.C	J.E	J.E

atg UV Technology
LANCASHIRE
ENGLAND
Tel +44 (0) 1942 216161
Fax +44 (0) 1942 213131
www.atguv.com

CLIENT

TITLE
CGA_WF-115-4
Chamber General Arrangement

DRAWING No CGA_WF-115-4_33Z_N14

1

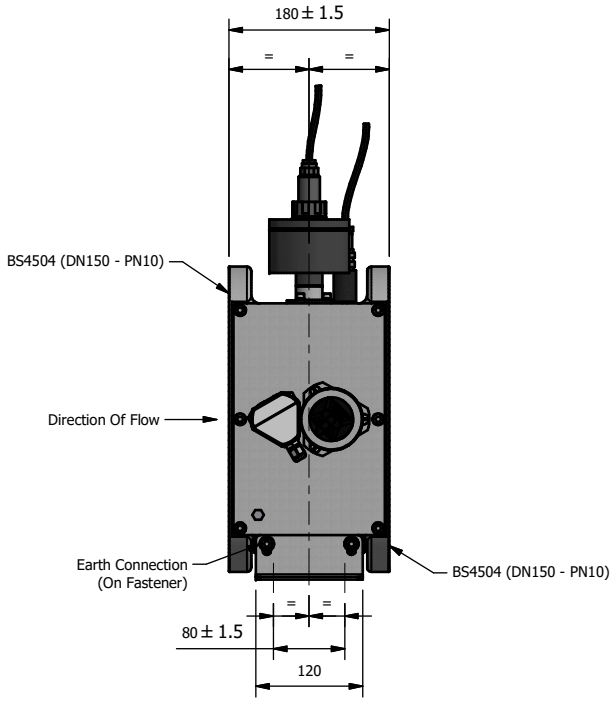

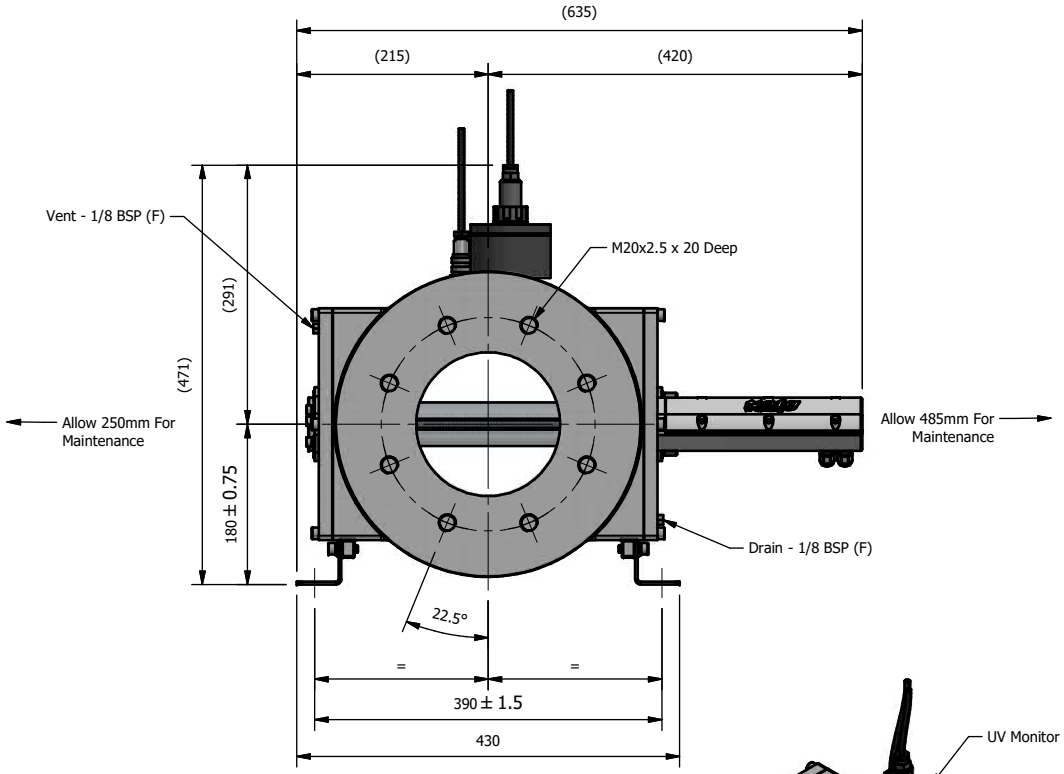

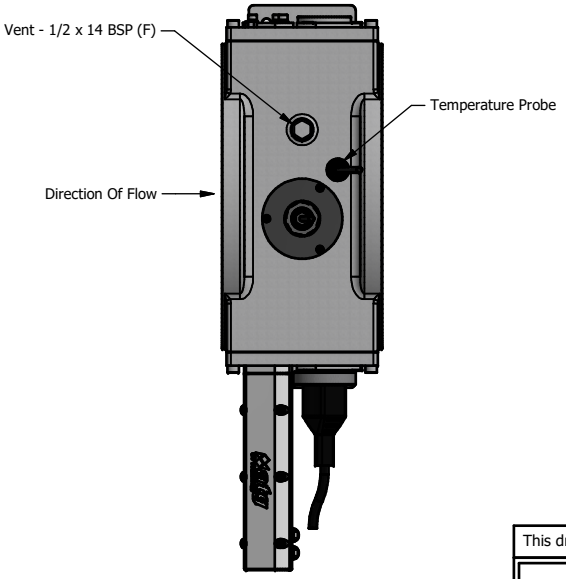

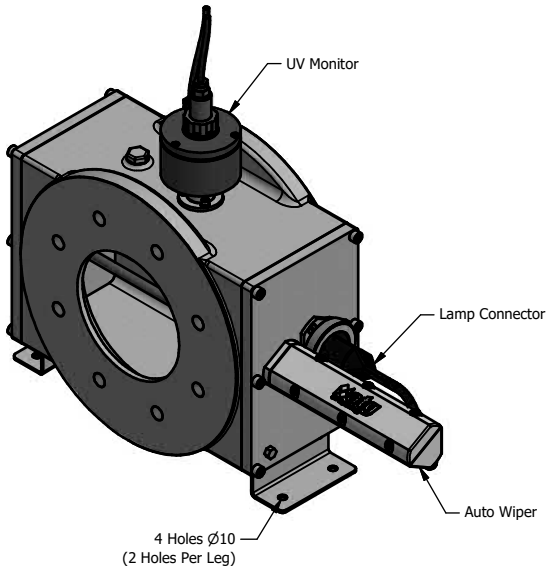

REV	DATE	DESCRIPTION	DRN	CHK	APP
2	06/12/2017	UV MONITOR HEIGHT DECREASED	T.D.C	J.E	J.E
1	30/11/2017	ISSUED FOR MANUFACTURE	T.D.C	J.E	J.E

This drawing is the property of atg UV Technology. It is a confidential document and must not be copied, used, or its contents divulged (in whole or part) without prior written consent of the company.

atg UV Technology
LANCASHIRE
ENGLAND
Tel +44 (0) 1942 216161
Fax +44 (0) 1942 213131
www.atguv.com

CLIENT

TITLE
CGA_WF-125-6
Chamber General Arrangement

DRAWING No CGA_WF-125-6_33Z_N14

2

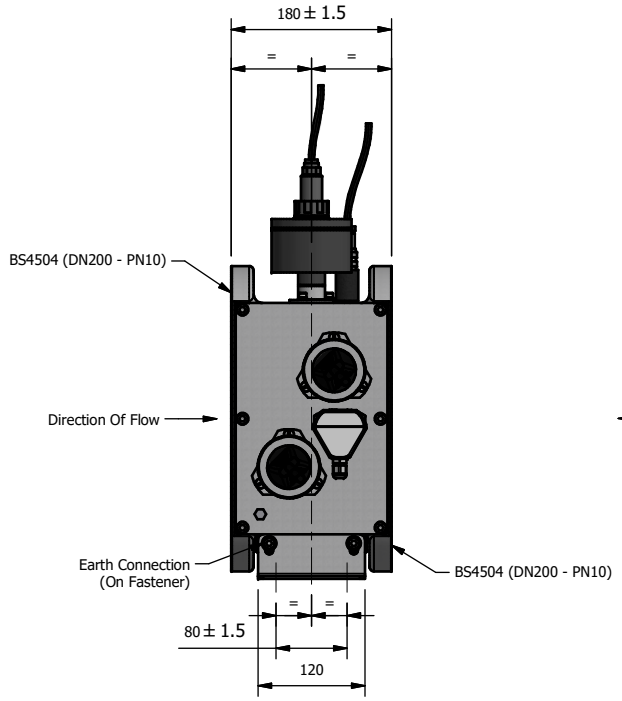

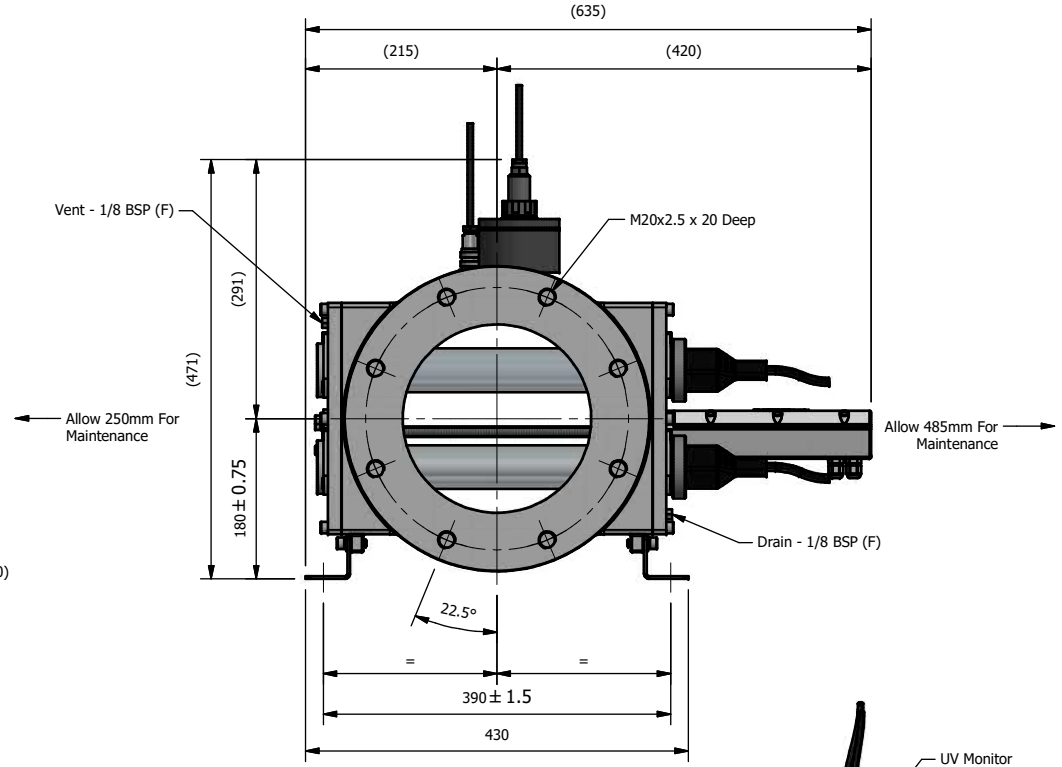

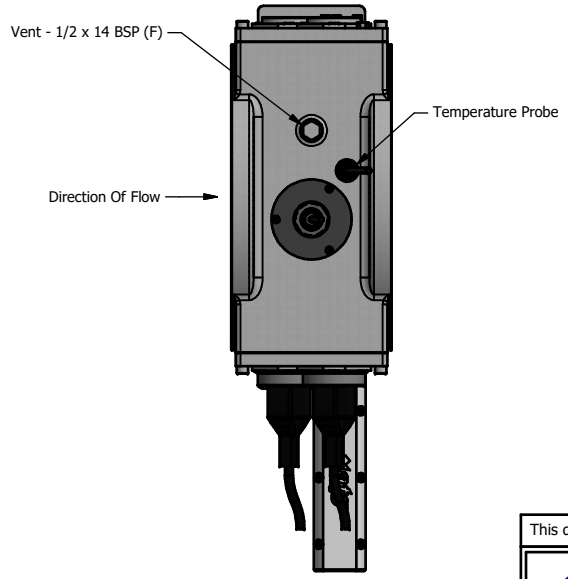

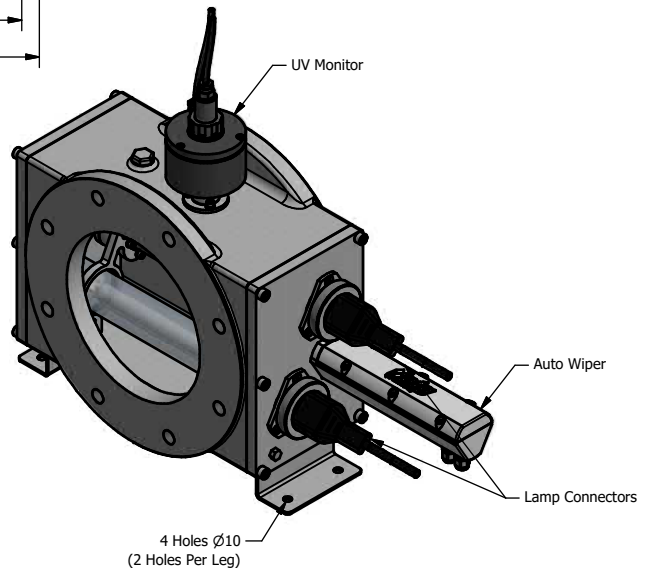

REV	DATE	DESCRIPTION	DRN	CHK	APP
2	06/12/2017	UV MONITOR HEIGHT DECREASED	T.D.C	J.E	J.E
1	30/11/2017	ISSUED FOR MANUFACTURE	T.D.C	J.E	J.E

This drawing is the property of atg UV Technology. It is a confidential document and must not be copied, used, or its contents divulged (in whole or part) without prior written consent of the company.

atg UV Technology
LANCASHIRE
ENGLAND
Tel +44 (0) 1942 216161
Fax +44 (0) 1942 213131
www.atguv.com

CLIENT

TITLE
CGA_WF-225-8
Chamber General Arrangement

DRAWING No CGA_WF-225-8_33Z_N14

2

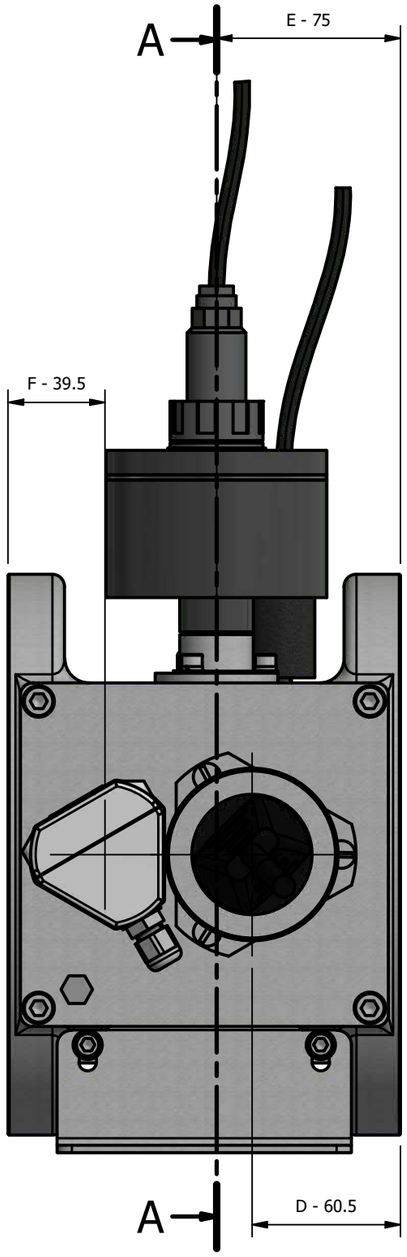

A-A (1 : 2.5)

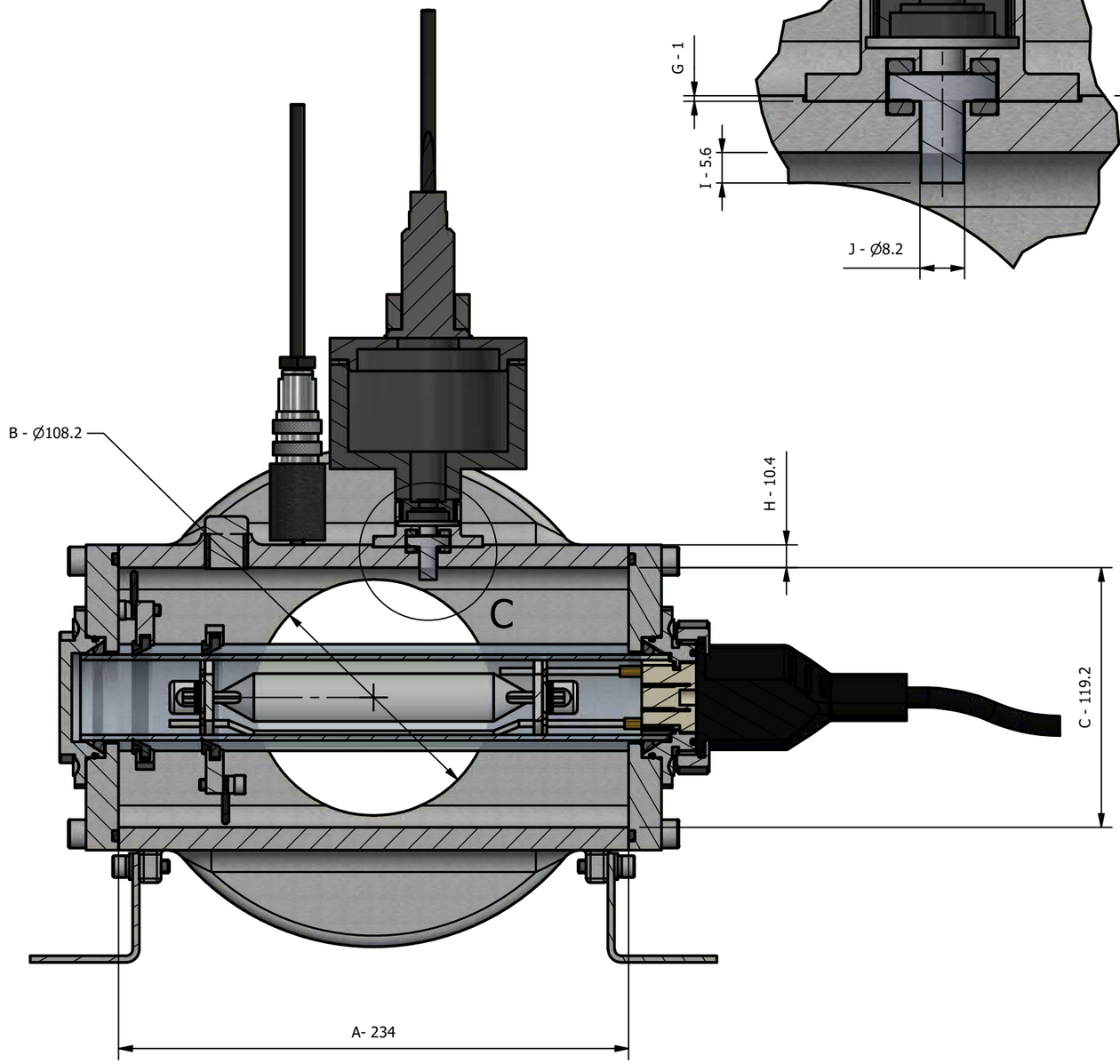

C (1:1)

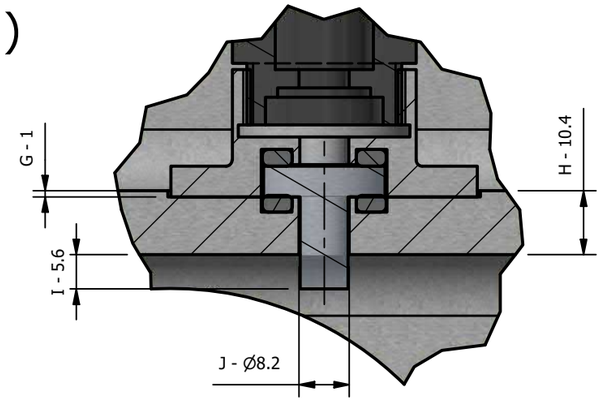

This drawing is the property of atg UV Technology. It is a confidential document and must not be copied, used, or its contents divulged (in whole or part) without prior written consent of the company.

atg UV Technology
LANCASHIRE
ENGLAND
Tel +44 (0) 1942 216161
Fax +44 (0) 1942 213131
www.atguv.com

CLIENT

TITLE

DRAWING No CGA_WF-115-4 Various Dimensions

A

REV	DATE	DESCRIPTION	DRN	CHK	APP
A	04/09/2019	FOR TECHNICAL USE ONLY	T.D.C		

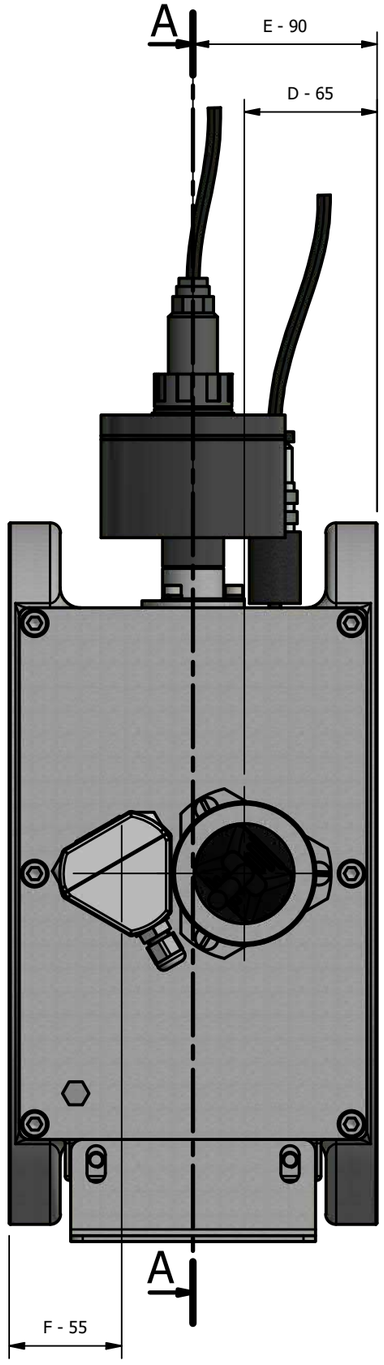

A-A (1 : 3)

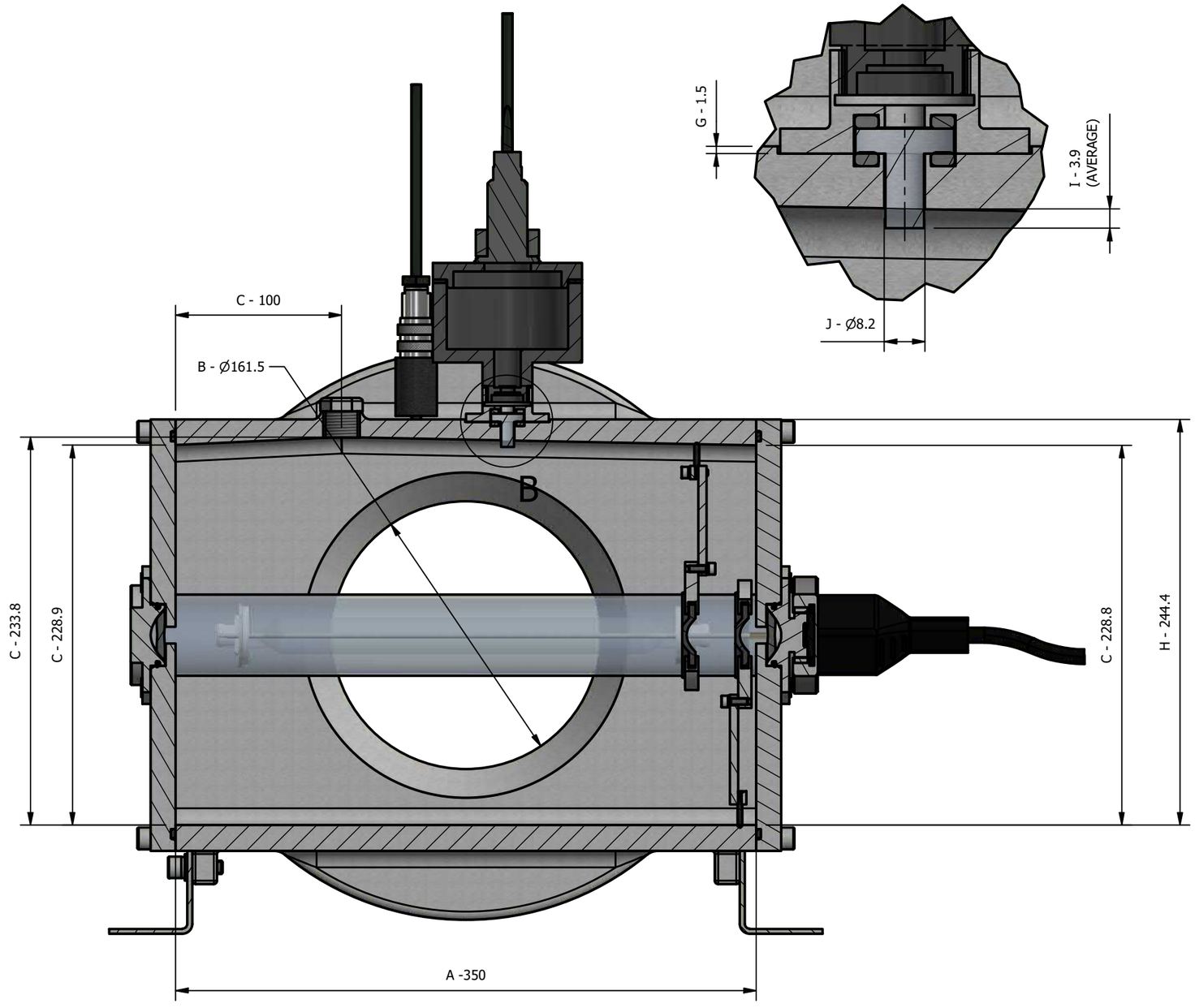

B (1:1)

This drawing is the property of atg UV Technology. It is a confidential document and must not be copied, used, or its contents divulged (in whole or part) without prior written consent of the company.

atg UV Technology
LANCASHIRE
ENGLAND
Tel +44 (0) 1942 216161
Fax +44 (0) 1942 213131
www.atguv.com

CLIENT

TITLE

DRAWING No: CGA_WF-125-6 Various Dimensions

A

REV	DATE	DESCRIPTION	DRN	CHK	APP
A	04/09/2019	FOR TECHNICAL USE ONLY	T.D.C		

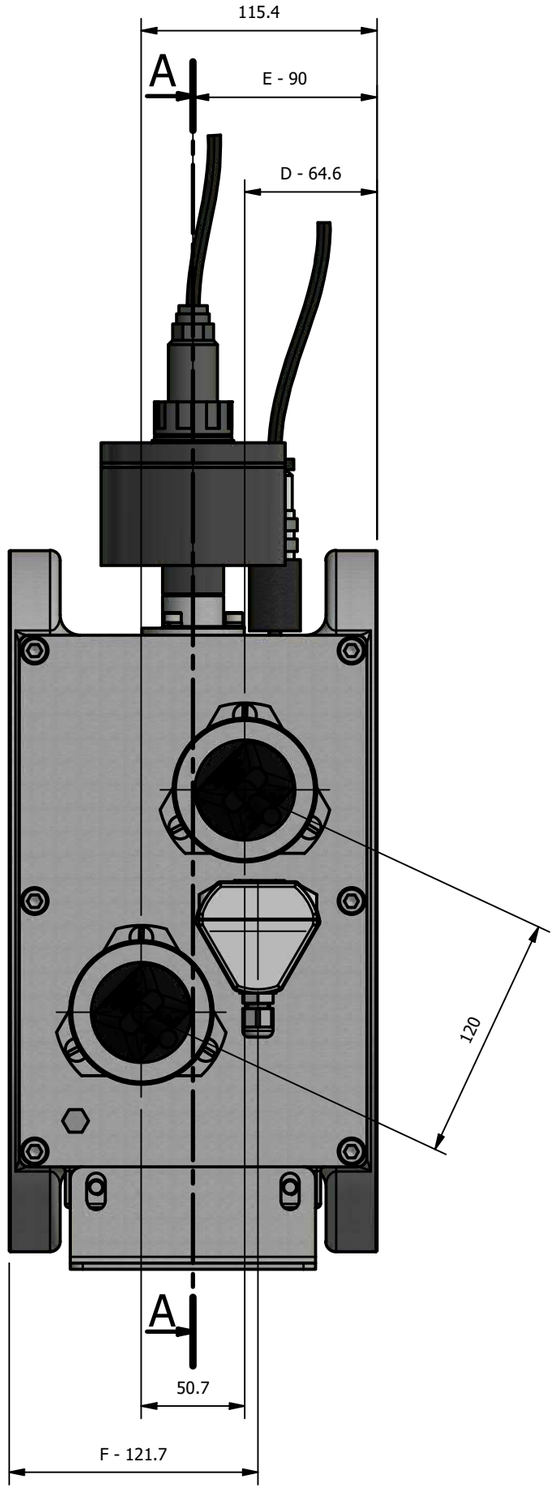

A-A (1 : 3)

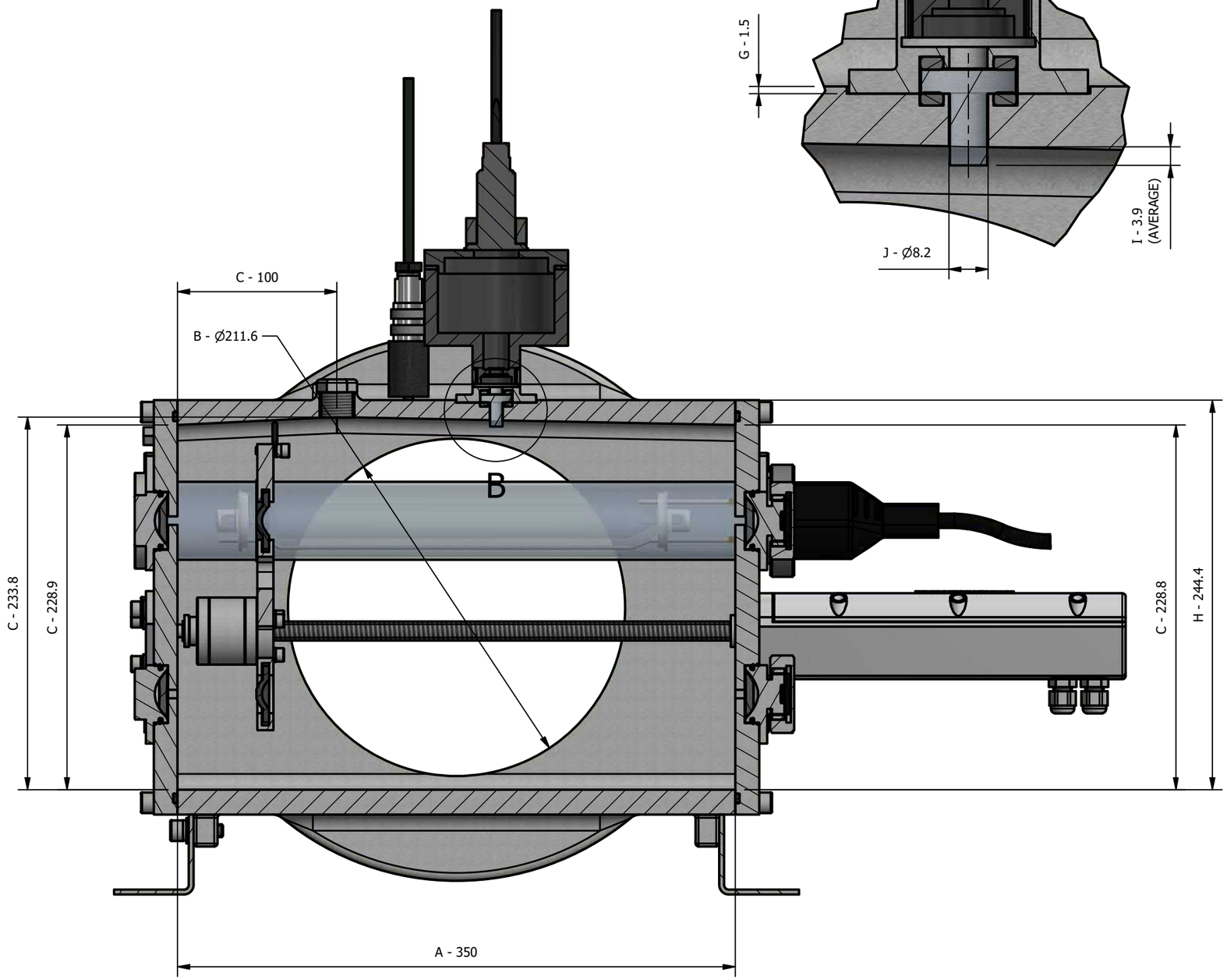

B (1:1)

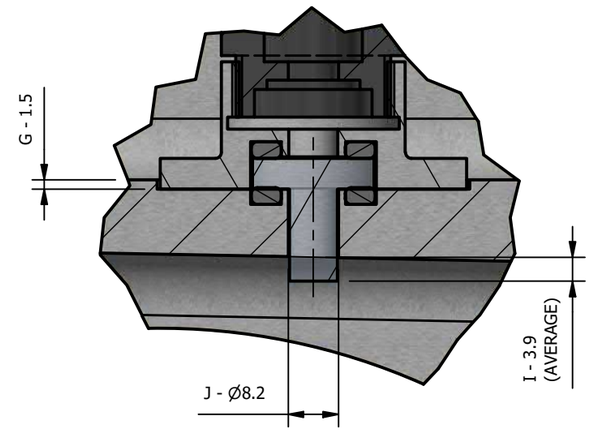

REV	DATE	DESCRIPTION	DRN	CHK	APP
A	04/09/2019	FOR TECHNICAL USE ONLY	T.D.C		

This drawing is the property of atg UV Technology. It is a confidential document and must not be copied, used, or its contents divulged (in whole or part) without prior written consent of the company.

atg UV Technology
LANCASHIRE
ENGLAND
Tel +44 (0) 1942 216161
Fax +44 (0) 1942 213131
www.atguv.com

CLIENT

TITLE

DRAWING No CGA_WF-225-8 Various Dimensions

A

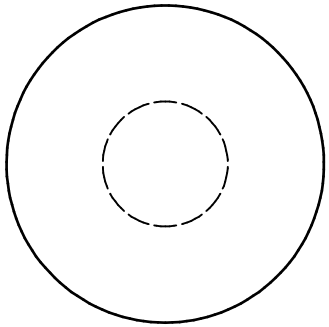

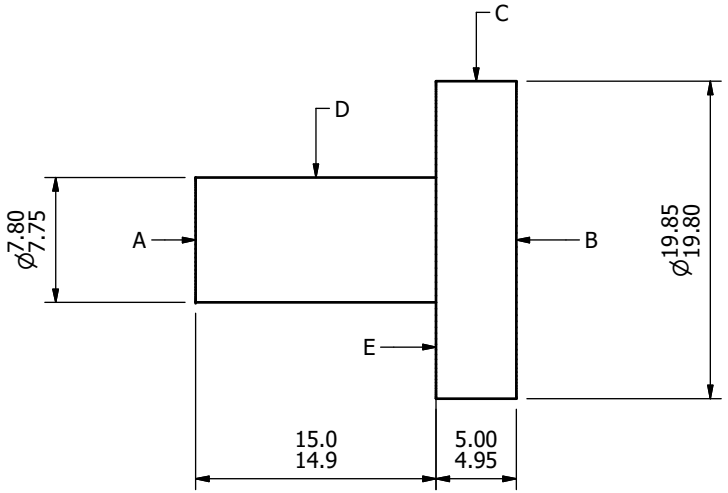

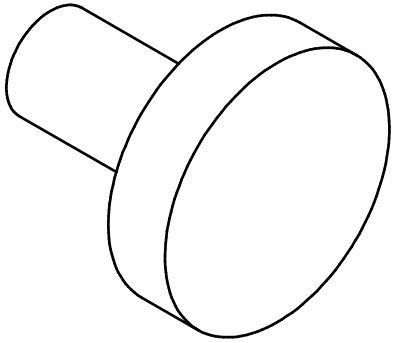

FINISH:
FACE A OPTICALLY POLISHED PGF, USING CEROX 1663
FACE B GROUND TO GIVE 0.3 Ra (+/- 0.1 Ra)
FACES C, D & E GROUND
CLEAN WITH 30% PHOSPHORIC ACID FOR 1 MINUTE AT ATG ONLY

MATERIAL:
SPECTROSIL 2000

TOLERANCES:
DIN ISO 2768 'C'
DIMENSIONS IN mm

This drawing is the property of atg UV Technology. It is a confidential document and must not be copied, used, or its contents divulged (in whole or part) without prior written consent of the company.

REV	DATE	DESCRIPTION	DRN	CHK	APP
2	19/09/2017	MATERIAL AND FINISH CHANGED	T.D.C	G.F	G.F
1	31/01/2017	ISSUED FOR MANUFACTURE	T.D.C	T.D.C	T.D.C

atg UV Technology
LANCASHIRE
ENGLAND
Tel +44 (0) 1942 216161
Fax +44 (0) 1942 213131
www.atguv.com

CLIENT

TITLE
VERIFIED - Quartz Window QWI-20x15x5 (Top Hat)

DRAWING No W2900322

2

Appendix H
DOSE RESPONSE QA/QC BOUNDS

QA/QC Bounds for MS2, T1UV and T7 Phage

This document provides bounds for the UV dose-response of MS2, T1UV and T7 phage cultured and assayed by GAP Enviromicrobial Services for UV validation at the Portland test Facility.

Methods

UV dose-response data was collected from UV validation reports for three UV vendors. The data spanned a four year period from May 2007 to February 2011. The UV dose-response coefficients used to define the fits to the UV dose-response data were used to predict UV dose for log inactivations from 0 to 6 log in 0.2 log increments. Using data restricted to the validated range of the UV dose-response, the average and standard deviation of the predicted UV dose was calculated at each log inactivation. The 95th and 99.7th percentile predictions intervals for the predicted UV dose were then calculated using:

$$UVdose = \bar{x} \pm t \times SD$$

Where $\bar{x}$ is the average predicted UV dose, SD is the standard deviation of the predicted UV dose, and t is a t-statistic. The upper and lower prediction intervals were then fitted as a function of log inactivation using a polynomial function. Any dose-response fits that fell outside of the 99.7th percentile prediction interval was considered an outlier for defining the average and standard deviation, and hence not included in the analysis. Only one UV dose-response for T7 phage was excluded from the analysis, based on this criteria.

Results

Figures 1, 2, and 3 present the predicted UV dose-response curves for MS2, T1UV and T7 phage, respectively, and the prediction intervals defines as a 95th percentile as defined using the polynomial functions. The 95th percent prediction interval represents the range over which the predicted UV dose-response is expected to occur with 19 out of every 20 measured UV dose response data sets. If the fitted UV dose-response falls within these bounds, there is a high statistical confidence that the fit is valid.

Figures 4, 5, and 6 present the predicted UV dose-response curves for MS2, T1UV and T7 phage, respectively, and the prediction intervals defines as a 99.7th percentile as defined using the polynomial functions. The 99.7th percent prediction interval represents the range over which the predicted UV dose-response is expected to occur with 997 out of every 1000 measured UV dose response data sets. If the fitted UV dose-response falls outside of these bounds, there is a high statistical confidence that the fit is not valid.

UV dose-response fits that fall within the 95th and 99.7th percentile prediction intervals represents a grey area where the fit may or may not be valid. The UV dose response data associated with those fits should inspected to determine if there are reasons for considering the data invalid. For example, if the fit is closer to the 95th percentile prediction interval compared to the 99.7th percentile predictions interval, the confidence that the data is valid is notably higher. Outliers within the measured data set or other factors may be responsible for a fit not being valid.

Because only 10 UV dose-response curves were used to define the T7 phage bounds, the t-statistic was high and the bounds are relatively wide. As more data is collected at the Portland test facility, these bounds shall be updated.

It should be noted that the MS2 UV dose-response is highly repeatable and falls within the bounds for MS2 UV dose-response given by the NWRI UV Guidelines. For a log inactivation of 2 log, the range of UV doses with the 95th percentile prediction interval is ±2.5 mJ/cm^2, or ± 6.4 percent relative to the average dose. In comparison, the range with the NWRI bounds is notably higher at ±10 mJ/cm^2, or ± 23 percent relative to the average dose. The high level of repeatability of the MS2 UV dose-response relative to the NWRI bounds should provide high degree of confidence in the quality of the MS2 phage UV dose-response data obtained from GAP.

The T1UV phage UV dose-response also shows a high degree of repeatability over the four year period considered. For a log inactivation of 2 log, the range of UV doses with the 95th percentile prediction interval is ±0.65 mJ/cm^2, or ± 6.5 percent relative to the average dose. For 2 log inactivation, the absolute variability is less than that with MS2 phage and the relative variability is, for all intents and purposes, the same as MS2 phage. This observation should provide a high degree of confidence in the quality of the T1UV phage UV dose-response data obtained from GAP.

Comparing figures 1, 2 and 3, T7 phage appears to show a higher degree of variability compared to MS2 and T1 phage. For a log inactivation of 2 log, the range of UV doses with the 95th percentile prediction interval is ±0.98 mJ/cm^2, or ± 31 percent relative to the average dose. However, 2 log inactivation with T7 phage corresponds to an average UV dose of 3.18 mJ/cm^2, a relatively low UV dose value typically below the validated range with many UV reactors. At 3 log inactivation, typical of values measured with biodosimetry, the range of UV doses with the 95th percentile prediction interval is ±0.84 mJ/cm^2, or ± 15 percent relative to the average dose. The analysis suggests that the variability with T7 is related to the accuracy measuring low UV doses with the collimated beam apparatus. Nevertheless, the relative variability is still comparable to the relative variability considered acceptable with the NWRI UV Guidelines.

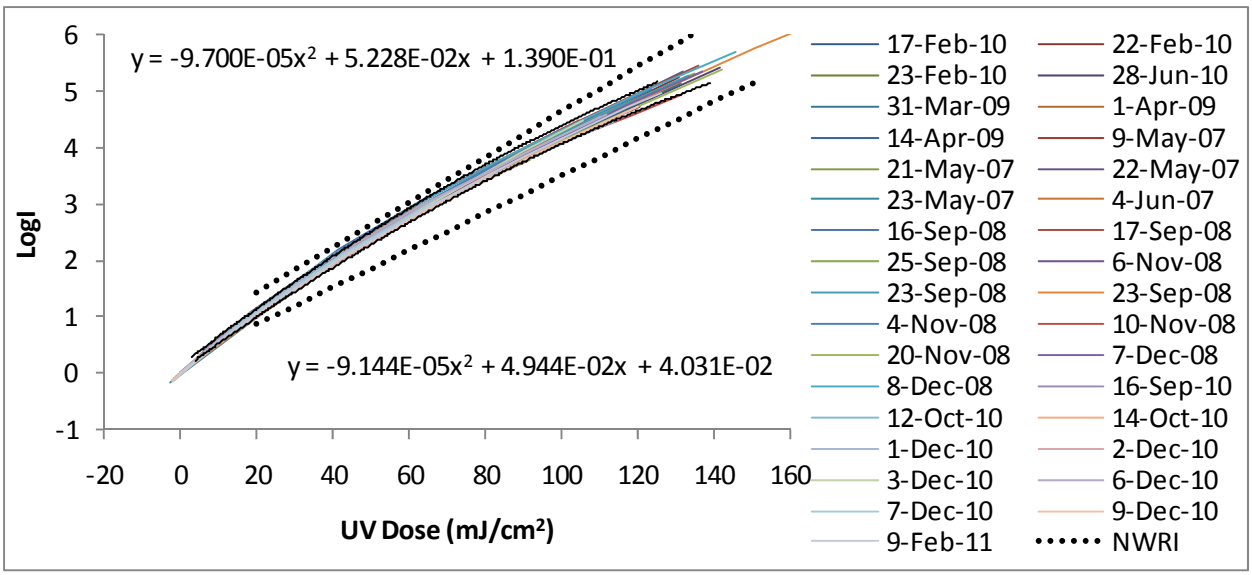

Figure 1. QA/QC Bounds for MS2 phage defined as a 95th percentile prediction interval

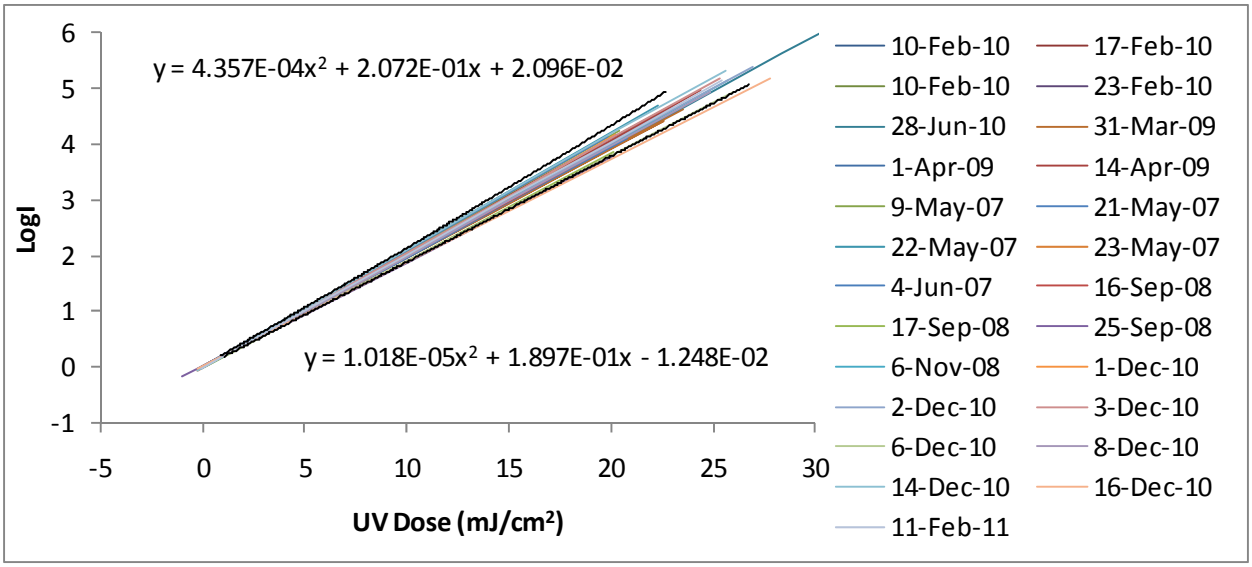

Figure 2. QA/QC Bounds for T1UV phage defined as a 95th percentile prediction interval

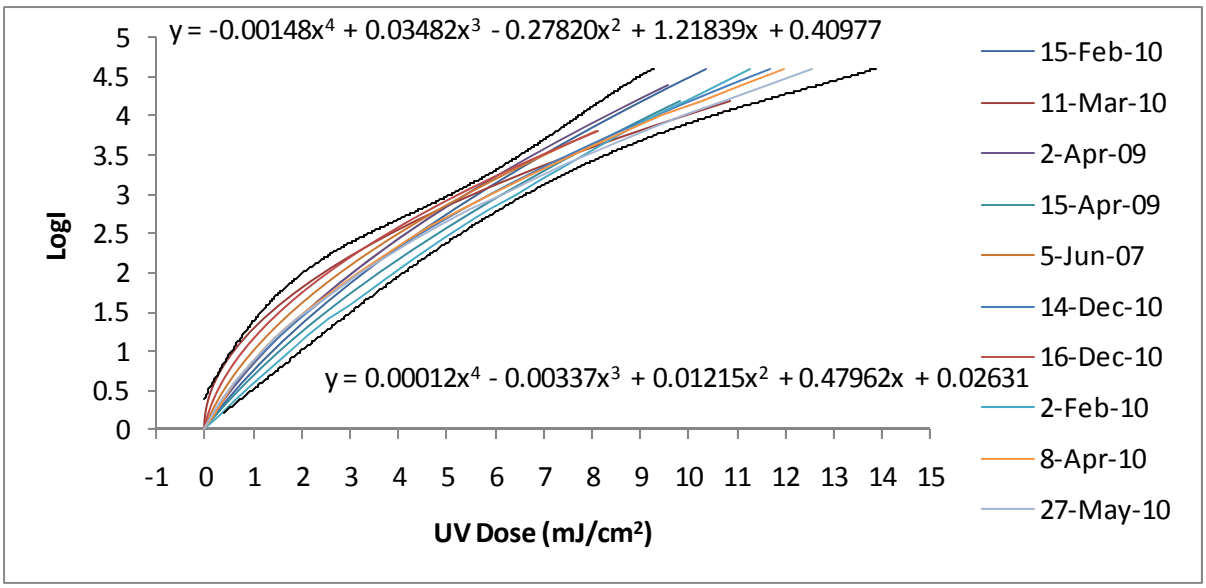

Figure 3. QA/QC Bounds for T7 phage defined as a 95th percentile prediction interval

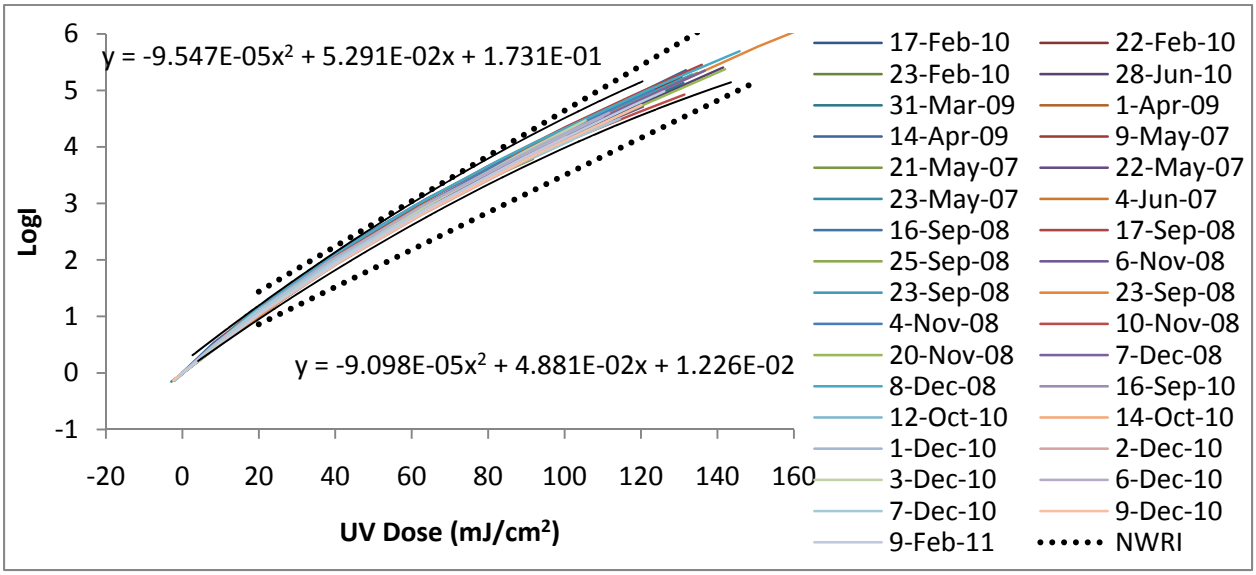

Figure 4. QA/QC Bounds for MS2 phage defined as a 99.7th percentile prediction interval

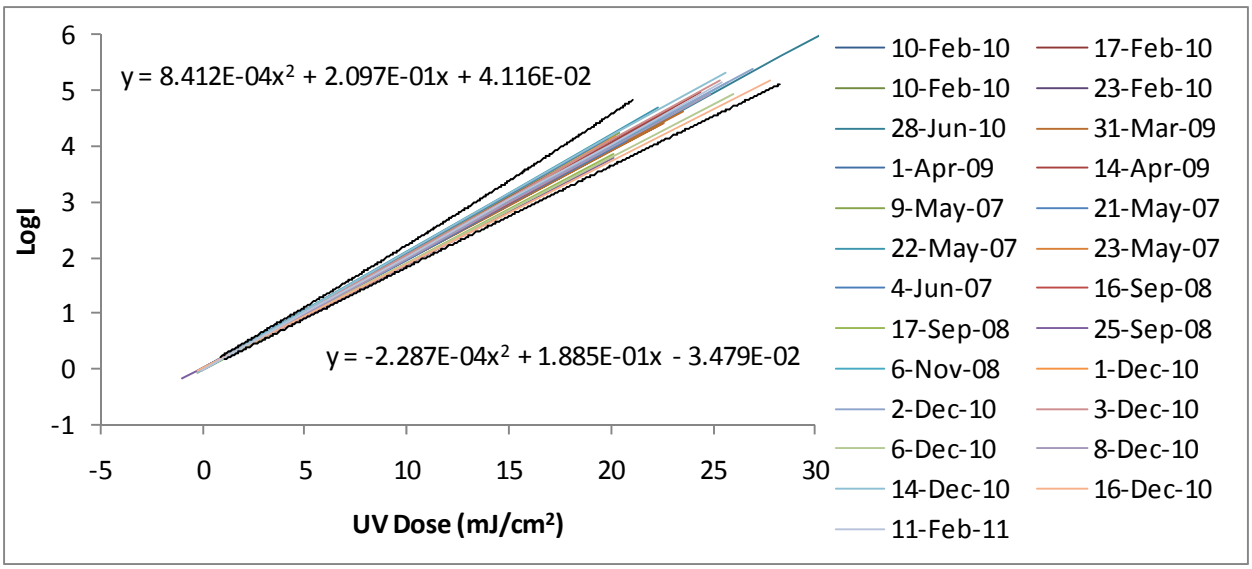

Figure 5. QA/QC Bounds for T1UV phage defined as a 99.7th percentile prediction interval

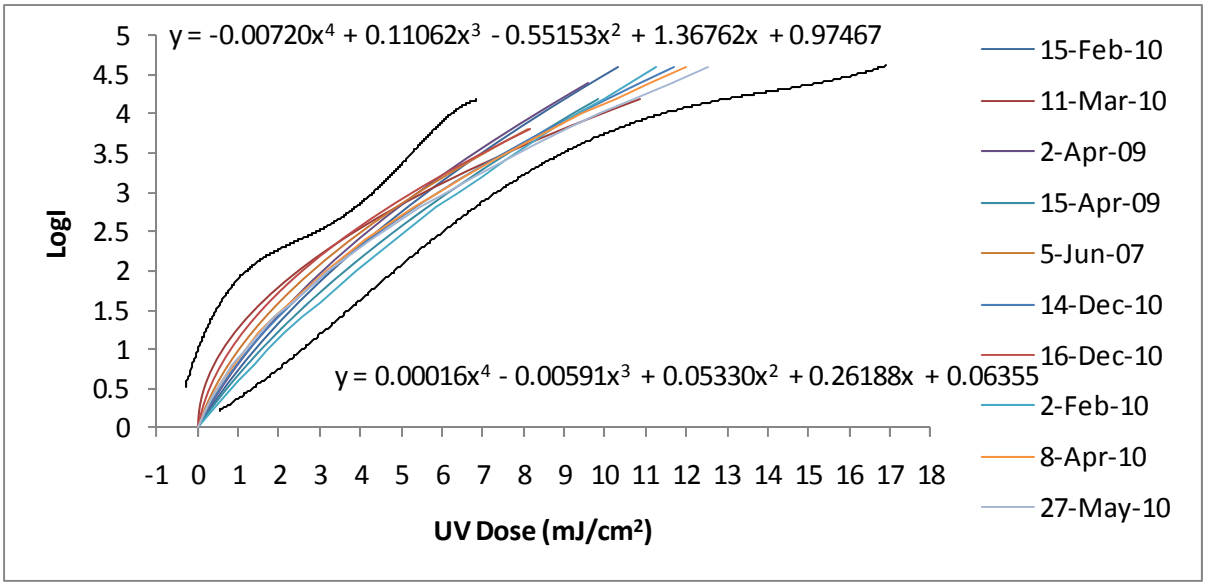

Figure 6. QA/QC Bounds for T7 phage defined as a 99.7th percentile prediction interval

Appendix I

CALCULATING THE UNCERTAINTY OF THE UV DOSE RESPONSE FIT

During UV validation, the UV dose-response of the test microorganisms, measured in the laboratory using a collimated beam apparatus, is fitted using an equation that predicts the UV dose as a function of the log inactivation. That equation is used to relate the log inactivation measured through the UV reactor to a Reduction Equivalent Dose (RED). Appendix C of the UVDGM describes the measurement of the UV dose-response and the analysis used to develop the fit to the UV dose-response data. Section C.4 of the UVDGM states that the uncertainty of the fit to the UV dose-response data, referred to as U_{DR}, should be determined as a 95th percentile confidence interval and incorporated into the validation factor used to define inactivation credit by the UV reactor.

Section C.4 states that the uncertainty of the UV dose-response fit can be conservatively estimated using:

$$U_{DR} = \frac{t \times SD}{D_{CB}} \times 100\%$$

where:

U_{DR} is the uncertainty of the UV dose-response fit,

D_{CB} is the UV dose delivered by the collimated beam,

SD is the standard deviation of the differences between the UV dose values predicted by the equation used to fit the UV dose-response and the UV dose measured with the collimated beam apparatus, and

t is a t-statistic for a 95th percent confidence interval and degrees of freedom defined as the number of measured data points used to define the UV dose-response.

With this conservative approach, the UVDGM states that the uncertainty of the UV dose-response fit should be incorporated into the validation factor if the value exceeds 30 percent.

The UVDGM also states that the uncertainty can be calculated using standard statistical approaches. If these approaches are used, the UVDGM states that the uncertainty of the UV dose-response fit should be incorporated into the validation factor if the value exceeds 15 percent. The UVDGM does not provide an approach for calculating U_{DR} using standard statistical approaches. During the development of the UVDGM, there was concern that including such approaches would make the document too complex for many practitioners.

This document describes an approach for determining the uncertainty of the fit to the UV dose-response using standard statistical approaches. This approach was used with this validation to calculate U_{DR}.

Analysis of UV Dose-Response Data

The UV dose-response of the test microbe is measured using a collimated beam apparatus. The collimated beam apparatus is used to irradiate a fully mixed sample contained within a Petri dish using UV light. Section C.2.4 of the UVDGM provides an equation for calculating the UV dose with each irradiation as:

$$D_{CB} = E_s \times P_f \times (1 - R) \times \frac{L}{d + L} \times \frac{\left(1 - 10^{-A_{254} \times d}\right)}{A_{254} \times d \times ln(10)}$$

where:

E_s is the UV irradiance measured at the sample surface using a radiometer,

P_f is the Petri factor (a factor that accounts for the non-uniformity of the UV intensity across the sample surface),

R is the reflectance of UV light at the air-water interface,

L is the distance from the lamp centerline to the sample surface,

d is the sample depth,

A_{254} is the UV absorbance at 254 nm (Base 10) of the water sample, and

t is the exposure time.

The uncertainty of the calculated UV dose is related to the uncertainty of the equation terms, which include bias and experimental error. The main source of bias error is the accuracy of the radiometer used to measure the UV irradiance. Typically, the radiometer reads high or low and that error impacts the measured UV dose the same amount with each irradiation. The second source of bias error is the accuracy measuring the UVA of the water sample, which also may read high or low. The experimental error is related to the repeatability measuring the suspension depth, exposure time, and UV absorbance. These errors are expected to vary with each exposure.

Following each exposure, the microbial laboratory measures the concentration of the test microbe in the water sample. The results are used to develop a plot of the log concentration (log N) as a function of UV dose. Figure J.1 shows an example of this plot. The relation in Figure J.1 is fitted using a quadratic equation.

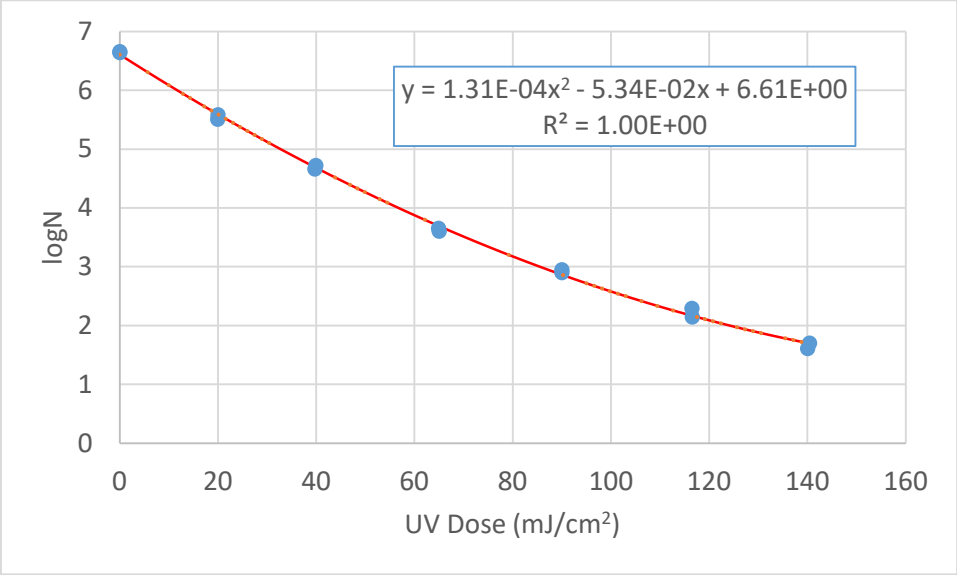

Figure J.1 Example Plot of Log N vs UV dose

The UVDGM states that the log inactivation with each irradiation is calculated using:

$$\log I = logN_0 - logN$$

where log N_0 is the log concentration with zero UV dose. The UVDGM recommends determining the value of log N_0 using a fit to the relation between log N and UV dose, For example, with Figure J.1, the value of log N_0 would be 6.61 log. As an alternate, the value of log N_0 can be calculated as the average value measured with replicate measurements of the concentration with zero UV dose. Which approach is better will depend on the quality of the dataset, with the best approach will give the most accurate estimate of log N_0. With this validation, the value of log N_0 is calculated as the average of replicate measurements because the polynomial fit to the UV dose-response data gave biased estimates of log N_0.

Figure J.2 provides the UV dose-response expressed as UV dose as a function of log i. The UVDGM states that the UV dose response data is fitted using a polynomial equation that predicts UV dose as a function of log i using statistically significant terms. Typically, the intercept of the polynomial equation is not significant, and the equation used to fit the data is forced through the origin. The order of the polynomial depends on the shape of the UV dose response. With a linear dose-response, the data is fitted using:

$$\mathrm{D} = A \times logI$$

where A is a constant obtained from regression analysis. However, if the UV dose-response shows curvature, the data may be fitted with a quadratic function:

$$\mathrm{D} = A \times logI + B \times logI^2$$

or a higher order function such as:

$$\mathrm{D} = A \times logI + B \times logI^2 + C \times logI^3$$

where A through C are constants. With the regression analysis, the p-statistics for the constants must be statistically significant (i.e., p-statistic < 0.05). If one or more terms are not statistically significant, the one with the highest p-statistic should be removed from the equation and the analysis repeated until all terms are significant.

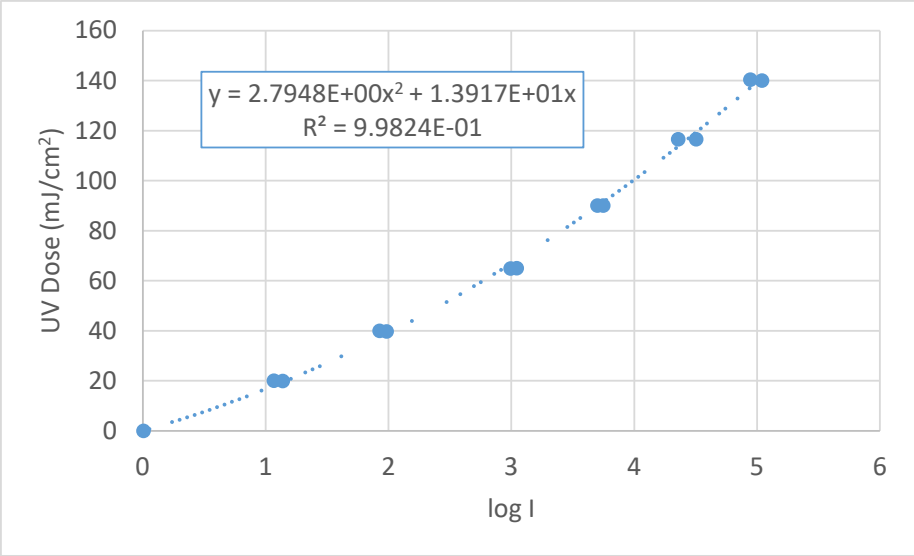

Figure J.2 UV Dose-Response Expressed as UV Dose versus log i

Uncertainty of the UV Dose Response Fit

The uncertainty of the UV dose-response fit arises from two sources. Uncertainty occurs because the value of log N_0 is estimated from the UV dose-response data. Any error in the estimate of log N_0 impacts the calculated log inactivation. Second, there is uncertainty occurs because of the regression analysis used to define the fit. The total uncertainty in log units is calculated as:

$$U_{DR} = \sqrt{U_{Zero}^2 + U_{LR}^2}$$

where U_{Zero} is the uncertainty of the UV dose-response caused by the estimate of N_0 and U_{LR} is the uncertainty of the linear regression analysis used to define the fit.

The following sections describe how each of these terms is calculated.

Uncertainty Related to the Estimate of log N_0

If the value of log N_0 is estimated using a fit to the relation of log N as a function of UV dose, the uncertainty of the estimate is calculated using:

$$U_{logN0} = \frac{t \times SE}{\sqrt{n}}$$

where

SE is the standard error of the fit of log N as a function of UV dose,

t is a t-statistic for a 95th percent confidence interval and degrees of freedom equal to n-p-1 where n the number of measured data points used to define the UV dose-response and p is the number of constants determined using the regression analysis.

If the value of log N_0 is estimated as the average of replicate measurements of the log concentration with zero dose, the uncertainty of the estimate is calculated using:

$$U_{logN0} = \frac{t \times SD}{\sqrt{n}}$$

where

SD is the standard deviation of the replicate measurements of log N_0,

t is a t-statistic for a 95th percent confidence interval and degrees of freedom equal to n-1,

n is the number of data replicate measurements used to calculate the average.

With this work, log N_0 was estimated as the average of the six replicate measurements with zero dose (i.e., n= 6).

The impact of the uncertainty of log N_0 on the UV dose-response is estimated using the following steps:

1. Fit the relation between log N and UV dose.
2. Use the fit from Step 1 to predict the log N at each measured UV dose.
3. Calculate log N_0, either using the fit from Step 1 or as the average of the replicate measurements of log N with zero dose.
4. Calculate the uncertainty of log N_0.
5. For each irradiation, calculate log i using the log N_0 value from Step 3 minus the measured value of log N.
6. Fit the relation of UV dose versus log i from Step 5.
7. Define a new value of log N_0 as the value from Step 3 minus the uncertainty from Step 4.
8. For each irradiation, calculate the log i as the log N_0 value from Step 7 minus the log N predicted using the equation from Step 2.
9. Fit the relation of UV dose versus log i from Step 8.
10. For a given log i of interest, the uncertainty in the predicted UV dose is defined as the difference in the UV dose values predicted for that log i using the equations developed from Steps 6 and 9.

Example Calculation.

Table J.1 gives a UV dose-response data set. The irradiations were done in duplicate and each irradiated sample was assayed in triplicate. Log N_0 was calculated using the 6 replicate counts at zero UV dose as 6.6468 log. The uncertainty of log N_0 for a 95th percent confidence interval was calculated as ± 0.0418 log.

Column 5 of Table J.1 gives the log N calculated as the average of the measured counts for each UV dose. Column 6 gives the log N predicted using the fit of the measured log N versus UV dose.

Column 7 gives the log inactivation calculated using the measured log N values and log N_0 set to 6.6468 log.

Column 8 gives the log inactivation calculated using the predicted values from Step 5 and log N_0 set to 6.6468 - 0.0418 = 6.6065 log.

Table J.1 Example UV Dose-Response Data and Analysis

1	2	3	4	5	6	7	8
UV Dose	**Counts$_a$**	**Counts$_b$**	**Counts$_c$**	**log N**	**Pred log N**	**log i**	**log i'**

					Step 2	Step 5	Step 8
0.00	5050000.0	4350000.0	4150000.0	6.65	-	-0.0065	0.0000
19.96	360000.0	365000.0	245000.0	5.51	5.6151	1.1387	0.9913
39.75	44000.0	46500.0	47500.0	4.66	4.6990	1.9856	1.9075
64.88	6050.0	4000.0	3500.0	3.65	3.6903	2.9935	2.9161
90.03	870.0	980.0	810.0	2.95	2.8549	3.7006	3.7515
116.55	131.0	151.0	136.0	2.14	2.1621	4.5043	4.4443
140.07	38.0	47.0	36.5	1.61	1.7094	5.0409	4.8970
0.00	4150000.0	4900000.0	4100000.0	6.64	-	0.0065	0.0000
20.04	385000.0	385000.0	375000.0	5.58	5.6113	1.0666	0.9952
39.91	55500.0	52500.0	49500.0	4.72	4.6917	1.9282	1.9148
65.06	4250.0	4000.0	3800.0	3.60	3.6839	3.0444	2.9226
90.02	1000.0	710.0	670.0	2.90	2.8551	3.7489	3.7514
116.52	223.0	180.0	182.0	2.29	2.1627	4.3583	4.4437
140.41	55.0	47.0	49.0	1.70	1.7039	4.9465	4.9025

The fit of UV dose versus log inactivation from column 6 gives:

$$UV\ dose = 13.917 \times \log I + 2.7948 \times \log I^2$$

The fit of UV dose versus log inactivation from column 8 gives:

$$UV\ dose = 14.603 \times \log I + 2.7202 \times \log I^2$$

The difference between the UV dose values predicted by these two equations represents the uncertainty of the UV dose-response caused by the estimate of log N_0 (i.e., U_{zero})

Uncertainty Related to the Linear Regression Analysis

With linear regression, a dataset is fitted using:

$$y = \beta_1 + \beta_2 \times x$$

where β_1 and β_2 are the constants. If the dataset consists of n values of x, the linear regression analysis can be expressed using matrix math as:

$$\begin{bmatrix} y_1 \\ y_2 \\ . \\ . \\ . \\ y_n \end{bmatrix} = \begin{bmatrix} 1 & x_1 \\ 1 & x_2 \\ & . \\ & . \\ & . \\ 1 & x_n \end{bmatrix} \times \begin{bmatrix} \beta_1 \\ \beta_2 \end{bmatrix} + \begin{bmatrix} \epsilon_1 \\ \epsilon_2 \\ . \\ . \\ . \\ \epsilon_N \end{bmatrix}$$

or

$$\boldsymbol{Y} = \boldsymbol{X\beta} + \boldsymbol{\varepsilon}$$

where

y_1 to y_n are the y-values,

x_1 to x_n are the x-values,

ε_1 to ε_n are the difference between the measured and predicted y-values,

Y is a matrix representing the y-values

X is a matrix representing the x-values

β is a matrix representing the constants, and

ε is a matrix representing the differences

If the equation is forced through zero, the matrix math is expressed as:

$$\begin{bmatrix} y_1 \\ y_2 \\ . \\ . \\ . \\ y_n \end{bmatrix} = \begin{bmatrix} x_1 \\ x_2 \\ . \\ . \\ . \\ x_n \end{bmatrix} \times [\beta_1] + \begin{bmatrix} \epsilon_1 \\ \epsilon_2 \\ . \\ . \\ . \\ \epsilon_N \end{bmatrix}$$

With quadratic regression, a dataset is fitted using:

$$y = \beta_1 + \beta_2 \times x + \beta_3 \times x^2$$

where β_1, β_2 and β_3 are the constants. If the dataset consists of n values of x and y, the linear regression analysis can be expressed using matrix math as:

$$\begin{bmatrix} y_1 \\ y_2 \\ . \\ . \\ . \\ y_n \end{bmatrix} = \begin{bmatrix} 1 & x_1 & x_1^2 \\ 1 & x_2 & x_2^2 \\ & . & \\ & . & \\ & . & \\ 1 & x_n & x_n^2 \end{bmatrix} \times \begin{bmatrix} \beta_1 \\ \beta_2 \\ \beta_3 \end{bmatrix} + \begin{bmatrix} \epsilon_1 \\ \epsilon_2 \\ . \\ . \\ . \\ \epsilon_N \end{bmatrix}$$

which can also be expressed as:

$$\boldsymbol{Y} = \boldsymbol{X\beta} + \boldsymbol{\varepsilon}$$

If the quadratic equation is forced through zero, the matrix math is expressed as:

$$\begin{bmatrix} y_1 \\ y_2 \\ . \\ . \\ . \\ y_n \end{bmatrix} = \begin{bmatrix} x_1 & x_1^2 \\ x_2 & x_2^2 \\ & . \\ & . \\ & . \\ x_n & x_n^2 \end{bmatrix} \times \begin{bmatrix} \beta_2 \\ \beta_3 \end{bmatrix} + \begin{bmatrix} \epsilon_1 \\ \epsilon_2 \\ . \\ . \\ . \\ \epsilon_N \end{bmatrix}$$

In a likewise fashion, with a third order polynomial regression, a dataset is fitted using:

$$y = \beta_1 + \beta_2 \times x + \beta_3 \times x^2 + \beta_4 \times x^3$$

where β_1, β_2 and β_3 are the constants. If the dataset consists of n values of x and y, the linear regression analysis can be expressed using matrix math as:

$$\begin{bmatrix} y_1 \\ y_2 \\ . \\ . \\ . \\ y_n \end{bmatrix} = \begin{bmatrix} 1 & x_1 & x_1^2 & x_1^3 \\ 1 & x_2 & x_2^2 & x_2^3 \\ & & . & \\ & & . & \\ & & . & \\ 1 & x_n & x_n^2 & x_n^3 \end{bmatrix} \times \begin{bmatrix} \beta_1 \\ \beta_2 \\ \beta_3 \\ \beta_4 \end{bmatrix} + \begin{bmatrix} \epsilon_1 \\ \epsilon_2 \\ . \\ . \\ . \\ \epsilon_N \end{bmatrix}$$

If the third order polynomial equation is forced through zero, the matrix math is expressed as:

$$\begin{bmatrix} y_1 \\ y_2 \\ . \\ . \\ . \\ y_n \end{bmatrix} = \begin{bmatrix} x_1 & x_1^2 & x_1^3 \\ x_2 & x_2^2 & x_2^3 \\ & . & \\ & . & \\ & . & \\ x_n & x_n^2 & x_n^3 \end{bmatrix} \times \begin{bmatrix} \beta_2 \\ \beta_3 \\ \beta_4 \end{bmatrix} + \begin{bmatrix} \epsilon_1 \\ \epsilon_2 \\ . \\ . \\ . \\ \epsilon_N \end{bmatrix}$$

With UV dose response data shown in Figure J.1, the data is fit using:

$$logN = A + B \times D + C \times D^2$$

where A, B, and C are constants. In this case, matrix **Y** is composed of the measured values of log N, the matrix **X** is composed of the measured values of UV dose and UV dose squared, and the matrix **β** is composed of the constants A, B, and C.

With the UV dose-response shown in Figure J.2, the data is fit using:

$$D = A \times logI + B \times logI^2$$

where A and B are constants. In this case, matrix **Y** is composed of the measured values of UV dose, the matrix **X** is composed of the measured values of log i and log i squared, and the matrix **β** is composed of the constants A and B.

According to Draper and Smith (183), the confidence interval for the predicted value with a multivariate linear equation fitted to a dataset is calculated using:

$$CI_{Fit} = t \times \sqrt{\boldsymbol{X_0'(X'X)^{-1}X_0}} \times \sqrt{\frac{\boldsymbol{Y'Y - Y'X(X'X)^{-1}X'Y}}{n - p - 1}}$$

where:

Y is a matrix representing the y-values,

Y' is the transpose of matrix **Y**,

Y'Y is the matrix multiplication of **Y'** and **Y**,

X is a matrix representing the x-values,

X' is the transpose of matrix **X**,

(X'X)$^{-1}$ is the inverse matrix of the matrix multiplication of **X'** and **X**,

n is the number of data points with the dataset,

p is the number of constants with the equation, and

t is a t-statistic for a 95th percent confidence defined for n-p-1 degrees of freedom.

Furthermore, $\mathbf{X_0}$ is a matrix representing the X values for which the confidence interval is being determined, and $\mathbf{X_0}'$ would be defined as the transform of matrix $\mathbf{X_0}$. With the data in Figure J.1 fitted using a quadratic equation, the matrix $\mathbf{X_0}$ at a UV dose of 20 mJ/cm^2 would be defined as:

$$\boldsymbol{X_0} = [1 \;\; x \;\; x^2] = [1 \;\; 20 \;\; 400]$$

With the data in Figure J.2 fitted using a quadratic equation forced through zero, the matrix $\mathbf{X_0}$ at a log inactivation of 3 log would be defined as:

$$\boldsymbol{X_0} = [x \;\; x^2] = [3 \;\; 9]$$

If the data in Figure J.2 was fit using a 3rd order polynomial forced through zero, the matrix $\mathbf{X_0}$ at a log inactivation of 3 log would be defined as:

$$\boldsymbol{X_0} = [x \;\; x^2 \;\; x^3] = [3 \;\; 9 \;\; 27]$$

Example Calculation

With Table J.1, the matrices **X** and **Y** are defined respectively as:

$$\begin{bmatrix} 0.00 \\ 19.96 \\ 39.75 \\ 64.88 \\ 90.03 \\ 116.55 \\ 140.07 \\ 0 \\ 20.04 \\ 39.91 \\ 65.06 \\ 90.02 \\ 116.52 \\ 140.41 \end{bmatrix} \quad \text{and} \quad \begin{bmatrix} -0.0065 & 0.0000 \\ 1.1387 & 1.2965 \\ 1.9856 & 3.9424 \\ 2.9935 & 8.9610 \\ 3.7006 & 13.694 \\ 4.5043 & 20.288 \\ 5.0409 & 25.410 \\ 0.0065 & 0.0000 \\ 1.0666 & 1.1377 \\ 1.9282 & 3.7178 \\ 3.0444 & 9.2686 \\ 3.7489 & 14.054 \\ 4.3583 & 18.995 \\ 4.9465 & 24.467 \end{bmatrix}$$

The matrix math was done using functions within Microsoft Excel.

The term $\sqrt{\frac{\boldsymbol{Y}'\boldsymbol{Y} - \boldsymbol{Y}'\boldsymbol{X}(\boldsymbol{X}'\boldsymbol{X})^{-1}\boldsymbol{X}'\boldsymbol{Y}}{n-p-1}}$ represents the standard error of the fit and has a value of 0.03672.

For each UV dose, Table J.2 tabulated the uncertainty related to the estimate of log N_0, the uncertainty related to the linear regression analysis, and the uncertainty of the UV dose response. Figure J.3 shows a plot of the uncertainties in units of mJ/cm^2 expressed as a function of log inactivation. Figure J.4 shows the total uncertainty in units of percent expressed as a function of log inactivation.

Table J.2 Example UV Dose-Response Uncertainty

log i	UV Dose (mJ/cm^2)	Uncertainty Related to log N_0 (mJ/cm^2)	Uncertainty Related to Regression (mJ/cm^2)	Total Uncertainty, U_{DR} (mJ/cm^2)	Total Uncertainty, U_{DR} (%)
0.10	1.42	0.06793	0.1819	0.19417	13.6777
0.15	2.15	0.10133	0.26964	0.28805	13.3952
0.20	2.90	0.13437	0.35523	0.3798	13.1184
0.30	4.43	0.19931	0.52002	0.5569	12.581
0.40	6.01	0.26276	0.67627	0.72552	12.0642
0.51	7.87	0.33267	0.84259	0.90589	11.5037
0.60	9.36	0.38519	0.96327	1.03743	11.0882
0.70	11.11	0.44416	1.09407	1.18079	10.6271
0.80	12.92	0.50164	1.21644	1.31581	10.1827
1.00	16.71	0.61213	1.43601	1.56104	9.34112
1.25	21.76	0.74184	1.66373	1.82163	8.37041
1.50	27.16	0.86222	1.84024	2.03222	7.48149
2.00	39.01	1.075	2.04438	2.30979	5.92064
3.00	66.90	1.38862	1.93227	2.37948	3.55661
4.00	100.38	1.55299	1.6592	2.2726	2.26392

Figure J.3 **Uncertainty of the UV Dose Response in Units of mJ/cm^2. The UV dose-response was modeled using a quadratic equation forced through zero.**

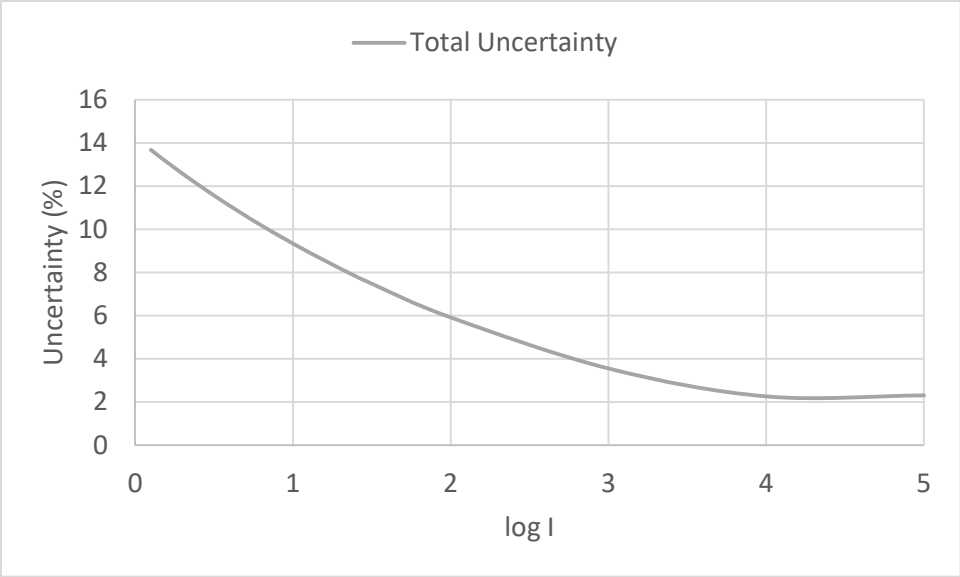

Figure J.4 Uncertainty of the UV Dose Response as a Percentage of the UV Dose. The UV dose response was modeled using a quadratic equation forced through zero.

Comparison of UDR with Linear and Quadratic UV Dose-Response

For a linear UV dose-response curve, Figure J.5 shows the uncertainty related to the estimate of log N_0, the uncertainty related to the linear regression analysis, and the uncertainty of the UV dose response. Figure J.6 shows the total uncertainty in units of percent expressed as a function of log inactivation.

Comparing Figures J.5 and J.6 to Figures J.3 and J.4, it is apparent that the uncertainty depends on the function used to fit the dose-response data. With a linear function forced through zero, the uncertainty in units of mJ/cm^2 increases linearly with log inactivation and is a fixed percentage of the UV dose. In contrast, with a quadratic function forced through zero, the uncertainty in units of mJ/cm^2 shows a non-linear increase with log inactivation, and the uncertainty as a percentage of UV dose decrease in value to a minimum beyond which it increases as log inactivation increases. However, with all of these calculations, the uncertainty at zero log inactivation is zero.

Figure J.5 **Uncertainty of the UV Dose Response in Units of mJ/cm². The UV dose-response was modeled using a linear equation forced through zero.**

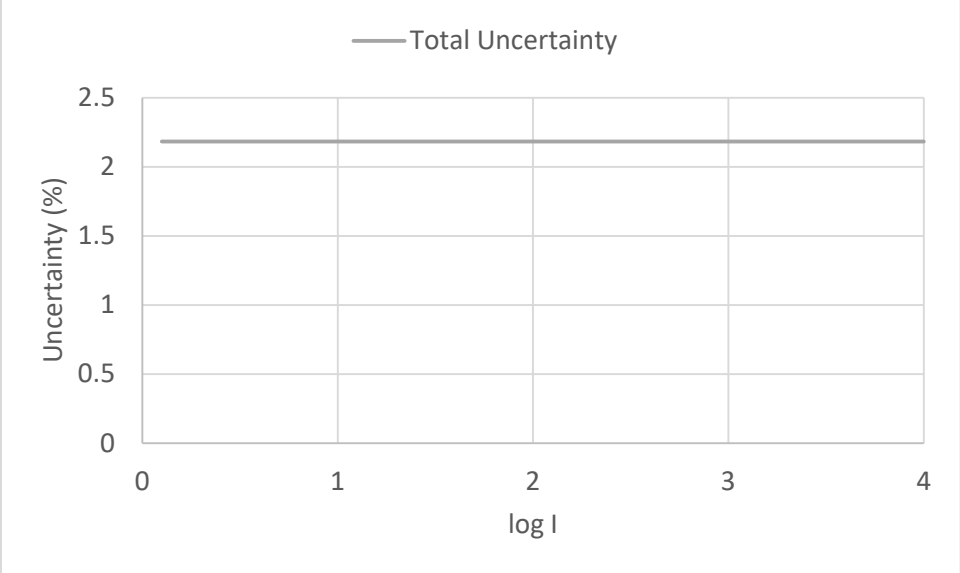

Figure J.6 **Uncertainty of the UV Dose Response as a Percentage of the UV Dose. The UV dose-response was modeled using a linear equation forced through zero.**

Proof of Concept

A Monte Carlo simulation was used to simulate the measurement of 563 UV dose response curves. The simulation assumed a true UV dose-response of:

$$\log N = 6.483 - 0.05451 \times D + 0.000137 \times D^2$$

This UV dose-response represents the fitted dose response using the data from the example above. The simulation assumed the measured values logN are normally distributed about the true value of log N. The simulation used standard deviation of 0.041857 log for the simulated value of logN at zero UV dose and a standard deviation of 0.073478, values that matched the standard deviation of the replicates at zero dose and the standard error of the fit to the data given in the example. Figure J.7 shows five of the 563 simulated U dose-response curves.

Each simulated dose-response curve was analyzed to develop an equation predicting UV dose as a function of log i. The equations were used to predict UV dose values at various log inactivation ranging from 0 to 5 log. At each log inactivation, the average and standard deviation of the UV dose values was calculated. The standard deviation was used to calculate a 95th percentile predictions interval, which in turn was used to estimate the value of U_{DR} as a percentage of the UV dose. Figure J.8 compares the UDR calculated using the Monte Carlo simulation to that determined for the example above using the equations given in this document. As shown, the equations presented in this document predict the UDR determined using the Monte Carlo approach within 1 percent, providing an independent validation of these equations.

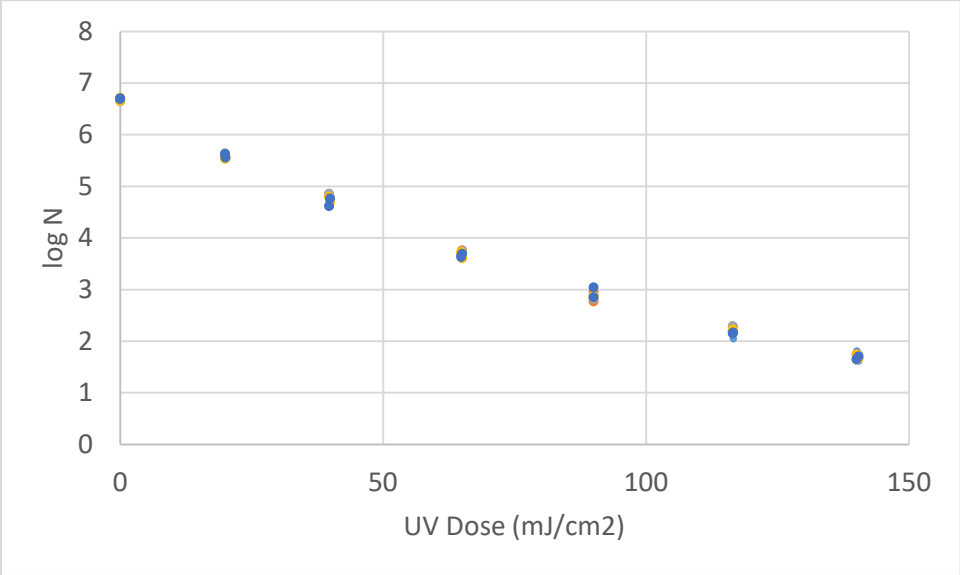

Figure J.7 Monte Carlo Simulation of UV Dose-Response Data

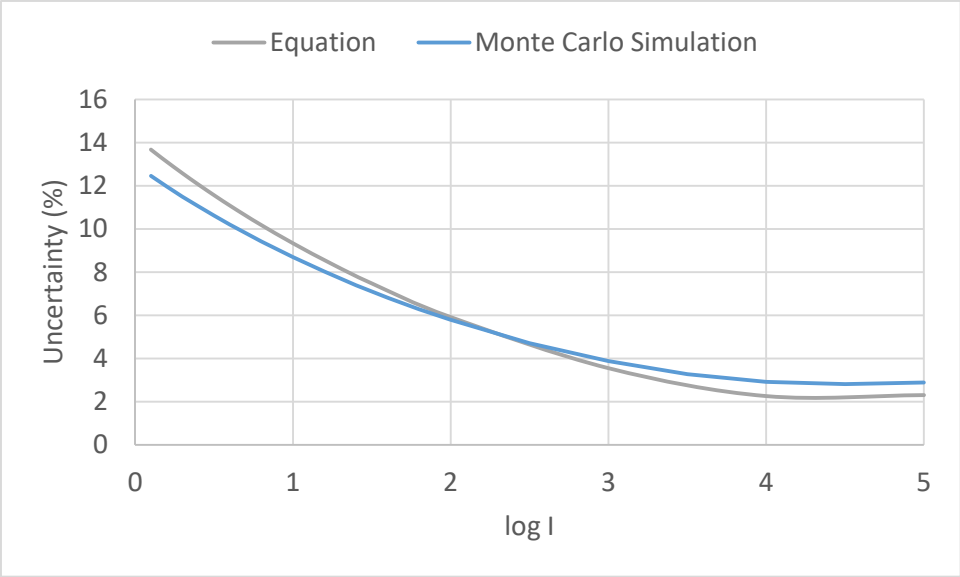

Figure J.8 **Comparison of U_{DR} for the Example UV Dose Response Calculated Using the Equations Given in this Document to Values Determined Using Monte Carlo Simulation.**

APPENDIX XI

SUMMIT CLUB **Date: August 2022**
NORTH CASTLE, NEW YORK

CALCULATION OF SODIUM HYPOCHLORITE INJECTION RATES FOR WELL 1, WELL 3 AND WELL 6A
Calculated by: Michael Shortell
Reviewed by: Steve Rupar

PROBLEM STATEMENT
Calculate the sodium hypochlorite injection rates and the metering pump settings.

GENERAL EQUATION
$C_{cl2} \times V_{cl2} + C_{dil} \times V_{dil} = C_{crock} \times V_{crock}$

where

Ccl2 = sodium hypochlorite base product concentration (12.5%)
Vcl2 = volume of sodium hypochlorite (12.5%)
Cdil = dilution water sodium hypochlorite concentration
Vdil = volume of dilution water
C crock = sodium hypochlorite solution concentration in day tank
V crock = volume of sodium hypochlorite solution in day tank

metering pump feed rate = $\frac{\text{Well Pump Output x Dosage x 1,440 x Treated Water Concentration}}{\text{Solution Strength - Treated Water Concentration}}$

ASSUMPTIONS
1. A diluted 12.5% sodium hypochlorite source product will be used for disinfection.
2. The proposed chlorine dosage at the compliance sampling point in the system will be 1.0 mg/l.
3. The calculation is based on the peak well pump rate from Well 1, Well 3 and Well 6A being 50 gpm, 50 gpm and 65 gpm, respectively.
5. A 55-gallon chemical solution tank will be used to store the sodium hypochlorite solution.
6. The metering pumps are equipped with an adjustable dial that ranges from 0 to 10 with each incremental setting equating to 10% of the output.

CALCULATION

Ccl2 =	125000	mg/l
Cdil =	1.00	mg/l
Vcl2 =	10	gal
Vdil =	44	gal
V crock =	54	gal
C crock =	23149	mg/l

Sodium hypochlorite solution strength in day tank = 2.31 %

Well	Well Pump Output (gpm)	TTWC (mg/l)	Solution Strength (%)	Metering Pump Feed Rate	
				gpd	gph
Well 1	50	1	2.31	3.1104	0.1296
Well 3	50	1	2.31	3.1104	0.1296
Well 6A	65	1	2.31	4.0436	0.1685

TTWC: Target treated water concentration

Metering Pump ID	Maximum Metering Pump Output (GPD)	Pump Setting	Output (gpd)	Output (gph)
Well 1	5	6.22	3.1104	0.1296
Well 3	5	6.22	3.1104	0.1296
Well 6A	10	4.04	4.0436	0.1685

CONCLUSION

A 2.31% sodium hypochlorite solution will be injected at a rate of approximately 6.2 gpd, 6.2 gpd and 4.0 gpd for Well 1, Well 3 and Well 6A, respectively. The metering pump controls for Well 1, Well 3 and Well 6A will be set at 3.1, 3.1 and 5.0, respectively.

APPENDIX XII

NATIONAL PIPE & PLASTICS, INC.
American-made products since 1970

DURA-BLUE®

Corporate Offices
3421 Old Vestal Road, Vestal, NY 13850
800.836.4350 607.729.9381 Fax: 607.729.6130
www.nationalpipe.com

PVC MUNICIPAL WATER TRANSMISSION PIPE

Scope: This submittal designates the general requirements for **Unplasticized Polyvinyl Chloride Municipal Water Pipe from compound with a cell classification 12454, as defined in ASTM Standard D-1784.**

Pipe: All pipe shall meet the requirements of **AWWA C-905 Standard**, for potable water transmission mains and for fire protection systems. Our pipe meets National Sanitation Foundation Standard #61 for plastic piping system components and related materials. The gasketed joint shall meet the requirements of ASTM D-3139, and the joint gasket shall conform to ASTM F-477. Pipe shall be furnished in laying lengths of 20' (+/- 1"). Other lengths may be available upon request.

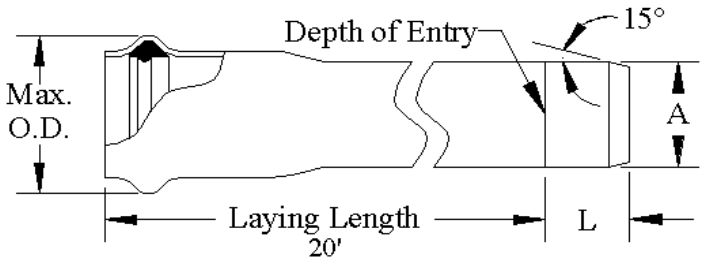

This product is manufactured in alternative colors for specific applications. **Purple** for Reclaimed Water application. Print legend will include the marking "Reclaimed Water". **Green** for Sanitary Sewer Force Main applications. Print legend will include "Force Main". Although manufactured in accordance with the same industrial standards and testing requirements, these products do not bear the NSF or CSA Listing Mark as they are used for different applications.

C-905 Water Pipe Size and Dimensions

Nominal Size (in.)	Metric (m.m.)	Dimension Ratio (DR)	Pressure Rating (PSI)	"A" Average (O.D.) Outside Diameter	Minimum Wall	Max. O.D. Reference	"L" Dimension Reference
14	350	25	165	15.300	.612	18.750	8.750
		21	200		.729		
		18 **	235		.850		
16	400	25 *	165	17.400	.696	21.000	10.000
		21	200		.829		
		18 * **	235		.967		
18	450	25	165	19.500	.780	24.000	10.750
		21	200		.929		
		18	235		1.083		
20	500	25	165	21.600	.864	26.000	10.500
		18	235		1.200		
24	600	32.5	125	25.800	0.794	31.000	12.000
		25	165		1.032		
		18	235		1.433		

* CSA Certified.

** BNQ Certified.

SUMMIT CLUB **Date: August 2022**
NORTH CASTLE, NEW YORK

CALCULATION OF THE CONTACT TIME FOR WELL 1, WELL 3 AND WELL 6A

Calculated by: Michael Shortell
Reviewed by: Steve Rupar

PROBLEM STATEMENT

Calculate the CT of the water supply system needed to provide 4-log inactivation of viruses.

GENERAL EQUATION

$$T = \frac{(0.785\ d^2) \times (L) \times (7.48)}{Q}$$

where

T =	contact time (minutes)
d =	pipe diameter (feet)
L =	length of pipe (feet)
Q =	maximum expected flow (gpm)
CT =	free chlorine residual (mg/l) x T (min)

ASSUMPTIONS

1. The maximum pH of the groundwater from Well 1 is 7.5.
2. The Groundwater Rule requires a CT of approximately 8 mg-min/l at 5 degrees Celsius for inactivation of viruses.
3. The maximum design flow (peak well pump output) for Well 1, Well 3 and Well 6A is 165 gpm (Well 1: 50 gpm, Well 3: 50 gpm and Well 6A: 65 gpm).
4. The baffling factor for pipe flow (plug flow) is 1.0.
5. The inner diameter of the 24-inch diameter C905 pipe is 25.80 inches (2.15 ft).
6. The minimum free residual chlorine concentration at the compliance point is 0.60 mg/l.

CALCULATION

Baffling Factor =	1	
Length of 24-inch diameter contact pipe =	82	feet
Diameter of contact pipe =	2.15	feet
Peak Flow =	165	gpm
Minimum free chlorine residual at Compliance Point =	0.6	mg/l

T =	13.49	minutes
CT =	8.09	mg min/l

CONCLUSION

Using 82 feet of 24-inch C905 PVC pipe with a minimum residual chlorine concentration of 0.60 mg/l will result in the CT for the water supply system being 8.09 mg-min/L, which exceeds the 8 mg-min/L requirement.

APPENDIX XIII

SUMMIT CLUB **Date: August 2022**
NORTH CASTLE, NEW YORK

CALCULATION OF TOTAL DYNAMIC HEAD - TRANSFER PUMPS (FIRE)
Calculated by: Michael Shortell
Reviewed by: Stephen Rupar

PROBLEM STATEMENT

Calculate the total dynamic head from the transfer pumps to the furthest point in the distribution system.

PROCESS DESCRIPTION

The headloss for the transfer pumps is determined by summing the losses associated with the piping losses and lift between the transfer pumps in the proposed treatment building to furthest point in the distribution system. The design pumping rate for the transfer pumps is 1,000 gpm.

ASSUMPTIONS

1. The design pumping rate will be the output of two transfer pumps (1,000 gpm).
2. The first floor elevation of the proposed treatment building will be 562 ft msl and the elevation of the suction for the transfer pump is 564 ft msl.
3. The elevation at the highest point in the distribution system is 681 ft msl.
4. Eight inch ductile iron pipe will be used is used for the distribution system.
5. The design pumping rate through the 8-inch ductile iron pipe will be 1,000 gpm.
6. The inside diameter of the 8-inch ductile iron pipe is 8.38 inches.
7. The minimum pressure at the highest point in the distribution system is 20 psi.

kinematic viscosity of standard water, KV =	1.41E-05	ft^2/min		
specific roughness of HDPE, e1 =	0.000005			
acceleration due to gravity, g =	32.2	ft/sec^2		
elevation at the highest point in the system =	681	ft msl		
Transfer pump suction elevation =	564	ft msl		
Hazen Williams Roughness Coefficient (Plastic), C =	130			
8-inch DI pipe length, L1 =	2500	ft		
8-inch DI pipe inside diameter, d1 =	8.38	in	Relative Roughness =	0.00001
Flowrate. Q1 =	1000	gpm		
1 gpm =	0.00233	ft^3/sec		

CALCULATION

1. Flow Velocity - Continuity Equation

$$Q = V \times A$$

$$v = \frac{Q \times 0.00223}{[(3.1459/4) \times (d/12)^2]}$$

v(Q1, d1) = 6.07 ft/sec

2. Calculate the velocity head and entrance loss

$$\text{Velocity head, } VH = \frac{v^2}{2 \times g}$$

VH(v(Q1, d1) = 0.57 ft

Entrance Loss, EL = $k \times (v^2/2 \times g)$ k = 1

Entrance Loss = 0.57 ft

3. Calculate equivalent lengths

8-inch check valve =	33.00	ft
8-inch 90 degree elbow =	8.90	ft
8-inch 45 degree elbow =	6.00	ft
8-inch gate valve =	3.20	ft
Flow meter =	10.00	ft
Number of check valves =	2.00	
Number of 90 degree elbows =	8.00	
Number of 45 degree elbows =	20.00	
Number of gate valves =	4.00	
Number of flow meters =	1.00	
EQ1 (8-inch DI pipe) =	280.00	ft

4. Calculate the friction loss using the Hazen Williams Equation

$$hf = \frac{10.44 \times L \times V^{1.85}}{C^{1.85} \times d^{4.87}}$$

hf1 (8-inch DI pipe)=	40.34	ft

5. Summation of lift

Lift at Pump = Elevation at highest point in system - first floor elevation

Lift at Pump =	117.00	ft

6. Calculate total dynamic head

The total dynamic head is determined by summing all the losses associated with the operation of the pump with the total lift

Head =	158.49	ft
Minimum pressure at highest point (20 psi) =	46.20	ft
Factor of safety (10% TDH) =	20.47	ft
Total dynamic head =	225.16	ft

CONCLUSION

The total dynamic head that the transfer pump will work against is 225 feet.

SUMMIT CLUB **Date: August 2022**
NORTH CASTLE, NEW YORK

CALCULATION OF TOTAL DYNAMIC HEAD - TRANSFER PUMPS
Calculated by: Michael Shortell
Reviewed by: Stephen Rupar

PROBLEM STATEMENT

Calculate the total dynamic head from the transfer pumps to the furthest point in the distribution system.

PROCESS DESCRIPTION

The headloss for the transfer pumps is determined by summing the losses associated with the piping losses and lift between the transfer pumps in the proposed treatment building to furthest point in the distribution system. The design pumping rate for the transfer pumps is 284 gpm.

ASSUMPTIONS

1. The design pumping rate will be the output of two of the transfer pumps (284 gpm).
2. The first floor elevation of the proposed treatment building will be 562 ft msl and the elevation of the suction for the transfer pump is 564 ft msl.
3. The elevation at the highest point in the distribution system is 681 ft msl.
4. Eight inch ductile iron pipe will be used is used for the distribution system.
5. The design pumping rate through the 8-inch ductile iron pipe will be 284 gpm.
6. The inside diameter of the 8-inch ductile iron pipe is 8.38 inches.
7. The minimum pressure at the highest point in the distribution system is 35 psi.

kinematic viscosity of standard water, KV =	1.41E-05	ft^2/min		
specific roughness of HDPE, e1 =	0.000005			
acceleration due to gravity, g =	32.2	ft/sec^2		
elevation at the highest point in the system =	681	ft msl		
Transfer pump suction elevation =	564	ft msl		
Hazen Williams Roughness Coefficient (Plastic), C =	130			
8-inch DI pipe length, L1 =	2500	ft		
8-inch DI pipe inside diameter, d1 =	8.38	in	Relative Roughness =	0.00001
Flowrate. Q1 =	284	gpm		
1 gpm =	0.00233	ft^3/sec		

CALCULATION

1. Flow Velocity - Continuity Equation

$$Q = V \times A$$

$$v = \frac{Q \times 0.00223}{[(3.1459/4) \times (d/12)^2]}$$

v(Q1, d1) = 1.73 ft/sec

2. Calculate the velocity head and entrance loss

$$\text{Velocity head, } VH = \frac{v^2}{2 \times g}$$

VH(v(Q1, d1) = 0.05 ft

Entrance Loss, $EL = k \times (v^2/2 \times g)$ k = 1

Entrance Loss = 0.05 ft

3. Calculate equivalent lengths

8-inch check valve =	63.00	ft
8-inch 90 degree elbow =	8.90	ft
8-inch 45 degree elbow =	6.00	ft
86-inch gate valve =	3.20	ft
Flow meter =	10.00	ft
Number of check valves =	2.00	
Number of 90 degree elbows =	8.00	
Number of 45 degree elbows =	20.00	
Number of gate valves =	4.00	
Number of flow meters =	1.00	
EQ1 (8-inch DI pipe) =	340.00	ft

4. Calculate the friction loss using the Hazen Williams Equation

$$hf = \frac{10.44 \times L \times V^{1.85}}{C^{1.85} \times d^{4.87}}$$

hf1 (8-inch DI pipe)=	4.01	ft

5. Summation of lift

Lift at Pump = Elevation at highest point in system - first floor elevation

Lift at Pump =	117.00	ft

6. Calculate total dynamic head

The total dynamic head is determined by summing all the losses associated with the operation of the pump with the total lift

Head =	121.11	ft
Minimum pressure at highest point (35 psi) =	81.00	ft
Factor of safety (10% TDH) =	20.21	ft
Total dynamic head =	222.32	ft

CONCLUSION

The total dynamic head that the transfer pump will work against is 222 feet.

SUMMIT CLUB **Date: August 2022**
NORTH CASTLE, NEW YORK

CALCULATION OF TOTAL DYNAMIC HEAD - TRANSFER PUMPS - PEAK HOUR
Calculated by: Michael Shortell
Reviewed by: Stephen Rupar

PROBLEM STATEMENT

Calculate the total dynamic head from the transfer pumps to the furthest point in the distribution system.

PROCESS DESCRIPTION

The headloss for the transfer pumps is determined by summing the losses associated with the piping losses and lift between the transfer pumps in the proposed treatment building to furthest point in the distribution system. The design peak hour pumping rate for the transfer pumps is 227 gpm.

ASSUMPTIONS

1. The design pumping rate will be the output of two of the transfer pumps (227 gpm).
2. The first floor elevation of the proposed treatment building will be 562 ft msl and the elevation of the suction for the transfer pump is 564 ft msl.
3. The elevation at the highest point in the distribution system is 681 ft msl.
4. Eight inch ductile iron pipe will be used is used for the distribution system.
5. The design pumping rate through the 8-inch ductile iron pipe will be 227 gpm.
6. The inside diameter of the 8-inch ductile iron pipe is 8.38 inches.
7. The minimum pressure at the highest point in the distribution system is 35 psi.

kinematic viscosity of standard water, KV =	1.41E-05	ft^2/min		
specific roughness of HDPE, e1 =	0.000005			
acceleration due to gravity, g =	32.2	ft/sec^2		
elevation at the highest point in the system =	681	ft msl		
Transfer pump suction elevation =	564	ft msl		
Hazen Williams Roughness Coefficient (Plastic), C =	130			
8-inch DI pipe length, L1 =	2500	ft		
8-inch DI pipe inside diameter, d1 =	8.38	in	Relative Roughness =	0.00001
Flowrate. Q1 =	227	gpm		
1 gpm =	0.00233	ft^3/sec		

CALCULATION

1. Flow Velocity - Continuity Equation

$$Q = V \times A$$

$$v = \frac{Q \times 0.00223}{[(3.1459/4) \times (d/12)^2]}$$

v(Q1, d1) = 1.38 ft/sec

2. Calculate the velocity head and entrance loss

$$\text{Velocity head, } VH = \frac{v^2}{2 \times g}$$

VH(v(Q1, d1) = 0.03 ft

Entrance Loss, $EL = k \times (v^2/2 \times g)$ k = 1

Entrance Loss = 0.03 ft

3. Calculate equivalent lengths

8-inch check valve =	63.00	ft
8-inch 90 degree elbow =	8.90	ft
8-inch 45 degree elbow =	6.00	ft
86-inch gate valve =	3.20	ft
Flow meter =	10.00	ft
Number of check valves =	2.00	
Number of 90 degree elbows =	8.00	
Number of 45 degree elbows =	20.00	
Number of gate valves =	4.00	
Number of flow meters =	1.00	
EQ1 (8-inch DI pipe) =	340.00	ft

4. Calculate the friction loss using the Hazen Williams Equation

$$hf = \frac{10.44 \times L \times V^{1.85}}{C^{1.85} \times d^{4.87}}$$

hf1 (8-inch DI pipe)=	2.65	ft

5. Summation of lift

Lift at Pump = Elevation at highest point in system - first floor elevation

Lift at Pump =	117.00	ft

6. Calculate total dynamic head

The total dynamic head is determined by summing all the losses associated with the operation of the pump with the total lift

Head =	119.71	ft
Minimum pressure at highest point (35 psi) =	81.00	ft
Factor of safety (10% TDH) =	20.07	ft
Total dynamic head =	220.78	ft

CONCLUSION

The total dynamic head that the transfer pump will work against is 221 feet.

PLATES

Summit Club Residential

568 Bedford Road (Route 22)
Town of North Castle, New York

Water Supply, Treatment and Distribution
North Castle, New York
August 2022

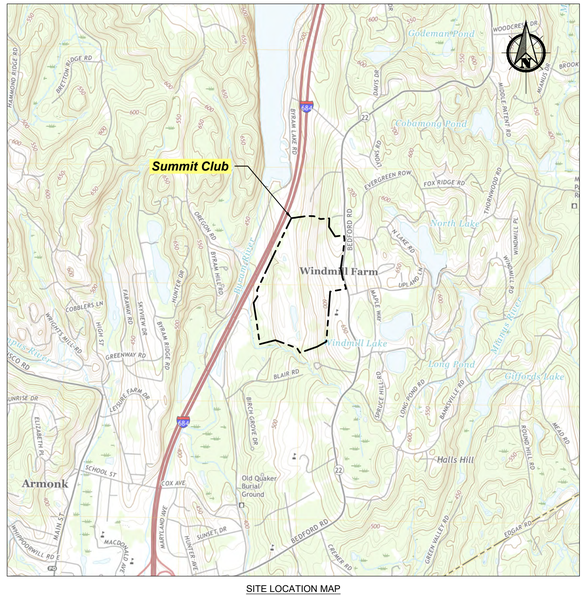

SITE LOCATION MAP
SCALE: 1" = 2000'

INDEX OF DRAWINGS

DRAWING N0.	DRAWING TITLE
TS	TITLE SHEET
1	SITE PLAN
1A	PARTIAL SITE PLAN
2	PROJECT NOTES, EQUIPMENT LIST, PROCESS FLOW DIAGRAM AND WELL PROFILE
3	PROPOSED TREATMENT BUILDING DETAILS
4	WELL SETTINGS AND PIPING DETAILS
5	PIPING DETAILS
6	105,000-GALLON ABOVE GRADE POTABLE WATER ATMOSPHERIC STORAGE TANK DETAILS
7	DISTRIBUTION SYSTEM PLAN AND PROFILE
8	DISTRIBUTION SYSTEM PLAN AND PROFILE
9	OVERSIZED WATER MAIN PLAN AND PROFILE

VICINITY MAP
SCALE: 1" = 1000'

WSP USA
6 RESEARCH DRIVE, SUITE 260
SHELTON, CONNECTICUT 06484

D

O:\DWG\Brynwood\Summit Club\Water Supply\TitleSheet.dwg, Layout1, 9/29/2022 9:29:07 AM, DWG To PDF.pc3

REVISIONS

REV	DESCRIPTION			
1	Revised:	Chkd:	Appr.:	
2	Revised:	Chkd:	Appr.:	
3	Revised:	Chkd:	Appr.:	

SEAL

DATE

DRAWN BY RAC
CHECKED MS
APPROVED SR
DRAWING DATE 01/06/22

PROPERTY OF WSP USA
THIS DRAWING IS AN INSTRUMENT OF PROFESSIONAL SERVICE AND AS SUCH IS SUBJECT TO RECALL AT ANY TIME. INFORMATION CONTAINED HEREIN SHALL NOT BE USED OR REPRODUCED IN ANY FORM FOR THE BENEFIT OF PARTIES OTHER THAN NECESSARY SUBCONTRACTORS AND SUPPLIERS WITHOUT THE WRITTEN CONSENT OF WSP USA

NOTICE: THIS DRAWING HAS BEEN PREPARED UNDER THE DIRECTION OF A LICENSED PROFESSIONAL ENGINEER OR LAND SURVEYOR. IT IS A VIOLATION OF THE NEW YORK STATE EDUCATION LAW FOR ANY PERSON TO ALTER THIS DRAWING IN ANY WAY UNLESS HE IS ACTING UNDER THE DIRECTION OF A LICENSED PROFESSIONAL ENGINEER OR LAND SURVEYOR. ANY ALTERATION BY ANOTHER ENGINEER OR SURVEYOR MUST BE NOTED IN WRITING IN CONFORMANCE WITH SECTION 7209 (2), ARTICLE 130, NEW YORK STATE EDUCATION LAW.

TITLE SHEET

Summit Club Residential
568 Bedford Road (Route 22)
Town of North Castle, New York

WSP USA Inc.
6 Research Drive, Suite 260
Shelton, Connecticut 06484
(203) 929-8555

D

SOURCE:
JMC "LAY-GRAD-UTIL_2022-05-11.dwg" EMAILED AUTOCAD FILE.

O:\DWG\Brynwood\Summit Club\Water Supply\P1_SitePlan.dwg, Layout1, 9/29/2022 9:27:16 AM, DWG To PDF.pc3

REVISIONS

REV	DESCRIPTION		
1	Revised:	Chkd:	Appr.:
2	Revised:	Chkd:	Appr.:
3	Revised:	Chkd:	Appr.:

SEAL

DATE

DRAWN BY	08/16/22
CHECKED	MS
APPROVED	SR
DRAWING DATE	06/21/22

PROPERTY OF WSP USA
IMPORTANT: THIS DRAWING PRINT IS LOANED FOR MUTUAL ASSISTANCE AND AS SUCH IS SUBJECT TO RECALL AT ANY TIME. INFORMATION CONTAINED HEREON IS NOT TO BE DISCLOSED OR REPRODUCED IN ANY FORM FOR THE BENEFIT OF PARTIES OTHER THAN NECESSARY SUBCONTRACTORS AND SUPPLIERS WITHOUT THE WRITTEN CONSENT OF WSP USA.

NOTICE: THIS DRAWING HAS BEEN PREPARED UNDER THE DIRECTION OF A LICENSED PROFESSIONAL ENGINEER. IT IS A VIOLATION OF ARTICLE 130 OF THE NEW YORK STATE EDUCATION LAW FOR ANY PERSON TO ALTER THIS DOCUMENT IN ANY WAY WITHOUT THE EXPRESS WRITTEN VERIFICATION OR ADDITION BY A NEW YORK STATE LICENSED LAND SURVEYOR OR ENGINEER IN ACCORDANCE WITH SECTION 7209 (2), ARTICLE 130, NEW YORK STATE EDUCATION LAW.

SITE PLAN

Summit Club Residential
568 Bedford Road (Route 22)
Town of North Castle, New York

WSP USA Inc.
6 Research Drive, Suite 260
Shelton, Connecticut 06484
(203) 929-8555

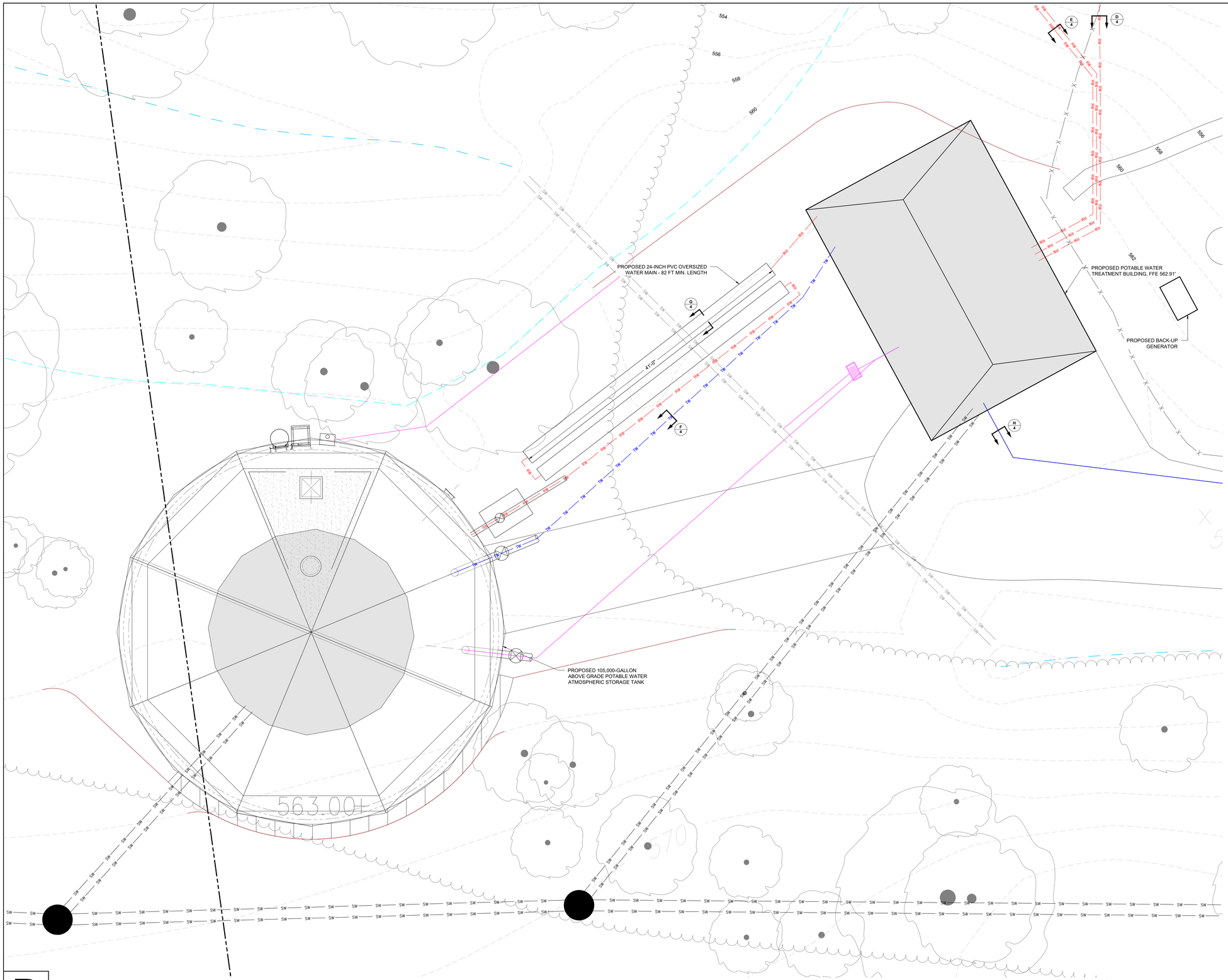

LEGEND

- PROPERTY BOUNDARY
- EXISTING WETLAND BUFFER
- 560 EXISTING CONTOUR
- 650 PROPOSED CONTOUR
- SW EXISTING STORMWATER PIPE
- PROPOSED 8-INCH DIA. DUCTILE IRON WATER MAIN
- RW PROPOSED 4-INCH DIA. HDPE RAW WATER PIPE
- TW PROPOSED 8-INCH DIA. HDPE TREATED WATER PIPE

0 6
SCALE IN FEET

D

SOURCE:
JMC "LAY-GRAD-UTIL_2022-05-11.dwg" EMAILED AUTOCAD FILE.

O:\DWG\Brynwood\Summit Club\Water Supply\P1_SitePlan.dwg, Layout2, 9/29/2022 9:27:48 AM, DWG To PDF.pc3

REVISIONS

REV	DESCRIPTION		
1	Revised:	Chkd:	Appr.:
2	Revised:	Chkd:	Appr.:
3	Revised:	Chkd:	Appr.:

SEAL

DATE

DRAWN BY	RAC
CHECKED	MS
APPROVED	SR
DRAWING DATE	08/16/22

PROPERTY OF WSP USA
IMPORTANT: THIS DRAWING PRINT IS LOANED FOR MUTUAL ASSISTANCE AND AS SUCH IS SUBJECT TO RECALL AT ANY TIME. INFORMATION CONTAINED HEREON IS NOT TO BE DISCLOSED OR REPRODUCED IN ANY FORM FOR THE BENEFIT OF PARTIES OTHER THAN NECESSARY SUBCONTRACTORS AND SUPPLIERS WITHOUT THE WRITTEN CONSENT OF WSP USA.

NOTICE: THIS DRAWING HAS BEEN PREPARED UNDER THE DIRECTION OF A LICENSED PROFESSIONAL ENGINEER. IT IS A VIOLATION OF ARTICLE 130 OF THE NEW YORK STATE EDUCATION LAW FOR ANY PERSON TO ALTER THIS DOCUMENT IN ANY WAY WITHOUT THE EXPRESS WRITTEN VERIFICATION OR ADDITION BY A NEW YORK STATE LICENSED LAND SURVEYOR OR ENGINEER IN ACCORDANCE WITH SECTION 7209 (2), ARTICLE 130, NEW YORK STATE EDUCATION LAW.

PARTIAL SITE PLAN

Summit Club Residential
568 Bedford Road (Route 22)
Town of North Castle, New York

WSP USA Inc.
6 Research Drive, Suite 260
Shelton, Connecticut 06484
(203) 929-8555

PROJECT NOTES

A. MOBILIZATION SHALL CONSIST OF: 1) DELIVERY TO THE SITE OF ALL EQUIPMENT, MATERIALS AND SUPPLIES TO BE FURNISHED BY THE CONTRACTOR; 2) COMPLETE PREPARATION IN SATISFACTORY WORKING ORDER OF ALL EQUIPMENT FOR THE JOB; AND 3) THE SATISFACTORY AND SECURE STORAGE OF ALL MATERIALS AND SUPPLIES. AREAS FOR STAGING EQUIPMENT AND MATERIALS WILL BE DESIGNATED BY THE ENGINEER TO CAUSE THE LEAST INTERFERENCE TO SITE ACTIVITIES.

B. DEMOBILIZATION SHALL CONSIST OF REMOVAL FROM THE SITE OF ALL EQUIPMENT, TRASH AND DEBRIS AFTER COMPLETION OF THE WORK. THE CONTRACTOR IS RESPONSIBLE FOR RESTORING THE AREA TO THE CONDITION THAT EXISTED PRIOR TO THE WORK, INCLUDING REPLACEMENT OR REPAIR OF ANY SITE FEATURES THAT WERE AFFECTED (I.E., FENCES, WALLS, PAVEMENT), AS WELL AS THE GRADING, RAKING AND SEEDING OF DISTURBED LAWN AREAS.

C. ALL SITE WORK IS TO COMPLY WITH ALL APPLICABLE FEDERAL, STATE AND LOCAL SAFETY STANDARDS, AS WELL AS THE SAFETY PROCEDURES LISTED IN THE "MANUAL OF ACCIDENT PREVENTION IN CONSTRUCTION", ISSUED BY THE ASSOCIATED GENERAL CONTRACTORS OF AMERICA (AGC PUBLICATION NO. 100). THE CONTRACTOR SHALL BEAR THE COST OF PROVIDING WARNING DEVICES, FENCES, TRAFFIC CONTROL MEASURES AND OTHER SAFETY MEASURES, AS NEEDED, FOR THE WORK TO BE COMPLETED. SAFETY MEASURES WILL BE REQUIRED WHEN WORKING ALONG OR IN STATE OR LOCAL ROADS. ALL EXCAVATIONS WILL BE COVERED AND EQUIPMENT AND MATERIALS SECURED AT THE END OF EACH WORK DAY.

D. ALL ELECTRICAL, MECHANICAL, PLUMBING, CONSTRUCTION AND OTHER SITE WORK, EQUIPMENT AND MATERIALS ARE TO BE IN ACCORDANCE WITH AND TO MEET ALL APPLICABLE LAWS, CODES AND REGULATIONS.

E. ALL NEW, CLEANED OR REPAIRED POTABLE WATER PIPES SHALL BE DISINFECTED UNDER THE SUPERVISION OF THE ENGINEER IN ACCORDANCE WITH AWWA STANDARD C651-14 OR LATEST VERSION, EXCEPT SECTION 4.3 (THE TABLET METHOD) PRIOR TO USE.

F. ALL INTERIOR PIPES SHALL BE INSTALLED PLUMB AND PERPENDICULAR AND IN A NEAT FASHION. THE PIPES WILL BE INSTALLED WITH ADEQUATE SPACING BETWEEN WALLS AND OTHER PIPES TO ALLOW FOR THE INSTALLATION OF VALVES AND METERS. ALL PIPES AND FITTINGS WILL BE SUPPORTED EVERY 5-FEET IN A MANNER THAT PREVENTS SAGGING WHEN THE PIPES ARE FULL. ALL PIPE SUPPORTS WILL BE SECURED TO EITHER THE FLOOR, WALL OR CEILING OF THE PROPOSED PUMP HOUSE.

G. THE RAW WATER PIPES WILL BE COLOR-CODED OLIVE GREEN. THE TREATED WATER PIPES WILL BE COLOR-CODED DARK BLUE AND THE SODIUM HYPOCHLORITE LINES COLORED YELLOW.

H. PRIOR TO ANY SUBSURFACE WORK, THE UNDERGROUND UTILITIES CALL CENTER SHALL BE CONTACTED.

I. THE MATERIAL USED AS BACKFILL SHALL BE FREE OF ROCKS, STUMPS OR OTHER UNSUITABLE DEBRIS LARGER THAN 2-INCHES IN DIAMETER AND SHALL BE CAPABLE OF BEING COMPACTED TO 95% PROCTOR DENSITY. CLEAN TRACEABLE FILL MEETING THE ABOVE REQUIREMENT SHALL BE BROUGHT ONSITE AND USED AS BACKFILL IF THE MATERIAL REMOVED FROM THE TRENCHES IS UNSUITABLE. THE SOURCE OF FILL MUST BE PROVIDED IN ADVANCE OF DELIVERY TO THE SITE. THE ENGINEER RESERVES THE RIGHT TO REQUEST DOCUMENTATION OF FILL QUALITY AND TESTING DONE AT THE CONTRACTORS EXPENSE IF THE SOURCE DOCUMENTATION IS UNSATISFACTORY. ALL MATERIAL SHALL BE SUBJECT TO APPROVAL BY THE ENGINEER. UNSUITABLE MATERIAL WILL BE REMOVED FROM THE PROPERTY AND DISPOSED OF IN ACCORDANCE WITH ALL FEDERAL AND STATE LAWS.

J. THE LOCATION OF ALL UTILITIES AND BELOW-GRADE PIPING TO BE INSTALLED SHALL BE STAKED AND APPROVED BY THE ENGINEER PRIOR TO SITE WORK.

K. SEDIMENTATION AND EROSION CONTROLS (S&E), CONSISTING OF, BUT NOT LIMITED TO, SILT FENCING AND/OR HAY BALES, ARE TO BE INSTALLED ON THE DOWNSLOPE SIDE OF EXCAVATION AREAS. THE CONTROLS WILL BE INSTALLED PRIOR TO INITIATION OF WORK ON THE SITE, S&E ARE TO BE MAINTAINED THROUGHOUT THE DURATION OF THE PROJECT AND ARE TO BE COMBINED WITH SEDIMENTATION AND EROSION CONTROLS UTILIZED FOR OTHER ASPECTS OF THE PROJECT.

L. THE WATER PIPES FROM THE POTABLE WATER WELLS AND FOR THE DISTRIBUTION SYSTEM SHALL BE CONSTRUCTED FROM HIGH DENSITY POLYETHYLENE (HDPE), BE NSF 61 APPROVED AND BE RATED FOR 160 PSI AND SHALL BE INSTALLED AS SHOWN. ALL PIPE BEDDING SHALL BE OF THE MATERIAL AND COVER DIMENSIONS SHOWN IN THE PLANS. THE FOLLOWING PROCEDURE SHALL BE USED WHEN INSTALLING THE BURIED HDPE PIPE FOR POTABLE WATER SUPPLY.
   a. INSPECT THE PIPE FOR CUTS, GOUGES, DEEP SCRATCHES OR OTHER DAMAGE BEFORE INSTALLATION. IF A CUT OR GOUGE IS DEEPER THAN 10 PERCENT OF THE MINIMUM WALL THICKNESS OF THE PIPE, THAT SECTION SHALL BE REMOVED AND DISCARDED.
   b. INSPECT THE PIPE FOR KINKS AND REMOVE AND DISCARD ALL KINKED SECTIONS.
   c. ALL BENDS SHALL BE LONG RADIUS BENDS AND WELDED JOINTS SHALL BE USED FOR ALL PIPING CONNECTIONS
   d. COMPACT THE TRENCH BOTTOM AND SMOOTH ANY DEPRESSION OR CAVITIES
   e. BURY THE PIPE AS SHOWN ON THE PLANS, COMPACTING THE PIPE EMBEDMENT AND BACKFILL MATERIAL IN 1-FOOT LIFTS.

M. PRESSURE TESTING OF THE HDPE PIPE SHALL BE CONDUCTED IN ACCORDANCE WITH AWWA M55 AND ASTM F2164 AT 100 PSI.

N. UNDERGROUND WARNING TAPES SHALL BE PLACED ABOVE THE BURIED WATER PIPES AND ELECTRICAL CONDUIT AS SHOWN ON THE PLANS.

O. AFTER DISINFECTING AND BEFORE PLACING IN SERVICE, TWO WATER SAMPLES WILL BE COLLECTED (A MINIMUM OF 24 HOURS APART) FROM EACH WELL WITHIN THE TREATMENT BUILDING AND AFTER THE ATMOSPHERIC STORAGE TANK, AND SUBMITTED FOR HETEROTROPHIC PLATE COUNT (HPC) AND BACTERIOLOGICAL.

P. ALL SAMPLE TAPS SHALL BE SMOOTH NOSE SAMPLE TAPS.

Q. THE OPERATION OF THE CHEMICAL METERING PUMPS WILL BE INTERLOCKED WITH THE OPERATION OF THE SUBMERSIBLE WELL PUMPS AND EACH WATER SUPPLY WELL WILL BE EQUIPPED WITH A DEDICATED CHEMICAL METERING PUMP THAT IS ADJUSTED TO THE PUMPING RATE OF THE WELL.

R. THE CONTRACTOR WILL BE REQUIRED TO RETAIN THE SERVICES OF A LICENSED LAND SURVEYOR TO DEVELOP AS-BUILT (RECORD DRAWINGS) OF ALL SUBSURFACE WATER SUPPLY PIPES AND ELECTRICAL CONDUIT.

S. EQUIPMENT SUBSTITUTIONS WILL NOT BE PERMITTED WITHOUT PRIOR APPROVAL FROM THE ENGINEER.

T. THE PRESSURE TRANSDUCER POSITIONED IN THE 105,000-GALLON ABOVE GRADE POTABLE WATER ATMOSPHERIC STORAGE TANK WILL ALLOW FOR ADJUSTMENT IN THE HIGH/HIGH, HIGH, LOW, MID/LOW AND LOW/LOW LEVEL SETTINGS.

U. THE OPERATION OF WELL #1, WELL #3 AND WELL #6A WILL ALTERNATE WHEN THE PRESSURE TRANSDUCER IN THE 105,000-GALLON ABOVE GRADE POTABLE WATER ATMOSPHERIC STORAGE TANK INDICATES A LOW LEVEL SETTING.

V. THE ELECTRICAL CONTROLS WILL BE EQUIPPED WITH A TELEMETRY SYSTEM TO NOTIFY THE CERTIFIED OPERATOR IF A MALFUNCTION OCCURS.

W. THE PROPOSED PUMP HOUSE WILL BE EQUIPPED WITH A SUPPLY OF PROTECTIVE CLOTHING (APRON, GOGGLES AND GLOVES) TO BE USED FOR SAFE HANDLING OF THE SODIUM HYPOCHLORITE.

X. THE BACKUP GENERATOR WILL HAVE THE CAPABILITY OF OPERATING ALL THE WATER-SUPPLY AND TREATMENT EQUIPMENT, LIGHTING, HEATING AND CONTROLS.

Y. THE TREATMENT BUILDING WILL BE EQUIPPED WITH ADEQUATE HEATING, LIGHTING AND VENTILATION. THE VENTILATION WILL ACCOUNT FOR THE ONSITE STORAGE OF SODIUM HYPOCHLORITE.

Z. THE CONTRACTOR WILL BE REQUIRED TO RETAIN THE SERVICES OF A DRILLING CONTRACTOR TO INSTALL TEST BORINGS TO CONFIRM THE DEPTH TO BEDROCK ALONG THE DIRECTIONAL DRILLING ROUTES.

AA. THE EXISTING POTABLE WATER SUPPLY SERVICE FROM THE TOWN OF NORTH CASTLE WILL BE PERMANENTLY ABANDONED.

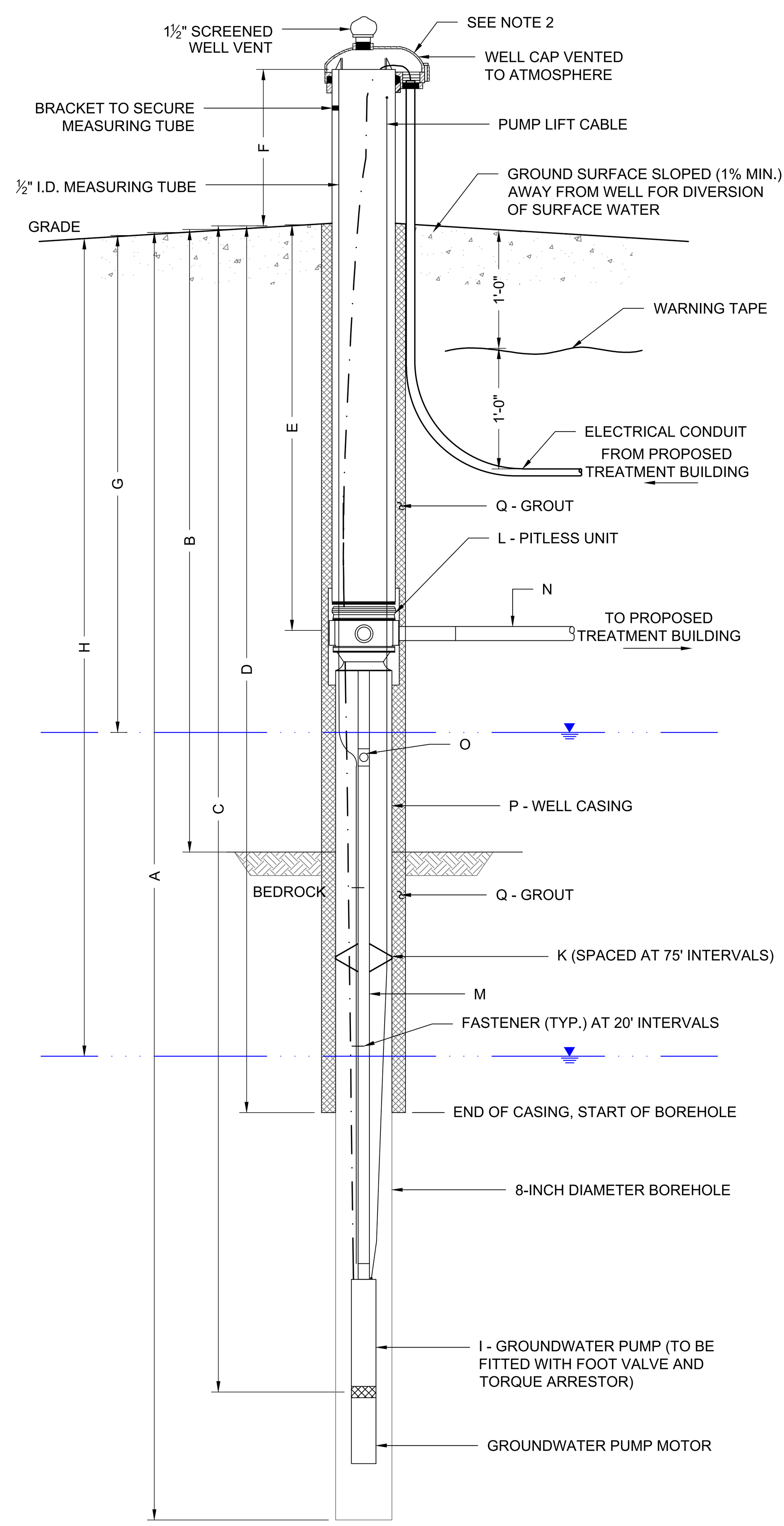

B/2 PROFILE OF WELL - TYPICAL
NOT TO SCALE

ITEM	WELL #1	WELL #3	WELL #6A	COMMENTS
A	575	645	625	TOTAL DEPTH OF WELL (FT BG)
B	17	27	26	DEPTH TO BEDROCK (FT BG)
C	275	150	150	PUMP PLACEMENT DEPTH (FT BG)
D	51	61	61	DEPTH OF CASING (FT BG)
E	4.5	4.5	4.5	DEPTH OF PITLESS CONNECTION (FT BG)
F	MINIMUM 1.5	MINIMUM 1.5	MINIMUM 1.5	HEIGHT OF WELL CAP ABOVE GRADE (FT)
G	ARTESIAN	ARTESIAN	ARTESIAN	STATIC WATER LEVEL (FT BG)
H	248	109	109	PUMPING WATER LEVEL (FT BG)
I	GOULDS 35GS50	GOULDS 35GS50	GOULDS 45GS50	SUBMERSIBLE PUMP MANUFACTURER AND MODEL
J	37 GPM @ 500 FT	33 GPM @ 331 FT	43 GPM @ 345 FT	PUMP DESIGN FLOW AND TOTAL DYNAMIC HEAD
K	MONOFLEX SCC8x20	MONOFLEX SCC8x20	MONOFLEX SCC8x20	CENTRALIZER, MANUFACTURER AND MODEL
L	BAKER MONITOR DIVISION 5.0PS67WBWE23T4SF	BAKER MONITOR DIVISION 5.0PS67WBWE23T4SF	BAKER MONITOR DIVISION 5.0PS67WBWE23T4SF	PITLESS CONNECTION MANUFACTURER AND MODEL
M	3-INCH GALVANIZED STEEL	3-INCH GALVANIZED STEEL	3-INCH GALVANIZED STEEL	RISER PIPE DIAMETER
N	4-INCH HDPE DISCHARGE	3-INCH HDPE DISCHARGE	4-INCH HDPE DISCHARGE	DISCHARGE PIPE DIAMETER
O	3-INCH BRONZE	3-INCH BRONZE	3-INCH BRONZE	CHECK VALVE
P	6-INCH	6-INCH	6-INCH	NEW SINGLE STEEL CASING PIPE MEETING AWWA STANDARD A-100, ASTM OR SPI SPECIFICATIONS FOR WATER WELL CONSTRUCTION - MINIMUM OF 0.280 INCH THICKNESS
Q	BOTTOM OF WELL CASING TO GRADE	BOTTOM OF WELL CASING TO GRADE	BOTTOM OF WELL CASING TO GRADE	NEAT CEMENT GROUT CONFORMING TO AWWA A100, AND WATER WILL BE USED. GROUT SHALL BE A MINIMUM OF 1.5 INCHES THICK AND SHALL MEET PART 5, SUBPART 5-1 APPENDIX 5-A STANDARDS

FT BG: FEET BELOW GRADE

NOTES:
1. A TORQUE ARRESTOR SHALL BE INSTALLED ON THE RISER PIPE IMMEDIATELY ABOVE EACH PUMP TO MINIMIZE MOVEMENT OF THE PUMP AND RISER PIPE WHEN THE PUMP STARTS.
2. THE WELLHEAD WILL BE EQUIPPED WITH A LOCKING HASP OR A BOLT REPLACED WITH A COMMON-KEYED PAD LOCK.

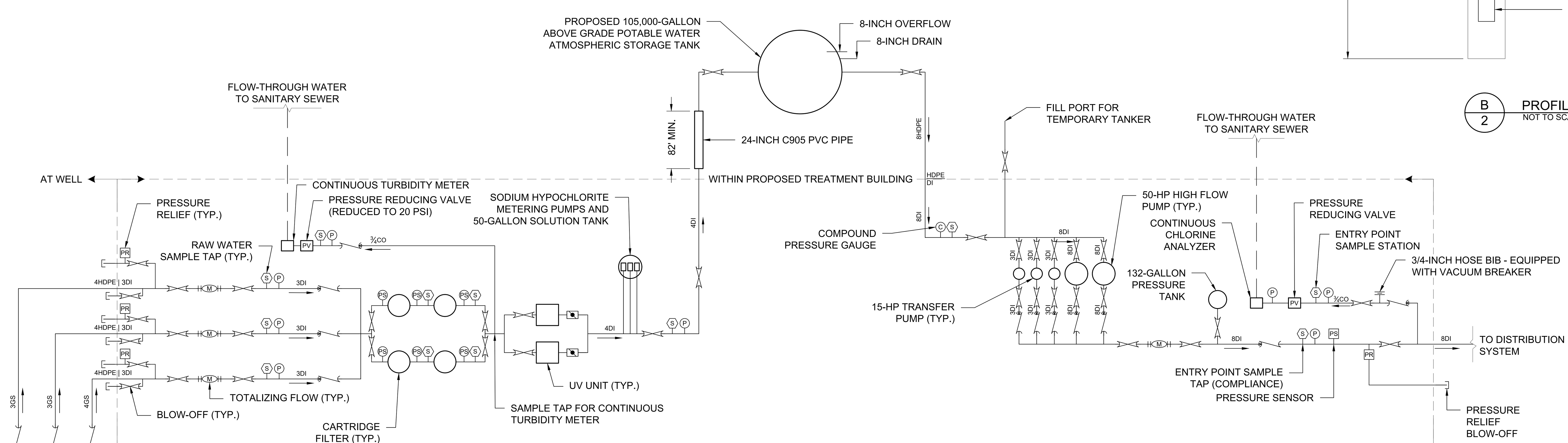

A/5 PROCESS FLOW DIAGRAM
NOT TO SCALE

PIPE SYMBOLS

SYMBOL LEGEND

GATE VALVE		1|2	PIPE DIAMETER CHANGE
CHECK VALVE		PVC/HDPE	PIPE MATERIAL CHANGE
(S)	SAMPLE PETCOCK		*MATERIAL ABBREVIATIONS*
(P)	PRESSURE GAUGE	HDPE	HIGH DENSITY POLYETHYLENE
(C)	COMPOUND PRESSURE GAUGE	CO	COPPER
M	TOTALIZING FLOW METER	DI	DUCTILE IRON
PR	PRESSURE RELIEF		
PS	PRESSURE SENSOR/SWITCH		

SCHEDULE
PIPE MATERIAL
DIAMETER
4PVC80
WATER
FLOW DIRECTION
FLUID DESCRIPTION

CONTROL TABLE

CONDITION	SENSOR LOCATION	WELL PUMPS ON	WELL PUMPS OFF	POTABLE BOOSTER PUMPS ON	POTABLE BOOSTER PUMPS OFF	TELEMETRY SYSTEM-OPERATING NOTIFICATION
HIGH/HIGH LEVEL	ATMOSPHERIC STORAGE TANK		X			X
HIGH LEVEL	ATMOSPHERIC STORAGE TANK		X			
LOW LEVEL	ATMOSPHERIC STORAGE TANK	X				
MID/LOW LEVEL	ATMOSPHERIC STORAGE TANK	X (SEE NOTE1)				
LOW/LOW LEVEL	ATMOSPHERIC STORAGE TANK	X				X
PRESSURE SENSOR - LESS THAN 70 PSI	PRESSURE TANK (PUMP HOUSE)			X		
PRESSURE SENSOR - EQUAL TO 70 PSI	PRESSURE TANK (PUMP HOUSE)				X	X
PRESSURE SWITCH LOW PRESSURE	PRESSURE TANK (PUMP HOUSE)					X

NOTE:
1. THE WELL PUMP IN WELL #1, WELL #3 OR WELL #6A WILL TURN ON WHEN THE LOW LEVEL SETTING IS ACTIVATED AND WILL CONTINUE TO OPERATE UNTIL THE HIGH LEVEL SETTING IS ACTIVATED, IN THE EVENT THE WATER IN THE ATMOSPHERIC STORAGE TANK REACHES THE LOW/LOW LEVEL, ALL THREE WELL PUMPS WILL ACTIVATE. THE NEXT TIME THE LOW LEVEL SETTING IS ACTIVATED, AN ALTERNATE WELL PUMP WILL BE ACTIVATED. IN THE EVENT OF HIGH FLOW DEMAND, TWO PUMPS WILL BE ACTIVATED AT THE SAME TIME WHEN THE WATER LEVEL REACHES THE MID-LOW LEVEL.

REVISIONS
DESCRIPTION
REV 1 Revised: Chkd: Appr.:
REV 2 Revised: Chkd: Appr.:
REV 3 Revised: Chkd: Appr.:

SEAL
DATE

DRAWN BY RAC
CHECKED MS
APPROVED SR
DRAWING DATE 08/16/22

IMPORTANT: THIS DRAWING PRINT IS LOANED FOR MUTUAL ASSISTANCE AND AS SUCH IS SUBJECT TO RECALL AT ANY TIME. INFORMATION CONTAINED HEREON IS NOT TO BE DISCLOSED OR REPRODUCED IN ANY FORM FOR THE BENEFIT OF PARTIES OTHER THAN NECESSARY SUBCONTRACTORS AND SUPPLIERS WITHOUT THE WRITTEN CONSENT OF WSP USA
PROPERTY OF WSP USA

NOTICE: THIS DRAWING HAS BEEN PREPARED UNDER THE DIRECTION OF A LICENSED PROFESSIONAL ENGINEER, IT IS A VIOLATION OF ARTICLE 130 OF THE NEW YORK STATE EDUCATION LAW FOR ANY PERSON TO ALTER THIS DOCUMENT IN ANY WAY WITHOUT THE EXPRESS WRITTEN VERIFICATION OR ADOPTION BY A NEW YORK STATE LICENSED LAND SURVEYOR OR ENGINEER IN ACCORDANCE WITH SECTION 7209 (2), ARTICLE 130, NEW YORK STATE EDUCATION LAW.

PROJECT NOTES, EQUIPMENT LIST, PROCESS FLOW DIAGRAM AND WELL PROFILE

Summit Club Residential
568 Bedford Road (Route 22)
Town of North Castle, New York

WSP USA Inc.
6 Research Drive, Suite 260
Shelton, Connecticut 06484
(203) 929-8555

O:\DWG\Brynwood\Summit Club\Water Supply\P2_ProjectNotes.dwg, Layout1, 9/29/2022 9:26:45 AM, DWG To PDF.pc3

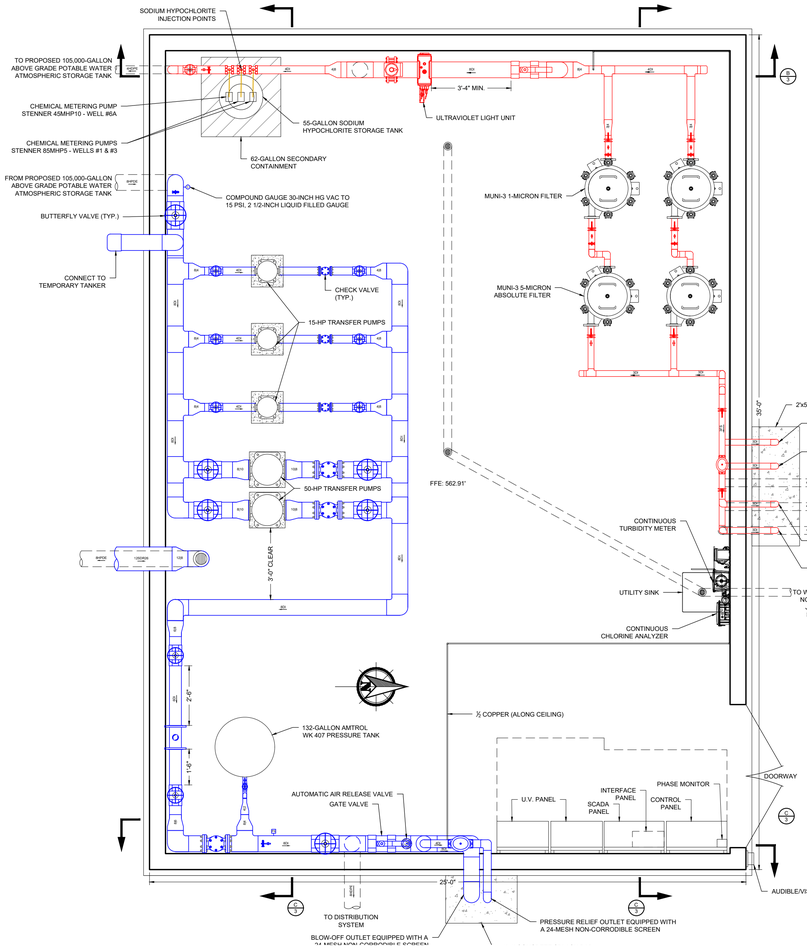

A/3 PLAN VIEW OF PROPOSED TREATMENT BUILDING
SCALE: 1" = 3'-0"

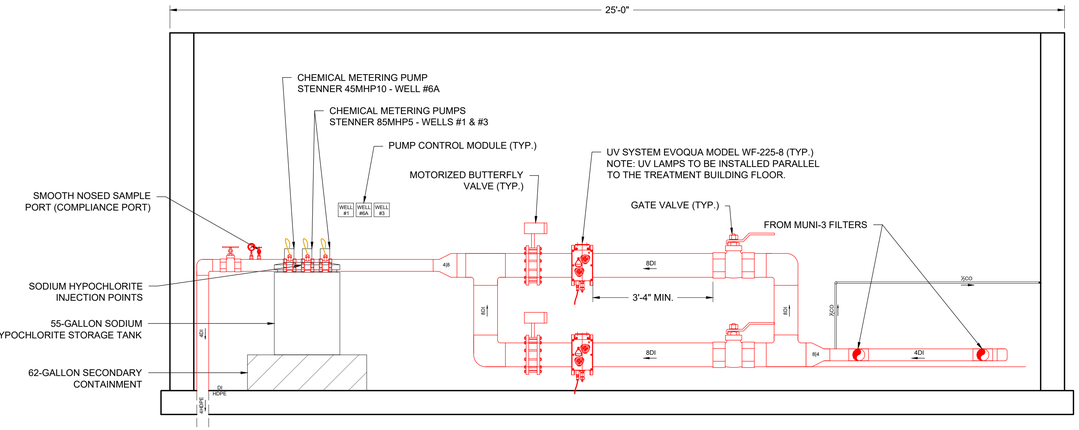

B/3 PROFILE VIEW OF WESTERN WALL
SCALE: 1" = 2'-0"

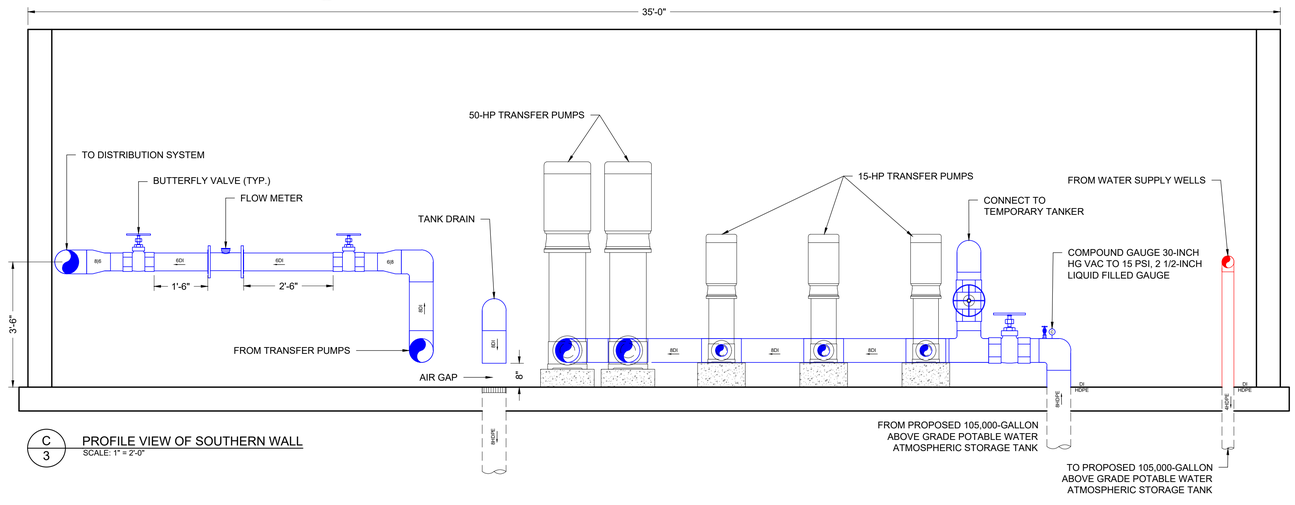

C/3 PROFILE VIEW OF SOUTHERN WALL
SCALE: 1" = 2'-0"

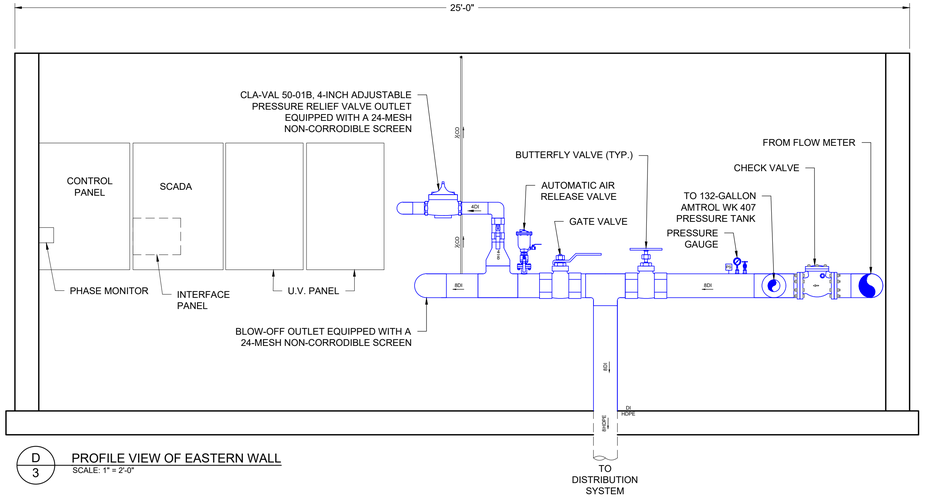

D/3 PROFILE VIEW OF EASTERN WALL
SCALE: 1" = 2'-0"

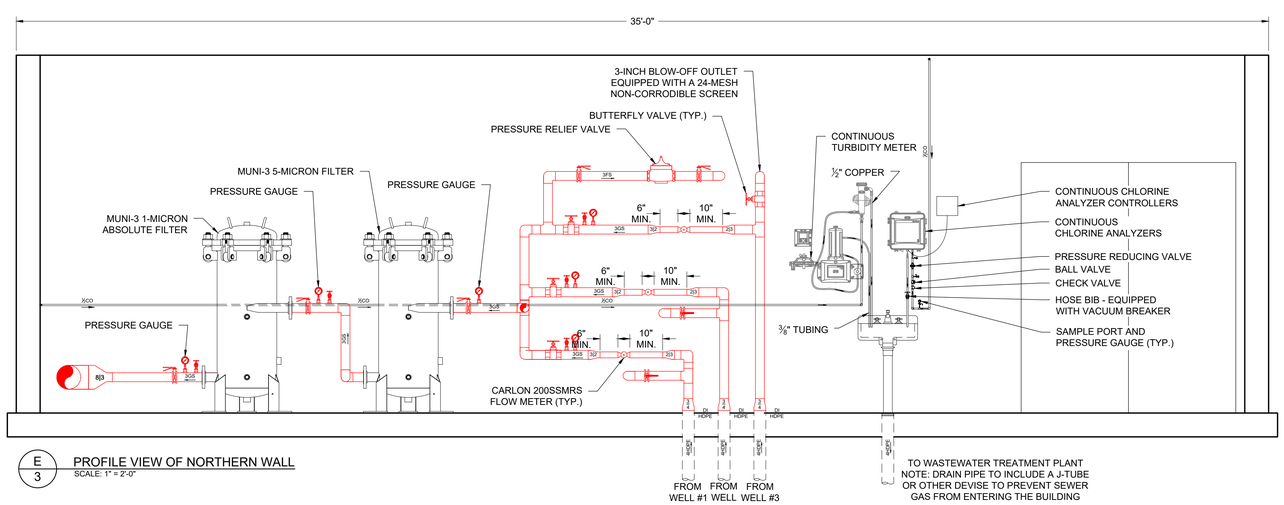

E/3 PROFILE VIEW OF NORTHERN WALL
SCALE: 1" = 2'-0"

0 2
SCALE IN FEET

REVISIONS

REV	DESCRIPTION			
1	Revised:	Chkd:	Appr.:	DATE
2	Revised:	Chkd:	Appr.:	
3	Revised:	Chkd:	Appr.:	

SEAL

DRAWN BY RAC
CHECKED MS
APPROVED SR
DRAWING DATE 08/16/22

IMPORTANT: THIS DRAWING IS THE PROPERTY OF WSP USA AND IS SUBMITTED ON THE EXPRESS UNDERSTANDING THAT IT IS TO BE USED FOR THE PROJECT AND SITE SPECIFICALLY IDENTIFIED HEREIN AND THAT IT WILL NOT BE LOANED, COPIED OR DISCLOSED TO ANY PERSON OR ENTITY FOR ANY PURPOSE WHATSOEVER WITHOUT THE PRIOR WRITTEN CONSENT OF WSP USA.

NOTICE: THIS DRAWING HAS BEEN PREPARED UNDER THE DIRECTION OF A LICENSED PROFESSIONAL ENGINEER. IT IS A VIOLATION OF LAW FOR ANY PERSON, UNLESS HE IS ACTING UNDER THE DIRECTION OF A LICENSED PROFESSIONAL ENGINEER, TO ALTER THIS DRAWING IN ANY WAY. IF THIS DRAWING IS ALTERED, THE ALTERING ENGINEER OR SURVEYOR SHALL AFFIX TO THE DRAWING HIS SEAL AND A NOTATION STATING THE ALTERATION AND HIS NAME. IN ACCORDANCE WITH SECTION 7209 (2) ARTICLE 130, NEW YORK STATE EDUCATION LAW.

PROPOSED TREATMENT BUILDING DETAILS

Summit Club Residential
568 Bedford Road (Route 22)
Town of North Castle, New York

WSP USA Inc.
6 Research Drive, Suite 260
Shelton, Connecticut 06484
(203) 929-8555

5 of 11

Sheet Number
3

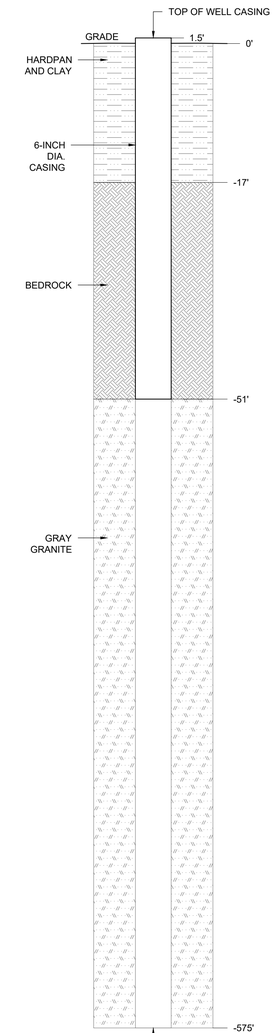

A/4 GEOLOGIC SETTING OF WELL #1
NOT TO SCALE

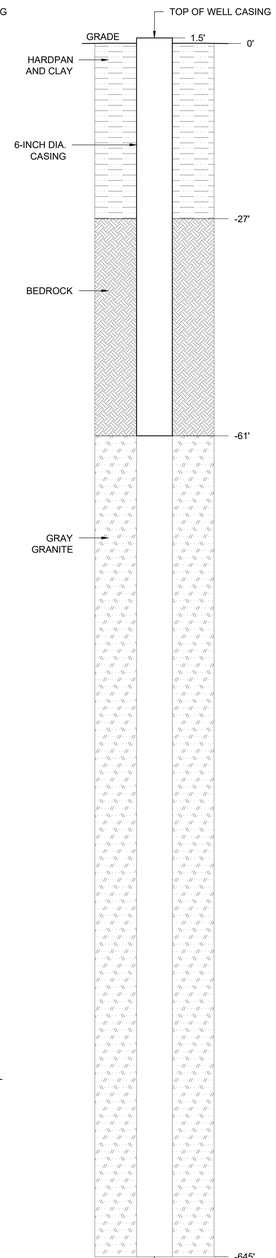

B/4 GEOLOGIC SETTING OF WELL #3
NOT TO SCALE

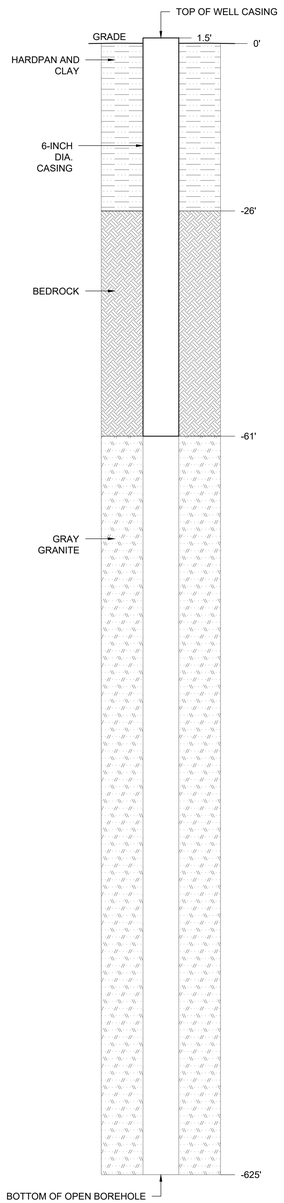

C/4 GEOLOGIC SETTING OF WELL #6A
NOT TO SCALE

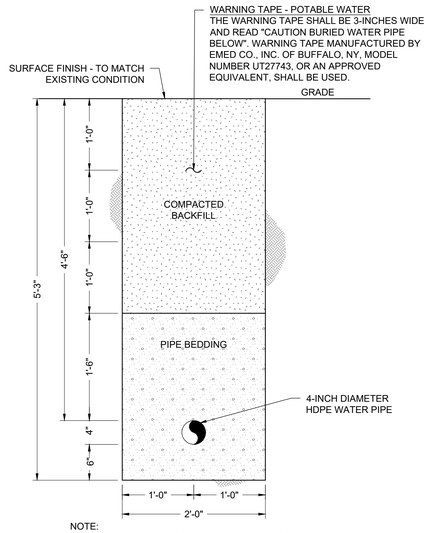

NOTE:
1. THE PIPE BEDDING SHALL BE ASTM CLASS III SAND AND SHALL NOT CONTAIN ANY COBBLES OR GRAVEL AND SHALL BE CLEAN AND FREE OF UNDESIRABLE MATERIAL.

D/4 TRENCH CROSS-SECTION - SINGLE PIPE - RAW WATER
SCALE: 1" = 1'-0"
SCALE IN FEET

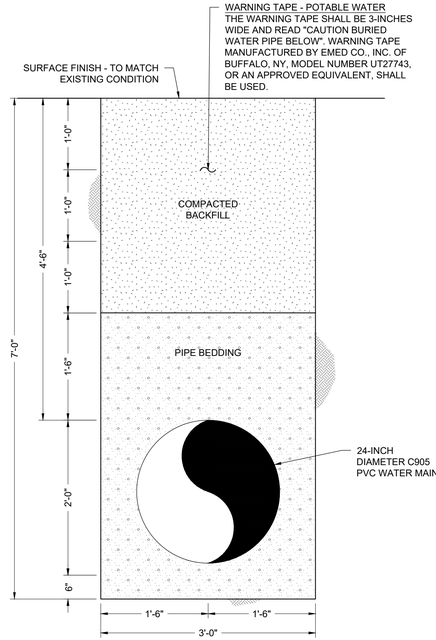

NOTE:
1. THE PIPE BEDDING SHALL BE ASTM CLASS III SAND AND SHALL NOT CONTAIN ANY COBBLES OR GRAVEL AND SHALL BE CLEAN AND FREE OF UNDESIRABLE MATERIAL.

G/4 TRENCH CROSS-SECTION - SINGLE PIPE - OVERSIZED WATER MAIN
SCALE: 1" = 1'-0"
SCALE IN FEET

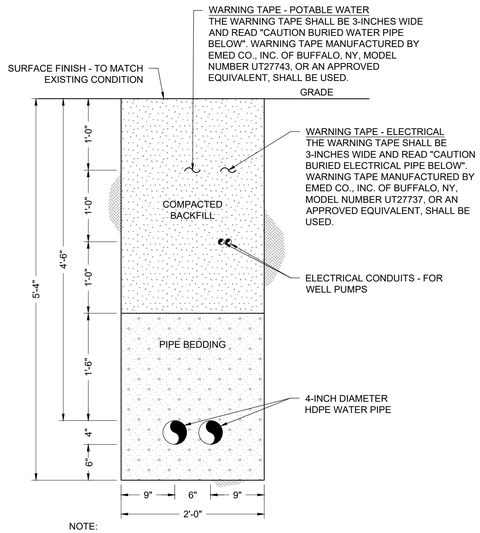

NOTE:
1. THE PIPE BEDDING SHALL BE ASTM CLASS III SAND AND SHALL NOT CONTAIN ANY COBBLES OR GRAVEL AND SHALL BE CLEAN AND FREE OF UNDESIRABLE MATERIAL.

E/4 TRENCH CROSS-SECTION - DOUBLE PIPE - RAW WATER
SCALE: 1" = 1'-0"
SCALE IN FEET

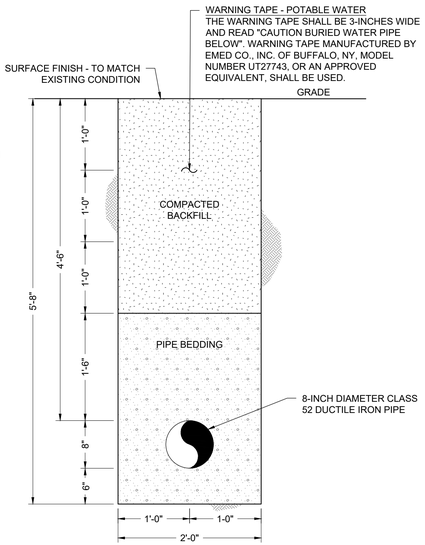

NOTE:
1. THE PIPE BEDDING SHALL BE ASTM CLASS III SAND AND SHALL NOT CONTAIN ANY COBBLES OR GRAVEL AND SHALL BE CLEAN AND FREE OF UNDESIRABLE MATERIAL.

F/4 TRENCH CROSS-SECTION - SINGLE PIPE - TREATED WATER
SCALE: 1" = 1'-0"
SCALE IN FEET

H/4 TRENCH CROSS-SECTION - SINGLE PIPE - DISTRIBUTION SYSTEM
SCALE: 1" = 1'-0"
SCALE IN FEET

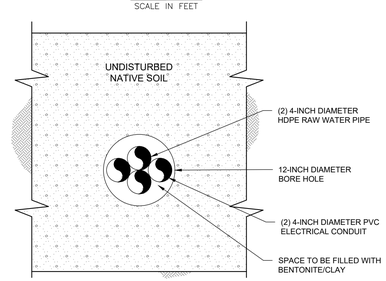

J/4 DIRECTIONAL DRILL - WELL #1 & Well #6A RAW WATER BORE HOLE
SCALE: 1" = 1'-0"
SCALE IN FEET

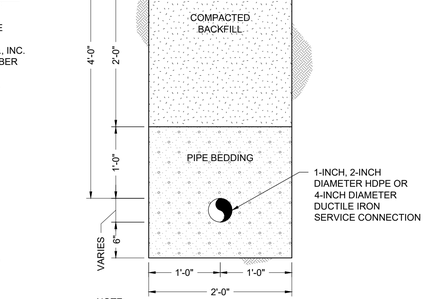

NOTE:
1. THE PIPE BEDDING SHALL BE ASTM CLASS III SAND AND SHALL NOT CONTAIN ANY COBBLES OR GRAVEL AND SHALL BE CLEAN AND FREE OF UNDESIRABLE MATERIAL.

I/4 TRENCH CROSS-SECTION - SINGLE PIPE - SERVICE CONNECTION
SCALE: 1" = 1'-0"
SCALE IN FEET

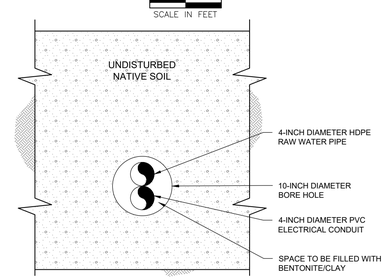

K/4 DIRECTIONAL DRILL - WELL #3 RAW WATER BORE HOLE
SCALE: 1" = 1'-0"
SCALE IN FEET

REVISIONS									
REV	DESCRIPTION		Appr.:		Appr.:		Appr.:		Appr.:
1	Revised:	Chkd:		Revised:	Chkd:		Revised:	Chkd:	
2	Revised:	Chkd:		Revised:	Chkd:		Revised:	Chkd:	
3	Revised:	Chkd:		Revised:	Chkd:		Revised:	Chkd:	

SEAL

DATE

DRAWN BY	RAC
CHECKED	MS
APPROVED	SR
DRAWING DATE	08/16/22

PROPERTY OF WSP USA
IMPORTANT: THE PAPER COPY OF THIS DRAWING AND ALL SUCH IS SUBJECT TO RECALL AT ANY TIME. INFORMATION CONTAINED IN THIS DRAWING SHALL BE KEPT CONFIDENTIAL AND SHALL NOT BE USED IN WHOLE OR IN PART, IN ANY FORM FOR THE BENEFIT OF PARTIES OTHER THAN NECESSARY SUBCONTRACTORS AND SUPPLIERS WITHOUT THE WRITTEN CONSENT OF WSP USA.
NOTICE: THIS DRAWING HAS BEEN PREPARED UNDER THE DIRECTION OF A LICENSED PROFESSIONAL ENGINEER OR LAND SURVEYOR. IT IS A VIOLATION OF THE NEW YORK STATE EDUCATION LAW FOR ANY PERSON, UNLESS ACTING UNDER THE DIRECTION OF A LICENSED PROFESSIONAL ENGINEER OR LAND SURVEYOR, TO ALTER THIS DRAWING IN ANY WAY. IF ANY ALTERATIONS ARE MADE TO THIS DRAWING, THE ALTERING ENGINEER OR SURVEYOR SHALL STAMP THE DRAWING AND INDICATE THE ALTERATIONS IN ACCORDANCE WITH SECTION 7209 (2) ARTICLE 130, NEW YORK STATE EDUCATION LAW.

WELL SETTINGS AND PIPING DETAILS

Summit Club Residential
568 Bedford Road (Route 22)
Town of North Castle, New York

WSP USA Inc.
6 Research Drive, Suite 260
Shelton, Connecticut 06484
(203) 929-8555

6 of 11

Sheet Number
4

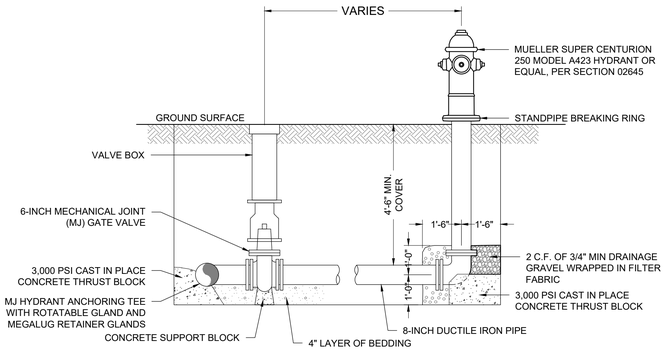

NOTES:
1. HYDRANT DRAINS SHOULD REMAIN PLUGGED WHEN GROUNDWATER IS ENCOUNTERED 2 FEET OR LESS BELOW THE BASE OF THE HYDRANT.
2. WHEN HYDRANT DRAINS ARE NOT PLUGGED, A GRAVEL POCKET OR DRY WELL SHALL BE PROVIDED UNLESS THE NATURAL SOILS WILL PROVIDE ADEQUATE DRAINAGE.
3. HYDRANT DRAINS SHALL NOT BE CONNECTED TO OR LOCATED WITHIN 10 FEET OF SANITARY SEWERS, STORM SEWERS, OR STORM DRAINS.
4. APPROXIMATE SIGNAGE MUST BE PERMANENTLY AFFIXED TO HYDRANT CITING REQUIREMENTS TO PUMP THE HYDRANT BARREL DRY AFTER USE TO PREVENT DAMAGE DURING FREEZING WEATHER.

A/5 HYDRANT DETAIL - TYPICAL
NOT TO SCALE

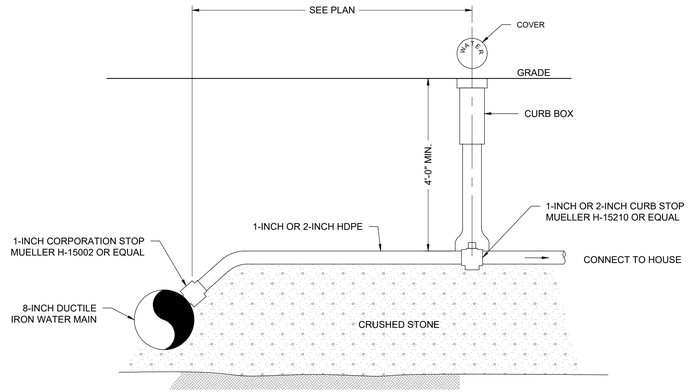

B/5 1-INCH TAP DETAIL (BY OTHERS)
NOT TO SCALE

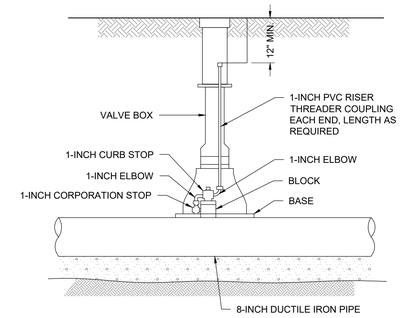

C/5 HAND OPERATED AIR RELEASE VALVE ASSEMBLY DETAIL
NOT TO SCALE

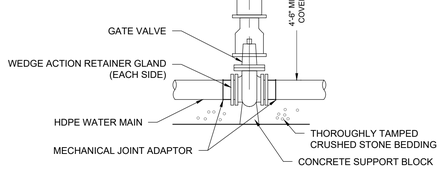

D/5 VALVE DETAIL - TYPICAL, BURIED
NOT TO SCALE

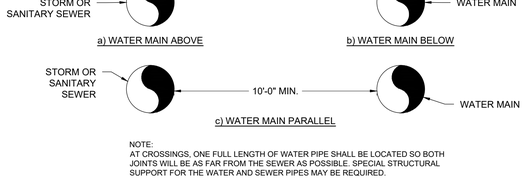

NOTE:
AT CROSSINGS, ONE FULL LENGTH OF WATER PIPE SHALL BE LOCATED SO BOTH JOINTS WILL BE AS FAR FROM THE SEWER AS POSSIBLE. SPECIAL STRUCTURAL SUPPORT FOR THE WATER AND SEWER PIPES MAY BE REQUIRED.

E/5 PIPING SEPARATION DETAIL - PIPE CROSSING AND PARALLEL PIPE INSTALLATION
NOT TO SCALE

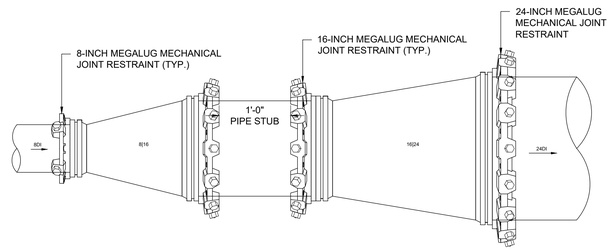

F/5 PROFILE OF TRANSITION FROM 8-INCH TO 24-INCH PIPE
SCALE: 1" = 1'-0"

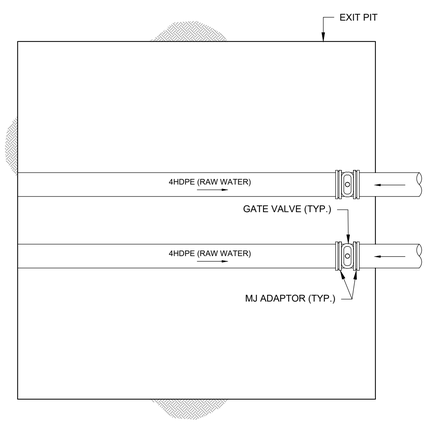

G/5 EXIT PIT - DOUBLE PIPE - WELL #1 & WELL #6A
SCALE: 1" = 1'-0"

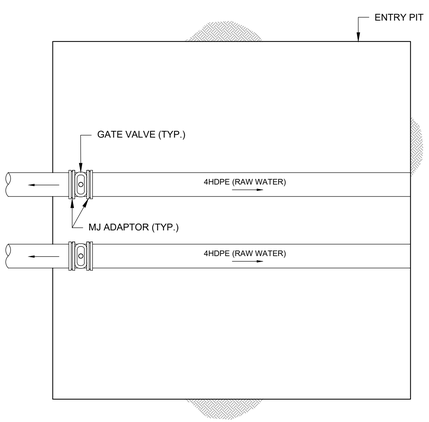

H/5 ENTRY PIT - DOUBLE PIPE - WELL #1 & WELL #6A
SCALE: 1" = 1'-0"

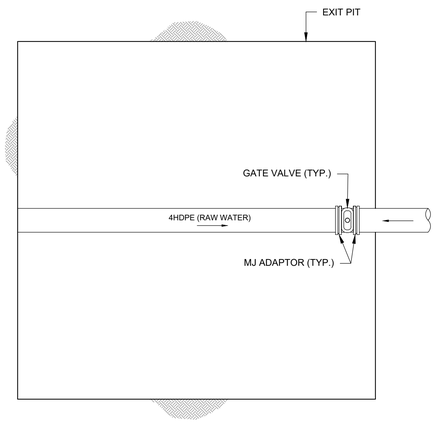

I/5 EXIT PIT - SINGLE PIPE - WELL #3
SCALE: 1" = 1'-0"

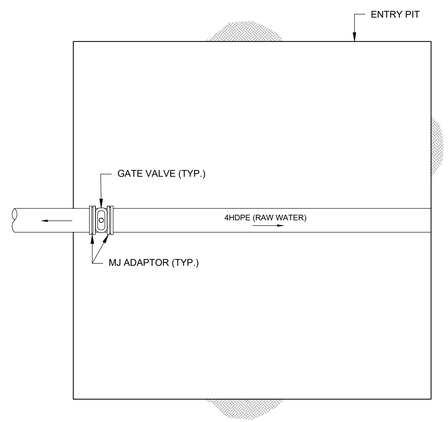

J/5 ENTRY PIT - SINGLE PIPE - WELL #3
SCALE: 1" = 1'-0"

REVISIONS

REV	DESCRIPTION	Drwn:	Appr.:
1	Revised:	Drwn:	Appr.:
2	Revised:	Drwn:	Appr.:
3	Revised:	Drwn:	Appr.:

SEAL

DATE

DRAWN BY RAC
CHECKED MS
APPROVED SR
DRAWING DATE 08/16/22

IMPORTANT: THIS DRAWING IS THE PROPERTY OF WSP USA AND AS SUCH IS SUBJECT TO RECALL AT ANY TIME. INFORMATION CONTAINED HEREIN SHALL NOT BE USED BY ANY PERSON OR FIRM FOR, OR BENEFIT OF, PARTIES OTHER THAN NECESSARY SUBCONTRACTORS AND SUPPLIERS WITHOUT THE WRITTEN CONSENT OF WSP USA.

NOTICE: THIS DRAWING HAS BEEN PREPARED UNDER THE DIRECTION OF A LICENSED PROFESSIONAL ENGINEER OR LAND SURVEYOR. IT IS A VIOLATION OF LAW FOR ANY PERSON, UNLESS HE IS ACTING UNDER THE DIRECTION OF A LICENSED PROFESSIONAL ENGINEER OR LAND SURVEYOR, TO ALTER THIS DRAWING IN ANY WAY. IF THIS DRAWING IS ALTERED, THE ALTERING ENGINEER OR SURVEYOR SHALL AFFIX TO THE DRAWING HIS SEAL AND A NOTATION INDICATING THE MANNER IN WHICH THE DRAWING HAS BEEN ALTERED, THE DATE OF ALTERATION, AND A SPECIFIC DESCRIPTION OF THE ALTERATION. IN ACCORDANCE WITH SECTION 7209 (2) ARTICLE 130, NEW YORK STATE EDUCATION LAW.

PIPING DETAILS

Summit Club Residential
568 Bedford Road (Route 22)
Town of North Castle, New York

WSP USA Inc.
6 Research Drive, Suite 260
Shelton, Connecticut 06484
(203) 929-8555

O:\DWG\Brynwood\Summit Club\Water Supply\PS_Details.dwg, Layout1, 9/29/2022 9:25:23 AM, DWG To PDF.pc3

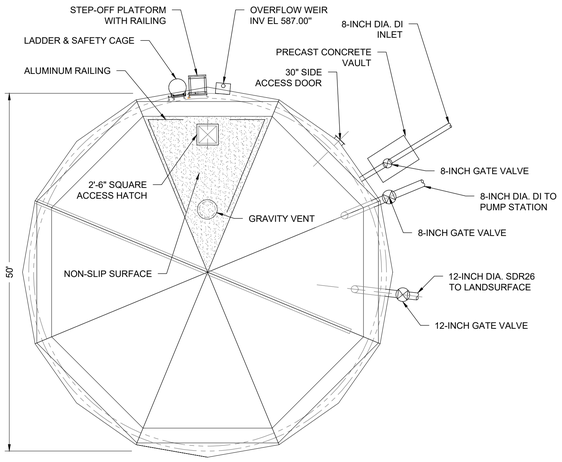

A 11 PLAN VIEW - TANK ROOF
SCALE: 1" = 10'-0"

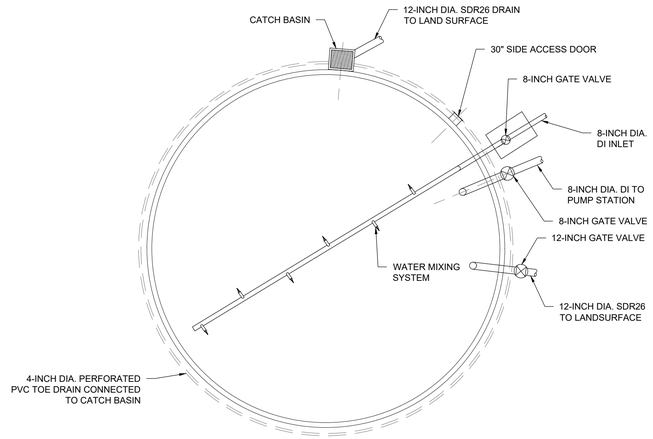

B 11 PLAN VIEW - TANK FLOOR
SCALE: 1" = 10'-0"

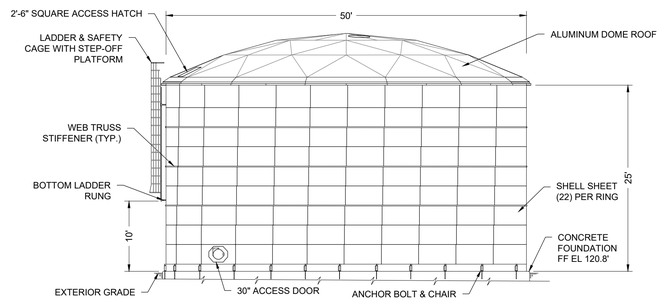

C 11 PROFILE VIEW - TANK
SCALE: 1" = 10'-0"

STORAGE TANK NOTES:

1. TANK SHALL BE GLASS LINED BOLTED STEEL WITH A WORKING CAPACITY OF NO LESS THAN 105,000 GALLONS.
2. THE TANK SHALL HAVE A FINISHED FLOOR ELEVATION OF 563.00'; A HIGH WATER LEVEL AT ELEVATION 587.50'; AND AN OVERFLOW WEIR AT ELEVATION 588.00'.
3. THE CONTRACTOR SHALL PROVIDE PROJECT SPECIFIC TANK DESIGN AND CALCULATIONS DEVELOPED BY THE TANK MANUFACTURER AND SEALED BY A PROFESSIONAL ENGINEER LICENSED IN THE STATE OF NEW YORK. GRAVITY VENT SHALL BE PROVIDED WITH BIRD/INSECT SCREENING AND SHALL MEET THE REQUIREMENTS OF AWWA D103-97 AND AWWA D103-09.
4. THE TANK SHALL BE EQUIPPED WITH A CATHODIC PROTECTION SYSTEM PER TANK MANUFACTURER RECOMMENDATIONS.
5. ROOF ACCESS SHALL INCLUDE 2'-6" SQUARE HATCH OPENING, LADDER WITH SAFETY CAGE, STEP-OFF PLATFORM, SAFETY CABLE, AND ROOF-MOUNTED ALUMINUM PIPE SAFETY RAIL. ALL STEEL COMPONENTS SHALL BE HOT DIP GALVANIZED.
6. THE INFLUENT WATER MIXING SYSTEM SHALL BE A TIDEFLEX MIXING SYSTEM OR APPROVED EQUAL. THE CONTRACTOR SHALL SUBMIT A MIXING AND WATER AGE ANALYSIS PROVIDED BY THE SYSTEM MANUFACTURER FOR REVIEW AND APPROVAL BY THE ENGINEER.

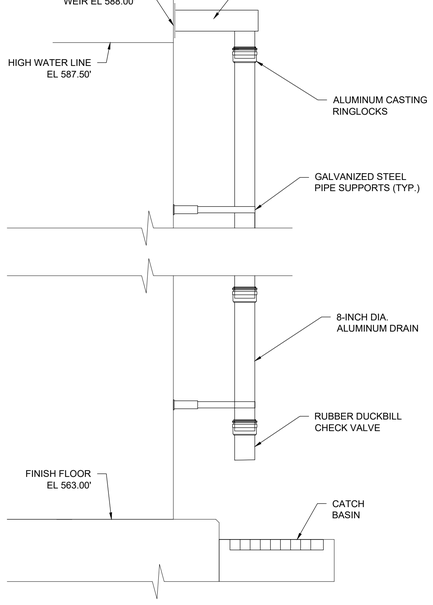

D 11 TANK OVERFLOW WEIR DETAIL
NOT TO SCALE

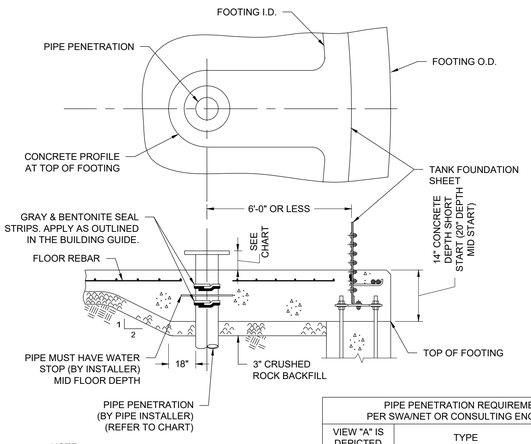

NOTE:
THIS IS A TYPICAL PIPE PENETRATION DETAIL THROUGH THE FOUNDATION FLOOR WHEN THE PIPE IS LOCATED 6'-0" OR LESS FROM THE TANK INSIDE WALL.

SOURCE:
CST STORAGE DRAWING NO. 261342 TYP.

E 11 FLOOR PENETRATION
NOT TO SCALE

PIPE PENETRATION REQUIREMENT PER SWANET OR CONSULTING ENGINEER		
VIEW "A" IS DEPICTED	TYPE	QUANTITY EACH
A	MECHANICAL FLANGE 6" ABOVE FLOOR	?
B	PLAIN END 6" ABOVE FLOOR	?
C	PLAIN END FLUSH WITH FLOOR	?

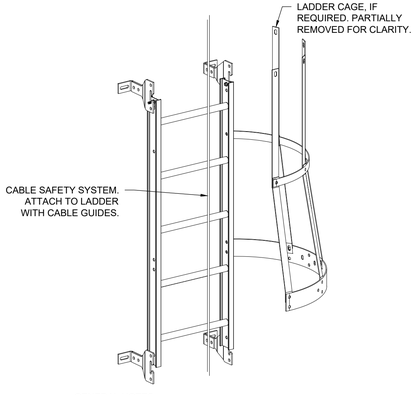

GENERAL NOTES:
1. ALL STEEL COMPONENTS ARE HOT DIP GALVANIZED.
2. LADDER BRACKET ASSEMBLIES ARE SHOWN FOR REFERENCE ONLY. POSITION OF THE BRACKETS TO BE DETERMINED DURING INSTALLATION.

SOURCE:
STATEWIDE AQUA STORE INC. DWG # 291117-MOD2.

F 11 LADDER SECTION WITH CABLE SAFETY SYSTEM
NOT TO SCALE

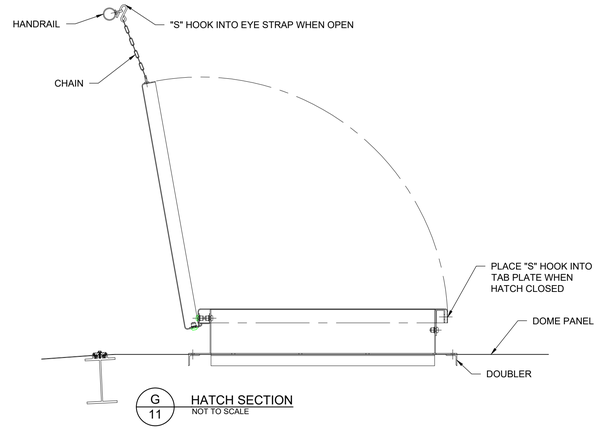

G 11 HATCH SECTION
NOT TO SCALE

REVISIONS

REV	DESCRIPTION	Chkd:	Appr.:
1	Revised:	Chkd:	Appr.:
2	Revised:	Chkd:	Appr.:
3	Revised:	Chkd:	Appr.:

SEAL

DATE

DRAWN BY RAC
CHECKED MS
APPROVED SR
DRAWING DATE 08/17/22

IMPORTANT: THIS DRAWING IS THE PROPERTY OF WSP USA AND AS SUCH IS SUBJECT TO RECALL AT ANY TIME. INFORMATION CONTAINED HEREIN SHALL NOT BE DISCLOSED OR REPRODUCED IN WHOLE OR IN PART OR USED FOR ANY PURPOSE OTHER THAN THE PROJECT FOR THE BENEFIT OF PARTIES OTHER THAN THOSE FOR WHOM IT WAS PREPARED BY WSP USA OR ITS SUBCONSULTANTS AND SUPPLIERS WITHOUT THE WRITTEN CONSENT OF WSP USA.

NOTICE: THIS DRAWING HAS BEEN PREPARED UNDER THE DIRECTION OF A LICENSED PROFESSIONAL ENGINEER OR LAND SURVEYOR. IT IS A VIOLATION OF THE NEW YORK STATE EDUCATION LAW FOR ANY PERSON TO ALTER THIS DRAWING IN ANY WAY UNLESS HE OR SHE IS ACTING UNDER THE DIRECTION OF A LICENSED PROFESSIONAL ENGINEER OR LAND SURVEYOR. ALTERATION OF A DRAWING IN ANY WAY IN ACCORDANCE WITH SECTION 7209 (2), ARTICLE 130, NEW YORK STATE EDUCATION LAW.

205,000-GALLON ABOVE GRADE POTABLE WATER ATMOSPHERIC STORAGE TANK DETAILS

Summit Club Residential
568 Bedford Road (Route 22)
Town of North Castle, New York

WSP USA Inc.
6 Research Drive, Suite 260
Shelton, Connecticut 06484
(203) 929-8555

D

O:\DWG\Brynwood\Summit Club\Water Supply\P6_TankDetails.dwg, Layout1, 9/29/2022 9:24:40 AM, DWG To PDF.pc3

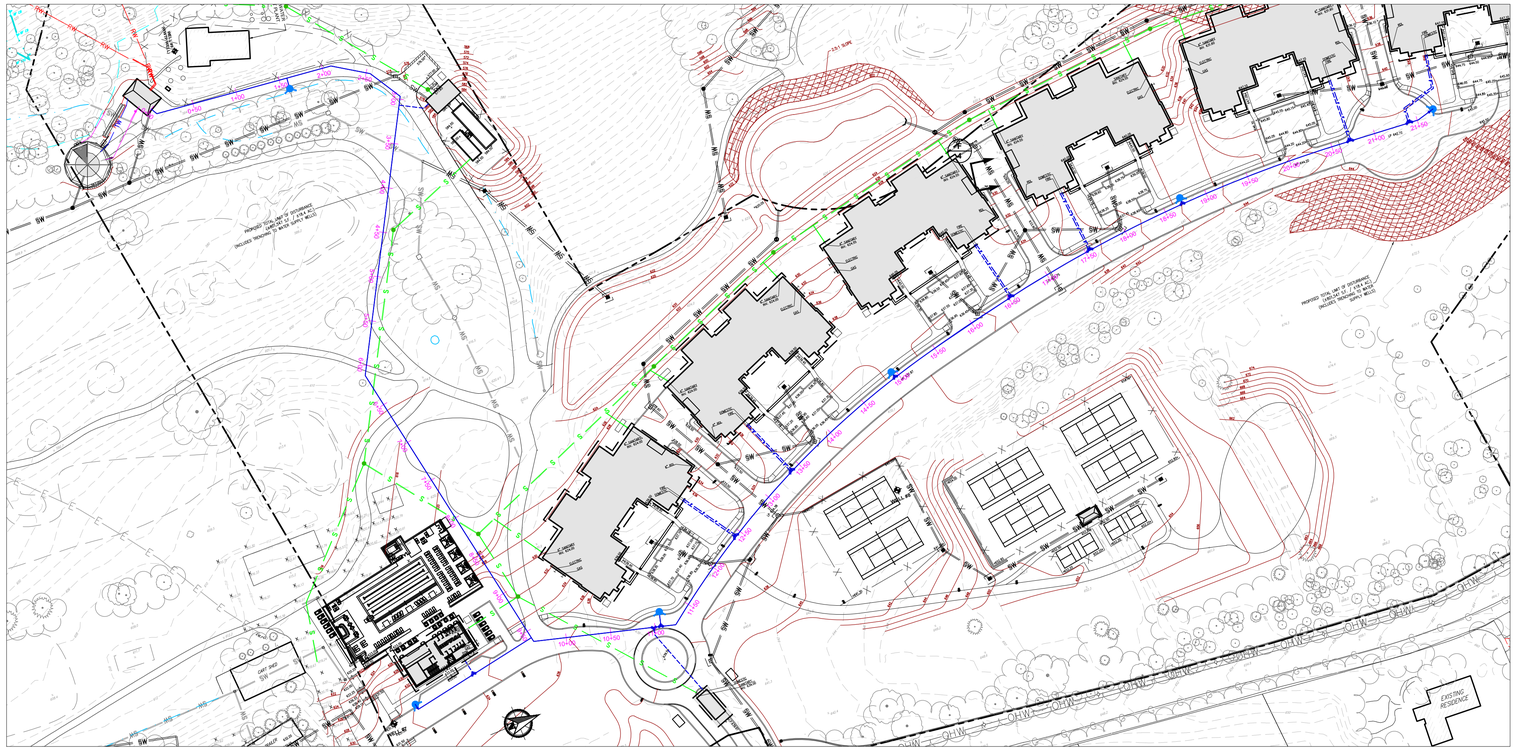

PLAN VIEW
SCALE: 1" = 80'

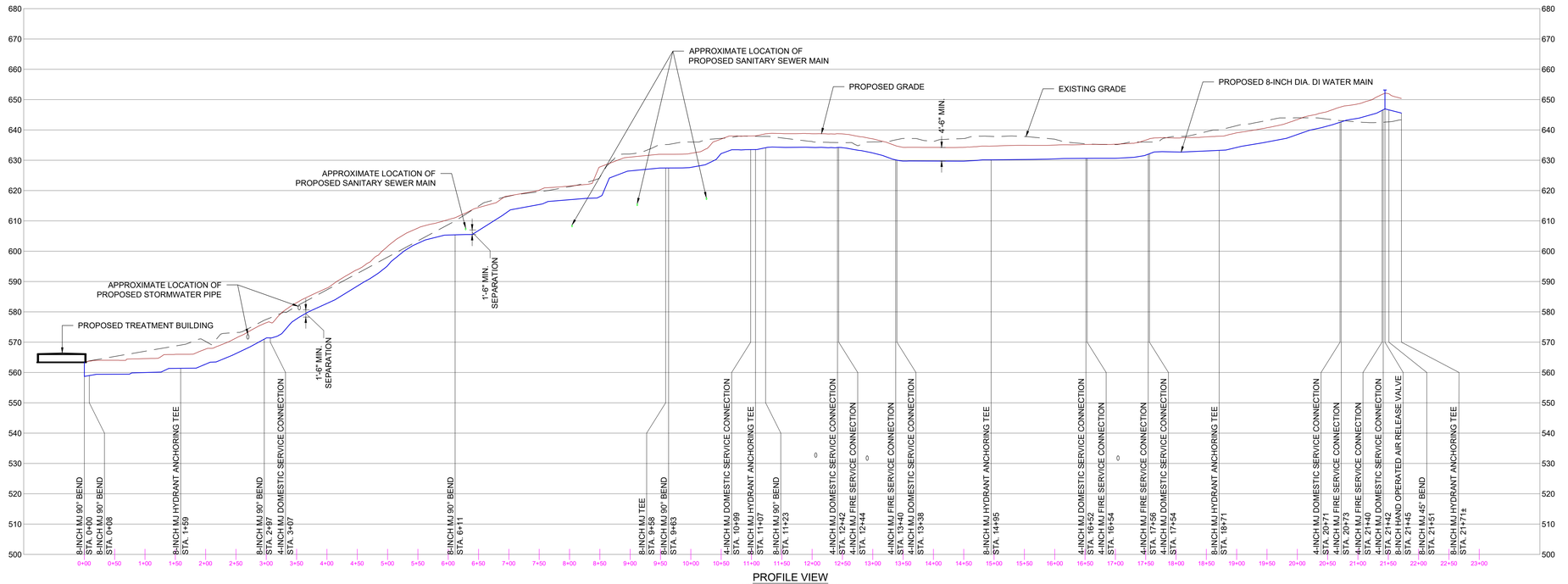

PROFILE VIEW
VERTICAL SCALE: 1" = 20'
HORIZONTAL SCALE: 1" = 100'

LEGEND

- PROPERTY BOUNDARY
- EXISTING FLAGGED WETLAND BOUNDARY
- EXISTING WETLAND BUFFER
- EXISTING CONTOUR
- PROPOSED CONTOUR
- EXISTING WELL
- EXISTING ELECTRICAL LINE
- EXISTING GAS LINE
- EXISTING STORMWATER PIPE
- EXISTING SANITARY SEWER MAIN
- PROPOSED STORMWATER PIPE
- PROPOSED SANITARY SEWER MAIN
- PROPOSED 8-INCH DIA. DUCTILE IRON WATER MAIN
- PROPOSED 4-INCH DIA. DUCTILE IRON DOMESTIC SERVICE CONNECTION
- PROPOSED 4-INCH DIA. DUCTILE IRON FIRE SERVICE CONNECTION
- PROPOSED 4-INCH DIA. HDPE RAW WATER PIPE
- PROPOSED FIRE HYDRANT
- STATION NUMBER

0 20
VERTICAL SCALE IN FEET

0 100
HORIZONTAL SCALE IN FEET

D

SOURCE:
JMC "LAY-GRAD-UTIL_2022-05-11.dwg" EMAILED AUTOCAD FILE.

O:\DWG\Brynwood\Summit Club\Water Supply\PT-8_PlanProfile.dwg, Layout1, 9/29/2022 9:23:46 AM, DWG To PDF.pc3

REVISIONS

REV	DESCRIPTION		
1	Revised:	Chkd:	Appr.:
2	Revised:	Chkd:	Appr.:
3	Revised:	Chkd:	Appr.:

SEAL

DATE

DRAWN BY RAC
CHECKED MS
APPROVED SR
DRAWING DATE 08/17/22

IMPORTANT: THE DRAWINGS ARE PROVIDED TO YOU AS A MUTUAL ASSISTANCE AND AS SUCH IS SUBJECT TO RECALL AT ANY TIME. INFORMATION CONTAINED ON THESE DRAWINGS IS PROPRIETARY AND SHALL NOT BE USED IN WHOLE OR IN PART IN ANY FORM FOR THE BENEFIT OF PARTIES OTHER THAN NECESSARY SUBCONTRACTORS AND SUPPLIERS WITHOUT THE WRITTEN CONSENT OF WSP USA.

NOTICE: THIS DRAWING HAS BEEN PREPARED UNDER THE DIRECTION OF A LICENSED PROFESSIONAL ENGINEER OR LAND SURVEYOR. IT IS A VIOLATION OF THE NEW YORK STATE EDUCATION LAW FOR ANY PERSON, UNLESS ACTING UNDER THE DIRECTION OF A LICENSED PROFESSIONAL ENGINEER OR LAND SURVEYOR, TO ALTER THIS DRAWING IN ANY WAY. IF THIS DRAWING IS ALTERED, THE ALTERING ENGINEER OR SURVEYOR SHALL AFFIX TO THE DRAWING HIS SEAL AND A NOTATION INDICATING THE EXTENT OF THE ALTERATIONS. IN ACCORDANCE WITH SECTION 7209 (2) ARTICLE 130, NEW YORK STATE EDUCATION LAW.

DISTRIBUTION SYSTEM PLAN AND PROFILE

Summit Club Residential
568 Bedford Road (Route 22)
Town of North Castle, New York

WSP USA Inc.
6 Research Drive, Suite 260
Shelton, Connecticut 06484
(203) 929-8555

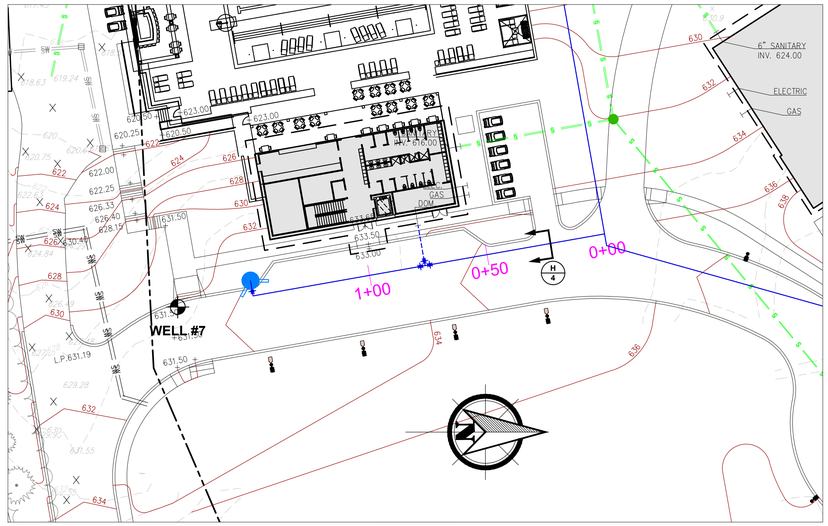

PLAN VIEW
SCALE: 1" = 30'

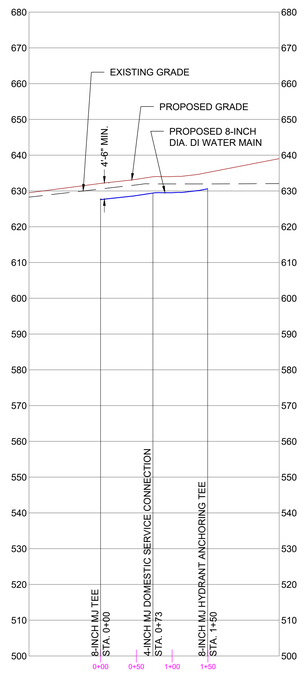

PROFILE VIEW
VERTICAL SCALE: 1" = 20'
HORIZONTAL SCALE: 1" = 100'

LEGEND

- PROPERTY BOUNDARY
- EXISTING FLAGGED WETLAND BOUNDARY
- EXISTING WETLAND BUFFER
- EXISTING CONTOUR
- PROPOSED CONTOUR
- EXISTING WELL
- EXISTING ELECTRICAL LINE
- EXISTING GAS LINE
- EXISTING STORMWATER PIPE
- EXISTING SANITARY SEWER MAIN
- PROPOSED STORMWATER PIPE
- PROPOSED SANITARY SEWER MAIN
- PROPOSED 8-INCH DIA. DUCTILE IRON WATER MAIN
- PROPOSED 4-INCH DIA. DUCTILE IRON DOMESTIC SERVICE CONNECTION
- PROPOSED 4-INCH DIA. DUCTILE IRON FIRE SERVICE CONNECTION
- PROPOSED 4-INCH DIA. HDPE RAW WATER PIPE
- PROPOSED FIRE HYDRANT
- STATION NUMBER

0 20
VERTICAL SCALE IN FEET

0 100
HORIZONTAL SCALE IN FEET

D

SOURCE:
JMC "LAY-GRAD-UTIL_2022-05-11.dwg" EMAILED AUTOCAD FILE.

O:\DWG\Brynwood\Summit Club\Water Supply\P7-8_PlanProfile.dwg, Layout2, 9/29/2022 9:19:19 AM, DWG To PDF.pc3

REVISIONS

REV	DESCRIPTION		
1	Revised:	Chkd:	Appr.:
2	Revised:	Chkd:	Appr.:
3	Revised:	Chkd:	Appr.:

SEAL

DATE

DRAWN BY RAC
CHECKED MS
APPROVED SR
DRAWING DATE 08/17/22

PROPERTY OF WSP USA
IMPORTANT: THIS DRAWING IS LOANED FOR MUTUAL ASSISTANCE AND AS SUCH IS SUBJECT TO RECALL AT ANY TIME. INFORMATION CONTAINED HEREON IS NOT TO BE DISCLOSED OR REPRODUCED IN ANY FORM OR TO BE USED FOR OTHER THAN NECESSARY SUBCONTRACTORS AND SUPPLIERS WITHOUT THE WRITTEN CONSENT OF WSP USA.

NOTICE: THIS DRAWING HAS BEEN PREPARED UNDER THE DIRECTION OF A LICENSED PROFESSIONAL ENGINEER. IT IS A VIOLATION OF ARTICLE 130 OF THE NEW YORK STATE EDUCATION LAW FOR ANY PERSON TO ALTER THIS DOCUMENT IN ANY WAY WITHOUT THE EXPRESS WRITTEN VERIFICATION OR ADDITION BY A NEW YORK STATE LICENSED LAND SURVEYOR OR ENGINEER IN ACCORDANCE WITH SECTION 7209 (2), ARTICLE 130, NEW YORK STATE EDUCATION LAW.

DISTRIBUTION SYSTEM PLAN AND PROFILE

Summit Club Residential
568 Bedford Road (Route 22)
Town of North Castle, New York

WSP USA Inc.
6 Research Drive, Suite 260
Shelton, Connecticut 06484
(203) 929-8555

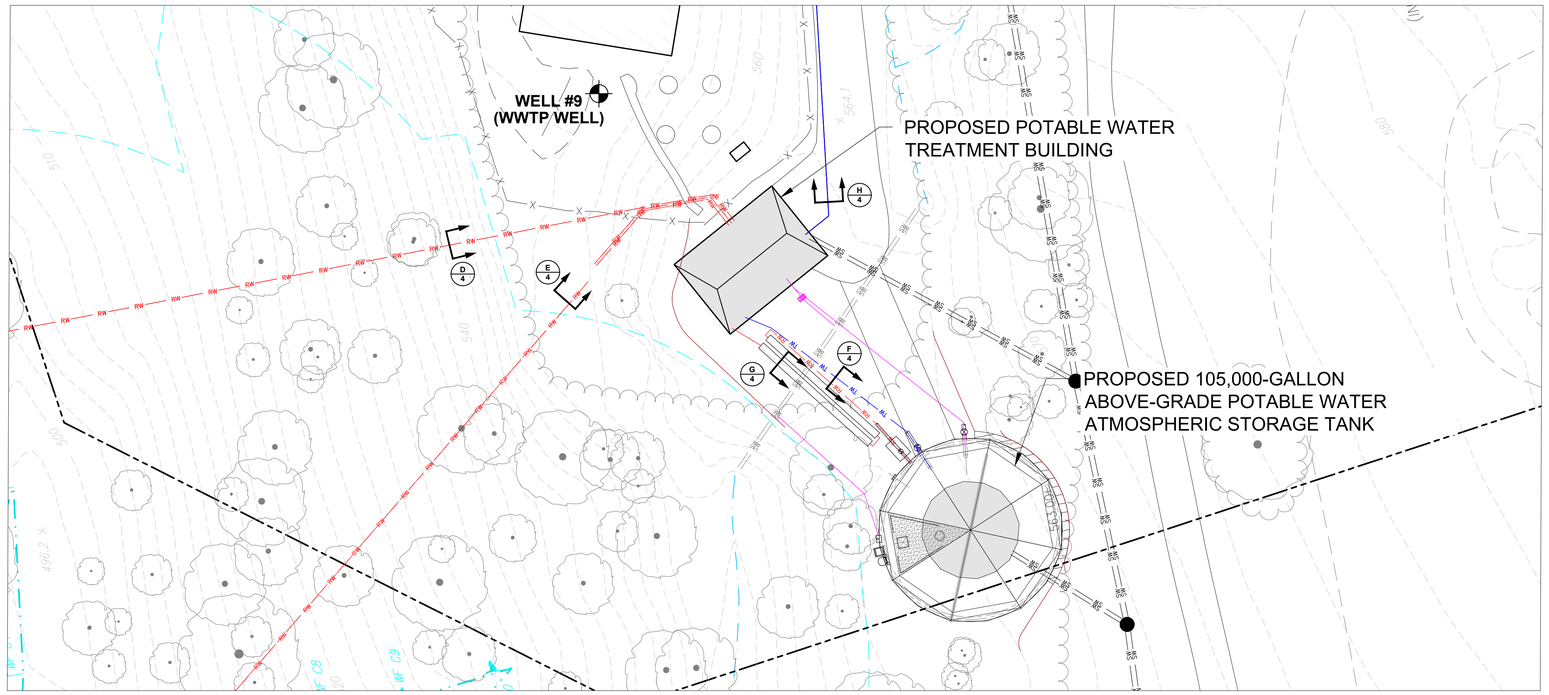

PLAN VIEW
SCALE: 1" = 20'

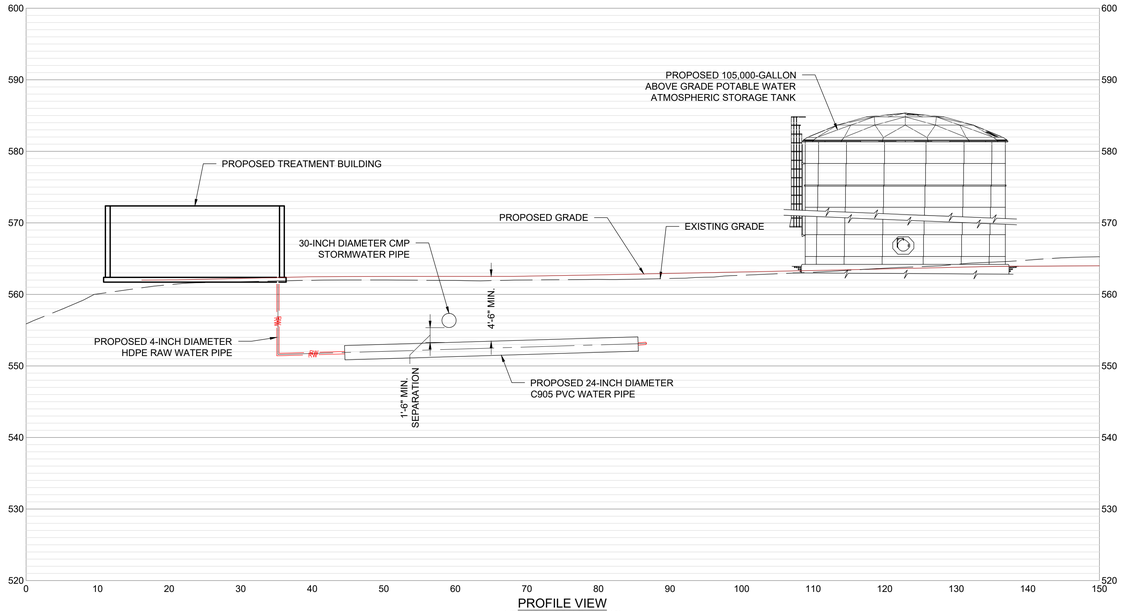

PROFILE VIEW
VERTICAL SCALE: 1" = 10'
HORIZONTAL SCALE: 1" = 10'

LEGEND

- PROPERTY BOUNDARY
- EXISTING FLAGGED WETLAND BOUNDARY
- EXISTING WETLAND BUFFER
- EXISTING CONTOUR
- PROPOSED CONTOUR
- EXISTING WELL
- EXISTING ELECTRICAL LINE
- EXISTING GAS LINE
- EXISTING STORMWATER PIPE
- EXISTING SANITARY SEWER MAIN
- PROPOSED STORMWATER PIPE
- PROPOSED SANITARY SEWER MAIN
- PROPOSED 8-INCH DIA. DUCTILE IRON WATER MAIN
- PROPOSED 4-INCH DIA. DUCTILE IRON DOMESTIC SERVICE CONNECTION
- PROPOSED 4-INCH DIA. DUCTILE IRON FIRE SERVICE CONNECTION
- PROPOSED 4-INCH DIA. HDPE RAW WATER PIPE
- PROPOSED FIRE HYDRANT
- STATION NUMBER

VERTICAL SCALE IN FEET
HORIZONTAL SCALE IN FEET

D

SOURCE:
JMC "LAY-GRAD-UTIL_2022-05-11.dwg" EMAILED AUTOCAD FILE.

O:\DWG\Brynwood\Summit Club\Water Supply\P7-8_PlanProfile.dwg, Layout3, 9/29/2022 9:18:06 AM, DWG To PDF.pc3

REVISIONS

REV	DESCRIPTION		
1	Revised:	Chkd:	Appr.:
2	Revised:	Chkd:	Appr.:
3	Revised:	Chkd:	Appr.:

SEAL

DATE

DRAWN BY	RAC
CHECKED	MS
APPROVED	SR
DRAWING DATE	08/17/22

PROPERTY OF WSP USA
IMPORTANT: THIS DRAWING PRINT IS LOANED FOR MUTUAL ASSISTANCE AND AS SUCH IS SUBJECT TO RECALL AT ANY TIME. INFORMATION CONTAINED HEREON IS NOT TO BE DISCLOSED OR REPRODUCED IN ANY FORM FOR THE BENEFIT OF PARTIES OTHER THAN NECESSARY SUBCONTRACTORS AND SUPPLIERS WITHOUT THE WRITTEN CONSENT OF WSP USA.

NOTICE: THIS DRAWING HAS BEEN PREPARED UNDER THE DIRECTION OF A LICENSED PROFESSIONAL ENGINEER. IT IS A VIOLATION OF ARTICLE 130 OF THE NEW YORK STATE EDUCATION LAW FOR ANY PERSON TO ALTER THIS DOCUMENT IN ANY WAY WITHOUT THE EXPRESS WRITTEN VERIFICATION OR ADDITION BY A NEW YORK STATE LICENSED LAND SURVEYOR OR ENGINEER IN ACCORDANCE WITH SECTION 7209 (2), ARTICLE 130, NEW YORK STATE EDUCATION LAW.

OVERSIZED WATER MAIN PLAN AND PROFILE

Summit Club Residential
568 Bedford Road (Route 22)
Town of North Castle, New York

WSP USA Inc.
6 Research Drive, Suite 260
Shelton, Connecticut 06484
(203) 929-8555

72-HOUR PUMPING TEST REPORT

SUMMIT COUNTRY CLUB WELLS 1, 3 AND 6A

Summit Club

Town of North Castle

Westchester County, New York

PROJECT NO.: 31403576.002
DATE: AUGUST 2022

WSP USA INC.
4 RESEARCH DRIVE, SUITE 204
SHELTON, CT 06484

PHONE: +1 (203) 929-8555
FAX: +1 (203) 926-9140
wsp.com

SIGNATURES

PREPARED BY:

Stacy Stieber, CPG, PG (NY)
Senior Lead Hydrogeologist

PREPARED BY:

Thomas P. Cusack, CPG, PG (NY)
Vice President

This report was prepared by WSP USA (WSP) for the account of Summit Club Manor, in accordance with the professional services agreement. The disclosure of any information contained in this report is the sole responsibility of the intended recipient. The material in it reflects WSP's best judgement in light of the information available to it at the time of preparation. Any use that a third party makes of this report, or any reliance on or decisions to be made based on it, are the responsibility of such third parties. WSP accepts no responsibility for damages, if any, suffered by any third party as a result of decisions made or actions based on this report. This limitations statement is considered part of this report.

TABLE OF CONTENTS

Page

1.0 INTRODUCTION 1

2.0 WATER DEMAND 1

3.0 JUNE 2022 72-HOUR PUMPING TEST PROGRAM 2
- 3.1 Well 1 4
- 3.2 Well 3 5
- 3.3 Well 6A 5
- 3.4 June 2022 72-Hour Pumping Test Yield Summary 6

4.0 ONSITE MONITORING WELLS 6

5.0 OFFSITE MONITORING WELLS 7

6.0 PIEZOMETER LOCATIONS 10

7.0 WATER-QUALITY RESULTS 11
- 7.1 Well 1 11
- 7.2 Well 3 11
- 7.3 Well 6A 12
- 7.4 Physical Parameter Measurements 12

8.0 CONCLUSIONS 12

TABLES

PAGE

TABLE 1: Summit Club Potable Water Demand Calculation 2
TABLE 2: Daily Precipitation Totals..... 3
TABLE 3: Monthly Precipitation and Precipitation Normal from 1991-2020 4
TABLE 4: Drawdown Measured During June 2022 Pumping Test in Onsite Monitoring Wells..... 7
TABLE 5: Properties Contacted in 2022 With Request for Well Monitoring..... 7
TABLE 6: Drawdown Measured During June 2022 Pumping Test in Offsite Monitoring Wells..... 9
TABLE 7: Drawdown Measured During May 2013 Pumping Test in the Offsite Monitoring Wells 10

FIGURES

FIGURE 1: Site Location Map
FIGURE 2: Site Map and Onsite Well Locations
FIGURE 3: Offsite Well Monitoring Program

APPENDICES

I Westchester County Department of Health, Pumping Test Plan Acknowledgement
II Well Completion Reports
III Pumping Wells 1, 3 and 6A Hydrographs, 180-Day Drawdown Projection Graphs and Water-Level Summary Tables
IV Onsite Monitoring Well Hydrographs and Water Level Summary Table
V Offsite Monitoring Well Hydrographs and Water Level Summary Table
VI Piezometer Hydrograph and Water-Level Summary Table
VII Laboratory Reports, Wells 1, 3 and 6A
VIII Physical Parameter Graphs and Tables

CD (at end of report)

Water-Level Data

1.0 INTRODUCTION

The following are the results of the combined 72-hour pumping test conducted on the Summit Country Club Wells 1, 3 and 6A by WSP USA Inc., and related company Hydrogeologic, Architecture, Land Surveying, Landscape Architecture Services, P.C. (WSP), in June 2022. The Summit Country Club is located at 568 Bedford Road in North Castle, New York (Figure 1). The pumping test was conducted at the recommendation of the Westchester County Department of Health (WCDH) to confirm that the yield capacity of the proposed residential potable supply wells could meet the current water demand needs of the proposed residential development on the project site. A Pumping Test Plan was prepared and submitted to the WCDH in January 2022. Comments were received from WCDH in February 2022 and a revised plan was prepared and resubmitted in March 2022. WCDH acknowledged and accepted the revised plan in an email dated March 10, 2022 (Appendix I).

A groundwater exploration program was conducted for the Summit Country Club (formerly Brynwood Golf & Country Club) in 2013 to develop an onsite potable water source that could meet the water demand of a proposed residential development on the project site. Bedrock well locations were selected on the property that meet the New York State Department of Health (NYSDOH) well siting requirement for community public water-supply wells. The proposed well locations were submitted to the WCDH for review and approval prior to drilling. Upon receipt of approval of the well locations from WCDH, the well drilling program was conducted and sufficient yields were encountered in several of the bedrock test wells to proceed with a pumping test program and water-quality sample analysis. Copies of the Well Completion Reports for Wells 1, 2B, 3, 4 and 5 drilled during the groundwater exploration program are included in Appendix II.

Wells 1, 3 and 6A were previously yield tested in May 2013. Following the completion of the groundwater exploration program, a 72-hour pumping test program was conducted on onsite bedrock Wells 1, 2B, 3, 5, 6A and Irrigation Wells 4 and 5 (Figure 2). Well 4 was not included as a pumping well in the 2013 pumping test program but was measured as an onsite monitoring well during the test period. Wells 1, 2B, 3, 5, Irrigation Well 4 and Irrigation Well 5 were pumped concurrently to demonstrate their combined yield capacity and to assess potential pumping-related drawdown effects in the aquifer. An individual 72-hour pumping test was conducted on Well 6A to demonstrate it as the best well (out of service) to meet the NYSDOH requirement of providing twice a project's average water demand with the best well out of service. The individual yields of Wells 1, 2B, 3, 5 and Irrigation Wells 4 and 5 from the simultaneous pumping test were 50 gpm (gallons per minute), 12 gpm, 32 gpm, 19.5 gpm, 32 gpm and 40 gpm, respectively, for a combined yield of 185.5 gpm. The yield of Well 6A from the individual pumping test conducted was 55 gpm. The report with the results of the May 2013 pumping test program has been previously submitted to the WCDH, New York State Department of Environmental Conservation (NYSDEC) and Town of North Castle.

After the completion of the 2013 well testing program, as SEQR Lead Agency, the Town of North Castle recommended that Summit Club evaluate connection of the proposed project to the Windmill Farms Water District #2. The Summit Club pursued additional groundwater exploration at the Windmill Farms well field to develop supplemental water to supply the proposed Summit Club development. However, the results of the groundwater exploration program at the Windmill Farms well field did not produce sufficient surplus capacity to meet the requirements of the proposed Summit Club project. Therefore, the Summit Club is now pursuing the use of their own onsite wells to meet their potable water-supply needs.

2.0 WATER DEMAND

The table below is a summary of the estimated potable water demand for the Summit Club project. This calculation was used to select the minimum target pumping rates for Wells 1, 3 and 6A during the June 2022 72-hour

pumping test program. Per the comments received from WCDH, the non-residential water usages have been adjusted for hours of operation in the calculations and no 20% reduction for water-saving fixtures has been applied. The goal of the 72-hour pumping test was to demonstrate the wells could meet twice the projects maximum daily water demand with the best well out of service.

Table 1: Summit Club Potable Water Demand Calculation

Usage Type	Subcategory	Number	Water Usage Rate	Hour of Operation (hours)	Water Demand (gpd)	Water Demand (gpm)
Townhomes	--	198 bedrooms	110 gpd/bedroom	24	21,780	15.1
Guest Cottages	--	40 bedrooms	110 gpd/bedroom	24	4,400	3.1
Restaurant	--	252 seats	35 gpd/seat	18	11,025	7.7
Bar/Lounge	--	35 seats	20 gpd/seat	18	875	0.6
Country Club	Employees	20 employees	15 gpd/employee	18	375	0.3
	Pool	257 swimmers	10 gpd/swimmer	18	3,213	2.2
	Spa/Jacuzzi	24 patrons	10 gpd/swimmer	18	300	0.2
	Excess Pool Deck	170 swimmers	10 gpd/swimmer	18	2,125	1.5
Golf Rounds	--	144 rounds	20 gpd/round	18	3,600	2.5
Golf Course Maintenance Facility	Employees	15 employees	15 gpd/employee	18	281	0.2
	Seasonal Staff Dormitory Accommodations	12 staff	75 gpd/staff	24	900	0.6
Wastewater Treatment Plant Usage	--	--	55 gpd	24	55	0.0
				Average Water Demand	48,929	34.0
				Maximum Daily Demand	97,858	68.0

gpm gallons per minute
gpd gallons per day

3.0 JUNE 2022 72-HOUR PUMPING TEST PROGRAM

The combined 72-hour pumping test program on Wells 1, 3 and 6A was conducted between June 20 through 23, 2022. The three wells were pumped concurrently and the well pumps were started in a staggered manner with a minimum two hours between the start of each well pump. The pump in Well 6A was started first, followed by Well 1, and the pump in Well 3 was started last. The wells were pumped concurrently for a minimum of 72 hours following the start of the pump in the final well (Well 3).

During the 72-hour pumping test program, water-level measurements were collected from the onsite pumping Wells 1, 3, and 6A; onsite monitoring Wells 2B, 5, 9, 10, Irrigation Well 4, Irrigation Well 5, and former Irrigation Well 3; and 13 offsite wells located near the project site. The hydrographs, 180-day drawdown projection graphs and summary tables of water-level measurements collected from the pumping Wells 1, 3 and 6A are provided in Appendix III. The hydrographs and summary tables of water-level measurements collected from onsite monitoring wells are provided in Appendix IV and for the offsite monitoring wells are provided in Appendix V. The onsite and offsite well locations are shown on Figures 2 and 3. The raw water-level data collected from all locations are provided on the attached excel spreadsheet.

In addition to the wells, water-level measurements were collected from a piezometer location, PZ-1, installed near Wells 1 and 6A. The hydrographs and a table of the water-level measurements collected from the piezometer location is included in Appendix VI. The piezometer location is shown on Figure 2.

The water from Wells 1, 3 and 6A was discharged to waste during the pumping test. The discharge locations are shown on Figure 2. The locations were positioned downgradient of the onsite wells and surface-water monitoring location to prevent artificial recharge of the groundwater during the test period.

Daily precipitation was measured at the well field and monitored at other nearby weather stations. Daily precipitation measurements from a weather station in Armonk have been overlain on the hydrographs for reference. Daily precipitation totals from the station are also included on the table below.

Table 2: Daily Precipitation Totals

Date	Daily Precipitation (inches)
6/14/2022	0
6/15/2022	0
6/16/2022	0.18
6/17/2022	0.02
6/18/2022	0.03
6/19/2022	0
6/20/2022	0
6/21/2022	0
6/22/2022	0.11
6/23/2022	0.07
6/24/2022	0.15
6/25/2022	0
6/26/2022	0
6/27/2022	0.10

Total monthly precipitation for the Westchester County AP station and 30-year normal for the 12-month period prior to the pumping test in June 2022 are provided in the table below. In the months leading up to the June 2022 72-hour pumping test, with the exception of April 2022, precipitation has been below normal since November 2021.

Table 3: Monthly Precipitation and Precipitation Normal from 1991-2020

Date	Total Precipitation (inches)	Monthly Precipitation Normals (1991-2020) (inches)
July 2021	4.44	4.07
August 2021	4.54	4.36
September 2021	8.54	4.94
October 2021	5.99	4.33
November 2021	1.11	3.64
December 2021	1.11	4.18
January 2022	2.60	3.20
February 2022	2.58	2.53
March 2022	2.09	4.11
April 2022	5.91	4.20
May 2022	3.40	3.94
June 2022	3.72	4.25

Water samples were collected from Wells 1, 3 and 6A at the end of the 72-hour test for analysis for NYSDOH Sanitary Code Part 5, Subpart 5-1 parameters for community, public water-supply wells listed in Tables 8A, 8B, 8C, 8D, 9B, 9C (including the extras dioxin, endothall, diquat and glyphosate), 9D, 10A, 11A, 12, lead, copper, total coliform, perfluorinated compounds (18 compound list) and radon. Microscopic particulate analysis (MPA), giardia, cryptosporidium samples were also collected from Wells 1 and 6A during the test period because these wells are located within 200 feet of surface water. The laboratory reports for the Part 5 and MPA samples are included in Appendix VII. Measurements of pH, temperature and conductivity were also collected from the Wells 1 and 6A discharge water and the nearby surface water as part of the preliminary groundwater under the direct influence of surface water (GWUDI) assessment. A graph and tables of the physical parameter measurements collected are provided in Appendix VIII.

3.1 Well 1

The pump in Well 1 was started at 12:21 on June 20, 2022. Prior to the start of pumping in any of the onsite wells, the water level in Well 1 was flowing artesian over the top of casing. The pump in Well 6A was started before Well 1 at 10:45. During the intervening period between the start of pumping in Well 6A and the start of pumping in Well 1, the water level in Well 1 declined to 3.05 ft btoc (feet below top of casing).

Following the start of pumping in Well 1, the pumping rate in the well was adjusted to 46 gpm. As the test progressed and the pumping water level in the well declined, the pumping rate decreased to 37 gpm on June 22. The pumping rate remained at 37 gpm for the last 24 hours of the test period.

The pump in Well 1 was shut down at 17:00 on June 23 after 76 hours and 39 minutes of continuous pumping. The final pumping water level in Well 1 at the end of the test was 244.65 ft btoc, for a total drawdown of 244.65 feet. The water-level change over the last six hours of pumping in Well 1 was 1.0 foot, which meets the stabilization criteria of less than 0.5 foot per 100 feet of available drawdown in the well. The water-level trend was slightly downward at the end of the test period, therefore, a 180-day water-level drawdown projection has been completed for Well 1 to assess the water level in the well after 180 days of continuous pumping. A copy of the 180-day water-level drawdown projection graph is included in Appendix III. Based on the projection, the water level in the well after 180 days of continuous pumping is 296.12 ft btoc. The projection data support that the pumping rate of 37 gpm is a sustainable yield capacity for Well 1 pumping concurrently with both Wells 3 and 6A.

Water-level recovery in Well 1 was measured for five days after shutdown of the test. The water level in the well reached 90% approximately 5.7 hours (339 minutes) after shutdown of the pump and the well was flowing artesian again approximately 14 hours after the end of the test.

3.2 Well 3

The pump in Well 3 was started at 16:38 on June 20, 2022. Prior to the start of pumping in any of the onsite wells, the water level in Well 3 was flowing artesian over the top of casing. The pumps in Wells 1 and 6A were started before Well 3. However, no drawdown was measured in Well 3 during the intervening period and the water level in Well 3 was still artesian just prior to the start of the well pump.

Following the start of pumping in Well 3, the pumping rate in the well was adjusted to 38 gpm and manually decreased to 36 gpm at 17:32. As the test progressed and the pumping water level in the well declined, the pumping rate decreased to 33 gpm on June 21. The pumping rate remained at 33 gpm for the duration of the test period.

The pump in Well 3 was shut down at 17:00 on June 23 after 72 hours and 22 minutes of continuous pumping. The final pumping water level in Well 3 at the end of the test was 107.77 ft btoc, for a total drawdown of 107.77 feet. The water-level change over the last six hours of pumping in Well 3 was 1.09 feet, which meets the stabilization criteria of less than 0.5 foot per 100 feet of available drawdown in the well. The water-level trend was slightly downward at the end of the test period, therefore, a 180-day water-level drawdown projection has been completed for Well 3 to assess the water level in the well after 180 days of continuous pumping. A copy of the 180-day water-level drawdown projection graph is included in Appendix III. Based on the projection, the water level in the well after 180 days of continuous pumping is 177.26 ft btoc. The projection data support that the pumping rate of 33 gpm is a sustainable yield capacity for Well 3 pumping concurrently with both Wells 1 and 6A.

Water-level recovery in Well 3 was measured for five days after shutdown of the test. The water level in the well reached 90% approximately 24.3 hours (1,457 minutes) after shutdown of the pump and the well was flowing artesian again approximately 39 hours after the end of the test.

3.3 Well 6A

The pump in Well 6A was started at 10:45 on June 20, 2022. Prior to the start of pumping, the static water level in Well 6A was flowing artesian over the top of casing. Following the start of the pump in Well 6A, the pumping rate in the well was adjusted to 45 gpm. As the test progressed and the pumping water level in the well declined, the pumping rate decreased to 43 gpm on June 22. The pumping rate remained at 43 gpm for the duration of the test period.

The pump in Well 6A was shut down at 17:00 on June 23 after 78 hours and 15 minutes of continuous pumping. The final pumping water level in Well 6A at the end of the test was 108.72 ft btoc, for a total drawdown of 108.72 feet. The water-level change over the last six hours of pumping in Well 6A was 1.10 foot, which meets the stabilization criteria of less than 0.5 foot per 100 feet of available drawdown in the well. The water-level trend was slightly downward at the end of the test period, therefore a 180-day water-level drawdown projection has been completed for Well 6A to assess the water level in the well after 180 days of continuous pumping. A copy of the 180-day water-level drawdown projection graph is included in Appendix III. Based on the projection, the water level in the well after 180 days of continuous pumping is 152.78 ft btoc. The projection data support that the pumping rate of 43 gpm is a sustainable yield capacity for Well 6A pumping concurrently with both Wells 1 and 3.

Water-level recovery in Well 6A was measured for five days after shutdown of the test. The water level in the well reached 90% approximately 8.5 hours (511 minutes) after shutdown of the pump and the well was flowing artesian again approximately 16 hours after the end of the test.

3.4 June 2022 72-Hour Pumping Test Yield Summary

The June 2022 72-hour pumping test demonstrated stabilized yields and water-level drawdown in Wells 1, 3 and 6A at pumping rates of 37 gpm, 33 gpm and 43 gpm, for a combined 113 gpm (162,720 gpd (gallons per day)). Similar to the May 2013 pumping test, Well 6A was the best well. Therefore, excluding the pumping volume of Well 6A, Wells 1 and 3 demonstrated that they can pump at a combined yield of 70 gpm or (100,800 gpd) during the June 2022 pumping test. This data are supported by the results from the prior May 2013 pumping test program which showed that Wells 1, 2B, 3, 5 and Irrigation Wells 4 and 5 can pump simultaneously at 50 gpm, 12 gpm, 32 gpm, 19.5 gpm, 32 gpm and 40 gpm, respectively, for a combined yield of 185.5 gpm.

The combined yield capacity of Wells 1 and 3 of 70 gpm (100,800 gpd) can support an average water demand of 50,400 gpd with the best well out of service which is more than sufficient to meet the water demand calculated in the table above (48,929 gpd). In the future, the use of all three well (Wells 1, 3 and 6A) concurrently is not likely to occur. The combined pumping rate of 113 gpm was 3.3 times the project's proposed average water demand. However, the pumping test has demonstrated that the proposed supply wells can be operated concurrently in any pumping combination warranted in the future to meet the water system's well service and maintenance needs.

4.0 ONSITE MONITORING WELLS

Water-level measurements were collected from seven onsite monitoring wells during the pumping test period. The hydrographs and a summary table of water-level measurements collected from the onsite monitoring wells are provided in Appendix IV and the well locations are shown on Figure 2.

Well 2B, Well 5 and former Irrigation Well 3 were flowing artesian prior to the start of the pumping test. Pressure transducers were installed in Wells 2B and former Irrigation Well 3 to measure water levels during the test period. Well 5 is capped with an outlet pipe which controls and diverts the overflow from this well. Therefore, the overflow rate was measured on Well 5 during the data collection period in lieu of water-level measurements to assess potential pumping-related impact.

Pressure transducers were also installed in Wells 9 and 10 and Irrigation Wells 4 and 5. Water levels were shallow in these wells, but the wells were not flowing during the test period. A slight declining water level trend is noted in the background water-level data in Irrigation Wells 4 and 5 and in Well 10. The continuation of this naturally declining trend during the test period and into the recovery period is evident in the wells.

Water-level drawdown that is attributed to Wells 1, 3 and 6A pumping was measured in Wells 2B, Irrigation Well 4 and Irrigation Well 5. Taking into account the natural declining trend observed in the background water-level data, the drawdown measured in Well 2B was approximately 9.1 feet, in Irrigation Well 4 approximately 1.6 feet, and in Irrigation Well 5 approximately 3.5 feet. The water level in these three wells fully recovered after the pumping test ended. Well 2B resumed artesian flow two days after the end of the test and Irrigation Wells 4 and 5 were 90% recovered within three days and resumed a slight declining water level on trend with the pre-test water levels approximately four days after the end of the test period.

No discernible drawdown that was attributed to Wells 1, 3 and 6A pumping was measured in Wells 5, 9, 10 or former Irrigation Well 3.

The table below is a summary of the drawdown observed in the onsite monitoring wells during the June 2022 72-hour pumping test.

Table 4: Drawdown Measured During June 2022 Pumping Test in Onsite Monitoring Wells

Address	Drawdown Measured During June 2022 Pumping Test (feet)
Well 2B	9.1
Well 5	ND
Well 9	ND
Well 10	ND
Former Irrigation Well 3	ND
Irrigation Well 4	1.6
Irrigation Well 5	3.5

ND None discernible

The drawdown measured in the onsite wells decreased with increasing distance from the pumping wells. In addition, the drawdown measured in the Irrigation Wells 4 and 5 was not significant and in line with the expected well interference based on the data from the May 2013 72-hour pumping test program.

5.0 OFFSITE MONITORING WELLS

The table below is a list of all properties that were contacted with a request to measure their well during the 2022 pumping test.

Table 5: Properties Contacted in 2022 With Request for Well Monitoring

Property Address	Comments
6 Evan Place	No response, form returned to WSP.
7 Evan Place	No response, form returned to WSP.
9 Evan Place	No response, form returned to WSP.
5 Norman Place	No response, form returned to WSP.
6 Norman Place (mailing address 113 Cold Springs Rd, Fishkill, NY 12524)	No response, form returned to WSP.
182 Byram Lake Road	No response, form returned to WSP.
82 Old Byram Lake Road	No response, form returned to WSP.
76 Old Byram Lake Road	No response, form returned to WSP.
74 Old Byram Lake Road	No response, form returned to WSP.
7 Willow Pond Lane	No response, form returned to WSP.
18 Blair Road	No response, form returned to WSP.
12 Blair Road	No response, form returned to WSP.
26 Blair Road	No response, form returned to WSP.
24 Blair Road	No response, form returned to WSP.
538 Bedford Road	No response, form returned to WSP.
3 Colonial Court	No response, form returned to WSP.
4 Colonial Court	No response, form returned to WSP.

Property Address	Comments
5 Colonial Court	No response, form returned to WSP.
7 Colonial Ct (mailing address 60 Knightbridge Rd, Great Neck, NY	No response, form returned to WSP.
5 Evan Place	No response, form returned to WSP.
3 Oregon Road	Property owner declined participation.
68 Old Byram Lake Road	Property owner declined participation.
66 Old Byram Lake Road	Property owner declined participation.
1 Colonial Court	Property owner declined participation.
8 Byram Hill Road	Property owner declined participation.
80 Old Byram Lake Road	Property owner declined participation.
7 Oregon Road	Property owner declined participation.
10 Evan Place	Property owner declined participation.
3 Willow Pond Lane	Property owner declined participation.
11 Blair Road	Signed permission form returned, well measured during June 2022 pumping test.
8 Embassy Court	Signed permission form returned, well measured during June 2022 pumping test.
10 Byram Hill Road	Signed permission form returned, well measured during June 2022 pumping test.
34 Blair Road	Signed permission form returned, well measured during June 2022 pumping test.
30 Blair Road	Signed permission form returned, well measured during June 2022 pumping test.
10 Willow Pond Lane	Signed permission form returned, well measured during June 2022 pumping test.
14 Willow Pond Lane	Signed permission form returned, well measured during June 2022 pumping test.
8 Colonial Court	Signed permission form returned, well measured during June 2022 pumping test.
8 Evan Place	Signed permission form returned, well measured during June 2022 pumping test.
198 Byram Lake Road	Signed permission form returned, well measured during June 2022 pumping test.
4 Norman Place	Signed permission form returned, well measured during June 2022 pumping test.
6 Byram Hill Road	Signed permission form returned, well measured during June 2022 pumping test.
188 Byram Lake Road	Signed permission form returned, but permission rescinded.
70 Old Byram Lake Road	Signed permission form returned, well measured during June 2022 pumping test.
19 Blair Road	Signed permission form returned, well could not be measured.

Water-level measurements were ultimately collected from 13 offsite monitoring wells during the pumping test period. The hydrographs and a summary table of water-level measurements collected from the offsite monitoring wells are provided in Appendix V and the well locations are shown on Figure 3.

Pressure transducers were installed in all of the offsite wells measured. A slight declining water-level trend is noted in the background water-level data in several of the offsite wells, similar to the trend observed in onsite

Irrigation Wells 4 and 5 and Well 10. The continuation of this naturally-declining trend during the test period and into the recovery period is also evident in the wells.

Water-level drawdown that was attributed to pumping Wells 1, 3 and 6A during the June 2022 testing program was measured in 3 of the 13 wells monitored. Drawdown of approximately 1.0 foot was measured in the well at 10 Willow Pond Lane and, taking into account the natural declining trend observed in the background water-level data, the drawdown measured in the wells at 30 Blair Road and 34 Blair Road was 5.8 feet in both wells. The water-level drawdown trends in all three wells were stable at the end of the 72-hour pumping test period.

No discernible drawdown that was attributed to Wells 1, 3 and 6A pumping was measured in the remaining 10 offsite wells measured during the June 2022 pumping test. The table below is a summary of the drawdown measured during the June 2022 pumping test.

Table 6: Drawdown Measured During June 2022 Pumping Test in Offsite Monitoring Wells

Address	Drawdown Measured During June 2022 Pumping Test (feet)
11 Blair Road	ND
8 Embassy Court	ND
10 Byram Hill Road	ND
34 Blair Road	5.8
30 Blair Road	5.8
10 Willow Pond Lane	1.0
14 Willow Pond Lane	ND
8 Colonial Court	ND
8 Evan Place	ND
198 Byram Lake Road	ND
4 Norman Place	ND
6 Byram Hill Road	ND
70 Old Byram Lake Road	ND

ND None discernible

The drawdown measured in the three offsite wells during the June 2022 72-hour pumping test occurred with Wells 1, 3 and 6A pumping currently at rates of 37 gpm, 33 gpm and 43 gpm, for a combined 113 gpm for 72+ hours continuously during a dry period. This combined pumping rate of 113 gpm is 3.3 times the project's proposed average water demand. In the future, the use of all three wells (Wells 1, 3 and 6A) concurrently is not likely to occur, and with the proposed supply wells used in rotation and cycling on and off, the drawdown in the offsite wells will likely be less that what was measured during the June 2022 pumping test and the future use of these wells should not be affected by the use of the Summit Club supply wells.

The reported pump setting at 30 Blair Road is 80 feet and in 34 Blair Road is 200 feet (reported to WSP by the property owners). Based on the static water level height at the end of the 72-hour test period, this leaves approximately 45 feet of drawdown available in the well at 30 Blair Road and 160 feet of drawdown in the well at 34 Blair Road. The June 2022 pumping test was conducted during an extended dry period and at a combined rate 3+ times the project's average water demand. Despite the minor well interference observed, with the remaining available drawdown in these wells there should be no effect on their capacity to supply the associated homes in the future.

The 2022 offsite well monitoring results are similar to the findings from the May 2013 pumping test conducted. The table below is a summary of the wells measured and the drawdown observed.

Table 7: Drawdown Measured During May 2013 Pumping Test in the Offsite Monitoring Wells

Address	Drawdown Measured During May 2013 Pumping Test (feet) Test on Wells 1, 2B, 3, 5 and Irrigation Wells 4 and 5/Test on Well 6A
19 Ilana Court	ND/ND
12 Ilana Court	ND/ND
8 Embassy Court	11/7[1/]
4 Embassy Court	ND/ND
3 Embassy Court	ND/ND
6 Colonial Court	ND/ND
34 Blair Road	13/ND
30 Blair Road	13/ND
26 Blair Road	1/ND
70 Old Byram Lake Road	ND/ND
198 Byram Lake Road	ND/NM
9 Oregon Road	ND/ND
11 Oregon Road	ND/ND
4 Norman Place	ND/ND
3 Norman Place	ND/ND

[1/] The drawdown measured during the simultaneous pumping test was attributed to Well 5 pumping on the project site. The drawdown reported during the Well 6A pumping test period was a questionable correlation to Well 6A pumping but was reported to be conservative.

ND None discernible.

NM Not measured.

The water-level drawdown observed at 34 Blair Road and 30 Blair Road during the May 2013 was mainly attributed to pumping of existing Irrigation Wells 4 and 5, and the water-level drawdown observed occurred with Wells 1, 2B, 3 and 5 and Irrigation Wells 4 and 5 pumping at a combined rate of 185.5 gpm.

6.0 PIEZOMETER LOCATIONS

Water-level measurements were collected from a piezometer location, PZ-1, near Wells 1 and 6A during the June 2022 pumping test (Figure 2). A nested-pair of piezometers was installed at this location with one piezometer screen set shallower and the adjacent one set deeper. The hydrograph and a table of the water-level measurements collected from the piezometer locations are included in Appendix VI.

The groundwater level in the deeper piezometer showed a relatively steady, slightly declining trend throughout the background, pumping and recovery data collection periods. The groundwater level in the shallower screened piezometer was also on an overall declining trend; however, the water level showed a slight rising response to the rain events on June 16, June 22 and 23, and June 27. After the precipitation ended, the declining trend resumed. The deeper groundwater level was higher than the shallow groundwater level throughout the data collection period, indicating an upward vertical gradient at this monitoring location. Neither piezometer showed water-level drawdown in response to pumping in the onsite wells and no water-level recovery was observed after pumping ended, indicating no discernible pumping-related effects in the piezometers during the test.

7.0 WATER-QUALITY RESULTS

Water samples were collected from Wells 1, 3 and 6A at the end of the 72-hour test for analysis for NYSDOH Sanitary Code Part 5, Subpart 5-1 parameters for community, public water-supply wells listed in Tables 8A, 8B, 8C, 8D, 9B, 9C (including the extras dioxin, endothall, diquat and glyphosate), 9D, 10A, 11A, 12, lead, copper, total coliform, perfluorinated compounds (18 compound list) and radon. MPA, giardia, cryptosporidium samples were also collected from Wells 1 and 6A during the test period because these wells are located within 200 feet of surface water. The laboratory reports for the Part 5 and MPA samples are included in Appendix VII. Measurements of pH, temperature and conductivity were also collected from the Wells 1 and 6A discharge water and the nearby surface water as part of the preliminary GWUDI assessment. A graph and tables of the physical parameter measurements collected are provided in Appendix VIII.

7.1 Well 1

The Part 5 sample results for Well 1 met all NYSDOH drinking water standards with the exception of a detection of propylene glycol. The reported concentration was 1.5 mg/L (milligrams per liter) which exceeds the MCL (maximum contaminant level) of 1.0 mg/L.

The sodium concentration in Well 1 was reported at 29.4 mg/L which exceeds the NYSDOH reporting limit for people on severely sodium restricted diets but is below the recommended limit for sodium of 270 mg/L. The associated chloride concentration in Well 1 was 21.2 mg/L which is below the MCL for chloride of 250 mg/L.

Detections of PFOS (perfluorooctane sulfonic acid) and PFOA (perfluorooctanoic acid) were reported in the samples collected from Well 1. The PFOS concentration was 4.00 ng/L (nanograms per liter) and the PFOA concentration was 4.70 ng/L. Both detections were below their respective MCL values of 10 ng/L.

The MPA, giardia and cryptosporidium sample from Well 1 reported a low-risk potential for GWUDI and giardia and cryptosporidium were not detected.

7.2 Well 3

The Part 5 sample results for Well 3 met all NYSDOH drinking water standards with the exception of a detection of propylene glycol and the presence of total coliform. The reported concentration propylene glycol was 1.1 mg/L which exceeds the MCL of 1.0 mg/L.

Total coliform was reported present in the sample collected; E.coli was absent.

The Langlier Index value reported for Well 3 was -0.6 which is outside of the desired range of 0.5 to -0.5 and should be taken into consideration during the water system treatment design.

Detections of PFOS and PFOA were reported in the samples collected from Well 3. The PFOS concentration was 2.05 ng/L and the PFOA concentration was 3.35 ng/L. Both detections were below their respective MCL values of 10 ng/L.

7.3 Well 6A

The Part 5 sample results for Well 6A met all NYSDOH drinking water standards with the exception of a detection of propylene glycol and the presence of total coliform. The reported concentration propylene glycol was 1.1 mg/L which exceeds the MCL of 1.0 mg/L.

Total coliform was reported present in the sample collected; E.coli was absent.

The Langlier Index value reported for Well 6A was -0.56 which is outside of the desired range of 0.5 to -0.5 and should be taken into consideration during the water system treatment design.

Detections of PFOS and PFOA were reported in the samples collected from Well 6A. The PFOS concentration was 2.29 ng/L and the PFOA concentration was 3.38 ng/L. Both detections were below their respective MCL values of 10 ng/L.

The MPA, giardia and cryptosporidium sample from Well 6A reported a low-risk potential for GWUDI and giardia and cryptosporidium were not detected.

7.4 Physical Parameter Measurements

Measurements of pH, temperature and conductivity were collected from Wells 1 and 6A discharge water and the nearby surface water as part of the preliminary GWUDI assessment. The graphs and summary tables of the measurements collected are provided in Appendix VIII.

The conductivity values in Wells 1 and 6A were generally consistent throughout the pumping test period and overall were higher than the values measured in the nearby surface water. The pH values in Wells 1 and 6A were also higher overall than the surface water values. The temperature values in Wells 1 and 6A were lower than the surface water temperature and showed no significant oscillation up or down during the test period.

The physical parameter data supports the MPA's reported low risk potential for GWUDI in Wells 1 and 6A.

8.0 CONCLUSIONS

- A combined 72-hour pumping test was conducted on Wells 1, 3 and 6A on the Summit Club property from June 20 through 23, 2022. Wells 1, 3 and 6A demonstrated stabilized yield and water-level drawdown at pumping rates of 37 gpm, 33 gpm and 43 gpm, respectively, at the end of the test period. Additionally, the 180-day water-level drawdown projections completed for Wells 1, 3, and 6A using the pumping test data support that these are sustainable long-term yields for the wells.
- Following the end of pumping, water-level recovery reached 90% of the pre-test level in Well 1 within 5.7 hours, in Well 3 within 24.3 hours and in Well 6A in 8.5 hours.
- The combined yield of Wells 1, 3, and 6A during the June 2022 pumping test was 113 gpm. With Well 6A out of services as the best well, Wells 1 and 3 can pump at a combined yield of 70 gpm or (100,800 gpd). This well capacity is sufficient to support an average water demand of up to 50,400 gpd.
- Water-level measurements were collected from seven onsite monitoring wells during the simultaneous pumping test. Drawdown was measured in three of the seven wells. Well 2B, Irrigation Well 5, and Irrigation Well 4, the three wells closest to Wells 1, 3 and 6A, showed 9.1 feet, 3.5 feet and 1.6 feet,

respectively. The drawdown measured decreased with increasing distance from the pumping wells, and no discernible drawdown was measured in Former Irrigation Well 3, Well 5, Well 9 and Well 10 on the project site.

- Water-level measurements were collected from 13 offsite wells during the June 2022 pumping test. Water-level drawdown that was attributed to pumping Wells 1, 3 and 6A during the June 2022 testing program was measured in three of the 13 wells monitored. Drawdown of approximately 1.0 foot was measured in the well at 10 Willow Pond Lane, and 5.8 feet of drawdown was measured in both the wells at 30 Blair Road and 34 Blair Road, respectively, and the water-level drawdown trends in all three wells were stable at the end of the 72-hour pumping test period. The drawdown measured in the three offsite wells during the June 2022 72-hour pumping test occurred with Wells 1, 3 and 6A pumping currently at rates of 37 gpm, 33 gpm and 43 gpm, for a combined 113 gpm for 72+ hours continuously during a dry period. This combined pumping rate of 113 gpm is 3.3 times the project's proposed average water demand. In the future, the use of all three well (Wells 1, 3 and 6A) concurrently is not likely to occur, and with the proposed supply wells used in rotation and cycling on and off, the drawdown in the offsite wells will likely be less that what was measured during the June 2022 pumping test. The future use of these offsite wells should not be affected by the use of the Summit Club supply wells.

  The reported pump setting at 30 Blair Road is 80 feet and in 34 Blair Road is 200 feet (reported to WSP by the property owners). Using the static water level height at the end of the 72-hour test period, this leaves approximately 45 feet of drawdown available in the well at 30 Blair Road and 160 feet of drawdown in the well at 34 Blair Road. The June 2022 pumping test was conducted during an extended dry period and at a combined rate 3+ times the project's average water demand. Despite the minor well interference observed, with the remaining available drawdown in these wells there should be no effect on their capacity to supply the associated homes in the future.

- Water-level measurements were collected from a piezometer location, PZ-1, installed near Wells 1 and 6A during the June 2022 pumping test. A nested-pair of piezometers was installed with one piezometer screen set shallower and the adjacent one set deeper. The groundwater level in the deeper piezometer showed a relatively steady, slightly declining trend throughout the background, pumping and recovery data collection periods. The groundwater level in the shallower screened piezometer was also on an overall declining trend; however, the water level showed a slight rising response to the rain events on June 16, June 22 and 23, and June 27. After the precipitation ended, the declining trend resumed. The deeper groundwater level was higher than the shallow groundwater level throughout the data collection period, indicating an upward vertical gradient at this monitoring location. Neither piezometer showed water-level drawdown in response to pumping in the onsite wells and no water-level recovery was observed after pumping ended, indicating no discernible pumping-related effects in the piezometers during the test.

- Water samples were collected from Wells 1, 3 and 6A at the end of the 72-hour test for analysis for NYSDOH Sanitary Code Part 5, Subpart 5-1 parameters for community, public water-supply wells listed in Tables 8A, 8B, 8C, 8D, 9B, 9C (including the extras dioxin, endothall, diquat and glyphosate), 9D, 10A, 11A, 12, lead, copper, total coliform, perfluorinated compounds (18 compound list) and radon.

- The Part 5 sample results for Well 1 met all NYSDOH drinking water standards with the exception of a detection of propylene glycol. The reported concentration was 1.5 mg/L which exceeds the MCL of 1.0 mg/L. The sodium concentration in Well 1 was reported at 29.4 mg/L which exceeds the NYSDOH reporting limit for people on severely sodium restricted diets but is below the recommended limit for sodium of 270 mg/L. The associated chloride concentration in Well 1 was 21.2 mg/L which is below the MCL for chloride of 250 mg/L. Detections of PFOS and PFOA were reported in the samples collected

from Well 1. The PFOS concentration was 4.00 ng/L and the PFOA concentration was 4.70 ng/L. Both detections were below their respective MCL values of 10 ng/L.

- The Part 5 sample results for Well 3 met all NYSDOH drinking water standards with the exception of a detection of propylene glycol and the presence of total coliform. The reported concentration propylene glycol was 1.1 mg/L which exceeds the MCL of 1.0 mg/L. Total coliform was reported present in the sample collected; E.coli was absent. The Langlier Index value reported for Well 3 was -0.6 which is outside of the desired range of 0.5 to -0.5 and should be taken into consideration during the water system treatment design. Detections of PFOS and PFOA were reported in the samples collected from Well 3. The PFOS concentration was 2.05 ng/L and the PFOA concentration was 3.35 ng/L. Both detections were below their respective MCL values of 10 ng/L.
- The Part 5 sample results for Well 6A met all NYSDOH drinking water standards with the exception of a detection of propylene glycol and the presence of total coliform. The reported concentration propylene glycol was 1.1 mg/L which exceeds the MCL of 1.0 mg/L. Total coliform was reported present in the sample collected; E.coli was absent. The Langlier Index value reported for Well 6A was -0.56 which is outside of the desired range of 0.5 to -0.5 and should be taken into consideration during the water system treatment design. Detections of PFOS and PFOA were reported in the samples collected from Well 6A. The PFOS concentration was 2.29 ng/L and the PFOA concentration was 3.38 ng/L. Both detections were below their respective MCL values of 10 ng/L.
- MPA, giardia, cryptosporidium samples were also collected from Wells 1 and 6A during the test period because the well is located within 200 feet of surface water. Both MPA samples were reported as low risk and giardia and cryptosporidium were absent in the samples. The comparison of the temperature, conductivity and pH values measured from Wells 1 and 6A and the surface water near PZ-1 support the MPA low-risk results.

cmm
August 26, 2022
H:\Brynwood\2022\Summit Club_72-Hour PT Rpt\Report.docx

FIGURES

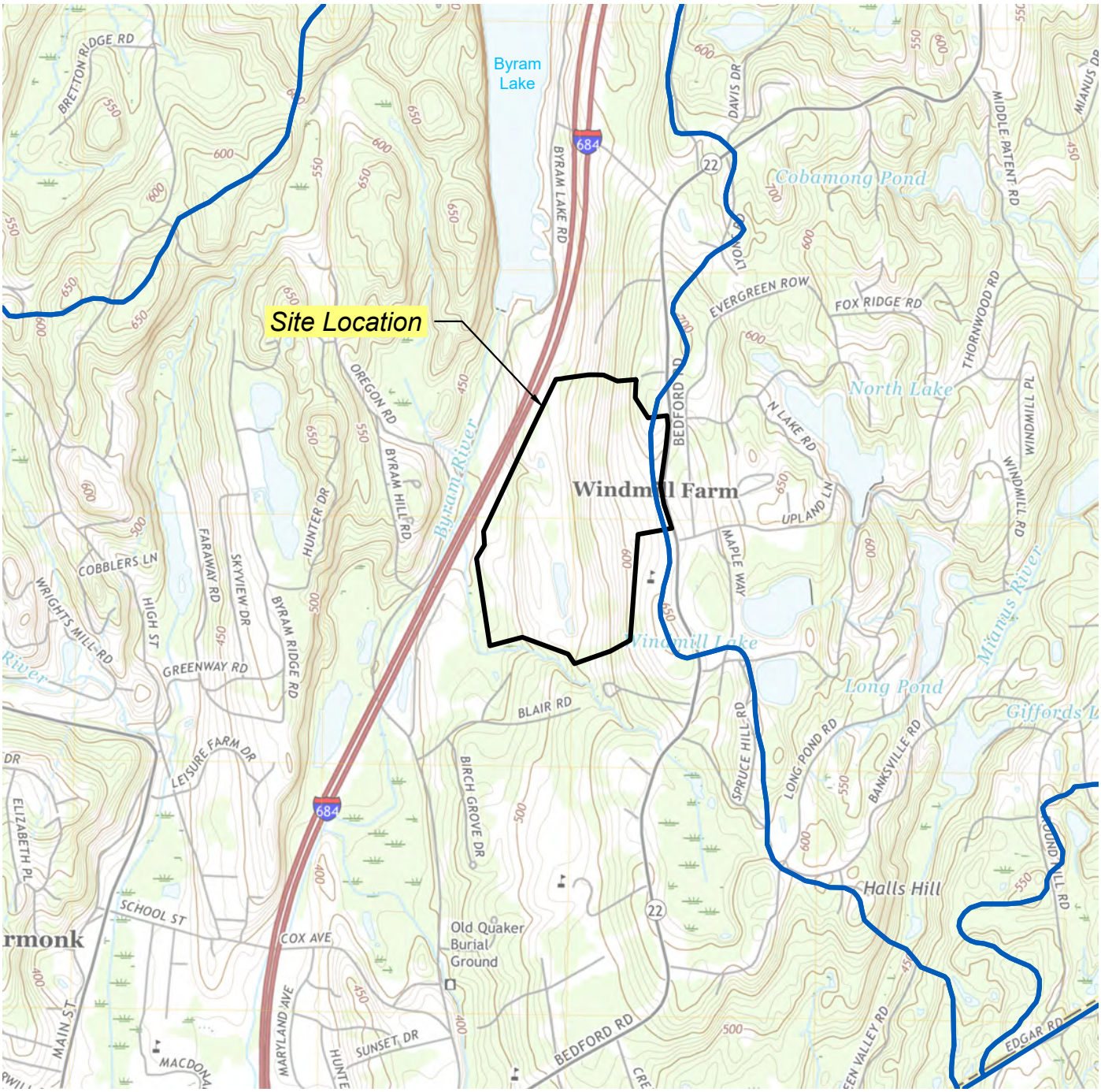

SOURCE: USGS TOPOGRAPHIC QUADRANGLE MOUNT KISCO, NEW YORK (2019).

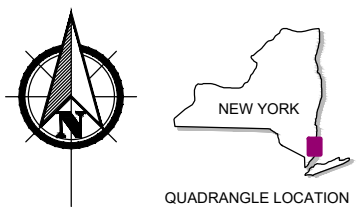

QUADRANGLE LOCATION

LEGEND

PROPERTY BOUNDARY

WATERSHED BOUNDARY LINE

0 2000

SCALE IN FEET

WSP USA, Inc. and related company
Hydrogeologic, Architecture, Land Surveying, Landscape Architecture, P.C. (WSP)
4 Research Drive
Suite 204
Shelton, Connecticut 06484
(203) 929-8555

Summit Country Club
568 Bedford Road
North Castle, New York

SITE LOCATION MAP

FIGURE 1

A | Drawn By: RAC | Checked: SS | Approved: SS | DWG Date: 09/30/21

O:\DWG\Brynwood\Summit Club\2021 NYSDEC Permit Modification\F1_SLM.dwg, Layout1, 9/30/2021 6:41:03 AM, DWG To PDF.pc3

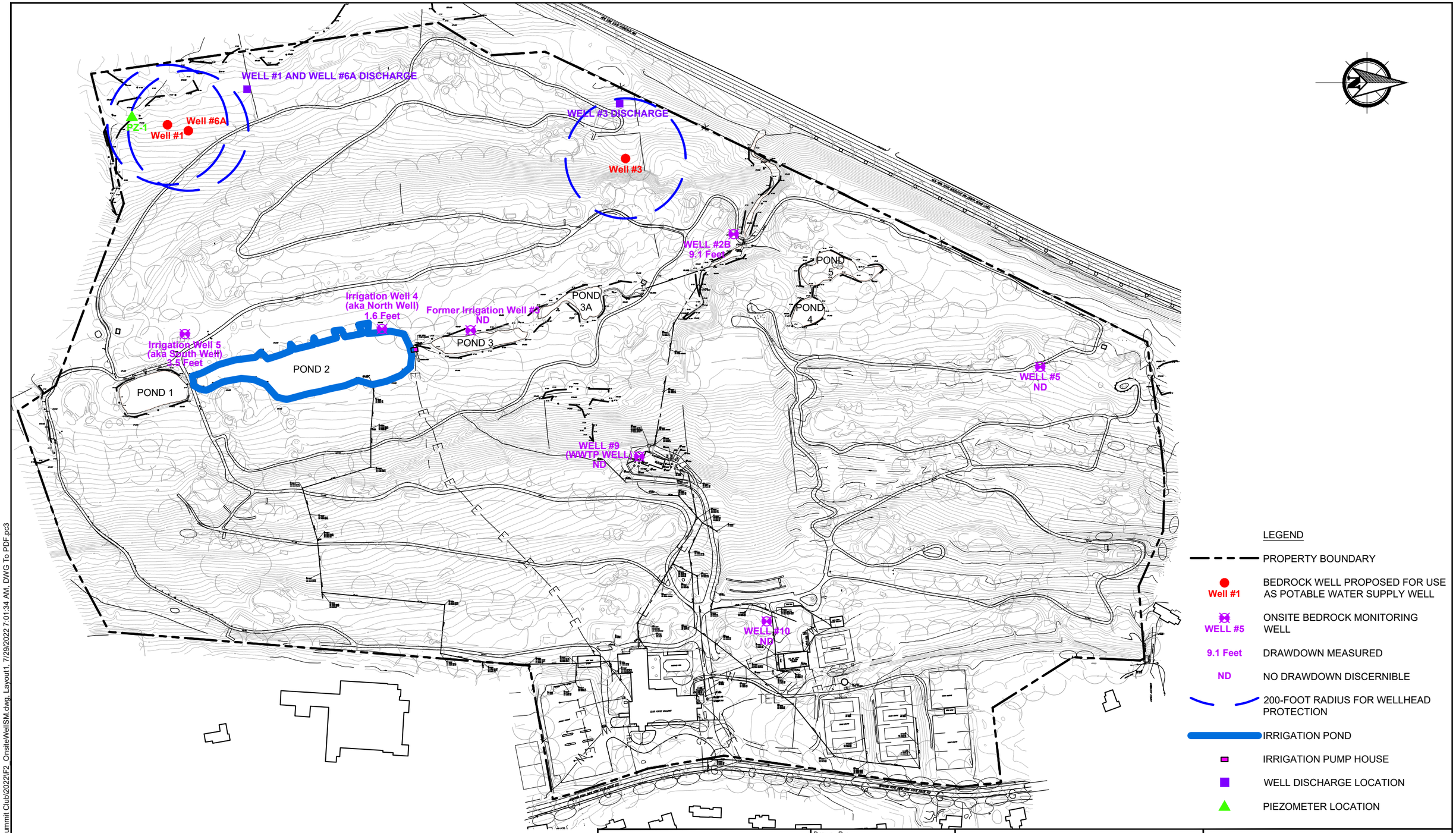

O:\DWG\Brynwood\Summit Club\2022\F2_OnsiteWellSM.dwg, Layout1, 7/29/2022 7:01:34 AM, DWG To PDF.pc3

B

SOURCE:
WATERSHED OUTLINE FOR PONDS 1 & 2 AND BASE MAP OBTAINED FROM JMC
DRAWING "EXISTING DRAINAGE AREA MAP" DRAWINGS NO. DA-1, DATED MAY 16, 2013.

0 300
SCALE IN FEET

WSP USA, Inc. and related company
Hydrogeologic, Architecture, Land Surveying, Landscape Architecture, P.C. (WSP)
4 Research Drive
Suite 204
Shelton, Connecticut 06484
(203) 929-8555

Drawn By:	RAC
Checked:	SS
Approved:	SS
DWG Date:	07/29/22

Summit Country Club
568 Bedford Road
North Castle, New York

SITE MAP AND ONSITE WELL LOCATIONS

FIGURE 2

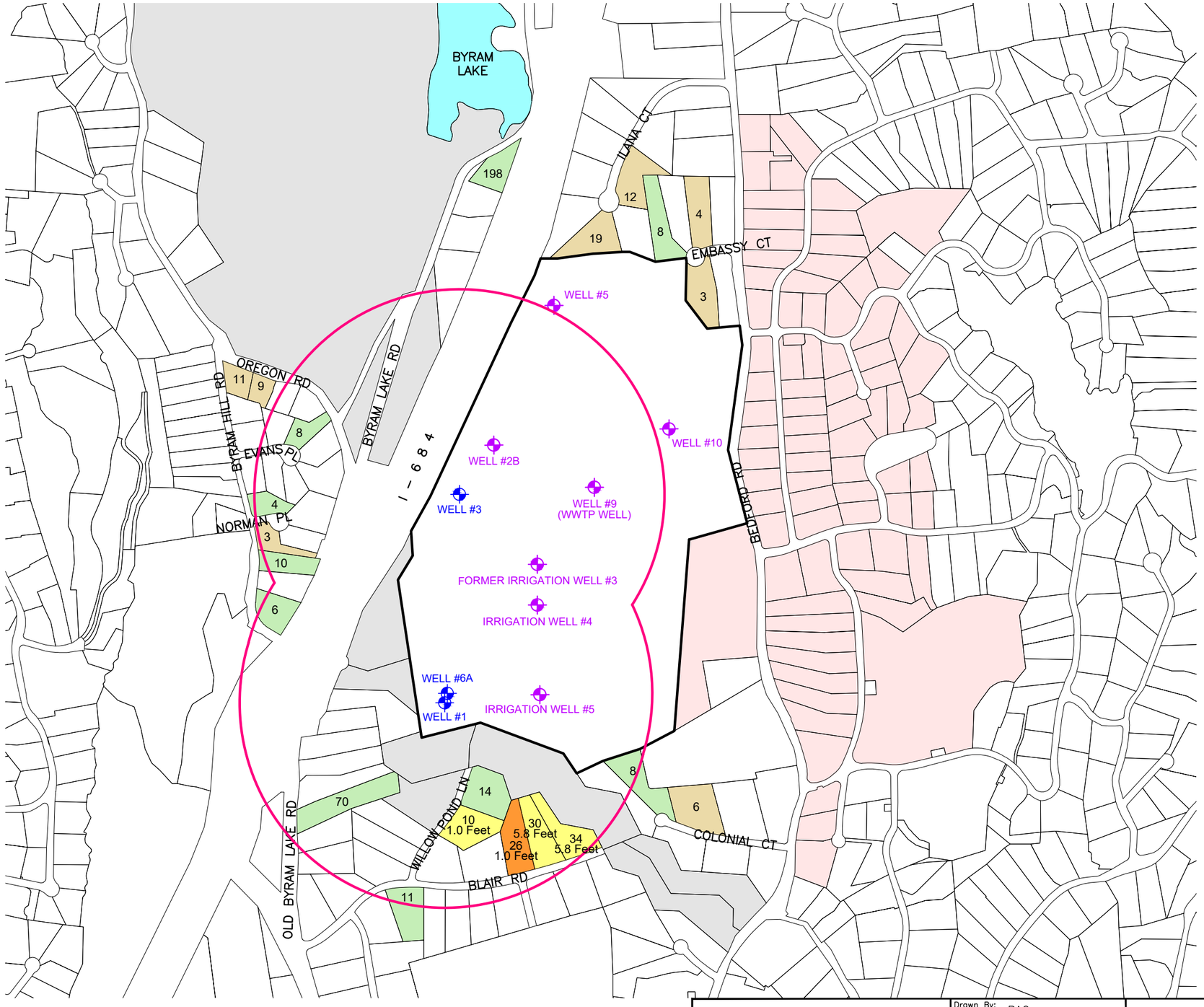

O:\DWG\Brynwood\Summit Club\2022\F3 OffsiteWellMP.dwg, Layout1, 7/29/2022 7:12:50 AM, DWG To PDF.pc3

B

WSP USA, Inc. and related company
Hydrogeologic, Architecture, Land Surveying, Landscape Architecture, P.C. (WSP)
4 Research Drive
Suite 204
Shelton, Connecticut 06484
(203) 929-8555

Drawn By:	RAC
Checked:	SS
Approved:	SS
DWG Date:	07/29/22

Summit Country Club
568 Bedford Road
North Castle, New York

OFFSITE WELL MONITORING PROGRAM

FIGURE 3

APPENDIX I

Stieber, Stacy

Subject: FW: WCDOH File I.D.: C22-014: Summit Country Club Pump Testing

From: Thein, Zaw <ztt1@westchestergov.com>
Sent: Thursday, March 10, 2022 4:27 PM
To: Stieber, Stacy <Stacy.Stieber@wsp.com>
Cc: McVeigh, Heather <hdh1@westchestergov.com>; Cusack, Thomas <Thomas.Cusack@wsp.com>; DeLucia, Peter <ppd4@westchestergov.com>; smisiti@northcastleny.com
Subject: RE: WCDOH File I.D.: C22-014: Summit Country Club Pump Testing

Stacy:

The receipt of a revised Pumping Test Plan for the above referenced facility is hereby acknowledged. This Department has no objection to the well yield test plan outlined in the revised plans dated January 26, 2022, last revised March 9, 2022 that also addresses all the comments issued in the Department email correspondence dated February 21, 2022. Please be mindful of the following items before the scheduled well yield testing and setting the pumping rates that will be used to demonstrate that the minimum source capacity requirements in accordance with the 10-States standards are met.

1. This Department does not allow 20% reduction for the use of water saving fixture in calculated water demand in designing of a water supply system.
2. Gallons per Day (GPD) to Gallons per Minutes (GPM) conversion is required to be based on the hour of operations of each facility. (e.g. residential units water demand shall be based on 24 hr. and restaurant/Bar/swimming pool/club, etc. water demand shall be based on the corresponding hours of operation of the facility).

Should you have any questions or require additional information, please feel free to contact me.

Sincerely,
Zaw

Zaw T. Thein, P.E.
Associate Engineer
Bureau of Environmental Quality
Westchester County Department of Health
25 Moore Avenue, Mt. Kisco, NY 10549
Tel: 914-864-7348
Fax: 914-813-4691
ztt1@westchestergov.com

For breaking public health news, updates and information, like us on Facebook and follow us on Twitter

From: Thein, Zaw
Sent: Monday, February 21, 2022 12:06 PM
To: 'Stieber, Stacy' <Stacy.Stieber@wsp.com>
Cc: McVeigh, Heather <hdh1@westchestergov.com>; Cusack, Thomas <Thomas.Cusack@wsp.com>; DeLucia, Peter

<ppd4@westchestergov.com>; 'smisiti@northcastleny.com' <smisiti@northcastleny.com>
Subject: WCDOH File I.D.: C22-014: Summit Country Club Pump Testing

Good Afternoon Stacy:

The receipt of your submittal for well testing plan at the above referenced facility is hereby acknowledged. The following items are required during the proposed simultaneous well testing at Well #1, Well #3 and Well #6A:

1. The wells that were monitored at the offsite properties that show effects during 2013 simultaneous yield testing must be re-monitored. That is:
    a. #8 Embassy Ct.
    b. #1 Blair Rd.
    c. #30 Blair Rd.
    d. #34 Blair Rd.
2. The properties that were solicited for well monitoring but did not response at the time and did not get their wells monitored during 2013 yield testing must be resolicited and monitored if permission granted by the owners at this time.
3. Properties that were vacant during 2013 test must be reconfirmed if they are still vacant. If any of those vacant lots are occupied at this time, solicitation to those properties must be made and well monitoring must be conducted if permission granted.
4. All onsite wells that will not be purposed for drinking water supply system but will be used for other purposes, such as irrigation and/or for fire tanks (if any) are required to be monitored.
5. In order to keep all approval records in one place, please resubmit copies of WCDOH Approval of Plans issued for those wells.
6. Please also clarify which entity will be the applicant for the water system development (i.e., owner of the proposed water supply system).

Should you have any questions or require additional information, please feel free to contact me.

Sincerely,
Zaw

Zaw T. Thein, P.E.
Associate Engineer
Bureau of Environmental Quality
Westchester County Department of Health
25 Moore Avenue, Mt. Kisco, NY 10549
Tel: 914-864-7348
Fax: 914-813-4691
ztt1@westchestergov.com

For breaking public health news, updates and information, like us on Facebook and follow us on Twitter

APPENDIX II

Westchester ov.com

Westchester County Department Health
Bureau of Environmental Quality

WELL COMPLETION REPORT: Well #1 WCDH File No.

This report is to be completed by well driller and submitted to Health Department, together with laboratory report of analysis of water sample indicating water is of satisfactory bacterial quality, before certificate of construction compliance is issued.

Well construction to be in accordance with Westchester County Health Dept, Rules & Regulations for the Design and Construction of Residential Subsurface Sewage Treatment System and Drilled Wells in Westchester County, NY.

Located at: 563 Bedford Rd Section: Block:

Well Location Municipality: N. Castle Lot:

Owner Last Name: Brynwood Owner First Name: C.C.

St. # 563 Street Name: Rte 22 Municipality: Armonk State: NY Zip Code: 10504

Well Driller (WD) Company Name:

Well Pit and Pump Equipment: Pitless Adapter: Other – Describe

Pump Make: Pump Type: Pump Capacity: Pump GPM:

Storage Tank Type: Storage Tank Capacity:

Well Details:

Casing Length: 57 Ft. Yield Test Type: Alc Measured from Land

Casing Diameter 6 In. Yield Test Duration: 6 Hrs. Water Level, Static: 0 Ft.

Casing Material: Steel Well Yield: 75 G.P.M. Water Level, Pumped: 500 Ft.

Screen Make: Screen Diameter: Inches

Screen Length: Ft. Screen Slot Size: **TOTAL WELL DEPTH :** 575 Ft.

WELL LOG :

Depth From Ground Surface		Give description of formation penetrated, such as: peat, silt, sand, gravel, clay, hardpan, shale, sandstone, granite, etc. Include size of gravel (diameter) and sand (fine, medium, coarse), color of material, structure (loose, packed, cemented, soft, hard). For example: 0 ft. to 27 ft. fine, packed, yellow sand; 27 ft. to 134 ft. gray granite.
0 Ft. to	17 Ft.	Well Geology, 1st Strata : Hardpan & Clay
17 Ft. to	575 Ft.	Well Geology, 2nd Strata: Gray Granite
Ft. to	Ft.	Well Geology, 3rd Strata :
Ft. to	Ft.	Well Geology, 4th Strata :
Ft. to	Ft.	Well Geology, 5th Strata :

I certify that the individual water supply indicated above was installed as per the Westchester County Health Department Rules & Regulations for the Design and Construction of Residential Subsurface Sewage Treatment System and Drilled Wells in Westchester County, NY.

Date Well Was Completed: 4/25/13 Date of Signature 5/29/13

NYSDEC Registration #: 10318 Well Driller Signature : Duane Ford

Revised 1/18/05

Westchester County Department Health
Bureau of Environmental Quality

WELL COMPLETION REPORT: Well #273 WCDH File No.

This report is to be completed by well driller and submitted to Health Department, together with laboratory report of analysis of water sample indicating water is of satisfactory bacterial quality, before certificate of construction compliance is issued.

Well construction to be in accordance with Westchester County Health Dept, Rules & Regulations for the Design and Construction of Residential Subsurface Sewage Treatment System and Drilled Wells in Westchester County, NY.

Located at: 568 Bedford Rd Section: Block:

Well Location Municipality: N. CASTLE Lot:

Owner Last Name: BRINWOOD Owner First Name: C.C.

St. # 568 Street Name: Rte 22 Municipality: ARMONK State: NY Zip Code: 10504

Well Driller (WD) Company Name:

Well Pit and Pump Equipment: Pitless Adapter: Other – Describe

Pump Make: Pump Type: Pump Capacity: Pump GPM:

Storage Tank Type: Storage Tank Capacity:

Well Details:

Casing Length: 100 Ft. Yield Test Type: Air Measured from Land

Casing Diameter: 6 In. Yield Test Duration: 6 Hrs. Water Level, Static: 0 Ft.

Casing Material: Steel Well Yield: 20 G.P.M. Water Level, Pumped: 500 Ft.

Screen Make: Screen Diameter: Inches

Screen Length: Ft. Screen Slot Size: **TOTAL WELL DEPTH :** 545 Ft.

WELL LOG :

Depth From Ground Surface	Give description of formation penetrated, such as: peat, silt, sand, gravel, clay, hardpan, shale, sandstone, granite, etc. Include size of gravel (diameter) and sand (fine, medium, coarse), color of material, structure (loose, packed, cemented, soft, hard). For example: 0 ft. to 27 ft. fine, packed, yellow sand; 27 ft. to 134 ft. grey granite.
0 Ft. to 32 Ft.	Well Geology, 1st Strata : HARDPAN + WATER
32 Ft. to 88 Ft.	Well Geology, 2nd Strata: SOFT CAVING ROCK
88 Ft. to 545 Ft.	Well Geology, 3rd Strata : GRAY GRANITE
Ft. to Ft.	Well Geology, 4th Strata :
Ft. to Ft.	Well Geology, 5th Strata :

I certify that the individual water supply indicated above was installed as per the Westchester County Health Department Rules & Regulations for the Design and Construction of Residential Subsurface Sewage Treatment System and Drilled Wells in Westchester County, NY.

Date Well Was Completed: 4/23/13 Date of Signature 5/29/13

NYSDEC Registration #: 10318 Well Driller Signature : for Paul

Revised 1/18/08

Westchester [redacted]ov.com

Westchester County Department Health
Bureau of Environmental Quality

WELL COMPLETION REPORT: Well #3 WCDH File No.

This report is to be completed by well driller and submitted to Health Department, together with laboratory report of analysis of water sample indicating water is of satisfactory bacterial quality, before certificate of construction compliance is issued.

Well construction to be in accordance with Westchester County Health Dept, Rules & Regulations for the Design and Construction of Residential Subsurface Sewage Treatment System and Drilled Wells in Westchester County, NY.

Located at: 568 Bedford Rd Section: Block:
Well Location Municipality: N. Castle Lot:
Owner Last Name: Brfnwood Owner First Name: C.C.
St. #: 563 Street Name: Rte 22 Municipality: Armonk State: NY Zip Code: 10504
Well Driller (WD) Company Name:

Well Pit and Pump Equipment: Pitless Adapter: Other – Describe
Pump Make: Pump Type: Pump Capacity: Pump GPM:
Storage Tank Type: Storage Tank Capacity:

Well Details:
Casing Length: 61 Ft. Yield Test Type: Air Measured from Land
Casing Diameter 6 In. Yield Test Duration: 6 Hrs. Water Level, Static: 0 Ft.
Casing Material: Steel Well Yield: 40 G.P.M. Water Level, Pumped: 600 Ft.
Screen Make: Screen Diameter: Inches
Screen Length: Ft. Screen Slot Size: TOTAL WELL DEPTH : 645 Ft.

WELL LOG :

Depth From Ground Surface	Give description of formation penetrated, such as: peat, silt, sand, gravel, clay, hardpan, shale, sandstone, granite, etc. Include size of gravel (diameter) and sand (fine, medium, coarse), color of material, structure (loose, packed, cemented, soft, hard). For example: 0 ft. to 27 ft. fine, packed, yellow sand; 27 ft. to 134 ft. gray granite.
0 Ft. to 27 Ft.	Well Geology, 1st Strata : HARDPAN + CLAY
27 Ft. to 645 Ft.	Well Geology, 2nd Strata: GRAY GRANITE
Ft. to Ft.	Well Geology, 3rd Strata :
Ft. to Ft.	Well Geology, 4th Strata :
Ft. to Ft.	Well Geology, 5th Strata :

I certify that the individual water supply indicated above was installed as per the Westchester County Health Department Rules & Regulations for the Design and Construction of Residential Subsurface Sewage Treatment System and Drilled Wells in Westchester County, NY.

Date Well Was Completed: 1/30/13 Date of Signature 5/29/13
NYSDEC Registration #: 10318 Well Driller Signature :

Revised 1/18/06

Westchester County Department Health
Bureau of Environmental Quality

WELL COMPLETION REPORT: Well #4 WCDH File No.

This report is to be completed by well driller and submitted to Health Department, together with laboratory report of analysis of water sample indicating water is of satisfactory bacterial quality, before certificate of construction compliance is issued.

Well construction to be in accordance with Westchester County Health Dept, Rules & Regulations for the Design and Construction of Residential Subsurface Sewage Treatment System and Drilled Wells in Westchester County, NY

Located at: 568 Bedford Rd Section: Block:

Well Location Municipality: N. CASTLE Lot:

Owner Last Name: BRYNWOOD Owner First Name: C.C.

St. #: 568 Street Name: Rte 22 Municipality: ARMONK State: NY Zip Code: 10504

Well Driller (WD) Company Name:

Well Pit and Pump Equipment: Pitless Adapter: Other – Describe

Pump Make: Pump Type: Pump Capacity: Pump GPM:

Storage Tank Type: Storage Tank Capacity:

Well Details:

Casing Length: 61 Ft. Yield Test Type: Air Measured from Land

Casing Diameter 6 In. Yield Test Duration: 6 Hrs. Water Level, Static: 0 Ft.

Casing Material: Steel Well Yield: 7 G.P.M. Water Level, Pumped: 500 Ft.

Screen Make: Screen Diameter: Inches

Screen Length: Ft. Screen Slot Size: **TOTAL WELL DEPTH :** 545 Ft.

WELL LOG :

Depth From Ground Surface	Give description of formation penetrated, such as: peat, silt, sand, gravel, clay, hardpan, shale, sandstone, granite, etc. Include size of gravel (diameter) and sand (fine, medium, coarse), color of material, structure (loose, packed, cemented, soft, hard). For example: 0 ft. to 27 ft. fine, packed, yellow sand; 27 ft. to 134 ft. grey granite.
0 Ft. to 4 Ft.	Well Geology, 1st Strata : HARDPAN
4 Ft. to 545 Ft.	Well Geology, 2nd Strata: GRAY GRANITE
Ft. to Ft.	Well Geology, 3rd Strata :
Ft. to Ft.	Well Geology, 4th Strata :
Ft. to Ft.	Well Geology, 5th Strata :

I certify that the individual water supply indicated above was installed as per the Westchester County Health Department Rules & Regulations for the Design and Construction of Residential Subsurface Sewage Treatment System and Drilled Wells in Westchester County, NY.

Date Well Was Completed: 2/1/13 Date of Signature 5/29/13

NYSDEC Registration #: 10317 Well Driller Signature : C Torlish

Revised 1/13/00

Westchester gov.com

Westchester County Department Health
Bureau of Environmental Quality

WELL COMPLETION REPORT: Well # 5 WCDH File No.

This report is to be completed by well driller and submitted to Health Department, together with laboratory report of analysis of water sample indicating water is of satisfactory bacterial quality, before certificate of construction compliance is issued.

Well construction to be in accordance with Westchester County Health Dept. Rules & Regulations for the Design and Construction of Residential Subsurface Sewage Treatment System and Drilled Wells in Westchester County, NY.

Located at: 568 Bedford Rd Section: Block:

Well Location Municipality N. CASTLE Lot:

Owner Last Name: BRINWOOD Owner First Name: C. C.

St. # 568 Street Name: Rte 22 Municipality: ARMONK State: N.Y. Zip Code: 10504

Well Driller (WD) Compar / Name:

Well Pit and Pump Equipment: Pitless Adapter: Other – Describe

Pump Make: Pump Type: Pump Capacity: Pump GPM:

Storage Tank Type: Storage Tank Capacity:

Well Details:

Casing Length: 61 Ft. Yield Test Type: Air Measured from Land

Casing Diameter 6 In. Yield Test Duration: 6 Hrs. Water Level, Static: 20 Ft.

Casing Material: Steel Well Yield: 25 G.P.M. Water Level, Pumped: 500 Ft.

Screen Make: Screen Diameter: Inches

Screen Length: Ft. Screen Slot Size: **TOTAL WELL DEPTH :** 540 Ft.

WELL LOG :

Depth From Ground Surface	Give description of formation penetrated, such as: peat, silt, sand, gravel, clay, hardpan, shale, sandstone, granite, etc. Include size of gravel (diameter) and sand (fine, medium, coarse), color of material, structure (loose, packed, cemented, soft, hard). For example: 0 ft. to 27 ft. fine, packed, yellow sand; 27 ft. to 134 ft. gray granite.
0 Ft. to 7 Ft.	Well Geology, 1st Strata : HARDPAN
7 Ft. to 540 Ft.	Well Geology, 2nd Strata: GRAY GRANITE
Ft. to Ft.	Well Geology, 3rd Strata :
Ft. to Ft.	Well Geology, 4th Strata :
Ft. to Ft.	Well Geology, 5th Strata :

I certify that the individual water supply indicated above was installed as per the Westchester County Health Department Rules & Regulations for the Design and Construction of Residential Subsurface Sewage Treatment System and Drilled Wells in Westchester County, NY.

Date Well Was Completed: 8/6/13 Date of Signature 5/29/13

NYSDEC Registration #: 10318 Well Driller Signature :

Revised 1/18/02

Westchester County Department Health
Bureau of Environmental Quality

WELL COMPLETION REPORT: WELL # 6A WCDH File No.

This report is to be completed by well driller and submitted to Health Department, together with laboratory report of analysis of water sample indicating water is of satisfactory bacterial quality, before certificate of construction compliance is issued.

Well construction to be in accordance with Westchester County Health Dept, Rules & Regulations for the Design and Construction of Residential Subsurface Sewage Treatment System and Drilled Wells in Westchester County, NY.

Located at: 568 Bedford Rd Section: Block:

Well Location Municipality: N. CASTLE Lot:

Owner Last Name: BRYNWOOD Owner First Name: C.C.

St. # 568 Street Name: Rte 22 Municipality: ARMONK State: N.Y. Zip Code: 10504

Well Driller (WD) Company Name:

Well Pit and Pump Equipment: Pitless Adapter: Other – Describe

Pump Make: Pump Type: Pump Capacity: Pump GPM:

Storage Tank Type: Storage Tank Capacity:

Well Details:

Casing Length: 61 Ft. Yield Test Type: Air Measured from Land

Casing Diameter 6 In. Yield Test Duration: 6 Hrs. Water Level, Static: 0 Ft.

Casing Material Steel Well Yield: 30 G.P.M. Water Level, Pumped: 600 Ft.

Screen Make: Screen Diameter: Inches

Screen Length: Ft. Screen Slot Size: TOTAL WELL DEPTH : Ft.

WELL LOG :

Depth From Ground Surface	Give description of formation penetrated, such as: peat, silt, sand, gravel, clay, hardpan, shale, sandstone, granite, etc. Include size of gravel (diameter) and sand (fine, medium, coarse), color of material, structure (loose, packed, cemented, soft, hard). For example: 0 ft. to 27 ft. fine, packed, yellow sand; 27 ft. to 134 ft. gray granite.
0 Ft. to 20 Ft.	Well Geology, 1st Strata : HARDPAN & CLAY
20 Ft. to 675 Ft.	Well Geology, 2nd Strata: GRAY GRANITE
Ft. to Ft.	Well Geology, 3rd Strata :
Ft. to Ft.	Well Geology, 4th Strata :
Ft. to Ft.	Well Geology, 5th Strata :

I certify that the individual water supply indicated above was installed as per the Westchester County Health Department Rules & Regulations for the Design and Construction of Residential Subsurface Sewage Treatment System and Drilled Wells in Westchester County, NY.

Date Well Was Completed: 5/13/13 Date of Signature 5/29/13

NYSDEC Registration #: 10318 Well Driller Signature : James Torlish

Revised 1/18/08

APPENDIX III

WELL 1

SUMMIT COUNTRY CLUB
568 BEDFORD ROAD
NORTH CASTLE, NEW YORK

Hydrograph of Water-Level Measurements Collected from Pumping Well 1 During the 72-Hour Pumping Test Conducted on Wells 1, 3 and 6A, June 2022

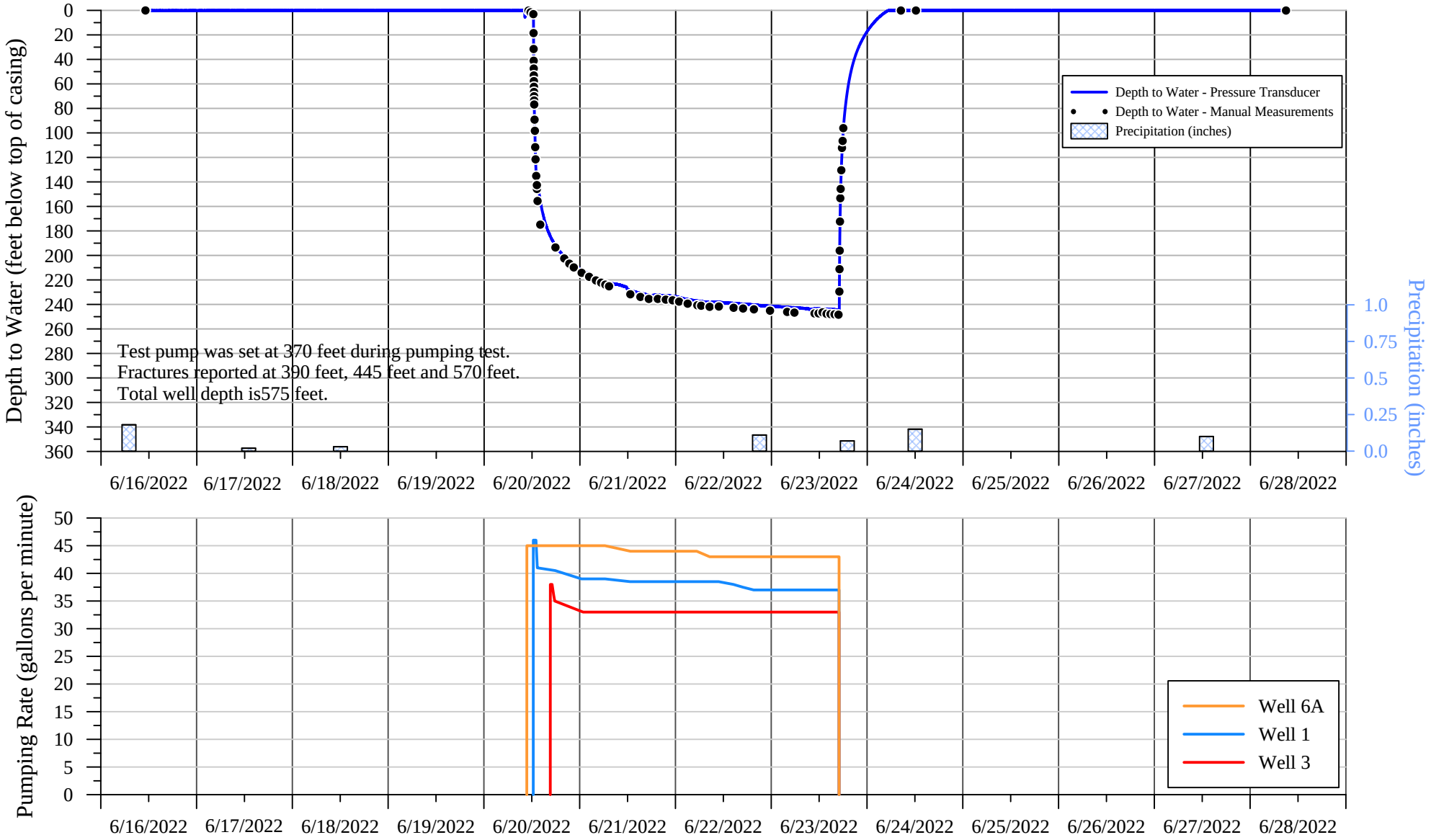

SUMMIT COUNTRY CLUB
568 BEDFORD ROAD
NORTH CASTLE, NEW YORK

180-Day Water-Level Drawdown Projection from Measurements Collected from Pumping Well 1
During the 72-Hour Pumping Test Conducted on Wells 1, 3 and 6A, June 2022

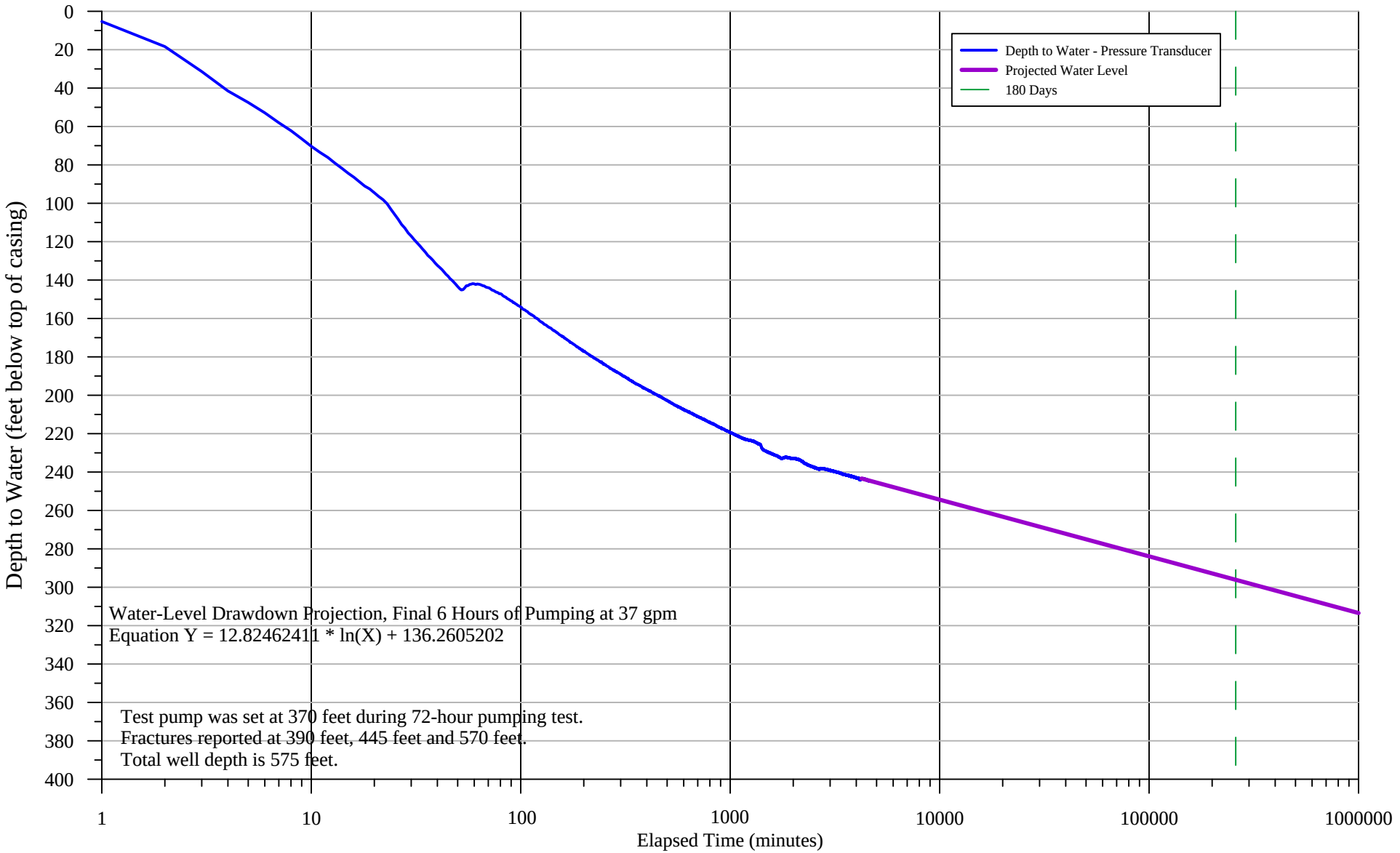

SUMMIT COUNTRY CLUB
568 BEDFORD ROAD
NORTH CASTLE, NEW YORK

Summary of Water-Level Measurements Collected from Pumping Well 1
During the 72-Hour Pumping Test Conducted on Wells 1, 3 and 6A, June 2022

Date	Time	Depth to Water (ft btoc)/ Drawdown (feet)	Elapsed Time (minutes)	Comments
6/16/2022	12:00	0.00	--	Pressure transducer installed in well.
6/16/2022	16:00	0.00	--	Well 1 flowing artesian.
6/16/2022	20:00	0.00	--	
6/17/2022	0:00	0.00	--	
6/17/2022	4:00	0.00	--	
6/17/2022	8:00	0.00	--	
6/17/2022	12:00	0.00	--	
6/17/2022	16:00	0.00	--	
6/17/2022	20:00	0.00	--	
6/18/2022	0:00	0.00	--	
6/18/2022	4:00	0.00	--	
6/18/2022	8:00	0.00	--	
6/18/2022	12:00	0.00	--	
6/18/2022	16:00	0.00	--	
6/18/2022	20:00	0.00	--	
6/19/2022	0:00	0.00	--	
6/19/2022	4:00	0.00	--	
6/19/2022	8:00	0.00	--	
6/19/2022	12:00	0.00	--	
6/19/2022	16:00	0.00	--	
6/19/2022	20:00	0.00	--	
6/20/2022	0:00	0.00	--	
6/20/2022	4:00	0.00	--	
6/20/2022	8:00	0.00	--	
6/20/2022	10:45	0.00	--	Pump in Well 6A started.
6/20/2022	11:00	0.17	--	
6/20/2022	12:00	2.48	--	
6/20/2022	12:20	3.05	--	
6/20/2022	12:21	5.35	1	Pump in Well 1 started.
6/20/2022	12:22	18.40	2	Pumping rate adjusted to 46 gpm.
6/20/2022	12:23	31.41	3	
6/20/2022	12:24	41.51	4	
6/20/2022	12:25	47.52	5	Pumping rate 46 gpm.
6/20/2022	12:26	52.91	6	
6/20/2022	12:27	58.07	7	
6/20/2022	12:28	62.20	8	
6/20/2022	12:29	66.44	9	
6/20/2022	12:30	70.34	10	Pumping rate 46 gpm.
6/20/2022	12:31	73.51	11	
6/20/2022	12:32	76.14	12	
6/20/2022	12:33	79.19	13	
6/20/2022	12:34	81.80	14	
6/20/2022	12:35	84.37	15	Pumping rate 46 gpm.
6/20/2022	12:40	94.54	20	
6/20/2022	12:45	105.82	25	Pumping rate 46 gpm.
6/20/2022	12:50	117.11	30	
6/20/2022	12:55	125.39	35	Pumping rate 46 gpm.
6/20/2022	13:00	132.36	40	
6/20/2022	13:05	138.00	45	Pumping rate 46 gpm.
6/20/2022	13:10	143.38	50	
6/20/2022	13:15	142.98	55	Pumping rate 46 gpm.
6/20/2022	13:20	142.00	60	

SUMMIT COUNTRY CLUB
568 BEDFORD ROAD
NORTH CASTLE, NEW YORK

Summary of Water-Level Measurements Collected from Pumping Well 1
During the 72-Hour Pumping Test Conducted on Wells 1, 3 and 6A, June 2022

Date	Time	Depth to Water (ft btoc)/ Drawdown (feet)	Elapsed Time (minutes)	Comments
6/20/2022	14:00	154.06	100	Pumping rate 41 gpm.
6/20/2022	15:00	169.52	160	
6/20/2022	16:00	179.90	220	Pumping rate 40.5 gpm.
6/20/2022	16:38	184.82	258	Pump in Well 3 started.
6/20/2022	17:00	187.04	280	
6/20/2022	18:00	192.88	340	Pumping rate 40 gpm.
6/20/2022	19:00	197.00	400	
6/20/2022	20:00	200.45	460	Pumping rate 40 gpm.
6/20/2022	21:00	203.78	520	
6/20/2022	22:00	206.52	580	Pumping rate 40 gpm.
6/20/2022	23:00	209.10	640	
6/21/2022	0:00	211.07	700	Pumping rate 39 gpm.
6/21/2022	1:00	212.94	760	
6/21/2022	2:00	214.81	820	Pumping rate 39 gpm.
6/21/2022	3:00	216.50	880	
6/21/2022	4:00	218.12	940	Pumping rate 39 gpm.
6/21/2022	5:00	219.39	1000	
6/21/2022	6:00	220.52	1060	Pumping rate 39 gpm.
6/21/2022	7:00	222.10	1120	
6/21/2022	8:00	222.95	1180	Pumping rate 39 gpm.
6/21/2022	9:00	223.53	1240	
6/21/2022	10:00	224.00	1300	Pumping rate 39 gpm.
6/21/2022	11:00	225.43	1360	
6/21/2022	12:00	227.92	1420	Pumping rate 38.5 gpm.
6/21/2022	13:00	229.09	1480	
6/21/2022	14:00	229.90	1540	Pumping rate 38.5 gpm.
6/21/2022	15:00	230.60	1600	
6/21/2022	16:00	231.36	1660	Pumping rate 38.5 gpm.
6/21/2022	17:00	232.21	1720	
6/21/2022	18:00	232.83	1780	Pumping rate 38.5 gpm.
6/21/2022	19:00	232.23	1840	
6/21/2022	20:00	232.53	1900	Pumping rate 38.5 gpm.
6/21/2022	21:00	232.86	1960	
6/21/2022	22:00	232.83	2020	Pumping rate 38.5 gpm.
6/21/2022	23:00	233.38	2080	
6/22/2022	0:00	233.70	2140	Pumping rate 38.5 gpm.
6/22/2022	1:00	234.38	2200	
6/22/2022	2:00	235.39	2260	Pumping rate 38.5 gpm.
6/22/2022	3:00	236.02	2320	
6/22/2022	4:00	236.64	2380	Pumping rate 38.5 gpm.
6/22/2022	5:00	236.87	2440	
6/22/2022	6:00	237.23	2500	Pumping rate 38.5 gpm.
6/22/2022	7:00	237.90	2560	
6/22/2022	8:00	238.27	2620	Pumping rate 38.5 gpm.
6/22/2022	9:00	238.25	2680	
6/22/2022	10:00	238.11	2740	Pumping rate 38.5 gpm.
6/22/2022	11:00	238.37	2800	
6/22/2022	12:00	238.73	2860	Pumping rate 38.5 gpm.
6/22/2022	13:00	238.68	2920	
6/22/2022	14:00	239.03	2980	Pumping rate 38 gpm.
6/22/2022	15:00	239.41	3040	
6/22/2022	16:00	239.64	3100	Pumping rate 37.5 gpm.

SUMMIT COUNTRY CLUB
568 BEDFORD ROAD
NORTH CASTLE, NEW YORK

Summary of Water-Level Measurements Collected from Pumping Well 1
During the 72-Hour Pumping Test Conducted on Wells 1, 3 and 6A, June 2022

Date	Time	Depth to Water (ft btoc)/ Drawdown (feet)	Elapsed Time (minutes)	Comments
6/22/2022	17:00	239.87	3160	
6/22/2022	18:00	240.14	3220	Pumping rate 37 gpm.
6/22/2022	19:00	240.10	3280	
6/22/2022	20:00	240.47	3340	Pumping rate 37 gpm.
6/22/2022	21:00	240.98	3400	
6/22/2022	22:00	241.17	3460	Pumping rate 37 gpm.
6/22/2022	23:00	241.32	3520	
6/23/2022	0:00	241.49	3580	Pumping rate 37 gpm.
6/23/2022	1:00	241.63	3640	
6/23/2022	2:00	241.83	3700	Pumping rate 37 gpm.
6/23/2022	3:00	242.16	3760	
6/23/2022	4:00	242.49	3820	Pumping rate 37 gpm.
6/23/2022	5:00	242.75	3880	
6/23/2022	6:00	242.65	3940	Pumping rate 37 gpm.
6/23/2022	7:00	243.01	4000	
6/23/2022	8:00	243.04	4060	Pumping rate 37 gpm.
6/23/2022	9:00	243.45	4120	
6/23/2022	10:00	244.31	4180	Pumping rate 37 gpm.
6/23/2022	10:59	243.65	4239	Six hours prior to shut down of test.
6/23/2022	11:00	243.79	4240	Pumping rate 37 gpm.
6/23/2022	12:00	243.28	4300	
6/23/2022	13:00	243.55	4360	Pumping rate 37 gpm.
6/23/2022	14:00	244.07	4420	
6/23/2022	15:00	244.03	4480	Pumping rate 37 gpm.
6/23/2022	16:00	244.42	4540	
6/23/2022	16:59	244.65	4599	Pumping rate 37 gpm.
6/23/2022	17:00	232.27	-1	Pump in Well 1 shut down.
6/23/2022	17:01	222.12	-2	
6/23/2022	17:02	213.61	-3	
6/23/2022	17:03	206.52	-4	
6/23/2022	17:04	200.18	-5	
6/23/2022	17:05	194.46	-6	
6/23/2022	17:06	189.36	-7	
6/23/2022	17:07	184.62	-8	
6/23/2022	17:08	180.40	-9	
6/23/2022	17:09	176.48	-10	
6/23/2022	17:10	172.75	-11	
6/23/2022	17:11	169.40	-12	
6/23/2022	17:12	166.08	-13	
6/23/2022	17:13	163.19	-14	
6/23/2022	17:14	160.40	-15	
6/23/2022	17:19	148.25	-20	
6/23/2022	17:24	138.39	-25	
6/23/2022	17:29	130.18	-30	
6/23/2022	17:34	123.23	-35	
6/23/2022	17:39	116.99	-40	
6/23/2022	17:44	111.50	-45	
6/23/2022	17:49	106.48	-50	
6/23/2022	17:54	102.01	-55	
6/23/2022	17:59	97.84	-60	
6/23/2022	18:00	97.15	-61	
6/23/2022	19:00	66.17	-121	

SUMMIT COUNTRY CLUB
568 BEDFORD ROAD
NORTH CASTLE, NEW YORK

Summary of Water-Level Measurements Collected from Pumping Well 1
During the 72-Hour Pumping Test Conducted on Wells 1, 3 and 6A, June 2022

Date	Time	Depth to Water (ft btoc)/ Drawdown (feet)	Elapsed Time (minutes)	Comments
6/23/2022	20:00	48.70	-181	
6/23/2022	21:00	37.14	-241	
6/23/2022	22:00	28.87	-301	
6/23/2022	22:38	24.46	-339	90% recovered to pre-test level.
6/23/2022	23:00	22.38	-361	
6/24/2022	0:00	16.98	-421	
6/24/2022	1:00	12.60	-481	
6/24/2022	2:00	8.62	-541	
6/24/2022	3:00	5.39	-601	
6/24/2022	4:00	2.73	-661	
6/24/2022	5:00	0.50	-721	
6/24/2022	6:00	0.01	-781	
6/24/2022	7:00	0.00	-841	Well 1 flowing artesian.
6/24/2022	8:00	0.00	-901	
6/24/2022	9:00	0.00	-961	
6/24/2022	10:00	0.00	-1021	
6/24/2022	11:00	0.00	-1081	
6/24/2022	12:00	0.00	-1141	
6/24/2022	16:00	0.00	-1381	
6/24/2022	20:00	0.00	-1621	
6/25/2022	0:00	0.00	-1861	
6/25/2022	4:00	0.00	-2101	
6/25/2022	8:00	0.00	-2341	
6/25/2022	12:00	0.00	-2581	
6/25/2022	16:00	0.00	-2821	
6/25/2022	20:00	0.00	-3061	
6/26/2022	0:00	0.00	-3301	
6/26/2022	4:00	0.00	-3541	
6/26/2022	8:00	0.00	-3781	
6/26/2022	12:00	0.00	-4021	
6/26/2022	16:00	0.00	-4261	
6/26/2022	20:00	0.00	-4501	
6/27/2022	0:00	0.00	-4741	
6/27/2022	4:00	0.00	-4981	
6/27/2022	8:00	0.00	-5221	
6/27/2022	12:00	0.00	-5461	
6/27/2022	16:00	0.00	-5701	
6/27/2022	20:00	0.00	-5941	
6/28/2022	0:00	0.00	-6181	
6/28/2022	4:00	0.00	-6421	
6/28/2022	8:00	0.00	-6661	Pressure transducer removed from well.

gpm gallons per minute
ft btoc feet below top of casing

WELL 3

SUMMIT COUNTRY CLUB
568 BEDFORD ROAD
NORTH CASTLE, NEW YORK

Hydrograph of Water-Level Measurements Collected from Pumping Well 3 During the 72-Hour Pumping Test Conducted on Wells 1, 3 and 6A, June 2022

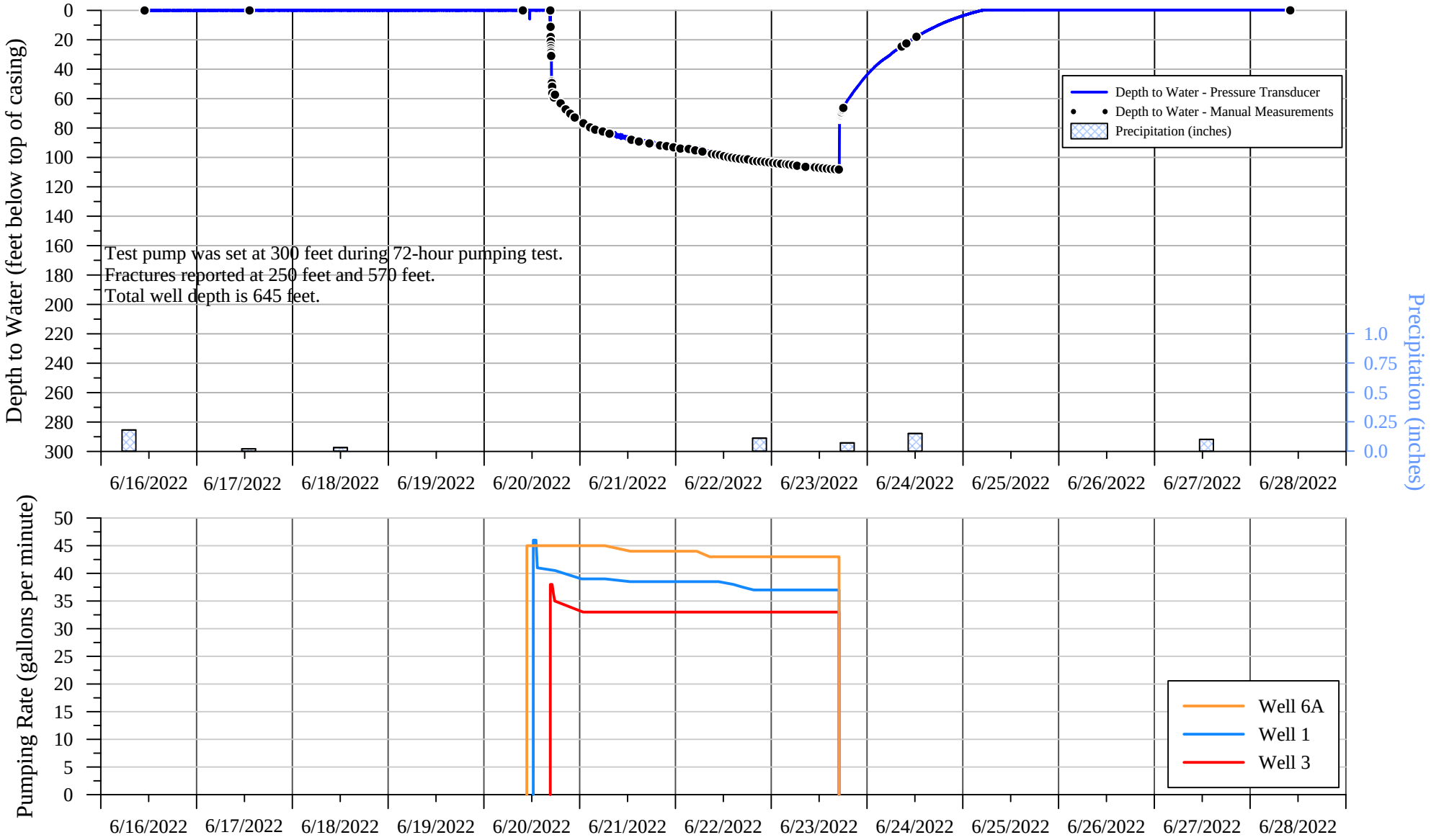

SUMMIT COUNTRY CLUB
568 BEDFORD ROAD
NORTH CASTLE, NEW YORK

180-Day Water-Level Drawdown Projection from Measurements Collected from Pumping Well 3
During the 72-Hour Pumping Test Conducted on Wells 1, 3 and 6A, June 2022

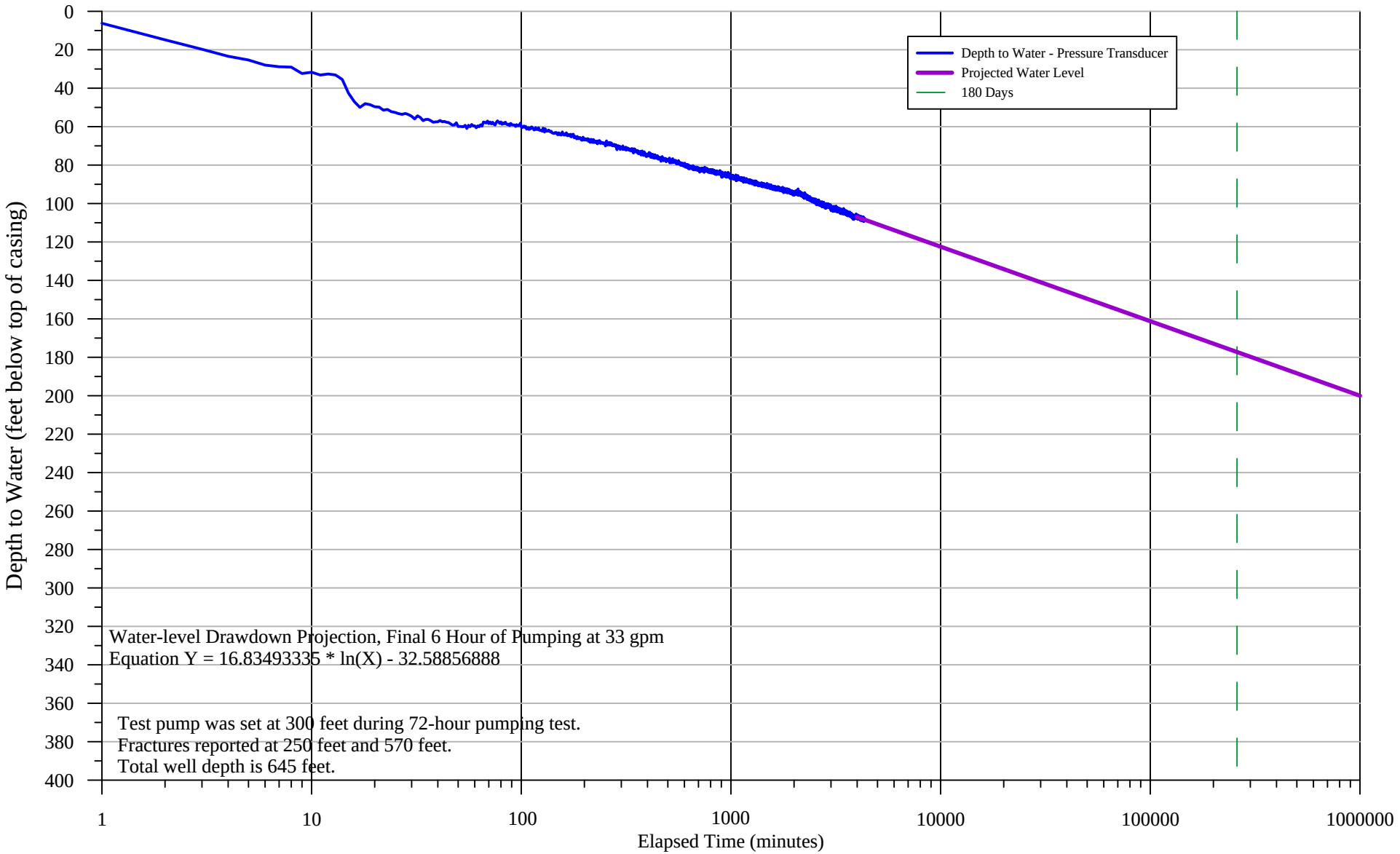

SUMMIT COUNTRY CLUB
568 BEDFORD ROAD
NORTH CASTLE, NEW YORK

Summary of Water-Level Measurements Collected from Pumping Well 3
During the 72-Hour Pumping Test Conducted on Wells 1, 3 and 6A, June 2022

Date	Time	Depth to Water (ft btoc)/ Drawdown (feet)	Elapsed Time (minutes)	Comments
6/16/2022	12:00	0.00	--	Pressure transducer installed in well.
6/16/2022	16:00	0.00	--	Well 3 flowing artesian.
6/16/2022	20:00	0.00	--	
6/17/2022	0:00	0.00	--	
6/17/2022	4:00	0.00	--	
6/17/2022	8:00	0.00	--	
6/17/2022	12:00	0.00	--	
6/17/2022	16:00	0.00	--	
6/17/2022	20:00	0.00	--	
6/18/2022	0:00	0.00	--	
6/18/2022	4:00	0.00	--	
6/18/2022	8:00	0.00	--	
6/18/2022	12:00	0.00	--	
6/18/2022	16:00	0.00	--	
6/18/2022	20:00	0.00	--	
6/19/2022	0:00	0.00	--	
6/19/2022	4:00	0.00	--	
6/19/2022	8:00	0.00	--	
6/19/2022	12:00	0.00	--	
6/19/2022	16:00	0.00	--	
6/19/2022	20:00	0.00	--	
6/20/2022	0:00	0.00	--	
6/20/2022	4:00	0.00	--	
6/20/2022	8:00	0.00	--	
6/20/2022	10:00	0.00	--	
6/20/2022	10:45	0.00	--	Pump in Well 6A started.
6/20/2022	11:00	0.00	--	
6/20/2022	12:00	0.00	--	
6/20/2022	12:21	0.00	--	Pump in Well 1 started.
6/20/2022	13:00	0.00	--	
6/20/2022	14:00	0.00	--	
6/20/2022	15:00	0.00	--	
6/20/2022	16:00	0.00	--	
6/20/2022	16:37	0.00	--	
6/20/2022	16:38	5.34	1	Pump in Well 3 started.
6/20/2022	16:39	13.95	2	Pumping rate adjusted to 38 gpm.
6/20/2022	16:40	18.86	3	
6/20/2022	16:41	22.51	4	
6/20/2022	16:42	24.44	5	Pumping rate 38 gpm.
6/20/2022	16:43	27.09	6	
6/20/2022	16:44	27.94	7	Pumping rate 38 gpm.
6/20/2022	16:45	28.16	8	
6/20/2022	16:46	31.48	9	Pumping rate 38 gpm.
6/20/2022	16:47	30.80	10	
6/20/2022	16:48	32.25	11	Pumping rate 38 gpm.
6/20/2022	16:49	31.72	12	
6/20/2022	16:50	32.22	13	Pumping rate 38 gpm.
6/20/2022	16:51	34.55	14	
6/20/2022	16:52	41.72	15	Pumping rate 38 gpm.
6/20/2022	16:57	48.75	20	
6/20/2022	17:02	51.72	25	Pumping rate 38 gpm.
6/20/2022	17:07	53.72	30	

SUMMIT COUNTRY CLUB
568 BEDFORD ROAD
NORTH CASTLE, NEW YORK

Summary of Water-Level Measurements Collected from Pumping Well 3
During the 72-Hour Pumping Test Conducted on Wells 1, 3 and 6A, June 2022

Date	Time	Depth to Water (ft btoc)/ Drawdown (feet)	Elapsed Time (minutes)	Comments
6/20/2022	17:12	55.37	35	Pumping rate 38 gpm.
6/20/2022	17:17	56.57	40	
6/20/2022	17:22	56.97	45	Pumping rate 38 gpm.
6/20/2022	17:27	59.07	50	
6/20/2022	17:32	60.08	55	Decreased rate to 36 gpm.
6/20/2022	17:37	58.72	60	
6/20/2022	18:00	57.65	83	Pumping rate 35 gpm.
6/20/2022	19:00	62.67	143	
6/20/2022	20:00	65.84	203	Pumping rate 35 gpm.
6/20/2022	21:00	68.47	263	
6/20/2022	22:00	70.89	323	Pumping rate 35 gpm.
6/20/2022	23:00	73.85	383	
6/21/2022	0:00	75.04	443	Pumping rate 33 gpm.
6/21/2022	1:00	77.08	503	
6/21/2022	2:00	77.66	563	Pumping rate 33 gpm.
6/21/2022	3:00	80.54	623	
6/21/2022	4:00	80.90	683	Pumping rate 33 gpm.
6/21/2022	5:00	81.39	743	
6/21/2022	6:00	81.40	803	Pumping rate 33 gpm.
6/21/2022	7:00	83.33	863	
6/21/2022	8:00	83.48	923	Pumping rate 33 gpm.
6/21/2022	9:00	85.07	983	
6/21/2022	10:00	85.10	1043	Pumping rate 33 gpm.
6/21/2022	11:00	86.54	1103	
6/21/2022	12:00	87.26	1163	Pumping rate 33 gpm.
6/21/2022	13:00	88.49	1223	
6/21/2022	14:00	88.33	1283	Pumping rate 33 gpm.
6/21/2022	15:00	89.09	1343	
6/21/2022	16:00	89.83	1403	Pumping rate 33 gpm.
6/21/2022	17:00	89.88	1463	
6/21/2022	18:00	89.44	1523	Pumping rate 33 gpm.
6/21/2022	19:00	91.31	1583	
6/21/2022	20:00	90.69	1643	Pumping rate 33 gpm.
6/21/2022	21:00	91.40	1703	
6/21/2022	22:00	90.62	1763	Pumping rate 33 gpm.
6/21/2022	23:00	91.86	1823	
6/22/2022	0:00	91.88	1883	Pumping rate 33 gpm.
6/22/2022	1:00	93.75	1943	
6/22/2022	2:00	94.30	2003	Pumping rate 33 gpm.
6/22/2022	3:00	93.83	2063	
6/22/2022	4:00	93.83	2123	Pumping rate 33 gpm.
6/22/2022	5:00	95.10	2183	
6/22/2022	6:00	96.09	2243	Pumping rate 33 gpm.
6/22/2022	7:00	95.61	2303	
6/22/2022	8:00	96.99	2363	Pumping rate 33 gpm.
6/22/2022	9:00	97.62	2423	
6/22/2022	10:00	98.07	2483	Pumping rate 33 gpm.
6/22/2022	11:00	98.85	2543	
6/22/2022	12:00	98.70	2603	Pumping rate 33 gpm.
6/22/2022	13:00	98.90	2663	
6/22/2022	14:00	99.54	2723	Pumping rate 33 gpm.
6/22/2022	15:00	100.23	2783	

SUMMIT COUNTRY CLUB
568 BEDFORD ROAD
NORTH CASTLE, NEW YORK

Summary of Water-Level Measurements Collected from Pumping Well 3
During the 72-Hour Pumping Test Conducted on Wells 1, 3 and 6A, June 2022

Date	Time	Depth to Water (ft btoc)/ Drawdown (feet)	Elapsed Time (minutes)	Comments
6/22/2022	16:00	100.61	2843	Pumping rate 33 gpm.
6/22/2022	17:00	100.18	2903	
6/22/2022	18:00	100.00	2963	Pumping rate 33 gpm.
6/22/2022	19:00	102.31	3023	
6/22/2022	20:00	102.26	3083	Pumping rate 33 gpm.
6/22/2022	21:00	101.98	3143	
6/22/2022	22:00	101.51	3203	Pumping rate 33 gpm.
6/22/2022	23:00	102.16	3263	
6/23/2022	0:00	103.74	3323	Pumping rate 33 gpm.
6/23/2022	1:00	102.56	3383	
6/23/2022	2:00	103.51	3443	Pumping rate 33 gpm.
6/23/2022	3:00	104.05	3503	
6/23/2022	4:00	104.30	3563	Pumping rate 33 gpm.
6/23/2022	5:00	104.44	3623	
6/23/2022	6:00	104.27	3683	Pumping rate 33 gpm.
6/23/2022	7:00	105.22	3743	
6/23/2022	8:00	106.37	3803	Pumping rate 33 gpm.
6/23/2022	9:00	105.78	3863	
6/23/2022	10:00	106.45	3923	Pumping rate 33 gpm.
6/23/2022	10:59	106.68	3982	Six hours prior to shut down of test.
6/23/2022	11:00	105.86	3983	Pumping rate 33 gpm.
6/23/2022	12:00	105.39	4043	
6/23/2022	13:00	105.88	4103	Pumping rate 33 gpm.
6/23/2022	14:00	106.74	4163	
6/23/2022	15:00	107.77	4223	Pumping rate 33 gpm.
6/23/2022	16:00	106.94	4283	
6/23/2022	16:59	107.77	4342	Pumping rate 33 gpm.
6/23/2022	17:00	100.17	-1	Pump in Well 3 shut down.
6/23/2022	17:01	87.02	-2	
6/23/2022	17:02	79.84	-3	
6/23/2022	17:03	76.14	-4	
6/23/2022	17:04	74.40	-5	
6/23/2022	17:05	73.49	-6	
6/23/2022	17:06	72.95	-7	
6/23/2022	17:07	72.51	-8	
6/23/2022	17:08	72.17	-9	
6/23/2022	17:09	71.90	-10	
6/23/2022	17:10	71.62	-11	
6/23/2022	17:11	71.40	-12	
6/23/2022	17:12	71.31	-13	
6/23/2022	17:13	71.01	-14	
6/23/2022	17:14	70.86	-15	
6/23/2022	17:19	70.10	-20	
6/23/2022	17:24	69.48	-25	
6/23/2022	17:29	68.90	-30	
6/23/2022	17:34	68.45	-35	
6/23/2022	17:39	67.91	-40	
6/23/2022	17:44	67.38	-45	
6/23/2022	17:49	66.94	-50	
6/23/2022	17:54	66.54	-55	
6/23/2022	17:59	66.06	-60	
6/23/2022	18:00	66.00	-61	

SUMMIT COUNTRY CLUB
568 BEDFORD ROAD
NORTH CASTLE, NEW YORK

Summary of Water-Level Measurements Collected from Pumping Well 3
During the 72-Hour Pumping Test Conducted on Wells 1, 3 and 6A, June 2022

Date	Time	Depth to Water (ft btoc)/ Drawdown (feet)	Elapsed Time (minutes)	Comments
6/23/2022	19:00	61.45	-121	
6/23/2022	20:00	57.61	-181	
6/23/2022	21:00	53.80	-241	
6/23/2022	22:00	50.37	-301	
6/23/2022	23:00	46.79	-361	
6/24/2022	0:00	43.66	-421	
6/24/2022	1:00	40.78	-481	
6/24/2022	2:00	38.08	-541	
6/24/2022	3:00	35.67	-601	
6/24/2022	4:00	33.57	-661	
6/24/2022	5:00	31.68	-721	
6/24/2022	6:00	29.60	-781	
6/24/2022	7:00	27.41	-841	
6/24/2022	8:00	25.49	-901	
6/24/2022	9:00	23.66	-961	
6/24/2022	10:00	21.91	-1021	
6/24/2022	11:00	20.15	-1081	
6/24/2022	12:00	18.53	-1141	
6/24/2022	13:00	16.91	-1201	
6/24/2022	14:00	15.25	-1261	
6/24/2022	15:00	13.84	-1321	
6/24/2022	16:00	12.50	-1381	
6/24/2022	17:00	11.15	-1441	
6/24/2022	17:16	10.75	-1457	90% recovered to pre-test level.
6/24/2022	18:00	9.83	-1501	
6/24/2022	19:00	8.61	-1561	
6/24/2022	20:00	7.47	-1621	
6/25/2022	0:00	3.63	-1861	
6/25/2022	4:00	0.53	-2101	
6/25/2022	8:00	0.00	-2341	Well 3 flowing artesian.
6/25/2022	12:00	0.00	-2581	
6/25/2022	16:00	0.00	-2821	
6/25/2022	20:00	0.00	-3061	
6/26/2022	0:00	0.00	-3301	
6/26/2022	4:00	0.00	-3541	
6/26/2022	8:00	0.00	-3781	
6/26/2022	12:00	0.00	-4021	
6/26/2022	16:00	0.00	-4261	
6/26/2022	20:00	0.00	-4501	
6/27/2022	0:00	0.00	-4741	
6/27/2022	4:00	0.00	-4981	
6/27/2022	8:00	0.00	-5221	
6/27/2022	12:00	0.00	-5461	
6/27/2022	16:00	0.00	-5701	
6/27/2022	20:00	0.00	-5941	
6/28/2022	0:00	0.00	-6181	
6/28/2022	4:00	0.00	-6421	
6/28/2022	8:00	0.00	-6661	Pressure transducer removed from well.

gpm gallons per minute
ft btoc feet below top of casing

WELL 6A

SUMMIT COUNTRY CLUB
568 BEDFORD ROAD
NORTH CASTLE, NEW YORK

Hydrograph of Water-Level Measurements Collected from Pumping Well 6A During the 72-Hour Pumping Test Conducted on Wells 1, 3 and 6A, June 2022

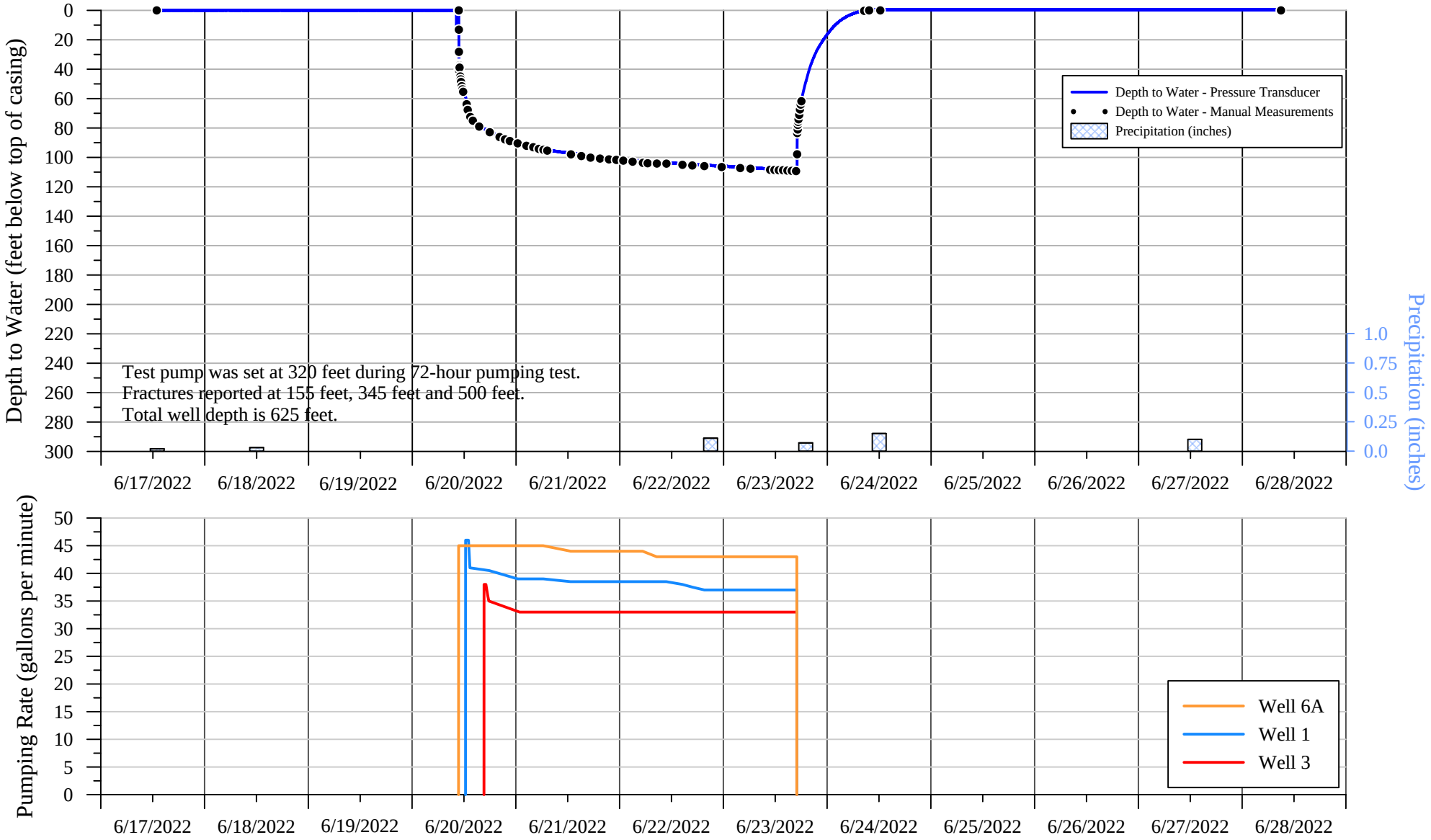

SUMMIT COUNTRY CLUB
568 BEDFORD ROAD
NORTH CASTLE, NEW YORK

180-Day Water-Level Drawdown Projection from Measurements Collected from Pumping Well 6A
During the 72-Hour Pumping Test Conducted on Wells 1, 3 and 6A, June 2022

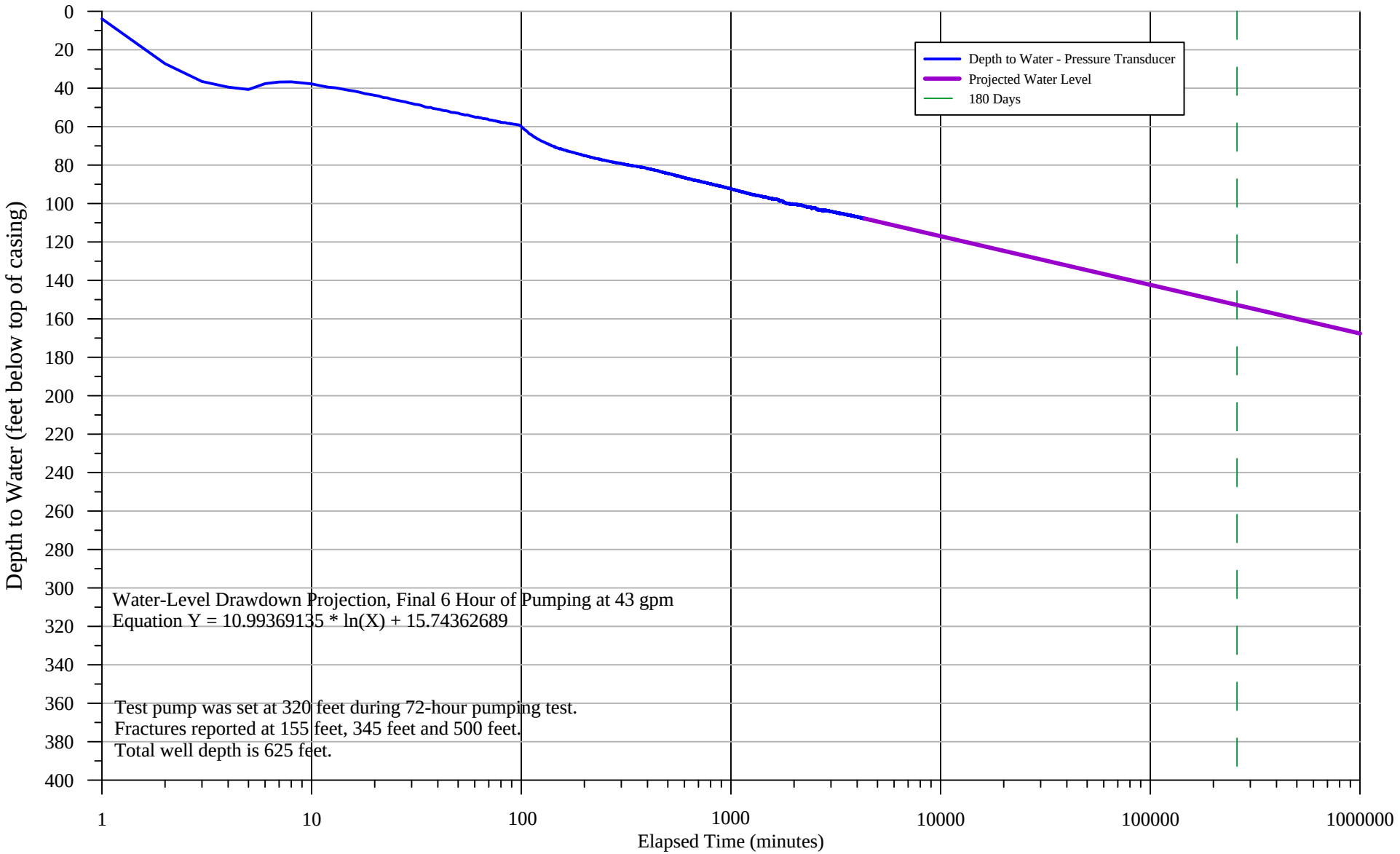

SUMMIT COUNTRY CLUB
568 BEDFORD ROAD
NORTH CASTLE, NEW YORK

Summary of Water-Level Measurements Collected from Pumping Well 6A
During the 72-Hour Pumping Test Conducted on Wells 1, 3 and 6A, June 2022

Date	Time	Depth to Water (ft btoc)/ Drawdown (feet)	Elapsed Time (minutes)	Comments
6/17/2022	16:00	0.00	--	Pressure transducer installed in well.
6/17/2022	20:00	0.00	--	Well 6A flowing artesian.
6/18/2022	0:00	0.00	--	
6/18/2022	4:00	0.00	--	
6/18/2022	8:00	0.00	--	
6/18/2022	12:00	0.00	--	
6/18/2022	16:00	0.00	--	
6/18/2022	20:00	0.00	--	
6/19/2022	0:00	0.00	--	
6/19/2022	4:00	0.00	--	
6/19/2022	8:00	0.00	--	
6/19/2022	12:00	0.00	--	
6/19/2022	16:00	0.00	--	
6/19/2022	20:00	0.00	--	
6/20/2022	0:00	0.00	--	
6/20/2022	4:00	0.00	--	
6/20/2022	8:00	0.00	--	
6/20/2022	10:44	0.00	--	
6/20/2022	10:45	3.81	1	Pump in Well 6A started.
6/20/2022	10:46	27.16	2	Pumping rate set at 45 gpm.
6/20/2022	10:47	36.42	3	
6/20/2022	10:48	39.36	4	
6/20/2022	10:49	40.59	5	Pumping rate 45 gpm.
6/20/2022	10:50	37.53	6	
6/20/2022	10:51	36.69	7	
6/20/2022	10:52	36.60	8	
6/20/2022	10:53	37.16	9	
6/20/2022	10:54	37.65	10	Pumping rate 45 gpm.
6/20/2022	10:55	38.61	11	
6/20/2022	10:56	39.39	12	
6/20/2022	10:57	39.71	13	
6/20/2022	10:58	40.35	14	
6/20/2022	10:59	40.99	15	Pumping rate 45 gpm.
6/20/2022	11:04	43.64	20	
6/20/2022	11:09	46.01	25	Pumping rate 45 gpm.
6/20/2022	11:14	47.83	30	
6/20/2022	11:19	49.77	35	Pumping rate 45 gpm.
6/20/2022	11:24	50.82	40	
6/20/2022	11:29	51.96	45	Pumping rate 45 gpm.
6/20/2022	11:34	52.91	50	
6/20/2022	11:39	53.78	55	Pumping rate 45 gpm.
6/20/2022	11:44	54.93	60	
6/20/2022	12:00	57.11	76	Pumping rate 45 gpm.
6/20/2022	12:21	58.98	97	Pump in Well 1 started.
6/20/2022	13:00	69.41	136	
6/20/2022	14:00	74.75	196	Pumping rate 45 gpm.
6/20/2022	15:00	77.68	256	
6/20/2022	16:00	79.75	316	Pumping rate 45 gpm.
6/20/2022	16:38	80.54	354	Pump in Well 3 started.
6/20/2022	17:00	80.93	376	
6/20/2022	18:00	82.59	436	Pumping rate 45 gpm.
6/20/2022	19:00	84.10	496	

SUMMIT COUNTRY CLUB
568 BEDFORD ROAD
NORTH CASTLE, NEW YORK

Summary of Water-Level Measurements Collected from Pumping Well 6A
During the 72-Hour Pumping Test Conducted on Wells 1, 3 and 6A, June 2022

Date	Time	Depth to Water (ft btoc)/ Drawdown (feet)	Elapsed Time (minutes)	Comments
6/20/2022	20:00	85.61	556	Pumping rate 45 gpm.
6/20/2022	21:00	86.79	616	
6/20/2022	22:00	87.82	676	Pumping rate 45 gpm.
6/20/2022	23:00	88.70	736	
6/21/2022	0:00	89.70	796	Pumping rate 45 gpm.
6/21/2022	1:00	90.56	856	
6/21/2022	2:00	91.36	916	Pumping rate 45 gpm.
6/21/2022	3:00	91.85	976	
6/21/2022	4:00	92.66	1036	Pumping rate 45 gpm.
6/21/2022	5:00	93.43	1096	
6/21/2022	6:00	94.04	1156	Pumping rate 45 gpm.
6/21/2022	7:00	94.80	1216	
6/21/2022	8:00	95.34	1276	Pumping rate 45 gpm.
6/21/2022	9:00	95.62	1336	
6/21/2022	10:00	96.17	1396	Pumping rate 45 gpm.
6/21/2022	11:00	96.66	1456	
6/21/2022	12:00	97.16	1516	Pumping rate 44 gpm.
6/21/2022	13:00	97.28	1576	
6/21/2022	14:00	97.73	1636	Pumping rate 44 gpm.
6/21/2022	15:00	98.68	1696	
6/21/2022	16:00	98.67	1756	Pumping rate 44 gpm.
6/21/2022	17:00	99.65	1816	
6/21/2022	18:00	100.02	1876	Pumping rate 44 gpm.
6/21/2022	19:00	100.48	1936	
6/21/2022	20:00	100.09	1996	Pumping rate 44 gpm.
6/21/2022	21:00	100.45	2056	
6/21/2022	22:00	100.54	2116	Pumping rate 44 gpm.
6/21/2022	23:00	100.67	2176	
6/22/2022	0:00	101.48	2236	Pumping rate 44 gpm.
6/22/2022	1:00	101.72	2296	
6/22/2022	2:00	101.84	2356	Pumping rate 44 gpm.
6/22/2022	3:00	102.13	2416	
6/22/2022	4:00	102.25	2476	Pumping rate 44 gpm.
6/22/2022	5:00	102.14	2536	
6/22/2022	6:00	103.07	2596	Pumping rate 44 gpm.
6/22/2022	7:00	103.40	2656	
6/22/2022	8:00	103.53	2716	Pumping rate 43 gpm.
6/22/2022	9:00	103.35	2776	
6/22/2022	10:00	103.35	2836	Pumping rate 43 gpm.
6/22/2022	11:00	103.74	2896	
6/22/2022	12:00	103.98	2956	Pumping rate 43 gpm.
6/22/2022	13:00	103.82	3016	
6/22/2022	14:00	104.32	3076	Pumping rate 43 gpm.
6/22/2022	15:00	104.45	3136	
6/22/2022	16:00	104.66	3196	Pumping rate 43 gpm.
6/22/2022	17:00	104.85	3256	
6/22/2022	18:00	105.06	3316	Pumping rate 43 gpm.
6/22/2022	19:00	105.18	3376	
6/22/2022	20:00	105.41	3436	Pumping rate 43 gpm.
6/22/2022	21:00	105.46	3496	
6/22/2022	22:00	105.63	3556	Pumping rate 43 gpm.
6/22/2022	23:00	105.80	3616	

SUMMIT COUNTRY CLUB
568 BEDFORD ROAD
NORTH CASTLE, NEW YORK

Summary of Water-Level Measurements Collected from Pumping Well 6A
During the 72-Hour Pumping Test Conducted on Wells 1, 3 and 6A, June 2022

Date	Time	Depth to Water (ft btoc)/ Drawdown (feet)	Elapsed Time (minutes)	Comments
6/23/2022	0:00	105.93	3676	Pumping rate 43 gpm.
6/23/2022	1:00	106.14	3736	
6/23/2022	2:00	106.28	3796	Pumping rate 43 gpm.
6/23/2022	3:00	106.45	3856	
6/23/2022	4:00	106.70	3916	Pumping rate 43 gpm.
6/23/2022	5:00	106.86	3976	
6/23/2022	6:00	106.94	4036	Pumping rate 43 gpm.
6/23/2022	7:00	107.10	4096	
6/23/2022	8:00	107.44	4156	Pumping rate 43 gpm.
6/23/2022	9:00	107.40	4216	
6/23/2022	10:00	107.73	4276	Pumping rate 43 gpm.
6/23/2022	10:59	107.62	4335	Six hour prior to shut down of test.
6/23/2022	11:00	107.75	4336	Pumping rate 43 gpm.
6/23/2022	12:00	107.74	4396	
6/23/2022	13:00	107.95	4456	Pumping rate 43 gpm.
6/23/2022	14:00	108.23	4516	
6/23/2022	15:00	108.56	4576	Pumping rate 43 gpm.
6/23/2022	16:00	108.61	4636	
6/23/2022	16:59	108.72	4695	Pumping rate 43 gpm.
6/23/2022	17:00	91.23	-1	Pump in Well 6A shut down.
6/23/2022	17:01	84.66	-2	
6/23/2022	17:02	82.34	-3	
6/23/2022	17:03	81.20	-4	
6/23/2022	17:04	80.53	-5	
6/23/2022	17:05	79.84	-6	
6/23/2022	17:06	79.16	-7	
6/23/2022	17:07	78.71	-8	
6/23/2022	17:08	78.24	-9	
6/23/2022	17:09	77.67	-10	
6/23/2022	17:10	77.23	-11	
6/23/2022	17:11	76.78	-12	
6/23/2022	17:12	76.44	-13	
6/23/2022	17:13	76.06	-14	
6/23/2022	17:14	75.67	-15	
6/23/2022	17:19	73.76	-20	
6/23/2022	17:24	72.12	-25	
6/23/2022	17:29	70.15	-30	
6/23/2022	17:34	68.52	-35	
6/23/2022	17:39	67.03	-40	
6/23/2022	17:44	65.46	-45	
6/23/2022	17:49	64.22	-50	
6/23/2022	17:54	62.82	-55	
6/23/2022	17:59	61.60	-60	
6/23/2022	18:00	61.26	-61	
6/23/2022	19:00	48.72	-121	
6/23/2022	20:00	38.46	-181	
6/23/2022	21:00	30.81	-241	
6/23/2022	22:00	25.11	-301	
6/23/2022	23:00	20.30	-361	
6/24/2022	0:00	16.11	-421	
6/24/2022	1:00	12.58	-481	
6/24/2022	1:30	10.85	-511	90% recovery to pre-test level.

SUMMIT COUNTRY CLUB
568 BEDFORD ROAD
NORTH CASTLE, NEW YORK

Summary of Water-Level Measurements Collected from Pumping Well 6A
During the 72-Hour Pumping Test Conducted on Wells 1, 3 and 6A, June 2022

Date	Time	Depth to Water (ft btoc)/ Drawdown (feet)	Elapsed Time (minutes)	Comments
6/24/2022	2:00	9.31	-541	
6/24/2022	3:00	6.83	-601	
6/24/2022	4:00	5.00	-661	
6/24/2022	5:00	3.42	-721	
6/24/2022	6:00	2.25	-781	
6/24/2022	7:00	1.15	-841	
6/24/2022	8:00	0.30	-901	
6/24/2022	9:00	0.00	-961	Artesian flow resumed in Well 6A.
6/24/2022	10:00	0.00	-1021	
6/24/2022	11:00	0.00	-1081	
6/24/2022	12:00	0.00	-1141	
6/24/2022	16:00	0.00	-1381	
6/24/2022	20:00	0.00	-1621	
6/25/2022	0:00	0.00	-1861	
6/25/2022	4:00	0.00	-2101	
6/25/2022	8:00	0.00	-2341	
6/25/2022	12:00	0.00	-2581	
6/25/2022	16:00	0.00	-2821	
6/25/2022	20:00	0.00	-3061	
6/26/2022	0:00	0.00	-3301	
6/26/2022	4:00	0.00	-3541	
6/26/2022	8:00	0.00	-3781	
6/26/2022	12:00	0.00	-4021	
6/26/2022	16:00	0.00	-4261	
6/26/2022	20:00	0.00	-4501	
6/27/2022	0:00	0.00	-4741	
6/27/2022	4:00	0.00	-4981	
6/27/2022	8:00	0.00	-5221	
6/27/2022	12:00	0.00	-5461	
6/27/2022	16:00	0.00	-5701	
6/27/2022	20:00	0.00	-5941	
6/28/2022	0:00	0.00	-6181	
6/28/2022	4:00	0.00	-6421	
6/28/2022	8:00	0.00	-6661	Pressure transducer removed from well.

gpm gallons per minute
ft btoc feet below top of casing

APPENDIX IV

SUMMIT COUNTRY CLUB
568 BEDFORD ROAD
NORTH CASTLE, NEW YORK

Hydrograph of Water-Level Measurements Collected from Well 2B
During the 72-Hour Pumping Test Conducted on Wells 1, 3 and 6A, June 2022

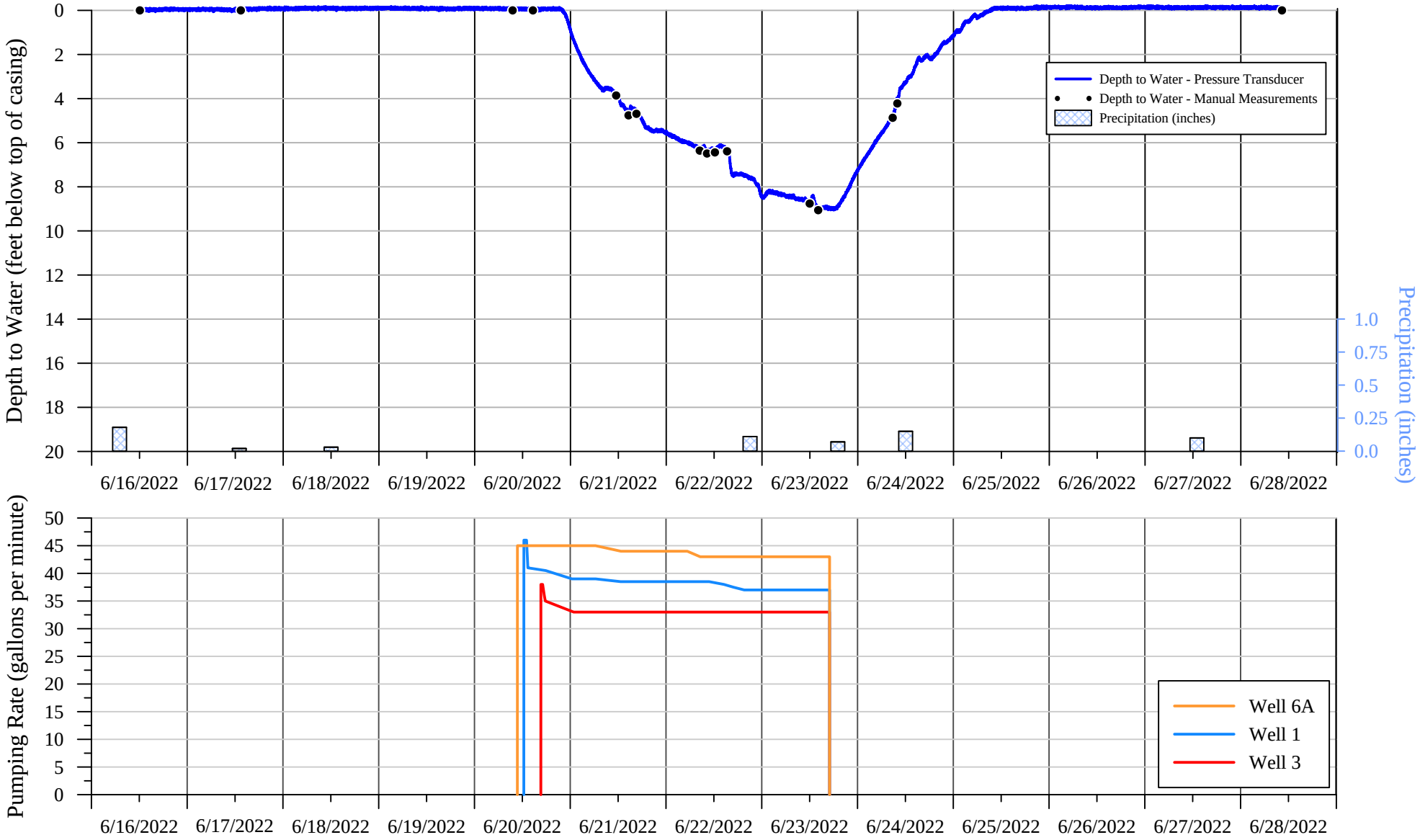

SUMMIT COUNTRY CLUB
568 BEDFORD ROAD
NORTH CASTLE, NEW YORK

Hydrograph of Artesian Discharge Rate Measurements Collected from Well 5
During the 72-Hour Pumping Test Conducted on Wells 1, 3 and 6A, June 2022

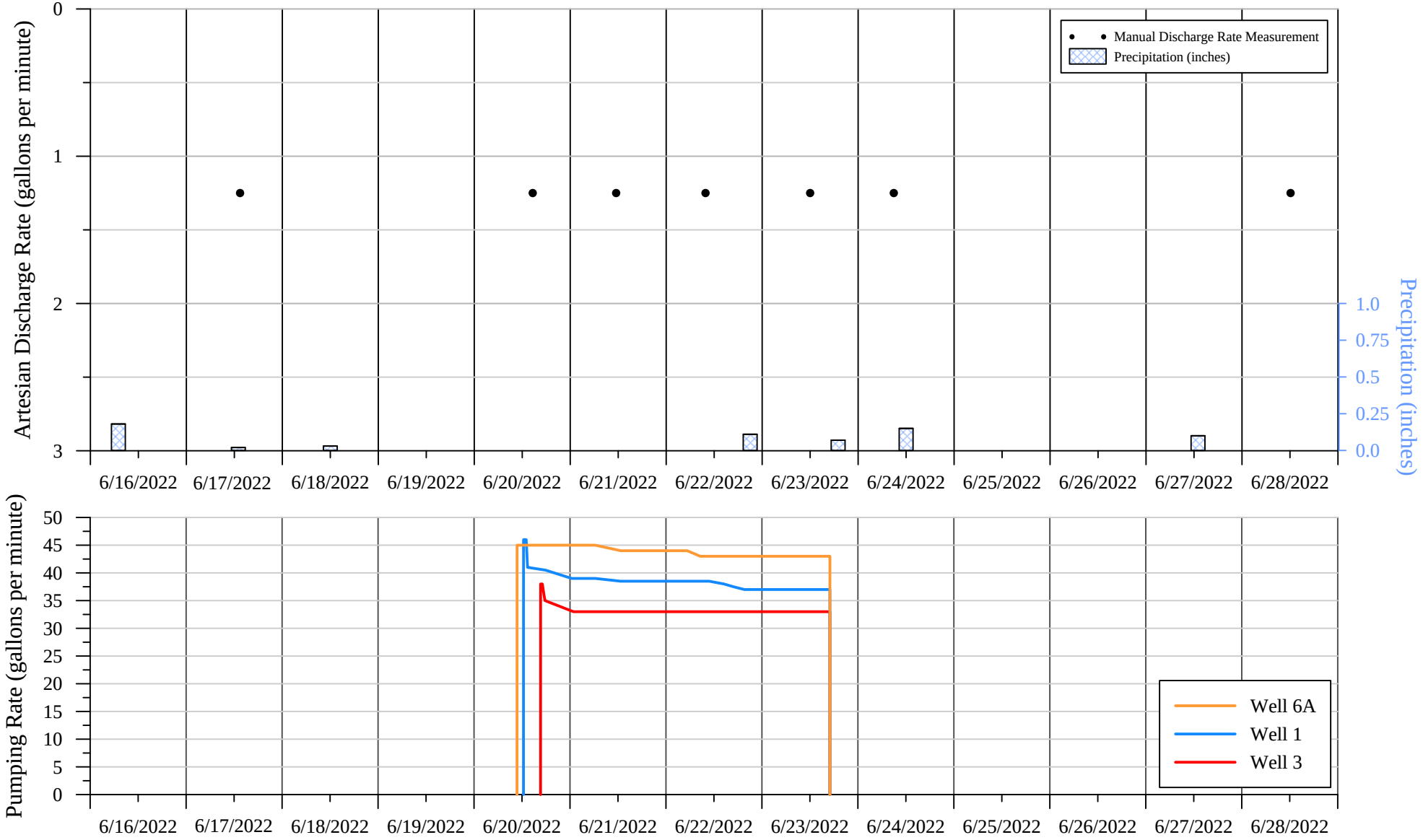

SUMMIT COUNTRY CLUB
568 BEDFORD ROAD
NORTH CASTLE, NEW YORK

Hydrograph of Water-Level Measurements Collected from Well 9 During the 72-Hour Pumping Test Conducted on Wells 1, 3 and 6A, June 2022

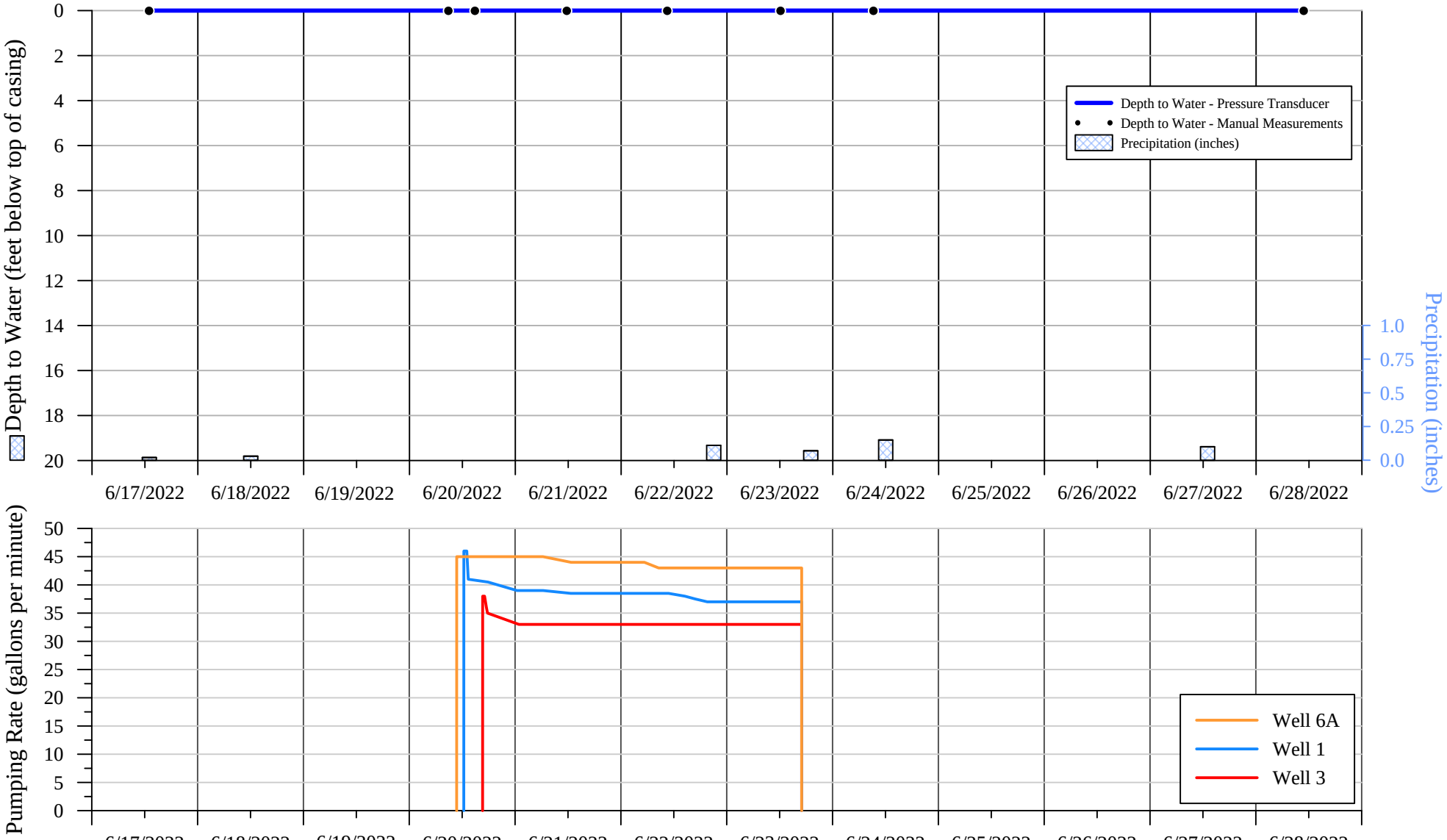

SUMMIT COUNTRY CLUB
568 BEDFORD ROAD
NORTH CASTLE, NEW YORK

Hydrograph of Water-Level Measurements Collected from Well 10 During the 72-Hour Pumping Test Conducted on Wells 1, 3 and 6A, June 2022

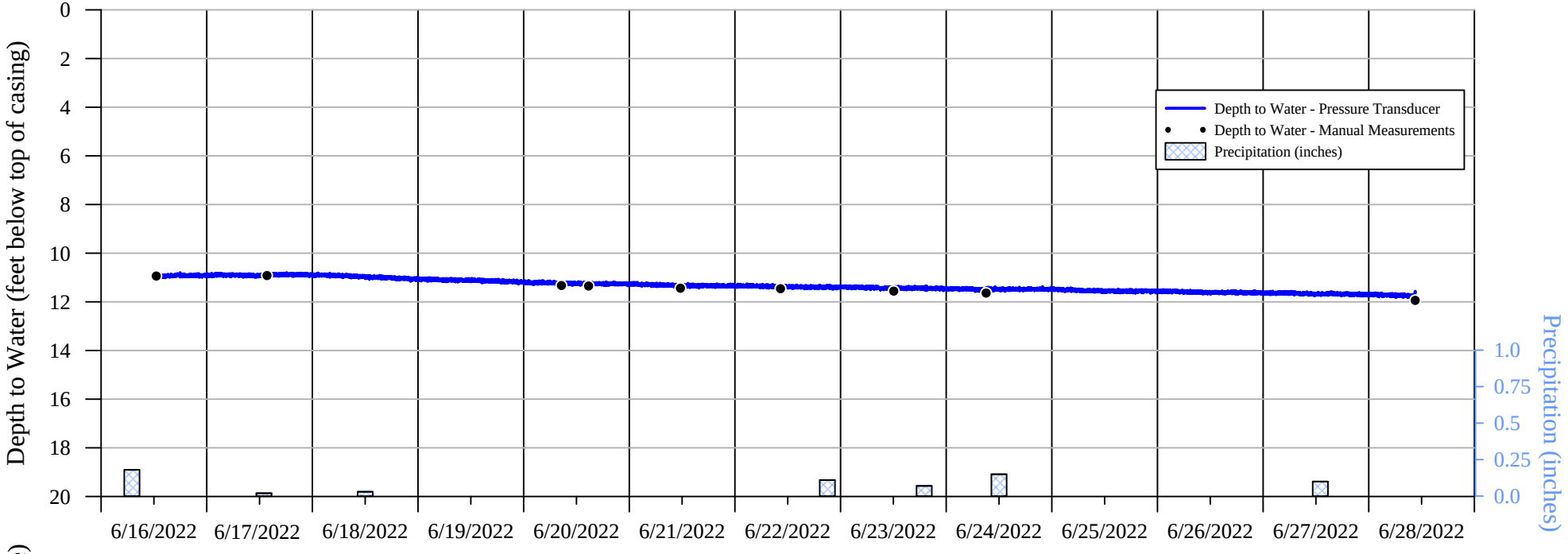

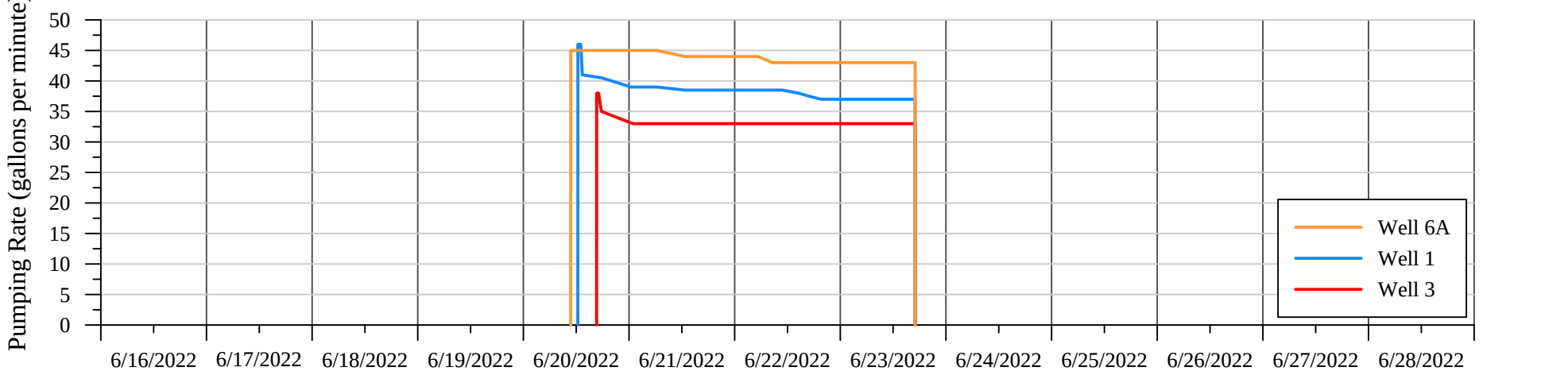

SUMMIT COUNTRY CLUB
568 BEDFORD ROAD
NORTH CASTLE, NEW YORK

Hydrograph of Water-Level Measurements Collected from Former Irrigation Well 3 During the 72-Hour Pumping Test Conducted on Wells 1, 3 and 6A, June 2022

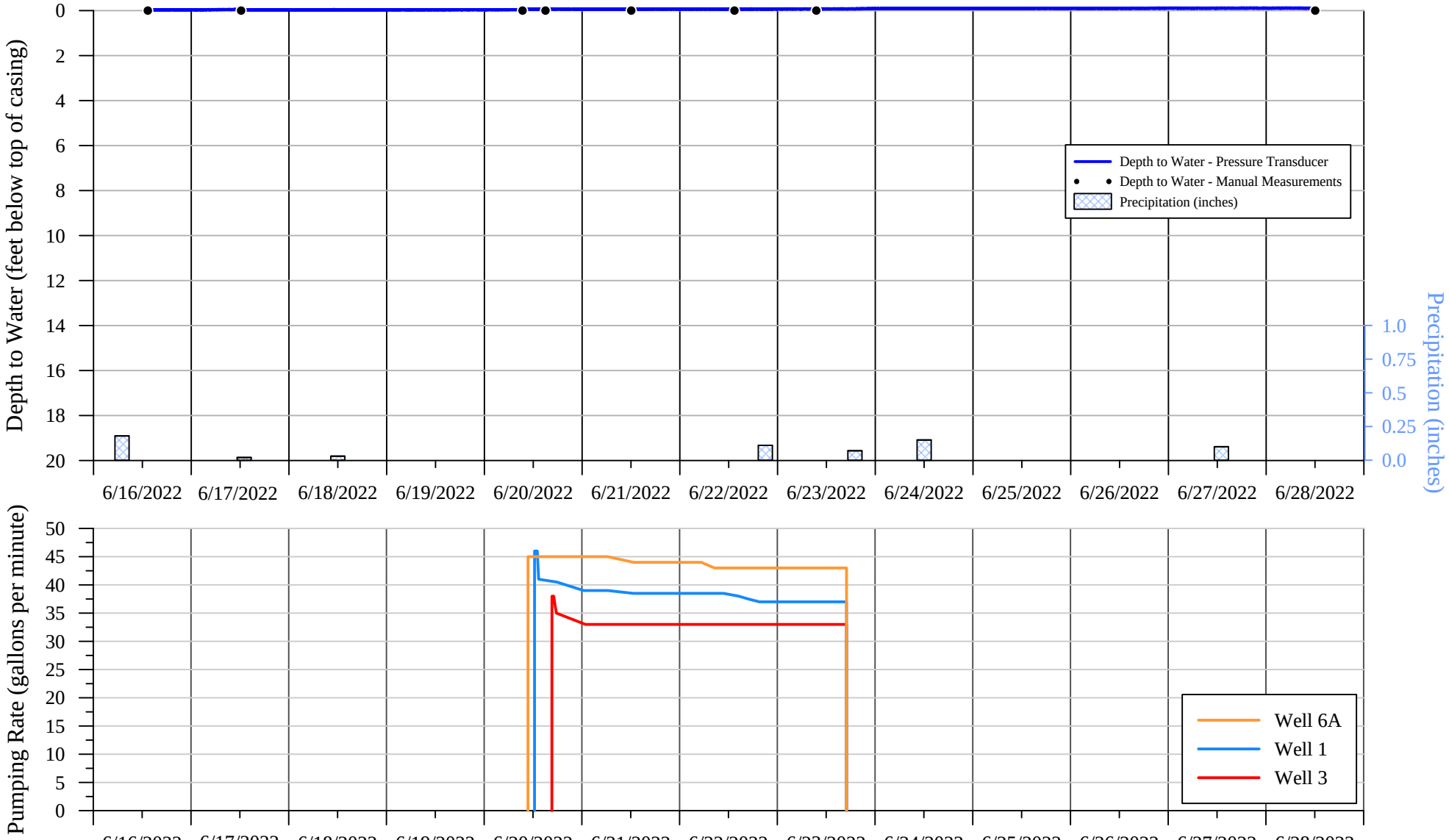

SUMMIT COUNTRY CLUB
568 BEDFORD ROAD
NORTH CASTLE, NEW YORK

Hydrograph of Water-Level Measurements Collected from Irrigation Well 4 During the 72-Hour Pumping Test Conducted on Wells 1, 3 and 6A, June 2022

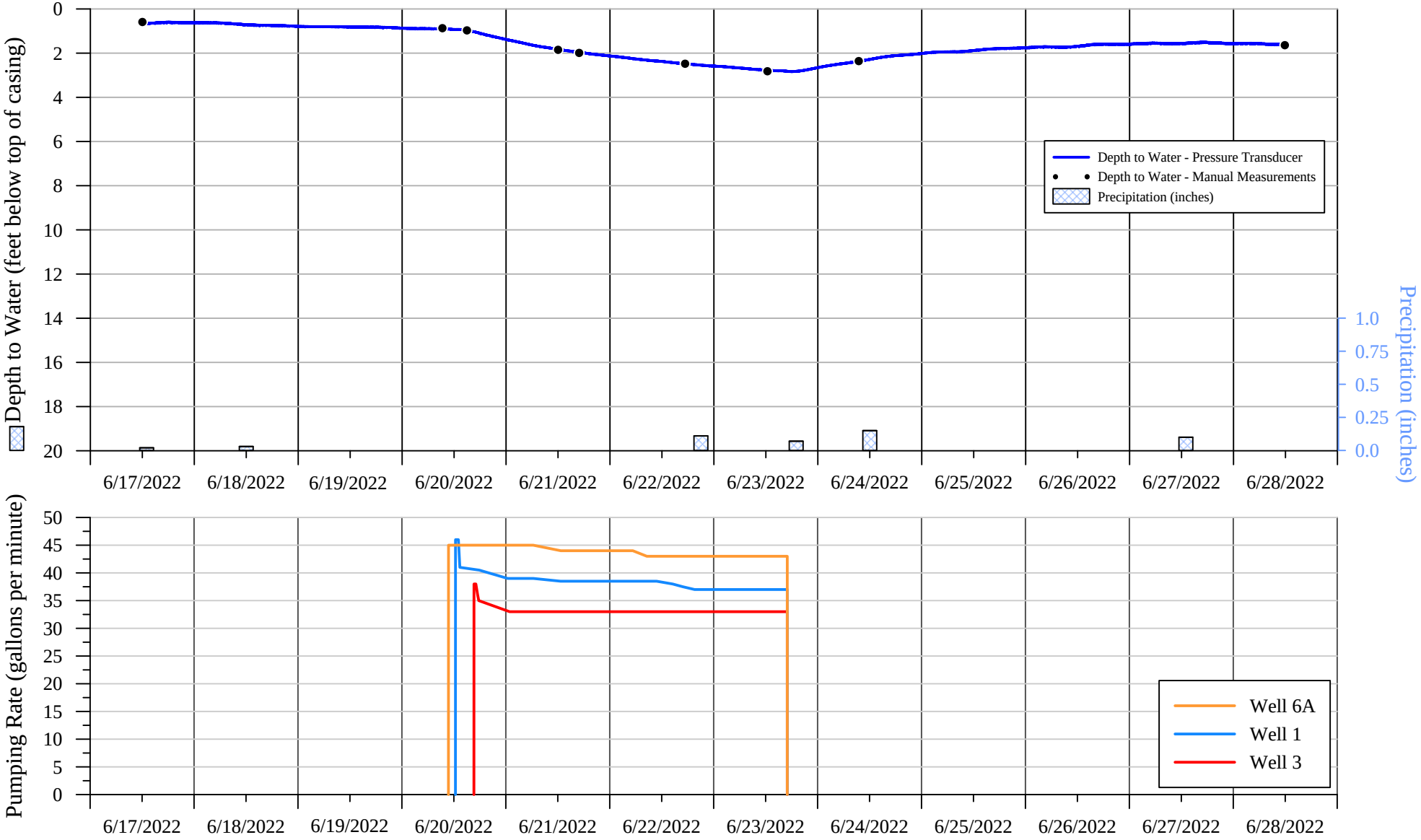

SUMMIT COUNTRY CLUB
568 BEDFORD ROAD
NORTH CASTLE, NEW YORK

Hydrograph of Water-Level Measurements Collected from Irrigation Well 5 During the 72-Hour Pumping Test Conducted on Wells 1, 3 and 6A, June 2022

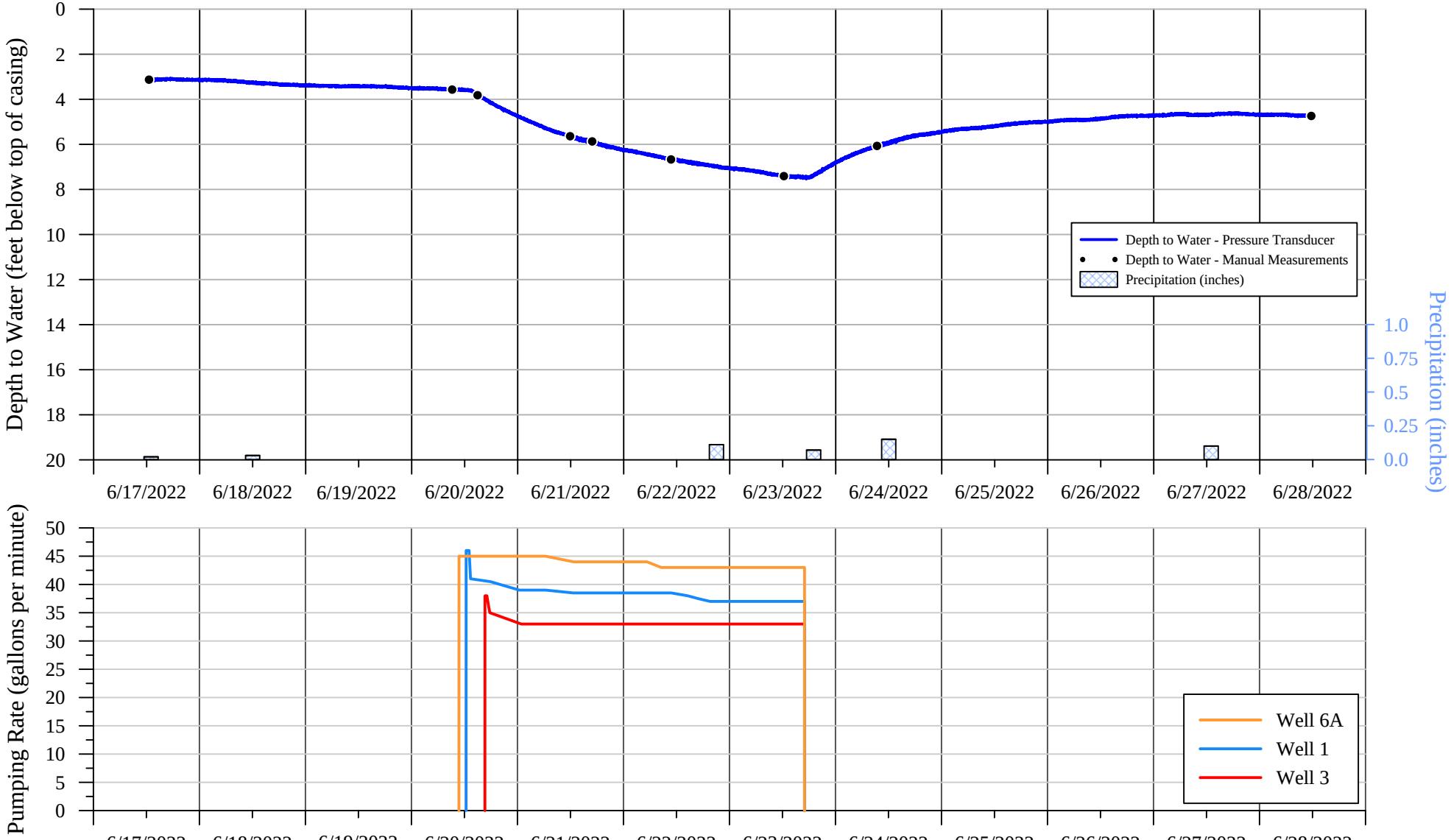

SUMMIT COUNTRY CLUB
568 BEDFORD ROAD
NORTH CASTLE, NEW YORK

Manual Water-Level Measurements Collected from Onsite Monitoring Wells
During the 72-Hour Pumping Test Conducted on Wells 1, 3 and 6A, June 2022

Date/Time	Level Depth to Water (ft btoc)
Well 2B	
6/16/2022 11:54	0[1/]
6/16/2022 12:05	0[1/]
6/17/2022 13:23	0[1/]
6/20/2022 9:30	0[1/]
6/20/2022 14:35	0[1/]
6/21/2022 11:27	3.86
6/21/2022 14:33	4.76
6/21/2022 16:32	4.69
6/22/2022 8:24	6.36
6/22/2022 10:13	6.49
6/22/2022 12:12	6.44
6/22/2022 15:15	6.39
6/23/2022 11:57	8.76
6/23/2022 14:05	9.06
6/24/2022 8:45	4.87
6/24/2022 9:55	4.22
6/28/2022 10:19	0[1/]
Former Irrigation Well 3	
6/16/2022 13:20	0[1/]
6/17/2022 12:15	0[1/]
6/20/2022 9:22	0[1/]
6/20/2022 15:00	0[1/]
6/21/2022 12:04	0[1/]
6/22/2022 13:25	0[1/]
6/23/2022 9:31	0[1/]
6/28/2022 12:03	0[1/]
Irrigation Well 4	
6/17/2022 12:01	0.59
6/20/2022 9:18	0.87
6/20/2022 14:58	0.97
6/21/2022 12:01	1.85
6/21/2022 16:53	1.99
6/22/2022 17:21	2.48
6/23/2022 12:22	2.82
6/24/2022 9:27	2.36
6/28/2022 11:51	1.64
Irrigation Well 5	
6/17/2022 12:22	3.13
6/17/2022 12:32	3.13
6/20/2022 9:10	3.57
6/20/2022 14:55	3.82
6/21/2022 11:52	5.64
6/21/2022 16:52	5.87
6/22/2022 10:43	6.67
6/23/2022 12:16	7.41
6/24/2022 9:21	6.07
6/28/2022 11:40	4.74
Well 9	
6/17/2022 12:56	0.01
6/20/2022 8:49	0.01
6/20/2022 14:50	0.01

SUMMIT COUNTRY CLUB
568 BEDFORD ROAD
NORTH CASTLE, NEW YORK

Manual Water-Level Measurements Collected from Onsite Monitoring Wells
During the 72-Hour Pumping Test Conducted on Wells 1, 3 and 6A, June 2022

Date/Time	Level Depth to Water (ft btoc)
Well 9 (continued)	
6/21/2022 11:40	0.01
6/22/2022 10:27	0.01
6/23/2022 12:09	0.01
6/24/2022 9:13	0.01
6/28/2022 10:48	0.01
Well 10	
6/16/2022 12:32	10.94
6/17/2022 13:42	10.92
6/20/2022 8:35	11.33
6/20/2022 14:45	11.35
6/21/2022 11:37	11.44
6/22/2022 10:21	11.46
6/23/2022 12:05	11.56
6/24/2022 9:04	11.64
6/28/2022 10:33	11.94
Date/Time	**Discharge Rate (gpm)[1/]**
Well 5	
6/17/2022 13:26	1.25
6/20/2022 14:37	1.25
6/21/2022 11:29	1.25
6/22/2022 9:50	1.25
6/23/2022 12:00	1.25
6/24/2022 8:55	1.25
6/28/2022 12:09	1.25

ft btoc feet below top of casing
gpm gallons per minute
[1/] Well flowing artesian.

APPENDIX V

SUMMIT COUNTRY CLUB
568 BEDFORD ROAD
NORTH CASTLE, NEW YORK

Hydrograph of Water-Level Measurements Collected from Well Located at 4 Norman Place During the 72-Hour Pumping Test Conducted on Wells 1, 3 and 6A, June 2022

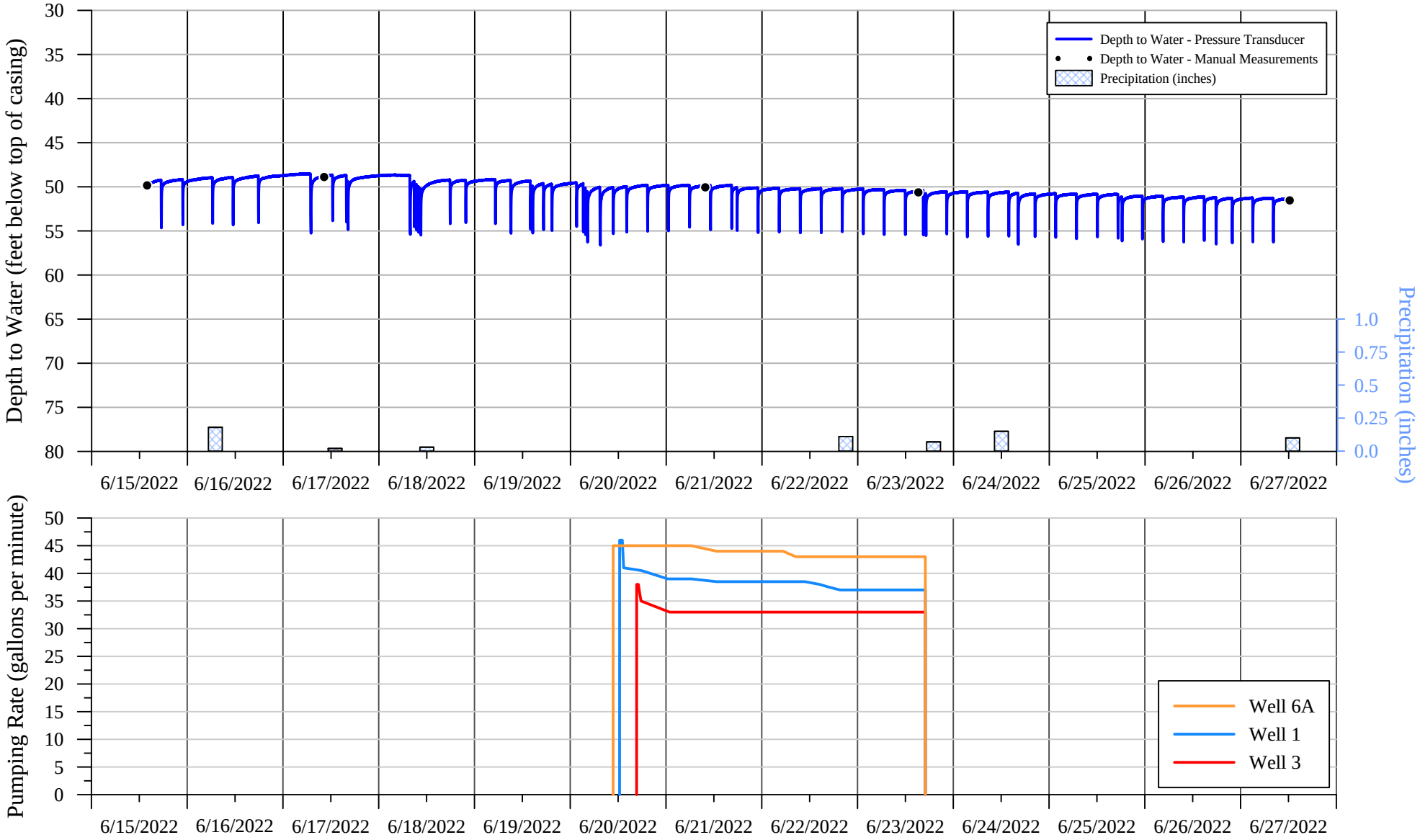

SUMMIT COUNTRY CLUB
568 BEDFORD ROAD
NORTH CASTLE, NEW YORK

Hydrograph of Water-Level Measurements Collected from Well Located at 6 Byram Hill Road
During the 72-Hour Pumping Test Conducted on Wells 1, 3 and 6A, June 2022

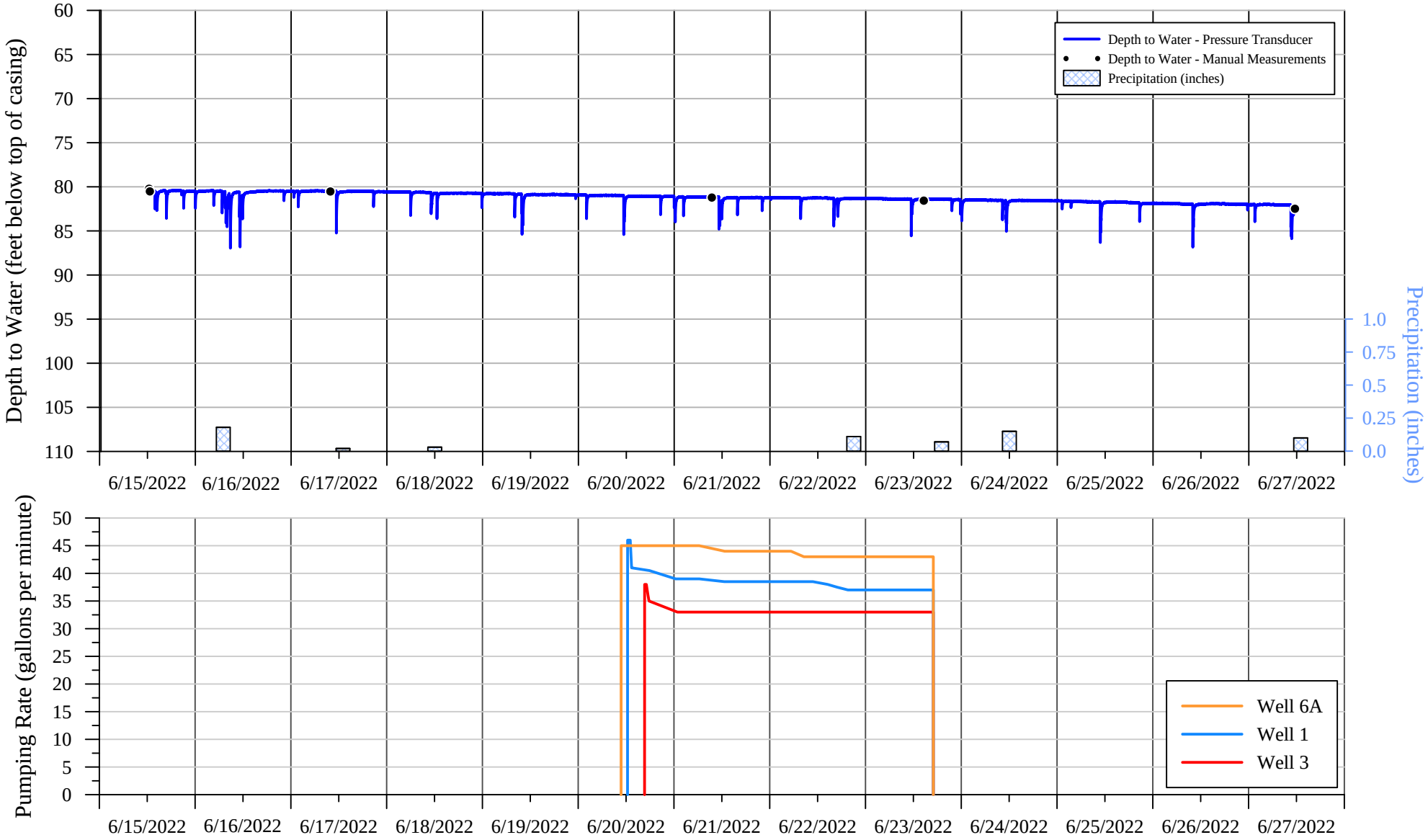

SUMMIT COUNTRY CLUB
568 BEDFORD ROAD
NORTH CASTLE, NEW YORK

Hydrograph of Water-Level Measurements Collected from Well Located at 8 Colonial Court
During the 72-Hour Pumping Test Conducted on Wells 1, 3 and 6A, June 2022

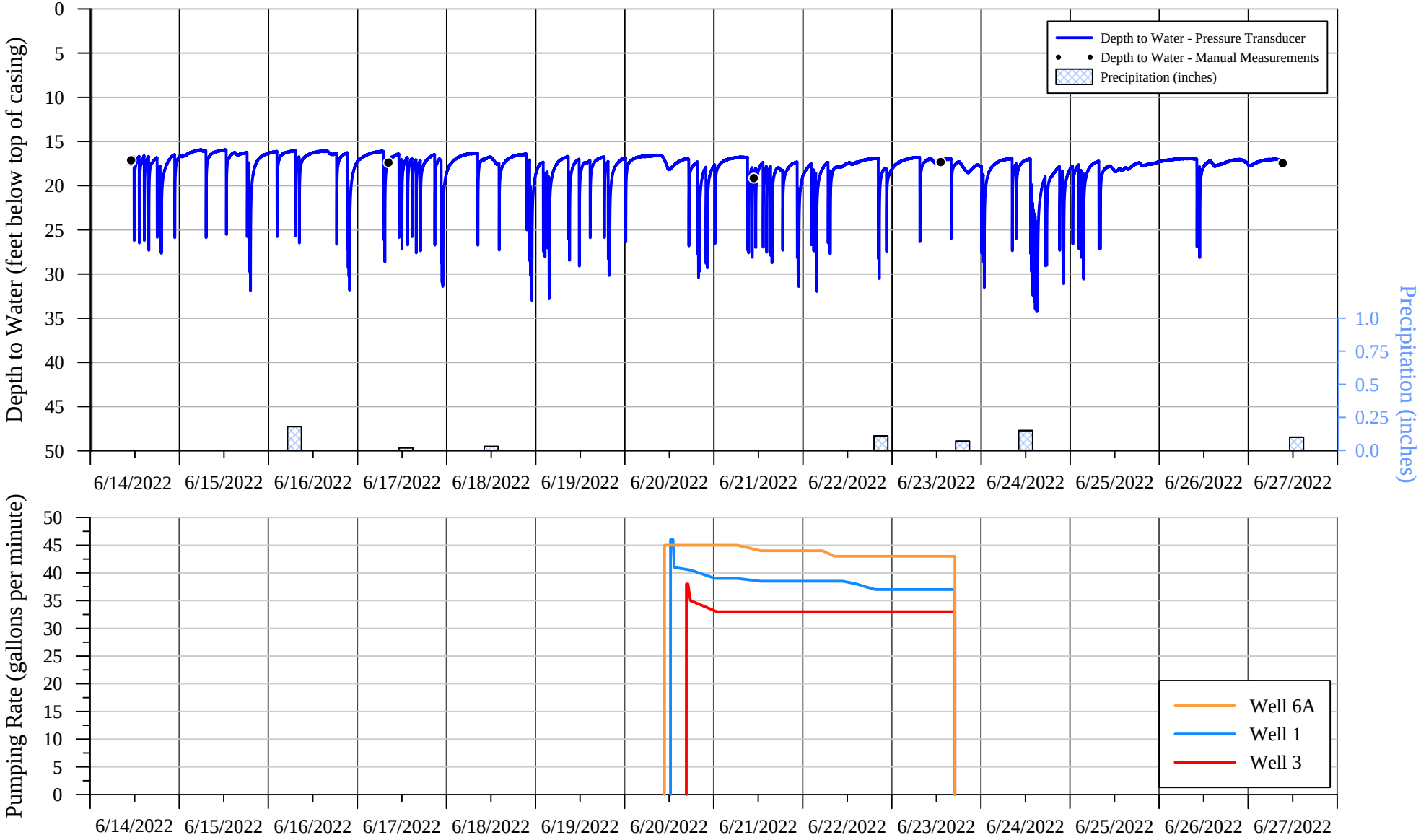

SUMMIT COUNTRY CLUB
568 BEDFORD ROAD
NORTH CASTLE, NEW YORK

Hydrograph of Water-Level Measurements Collected from Well Located at 8 Embassy Court
During the 72-Hour Pumping Test Conducted on Wells 1, 3 and 6A, June 2022

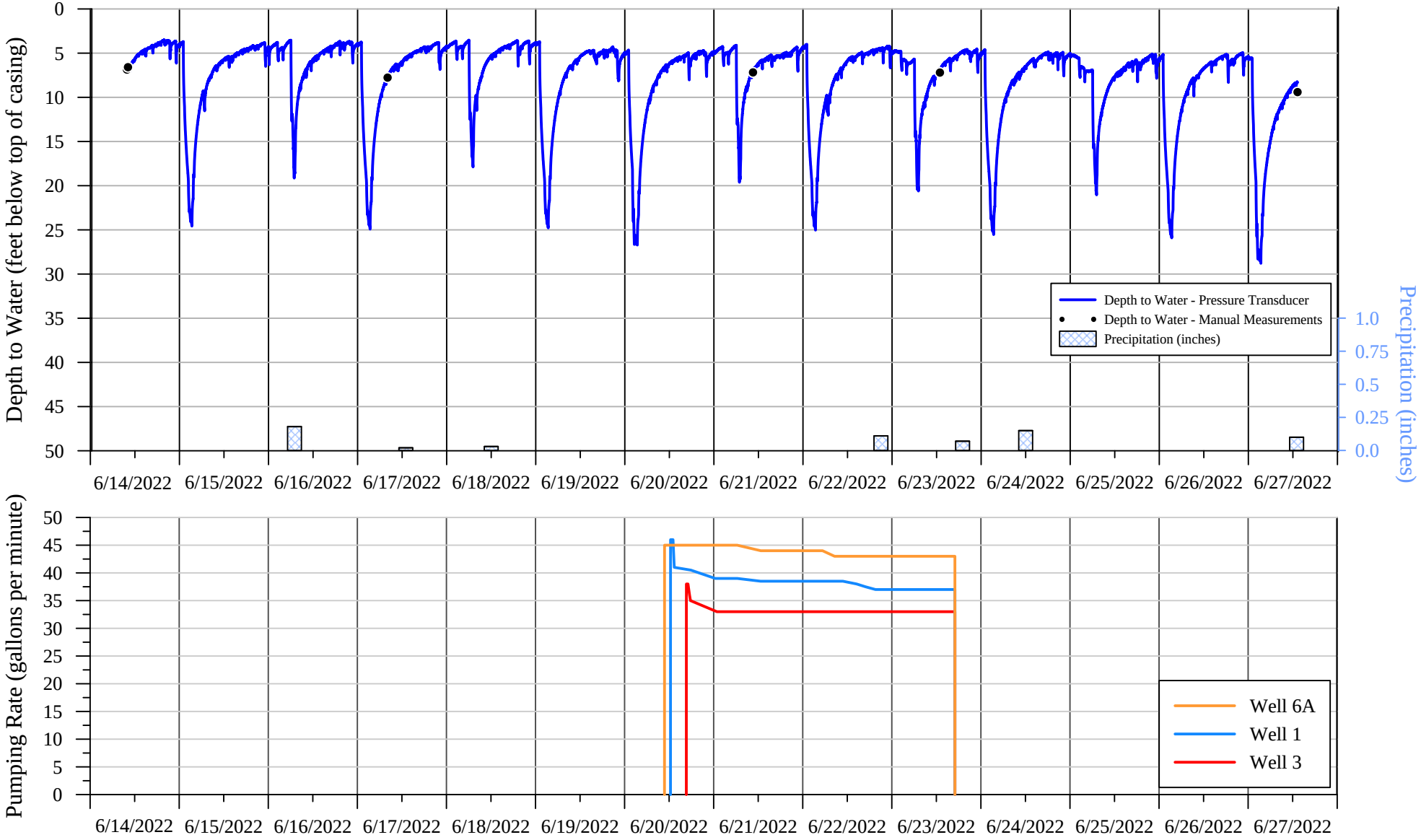

SUMMIT COUNTRY CLUB
568 BEDFORD ROAD
NORTH CASTLE, NEW YORK

Hydrograph of Water-Level Measurements Collected from Well Located at 8 Evans Place
During the 72-Hour Pumping Test Conducted on Wells 1, 3 and 6A, June 2022

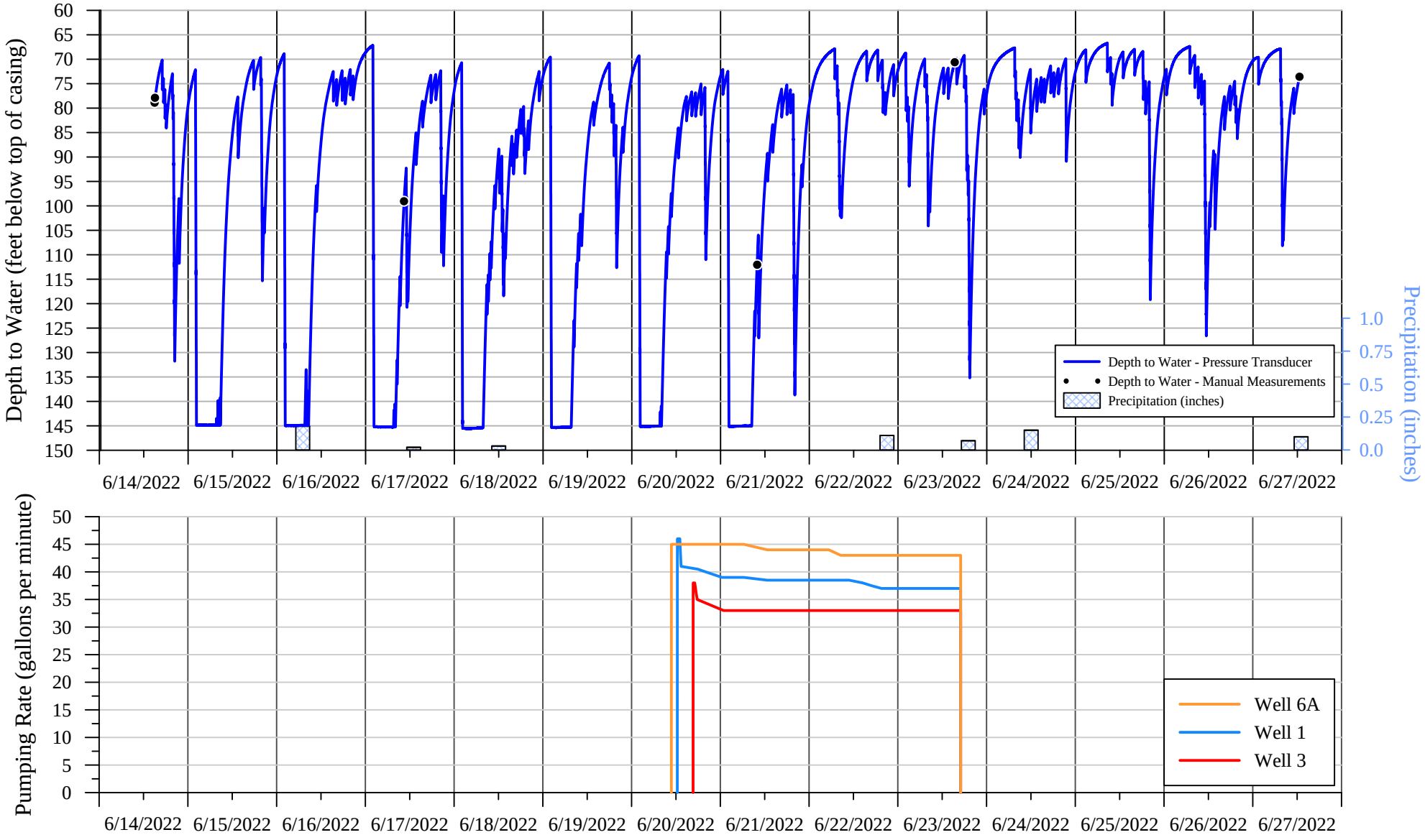

SUMMIT COUNTRY CLUB
568 BEDFORD ROAD
NORTH CASTLE, NEW YORK

Hydrograph of Water-Level Measurements Collected from Well Located at 10 Byram Hill Road
During the 72-Hour Pumping Test Conducted on Wells 1, 3 and 6A, June 2022

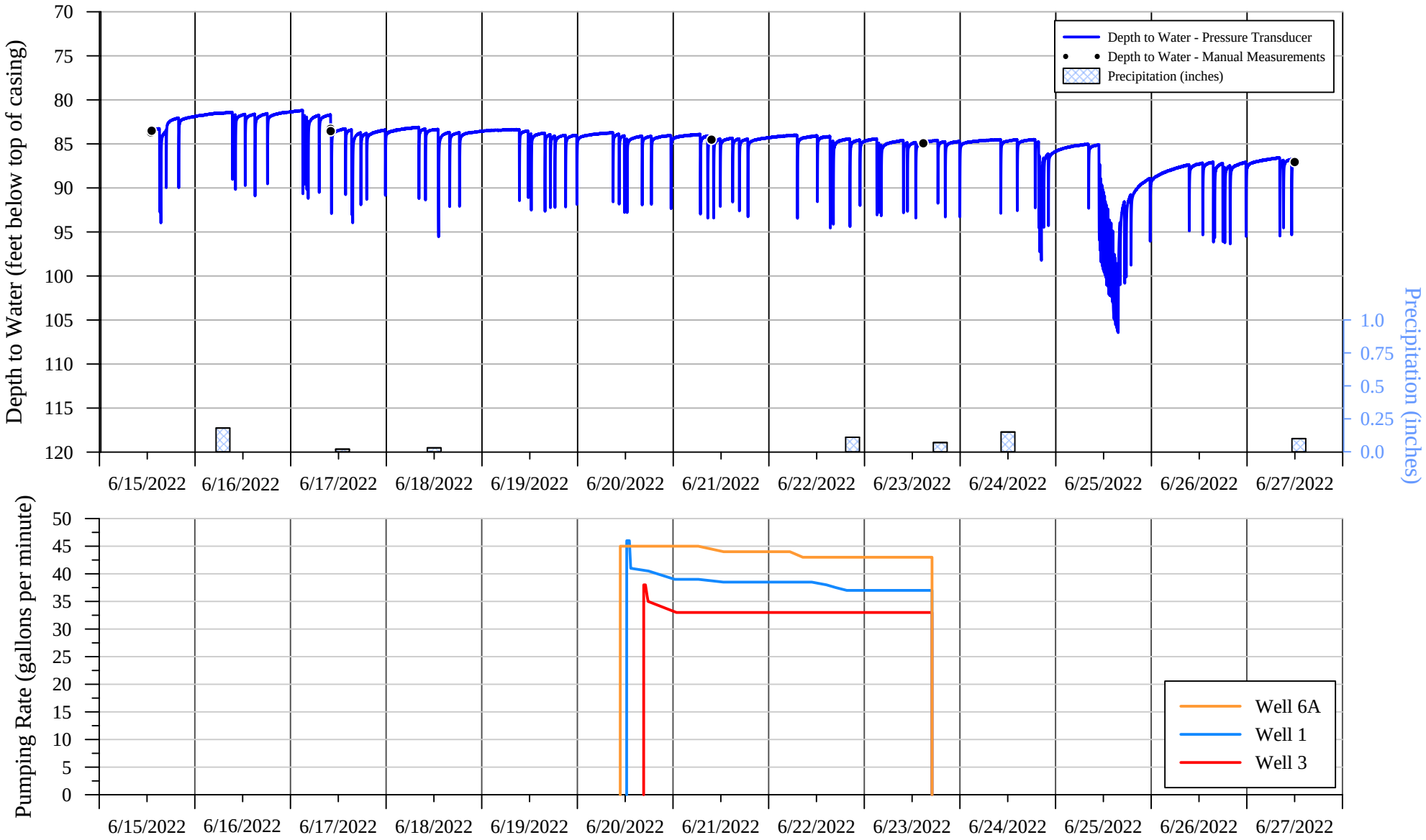

SUMMIT COUNTRY CLUB
568 BEDFORD ROAD
NORTH CASTLE, NEW YORK

Hydrograph of Water-Level Measurements Collected from Well Located at 10 Willow Pond Lane
During the 72-Hour Pumping Test Conducted on Wells 1, 3 and 6A, June 2022

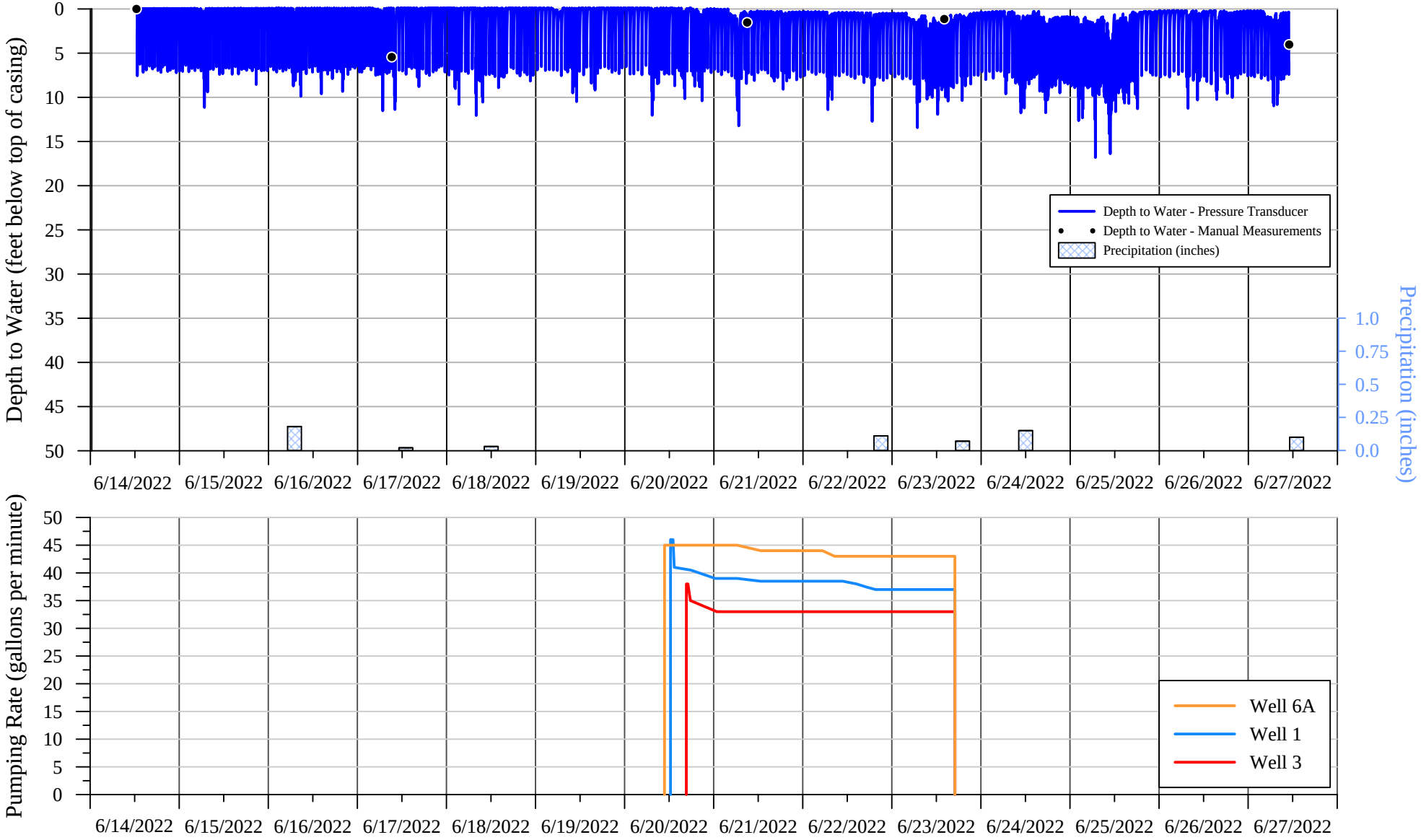

SUMMIT COUNTRY CLUB
568 BEDFORD ROAD
NORTH CASTLE, NEW YORK

Hydrograph of Water-Level Measurements Collected from Well Located at 11 Blair Road
During the 72-Hour Pumping Test Conducted on Wells 1, 3 and 6A, June 2022

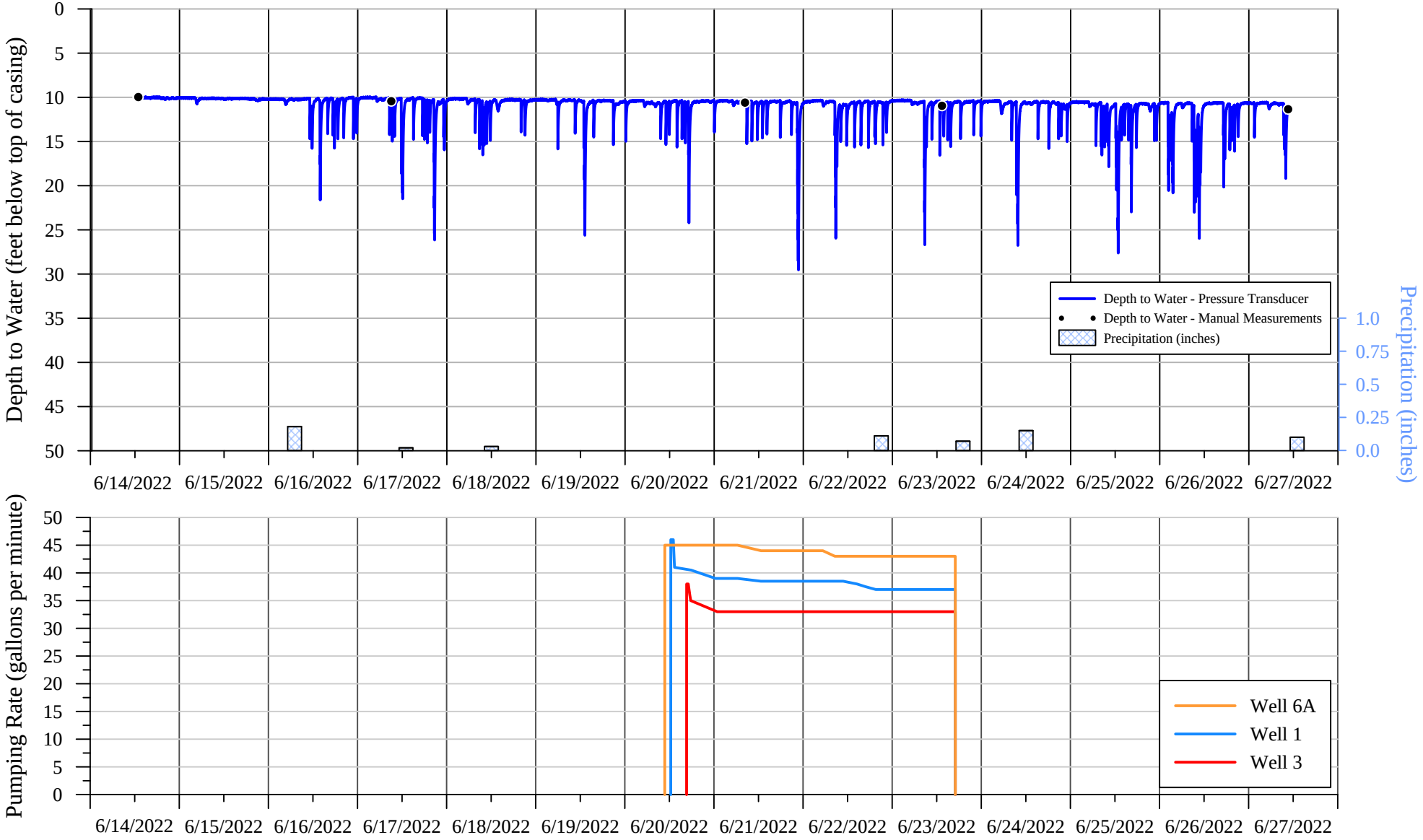

SUMMIT COUNTRY CLUB
568 BEDFORD ROAD
NORTH CASTLE, NEW YORK

Hydrograph of Water-Level Measurements Collected from Well Located at 14 Willow Pond Lane
During the 72-Hour Pumping Test Conducted on Wells 1, 3 and 6A, June 2022

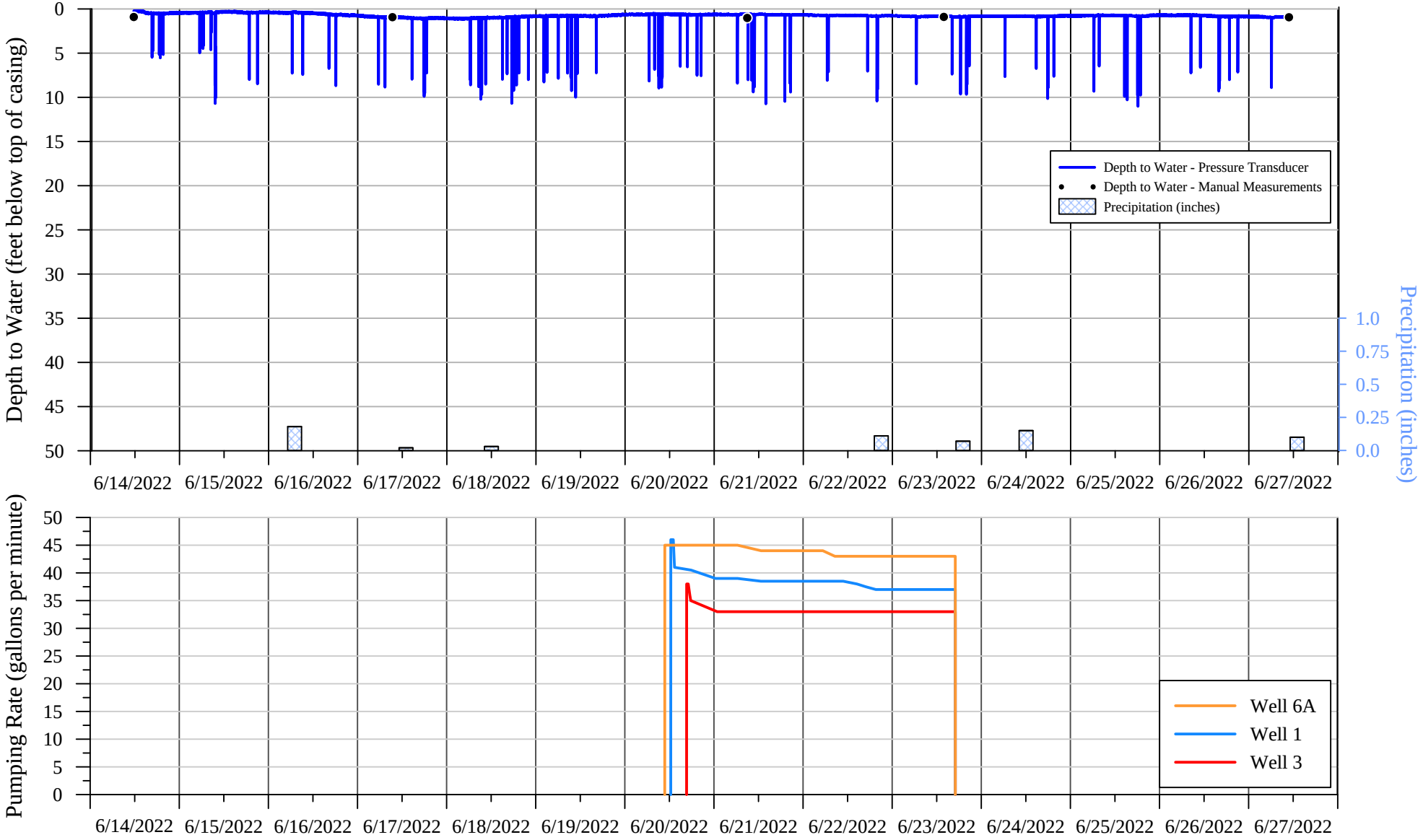

SUMMIT COUNTRY CLUB
568 BEDFORD ROAD
NORTH CASTLE, NEW YORK

Hydrograph of Water-Level Measurements Collected from Well Located at 30 Blair Road
During the 72-Hour Pumping Test Conducted on Wells 1, 3 and 6A, June 2022

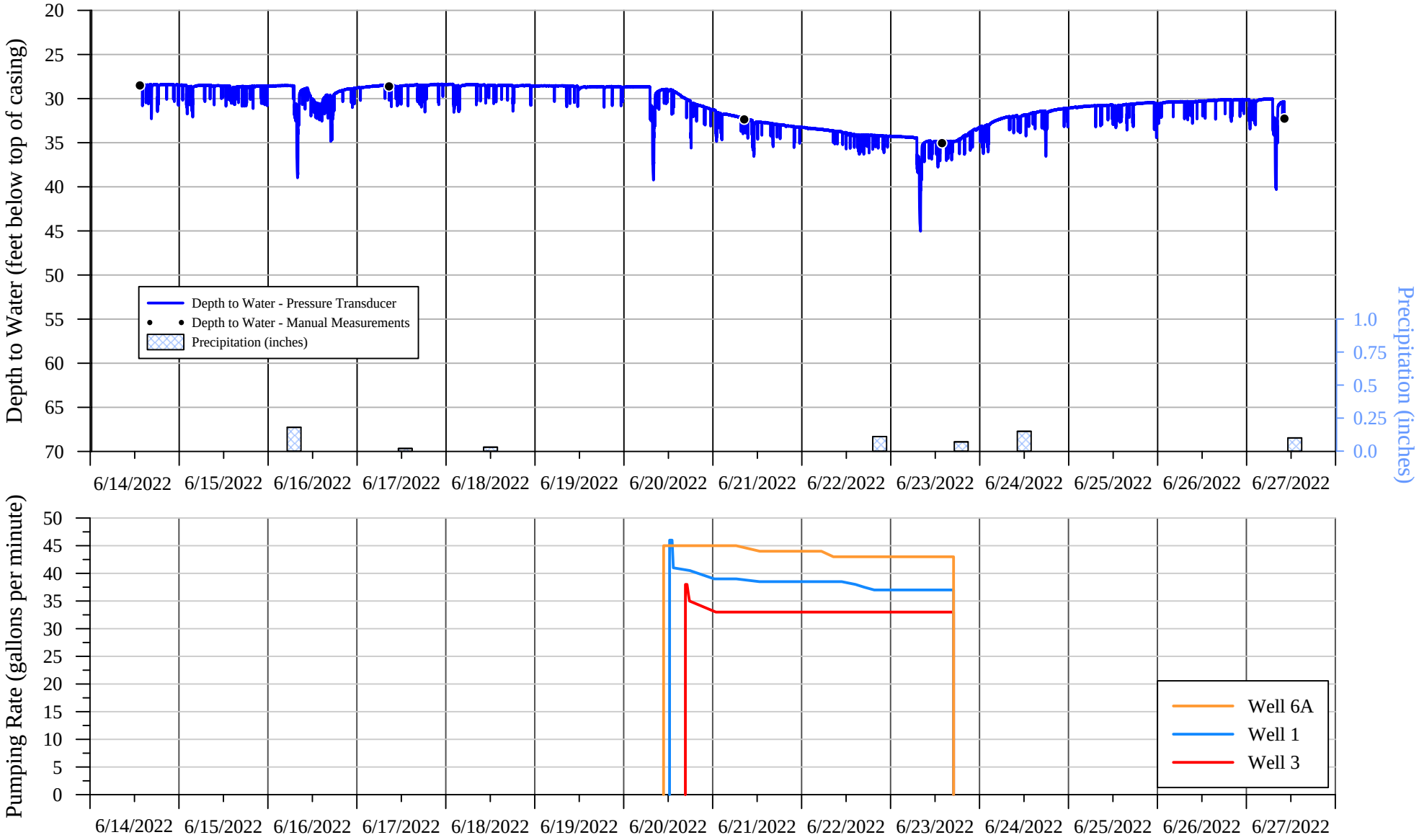

SUMMIT COUNTRY CLUB
568 BEDFORD ROAD
NORTH CASTLE, NEW YORK

Hydrograph of Water-Level Measurements Collected from Well Located at 34 Blair Road During the 72-Hour Pumping Test Conducted on Wells 1, 3 and 6A, June 2022

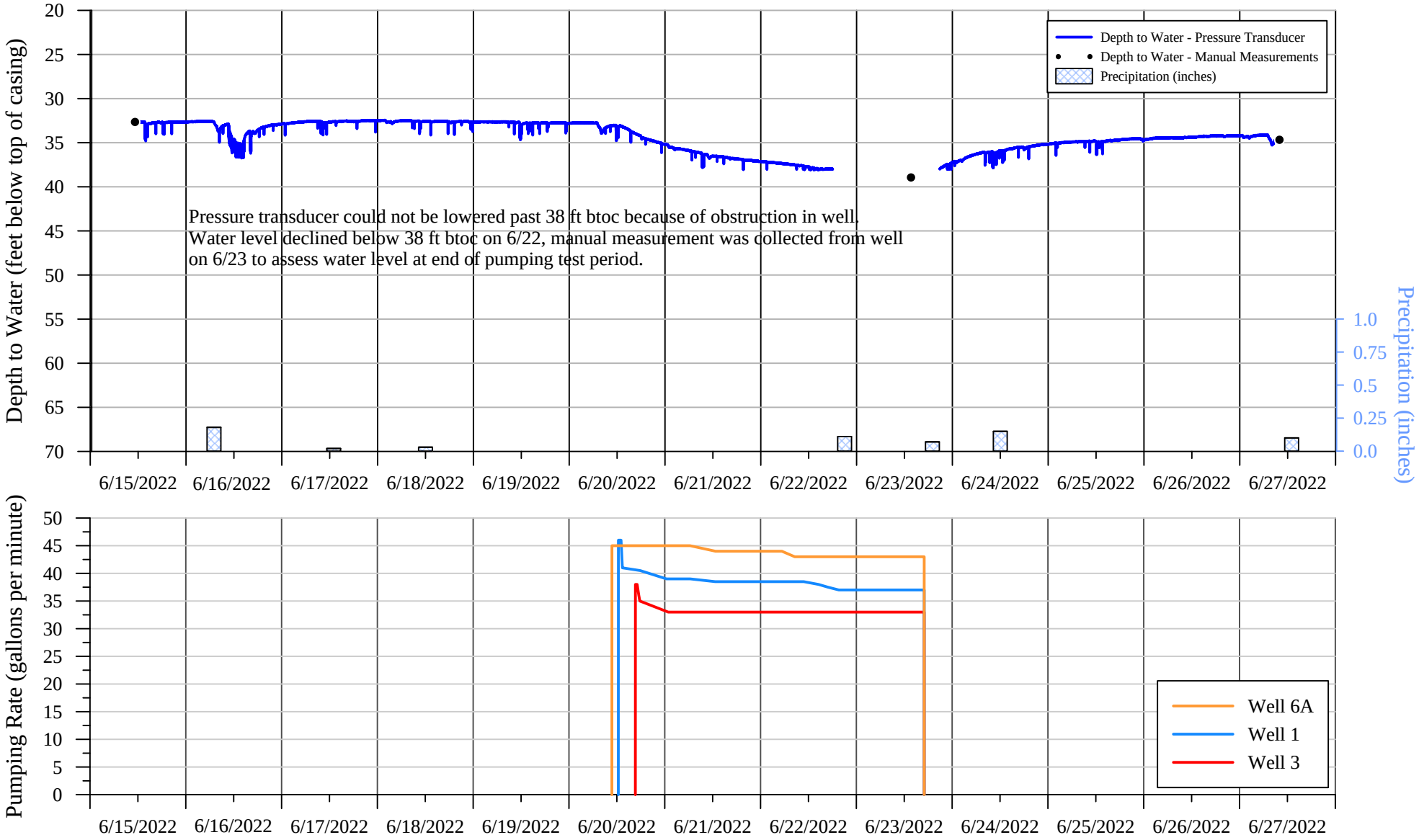

SUMMIT COUNTRY CLUB
568 BEDFORD ROAD
NORTH CASTLE, NEW YORK

Hydrograph of Water-Level Measurements Collected from Well Located at 70 Old Byram Lake Road
During the 72-Hour Pumping Test Conducted on Wells 1, 3 and 6A, June 2022

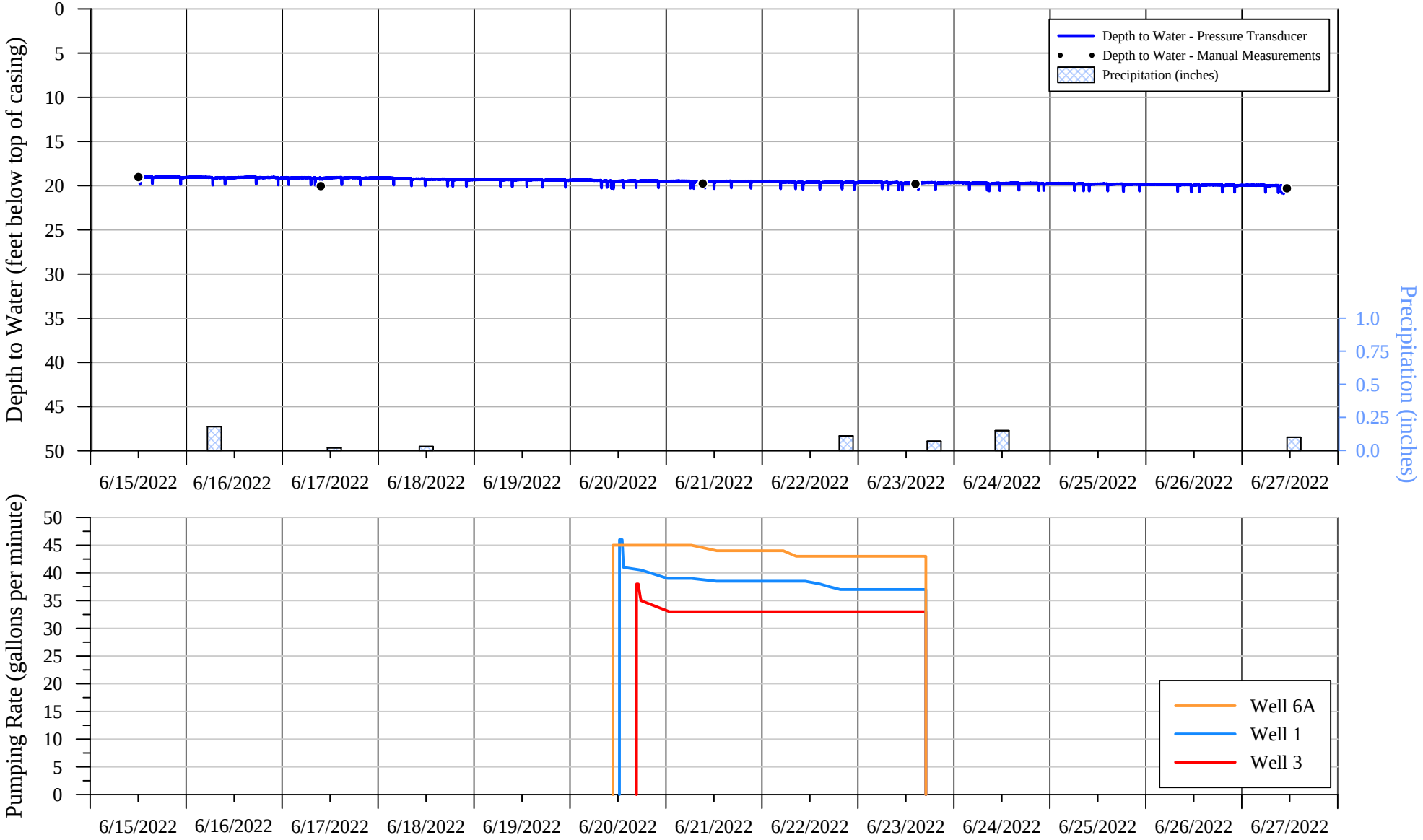

SUMMIT COUNTRY CLUB
568 BEDFORD ROAD
NORTH CASTLE, NEW YORK

Hydrograph of Water-Level Measurements Collected from Well Located at 198 Byram Lake Road
During the 72-Hour Pumping Test Conducted on Wells 1, 3 and 6A, June 2022

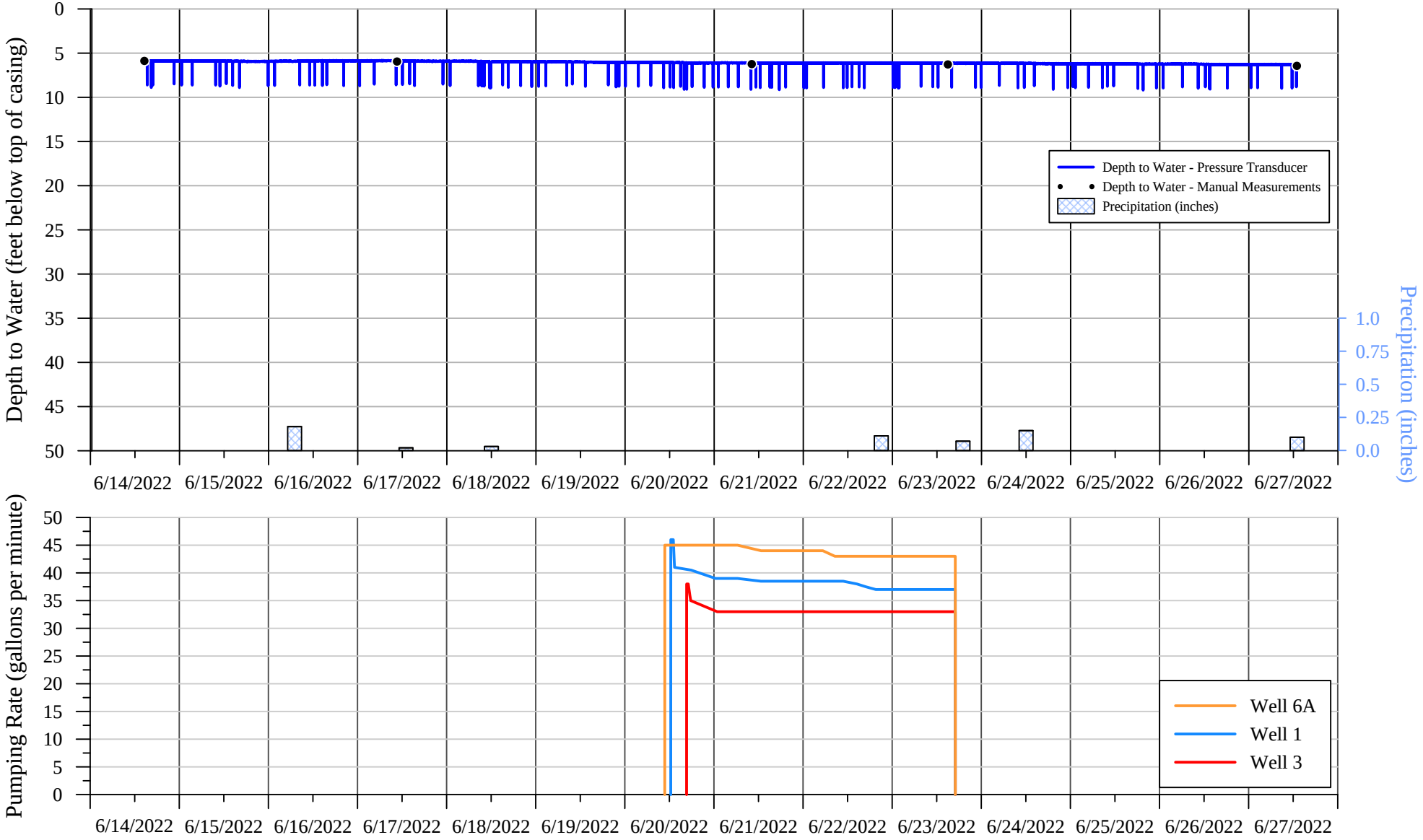

SUMMIT COUNTRY CLUB
568 BEDFORD ROAD
NORTH CASTLE, NEW YORK

Manual Water-Level Measurements Collected from Offsite Monitoring Wells
During the 72-Hour Pumping Test Conducted on Wells 1, 3 and 6A, June 2022

Date/Time	Depth to Water (ft btoc)
4 Norman Place	
6/15/2022 13:41	49.94
6/15/2022 13:54	49.84
6/17/2022 10:16	48.89
6/21/2022 9:47	50.06
6/23/2022 15:11	50.63
6/27/2022 12:15	51.54
6 Byram Hill Road	
6/15/2022 12:24	80.22
6/15/2022 12:36	80.52
6/17/2022 9:50	80.53
6/21/2022 9:26	81.22
6/23/2022 14:33	81.57
6/27/2022 11:34	82.49
8 Colonial Court	
6/14/2022 10:51	17.27
6/14/2022 10:59	17.12
6/17/2022 8:18	17.39
6/21/2022 10:44	19.15
6/23/2022 13:05	17.33
6/27/2022 9:16	17.45
8 Embassy Court	
6/14/2022 9:51	6.86
6/14/2022 10:08	6.59
6/17/2022 8:05	7.77
6/21/2022 10:32	7.18
6/23/2022 12:54	7.20
6/27/2022 13:15	9.41
8 Evans Place	
6/14/2022 14:56	78.89
6/14/2022 15:02	77.89
6/17/2022 10:23	99.05
6/21/2022 9:54	112.04
6/23/2022 15:20	70.61
6/27/2022 12:34	73.58
10 Byram Hill Road	
6/15/2022 12:55	83.70
6/15/2022 13:06	83.51
6/17/2022 10:00	83.29
6/17/2022 10:02	83.55
6/21/2022 9:36	84.52
6/23/2022 14:45	84.93
6/27/2022 11:57	87.06
10 Willow Pond Lane	
6/14/2022 12:11	0.00
6/14/2022 12:25	0.00
6/17/2022 9:12	5.44
6/21/2022 8:58	1.53
6/23/2022 14:04	1.14
6/27/2022 11:00	4.03

SUMMIT COUNTRY CLUB
568 BEDFORD ROAD
NORTH CASTLE, NEW YORK

Manual Water-Level Measurements Collected from Offsite Monitoring Wells
During the 72-Hour Pumping Test Conducted on Wells 1, 3 and 6A, June 2022

Date/Time	Depth to Water (ft btoc)
11 Blair Road	
6/14/2022 12:47	9.98
6/14/2022 12:54	9.97
6/17/2022 9:02	10.44
6/21/2022 8:18	10.60
6/23/2022 13:21	10.96
6/27/2022 10:35	11.35
14 Willow Pond Lane	
6/14/2022 11:29	0.93
6/14/2022 11:41	0.91
6/17/2022 9:19	0.93
6/17/2022 9:21	0.93
6/21/2022 8:54	1.02
6/23/2022 13:51	0.90
6/27/2022 10:48	0.94
30 Blair Road	
6/14/2022 13:17	28.51
6/14/2022 13:24	28.51
6/17/2022 8:37	28.62
6/21/2022 8:27	32.36
6/23/2022 13:49	35.05
6/27/2022 10:12	32.27
34 Blair Road	
6/15/2022 10:56	32.67
6/15/2022 11:13	32.65
6/23/2022 13:38	38.94
6/27/2022 9:57	34.67
70 Old Byram Lake Road	
6/15/2022 11:48	19.02
6/15/2022 12:00	19.03
6/17/2022 9:37	20.05
6/21/2022 9:09	19.76
6/23/2022 14:20	19.80
6/27/2022 11:14	20.30
198 Byram Lake Road	
6/14/2022 14:26	5.87
6/14/2022 14:32	5.88
6/17/2022 10:35	5.95
6/21/2022 10:07	6.24
6/23/2022 14:56	6.28
6/27/2022 12:56	6.44

ft btoc feet below top of casing

APPENDIX VI

SUMMIT COUNTRY CLUB
568 BEDFORD ROAD
NORTH CASTLE, NEW YORK

Hydrograph of Water-Level Measurements Collected from Nested Piezometer Pair PZ-1 During the 72-Hour Pumping Test Conducted on Wells 1, 3 and 6A, June 2022

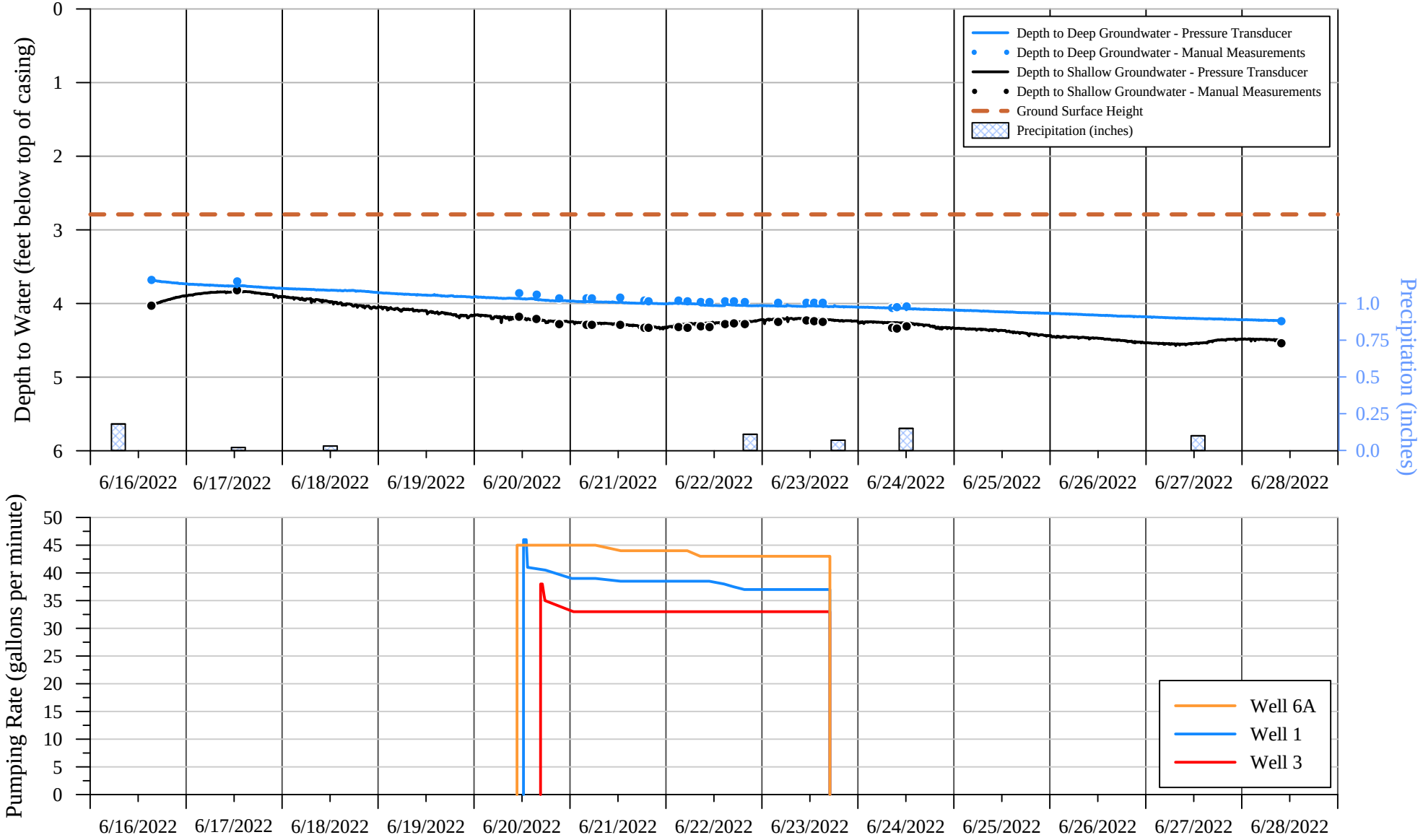

SUMMIT COUNTRY CLUB
568 BEDFORD ROAD
NORTH CASTLE, NEW YORK

Manual Water-Level Measurements Collected from Nested Piezometer Pair PZ-1
During the 72-Hour Pumping Test Conducted on Wells 1, 3 and 6A, June 2022

Date/Time	Depth to Groundwater, Shallow Screened Piezometer (ft btoc)	Depth to Groundwater, Deeper Screened Piezometer (ft btoc)[1/]	Vertical Gradient	Vertical Head Direction
6/16/2022 15:15	4.03	3.68	0.35	Upward
6/17/2022 12:40	3.82	3.70	0.12	Upward
6/20/2022 11:12	4.18	3.86	0.32	Upward
6/20/2022 15:32	4.21	3.88	0.33	Upward
6/20/2022 21:15	4.28	3.93	0.35	Upward
6/21/2022 4:05	4.29	3.93	0.36	Upward
6/21/2022 5:25	4.29	3.93	0.36	Upward
6/21/2022 12:30	4.29	3.92	0.37	Upward
6/21/2022 18:32	4.33	3.96	0.37	Upward
6/21/2022 19:35	4.33	3.97	0.36	Upward
6/22/2022 3:05	4.32	3.96	0.36	Upward
6/22/2022 5:20	4.33	3.97	0.36	Upward
6/22/2022 8:39	4.31	3.98	0.33	Upward
6/22/2022 10:50	4.32	3.98	0.34	Upward
6/22/2022 14:44	4.28	3.97	0.31	Upward
6/22/2022 16:57	4.27	3.97	0.30	Upward
6/22/2022 19:40	4.28	3.98	0.30	Upward
6/23/2022 4:00	4.25	3.99	0.26	Upward
6/23/2022 11:05	4.23	3.99	0.24	Upward
6/23/2022 13:00	4.24	3.99	0.25	Upward
6/23/2022 15:09	4.25	3.99	0.26	Upward
6/24/2022 8:30	4.33	4.06	0.27	Upward
6/24/2022 9:42	4.34	4.05	0.29	Upward
6/24/2022 12:08	4.31	4.04	0.27	Upward
6/28/2022 9:51	4.54	4.24	0.30	Upward

[1/] Measurements adjusted to match casing height of shallow piezometer.

ft btoc feet below top of casing

APPENDIX VII

WELL 1

AQUA ENVIRONMENTAL LAB
56 Church Hill Road • Newtown, CT 06470 • (203) 270-9973
A York Analytical Company
YORK

Report of Analysis

Name: WSP, USA
4 Research Dr.
Ste. 204
Shelton, CT 06484
Sample Date: 6/20/2022 2:03 PM
Receipt Date: 6/20/2022 2:03 PM
Report Date: 7/11/2022
Sample Site: Summit Well 1

Sample ID#: 288606
Sample Type: Drinking Water
Sampler: WSP

Parameter	Sample Result	Units	Limits	Method	RL	Analysis Date / Time
Biological						
Coliform Bacteria	absent	none	0	SM9223B-04	0	6/23/2022 16:30
e Coli Bacteria	absent	none	0	SM9223B-04	0	6/23/2022 16:30
Heterotrophic Plate Count	324	MPN	No Limit Set	SM9215E	0	6/23/2022 13:40
Inorganic Compounds						
Chlorine, residual	0	mg/L	4	SM4500CLG-2011	0	6/20/2022 14:03
Metals						
Arsenic	ND	mg/L	0.01	EPA 200.5	0.005	6/24/2022 13:11
Copper	ND	mg/L	1.3	EPA 200.5	0.005	6/24/2022 13:11
Iron	ND	mg/L	0.3	EPA 200.5	0.005	6/24/2022 13:11
Lead	ND	mg/L	0.015	EPA 200.5	0.001	6/24/2022 13:11
Manganese	0.008	mg/L	0.05	EPA 200.5	0.005	6/24/2022 13:11
Minerals						
Alkalinity	134	mg/L	No Limit Set	SM 2320B (-97)	5	7/5/2022 17:10
Chloride	21.2	mg/L	250	EPA 300.0	1	6/23/2022 20:14
Hardness	127	mg/L	No Limit Set	EPA 200.5	5	6/24/2022 13:11
Sodium	29.4	mg/L	100	EPA 200.5	1	6/24/2022 13:11
Sulfate	29.1	mg/L	250	EPA 300.0	2	6/23/2022 20:14
Miscellaneous/Other						
Langelier Saturation Index	-0.27 *	LSI	No Limit Set	CALCTN	0	7/6/2022 18:06
Nutrient						
Nitrate as N	ND	mg/L	10	EPA 300.0	0.5	6/23/2022 20:14
Nitrite as N	ND	mg/L	1	EPA 300.0	0.1	6/23/2022 20:14
Physical						
Color, apparent	<5	CU	15	SM 2120B-01	5	6/21/2022 13:30
Odor	0	TON	2	SM2150B-2011	0	6/23/2022 16:00

Based on the bacteriological examination, according to the Federal Safe Drinking Water Act (SDWA), this water was safe for drinking purposes at the time the sample was collected.
*Slightly corrosive but non-scale forming.

ND = Not Detected
* = Above Specified Limit

CT Lic PH-0787 NY Lic 11706

AquaEnvLab.com
YorkLab.com
203 270 9973

Analytical results relate to the samples as received at the laboratory. Report shall not be reproduced except in its entirety without written approval from the laboratory.

AQUA ENVIRONMENTAL LAB
56 Church Hill Road • Newtown, CT 06470 • (203) 270-9973
A York Analytical Company
YORK

Report of Analysis

Name: WSP, USA
4 Research Dr.
Ste. 204
Shelton, CT 06484
Sample Date: 6/20/2022 2:03 PM
Receipt Date: 6/20/2022 2:03 PM
Report Date: 7/11/2022
Sample Site: Summit Well 1

Sample ID#: 288606
Sample Type: Drinking Water
Sampler: WSP

Parameter	Sample Result	Units	Limits	Method	RL	Analysis Date / Time
Physical						
PH	8.1	pH	6.4 - 8.5	SM4500HB-2011	0	6/20/2022 14:03
Total Dissolved Solids (TDS)	254	mg/L	500	SM2540C-2011	None	6/29/2022 12:02
Turbidity	0.15	NTU	5	EPA 180.1	0.05	6/23/2022 16:00
Radiochemicals						
Water Radon(212825)	427 +/-21	pCi/L	No Limit Set	SM7500Rn-23	0	6/23/2022 16:50

Comments: Based on the bacteriological examination, according to the Federal Safe Drinking Water Act (SDWA), this water was safe for drinking purposes at the time the sample was collected.
*Slightly corrosive but non-scale forming.

ND = Not Detected
* = Above Specified Limit

Report Approved by: _____ CT Lic PH-0787 NY Lic 11706
Lab Director

AquaEnvLab.com
YorkLab.com
203 270 9973

Analytical results relate to the samples as received at the laboratory. Report shall not be reproduced except in its entirety without written approval from the laboratory.

AQUA ENVIRONMENTAL LAB
56 Church Hill Road • Newtown, CT 06470 • (203) 270-9973
A York Analytical Company
YORK

Report of Analysis

Name: WSP, USA
4 Research Dr.
Ste. 204
Shelton, CT 06484
Sample Date: 6/20/2022 2:03 PM
Receipt Date: 6/20/2022 2:03 PM
Report Date: 7/27/2022
Sample Site: Summit Well 1

Sample ID#: 288607
Sample Type: Drinking Water
Sampler: WSP

Parameter	Sample Result	Units	Limits	Method	RL	Analysis Date / Time
Metals						
Antimony	ND	mg/L	No Limit Set	EPA 200.8	0.001	6/29/2022 16:20
Arsenic	ND	mg/L	0.01	EPA 200.5	0.005	6/24/2022 13:11
Barium	0.02	mg/L	2	EPA 200.5	0.001	6/24/2022 13:11
Beryllium	ND	mg/L	0.004	EPA 200.5	0.001	6/24/2022 13:11
Cadmium	ND	mg/L	0.005	EPA 200.5	0.001	6/24/2022 13:11
Chromium(T)	ND	mg/L	0.1	EPA 200.5	0.001	6/24/2022 13:11
Cyanide	<0.005	mg/L	0.2	EPA 335.4	0.005	6/24/2022 10:38
Mercury	<0.0002	mg/L	0.002	EPA 245.2	0.0002	6/29/2022 10:35
Nickel	ND	mg/L	0.1	EPA 200.5	0.001	6/24/2022 13:11
Selenium	ND	mg/L	0.05	EPA 200.5	0.005	6/24/2022 13:11
Silver	ND	mg/L	0.1	EPA 200.5	0.002	6/24/2022 13:11
Thallium	ND	mg/L	0.002	EPA 200.8	0.001	6/29/2022 16:20
Zinc	ND	mg/L	5	EPA 200.5	0.005	6/24/2022 13:11
Minerals						
Chloride	21.2	mg/L	250	EPA 300.0	1	6/23/2022 20:14
Fluoride	0.1	mg/L	4	EPA 300.0	0.1	6/23/2022 20:14
Sodium	29.4	mg/L	100	EPA 200.5	1	6/24/2022 13:11
Sulfate	29.1	mg/L	250	EPA 300.0	2	6/23/2022 20:14

ND = Not Detected
* = Above Specified Limit

Report Approved by: _____ CT Lic PH-0787 NY Lic 11706
Lab Director

AquaEnvLab.com
YorkLab.com
203 270 9973

Analytical results relate to the samples as received at the laboratory. Report shall not be reproduced except in its entirety without written approval from the laboratory.

AQUA ENVIRONMENTAL LAB
56 Church Hill Road • Newtown, CT 06470 • (203) 270-9973
A York Analytical Company
YORK

Report of Analysis

Name: WSP, USA
4 Research Dr.
Ste. 204
Shelton, CT 06484
Sample Date: 6/20/2022 2:03 PM
Receipt Date: 6/20/2022 2:03 PM
Report Date: 7/25/2022
Sample Site: Summit Well 1

Sample ID#: 288610
Sample Type: Drinking Water
Sampler: WSP

Parameter	Sample Result	Units	Limits	Method	RL	Analysis Date / Time
Volatile Organic Compounds						
01) Benzene	ND	ug/L	5	EPA 524.2	0.5	6/24/2022 13:18
02) Bromobenzene	ND	ug/L	5	EPA 524.2	0.5	6/24/2022 13:18
03) Bromochloromethane	ND	ug/L	5	EPA 524.2	0.5	6/24/2022 13:18
04) Bromomethane	ND	ug/L	5	EPA 524.2	0.5	6/24/2022 13:18
05) n-Butylbenzene	ND	ug/L	5	EPA 524.2	0.5	6/24/2022 13:18
06) sec-Butylbenzene	ND	ug/L	5	EPA 524.2	0.5	6/24/2022 13:18
07) tert-Butylbenzene	ND	ug/L	5	EPA 524.2	0.5	6/24/2022 13:18
08) Carbon Tetrachloride	ND	ug/L	5	EPA 524.2	0.5	6/24/2022 13:18
09) Chlorobenzene	ND	ug/L	5	EPA 524.2	0.5	6/24/2022 13:18
10) Chloroethane	ND	ug/L	5	EPA 524.2	0.5	6/24/2022 13:18
11) Chloromethane	ND	ug/L	5	EPA 524.2	0.5	6/24/2022 13:18
12) 2-Chlorotoluene	ND	ug/L	5	EPA 524.2	0.5	6/24/2022 13:18
13) 4-Chlorotoluene	ND	ug/L	5	EPA 524.2	0.5	6/24/2022 13:18
14) Dibromomethane	ND	ug/L	5	EPA 524.2	0.5	6/24/2022 13:18
15) 1,2-Dichlorobenzene	ND	ug/L	5	EPA 524.2	0.5	6/24/2022 13:18
16) 1,3-Dichlorobenzene	ND	ug/L	5	EPA 524.2	0.5	6/24/2022 13:18
17) 1,4-Dichlorobenzene	ND	ug/L	5	EPA 524.2	0.5	6/24/2022 13:18
18) Dichlorodifluoromethane	ND	ug/L	5	EPA 524.2	0.5	6/24/2022 13:18
19) 1,1-Dichloroethane	ND	ug/L	5	EPA 524.2	0.5	6/24/2022 13:18
20) 1,2-Dichloroethane	ND	ug/L	5	EPA 524.2	0.5	6/24/2022 13:18
21) 1,1-Dichloroethene	ND	ug/L	5	EPA 524.2	0.5	6/24/2022 13:18
22) cis-1,2,-Dichloroethene	ND	ug/L	5	EPA 524.2	0.5	6/24/2022 13:18
23) trans-1,2-Dichloroethene	ND	ug/L	5	EPA 524.2	0.5	6/24/2022 13:18
24) 1,2-Dichloropropane	ND	ug/L	5	EPA 524.2	0.5	6/24/2022 13:18
25) 1,3-Dichloropropane	ND	ug/L	5	EPA 524.2	0.5	6/24/2022 13:18
26) 2,2-Dichloropropane	ND	ug/L	5	EPA 524.2	0.5	6/24/2022 13:18
27) 1,1-Dichloropropene	ND	ug/L	5	EPA 524.2	0.5	6/24/2022 13:18

ND = Not Detected
* = Above Specified Limit

CT Lic PH-0787 NY Lic 11706

AquaEnvLab.com
YorkLab.com
203 270 9973

Analytical results relate to the samples as received at the laboratory. Report shall not be reproduced except in its entirety without written approval from the laboratory.

AQUA ENVIRONMENTAL LAB
56 Church Hill Road • Newtown, CT 06470 • (203) 270-9973
A York Analytical Company
YORK

Report of Analysis

Name: WSP, USA
4 Research Dr.
Ste. 204
Shelton, CT 06484
Sample Date: 6/20/2022 2:03 PM
Receipt Date: 6/20/2022 2:03 PM
Report Date: 7/25/2022
Sample Site: Summit Well 1

Sample ID#: 288610
Sample Type: Drinking Water
Sampler: WSP

Parameter	Sample Result	Units	Limits	Method	RL	Analysis Date / Time
Volatile Organic Compounds						
28] cis- 1,3-Dichloropropene	ND	ug/L	5	EPA 524.2	0.5	6/24/2022 13:18
29] trans-1,3-Dichloropropene	ND	ug/L	5	EPA 524.2	0.5	6/24/2022 13:18
30) Ethylbenzene	ND	ug/L	5	EPA 524.2	0.5	6/24/2022 13:18
31) Isopropylbenzene	ND	ug/L	5	EPA 524.2	0.5	6/24/2022 13:18
32) p-Isopropyltoluene	ND	ug/L	5	EPA 524.2	0.5	6/24/2022 13:18
33) Methylene chloride	ND	ug/L	5	EPA 524.2	0.5	6/24/2022 13:18
34) n-Propylbenzene	ND	ug/L	5	EPA 524.2	0.5	6/24/2022 13:18
35) Styrene	ND	ug/L	5	EPA 524.2	0.5	6/24/2022 13:18
36) 1,1,1,2-Tetrachloroethane	ND	ug/L	5	EPA 524.2	0.5	6/24/2022 13:18
37) 1,1,2,2-Tetrachloroethane	ND	ug/L	5	EPA 524.2	0.5	6/24/2022 13:18
38) Tetrachloroethene	ND	ug/L	5	EPA 524.2	0.5	6/24/2022 13:18
39) Toluene	ND	ug/L	5	EPA 524.2	0.5	6/24/2022 13:18
40) 1,2,3-Trichlorobenzene	ND	ug/L	5	EPA 524.2	0.5	6/24/2022 13:18
41) 1,2,4-Trichlorobenzene	ND	ug/L	5	EPA 524.2	0.5	6/24/2022 13:18
42) 1,1,1-Trichloroethane	ND	ug/L	5	EPA 524.2	0.5	6/24/2022 13:18
43) 1,1,2-Trichloroethane	ND	ug/L	5	EPA 524.2	0.5	6/24/2022 13:18
44) Trichloroethene	ND	ug/L	5	EPA 524.2	0.5	6/24/2022 13:18
45) Trichlorofluoromethane	ND	ug/L	5	EPA 524.2	0.5	6/24/2022 13:18
46) 1,2,3-Trichloropropane	ND	ug/L	5	EPA 524.2	0.5	6/24/2022 13:18
47} 1,2,4-Trimethylbenzene	ND	ug/L	5	EPA 524.2	0.5	6/24/2022 13:18
48) 1,3,5-Trimethylbenzene	ND	ug/L	5	EPA 524.2	0.5	6/24/2022 13:18
49) o-Xylene	ND	ug/L	5	EPA 524.2	0.5	6/24/2022 13:18
50) Hexachlorobutadiene	ND	ug/L	5	EPA 524.2	0.5	6/24/2022 13:18
51) m+p-Xylene	ND	ug/L	5	EPA 524.2	0.5	6/24/2022 13:18
52) Methyl-tertiary-butyl-ether	ND	ug/L	10	EPA 524.2	0.5	6/24/2022 13:18
53) Vinyl chloride	ND	ug/L	2	EPA 524.2	0.5	6/24/2022 13:18

ND = Not Detected
* = Above Specified Limit

Report Approved by: _____ CT Lic PH-0787 NY Lic 11706

Lab Director

AquaEnvLab.com
YorkLab.com
203 270 9973

Analytical results relate to the samples as received at the laboratory. Report shall not be reproduced except in its entirety without written approval from the laboratory.

AQUA ENVIRONMENTAL LAB
56 Church Hill Road • Newtown, CT 06470 • (203) 270-9973
A York Analytical Company
YORK

Report of Analysis

Name: WSP, USA
4 Research Dr.
Ste. 204
Shelton, CT 06484
Sample Date: 6/20/2022 2:03 PM
Receipt Date: 6/20/2022 2:03 PM
Report Date: 7/27/2022
Sample Site: Summit Well 1

Sample ID#: 288609
Sample Type: Drinking Water
Sampler: WSP

Parameter	Sample Result	Units	Limits	Method	RL	Analysis Date / Time
Organic Compounds						
PCB	ND	mg/L	0.5	EPA 508.1	0.0002	7/25/2022 10:44
Synthetic Organic Chemicals P						
Butachlor	ND	mg/L	0	EPA 508.1	0.001	7/25/2022 10:44
Dioxin	ND	ug/L	0	EPA 1613-B	5	7/2/2022 10:44
Endothall	ND	mg/L	0	EPA 548.1	5	6/29/2022 10:44
Metribuzin	ND	mg/L	0	EPA 508.1	0.0005	7/25/2022 10:44
Propachlor	ND	mg/L	0	EPA 508.1	0.001	7/25/2022 10:44
Synthetic Organic Chemicals P						
Dalapon	ND	mg/L	200	EPA 552.2	0.002	6/29/2022 10:44
Synthetic Organic Compounds						
2,4,5-TP	ND	mg/L	50	EPA 555	0.0004	6/29/2022 10:44
2,4-D	ND	mg/L	70	EPA 555	0.0002	6/29/2022 10:44
3-Hydroxycarbofuran	ND	mg/L	No Limit Set	EPA 531.1	0.002	7/3/2022 10:44
Alachlor	ND	mg/L	2	EPA 508.1	0.0004	7/25/2022 10:44
Aldicarb	ND	mg/L	No Limit Set	EPA 531.1	0.001	7/3/2022 10:44
Aldicarb Sulfone	ND	mg/L	No Limit Set	EPA 531.1	0.0017	7/3/2022 10:44
Aldicarb Sulfoxide	ND	mg/L	No Limit Set	EPA 531.1	0.001	7/3/2022 10:44
Aldrin	ND	mg/L	0	EPA 508.1	0.0005	6/27/2022 10:44
Atrazine	ND	ug/L	3	EPA 508.1	0.0002	6/27/2022 10:44
Benzo (A) Pyrene	ND	mg/L	0.2	EPA 525.2	0	7/12/2022 10:44
Carbaryl	ND	mg/L	No Limit Set	EPA 531.1	0.004	7/3/2022 10:44
Carbofuran	ND	mg/L	40	EPA 531.1	0.0019	7/3/2022 10:44
Chlordane	ND	mg/L	2	EPA 508.1	0.0004	6/27/2022 10:44
Di (2-ethylhexyl) adipate	ND	mg/L	400	EPA 525.2	0.001	7/12/2022 10:44
Di (2-ethylhexyl) phthalates	ND	mg/L	6	EPA 525.2	0.001	7/12/2022 10:44
Dibromochloropropane(DBCP)	ND	mg/L	0.2	EPA 504.1	0	7/25/2022 10:44

ND = Not Detected
* = Above Specified Limit

CT Lic PH-0787 NY Lic 11706
AquaEnvLab.com
YorkLab.com
203 270 9973

Analytical results relate to the samples as received at the laboratory. Report shall not be reproduced except in its entirety without written approval from the laboratory.

AQUA ENVIRONMENTAL LAB
56 Church Hill Road • Newtown, CT 06470 • (203) 270-9973
A York Analytical Company
YORK

Report of Analysis

Name: WSP, USA
4 Research Dr.
Ste. 204
Shelton, CT 06484
Sample Date: 6/20/2022 2:03 PM
Receipt Date: 6/20/2022 2:03 PM
Report Date: 7/27/2022
Sample Site: Summit Well 1

Sample ID#: 288609
Sample Type: Drinking Water
Sampler: WSP

Parameter	Sample Result	Units	Limits	Method	RL	Analysis Date / Time
Synthetic Organic Compounds						
Dicamba	ND	mg/L	No Limit Set	EPA 555	0.0008	6/29/2022 10:44
Dieldrin	ND	mg/L	No Limit Set	EPA 508.1	0	6/27/2022 10:44
Dinoseb	ND	mg/L	7	EPA 555	0.0004	6/29/2022 10:44
Diquat	ND	mg/L	0	EPA 549.2	0.0008	6/28/2022 10:44
Endrin	ND	mg/L	2	EPA 508.1	0	6/27/2022 10:44
Ethylene Dibromide(EDB)	ND	mg/L	0.05	EPA 504.1	0	7/25/2022 10:44
Glyphosphate	ND	mg/L	700	EPA 547	0.01	6/27/2022 10:44
Heptachlor	ND	mg/L	0.4	EPA 508.1	0.0001	6/27/2022 10:44
Heptachlor Epoxide	ND	mg/L	No Limit Set	EPA 508.1	0.0002	7/25/2022 10:44
Hexachlorobenzene	ND	mg/L	1	EPA 508.1	0.0002	7/25/2022 10:44
Hexachlorocyclopentadiene	ND	mg/L	50	EPA 508.1	0.0002	7/25/2022 10:44
Lindane	ND	mg/L	0.2	EPA 508.1	0.0002	7/25/2022 10:44
Methomyl	ND	mg/L	0	EPA 531.1	0.004	7/3/2022 10:44
Methoxychlor	ND	mg/L	40	EPA 508.1	0.001	7/25/2022 10:44
Metolachlor	ND	mg/L	No Limit Set	EPA 508.1	0.001	7/25/2022 10:44
Oxamyl (Vydate)	ND	mg/L	200	EPA 531.1	0.004	7/3/2022 10:44
Pentachlorophenol	ND	mg/L	1	EPA 555	0.0001	6/29/2022 10:44
Picloram	ND	mg/L	500	EPA 555	0.0002	6/29/2022 10:44
Simazine	ND	mg/L	4	EPA 508.1	0.0001	7/25/2022 10:44
Toxaphene	ND	mg/L	3	EPA 508.1	0.002	7/25/2022 10:44

ND = Not Detected
* = Above Specified Limit

Report Approved by: _____ CT Lic PH-0787 NY Lic 11706

Lab Director

AquaEnvLab.com
YorkLab.com
203 270 9973

Analytical results relate to the samples as received at the laboratory. Report shall not be reproduced except in its entirety without written approval from the laboratory.

AQUA ENVIRONMENTAL LAB
56 Church Hill Road • Newtown, CT 06470 • (203) 270-9973
A York Analytical Company
YORK ANALYTICAL LABORATORIES INC

Report of Analysis

Name: WSP, USA
4 Research Dr.
Ste. 204
Shelton, CT 06484
Sample Date: 6/20/2022 2:03 PM
Receipt Date: 6/20/2022 2:03 PM
Report Date: 7/1/2022
Sample Site: Summit Well 1

Sample ID#: 288605
Sample Type: Drinking Water
Sampler: WSP

Parameter	Sample Result	Units	Limits	Method	RL	Analysis Date / Time
Miscellaneous/Other						
Asbestos	ND	MFL	0	EPA 100.2	0.19	6/30/2022 08:18

ND = Not Detected
* = Above Specified Limit

Report Approved by: _____ CT Lic PH-0787 NY Lic 11706
Lab Director

AquaEnvLab.com
YorkLab.com
203 270 9973

Analytical results relate to the samples as received at the laboratory. Report shall not be reproduced except in its entirety without written approval from the laboratory.

AQUA ENVIRONMENTAL LAB
56 Church Hill Road • Newtown, CT 06470 • (203) 270-9973
A York Analytical Company
YORK

Report of Analysis

Name: WSP, USA
4 Research Dr.
Ste. 204
Shelton, CT 06484
Sample Date: 6/20/2022 2:03 PM
Receipt Date: 6/20/2022 2:03 PM
Report Date: 7/26/2022
Sample Site: Summit Well 1

Sample ID#: 288611
Sample Type: Drinking Water
Sampler: WSP

Parameter	Sample Result	Units	Limits	Method	RL	Analysis Date / Time
Radiochemicals						
Gross Beta	3.48+/-0.995	pCi/L	No Limit Set	EPA 900.0	None	7/18/2022 08:35
Radium 226	0.531+/-0.417	pCi/L	5	EPA 903.0	1	7/21/2022 14:03
Radium 228	0.390+/-0.305	pCi/L	5	EPA 904.0	1	7/21/2022 11:57
Total Gross Alpha	2.44+/-1.68	pCi/L	No Limit Set	EPA 900.0	3	7/18/2022 08:35
Uranium	1.9	ug/L	30	EPA 200.8	1	6/29/2022 16:20

ND = Not Detected
* = Above Specified Limit

Report Approved by: _____
Lab Director

CT Lic PH-0787 NY Lic 11706

AquaEnvLab.com
YorkLab.com
203 270 9973

Analytical results relate to the samples as received at the laboratory. Report shall not be reproduced except in its entirety without written approval from the laboratory.

AQUA ENVIRONMENTAL LAB
56 Church Hill Road • Newtown, CT 06470 • (203) 270-9973
A York Analytical Company

Report of Analysis

Name: WSP, USA
4 Research Dr.
Ste. 204
Shelton, CT 06484
Sample Date: 6/21/2022 8:39 AM
Receipt Date: 6/21/2022 8:39 AM
Report Date: 7/6/2022
Sample Site: Summit Well 1

Sample ID#: 288673
Sample Type: Drinking Water
Sampler: WSP

Parameter	Sample Result	Units	Limits	Method	RL	Analysis Date / Time
Organic Compounds						
1,4-Dioxane	ND	ug/L	1	EPA 522	0.2	6/24/2022 07:43
PerFluoroButaneSulfonic Acid	ND	ng/L	No Limit Set	EPA 537	1.34	7/1/2022 11:13
PerFluoroHeptanoic Acid	ND	ng/L	No Limit Set	EPA 537	1.34	7/1/2022 11:13
PerFluoroHexaneSulfonic Acid	2.22	ng/L	49	EPA 537	1.34	7/1/2022 11:13
PerFluoroHexanoic Acid	4.48	ng/L	No Limit Set	EPA 537	1.34	7/1/2022 11:13
PerFluoroNonanoic Acid	ND	ng/L	12	EPA 537	1.34	7/1/2022 11:13
PerFluoroOctaneSulfonic Acid	4.00	ng/L	10	EPA 537	1.34	7/1/2022 11:13
PerFluoroOctanoic Acid	4.70	ng/L	16	EPA 537	1.34	7/1/2022 11:13

ND = Not Detected
* = Above Specified Limit

Report Approved by: _____ CT Lic PH-0787 NY Lic 11706
Lab Director

AquaEnvLab.com
YorkLab.com
203 270 9973

Analytical results relate to the samples as received at the laboratory. Report shall not be reproduced except in its entirety without written approval from the laboratory.

Technical Report
Perfluoroalkyl Substances (PFAS)

prepared for:

Aqua Environmental Lab
56 Church Hill Road
Newtown CT, 06470
Attention: T. Braun

Report Date: 07/05/2022
Client Project ID: 288625/288617/288673
York Project (SDG) No.: 22F1242

Report Date: 07/05/2022
Client Project ID: 288625/288617/288673
York Project (SDG) No.: 22F1242

Aqua Environmental Lab
56 Church Hill Road
Newtown CT, 06470
Attention: T. Braun

Purpose and Results

This report contains the analytical data for the sample(s) identified on the attached chain-of-custody received in our laboratory on June 23, 2022 and listed below. The project was identified as your project: **288625/288617/288673**.

The analyses were conducted utilizing appropriate EPA methods as detailed in the data summary tables.

All samples were received in proper condition meeting the customary acceptance requirements for environmental samples except those indicated under the Sample and Analysis Qualifiers section of this report.

All analyses met the method and laboratory standard operating procedure requirements except as indicated by any data flags, the meaning of which are explained in the Sample and Data Qualifiers Relating to This Work Order section of this report and case narrative if applicable.

Please contact Client Services at 203.325.1371 with any questions regarding this report or e-mail clientservices@yorklab.com.

York Sample ID	Client Sample ID	Matrix	Date Collected	Date Received
22F1242-01	288625	Drinking Water	06/23/2022	06/23/2022
22F1242-02	288617	Drinking Water	06/23/2022	06/23/2022
22F1242-03	288673	Drinking Water	06/23/2022	06/23/2022
22F1242-04	288625-PFAS-Field Blank	Drinking Water	06/23/2022	06/23/2022
22F1242-05	288617-PFAS-Field Blank	Drinking Water	06/23/2022	06/23/2022
22F1242-06	288673-PFAS-Field Blank	Drinking Water	06/23/2022	06/23/2022

General Notes for York Project (SDG) No.: 22F1242

1. The RLs and MDLs (Reporting Limit and Method Detection Limit respectively) reported are adjusted for any dilution necessary due to the levels of target and/or non-target analytes and matrix interference. The RL(REPORTING LIMIT) is based upon the lowest standard utilized for the calibration where applicable.
2. Samples are retained for a period of thirty days after submittal of report, unless other arrangements are made.
3. York's liability for the above data is limited to the dollar value paid to York for the referenced project.
4. This report shall not be reproduced without the written approval of York Analytical Laboratories, Inc.
5. All analyses conducted met method or Laboratory SOP requirements. See the Sample and Data Qualifiers Section for further information.
6. It is noted that no analyses reported herein were subcontracted to another laboratory, unless noted in the report.
7. This report reflects results that relate only to the samples submitted on the attached chain-of-custody form(s) received by York.
8. Analyses conducted at York Analytical Laboratories, Inc. Stratford, CT are indicated by NY Cert. No. 10854; those conducted at York Analytical Laboratories, Inc., Richmond Hill, NY are indicated by NY Cert. No. 12058.

Approved By: Cassie L. Mosher

Cassie L. Mosher
Laboratory Manager

Date: 07/05/2022

Sample Information

Client Sample ID: 288625 **York Sample ID:** 22F1242-01

York Project (SDG) No.	Client Project ID	Matrix	Collection Date/Time	Date Received
22F1242	288625/288617/288673	Drinking Water	June 23, 2022 8:00 am	06/23/2022

1,4-Dioxane by GC/MS/SIM EPA 522

Log-in Notes:

Sample Notes:

Sample Prepared by Method: EPA 522

CAS No.	Parameter	Result	Flag	Maximum Contaminant Level MCL, ng/L	Units	Reported to LOQ	Reference Method	Date/Time Analyzed	Analyst
123-91-1	1,4-Dioxane	ND		1	ug/L	0.200	EPA 522	06/24/2022 07:43	KH
					Certifications:		NELAC-NY10854	06/27/2022 15:05	
1693-74-9	*** Tetrahydrofuran-d8**	**0.500**		**0**	ug/mL		EPA 522	06/24/2022 07:43	KH
					Certifications:			06/27/2022 15:05	

	Surrogate Recoveries	Result	Acceptance Range
17647-74-4	*Surrogate: 1,4-Dioxane-d8*	*80.0 %*	*70-130*

PFAS, EPA 537.1 List

Well 3

Log-in Notes:

Sample Notes:

Sample Prepared by Method: EPA 537.1 SPE DVB

CAS No.	Parameter	Result	Flag	Maximum Contaminant Level MCL, ng/L	Units	Reported to LOQ	Reference Method	Date/Time Analyzed	Analyst
375-73-5	* Perfluorobutanesulfonic acid (PFBS)	ND		0	ng/L	1.35	EPA 537.1	07/01/2022 11:13	WEL
					Certifications:			07/05/2022 13:50	
307-24-4	*** Perfluorohexanoic acid (PFHxA)**	**1.49**		**0**	ng/L	1.35	EPA 537.1	07/01/2022 11:13	WEL
					Certifications:			07/05/2022 13:50	
375-85-9	* Perfluoroheptanoic acid (PFHpA)	ND		0	ng/L	1.35	EPA 537.1	07/01/2022 11:13	WEL
					Certifications:			07/05/2022 13:50	
355-46-4	*** Perfluorohexanesulfonic acid (PFHxS)**	**1.46**		**0**	ng/L	1.35	EPA 537.1	07/01/2022 11:13	WEL
					Certifications:			07/05/2022 13:50	
335-67-1	**Perfluorooctanoic acid (PFOA)**	**3.35**		**10**	ng/L	1.35	EPA 537.1	07/01/2022 11:13	WEL
					Certifications:		NELAC-NY12058	07/05/2022 13:50	
1763-23-1	**Perfluorooctanesulfonic acid (PFOS)**	**2.05**		**10**	ng/L	1.35	EPA 537.1	07/01/2022 11:13	WEL
					Certifications:		NELAC-NY12058	07/05/2022 13:50	
375-95-1	* Perfluorononanoic acid (PFNA)	ND		0	ng/L	1.35	EPA 537.1	07/01/2022 11:13	WEL
					Certifications:			07/05/2022 13:50	
335-76-2	* Perfluorodecanoic acid (PFDA)	ND		0	ng/L	1.35	EPA 537.1	07/01/2022 11:13	WEL
					Certifications:			07/05/2022 13:50	
2058-94-8	* Perfluoroundecanoic acid (PFUnA)	ND		0	ng/L	1.35	EPA 537.1	07/01/2022 11:13	WEL
					Certifications:			07/05/2022 13:50	
307-55-1	* Perfluorododecanoic acid (PFDoA)	ND		0	ng/L	1.35	EPA 537.1	07/01/2022 11:13	WEL
					Certifications:			07/05/2022 13:50	
72629-94-8	* Perfluorotridecanoic acid (PFTrDA)	ND		0	ng/L	1.35	EPA 537.1	07/01/2022 11:13	WEL
					Certifications:			07/05/2022 13:50	
376-06-7	* Perfluorotetradecanoic acid (PFTA)	ND		0	ng/L	1.35	EPA 537.1	07/01/2022 11:13	WEL
					Certifications:			07/05/2022 13:50	
2355-31-9	* N-MeFOSAA	ND		0	ng/L	1.35	EPA 537.1	07/01/2022 11:13	WEL
					Certifications:			07/05/2022 13:50	
2991-50-6	* N-EtFOSAA	ND		0	ng/L	1.35	EPA 537.1	07/01/2022 11:13	WEL
					Certifications:			07/05/2022 13:50	

Sample Information

Client Sample ID: 288625 **York Sample ID:** 22F1242-01

York Project (SDG) No.	Client Project ID	Matrix	Collection Date/Time	Date Received
22F1242	288625/288617/288673	Drinking Water	June 23, 2022 8:00 am	06/23/2022

PFAS, EPA 537.1 List

Log-in Notes:

Sample Notes:

Sample Prepared by Method: EPA 537.1 SPE DVB

CAS No.	Parameter	Result	Flag	Maximum Contaminant Level MCL, ng/L	Units	Reported to LOQ	Reference Method	Date/Time Analyzed	Analyst
756426-58-1	* 9CL-PF3ONS	ND		0	ng/L	1.35	EPA 537.1	07/01/2022 11:13	WEL
					Certifications:			07/05/2022 13:50	
763051-92-9	* 11CL-PF3OUdS	ND		0	ng/L	1.35	EPA 537.1	07/01/2022 11:13	WEL
					Certifications:			07/05/2022 13:50	
13252-13-6	* HFPO-DA (Gen-X)	ND		0	ng/L	1.35	EPA 537.1	07/01/2022 11:13	WEL
					Certifications:			07/05/2022 13:50	
919005-14-4	* ADONA	ND		0	ng/L	1.35	EPA 537.1	07/01/2022 11:13	WEL
					Certifications:			07/05/2022 13:50	

Surrogate Recoveries	Result	Acceptance Range
Surrogate: d5-N-EtFOSAA	*107 %*	*70-130*
Surrogate: 13C-PFDA	*90.5 %*	*70-130*
Surrogate: 13C-PFHxA	*104 %*	*70-130*
Surrogate: M3HFPO-DA	*96.7 %*	*70-130*

Sample Information

Client Sample ID: 288617 **York Sample ID:** 22F1242-02

York Project (SDG) No.	Client Project ID	Matrix	Collection Date/Time	Date Received
22F1242	288625/288617/288673	Drinking Water	June 23, 2022 9:00 am	06/23/2022

1,4-Dioxane by GC/MS/SIM EPA 522

Log-in Notes:

Sample Notes:

Sample Prepared by Method: EPA 522

CAS No.	Parameter	Result	Flag	Maximum Contaminant Level MCL, ng/L	Units	Reported to LOQ	Reference Method	Date/Time Analyzed	Analyst
123-91-1	1,4-Dioxane	ND		1	ug/L	0.200	EPA 522	06/24/2022 07:43	KH
					Certifications:	NELAC-NY10854		06/27/2022 15:25	
1693-74-9	*** Tetrahydrofuran-d8**	**0.500**		**0**	ug/mL		EPA 522	06/24/2022 07:43	KH
					Certifications:			06/27/2022 15:25	

	Surrogate Recoveries	Result	Acceptance Range
17647-74-4	*Surrogate: 1,4-Dioxane-d8*	*80.0 %*	*70-130*

PFAS, EPA 537.1 List Well 6A

Log-in Notes:

Sample Notes:

Sample Prepared by Method: EPA 537.1 SPE DVB

CAS No.	Parameter	Result	Flag	Maximum Contaminant Level MCL, ng/L	Units	Reported to LOQ	Reference Method	Date/Time Analyzed	Analyst
375-73-5	* Perfluorobutanesulfonic acid (PFBS)	ND		0	ng/L	1.43	EPA 537.1	07/01/2022 11:13	WEL
					Certifications:			07/05/2022 14:03	

Sample Information

Client Sample ID: 288617 **York Sample ID:** 22F1242-02

York Project (SDG) No.	Client Project ID	Matrix	Collection Date/Time	Date Received
22F1242	288625/288617/288673	Drinking Water	June 23, 2022 9:00 am	06/23/2022

PFAS, EPA 537.1 List

Log-in Notes:

Sample Notes:

Sample Prepared by Method: EPA 537.1 SPE DVB

CAS No.	Parameter	Result	Flag	Maximum Contaminant Level MCL, ng/L	Units	Reported to LOQ	Reference Method	Date/Time Analyzed	Analyst
307-24-4	*** Perfluorohexanoic acid (PFHxA)**	**1.78**		**0**	ng/L	1.43	EPA 537.1	07/01/2022 11:13	WEL
					Certifications:			07/05/2022 14:03	
375-85-9	* Perfluoroheptanoic acid (PFHpA)	ND		0	ng/L	1.43	EPA 537.1	07/01/2022 11:13	WEL
					Certifications:			07/05/2022 14:03	
355-46-4	*** Perfluorohexanesulfonic acid (PFHxS)**	**1.54**		**0**	ng/L	1.43	EPA 537.1	07/01/2022 11:13	WEL
					Certifications:			07/05/2022 14:03	
335-67-1	**Perfluorooctanoic acid (PFOA)**	**3.88**		**10**	ng/L	1.43	EPA 537.1	07/01/2022 11:13	WEL
					Certifications:	NELAC-NY12058		07/05/2022 14:03	
1763-23-1	**Perfluorooctanesulfonic acid (PFOS)**	**2.29**		**10**	ng/L	1.43	EPA 537.1	07/01/2022 11:13	WEL
					Certifications:	NELAC-NY12058		07/05/2022 14:03	
375-95-1	* Perfluorononanoic acid (PFNA)	ND		0	ng/L	1.43	EPA 537.1	07/01/2022 11:13	WEL
					Certifications:			07/05/2022 14:03	
335-76-2	* Perfluorodecanoic acid (PFDA)	ND		0	ng/L	1.43	EPA 537.1	07/01/2022 11:13	WEL
					Certifications:			07/05/2022 14:03	
2058-94-8	* Perfluoroundecanoic acid (PFUnA)	ND		0	ng/L	1.43	EPA 537.1	07/01/2022 11:13	WEL
					Certifications:			07/05/2022 14:03	
307-55-1	* Perfluorododecanoic acid (PFDoA)	ND		0	ng/L	1.43	EPA 537.1	07/01/2022 11:13	WEL
					Certifications:			07/05/2022 14:03	
72629-94-8	* Perfluorotridecanoic acid (PFTrDA)	ND		0	ng/L	1.43	EPA 537.1	07/01/2022 11:13	WEL
					Certifications:			07/05/2022 14:03	
376-06-7	* Perfluorotetradecanoic acid (PFTA)	ND		0	ng/L	1.43	EPA 537.1	07/01/2022 11:13	WEL
					Certifications:			07/05/2022 14:03	
2355-31-9	* N-MeFOSAA	ND		0	ng/L	1.43	EPA 537.1	07/01/2022 11:13	WEL
					Certifications:			07/05/2022 14:03	
2991-50-6	* N-EtFOSAA	ND		0	ng/L	1.43	EPA 537.1	07/01/2022 11:13	WEL
					Certifications:			07/05/2022 14:03	
756426-58-1	* 9CL-PF3ONS	ND		0	ng/L	1.43	EPA 537.1	07/01/2022 11:13	WEL
					Certifications:			07/05/2022 14:03	
763051-92-9	* 11CL-PF3OUdS	ND		0	ng/L	1.43	EPA 537.1	07/01/2022 11:13	WEL
					Certifications:			07/05/2022 14:03	
13252-13-6	* HFPO-DA (Gen-X)	ND		0	ng/L	1.43	EPA 537.1	07/01/2022 11:13	WEL
					Certifications:			07/05/2022 14:03	
919005-14-4	* ADONA	ND		0	ng/L	1.43	EPA 537.1	07/01/2022 11:13	WEL
					Certifications:			07/05/2022 14:03	

Surrogate Recoveries	Result	Acceptance Range
Surrogate: d5-N-EtFOSAA	*102 %*	*70-130*
Surrogate: 13C-PFDA	*96.1 %*	*70-130*
Surrogate: 13C-PFHxA	*109 %*	*70-130*
Surrogate: M3HFPO-DA	*101 %*	*70-130*

Sample Information

Client Sample ID: 288673 **York Sample ID:** 22F1242-03

York Project (SDG) No.	Client Project ID	Matrix	Collection Date/Time	Date Received
22F1242	288625/288617/288673	Drinking Water	June 23, 2022 9:20 am	06/23/2022

1,4-Dioxane by GC/MS/SIM EPA 522

Log-in Notes:

Sample Notes:

Sample Prepared by Method: EPA 522

CAS No.	Parameter	Result	Flag	Maximum Contaminant Level MCL, ng/L	Units	Reported to LOQ	Reference Method	Date/Time Analyzed	Analyst
123-91-1	1,4-Dioxane	ND		1	ug/L	0.200	EPA 522	06/24/2022 07:43	KH
					Certifications:	NELAC-NY10854		06/27/2022 15:44	
1693-74-9	*** Tetrahydrofuran-d8**	**0.500**		**0**	ug/mL		EPA 522	06/24/2022 07:43	KH
					Certifications:			06/27/2022 15:44	

	Surrogate Recoveries	Result	Acceptance Range
17647-74-4	*Surrogate: 1,4-Dioxane-d8*	*80.0 %*	*70-130*

PFAS, EPA 537.1 List

Well 1

Log-in Notes:

Sample Notes:

Sample Prepared by Method: EPA 537.1 SPE DVB

CAS No.	Parameter	Result	Flag	Maximum Contaminant Level MCL, ng/L	Units	Reported to LOQ	Reference Method	Date/Time Analyzed	Analyst
375-73-5	* Perfluorobutanesulfonic acid (PFBS)	ND		0	ng/L	1.11	EPA 537.1	07/01/2022 11:13	WEL
					Certifications:			07/05/2022 14:15	
307-24-4	*** Perfluorohexanoic acid (PFHxA)**	**4.48**		**0**	ng/L	1.11	EPA 537.1	07/01/2022 11:13	WEL
					Certifications:			07/05/2022 14:15	
375-85-9	* Perfluoroheptanoic acid (PFHpA)	ND		0	ng/L	1.11	EPA 537.1	07/01/2022 11:13	WEL
					Certifications:			07/05/2022 14:15	
355-46-4	*** Perfluorohexanesulfonic acid (PFHxS)**	**2.22**		**0**	ng/L	1.11	EPA 537.1	07/01/2022 11:13	WEL
					Certifications:			07/05/2022 14:15	
335-67-1	**Perfluorooctanoic acid (PFOA)**	**4.70**		**10**	ng/L	1.11	EPA 537.1	07/01/2022 11:13	WEL
					Certifications:	NELAC-NY12058		07/05/2022 14:15	
1763-23-1	**Perfluorooctanesulfonic acid (PFOS)**	**4.00**		**10**	ng/L	1.11	EPA 537.1	07/01/2022 11:13	WEL
					Certifications:	NELAC-NY12058		07/05/2022 14:15	
375-95-1	* Perfluorononanoic acid (PFNA)	ND		0	ng/L	1.11	EPA 537.1	07/01/2022 11:13	WEL
					Certifications:			07/05/2022 14:15	
335-76-2	* Perfluorodecanoic acid (PFDA)	ND		0	ng/L	1.11	EPA 537.1	07/01/2022 11:13	WEL
					Certifications:			07/05/2022 14:15	
2058-94-8	* Perfluoroundecanoic acid (PFUnA)	ND		0	ng/L	1.11	EPA 537.1	07/01/2022 11:13	WEL
					Certifications:			07/05/2022 14:15	
307-55-1	* Perfluorododecanoic acid (PFDoA)	ND		0	ng/L	1.11	EPA 537.1	07/01/2022 11:13	WEL
					Certifications:			07/05/2022 14:15	
72629-94-8	* Perfluorotridecanoic acid (PFTrDA)	ND		0	ng/L	1.11	EPA 537.1	07/01/2022 11:13	WEL
					Certifications:			07/05/2022 14:15	
376-06-7	* Perfluorotetradecanoic acid (PFTA)	ND		0	ng/L	1.11	EPA 537.1	07/01/2022 11:13	WEL
					Certifications:			07/05/2022 14:15	
2355-31-9	* N-MeFOSAA	ND		0	ng/L	1.11	EPA 537.1	07/01/2022 11:13	WEL
					Certifications:			07/05/2022 14:15	
2991-50-6	* N-EtFOSAA	ND		0	ng/L	1.11	EPA 537.1	07/01/2022 11:13	WEL
					Certifications:			07/05/2022 14:15	
756426-58-1	* 9CL-PF3ONS	ND		0	ng/L	1.11	EPA 537.1	07/01/2022 11:13	WEL
					Certifications:			07/05/2022 14:15	

Sample Information

Client Sample ID: 288673 **York Sample ID:** 22F1242-03

York Project (SDG) No.	Client Project ID	Matrix	Collection Date/Time	Date Received
22F1242	288625/288617/288673	Drinking Water	June 23, 2022 9:20 am	06/23/2022

PFAS, EPA 537.1 List **Log-in Notes:** **Sample Notes:**

Sample Prepared by Method: EPA 537.1 SPE DVB

CAS No.	Parameter	Result	Flag	Maximum Contaminant Level MCL, ng/L	Units	Reported to LOQ	Reference Method	Date/Time Analyzed	Analyst
763051-92-9	* 11CL-PF3OUdS	ND		0	ng/L	1.11	EPA 537.1	07/01/2022 11:13	WEL
					Certifications:			07/05/2022 14:15	
13252-13-6	* HFPO-DA (Gen-X)	ND		0	ng/L	1.11	EPA 537.1	07/01/2022 11:13	WEL
					Certifications:			07/05/2022 14:15	
919005-14-4	* ADONA	ND		0	ng/L	1.11	EPA 537.1	07/01/2022 11:13	WEL
					Certifications:			07/05/2022 14:15	

Surrogate Recoveries	Result	Acceptance Range
Surrogate: d5-N-EtFOSAA	*96.0 %*	*70-130*
Surrogate: 13C-PFDA	*84.4 %*	*70-130*
Surrogate: 13C-PFHxA	*97.8 %*	*70-130*
Surrogate: M3HFPO-DA	*92.7 %*	*70-130*

Sample Information

Client Sample ID: 288625-PFAS-Field Blank **York Sample ID:** 22F1242-04

York Project (SDG) No.	Client Project ID	Matrix	Collection Date/Time	Date Received
22F1242	288625/288617/288673	Drinking Water	June 23, 2022 8:00 am	06/23/2022

PFAS, EPA 537.1 List **Log-in Notes:** **Sample Notes:**

Sample Prepared by Method: EPA 537.1 SPE DVB

CAS No.	Parameter	Result	Flag	Maximum Contaminant Level MCL, ng/L	Units	Reported to LOQ	Reference Method	Date/Time Analyzed	Analyst
375-73-5	* Perfluorobutanesulfonic acid (PFBS)	ND		0	ng/L	1.52	EPA 537.1	07/01/2022 11:13	WEL
					Certifications:			07/05/2022 14:27	
307-24-4	* Perfluorohexanoic acid (PFHxA)	ND		0	ng/L	1.52	EPA 537.1	07/01/2022 11:13	WEL
					Certifications:			07/05/2022 14:27	
375-85-9	* Perfluoroheptanoic acid (PFHpA)	ND		0	ng/L	1.52	EPA 537.1	07/01/2022 11:13	WEL
					Certifications:			07/05/2022 14:27	
355-46-4	* Perfluorohexanesulfonic acid (PFHxS)	ND		0	ng/L	1.52	EPA 537.1	07/01/2022 11:13	WEL
					Certifications:			07/05/2022 14:27	
335-67-1	Perfluorooctanoic acid (PFOA)	ND		10	ng/L	1.52	EPA 537.1	07/01/2022 11:13	WEL
					Certifications:	NELAC-NY12058		07/05/2022 14:27	
1763-23-1	Perfluorooctanesulfonic acid (PFOS)	ND		10	ng/L	1.52	EPA 537.1	07/01/2022 11:13	WEL
					Certifications:	NELAC-NY12058		07/05/2022 14:27	
375-95-1	* Perfluorononanoic acid (PFNA)	ND		0	ng/L	1.52	EPA 537.1	07/01/2022 11:13	WEL
					Certifications:			07/05/2022 14:27	
335-76-2	* Perfluorodecanoic acid (PFDA)	ND		0	ng/L	1.52	EPA 537.1	07/01/2022 11:13	WEL
					Certifications:			07/05/2022 14:27	
2058-94-8	* Perfluoroundecanoic acid (PFUnA)	ND		0	ng/L	1.52	EPA 537.1	07/01/2022 11:13	WEL
					Certifications:			07/05/2022 14:27	

Sample Information

Client Sample ID: 288625-PFAS-Field Blank **York Sample ID:** 22F1242-04

York Project (SDG) No.	Client Project ID	Matrix	Collection Date/Time	Date Received
22F1242	288625/288617/288673	Drinking Water	June 23, 2022 8:00 am	06/23/2022

PFAS, EPA 537.1 List

Log-in Notes:

Sample Notes:

Sample Prepared by Method: EPA 537.1 SPE DVB

CAS No.	Parameter	Result	Flag	Maximum Contaminant Level MCL, ng/L	Units	Reported to LOQ	Reference Method	Date/Time Analyzed	Analyst
307-55-1	* Perfluorododecanoic acid (PFDoA)	ND		0	ng/L	1.52	EPA 537.1	07/01/2022 11:13	WEL
					Certifications:			07/05/2022 14:27	
72629-94-8	* Perfluorotridecanoic acid (PFTrDA)	ND		0	ng/L	1.52	EPA 537.1	07/01/2022 11:13	WEL
					Certifications:			07/05/2022 14:27	
376-06-7	* Perfluorotetradecanoic acid (PFTA)	ND		0	ng/L	1.52	EPA 537.1	07/01/2022 11:13	WEL
					Certifications:			07/05/2022 14:27	
2355-31-9	* N-MeFOSAA	ND		0	ng/L	1.52	EPA 537.1	07/01/2022 11:13	WEL
					Certifications:			07/05/2022 14:27	
2991-50-6	* N-EtFOSAA	ND		0	ng/L	1.52	EPA 537.1	07/01/2022 11:13	WEL
					Certifications:			07/05/2022 14:27	
756426-58-1	* 9CL-PF3ONS	ND		0	ng/L	1.52	EPA 537.1	07/01/2022 11:13	WEL
					Certifications:			07/05/2022 14:27	
763051-92-9	* 11CL-PF3OUdS	ND		0	ng/L	1.52	EPA 537.1	07/01/2022 11:13	WEL
					Certifications:			07/05/2022 14:27	
13252-13-6	* HFPO-DA (Gen-X)	ND		0	ng/L	1.52	EPA 537.1	07/01/2022 11:13	WEL
					Certifications:			07/05/2022 14:27	
919005-14-4	* ADONA	ND		0	ng/L	1.52	EPA 537.1	07/01/2022 11:13	WEL
					Certifications:			07/05/2022 14:27	

Surrogate Recoveries	Result	Acceptance Range
Surrogate: d5-N-EtFOSAA	*107 %*	*70-130*
Surrogate: 13C-PFDA	*95.5 %*	*70-130*
Surrogate: 13C-PFHxA	*104 %*	*70-130*
Surrogate: M3HFPO-DA	*105 %*	*70-130*

Sample Information

Client Sample ID: 288617-PFAS-Field Blank **York Sample ID:** 22F1242-05

York Project (SDG) No.	Client Project ID	Matrix	Collection Date/Time	Date Received
22F1242	288625/288617/288673	Drinking Water	June 23, 2022 9:00 am	06/23/2022

PFAS, EPA 537.1 List

Log-in Notes:

Sample Notes:

Sample Prepared by Method: EPA 537.1 SPE DVB

CAS No.	Parameter	Result	Flag	Maximum Contaminant Level MCL, ng/L	Units	Reported to LOQ	Reference Method	Date/Time Analyzed	Analyst
375-73-5	* Perfluorobutanesulfonic acid (PFBS)	ND		0	ng/L	1.92	EPA 537.1	07/01/2022 11:13	WEL
					Certifications:			07/05/2022 15:04	
307-24-4	* Perfluorohexanoic acid (PFHxA)	ND		0	ng/L	1.92	EPA 537.1	07/01/2022 11:13	WEL
					Certifications:			07/05/2022 15:04	
375-85-9	* Perfluoroheptanoic acid (PFHpA)	ND		0	ng/L	1.92	EPA 537.1	07/01/2022 11:13	WEL
					Certifications:			07/05/2022 15:04	

Sample Information

Client Sample ID: 288617-PFAS-Field Blank **York Sample ID:** 22F1242-05

York Project (SDG) No.	Client Project ID	Matrix	Collection Date/Time	Date Received
22F1242	288625/288617/288673	Drinking Water	June 23, 2022 9:00 am	06/23/2022

PFAS, EPA 537.1 List **Log-in Notes:** **Sample Notes:**

Sample Prepared by Method: EPA 537.1 SPE DVB

CAS No.	Parameter	Result	Flag	Maximum Contaminant Level MCL, ng/L	Units	Reported to LOQ	Reference Method	Date/Time Analyzed	Analyst
355-46-4	* Perfluorohexanesulfonic acid (PFHxS)	ND		0	ng/L	1.92	EPA 537.1	07/01/2022 11:13	WEL
					Certifications:			07/05/2022 15:04	
335-67-1	Perfluorooctanoic acid (PFOA)	ND		10	ng/L	1.92	EPA 537.1	07/01/2022 11:13	WEL
					Certifications:	NELAC-NY12058		07/05/2022 15:04	
1763-23-1	Perfluorooctanesulfonic acid (PFOS)	ND		10	ng/L	1.92	EPA 537.1	07/01/2022 11:13	WEL
					Certifications:	NELAC-NY12058		07/05/2022 15:04	
375-95-1	* Perfluorononanoic acid (PFNA)	ND		0	ng/L	1.92	EPA 537.1	07/01/2022 11:13	WEL
					Certifications:			07/05/2022 15:04	
335-76-2	* Perfluorodecanoic acid (PFDA)	ND		0	ng/L	1.92	EPA 537.1	07/01/2022 11:13	WEL
					Certifications:			07/05/2022 15:04	
2058-94-8	* Perfluoroundecanoic acid (PFUnA)	ND		0	ng/L	1.92	EPA 537.1	07/01/2022 11:13	WEL
					Certifications:			07/05/2022 15:04	
307-55-1	* Perfluorododecanoic acid (PFDoA)	ND		0	ng/L	1.92	EPA 537.1	07/01/2022 11:13	WEL
					Certifications:			07/05/2022 15:04	
72629-94-8	* Perfluorotridecanoic acid (PFTrDA)	ND		0	ng/L	1.92	EPA 537.1	07/01/2022 11:13	WEL
					Certifications:			07/05/2022 15:04	
376-06-7	* Perfluorotetradecanoic acid (PFTA)	ND		0	ng/L	1.92	EPA 537.1	07/01/2022 11:13	WEL
					Certifications:			07/05/2022 15:04	
2355-31-9	* N-MeFOSAA	ND		0	ng/L	1.92	EPA 537.1	07/01/2022 11:13	WEL
					Certifications:			07/05/2022 15:04	
2991-50-6	* N-EtFOSAA	ND		0	ng/L	1.92	EPA 537.1	07/01/2022 11:13	WEL
					Certifications:			07/05/2022 15:04	
756426-58-1	* 9CL-PF3ONS	ND		0	ng/L	1.92	EPA 537.1	07/01/2022 11:13	WEL
					Certifications:			07/05/2022 15:04	
763051-92-9	* 11CL-PF3OUdS	ND		0	ng/L	1.92	EPA 537.1	07/01/2022 11:13	WEL
					Certifications:			07/05/2022 15:04	
13252-13-6	* HFPO-DA (Gen-X)	ND		0	ng/L	1.92	EPA 537.1	07/01/2022 11:13	WEL
					Certifications:			07/05/2022 15:04	
919005-14-4	* ADONA	ND		0	ng/L	1.92	EPA 537.1	07/01/2022 11:13	WEL
					Certifications:			07/05/2022 15:04	

Surrogate Recoveries	Result	Acceptance Range
Surrogate: d5-N-EtFOSAA	*95.7 %*	*70-130*
Surrogate: 13C-PFDA	*82.6 %*	*70-130*
Surrogate: 13C-PFHxA	*87.4 %*	*70-130*
Surrogate: M3HFPO-DA	*91.1 %*	*70-130*

Sample Information

Client Sample ID: 288673-PFAS-Field Blank **York Sample ID:** 22F1242-06

York Project (SDG) No.	Client Project ID	Matrix	Collection Date/Time	Date Received
22F1242	288625/288617/288673	Drinking Water	June 23, 2022 9:20 am	06/23/2022

Sample Information

Client Sample ID: 288673-PFAS-Field Blank **York Sample ID:** 22F1242-06

York Project (SDG) No.	Client Project ID	Matrix	Collection Date/Time	Date Received
22F1242	288625/288617/288673	Drinking Water	June 23, 2022 9:20 am	06/23/2022

PFAS, EPA 537.1 List **Log-in Notes:** **Sample Notes:**

Sample Prepared by Method: EPA 537.1 SPE DVB

CAS No.	Parameter	Result	Flag	Maximum Contaminant Level MCL, ng/L	Units	Reported to LOQ	Reference Method	Date/Time Analyzed	Analyst
375-73-5	* Perfluorobutanesulfonic acid (PFBS)	ND		0	ng/L	2.00	EPA 537.1	07/01/2022 11:13	WEL
					Certifications:			07/05/2022 15:18	
307-24-4	* Perfluorohexanoic acid (PFHxA)	ND		0	ng/L	2.00	EPA 537.1	07/01/2022 11:13	WEL
					Certifications:			07/05/2022 15:18	
375-85-9	* Perfluoroheptanoic acid (PFHpA)	ND		0	ng/L	2.00	EPA 537.1	07/01/2022 11:13	WEL
					Certifications:			07/05/2022 15:18	
355-46-4	* Perfluorohexanesulfonic acid (PFHxS)	ND		0	ng/L	2.00	EPA 537.1	07/01/2022 11:13	WEL
					Certifications:			07/05/2022 15:18	
335-67-1	Perfluorooctanoic acid (PFOA)	ND		10	ng/L	2.00	EPA 537.1	07/01/2022 11:13	WEL
					Certifications:		NELAC-NY12058	07/05/2022 15:18	
1763-23-1	Perfluorooctanesulfonic acid (PFOS)	ND		10	ng/L	2.00	EPA 537.1	07/01/2022 11:13	WEL
					Certifications:		NELAC-NY12058	07/05/2022 15:18	
375-95-1	* Perfluorononanoic acid (PFNA)	ND		0	ng/L	2.00	EPA 537.1	07/01/2022 11:13	WEL
					Certifications:			07/05/2022 15:18	
335-76-2	* Perfluorodecanoic acid (PFDA)	ND		0	ng/L	2.00	EPA 537.1	07/01/2022 11:13	WEL
					Certifications:			07/05/2022 15:18	
2058-94-8	* Perfluoroundecanoic acid (PFUnA)	ND		0	ng/L	2.00	EPA 537.1	07/01/2022 11:13	WEL
					Certifications:			07/05/2022 15:18	
307-55-1	* Perfluorododecanoic acid (PFDoA)	ND		0	ng/L	2.00	EPA 537.1	07/01/2022 11:13	WEL
					Certifications:			07/05/2022 15:18	
72629-94-8	* Perfluorotridecanoic acid (PFTrDA)	ND		0	ng/L	2.00	EPA 537.1	07/01/2022 11:13	WEL
					Certifications:			07/05/2022 15:18	
376-06-7	* Perfluorotetradecanoic acid (PFTA)	ND		0	ng/L	2.00	EPA 537.1	07/01/2022 11:13	WEL
					Certifications:			07/05/2022 15:18	
2355-31-9	* N-MeFOSAA	ND		0	ng/L	2.00	EPA 537.1	07/01/2022 11:13	WEL
					Certifications:			07/05/2022 15:18	
2991-50-6	* N-EtFOSAA	ND		0	ng/L	2.00	EPA 537.1	07/01/2022 11:13	WEL
					Certifications:			07/05/2022 15:18	
756426-58-1	* 9CL-PF3ONS	ND		0	ng/L	2.00	EPA 537.1	07/01/2022 11:13	WEL
					Certifications:			07/05/2022 15:18	
763051-92-9	* 11CL-PF3OUdS	ND		0	ng/L	2.00	EPA 537.1	07/01/2022 11:13	WEL
					Certifications:			07/05/2022 15:18	
13252-13-6	* HFPO-DA (Gen-X)	ND		0	ng/L	2.00	EPA 537.1	07/01/2022 11:13	WEL
					Certifications:			07/05/2022 15:18	
919005-14-4	* ADONA	ND		0	ng/L	2.00	EPA 537.1	07/01/2022 11:13	WEL
					Certifications:			07/05/2022 15:18	

Surrogate Recoveries	Result	Acceptance Range
Surrogate: d5-N-EtFOSAA	*96.6 %*	*70-130*
Surrogate: 13C-PFDA	*91.1 %*	*70-130*
Surrogate: 13C-PFHxA	*107 %*	*70-130*
Surrogate: M3HFPO-DA	*113 %*	*70-130*

Analytical Batch Summary

Batch ID: BF21540 **Preparation Method:** EPA 522 **Prepared By:** SJB

YORK Sample ID	Client Sample ID	Preparation Date
22F1242-01	288625	06/24/22
22F1242-02	288617	06/24/22
22F1242-03	288673	06/24/22
BF21540-BLK1	Blank	06/24/22
BF21540-BS1	LCS	06/24/22
BF21540-BS2	LCS	06/24/22
BF21540-DUP1	Duplicate	06/24/22
BF21540-MS1	Matrix Spike	06/24/22

Batch ID: BG20029 **Preparation Method:** EPA 537.1 SPE DVB **Prepared By:** WEL

YORK Sample ID	Client Sample ID	Preparation Date
22F1242-01	288625	07/01/22
22F1242-02	288617	07/01/22
22F1242-03	288673	07/01/22
22F1242-04	288625-PFAS-Field Blank	07/01/22
22F1242-05	288617-PFAS-Field Blank	07/01/22
22F1242-06	288673-PFAS-Field Blank	07/01/22
BG20029-BLK1	Blank	07/01/22
BG20029-BS1	LCS	07/01/22
BG20029-DUP1	Duplicate	07/01/22
BG20029-MS1	Matrix Spike	07/01/22

Semivolatile Organic Compounds by GC/MS/SIM - Quality Control Data

York Analytical Laboratories, Inc.

Analyte	Result	Reporting Limit	Units	Spike Level	Source* Result	%REC	%REC Limits	Flag	RPD	RPD Limit	Flag
Batch BF21540 - EPA 522											
Blank (BF21540-BLK1)									Prepared: 06/24/2022 Analyzed: 06/27/2022		
1,4-Dioxane	ND	0.200	ug/L								
Surrogate: 1,4-Dioxane-d8	*2.80*		*"*	*2.50*		*112*	*70-130*				
LCS (BF21540-BS1)									Prepared: 06/24/2022 Analyzed: 06/27/2022		
1,4-Dioxane	4.66	0.200	ug/L	5.00		93.2	70-130				
Surrogate: 1,4-Dioxane-d8	*2.20*		*"*	*2.50*		*88.0*	*70-130*				
LCS (BF21540-BS2)									Prepared: 06/24/2022 Analyzed: 06/27/2022		
1,4-Dioxane	8.86	0.200	ug/L	10.0		88.6	70-130				
Surrogate: 1,4-Dioxane-d8	*2.20*		*"*	*2.50*		*88.0*	*70-130*				
Duplicate (BF21540-DUP1)	*Source sample: 22F0847-01 (Duplicate)								Prepared: 06/24/2022 Analyzed: 06/27/2022		
1,4-Dioxane	ND	0.200	ug/L		ND					30	
Surrogate: 1,4-Dioxane-d8	*2.60*		*"*	*2.50*		*104*	*70-130*				
Matrix Spike (BF21540-MS1)	*Source sample: 22F0765-01 (Matrix Spike)								Prepared: 06/24/2022 Analyzed: 06/27/2022		
1,4-Dioxane	4.17	0.200	ug/L	5.00	ND	83.4	70-130				
Surrogate: 1,4-Dioxane-d8	*2.40*		*"*	*2.50*		*96.0*	*70-130*				

Analyte	Result	Reporting Limit	Units	Spike Level	Source* Result	%REC	%REC Limits	Flag	RPD	RPD Limit	Flag
Batch BG20029 - EPA 537.1 SPE DVB											
Blank (BG20029-BLK1)									Prepared: 07/01/2022 Analyzed: 07/05/2022		
Perfluorobutanesulfonic acid (PFBS)	ND	2.00	ng/L								
Perfluorohexanoic acid (PFHxA)	ND	2.00	"								
Perfluoroheptanoic acid (PFHpA)	ND	2.00	"								
Perfluorohexanesulfonic acid (PFHxS)	ND	2.00	"								
Perfluorooctanoic acid (PFOA)	ND	2.00	"								
Perfluorooctanesulfonic acid (PFOS)	ND	2.00	"								
Perfluorononanoic acid (PFNA)	ND	2.00	"								
Perfluorodecanoic acid (PFDA)	ND	2.00	"								
Perfluoroundecanoic acid (PFUnA)	ND	2.00	"								
Perfluorododecanoic acid (PFDoA)	ND	2.00	"								
Perfluorotridecanoic acid (PFTrDA)	ND	2.00	"								
Perfluorotetradecanoic acid (PFTA)	ND	2.00	"								
N-MeFOSAA	ND	2.00	"								
N-EtFOSAA	ND	2.00	"								
9CL-PF3ONS	ND	2.00	"								
11CL-PF3OUdS	ND	2.00	"								
HFPO-DA (Gen-X)	ND	2.00	"								
ADONA	ND	2.00	"								
Surrogate: d5-N-EtFOSAA	*287*		"	*320*		*89.5*	*70-130*				
Surrogate: 13C-PFDA	*69.4*		"	*80.0*		*86.8*	*70-130*				
Surrogate: 13C-PFHxA	*75.8*		"	*80.0*		*94.7*	*70-130*				
Surrogate: M3HFPO-DA	*73.2*		"	*80.0*		*91.5*	*70-130*				
LCS (BG20029-BS1)									Prepared: 07/01/2022 Analyzed: 07/05/2022		
Perfluorobutanesulfonic acid (PFBS)	32.3	2.00	ng/L	35.4		91.1	70-130				
Perfluorohexanoic acid (PFHxA)	34.8	2.00	"	40.0		87.0	70-130				
Perfluoroheptanoic acid (PFHpA)	36.5	2.00	"	40.0		91.2	70-130				
Perfluorohexanesulfonic acid (PFHxS)	35.4	2.00	"	38.0		93.0	70-130				
Perfluorooctanoic acid (PFOA)	37.9	2.00	"	40.0		94.7	70-130				
Perfluorooctanesulfonic acid (PFOS)	37.2	2.00	"	38.4		96.9	70-130				
Perfluorononanoic acid (PFNA)	38.4	2.00	"	40.0		95.9	70-130				
Perfluorodecanoic acid (PFDA)	32.7	2.00	"	40.0		81.7	70-130				
Perfluoroundecanoic acid (PFUnA)	36.4	2.00	"	40.0		91.0	70-130				
Perfluorododecanoic acid (PFDoA)	36.4	2.00	"	40.0		91.1	70-130				
Perfluorotridecanoic acid (PFTrDA)	31.3	2.00	"	40.0		78.2	70-130				
Perfluorotetradecanoic acid (PFTA)	32.5	2.00	"	40.0		81.2	70-130				
N-MeFOSAA	37.4	2.00	"	40.0		93.5	70-130				
N-EtFOSAA	37.5	2.00	"	40.0		93.6	70-130				
9CL-PF3ONS	33.9	2.00	"	37.4		90.6	60-130				
11CL-PF3OUdS	31.1	2.00	"	37.8		82.3	60-130				
HFPO-DA (Gen-X)	33.8	2.00	"	40.0		84.6	60-130				
ADONA	32.7	2.00	"	37.8		86.5	60-130				
Surrogate: d5-N-EtFOSAA	*337*		"	*320*		*105*	*70-130*				
Surrogate: 13C-PFDA	*74.7*		"	*80.0*		*93.3*	*70-130*				
Surrogate: 13C-PFHxA	*83.2*		"	*80.0*		*104*	*70-130*				
Surrogate: M3HFPO-DA	*78.9*		"	*80.0*		*98.6*	*70-130*				

PFAS Target compounds by LC/MS-MS - Quality Control Data

York Analytical Laboratories, Inc.

Analyte	Result	Reporting Limit	Units	Spike Level	Source* Result	%REC	%REC Limits	Flag	RPD	RPD Limit	Flag
Batch BG20029 - EPA 537.1 SPE DVB											
Duplicate (BG20029-DUP1)	*Source sample: 22F1242-04 (288625-PFAS-Field Blank)								Prepared: 07/01/2022 Analyzed: 07/05/2022		
Perfluorobutanesulfonic acid (PFBS)	ND	2.17	ng/L		ND					25	
Perfluorohexanoic acid (PFHxA)	ND	2.17	"		ND					25	
Perfluoroheptanoic acid (PFHpA)	ND	2.17	"		ND					25	
Perfluorohexanesulfonic acid (PFHxS)	ND	2.17	"		ND					25	
Perfluorooctanoic acid (PFOA)	ND	2.17	"		ND					25	
Perfluorooctanesulfonic acid (PFOS)	ND	2.17	"		ND					25	
Perfluorononanoic acid (PFNA)	ND	2.17	"		ND					25	
Perfluorodecanoic acid (PFDA)	ND	2.17	"		ND					25	
Perfluoroundecanoic acid (PFUnA)	ND	2.17	"		ND					25	
Perfluorododecanoic acid (PFDoA)	ND	2.17	"		ND					25	
Perfluorotridecanoic acid (PFTrDA)	ND	2.17	"		ND					25	
Perfluorotetradecanoic acid (PFTA)	ND	2.17	"		ND					25	
N-MeFOSAA	ND	2.17	"		ND					25	
N-EtFOSAA	ND	2.17	"		ND					25	
9CL-PF3ONS	ND	2.17	"		ND					25	
11CL-PF3OUdS	ND	2.17	"		ND					25	
HFPO-DA (Gen-X)	ND	2.17	"		ND					25	
ADONA	ND	2.17	"		ND					25	
Surrogate: d5-N-EtFOSAA	*348*		*"*	*348*		*100*	*70-130*				
Surrogate: 13C-PFDA	*77.2*		*"*	*87.0*		*88.8*	*70-130*				
Surrogate: 13C-PFHxA	*87.6*		*"*	*87.0*		*101*	*70-130*				
Surrogate: M3HFPO-DA	*84.0*		*"*	*87.0*		*96.6*	*70-130*				
Matrix Spike (BG20029-MS1)	*Source sample: 22F1306-01 (Matrix Spike)								Prepared: 07/01/2022 Analyzed: 07/05/2022		
Perfluorobutanesulfonic acid (PFBS)	58.9	2.00	ng/L	70.8	ND	83.1	70-130				
Perfluorohexanoic acid (PFHxA)	64.6	2.00	"	80.0	ND	80.7	70-130				
Perfluoroheptanoic acid (PFHpA)	69.6	2.00	"	80.0	ND	87.0	70-130				
Perfluorohexanesulfonic acid (PFHxS)	71.2	2.00	"	76.0	ND	93.7	70-130				
Perfluorooctanoic acid (PFOA)	72.3	2.00	"	80.0	ND	90.4	70-130				
Perfluorooctanesulfonic acid (PFOS)	68.0	2.00	"	76.8	ND	88.6	70-130				
Perfluorononanoic acid (PFNA)	68.4	2.00	"	80.0	ND	85.5	70-130				
Perfluorodecanoic acid (PFDA)	65.0	2.00	"	80.0	ND	81.2	70-130				
Perfluoroundecanoic acid (PFUnA)	67.1	2.00	"	80.0	ND	83.9	70-130				
Perfluorododecanoic acid (PFDoA)	64.8	2.00	"	80.0	ND	81.0	70-130				
Perfluorotridecanoic acid (PFTrDA)	60.5	2.00	"	80.0	ND	75.6	70-130				
Perfluorotetradecanoic acid (PFTA)	63.2	2.00	"	80.0	ND	79.0	70-130				
N-MeFOSAA	73.5	2.00	"	80.0	ND	91.8	70-130				
N-EtFOSAA	69.6	2.00	"	80.0	ND	87.0	70-130				
9CL-PF3ONS	67.2	2.00	"	74.8	ND	89.9	70-130				
11CL-PF3OUdS	59.4	2.00	"	75.6	ND	78.5	70-130				
HFPO-DA (Gen-X)	59.2	2.00	"	80.0	ND	74.0	70-130				
ADONA	60.6	2.00	"	75.6	ND	80.2	50-130				
Surrogate: d5-N-EtFOSAA	*304*		*"*	*320*		*94.9*	*70-130*				
Surrogate: 13C-PFDA	*70.4*		*"*	*80.0*		*88.0*	*70-130*				
Surrogate: 13C-PFHxA	*77.0*		*"*	*80.0*		*96.2*	*70-130*				
Surrogate: M3HFPO-DA	*72.0*		*"*	*80.0*		*90.0*	*70-130*				

Sample and Data Qualifiers Relating to This Work Order

Definitions and Other Explanations

*	Analyte is not certified or the state of the samples origination does not offer certification for the Analyte.
ND	NOT DETECTED - the analyte is not detected at the Reported to level (LOQ/RL or LOD/MDL)
RL	REPORTING LIMIT - the minimum reportable value based upon the lowest point in the analyte calibration curve.
LOQ	LIMIT OF QUANTITATION - the minimum concentration of a target analyte that can be reported within a specified degree of confidence. This is the lowest point in an analyte calibration curve that has been subjected to all steps of the processing/analysis and verified to meet defined criteria. This is based upon NELAC 2009 Standards and applies to all analyses.
LOD	LIMIT OF DETECTION - a verified estimate of the minimum concentration of a substance in a given matrix that an analytical process can reliably detect. This is based upon NELAC 2009 Standards and applies to all analyses conducted under the auspices of EPA SW-846.
MDL	METHOD DETECTION LIMIT - a statistically derived estimate of the minimum amount of a substance an analytical system can reliably detect with a 99% confidence that the concentration of the substance is greater than zero. This is based upon 40 CFR Part 136 Appendix B and applies only to EPA 600 and 200 series methods.
Reported to	This indicates that the data for a particular analysis is reported to either the LOD/MDL, or the LOQ/RL. In cases where the "Reported to" is located above the LOD/MDL, any value between this and the LOQ represents an estimated value which is "J" flagged accordingly. This applies to volatile and semi-volatile target compounds only.
NR	Not reported
RPD	Relative Percent Difference
Wet	The data has been reported on an as-received (wet weight) basis
Low Bias	Low Bias flag indicates that the recovery of the flagged analyte is below the laboratory or regulatory lower control limit. The data user should take note that this analyte may be biased low but should evaluate multiple lines of evidence including the LCS and site-specific MS/MSD data to draw bias conclusions. In cases where no site-specific MS/MSD was requested, only the LCS data can be used to evaluate such bias.
High Bias	High Bias flag indicates that the recovery of the flagged analyte is above the laboratory or regulatory upper control limit. The data user should take note that this analyte may be biased high but should evaluate multiple lines of evidence including the LCS and site-specific MS/MSD data to draw bias conclusions. In cases where no site-specific MS/MSD was requested, only the LCS data can be used to evaluate such bias.
Non-Dir.	Non-dir. flag (Non-Directional Bias) indicates that the Relative Percent Difference (RPD) (a measure of precision) among the MS and MSD data is outside the laboratory or regulatory control limit. This alerts the data user where the MS and MSD are from site-specific samples that the RPD is high due to either non-homogeneous distribution of target analyte between the MS/MSD or indicates poor reproducibility for other reasons.
MCL	This is the Maximum Contaminant Level in ng/L (ppt) establised by the NYSDOH for these compounds wheree an MCL is reported. Exceedences are flagged according.

Field Chain-of-Custody Record

YORK
ANALYTICAL LABORATORIES INC

York Analytical Laboratories, Inc. (YORK)'s Standard Terms & Conditions are listed on the back side of this document.
This document serves as your written authorization for YORK to proceed with the analyses requested below.
Your signature binds you to YORK's Standard Terms & Conditions.

YORK Project No. 22F1242

120 Research Drive Stratford, CT 06615 | 132-02 89th Ave Queens, NY 11418 | clientservices@yorklab.com | www.yorklab.com | 800-306-YORK | 800-306-9675 | Page ____ of ____

YOUR Information	Report To:	Invoice To:	YOUR Project Number	Turn-Around Time
Company:	Company: Agua Environmental Lab	Company:		RUSH - Next Day
Address:	Address:	Address:	YOUR Project Name	RUSH - Two Day
Phone.:	Phone.:	Phone.:		RUSH - Three Day
Contact:	Contact:	Contact:		RUSH - Four Day
E-mail:	E-mail:	E-mail:	YOUR PO#:	Standard (5-7 Day)

Please print clearly and legibly. All information must be complete. Samples will not be logged in and the turn-around-time clock will not begin until any questions by YORK are resolved.

Samples Collected by: (print AND sign your name)

Matrix Codes
S - soil / solid
GW - groundwater
DW - drinking water
WW - wastewater
O - Oil | Other

Samples From
New York ✓
New Jersey
Connecticut
Pennsylvania
Other:

Report / EDD Type (circle selections)
Summary Report | CT RCP | Standard Excel EDD
QA Report | CT RCP DQA/DUE | EQuIS (Standard)
NY ASP A Package | NJDEP Reduced Deliverables | NYSDEC EQuIS
NY ASP B Package | NJDEP SRP HazSite
NJDKQP | Other:

YORK Reg. Comp.
Compared to the following Regulation(s): (please fill in)

Sample Identification	Sample Matrix	Date/Time Sampled	Analysis Requested	Container Description
288625	DW	6/23/22 8:40 am	PFAS Method 537 18 Compound +	1,4 Dioxane
288617	DW	6/23/22 9:40 am	PFAS Method 537 18 Compound +	1,4 Dioxane
288623	DW	6/23/22 9:20 am	PFAS Method 537 18 Compound +	1,4 Dioxane

Comments:

Preservation: (check all that apply)
HCl ____ MeOH ____ HNO3 ____ H2SO4 ____ NaOH ____
ZnAc ____ Ascorbic Acid ____ Other: ____

Special Instruction
Field Filtered
Lab to Filter

Samples iced/chilled at time of lab pickup? circle Yes or No

Samples Relinquished by / Company	Date/Time	Samples Received by / Company	Date/Time	Samples Relinquished by / Company	Date/Time
[illegible]	6/23/22 12:55 pm	1.		2. S Beaman 6/23	13:55
Samples Received by / Company	Date/Time	3. Samples Relinquished by / Company	Date/Time	3. Samples Received by / Company	Date/Time
Samples Relinquished by / Company	Date/Time	4. Samples Received by / Company	Date/Time	Samples Received in LAB by	Date/Time 6/24/22 1317 Temperature 1.0 Degrees C

AQUA ENVIRONMENTAL LAB
56 Church Hill Road • Newtown, CT 06470 • (203) 270-9973
A York Analytical Company
YORK ANALYTICAL LABORATORIES INC

Report of Analysis

Name: WSP, USA
4 Research Dr.
Ste. 204
Shelton, CT 06484
Sample Date: 6/20/2022 2:03 PM
Receipt Date: 6/20/2022 2:03 PM
Report Date: 7/25/2022
Sample Site: Summit Well 1

Sample ID#: 288608
Sample Type: Drinking Water
Sampler: WSP

Parameter	Sample Result	Units	Limits	Method	RL	Analysis Date / Time
Organic Compounds						
Propylene Glycol	1.5	mg/L	No Limit Set	SW8015	1	6/27/2022 14:05

ND = Not Detected
* = Above Specified Limit

Report Approved by: _____ CT Lic PH-0787 NY Lic 11706
Lab Director

AquaEnvLab.com
YorkLab.com
203 270 9973

Analytical results relate to the samples as received at the laboratory. Report shall not be reproduced except in its entirety without written approval from the laboratory.

EnviroTest Laboratories Inc.

ANALYTICAL REPORT

Job Number: 420-227330-1

SDG Number: Summit Club Well 1

Job Description: WSP USA

For:
WSP USA
4 Research Drive
Shelton, CT 06464

Attention: Stacy Stieber

Mary Hernandez
Customer Service Manager
reports@envirotestlaboratories.com
08/16/2022

NYSDOH ELAP does not certify for all parameters. EnviroTest Laboratories does hold certification for all analytes where certification is offered by ELAP unless otherwise specified in the Certification Information section of this report. Pursuant to NELAP, this report may not be reproduced, except in full, without written approval of the laboratory. EnviroTest Laboratories LLC certifies that the analytical results contained herein apply only to the samples tested as received by our laboratory. All questions regarding this report should be directed to the EnviroTest Customer Service Representative. All services performed by EnviroTest Laboratories LLC are subject to our Terms and Conditions available at Envirotestlabs/terms.com. As of 12/23/19, EnviroTest Laboratories LLC acquired substantially all of the lab and testing assets of EnviroTest Laboratories Inc, including its name.

EnviroTest Laboratories, LLC. Certifications and Approvals: NYSDOH 10142, NJDEP NY015, CTDOPH PH-0554

METHOD SUMMARY

Client: WSP USA

Job Number: 420-227330-1
SDG Number: Summit Club Well 1

Description	Lab Location	Method	Preparation Method
Matrix: Water			
General Sub Contract Method		Subcontract	

Lab References:

=

Method References:

SAMPLE SUMMARY

Client: WSP USA

Job Number: 420-227330-1
SDG Number: Summit Club Well 1

Lab Sample ID	Client Sample ID	Client Matrix	Date/Time Sampled	Date/Time Received
420-227330-1	Well 1	Water	06/22/2022 0850	06/22/2022 1145

Analytical Services, Inc.

CHAIN OF CUSTODY RECORD

Ship to: Analytical Services, Inc., 130 Allen Brook Lane, Williston, VT 05495, Attn: Sample Management
Phone: 1-800-723-4432 or 802-878-5138 • Fax: 802-878-6765 *Web site: www.analyticalservices.com*

Submitted By: WSP USA 4 Research Drive, Ste 204 Shelton, CT 06484 Phone: 475-882-1703 Email: stacy.stober@wsp.com	Report To: Stacy Stober WSP USA 4 Research Drive, Ste 204 Shelton CT 06484 Phone: 475-882-1703 Email: stacy.stober@wsp.com
Project Name: Summit Club Job Site: P.O. Number: 31403576.002	Invoice To: Phone: ___ Email: ___

Sample Identification*	Sample Collection			Sample Matrix (check one)						Analysis Requested	Lab Use Only
	Date (Start)	Time (Start)	Sampler Initials	Water - Raw	Water - Finished	Waste Water	Biosolids	Soil/Sediment	Other		Temp (°C)
Well 1	6/22/22	850	SS	X						NPA w/ IFA	

*Sample ID should match ID written on the sample containers and data sheets. Sample ID will appear on the report for identification.

Relinquished By (signature)	Date/Time	Received By (signature)	Date/Time
[signature]	6/22/22 1145	[signature]	6/22/22 1145

Field Comments:	Lab Comments:

White – To accompany samples • Yellow – Sampler Copy

LOGIN SAMPLE RECEIPT CHECK LIST

Client: WSP USA

Job Number: 420-227330-1
SDG Number: Summit Club Well 1

Login Number: **227330**

Question	T/F/NA	Comment
Samples were collected by ETL employee as per SOP-SAM-1	NA	
The cooler's custody seal, if present, is intact.	NA	
The cooler or samples do not appear to have been compromised or tampered with.	True	
Samples were received on ice.	True	
Cooler Temperature is recorded.	True	2.2C
Cooler Temp. is within method specified range.(0-4 C PW, 0-6 C NPW, or BAC <10 C	True	
If false, was sample received on ice within 6 hours of collection.	NA	
Based on above criteria cooler temperature is acceptable.	True	
COC is present.	True	
COC is filled out in ink and legible.	True	
COC is filled out with all pertinent information.	True	
There are no discrepancies between the sample IDs on the containers and the COC.	True	
Samples are received within Holding Time.	True	
Sample containers have legible labels.	True	
Containers are not broken or leaking.	True	
Sample collection date/times are provided.	True	
Appropriate sample containers are used.	True	
Sample bottles are completely filled.	True	
There is sufficient vol. for all requested analyses, incl. any requested MS/MSDs	True	
VOA sample vials do not have headspace or bubble is <6mm (1/4") in diameter.	NA	
If necessary, staff have been informed of any short hold time or quick TAT needs	True	
Multiphasic samples are not present.	True	
Samples do not require splitting or compositing.	True	

ANALYTICAL SERVICES, INC.
Microbiological Testing, Research and Consulting

130 Allen Brook Ln., PO Box 515, Williston, VT 05495 USA
1.800.723.4432 / 802.878.5138 Fax: 802.878.6765
www.analyticalservices.com

8/15/2022

Ron Bayer
EnviroTest Laboratories
315 Fullerton Ave
Newburgh, NY 12550

Subj.: ASI Report 69086

Dear Ron,

Enclosed please find the results of Microscopic Particulate Analysis (MPA) performed by Analytical Services, Inc. (ASI).

Sample(s) covered in this report were received at ASI on: 6/23/2022

This report contains the following number of pages (total): 5

This report concerns only the samples referenced herein. These results were generated under ASI's quality system, which is in accordance with the NELAC (TNI) standard. Deviations, if any, are noted.

Exceptions: NA

This report shall not be reproduced, except in full, without ASI's written permission.

Thank you for using ASI for your microbiological testing needs. If you have any questions, please contact us at 800-723-4432.

Sincerely,
ANALYTICAL SERVICES, INC. (ASI)

Harry D. Christman, Ph.D.
Technical Director

P 1/1

Microscopic Particulate Analysis (MPA)

Sample Information

Client	EnviroTest Laboratories	Volume Sampled (gal)	788.4
Site	Summit Club	Filter Color	Off-White
Water Type	Raw/Well	Sediment Volume (mL)	0.3
Client Sample ID	Well 1	Analysis Start	6/23/22 12:00
ASI Sample #	69086-01	Analysis End	8/4/22

MPA Data (data per 100 gal.)

Vol. Examined at 150x (gal.)	100	Detection Limit at 150X =	1.0
Vol. Examined at 300x (gal.)	NA	Detection Limit at 300X =	NA
Amorphous Debris	Uniform	Iron Bacteria	ND
Vegetative Debris w/ chlorophyll	ND	Crustaceans	ND
Veg. Debris w/o chlorophyll	1	Crustacean Parts/Eggs	ND
Diatoms w/ chlorophyll (300X)	ND	Water Mites	ND
Diatoms w/o chlorophyll (300X)	ND	Gastrotrichs	ND
Other Algae (300X, see below)	ND	Tardigrades	ND
Coccidia (300x)	ND	Nematodes/N. Eggs	ND
Rotifiers / Rotifier Eggs	ND	Invertebrate Eggs	ND
Spores	ND	Annelids	ND
Pollen	ND	Amoeba	ND
Insects/Larvae	ND	Protozoa (300X, non-Crypto/Giardia)	ND

Cryptosporidium and Giardia Data

		RESULTS	
Volume Examined (gal.)	394.2	Examined	Per 100gal
	Cryptosporidium Oocysts:	0	<0.25
	Giardia Cysts:	0	<0.25

MPA Risk Rating Score (per EPA Consensus Method)

Numerical Score	0	Risk Rating	Low

Other

Algae Observed	NA
Comments	NA

Methods: MPA - SOP based on EPA Consensus Method (EPA 910/9-92-029)

Cryptosporidium & Giardia - SOP based on purification, staining & exam procedures in EPA 1623/1623.1

Notes MPA Risk Rating Tables were developed by USEPA Region 10 from limited data; interpret with caution.

MPA Risk Rating Score - if less than 100 gallons was examined, interpret with caution.

Microscopic Particulate Analysis (MPA)

Sample Information

Client	EnviroTest Laboratories	Volume Sampled (gal)	562.2
Site	Summit Club	Filter Color	Off-White
Water Type	Raw/Well	Sediment Volume (mL)	0.2
Client Sample ID	Well 6A	Analysis Start	6/23/22 12:35
ASI Sample #	69086-02	Analysis End	8/4/22

MPA Data (data per 100 gal.)

Vol. Examined at 150x (gal.)	100	Detection Limit at 150X =	1.0
Vol. Examined at 300x (gal.)	NA	Detection Limit at 300X =	NA
Amorphous Debris	Uniform	Iron Bacteria	ND
Vegetative Debris w/ chlorophyll	ND	Crustaceans	ND
Veg. Debris w/o chlorophyll	4	Crustacean Parts/Eggs	ND
Diatoms w/ chlorophyll (300X)	ND	Water Mites	ND
Diatoms w/o chlorophyll (300X)	ND	Gastrotrichs	ND
Other Algae (300X, see below)	ND	Tardigrades	ND
Coccidia (300x)	ND	Nematodes/N. Eggs	ND
Rotifiers / Rotifier Eggs	ND	Invertebrate Eggs	ND
Spores	ND	Annelids	ND
Pollen	ND	Amoeba	ND
Insects/Larvae	ND	Protozoa (300X, non-Crypto/Giardia)	ND

Cryptosporidium and Giardia Data

		RESULTS	
Volume Examined (gal.)	281.1	Examined	Per 100gal
	Cryptosporidium Oocysts:	0	<0.36
	Giardia Cysts:	0	<0.36

MPA Risk Rating Score (per EPA Consensus Method)

Numerical Score	0	Risk Rating	Low

Other

Algae Observed	NA
Comments	NA

Methods: MPA - SOP based on EPA Consensus Method (EPA 910/9-92-029)

Cryptosporidium & Giardia - SOP based on purification, staining & exam procedures in EPA 1623/1623.1

Notes MPA Risk Rating Tables were developed by USEPA Region 10 from limited data; interpret with caution.

MPA Risk Rating Score - if less than 100 gallons was examined, interpret with caution.

227330

Page ___ of ___

Analytical Services, Inc.

CHAIN OF CUSTODY RECORD

Ship to: Analytical Services, Inc., 130 Allen Brook Lane, Williston, VT 05495, Attn: Sample Management
Phone: 1-800-723-4432 or 802-878-5138 • Fax: 802-878-6765 *Web site: www.analyticalservices.com*

Submitted By: WSP USA 4 Research Drive, Ste 204 Shelton, CT 06484 Phone: 475-882-1723 Email: stacy.stieber@wsp.com	Report To: Stacy Stieber WSP USA 4 Research Drive, Ste 204 Shelton, CT 06484 Phone: 475-882-1723 Email: stacy.stieber@wsp.com
Project Name: Summit Club Job Site: P.O. Number: 31403576.002	Invoice To: Phone: ___ Email: ___

Sample Identification*	Sample Collection			Sample Matrix (check one)						Analysis Requested	Lab Use Only
	Date (Start)	Time (Start)	Sampler Initials	Water - Raw	Water - Finished	Waste Water	Biosolids	Soil/Sediment	Other		Temp (°C)
Well 1	6/22/22	850	SZ	X						MPA w/ IFA	8.7°

*Sample ID should match ID written on the sample containers and data sheets. Sample ID will appear on the report for identification.

Relinquished By (signature)	Date/Time	Received By (signature)	Date/Time
	6/22/22 1145		6/22/22 1145
	6/22/22 1525		6/23/22 1040

Field Comments:

Lab Comments:

1/5

White – To accompany samples • Yellow – Sampler Copy

227328

Page ___ of ___

Analytical Services, Inc.

CHAIN OF CUSTODY RECORD

Ship to: Analytical Services, Inc., 130 Allen Brook Lane, Williston, VT 05495, Attn: Sample Management
Phone: 1-800-723-4432 or 802-878-5138 • Fax: 802-878-6765 *Web site: www.analyticalservices.com*

Submitted By: WSP USA 4 Research Drive, Suite 204 Shelton, CT 06484 Phone: 475-882-1723 Email: stacy.stieber@wsp.com	Report To: Stacy Stieber WSP USA Shelton 4 Research Drive Shelton, CT 06484 Phone: 475-882-1723 Email: stacy.stieber@wsp.com
Project Name: Summit Club Job Site: 31403576.002 P.O. Number:	Invoice To: Phone: Email:

Sample Identification*	Sample Collection			Sample Matrix (check one)						Analysis Requested	Lab Use Only
	Date (Start)	Time (Start)	Sampler Initials	Water - Raw	Water - Finished	Waste Water	Biosolids	Soil/Sediment	Other		Temp (°C)
Well 6A	6/22/22	855	SZ	X						MPA w/ IFA	6.0

*Sample ID should match ID written on the sample containers and data sheets. Sample ID will appear on the report for identification.

Relinquished By (signature)	Date/Time	Received By (signature)	Date/Time
	6/22/22 1145		6/22/22 1145
	6/22/22 1520		6/23/22 1040

Field Comments:

Lab Comments:

T/A

White – To accompany samples • Yellow – Sampler Copy

WELL 3

AQUA ENVIRONMENTAL LAB
56 Church Hill Road • Newtown, CT 06470 • (203) 270-9973
A York Analytical Company
YORK

Report of Analysis

Name: WSP, USA
4 Research Dr.
Ste. 204
Shelton, CT 06484
Sample Date: 6/20/2022 2:03 PM
Receipt Date: 6/20/2022 2:03 PM
Report Date: 7/11/2022
Sample Site: Summit Well 3

Sample ID#: 288621
Sample Type: Drinking Water
Sampler: WSP

Parameter	Sample Result	Units	Limits	Method	RL	Analysis Date / Time
Biological						
Coliform Bacteria	present *	none	0	SM9223B-04	0	6/23/2022 16:30
e Coli Bacteria	absent	none	0	SM9223B-04	0	6/23/2022 16:30
Heterotrophic Plate Count	195	MPN	No Limit Set	SM9215E	0	6/23/2022 13:40
Inorganic Compounds						
Chlorine, residual	0	mg/L	4	SM4500CLG-2011	0	6/20/2022 14:03
Metals						
Arsenic	ND	mg/L	0.01	EPA 200.5	0.005	6/24/2022 13:11
Copper	ND	mg/L	1.3	EPA 200.5	0.005	6/24/2022 13:11
Iron	ND	mg/L	0.3	EPA 200.5	0.005	6/24/2022 13:11
Lead	ND	mg/L	0.015	EPA 200.5	0.001	6/24/2022 13:11
Manganese	ND	mg/L	0.05	EPA 200.5	0.005	6/24/2022 13:11
Minerals						
Alkalinity	144	mg/L	No Limit Set	SM 2320B (-97)	5	7/5/2022 17:10
Chloride	8.0	mg/L	250	EPA 300.0	1	6/23/2022 21:42
Hardness	169	mg/L	No Limit Set	EPA 200.5	5	6/24/2022 13:11
Sodium	7.6	mg/L	100	EPA 200.5	1	6/24/2022 13:11
Sulfate	25.5	mg/L	250	EPA 300.0	2	6/23/2022 21:42
Miscellaneous/Other						
Langelier Saturation Index	-0.60 *	LSI	No Limit Set	CALCTN	None	7/6/2022 18:10
Nutrient						
Nitrate as N	1.0	mg/L	10	EPA 300.0	0.5	6/23/2022 21:42
Nitrite as N	ND	mg/L	1	EPA 300.0	0.1	6/23/2022 21:42
Physical						
Color, apparent	<5	CU	15	SM 2120B-01	5	6/21/2022 13:30
Odor	0	TON	2	SM2150B-2011	0	6/23/2022 16:00

Based on the bacteriological examination, according to the Federal Safe Drinking Water Act (SDWA), this water was unsafe for drinking purpose at the time the sample was collected. Corrective measures, followed by re-examination, are recommended.
*Serious corrosion.

ND = Not Detected
* = Above Specified Limit

CT Lic PH-0787 NY Lic 11706

AquaEnvLab.com
YorkLab.com
203 270 9973

Analytical results relate to the samples as received at the laboratory. Report shall not be reproduced except in its entirety without written approval from the laboratory.

AQUA ENVIRONMENTAL LAB
56 Church Hill Road • Newtown, CT 06470 • (203) 270-9973
A York Analytical Company
YORK

Report of Analysis

Name: WSP, USA
4 Research Dr.
Ste. 204
Shelton, CT 06484
Sample Date: 6/20/2022 2:03 PM
Receipt Date: 6/20/2022 2:03 PM
Report Date: 7/11/2022
Sample Site: Summit Well 3

Sample ID#: 288621
Sample Type: Drinking Water
Sampler: WSP

Parameter	Sample Result	Units	Limits	Method	RL	Analysis Date / Time
Physical						
PH	7.6	pH	6.4 - 8.5	SM4500HB-2011	0	6/20/2022 14:03
Total Dissolved Solids (TDS)	246	mg/L	500	SM2540C-2011	None	6/29/2022 12:03
Turbidity	0.30	NTU	5	EPA 180.1	0.05	6/23/2022 16:00
Radiochemicals						
Water Radon(212835)	813 +/-30	pCi/L	No Limit Set	SM7500Rn-23	0	6/23/2022 16:50

Comments: Based on the bacteriological examination, according to the Federal Safe Drinking Water Act (SDWA), this water was unsafe for drinking purpose at the time the sample was collected. Corrective measures, followed by re-examination, are recommended.
*Serious corrosion.

ND = Not Detected
* = Above Specified Limit

Report Approved by: _____ CT Lic PH-0787 NY Lic 11706
Lab Director

AquaEnvLab.com
YorkLab.com
203 270 9973

Analytical results relate to the samples as received at the laboratory. Report shall not be reproduced except in its entirety without written approval from the laboratory.

AQUA ENVIRONMENTAL LAB
56 Church Hill Road • Newtown, CT 06470 • (203) 270-9973
A York Analytical Company
YORK

Report of Analysis

Name: WSP, USA
4 Research Dr.
Ste. 204
Shelton, CT 06484
Sample Date: 6/20/2022 2:03 PM
Receipt Date: 6/20/2022 2:03 PM
Report Date: 7/27/2022
Sample Site: Summit Well 3

Sample ID#: 288622
Sample Type: Drinking Water
Sampler: WSP

Parameter	Sample Result	Units	Limits	Method	RL	Analysis Date / Time
Metals						
Antimony	ND	mg/L	0.006	EPA 200.5	0.005	6/24/2022 13:11
Arsenic	ND	mg/L	0.01	EPA 200.5	0.005	6/24/2022 13:11
Barium	0.04	mg/L	2	EPA 200.5	0.001	6/24/2022 13:11
Beryllium	ND	mg/L	0.004	EPA 200.5	0.001	6/24/2022 13:11
Cadmium	ND	mg/L	0.005	EPA 200.5	0.001	6/24/2022 13:11
Chromium(T)	ND	mg/L	0.1	EPA 200.5	0.001	6/24/2022 13:11
Cyanide	<0.005	mg/L	0.2	EPA 335.4	0.005	6/24/2022 10:38
Mercury	<0.0002	mg/L	0.002	EPA 245.2	0.0002	6/29/2022 10:36
Nickel	ND	mg/L	0.1	EPA 200.5	0.001	6/24/2022 13:11
Selenium	ND	mg/L	0.05	EPA 200.5	0.005	6/24/2022 13:11
Silver	ND	mg/L	0.1	EPA 200.5	0.002	6/24/2022 13:11
Thallium	ND	mg/L	0.002	EPA 200.8	0.001	6/29/2022 16:21
Zinc	ND	mg/L	5	EPA 200.5	0.005	6/24/2022 13:11
Minerals						
Chloride	8.0	mg/L	250	EPA 300.0	1	6/23/2022 21:42
Fluoride	ND	mg/L	4	EPA 300.0	0.1	6/23/2022 21:42
Sodium	7.6	mg/L	100	EPA 200.5	1	6/24/2022 13:11
Sulfate	25.5	mg/L	250	EPA 300.0	2	6/23/2022 21:42

ND = Not Detected
* = Above Specified Limit

Report Approved by: _____ Lab Director

CT Lic PH-0787 NY Lic 11706

AquaEnvLab.com
YorkLab.com
203 270 9973

Analytical results relate to the samples as received at the laboratory. Report shall not be reproduced except in its entirety without written approval from the laboratory.

AQUA ENVIRONMENTAL LAB
56 Church Hill Road • Newtown, CT 06470 • (203) 270-9973
A York Analytical Company
YORK

Report of Analysis

Name: WSP, USA
4 Research Dr.
Ste. 204
Shelton, CT 06484
Sample Date: 6/20/2022 2:03 PM
Receipt Date: 6/20/2022 2:03 PM
Report Date: 7/25/2022
Sample Site: Summit Well 3

Sample ID#: 288626
Sample Type: Drinking Water
Sampler: WSP

Parameter	Sample Result	Units	Limits	Method	RL	Analysis Date / Time
Volatile Organic Compounds						
01) Benzene	ND	ug/L	5	EPA 524.2	0.5	6/27/2022 09:11
02) Bromobenzene	ND	ug/L	5	EPA 524.2	0.5	6/27/2022 09:11
03) Bromochloromethane	ND	ug/L	5	EPA 524.2	0.5	6/27/2022 09:11
04) Bromomethane	ND	ug/L	5	EPA 524.2	0.5	6/27/2022 09:11
05) n-Butylbenzene	ND	ug/L	5	EPA 524.2	0.5	6/27/2022 09:11
06) sec-Butylbenzene	ND	ug/L	5	EPA 524.2	0.5	6/27/2022 09:11
07) tert-Butylbenzene	ND	ug/L	5	EPA 524.2	0.5	6/27/2022 09:11
08) Carbon Tetrachloride	ND	ug/L	5	EPA 524.2	0.5	6/27/2022 09:11
09) Chlorobenzene	ND	ug/L	5	EPA 524.2	0.5	6/27/2022 09:11
10) Chloroethane	ND	ug/L	5	EPA 524.2	0.5	6/27/2022 09:11
11) Chloromethane	ND	ug/L	5	EPA 524.2	0.5	6/27/2022 09:11
12) 2-Chlorotoluene	ND	ug/L	5	EPA 524.2	0.5	6/27/2022 09:11
13) 4-Chlorotoluene	ND	ug/L	5	EPA 524.2	0.5	6/27/2022 09:11
14) Dibromomethane	ND	ug/L	5	EPA 524.2	0.5	6/27/2022 09:11
15) 1,2-Dichlorobenzene	ND	ug/L	5	EPA 524.2	0.5	6/27/2022 09:11
16) 1,3-Dichlorobenzene	ND	ug/L	5	EPA 524.2	0.5	6/27/2022 09:11
17) 1,4-Dichlorobenzene	ND	ug/L	5	EPA 524.2	0.5	6/27/2022 09:11
18) Dichlorodifluoromethane	ND	ug/L	5	EPA 524.2	0.5	6/27/2022 09:11
19) 1,1-Dichloroethane	ND	ug/L	5	EPA 524.2	0.5	6/27/2022 09:11
20) 1,2-Dichloroethane	ND	ug/L	5	EPA 524.2	0.5	6/27/2022 09:11
21) 1,1-Dichloroethene	ND	ug/L	5	EPA 524.2	0.5	6/27/2022 09:11
22) cis-1,2,-Dichloroethene	ND	ug/L	5	EPA 524.2	0.5	6/27/2022 09:11
23) trans-1,2-Dichloroethene	ND	ug/L	5	EPA 524.2	0.5	6/27/2022 09:11
24) 1,2-Dichloropropane	ND	ug/L	5	EPA 524.2	0.5	6/27/2022 09:11
25) 1,3-Dichloropropane	ND	ug/L	5	EPA 524.2	0.5	6/27/2022 09:11
26) 2,2-Dichloropropane	ND	ug/L	5	EPA 524.2	0.5	6/27/2022 09:11
27) 1,1-Dichloropropene	ND	ug/L	5	EPA 524.2	0.5	6/27/2022 09:11

ND = Not Detected
* = Above Specified Limit

CT Lic PH-0787 NY Lic 11706

AquaEnvLab.com
YorkLab.com
203 270 9973

Analytical results relate to the samples as received at the laboratory. Report shall not be reproduced except in its entirety without written approval from the laboratory.

AQUA ENVIRONMENTAL LAB
56 Church Hill Road • Newtown, CT 06470 • (203) 270-9973
A York Analytical Company
YORK

Report of Analysis

Name: WSP, USA
4 Research Dr.
Ste. 204
Shelton, CT 06484
Sample Date: 6/20/2022 2:03 PM
Receipt Date: 6/20/2022 2:03 PM
Report Date: 7/25/2022
Sample Site: Summit Well 3

Sample ID#: 288626
Sample Type: Drinking Water
Sampler: WSP

Parameter	Sample Result	Units	Limits	Method	RL	Analysis Date / Time
Volatile Organic Compounds						
28] cis- 1,3-Dichloropropene	ND	ug/L	5	EPA 524.2	0.5	6/27/2022 09:11
29] trans-1,3-Dichloropropene	ND	ug/L	5	EPA 524.2	0.5	6/27/2022 09:11
30) Ethylbenzene	ND	ug/L	5	EPA 524.2	0.5	6/27/2022 09:11
31) Isopropylbenzene	ND	ug/L	5	EPA 524.2	0.5	6/27/2022 09:11
32) p-Isopropyltoluene	ND	ug/L	5	EPA 524.2	0.5	6/27/2022 09:11
33) Methylene chloride	ND	ug/L	5	EPA 524.2	0.5	6/27/2022 09:11
34) n-Propylbenzene	ND	ug/L	5	EPA 524.2	0.5	6/27/2022 09:11
35) Styrene	ND	ug/L	5	EPA 524.2	0.5	6/27/2022 09:11
36) 1,1,1,2-Tetrachloroethane	ND	ug/L	5	EPA 524.2	0.5	6/27/2022 09:11
37) 1,1,2,2-Tetrachloroethane	ND	ug/L	5	EPA 524.2	0.5	6/27/2022 09:11
38) Tetrachloroethene	ND	ug/L	5	EPA 524.2	0.5	6/27/2022 09:11
39) Toluene	ND	ug/L	5	EPA 524.2	0.5	6/27/2022 09:11
40) 1,2,3-Trichlorobenzene	ND	ug/L	5	EPA 524.2	0.5	6/27/2022 09:11
41) 1,2,4-Trichlorobenzene	ND	ug/L	5	EPA 524.2	0.5	6/27/2022 09:11
42) 1,1,1-Trichloroethane	ND	ug/L	5	EPA 524.2	0.5	6/27/2022 09:11
43) 1,1,2-Trichloroethane	ND	ug/L	5	EPA 524.2	0.5	6/27/2022 09:11
44) Trichloroethene	ND	ug/L	5	EPA 524.2	0.5	6/27/2022 09:11
45) Trichlorofluoromethane	ND	ug/L	5	EPA 524.2	0.5	6/27/2022 09:11
46) 1,2,3-Trichloropropane	ND	ug/L	5	EPA 524.2	0.5	6/27/2022 09:11
47} 1,2,4-Trimethylbenzene	ND	ug/L	5	EPA 524.2	0.5	6/27/2022 09:11
48) 1,3,5-Trimethylbenzene	ND	ug/L	5	EPA 524.2	0.5	6/27/2022 09:11
49) o-Xylene	ND	ug/L	5	EPA 524.2	0.5	6/27/2022 09:11
50) Hexachlorobutadiene	ND	ug/L	5	EPA 524.2	0.5	6/27/2022 09:11
51) m+p-Xylene	ND	ug/L	5	EPA 524.2	0.5	6/27/2022 09:11
52) Methyl-tertiary-butyl-ether	ND	ug/L	10	EPA 524.2	0.5	6/27/2022 09:11
53) Vinyl chloride	ND	ug/L	2	EPA 524.2	0.5	6/27/2022 09:11

ND = Not Detected
* = Above Specified Limit

Report Approved by: _____ CT Lic PH-0787 NY Lic 11706

Lab Director

AquaEnvLab.com
YorkLab.com
203 270 9973

Analytical results relate to the samples as received at the laboratory. Report shall not be reproduced except in its entirety without written approval from the laboratory.

AQUA ENVIRONMENTAL LAB
56 Church Hill Road • Newtown, CT 06470 • (203) 270-9973
A York Analytical Company
YORK

Report of Analysis

Name: WSP, USA
4 Research Dr.
Ste. 204
Shelton, CT 06484
Sample Date: 6/20/2022 2:03 PM
Receipt Date: 6/20/2022 2:03 PM
Report Date: 7/27/2022
Sample Site: Summit Well 3

Sample ID#: 288624
Sample Type: Drinking Water
Sampler: WSP

Parameter	Sample Result	Units	Limits	Method	RL	Analysis Date / Time
Organic Compounds						
PCB	ND	mg/L	0.5	EPA 508.1	0.0002	6/27/2022 10:55
Synthetic Organic Chemicals P						
Butachlor	ND	mg/L	0	EPA 508.1	0.001	6/27/2022 10:55
Dioxin	ND	ug/L	0	EPA 1613-B	5	7/2/2022 10:55
Endothall	ND	mg/L	0	EPA 548.1	5	6/29/2022 10:55
Metribuzin	ND	mg/L	0	EPA 508.1	0.0005	6/27/2022 10:55
Propachlor	ND	mg/L	0	EPA 508.1	0.001	6/27/2022 10:55
Synthetic Organic Chemicals P						
Dalapon	ND	mg/L	200	EPA 552.2	0.002	6/29/2022 10:55
Synthetic Organic Compounds						
2,4,5-TP	ND	mg/L	50	EPA 555	0.0004	6/29/2022 10:55
2,4-D	ND	mg/L	70	EPA 555	0.0002	6/29/2022 10:55
3-Hydroxycarbofuran	ND	mg/L	No Limit Set	EPA 531.1	0.002	7/8/2022 10:55
Alachlor	ND	mg/L	2	EPA 508.1	0.0004	6/27/2022 10:55
Aldicarb	ND	mg/L	No Limit Set	EPA 531.1	0.001	7/8/2022 10:55
Aldicarb Sulfone	ND	mg/L	No Limit Set	EPA 531.1	0.0017	7/8/2022 10:55
Aldicarb Sulfoxide	ND	mg/L	No Limit Set	EPA 531.1	0.001	7/8/2022 10:55
Aldrin	ND	mg/L	0	EPA 508.1	0.0005	6/27/2022 10:55
Atrazine	ND	ug/L	3	EPA 508.1	0.0002	6/27/2022 10:55
Benzo (A) Pyrene	ND	mg/L	0.2	EPA 525.2	0	7/12/2022 10:55
Carbaryl	ND	mg/L	No Limit Set	EPA 531.1	0.004	7/8/2022 10:55
Carbofuran	ND	mg/L	40	EPA 531.1	0.0019	7/8/2022 10:55
Chlordane	ND	mg/L	2	EPA 508.1	0.0004	6/27/2022 10:55
Di (2-ethylhexyl) adipate	ND	mg/L	400	EPA 525.2	0.001	7/12/2022 10:55
Di (2-ethylhexyl) phthalates	ND	mg/L	6	EPA 525.2	0.001	7/12/2022 10:55
Dibromochloropropane(DBCP)	ND	mg/L	0.2	EPA 504.1	0	6/29/2022 10:55

ND = Not Detected
* = Above Specified Limit

CT Lic PH-0787 NY Lic 11706

AquaEnvLab.com
YorkLab.com
203 270 9973

Analytical results relate to the samples as received at the laboratory. Report shall not be reproduced except in its entirety without written approval from the laboratory.

AQUA ENVIRONMENTAL LAB
56 Church Hill Road • Newtown, CT 06470 • (203) 270-9973
A York Analytical Company
YORK

Report of Analysis

Name: WSP, USA
4 Research Dr.
Ste. 204
Shelton, CT 06484
Sample Date: 6/20/2022 2:03 PM
Receipt Date: 6/20/2022 2:03 PM
Report Date: 7/27/2022
Sample Site: Summit Well 3

Sample ID#: 288624
Sample Type: Drinking Water
Sampler: WSP

Parameter	Sample Result	Units	Limits	Method	RL	Analysis Date / Time
Synthetic Organic Compounds						
Dicamba	ND	mg/L	No Limit Set	EPA 555	0.0008	6/29/2022 10:55
Dieldrin	ND	mg/L	No Limit Set	EPA 508.1	0	6/27/2022 10:55
Dinoseb	ND	mg/L	7	EPA 555	0.0004	6/29/2022 10:55
Diquat	ND	mg/L	0	EPA 549.2	0.0008	6/28/2022 10:55
Endrin	ND	mg/L	2	EPA 508.1	0	6/27/2022 10:55
Ethylene Dibromide(EDB)	ND	mg/L	0.05	EPA 504.1	0	6/29/2022 10:55
Glyphosphate	ND	mg/L	700	EPA 547	0.01	6/28/2022 10:55
Heptachlor	ND	mg/L	0.4	EPA 508.1	0.0001	6/27/2022 10:55
Heptachlor Epoxide	ND	mg/L	No Limit Set	EPA 508.1	0.0002	6/27/2022 10:55
Hexachlorobenzene	ND	mg/L	1	EPA 508.1	0.0002	6/27/2022 10:55
Hexachlorocyclopentadiene	ND	mg/L	50	EPA 508.1	0.0002	6/27/2022 10:55
Lindane	ND	mg/L	0.2	EPA 508.1	0.0002	6/27/2022 10:55
Methomyl	ND	mg/L	0	EPA 531.1	0.004	7/8/2022 10:55
Methoxychlor	ND	mg/L	40	EPA 508.1	0.001	6/27/2022 10:55
Metolachlor	ND	mg/L	No Limit Set	EPA 508.1	0.001	6/27/2022 10:55
Oxamyl (Vydate)	ND	mg/L	200	EPA 531.1	0.004	7/8/2022 10:55
Pentachlorophenol	ND	mg/L	1	EPA 555	0.0001	6/29/2022 10:55
Picloram	ND	mg/L	500	EPA 555	0.0002	6/29/2022 10:55
Simazine	ND	mg/L	4	EPA 508.1	0.0001	6/27/2022 10:55
Toxaphene	ND	mg/L	3	EPA 508.1	0.002	6/27/2022 10:55

ND = Not Detected
* = Above Specified Limit

Report Approved by: _____ Lab Director

CT Lic PH-0787 NY Lic 11706

AquaEnvLab.com
YorkLab.com
203 270 9973

Analytical results relate to the samples as received at the laboratory. Report shall not be reproduced except in its entirety without written approval from the laboratory.

AQUA ENVIRONMENTAL LAB
56 Church Hill Road • Newtown, CT 06470 • (203) 270-9973
A York Analytical Company

Report of Analysis

Name: WSP, USA
4 Research Dr.
Ste. 204
Shelton, CT 06484
Sample Date: 6/20/2022 2:03 PM
Receipt Date: 6/20/2022 2:03 PM
Report Date: 7/26/2022
Sample Site: Summit Well 3

Sample ID#: 288627
Sample Type: Drinking Water
Sampler: WSP

Parameter	Sample Result	Units	Limits	Method	RL	Analysis Date / Time
Radiochemicals						
Gross Beta	2.74+/-1.06	pCi/L	No Limit Set	EPA 900.0	None	7/18/2022 08:36
Radium 226	0.129+/-0.222	pCi/L	5	EPA 903.0	1	7/21/2022 14:03
Radium 228	0.468+/-0.305	pCi/L	5	EPA 904.0	1	7/21/2022 11:58
Total Gross Alpha	3.35+/-1.75	pCi/L	No Limit Set	EPA 900.0	3	7/18/2022 08:36
Uranium	1.3	ug/L	30	EPA 200.8	1	6/29/2022 16:21

ND = Not Detected
* = Above Specified Limit

Report Approved by: _____ CT Lic PH-0787 NY Lic 11706

Lab Director

AquaEnvLab.com
YorkLab.com
203 270 9973

Analytical results relate to the samples as received at the laboratory. Report shall not be reproduced except in its entirety without written approval from the laboratory.

AQUA ENVIRONMENTAL LAB
56 Church Hill Road • Newtown, CT 06470 • (203) 270-9973
A York Analytical Company
YORK ANALYTICAL LABORATORIES INC

Report of Analysis

Name: WSP, USA
4 Research Dr.
Ste. 204
Shelton, CT 06484
Sample Date: 6/20/2022 2:03 PM
Receipt Date: 6/20/2022 2:03 PM
Report Date: 7/1/2022
Sample Site: Summit Well 3

Sample ID#: 288620
Sample Type: Drinking Water
Sampler: WSP

Parameter	Sample Result	Units	Limits	Method	RL	Analysis Date / Time
Miscellaneous/Other						
Asbestos	ND	MFL	0	EPA 100.2	0.19	6/30/2022 08:19

ND = Not Detected
* = Above Specified Limit

Report Approved by: _____ CT Lic PH-0787 NY Lic 11706
Lab Director

AquaEnvLab.com
YorkLab.com
203 270 9973

Analytical results relate to the samples as received at the laboratory. Report shall not be reproduced except in its entirety without written approval from the laboratory.

AQUA ENVIRONMENTAL LAB
56 Church Hill Road • Newtown, CT 06470 • (203) 270-9973
A York Analytical Company
YORK ANALYTICAL LABORATORIES INC

Report of Analysis

Name: WSP, USA
4 Research Dr.
Ste. 204
Shelton, CT 06484
Sample Date: 6/20/2022 2:03 PM
Receipt Date: 6/20/2022 2:03 PM
Report Date: 7/25/2022
Sample Site: Summit Well 3

Sample ID#: 288623
Sample Type: Drinking Water
Sampler: WSP

Parameter	Sample Result	Units	Limits	Method	RL	Analysis Date / Time
Organic Compounds						
Propylene Glycol	1.1	mg/L	No Limit Set	SW8015	1	6/27/2022 14:03

ND = Not Detected
* = Above Specified Limit

Report Approved by: _____ CT Lic PH-0787 NY Lic 11706
Lab Director

AquaEnvLab.com
YorkLab.com
203 270 9973

Analytical results relate to the samples as received at the laboratory. Report shall not be reproduced except in its entirety without written approval from the laboratory.

AQUA ENVIRONMENTAL LAB
56 Church Hill Road • Newtown, CT 06470 • (203) 270-9973
A York Analytical Company

Report of Analysis

Name: WSP, USA
4 Research Dr.
Ste. 204
Shelton, CT 06484
Sample Date: 6/20/2022 2:03 PM
Receipt Date: 6/20/2022 2:03 PM
Report Date: 7/6/2022
Sample Site: Summit Well 3

Sample ID#: 288625
Sample Type: Drinking Water
Sampler: WSP

Parameter	Sample Result	Units	Limits	Method	RL	Analysis Date / Time
Organic Compounds						
1,4-Dioxane	ND	ug/L	1	EPA 522	0.2	6/24/2022 07:43
PerFluoroButaneSulfonic Acid	ND	ng/L	No Limit Set	EPA 537	1.34	7/1/2022 11:13
PerFluoroHeptanoic Acid	ND	ng/L	No Limit Set	EPA 537	1.34	7/1/2022 11:13
PerFluoroHexaneSulfonic Acid	1.46	ng/L	49	EPA 537	1.34	7/1/2022 11:13
PerFluoroHexanoic Acid	1.49	ng/L	No Limit Set	EPA 537	1.34	7/1/2022 11:13
PerFluoroNonanoic Acid	ND	ng/L	12	EPA 537	1.34	7/1/2022 11:13
PerFluoroOctaneSulfonic Acid	2.05	ng/L	10	EPA 537	1.34	7/1/2022 11:13
PerFluoroOctanoic Acid	3.35	ng/L	16	EPA 537	1.34	7/1/2022 11:13

ND = Not Detected
* = Above Specified Limit

Report Approved by: _____
Lab Director

CT Lic PH-0787 NY Lic 11706

AquaEnvLab.com
YorkLab.com
203 270 9973

Analytical results relate to the samples as received at the laboratory. Report shall not be reproduced except in its entirety without written approval from the laboratory.

Technical Report
Perfluoroalkyl Substances (PFAS)

prepared for:

Aqua Environmental Lab
56 Church Hill Road
Newtown CT, 06470
Attention: T. Braun

Report Date: 07/05/2022
Client Project ID: 288625/288617/288673
York Project (SDG) No.: 22F1242

Report Date: 07/05/2022
Client Project ID: 288625/288617/288673
York Project (SDG) No.: 22F1242

Aqua Environmental Lab
56 Church Hill Road
Newtown CT, 06470
Attention: T. Braun

Purpose and Results

This report contains the analytical data for the sample(s) identified on the attached chain-of-custody received in our laboratory on June 23, 2022 and listed below. The project was identified as your project: **288625/288617/288673**.

The analyses were conducted utilizing appropriate EPA methods as detailed in the data summary tables.

All samples were received in proper condition meeting the customary acceptance requirements for environmental samples except those indicated under the Sample and Analysis Qualifiers section of this report.

All analyses met the method and laboratory standard operating procedure requirements except as indicated by any data flags, the meaning of which are explained in the Sample and Data Qualifiers Relating to This Work Order section of this report and case narrative if applicable.

Please contact Client Services at 203.325.1371 with any questions regarding this report or e-mail clientservices@yorklab.com.

York Sample ID	Client Sample ID	Matrix	Date Collected	Date Received
22F1242-01	288625	Drinking Water	06/23/2022	06/23/2022
22F1242-02	288617	Drinking Water	06/23/2022	06/23/2022
22F1242-03	288673	Drinking Water	06/23/2022	06/23/2022
22F1242-04	288625-PFAS-Field Blank	Drinking Water	06/23/2022	06/23/2022
22F1242-05	288617-PFAS-Field Blank	Drinking Water	06/23/2022	06/23/2022
22F1242-06	288673-PFAS-Field Blank	Drinking Water	06/23/2022	06/23/2022

General Notes for York Project (SDG) No.: 22F1242

1. The RLs and MDLs (Reporting Limit and Method Detection Limit respectively) reported are adjusted for any dilution necessary due to the levels of target and/or non-target analytes and matrix interference. The RL(REPORTING LIMIT) is based upon the lowest standard utilized for the calibration where applicable.
2. Samples are retained for a period of thirty days after submittal of report, unless other arrangements are made.
3. York's liability for the above data is limited to the dollar value paid to York for the referenced project.
4. This report shall not be reproduced without the written approval of York Analytical Laboratories, Inc.
5. All analyses conducted met method or Laboratory SOP requirements. See the Sample and Data Qualifiers Section for further information.
6. It is noted that no analyses reported herein were subcontracted to another laboratory, unless noted in the report.
7. This report reflects results that relate only to the samples submitted on the attached chain-of-custody form(s) received by York.
8. Analyses conducted at York Analytical Laboratories, Inc. Stratford, CT are indicated by NY Cert. No. 10854; those conducted at York Analytical Laboratories, Inc., Richmond Hill, NY are indicated by NY Cert. No. 12058.

Approved By: Cassie L. Mosher

Cassie L. Mosher
Laboratory Manager

Date: 07/05/2022

Sample Information

Client Sample ID: 288625 **York Sample ID:** 22F1242-01

York Project (SDG) No.	Client Project ID	Matrix	Collection Date/Time	Date Received
22F1242	288625/288617/288673	Drinking Water	June 23, 2022 8:00 am	06/23/2022

1,4-Dioxane by GC/MS/SIM EPA 522

Log-in Notes:

Sample Notes:

Sample Prepared by Method: EPA 522

CAS No.	Parameter	Result	Flag	Maximum Contaminant Level MCL, ng/L	Units	Reported to LOQ	Reference Method	Date/Time Analyzed	Analyst
123-91-1	1,4-Dioxane	ND		1	ug/L	0.200	EPA 522	06/24/2022 07:43	KH
					Certifications:		NELAC-NY10854	06/27/2022 15:05	
1693-74-9	*** Tetrahydrofuran-d8**	**0.500**		**0**	ug/mL		EPA 522	06/24/2022 07:43	KH
					Certifications:			06/27/2022 15:05	

	Surrogate Recoveries	Result	Acceptance Range
17647-74-4	*Surrogate: 1,4-Dioxane-d8*	*80.0 %*	*70-130*

PFAS, EPA 537.1 List

Well 3

Log-in Notes:

Sample Notes:

Sample Prepared by Method: EPA 537.1 SPE DVB

CAS No.	Parameter	Result	Flag	Maximum Contaminant Level MCL, ng/L	Units	Reported to LOQ	Reference Method	Date/Time Analyzed	Analyst
375-73-5	* Perfluorobutanesulfonic acid (PFBS)	ND		0	ng/L	1.35	EPA 537.1	07/01/2022 11:13	WEL
					Certifications:			07/05/2022 13:50	
307-24-4	*** Perfluorohexanoic acid (PFHxA)**	**1.49**		**0**	ng/L	1.35	EPA 537.1	07/01/2022 11:13	WEL
					Certifications:			07/05/2022 13:50	
375-85-9	* Perfluoroheptanoic acid (PFHpA)	ND		0	ng/L	1.35	EPA 537.1	07/01/2022 11:13	WEL
					Certifications:			07/05/2022 13:50	
355-46-4	*** Perfluorohexanesulfonic acid (PFHxS)**	**1.46**		**0**	ng/L	1.35	EPA 537.1	07/01/2022 11:13	WEL
					Certifications:			07/05/2022 13:50	
335-67-1	**Perfluorooctanoic acid (PFOA)**	**3.35**		**10**	ng/L	1.35	EPA 537.1	07/01/2022 11:13	WEL
					Certifications:		NELAC-NY12058	07/05/2022 13:50	
1763-23-1	**Perfluorooctanesulfonic acid (PFOS)**	**2.05**		**10**	ng/L	1.35	EPA 537.1	07/01/2022 11:13	WEL
					Certifications:		NELAC-NY12058	07/05/2022 13:50	
375-95-1	* Perfluorononanoic acid (PFNA)	ND		0	ng/L	1.35	EPA 537.1	07/01/2022 11:13	WEL
					Certifications:			07/05/2022 13:50	
335-76-2	* Perfluorodecanoic acid (PFDA)	ND		0	ng/L	1.35	EPA 537.1	07/01/2022 11:13	WEL
					Certifications:			07/05/2022 13:50	
2058-94-8	* Perfluoroundecanoic acid (PFUnA)	ND		0	ng/L	1.35	EPA 537.1	07/01/2022 11:13	WEL
					Certifications:			07/05/2022 13:50	
307-55-1	* Perfluorododecanoic acid (PFDoA)	ND		0	ng/L	1.35	EPA 537.1	07/01/2022 11:13	WEL
					Certifications:			07/05/2022 13:50	
72629-94-8	* Perfluorotridecanoic acid (PFTrDA)	ND		0	ng/L	1.35	EPA 537.1	07/01/2022 11:13	WEL
					Certifications:			07/05/2022 13:50	
376-06-7	* Perfluorotetradecanoic acid (PFTA)	ND		0	ng/L	1.35	EPA 537.1	07/01/2022 11:13	WEL
					Certifications:			07/05/2022 13:50	
2355-31-9	* N-MeFOSAA	ND		0	ng/L	1.35	EPA 537.1	07/01/2022 11:13	WEL
					Certifications:			07/05/2022 13:50	
2991-50-6	* N-EtFOSAA	ND		0	ng/L	1.35	EPA 537.1	07/01/2022 11:13	WEL
					Certifications:			07/05/2022 13:50	

Sample Information

Client Sample ID: 288625 **York Sample ID:** 22F1242-01

York Project (SDG) No.	Client Project ID	Matrix	Collection Date/Time	Date Received
22F1242	288625/288617/288673	Drinking Water	June 23, 2022 8:00 am	06/23/2022

PFAS, EPA 537.1 List

Log-in Notes:

Sample Notes:

Sample Prepared by Method: EPA 537.1 SPE DVB

CAS No.	Parameter	Result	Flag	Maximum Contaminant Level MCL, ng/L	Units	Reported to LOQ	Reference Method	Date/Time Analyzed	Analyst
756426-58-1	* 9CL-PF3ONS	ND		0	ng/L	1.35	EPA 537.1	07/01/2022 11:13	WEL
					Certifications:			07/05/2022 13:50	
763051-92-9	* 11CL-PF3OUdS	ND		0	ng/L	1.35	EPA 537.1	07/01/2022 11:13	WEL
					Certifications:			07/05/2022 13:50	
13252-13-6	* HFPO-DA (Gen-X)	ND		0	ng/L	1.35	EPA 537.1	07/01/2022 11:13	WEL
					Certifications:			07/05/2022 13:50	
919005-14-4	* ADONA	ND		0	ng/L	1.35	EPA 537.1	07/01/2022 11:13	WEL
					Certifications:			07/05/2022 13:50	

Surrogate Recoveries	Result	Acceptance Range
Surrogate: d5-N-EtFOSAA	*107 %*	*70-130*
Surrogate: 13C-PFDA	*90.5 %*	*70-130*
Surrogate: 13C-PFHxA	*104 %*	*70-130*
Surrogate: M3HFPO-DA	*96.7 %*	*70-130*

Sample Information

Client Sample ID: 288617 **York Sample ID:** 22F1242-02

York Project (SDG) No.	Client Project ID	Matrix	Collection Date/Time	Date Received
22F1242	288625/288617/288673	Drinking Water	June 23, 2022 9:00 am	06/23/2022

1,4-Dioxane by GC/MS/SIM EPA 522

Log-in Notes:

Sample Notes:

Sample Prepared by Method: EPA 522

CAS No.	Parameter	Result	Flag	Maximum Contaminant Level MCL, ng/L	Units	Reported to LOQ	Reference Method	Date/Time Analyzed	Analyst
123-91-1	1,4-Dioxane	ND		1	ug/L	0.200	EPA 522	06/24/2022 07:43	KH
					Certifications:	NELAC-NY10854		06/27/2022 15:25	
1693-74-9	*** Tetrahydrofuran-d8**	**0.500**		**0**	ug/mL		EPA 522	06/24/2022 07:43	KH
					Certifications:			06/27/2022 15:25	

	Surrogate Recoveries	Result	Acceptance Range
17647-74-4	*Surrogate: 1,4-Dioxane-d8*	*80.0 %*	*70-130*

PFAS, EPA 537.1 List Well 6A

Log-in Notes:

Sample Notes:

Sample Prepared by Method: EPA 537.1 SPE DVB

CAS No.	Parameter	Result	Flag	Maximum Contaminant Level MCL, ng/L	Units	Reported to LOQ	Reference Method	Date/Time Analyzed	Analyst
375-73-5	* Perfluorobutanesulfonic acid (PFBS)	ND		0	ng/L	1.43	EPA 537.1	07/01/2022 11:13	WEL
					Certifications:			07/05/2022 14:03	

Sample Information

Client Sample ID: 288617 **York Sample ID:** 22F1242-02

York Project (SDG) No.	Client Project ID	Matrix	Collection Date/Time	Date Received
22F1242	288625/288617/288673	Drinking Water	June 23, 2022 9:00 am	06/23/2022

PFAS, EPA 537.1 List

Log-in Notes:

Sample Notes:

Sample Prepared by Method: EPA 537.1 SPE DVB

CAS No.	Parameter	Result	Flag	Maximum Contaminant Level MCL, ng/L	Units	Reported to LOQ	Reference Method	Date/Time Analyzed	Analyst
307-24-4	*** Perfluorohexanoic acid (PFHxA)**	**1.78**		**0**	ng/L	1.43	EPA 537.1	07/01/2022 11:13	WEL
					Certifications:			07/05/2022 14:03	
375-85-9	* Perfluoroheptanoic acid (PFHpA)	ND		0	ng/L	1.43	EPA 537.1	07/01/2022 11:13	WEL
					Certifications:			07/05/2022 14:03	
355-46-4	*** Perfluorohexanesulfonic acid (PFHxS)**	**1.54**		**0**	ng/L	1.43	EPA 537.1	07/01/2022 11:13	WEL
					Certifications:			07/05/2022 14:03	
335-67-1	**Perfluorooctanoic acid (PFOA)**	**3.88**		**10**	ng/L	1.43	EPA 537.1	07/01/2022 11:13	WEL
					Certifications:	NELAC-NY12058		07/05/2022 14:03	
1763-23-1	**Perfluorooctanesulfonic acid (PFOS)**	**2.29**		**10**	ng/L	1.43	EPA 537.1	07/01/2022 11:13	WEL
					Certifications:	NELAC-NY12058		07/05/2022 14:03	
375-95-1	* Perfluorononanoic acid (PFNA)	ND		0	ng/L	1.43	EPA 537.1	07/01/2022 11:13	WEL
					Certifications:			07/05/2022 14:03	
335-76-2	* Perfluorodecanoic acid (PFDA)	ND		0	ng/L	1.43	EPA 537.1	07/01/2022 11:13	WEL
					Certifications:			07/05/2022 14:03	
2058-94-8	* Perfluoroundecanoic acid (PFUnA)	ND		0	ng/L	1.43	EPA 537.1	07/01/2022 11:13	WEL
					Certifications:			07/05/2022 14:03	
307-55-1	* Perfluorododecanoic acid (PFDoA)	ND		0	ng/L	1.43	EPA 537.1	07/01/2022 11:13	WEL
					Certifications:			07/05/2022 14:03	
72629-94-8	* Perfluorotridecanoic acid (PFTrDA)	ND		0	ng/L	1.43	EPA 537.1	07/01/2022 11:13	WEL
					Certifications:			07/05/2022 14:03	
376-06-7	* Perfluorotetradecanoic acid (PFTA)	ND		0	ng/L	1.43	EPA 537.1	07/01/2022 11:13	WEL
					Certifications:			07/05/2022 14:03	
2355-31-9	* N-MeFOSAA	ND		0	ng/L	1.43	EPA 537.1	07/01/2022 11:13	WEL
					Certifications:			07/05/2022 14:03	
2991-50-6	* N-EtFOSAA	ND		0	ng/L	1.43	EPA 537.1	07/01/2022 11:13	WEL
					Certifications:			07/05/2022 14:03	
756426-58-1	* 9CL-PF3ONS	ND		0	ng/L	1.43	EPA 537.1	07/01/2022 11:13	WEL
					Certifications:			07/05/2022 14:03	
763051-92-9	* 11CL-PF3OUdS	ND		0	ng/L	1.43	EPA 537.1	07/01/2022 11:13	WEL
					Certifications:			07/05/2022 14:03	
13252-13-6	* HFPO-DA (Gen-X)	ND		0	ng/L	1.43	EPA 537.1	07/01/2022 11:13	WEL
					Certifications:			07/05/2022 14:03	
919005-14-4	* ADONA	ND		0	ng/L	1.43	EPA 537.1	07/01/2022 11:13	WEL
					Certifications:			07/05/2022 14:03	

Surrogate Recoveries	Result	Acceptance Range
Surrogate: d5-N-EtFOSAA	*102 %*	*70-130*
Surrogate: 13C-PFDA	*96.1 %*	*70-130*
Surrogate: 13C-PFHxA	*109 %*	*70-130*
Surrogate: M3HFPO-DA	*101 %*	*70-130*

Sample Information

Client Sample ID: 288673 **York Sample ID:** 22F1242-03

York Project (SDG) No.	Client Project ID	Matrix	Collection Date/Time	Date Received
22F1242	288625/288617/288673	Drinking Water	June 23, 2022 9:20 am	06/23/2022

1,4-Dioxane by GC/MS/SIM EPA 522

Log-in Notes:

Sample Notes:

Sample Prepared by Method: EPA 522

CAS No.	Parameter	Result	Flag	Maximum Contaminant Level MCL, ng/L	Units	Reported to LOQ	Reference Method	Date/Time Analyzed	Analyst
123-91-1	1,4-Dioxane	ND		1	ug/L	0.200	EPA 522	06/24/2022 07:43	KH
					Certifications:	NELAC-NY10854		06/27/2022 15:44	
1693-74-9	*** Tetrahydrofuran-d8**	**0.500**		**0**	ug/mL		EPA 522	06/24/2022 07:43	KH
					Certifications:			06/27/2022 15:44	

	Surrogate Recoveries	Result	Acceptance Range
17647-74-4	*Surrogate: 1,4-Dioxane-d8*	*80.0 %*	*70-130*

PFAS, EPA 537.1 List

Well 1

Log-in Notes:

Sample Notes:

Sample Prepared by Method: EPA 537.1 SPE DVB

CAS No.	Parameter	Result	Flag	Maximum Contaminant Level MCL, ng/L	Units	Reported to LOQ	Reference Method	Date/Time Analyzed	Analyst
375-73-5	* Perfluorobutanesulfonic acid (PFBS)	ND		0	ng/L	1.11	EPA 537.1	07/01/2022 11:13	WEL
					Certifications:			07/05/2022 14:15	
307-24-4	*** Perfluorohexanoic acid (PFHxA)**	**4.48**		**0**	ng/L	1.11	EPA 537.1	07/01/2022 11:13	WEL
					Certifications:			07/05/2022 14:15	
375-85-9	* Perfluoroheptanoic acid (PFHpA)	ND		0	ng/L	1.11	EPA 537.1	07/01/2022 11:13	WEL
					Certifications:			07/05/2022 14:15	
355-46-4	*** Perfluorohexanesulfonic acid (PFHxS)**	**2.22**		**0**	ng/L	1.11	EPA 537.1	07/01/2022 11:13	WEL
					Certifications:			07/05/2022 14:15	
335-67-1	**Perfluorooctanoic acid (PFOA)**	**4.70**		**10**	ng/L	1.11	EPA 537.1	07/01/2022 11:13	WEL
					Certifications:	NELAC-NY12058		07/05/2022 14:15	
1763-23-1	**Perfluorooctanesulfonic acid (PFOS)**	**4.00**		**10**	ng/L	1.11	EPA 537.1	07/01/2022 11:13	WEL
					Certifications:	NELAC-NY12058		07/05/2022 14:15	
375-95-1	* Perfluorononanoic acid (PFNA)	ND		0	ng/L	1.11	EPA 537.1	07/01/2022 11:13	WEL
					Certifications:			07/05/2022 14:15	
335-76-2	* Perfluorodecanoic acid (PFDA)	ND		0	ng/L	1.11	EPA 537.1	07/01/2022 11:13	WEL
					Certifications:			07/05/2022 14:15	
2058-94-8	* Perfluoroundecanoic acid (PFUnA)	ND		0	ng/L	1.11	EPA 537.1	07/01/2022 11:13	WEL
					Certifications:			07/05/2022 14:15	
307-55-1	* Perfluorododecanoic acid (PFDoA)	ND		0	ng/L	1.11	EPA 537.1	07/01/2022 11:13	WEL
					Certifications:			07/05/2022 14:15	
72629-94-8	* Perfluorotridecanoic acid (PFTrDA)	ND		0	ng/L	1.11	EPA 537.1	07/01/2022 11:13	WEL
					Certifications:			07/05/2022 14:15	
376-06-7	* Perfluorotetradecanoic acid (PFTA)	ND		0	ng/L	1.11	EPA 537.1	07/01/2022 11:13	WEL
					Certifications:			07/05/2022 14:15	
2355-31-9	* N-MeFOSAA	ND		0	ng/L	1.11	EPA 537.1	07/01/2022 11:13	WEL
					Certifications:			07/05/2022 14:15	
2991-50-6	* N-EtFOSAA	ND		0	ng/L	1.11	EPA 537.1	07/01/2022 11:13	WEL
					Certifications:			07/05/2022 14:15	
756426-58-1	* 9CL-PF3ONS	ND		0	ng/L	1.11	EPA 537.1	07/01/2022 11:13	WEL
					Certifications:			07/05/2022 14:15	

Sample Information

Client Sample ID: 288673 **York Sample ID:** 22F1242-03

York Project (SDG) No.	Client Project ID	Matrix	Collection Date/Time	Date Received
22F1242	288625/288617/288673	Drinking Water	June 23, 2022 9:20 am	06/23/2022

PFAS, EPA 537.1 List **Log-in Notes:** **Sample Notes:**

Sample Prepared by Method: EPA 537.1 SPE DVB

CAS No.	Parameter	Result	Flag	Maximum Contaminant Level MCL, ng/L	Units	Reported to LOQ	Reference Method	Date/Time Analyzed	Analyst
763051-92-9	* 11CL-PF3OUdS	ND		0	ng/L	1.11	EPA 537.1	07/01/2022 11:13	WEL
					Certifications:			07/05/2022 14:15	
13252-13-6	* HFPO-DA (Gen-X)	ND		0	ng/L	1.11	EPA 537.1	07/01/2022 11:13	WEL
					Certifications:			07/05/2022 14:15	
919005-14-4	* ADONA	ND		0	ng/L	1.11	EPA 537.1	07/01/2022 11:13	WEL
					Certifications:			07/05/2022 14:15	

Surrogate Recoveries	Result	Acceptance Range
Surrogate: d5-N-EtFOSAA	*96.0 %*	*70-130*
Surrogate: 13C-PFDA	*84.4 %*	*70-130*
Surrogate: 13C-PFHxA	*97.8 %*	*70-130*
Surrogate: M3HFPO-DA	*92.7 %*	*70-130*

Sample Information

Client Sample ID: 288625-PFAS-Field Blank **York Sample ID:** 22F1242-04

York Project (SDG) No.	Client Project ID	Matrix	Collection Date/Time	Date Received
22F1242	288625/288617/288673	Drinking Water	June 23, 2022 8:00 am	06/23/2022

PFAS, EPA 537.1 List **Log-in Notes:** **Sample Notes:**

Sample Prepared by Method: EPA 537.1 SPE DVB

CAS No.	Parameter	Result	Flag	Maximum Contaminant Level MCL, ng/L	Units	Reported to LOQ	Reference Method	Date/Time Analyzed	Analyst
375-73-5	* Perfluorobutanesulfonic acid (PFBS)	ND		0	ng/L	1.52	EPA 537.1	07/01/2022 11:13	WEL
					Certifications:			07/05/2022 14:27	
307-24-4	* Perfluorohexanoic acid (PFHxA)	ND		0	ng/L	1.52	EPA 537.1	07/01/2022 11:13	WEL
					Certifications:			07/05/2022 14:27	
375-85-9	* Perfluoroheptanoic acid (PFHpA)	ND		0	ng/L	1.52	EPA 537.1	07/01/2022 11:13	WEL
					Certifications:			07/05/2022 14:27	
355-46-4	* Perfluorohexanesulfonic acid (PFHxS)	ND		0	ng/L	1.52	EPA 537.1	07/01/2022 11:13	WEL
					Certifications:			07/05/2022 14:27	
335-67-1	Perfluorooctanoic acid (PFOA)	ND		10	ng/L	1.52	EPA 537.1	07/01/2022 11:13	WEL
					Certifications:	NELAC-NY12058		07/05/2022 14:27	
1763-23-1	Perfluorooctanesulfonic acid (PFOS)	ND		10	ng/L	1.52	EPA 537.1	07/01/2022 11:13	WEL
					Certifications:	NELAC-NY12058		07/05/2022 14:27	
375-95-1	* Perfluorononanoic acid (PFNA)	ND		0	ng/L	1.52	EPA 537.1	07/01/2022 11:13	WEL
					Certifications:			07/05/2022 14:27	
335-76-2	* Perfluorodecanoic acid (PFDA)	ND		0	ng/L	1.52	EPA 537.1	07/01/2022 11:13	WEL
					Certifications:			07/05/2022 14:27	
2058-94-8	* Perfluoroundecanoic acid (PFUnA)	ND		0	ng/L	1.52	EPA 537.1	07/01/2022 11:13	WEL
					Certifications:			07/05/2022 14:27	

Sample Information

Client Sample ID: 288625-PFAS-Field Blank **York Sample ID:** 22F1242-04

York Project (SDG) No.	Client Project ID	Matrix	Collection Date/Time	Date Received
22F1242	288625/288617/288673	Drinking Water	June 23, 2022 8:00 am	06/23/2022

PFAS, EPA 537.1 List

Log-in Notes:

Sample Notes:

Sample Prepared by Method: EPA 537.1 SPE DVB

CAS No.	Parameter	Result	Flag	Maximum Contaminant Level MCL, ng/L	Units	Reported to LOQ	Reference Method	Date/Time Analyzed	Analyst
307-55-1	* Perfluorododecanoic acid (PFDoA)	ND		0	ng/L	1.52	EPA 537.1	07/01/2022 11:13	WEL
					Certifications:			07/05/2022 14:27	
72629-94-8	* Perfluorotridecanoic acid (PFTrDA)	ND		0	ng/L	1.52	EPA 537.1	07/01/2022 11:13	WEL
					Certifications:			07/05/2022 14:27	
376-06-7	* Perfluorotetradecanoic acid (PFTA)	ND		0	ng/L	1.52	EPA 537.1	07/01/2022 11:13	WEL
					Certifications:			07/05/2022 14:27	
2355-31-9	* N-MeFOSAA	ND		0	ng/L	1.52	EPA 537.1	07/01/2022 11:13	WEL
					Certifications:			07/05/2022 14:27	
2991-50-6	* N-EtFOSAA	ND		0	ng/L	1.52	EPA 537.1	07/01/2022 11:13	WEL
					Certifications:			07/05/2022 14:27	
756426-58-1	* 9CL-PF3ONS	ND		0	ng/L	1.52	EPA 537.1	07/01/2022 11:13	WEL
					Certifications:			07/05/2022 14:27	
763051-92-9	* 11CL-PF3OUdS	ND		0	ng/L	1.52	EPA 537.1	07/01/2022 11:13	WEL
					Certifications:			07/05/2022 14:27	
13252-13-6	* HFPO-DA (Gen-X)	ND		0	ng/L	1.52	EPA 537.1	07/01/2022 11:13	WEL
					Certifications:			07/05/2022 14:27	
919005-14-4	* ADONA	ND		0	ng/L	1.52	EPA 537.1	07/01/2022 11:13	WEL
					Certifications:			07/05/2022 14:27	

Surrogate Recoveries	Result	Acceptance Range
Surrogate: d5-N-EtFOSAA	*107 %*	*70-130*
Surrogate: 13C-PFDA	*95.5 %*	*70-130*
Surrogate: 13C-PFHxA	*104 %*	*70-130*
Surrogate: M3HFPO-DA	*105 %*	*70-130*

Sample Information

Client Sample ID: 288617-PFAS-Field Blank **York Sample ID:** 22F1242-05

York Project (SDG) No.	Client Project ID	Matrix	Collection Date/Time	Date Received
22F1242	288625/288617/288673	Drinking Water	June 23, 2022 9:00 am	06/23/2022

PFAS, EPA 537.1 List

Log-in Notes:

Sample Notes:

Sample Prepared by Method: EPA 537.1 SPE DVB

CAS No.	Parameter	Result	Flag	Maximum Contaminant Level MCL, ng/L	Units	Reported to LOQ	Reference Method	Date/Time Analyzed	Analyst
375-73-5	* Perfluorobutanesulfonic acid (PFBS)	ND		0	ng/L	1.92	EPA 537.1	07/01/2022 11:13	WEL
					Certifications:			07/05/2022 15:04	
307-24-4	* Perfluorohexanoic acid (PFHxA)	ND		0	ng/L	1.92	EPA 537.1	07/01/2022 11:13	WEL
					Certifications:			07/05/2022 15:04	
375-85-9	* Perfluoroheptanoic acid (PFHpA)	ND		0	ng/L	1.92	EPA 537.1	07/01/2022 11:13	WEL
					Certifications:			07/05/2022 15:04	

Sample Information

Client Sample ID: 288617-PFAS-Field Blank **York Sample ID:** 22F1242-05

York Project (SDG) No.	Client Project ID	Matrix	Collection Date/Time	Date Received
22F1242	288625/288617/288673	Drinking Water	June 23, 2022 9:00 am	06/23/2022

PFAS, EPA 537.1 List **Log-in Notes:** **Sample Notes:**

Sample Prepared by Method: EPA 537.1 SPE DVB

CAS No.	Parameter	Result	Flag	Maximum Contaminant Level MCL, ng/L	Units	Reported to LOQ	Reference Method	Date/Time Analyzed	Analyst
355-46-4	* Perfluorohexanesulfonic acid (PFHxS)	ND		0	ng/L	1.92	EPA 537.1	07/01/2022 11:13	WEL
					Certifications:			07/05/2022 15:04	
335-67-1	Perfluorooctanoic acid (PFOA)	ND		10	ng/L	1.92	EPA 537.1	07/01/2022 11:13	WEL
					Certifications:	NELAC-NY12058		07/05/2022 15:04	
1763-23-1	Perfluorooctanesulfonic acid (PFOS)	ND		10	ng/L	1.92	EPA 537.1	07/01/2022 11:13	WEL
					Certifications:	NELAC-NY12058		07/05/2022 15:04	
375-95-1	* Perfluorononanoic acid (PFNA)	ND		0	ng/L	1.92	EPA 537.1	07/01/2022 11:13	WEL
					Certifications:			07/05/2022 15:04	
335-76-2	* Perfluorodecanoic acid (PFDA)	ND		0	ng/L	1.92	EPA 537.1	07/01/2022 11:13	WEL
					Certifications:			07/05/2022 15:04	
2058-94-8	* Perfluoroundecanoic acid (PFUnA)	ND		0	ng/L	1.92	EPA 537.1	07/01/2022 11:13	WEL
					Certifications:			07/05/2022 15:04	
307-55-1	* Perfluorododecanoic acid (PFDoA)	ND		0	ng/L	1.92	EPA 537.1	07/01/2022 11:13	WEL
					Certifications:			07/05/2022 15:04	
72629-94-8	* Perfluorotridecanoic acid (PFTrDA)	ND		0	ng/L	1.92	EPA 537.1	07/01/2022 11:13	WEL
					Certifications:			07/05/2022 15:04	
376-06-7	* Perfluorotetradecanoic acid (PFTA)	ND		0	ng/L	1.92	EPA 537.1	07/01/2022 11:13	WEL
					Certifications:			07/05/2022 15:04	
2355-31-9	* N-MeFOSAA	ND		0	ng/L	1.92	EPA 537.1	07/01/2022 11:13	WEL
					Certifications:			07/05/2022 15:04	
2991-50-6	* N-EtFOSAA	ND		0	ng/L	1.92	EPA 537.1	07/01/2022 11:13	WEL
					Certifications:			07/05/2022 15:04	
756426-58-1	* 9CL-PF3ONS	ND		0	ng/L	1.92	EPA 537.1	07/01/2022 11:13	WEL
					Certifications:			07/05/2022 15:04	
763051-92-9	* 11CL-PF3OUdS	ND		0	ng/L	1.92	EPA 537.1	07/01/2022 11:13	WEL
					Certifications:			07/05/2022 15:04	
13252-13-6	* HFPO-DA (Gen-X)	ND		0	ng/L	1.92	EPA 537.1	07/01/2022 11:13	WEL
					Certifications:			07/05/2022 15:04	
919005-14-4	* ADONA	ND		0	ng/L	1.92	EPA 537.1	07/01/2022 11:13	WEL
					Certifications:			07/05/2022 15:04	

Surrogate Recoveries	Result	Acceptance Range
Surrogate: d5-N-EtFOSAA	*95.7 %*	*70-130*
Surrogate: 13C-PFDA	*82.6 %*	*70-130*
Surrogate: 13C-PFHxA	*87.4 %*	*70-130*
Surrogate: M3HFPO-DA	*91.1 %*	*70-130*

Sample Information

Client Sample ID: 288673-PFAS-Field Blank **York Sample ID:** 22F1242-06

York Project (SDG) No.	Client Project ID	Matrix	Collection Date/Time	Date Received
22F1242	288625/288617/288673	Drinking Water	June 23, 2022 9:20 am	06/23/2022

Sample Information

Client Sample ID: 288673-PFAS-Field Blank **York Sample ID:** 22F1242-06

York Project (SDG) No.	Client Project ID	Matrix	Collection Date/Time	Date Received
22F1242	288625/288617/288673	Drinking Water	June 23, 2022 9:20 am	06/23/2022

PFAS, EPA 537.1 List **Log-in Notes:** **Sample Notes:**

Sample Prepared by Method: EPA 537.1 SPE DVB

CAS No.	Parameter	Result	Flag	Maximum Contaminant Level MCL, ng/L	Units	Reported to LOQ	Reference Method	Date/Time Analyzed	Analyst
375-73-5	* Perfluorobutanesulfonic acid (PFBS)	ND		0	ng/L	2.00	EPA 537.1	07/01/2022 11:13	WEL
					Certifications:			07/05/2022 15:18	
307-24-4	* Perfluorohexanoic acid (PFHxA)	ND		0	ng/L	2.00	EPA 537.1	07/01/2022 11:13	WEL
					Certifications:			07/05/2022 15:18	
375-85-9	* Perfluoroheptanoic acid (PFHpA)	ND		0	ng/L	2.00	EPA 537.1	07/01/2022 11:13	WEL
					Certifications:			07/05/2022 15:18	
355-46-4	* Perfluorohexanesulfonic acid (PFHxS)	ND		0	ng/L	2.00	EPA 537.1	07/01/2022 11:13	WEL
					Certifications:			07/05/2022 15:18	
335-67-1	Perfluorooctanoic acid (PFOA)	ND		10	ng/L	2.00	EPA 537.1	07/01/2022 11:13	WEL
					Certifications:		NELAC-NY12058	07/05/2022 15:18	
1763-23-1	Perfluorooctanesulfonic acid (PFOS)	ND		10	ng/L	2.00	EPA 537.1	07/01/2022 11:13	WEL
					Certifications:		NELAC-NY12058	07/05/2022 15:18	
375-95-1	* Perfluorononanoic acid (PFNA)	ND		0	ng/L	2.00	EPA 537.1	07/01/2022 11:13	WEL
					Certifications:			07/05/2022 15:18	
335-76-2	* Perfluorodecanoic acid (PFDA)	ND		0	ng/L	2.00	EPA 537.1	07/01/2022 11:13	WEL
					Certifications:			07/05/2022 15:18	
2058-94-8	* Perfluoroundecanoic acid (PFUnA)	ND		0	ng/L	2.00	EPA 537.1	07/01/2022 11:13	WEL
					Certifications:			07/05/2022 15:18	
307-55-1	* Perfluorododecanoic acid (PFDoA)	ND		0	ng/L	2.00	EPA 537.1	07/01/2022 11:13	WEL
					Certifications:			07/05/2022 15:18	
72629-94-8	* Perfluorotridecanoic acid (PFTrDA)	ND		0	ng/L	2.00	EPA 537.1	07/01/2022 11:13	WEL
					Certifications:			07/05/2022 15:18	
376-06-7	* Perfluorotetradecanoic acid (PFTA)	ND		0	ng/L	2.00	EPA 537.1	07/01/2022 11:13	WEL
					Certifications:			07/05/2022 15:18	
2355-31-9	* N-MeFOSAA	ND		0	ng/L	2.00	EPA 537.1	07/01/2022 11:13	WEL
					Certifications:			07/05/2022 15:18	
2991-50-6	* N-EtFOSAA	ND		0	ng/L	2.00	EPA 537.1	07/01/2022 11:13	WEL
					Certifications:			07/05/2022 15:18	
756426-58-1	* 9CL-PF3ONS	ND		0	ng/L	2.00	EPA 537.1	07/01/2022 11:13	WEL
					Certifications:			07/05/2022 15:18	
763051-92-9	* 11CL-PF3OUdS	ND		0	ng/L	2.00	EPA 537.1	07/01/2022 11:13	WEL
					Certifications:			07/05/2022 15:18	
13252-13-6	* HFPO-DA (Gen-X)	ND		0	ng/L	2.00	EPA 537.1	07/01/2022 11:13	WEL
					Certifications:			07/05/2022 15:18	
919005-14-4	* ADONA	ND		0	ng/L	2.00	EPA 537.1	07/01/2022 11:13	WEL
					Certifications:			07/05/2022 15:18	

Surrogate Recoveries	Result	Acceptance Range
Surrogate: d5-N-EtFOSAA	*96.6 %*	*70-130*
Surrogate: 13C-PFDA	*91.1 %*	*70-130*
Surrogate: 13C-PFHxA	*107 %*	*70-130*
Surrogate: M3HFPO-DA	*113 %*	*70-130*

Analytical Batch Summary

Batch ID: BF21540 **Preparation Method:** EPA 522 **Prepared By:** SJB

YORK Sample ID	Client Sample ID	Preparation Date
22F1242-01	288625	06/24/22
22F1242-02	288617	06/24/22
22F1242-03	288673	06/24/22
BF21540-BLK1	Blank	06/24/22
BF21540-BS1	LCS	06/24/22
BF21540-BS2	LCS	06/24/22
BF21540-DUP1	Duplicate	06/24/22
BF21540-MS1	Matrix Spike	06/24/22

Batch ID: BG20029 **Preparation Method:** EPA 537.1 SPE DVB **Prepared By:** WEL

YORK Sample ID	Client Sample ID	Preparation Date
22F1242-01	288625	07/01/22
22F1242-02	288617	07/01/22
22F1242-03	288673	07/01/22
22F1242-04	288625-PFAS-Field Blank	07/01/22
22F1242-05	288617-PFAS-Field Blank	07/01/22
22F1242-06	288673-PFAS-Field Blank	07/01/22
BG20029-BLK1	Blank	07/01/22
BG20029-BS1	LCS	07/01/22
BG20029-DUP1	Duplicate	07/01/22
BG20029-MS1	Matrix Spike	07/01/22

Semivolatile Organic Compounds by GC/MS/SIM - Quality Control Data

York Analytical Laboratories, Inc.

Analyte	Result	Reporting Limit	Units	Spike Level	Source* Result	%REC	%REC Limits	Flag	RPD	RPD Limit	Flag
Batch BF21540 - EPA 522											
Blank (BF21540-BLK1)									Prepared: 06/24/2022 Analyzed: 06/27/2022		
1,4-Dioxane	ND	0.200	ug/L								
Surrogate: 1,4-Dioxane-d8	*2.80*		*"*	*2.50*		*112*	*70-130*				
LCS (BF21540-BS1)									Prepared: 06/24/2022 Analyzed: 06/27/2022		
1,4-Dioxane	4.66	0.200	ug/L	5.00		93.2	70-130				
Surrogate: 1,4-Dioxane-d8	*2.20*		*"*	*2.50*		*88.0*	*70-130*				
LCS (BF21540-BS2)									Prepared: 06/24/2022 Analyzed: 06/27/2022		
1,4-Dioxane	8.86	0.200	ug/L	10.0		88.6	70-130				
Surrogate: 1,4-Dioxane-d8	*2.20*		*"*	*2.50*		*88.0*	*70-130*				
Duplicate (BF21540-DUP1)	*Source sample: 22F0847-01 (Duplicate)								Prepared: 06/24/2022 Analyzed: 06/27/2022		
1,4-Dioxane	ND	0.200	ug/L		ND					30	
Surrogate: 1,4-Dioxane-d8	*2.60*		*"*	*2.50*		*104*	*70-130*				
Matrix Spike (BF21540-MS1)	*Source sample: 22F0765-01 (Matrix Spike)								Prepared: 06/24/2022 Analyzed: 06/27/2022		
1,4-Dioxane	4.17	0.200	ug/L	5.00	ND	83.4	70-130				
Surrogate: 1,4-Dioxane-d8	*2.40*		*"*	*2.50*		*96.0*	*70-130*				

Analyte	Result	Reporting Limit	Units	Spike Level	Source* Result	%REC	%REC Limits	Flag	RPD	RPD Limit	Flag
Batch BG20029 - EPA 537.1 SPE DVB											
Blank (BG20029-BLK1)									Prepared: 07/01/2022 Analyzed: 07/05/2022		
Perfluorobutanesulfonic acid (PFBS)	ND	2.00	ng/L								
Perfluorohexanoic acid (PFHxA)	ND	2.00	"								
Perfluoroheptanoic acid (PFHpA)	ND	2.00	"								
Perfluorohexanesulfonic acid (PFHxS)	ND	2.00	"								
Perfluorooctanoic acid (PFOA)	ND	2.00	"								
Perfluorooctanesulfonic acid (PFOS)	ND	2.00	"								
Perfluorononanoic acid (PFNA)	ND	2.00	"								
Perfluorodecanoic acid (PFDA)	ND	2.00	"								
Perfluoroundecanoic acid (PFUnA)	ND	2.00	"								
Perfluorododecanoic acid (PFDoA)	ND	2.00	"								
Perfluorotridecanoic acid (PFTrDA)	ND	2.00	"								
Perfluorotetradecanoic acid (PFTA)	ND	2.00	"								
N-MeFOSAA	ND	2.00	"								
N-EtFOSAA	ND	2.00	"								
9CL-PF3ONS	ND	2.00	"								
11CL-PF3OUdS	ND	2.00	"								
HFPO-DA (Gen-X)	ND	2.00	"								
ADONA	ND	2.00	"								
Surrogate: d5-N-EtFOSAA	*287*		"	*320*		*89.5*	*70-130*				
Surrogate: 13C-PFDA	*69.4*		"	*80.0*		*86.8*	*70-130*				
Surrogate: 13C-PFHxA	*75.8*		"	*80.0*		*94.7*	*70-130*				
Surrogate: M3HFPO-DA	*73.2*		"	*80.0*		*91.5*	*70-130*				
LCS (BG20029-BS1)									Prepared: 07/01/2022 Analyzed: 07/05/2022		
Perfluorobutanesulfonic acid (PFBS)	32.3	2.00	ng/L	35.4		91.1	70-130				
Perfluorohexanoic acid (PFHxA)	34.8	2.00	"	40.0		87.0	70-130				
Perfluoroheptanoic acid (PFHpA)	36.5	2.00	"	40.0		91.2	70-130				
Perfluorohexanesulfonic acid (PFHxS)	35.4	2.00	"	38.0		93.0	70-130				
Perfluorooctanoic acid (PFOA)	37.9	2.00	"	40.0		94.7	70-130				
Perfluorooctanesulfonic acid (PFOS)	37.2	2.00	"	38.4		96.9	70-130				
Perfluorononanoic acid (PFNA)	38.4	2.00	"	40.0		95.9	70-130				
Perfluorodecanoic acid (PFDA)	32.7	2.00	"	40.0		81.7	70-130				
Perfluoroundecanoic acid (PFUnA)	36.4	2.00	"	40.0		91.0	70-130				
Perfluorododecanoic acid (PFDoA)	36.4	2.00	"	40.0		91.1	70-130				
Perfluorotridecanoic acid (PFTrDA)	31.3	2.00	"	40.0		78.2	70-130				
Perfluorotetradecanoic acid (PFTA)	32.5	2.00	"	40.0		81.2	70-130				
N-MeFOSAA	37.4	2.00	"	40.0		93.5	70-130				
N-EtFOSAA	37.5	2.00	"	40.0		93.6	70-130				
9CL-PF3ONS	33.9	2.00	"	37.4		90.6	60-130				
11CL-PF3OUdS	31.1	2.00	"	37.8		82.3	60-130				
HFPO-DA (Gen-X)	33.8	2.00	"	40.0		84.6	60-130				
ADONA	32.7	2.00	"	37.8		86.5	60-130				
Surrogate: d5-N-EtFOSAA	*337*		"	*320*		*105*	*70-130*				
Surrogate: 13C-PFDA	*74.7*		"	*80.0*		*93.3*	*70-130*				
Surrogate: 13C-PFHxA	*83.2*		"	*80.0*		*104*	*70-130*				
Surrogate: M3HFPO-DA	*78.9*		"	*80.0*		*98.6*	*70-130*				

PFAS Target compounds by LC/MS-MS - Quality Control Data

York Analytical Laboratories, Inc.

Analyte	Result	Reporting Limit	Units	Spike Level	Source* Result	%REC	%REC Limits	Flag	RPD	RPD Limit	Flag
Batch BG20029 - EPA 537.1 SPE DVB											
Duplicate (BG20029-DUP1)	*Source sample: 22F1242-04 (288625-PFAS-Field Blank)								Prepared: 07/01/2022 Analyzed: 07/05/2022		
Perfluorobutanesulfonic acid (PFBS)	ND	2.17	ng/L		ND					25	
Perfluorohexanoic acid (PFHxA)	ND	2.17	"		ND					25	
Perfluoroheptanoic acid (PFHpA)	ND	2.17	"		ND					25	
Perfluorohexanesulfonic acid (PFHxS)	ND	2.17	"		ND					25	
Perfluorooctanoic acid (PFOA)	ND	2.17	"		ND					25	
Perfluorooctanesulfonic acid (PFOS)	ND	2.17	"		ND					25	
Perfluorononanoic acid (PFNA)	ND	2.17	"		ND					25	
Perfluorodecanoic acid (PFDA)	ND	2.17	"		ND					25	
Perfluoroundecanoic acid (PFUnA)	ND	2.17	"		ND					25	
Perfluorododecanoic acid (PFDoA)	ND	2.17	"		ND					25	
Perfluorotridecanoic acid (PFTrDA)	ND	2.17	"		ND					25	
Perfluorotetradecanoic acid (PFTA)	ND	2.17	"		ND					25	
N-MeFOSAA	ND	2.17	"		ND					25	
N-EtFOSAA	ND	2.17	"		ND					25	
9CL-PF3ONS	ND	2.17	"		ND					25	
11CL-PF3OUdS	ND	2.17	"		ND					25	
HFPO-DA (Gen-X)	ND	2.17	"		ND					25	
ADONA	ND	2.17	"		ND					25	
Surrogate: d5-N-EtFOSAA	*348*		*"*	*348*		*100*	*70-130*				
Surrogate: 13C-PFDA	*77.2*		*"*	*87.0*		*88.8*	*70-130*				
Surrogate: 13C-PFHxA	*87.6*		*"*	*87.0*		*101*	*70-130*				
Surrogate: M3HFPO-DA	*84.0*		*"*	*87.0*		*96.6*	*70-130*				
Matrix Spike (BG20029-MS1)	*Source sample: 22F1306-01 (Matrix Spike)								Prepared: 07/01/2022 Analyzed: 07/05/2022		
Perfluorobutanesulfonic acid (PFBS)	58.9	2.00	ng/L	70.8	ND	83.1	70-130				
Perfluorohexanoic acid (PFHxA)	64.6	2.00	"	80.0	ND	80.7	70-130				
Perfluoroheptanoic acid (PFHpA)	69.6	2.00	"	80.0	ND	87.0	70-130				
Perfluorohexanesulfonic acid (PFHxS)	71.2	2.00	"	76.0	ND	93.7	70-130				
Perfluorooctanoic acid (PFOA)	72.3	2.00	"	80.0	ND	90.4	70-130				
Perfluorooctanesulfonic acid (PFOS)	68.0	2.00	"	76.8	ND	88.6	70-130				
Perfluorononanoic acid (PFNA)	68.4	2.00	"	80.0	ND	85.5	70-130				
Perfluorodecanoic acid (PFDA)	65.0	2.00	"	80.0	ND	81.2	70-130				
Perfluoroundecanoic acid (PFUnA)	67.1	2.00	"	80.0	ND	83.9	70-130				
Perfluorododecanoic acid (PFDoA)	64.8	2.00	"	80.0	ND	81.0	70-130				
Perfluorotridecanoic acid (PFTrDA)	60.5	2.00	"	80.0	ND	75.6	70-130				
Perfluorotetradecanoic acid (PFTA)	63.2	2.00	"	80.0	ND	79.0	70-130				
N-MeFOSAA	73.5	2.00	"	80.0	ND	91.8	70-130				
N-EtFOSAA	69.6	2.00	"	80.0	ND	87.0	70-130				
9CL-PF3ONS	67.2	2.00	"	74.8	ND	89.9	70-130				
11CL-PF3OUdS	59.4	2.00	"	75.6	ND	78.5	70-130				
HFPO-DA (Gen-X)	59.2	2.00	"	80.0	ND	74.0	70-130				
ADONA	60.6	2.00	"	75.6	ND	80.2	50-130				
Surrogate: d5-N-EtFOSAA	*304*		*"*	*320*		*94.9*	*70-130*				
Surrogate: 13C-PFDA	*70.4*		*"*	*80.0*		*88.0*	*70-130*				
Surrogate: 13C-PFHxA	*77.0*		*"*	*80.0*		*96.2*	*70-130*				
Surrogate: M3HFPO-DA	*72.0*		*"*	*80.0*		*90.0*	*70-130*				

Sample and Data Qualifiers Relating to This Work Order

Definitions and Other Explanations

*	Analyte is not certified or the state of the samples origination does not offer certification for the Analyte.
ND	NOT DETECTED - the analyte is not detected at the Reported to level (LOQ/RL or LOD/MDL)
RL	REPORTING LIMIT - the minimum reportable value based upon the lowest point in the analyte calibration curve.
LOQ	LIMIT OF QUANTITATION - the minimum concentration of a target analyte that can be reported within a specified degree of confidence. This is the lowest point in an analyte calibration curve that has been subjected to all steps of the processing/analysis and verified to meet defined criteria. This is based upon NELAC 2009 Standards and applies to all analyses.
LOD	LIMIT OF DETECTION - a verified estimate of the minimum concentration of a substance in a given matrix that an analytical process can reliably detect. This is based upon NELAC 2009 Standards and applies to all analyses conducted under the auspices of EPA SW-846.
MDL	METHOD DETECTION LIMIT - a statistically derived estimate of the minimum amount of a substance an analytical system can reliably detect with a 99% confidence that the concentration of the substance is greater than zero. This is based upon 40 CFR Part 136 Appendix B and applies only to EPA 600 and 200 series methods.
Reported to	This indicates that the data for a particular analysis is reported to either the LOD/MDL, or the LOQ/RL. In cases where the "Reported to" is located above the LOD/MDL, any value between this and the LOQ represents an estimated value which is "J" flagged accordingly. This applies to volatile and semi-volatile target compounds only.
NR	Not reported
RPD	Relative Percent Difference
Wet	The data has been reported on an as-received (wet weight) basis
Low Bias	Low Bias flag indicates that the recovery of the flagged analyte is below the laboratory or regulatory lower control limit. The data user should take note that this analyte may be biased low but should evaluate multiple lines of evidence including the LCS and site-specific MS/MSD data to draw bias conclusions. In cases where no site-specific MS/MSD was requested, only the LCS data can be used to evaluate such bias.
High Bias	High Bias flag indicates that the recovery of the flagged analyte is above the laboratory or regulatory upper control limit. The data user should take note that this analyte may be biased high but should evaluate multiple lines of evidence including the LCS and site-specific MS/MSD data to draw bias conclusions. In cases where no site-specific MS/MSD was requested, only the LCS data can be used to evaluate such bias.
Non-Dir.	Non-dir. flag (Non-Directional Bias) indicates that the Relative Percent Difference (RPD) (a measure of precision) among the MS and MSD data is outside the laboratory or regulatory control limit. This alerts the data user where the MS and MSD are from site-specific samples that the RPD is high due to either non-homogeneous distribution of target analyte between the MS/MSD or indicates poor reproducibility for other reasons.
MCL	This is the Maximum Contaminant Level in ng/L (ppt) establised by the NYSDOH for these compounds wheree an MCL is reported. Exceedences are flagged according.

Field Chain-of-Custody Record

YORK
ANALYTICAL LABORATORIES INC

York Analytical Laboratories, Inc. (YORK)'s Standard Terms & Conditions are listed on the back side of this document.
This document serves as your written authorization for YORK to proceed with the analyses requested below.
Your signature binds you to YORK's Standard Terms & Conditions.

YORK Project No. 22F1242

120 Research Drive Stratford, CT 06615 | 132-02 89th Ave Queens, NY 11418 | clientservices@yorklab.com | www.yorklab.com | 800-306-YORK | 800-306-9675 | Page ____ of ____

YOUR Information	Report To:	Invoice To:	YOUR Project Number	Turn-Around Time
Company:	Company: Agua Environmental Lab	Company:		RUSH - Next Day
Address:	Address:	Address:	YOUR Project Name	RUSH - Two Day
Phone.:	Phone.:	Phone.:		RUSH - Three Day
Contact:	Contact:	Contact:		RUSH - Four Day
E-mail:	E-mail:	E-mail:	YOUR PO#:	Standard (5-7 Day)

Please print clearly and legibly. All information must be complete. Samples will not be logged in and the turn-around-time clock will not begin until any questions by YORK are resolved.

Samples Collected by: (print AND sign your name)

Matrix Codes
S - soil / solid
GW - groundwater
DW - drinking water
WW - wastewater
O - Oil | Other

Samples From
New York ✓
New Jersey
Connecticut
Pennsylvania
Other:

Report / EDD Type (circle selections)
Summary Report | CT RCP | Standard Excel EDD
QA Report | CT RCP DQA/DUE | EQuIS (Standard)
NY ASP A Package | NJDEP Reduced Deliverables | NYSDEC EQuIS
NY ASP B Package | NJDEP SRP HazSite
NJDKQP | Other:

YORK Reg. Comp.
Compared to the following Regulation(s): (please fill in)

Sample Identification	Sample Matrix	Date/Time Sampled	Analysis Requested	Container Description
288625	DW	6/23/22 8:40 am	PFAS Method 537 18 Compound +	1,4 Dioxane
288617	DW	6/23/22 9:40 am	PFAS Method 537 18 Compound +	1,4 Dioxane
288623	DW	6/23/22 9:20 am	PFAS Method 537 18 Compound +	1,4 Dioxane

Comments:

Preservation: (check all that apply)
HCl ____ MeOH ____ HNO3 ____ H2SO4 ____ NaOH ____
ZnAc ____ Ascorbic Acid ____ Other: ____

Special Instruction
Field Filtered
Lab to Filter

Samples iced/chilled at time of lab pickup? circle Yes or No

Samples Relinquished by / Company	Date/Time	Samples Received by / Company	Date/Time	Samples Relinquished by / Company	Date/Time
[illegible]	6/23/22 12:55 pm	1.		2. S Beaman 6/23	13:55
Samples Received by / Company	Date/Time	3. Samples Relinquished by / Company	Date/Time	3. Samples Received by / Company	Date/Time
Samples Relinquished by / Company	Date/Time	4. Samples Received by / Company	Date/Time	Samples Received in LAB by	Date/Time 6/24/22 1317 Temperature 1.0 Degrees C

WELL 6A

AQUA ENVIRONMENTAL LAB
56 Church Hill Road • Newtown, CT 06470 • (203) 270-9973
A York Analytical Company
YORK

Report of Analysis

Name: WSP, USA
4 Research Dr.
Ste. 204
Shelton, CT 06484
Sample Date: 6/20/2022 2:03 PM
Receipt Date: 6/20/2022 2:03 PM
Report Date: 7/11/2022
Sample Site: Summit Well 6A

Sample ID#: 288613
Sample Type: Drinking Water
Sampler: WSP

Parameter	Sample Result	Units	Limits	Method	RL	Analysis Date / Time
Biological						
Coliform Bacteria	present *	none	0	SM9223B-04	0	6/23/2022 16:30
e Coli Bacteria	absent	none	0	SM9223B-04	0	6/23/2022 16:30
Heterotrophic Plate Count	53	MPN	No Limit Set	SM9215E	0	6/23/2022 13:40
Inorganic Compounds						
Chlorine, residual	0	mg/L	4	SM4500CLG-2011	0	6/20/2022 14:03
Metals						
Arsenic	ND	mg/L	0.01	EPA 200.5	0.005	6/24/2022 13:11
Copper	ND	mg/L	1.3	EPA 200.5	0.005	6/24/2022 13:11
Iron	0.02	mg/L	0.3	EPA 200.5	0.005	6/24/2022 13:11
Lead	ND	mg/L	0.015	EPA 200.5	0.001	6/24/2022 13:11
Manganese	0.05	mg/L	0.05	EPA 200.5	0.005	6/24/2022 13:11
Minerals						
Alkalinity	138	mg/L	No Limit Set	SM 2320B (-97)	5	7/5/2022 17:10
Chloride	12.6	mg/L	250	EPA 300.0	1	6/23/2022 20:32
Hardness	151	mg/L	No Limit Set	EPA 200.5	5	6/24/2022 13:11
Sodium	16.7	mg/L	100	EPA 200.5	1	6/24/2022 13:11
Sulfate	30.7	mg/L	250	EPA 300.0	2	6/23/2022 20:32
Miscellaneous/Other						
Langelier Saturation Index	-0.56 *	LSI	No Limit Set	CALCTN	None	7/6/2022 18:09
Nutrient						
Nitrate as N	ND	mg/L	10	EPA 300.0	0.5	6/23/2022 20:32
Nitrite as N	ND	mg/L	1	EPA 300.0	0.1	6/23/2022 20:32
Physical						
Color, apparent	<5	CU	15	SM 2120B-01	5	6/21/2022 13:30
Odor	2	TON	2	SM2150B-2011	0	6/23/2022 16:00

Based on the bacteriological examination, according to the Federal Safe Drinking Water Act (SDWA), this water was unsafe for drinking purpose at the time the sample was collected. Corrective measures, followed by re-examination, are recommended.
*Serious corrosion.

ND = Not Detected
* = Above Specified Limit

CT Lic PH-0787 NY Lic 11706

AquaEnvLab.com
YorkLab.com
203 270 9973

Analytical results relate to the samples as received at the laboratory. Report shall not be reproduced except in its entirety without written approval from the laboratory.

AQUA ENVIRONMENTAL LAB
56 Church Hill Road • Newtown, CT 06470 • (203) 270-9973
A York Analytical Company
YORK ANALYTICAL LABORATORIES INC

Report of Analysis

Name: WSP, USA
4 Research Dr.
Ste. 204
Shelton, CT 06484
Sample Date: 6/20/2022 2:03 PM
Receipt Date: 6/20/2022 2:03 PM
Report Date: 7/11/2022
Sample Site: Summit Well 6A

Sample ID#: 288613
Sample Type: Drinking Water
Sampler: WSP

Parameter	Sample Result	Units	Limits	Method	RL	Analysis Date / Time
Physical						
PH	7.6	pH	6.4 - 8.5	SM4500HB-2011	0	6/20/2022 14:03
Total Dissolved Solids (TDS)	254	mg/L	500	SM2540C-2011	None	6/29/2022 12:02
Turbidity	0.17	NTU	5	EPA 180.1	0.05	6/23/2022 16:00
Radiochemicals						
Water Radon	1,340 +/-38	pCi/L	No Limit Set	SM7500Rn-23	0	6/23/2022 16:50

Comments: Based on the bacteriological examination, according to the Federal Safe Drinking Water Act (SDWA), this water was unsafe for drinking purpose at the time the sample was collected. Corrective measures, followed by re-examination, are recommended.
*Serious corrosion.

ND = Not Detected
* = Above Specified Limit

Report Approved by: _____
Lab Director

CT Lic PH-0787 NY Lic 11706

AquaEnvLab.com
YorkLab.com
203 270 9973

Analytical results relate to the samples as received at the laboratory. Report shall not be reproduced except in its entirety without written approval from the laboratory.

AQUA ENVIRONMENTAL LAB
56 Church Hill Road • Newtown, CT 06470 • (203) 270-9973
A York Analytical Company
YORK

Report of Analysis

Name: WSP, USA
4 Research Dr.
Ste. 204
Shelton, CT 06484
Sample Date: 6/20/2022 2:03 PM
Receipt Date: 6/20/2022 2:03 PM
Report Date: 7/27/2022
Sample Site: Summit Well 6A

Sample ID#: 288614
Sample Type: Drinking Water
Sampler: WSP

Parameter	Sample Result	Units	Limits	Method	RL	Analysis Date / Time
Metals						
Antimony	ND	mg/L	No Limit Set	EPA 200.8	0.001	6/29/2022 16:21
Arsenic	ND	mg/L	0.01	EPA 200.5	0.005	6/24/2022 13:11
Barium	0.007	mg/L	2	EPA 200.5	0.001	6/24/2022 13:11
Beryllium	ND	mg/L	0.004	EPA 200.5	0.001	6/24/2022 13:11
Cadmium	ND	mg/L	0.005	EPA 200.5	0.001	6/24/2022 13:11
Chromium(T)	ND	mg/L	0.1	EPA 200.5	0.001	6/24/2022 13:11
Cyanide	<0.005	mg/L	0.2	EPA 335.4	0.005	6/24/2022 10:38
Mercury	<0.0002	mg/L	0.002	EPA 245.2	0.0002	6/29/2022 10:35
Nickel	ND	mg/L	0.1	EPA 200.5	0.001	6/24/2022 13:11
Selenium	ND	mg/L	0.05	EPA 200.5	0.005	6/24/2022 13:11
Silver	ND	mg/L	0.1	EPA 200.5	0.002	6/24/2022 13:11
Thallium	ND	mg/L	0.002	EPA 200.8	0.001	6/29/2022 16:21
Zinc	ND	mg/L	5	EPA 200.5	0.005	6/24/2022 13:11
Minerals						
Chloride	12.6	mg/L	250	EPA 300.0	1	6/23/2022 20:32
Fluoride	ND	mg/L	4	EPA 300.0	0.1	6/23/2022 20:32
Sodium	16.7	mg/L	100	EPA 200.5	1	6/24/2022 13:11
Sulfate	30.7	mg/L	250	EPA 300.0	2	6/23/2022 20:32

ND = Not Detected
* = Above Specified Limit

Report Approved by: _____ CT Lic PH-0787 NY Lic 11706
Lab Director

AquaEnvLab.com
YorkLab.com
203 270 9973

Analytical results relate to the samples as received at the laboratory. Report shall not be reproduced except in its entirety without written approval from the laboratory.

AQUA ENVIRONMENTAL LAB
56 Church Hill Road • Newtown, CT 06470 • (203) 270-9973
A York Analytical Company
YORK

Report of Analysis

Name: WSP, USA
4 Research Dr.
Ste. 204
Shelton, CT 06484
Sample Date: 6/20/2022 2:03 PM
Receipt Date: 6/20/2022 2:03 PM
Report Date: 7/25/2022
Sample Site: Summit Well 6A

Sample ID#: 288618
Sample Type: Drinking Water
Sampler: WSP

Parameter	Sample Result	Units	Limits	Method	RL	Analysis Date / Time
Volatile Organic Compounds						
01) Benzene	ND	ug/L	5	EPA 524.2	0.5	6/27/2022 20:44
02) Bromobenzene	ND	ug/L	5	EPA 524.2	0.5	6/27/2022 20:44
03) Bromochloromethane	ND	ug/L	5	EPA 524.2	0.5	6/27/2022 20:44
04) Bromomethane	ND	ug/L	5	EPA 524.2	0.5	6/27/2022 20:44
05) n-Butylbenzene	ND	ug/L	5	EPA 524.2	0.5	6/27/2022 20:44
06) sec-Butylbenzene	ND	ug/L	5	EPA 524.2	0.5	6/27/2022 20:44
07) tert-Butylbenzene	ND	ug/L	5	EPA 524.2	0.5	6/27/2022 20:44
08) Carbon Tetrachloride	ND	ug/L	5	EPA 524.2	0.5	6/27/2022 20:44
09) Chlorobenzene	ND	ug/L	5	EPA 524.2	0.5	6/27/2022 20:44
10) Chloroethane	ND	ug/L	5	EPA 524.2	0.5	6/27/2022 20:44
11) Chloromethane	ND	ug/L	5	EPA 524.2	0.5	6/27/2022 20:44
12) 2-Chlorotoluene	ND	ug/L	5	EPA 524.2	0.5	6/27/2022 20:44
13) 4-Chlorotoluene	ND	ug/L	5	EPA 524.2	0.5	6/27/2022 20:44
14) Dibromomethane	ND	ug/L	5	EPA 524.2	0.5	6/27/2022 20:44
15) 1,2-Dichlorobenzene	ND	ug/L	5	EPA 524.2	0.5	6/27/2022 20:44
16) 1,3-Dichlorobenzene	ND	ug/L	5	EPA 524.2	0.5	6/27/2022 20:44
17) 1,4-Dichlorobenzene	ND	ug/L	5	EPA 524.2	0.5	6/27/2022 20:44
18) Dichlorodifluoromethane	ND	ug/L	5	EPA 524.2	0.5	6/27/2022 20:44
19) 1,1-Dichloroethane	ND	ug/L	5	EPA 524.2	0.5	6/27/2022 20:44
20) 1,2-Dichloroethane	ND	ug/L	5	EPA 524.2	0.5	6/27/2022 20:44
21) 1,1-Dichloroethene	ND	ug/L	5	EPA 524.2	0.5	6/27/2022 20:44
22) cis-1,2,-Dichloroethene	ND	ug/L	5	EPA 524.2	0.5	6/27/2022 20:44
23) trans-1,2-Dichloroethene	ND	ug/L	5	EPA 524.2	0.5	6/27/2022 20:44
24) 1,2-Dichloropropane	ND	ug/L	5	EPA 524.2	0.5	6/27/2022 20:44
25) 1,3-Dichloropropane	ND	ug/L	5	EPA 524.2	0.5	6/27/2022 20:44
26) 2,2-Dichloropropane	ND	ug/L	5	EPA 524.2	0.5	6/27/2022 20:44
27) 1,1-Dichloropropene	ND	ug/L	5	EPA 524.2	0.5	6/27/2022 20:44

ND = Not Detected
* = Above Specified Limit

CT Lic PH-0787 NY Lic 11706

AquaEnvLab.com
YorkLab.com
203 270 9973

Analytical results relate to the samples as received at the laboratory. Report shall not be reproduced except in its entirety without written approval from the laboratory.

AQUA ENVIRONMENTAL LAB
56 Church Hill Road • Newtown, CT 06470 • (203) 270-9973
A York Analytical Company
YORK

Report of Analysis

Name: WSP, USA
4 Research Dr.
Ste. 204
Shelton, CT 06484
Sample Date: 6/20/2022 2:03 PM
Receipt Date: 6/20/2022 2:03 PM
Report Date: 7/25/2022
Sample Site: Summit Well 6A

Sample ID#: 288618
Sample Type: Drinking Water
Sampler: WSP

Parameter	Sample Result	Units	Limits	Method	RL	Analysis Date / Time
Volatile Organic Compounds						
28] cis- 1,3-Dichloropropene	ND	ug/L	5	EPA 524.2	0.5	6/27/2022 20:44
29] trans-1,3-Dichloropropene	ND	ug/L	5	EPA 524.2	0.5	6/27/2022 20:44
30) Ethylbenzene	ND	ug/L	5	EPA 524.2	0.5	6/27/2022 20:44
31) Isopropylbenzene	ND	ug/L	5	EPA 524.2	0.5	6/27/2022 20:44
32) p-Isopropyltoluene	ND	ug/L	5	EPA 524.2	0.5	6/27/2022 20:44
33) Methylene chloride	ND	ug/L	5	EPA 524.2	0.5	6/27/2022 20:44
34) n-Propylbenzene	ND	ug/L	5	EPA 524.2	0.5	6/27/2022 20:44
35) Styrene	ND	ug/L	5	EPA 524.2	0.5	6/27/2022 20:44
36) 1,1,1,2-Tetrachloroethane	ND	ug/L	5	EPA 524.2	0.5	6/27/2022 20:44
37) 1,1,2,2-Tetrachloroethane	ND	ug/L	5	EPA 524.2	0.5	6/27/2022 20:44
38) Tetrachloroethene	ND	ug/L	5	EPA 524.2	0.5	6/27/2022 20:44
39) Toluene	ND	ug/L	5	EPA 524.2	0.5	6/27/2022 20:44
40) 1,2,3-Trichlorobenzene	ND	ug/L	5	EPA 524.2	0.5	6/27/2022 20:44
41) 1,2,4-Trichlorobenzene	ND	ug/L	5	EPA 524.2	0.5	6/27/2022 20:44
42) 1,1,1-Trichloroethane	ND	ug/L	5	EPA 524.2	0.5	6/27/2022 20:44
43) 1,1,2-Trichloroethane	ND	ug/L	5	EPA 524.2	0.5	6/27/2022 20:44
44) Trichloroethene	ND	ug/L	5	EPA 524.2	0.5	6/27/2022 20:44
45) Trichlorofluoromethane	ND	ug/L	5	EPA 524.2	0.5	6/27/2022 20:44
46) 1,2,3-Trichloropropane	ND	ug/L	5	EPA 524.2	0.5	6/27/2022 20:44
47} 1,2,4-Trimethylbenzene	ND	ug/L	5	EPA 524.2	0.5	6/27/2022 20:44
48) 1,3,5-Trimethylbenzene	ND	ug/L	5	EPA 524.2	0.5	6/27/2022 20:44
49) o-Xylene	ND	ug/L	5	EPA 524.2	0.5	6/27/2022 20:44
50) Hexachlorobutadiene	ND	ug/L	5	EPA 524.2	0.5	6/27/2022 20:44
51) m+p-Xylene	ND	ug/L	5	EPA 524.2	0.5	6/27/2022 20:44
52) Methyl-tertiary-butyl-ether	ND	ug/L	10	EPA 524.2	0.5	6/27/2022 20:44
53) Vinyl chloride	ND	ug/L	2	EPA 524.2	0.5	6/27/2022 20:44

ND = Not Detected
* = Above Specified Limit

Report Approved by: _____ CT Lic PH-0787 NY Lic 11706
Lab Director

AquaEnvLab.com
YorkLab.com
203 270 9973

Analytical results relate to the samples as received at the laboratory. Report shall not be reproduced except in its entirety without written approval from the laboratory.

AQUA ENVIRONMENTAL LAB
56 Church Hill Road • Newtown, CT 06470 • (203) 270-9973
A York Analytical Company
YORK

Report of Analysis

Name: WSP, USA
4 Research Dr.
Ste. 204
Shelton, CT 06484
Sample Date: 6/20/2022 2:03 PM
Receipt Date: 6/20/2022 2:03 PM
Report Date: 7/27/2022
Sample Site: Summit Well 6A

Sample ID#: 288616
Sample Type: Drinking Water
Sampler: WSP

Parameter	Sample Result	Units	Limits	Method	RL	Analysis Date / Time
Organic Compounds						
PCB	ND	mg/L	0.5	EPA 508.1	0.0002	6/27/2022 10:50
Synthetic Organic Chemicals P						
Butachlor	ND	mg/L	0	EPA 508.1	0.001	6/27/2022 10:50
Dioxin	ND	ug/L	0	EPA 1613-B	5	7/2/2022 10:50
Endothall	ND	mg/L	0	EPA 548.1	5	6/29/2022 10:50
Metribuzin	ND	mg/L	0	EPA 508.1	0.0005	6/27/2022 10:50
Propachlor	ND	mg/L	0	EPA 508.1	0.001	6/27/2022 10:50
Synthetic Organic Chemicals P						
Dalapon	ND	mg/L	200	EPA 552.2	0.002	6/29/2022 10:50
Synthetic Organic Compounds						
2,4,5-TP	ND	mg/L	50	EPA 555	0.0004	6/29/2022 10:50
2,4-D	ND	mg/L	70	EPA 555	0.0002	6/29/2022 10:50
3-Hydroxycarbofuran	ND	mg/L	No Limit Set	EPA 531.1	0.002	7/3/2022 10:50
Alachlor	ND	mg/L	2	EPA 508.1	0.0004	6/27/2022 10:50
Aldicarb	ND	mg/L	No Limit Set	EPA 531.1	0.001	7/3/2022 10:50
Aldicarb Sulfone	ND	mg/L	No Limit Set	EPA 531.1	0.0017	7/3/2022 10:50
Aldicarb Sulfoxide	ND	mg/L	No Limit Set	EPA 531.1	0.001	7/3/2022 10:50
Aldrin	ND	mg/L	0	EPA 508.1	0.0005	6/27/2022 10:50
Atrazine	ND	ug/L	3	EPA 508.1	0.0002	6/27/2022 10:50
Benzo (A) Pyrene	ND	mg/L	0.2	EPA 525.2	0	7/12/2022 10:50
Carbaryl	ND	mg/L	No Limit Set	EPA 531.1	0.004	7/3/2022 10:50
Carbofuran	ND	mg/L	40	EPA 531.1	0.0019	7/3/2022 10:50
Chlordane	ND	mg/L	2	EPA 508.1	0.0004	6/27/2022 10:50
Di (2-ethylhexyl) adipate	ND	mg/L	400	EPA 525.2	0.001	7/12/2022 10:50
Di (2-ethylhexyl) phthalates	ND	mg/L	6	EPA 525.2	0.001	7/12/2022 10:50
Dibromochloropropane(DBCP)	ND	mg/L	0.2	EPA 504.1	0	6/29/2022 10:50

ND = Not Detected
* = Above Specified Limit

CT Lic PH-0787 NY Lic 11706

AquaEnvLab.com
YorkLab.com
203 270 9973

Analytical results relate to the samples as received at the laboratory. Report shall not be reproduced except in its entirety without written approval from the laboratory.

AQUA ENVIRONMENTAL LAB
56 Church Hill Road • Newtown, CT 06470 • (203) 270-9973
A York Analytical Company
YORK

Report of Analysis

Name: WSP, USA
4 Research Dr.
Ste. 204
Shelton, CT 06484
Sample Date: 6/20/2022 2:03 PM
Receipt Date: 6/20/2022 2:03 PM
Report Date: 7/27/2022
Sample Site: Summit Well 6A

Sample ID#: 288616
Sample Type: Drinking Water
Sampler: WSP

Parameter	Sample Result	Units	Limits	Method	RL	Analysis Date / Time
Synthetic Organic Compounds						
Dicamba	ND	mg/L	No Limit Set	EPA 555	0.0008	6/29/2022 10:50
Dieldrin	ND	mg/L	No Limit Set	EPA 508.1	0	6/27/2022 10:50
Dinoseb	ND	mg/L	7	EPA 555	0.0004	6/29/2022 10:50
Diquat	ND	mg/L	0	EPA 549.2	0.0008	6/28/2022 10:50
Endrin	ND	mg/L	2	EPA 508.1	0	6/27/2022 10:50
Ethylene Dibromide(EDB)	ND	mg/L	0.05	EPA 504.1	0	6/29/2022 10:50
Glyphosphate	ND	mg/L	700	EPA 547	0.01	6/28/2022 10:50
Heptachlor	ND	mg/L	0.4	EPA 508.1	0.0001	6/27/2022 10:50
Heptachlor Epoxide	ND	mg/L	No Limit Set	EPA 508.1	0.0002	6/27/2022 10:50
Hexachlorobenzene	ND	mg/L	1	EPA 508.1	0.0002	6/27/2022 10:50
Hexachlorocyclopentadiene	ND	mg/L	50	EPA 508.1	0.0002	6/27/2022 10:50
Lindane	ND	mg/L	0.2	EPA 508.1	0.0002	6/27/2022 10:50
Methomyl	ND	mg/L	0	EPA 531.1	0.004	7/3/2022 10:50
Methoxychlor	ND	mg/L	40	EPA 508.1	0.001	6/27/2022 10:50
Metolachlor	ND	mg/L	No Limit Set	EPA 508.1	0.001	6/27/2022 10:50
Oxamyl (Vydate)	ND	mg/L	200	EPA 531.1	0.004	7/3/2022 10:50
Pentachlorophenol	ND	mg/L	1	EPA 555	0.0001	6/29/2022 10:50
Picloram	ND	mg/L	500	EPA 555	0.0002	6/29/2022 10:50
Simazine	ND	mg/L	4	EPA 508.1	0.0001	6/27/2022 10:50
Toxaphene	ND	mg/L	3	EPA 508.1	0.002	6/27/2022 10:50

ND = Not Detected
* = Above Specified Limit

Report Approved by: _____ CT Lic PH-0787 NY Lic 11706
Lab Director

AquaEnvLab.com
YorkLab.com
203 270 9973

Analytical results relate to the samples as received at the laboratory. Report shall not be reproduced except in its entirety without written approval from the laboratory.

AQUA ENVIRONMENTAL LAB
56 Church Hill Road • Newtown, CT 06470 • (203) 270-9973
A York Analytical Company
YORK

Report of Analysis

Name: WSP, USA
4 Research Dr.
Ste. 204
Shelton, CT 06484
Sample Date: 6/20/2022 2:03 PM
Receipt Date: 6/20/2022 2:03 PM
Report Date: 7/26/2022
Sample Site: Summit Well 6A

Sample ID#: 288619
Sample Type: Drinking Water
Sampler: WSP

Parameter	Sample Result	Units	Limits	Method	RL	Analysis Date / Time
Radiochemicals						
Gross Beta	1.50+/-0.830	pCi/L	No Limit Set	EPA 900.0	None	7/18/2022 08:36
Radium 226	0.216+/-0.300	pCi/L	5	EPA 903.0	1	7/21/2022 14:03
Radium 228	0.193+/-0.303	pCi/L	5	EPA 904.0	1	7/21/2022 11:57
Total Gross Alpha	1.84+/-1.46	pCi/L	No Limit Set	EPA 900.0	3	7/18/2022 08:36
Uranium	1.3	ug/L	30	EPA 200.8	1	6/29/2022 16:21

ND = Not Detected
* = Above Specified Limit

Report Approved by: _____ CT Lic PH-0787 NY Lic 11706
Lab Director

AquaEnvLab.com
YorkLab.com
203 270 9973

Analytical results relate to the samples as received at the laboratory. Report shall not be reproduced except in its entirety without written approval from the laboratory.

AQUA ENVIRONMENTAL LAB
56 Church Hill Road • Newtown, CT 06470 • (203) 270-9973
A York Analytical Company
YORK ANALYTICAL LABORATORIES INC

Report of Analysis

Name: WSP, USA
4 Research Dr.
Ste. 204
Shelton, CT 06484
Sample Date: 6/20/2022 2:03 PM
Receipt Date: 6/20/2022 2:03 PM
Report Date: 7/1/2022
Sample Site: Summit Well 6A

Sample ID#: 288612
Sample Type: Drinking Water
Sampler: WSP

Parameter	Sample Result	Units	Limits	Method	RL	Analysis Date / Time
Miscellaneous/Other						
Asbestos	ND	MFL	0	EPA 100.2	0.19	6/30/2022 08:18

ND = Not Detected
* = Above Specified Limit

Report Approved by: _____ CT Lic PH-0787 NY Lic 11706
Lab Director

AquaEnvLab.com
YorkLab.com
203 270 9973

Analytical results relate to the samples as received at the laboratory. Report shall not be reproduced except in its entirety without written approval from the laboratory.

AQUA ENVIRONMENTAL LAB
56 Church Hill Road • Newtown, CT 06470 • (203) 270-9973
A York Analytical Company
YORK ANALYTICAL LABORATORIES INC

Report of Analysis

Name: WSP, USA
4 Research Dr.
Ste. 204
Shelton, CT 06484
Sample Date: 6/20/2022 2:03 PM
Receipt Date: 6/20/2022 2:03 PM
Report Date: 7/25/2022
Sample Site: Summit Well 6A

Sample ID#: 288615
Sample Type: Drinking Water
Sampler: WSP

Parameter	Sample Result	Units	Limits	Method	RL	Analysis Date / Time
Organic Compounds						
Propylene Glycol	1.1	mg/L	No Limit Set	SW8015	1	7/25/2022 14:00

ND = Not Detected
* = Above Specified Limit

Report Approved by: _____ CT Lic PH-0787 NY Lic 11706
Lab Director

AquaEnvLab.com
YorkLab.com
203 270 9973

Analytical results relate to the samples as received at the laboratory. Report shall not be reproduced except in its entirety without written approval from the laboratory.

AQUA ENVIRONMENTAL LAB
56 Church Hill Road • Newtown, CT 06470 • (203) 270-9973
A York Analytical Company
YORK

Report of Analysis

Name: WSP, USA
4 Research Dr.
Ste. 204
Shelton, CT 06484
Sample Date: 6/20/2022 2:03 PM
Receipt Date: 6/20/2022 2:03 PM
Report Date: 7/6/2022
Sample Site: Summit Well 6A

Sample ID#: 288617
Sample Type: Drinking Water
Sampler: WSP

Parameter	Sample Result	Units	Limits	Method	RL	Analysis Date / Time
Organic Compounds						
1,4-Dioxane	ND	ug/L	1	EPA 522	0.2	6/24/2022 07:43
PerFluoroButaneSulfonic Acid	ND	ng/L	No Limit Set	EPA 537	1.34	7/1/2022 11:13
PerFluoroHeptanoic Acid	ND	ng/L	No Limit Set	EPA 537	1.34	7/1/2022 11:13
PerFluoroHexaneSulfonic Acid	1.54	ng/L	49	EPA 537	1.34	7/1/2022 11:13
PerFluoroHexanoic Acid	1.78	ng/L	No Limit Set	EPA 537	1.34	7/1/2022 11:13
PerFluoroNonanoic Acid	ND	ng/L	12	EPA 537	1.34	7/1/2022 11:13
PerFluoroOctaneSulfonic Acid	2.29	ng/L	10	EPA 537	1.34	7/1/2022 11:13
PerFluoroOctanoic Acid	3.88	ng/L	16	EPA 537	1.34	7/1/2022 11:13

ND = Not Detected
* = Above Specified Limit

Report Approved by: _____
Lab Director

CT Lic PH-0787 NY Lic 11706

AquaEnvLab.com
YorkLab.com
203 270 9973

Analytical results relate to the samples as received at the laboratory. Report shall not be reproduced except in its entirety without written approval from the laboratory.

Technical Report
Perfluoroalkyl Substances (PFAS)

prepared for:

Aqua Environmental Lab
56 Church Hill Road
Newtown CT, 06470
Attention: T. Braun

Report Date: 07/05/2022
Client Project ID: 288625/288617/288673
York Project (SDG) No.: 22F1242

Report Date: 07/05/2022
Client Project ID: 288625/288617/288673
York Project (SDG) No.: 22F1242

Aqua Environmental Lab
56 Church Hill Road
Newtown CT, 06470
Attention: T. Braun

Purpose and Results

This report contains the analytical data for the sample(s) identified on the attached chain-of-custody received in our laboratory on June 23, 2022 and listed below. The project was identified as your project: **288625/288617/288673**.

The analyses were conducted utilizing appropriate EPA methods as detailed in the data summary tables.

All samples were received in proper condition meeting the customary acceptance requirements for environmental samples except those indicated under the Sample and Analysis Qualifiers section of this report.

All analyses met the method and laboratory standard operating procedure requirements except as indicated by any data flags, the meaning of which are explained in the Sample and Data Qualifiers Relating to This Work Order section of this report and case narrative if applicable.

Please contact Client Services at 203.325.1371 with any questions regarding this report or e-mail clientservices@yorklab.com.

York Sample ID	Client Sample ID	Matrix	Date Collected	Date Received
22F1242-01	288625	Drinking Water	06/23/2022	06/23/2022
22F1242-02	288617	Drinking Water	06/23/2022	06/23/2022
22F1242-03	288673	Drinking Water	06/23/2022	06/23/2022
22F1242-04	288625-PFAS-Field Blank	Drinking Water	06/23/2022	06/23/2022
22F1242-05	288617-PFAS-Field Blank	Drinking Water	06/23/2022	06/23/2022
22F1242-06	288673-PFAS-Field Blank	Drinking Water	06/23/2022	06/23/2022

General Notes for York Project (SDG) No.: 22F1242

1. The RLs and MDLs (Reporting Limit and Method Detection Limit respectively) reported are adjusted for any dilution necessary due to the levels of target and/or non-target analytes and matrix interference. The RL(REPORTING LIMIT) is based upon the lowest standard utilized for the calibration where applicable.
2. Samples are retained for a period of thirty days after submittal of report, unless other arrangements are made.
3. York's liability for the above data is limited to the dollar value paid to York for the referenced project.
4. This report shall not be reproduced without the written approval of York Analytical Laboratories, Inc.
5. All analyses conducted met method or Laboratory SOP requirements. See the Sample and Data Qualifiers Section for further information.
6. It is noted that no analyses reported herein were subcontracted to another laboratory, unless noted in the report.
7. This report reflects results that relate only to the samples submitted on the attached chain-of-custody form(s) received by York.
8. Analyses conducted at York Analytical Laboratories, Inc. Stratford, CT are indicated by NY Cert. No. 10854; those conducted at York Analytical Laboratories, Inc., Richmond Hill, NY are indicated by NY Cert. No. 12058.

Approved By: Cassie L. Mosher

Cassie L. Mosher
Laboratory Manager

Date: 07/05/2022

Sample Information

Client Sample ID: 288625 **York Sample ID:** 22F1242-01

York Project (SDG) No.	Client Project ID	Matrix	Collection Date/Time	Date Received
22F1242	288625/288617/288673	Drinking Water	June 23, 2022 8:00 am	06/23/2022

1,4-Dioxane by GC/MS/SIM EPA 522

Log-in Notes:

Sample Notes:

Sample Prepared by Method: EPA 522

CAS No.	Parameter	Result	Flag	Maximum Contaminant Level MCL, ng/L	Units	Reported to LOQ	Reference Method	Date/Time Analyzed	Analyst
123-91-1	1,4-Dioxane	ND		1	ug/L	0.200	EPA 522	06/24/2022 07:43	KH
					Certifications:		NELAC-NY10854	06/27/2022 15:05	
1693-74-9	*** Tetrahydrofuran-d8**	**0.500**		**0**	ug/mL		EPA 522	06/24/2022 07:43	KH
					Certifications:			06/27/2022 15:05	

	Surrogate Recoveries	Result	Acceptance Range
17647-74-4	*Surrogate: 1,4-Dioxane-d8*	*80.0 %*	*70-130*

PFAS, EPA 537.1 List

Well 3

Log-in Notes:

Sample Notes:

Sample Prepared by Method: EPA 537.1 SPE DVB

CAS No.	Parameter	Result	Flag	Maximum Contaminant Level MCL, ng/L	Units	Reported to LOQ	Reference Method	Date/Time Analyzed	Analyst
375-73-5	* Perfluorobutanesulfonic acid (PFBS)	ND		0	ng/L	1.35	EPA 537.1	07/01/2022 11:13	WEL
					Certifications:			07/05/2022 13:50	
307-24-4	*** Perfluorohexanoic acid (PFHxA)**	**1.49**		**0**	ng/L	1.35	EPA 537.1	07/01/2022 11:13	WEL
					Certifications:			07/05/2022 13:50	
375-85-9	* Perfluoroheptanoic acid (PFHpA)	ND		0	ng/L	1.35	EPA 537.1	07/01/2022 11:13	WEL
					Certifications:			07/05/2022 13:50	
355-46-4	*** Perfluorohexanesulfonic acid (PFHxS)**	**1.46**		**0**	ng/L	1.35	EPA 537.1	07/01/2022 11:13	WEL
					Certifications:			07/05/2022 13:50	
335-67-1	**Perfluorooctanoic acid (PFOA)**	**3.35**		**10**	ng/L	1.35	EPA 537.1	07/01/2022 11:13	WEL
					Certifications:		NELAC-NY12058	07/05/2022 13:50	
1763-23-1	**Perfluorooctanesulfonic acid (PFOS)**	**2.05**		**10**	ng/L	1.35	EPA 537.1	07/01/2022 11:13	WEL
					Certifications:		NELAC-NY12058	07/05/2022 13:50	
375-95-1	* Perfluorononanoic acid (PFNA)	ND		0	ng/L	1.35	EPA 537.1	07/01/2022 11:13	WEL
					Certifications:			07/05/2022 13:50	
335-76-2	* Perfluorodecanoic acid (PFDA)	ND		0	ng/L	1.35	EPA 537.1	07/01/2022 11:13	WEL
					Certifications:			07/05/2022 13:50	
2058-94-8	* Perfluoroundecanoic acid (PFUnA)	ND		0	ng/L	1.35	EPA 537.1	07/01/2022 11:13	WEL
					Certifications:			07/05/2022 13:50	
307-55-1	* Perfluorododecanoic acid (PFDoA)	ND		0	ng/L	1.35	EPA 537.1	07/01/2022 11:13	WEL
					Certifications:			07/05/2022 13:50	
72629-94-8	* Perfluorotridecanoic acid (PFTrDA)	ND		0	ng/L	1.35	EPA 537.1	07/01/2022 11:13	WEL
					Certifications:			07/05/2022 13:50	
376-06-7	* Perfluorotetradecanoic acid (PFTA)	ND		0	ng/L	1.35	EPA 537.1	07/01/2022 11:13	WEL
					Certifications:			07/05/2022 13:50	
2355-31-9	* N-MeFOSAA	ND		0	ng/L	1.35	EPA 537.1	07/01/2022 11:13	WEL
					Certifications:			07/05/2022 13:50	
2991-50-6	* N-EtFOSAA	ND		0	ng/L	1.35	EPA 537.1	07/01/2022 11:13	WEL
					Certifications:			07/05/2022 13:50	

Sample Information

Client Sample ID: 288625 **York Sample ID:** 22F1242-01

York Project (SDG) No.	Client Project ID	Matrix	Collection Date/Time	Date Received
22F1242	288625/288617/288673	Drinking Water	June 23, 2022 8:00 am	06/23/2022

PFAS, EPA 537.1 List

Log-in Notes:

Sample Notes:

Sample Prepared by Method: EPA 537.1 SPE DVB

CAS No.	Parameter	Result	Flag	Maximum Contaminant Level MCL, ng/L	Units	Reported to LOQ	Reference Method	Date/Time Analyzed	Analyst
756426-58-1	* 9CL-PF3ONS	ND		0	ng/L	1.35	EPA 537.1	07/01/2022 11:13	WEL
					Certifications:			07/05/2022 13:50	
763051-92-9	* 11CL-PF3OUdS	ND		0	ng/L	1.35	EPA 537.1	07/01/2022 11:13	WEL
					Certifications:			07/05/2022 13:50	
13252-13-6	* HFPO-DA (Gen-X)	ND		0	ng/L	1.35	EPA 537.1	07/01/2022 11:13	WEL
					Certifications:			07/05/2022 13:50	
919005-14-4	* ADONA	ND		0	ng/L	1.35	EPA 537.1	07/01/2022 11:13	WEL
					Certifications:			07/05/2022 13:50	

Surrogate Recoveries	Result	Acceptance Range
Surrogate: d5-N-EtFOSAA	*107 %*	*70-130*
Surrogate: 13C-PFDA	*90.5 %*	*70-130*
Surrogate: 13C-PFHxA	*104 %*	*70-130*
Surrogate: M3HFPO-DA	*96.7 %*	*70-130*

Sample Information

Client Sample ID: 288617 **York Sample ID:** 22F1242-02

York Project (SDG) No.	Client Project ID	Matrix	Collection Date/Time	Date Received
22F1242	288625/288617/288673	Drinking Water	June 23, 2022 9:00 am	06/23/2022

1,4-Dioxane by GC/MS/SIM EPA 522

Log-in Notes:

Sample Notes:

Sample Prepared by Method: EPA 522

CAS No.	Parameter	Result	Flag	Maximum Contaminant Level MCL, ng/L	Units	Reported to LOQ	Reference Method	Date/Time Analyzed	Analyst
123-91-1	1,4-Dioxane	ND		1	ug/L	0.200	EPA 522	06/24/2022 07:43	KH
					Certifications:	NELAC-NY10854		06/27/2022 15:25	
1693-74-9	*** Tetrahydrofuran-d8**	**0.500**		**0**	ug/mL		EPA 522	06/24/2022 07:43	KH
					Certifications:			06/27/2022 15:25	

	Surrogate Recoveries	Result	Acceptance Range
17647-74-4	*Surrogate: 1,4-Dioxane-d8*	*80.0 %*	*70-130*

PFAS, EPA 537.1 List Well 6A

Log-in Notes:

Sample Notes:

Sample Prepared by Method: EPA 537.1 SPE DVB

CAS No.	Parameter	Result	Flag	Maximum Contaminant Level MCL, ng/L	Units	Reported to LOQ	Reference Method	Date/Time Analyzed	Analyst
375-73-5	* Perfluorobutanesulfonic acid (PFBS)	ND		0	ng/L	1.43	EPA 537.1	07/01/2022 11:13	WEL
					Certifications:			07/05/2022 14:03	

Sample Information

Client Sample ID: 288617 **York Sample ID:** 22F1242-02

York Project (SDG) No.	Client Project ID	Matrix	Collection Date/Time	Date Received
22F1242	288625/288617/288673	Drinking Water	June 23, 2022 9:00 am	06/23/2022

PFAS, EPA 537.1 List

Log-in Notes:

Sample Notes:

Sample Prepared by Method: EPA 537.1 SPE DVB

CAS No.	Parameter	Result	Flag	Maximum Contaminant Level MCL, ng/L	Units	Reported to LOQ	Reference Method	Date/Time Analyzed	Analyst
307-24-4	*** Perfluorohexanoic acid (PFHxA)**	**1.78**		**0**	ng/L	1.43	EPA 537.1	07/01/2022 11:13	WEL
					Certifications:			07/05/2022 14:03	
375-85-9	* Perfluoroheptanoic acid (PFHpA)	ND		0	ng/L	1.43	EPA 537.1	07/01/2022 11:13	WEL
					Certifications:			07/05/2022 14:03	
355-46-4	*** Perfluorohexanesulfonic acid (PFHxS)**	**1.54**		**0**	ng/L	1.43	EPA 537.1	07/01/2022 11:13	WEL
					Certifications:			07/05/2022 14:03	
335-67-1	**Perfluorooctanoic acid (PFOA)**	**3.88**		**10**	ng/L	1.43	EPA 537.1	07/01/2022 11:13	WEL
					Certifications:	NELAC-NY12058		07/05/2022 14:03	
1763-23-1	**Perfluorooctanesulfonic acid (PFOS)**	**2.29**		**10**	ng/L	1.43	EPA 537.1	07/01/2022 11:13	WEL
					Certifications:	NELAC-NY12058		07/05/2022 14:03	
375-95-1	* Perfluorononanoic acid (PFNA)	ND		0	ng/L	1.43	EPA 537.1	07/01/2022 11:13	WEL
					Certifications:			07/05/2022 14:03	
335-76-2	* Perfluorodecanoic acid (PFDA)	ND		0	ng/L	1.43	EPA 537.1	07/01/2022 11:13	WEL
					Certifications:			07/05/2022 14:03	
2058-94-8	* Perfluoroundecanoic acid (PFUnA)	ND		0	ng/L	1.43	EPA 537.1	07/01/2022 11:13	WEL
					Certifications:			07/05/2022 14:03	
307-55-1	* Perfluorododecanoic acid (PFDoA)	ND		0	ng/L	1.43	EPA 537.1	07/01/2022 11:13	WEL
					Certifications:			07/05/2022 14:03	
72629-94-8	* Perfluorotridecanoic acid (PFTrDA)	ND		0	ng/L	1.43	EPA 537.1	07/01/2022 11:13	WEL
					Certifications:			07/05/2022 14:03	
376-06-7	* Perfluorotetradecanoic acid (PFTA)	ND		0	ng/L	1.43	EPA 537.1	07/01/2022 11:13	WEL
					Certifications:			07/05/2022 14:03	
2355-31-9	* N-MeFOSAA	ND		0	ng/L	1.43	EPA 537.1	07/01/2022 11:13	WEL
					Certifications:			07/05/2022 14:03	
2991-50-6	* N-EtFOSAA	ND		0	ng/L	1.43	EPA 537.1	07/01/2022 11:13	WEL
					Certifications:			07/05/2022 14:03	
756426-58-1	* 9CL-PF3ONS	ND		0	ng/L	1.43	EPA 537.1	07/01/2022 11:13	WEL
					Certifications:			07/05/2022 14:03	
763051-92-9	* 11CL-PF3OUdS	ND		0	ng/L	1.43	EPA 537.1	07/01/2022 11:13	WEL
					Certifications:			07/05/2022 14:03	
13252-13-6	* HFPO-DA (Gen-X)	ND		0	ng/L	1.43	EPA 537.1	07/01/2022 11:13	WEL
					Certifications:			07/05/2022 14:03	
919005-14-4	* ADONA	ND		0	ng/L	1.43	EPA 537.1	07/01/2022 11:13	WEL
					Certifications:			07/05/2022 14:03	

Surrogate Recoveries	Result	Acceptance Range
Surrogate: d5-N-EtFOSAA	*102 %*	*70-130*
Surrogate: 13C-PFDA	*96.1 %*	*70-130*
Surrogate: 13C-PFHxA	*109 %*	*70-130*
Surrogate: M3HFPO-DA	*101 %*	*70-130*

Sample Information

Client Sample ID: 288673 **York Sample ID:** 22F1242-03

York Project (SDG) No.	Client Project ID	Matrix	Collection Date/Time	Date Received
22F1242	288625/288617/288673	Drinking Water	June 23, 2022 9:20 am	06/23/2022

1,4-Dioxane by GC/MS/SIM EPA 522

Log-in Notes:

Sample Notes:

Sample Prepared by Method: EPA 522

CAS No.	Parameter	Result	Flag	Maximum Contaminant Level MCL, ng/L	Units	Reported to LOQ	Reference Method	Date/Time Analyzed	Analyst
123-91-1	1,4-Dioxane	ND		1	ug/L	0.200	EPA 522	06/24/2022 07:43	KH
					Certifications:	NELAC-NY10854		06/27/2022 15:44	
1693-74-9	*** Tetrahydrofuran-d8**	**0.500**		**0**	ug/mL		EPA 522	06/24/2022 07:43	KH
					Certifications:			06/27/2022 15:44	

	Surrogate Recoveries	Result	Acceptance Range
17647-74-4	*Surrogate: 1,4-Dioxane-d8*	*80.0 %*	*70-130*

PFAS, EPA 537.1 List

Well 1

Log-in Notes:

Sample Notes:

Sample Prepared by Method: EPA 537.1 SPE DVB

CAS No.	Parameter	Result	Flag	Maximum Contaminant Level MCL, ng/L	Units	Reported to LOQ	Reference Method	Date/Time Analyzed	Analyst
375-73-5	* Perfluorobutanesulfonic acid (PFBS)	ND		0	ng/L	1.11	EPA 537.1	07/01/2022 11:13	WEL
					Certifications:			07/05/2022 14:15	
307-24-4	*** Perfluorohexanoic acid (PFHxA)**	**4.48**		**0**	ng/L	1.11	EPA 537.1	07/01/2022 11:13	WEL
					Certifications:			07/05/2022 14:15	
375-85-9	* Perfluoroheptanoic acid (PFHpA)	ND		0	ng/L	1.11	EPA 537.1	07/01/2022 11:13	WEL
					Certifications:			07/05/2022 14:15	
355-46-4	*** Perfluorohexanesulfonic acid (PFHxS)**	**2.22**		**0**	ng/L	1.11	EPA 537.1	07/01/2022 11:13	WEL
					Certifications:			07/05/2022 14:15	
335-67-1	**Perfluorooctanoic acid (PFOA)**	**4.70**		**10**	ng/L	1.11	EPA 537.1	07/01/2022 11:13	WEL
					Certifications:	NELAC-NY12058		07/05/2022 14:15	
1763-23-1	**Perfluorooctanesulfonic acid (PFOS)**	**4.00**		**10**	ng/L	1.11	EPA 537.1	07/01/2022 11:13	WEL
					Certifications:	NELAC-NY12058		07/05/2022 14:15	
375-95-1	* Perfluorononanoic acid (PFNA)	ND		0	ng/L	1.11	EPA 537.1	07/01/2022 11:13	WEL
					Certifications:			07/05/2022 14:15	
335-76-2	* Perfluorodecanoic acid (PFDA)	ND		0	ng/L	1.11	EPA 537.1	07/01/2022 11:13	WEL
					Certifications:			07/05/2022 14:15	
2058-94-8	* Perfluoroundecanoic acid (PFUnA)	ND		0	ng/L	1.11	EPA 537.1	07/01/2022 11:13	WEL
					Certifications:			07/05/2022 14:15	
307-55-1	* Perfluorododecanoic acid (PFDoA)	ND		0	ng/L	1.11	EPA 537.1	07/01/2022 11:13	WEL
					Certifications:			07/05/2022 14:15	
72629-94-8	* Perfluorotridecanoic acid (PFTrDA)	ND		0	ng/L	1.11	EPA 537.1	07/01/2022 11:13	WEL
					Certifications:			07/05/2022 14:15	
376-06-7	* Perfluorotetradecanoic acid (PFTA)	ND		0	ng/L	1.11	EPA 537.1	07/01/2022 11:13	WEL
					Certifications:			07/05/2022 14:15	
2355-31-9	* N-MeFOSAA	ND		0	ng/L	1.11	EPA 537.1	07/01/2022 11:13	WEL
					Certifications:			07/05/2022 14:15	
2991-50-6	* N-EtFOSAA	ND		0	ng/L	1.11	EPA 537.1	07/01/2022 11:13	WEL
					Certifications:			07/05/2022 14:15	
756426-58-1	* 9CL-PF3ONS	ND		0	ng/L	1.11	EPA 537.1	07/01/2022 11:13	WEL
					Certifications:			07/05/2022 14:15	

Sample Information

Client Sample ID: 288673 **York Sample ID:** 22F1242-03

York Project (SDG) No.	Client Project ID	Matrix	Collection Date/Time	Date Received
22F1242	288625/288617/288673	Drinking Water	June 23, 2022 9:20 am	06/23/2022

PFAS, EPA 537.1 List **Log-in Notes:** **Sample Notes:**

Sample Prepared by Method: EPA 537.1 SPE DVB

CAS No.	Parameter	Result	Flag	Maximum Contaminant Level MCL, ng/L	Units	Reported to LOQ	Reference Method	Date/Time Analyzed	Analyst
763051-92-9	* 11CL-PF3OUdS	ND		0	ng/L	1.11	EPA 537.1	07/01/2022 11:13	WEL
					Certifications:			07/05/2022 14:15	
13252-13-6	* HFPO-DA (Gen-X)	ND		0	ng/L	1.11	EPA 537.1	07/01/2022 11:13	WEL
					Certifications:			07/05/2022 14:15	
919005-14-4	* ADONA	ND		0	ng/L	1.11	EPA 537.1	07/01/2022 11:13	WEL
					Certifications:			07/05/2022 14:15	

Surrogate Recoveries	Result	Acceptance Range
Surrogate: d5-N-EtFOSAA	*96.0 %*	*70-130*
Surrogate: 13C-PFDA	*84.4 %*	*70-130*
Surrogate: 13C-PFHxA	*97.8 %*	*70-130*
Surrogate: M3HFPO-DA	*92.7 %*	*70-130*

Sample Information

Client Sample ID: 288625-PFAS-Field Blank **York Sample ID:** 22F1242-04

York Project (SDG) No.	Client Project ID	Matrix	Collection Date/Time	Date Received
22F1242	288625/288617/288673	Drinking Water	June 23, 2022 8:00 am	06/23/2022

PFAS, EPA 537.1 List **Log-in Notes:** **Sample Notes:**

Sample Prepared by Method: EPA 537.1 SPE DVB

CAS No.	Parameter	Result	Flag	Maximum Contaminant Level MCL, ng/L	Units	Reported to LOQ	Reference Method	Date/Time Analyzed	Analyst
375-73-5	* Perfluorobutanesulfonic acid (PFBS)	ND		0	ng/L	1.52	EPA 537.1	07/01/2022 11:13	WEL
					Certifications:			07/05/2022 14:27	
307-24-4	* Perfluorohexanoic acid (PFHxA)	ND		0	ng/L	1.52	EPA 537.1	07/01/2022 11:13	WEL
					Certifications:			07/05/2022 14:27	
375-85-9	* Perfluoroheptanoic acid (PFHpA)	ND		0	ng/L	1.52	EPA 537.1	07/01/2022 11:13	WEL
					Certifications:			07/05/2022 14:27	
355-46-4	* Perfluorohexanesulfonic acid (PFHxS)	ND		0	ng/L	1.52	EPA 537.1	07/01/2022 11:13	WEL
					Certifications:			07/05/2022 14:27	
335-67-1	Perfluorooctanoic acid (PFOA)	ND		10	ng/L	1.52	EPA 537.1	07/01/2022 11:13	WEL
					Certifications:	NELAC-NY12058		07/05/2022 14:27	
1763-23-1	Perfluorooctanesulfonic acid (PFOS)	ND		10	ng/L	1.52	EPA 537.1	07/01/2022 11:13	WEL
					Certifications:	NELAC-NY12058		07/05/2022 14:27	
375-95-1	* Perfluorononanoic acid (PFNA)	ND		0	ng/L	1.52	EPA 537.1	07/01/2022 11:13	WEL
					Certifications:			07/05/2022 14:27	
335-76-2	* Perfluorodecanoic acid (PFDA)	ND		0	ng/L	1.52	EPA 537.1	07/01/2022 11:13	WEL
					Certifications:			07/05/2022 14:27	
2058-94-8	* Perfluoroundecanoic acid (PFUnA)	ND		0	ng/L	1.52	EPA 537.1	07/01/2022 11:13	WEL
					Certifications:			07/05/2022 14:27	

Sample Information

Client Sample ID: 288625-PFAS-Field Blank **York Sample ID:** 22F1242-04

York Project (SDG) No.	Client Project ID	Matrix	Collection Date/Time	Date Received
22F1242	288625/288617/288673	Drinking Water	June 23, 2022 8:00 am	06/23/2022

PFAS, EPA 537.1 List

Log-in Notes:

Sample Notes:

Sample Prepared by Method: EPA 537.1 SPE DVB

CAS No.	Parameter	Result	Flag	Maximum Contaminant Level MCL, ng/L	Units	Reported to LOQ	Reference Method	Date/Time Analyzed	Analyst
307-55-1	* Perfluorododecanoic acid (PFDoA)	ND		0	ng/L	1.52	EPA 537.1	07/01/2022 11:13	WEL
					Certifications:			07/05/2022 14:27	
72629-94-8	* Perfluorotridecanoic acid (PFTrDA)	ND		0	ng/L	1.52	EPA 537.1	07/01/2022 11:13	WEL
					Certifications:			07/05/2022 14:27	
376-06-7	* Perfluorotetradecanoic acid (PFTA)	ND		0	ng/L	1.52	EPA 537.1	07/01/2022 11:13	WEL
					Certifications:			07/05/2022 14:27	
2355-31-9	* N-MeFOSAA	ND		0	ng/L	1.52	EPA 537.1	07/01/2022 11:13	WEL
					Certifications:			07/05/2022 14:27	
2991-50-6	* N-EtFOSAA	ND		0	ng/L	1.52	EPA 537.1	07/01/2022 11:13	WEL
					Certifications:			07/05/2022 14:27	
756426-58-1	* 9CL-PF3ONS	ND		0	ng/L	1.52	EPA 537.1	07/01/2022 11:13	WEL
					Certifications:			07/05/2022 14:27	
763051-92-9	* 11CL-PF3OUdS	ND		0	ng/L	1.52	EPA 537.1	07/01/2022 11:13	WEL
					Certifications:			07/05/2022 14:27	
13252-13-6	* HFPO-DA (Gen-X)	ND		0	ng/L	1.52	EPA 537.1	07/01/2022 11:13	WEL
					Certifications:			07/05/2022 14:27	
919005-14-4	* ADONA	ND		0	ng/L	1.52	EPA 537.1	07/01/2022 11:13	WEL
					Certifications:			07/05/2022 14:27	

Surrogate Recoveries	Result	Acceptance Range
Surrogate: d5-N-EtFOSAA	*107 %*	*70-130*
Surrogate: 13C-PFDA	*95.5 %*	*70-130*
Surrogate: 13C-PFHxA	*104 %*	*70-130*
Surrogate: M3HFPO-DA	*105 %*	*70-130*

Sample Information

Client Sample ID: 288617-PFAS-Field Blank **York Sample ID:** 22F1242-05

York Project (SDG) No.	Client Project ID	Matrix	Collection Date/Time	Date Received
22F1242	288625/288617/288673	Drinking Water	June 23, 2022 9:00 am	06/23/2022

PFAS, EPA 537.1 List

Log-in Notes:

Sample Notes:

Sample Prepared by Method: EPA 537.1 SPE DVB

CAS No.	Parameter	Result	Flag	Maximum Contaminant Level MCL, ng/L	Units	Reported to LOQ	Reference Method	Date/Time Analyzed	Analyst
375-73-5	* Perfluorobutanesulfonic acid (PFBS)	ND		0	ng/L	1.92	EPA 537.1	07/01/2022 11:13	WEL
					Certifications:			07/05/2022 15:04	
307-24-4	* Perfluorohexanoic acid (PFHxA)	ND		0	ng/L	1.92	EPA 537.1	07/01/2022 11:13	WEL
					Certifications:			07/05/2022 15:04	
375-85-9	* Perfluoroheptanoic acid (PFHpA)	ND		0	ng/L	1.92	EPA 537.1	07/01/2022 11:13	WEL
					Certifications:			07/05/2022 15:04	

Sample Information

Client Sample ID: 288617-PFAS-Field Blank **York Sample ID:** 22F1242-05

York Project (SDG) No.	Client Project ID	Matrix	Collection Date/Time	Date Received
22F1242	288625/288617/288673	Drinking Water	June 23, 2022 9:00 am	06/23/2022

PFAS, EPA 537.1 List **Log-in Notes:** **Sample Notes:**

Sample Prepared by Method: EPA 537.1 SPE DVB

CAS No.	Parameter	Result	Flag	Maximum Contaminant Level MCL, ng/L	Units	Reported to LOQ	Reference Method	Date/Time Analyzed	Analyst
355-46-4	* Perfluorohexanesulfonic acid (PFHxS)	ND		0	ng/L	1.92	EPA 537.1	07/01/2022 11:13	WEL
					Certifications:			07/05/2022 15:04	
335-67-1	Perfluorooctanoic acid (PFOA)	ND		10	ng/L	1.92	EPA 537.1	07/01/2022 11:13	WEL
					Certifications:	NELAC-NY12058		07/05/2022 15:04	
1763-23-1	Perfluorooctanesulfonic acid (PFOS)	ND		10	ng/L	1.92	EPA 537.1	07/01/2022 11:13	WEL
					Certifications:	NELAC-NY12058		07/05/2022 15:04	
375-95-1	* Perfluorononanoic acid (PFNA)	ND		0	ng/L	1.92	EPA 537.1	07/01/2022 11:13	WEL
					Certifications:			07/05/2022 15:04	
335-76-2	* Perfluorodecanoic acid (PFDA)	ND		0	ng/L	1.92	EPA 537.1	07/01/2022 11:13	WEL
					Certifications:			07/05/2022 15:04	
2058-94-8	* Perfluoroundecanoic acid (PFUnA)	ND		0	ng/L	1.92	EPA 537.1	07/01/2022 11:13	WEL
					Certifications:			07/05/2022 15:04	
307-55-1	* Perfluorododecanoic acid (PFDoA)	ND		0	ng/L	1.92	EPA 537.1	07/01/2022 11:13	WEL
					Certifications:			07/05/2022 15:04	
72629-94-8	* Perfluorotridecanoic acid (PFTrDA)	ND		0	ng/L	1.92	EPA 537.1	07/01/2022 11:13	WEL
					Certifications:			07/05/2022 15:04	
376-06-7	* Perfluorotetradecanoic acid (PFTA)	ND		0	ng/L	1.92	EPA 537.1	07/01/2022 11:13	WEL
					Certifications:			07/05/2022 15:04	
2355-31-9	* N-MeFOSAA	ND		0	ng/L	1.92	EPA 537.1	07/01/2022 11:13	WEL
					Certifications:			07/05/2022 15:04	
2991-50-6	* N-EtFOSAA	ND		0	ng/L	1.92	EPA 537.1	07/01/2022 11:13	WEL
					Certifications:			07/05/2022 15:04	
756426-58-1	* 9CL-PF3ONS	ND		0	ng/L	1.92	EPA 537.1	07/01/2022 11:13	WEL
					Certifications:			07/05/2022 15:04	
763051-92-9	* 11CL-PF3OUdS	ND		0	ng/L	1.92	EPA 537.1	07/01/2022 11:13	WEL
					Certifications:			07/05/2022 15:04	
13252-13-6	* HFPO-DA (Gen-X)	ND		0	ng/L	1.92	EPA 537.1	07/01/2022 11:13	WEL
					Certifications:			07/05/2022 15:04	
919005-14-4	* ADONA	ND		0	ng/L	1.92	EPA 537.1	07/01/2022 11:13	WEL
					Certifications:			07/05/2022 15:04	

Surrogate Recoveries	Result	Acceptance Range
Surrogate: d5-N-EtFOSAA	*95.7 %*	*70-130*
Surrogate: 13C-PFDA	*82.6 %*	*70-130*
Surrogate: 13C-PFHxA	*87.4 %*	*70-130*
Surrogate: M3HFPO-DA	*91.1 %*	*70-130*

Sample Information

Client Sample ID: 288673-PFAS-Field Blank **York Sample ID:** 22F1242-06

York Project (SDG) No.	Client Project ID	Matrix	Collection Date/Time	Date Received
22F1242	288625/288617/288673	Drinking Water	June 23, 2022 9:20 am	06/23/2022

Sample Information

Client Sample ID: 288673-PFAS-Field Blank **York Sample ID:** 22F1242-06

York Project (SDG) No.	Client Project ID	Matrix	Collection Date/Time	Date Received
22F1242	288625/288617/288673	Drinking Water	June 23, 2022 9:20 am	06/23/2022

PFAS, EPA 537.1 List **Log-in Notes:** **Sample Notes:**

Sample Prepared by Method: EPA 537.1 SPE DVB

CAS No.	Parameter	Result	Flag	Maximum Contaminant Level MCL, ng/L	Units	Reported to LOQ	Reference Method	Date/Time Analyzed	Analyst
375-73-5	* Perfluorobutanesulfonic acid (PFBS)	ND		0	ng/L	2.00	EPA 537.1	07/01/2022 11:13	WEL
					Certifications:			07/05/2022 15:18	
307-24-4	* Perfluorohexanoic acid (PFHxA)	ND		0	ng/L	2.00	EPA 537.1	07/01/2022 11:13	WEL
					Certifications:			07/05/2022 15:18	
375-85-9	* Perfluoroheptanoic acid (PFHpA)	ND		0	ng/L	2.00	EPA 537.1	07/01/2022 11:13	WEL
					Certifications:			07/05/2022 15:18	
355-46-4	* Perfluorohexanesulfonic acid (PFHxS)	ND		0	ng/L	2.00	EPA 537.1	07/01/2022 11:13	WEL
					Certifications:			07/05/2022 15:18	
335-67-1	Perfluorooctanoic acid (PFOA)	ND		10	ng/L	2.00	EPA 537.1	07/01/2022 11:13	WEL
					Certifications:		NELAC-NY12058	07/05/2022 15:18	
1763-23-1	Perfluorooctanesulfonic acid (PFOS)	ND		10	ng/L	2.00	EPA 537.1	07/01/2022 11:13	WEL
					Certifications:		NELAC-NY12058	07/05/2022 15:18	
375-95-1	* Perfluorononanoic acid (PFNA)	ND		0	ng/L	2.00	EPA 537.1	07/01/2022 11:13	WEL
					Certifications:			07/05/2022 15:18	
335-76-2	* Perfluorodecanoic acid (PFDA)	ND		0	ng/L	2.00	EPA 537.1	07/01/2022 11:13	WEL
					Certifications:			07/05/2022 15:18	
2058-94-8	* Perfluoroundecanoic acid (PFUnA)	ND		0	ng/L	2.00	EPA 537.1	07/01/2022 11:13	WEL
					Certifications:			07/05/2022 15:18	
307-55-1	* Perfluorododecanoic acid (PFDoA)	ND		0	ng/L	2.00	EPA 537.1	07/01/2022 11:13	WEL
					Certifications:			07/05/2022 15:18	
72629-94-8	* Perfluorotridecanoic acid (PFTrDA)	ND		0	ng/L	2.00	EPA 537.1	07/01/2022 11:13	WEL
					Certifications:			07/05/2022 15:18	
376-06-7	* Perfluorotetradecanoic acid (PFTA)	ND		0	ng/L	2.00	EPA 537.1	07/01/2022 11:13	WEL
					Certifications:			07/05/2022 15:18	
2355-31-9	* N-MeFOSAA	ND		0	ng/L	2.00	EPA 537.1	07/01/2022 11:13	WEL
					Certifications:			07/05/2022 15:18	
2991-50-6	* N-EtFOSAA	ND		0	ng/L	2.00	EPA 537.1	07/01/2022 11:13	WEL
					Certifications:			07/05/2022 15:18	
756426-58-1	* 9CL-PF3ONS	ND		0	ng/L	2.00	EPA 537.1	07/01/2022 11:13	WEL
					Certifications:			07/05/2022 15:18	
763051-92-9	* 11CL-PF3OUdS	ND		0	ng/L	2.00	EPA 537.1	07/01/2022 11:13	WEL
					Certifications:			07/05/2022 15:18	
13252-13-6	* HFPO-DA (Gen-X)	ND		0	ng/L	2.00	EPA 537.1	07/01/2022 11:13	WEL
					Certifications:			07/05/2022 15:18	
919005-14-4	* ADONA	ND		0	ng/L	2.00	EPA 537.1	07/01/2022 11:13	WEL
					Certifications:			07/05/2022 15:18	

Surrogate Recoveries	Result	Acceptance Range
Surrogate: d5-N-EtFOSAA	*96.6 %*	*70-130*
Surrogate: 13C-PFDA	*91.1 %*	*70-130*
Surrogate: 13C-PFHxA	*107 %*	*70-130*
Surrogate: M3HFPO-DA	*113 %*	*70-130*

Analytical Batch Summary

Batch ID: BF21540 **Preparation Method:** EPA 522 **Prepared By:** SJB

YORK Sample ID	Client Sample ID	Preparation Date
22F1242-01	288625	06/24/22
22F1242-02	288617	06/24/22
22F1242-03	288673	06/24/22
BF21540-BLK1	Blank	06/24/22
BF21540-BS1	LCS	06/24/22
BF21540-BS2	LCS	06/24/22
BF21540-DUP1	Duplicate	06/24/22
BF21540-MS1	Matrix Spike	06/24/22

Batch ID: BG20029 **Preparation Method:** EPA 537.1 SPE DVB **Prepared By:** WEL

YORK Sample ID	Client Sample ID	Preparation Date
22F1242-01	288625	07/01/22
22F1242-02	288617	07/01/22
22F1242-03	288673	07/01/22
22F1242-04	288625-PFAS-Field Blank	07/01/22
22F1242-05	288617-PFAS-Field Blank	07/01/22
22F1242-06	288673-PFAS-Field Blank	07/01/22
BG20029-BLK1	Blank	07/01/22
BG20029-BS1	LCS	07/01/22
BG20029-DUP1	Duplicate	07/01/22
BG20029-MS1	Matrix Spike	07/01/22

Semivolatile Organic Compounds by GC/MS/SIM - Quality Control Data

York Analytical Laboratories, Inc.

Analyte	Result	Reporting Limit	Units	Spike Level	Source* Result	%REC	%REC Limits	Flag	RPD	RPD Limit	Flag
Batch BF21540 - EPA 522											
Blank (BF21540-BLK1)									Prepared: 06/24/2022 Analyzed: 06/27/2022		
1,4-Dioxane	ND	0.200	ug/L								
Surrogate: 1,4-Dioxane-d8	*2.80*		*"*	*2.50*		*112*	*70-130*				
LCS (BF21540-BS1)									Prepared: 06/24/2022 Analyzed: 06/27/2022		
1,4-Dioxane	4.66	0.200	ug/L	5.00		93.2	70-130				
Surrogate: 1,4-Dioxane-d8	*2.20*		*"*	*2.50*		*88.0*	*70-130*				
LCS (BF21540-BS2)									Prepared: 06/24/2022 Analyzed: 06/27/2022		
1,4-Dioxane	8.86	0.200	ug/L	10.0		88.6	70-130				
Surrogate: 1,4-Dioxane-d8	*2.20*		*"*	*2.50*		*88.0*	*70-130*				
Duplicate (BF21540-DUP1)	*Source sample: 22F0847-01 (Duplicate)								Prepared: 06/24/2022 Analyzed: 06/27/2022		
1,4-Dioxane	ND	0.200	ug/L		ND					30	
Surrogate: 1,4-Dioxane-d8	*2.60*		*"*	*2.50*		*104*	*70-130*				
Matrix Spike (BF21540-MS1)	*Source sample: 22F0765-01 (Matrix Spike)								Prepared: 06/24/2022 Analyzed: 06/27/2022		
1,4-Dioxane	4.17	0.200	ug/L	5.00	ND	83.4	70-130				
Surrogate: 1,4-Dioxane-d8	*2.40*		*"*	*2.50*		*96.0*	*70-130*				

Analyte	Result	Reporting Limit	Units	Spike Level	Source* Result	%REC	%REC Limits	Flag	RPD	RPD Limit	Flag
Batch BG20029 - EPA 537.1 SPE DVB											
Blank (BG20029-BLK1)									Prepared: 07/01/2022 Analyzed: 07/05/2022		
Perfluorobutanesulfonic acid (PFBS)	ND	2.00	ng/L								
Perfluorohexanoic acid (PFHxA)	ND	2.00	"								
Perfluoroheptanoic acid (PFHpA)	ND	2.00	"								
Perfluorohexanesulfonic acid (PFHxS)	ND	2.00	"								
Perfluorooctanoic acid (PFOA)	ND	2.00	"								
Perfluorooctanesulfonic acid (PFOS)	ND	2.00	"								
Perfluorononanoic acid (PFNA)	ND	2.00	"								
Perfluorodecanoic acid (PFDA)	ND	2.00	"								
Perfluoroundecanoic acid (PFUnA)	ND	2.00	"								
Perfluorododecanoic acid (PFDoA)	ND	2.00	"								
Perfluorotridecanoic acid (PFTrDA)	ND	2.00	"								
Perfluorotetradecanoic acid (PFTA)	ND	2.00	"								
N-MeFOSAA	ND	2.00	"								
N-EtFOSAA	ND	2.00	"								
9CL-PF3ONS	ND	2.00	"								
11CL-PF3OUdS	ND	2.00	"								
HFPO-DA (Gen-X)	ND	2.00	"								
ADONA	ND	2.00	"								
Surrogate: d5-N-EtFOSAA	*287*		"	*320*		*89.5*	*70-130*				
Surrogate: 13C-PFDA	*69.4*		"	*80.0*		*86.8*	*70-130*				
Surrogate: 13C-PFHxA	*75.8*		"	*80.0*		*94.7*	*70-130*				
Surrogate: M3HFPO-DA	*73.2*		"	*80.0*		*91.5*	*70-130*				
LCS (BG20029-BS1)									Prepared: 07/01/2022 Analyzed: 07/05/2022		
Perfluorobutanesulfonic acid (PFBS)	32.3	2.00	ng/L	35.4		91.1	70-130				
Perfluorohexanoic acid (PFHxA)	34.8	2.00	"	40.0		87.0	70-130				
Perfluoroheptanoic acid (PFHpA)	36.5	2.00	"	40.0		91.2	70-130				
Perfluorohexanesulfonic acid (PFHxS)	35.4	2.00	"	38.0		93.0	70-130				
Perfluorooctanoic acid (PFOA)	37.9	2.00	"	40.0		94.7	70-130				
Perfluorooctanesulfonic acid (PFOS)	37.2	2.00	"	38.4		96.9	70-130				
Perfluorononanoic acid (PFNA)	38.4	2.00	"	40.0		95.9	70-130				
Perfluorodecanoic acid (PFDA)	32.7	2.00	"	40.0		81.7	70-130				
Perfluoroundecanoic acid (PFUnA)	36.4	2.00	"	40.0		91.0	70-130				
Perfluorododecanoic acid (PFDoA)	36.4	2.00	"	40.0		91.1	70-130				
Perfluorotridecanoic acid (PFTrDA)	31.3	2.00	"	40.0		78.2	70-130				
Perfluorotetradecanoic acid (PFTA)	32.5	2.00	"	40.0		81.2	70-130				
N-MeFOSAA	37.4	2.00	"	40.0		93.5	70-130				
N-EtFOSAA	37.5	2.00	"	40.0		93.6	70-130				
9CL-PF3ONS	33.9	2.00	"	37.4		90.6	60-130				
11CL-PF3OUdS	31.1	2.00	"	37.8		82.3	60-130				
HFPO-DA (Gen-X)	33.8	2.00	"	40.0		84.6	60-130				
ADONA	32.7	2.00	"	37.8		86.5	60-130				
Surrogate: d5-N-EtFOSAA	*337*		"	*320*		*105*	*70-130*				
Surrogate: 13C-PFDA	*74.7*		"	*80.0*		*93.3*	*70-130*				
Surrogate: 13C-PFHxA	*83.2*		"	*80.0*		*104*	*70-130*				
Surrogate: M3HFPO-DA	*78.9*		"	*80.0*		*98.6*	*70-130*				

PFAS Target compounds by LC/MS-MS - Quality Control Data

York Analytical Laboratories, Inc.

Analyte	Result	Reporting Limit	Units	Spike Level	Source* Result	%REC	%REC Limits	Flag	RPD	RPD Limit	Flag
Batch BG20029 - EPA 537.1 SPE DVB											
Duplicate (BG20029-DUP1)	*Source sample: 22F1242-04 (288625-PFAS-Field Blank)								Prepared: 07/01/2022 Analyzed: 07/05/2022		
Perfluorobutanesulfonic acid (PFBS)	ND	2.17	ng/L		ND					25	
Perfluorohexanoic acid (PFHxA)	ND	2.17	"		ND					25	
Perfluoroheptanoic acid (PFHpA)	ND	2.17	"		ND					25	
Perfluorohexanesulfonic acid (PFHxS)	ND	2.17	"		ND					25	
Perfluorooctanoic acid (PFOA)	ND	2.17	"		ND					25	
Perfluorooctanesulfonic acid (PFOS)	ND	2.17	"		ND					25	
Perfluorononanoic acid (PFNA)	ND	2.17	"		ND					25	
Perfluorodecanoic acid (PFDA)	ND	2.17	"		ND					25	
Perfluoroundecanoic acid (PFUnA)	ND	2.17	"		ND					25	
Perfluorododecanoic acid (PFDoA)	ND	2.17	"		ND					25	
Perfluorotridecanoic acid (PFTrDA)	ND	2.17	"		ND					25	
Perfluorotetradecanoic acid (PFTA)	ND	2.17	"		ND					25	
N-MeFOSAA	ND	2.17	"		ND					25	
N-EtFOSAA	ND	2.17	"		ND					25	
9CL-PF3ONS	ND	2.17	"		ND					25	
11CL-PF3OUdS	ND	2.17	"		ND					25	
HFPO-DA (Gen-X)	ND	2.17	"		ND					25	
ADONA	ND	2.17	"		ND					25	
Surrogate: d5-N-EtFOSAA	*348*		*"*	*348*		*100*	*70-130*				
Surrogate: 13C-PFDA	*77.2*		*"*	*87.0*		*88.8*	*70-130*				
Surrogate: 13C-PFHxA	*87.6*		*"*	*87.0*		*101*	*70-130*				
Surrogate: M3HFPO-DA	*84.0*		*"*	*87.0*		*96.6*	*70-130*				
Matrix Spike (BG20029-MS1)	*Source sample: 22F1306-01 (Matrix Spike)								Prepared: 07/01/2022 Analyzed: 07/05/2022		
Perfluorobutanesulfonic acid (PFBS)	58.9	2.00	ng/L	70.8	ND	83.1	70-130				
Perfluorohexanoic acid (PFHxA)	64.6	2.00	"	80.0	ND	80.7	70-130				
Perfluoroheptanoic acid (PFHpA)	69.6	2.00	"	80.0	ND	87.0	70-130				
Perfluorohexanesulfonic acid (PFHxS)	71.2	2.00	"	76.0	ND	93.7	70-130				
Perfluorooctanoic acid (PFOA)	72.3	2.00	"	80.0	ND	90.4	70-130				
Perfluorooctanesulfonic acid (PFOS)	68.0	2.00	"	76.8	ND	88.6	70-130				
Perfluorononanoic acid (PFNA)	68.4	2.00	"	80.0	ND	85.5	70-130				
Perfluorodecanoic acid (PFDA)	65.0	2.00	"	80.0	ND	81.2	70-130				
Perfluoroundecanoic acid (PFUnA)	67.1	2.00	"	80.0	ND	83.9	70-130				
Perfluorododecanoic acid (PFDoA)	64.8	2.00	"	80.0	ND	81.0	70-130				
Perfluorotridecanoic acid (PFTrDA)	60.5	2.00	"	80.0	ND	75.6	70-130				
Perfluorotetradecanoic acid (PFTA)	63.2	2.00	"	80.0	ND	79.0	70-130				
N-MeFOSAA	73.5	2.00	"	80.0	ND	91.8	70-130				
N-EtFOSAA	69.6	2.00	"	80.0	ND	87.0	70-130				
9CL-PF3ONS	67.2	2.00	"	74.8	ND	89.9	70-130				
11CL-PF3OUdS	59.4	2.00	"	75.6	ND	78.5	70-130				
HFPO-DA (Gen-X)	59.2	2.00	"	80.0	ND	74.0	70-130				
ADONA	60.6	2.00	"	75.6	ND	80.2	50-130				
Surrogate: d5-N-EtFOSAA	*304*		*"*	*320*		*94.9*	*70-130*				
Surrogate: 13C-PFDA	*70.4*		*"*	*80.0*		*88.0*	*70-130*				
Surrogate: 13C-PFHxA	*77.0*		*"*	*80.0*		*96.2*	*70-130*				
Surrogate: M3HFPO-DA	*72.0*		*"*	*80.0*		*90.0*	*70-130*				

Sample and Data Qualifiers Relating to This Work Order

Definitions and Other Explanations

*	Analyte is not certified or the state of the samples origination does not offer certification for the Analyte.
ND	NOT DETECTED - the analyte is not detected at the Reported to level (LOQ/RL or LOD/MDL)
RL	REPORTING LIMIT - the minimum reportable value based upon the lowest point in the analyte calibration curve.
LOQ	LIMIT OF QUANTITATION - the minimum concentration of a target analyte that can be reported within a specified degree of confidence. This is the lowest point in an analyte calibration curve that has been subjected to all steps of the processing/analysis and verified to meet defined criteria. This is based upon NELAC 2009 Standards and applies to all analyses.
LOD	LIMIT OF DETECTION - a verified estimate of the minimum concentration of a substance in a given matrix that an analytical process can reliably detect. This is based upon NELAC 2009 Standards and applies to all analyses conducted under the auspices of EPA SW-846.
MDL	METHOD DETECTION LIMIT - a statistically derived estimate of the minimum amount of a substance an analytical system can reliably detect with a 99% confidence that the concentration of the substance is greater than zero. This is based upon 40 CFR Part 136 Appendix B and applies only to EPA 600 and 200 series methods.
Reported to	This indicates that the data for a particular analysis is reported to either the LOD/MDL, or the LOQ/RL. In cases where the "Reported to" is located above the LOD/MDL, any value between this and the LOQ represents an estimated value which is "J" flagged accordingly. This applies to volatile and semi-volatile target compounds only.
NR	Not reported
RPD	Relative Percent Difference
Wet	The data has been reported on an as-received (wet weight) basis
Low Bias	Low Bias flag indicates that the recovery of the flagged analyte is below the laboratory or regulatory lower control limit. The data user should take note that this analyte may be biased low but should evaluate multiple lines of evidence including the LCS and site-specific MS/MSD data to draw bias conclusions. In cases where no site-specific MS/MSD was requested, only the LCS data can be used to evaluate such bias.
High Bias	High Bias flag indicates that the recovery of the flagged analyte is above the laboratory or regulatory upper control limit. The data user should take note that this analyte may be biased high but should evaluate multiple lines of evidence including the LCS and site-specific MS/MSD data to draw bias conclusions. In cases where no site-specific MS/MSD was requested, only the LCS data can be used to evaluate such bias.
Non-Dir.	Non-dir. flag (Non-Directional Bias) indicates that the Relative Percent Difference (RPD) (a measure of precision) among the MS and MSD data is outside the laboratory or regulatory control limit. This alerts the data user where the MS and MSD are from site-specific samples that the RPD is high due to either non-homogeneous distribution of target analyte between the MS/MSD or indicates poor reproducibility for other reasons.
MCL	This is the Maximum Contaminant Level in ng/L (ppt) establised by the NYSDOH for these compounds wheree an MCL is reported. Exceedences are flagged according.

Field Chain-of-Custody Record

YORK
ANALYTICAL LABORATORIES INC

York Analytical Laboratories, Inc. (YORK)'s Standard Terms & Conditions are listed on the back side of this document.
This document serves as your written authorization for YORK to proceed with the analyses requested below.
Your signature binds you to YORK's Standard Terms & Conditions.

YORK Project No. 22F1242

120 Research Drive Stratford, CT 06615 | 132-02 89th Ave Queens, NY 11418 | clientservices@yorklab.com | www.yorklab.com | 800-306-YORK | 800-306-9675 | Page ____ of ____

YOUR Information	Report To:	Invoice To:	YOUR Project Number	Turn-Around Time
Company:	Company: Agua Environmental Lab	Company:		RUSH - Next Day
Address:	Address:	Address:	YOUR Project Name	RUSH - Two Day
Phone.:	Phone.:	Phone.:		RUSH - Three Day
Contact:	Contact:	Contact:		RUSH - Four Day
E-mail:	E-mail:	E-mail:	YOUR PO#:	Standard (5-7 Day)

Please print clearly and legibly. All information must be complete. Samples will not be logged in and the turn-around-time clock will not begin until any questions by YORK are resolved.

Samples Collected by: (print AND sign your name)

Matrix Codes
S - soil / solid
GW - groundwater
DW - drinking water
WW - wastewater
O - Oil | Other

Samples From
New York ✓
New Jersey
Connecticut
Pennsylvania
Other:

Report / EDD Type (circle selections)
Summary Report | CT RCP | Standard Excel EDD
QA Report | CT RCP DQA/DUE | EQuIS (Standard)
NY ASP A Package | NJDEP Reduced Deliverables | NYSDEC EQuIS
NY ASP B Package | NJDEP SRP HazSite
NJDKQP | Other:

YORK Reg. Comp.
Compared to the following Regulation(s): (please fill in)

Sample Identification	Sample Matrix	Date/Time Sampled	Analysis Requested	Container Description
288625	DW	6/23/22 8:40 am	PFAS Method 537 18 Compound +	1,4 Dioxane
288617	DW	6/23/22 9:40 am	PFAS Method 537 18 Compound +	1,4 Dioxane
288623	DW	6/23/22 9:20 am	PFAS Method 537 18 Compound +	1,4 Dioxane

Comments:

Preservation: (check all that apply)
HCl ____ MeOH ____ HNO3 ____ H2SO4 ____ NaOH ____
ZnAc ____ Ascorbic Acid ____ Other: ____

Special Instruction
Field Filtered
Lab to Filter

Samples iced/chilled at time of lab pickup? circle Yes or No

Samples Relinquished by / Company	Date/Time	Samples Received by / Company	Date/Time	Samples Relinquished by / Company	Date/Time
[illegible]	6/23/22 12:55 pm	1.		2. S Beaman 6/23	13:55
Samples Received by / Company	Date/Time	3. Samples Relinquished by / Company	Date/Time	3. Samples Received by / Company	Date/Time
Samples Relinquished by / Company	Date/Time	4. Samples Received by / Company	Date/Time	Samples Received in LAB by	Date/Time 6/24/22 1317 Temperature 1.0 Degrees C

EnviroTest Laboratories Inc.

ANALYTICAL REPORT

Job Number: 420-227328-1

SDG Number: Summit Club Well 6A

Job Description: WSP USA

For:
WSP USA
4 Research Drive
Shelton, CT 06464

Attention: Stacy Stieber

Mary Hernandez
Customer Service Manager
reports@envirotestlaboratories.com
08/17/2022

NYSDOH ELAP does not certify for all parameters. EnviroTest Laboratories does hold certification for all analytes where certification is offered by ELAP unless otherwise specified in the Certification Information section of this report. Pursuant to NELAP, this report may not be reproduced, except in full, without written approval of the laboratory. EnviroTest Laboratories LLC certifies that the analytical results contained herein apply only to the samples tested as received by our laboratory. All questions regarding this report should be directed to the EnviroTest Customer Service Representative. All services performed by EnviroTest Laboratories LLC are subject to our Terms and Conditions available at Envirotestlabs/terms.com. As of 12/23/19, EnviroTest Laboratories LLC acquired substantially all of the lab and testing assets of EnviroTest Laboratories Inc, including its name.

EnviroTest Laboratories, LLC. Certifications and Approvals: NYSDOH 10142, NJDEP NY015, CTDOPH PH-0554

METHOD SUMMARY

Client: WSP USA

Job Number: 420-227328-1
SDG Number: Summit Club Well 6A

Description	Lab Location	Method	Preparation Method
Matrix: Water			
General Sub Contract Method		Subcontract	

Lab References:

=

Method References:

SAMPLE SUMMARY

Client: WSP USA

Job Number: 420-227328-1
SDG Number: Summit Club Well 6A

Lab Sample ID	Client Sample ID	Client Matrix	Date/Time Sampled	Date/Time Received
420-227328-1	Well 6A	Water	06/22/2022 0855	06/22/2022 1145

CC1320

Page ___ of ___

Analytical Services, Inc.

CHAIN OF CUSTODY RECORD

Ship to: Analytical Services, Inc., 130 Allen Brook Lane, Williston, VT 05495, Attn: Sample Management
Phone: 1-800-723-4432 or 802-878-5138 • Fax: 802-878-6765 *Web site: www.analyticalservices.com*

Submitted By: WSP USA 4 Research Drive, Suite 204 Shelton, CT 06484 Phone: 475-882-1723 Email: stacy.stieber@wsp.com	Report To: Stacy Stieber WSP USA ~~Shelton~~ 4 Research Drive Shelton, CT 06484 Phone: 475-882-1723 Email: stacy.stieber@wsp.com
Project Name: Summit Club	Invoice To:
Job Site: 31403576.002	
P.O. Number:	Phone: Email:

Sample Identification*	Sample Collection: Date (Start)	Time (Start)	Sampler Initials	Sample Matrix (check one): Water - Raw	Water - Finished	Waste Water	Biosolids	Soil/Sediment	Other	Analysis Requested	Lab Use Only Temp (°C)
Well 6A	6/22/22	855	SZ	X						MPA w/ IFA	

*Sample ID should match ID written on the sample containers and data sheets. Sample ID will appear on the report for identification.

Relinquished By (signature)	Date/Time	Received By (signature)	Date/Time
[signature]	6/22/22 1145	[signature]	6/22/22 1145

Field Comments:	Lab Comments:

White – To accompany samples • Yellow – Sampler Copy

LOGIN SAMPLE RECEIPT CHECK LIST

Client: WSP USA

Job Number: 420-227328-1
SDG Number: Summit Club Well 6A

Login Number: **227328**

Question	T/F/NA	Comment
Samples were collected by ETL employee as per SOP-SAM-1	NA	
The cooler's custody seal, if present, is intact.	NA	
The cooler or samples do not appear to have been compromised or tampered with.	True	
Samples were received on ice.	True	
Cooler Temperature is recorded.	True	2.2C
Cooler Temp. is within method specified range.(0-4 C PW, 0-6 C NPW, or BAC <10 C	True	
If false, was sample received on ice within 6 hours of collection.	NA	
Based on above criteria cooler temperature is acceptable.	True	
COC is present.	True	
COC is filled out in ink and legible.	True	
COC is filled out with all pertinent information.	True	
There are no discrepancies between the sample IDs on the containers and the COC.	True	
Samples are received within Holding Time.	True	
Sample containers have legible labels.	True	
Containers are not broken or leaking.	True	
Sample collection date/times are provided.	True	
Appropriate sample containers are used.	True	
Sample bottles are completely filled.	True	
There is sufficient vol. for all requested analyses, incl. any requested MS/MSDs	True	
VOA sample vials do not have headspace or bubble is <6mm (1/4") in diameter.	NA	
If necessary, staff have been informed of any short hold time or quick TAT needs	True	
Multiphasic samples are not present.	True	
Samples do not require splitting or compositing.	True	

ANALYTICAL SERVICES, INC.
Microbiological Testing, Research and Consulting

130 Allen Brook Ln., PO Box 515, Williston, VT 05495 USA
1.800.723.4432 / 802.878.5138 Fax: 802.878.6765
www.analyticalservices.com

8/15/2022

Ron Bayer
EnviroTest Laboratories
315 Fullerton Ave
Newburgh, NY 12550

Subj.: ASI Report 69086

Dear Ron,

Enclosed please find the results of Microscopic Particulate Analysis (MPA) performed by Analytical Services, Inc. (ASI).

Sample(s) covered in this report were received at ASI on: 6/23/2022

This report contains the following number of pages (total): 5

This report concerns only the samples referenced herein. These results were generated under ASI's quality system, which is in accordance with the NELAC (TNI) standard. Deviations, if any, are noted.

Exceptions: NA

This report shall not be reproduced, except in full, without ASI's written permission.

Thank you for using ASI for your microbiological testing needs. If you have any questions, please contact us at 800-723-4432.

Sincerely,
ANALYTICAL SERVICES, INC. (ASI)

Harry D. Christman, Ph.D.
Technical Director

P 1/1

Microscopic Particulate Analysis (MPA)

Sample Information

Client	EnviroTest Laboratories	Volume Sampled (gal)	788.4
Site	Summit Club	Filter Color	Off-White
Water Type	Raw/Well	Sediment Volume (mL)	0.3
Client Sample ID	Well 1	Analysis Start	6/23/22 12:00
ASI Sample #	69086-01	Analysis End	8/4/22

MPA Data (data per 100 gal.)

Vol. Examined at 150x (gal.)	100	Detection Limit at 150X =	1.0
Vol. Examined at 300x (gal.)	NA	Detection Limit at 300X =	NA
Amorphous Debris	Uniform	Iron Bacteria	ND
Vegetative Debris w/ chlorophyll	ND	Crustaceans	ND
Veg. Debris w/o chlorophyll	1	Crustacean Parts/Eggs	ND
Diatoms w/ chlorophyll (300X)	ND	Water Mites	ND
Diatoms w/o chlorophyll (300X)	ND	Gastrotrichs	ND
Other Algae (300X, see below)	ND	Tardigrades	ND
Coccidia (300x)	ND	Nematodes/N. Eggs	ND
Rotifiers / Rotifier Eggs	ND	Invertebrate Eggs	ND
Spores	ND	Annelids	ND
Pollen	ND	Amoeba	ND
Insects/Larvae	ND	Protozoa (300X, non-Crypto/Giardia)	ND

Cryptosporidium and Giardia Data

		RESULTS	
Volume Examined (gal.)	394.2	Examined	Per 100gal
	Cryptosporidium Oocysts:	0	<0.25
	Giardia Cysts:	0	<0.25

MPA Risk Rating Score (per EPA Consensus Method)

Numerical Score	0	Risk Rating	Low

Other

Algae Observed	NA
Comments	NA

Methods: MPA - SOP based on EPA Consensus Method (EPA 910/9-92-029)

Cryptosporidium & Giardia - SOP based on purification, staining & exam procedures in EPA 1623/1623.1

Notes MPA Risk Rating Tables were developed by USEPA Region 10 from limited data; interpret with caution.

MPA Risk Rating Score - if less than 100 gallons was examined, interpret with caution.

Microscopic Particulate Analysis (MPA)

Sample Information

Client	EnviroTest Laboratories	Volume Sampled (gal)	562.2
Site	Summit Club	Filter Color	Off-White
Water Type	Raw/Well	Sediment Volume (mL)	0.2
Client Sample ID	Well 6A	Analysis Start	6/23/22 12:35
ASI Sample #	69086-02	Analysis End	8/4/22

MPA Data (data per 100 gal.)

Vol. Examined at 150x (gal.)	100	Detection Limit at 150X =	1.0
Vol. Examined at 300x (gal.)	NA	Detection Limit at 300X =	NA
Amorphous Debris	Uniform	Iron Bacteria	ND
Vegetative Debris w/ chlorophyll	ND	Crustaceans	ND
Veg. Debris w/o chlorophyll	4	Crustacean Parts/Eggs	ND
Diatoms w/ chlorophyll (300X)	ND	Water Mites	ND
Diatoms w/o chlorophyll (300X)	ND	Gastrotrichs	ND
Other Algae (300X, see below)	ND	Tardigrades	ND
Coccidia (300x)	ND	Nematodes/N. Eggs	ND
Rotifiers / Rotifier Eggs	ND	Invertebrate Eggs	ND
Spores	ND	Annelids	ND
Pollen	ND	Amoeba	ND
Insects/Larvae	ND	Protozoa (300X, non-Crypto/Giardia)	ND

Cryptosporidium and Giardia Data

		RESULTS	
Volume Examined (gal.)	281.1	Examined	Per 100gal
	Cryptosporidium Oocysts:	0	<0.36
	Giardia Cysts:	0	<0.36

MPA Risk Rating Score (per EPA Consensus Method)

Numerical Score	0	Risk Rating	Low

Other

Algae Observed	NA
Comments	NA

Methods: MPA - SOP based on EPA Consensus Method (EPA 910/9-92-029)

Cryptosporidium & Giardia - SOP based on purification, staining & exam procedures in EPA 1623/1623.1

Notes MPA Risk Rating Tables were developed by USEPA Region 10 from limited data; interpret with caution.

MPA Risk Rating Score - if less than 100 gallons was examined, interpret with caution.

227330

Page ___ of ___

Analytical Services, Inc.

CHAIN OF CUSTODY RECORD

Ship to: Analytical Services, Inc., 130 Allen Brook Lane, Williston, VT 05495, Attn: Sample Management
Phone: 1-800-723-4432 or 802-878-5138 • Fax: 802-878-6765 *Web site: www.analyticalservices.com*

Submitted By: WSP USA 4 Research Drive, Ste 204 Shelton, CT 06484 Phone: 475-882-1723 Email: stacy.stieber@wsp.com	Report To: Stacy Stieber WSP USA 4 Research Drive, Ste 204 Shelton, CT 06484 Phone: 475-882-1723 Email: stacy.stieber@wsp.com
Project Name: Summit Club Job Site: P.O. Number: 31403576.002	Invoice To: Phone: ___ Email: ___

Sample Identification*	Sample Collection			Sample Matrix (check one)						Analysis Requested	Lab Use Only
	Date (Start)	Time (Start)	Sampler Initials	Water - Raw	Water - Finished	Waste Water	Biosolids	Soil/Sediment	Other		Temp (°C)
Well 1	6/22/22	850	SZ	X						MPA w/ IFA	8.7°

*Sample ID should match ID written on the sample containers and data sheets. Sample ID will appear on the report for identification.

Relinquished By (signature)	Date/Time	Received By (signature)	Date/Time
	6/22/22 1145		6/22/22 1145
	6/22/22 1525		6/23/22 1040

Field Comments:

Lab Comments:

1/5

White – To accompany samples • Yellow – Sampler Copy

227328

Page ___ of ___

Analytical Services, Inc.

CHAIN OF CUSTODY RECORD

Ship to: Analytical Services, Inc., 130 Allen Brook Lane, Williston, VT 05495, Attn: Sample Management
Phone: 1-800-723-4432 or 802-878-5138 • Fax: 802-878-6765 *Web site: www.analyticalservices.com*

Submitted By: WSP USA 4 Research Drive, Suite 204 Shelton, CT 06484 Phone: 475-882-1723 Email: stacy.stieber@wsp.com	Report To: Stacy Stieber WSP USA Shelton 4 Research Drive Shelton, CT 06484 Phone: 475-882-1723 Email: stacy.stieber@wsp.com
Project Name: Summit Club Job Site: 31403576.002 P.O. Number:	Invoice To: Phone: Email:

Sample Identification*	Sample Collection			Sample Matrix (check one)						Analysis Requested	Lab Use Only
	Date (Start)	Time (Start)	Sampler Initials	Water - Raw	Water - Finished	Waste Water	Biosolids	Soil/Sediment	Other		Temp (°C)
Well 6A	6/22/22	855	SZ	X						MPA w/ IFA	6.0

*Sample ID should match ID written on the sample containers and data sheets. Sample ID will appear on the report for identification.

Relinquished By (signature)	Date/Time	Received By (signature)	Date/Time
	6/22/22 1145		6/22/22 1145
	6/22/22 1520		6/23/22 1040

Field Comments:

Lab Comments:

T/A

White – To accompany samples • Yellow – Sampler Copy

APPENDIX VIII

SUMMIT COUNTRY CLUB
568 BEDFORD ROAD
NORTH CASTLE, NEW YORK

Graphs of Physical Parameter Measurements Collected from Pumping Well 1, 6A, and Nearby Surface Water During 72 Hour Pumping Test Program Conducted on Wells 1, 3, and 6A, June 2022

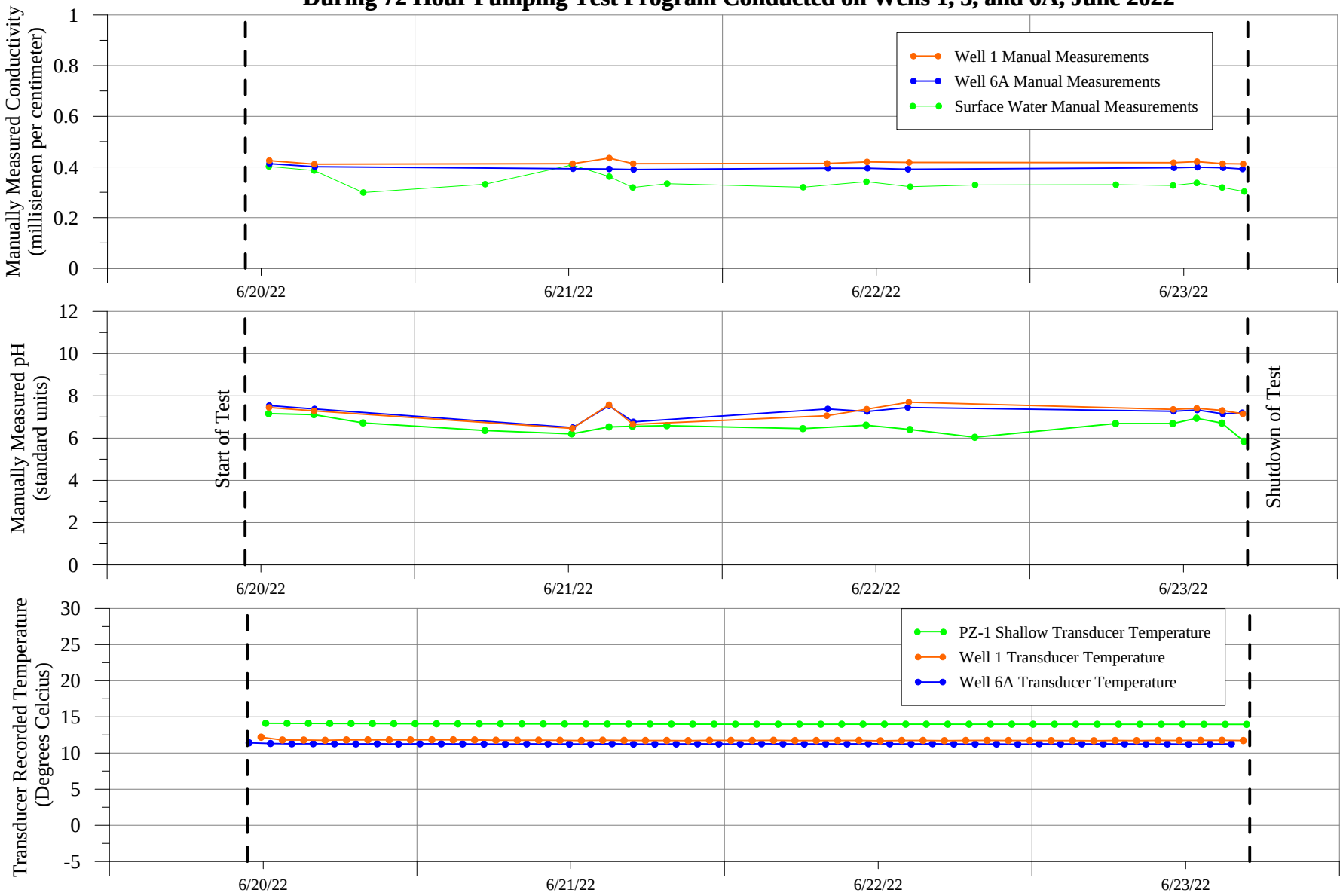

SUMMIT COUNTRY CLUB
568 BEDFORD ROAD
NORTH CASTLE, NEW YORK

Physical Parameter pH and Conductivity Measurements Collected from Pumping Wells 1 and 6A and Nearby Surface Water During the 72-Hour Pumping Test Conducted on Wells 1, 3 and 6A, June 2022

Date/Time	pH (S.U.)	Conductivity (mS/cm)
Well 1		
6/20/2022 12:38	7.45	0.425
6/20/2022 16:09	7.29	0.411
6/21/2022 12:18	6.46	0.413
6/21/2022 15:10	7.58	0.435
6/21/2022 17:02	6.65	0.413
6/22/2022 8:10	7.06	0.414
6/22/2022 11:17	7.37	0.420
6/22/2022 14:34	7.70	0.418
6/23/2022 11:12	7.36	0.417
6/23/2022 13:02	7.41	0.421
6/23/2022 15:02	7.31	0.413
6/23/2022 16:38	7.15	0.412
Well 6A		
6/20/2022 12:39	7.54	0.413
6/20/2022 16:11	7.38	0.401
6/21/2022 12:20	6.50	0.393
6/21/2022 15:10	7.53	0.392
6/21/2022 17:04	6.77	0.390
6/22/2022 8:14	7.38	0.395
6/22/2022 11:19	7.26	0.395
6/22/2022 14:29	7.45	0.391
6/23/2022 11:14	7.27	0.397
6/23/2022 13:04	7.33	0.399
6/23/2022 15:04	7.15	0.397
6/23/2022 16:35	7.20	0.392
Surface Water		
6/20/2022 12:36	7.16	0.402
6/20/2022 16:08	7.11	0.386
6/20/2022 19:58	6.72	0.299
6/21/2022 5:29	6.36	0.332
6/21/2022 12:15	6.20	0.408
6/21/2022 15:10	6.53	0.362
6/21/2022 17:00	6.56	0.319
6/21/2022 19:41	6.59	0.334
6/22/2022 6:18	6.45	0.320
6/22/2022 11:14	6.61	0.342
6/22/2022 14:39	6.41	0.322
6/22/2022 19:43	6.04	0.329
6/23/2022 6:42	6.69	0.330
6/23/2022 11:10	6.69	0.327
6/23/2022 13:01	6.94	0.337
6/23/2022 15:00	6.71	0.319
6/23/2022 16:43	5.85	0.303

S.U. standard units
mS/cm microSiemen per centimeter

SUMMIT COUNTRY CLUB
568 BEDFORD ROAD
NORTH CASTLE, NEW YORK

Temperature Measurements Collected from Pumping Wells 1 and 6A
and Shallow Groundwater at PZ-1 During the 72-Hour Pumping Test Conducted on Wells 1, 3 and 6A, June 2022

Date	Time	Well 1 Temperature (degrees Celsius)	Well 6 Temperature (degrees Celsius)	PZ-1 Temperature (degrees Celsius)
6/20/2022	11:00	12.07	11.37	14.11
6/20/2022	12:00	12.22	11.31	14.11
6/20/2022	13:00	11.85	11.29	14.10
6/20/2022	14:00	11.82	11.30	14.10
6/20/2022	15:00	11.76	11.28	14.09
6/20/2022	16:00	11.73	11.29	14.09
6/20/2022	17:00	11.83	11.29	14.08
6/20/2022	18:00	11.85	11.27	14.08
6/20/2022	19:00	11.83	11.27	14.07
6/20/2022	20:00	11.82	11.26	14.07
6/20/2022	21:00	11.85	11.26	14.06
6/20/2022	22:00	11.81	11.28	14.06
6/20/2022	23:00	11.82	11.27	14.05
6/21/2022	0:00	11.80	11.27	14.04
6/21/2022	1:00	11.81	11.28	14.04
6/21/2022	2:00	11.82	11.26	14.04
6/21/2022	3:00	11.80	11.27	14.04
6/21/2022	4:00	11.80	11.26	14.03
6/21/2022	5:00	11.77	11.28	14.03
6/21/2022	6:00	11.80	11.27	14.03
6/21/2022	7:00	11.78	11.26	14.02
6/21/2022	8:00	11.75	11.26	14.02
6/21/2022	9:00	11.79	11.29	14.02
6/21/2022	10:00	11.73	11.28	14.02
6/21/2022	11:00	11.75	11.26	14.02
6/21/2022	12:00	11.73	11.26	14.01
6/21/2022	13:00	11.75	11.28	14.01
6/21/2022	14:00	11.74	11.26	14.00
6/21/2022	15:00	11.71	11.27	14.00
6/21/2022	16:00	11.74	11.26	14.00
6/21/2022	17:00	11.72	11.26	14.00
6/21/2022	18:00	11.74	11.27	14.00
6/21/2022	19:00	11.73	11.31	13.99
6/21/2022	20:00	11.76	11.26	13.99
6/21/2022	21:00	11.75	11.26	13.99
6/21/2022	22:00	11.74	11.24	13.99
6/21/2022	23:00	11.77	11.28	13.98
6/22/2022	0:00	11.75	11.27	13.98
6/22/2022	1:00	11.76	11.25	13.98
6/22/2022	2:00	11.77	11.29	13.98
6/22/2022	3:00	11.75	11.27	13.98
6/22/2022	4:00	11.76	11.26	13.98
6/22/2022	5:00	11.74	11.26	13.98
6/22/2022	6:00	11.74	11.27	13.98
6/22/2022	7:00	11.73	11.28	13.98
6/22/2022	8:00	11.72	11.27	13.98
6/22/2022	9:00	11.73	11.25	13.98
6/22/2022	10:00	11.72	11.27	13.98
6/22/2022	11:00	11.74	11.26	13.98
6/22/2022	12:00	11.72	11.26	13.98
6/22/2022	13:00	11.73	11.27	13.98
6/22/2022	14:00	11.71	11.26	13.98

SUMMIT COUNTRY CLUB
568 BEDFORD ROAD
NORTH CASTLE, NEW YORK

Temperature Measurements Collected from Pumping Wells 1 and 6A
and Shallow Groundwater at PZ-1 During the 72-Hour Pumping Test Conducted on Wells 1, 3 and 6A, June 2022

Date	Time	Well 1 Temperature (degrees Celsius)	Well 6 Temperature (degrees Celsius)	PZ-1 Temperature (degrees Celsius)
6/22/2022	15:00	11.74	11.27	13.99
6/22/2022	16:00	11.73	11.25	13.98
6/22/2022	17:00	11.75	11.25	13.98
6/22/2022	18:00	11.74	11.26	13.98
6/22/2022	19:00	11.73	11.27	13.98
6/22/2022	20:00	11.73	11.26	13.98
6/22/2022	21:00	11.72	11.27	13.98
6/22/2022	22:00	11.75	11.27	13.98
6/22/2022	23:00	11.74	11.25	13.98
6/23/2022	0:00	11.71	11.26	13.98
6/23/2022	1:00	11.73	11.27	13.98
6/23/2022	2:00	11.73	11.28	13.98
6/23/2022	3:00	11.74	11.27	13.98
6/23/2022	4:00	11.75	11.23	13.97
6/23/2022	5:00	11.73	11.26	13.98
6/23/2022	6:00	11.75	11.27	13.98
6/23/2022	7:00	11.75	11.27	13.97
6/23/2022	8:00	11.74	11.26	13.97
6/23/2022	9:00	11.74	11.27	13.97
6/23/2022	10:00	11.75	11.27	13.97
6/23/2022	11:00	11.75	11.25	13.97
6/23/2022	12:00	11.76	11.25	13.97
6/23/2022	13:00	11.76	11.25	13.97
6/23/2022	14:00	11.75	11.26	13.96
6/23/2022	15:00	11.73	11.27	13.96
6/23/2022	16:00	11.77	11.24	13.96
6/23/2022	17:00	11.90	11.31	13.96

Well 1			Well 6A			Well 3			Well 2B	
Date and Time	Temperature (C)	Level Depth to Water (ft)	Date and Time	Temperature (C)	Level Depth to Water (ft)	Date and Time	Temperature (C)	Level Depth to Water (ft)	Date and Time	Level Depth To Water (ft)
6/16/2022 11:09	12.09	0.08	6/17/2022 12:53	11.60	-0.01	6/16/2022 10:56	11.69	0.06	6/16/2022 12:10	0.00
6/16/2022 11:10	12.09	0.21	6/17/2022 12:54	11.61	0.04	6/16/2022 10:57	11.69	0.06	6/16/2022 12:11	-0.03
6/16/2022 11:11	12.09	0.22	6/17/2022 12:55	11.59	0.03	6/16/2022 10:58	11.65	0.08	6/16/2022 12:12	-0.06
6/16/2022 11:12	12.08	0.21	6/17/2022 12:56	11.57	-0.02	6/16/2022 10:59	11.62	0.11	6/16/2022 12:13	0.01
6/16/2022 11:13	12.07	0.27	6/17/2022 12:57	11.56	-0.02	6/16/2022 11:00	11.65	0.10	6/16/2022 12:14	-0.03
6/16/2022 11:14	12.07	0.12	6/17/2022 12:58	11.57	-0.04	6/16/2022 11:01	11.65	0.09	6/16/2022 12:15	-0.06
6/16/2022 11:15	12.07	0.21	6/17/2022 12:59	11.59	-0.07	6/16/2022 11:02	11.64	0.07	6/16/2022 12:16	-0.02
6/16/2022 11:16	12.07	0.12	6/17/2022 13:00	11.59	0.07	6/16/2022 11:03	11.65	0.08	6/16/2022 12:17	-0.02
6/16/2022 11:17	12.06	0.13	6/17/2022 13:01	11.58	-0.06	6/16/2022 11:04	11.65	0.06	6/16/2022 12:18	-0.03
6/16/2022 11:18	12.06	0.23	6/17/2022 13:02	11.56	0.02	6/16/2022 11:05	11.63	0.06	6/16/2022 12:19	0.01
6/16/2022 11:19	12.07	0.22	6/17/2022 13:03	11.56	-0.07	6/16/2022 11:06	11.63	0.11	6/16/2022 12:20	-0.02
6/16/2022 11:20	12.06	0.31	6/17/2022 13:04	11.57	-0.03	6/16/2022 11:07	11.62	0.08	6/16/2022 12:21	-0.03
6/16/2022 11:21	12.07	0.21	6/17/2022 13:05	11.57	0.10	6/16/2022 11:08	11.63	0.10	6/16/2022 12:22	-0.06
6/16/2022 11:22	12.05	0.19	6/17/2022 13:06	11.58	0.01	6/16/2022 11:09	11.63	0.10	6/16/2022 12:23	-0.02
6/16/2022 11:23	12.06	0.22	6/17/2022 13:07	11.60	-0.08	6/16/2022 11:10	11.62	0.07	6/16/2022 12:24	-0.04
6/16/2022 11:24	12.05	0.26	6/17/2022 13:08	11.57	-0.03	6/16/2022 11:11	11.63	0.02	6/16/2022 12:25	0.00
6/16/2022 11:25	12.08	0.19	6/17/2022 13:09	11.59	-0.02	6/16/2022 11:12	11.62	0.00	6/16/2022 12:26	-0.08
6/16/2022 11:26	12.08	0.21	6/17/2022 13:10	11.55	-0.04	6/16/2022 11:13	11.62	0.08	6/16/2022 12:27	-0.05
6/16/2022 11:27	12.06	0.16	6/17/2022 13:11	11.56	-0.01	6/16/2022 11:14	11.63	0.08	6/16/2022 12:28	-0.02
6/16/2022 11:28	12.05	0.17	6/17/2022 13:12	11.59	-0.08	6/16/2022 11:15	11.63	0.06	6/16/2022 12:29	0.00
6/16/2022 11:29	12.05	0.11	6/17/2022 13:13	11.59	0.06	6/16/2022 11:16	11.63	0.09	6/16/2022 12:30	-0.06
6/16/2022 11:30	12.06	0.12	6/17/2022 13:14	11.60	-0.05	6/16/2022 11:17	11.60	0.09	6/16/2022 12:31	-0.01
6/16/2022 11:31	12.05	0.20	6/17/2022 13:15	11.57	-0.04	6/16/2022 11:18	11.62	0.03	6/16/2022 12:32	0.02
6/16/2022 11:32	12.07	0.12	6/17/2022 13:16	11.57	-0.04	6/16/2022 11:19	11.62	0.12	6/16/2022 12:33	-0.04
6/16/2022 11:33	12.06	0.20	6/17/2022 13:17	11.57	0.05	6/16/2022 11:20	11.61	0.07	6/16/2022 12:34	-0.03
6/16/2022 11:34	12.05	0.17	6/17/2022 13:18	11.58	-0.06	6/16/2022 11:21	11.63	0.05	6/16/2022 12:35	-0.06
6/16/2022 11:35	12.05	0.17	6/17/2022 13:19	11.57	-0.01	6/16/2022 11:22	11.62	0.10	6/16/2022 12:36	-0.05
6/16/2022 11:36	12.06	0.16	6/17/2022 13:20	11.58	-0.04	6/16/2022 11:23	11.60	0.08	6/16/2022 12:37	0.04
6/16/2022 11:37	12.06	0.09	6/17/2022 13:21	11.55	-0.05	6/16/2022 11:24	11.63	0.06	6/16/2022 12:38	-0.03
6/16/2022 11:38	12.07	0.19	6/17/2022 13:22	11.57	-0.03	6/16/2022 11:25	11.62	0.05	6/16/2022 12:39	-0.05
6/16/2022 11:39	12.07	0.18	6/17/2022 13:23	11.57	0.00	6/16/2022 11:26	11.60	0.09	6/16/2022 12:40	-0.01
6/16/2022 11:40	12.07	0.16	6/17/2022 13:24	11.58	0.00	6/16/2022 11:27	11.63	0.09	6/16/2022 12:41	0.03
6/16/2022 11:41	12.08	0.20	6/17/2022 13:25	11.56	0.02	6/16/2022 11:28	11.64	0.09	6/16/2022 12:42	-0.02
6/16/2022 11:42	12.07	0.23	6/17/2022 13:26	11.58	0.05	6/16/2022 11:29	11.60	0.08	6/16/2022 12:43	0.06
6/16/2022 11:43	12.05	0.14	6/17/2022 13:27	11.56	0.00	6/16/2022 11:30	11.62	0.05	6/16/2022 12:44	-0.09
6/16/2022 11:44	12.07	0.12	6/17/2022 13:28	11.59	0.02	6/16/2022 11:31	11.60	0.06	6/16/2022 12:45	-0.02
6/16/2022 11:45	12.06	0.21	6/17/2022 13:29	11.56	0.02	6/16/2022 11:32	11.63	0.06	6/16/2022 12:46	0.00
6/16/2022 11:46	12.07	0.15	6/17/2022 13:30	11.59	-0.01	6/16/2022 11:33	11.62	0.05	6/16/2022 12:47	-0.01
6/16/2022 11:47	12.05	0.11	6/17/2022 13:31	11.54	-0.01	6/16/2022 11:34	11.62	0.07	6/16/2022 12:48	0.00
6/16/2022 11:48	12.06	0.17	6/17/2022 13:32	11.59	0.02	6/16/2022 11:35	11.62	0.06	6/16/2022 12:49	0.01
6/16/2022 11:49	12.06	0.13	6/17/2022 13:33	11.60	-0.01	6/16/2022 11:36	11.62	0.05	6/16/2022 12:50	-0.01
6/16/2022 11:50	12.06	0.17	6/17/2022 13:34	11.56	-0.03	6/16/2022 11:37	11.61	0.09	6/16/2022 12:51	-0.04
6/16/2022 11:51	12.04	0.11	6/17/2022 13:35	11.57	-0.03	6/16/2022 11:38	11.60	0.06	6/16/2022 12:52	-0.03
6/16/2022 11:52	12.07	0.18	6/17/2022 13:36	11.59	-0.01	6/16/2022 11:39	11.63	0.03	6/16/2022 12:53	-0.03
6/16/2022 11:53	12.05	0.15	6/17/2022 13:37	11.57	-0.05	6/16/2022 11:40	11.60	0.09	6/16/2022 12:54	0.01
6/16/2022 11:54	12.07	0.20	6/17/2022 13:38	11.59	0.00	6/16/2022 11:41	11.61	0.03	6/16/2022 12:55	0.03
6/16/2022 11:55	12.07	0.22	6/17/2022 13:39	11.60	-0.07	6/16/2022 11:42	11.64	0.04	6/16/2022 12:56	-0.01
6/16/2022 11:56	12.08	0.12	6/17/2022 13:40	11.57	-0.02	6/16/2022 11:43	11.62	0.05	6/16/2022 12:57	-0.01
6/16/2022 11:57	12.07	0.20	6/17/2022 13:41	11.58	-0.05	6/16/2022 11:44	11.61	0.04	6/16/2022 12:58	-0.08
6/16/2022 11:58	12.04	0.19	6/17/2022 13:42	11.55	0.01	6/16/2022 11:45	11.62	0.10	6/16/2022 12:59	-0.07
6/16/2022 11:59	12.06	0.19	6/17/2022 13:43	11.57	0.00	6/16/2022 11:46	11.61	0.08	6/16/2022 13:00	-0.05
6/16/2022 12:00	12.05	0.18	6/17/2022 13:44	11.58	-0.04	6/16/2022 11:47	11.64	0.01	6/16/2022 13:01	-0.07
6/16/2022 12:01	12.04	0.17	6/17/2022 13:45	11.59	-0.08	6/16/2022 11:48	11.64	0.06	6/16/2022 13:02	-0.04
6/16/2022 12:02	12.06	0.24	6/17/2022 13:46	11.59	0.01	6/16/2022 11:49	11.63	0.08	6/16/2022 13:03	-0.03
6/16/2022 12:03	12.09	0.20	6/17/2022 13:47	11.57	0.00	6/16/2022 11:50	11.64	0.07	6/16/2022 13:04	-0.01
6/16/2022 12:04	12.05	0.13	6/17/2022 13:48	11.60	0.02	6/16/2022 11:51	11.61	0.09	6/16/2022 13:05	-0.05
6/16/2022 12:05	12.05	0.12	6/17/2022 13:49	11.57	-0.02	6/16/2022 11:52	11.65	0.10	6/16/2022 13:06	-0.02
6/16/2022 12:06	12.07	0.11	6/17/2022 13:50	11.56	0.02	6/16/2022 11:53	11.62	0.05	6/16/2022 13:07	-0.02
6/16/2022 12:07	12.07	0.14	6/17/2022 13:51	11.55	-0.06	6/16/2022 11:54	11.61	0.11	6/16/2022 13:08	-0.01
6/16/2022 12:08	12.05	0.14	6/17/2022 13:52	11.57	0.06	6/16/2022 11:55	11.62	0.09	6/16/2022 13:09	-0.05
6/16/2022 12:09	12.07	0.22	6/17/2022 13:53	11.58	-0.04	6/16/2022 11:56	11.61	0.07	6/16/2022 13:10	-0.03
6/16/2022 12:10	12.05	0.07	6/17/2022 13:54	11.58	-0.03	6/16/2022 11:57	11.62	0.06	6/16/2022 13:11	-0.03
6/16/2022 12:11	12.07	0.20	6/17/2022 13:55	11.55	-0.01	6/16/2022 11:58	11.65	0.07	6/16/2022 13:12	-0.05
6/16/2022 12:12	12.05	0.14	6/17/2022 13:56	11.56	-0.07	6/16/2022 11:59	11.60	0.08	6/16/2022 13:13	-0.02
6/16/2022 12:13	12.06	0.12	6/17/2022 13:57	11.57	-0.06	6/16/2022 12:00	11.62	0.05	6/16/2022 13:14	-0.01
6/16/2022 12:14	12.08	0.11	6/17/2022 13:58	11.57	-0.05	6/16/2022 12:01	11.62	0.02	6/16/2022 13:15	-0.04
6/16/2022 12:15	12.05	0.16	6/17/2022 13:59	11.55	0.00	6/16/2022 12:02	11.61	0.05	6/16/2022 13:16	-0.03
6/16/2022 12:16	12.06	0.16	6/17/2022 14:00	11.58	-0.03	6/16/2022 12:03	11.61	0.07	6/16/2022 13:17	-0.02
6/16/2022 12:17	12.07	0.18	6/17/2022 14:01	11.57	-0.11	6/16/2022 12:04	11.62	0.05	6/16/2022 13:18	-0.03
6/16/2022 12:18	12.06	0.20	6/17/2022 14:02	11.58	-0.02	6/16/2022 12:05	11.61	0.07	6/16/2022 13:19	0.02
6/16/2022 12:19	12.08	0.14	6/17/2022 14:03	11.57	-0.03	6/16/2022 12:06	11.62	0.05	6/16/2022 13:20	0.00
6/16/2022 12:20	12.04	0.11	6/17/2022 14:04	11.56	0.04	6/16/2022 12:07	11.62	0.05	6/16/2022 13:21	0.00
6/16/2022 12:21	12.07	0.16	6/17/2022 14:05	11.57	-0.01	6/16/2022 12:08	11.60	0.06	6/16/2022 13:22	-0.01
6/16/2022 12:22	12.09	0.14	6/17/2022 14:06	11.61	-0.02	6/16/2022 12:09	11.62	0.05	6/16/2022 13:23	-0.04
6/16/2022 12:23	12.05	0.16	6/17/2022 14:07	11.55	0.04	6/16/2022 12:10	11.61	0.07	6/16/2022 13:24	-0.08
6/16/2022 12:24	12.05	0.22	6/17/2022 14:08	11.56	0.02	6/16/2022 12:11	11.61	0.06	6/16/2022 13:25	-0.05
6/16/2022 12:25	12.08	0.16	6/17/2022 14:09	11.57	-0.06	6/16/2022 12:12	11.60	0.07	6/16/2022 13:26	-0.04
6/16/2022 12:26	12.08	0.15	6/17/2022 14:10	11.60	-0.04	6/16/2022 12:13	11.63	0.05	6/16/2022 13:27	-0.06
6/16/2022 12:27	12.07	0.16	6/17/2022 14:11	11.55	0.04	6/16/2022 12:14	11.61	0.01	6/16/2022 13:28	-0.02
6/16/2022 12:28	12.08	0.16	6/17/2022 14:12	11.56	-0.02	6/16/2022 12:15	11.61	0.07	6/16/2022 13:29	-0.02
6/16/2022 12:29	12.05	0.20	6/17/2022 14:13	11.55	-0.01	6/16/2022 12:16	11.61	0.06	6/16/2022 13:30	0.01
6/16/2022 12:30	12.05	0.20	6/17/2022 14:14	11.58	0.05	6/16/2022 12:17	11.61	0.04	6/16/2022 13:31	-0.02

6/16/2022 12:31	12.06	0.11	6/17/2022 14:15	11.59	0.03	6/16/2022 12:18	11.61	0.05	6/16/2022 13:32	-0.06
6/16/2022 12:32	12.09	0.19	6/17/2022 14:16	11.59	0.01	6/16/2022 12:19	11.63	0.05	6/16/2022 13:33	-0.06
6/16/2022 12:33	12.05	0.13	6/17/2022 14:17	11.55	0.03	6/16/2022 12:20	11.59	0.02	6/16/2022 13:34	0.00
6/16/2022 12:34	12.07	0.09	6/17/2022 14:18	11.59	-0.17	6/16/2022 12:21	11.62	0.07	6/16/2022 13:35	-0.02
6/16/2022 12:35	12.05	0.18	6/17/2022 14:19	11.57	-0.05	6/16/2022 12:22	11.64	0.08	6/16/2022 13:36	-0.02
6/16/2022 12:36	12.06	0.25	6/17/2022 14:20	11.61	-0.07	6/16/2022 12:23	11.61	0.06	6/16/2022 13:37	-0.10
6/16/2022 12:37	12.08	0.15	6/17/2022 14:21	11.57	-0.01	6/16/2022 12:24	11.62	0.05	6/16/2022 13:38	-0.05
6/16/2022 12:38	12.08	0.20	6/17/2022 14:22	11.55	0.10	6/16/2022 12:25	11.61	0.05	6/16/2022 13:39	-0.01
6/16/2022 12:39	12.09	0.20	6/17/2022 14:23	11.59	0.01	6/16/2022 12:26	11.62	0.06	6/16/2022 13:40	0.01
6/16/2022 12:40	12.07	0.12	6/17/2022 14:24	11.58	0.03	6/16/2022 12:27	11.60	0.06	6/16/2022 13:41	-0.05
6/16/2022 12:41	12.07	0.16	6/17/2022 14:25	11.58	0.06	6/16/2022 12:28	11.62	0.06	6/16/2022 13:42	-0.09
6/16/2022 12:42	12.07	0.14	6/17/2022 14:26	11.55	-0.05	6/16/2022 12:29	11.59	0.06	6/16/2022 13:43	-0.05
6/16/2022 12:43	12.06	0.06	6/17/2022 14:27	11.58	0.00	6/16/2022 12:30	11.59	0.03	6/16/2022 13:44	0.02
6/16/2022 12:44	12.08	0.25	6/17/2022 14:28	11.55	-0.03	6/16/2022 12:31	11.64	0.04	6/16/2022 13:45	-0.08
6/16/2022 12:45	12.08	0.15	6/17/2022 14:29	11.58	-0.04	6/16/2022 12:32	11.62	0.07	6/16/2022 13:46	0.03
6/16/2022 12:46	12.06	0.23	6/17/2022 14:30	11.57	0.07	6/16/2022 12:33	11.62	0.03	6/16/2022 13:47	-0.04
6/16/2022 12:47	12.06	0.14	6/17/2022 14:31	11.59	-0.08	6/16/2022 12:34	11.61	0.03	6/16/2022 13:48	-0.02
6/16/2022 12:48	12.06	0.18	6/17/2022 14:32	11.57	-0.08	6/16/2022 12:35	11.62	0.08	6/16/2022 13:49	-0.01
6/16/2022 12:49	12.04	0.10	6/17/2022 14:33	11.58	0.02	6/16/2022 12:36	11.60	0.08	6/16/2022 13:50	-0.04
6/16/2022 12:50	12.07	0.16	6/17/2022 14:34	11.59	-0.05	6/16/2022 12:37	11.61	0.04	6/16/2022 13:51	0.01
6/16/2022 12:51	12.05	0.12	6/17/2022 14:35	11.58	-0.01	6/16/2022 12:38	11.61	0.02	6/16/2022 13:52	0.00
6/16/2022 12:52	12.05	0.17	6/17/2022 14:36	11.59	0.01	6/16/2022 12:39	11.62	0.05	6/16/2022 13:53	-0.02
6/16/2022 12:53	12.06	0.17	6/17/2022 14:37	11.58	-0.08	6/16/2022 12:40	11.60	0.07	6/16/2022 13:54	-0.02
6/16/2022 12:54	12.07	0.11	6/17/2022 14:38	11.57	0.04	6/16/2022 12:41	11.62	0.09	6/16/2022 13:55	-0.01
6/16/2022 12:55	12.07	0.21	6/17/2022 14:39	11.58	0.05	6/16/2022 12:42	11.62	0.07	6/16/2022 13:56	-0.04
6/16/2022 12:56	12.05	0.12	6/17/2022 14:40	11.58	-0.01	6/16/2022 12:43	11.61	0.04	6/16/2022 13:57	0.00
6/16/2022 12:57	12.07	0.13	6/17/2022 14:41	11.55	0.03	6/16/2022 12:44	11.61	0.04	6/16/2022 13:58	-0.06
6/16/2022 12:58	12.06	0.15	6/17/2022 14:42	11.58	0.03	6/16/2022 12:45	11.60	0.07	6/16/2022 13:59	-0.01
6/16/2022 12:59	12.07	0.19	6/17/2022 14:43	11.58	-0.02	6/16/2022 12:46	11.62	0.02	6/16/2022 14:00	-0.02
6/16/2022 13:00	12.08	0.18	6/17/2022 14:44	11.57	0.01	6/16/2022 12:47	11.61	0.07	6/16/2022 14:01	-0.02
6/16/2022 13:01	12.05	0.22	6/17/2022 14:45	11.57	0.02	6/16/2022 12:48	11.59	0.07	6/16/2022 14:02	-0.01
6/16/2022 13:02	12.05	0.14	6/17/2022 14:46	11.57	0.04	6/16/2022 12:49	11.58	0.03	6/16/2022 14:03	0.02
6/16/2022 13:03	12.06	0.14	6/17/2022 14:47	11.55	-0.02	6/16/2022 12:50	11.60	0.02	6/16/2022 14:04	-0.01
6/16/2022 13:04	12.06	0.18	6/17/2022 14:48	11.56	-0.03	6/16/2022 12:51	11.60	0.04	6/16/2022 14:05	-0.04
6/16/2022 13:05	12.06	0.22	6/17/2022 14:49	11.56	0.01	6/16/2022 12:52	11.59	0.07	6/16/2022 14:06	-0.07
6/16/2022 13:06	12.08	0.20	6/17/2022 14:50	11.56	-0.03	6/16/2022 12:53	11.61	0.03	6/16/2022 14:07	0.01
6/16/2022 13:07	12.05	0.17	6/17/2022 14:51	11.57	0.00	6/16/2022 12:54	11.62	0.06	6/16/2022 14:08	-0.04
6/16/2022 13:08	12.06	0.13	6/17/2022 14:52	11.59	-0.05	6/16/2022 12:55	11.61	0.10	6/16/2022 14:09	0.00
6/16/2022 13:09	12.06	0.22	6/17/2022 14:53	11.55	0.01	6/16/2022 12:56	11.60	0.02	6/16/2022 14:10	-0.02
6/16/2022 13:10	12.07	0.15	6/17/2022 14:54	11.56	0.01	6/16/2022 12:57	11.61	0.05	6/16/2022 14:11	0.05
6/16/2022 13:11	12.07	0.13	6/17/2022 14:55	11.58	0.04	6/16/2022 12:58	11.62	0.07	6/16/2022 14:12	-0.01
6/16/2022 13:12	12.09	0.17	6/17/2022 14:56	11.57	-0.04	6/16/2022 12:59	11.60	0.08	6/16/2022 14:13	-0.01
6/16/2022 13:13	12.06	0.19	6/17/2022 14:57	11.57	-0.01	6/16/2022 13:00	11.60	0.05	6/16/2022 14:14	-0.03
6/16/2022 13:14	12.06	0.16	6/17/2022 14:58	11.59	0.02	6/16/2022 13:01	11.59	0.05	6/16/2022 14:15	-0.01
6/16/2022 13:15	12.06	0.22	6/17/2022 14:59	11.56	0.02	6/16/2022 13:02	11.60	0.05	6/16/2022 14:16	0.02
6/16/2022 13:16	12.05	0.11	6/17/2022 15:00	11.55	-0.04	6/16/2022 13:03	11.62	0.00	6/16/2022 14:17	-0.05
6/16/2022 13:17	12.06	0.18	6/17/2022 15:01	11.55	-0.05	6/16/2022 13:04	11.63	0.08	6/16/2022 14:18	-0.05
6/16/2022 13:18	12.07	0.24	6/17/2022 15:02	11.59	-0.09	6/16/2022 13:05	11.59	0.07	6/16/2022 14:19	-0.01
6/16/2022 13:19	12.07	0.16	6/17/2022 15:03	11.58	-0.04	6/16/2022 13:06	11.63	0.04	6/16/2022 14:20	-0.03
6/16/2022 13:20	12.08	0.16	6/17/2022 15:04	11.61	0.01	6/16/2022 13:07	11.58	0.06	6/16/2022 14:21	-0.02
6/16/2022 13:21	12.07	0.18	6/17/2022 15:05	11.57	-0.09	6/16/2022 13:08	11.62	0.05	6/16/2022 14:22	-0.01
6/16/2022 13:22	12.07	0.11	6/17/2022 15:06	11.58	-0.02	6/16/2022 13:09	11.63	0.04	6/16/2022 14:23	0.00
6/16/2022 13:23	12.05	0.13	6/17/2022 15:07	11.58	0.00	6/16/2022 13:10	11.60	0.06	6/16/2022 14:24	-0.03
6/16/2022 13:24	12.07	0.10	6/17/2022 15:08	11.57	0.05	6/16/2022 13:11	11.61	0.07	6/16/2022 14:25	-0.09
6/16/2022 13:25	12.07	0.14	6/17/2022 15:09	11.58	0.06	6/16/2022 13:12	11.59	0.06	6/16/2022 14:26	-0.02
6/16/2022 13:26	12.06	0.12	6/17/2022 15:10	11.56	0.07	6/16/2022 13:13	11.63	0.05	6/16/2022 14:27	-0.02
6/16/2022 13:27	12.08	0.12	6/17/2022 15:11	11.55	-0.02	6/16/2022 13:14	11.62	0.03	6/16/2022 14:28	0.01
6/16/2022 13:28	12.07	0.17	6/17/2022 15:12	11.56	-0.04	6/16/2022 13:15	11.62	0.06	6/16/2022 14:29	-0.01
6/16/2022 13:29	12.07	0.22	6/17/2022 15:13	11.56	-0.02	6/16/2022 13:16	11.61	0.03	6/16/2022 14:30	0.05
6/16/2022 13:30	12.08	0.16	6/17/2022 15:14	11.56	-0.03	6/16/2022 13:17	11.61	0.06	6/16/2022 14:31	0.00
6/16/2022 13:31	12.08	0.12	6/17/2022 15:15	11.59	0.00	6/16/2022 13:18	11.61	0.04	6/16/2022 14:32	-0.02
6/16/2022 13:32	12.06	0.17	6/17/2022 15:16	11.57	-0.07	6/16/2022 13:19	11.63	0.05	6/16/2022 14:33	-0.02
6/16/2022 13:33	12.07	0.15	6/17/2022 15:17	11.55	-0.02	6/16/2022 13:20	11.63	0.07	6/16/2022 14:34	-0.05
6/16/2022 13:34	12.06	0.15	6/17/2022 15:18	11.56	0.04	6/16/2022 13:21	11.63	0.05	6/16/2022 14:35	0.01
6/16/2022 13:35	12.05	0.15	6/17/2022 15:19	11.57	-0.02	6/16/2022 13:22	11.60	0.06	6/16/2022 14:36	-0.03
6/16/2022 13:36	12.04	0.17	6/17/2022 15:20	11.58	0.00	6/16/2022 13:23	11.61	0.07	6/16/2022 14:37	0.00
6/16/2022 13:37	12.05	0.21	6/17/2022 15:21	11.58	0.03	6/16/2022 13:24	11.63	0.06	6/16/2022 14:38	0.01
6/16/2022 13:38	12.06	0.18	6/17/2022 15:22	11.57	0.01	6/16/2022 13:25	11.61	0.10	6/16/2022 14:39	-0.10
6/16/2022 13:39	12.05	0.22	6/17/2022 15:23	11.58	-0.03	6/16/2022 13:26	11.58	0.03	6/16/2022 14:40	0.01
6/16/2022 13:40	12.10	0.19	6/17/2022 15:24	11.56	0.04	6/16/2022 13:27	11.60	0.01	6/16/2022 14:41	-0.01
6/16/2022 13:41	12.06	0.17	6/17/2022 15:25	11.57	0.02	6/16/2022 13:28	11.62	0.01	6/16/2022 14:42	-0.03
6/16/2022 13:42	12.08	0.08	6/17/2022 15:26	11.58	0.03	6/16/2022 13:29	11.62	0.08	6/16/2022 14:43	-0.04
6/16/2022 13:43	12.07	0.14	6/17/2022 15:27	11.55	-0.05	6/16/2022 13:30	11.63	0.06	6/16/2022 14:44	-0.04
6/16/2022 13:44	12.03	0.15	6/17/2022 15:28	11.59	-0.05	6/16/2022 13:31	11.60	0.04	6/16/2022 14:45	0.01
6/16/2022 13:45	12.07	0.12	6/17/2022 15:29	11.57	0.05	6/16/2022 13:32	11.60	0.05	6/16/2022 14:46	-0.06
6/16/2022 13:46	12.07	0.23	6/17/2022 15:30	11.58	-0.08	6/16/2022 13:33	11.58	0.07	6/16/2022 14:47	-0.05
6/16/2022 13:47	12.06	0.12	6/17/2022 15:31	11.56	-0.12	6/16/2022 13:34	11.62	0.07	6/16/2022 14:48	-0.06
6/16/2022 13:48	12.10	0.14	6/17/2022 15:32	11.58	-0.02	6/16/2022 13:35	11.62	0.00	6/16/2022 14:49	-0.03
6/16/2022 13:49	12.07	0.12	6/17/2022 15:33	11.59	0.00	6/16/2022 13:36	11.59	0.06	6/16/2022 14:50	-0.01
6/16/2022 13:50	12.09	0.21	6/17/2022 15:34	11.57	0.04	6/16/2022 13:37	11.61	0.02	6/16/2022 14:51	-0.02
6/16/2022 13:51	12.06	0.12	6/17/2022 15:35	11.58	0.03	6/16/2022 13:38	11.61	0.05	6/16/2022 14:52	0.02
6/16/2022 13:52	12.05	0.15	6/17/2022 15:36	11.58	0.03	6/16/2022 13:39	11.64	0.02	6/16/2022 14:53	-0.06
6/16/2022 13:53	12.06	0.20	6/17/2022 15:37	11.58	-0.03	6/16/2022 13:40	11.64	0.03	6/16/2022 14:54	-0.04
6/16/2022 13:54	12.06	0.13	6/17/2022 15:38	11.57	0.02	6/16/2022 13:41	11.61	0.10	6/16/2022 14:55	0.00
6/16/2022 13:55	12.07	0.19	6/17/2022 15:39	11.57	-0.03	6/16/2022 13:42	11.62	0.05	6/16/2022 14:56	-0.02
6/16/2022 13:56	12.08	0.12	6/17/2022 15:40	11.58	0.00	6/16/2022 13:43	11.63	0.07	6/16/2022 14:57	-0.03
6/16/2022 13:57	12.08	0.16	6/17/2022 15:41	11.58	0.02	6/16/2022 13:44	11.62	0.04	6/16/2022 14:58	-0.01
6/16/2022 13:58	12.05	0.20	6/17/2022 15:42	11.56	0.00	6/16/2022 13:45	11.58	0.03	6/16/2022 14:59	-0.01

6/16/2022 13:59	12.06	0.11	6/17/2022 15:43	11.55	0.06	6/16/2022 13:46	11.61	0.06	6/16/2022 15:00	-0.02
6/16/2022 14:00	12.06	0.22	6/17/2022 15:44	11.59	0.04	6/16/2022 13:47	11.61	0.05	6/16/2022 15:01	-0.04
6/16/2022 14:01	12.06	0.20	6/17/2022 15:45	11.55	-0.03	6/16/2022 13:48	11.60	0.07	6/16/2022 15:02	-0.03
6/16/2022 14:02	12.08	0.13	6/17/2022 15:46	11.59	-0.02	6/16/2022 13:49	11.60	0.03	6/16/2022 15:03	-0.03
6/16/2022 14:03	12.08	0.11	6/17/2022 15:47	11.58	-0.04	6/16/2022 13:50	11.59	0.05	6/16/2022 15:04	-0.04
6/16/2022 14:04	12.07	0.11	6/17/2022 15:48	11.56	-0.04	6/16/2022 13:51	11.60	0.02	6/16/2022 15:05	-0.04
6/16/2022 14:05	12.07	0.12	6/17/2022 15:49	11.55	0.02	6/16/2022 13:52	11.61	0.05	6/16/2022 15:06	0.01
6/16/2022 14:06	12.08	0.13	6/17/2022 15:50	11.55	-0.04	6/16/2022 13:53	11.61	0.02	6/16/2022 15:07	-0.08
6/16/2022 14:07	12.06	0.10	6/17/2022 15:51	11.58	-0.08	6/16/2022 13:54	11.62	0.08	6/16/2022 15:08	-0.06
6/16/2022 14:08	12.05	0.16	6/17/2022 15:52	11.61	-0.01	6/16/2022 13:55	11.61	0.06	6/16/2022 15:09	-0.03
6/16/2022 14:09	12.05	0.15	6/17/2022 15:53	11.57	-0.05	6/16/2022 13:56	11.61	0.04	6/16/2022 15:10	0.01
6/16/2022 14:10	12.06	0.18	6/17/2022 15:54	11.58	-0.01	6/16/2022 13:57	11.62	0.08	6/16/2022 15:11	-0.02
6/16/2022 14:11	12.05	0.21	6/17/2022 15:55	11.57	-0.04	6/16/2022 13:58	11.64	0.06	6/16/2022 15:12	0.00
6/16/2022 14:12	12.05	0.11	6/17/2022 15:56	11.56	0.05	6/16/2022 13:59	11.62	0.04	6/16/2022 15:13	-0.04
6/16/2022 14:13	12.08	0.13	6/17/2022 15:57	11.55	-0.06	6/16/2022 14:00	11.60	0.08	6/16/2022 15:14	-0.05
6/16/2022 14:14	12.07	0.21	6/17/2022 15:58	11.59	-0.01	6/16/2022 14:01	11.60	0.05	6/16/2022 15:15	-0.04
6/16/2022 14:15	12.07	0.17	6/17/2022 15:59	11.56	-0.01	6/16/2022 14:02	11.63	0.04	6/16/2022 15:16	0.00
6/16/2022 14:16	12.07	0.16	6/17/2022 16:00	11.59	-0.11	6/16/2022 14:03	11.62	0.03	6/16/2022 15:17	0.00
6/16/2022 14:17	12.06	0.14	6/17/2022 16:01	11.59	-0.03	6/16/2022 14:04	11.61	0.06	6/16/2022 15:18	-0.03
6/16/2022 14:18	12.07	0.17	6/17/2022 16:02	11.57	0.01	6/16/2022 14:05	11.60	0.06	6/16/2022 15:19	-0.03
6/16/2022 14:19	12.06	0.22	6/17/2022 16:03	11.57	-0.01	6/16/2022 14:06	11.61	0.06	6/16/2022 15:20	-0.01
6/16/2022 14:20	12.03	0.09	6/17/2022 16:04	11.57	-0.03	6/16/2022 14:07	11.62	0.02	6/16/2022 15:21	-0.02
6/16/2022 14:21	12.06	0.13	6/17/2022 16:05	11.59	-0.01	6/16/2022 14:08	11.60	0.06	6/16/2022 15:22	-0.03
6/16/2022 14:22	12.08	0.19	6/17/2022 16:06	11.56	-0.03	6/16/2022 14:09	11.60	0.02	6/16/2022 15:23	-0.04
6/16/2022 14:23	12.06	0.20	6/17/2022 16:07	11.58	-0.02	6/16/2022 14:10	11.60	0.01	6/16/2022 15:24	-0.01
6/16/2022 14:24	12.06	0.16	6/17/2022 16:08	11.57	-0.06	6/16/2022 14:11	11.62	0.08	6/16/2022 15:25	-0.02
6/16/2022 14:25	12.07	0.12	6/17/2022 16:09	11.58	-0.01	6/16/2022 14:12	11.64	0.04	6/16/2022 15:26	0.01
6/16/2022 14:26	12.05	0.17	6/17/2022 16:10	11.60	0.00	6/16/2022 14:13	11.59	0.06	6/16/2022 15:27	-0.04
6/16/2022 14:27	12.06	0.16	6/17/2022 16:11	11.59	-0.01	6/16/2022 14:14	11.63	0.03	6/16/2022 15:28	-0.01
6/16/2022 14:28	12.07	0.12	6/17/2022 16:12	11.56	-0.05	6/16/2022 14:15	11.64	0.04	6/16/2022 15:29	0.03
6/16/2022 14:29	12.08	0.22	6/17/2022 16:13	11.57	-0.05	6/16/2022 14:16	11.62	0.04	6/16/2022 15:30	-0.06
6/16/2022 14:30	12.05	0.21	6/17/2022 16:14	11.59	0.00	6/16/2022 14:17	11.62	0.06	6/16/2022 15:31	-0.01
6/16/2022 14:31	12.05	0.22	6/17/2022 16:15	11.58	0.00	6/16/2022 14:18	11.62	0.06	6/16/2022 15:32	0.00
6/16/2022 14:32	12.06	0.10	6/17/2022 16:16	11.56	0.00	6/16/2022 14:19	11.61	0.01	6/16/2022 15:33	-0.04
6/16/2022 14:33	12.07	0.13	6/17/2022 16:17	11.59	-0.04	6/16/2022 14:20	11.61	0.04	6/16/2022 15:34	-0.01
6/16/2022 14:34	12.05	0.18	6/17/2022 16:18	11.56	0.06	6/16/2022 14:21	11.62	0.04	6/16/2022 15:35	-0.06
6/16/2022 14:35	12.07	0.16	6/17/2022 16:19	11.56	-0.01	6/16/2022 14:22	11.62	0.05	6/16/2022 15:36	-0.03
6/16/2022 14:36	12.05	0.18	6/17/2022 16:20	11.57	0.02	6/16/2022 14:23	11.62	0.09	6/16/2022 15:37	-0.10
6/16/2022 14:37	12.05	0.07	6/17/2022 16:21	11.60	0.01	6/16/2022 14:24	11.60	0.06	6/16/2022 15:38	-0.02
6/16/2022 14:38	12.07	0.12	6/17/2022 16:22	11.56	-0.06	6/16/2022 14:25	11.60	0.05	6/16/2022 15:39	0.01
6/16/2022 14:39	12.05	0.19	6/17/2022 16:23	11.56	-0.06	6/16/2022 14:26	11.64	0.08	6/16/2022 15:40	-0.02
6/16/2022 14:40	12.06	0.14	6/17/2022 16:24	11.59	-0.06	6/16/2022 14:27	11.62	0.03	6/16/2022 15:41	0.01
6/16/2022 14:41	12.06	0.14	6/17/2022 16:25	11.55	-0.04	6/16/2022 14:28	11.62	0.06	6/16/2022 15:42	-0.05
6/16/2022 14:42	12.07	0.15	6/17/2022 16:26	11.59	-0.02	6/16/2022 14:29	11.61	0.06	6/16/2022 15:43	-0.02
6/16/2022 14:43	12.07	0.18	6/17/2022 16:27	11.58	0.02	6/16/2022 14:30	11.60	0.03	6/16/2022 15:44	-0.02
6/16/2022 14:44	12.04	0.13	6/17/2022 16:28	11.56	0.02	6/16/2022 14:31	11.63	0.07	6/16/2022 15:45	0.01
6/16/2022 14:45	12.04	0.23	6/17/2022 16:29	11.56	0.00	6/16/2022 14:32	11.61	0.03	6/16/2022 15:46	-0.03
6/16/2022 14:46	12.07	0.24	6/17/2022 16:30	11.58	-0.04	6/16/2022 14:33	11.61	0.05	6/16/2022 15:47	-0.02
6/16/2022 14:47	12.06	0.15	6/17/2022 16:31	11.57	0.06	6/16/2022 14:34	11.62	0.08	6/16/2022 15:48	-0.01
6/16/2022 14:48	12.04	0.17	6/17/2022 16:32	11.57	-0.04	6/16/2022 14:35	11.63	0.02	6/16/2022 15:49	-0.02
6/16/2022 14:49	12.06	0.12	6/17/2022 16:33	11.54	0.00	6/16/2022 14:36	11.62	0.05	6/16/2022 15:50	-0.08
6/16/2022 14:50	12.05	0.16	6/17/2022 16:34	11.57	0.00	6/16/2022 14:37	11.61	0.04	6/16/2022 15:51	0.00
6/16/2022 14:51	12.05	0.08	6/17/2022 16:35	11.56	-0.03	6/16/2022 14:38	11.62	0.03	6/16/2022 15:52	-0.01
6/16/2022 14:52	12.07	0.18	6/17/2022 16:36	11.59	-0.05	6/16/2022 14:39	11.62	0.05	6/16/2022 15:53	-0.08
6/16/2022 14:53	12.07	0.13	6/17/2022 16:37	11.56	0.01	6/16/2022 14:40	11.62	0.05	6/16/2022 15:54	-0.03
6/16/2022 14:54	12.04	0.16	6/17/2022 16:38	11.55	0.01	6/16/2022 14:41	11.63	0.01	6/16/2022 15:55	-0.03
6/16/2022 14:55	12.08	0.13	6/17/2022 16:39	11.57	-0.03	6/16/2022 14:42	11.60	0.03	6/16/2022 15:56	0.00
6/16/2022 14:56	12.05	0.12	6/17/2022 16:40	11.60	0.02	6/16/2022 14:43	11.61	0.07	6/16/2022 15:57	0.03
6/16/2022 14:57	12.06	0.24	6/17/2022 16:41	11.58	0.06	6/16/2022 14:44	11.63	0.06	6/16/2022 15:58	-0.02
6/16/2022 14:58	12.07	0.10	6/17/2022 16:42	11.58	0.07	6/16/2022 14:45	11.62	0.07	6/16/2022 15:59	0.07
6/16/2022 14:59	12.08	0.20	6/17/2022 16:43	11.56	-0.06	6/16/2022 14:46	11.60	0.04	6/16/2022 16:00	-0.06
6/16/2022 15:00	12.05	0.12	6/17/2022 16:44	11.58	0.04	6/16/2022 14:47	11.62	0.03	6/16/2022 16:01	-0.01
6/16/2022 15:01	12.05	0.21	6/17/2022 16:45	11.57	-0.02	6/16/2022 14:48	11.61	0.06	6/16/2022 16:02	-0.06
6/16/2022 15:02	12.03	0.17	6/17/2022 16:46	11.58	-0.01	6/16/2022 14:49	11.60	0.08	6/16/2022 16:03	-0.06
6/16/2022 15:03	12.07	0.10	6/17/2022 16:47	11.57	-0.01	6/16/2022 14:50	11.62	0.05	6/16/2022 16:04	-0.01
6/16/2022 15:04	12.06	0.14	6/17/2022 16:48	11.55	0.02	6/16/2022 14:51	11.61	0.07	6/16/2022 16:05	-0.04
6/16/2022 15:05	12.07	0.14	6/17/2022 16:49	11.56	0.01	6/16/2022 14:52	11.61	0.03	6/16/2022 16:06	0.00
6/16/2022 15:06	12.06	0.15	6/17/2022 16:50	11.59	0.00	6/16/2022 14:53	11.62	0.04	6/16/2022 16:07	-0.09
6/16/2022 15:07	12.06	0.12	6/17/2022 16:51	11.58	-0.07	6/16/2022 14:54	11.61	0.04	6/16/2022 16:08	0.01
6/16/2022 15:08	12.06	0.16	6/17/2022 16:52	11.57	-0.01	6/16/2022 14:55	11.60	-0.02	6/16/2022 16:09	0.00
6/16/2022 15:09	12.05	0.16	6/17/2022 16:53	11.57	0.01	6/16/2022 14:56	11.63	0.05	6/16/2022 16:10	-0.01
6/16/2022 15:10	12.06	0.16	6/17/2022 16:54	11.58	-0.03	6/16/2022 14:57	11.62	0.04	6/16/2022 16:11	-0.05
6/16/2022 15:11	12.07	0.20	6/17/2022 16:55	11.59	0.08	6/16/2022 14:58	11.63	0.04	6/16/2022 16:12	-0.01
6/16/2022 15:12	12.07	0.21	6/17/2022 16:56	11.58	-0.02	6/16/2022 14:59	11.62	0.05	6/16/2022 16:13	-0.05
6/16/2022 15:13	12.05	0.22	6/17/2022 16:57	11.57	0.00	6/16/2022 15:00	11.62	0.03	6/16/2022 16:14	0.01
6/16/2022 15:14	12.06	0.22	6/17/2022 16:58	11.54	0.03	6/16/2022 15:01	11.60	0.02	6/16/2022 16:15	-0.03
6/16/2022 15:15	12.06	0.19	6/17/2022 16:59	11.56	0.03	6/16/2022 15:02	11.62	0.02	6/16/2022 16:16	0.00
6/16/2022 15:16	12.07	0.12	6/17/2022 17:00	11.57	0.00	6/16/2022 15:03	11.61	0.05	6/16/2022 16:17	-0.02
6/16/2022 15:17	12.08	0.19	6/17/2022 17:01	11.57	0.04	6/16/2022 15:04	11.60	0.04	6/16/2022 16:18	-0.01
6/16/2022 15:18	12.06	0.16	6/17/2022 17:02	11.58	-0.04	6/16/2022 15:05	11.61	0.05	6/16/2022 16:19	-0.04
6/16/2022 15:19	12.05	0.10	6/17/2022 17:03	11.58	-0.07	6/16/2022 15:06	11.62	0.03	6/16/2022 16:20	-0.02
6/16/2022 15:20	12.05	0.13	6/17/2022 17:04	11.58	-0.01	6/16/2022 15:07	11.61	0.04	6/16/2022 16:21	0.00
6/16/2022 15:21	12.05	0.07	6/17/2022 17:05	11.56	-0.09	6/16/2022 15:08	11.59	0.01	6/16/2022 16:22	-0.03
6/16/2022 15:22	12.07	0.17	6/17/2022 17:06	11.57	-0.02	6/16/2022 15:09	11.61	0.05	6/16/2022 16:23	0.00
6/16/2022 15:23	12.05	0.12	6/17/2022 17:07	11.58	0.00	6/16/2022 15:10	11.61	0.06	6/16/2022 16:24	0.02
6/16/2022 15:24	12.04	0.12	6/17/2022 17:08	11.57	-0.05	6/16/2022 15:11	11.62	0.02	6/16/2022 16:25	-0.03
6/16/2022 15:25	12.08	0.15	6/17/2022 17:09	11.56	0.01	6/16/2022 15:12	11.61	0.03	6/16/2022 16:26	-0.04
6/16/2022 15:26	12.06	0.09	6/17/2022 17:10	11.57	0.02	6/16/2022 15:13	11.60	0.04	6/16/2022 16:27	-0.05

6/16/2022 15:27	12.06	0.20	6/17/2022 17:11	11.57	0.00	6/16/2022 15:14	11.62	0.03	6/16/2022 16:28	0.01
6/16/2022 15:28	12.06	0.11	6/17/2022 17:12	11.56	0.00	6/16/2022 15:15	11.63	0.05	6/16/2022 16:29	-0.05
6/16/2022 15:29	12.08	0.12	6/17/2022 17:13	11.58	-0.04	6/16/2022 15:16	11.60	0.06	6/16/2022 16:30	-0.01
6/16/2022 15:30	12.06	0.14	6/17/2022 17:14	11.58	0.00	6/16/2022 15:17	11.61	0.08	6/16/2022 16:31	0.00
6/16/2022 15:31	12.07	0.16	6/17/2022 17:15	11.57	0.03	6/16/2022 15:18	11.60	0.06	6/16/2022 16:32	-0.06
6/16/2022 15:32	12.08	0.16	6/17/2022 17:16	11.58	-0.13	6/16/2022 15:19	11.62	0.04	6/16/2022 16:33	-0.03
6/16/2022 15:33	12.07	0.12	6/17/2022 17:17	11.58	0.00	6/16/2022 15:20	11.64	0.02	6/16/2022 16:34	-0.02
6/16/2022 15:34	12.07	0.18	6/17/2022 17:18	11.56	0.02	6/16/2022 15:21	11.63	0.05	6/16/2022 16:35	-0.03
6/16/2022 15:35	12.05	0.18	6/17/2022 17:19	11.57	0.04	6/16/2022 15:22	11.61	0.07	6/16/2022 16:36	-0.01
6/16/2022 15:36	12.04	0.17	6/17/2022 17:20	11.57	-0.12	6/16/2022 15:23	11.63	0.06	6/16/2022 16:37	-0.02
6/16/2022 15:37	12.05	0.22	6/17/2022 17:21	11.56	-0.06	6/16/2022 15:24	11.60	0.08	6/16/2022 16:38	-0.02
6/16/2022 15:38	12.05	0.12	6/17/2022 17:22	11.58	-0.02	6/16/2022 15:25	11.61	0.05	6/16/2022 16:39	-0.03
6/16/2022 15:39	12.05	0.23	6/17/2022 17:23	11.57	-0.06	6/16/2022 15:26	11.60	0.01	6/16/2022 16:40	-0.01
6/16/2022 15:40	12.07	0.17	6/17/2022 17:24	11.57	0.04	6/16/2022 15:27	11.63	0.01	6/16/2022 16:41	-0.06
6/16/2022 15:41	12.06	0.15	6/17/2022 17:25	11.57	-0.02	6/16/2022 15:28	11.62	0.03	6/16/2022 16:42	-0.07
6/16/2022 15:42	12.05	0.16	6/17/2022 17:26	11.58	-0.03	6/16/2022 15:29	11.63	0.06	6/16/2022 16:43	0.01
6/16/2022 15:43	12.06	0.18	6/17/2022 17:27	11.56	0.00	6/16/2022 15:30	11.61	0.05	6/16/2022 16:44	-0.04
6/16/2022 15:44	12.08	0.16	6/17/2022 17:28	11.56	-0.05	6/16/2022 15:31	11.60	0.07	6/16/2022 16:45	-0.05
6/16/2022 15:45	12.06	0.14	6/17/2022 17:29	11.58	0.02	6/16/2022 15:32	11.60	0.06	6/16/2022 16:46	-0.05
6/16/2022 15:46	12.04	0.12	6/17/2022 17:30	11.59	-0.02	6/16/2022 15:33	11.61	0.01	6/16/2022 16:47	-0.02
6/16/2022 15:47	12.06	0.11	6/17/2022 17:31	11.56	-0.08	6/16/2022 15:34	11.61	0.04	6/16/2022 16:48	-0.05
6/16/2022 15:48	12.07	0.17	6/17/2022 17:32	11.56	0.03	6/16/2022 15:35	11.63	0.05	6/16/2022 16:49	-0.02
6/16/2022 15:49	12.04	0.17	6/17/2022 17:33	11.57	0.04	6/16/2022 15:36	11.61	0.07	6/16/2022 16:50	-0.03
6/16/2022 15:50	12.07	0.18	6/17/2022 17:34	11.59	-0.07	6/16/2022 15:37	11.61	0.01	6/16/2022 16:51	-0.01
6/16/2022 15:51	12.07	0.21	6/17/2022 17:35	11.56	0.00	6/16/2022 15:38	11.63	0.05	6/16/2022 16:52	0.02
6/16/2022 15:52	12.06	0.17	6/17/2022 17:36	11.56	-0.07	6/16/2022 15:39	11.61	0.03	6/16/2022 16:53	-0.05
6/16/2022 15:53	12.06	0.17	6/17/2022 17:37	11.57	0.01	6/16/2022 15:40	11.60	0.03	6/16/2022 16:54	-0.03
6/16/2022 15:54	12.05	0.18	6/17/2022 17:38	11.57	0.01	6/16/2022 15:41	11.60	0.07	6/16/2022 16:55	-0.02
6/16/2022 15:55	12.03	0.17	6/17/2022 17:39	11.59	-0.04	6/16/2022 15:42	11.60	0.05	6/16/2022 16:56	-0.04
6/16/2022 15:56	12.07	0.22	6/17/2022 17:40	11.57	-0.01	6/16/2022 15:43	11.60	0.01	6/16/2022 16:57	-0.03
6/16/2022 15:57	12.07	0.17	6/17/2022 17:41	11.58	0.00	6/16/2022 15:44	11.62	0.03	6/16/2022 16:58	-0.01
6/16/2022 15:58	12.08	0.14	6/17/2022 17:42	11.57	0.00	6/16/2022 15:45	11.63	0.04	6/16/2022 16:59	-0.10
6/16/2022 15:59	12.05	0.12	6/17/2022 17:43	11.59	-0.07	6/16/2022 15:46	11.60	0.06	6/16/2022 17:00	-0.04
6/16/2022 16:00	12.06	0.18	6/17/2022 17:44	11.59	-0.01	6/16/2022 15:47	11.63	0.02	6/16/2022 17:01	-0.02
6/16/2022 16:01	12.07	0.12	6/17/2022 17:45	11.58	0.00	6/16/2022 15:48	11.62	0.00	6/16/2022 17:02	-0.02
6/16/2022 16:02	12.07	0.14	6/17/2022 17:46	11.57	0.03	6/16/2022 15:49	11.62	0.03	6/16/2022 17:03	-0.07
6/16/2022 16:03	12.08	0.21	6/17/2022 17:47	11.57	-0.05	6/16/2022 15:50	11.62	0.02	6/16/2022 17:04	-0.03
6/16/2022 16:04	12.05	0.11	6/17/2022 17:48	11.56	-0.02	6/16/2022 15:51	11.63	-0.01	6/16/2022 17:05	-0.02
6/16/2022 16:05	12.08	0.19	6/17/2022 17:49	11.58	-0.04	6/16/2022 15:52	11.63	0.05	6/16/2022 17:06	-0.07
6/16/2022 16:06	12.08	0.27	6/17/2022 17:50	11.58	-0.02	6/16/2022 15:53	11.61	0.00	6/16/2022 17:07	0.01
6/16/2022 16:07	12.05	0.21	6/17/2022 17:51	11.57	-0.06	6/16/2022 15:54	11.60	0.02	6/16/2022 17:08	-0.09
6/16/2022 16:08	12.08	0.21	6/17/2022 17:52	11.60	0.06	6/16/2022 15:55	11.61	0.02	6/16/2022 17:09	0.00
6/16/2022 16:09	12.07	0.14	6/17/2022 17:53	11.57	0.05	6/16/2022 15:56	11.63	0.07	6/16/2022 17:10	-0.03
6/16/2022 16:10	12.04	0.15	6/17/2022 17:54	11.58	-0.03	6/16/2022 15:57	11.60	0.06	6/16/2022 17:11	-0.07
6/16/2022 16:11	12.06	0.13	6/17/2022 17:55	11.58	-0.02	6/16/2022 15:58	11.60	0.03	6/16/2022 17:12	-0.06
6/16/2022 16:12	12.08	0.17	6/17/2022 17:56	11.57	-0.04	6/16/2022 15:59	11.58	0.05	6/16/2022 17:13	-0.05
6/16/2022 16:13	12.04	0.12	6/17/2022 17:57	11.56	0.01	6/16/2022 16:00	11.62	0.05	6/16/2022 17:14	-0.03
6/16/2022 16:14	12.08	0.11	6/17/2022 17:58	11.57	0.03	6/16/2022 16:01	11.64	0.06	6/16/2022 17:15	-0.01
6/16/2022 16:15	12.07	0.12	6/17/2022 17:59	11.56	-0.01	6/16/2022 16:02	11.63	0.05	6/16/2022 17:16	-0.06
6/16/2022 16:16	12.05	0.13	6/17/2022 18:00	11.59	-0.05	6/16/2022 16:03	11.58	0.03	6/16/2022 17:17	-0.07
6/16/2022 16:17	12.07	0.20	6/17/2022 18:01	11.56	0.01	6/16/2022 16:04	11.62	0.05	6/16/2022 17:18	-0.05
6/16/2022 16:18	12.07	0.24	6/17/2022 18:02	11.54	-0.09	6/16/2022 16:05	11.62	0.04	6/16/2022 17:19	-0.01
6/16/2022 16:19	12.05	0.13	6/17/2022 18:03	11.58	0.06	6/16/2022 16:06	11.62	0.03	6/16/2022 17:20	-0.08
6/16/2022 16:20	12.06	0.11	6/17/2022 18:04	11.56	0.00	6/16/2022 16:07	11.61	0.03	6/16/2022 17:21	-0.01
6/16/2022 16:21	12.06	0.19	6/17/2022 18:05	11.58	-0.07	6/16/2022 16:08	11.63	0.05	6/16/2022 17:22	-0.05
6/16/2022 16:22	12.07	0.20	6/17/2022 18:06	11.59	0.02	6/16/2022 16:09	11.59	0.03	6/16/2022 17:23	-0.01
6/16/2022 16:23	12.06	0.21	6/17/2022 18:07	11.58	-0.01	6/16/2022 16:10	11.63	0.03	6/16/2022 17:24	-0.05
6/16/2022 16:24	12.05	0.11	6/17/2022 18:08	11.59	0.02	6/16/2022 16:11	11.61	0.06	6/16/2022 17:25	-0.09
6/16/2022 16:25	12.09	0.16	6/17/2022 18:09	11.58	-0.03	6/16/2022 16:12	11.63	0.05	6/16/2022 17:26	0.01
6/16/2022 16:26	12.10	0.11	6/17/2022 18:10	11.57	-0.08	6/16/2022 16:13	11.60	0.05	6/16/2022 17:27	-0.08
6/16/2022 16:27	12.06	0.16	6/17/2022 18:11	11.58	0.01	6/16/2022 16:14	11.60	0.02	6/16/2022 17:28	-0.03
6/16/2022 16:28	12.07	0.17	6/17/2022 18:12	11.59	-0.03	6/16/2022 16:15	11.63	0.06	6/16/2022 17:29	-0.03
6/16/2022 16:29	12.07	0.17	6/17/2022 18:13	11.56	-0.03	6/16/2022 16:16	11.62	0.05	6/16/2022 17:30	-0.07
6/16/2022 16:30	12.07	0.18	6/17/2022 18:14	11.58	-0.01	6/16/2022 16:17	11.63	0.04	6/16/2022 17:31	-0.06
6/16/2022 16:31	12.06	0.11	6/17/2022 18:15	11.58	0.03	6/16/2022 16:18	11.63	0.08	6/16/2022 17:32	0.02
6/16/2022 16:32	12.08	0.22	6/17/2022 18:16	11.58	-0.05	6/16/2022 16:19	11.62	0.09	6/16/2022 17:33	-0.04
6/16/2022 16:33	12.07	0.19	6/17/2022 18:17	11.56	-0.02	6/16/2022 16:20	11.60	0.04	6/16/2022 17:34	-0.06
6/16/2022 16:34	12.06	0.15	6/17/2022 18:18	11.57	-0.07	6/16/2022 16:21	11.61	0.09	6/16/2022 17:35	-0.02
6/16/2022 16:35	12.05	0.18	6/17/2022 18:19	11.57	0.03	6/16/2022 16:22	11.60	0.03	6/16/2022 17:36	-0.04
6/16/2022 16:36	12.07	0.18	6/17/2022 18:20	11.57	-0.03	6/16/2022 16:23	11.63	0.04	6/16/2022 17:37	-0.06
6/16/2022 16:37	12.08	0.12	6/17/2022 18:21	11.58	-0.05	6/16/2022 16:24	11.61	0.02	6/16/2022 17:38	-0.03
6/16/2022 16:38	12.05	0.12	6/17/2022 18:22	11.57	0.08	6/16/2022 16:25	11.61	0.05	6/16/2022 17:39	-0.03
6/16/2022 16:39	12.06	0.12	6/17/2022 18:23	11.56	-0.02	6/16/2022 16:26	11.59	0.07	6/16/2022 17:40	-0.04
6/16/2022 16:40	12.07	0.12	6/17/2022 18:24	11.60	0.02	6/16/2022 16:27	11.61	0.03	6/16/2022 17:41	0.03
6/16/2022 16:41	12.07	0.08	6/17/2022 18:25	11.56	0.01	6/16/2022 16:28	11.60	0.02	6/16/2022 17:42	-0.09
6/16/2022 16:42	12.07	0.13	6/17/2022 18:26	11.57	0.04	6/16/2022 16:29	11.60	0.04	6/16/2022 17:43	-0.08
6/16/2022 16:43	12.07	0.14	6/17/2022 18:27	11.59	-0.06	6/16/2022 16:30	11.60	0.07	6/16/2022 17:44	-0.02
6/16/2022 16:44	12.06	0.20	6/17/2022 18:28	11.57	0.03	6/16/2022 16:31	11.59	0.02	6/16/2022 17:45	-0.05
6/16/2022 16:45	12.05	0.12	6/17/2022 18:29	11.58	-0.04	6/16/2022 16:32	11.62	0.06	6/16/2022 17:46	-0.04
6/16/2022 16:46	12.05	0.17	6/17/2022 18:30	11.57	-0.11	6/16/2022 16:33	11.60	0.02	6/16/2022 17:47	-0.02
6/16/2022 16:47	12.05	0.11	6/17/2022 18:31	11.60	-0.01	6/16/2022 16:34	11.60	0.06	6/16/2022 17:48	-0.02
6/16/2022 16:48	12.07	0.18	6/17/2022 18:32	11.57	-0.01	6/16/2022 16:35	11.60	0.07	6/16/2022 17:49	-0.04
6/16/2022 16:49	12.07	0.16	6/17/2022 18:33	11.59	0.00	6/16/2022 16:36	11.59	0.08	6/16/2022 17:50	-0.04
6/16/2022 16:50	12.08	0.13	6/17/2022 18:34	11.58	0.05	6/16/2022 16:37	11.62	0.05	6/16/2022 17:51	-0.04
6/16/2022 16:51	12.07	0.21	6/17/2022 18:35	11.59	0.02	6/16/2022 16:38	11.59	0.01	6/16/2022 17:52	-0.05
6/16/2022 16:52	12.07	0.09	6/17/2022 18:36	11.57	-0.02	6/16/2022 16:39	11.61	0.01	6/16/2022 17:53	-0.03
6/16/2022 16:53	12.06	0.08	6/17/2022 18:37	11.55	-0.02	6/16/2022 16:40	11.60	0.04	6/16/2022 17:54	-0.05
6/16/2022 16:54	12.05	0.20	6/17/2022 18:38	11.58	0.01	6/16/2022 16:41	11.61	0.07	6/16/2022 17:55	-0.01

6/16/2022 16:55	12.06	0.21	6/17/2022 18:39	11.57	-0.01	6/16/2022 16:42	11.62	0.05	6/16/2022 17:56	-0.07
6/16/2022 16:56	12.07	0.13	6/17/2022 18:40	11.56	0.01	6/16/2022 16:43	11.61	0.04	6/16/2022 17:57	-0.05
6/16/2022 16:57	12.09	0.12	6/17/2022 18:41	11.56	-0.01	6/16/2022 16:44	11.60	0.02	6/16/2022 17:58	-0.03
6/16/2022 16:58	12.06	0.11	6/17/2022 18:42	11.57	0.04	6/16/2022 16:45	11.62	0.08	6/16/2022 17:59	-0.02
6/16/2022 16:59	12.07	0.20	6/17/2022 18:43	11.58	-0.02	6/16/2022 16:46	11.62	0.06	6/16/2022 18:00	0.00
6/16/2022 17:00	12.07	0.04	6/17/2022 18:44	11.57	0.00	6/16/2022 16:47	11.61	0.04	6/16/2022 18:01	-0.06
6/16/2022 17:01	12.05	0.16	6/17/2022 18:45	11.59	-0.03	6/16/2022 16:48	11.60	0.05	6/16/2022 18:02	-0.01
6/16/2022 17:02	12.06	0.22	6/17/2022 18:46	11.56	0.08	6/16/2022 16:49	11.60	0.01	6/16/2022 18:03	-0.06
6/16/2022 17:03	12.06	0.24	6/17/2022 18:47	11.58	-0.07	6/16/2022 16:50	11.61	0.07	6/16/2022 18:04	-0.03
6/16/2022 17:04	12.06	0.04	6/17/2022 18:48	11.58	-0.05	6/16/2022 16:51	11.61	0.05	6/16/2022 18:05	-0.06
6/16/2022 17:05	12.06	0.11	6/17/2022 18:49	11.59	0.06	6/16/2022 16:52	11.62	0.03	6/16/2022 18:06	-0.05
6/16/2022 17:06	12.06	0.15	6/17/2022 18:50	11.59	-0.05	6/16/2022 16:53	11.60	0.05	6/16/2022 18:07	-0.04
6/16/2022 17:07	12.07	0.11	6/17/2022 18:51	11.57	0.04	6/16/2022 16:54	11.64	0.03	6/16/2022 18:08	-0.05
6/16/2022 17:08	12.05	0.15	6/17/2022 18:52	11.58	0.01	6/16/2022 16:55	11.62	0.02	6/16/2022 18:09	-0.10
6/16/2022 17:09	12.07	0.20	6/17/2022 18:53	11.58	-0.10	6/16/2022 16:56	11.62	0.04	6/16/2022 18:10	-0.06
6/16/2022 17:10	12.06	0.14	6/17/2022 18:54	11.57	0.00	6/16/2022 16:57	11.61	0.03	6/16/2022 18:11	-0.09
6/16/2022 17:11	12.05	0.19	6/17/2022 18:55	11.56	-0.02	6/16/2022 16:58	11.61	0.05	6/16/2022 18:12	-0.05
6/16/2022 17:12	12.08	0.15	6/17/2022 18:56	11.59	-0.08	6/16/2022 16:59	11.62	0.04	6/16/2022 18:13	-0.05
6/16/2022 17:13	12.07	0.16	6/17/2022 18:57	11.57	-0.04	6/16/2022 17:00	11.60	0.07	6/16/2022 18:14	-0.02
6/16/2022 17:14	12.08	0.14	6/17/2022 18:58	11.57	-0.06	6/16/2022 17:01	11.60	0.01	6/16/2022 18:15	-0.01
6/16/2022 17:15	12.05	0.19	6/17/2022 18:59	11.56	-0.03	6/16/2022 17:02	11.61	0.03	6/16/2022 18:16	-0.03
6/16/2022 17:16	12.04	0.18	6/17/2022 19:00	11.56	0.07	6/16/2022 17:03	11.62	0.05	6/16/2022 18:17	-0.05
6/16/2022 17:17	12.06	0.26	6/17/2022 19:01	11.58	-0.01	6/16/2022 17:04	11.62	0.03	6/16/2022 18:18	-0.02
6/16/2022 17:18	12.07	0.16	6/17/2022 19:02	11.57	-0.05	6/16/2022 17:05	11.61	0.04	6/16/2022 18:19	-0.02
6/16/2022 17:19	12.07	0.17	6/17/2022 19:03	11.59	-0.07	6/16/2022 17:06	11.63	0.00	6/16/2022 18:20	-0.05
6/16/2022 17:20	12.05	0.21	6/17/2022 19:04	11.57	0.02	6/16/2022 17:07	11.62	-0.03	6/16/2022 18:21	-0.09
6/16/2022 17:21	12.05	0.15	6/17/2022 19:05	11.58	0.02	6/16/2022 17:08	11.59	0.05	6/16/2022 18:22	-0.03
6/16/2022 17:22	12.06	0.20	6/17/2022 19:06	11.57	-0.06	6/16/2022 17:09	11.62	0.06	6/16/2022 18:23	-0.08
6/16/2022 17:23	12.07	0.15	6/17/2022 19:07	11.55	-0.05	6/16/2022 17:10	11.61	0.03	6/16/2022 18:24	-0.02
6/16/2022 17:24	12.05	0.18	6/17/2022 19:08	11.57	-0.05	6/16/2022 17:11	11.61	0.03	6/16/2022 18:25	-0.06
6/16/2022 17:25	12.06	0.21	6/17/2022 19:09	11.57	-0.10	6/16/2022 17:12	11.61	0.05	6/16/2022 18:26	-0.05
6/16/2022 17:26	12.07	0.16	6/17/2022 19:10	11.57	-0.08	6/16/2022 17:13	11.60	0.02	6/16/2022 18:27	-0.09
6/16/2022 17:27	12.06	0.09	6/17/2022 19:11	11.58	0.02	6/16/2022 17:14	11.63	0.03	6/16/2022 18:28	-0.05
6/16/2022 17:28	12.07	0.11	6/17/2022 19:12	11.57	-0.05	6/16/2022 17:15	11.62	0.03	6/16/2022 18:29	-0.07
6/16/2022 17:29	12.04	0.13	6/17/2022 19:13	11.57	-0.06	6/16/2022 17:16	11.62	0.05	6/16/2022 18:30	-0.09
6/16/2022 17:30	12.08	0.19	6/17/2022 19:14	11.59	-0.11	6/16/2022 17:17	11.62	0.09	6/16/2022 18:31	-0.02
6/16/2022 17:31	12.08	0.16	6/17/2022 19:15	11.58	0.01	6/16/2022 17:18	11.63	0.03	6/16/2022 18:32	-0.05
6/16/2022 17:32	12.06	0.20	6/17/2022 19:16	11.58	-0.01	6/16/2022 17:19	11.60	0.03	6/16/2022 18:33	-0.12
6/16/2022 17:33	12.05	0.24	6/17/2022 19:17	11.60	0.00	6/16/2022 17:20	11.64	0.02	6/16/2022 18:34	-0.07
6/16/2022 17:34	12.06	0.12	6/17/2022 19:18	11.60	-0.05	6/16/2022 17:21	11.62	0.01	6/16/2022 18:35	-0.02
6/16/2022 17:35	12.04	0.11	6/17/2022 19:19	11.60	0.00	6/16/2022 17:22	11.62	0.04	6/16/2022 18:36	-0.05
6/16/2022 17:36	12.04	0.10	6/17/2022 19:20	11.58	0.00	6/16/2022 17:23	11.63	0.04	6/16/2022 18:37	-0.05
6/16/2022 17:37	12.06	0.11	6/17/2022 19:21	11.57	0.00	6/16/2022 17:24	11.61	0.03	6/16/2022 18:38	-0.05
6/16/2022 17:38	12.06	0.15	6/17/2022 19:22	11.59	-0.05	6/16/2022 17:25	11.60	0.03	6/16/2022 18:39	-0.06
6/16/2022 17:39	12.06	0.13	6/17/2022 19:23	11.59	0.02	6/16/2022 17:26	11.60	0.01	6/16/2022 18:40	-0.06
6/16/2022 17:40	12.05	0.11	6/17/2022 19:24	11.56	-0.01	6/16/2022 17:27	11.62	0.03	6/16/2022 18:41	-0.07
6/16/2022 17:41	12.05	0.12	6/17/2022 19:25	11.57	0.01	6/16/2022 17:28	11.62	0.06	6/16/2022 18:42	-0.08
6/16/2022 17:42	12.06	0.14	6/17/2022 19:26	11.59	-0.04	6/16/2022 17:29	11.61	0.02	6/16/2022 18:43	-0.07
6/16/2022 17:43	12.07	0.15	6/17/2022 19:27	11.57	-0.01	6/16/2022 17:30	11.62	-0.02	6/16/2022 18:44	-0.04
6/16/2022 17:44	12.07	0.17	6/17/2022 19:28	11.57	0.00	6/16/2022 17:31	11.62	0.02	6/16/2022 18:45	-0.04
6/16/2022 17:45	12.07	0.12	6/17/2022 19:29	11.57	0.02	6/16/2022 17:32	11.62	0.03	6/16/2022 18:46	-0.10
6/16/2022 17:46	12.07	0.20	6/17/2022 19:30	11.57	0.02	6/16/2022 17:33	11.63	0.06	6/16/2022 18:47	0.01
6/16/2022 17:47	12.06	0.16	6/17/2022 19:31	11.58	-0.04	6/16/2022 17:34	11.62	0.05	6/16/2022 18:48	-0.07
6/16/2022 17:48	12.06	0.22	6/17/2022 19:32	11.59	0.06	6/16/2022 17:35	11.59	0.05	6/16/2022 18:49	-0.09
6/16/2022 17:49	12.03	0.14	6/17/2022 19:33	11.57	-0.10	6/16/2022 17:36	11.62	0.05	6/16/2022 18:50	-0.03
6/16/2022 17:50	12.08	0.08	6/17/2022 19:34	11.59	-0.02	6/16/2022 17:37	11.62	0.02	6/16/2022 18:51	0.00
6/16/2022 17:51	12.07	0.16	6/17/2022 19:35	11.59	-0.01	6/16/2022 17:38	11.63	0.03	6/16/2022 18:52	-0.06
6/16/2022 17:52	12.07	0.01	6/17/2022 19:36	11.54	-0.01	6/16/2022 17:39	11.60	0.03	6/16/2022 18:53	-0.09
6/16/2022 17:53	12.06	0.15	6/17/2022 19:37	11.56	-0.04	6/16/2022 17:40	11.62	0.05	6/16/2022 18:54	-0.07
6/16/2022 17:54	12.05	0.15	6/17/2022 19:38	11.58	-0.07	6/16/2022 17:41	11.63	0.04	6/16/2022 18:55	-0.09
6/16/2022 17:55	12.05	0.11	6/17/2022 19:39	11.59	0.02	6/16/2022 17:42	11.63	0.01	6/16/2022 18:56	-0.06
6/16/2022 17:56	12.07	0.16	6/17/2022 19:40	11.56	0.00	6/16/2022 17:43	11.59	0.03	6/16/2022 18:57	-0.03
6/16/2022 17:57	12.06	0.17	6/17/2022 19:41	11.56	-0.02	6/16/2022 17:44	11.63	0.04	6/16/2022 18:58	-0.08
6/16/2022 17:58	12.08	0.17	6/17/2022 19:42	11.55	0.01	6/16/2022 17:45	11.60	0.06	6/16/2022 18:59	-0.04
6/16/2022 17:59	12.06	0.16	6/17/2022 19:43	11.57	-0.10	6/16/2022 17:46	11.62	0.06	6/16/2022 19:00	-0.04
6/16/2022 18:00	12.08	0.16	6/17/2022 19:44	11.58	-0.02	6/16/2022 17:47	11.60	0.04	6/16/2022 19:01	-0.03
6/16/2022 18:01	12.06	0.21	6/17/2022 19:45	11.57	-0.01	6/16/2022 17:48	11.60	0.04	6/16/2022 19:02	0.00
6/16/2022 18:02	12.08	0.06	6/17/2022 19:46	11.56	-0.06	6/16/2022 17:49	11.62	0.03	6/16/2022 19:03	-0.05
6/16/2022 18:03	12.07	0.18	6/17/2022 19:47	11.58	-0.06	6/16/2022 17:50	11.63	0.02	6/16/2022 19:04	-0.06
6/16/2022 18:04	12.06	0.21	6/17/2022 19:48	11.54	-0.07	6/16/2022 17:51	11.64	0.07	6/16/2022 19:05	-0.06
6/16/2022 18:05	12.07	0.17	6/17/2022 19:49	11.56	0.03	6/16/2022 17:52	11.62	0.05	6/16/2022 19:06	-0.02
6/16/2022 18:06	12.05	0.19	6/17/2022 19:50	11.59	0.01	6/16/2022 17:53	11.62	0.02	6/16/2022 19:07	-0.10
6/16/2022 18:07	12.06	0.06	6/17/2022 19:51	11.59	-0.02	6/16/2022 17:54	11.64	-0.01	6/16/2022 19:08	-0.04
6/16/2022 18:08	12.06	0.12	6/17/2022 19:52	11.56	0.03	6/16/2022 17:55	11.61	0.05	6/16/2022 19:09	-0.05
6/16/2022 18:09	12.04	0.14	6/17/2022 19:53	11.61	-0.04	6/16/2022 17:56	11.62	0.04	6/16/2022 19:10	-0.01
6/16/2022 18:10	12.06	0.09	6/17/2022 19:54	11.58	0.03	6/16/2022 17:57	11.61	0.02	6/16/2022 19:11	-0.05
6/16/2022 18:11	12.06	0.13	6/17/2022 19:55	11.59	0.03	6/16/2022 17:58	11.65	0.03	6/16/2022 19:12	-0.06
6/16/2022 18:12	12.04	0.14	6/17/2022 19:56	11.56	-0.02	6/16/2022 17:59	11.62	0.02	6/16/2022 19:13	-0.04
6/16/2022 18:13	12.08	0.19	6/17/2022 19:57	11.58	0.02	6/16/2022 18:00	11.62	0.06	6/16/2022 19:14	-0.06
6/16/2022 18:14	12.05	0.17	6/17/2022 19:58	11.61	0.03	6/16/2022 18:01	11.63	0.04	6/16/2022 19:15	-0.04
6/16/2022 18:15	12.07	0.06	6/17/2022 19:59	11.56	0.08	6/16/2022 18:02	11.62	0.04	6/16/2022 19:16	-0.03
6/16/2022 18:16	12.06	0.17	6/17/2022 20:00	11.57	-0.04	6/16/2022 18:03	11.61	0.08	6/16/2022 19:17	-0.05
6/16/2022 18:17	12.07	0.12	6/17/2022 20:01	11.57	0.00	6/16/2022 18:04	11.61	0.02	6/16/2022 19:18	-0.04
6/16/2022 18:18	12.06	0.12	6/17/2022 20:02	11.59	-0.08	6/16/2022 18:05	11.62	0.04	6/16/2022 19:19	-0.05
6/16/2022 18:19	12.06	0.12	6/17/2022 20:03	11.59	0.05	6/16/2022 18:06	11.63	0.05	6/16/2022 19:20	-0.01
6/16/2022 18:20	12.05	0.09	6/17/2022 20:04	11.55	-0.01	6/16/2022 18:07	11.60	0.00	6/16/2022 19:21	-0.07
6/16/2022 18:21	12.07	0.13	6/17/2022 20:05	11.59	0.02	6/16/2022 18:08	11.61	0.04	6/16/2022 19:22	-0.02
6/16/2022 18:22	12.06	0.14	6/17/2022 20:06	11.56	-0.06	6/16/2022 18:09	11.60	0.00	6/16/2022 19:23	-0.05

6/16/2022 18:23	12.06	0.19	6/17/2022 20:07	11.60	-0.06	6/16/2022 18:10	11.61	0.03	6/16/2022 19:24	-0.04
6/16/2022 18:24	12.05	0.05	6/17/2022 20:08	11.55	-0.04	6/16/2022 18:11	11.63	0.02	6/16/2022 19:25	-0.04
6/16/2022 18:25	12.07	0.10	6/17/2022 20:09	11.59	-0.03	6/16/2022 18:12	11.61	0.05	6/16/2022 19:26	-0.03
6/16/2022 18:26	12.06	0.18	6/17/2022 20:10	11.57	-0.04	6/16/2022 18:13	11.61	0.03	6/16/2022 19:27	0.03
6/16/2022 18:27	12.04	0.18	6/17/2022 20:11	11.55	-0.03	6/16/2022 18:14	11.61	0.06	6/16/2022 19:28	-0.02
6/16/2022 18:28	12.03	0.21	6/17/2022 20:12	11.57	0.04	6/16/2022 18:15	11.59	0.03	6/16/2022 19:29	-0.04
6/16/2022 18:29	12.06	0.13	6/17/2022 20:13	11.57	-0.08	6/16/2022 18:16	11.60	0.05	6/16/2022 19:30	-0.04
6/16/2022 18:30	12.06	0.15	6/17/2022 20:14	11.54	0.00	6/16/2022 18:17	11.60	0.02	6/16/2022 19:31	-0.07
6/16/2022 18:31	12.05	0.17	6/17/2022 20:15	11.58	-0.04	6/16/2022 18:18	11.61	0.06	6/16/2022 19:32	-0.06
6/16/2022 18:32	12.06	0.16	6/17/2022 20:16	11.55	-0.03	6/16/2022 18:19	11.60	0.03	6/16/2022 19:33	-0.03
6/16/2022 18:33	12.07	0.11	6/17/2022 20:17	11.59	0.00	6/16/2022 18:20	11.61	0.04	6/16/2022 19:34	-0.03
6/16/2022 18:34	12.06	0.15	6/17/2022 20:18	11.57	-0.02	6/16/2022 18:21	11.60	0.08	6/16/2022 19:35	-0.04
6/16/2022 18:35	12.07	0.18	6/17/2022 20:19	11.58	-0.11	6/16/2022 18:22	11.62	0.05	6/16/2022 19:36	-0.06
6/16/2022 18:36	12.07	0.14	6/17/2022 20:20	11.58	-0.04	6/16/2022 18:23	11.63	0.02	6/16/2022 19:37	-0.02
6/16/2022 18:37	12.06	0.17	6/17/2022 20:21	11.56	-0.05	6/16/2022 18:24	11.62	0.05	6/16/2022 19:38	-0.02
6/16/2022 18:38	12.07	0.08	6/17/2022 20:22	11.59	-0.02	6/16/2022 18:25	11.60	0.02	6/16/2022 19:39	-0.05
6/16/2022 18:39	12.08	0.20	6/17/2022 20:23	11.56	-0.04	6/16/2022 18:26	11.61	0.03	6/16/2022 19:40	-0.02
6/16/2022 18:40	12.07	0.12	6/17/2022 20:24	11.57	-0.05	6/16/2022 18:27	11.62	0.04	6/16/2022 19:41	-0.04
6/16/2022 18:41	12.06	0.17	6/17/2022 20:25	11.59	-0.09	6/16/2022 18:28	11.62	0.05	6/16/2022 19:42	-0.12
6/16/2022 18:42	12.05	0.14	6/17/2022 20:26	11.59	0.05	6/16/2022 18:29	11.63	0.04	6/16/2022 19:43	-0.06
6/16/2022 18:43	12.04	0.15	6/17/2022 20:27	11.58	-0.01	6/16/2022 18:30	11.63	0.07	6/16/2022 19:44	-0.07
6/16/2022 18:44	12.05	0.16	6/17/2022 20:28	11.57	-0.11	6/16/2022 18:31	11.62	0.03	6/16/2022 19:45	-0.07
6/16/2022 18:45	12.06	0.17	6/17/2022 20:29	11.59	0.00	6/16/2022 18:32	11.62	0.03	6/16/2022 19:46	-0.05
6/16/2022 18:46	12.07	0.17	6/17/2022 20:30	11.58	0.07	6/16/2022 18:33	11.63	0.04	6/16/2022 19:47	0.01
6/16/2022 18:47	12.08	0.12	6/17/2022 20:31	11.59	0.02	6/16/2022 18:34	11.61	-0.01	6/16/2022 19:48	0.00
6/16/2022 18:48	12.07	0.16	6/17/2022 20:32	11.58	0.00	6/16/2022 18:35	11.62	0.03	6/16/2022 19:49	-0.06
6/16/2022 18:49	12.06	0.13	6/17/2022 20:33	11.60	-0.07	6/16/2022 18:36	11.63	0.04	6/16/2022 19:50	-0.04
6/16/2022 18:50	12.06	0.20	6/17/2022 20:34	11.55	-0.08	6/16/2022 18:37	11.61	0.03	6/16/2022 19:51	-0.03
6/16/2022 18:51	12.05	0.10	6/17/2022 20:35	11.58	-0.02	6/16/2022 18:38	11.60	0.01	6/16/2022 19:52	0.00
6/16/2022 18:52	12.05	0.07	6/17/2022 20:36	11.56	0.03	6/16/2022 18:39	11.61	0.03	6/16/2022 19:53	-0.06
6/16/2022 18:53	12.05	0.10	6/17/2022 20:37	11.57	0.07	6/16/2022 18:40	11.60	0.05	6/16/2022 19:54	-0.07
6/16/2022 18:54	12.08	0.14	6/17/2022 20:38	11.57	0.09	6/16/2022 18:41	11.60	0.06	6/16/2022 19:55	-0.05
6/16/2022 18:55	12.05	0.05	6/17/2022 20:39	11.58	0.01	6/16/2022 18:42	11.62	0.02	6/16/2022 19:56	-0.07
6/16/2022 18:56	12.06	0.17	6/17/2022 20:40	11.60	-0.06	6/16/2022 18:43	11.59	0.04	6/16/2022 19:57	-0.04
6/16/2022 18:57	12.07	0.17	6/17/2022 20:41	11.57	-0.02	6/16/2022 18:44	11.60	0.03	6/16/2022 19:58	-0.02
6/16/2022 18:58	12.06	0.15	6/17/2022 20:42	11.59	0.08	6/16/2022 18:45	11.61	0.00	6/16/2022 19:59	-0.07
6/16/2022 18:59	12.08	0.19	6/17/2022 20:43	11.58	0.08	6/16/2022 18:46	11.61	0.03	6/16/2022 20:00	-0.07
6/16/2022 19:00	12.06	0.12	6/17/2022 20:44	11.59	0.02	6/16/2022 18:47	11.62	0.03	6/16/2022 20:01	-0.07
6/16/2022 19:01	12.07	0.11	6/17/2022 20:45	11.57	-0.02	6/16/2022 18:48	11.62	0.05	6/16/2022 20:02	-0.12
6/16/2022 19:02	12.07	0.15	6/17/2022 20:46	11.58	-0.03	6/16/2022 18:49	11.61	0.06	6/16/2022 20:03	-0.09
6/16/2022 19:03	12.08	0.18	6/17/2022 20:47	11.57	-0.01	6/16/2022 18:50	11.61	0.04	6/16/2022 20:04	-0.05
6/16/2022 19:04	12.06	0.17	6/17/2022 20:48	11.55	0.05	6/16/2022 18:51	11.58	0.05	6/16/2022 20:05	-0.06
6/16/2022 19:05	12.07	0.12	6/17/2022 20:49	11.57	-0.07	6/16/2022 18:52	11.60	0.06	6/16/2022 20:06	-0.07
6/16/2022 19:06	12.07	0.17	6/17/2022 20:50	11.57	-0.06	6/16/2022 18:53	11.62	0.05	6/16/2022 20:07	-0.06
6/16/2022 19:07	12.04	0.11	6/17/2022 20:51	11.60	0.01	6/16/2022 18:54	11.61	0.00	6/16/2022 20:08	-0.10
6/16/2022 19:08	12.09	0.13	6/17/2022 20:52	11.57	0.01	6/16/2022 18:55	11.59	0.02	6/16/2022 20:09	-0.04
6/16/2022 19:09	12.05	0.16	6/17/2022 20:53	11.58	-0.04	6/16/2022 18:56	11.61	0.05	6/16/2022 20:10	-0.06
6/16/2022 19:10	12.06	0.23	6/17/2022 20:54	11.58	0.05	6/16/2022 18:57	11.60	0.02	6/16/2022 20:11	-0.04
6/16/2022 19:11	12.08	0.12	6/17/2022 20:55	11.58	0.04	6/16/2022 18:58	11.62	0.05	6/16/2022 20:12	-0.01
6/16/2022 19:12	12.07	0.11	6/17/2022 20:56	11.53	-0.01	6/16/2022 18:59	11.61	0.05	6/16/2022 20:13	-0.07
6/16/2022 19:13	12.06	0.08	6/17/2022 20:57	11.56	-0.06	6/16/2022 19:00	11.62	0.03	6/16/2022 20:14	-0.06
6/16/2022 19:14	12.07	0.16	6/17/2022 20:58	11.58	0.01	6/16/2022 19:01	11.62	0.03	6/16/2022 20:15	-0.04
6/16/2022 19:15	12.08	0.15	6/17/2022 20:59	11.57	0.03	6/16/2022 19:02	11.62	0.02	6/16/2022 20:16	-0.05
6/16/2022 19:16	12.06	0.11	6/17/2022 21:00	11.57	-0.02	6/16/2022 19:03	11.62	0.05	6/16/2022 20:17	-0.03
6/16/2022 19:17	12.05	0.21	6/17/2022 21:01	11.57	-0.02	6/16/2022 19:04	11.61	0.03	6/16/2022 20:18	-0.05
6/16/2022 19:18	12.07	0.15	6/17/2022 21:02	11.54	-0.03	6/16/2022 19:05	11.58	0.07	6/16/2022 20:19	0.01
6/16/2022 19:19	12.07	0.17	6/17/2022 21:03	11.57	0.00	6/16/2022 19:06	11.62	0.05	6/16/2022 20:20	-0.08
6/16/2022 19:20	12.07	0.14	6/17/2022 21:04	11.56	0.05	6/16/2022 19:07	11.61	-0.01	6/16/2022 20:21	-0.08
6/16/2022 19:21	12.04	0.15	6/17/2022 21:05	11.59	-0.11	6/16/2022 19:08	11.62	0.05	6/16/2022 20:22	-0.03
6/16/2022 19:22	12.06	0.17	6/17/2022 21:06	11.58	-0.10	6/16/2022 19:09	11.63	0.04	6/16/2022 20:23	-0.08
6/16/2022 19:23	12.05	0.10	6/17/2022 21:07	11.58	0.00	6/16/2022 19:10	11.59	0.00	6/16/2022 20:24	-0.01
6/16/2022 19:24	12.06	0.12	6/17/2022 21:08	11.59	0.01	6/16/2022 19:11	11.60	0.04	6/16/2022 20:25	-0.04
6/16/2022 19:25	12.05	0.12	6/17/2022 21:09	11.58	0.01	6/16/2022 19:12	11.61	0.03	6/16/2022 20:26	-0.08
6/16/2022 19:26	12.06	0.21	6/17/2022 21:10	11.58	0.01	6/16/2022 19:13	11.63	0.03	6/16/2022 20:27	-0.08
6/16/2022 19:27	12.07	0.16	6/17/2022 21:11	11.56	0.01	6/16/2022 19:14	11.63	0.05	6/16/2022 20:28	0.00
6/16/2022 19:28	12.08	0.19	6/17/2022 21:12	11.59	0.04	6/16/2022 19:15	11.58	0.02	6/16/2022 20:29	-0.06
6/16/2022 19:29	12.06	0.15	6/17/2022 21:13	11.56	-0.04	6/16/2022 19:16	11.63	0.03	6/16/2022 20:30	-0.02
6/16/2022 19:30	12.08	0.10	6/17/2022 21:14	11.59	-0.13	6/16/2022 19:17	11.62	0.04	6/16/2022 20:31	-0.11
6/16/2022 19:31	12.05	0.29	6/17/2022 21:15	11.56	-0.01	6/16/2022 19:18	11.60	0.05	6/16/2022 20:32	-0.03
6/16/2022 19:32	12.07	0.13	6/17/2022 21:16	11.57	-0.03	6/16/2022 19:19	11.61	0.07	6/16/2022 20:33	-0.01
6/16/2022 19:33	12.08	0.14	6/17/2022 21:17	11.56	-0.03	6/16/2022 19:20	11.61	0.04	6/16/2022 20:34	-0.02
6/16/2022 19:34	12.06	0.10	6/17/2022 21:18	11.57	0.02	6/16/2022 19:21	11.61	0.02	6/16/2022 20:35	-0.05
6/16/2022 19:35	12.07	0.17	6/17/2022 21:19	11.59	0.05	6/16/2022 19:22	11.63	0.04	6/16/2022 20:36	-0.10
6/16/2022 19:36	12.07	0.17	6/17/2022 21:20	11.60	0.01	6/16/2022 19:23	11.62	0.00	6/16/2022 20:37	-0.01
6/16/2022 19:37	12.05	0.18	6/17/2022 21:21	11.59	-0.01	6/16/2022 19:24	11.62	0.03	6/16/2022 20:38	-0.03
6/16/2022 19:38	12.07	0.17	6/17/2022 21:22	11.57	-0.02	6/16/2022 19:25	11.62	0.03	6/16/2022 20:39	-0.08
6/16/2022 19:39	12.06	0.15	6/17/2022 21:23	11.58	0.00	6/16/2022 19:26	11.60	0.07	6/16/2022 20:40	-0.06
6/16/2022 19:40	12.05	0.22	6/17/2022 21:24	11.59	-0.04	6/16/2022 19:27	11.63	0.05	6/16/2022 20:41	-0.05
6/16/2022 19:41	12.07	0.12	6/17/2022 21:25	11.56	-0.04	6/16/2022 19:28	11.61	0.04	6/16/2022 20:42	-0.05
6/16/2022 19:42	12.05	0.12	6/17/2022 21:26	11.57	0.01	6/16/2022 19:29	11.60	0.03	6/16/2022 20:43	-0.02
6/16/2022 19:43	12.07	0.06	6/17/2022 21:27	11.57	-0.05	6/16/2022 19:30	11.61	0.04	6/16/2022 20:44	-0.01
6/16/2022 19:44	12.06	0.19	6/17/2022 21:28	11.58	-0.02	6/16/2022 19:31	11.62	0.04	6/16/2022 20:45	-0.05
6/16/2022 19:45	12.07	0.23	6/17/2022 21:29	11.57	-0.01	6/16/2022 19:32	11.63	0.01	6/16/2022 20:46	-0.02
6/16/2022 19:46	12.07	0.14	6/17/2022 21:30	11.59	-0.05	6/16/2022 19:33	11.62	0.06	6/16/2022 20:47	-0.11
6/16/2022 19:47	12.06	0.15	6/17/2022 21:31	11.56	-0.06	6/16/2022 19:34	11.61	0.05	6/16/2022 20:48	-0.04
6/16/2022 19:48	12.04	0.16	6/17/2022 21:32	11.59	-0.02	6/16/2022 19:35	11.61	0.03	6/16/2022 20:49	-0.03
6/16/2022 19:49	12.09	0.16	6/17/2022 21:33	11.58	0.00	6/16/2022 19:36	11.62	0.04	6/16/2022 20:50	-0.05
6/16/2022 19:50	12.07	0.12	6/17/2022 21:34	11.56	0.06	6/16/2022 19:37	11.63	0.04	6/16/2022 20:51	-0.05

6/16/2022 19:51	12.07	0.13	6/17/2022 21:35	11.54	-0.06	6/16/2022 19:38	11.63	0.02	6/16/2022 20:52	-0.02
6/16/2022 19:52	12.05	0.10	6/17/2022 21:36	11.58	-0.02	6/16/2022 19:39	11.61	0.01	6/16/2022 20:53	-0.04
6/16/2022 19:53	12.06	0.18	6/17/2022 21:37	11.59	-0.04	6/16/2022 19:40	11.62	0.03	6/16/2022 20:54	-0.02
6/16/2022 19:54	12.07	0.16	6/17/2022 21:38	11.58	-0.09	6/16/2022 19:41	11.62	0.02	6/16/2022 20:55	-0.09
6/16/2022 19:55	12.09	0.21	6/17/2022 21:39	11.58	-0.06	6/16/2022 19:42	11.60	0.01	6/16/2022 20:56	-0.05
6/16/2022 19:56	12.08	0.18	6/17/2022 21:40	11.58	-0.09	6/16/2022 19:43	11.61	0.07	6/16/2022 20:57	-0.08
6/16/2022 19:57	12.06	0.15	6/17/2022 21:41	11.56	0.05	6/16/2022 19:44	11.61	0.01	6/16/2022 20:58	-0.05
6/16/2022 19:58	12.06	0.07	6/17/2022 21:42	11.58	-0.06	6/16/2022 19:45	11.63	0.05	6/16/2022 20:59	-0.08
6/16/2022 19:59	12.05	0.10	6/17/2022 21:43	11.56	-0.02	6/16/2022 19:46	11.61	0.02	6/16/2022 21:00	-0.06
6/16/2022 20:00	12.07	0.14	6/17/2022 21:44	11.56	-0.06	6/16/2022 19:47	11.63	-0.01	6/16/2022 21:01	-0.07
6/16/2022 20:01	12.07	0.14	6/17/2022 21:45	11.58	-0.09	6/16/2022 19:48	11.61	0.02	6/16/2022 21:02	-0.05
6/16/2022 20:02	12.06	0.14	6/17/2022 21:46	11.57	-0.10	6/16/2022 19:49	11.61	0.05	6/16/2022 21:03	-0.03
6/16/2022 20:03	12.08	0.10	6/17/2022 21:47	11.57	-0.04	6/16/2022 19:50	11.61	0.04	6/16/2022 21:04	-0.01
6/16/2022 20:04	12.09	0.14	6/17/2022 21:48	11.58	0.05	6/16/2022 19:51	11.63	0.03	6/16/2022 21:05	-0.06
6/16/2022 20:05	12.07	0.19	6/17/2022 21:49	11.57	0.02	6/16/2022 19:52	11.64	0.07	6/16/2022 21:06	-0.03
6/16/2022 20:06	12.06	0.05	6/17/2022 21:50	11.60	-0.04	6/16/2022 19:53	11.62	0.06	6/16/2022 21:07	-0.08
6/16/2022 20:07	12.08	0.19	6/17/2022 21:51	11.56	-0.01	6/16/2022 19:54	11.62	0.03	6/16/2022 21:08	-0.04
6/16/2022 20:08	12.07	0.14	6/17/2022 21:52	11.60	-0.03	6/16/2022 19:55	11.61	-0.03	6/16/2022 21:09	-0.07
6/16/2022 20:09	12.08	0.13	6/17/2022 21:53	11.56	0.01	6/16/2022 19:56	11.60	0.04	6/16/2022 21:10	-0.09
6/16/2022 20:10	12.06	0.14	6/17/2022 21:54	11.56	0.00	6/16/2022 19:57	11.62	0.04	6/16/2022 21:11	0.00
6/16/2022 20:11	12.07	0.11	6/17/2022 21:55	11.57	0.00	6/16/2022 19:58	11.61	0.00	6/16/2022 21:12	-0.04
6/16/2022 20:12	12.05	0.12	6/17/2022 21:56	11.58	-0.02	6/16/2022 19:59	11.60	0.02	6/16/2022 21:13	-0.07
6/16/2022 20:13	12.06	0.13	6/17/2022 21:57	11.58	-0.03	6/16/2022 20:00	11.61	0.03	6/16/2022 21:14	-0.04
6/16/2022 20:14	12.07	0.15	6/17/2022 21:58	11.58	0.04	6/16/2022 20:01	11.62	0.04	6/16/2022 21:15	-0.08
6/16/2022 20:15	12.06	0.14	6/17/2022 21:59	11.61	-0.01	6/16/2022 20:02	11.61	-0.02	6/16/2022 21:16	-0.04
6/16/2022 20:16	12.04	0.21	6/17/2022 22:00	11.56	-0.07	6/16/2022 20:03	11.64	0.01	6/16/2022 21:17	-0.05
6/16/2022 20:17	12.06	0.11	6/17/2022 22:01	11.57	0.00	6/16/2022 20:04	11.62	0.05	6/16/2022 21:18	-0.05
6/16/2022 20:18	12.05	0.12	6/17/2022 22:02	11.57	0.01	6/16/2022 20:05	11.64	0.05	6/16/2022 21:19	-0.03
6/16/2022 20:19	12.06	0.13	6/17/2022 22:03	11.58	-0.05	6/16/2022 20:06	11.63	0.03	6/16/2022 21:20	-0.01
6/16/2022 20:20	12.08	0.14	6/17/2022 22:04	11.55	-0.05	6/16/2022 20:07	11.63	0.04	6/16/2022 21:21	-0.05
6/16/2022 20:21	12.10	0.17	6/17/2022 22:05	11.57	-0.08	6/16/2022 20:08	11.64	0.06	6/16/2022 21:22	-0.08
6/16/2022 20:22	12.08	0.16	6/17/2022 22:06	11.57	-0.04	6/16/2022 20:09	11.63	0.05	6/16/2022 21:23	-0.02
6/16/2022 20:23	12.06	0.18	6/17/2022 22:07	11.58	0.07	6/16/2022 20:10	11.61	0.05	6/16/2022 21:24	-0.06
6/16/2022 20:24	12.07	0.13	6/17/2022 22:08	11.57	-0.06	6/16/2022 20:11	11.63	0.03	6/16/2022 21:25	-0.05
6/16/2022 20:25	12.06	0.15	6/17/2022 22:09	11.60	0.03	6/16/2022 20:12	11.60	0.02	6/16/2022 21:26	-0.09
6/16/2022 20:26	12.08	0.17	6/17/2022 22:10	11.58	-0.06	6/16/2022 20:13	11.60	0.04	6/16/2022 21:27	-0.05
6/16/2022 20:27	12.07	0.13	6/17/2022 22:11	11.56	0.07	6/16/2022 20:14	11.63	0.01	6/16/2022 21:28	-0.08
6/16/2022 20:28	12.07	0.15	6/17/2022 22:12	11.56	0.00	6/16/2022 20:15	11.63	0.06	6/16/2022 21:29	-0.03
6/16/2022 20:29	12.06	0.13	6/17/2022 22:13	11.58	-0.02	6/16/2022 20:16	11.60	0.01	6/16/2022 21:30	-0.04
6/16/2022 20:30	12.07	0.11	6/17/2022 22:14	11.58	-0.04	6/16/2022 20:17	11.61	0.02	6/16/2022 21:31	-0.03
6/16/2022 20:31	12.07	0.13	6/17/2022 22:15	11.59	-0.01	6/16/2022 20:18	11.61	0.06	6/16/2022 21:32	-0.05
6/16/2022 20:32	12.06	0.08	6/17/2022 22:16	11.59	-0.05	6/16/2022 20:19	11.62	0.00	6/16/2022 21:33	-0.09
6/16/2022 20:33	12.06	0.12	6/17/2022 22:17	11.57	-0.01	6/16/2022 20:20	11.60	0.02	6/16/2022 21:34	-0.10
6/16/2022 20:34	12.08	0.13	6/17/2022 22:18	11.59	0.02	6/16/2022 20:21	11.62	0.07	6/16/2022 21:35	-0.05
6/16/2022 20:35	12.04	0.17	6/17/2022 22:19	11.60	-0.04	6/16/2022 20:22	11.63	0.04	6/16/2022 21:36	-0.08
6/16/2022 20:36	12.05	0.15	6/17/2022 22:20	11.57	0.00	6/16/2022 20:23	11.61	0.03	6/16/2022 21:37	-0.04
6/16/2022 20:37	12.07	0.11	6/17/2022 22:21	11.58	-0.05	6/16/2022 20:24	11.60	0.04	6/16/2022 21:38	-0.05
6/16/2022 20:38	12.08	0.14	6/17/2022 22:22	11.58	-0.19	6/16/2022 20:25	11.62	0.02	6/16/2022 21:39	-0.09
6/16/2022 20:39	12.06	0.16	6/17/2022 22:23	11.59	0.03	6/16/2022 20:26	11.60	0.02	6/16/2022 21:40	-0.07
6/16/2022 20:40	12.08	0.19	6/17/2022 22:24	11.59	0.07	6/16/2022 20:27	11.62	0.03	6/16/2022 21:41	-0.01
6/16/2022 20:41	12.06	0.15	6/17/2022 22:25	11.60	0.00	6/16/2022 20:28	11.61	0.03	6/16/2022 21:42	-0.09
6/16/2022 20:42	12.08	0.10	6/17/2022 22:26	11.58	-0.05	6/16/2022 20:29	11.62	0.00	6/16/2022 21:43	-0.05
6/16/2022 20:43	12.05	0.06	6/17/2022 22:27	11.57	-0.05	6/16/2022 20:30	11.60	0.01	6/16/2022 21:44	-0.03
6/16/2022 20:44	12.07	0.11	6/17/2022 22:28	11.57	0.04	6/16/2022 20:31	11.61	0.04	6/16/2022 21:45	-0.09
6/16/2022 20:45	12.06	0.13	6/17/2022 22:29	11.58	-0.07	6/16/2022 20:32	11.61	0.03	6/16/2022 21:46	0.01
6/16/2022 20:46	12.07	0.19	6/17/2022 22:30	11.56	0.01	6/16/2022 20:33	11.61	0.00	6/16/2022 21:47	-0.05
6/16/2022 20:47	12.06	0.16	6/17/2022 22:31	11.60	-0.03	6/16/2022 20:34	11.62	0.01	6/16/2022 21:48	0.00
6/16/2022 20:48	12.05	0.08	6/17/2022 22:32	11.58	-0.04	6/16/2022 20:35	11.62	0.03	6/16/2022 21:49	-0.03
6/16/2022 20:49	12.05	0.14	6/17/2022 22:33	11.56	-0.01	6/16/2022 20:36	11.62	0.04	6/16/2022 21:50	0.01
6/16/2022 20:50	12.08	0.17	6/17/2022 22:34	11.58	0.00	6/16/2022 20:37	11.64	0.05	6/16/2022 21:51	-0.07
6/16/2022 20:51	12.07	0.17	6/17/2022 22:35	11.57	-0.06	6/16/2022 20:38	11.62	0.04	6/16/2022 21:52	-0.09
6/16/2022 20:52	12.06	0.17	6/17/2022 22:36	11.57	0.00	6/16/2022 20:39	11.60	0.02	6/16/2022 21:53	-0.05
6/16/2022 20:53	12.07	0.18	6/17/2022 22:37	11.58	-0.07	6/16/2022 20:40	11.60	0.05	6/16/2022 21:54	0.01
6/16/2022 20:54	12.06	0.11	6/17/2022 22:38	11.58	0.03	6/16/2022 20:41	11.60	0.00	6/16/2022 21:55	-0.06
6/16/2022 20:55	12.06	0.18	6/17/2022 22:39	11.58	0.02	6/16/2022 20:42	11.63	0.05	6/16/2022 21:56	-0.06
6/16/2022 20:56	12.08	0.15	6/17/2022 22:40	11.59	-0.01	6/16/2022 20:43	11.62	0.02	6/16/2022 21:57	-0.04
6/16/2022 20:57	12.06	0.15	6/17/2022 22:41	11.57	-0.03	6/16/2022 20:44	11.61	0.02	6/16/2022 21:58	-0.03
6/16/2022 20:58	12.06	0.23	6/17/2022 22:42	11.59	0.02	6/16/2022 20:45	11.63	0.03	6/16/2022 21:59	-0.04
6/16/2022 20:59	12.06	0.09	6/17/2022 22:43	11.58	0.03	6/16/2022 20:46	11.61	0.04	6/16/2022 22:00	-0.05
6/16/2022 21:00	12.06	0.13	6/17/2022 22:44	11.57	0.00	6/16/2022 20:47	11.62	0.05	6/16/2022 22:01	-0.08
6/16/2022 21:01	12.08	0.15	6/17/2022 22:45	11.57	0.01	6/16/2022 20:48	11.62	0.01	6/16/2022 22:02	-0.06
6/16/2022 21:02	12.05	0.17	6/17/2022 22:46	11.56	0.00	6/16/2022 20:49	11.62	0.01	6/16/2022 22:03	-0.08
6/16/2022 21:03	12.09	0.13	6/17/2022 22:47	11.57	0.01	6/16/2022 20:50	11.60	0.05	6/16/2022 22:04	-0.08
6/16/2022 21:04	12.07	0.15	6/17/2022 22:48	11.56	-0.02	6/16/2022 20:51	11.61	0.06	6/16/2022 22:05	-0.03
6/16/2022 21:05	12.08	0.14	6/17/2022 22:49	11.56	-0.02	6/16/2022 20:52	11.64	0.02	6/16/2022 22:06	-0.06
6/16/2022 21:06	12.08	0.17	6/17/2022 22:50	11.55	0.01	6/16/2022 20:53	11.60	0.01	6/16/2022 22:07	-0.01
6/16/2022 21:07	12.09	0.10	6/17/2022 22:51	11.58	0.03	6/16/2022 20:54	11.62	-0.01	6/16/2022 22:08	-0.04
6/16/2022 21:08	12.06	0.13	6/17/2022 22:52	11.57	0.00	6/16/2022 20:55	11.61	0.02	6/16/2022 22:09	-0.03
6/16/2022 21:09	12.07	0.16	6/17/2022 22:53	11.57	-0.07	6/16/2022 20:56	11.60	0.03	6/16/2022 22:10	-0.01
6/16/2022 21:10	12.07	0.10	6/17/2022 22:54	11.57	-0.02	6/16/2022 20:57	11.61	0.03	6/16/2022 22:11	-0.03
6/16/2022 21:11	12.06	0.15	6/17/2022 22:55	11.59	0.03	6/16/2022 20:58	11.61	0.03	6/16/2022 22:12	-0.08
6/16/2022 21:12	12.06	0.13	6/17/2022 22:56	11.59	-0.02	6/16/2022 20:59	11.61	0.04	6/16/2022 22:13	-0.02
6/16/2022 21:13	12.07	0.11	6/17/2022 22:57	11.59	0.02	6/16/2022 21:00	11.63	0.04	6/16/2022 22:14	-0.05
6/16/2022 21:14	12.08	0.20	6/17/2022 22:58	11.57	0.02	6/16/2022 21:01	11.62	0.06	6/16/2022 22:15	-0.05
6/16/2022 21:15	12.05	0.16	6/17/2022 22:59	11.58	0.01	6/16/2022 21:02	11.60	0.03	6/16/2022 22:16	-0.05
6/16/2022 21:16	12.06	0.12	6/17/2022 23:00	11.57	-0.04	6/16/2022 21:03	11.61	0.03	6/16/2022 22:17	-0.07
6/16/2022 21:17	12.06	0.18	6/17/2022 23:01	11.56	0.07	6/16/2022 21:04	11.65	-0.01	6/16/2022 22:18	-0.03
6/16/2022 21:18	12.07	0.17	6/17/2022 23:02	11.58	-0.04	6/16/2022 21:05	11.62	-0.01	6/16/2022 22:19	0.00

6/16/2022 21:19	12.07	0.14	6/17/2022 23:03	11.57	-0.02	6/16/2022 21:06	11.61	0.06	6/16/2022 22:20	-0.02
6/16/2022 21:20	12.06	0.20	6/17/2022 23:04	11.58	-0.02	6/16/2022 21:07	11.60	0.04	6/16/2022 22:21	-0.04
6/16/2022 21:21	12.03	0.14	6/17/2022 23:05	11.60	0.06	6/16/2022 21:08	11.63	-0.01	6/16/2022 22:22	-0.07
6/16/2022 21:22	12.06	0.06	6/17/2022 23:06	11.59	-0.02	6/16/2022 21:09	11.62	0.02	6/16/2022 22:23	-0.06
6/16/2022 21:23	12.07	0.17	6/17/2022 23:07	11.59	-0.03	6/16/2022 21:10	11.64	0.02	6/16/2022 22:24	-0.08
6/16/2022 21:24	12.07	0.13	6/17/2022 23:08	11.57	0.03	6/16/2022 21:11	11.63	-0.02	6/16/2022 22:25	-0.03
6/16/2022 21:25	12.06	0.12	6/17/2022 23:09	11.58	-0.03	6/16/2022 21:12	11.59	0.01	6/16/2022 22:26	-0.07
6/16/2022 21:26	12.07	0.16	6/17/2022 23:10	11.59	0.09	6/16/2022 21:13	11.60	0.02	6/16/2022 22:27	-0.05
6/16/2022 21:27	12.05	0.12	6/17/2022 23:11	11.57	0.02	6/16/2022 21:14	11.59	0.03	6/16/2022 22:28	-0.05
6/16/2022 21:28	12.07	0.11	6/17/2022 23:12	11.56	-0.01	6/16/2022 21:15	11.61	0.05	6/16/2022 22:29	-0.04
6/16/2022 21:29	12.05	0.16	6/17/2022 23:13	11.57	0.06	6/16/2022 21:16	11.60	0.03	6/16/2022 22:30	-0.08
6/16/2022 21:30	12.04	0.11	6/17/2022 23:14	11.58	-0.02	6/16/2022 21:17	11.65	0.03	6/16/2022 22:31	-0.09
6/16/2022 21:31	12.07	0.15	6/17/2022 23:15	11.57	-0.02	6/16/2022 21:18	11.62	0.03	6/16/2022 22:32	0.00
6/16/2022 21:32	12.07	0.15	6/17/2022 23:16	11.55	-0.06	6/16/2022 21:19	11.61	0.03	6/16/2022 22:33	-0.05
6/16/2022 21:33	12.09	0.16	6/17/2022 23:17	11.57	-0.02	6/16/2022 21:20	11.62	0.03	6/16/2022 22:34	-0.04
6/16/2022 21:34	12.06	0.17	6/17/2022 23:18	11.57	0.01	6/16/2022 21:21	11.61	0.00	6/16/2022 22:35	0.00
6/16/2022 21:35	12.07	0.09	6/17/2022 23:19	11.58	-0.01	6/16/2022 21:22	11.62	0.00	6/16/2022 22:36	-0.06
6/16/2022 21:36	12.07	0.23	6/17/2022 23:20	11.60	-0.06	6/16/2022 21:23	11.62	0.02	6/16/2022 22:37	-0.03
6/16/2022 21:37	12.08	0.19	6/17/2022 23:21	11.56	-0.04	6/16/2022 21:24	11.64	0.03	6/16/2022 22:38	-0.01
6/16/2022 21:38	12.07	0.16	6/17/2022 23:22	11.58	0.03	6/16/2022 21:25	11.63	0.01	6/16/2022 22:39	-0.05
6/16/2022 21:39	12.07	0.11	6/17/2022 23:23	11.56	-0.07	6/16/2022 21:26	11.63	0.00	6/16/2022 22:40	-0.01
6/16/2022 21:40	12.04	0.11	6/17/2022 23:24	11.56	0.01	6/16/2022 21:27	11.60	0.02	6/16/2022 22:41	-0.01
6/16/2022 21:41	12.08	0.10	6/17/2022 23:25	11.59	-0.04	6/16/2022 21:28	11.62	0.03	6/16/2022 22:42	-0.01
6/16/2022 21:42	12.08	0.11	6/17/2022 23:26	11.59	0.07	6/16/2022 21:29	11.62	0.04	6/16/2022 22:43	-0.04
6/16/2022 21:43	12.04	0.12	6/17/2022 23:27	11.61	0.00	6/16/2022 21:30	11.62	0.05	6/16/2022 22:44	-0.07
6/16/2022 21:44	12.10	0.23	6/17/2022 23:28	11.57	-0.01	6/16/2022 21:31	11.63	0.00	6/16/2022 22:45	-0.04
6/16/2022 21:45	12.06	0.12	6/17/2022 23:29	11.57	0.00	6/16/2022 21:32	11.63	0.01	6/16/2022 22:46	-0.04
6/16/2022 21:46	12.05	0.12	6/17/2022 23:30	11.58	-0.02	6/16/2022 21:33	11.63	0.07	6/16/2022 22:47	-0.01
6/16/2022 21:47	12.06	0.11	6/17/2022 23:31	11.59	-0.05	6/16/2022 21:34	11.62	0.02	6/16/2022 22:48	-0.04
6/16/2022 21:48	12.06	0.14	6/17/2022 23:32	11.57	-0.09	6/16/2022 21:35	11.62	-0.01	6/16/2022 22:49	-0.04
6/16/2022 21:49	12.07	0.13	6/17/2022 23:33	11.58	-0.05	6/16/2022 21:36	11.62	0.03	6/16/2022 22:50	0.00
6/16/2022 21:50	12.05	0.11	6/17/2022 23:34	11.58	-0.10	6/16/2022 21:37	11.59	0.06	6/16/2022 22:51	-0.03
6/16/2022 21:51	12.07	0.21	6/17/2022 23:35	11.58	-0.08	6/16/2022 21:38	11.63	0.01	6/16/2022 22:52	-0.01
6/16/2022 21:52	12.07	0.18	6/17/2022 23:36	11.59	-0.04	6/16/2022 21:39	11.61	0.04	6/16/2022 22:53	-0.10
6/16/2022 21:53	12.07	0.14	6/17/2022 23:37	11.57	-0.11	6/16/2022 21:40	11.63	0.03	6/16/2022 22:54	-0.05
6/16/2022 21:54	12.07	0.16	6/17/2022 23:38	11.56	-0.06	6/16/2022 21:41	11.61	0.01	6/16/2022 22:55	-0.03
6/16/2022 21:55	12.08	0.18	6/17/2022 23:39	11.57	-0.05	6/16/2022 21:42	11.62	0.06	6/16/2022 22:56	-0.03
6/16/2022 21:56	12.10	0.16	6/17/2022 23:40	11.60	-0.07	6/16/2022 21:43	11.62	0.02	6/16/2022 22:57	-0.07
6/16/2022 21:57	12.08	0.15	6/17/2022 23:41	11.58	-0.02	6/16/2022 21:44	11.63	0.06	6/16/2022 22:58	-0.05
6/16/2022 21:58	12.06	0.08	6/17/2022 23:42	11.57	-0.04	6/16/2022 21:45	11.63	0.05	6/16/2022 22:59	-0.04
6/16/2022 21:59	12.06	0.13	6/17/2022 23:43	11.58	-0.04	6/16/2022 21:46	11.60	0.00	6/16/2022 23:00	-0.07
6/16/2022 22:00	12.06	0.26	6/17/2022 23:44	11.58	-0.02	6/16/2022 21:47	11.62	0.04	6/16/2022 23:01	-0.04
6/16/2022 22:01	12.07	0.13	6/17/2022 23:45	11.55	0.03	6/16/2022 21:48	11.60	0.01	6/16/2022 23:02	-0.01
6/16/2022 22:02	12.06	0.05	6/17/2022 23:46	11.57	0.06	6/16/2022 21:49	11.63	0.02	6/16/2022 23:03	-0.03
6/16/2022 22:03	12.06	0.10	6/17/2022 23:47	11.55	-0.07	6/16/2022 21:50	11.62	0.08	6/16/2022 23:04	-0.07
6/16/2022 22:04	12.05	0.15	6/17/2022 23:48	11.58	-0.01	6/16/2022 21:51	11.62	0.01	6/16/2022 23:05	-0.04
6/16/2022 22:05	12.07	0.12	6/17/2022 23:49	11.59	-0.01	6/16/2022 21:52	11.61	0.06	6/16/2022 23:06	-0.01
6/16/2022 22:06	12.07	0.16	6/17/2022 23:50	11.57	0.06	6/16/2022 21:53	11.62	0.01	6/16/2022 23:07	-0.03
6/16/2022 22:07	12.08	0.15	6/17/2022 23:51	11.57	-0.03	6/16/2022 21:54	11.62	0.05	6/16/2022 23:08	-0.07
6/16/2022 22:08	12.08	0.11	6/17/2022 23:52	11.59	-0.07	6/16/2022 21:55	11.62	-0.01	6/16/2022 23:09	-0.06
6/16/2022 22:09	12.08	0.12	6/17/2022 23:53	11.57	-0.02	6/16/2022 21:56	11.61	0.01	6/16/2022 23:10	-0.01
6/16/2022 22:10	12.07	0.21	6/17/2022 23:54	11.58	-0.07	6/16/2022 21:57	11.59	-0.01	6/16/2022 23:11	0.03
6/16/2022 22:11	12.09	0.12	6/17/2022 23:55	11.59	-0.07	6/16/2022 21:58	11.61	0.00	6/16/2022 23:12	-0.03
6/16/2022 22:12	12.06	0.11	6/17/2022 23:56	11.58	-0.07	6/16/2022 21:59	11.63	0.05	6/16/2022 23:13	-0.02
6/16/2022 22:13	12.06	0.13	6/17/2022 23:57	11.58	-0.03	6/16/2022 22:00	11.63	0.03	6/16/2022 23:14	-0.08
6/16/2022 22:14	12.09	0.13	6/17/2022 23:58	11.57	-0.06	6/16/2022 22:01	11.61	0.03	6/16/2022 23:15	-0.02
6/16/2022 22:15	12.06	0.17	6/17/2022 23:59	11.59	-0.04	6/16/2022 22:02	11.63	-0.01	6/16/2022 23:16	-0.08
6/16/2022 22:16	12.07	0.12	6/18/2022 0:00	11.57	-0.01	6/16/2022 22:03	11.61	-0.01	6/16/2022 23:17	-0.04
6/16/2022 22:17	12.06	0.17	6/18/2022 0:01	11.58	-0.02	6/16/2022 22:04	11.61	0.01	6/16/2022 23:18	-0.07
6/16/2022 22:18	12.06	0.15	6/18/2022 0:02	11.58	0.01	6/16/2022 22:05	11.61	0.04	6/16/2022 23:19	-0.07
6/16/2022 22:19	12.06	0.20	6/18/2022 0:03	11.57	0.03	6/16/2022 22:06	11.63	0.01	6/16/2022 23:20	-0.08
6/16/2022 22:20	12.08	0.09	6/18/2022 0:04	11.59	-0.08	6/16/2022 22:07	11.62	0.00	6/16/2022 23:21	-0.05
6/16/2022 22:21	12.07	0.15	6/18/2022 0:05	11.60	0.02	6/16/2022 22:08	11.61	0.05	6/16/2022 23:22	-0.05
6/16/2022 22:22	12.05	0.13	6/18/2022 0:06	11.58	0.01	6/16/2022 22:09	11.62	0.01	6/16/2022 23:23	-0.05
6/16/2022 22:23	12.08	0.17	6/18/2022 0:07	11.60	-0.01	6/16/2022 22:10	11.60	0.01	6/16/2022 23:24	0.02
6/16/2022 22:24	12.05	0.16	6/18/2022 0:08	11.57	-0.03	6/16/2022 22:11	11.63	0.03	6/16/2022 23:25	-0.07
6/16/2022 22:25	12.05	0.14	6/18/2022 0:09	11.58	-0.08	6/16/2022 22:12	11.63	0.04	6/16/2022 23:26	-0.04
6/16/2022 22:26	12.09	0.19	6/18/2022 0:10	11.56	-0.02	6/16/2022 22:13	11.62	0.01	6/16/2022 23:27	-0.09
6/16/2022 22:27	12.05	0.12	6/18/2022 0:11	11.57	-0.04	6/16/2022 22:14	11.60	0.03	6/16/2022 23:28	-0.02
6/16/2022 22:28	12.07	0.18	6/18/2022 0:12	11.56	-0.08	6/16/2022 22:15	11.62	0.05	6/16/2022 23:29	-0.05
6/16/2022 22:29	12.08	0.15	6/18/2022 0:13	11.57	0.05	6/16/2022 22:16	11.61	0.05	6/16/2022 23:30	-0.07
6/16/2022 22:30	12.05	0.14	6/18/2022 0:14	11.57	-0.04	6/16/2022 22:17	11.62	0.03	6/16/2022 23:31	-0.03
6/16/2022 22:31	12.03	0.21	6/18/2022 0:15	11.57	-0.03	6/16/2022 22:18	11.61	0.00	6/16/2022 23:32	-0.05
6/16/2022 22:32	12.06	0.08	6/18/2022 0:16	11.60	-0.06	6/16/2022 22:19	11.61	0.02	6/16/2022 23:33	-0.05
6/16/2022 22:33	12.05	0.19	6/18/2022 0:17	11.60	-0.05	6/16/2022 22:20	11.61	0.03	6/16/2022 23:34	-0.07
6/16/2022 22:34	12.08	0.14	6/18/2022 0:18	11.57	-0.03	6/16/2022 22:21	11.61	0.04	6/16/2022 23:35	-0.02
6/16/2022 22:35	12.06	0.15	6/18/2022 0:19	11.60	0.00	6/16/2022 22:22	11.61	0.06	6/16/2022 23:36	-0.02
6/16/2022 22:36	12.08	0.17	6/18/2022 0:20	11.58	-0.07	6/16/2022 22:23	11.60	0.05	6/16/2022 23:37	-0.03
6/16/2022 22:37	12.06	0.17	6/18/2022 0:21	11.56	-0.09	6/16/2022 22:24	11.62	0.01	6/16/2022 23:38	-0.09
6/16/2022 22:38	12.07	0.12	6/18/2022 0:22	11.57	-0.01	6/16/2022 22:25	11.61	0.05	6/16/2022 23:39	-0.05
6/16/2022 22:39	12.08	0.16	6/18/2022 0:23	11.59	0.06	6/16/2022 22:26	11.61	0.01	6/16/2022 23:40	-0.06
6/16/2022 22:40	12.07	0.10	6/18/2022 0:24	11.58	0.01	6/16/2022 22:27	11.61	0.01	6/16/2022 23:41	-0.04
6/16/2022 22:41	12.07	0.15	6/18/2022 0:25	11.58	0.02	6/16/2022 22:28	11.61	0.07	6/16/2022 23:42	-0.04
6/16/2022 22:42	12.04	0.15	6/18/2022 0:26	11.58	-0.06	6/16/2022 22:29	11.62	0.05	6/16/2022 23:43	-0.06
6/16/2022 22:43	12.07	0.16	6/18/2022 0:27	11.58	-0.02	6/16/2022 22:30	11.62	0.02	6/16/2022 23:44	-0.03
6/16/2022 22:44	12.07	0.13	6/18/2022 0:28	11.58	0.07	6/16/2022 22:31	11.60	0.02	6/16/2022 23:45	-0.04
6/16/2022 22:45	12.05	0.11	6/18/2022 0:29	11.57	0.00	6/16/2022 22:32	11.63	0.04	6/16/2022 23:46	-0.04
6/16/2022 22:46	12.05	0.17	6/18/2022 0:30	11.58	0.00	6/16/2022 22:33	11.62	0.05	6/16/2022 23:47	-0.04

6/16/2022 22:47	12.06	0.10	6/18/2022 0:31	11.57	-0.04	6/16/2022 22:34	11.62	0.03	6/16/2022 23:48	-0.02
6/16/2022 22:48	12.06	0.20	6/18/2022 0:32	11.58	0.01	6/16/2022 22:35	11.62	0.02	6/16/2022 23:49	-0.03
6/16/2022 22:49	12.06	0.15	6/18/2022 0:33	11.60	0.00	6/16/2022 22:36	11.60	0.00	6/16/2022 23:50	-0.07
6/16/2022 22:50	12.05	0.20	6/18/2022 0:34	11.57	-0.08	6/16/2022 22:37	11.60	0.04	6/16/2022 23:51	-0.07
6/16/2022 22:51	12.07	0.10	6/18/2022 0:35	11.57	0.01	6/16/2022 22:38	11.63	0.06	6/16/2022 23:52	-0.03
6/16/2022 22:52	12.09	0.11	6/18/2022 0:36	11.60	-0.02	6/16/2022 22:39	11.61	0.06	6/16/2022 23:53	0.00
6/16/2022 22:53	12.08	0.17	6/18/2022 0:37	11.59	0.01	6/16/2022 22:40	11.60	0.02	6/16/2022 23:54	-0.04
6/16/2022 22:54	12.08	0.14	6/18/2022 0:38	11.58	-0.08	6/16/2022 22:41	11.62	0.02	6/16/2022 23:55	-0.03
6/16/2022 22:55	12.05	0.15	6/18/2022 0:39	11.58	-0.05	6/16/2022 22:42	11.62	0.04	6/16/2022 23:56	-0.04
6/16/2022 22:56	12.07	0.17	6/18/2022 0:40	11.54	-0.01	6/16/2022 22:43	11.62	0.06	6/16/2022 23:57	-0.01
6/16/2022 22:57	12.07	0.16	6/18/2022 0:41	11.58	0.02	6/16/2022 22:44	11.62	0.02	6/16/2022 23:58	-0.04
6/16/2022 22:58	12.08	0.08	6/18/2022 0:42	11.57	-0.11	6/16/2022 22:45	11.62	0.02	6/16/2022 23:59	-0.05
6/16/2022 22:59	12.08	0.18	6/18/2022 0:43	11.57	0.02	6/16/2022 22:46	11.60	0.03	6/17/2022 0:00	-0.01
6/16/2022 23:00	12.07	0.16	6/18/2022 0:44	11.57	-0.02	6/16/2022 22:47	11.61	0.04	6/17/2022 0:01	-0.01
6/16/2022 23:01	12.06	0.17	6/18/2022 0:45	11.57	-0.04	6/16/2022 22:48	11.61	0.04	6/17/2022 0:02	-0.06
6/16/2022 23:02	12.08	0.14	6/18/2022 0:46	11.56	0.03	6/16/2022 22:49	11.60	0.02	6/17/2022 0:03	-0.07
6/16/2022 23:03	12.07	0.11	6/18/2022 0:47	11.60	-0.04	6/16/2022 22:50	11.61	0.02	6/17/2022 0:04	-0.03
6/16/2022 23:04	12.06	0.16	6/18/2022 0:48	11.58	-0.05	6/16/2022 22:51	11.61	0.03	6/17/2022 0:05	-0.05
6/16/2022 23:05	12.07	0.11	6/18/2022 0:49	11.56	-0.05	6/16/2022 22:52	11.62	0.03	6/17/2022 0:06	-0.06
6/16/2022 23:06	12.07	0.15	6/18/2022 0:50	11.58	0.06	6/16/2022 22:53	11.62	0.01	6/17/2022 0:07	-0.08
6/16/2022 23:07	12.07	0.06	6/18/2022 0:51	11.54	-0.08	6/16/2022 22:54	11.62	0.03	6/17/2022 0:08	-0.06
6/16/2022 23:08	12.06	0.20	6/18/2022 0:52	11.58	-0.06	6/16/2022 22:55	11.62	0.04	6/17/2022 0:09	-0.04
6/16/2022 23:09	12.05	0.11	6/18/2022 0:53	11.58	-0.08	6/16/2022 22:56	11.61	0.02	6/17/2022 0:10	-0.02
6/16/2022 23:10	12.04	0.12	6/18/2022 0:54	11.57	-0.04	6/16/2022 22:57	11.62	0.03	6/17/2022 0:11	-0.03
6/16/2022 23:11	12.06	0.18	6/18/2022 0:55	11.58	-0.05	6/16/2022 22:58	11.60	0.01	6/17/2022 0:12	-0.01
6/16/2022 23:12	12.06	0.10	6/18/2022 0:56	11.56	-0.05	6/16/2022 22:59	11.61	0.03	6/17/2022 0:13	-0.03
6/16/2022 23:13	12.06	0.12	6/18/2022 0:57	11.58	0.03	6/16/2022 23:00	11.63	0.01	6/17/2022 0:14	0.01
6/16/2022 23:14	12.06	0.20	6/18/2022 0:58	11.56	0.02	6/16/2022 23:01	11.61	0.05	6/17/2022 0:15	-0.07
6/16/2022 23:15	12.05	0.13	6/18/2022 0:59	11.54	0.02	6/16/2022 23:02	11.62	0.04	6/17/2022 0:16	-0.08
6/16/2022 23:16	12.06	0.22	6/18/2022 1:00	11.56	-0.02	6/16/2022 23:03	11.63	0.03	6/17/2022 0:17	-0.06
6/16/2022 23:17	12.04	0.12	6/18/2022 1:01	11.54	-0.06	6/16/2022 23:04	11.62	0.02	6/17/2022 0:18	-0.06
6/16/2022 23:18	12.06	0.11	6/18/2022 1:02	11.59	-0.02	6/16/2022 23:05	11.64	-0.01	6/17/2022 0:19	-0.04
6/16/2022 23:19	12.04	0.09	6/18/2022 1:03	11.57	-0.06	6/16/2022 23:06	11.62	0.06	6/17/2022 0:20	-0.02
6/16/2022 23:20	12.06	0.14	6/18/2022 1:04	11.56	0.01	6/16/2022 23:07	11.61	0.04	6/17/2022 0:21	-0.07
6/16/2022 23:21	12.04	0.11	6/18/2022 1:05	11.56	0.02	6/16/2022 23:08	11.63	-0.02	6/17/2022 0:22	-0.08
6/16/2022 23:22	12.06	0.07	6/18/2022 1:06	11.58	-0.03	6/16/2022 23:09	11.60	0.04	6/17/2022 0:23	-0.09
6/16/2022 23:23	12.06	0.06	6/18/2022 1:07	11.57	-0.04	6/16/2022 23:10	11.63	0.03	6/17/2022 0:24	-0.04
6/16/2022 23:24	12.05	0.14	6/18/2022 1:08	11.57	-0.03	6/16/2022 23:11	11.62	0.01	6/17/2022 0:25	-0.04
6/16/2022 23:25	12.08	0.16	6/18/2022 1:09	11.58	0.02	6/16/2022 23:12	11.60	-0.01	6/17/2022 0:26	-0.08
6/16/2022 23:26	12.06	0.16	6/18/2022 1:10	11.57	-0.03	6/16/2022 23:13	11.60	0.02	6/17/2022 0:27	-0.04
6/16/2022 23:27	12.08	0.12	6/18/2022 1:11	11.54	-0.03	6/16/2022 23:14	11.62	0.00	6/17/2022 0:28	-0.02
6/16/2022 23:28	12.07	0.19	6/18/2022 1:12	11.58	-0.05	6/16/2022 23:15	11.62	-0.02	6/17/2022 0:29	-0.04
6/16/2022 23:29	12.07	0.27	6/18/2022 1:13	11.59	0.01	6/16/2022 23:16	11.60	0.03	6/17/2022 0:30	-0.03
6/16/2022 23:30	12.06	0.10	6/18/2022 1:14	11.56	-0.07	6/16/2022 23:17	11.60	0.04	6/17/2022 0:31	-0.04
6/16/2022 23:31	12.08	0.12	6/18/2022 1:15	11.59	-0.07	6/16/2022 23:18	11.62	0.01	6/17/2022 0:32	-0.02
6/16/2022 23:32	12.08	0.20	6/18/2022 1:16	11.59	-0.02	6/16/2022 23:19	11.62	0.06	6/17/2022 0:33	-0.03
6/16/2022 23:33	12.07	0.11	6/18/2022 1:17	11.59	0.00	6/16/2022 23:20	11.61	0.05	6/17/2022 0:34	0.02
6/16/2022 23:34	12.08	0.20	6/18/2022 1:18	11.57	-0.01	6/16/2022 23:21	11.61	0.03	6/17/2022 0:35	-0.04
6/16/2022 23:35	12.06	0.12	6/18/2022 1:19	11.59	0.04	6/16/2022 23:22	11.61	0.05	6/17/2022 0:36	-0.10
6/16/2022 23:36	12.07	0.16	6/18/2022 1:20	11.58	0.07	6/16/2022 23:23	11.64	0.02	6/17/2022 0:37	-0.06
6/16/2022 23:37	12.03	0.19	6/18/2022 1:21	11.57	-0.05	6/16/2022 23:24	11.60	0.03	6/17/2022 0:38	-0.06
6/16/2022 23:38	12.05	0.17	6/18/2022 1:22	11.59	-0.02	6/16/2022 23:25	11.61	0.00	6/17/2022 0:39	-0.05
6/16/2022 23:39	12.08	0.16	6/18/2022 1:23	11.59	-0.03	6/16/2022 23:26	11.60	0.05	6/17/2022 0:40	-0.03
6/16/2022 23:40	12.06	0.13	6/18/2022 1:24	11.59	0.02	6/16/2022 23:27	11.62	0.02	6/17/2022 0:41	-0.06
6/16/2022 23:41	12.05	0.24	6/18/2022 1:25	11.59	-0.02	6/16/2022 23:28	11.63	0.03	6/17/2022 0:42	-0.06
6/16/2022 23:42	12.06	0.11	6/18/2022 1:26	11.56	0.08	6/16/2022 23:29	11.63	0.02	6/17/2022 0:43	-0.05
6/16/2022 23:43	12.05	0.08	6/18/2022 1:27	11.56	-0.04	6/16/2022 23:30	11.60	0.02	6/17/2022 0:44	-0.03
6/16/2022 23:44	12.08	0.11	6/18/2022 1:28	11.57	-0.01	6/16/2022 23:31	11.64	0.04	6/17/2022 0:45	0.01
6/16/2022 23:45	12.05	0.16	6/18/2022 1:29	11.55	-0.01	6/16/2022 23:32	11.60	0.06	6/17/2022 0:46	-0.08
6/16/2022 23:46	12.07	0.23	6/18/2022 1:30	11.59	-0.02	6/16/2022 23:33	11.62	0.01	6/17/2022 0:47	-0.05
6/16/2022 23:47	12.07	0.11	6/18/2022 1:31	11.57	0.00	6/16/2022 23:34	11.62	0.03	6/17/2022 0:48	-0.07
6/16/2022 23:48	12.06	0.10	6/18/2022 1:32	11.57	-0.07	6/16/2022 23:35	11.62	0.00	6/17/2022 0:49	-0.09
6/16/2022 23:49	12.06	0.10	6/18/2022 1:33	11.60	0.01	6/16/2022 23:36	11.59	0.02	6/17/2022 0:50	-0.09
6/16/2022 23:50	12.07	0.06	6/18/2022 1:34	11.59	-0.06	6/16/2022 23:37	11.59	0.03	6/17/2022 0:51	-0.07
6/16/2022 23:51	12.06	0.14	6/18/2022 1:35	11.58	-0.05	6/16/2022 23:38	11.60	0.02	6/17/2022 0:52	-0.01
6/16/2022 23:52	12.07	0.20	6/18/2022 1:36	11.57	0.02	6/16/2022 23:39	11.61	0.03	6/17/2022 0:53	-0.03
6/16/2022 23:53	12.08	0.06	6/18/2022 1:37	11.59	0.00	6/16/2022 23:40	11.62	-0.02	6/17/2022 0:54	-0.07
6/16/2022 23:54	12.07	0.11	6/18/2022 1:38	11.57	-0.03	6/16/2022 23:41	11.62	0.10	6/17/2022 0:55	-0.08
6/16/2022 23:55	12.06	0.13	6/18/2022 1:39	11.56	0.05	6/16/2022 23:42	11.63	0.04	6/17/2022 0:56	-0.08
6/16/2022 23:56	12.07	0.13	6/18/2022 1:40	11.57	-0.02	6/16/2022 23:43	11.62	0.01	6/17/2022 0:57	-0.04
6/16/2022 23:57	12.08	0.17	6/18/2022 1:41	11.55	-0.04	6/16/2022 23:44	11.64	0.05	6/17/2022 0:58	-0.04
6/16/2022 23:58	12.08	0.15	6/18/2022 1:42	11.58	-0.10	6/16/2022 23:45	11.61	0.07	6/17/2022 0:59	-0.04
6/16/2022 23:59	12.06	0.22	6/18/2022 1:43	11.58	-0.02	6/16/2022 23:46	11.60	0.02	6/17/2022 1:00	-0.02
6/17/2022 0:00	12.07	0.14	6/18/2022 1:44	11.59	0.01	6/16/2022 23:47	11.62	0.01	6/17/2022 1:01	-0.03
6/17/2022 0:01	12.07	0.14	6/18/2022 1:45	11.56	-0.10	6/16/2022 23:48	11.61	0.05	6/17/2022 1:02	-0.05
6/17/2022 0:02	12.09	0.15	6/18/2022 1:46	11.56	-0.02	6/16/2022 23:49	11.62	0.01	6/17/2022 1:03	-0.04
6/17/2022 0:03	12.08	0.15	6/18/2022 1:47	11.56	-0.08	6/16/2022 23:50	11.59	0.06	6/17/2022 1:04	-0.07
6/17/2022 0:04	12.05	0.15	6/18/2022 1:48	11.56	-0.04	6/16/2022 23:51	11.62	0.02	6/17/2022 1:05	-0.06
6/17/2022 0:05	12.07	0.13	6/18/2022 1:49	11.57	-0.05	6/16/2022 23:52	11.63	0.05	6/17/2022 1:06	-0.05
6/17/2022 0:06	12.05	0.15	6/18/2022 1:50	11.58	-0.02	6/16/2022 23:53	11.61	0.05	6/17/2022 1:07	-0.01
6/17/2022 0:07	12.06	0.13	6/18/2022 1:51	11.52	-0.06	6/16/2022 23:54	11.63	0.02	6/17/2022 1:08	-0.07
6/17/2022 0:08	12.06	0.14	6/18/2022 1:52	11.58	-0.02	6/16/2022 23:55	11.62	0.03	6/17/2022 1:09	-0.07
6/17/2022 0:09	12.07	0.17	6/18/2022 1:53	11.56	0.01	6/16/2022 23:56	11.63	0.07	6/17/2022 1:10	-0.03
6/17/2022 0:10	12.07	0.15	6/18/2022 1:54	11.59	-0.04	6/16/2022 23:57	11.61	0.08	6/17/2022 1:11	-0.07
6/17/2022 0:11	12.06	0.17	6/18/2022 1:55	11.58	0.02	6/16/2022 23:58	11.60	0.00	6/17/2022 1:12	-0.06
6/17/2022 0:12	12.08	0.16	6/18/2022 1:56	11.60	-0.02	6/16/2022 23:59	11.62	0.01	6/17/2022 1:13	-0.05
6/17/2022 0:13	12.04	0.19	6/18/2022 1:57	11.58	-0.07	6/17/2022 0:00	11.62	0.01	6/17/2022 1:14	0.00
6/17/2022 0:14	12.05	0.07	6/18/2022 1:58	11.56	0.00	6/17/2022 0:01	11.61	0.01	6/17/2022 1:15	-0.04

6/17/2022 0:15	12.05	0.16	6/18/2022 1:59	11.58	-0.01	6/17/2022 0:02	11.64	0.05	6/17/2022 1:16	0.01
6/17/2022 0:16	12.07	0.17	6/18/2022 2:00	11.58	-0.07	6/17/2022 0:03	11.63	0.03	6/17/2022 1:17	-0.03
6/17/2022 0:17	12.07	0.12	6/18/2022 2:01	11.59	-0.06	6/17/2022 0:04	11.62	0.02	6/17/2022 1:18	-0.07
6/17/2022 0:18	12.05	0.15	6/18/2022 2:02	11.57	0.05	6/17/2022 0:05	11.63	0.04	6/17/2022 1:19	-0.01
6/17/2022 0:19	12.08	0.15	6/18/2022 2:03	11.56	-0.06	6/17/2022 0:06	11.62	0.02	6/17/2022 1:20	0.00
6/17/2022 0:20	12.09	0.12	6/18/2022 2:04	11.59	0.00	6/17/2022 0:07	11.62	0.03	6/17/2022 1:21	-0.03
6/17/2022 0:21	12.06	0.13	6/18/2022 2:05	11.57	-0.02	6/17/2022 0:08	11.62	0.04	6/17/2022 1:22	-0.07
6/17/2022 0:22	12.06	0.10	6/18/2022 2:06	11.57	-0.03	6/17/2022 0:09	11.64	-0.01	6/17/2022 1:23	-0.05
6/17/2022 0:23	12.08	0.13	6/18/2022 2:07	11.58	-0.03	6/17/2022 0:10	11.60	0.01	6/17/2022 1:24	-0.02
6/17/2022 0:24	12.06	0.17	6/18/2022 2:08	11.56	-0.11	6/17/2022 0:11	11.62	0.03	6/17/2022 1:25	-0.05
6/17/2022 0:25	12.06	0.18	6/18/2022 2:09	11.56	0.01	6/17/2022 0:12	11.61	0.06	6/17/2022 1:26	-0.07
6/17/2022 0:26	12.06	0.16	6/18/2022 2:10	11.58	0.00	6/17/2022 0:13	11.61	0.03	6/17/2022 1:27	-0.07
6/17/2022 0:27	12.07	0.04	6/18/2022 2:11	11.55	0.03	6/17/2022 0:14	11.62	0.04	6/17/2022 1:28	-0.05
6/17/2022 0:28	12.07	0.14	6/18/2022 2:12	11.56	0.04	6/17/2022 0:15	11.62	0.01	6/17/2022 1:29	-0.03
6/17/2022 0:29	12.08	0.18	6/18/2022 2:13	11.59	-0.03	6/17/2022 0:16	11.63	0.04	6/17/2022 1:30	-0.07
6/17/2022 0:30	12.07	0.15	6/18/2022 2:14	11.58	0.01	6/17/2022 0:17	11.61	0.03	6/17/2022 1:31	-0.07
6/17/2022 0:31	12.05	0.21	6/18/2022 2:15	11.55	-0.06	6/17/2022 0:18	11.62	0.05	6/17/2022 1:32	-0.07
6/17/2022 0:32	12.07	0.11	6/18/2022 2:16	11.58	-0.05	6/17/2022 0:19	11.64	0.00	6/17/2022 1:33	-0.02
6/17/2022 0:33	12.08	0.21	6/18/2022 2:17	11.58	-0.12	6/17/2022 0:20	11.63	0.01	6/17/2022 1:34	-0.01
6/17/2022 0:34	12.08	0.12	6/18/2022 2:18	11.59	0.02	6/17/2022 0:21	11.61	0.00	6/17/2022 1:35	-0.03
6/17/2022 0:35	12.05	0.13	6/18/2022 2:19	11.54	-0.01	6/17/2022 0:22	11.65	0.01	6/17/2022 1:36	-0.04
6/17/2022 0:36	12.06	0.11	6/18/2022 2:20	11.58	-0.05	6/17/2022 0:23	11.60	0.00	6/17/2022 1:37	-0.03
6/17/2022 0:37	12.06	0.06	6/18/2022 2:21	11.57	-0.05	6/17/2022 0:24	11.61	0.01	6/17/2022 1:38	-0.02
6/17/2022 0:38	12.05	0.11	6/18/2022 2:22	11.59	-0.04	6/17/2022 0:25	11.64	0.02	6/17/2022 1:39	0.00
6/17/2022 0:39	12.05	0.15	6/18/2022 2:23	11.55	0.02	6/17/2022 0:26	11.61	-0.01	6/17/2022 1:40	-0.07
6/17/2022 0:40	12.09	0.19	6/18/2022 2:24	11.58	0.02	6/17/2022 0:27	11.62	0.02	6/17/2022 1:41	-0.02
6/17/2022 0:41	12.06	0.15	6/18/2022 2:25	11.58	0.03	6/17/2022 0:28	11.61	0.07	6/17/2022 1:42	-0.05
6/17/2022 0:42	12.06	0.17	6/18/2022 2:26	11.59	-0.04	6/17/2022 0:29	11.62	0.01	6/17/2022 1:43	-0.04
6/17/2022 0:43	12.04	0.13	6/18/2022 2:27	11.57	-0.02	6/17/2022 0:30	11.62	0.03	6/17/2022 1:44	-0.05
6/17/2022 0:44	12.05	0.11	6/18/2022 2:28	11.59	-0.03	6/17/2022 0:31	11.60	0.04	6/17/2022 1:45	-0.02
6/17/2022 0:45	12.07	0.16	6/18/2022 2:29	11.56	-0.02	6/17/2022 0:32	11.63	0.02	6/17/2022 1:46	-0.04
6/17/2022 0:46	12.06	0.11	6/18/2022 2:30	11.58	-0.05	6/17/2022 0:33	11.61	0.03	6/17/2022 1:47	-0.02
6/17/2022 0:47	12.08	0.18	6/18/2022 2:31	11.57	0.04	6/17/2022 0:34	11.59	0.01	6/17/2022 1:48	-0.07
6/17/2022 0:48	12.05	0.14	6/18/2022 2:32	11.61	0.00	6/17/2022 0:35	11.63	0.06	6/17/2022 1:49	-0.06
6/17/2022 0:49	12.07	0.10	6/18/2022 2:33	11.57	-0.03	6/17/2022 0:36	11.62	-0.02	6/17/2022 1:50	-0.03
6/17/2022 0:50	12.05	0.02	6/18/2022 2:34	11.56	0.03	6/17/2022 0:37	11.62	0.03	6/17/2022 1:51	-0.04
6/17/2022 0:51	12.09	0.11	6/18/2022 2:35	11.57	0.04	6/17/2022 0:38	11.62	-0.02	6/17/2022 1:52	-0.04
6/17/2022 0:52	12.06	0.17	6/18/2022 2:36	11.55	0.00	6/17/2022 0:39	11.62	0.04	6/17/2022 1:53	-0.07
6/17/2022 0:53	12.09	0.17	6/18/2022 2:37	11.58	-0.09	6/17/2022 0:40	11.62	0.02	6/17/2022 1:54	-0.05
6/17/2022 0:54	12.04	0.15	6/18/2022 2:38	11.58	-0.08	6/17/2022 0:41	11.61	0.00	6/17/2022 1:55	-0.05
6/17/2022 0:55	12.05	0.14	6/18/2022 2:39	11.58	-0.03	6/17/2022 0:42	11.62	0.04	6/17/2022 1:56	-0.08
6/17/2022 0:56	12.06	0.11	6/18/2022 2:40	11.57	-0.06	6/17/2022 0:43	11.59	-0.01	6/17/2022 1:57	-0.07
6/17/2022 0:57	12.07	0.17	6/18/2022 2:41	11.56	-0.02	6/17/2022 0:44	11.61	0.00	6/17/2022 1:58	-0.06
6/17/2022 0:58	12.04	0.20	6/18/2022 2:42	11.59	-0.02	6/17/2022 0:45	11.63	0.00	6/17/2022 1:59	-0.04
6/17/2022 0:59	12.07	0.13	6/18/2022 2:43	11.58	-0.04	6/17/2022 0:46	11.63	0.02	6/17/2022 2:00	-0.03
6/17/2022 1:00	12.05	0.22	6/18/2022 2:44	11.59	-0.04	6/17/2022 0:47	11.61	0.03	6/17/2022 2:01	-0.04
6/17/2022 1:01	12.08	0.11	6/18/2022 2:45	11.57	-0.03	6/17/2022 0:48	11.62	0.02	6/17/2022 2:02	-0.04
6/17/2022 1:02	12.06	0.16	6/18/2022 2:46	11.57	-0.06	6/17/2022 0:49	11.60	0.05	6/17/2022 2:03	-0.02
6/17/2022 1:03	12.06	0.06	6/18/2022 2:47	11.59	0.03	6/17/2022 0:50	11.63	0.04	6/17/2022 2:04	-0.04
6/17/2022 1:04	12.06	0.19	6/18/2022 2:48	11.58	0.03	6/17/2022 0:51	11.61	0.06	6/17/2022 2:05	-0.01
6/17/2022 1:05	12.09	0.20	6/18/2022 2:49	11.59	-0.12	6/17/2022 0:52	11.60	0.03	6/17/2022 2:06	-0.06
6/17/2022 1:06	12.07	0.23	6/18/2022 2:50	11.58	0.01	6/17/2022 0:53	11.63	0.03	6/17/2022 2:07	-0.05
6/17/2022 1:07	12.06	0.15	6/18/2022 2:51	11.59	0.01	6/17/2022 0:54	11.61	0.01	6/17/2022 2:08	0.00
6/17/2022 1:08	12.07	0.19	6/18/2022 2:52	11.58	-0.01	6/17/2022 0:55	11.62	0.01	6/17/2022 2:09	-0.03
6/17/2022 1:09	12.05	0.17	6/18/2022 2:53	11.56	0.00	6/17/2022 0:56	11.62	0.02	6/17/2022 2:10	-0.03
6/17/2022 1:10	12.06	0.12	6/18/2022 2:54	11.56	-0.03	6/17/2022 0:57	11.61	-0.02	6/17/2022 2:11	-0.03
6/17/2022 1:11	12.06	0.11	6/18/2022 2:55	11.59	0.04	6/17/2022 0:58	11.62	0.03	6/17/2022 2:12	-0.07
6/17/2022 1:12	12.06	0.13	6/18/2022 2:56	11.55	-0.08	6/17/2022 0:59	11.62	-0.01	6/17/2022 2:13	-0.02
6/17/2022 1:13	12.08	0.08	6/18/2022 2:57	11.58	-0.09	6/17/2022 1:00	11.61	0.03	6/17/2022 2:14	0.03
6/17/2022 1:14	12.06	0.11	6/18/2022 2:58	11.56	-0.05	6/17/2022 1:01	11.61	0.05	6/17/2022 2:15	-0.07
6/17/2022 1:15	12.06	0.10	6/18/2022 2:59	11.59	0.05	6/17/2022 1:02	11.62	0.05	6/17/2022 2:16	-0.08
6/17/2022 1:16	12.05	0.11	6/18/2022 3:00	11.58	-0.05	6/17/2022 1:03	11.59	0.01	6/17/2022 2:17	-0.01
6/17/2022 1:17	12.06	0.18	6/18/2022 3:01	11.60	0.00	6/17/2022 1:04	11.60	0.03	6/17/2022 2:18	-0.03
6/17/2022 1:18	12.06	0.08	6/18/2022 3:02	11.60	0.02	6/17/2022 1:05	11.60	0.05	6/17/2022 2:19	0.00
6/17/2022 1:19	12.06	0.21	6/18/2022 3:03	11.58	-0.06	6/17/2022 1:06	11.62	0.05	6/17/2022 2:20	-0.06
6/17/2022 1:20	12.05	0.25	6/18/2022 3:04	11.59	-0.09	6/17/2022 1:07	11.61	0.02	6/17/2022 2:21	-0.04
6/17/2022 1:21	12.05	0.13	6/18/2022 3:05	11.58	-0.02	6/17/2022 1:08	11.60	0.02	6/17/2022 2:22	-0.05
6/17/2022 1:22	12.05	0.10	6/18/2022 3:06	11.56	-0.04	6/17/2022 1:09	11.62	0.03	6/17/2022 2:23	-0.06
6/17/2022 1:23	12.09	0.14	6/18/2022 3:07	11.58	-0.04	6/17/2022 1:10	11.62	0.06	6/17/2022 2:24	0.02
6/17/2022 1:24	12.06	0.14	6/18/2022 3:08	11.57	0.00	6/17/2022 1:11	11.60	0.02	6/17/2022 2:25	-0.04
6/17/2022 1:25	12.08	0.13	6/18/2022 3:09	11.55	0.01	6/17/2022 1:12	11.60	0.01	6/17/2022 2:26	-0.01
6/17/2022 1:26	12.07	0.14	6/18/2022 3:10	11.58	-0.10	6/17/2022 1:13	11.59	-0.01	6/17/2022 2:27	-0.09
6/17/2022 1:27	12.05	0.17	6/18/2022 3:11	11.57	0.00	6/17/2022 1:14	11.62	0.04	6/17/2022 2:28	-0.05
6/17/2022 1:28	12.07	0.17	6/18/2022 3:12	11.57	0.04	6/17/2022 1:15	11.63	0.03	6/17/2022 2:29	-0.09
6/17/2022 1:29	12.05	0.11	6/18/2022 3:13	11.59	0.04	6/17/2022 1:16	11.64	0.03	6/17/2022 2:30	-0.08
6/17/2022 1:30	12.07	0.15	6/18/2022 3:14	11.56	-0.11	6/17/2022 1:17	11.64	0.02	6/17/2022 2:31	-0.06
6/17/2022 1:31	12.04	0.06	6/18/2022 3:15	11.55	-0.11	6/17/2022 1:18	11.63	0.03	6/17/2022 2:32	-0.02
6/17/2022 1:32	12.06	0.07	6/18/2022 3:16	11.58	-0.05	6/17/2022 1:19	11.61	0.00	6/17/2022 2:33	-0.07
6/17/2022 1:33	12.06	0.11	6/18/2022 3:17	11.56	-0.02	6/17/2022 1:20	11.61	0.03	6/17/2022 2:34	-0.02
6/17/2022 1:34	12.05	0.13	6/18/2022 3:18	11.61	-0.04	6/17/2022 1:21	11.59	0.05	6/17/2022 2:35	-0.05
6/17/2022 1:35	12.07	0.17	6/18/2022 3:19	11.57	-0.04	6/17/2022 1:22	11.61	0.01	6/17/2022 2:36	-0.05
6/17/2022 1:36	12.07	0.19	6/18/2022 3:20	11.58	0.01	6/17/2022 1:23	11.61	0.03	6/17/2022 2:37	-0.04
6/17/2022 1:37	12.08	0.12	6/18/2022 3:21	11.56	-0.01	6/17/2022 1:24	11.61	0.02	6/17/2022 2:38	-0.01
6/17/2022 1:38	12.07	0.09	6/18/2022 3:22	11.57	-0.02	6/17/2022 1:25	11.62	-0.03	6/17/2022 2:39	-0.03
6/17/2022 1:39	12.07	0.10	6/18/2022 3:23	11.60	-0.03	6/17/2022 1:26	11.62	0.04	6/17/2022 2:40	-0.03
6/17/2022 1:40	12.06	0.10	6/18/2022 3:24	11.60	0.00	6/17/2022 1:27	11.60	0.00	6/17/2022 2:41	-0.07
6/17/2022 1:41	12.06	0.11	6/18/2022 3:25	11.55	0.01	6/17/2022 1:28	11.60	0.03	6/17/2022 2:42	-0.10
6/17/2022 1:42	12.05	0.16	6/18/2022 3:26	11.57	0.06	6/17/2022 1:29	11.63	0.02	6/17/2022 2:43	-0.03

6/17/2022 1:43	12.04	0.20	6/18/2022 3:27	11.58	-0.02	6/17/2022 1:30	11.61	0.01	6/17/2022 2:44	0.01
6/17/2022 1:44	12.05	0.16	6/18/2022 3:28	11.57	0.03	6/17/2022 1:31	11.64	-0.03	6/17/2022 2:45	-0.04
6/17/2022 1:45	12.05	0.11	6/18/2022 3:29	11.58	-0.09	6/17/2022 1:32	11.61	-0.03	6/17/2022 2:46	-0.01
6/17/2022 1:46	12.05	0.11	6/18/2022 3:30	11.60	0.00	6/17/2022 1:33	11.60	0.02	6/17/2022 2:47	-0.05
6/17/2022 1:47	12.08	0.16	6/18/2022 3:31	11.57	-0.02	6/17/2022 1:34	11.62	0.03	6/17/2022 2:48	-0.03
6/17/2022 1:48	12.06	0.15	6/18/2022 3:32	11.56	-0.01	6/17/2022 1:35	11.62	0.00	6/17/2022 2:49	-0.03
6/17/2022 1:49	12.07	0.13	6/18/2022 3:33	11.57	-0.06	6/17/2022 1:36	11.62	0.01	6/17/2022 2:50	-0.04
6/17/2022 1:50	12.07	0.25	6/18/2022 3:34	11.56	-0.06	6/17/2022 1:37	11.60	0.03	6/17/2022 2:51	-0.11
6/17/2022 1:51	12.06	0.16	6/18/2022 3:35	11.57	0.00	6/17/2022 1:38	11.62	0.02	6/17/2022 2:52	-0.04
6/17/2022 1:52	12.07	0.13	6/18/2022 3:36	11.57	0.01	6/17/2022 1:39	11.63	-0.01	6/17/2022 2:53	0.00
6/17/2022 1:53	12.06	0.19	6/18/2022 3:37	11.59	-0.06	6/17/2022 1:40	11.60	0.04	6/17/2022 2:54	-0.05
6/17/2022 1:54	12.07	0.13	6/18/2022 3:38	11.57	-0.03	6/17/2022 1:41	11.62	0.06	6/17/2022 2:55	-0.07
6/17/2022 1:55	12.08	0.10	6/18/2022 3:39	11.59	0.00	6/17/2022 1:42	11.61	0.02	6/17/2022 2:56	-0.02
6/17/2022 1:56	12.08	0.11	6/18/2022 3:40	11.57	-0.02	6/17/2022 1:43	11.63	-0.02	6/17/2022 2:57	-0.06
6/17/2022 1:57	12.08	0.16	6/18/2022 3:41	11.58	-0.02	6/17/2022 1:44	11.61	0.02	6/17/2022 2:58	-0.03
6/17/2022 1:58	12.05	0.12	6/18/2022 3:42	11.58	0.02	6/17/2022 1:45	11.61	0.02	6/17/2022 2:59	-0.06
6/17/2022 1:59	12.08	0.15	6/18/2022 3:43	11.56	-0.02	6/17/2022 1:46	11.61	0.04	6/17/2022 3:00	-0.03
6/17/2022 2:00	12.08	0.11	6/18/2022 3:44	11.59	-0.07	6/17/2022 1:47	11.61	0.05	6/17/2022 3:01	-0.05
6/17/2022 2:01	12.07	0.09	6/18/2022 3:45	11.58	0.03	6/17/2022 1:48	11.61	0.03	6/17/2022 3:02	-0.03
6/17/2022 2:02	12.08	0.17	6/18/2022 3:46	11.57	-0.07	6/17/2022 1:49	11.59	0.05	6/17/2022 3:03	-0.06
6/17/2022 2:03	12.06	0.21	6/18/2022 3:47	11.58	-0.06	6/17/2022 1:50	11.62	0.03	6/17/2022 3:04	0.00
6/17/2022 2:04	12.05	0.10	6/18/2022 3:48	11.58	0.01	6/17/2022 1:51	11.61	0.05	6/17/2022 3:05	-0.04
6/17/2022 2:05	12.06	0.11	6/18/2022 3:49	11.60	-0.06	6/17/2022 1:52	11.60	0.01	6/17/2022 3:06	0.01
6/17/2022 2:06	12.07	0.17	6/18/2022 3:50	11.57	-0.05	6/17/2022 1:53	11.61	0.02	6/17/2022 3:07	-0.03
6/17/2022 2:07	12.09	0.11	6/18/2022 3:51	11.58	-0.02	6/17/2022 1:54	11.62	0.01	6/17/2022 3:08	-0.07
6/17/2022 2:08	12.05	0.10	6/18/2022 3:52	11.58	-0.07	6/17/2022 1:55	11.61	0.00	6/17/2022 3:09	-0.03
6/17/2022 2:09	12.07	0.11	6/18/2022 3:53	11.57	0.00	6/17/2022 1:56	11.64	-0.01	6/17/2022 3:10	-0.07
6/17/2022 2:10	12.06	0.15	6/18/2022 3:54	11.60	-0.07	6/17/2022 1:57	11.63	0.02	6/17/2022 3:11	-0.02
6/17/2022 2:11	12.06	0.16	6/18/2022 3:55	11.59	-0.06	6/17/2022 1:58	11.61	0.05	6/17/2022 3:12	-0.06
6/17/2022 2:12	12.08	0.12	6/18/2022 3:56	11.57	-0.01	6/17/2022 1:59	11.61	0.00	6/17/2022 3:13	-0.06
6/17/2022 2:13	12.08	0.12	6/18/2022 3:57	11.58	-0.07	6/17/2022 2:00	11.61	0.02	6/17/2022 3:14	-0.04
6/17/2022 2:14	12.05	0.17	6/18/2022 3:58	11.59	0.02	6/17/2022 2:01	11.62	-0.01	6/17/2022 3:15	-0.05
6/17/2022 2:15	12.06	0.16	6/18/2022 3:59	11.56	-0.08	6/17/2022 2:02	11.61	-0.01	6/17/2022 3:16	-0.06
6/17/2022 2:16	12.08	0.09	6/18/2022 4:00	11.58	-0.01	6/17/2022 2:03	11.61	0.00	6/17/2022 3:17	-0.01
6/17/2022 2:17	12.05	0.06	6/18/2022 4:01	11.57	-0.03	6/17/2022 2:04	11.62	0.00	6/17/2022 3:18	-0.04
6/17/2022 2:18	12.06	0.14	6/18/2022 4:02	11.55	0.08	6/17/2022 2:05	11.60	0.06	6/17/2022 3:19	-0.05
6/17/2022 2:19	12.06	0.17	6/18/2022 4:03	11.58	0.03	6/17/2022 2:06	11.61	0.03	6/17/2022 3:20	-0.05
6/17/2022 2:20	12.08	0.22	6/18/2022 4:04	11.54	-0.02	6/17/2022 2:07	11.63	0.06	6/17/2022 3:21	0.01
6/17/2022 2:21	12.05	0.17	6/18/2022 4:05	11.58	0.01	6/17/2022 2:08	11.61	0.02	6/17/2022 3:22	-0.07
6/17/2022 2:22	12.09	0.17	6/18/2022 4:06	11.59	-0.05	6/17/2022 2:09	11.62	0.01	6/17/2022 3:23	-0.04
6/17/2022 2:23	12.05	0.21	6/18/2022 4:07	11.59	-0.05	6/17/2022 2:10	11.62	-0.01	6/17/2022 3:24	-0.05
6/17/2022 2:24	12.07	0.12	6/18/2022 4:08	11.59	-0.05	6/17/2022 2:11	11.66	0.04	6/17/2022 3:25	-0.03
6/17/2022 2:25	12.05	0.10	6/18/2022 4:09	11.56	-0.03	6/17/2022 2:12	11.58	0.01	6/17/2022 3:26	-0.04
6/17/2022 2:26	12.05	0.10	6/18/2022 4:10	11.59	0.04	6/17/2022 2:13	11.58	0.01	6/17/2022 3:27	-0.03
6/17/2022 2:27	12.06	0.12	6/18/2022 4:11	11.57	-0.10	6/17/2022 2:14	11.61	0.00	6/17/2022 3:28	-0.08
6/17/2022 2:28	12.07	0.17	6/18/2022 4:12	11.58	0.02	6/17/2022 2:15	11.61	0.02	6/17/2022 3:29	-0.05
6/17/2022 2:29	12.09	0.11	6/18/2022 4:13	11.56	0.00	6/17/2022 2:16	11.62	0.03	6/17/2022 3:30	0.00
6/17/2022 2:30	12.06	0.11	6/18/2022 4:14	11.58	-0.02	6/17/2022 2:17	11.62	0.01	6/17/2022 3:31	-0.09
6/17/2022 2:31	12.04	0.12	6/18/2022 4:15	11.56	0.02	6/17/2022 2:18	11.62	0.02	6/17/2022 3:32	-0.09
6/17/2022 2:32	12.05	0.18	6/18/2022 4:16	11.57	0.01	6/17/2022 2:19	11.60	0.00	6/17/2022 3:33	-0.03
6/17/2022 2:33	12.06	0.15	6/18/2022 4:17	11.60	0.05	6/17/2022 2:20	11.63	0.02	6/17/2022 3:34	-0.05
6/17/2022 2:34	12.06	0.12	6/18/2022 4:18	11.60	0.01	6/17/2022 2:21	11.62	0.03	6/17/2022 3:35	-0.04
6/17/2022 2:35	12.07	0.14	6/18/2022 4:19	11.60	-0.02	6/17/2022 2:22	11.61	0.02	6/17/2022 3:36	-0.03
6/17/2022 2:36	12.08	0.07	6/18/2022 4:20	11.58	0.08	6/17/2022 2:23	11.59	0.04	6/17/2022 3:37	-0.04
6/17/2022 2:37	12.03	0.14	6/18/2022 4:21	11.58	0.02	6/17/2022 2:24	11.61	0.03	6/17/2022 3:38	-0.01
6/17/2022 2:38	12.05	0.18	6/18/2022 4:22	11.58	0.03	6/17/2022 2:25	11.59	0.00	6/17/2022 3:39	-0.08
6/17/2022 2:39	12.07	0.13	6/18/2022 4:23	11.58	-0.01	6/17/2022 2:26	11.62	0.06	6/17/2022 3:40	-0.04
6/17/2022 2:40	12.05	0.12	6/18/2022 4:24	11.55	-0.11	6/17/2022 2:27	11.63	0.06	6/17/2022 3:41	-0.06
6/17/2022 2:41	12.06	0.11	6/18/2022 4:25	11.58	-0.09	6/17/2022 2:28	11.62	0.02	6/17/2022 3:42	-0.05
6/17/2022 2:42	12.08	0.12	6/18/2022 4:26	11.56	-0.07	6/17/2022 2:29	11.63	0.03	6/17/2022 3:43	-0.06
6/17/2022 2:43	12.07	0.15	6/18/2022 4:27	11.57	0.02	6/17/2022 2:30	11.61	0.04	6/17/2022 3:44	-0.08
6/17/2022 2:44	12.08	0.09	6/18/2022 4:28	11.61	0.00	6/17/2022 2:31	11.62	0.04	6/17/2022 3:45	-0.08
6/17/2022 2:45	12.06	0.16	6/18/2022 4:29	11.57	0.01	6/17/2022 2:32	11.62	0.03	6/17/2022 3:46	-0.09
6/17/2022 2:46	12.08	0.14	6/18/2022 4:30	11.58	-0.06	6/17/2022 2:33	11.62	-0.01	6/17/2022 3:47	-0.05
6/17/2022 2:47	12.06	0.08	6/18/2022 4:31	11.58	-0.05	6/17/2022 2:34	11.61	-0.01	6/17/2022 3:48	-0.10
6/17/2022 2:48	12.06	0.11	6/18/2022 4:32	11.59	-0.03	6/17/2022 2:35	11.62	-0.01	6/17/2022 3:49	-0.07
6/17/2022 2:49	12.08	0.12	6/18/2022 4:33	11.57	-0.04	6/17/2022 2:36	11.64	-0.01	6/17/2022 3:50	-0.07
6/17/2022 2:50	12.05	0.21	6/18/2022 4:34	11.57	0.01	6/17/2022 2:37	11.61	0.06	6/17/2022 3:51	-0.06
6/17/2022 2:51	12.05	0.20	6/18/2022 4:35	11.58	-0.02	6/17/2022 2:38	11.62	0.04	6/17/2022 3:52	-0.11
6/17/2022 2:52	12.05	0.11	6/18/2022 4:36	11.57	-0.05	6/17/2022 2:39	11.61	-0.02	6/17/2022 3:53	-0.07
6/17/2022 2:53	12.08	0.16	6/18/2022 4:37	11.59	-0.04	6/17/2022 2:40	11.63	0.01	6/17/2022 3:54	-0.09
6/17/2022 2:54	12.06	0.13	6/18/2022 4:38	11.57	-0.01	6/17/2022 2:41	11.63	-0.01	6/17/2022 3:55	-0.04
6/17/2022 2:55	12.07	0.16	6/18/2022 4:39	11.57	-0.04	6/17/2022 2:42	11.60	0.01	6/17/2022 3:56	-0.06
6/17/2022 2:56	12.06	0.18	6/18/2022 4:40	11.58	-0.01	6/17/2022 2:43	11.62	0.02	6/17/2022 3:57	-0.07
6/17/2022 2:57	12.07	0.11	6/18/2022 4:41	11.58	0.04	6/17/2022 2:44	11.60	0.00	6/17/2022 3:58	-0.12
6/17/2022 2:58	12.07	0.17	6/18/2022 4:42	11.59	0.01	6/17/2022 2:45	11.62	0.01	6/17/2022 3:59	-0.05
6/17/2022 2:59	12.04	0.17	6/18/2022 4:43	11.58	-0.05	6/17/2022 2:46	11.61	0.03	6/17/2022 4:00	-0.06
6/17/2022 3:00	12.05	0.04	6/18/2022 4:44	11.57	-0.07	6/17/2022 2:47	11.61	0.04	6/17/2022 4:01	0.00
6/17/2022 3:01	12.06	0.06	6/18/2022 4:45	11.62	-0.02	6/17/2022 2:48	11.62	0.01	6/17/2022 4:02	-0.10
6/17/2022 3:02	12.07	0.12	6/18/2022 4:46	11.58	-0.06	6/17/2022 2:49	11.59	0.00	6/17/2022 4:03	-0.08
6/17/2022 3:03	12.07	0.17	6/18/2022 4:47	11.58	0.01	6/17/2022 2:50	11.63	-0.01	6/17/2022 4:04	-0.07
6/17/2022 3:04	12.06	0.10	6/18/2022 4:48	11.57	0.01	6/17/2022 2:51	11.61	-0.01	6/17/2022 4:05	-0.07
6/17/2022 3:05	12.07	0.13	6/18/2022 4:49	11.57	0.01	6/17/2022 2:52	11.61	0.03	6/17/2022 4:06	-0.04
6/17/2022 3:06	12.07	0.06	6/18/2022 4:50	11.58	-0.08	6/17/2022 2:53	11.65	-0.03	6/17/2022 4:07	-0.08
6/17/2022 3:07	12.04	0.13	6/18/2022 4:51	11.58	-0.01	6/17/2022 2:54	11.62	0.01	6/17/2022 4:08	-0.09
6/17/2022 3:08	12.05	0.11	6/18/2022 4:52	11.58	0.01	6/17/2022 2:55	11.62	0.02	6/17/2022 4:09	-0.03
6/17/2022 3:09	12.07	0.15	6/18/2022 4:53	11.56	0.00	6/17/2022 2:56	11.61	0.00	6/17/2022 4:10	-0.08
6/17/2022 3:10	12.06	0.12	6/18/2022 4:54	11.60	-0.09	6/17/2022 2:57	11.62	0.00	6/17/2022 4:11	-0.02

6/17/2022 3:11	12.04	0.08	6/18/2022 4:55	11.58	-0.07	6/17/2022 2:58	11.61	0.02	6/17/2022 4:12	-0.04
6/17/2022 3:12	12.06	0.17	6/18/2022 4:56	11.58	-0.02	6/17/2022 2:59	11.63	0.02	6/17/2022 4:13	-0.01
6/17/2022 3:13	12.06	0.19	6/18/2022 4:57	11.58	0.02	6/17/2022 3:00	11.63	0.08	6/17/2022 4:14	-0.07
6/17/2022 3:14	12.07	0.14	6/18/2022 4:58	11.57	-0.04	6/17/2022 3:01	11.62	0.03	6/17/2022 4:15	-0.09
6/17/2022 3:15	12.08	0.12	6/18/2022 4:59	11.59	0.00	6/17/2022 3:02	11.62	-0.01	6/17/2022 4:16	-0.05
6/17/2022 3:16	12.06	0.10	6/18/2022 5:00	11.59	0.05	6/17/2022 3:03	11.63	0.03	6/17/2022 4:17	-0.02
6/17/2022 3:17	12.06	0.07	6/18/2022 5:01	11.55	0.07	6/17/2022 3:04	11.59	-0.01	6/17/2022 4:18	-0.02
6/17/2022 3:18	12.06	0.16	6/18/2022 5:02	11.57	-0.07	6/17/2022 3:05	11.60	0.02	6/17/2022 4:19	0.00
6/17/2022 3:19	12.09	0.14	6/18/2022 5:03	11.58	0.00	6/17/2022 3:06	11.59	-0.01	6/17/2022 4:20	-0.02
6/17/2022 3:20	12.06	0.12	6/18/2022 5:04	11.57	-0.02	6/17/2022 3:07	11.61	0.03	6/17/2022 4:21	-0.05
6/17/2022 3:21	12.07	0.11	6/18/2022 5:05	11.57	0.00	6/17/2022 3:08	11.61	0.03	6/17/2022 4:22	-0.01
6/17/2022 3:22	12.07	0.15	6/18/2022 5:06	11.59	0.00	6/17/2022 3:09	11.61	-0.02	6/17/2022 4:23	-0.01
6/17/2022 3:23	12.05	0.14	6/18/2022 5:07	11.59	-0.01	6/17/2022 3:10	11.61	0.03	6/17/2022 4:24	-0.05
6/17/2022 3:24	12.05	0.16	6/18/2022 5:08	11.58	0.03	6/17/2022 3:11	11.64	0.03	6/17/2022 4:25	-0.05
6/17/2022 3:25	12.06	0.08	6/18/2022 5:09	11.55	-0.04	6/17/2022 3:12	11.60	0.03	6/17/2022 4:26	-0.05
6/17/2022 3:26	12.06	0.16	6/18/2022 5:10	11.59	0.01	6/17/2022 3:13	11.63	0.04	6/17/2022 4:27	-0.04
6/17/2022 3:27	12.05	0.06	6/18/2022 5:11	11.58	0.00	6/17/2022 3:14	11.62	0.03	6/17/2022 4:28	-0.06
6/17/2022 3:28	12.08	0.08	6/18/2022 5:12	11.56	0.02	6/17/2022 3:15	11.62	0.03	6/17/2022 4:29	-0.06
6/17/2022 3:29	12.06	0.05	6/18/2022 5:13	11.58	0.01	6/17/2022 3:16	11.62	0.02	6/17/2022 4:30	0.02
6/17/2022 3:30	12.07	0.15	6/18/2022 5:14	11.57	-0.02	6/17/2022 3:17	11.62	-0.02	6/17/2022 4:31	0.00
6/17/2022 3:31	12.06	0.15	6/18/2022 5:15	11.60	-0.05	6/17/2022 3:18	11.62	0.02	6/17/2022 4:32	0.00
6/17/2022 3:32	12.06	0.11	6/18/2022 5:16	11.57	-0.05	6/17/2022 3:19	11.61	0.00	6/17/2022 4:33	-0.08
6/17/2022 3:33	12.05	0.11	6/18/2022 5:17	11.58	-0.04	6/17/2022 3:20	11.62	0.02	6/17/2022 4:34	-0.04
6/17/2022 3:34	12.08	0.10	6/18/2022 5:18	11.59	-0.02	6/17/2022 3:21	11.59	0.05	6/17/2022 4:35	-0.05
6/17/2022 3:35	12.08	0.12	6/18/2022 5:19	11.59	-0.03	6/17/2022 3:22	11.63	0.00	6/17/2022 4:36	-0.04
6/17/2022 3:36	12.07	0.17	6/18/2022 5:20	11.58	-0.03	6/17/2022 3:23	11.61	0.01	6/17/2022 4:37	-0.11
6/17/2022 3:37	12.06	0.11	6/18/2022 5:21	11.56	-0.04	6/17/2022 3:24	11.62	0.02	6/17/2022 4:38	-0.06
6/17/2022 3:38	12.10	0.14	6/18/2022 5:22	11.59	0.02	6/17/2022 3:25	11.60	0.01	6/17/2022 4:39	-0.01
6/17/2022 3:39	12.05	0.13	6/18/2022 5:23	11.58	-0.06	6/17/2022 3:26	11.63	0.00	6/17/2022 4:40	-0.01
6/17/2022 3:40	12.06	0.07	6/18/2022 5:24	11.59	-0.05	6/17/2022 3:27	11.62	0.00	6/17/2022 4:41	-0.04
6/17/2022 3:41	12.06	0.11	6/18/2022 5:25	11.55	-0.05	6/17/2022 3:28	11.61	0.01	6/17/2022 4:42	0.00
6/17/2022 3:42	12.08	0.20	6/18/2022 5:26	11.56	0.00	6/17/2022 3:29	11.63	-0.01	6/17/2022 4:43	-0.05
6/17/2022 3:43	12.06	0.16	6/18/2022 5:27	11.60	-0.07	6/17/2022 3:30	11.61	0.07	6/17/2022 4:44	-0.04
6/17/2022 3:44	12.06	0.10	6/18/2022 5:28	11.56	-0.07	6/17/2022 3:31	11.62	0.02	6/17/2022 4:45	-0.07
6/17/2022 3:45	12.07	0.12	6/18/2022 5:29	11.58	-0.02	6/17/2022 3:32	11.59	0.03	6/17/2022 4:46	-0.06
6/17/2022 3:46	12.06	0.08	6/18/2022 5:30	11.60	-0.05	6/17/2022 3:33	11.62	-0.01	6/17/2022 4:47	-0.05
6/17/2022 3:47	12.07	0.15	6/18/2022 5:31	11.58	-0.01	6/17/2022 3:34	11.62	0.04	6/17/2022 4:48	-0.03
6/17/2022 3:48	12.07	0.08	6/18/2022 5:32	11.58	-0.02	6/17/2022 3:35	11.61	0.03	6/17/2022 4:49	-0.02
6/17/2022 3:49	12.08	0.15	6/18/2022 5:33	11.59	-0.02	6/17/2022 3:36	11.65	0.02	6/17/2022 4:50	-0.05
6/17/2022 3:50	12.04	0.17	6/18/2022 5:34	11.57	0.03	6/17/2022 3:37	11.62	0.02	6/17/2022 4:51	-0.01
6/17/2022 3:51	12.06	0.12	6/18/2022 5:35	11.57	0.02	6/17/2022 3:38	11.62	0.04	6/17/2022 4:52	-0.02
6/17/2022 3:52	12.06	0.11	6/18/2022 5:36	11.57	0.05	6/17/2022 3:39	11.64	0.01	6/17/2022 4:53	-0.04
6/17/2022 3:53	12.06	0.17	6/18/2022 5:37	11.59	0.01	6/17/2022 3:40	11.61	0.05	6/17/2022 4:54	-0.04
6/17/2022 3:54	12.06	0.13	6/18/2022 5:38	11.56	-0.04	6/17/2022 3:41	11.61	0.01	6/17/2022 4:55	-0.04
6/17/2022 3:55	12.06	0.04	6/18/2022 5:39	11.57	-0.04	6/17/2022 3:42	11.62	-0.02	6/17/2022 4:56	0.00
6/17/2022 3:56	12.08	0.02	6/18/2022 5:40	11.56	0.00	6/17/2022 3:43	11.61	-0.01	6/17/2022 4:57	-0.05
6/17/2022 3:57	12.07	0.13	6/18/2022 5:41	11.59	-0.06	6/17/2022 3:44	11.61	0.00	6/17/2022 4:58	-0.09
6/17/2022 3:58	12.06	0.12	6/18/2022 5:42	11.57	-0.05	6/17/2022 3:45	11.60	0.01	6/17/2022 4:59	-0.01
6/17/2022 3:59	12.07	0.07	6/18/2022 5:43	11.58	-0.02	6/17/2022 3:46	11.62	0.02	6/17/2022 5:00	-0.02
6/17/2022 4:00	12.06	0.10	6/18/2022 5:44	11.57	-0.07	6/17/2022 3:47	11.63	0.00	6/17/2022 5:01	0.00
6/17/2022 4:01	12.08	0.17	6/18/2022 5:45	11.56	-0.06	6/17/2022 3:48	11.61	0.03	6/17/2022 5:02	0.00
6/17/2022 4:02	12.09	0.16	6/18/2022 5:46	11.57	-0.03	6/17/2022 3:49	11.63	0.00	6/17/2022 5:03	-0.04
6/17/2022 4:03	12.06	0.07	6/18/2022 5:47	11.56	-0.08	6/17/2022 3:50	11.60	0.06	6/17/2022 5:04	-0.06
6/17/2022 4:04	12.09	0.13	6/18/2022 5:48	11.61	0.01	6/17/2022 3:51	11.64	0.00	6/17/2022 5:05	-0.09
6/17/2022 4:05	12.06	0.11	6/18/2022 5:49	11.60	-0.03	6/17/2022 3:52	11.61	0.03	6/17/2022 5:06	-0.07
6/17/2022 4:06	12.06	0.09	6/18/2022 5:50	11.60	-0.09	6/17/2022 3:53	11.62	-0.03	6/17/2022 5:07	-0.04
6/17/2022 4:07	12.06	0.12	6/18/2022 5:51	11.58	0.03	6/17/2022 3:54	11.60	0.03	6/17/2022 5:08	-0.02
6/17/2022 4:08	12.08	0.17	6/18/2022 5:52	11.56	-0.08	6/17/2022 3:55	11.60	0.00	6/17/2022 5:09	-0.02
6/17/2022 4:09	12.07	0.13	6/18/2022 5:53	11.58	0.02	6/17/2022 3:56	11.63	0.03	6/17/2022 5:10	-0.07
6/17/2022 4:10	12.09	0.05	6/18/2022 5:54	11.57	-0.03	6/17/2022 3:57	11.63	0.04	6/17/2022 5:11	-0.09
6/17/2022 4:11	12.04	0.11	6/18/2022 5:55	11.55	0.01	6/17/2022 3:58	11.60	-0.01	6/17/2022 5:12	-0.03
6/17/2022 4:12	12.06	0.08	6/18/2022 5:56	11.56	-0.01	6/17/2022 3:59	11.61	0.02	6/17/2022 5:13	-0.04
6/17/2022 4:13	12.09	0.12	6/18/2022 5:57	11.57	-0.02	6/17/2022 4:00	11.64	-0.01	6/17/2022 5:14	-0.02
6/17/2022 4:14	12.05	0.03	6/18/2022 5:58	11.56	0.00	6/17/2022 4:01	11.62	0.02	6/17/2022 5:15	-0.04
6/17/2022 4:15	12.05	0.11	6/18/2022 5:59	11.56	-0.01	6/17/2022 4:02	11.63	0.03	6/17/2022 5:16	-0.05
6/17/2022 4:16	12.07	0.14	6/18/2022 6:00	11.57	0.02	6/17/2022 4:03	11.60	0.02	6/17/2022 5:17	-0.02
6/17/2022 4:17	12.06	0.11	6/18/2022 6:01	11.60	0.00	6/17/2022 4:04	11.62	0.04	6/17/2022 5:18	-0.01
6/17/2022 4:18	12.05	0.16	6/18/2022 6:02	11.59	-0.06	6/17/2022 4:05	11.62	0.00	6/17/2022 5:19	-0.01
6/17/2022 4:19	12.04	0.11	6/18/2022 6:03	11.58	-0.02	6/17/2022 4:06	11.64	-0.01	6/17/2022 5:20	-0.03
6/17/2022 4:20	12.06	0.16	6/18/2022 6:04	11.60	0.01	6/17/2022 4:07	11.63	0.02	6/17/2022 5:21	-0.03
6/17/2022 4:21	12.06	0.05	6/18/2022 6:05	11.57	-0.10	6/17/2022 4:08	11.60	0.05	6/17/2022 5:22	-0.02
6/17/2022 4:22	12.08	0.18	6/18/2022 6:06	11.59	0.09	6/17/2022 4:09	11.62	0.05	6/17/2022 5:23	-0.07
6/17/2022 4:23	12.07	0.21	6/18/2022 6:07	11.57	0.03	6/17/2022 4:10	11.61	-0.01	6/17/2022 5:24	-0.02
6/17/2022 4:24	12.04	0.13	6/18/2022 6:08	11.57	0.02	6/17/2022 4:11	11.62	0.03	6/17/2022 5:25	-0.01
6/17/2022 4:25	12.08	0.15	6/18/2022 6:09	11.57	0.01	6/17/2022 4:12	11.61	0.01	6/17/2022 5:26	0.02
6/17/2022 4:26	12.05	0.10	6/18/2022 6:10	11.58	-0.04	6/17/2022 4:13	11.62	0.02	6/17/2022 5:27	-0.05
6/17/2022 4:27	12.07	0.20	6/18/2022 6:11	11.58	-0.04	6/17/2022 4:14	11.63	0.00	6/17/2022 5:28	-0.02
6/17/2022 4:28	12.06	0.21	6/18/2022 6:12	11.56	0.03	6/17/2022 4:15	11.60	0.00	6/17/2022 5:29	0.00
6/17/2022 4:29	12.06	0.17	6/18/2022 6:13	11.56	-0.05	6/17/2022 4:16	11.62	0.02	6/17/2022 5:30	-0.09
6/17/2022 4:30	12.08	0.20	6/18/2022 6:14	11.58	-0.03	6/17/2022 4:17	11.64	0.04	6/17/2022 5:31	0.01
6/17/2022 4:31	12.06	0.06	6/18/2022 6:15	11.57	-0.06	6/17/2022 4:18	11.60	0.03	6/17/2022 5:32	-0.05
6/17/2022 4:32	12.08	0.07	6/18/2022 6:16	11.58	0.00	6/17/2022 4:19	11.61	0.01	6/17/2022 5:33	-0.01
6/17/2022 4:33	12.06	0.10	6/18/2022 6:17	11.59	-0.09	6/17/2022 4:20	11.61	0.01	6/17/2022 5:34	-0.03
6/17/2022 4:34	12.07	0.07	6/18/2022 6:18	11.57	-0.06	6/17/2022 4:21	11.61	0.05	6/17/2022 5:35	-0.05
6/17/2022 4:35	12.07	0.12	6/18/2022 6:19	11.59	-0.09	6/17/2022 4:22	11.60	0.00	6/17/2022 5:36	-0.04
6/17/2022 4:36	12.06	0.12	6/18/2022 6:20	11.58	0.01	6/17/2022 4:23	11.62	0.00	6/17/2022 5:37	-0.10
6/17/2022 4:37	12.09	0.11	6/18/2022 6:21	11.57	-0.05	6/17/2022 4:24	11.64	0.05	6/17/2022 5:38	0.00
6/17/2022 4:38	12.04	0.16	6/18/2022 6:22	11.57	0.01	6/17/2022 4:25	11.62	0.01	6/17/2022 5:39	-0.01

6/17/2022 4:39	12.06	0.18	6/18/2022 6:23	11.56	0.02	6/17/2022 4:26	11.61	0.02	6/17/2022 5:40	-0.04
6/17/2022 4:40	12.08	0.21	6/18/2022 6:24	11.56	0.00	6/17/2022 4:27	11.60	0.00	6/17/2022 5:41	-0.10
6/17/2022 4:41	12.05	0.16	6/18/2022 6:25	11.57	-0.03	6/17/2022 4:28	11.61	0.01	6/17/2022 5:42	-0.06
6/17/2022 4:42	12.06	0.15	6/18/2022 6:26	11.59	-0.05	6/17/2022 4:29	11.64	-0.01	6/17/2022 5:43	-0.07
6/17/2022 4:43	12.05	0.18	6/18/2022 6:27	11.59	-0.01	6/17/2022 4:30	11.62	0.01	6/17/2022 5:44	-0.05
6/17/2022 4:44	12.09	0.14	6/18/2022 6:28	11.57	-0.03	6/17/2022 4:31	11.60	-0.03	6/17/2022 5:45	-0.09
6/17/2022 4:45	12.07	0.11	6/18/2022 6:29	11.54	-0.06	6/17/2022 4:32	11.62	0.00	6/17/2022 5:46	-0.02
6/17/2022 4:46	12.06	0.17	6/18/2022 6:30	11.58	-0.04	6/17/2022 4:33	11.62	0.02	6/17/2022 5:47	-0.03
6/17/2022 4:47	12.08	0.16	6/18/2022 6:31	11.57	0.00	6/17/2022 4:34	11.60	-0.01	6/17/2022 5:48	-0.07
6/17/2022 4:48	12.07	0.14	6/18/2022 6:32	11.58	-0.06	6/17/2022 4:35	11.63	0.03	6/17/2022 5:49	-0.08
6/17/2022 4:49	12.08	0.21	6/18/2022 6:33	11.59	0.01	6/17/2022 4:36	11.59	0.00	6/17/2022 5:50	-0.03
6/17/2022 4:50	12.03	0.11	6/18/2022 6:34	11.57	-0.06	6/17/2022 4:37	11.61	0.01	6/17/2022 5:51	-0.01
6/17/2022 4:51	12.08	0.13	6/18/2022 6:35	11.59	-0.10	6/17/2022 4:38	11.61	0.03	6/17/2022 5:52	0.00
6/17/2022 4:52	12.07	0.06	6/18/2022 6:36	11.57	-0.03	6/17/2022 4:39	11.62	0.00	6/17/2022 5:53	-0.03
6/17/2022 4:53	12.08	0.11	6/18/2022 6:37	11.59	0.03	6/17/2022 4:40	11.62	-0.01	6/17/2022 5:54	-0.04
6/17/2022 4:54	12.07	0.18	6/18/2022 6:38	11.56	0.00	6/17/2022 4:41	11.62	-0.01	6/17/2022 5:55	-0.03
6/17/2022 4:55	12.05	0.15	6/18/2022 6:39	11.57	-0.01	6/17/2022 4:42	11.62	0.02	6/17/2022 5:56	-0.08
6/17/2022 4:56	12.05	0.15	6/18/2022 6:40	11.58	-0.06	6/17/2022 4:43	11.62	-0.01	6/17/2022 5:57	-0.01
6/17/2022 4:57	12.06	0.09	6/18/2022 6:41	11.57	-0.08	6/17/2022 4:44	11.62	0.03	6/17/2022 5:58	-0.06
6/17/2022 4:58	12.07	0.11	6/18/2022 6:42	11.56	-0.08	6/17/2022 4:45	11.63	0.01	6/17/2022 5:59	-0.05
6/17/2022 4:59	12.08	0.17	6/18/2022 6:43	11.58	0.03	6/17/2022 4:46	11.60	0.04	6/17/2022 6:00	-0.03
6/17/2022 5:00	12.07	0.15	6/18/2022 6:44	11.58	-0.06	6/17/2022 4:47	11.62	0.04	6/17/2022 6:01	-0.04
6/17/2022 5:01	12.04	0.11	6/18/2022 6:45	11.58	-0.03	6/17/2022 4:48	11.63	-0.01	6/17/2022 6:02	-0.02
6/17/2022 5:02	12.08	0.11	6/18/2022 6:46	11.59	-0.04	6/17/2022 4:49	11.62	0.02	6/17/2022 6:03	-0.05
6/17/2022 5:03	12.05	0.07	6/18/2022 6:47	11.58	0.00	6/17/2022 4:50	11.61	-0.01	6/17/2022 6:04	-0.03
6/17/2022 5:04	12.05	0.19	6/18/2022 6:48	11.59	-0.02	6/17/2022 4:51	11.61	0.02	6/17/2022 6:05	-0.10
6/17/2022 5:05	12.06	0.17	6/18/2022 6:49	11.54	-0.09	6/17/2022 4:52	11.60	-0.01	6/17/2022 6:06	0.00
6/17/2022 5:06	12.06	0.16	6/18/2022 6:50	11.58	-0.05	6/17/2022 4:53	11.62	0.01	6/17/2022 6:07	-0.10
6/17/2022 5:07	12.06	0.15	6/18/2022 6:51	11.58	-0.10	6/17/2022 4:54	11.59	-0.01	6/17/2022 6:08	-0.10
6/17/2022 5:08	12.05	0.11	6/18/2022 6:52	11.61	0.04	6/17/2022 4:55	11.62	0.00	6/17/2022 6:09	-0.06
6/17/2022 5:09	12.05	0.11	6/18/2022 6:53	11.59	0.03	6/17/2022 4:56	11.62	0.05	6/17/2022 6:10	0.00
6/17/2022 5:10	12.05	0.12	6/18/2022 6:54	11.57	0.01	6/17/2022 4:57	11.62	0.04	6/17/2022 6:11	-0.09
6/17/2022 5:11	12.07	0.05	6/18/2022 6:55	11.57	0.00	6/17/2022 4:58	11.62	0.02	6/17/2022 6:12	-0.02
6/17/2022 5:12	12.06	0.15	6/18/2022 6:56	11.57	-0.04	6/17/2022 4:59	11.62	0.00	6/17/2022 6:13	-0.01
6/17/2022 5:13	12.07	0.16	6/18/2022 6:57	11.57	0.03	6/17/2022 5:00	11.59	0.01	6/17/2022 6:14	-0.05
6/17/2022 5:14	12.05	0.11	6/18/2022 6:58	11.58	0.00	6/17/2022 5:01	11.62	0.03	6/17/2022 6:15	-0.01
6/17/2022 5:15	12.05	0.15	6/18/2022 6:59	11.57	-0.04	6/17/2022 5:02	11.65	0.02	6/17/2022 6:16	-0.04
6/17/2022 5:16	12.08	0.13	6/18/2022 7:00	11.57	0.04	6/17/2022 5:03	11.62	-0.02	6/17/2022 6:17	-0.03
6/17/2022 5:17	12.06	0.21	6/18/2022 7:01	11.58	-0.04	6/17/2022 5:04	11.61	0.00	6/17/2022 6:18	-0.02
6/17/2022 5:18	12.05	0.11	6/18/2022 7:02	11.58	-0.09	6/17/2022 5:05	11.63	0.01	6/17/2022 6:19	-0.07
6/17/2022 5:19	12.05	0.15	6/18/2022 7:03	11.56	-0.02	6/17/2022 5:06	11.61	0.01	6/17/2022 6:20	-0.05
6/17/2022 5:20	12.09	0.11	6/18/2022 7:04	11.58	0.05	6/17/2022 5:07	11.61	0.02	6/17/2022 6:21	-0.04
6/17/2022 5:21	12.07	0.19	6/18/2022 7:05	11.58	-0.08	6/17/2022 5:08	11.62	0.03	6/17/2022 6:22	-0.03
6/17/2022 5:22	12.05	0.12	6/18/2022 7:06	11.58	-0.02	6/17/2022 5:09	11.61	0.05	6/17/2022 6:23	-0.05
6/17/2022 5:23	12.07	0.14	6/18/2022 7:07	11.56	-0.04	6/17/2022 5:10	11.62	0.03	6/17/2022 6:24	-0.03
6/17/2022 5:24	12.06	0.05	6/18/2022 7:08	11.60	-0.01	6/17/2022 5:11	11.62	0.01	6/17/2022 6:25	-0.04
6/17/2022 5:25	12.08	0.17	6/18/2022 7:09	11.57	0.04	6/17/2022 5:12	11.64	0.04	6/17/2022 6:26	0.00
6/17/2022 5:26	12.08	0.11	6/18/2022 7:10	11.59	-0.03	6/17/2022 5:13	11.65	0.01	6/17/2022 6:27	-0.04
6/17/2022 5:27	12.07	0.16	6/18/2022 7:11	11.57	0.02	6/17/2022 5:14	11.64	0.04	6/17/2022 6:28	-0.04
6/17/2022 5:28	12.08	0.16	6/18/2022 7:12	11.56	-0.04	6/17/2022 5:15	11.62	0.04	6/17/2022 6:29	0.07
6/17/2022 5:29	12.05	0.19	6/18/2022 7:13	11.56	-0.06	6/17/2022 5:16	11.62	0.00	6/17/2022 6:30	-0.04
6/17/2022 5:30	12.06	0.11	6/18/2022 7:14	11.55	0.06	6/17/2022 5:17	11.62	0.02	6/17/2022 6:31	-0.07
6/17/2022 5:31	12.06	0.06	6/18/2022 7:15	11.59	-0.07	6/17/2022 5:18	11.61	-0.01	6/17/2022 6:32	-0.06
6/17/2022 5:32	12.08	0.18	6/18/2022 7:16	11.57	-0.10	6/17/2022 5:19	11.60	0.04	6/17/2022 6:33	-0.04
6/17/2022 5:33	12.07	0.14	6/18/2022 7:17	11.58	0.00	6/17/2022 5:20	11.62	-0.01	6/17/2022 6:34	-0.02
6/17/2022 5:34	12.08	0.16	6/18/2022 7:18	11.57	-0.06	6/17/2022 5:21	11.62	-0.01	6/17/2022 6:35	-0.05
6/17/2022 5:35	12.08	0.08	6/18/2022 7:19	11.57	0.01	6/17/2022 5:22	11.61	0.01	6/17/2022 6:36	-0.02
6/17/2022 5:36	12.07	0.11	6/18/2022 7:20	11.57	0.00	6/17/2022 5:23	11.62	0.02	6/17/2022 6:37	-0.05
6/17/2022 5:37	12.06	0.11	6/18/2022 7:21	11.58	-0.02	6/17/2022 5:24	11.60	0.01	6/17/2022 6:38	-0.03
6/17/2022 5:38	12.06	0.15	6/18/2022 7:22	11.57	-0.05	6/17/2022 5:25	11.62	0.02	6/17/2022 6:39	-0.01
6/17/2022 5:39	12.07	0.12	6/18/2022 7:23	11.61	-0.05	6/17/2022 5:26	11.63	0.03	6/17/2022 6:40	-0.03
6/17/2022 5:40	12.06	0.13	6/18/2022 7:24	11.57	-0.11	6/17/2022 5:27	11.60	0.01	6/17/2022 6:41	-0.09
6/17/2022 5:41	12.09	0.16	6/18/2022 7:25	11.59	-0.06	6/17/2022 5:28	11.61	-0.01	6/17/2022 6:42	0.04
6/17/2022 5:42	12.07	0.10	6/18/2022 7:26	11.60	-0.08	6/17/2022 5:29	11.63	0.00	6/17/2022 6:43	-0.01
6/17/2022 5:43	12.09	0.12	6/18/2022 7:27	11.57	0.03	6/17/2022 5:30	11.61	-0.03	6/17/2022 6:44	-0.04
6/17/2022 5:44	12.08	0.12	6/18/2022 7:28	11.57	-0.03	6/17/2022 5:31	11.62	-0.01	6/17/2022 6:45	-0.05
6/17/2022 5:45	12.07	0.14	6/18/2022 7:29	11.58	-0.05	6/17/2022 5:32	11.62	0.03	6/17/2022 6:46	-0.02
6/17/2022 5:46	12.09	0.12	6/18/2022 7:30	11.58	-0.02	6/17/2022 5:33	11.63	0.01	6/17/2022 6:47	-0.01
6/17/2022 5:47	12.07	0.05	6/18/2022 7:31	11.56	0.05	6/17/2022 5:34	11.63	0.01	6/17/2022 6:48	-0.01
6/17/2022 5:48	12.07	0.14	6/18/2022 7:32	11.58	-0.01	6/17/2022 5:35	11.61	0.01	6/17/2022 6:49	-0.03
6/17/2022 5:49	12.07	0.16	6/18/2022 7:33	11.57	0.06	6/17/2022 5:36	11.60	0.02	6/17/2022 6:50	-0.08
6/17/2022 5:50	12.08	0.06	6/18/2022 7:34	11.54	-0.02	6/17/2022 5:37	11.62	0.01	6/17/2022 6:51	-0.01
6/17/2022 5:51	12.09	0.13	6/18/2022 7:35	11.58	-0.01	6/17/2022 5:38	11.60	0.00	6/17/2022 6:52	-0.04
6/17/2022 5:52	12.07	0.06	6/18/2022 7:36	11.57	-0.01	6/17/2022 5:39	11.61	0.03	6/17/2022 6:53	-0.03
6/17/2022 5:53	12.09	0.04	6/18/2022 7:37	11.55	0.03	6/17/2022 5:40	11.62	-0.02	6/17/2022 6:54	-0.02
6/17/2022 5:54	12.05	0.15	6/18/2022 7:38	11.59	0.04	6/17/2022 5:41	11.61	-0.02	6/17/2022 6:55	-0.01
6/17/2022 5:55	12.08	0.16	6/18/2022 7:39	11.58	0.05	6/17/2022 5:42	11.62	0.03	6/17/2022 6:56	-0.01
6/17/2022 5:56	12.05	0.08	6/18/2022 7:40	11.56	-0.01	6/17/2022 5:43	11.62	0.01	6/17/2022 6:57	0.01
6/17/2022 5:57	12.07	0.15	6/18/2022 7:41	11.60	-0.05	6/17/2022 5:44	11.61	0.02	6/17/2022 6:58	-0.07
6/17/2022 5:58	12.07	0.11	6/18/2022 7:42	11.59	0.04	6/17/2022 5:45	11.61	-0.03	6/17/2022 6:59	-0.02
6/17/2022 5:59	12.06	0.15	6/18/2022 7:43	11.53	0.01	6/17/2022 5:46	11.61	-0.02	6/17/2022 7:00	-0.05
6/17/2022 6:00	12.06	0.17	6/18/2022 7:44	11.57	0.04	6/17/2022 5:47	11.61	0.00	6/17/2022 7:01	-0.09
6/17/2022 6:01	12.09	0.15	6/18/2022 7:45	11.57	0.01	6/17/2022 5:48	11.61	0.00	6/17/2022 7:02	-0.04
6/17/2022 6:02	12.06	0.09	6/18/2022 7:46	11.57	0.06	6/17/2022 5:49	11.62	0.01	6/17/2022 7:03	-0.02
6/17/2022 6:03	12.08	0.04	6/18/2022 7:47	11.57	-0.11	6/17/2022 5:50	11.62	0.01	6/17/2022 7:04	-0.04
6/17/2022 6:04	12.06	0.20	6/18/2022 7:48	11.57	-0.05	6/17/2022 5:51	11.59	-0.01	6/17/2022 7:05	-0.05
6/17/2022 6:05	12.04	0.15	6/18/2022 7:49	11.57	-0.05	6/17/2022 5:52	11.63	0.03	6/17/2022 7:06	-0.03
6/17/2022 6:06	12.08	0.15	6/18/2022 7:50	11.59	-0.04	6/17/2022 5:53	11.59	0.00	6/17/2022 7:07	-0.02

6/17/2022 6:07	12.07	0.08	6/18/2022 7:51	11.57	-0.01	6/17/2022 5:54	11.60	0.01	6/17/2022 7:08	-0.05
6/17/2022 6:08	12.08	0.08	6/18/2022 7:52	11.58	0.01	6/17/2022 5:55	11.59	-0.03	6/17/2022 7:09	-0.03
6/17/2022 6:09	12.05	0.10	6/18/2022 7:53	11.59	0.04	6/17/2022 5:56	11.63	-0.03	6/17/2022 7:10	-0.08
6/17/2022 6:10	12.08	0.15	6/18/2022 7:54	11.60	-0.06	6/17/2022 5:57	11.63	0.02	6/17/2022 7:11	-0.03
6/17/2022 6:11	12.08	0.10	6/18/2022 7:55	11.57	0.02	6/17/2022 5:58	11.64	0.01	6/17/2022 7:12	-0.01
6/17/2022 6:12	12.06	0.07	6/18/2022 7:56	11.57	0.03	6/17/2022 5:59	11.62	0.00	6/17/2022 7:13	-0.05
6/17/2022 6:13	12.07	0.18	6/18/2022 7:57	11.59	0.02	6/17/2022 6:00	11.63	0.02	6/17/2022 7:14	-0.05
6/17/2022 6:14	12.05	0.11	6/18/2022 7:58	11.57	-0.06	6/17/2022 6:01	11.63	-0.03	6/17/2022 7:15	-0.06
6/17/2022 6:15	12.07	0.11	6/18/2022 7:59	11.59	-0.04	6/17/2022 6:02	11.64	0.03	6/17/2022 7:16	-0.06
6/17/2022 6:16	12.06	0.11	6/18/2022 8:00	11.59	-0.03	6/17/2022 6:03	11.61	0.02	6/17/2022 7:17	-0.06
6/17/2022 6:17	12.08	0.17	6/18/2022 8:01	11.59	-0.07	6/17/2022 6:04	11.63	-0.02	6/17/2022 7:18	-0.03
6/17/2022 6:18	12.07	0.09	6/18/2022 8:02	11.57	-0.01	6/17/2022 6:05	11.62	-0.02	6/17/2022 7:19	-0.04
6/17/2022 6:19	12.09	0.21	6/18/2022 8:03	11.59	-0.04	6/17/2022 6:06	11.62	0.01	6/17/2022 7:20	-0.08
6/17/2022 6:20	12.06	0.12	6/18/2022 8:04	11.57	0.03	6/17/2022 6:07	11.63	0.02	6/17/2022 7:21	-0.03
6/17/2022 6:21	12.08	0.23	6/18/2022 8:05	11.58	0.01	6/17/2022 6:08	11.62	0.04	6/17/2022 7:22	-0.02
6/17/2022 6:22	12.09	0.20	6/18/2022 8:06	11.56	0.05	6/17/2022 6:09	11.58	0.02	6/17/2022 7:23	-0.08
6/17/2022 6:23	12.05	0.07	6/18/2022 8:07	11.60	-0.04	6/17/2022 6:10	11.61	0.01	6/17/2022 7:24	-0.11
6/17/2022 6:24	12.06	0.20	6/18/2022 8:08	11.58	0.00	6/17/2022 6:11	11.62	0.01	6/17/2022 7:25	-0.02
6/17/2022 6:25	12.07	0.19	6/18/2022 8:09	11.57	0.00	6/17/2022 6:12	11.60	0.00	6/17/2022 7:26	-0.01
6/17/2022 6:26	12.07	0.17	6/18/2022 8:10	11.55	-0.02	6/17/2022 6:13	11.60	0.01	6/17/2022 7:27	-0.08
6/17/2022 6:27	12.06	0.10	6/18/2022 8:11	11.59	-0.10	6/17/2022 6:14	11.61	0.00	6/17/2022 7:28	-0.02
6/17/2022 6:28	12.09	0.17	6/18/2022 8:12	11.58	0.04	6/17/2022 6:15	11.63	0.01	6/17/2022 7:29	-0.04
6/17/2022 6:29	12.07	0.16	6/18/2022 8:13	11.59	-0.02	6/17/2022 6:16	11.61	0.03	6/17/2022 7:30	-0.02
6/17/2022 6:30	12.08	0.18	6/18/2022 8:14	11.57	0.01	6/17/2022 6:17	11.62	0.04	6/17/2022 7:31	-0.07
6/17/2022 6:31	12.07	0.15	6/18/2022 8:15	11.60	-0.03	6/17/2022 6:18	11.62	-0.02	6/17/2022 7:32	0.00
6/17/2022 6:32	12.09	0.15	6/18/2022 8:16	11.56	0.05	6/17/2022 6:19	11.62	0.01	6/17/2022 7:33	-0.03
6/17/2022 6:33	12.05	0.14	6/18/2022 8:17	11.57	-0.08	6/17/2022 6:20	11.62	0.06	6/17/2022 7:34	-0.04
6/17/2022 6:34	12.05	0.16	6/18/2022 8:18	11.57	-0.03	6/17/2022 6:21	11.60	0.02	6/17/2022 7:35	-0.05
6/17/2022 6:35	12.06	0.16	6/18/2022 8:19	11.60	-0.02	6/17/2022 6:22	11.62	0.06	6/17/2022 7:36	-0.01
6/17/2022 6:36	12.07	0.15	6/18/2022 8:20	11.56	-0.02	6/17/2022 6:23	11.63	0.00	6/17/2022 7:37	-0.04
6/17/2022 6:37	12.05	0.09	6/18/2022 8:21	11.56	-0.03	6/17/2022 6:24	11.62	0.03	6/17/2022 7:38	-0.03
6/17/2022 6:38	12.08	0.03	6/18/2022 8:22	11.57	-0.08	6/17/2022 6:25	11.61	0.04	6/17/2022 7:39	-0.07
6/17/2022 6:39	12.07	0.09	6/18/2022 8:23	11.58	-0.02	6/17/2022 6:26	11.61	0.04	6/17/2022 7:40	-0.05
6/17/2022 6:40	12.06	0.05	6/18/2022 8:24	11.60	0.00	6/17/2022 6:27	11.62	0.04	6/17/2022 7:41	-0.09
6/17/2022 6:41	12.07	0.08	6/18/2022 8:25	11.58	-0.05	6/17/2022 6:28	11.62	0.01	6/17/2022 7:42	-0.03
6/17/2022 6:42	12.08	0.14	6/18/2022 8:26	11.57	0.00	6/17/2022 6:29	11.60	-0.03	6/17/2022 7:43	-0.01
6/17/2022 6:43	12.06	0.14	6/18/2022 8:27	11.58	0.01	6/17/2022 6:30	11.62	-0.07	6/17/2022 7:44	-0.07
6/17/2022 6:44	12.06	0.09	6/18/2022 8:28	11.59	-0.02	6/17/2022 6:31	11.61	0.03	6/17/2022 7:45	-0.02
6/17/2022 6:45	12.06	0.10	6/18/2022 8:29	11.58	-0.01	6/17/2022 6:32	11.61	-0.01	6/17/2022 7:46	-0.04
6/17/2022 6:46	12.09	0.14	6/18/2022 8:30	11.58	-0.02	6/17/2022 6:33	11.63	0.03	6/17/2022 7:47	-0.05
6/17/2022 6:47	12.03	0.11	6/18/2022 8:31	11.57	-0.05	6/17/2022 6:34	11.60	0.01	6/17/2022 7:48	-0.08
6/17/2022 6:48	12.06	0.15	6/18/2022 8:32	11.58	-0.08	6/17/2022 6:35	11.62	-0.01	6/17/2022 7:49	-0.01
6/17/2022 6:49	12.08	0.17	6/18/2022 8:33	11.60	-0.07	6/17/2022 6:36	11.60	0.02	6/17/2022 7:50	-0.05
6/17/2022 6:50	12.09	0.13	6/18/2022 8:34	11.59	-0.07	6/17/2022 6:37	11.63	0.01	6/17/2022 7:51	-0.10
6/17/2022 6:51	12.05	0.15	6/18/2022 8:35	11.54	-0.04	6/17/2022 6:38	11.59	0.02	6/17/2022 7:52	-0.04
6/17/2022 6:52	12.07	0.17	6/18/2022 8:36	11.60	0.00	6/17/2022 6:39	11.58	0.02	6/17/2022 7:53	-0.04
6/17/2022 6:53	12.05	0.09	6/18/2022 8:37	11.59	0.05	6/17/2022 6:40	11.62	0.03	6/17/2022 7:54	-0.06
6/17/2022 6:54	12.07	0.03	6/18/2022 8:38	11.57	0.07	6/17/2022 6:41	11.63	-0.03	6/17/2022 7:55	-0.07
6/17/2022 6:55	12.05	0.11	6/18/2022 8:39	11.60	0.00	6/17/2022 6:42	11.62	0.01	6/17/2022 7:56	-0.08
6/17/2022 6:56	12.09	0.14	6/18/2022 8:40	11.57	-0.01	6/17/2022 6:43	11.61	0.03	6/17/2022 7:57	-0.01
6/17/2022 6:57	12.08	0.11	6/18/2022 8:41	11.58	-0.06	6/17/2022 6:44	11.60	0.01	6/17/2022 7:58	-0.02
6/17/2022 6:58	12.06	0.10	6/18/2022 8:42	11.58	-0.05	6/17/2022 6:45	11.62	0.04	6/17/2022 7:59	-0.03
6/17/2022 6:59	12.07	0.19	6/18/2022 8:43	11.57	0.00	6/17/2022 6:46	11.61	0.02	6/17/2022 8:00	-0.05
6/17/2022 7:00	12.06	0.16	6/18/2022 8:44	11.57	-0.04	6/17/2022 6:47	11.61	0.03	6/17/2022 8:01	-0.05
6/17/2022 7:01	12.05	0.12	6/18/2022 8:45	11.55	0.00	6/17/2022 6:48	11.62	0.00	6/17/2022 8:02	-0.03
6/17/2022 7:02	12.07	0.06	6/18/2022 8:46	11.58	-0.04	6/17/2022 6:49	11.61	-0.01	6/17/2022 8:03	-0.04
6/17/2022 7:03	12.07	0.07	6/18/2022 8:47	11.56	-0.06	6/17/2022 6:50	11.62	-0.01	6/17/2022 8:04	0.01
6/17/2022 7:04	12.07	0.15	6/18/2022 8:48	11.58	-0.08	6/17/2022 6:51	11.60	-0.06	6/17/2022 8:05	-0.03
6/17/2022 7:05	12.08	0.11	6/18/2022 8:49	11.57	-0.03	6/17/2022 6:52	11.61	0.01	6/17/2022 8:06	-0.10
6/17/2022 7:06	12.08	0.11	6/18/2022 8:50	11.55	-0.06	6/17/2022 6:53	11.60	-0.04	6/17/2022 8:07	-0.06
6/17/2022 7:07	12.07	0.10	6/18/2022 8:51	11.58	-0.07	6/17/2022 6:54	11.62	-0.03	6/17/2022 8:08	-0.03
6/17/2022 7:08	12.07	0.08	6/18/2022 8:52	11.58	-0.03	6/17/2022 6:55	11.62	0.03	6/17/2022 8:09	-0.01
6/17/2022 7:09	12.07	0.07	6/18/2022 8:53	11.55	-0.05	6/17/2022 6:56	11.60	0.02	6/17/2022 8:10	-0.04
6/17/2022 7:10	12.07	0.20	6/18/2022 8:54	11.60	-0.04	6/17/2022 6:57	11.60	0.03	6/17/2022 8:11	-0.04
6/17/2022 7:11	12.08	0.05	6/18/2022 8:55	11.57	-0.06	6/17/2022 6:58	11.63	0.01	6/17/2022 8:12	-0.03
6/17/2022 7:12	12.08	0.16	6/18/2022 8:56	11.58	-0.03	6/17/2022 6:59	11.64	0.01	6/17/2022 8:13	-0.07
6/17/2022 7:13	12.05	0.14	6/18/2022 8:57	11.61	-0.01	6/17/2022 7:00	11.62	0.01	6/17/2022 8:14	-0.06
6/17/2022 7:14	12.07	0.05	6/18/2022 8:58	11.57	0.01	6/17/2022 7:01	11.60	0.01	6/17/2022 8:15	-0.05
6/17/2022 7:15	12.05	0.17	6/18/2022 8:59	11.59	0.11	6/17/2022 7:02	11.63	-0.01	6/17/2022 8:16	0.01
6/17/2022 7:16	12.07	0.19	6/18/2022 9:00	11.59	0.03	6/17/2022 7:03	11.63	-0.01	6/17/2022 8:17	-0.05
6/17/2022 7:17	12.06	0.06	6/18/2022 9:01	11.56	-0.03	6/17/2022 7:04	11.62	0.00	6/17/2022 8:18	-0.01
6/17/2022 7:18	12.07	0.05	6/18/2022 9:02	11.58	-0.06	6/17/2022 7:05	11.61	0.01	6/17/2022 8:19	-0.04
6/17/2022 7:19	12.06	0.15	6/18/2022 9:03	11.58	0.07	6/17/2022 7:06	11.61	0.08	6/17/2022 8:20	-0.03
6/17/2022 7:20	12.07	0.13	6/18/2022 9:04	11.57	0.03	6/17/2022 7:07	11.61	-0.02	6/17/2022 8:21	-0.06
6/17/2022 7:21	12.07	0.23	6/18/2022 9:05	11.58	-0.12	6/17/2022 7:08	11.60	-0.02	6/17/2022 8:22	-0.03
6/17/2022 7:22	12.09	0.15	6/18/2022 9:06	11.57	0.01	6/17/2022 7:09	11.60	0.02	6/17/2022 8:23	-0.08
6/17/2022 7:23	12.04	0.10	6/18/2022 9:07	11.57	0.01	6/17/2022 7:10	11.60	-0.01	6/17/2022 8:24	-0.04
6/17/2022 7:24	12.08	0.18	6/18/2022 9:08	11.55	0.00	6/17/2022 7:11	11.63	0.03	6/17/2022 8:25	-0.06
6/17/2022 7:25	12.06	0.11	6/18/2022 9:09	11.56	-0.10	6/17/2022 7:12	11.60	0.03	6/17/2022 8:26	0.01
6/17/2022 7:26	12.09	0.15	6/18/2022 9:10	11.57	-0.05	6/17/2022 7:13	11.62	0.06	6/17/2022 8:27	-0.04
6/17/2022 7:27	12.09	0.19	6/18/2022 9:11	11.58	-0.03	6/17/2022 7:14	11.61	-0.03	6/17/2022 8:28	-0.04
6/17/2022 7:28	12.10	0.10	6/18/2022 9:12	11.58	-0.05	6/17/2022 7:15	11.61	0.03	6/17/2022 8:29	-0.05
6/17/2022 7:29	12.08	0.16	6/18/2022 9:13	11.57	-0.05	6/17/2022 7:16	11.62	-0.02	6/17/2022 8:30	-0.04
6/17/2022 7:30	12.10	0.13	6/18/2022 9:14	11.58	0.04	6/17/2022 7:17	11.61	0.01	6/17/2022 8:31	-0.01
6/17/2022 7:31	12.09	0.21	6/18/2022 9:15	11.55	-0.03	6/17/2022 7:18	11.60	0.01	6/17/2022 8:32	-0.04
6/17/2022 7:32	12.07	0.14	6/18/2022 9:16	11.56	-0.05	6/17/2022 7:19	11.63	0.00	6/17/2022 8:33	-0.11
6/17/2022 7:33	12.07	0.17	6/18/2022 9:17	11.58	-0.05	6/17/2022 7:20	11.62	-0.01	6/17/2022 8:34	-0.02
6/17/2022 7:34	12.04	0.13	6/18/2022 9:18	11.56	0.03	6/17/2022 7:21	11.63	0.04	6/17/2022 8:35	-0.01

6/17/2022 7:35	12.06	0.17	6/18/2022 9:19	11.59	-0.02	6/17/2022 7:22	11.64	0.00	6/17/2022 8:36	-0.02
6/17/2022 7:36	12.06	0.10	6/18/2022 9:20	11.58	-0.02	6/17/2022 7:23	11.63	0.00	6/17/2022 8:37	-0.01
6/17/2022 7:37	12.08	0.13	6/18/2022 9:21	11.59	-0.09	6/17/2022 7:24	11.61	-0.05	6/17/2022 8:38	-0.02
6/17/2022 7:38	12.05	0.09	6/18/2022 9:22	11.56	0.00	6/17/2022 7:25	11.64	-0.01	6/17/2022 8:39	0.03
6/17/2022 7:39	12.05	0.11	6/18/2022 9:23	11.60	-0.05	6/17/2022 7:26	11.62	0.05	6/17/2022 8:40	-0.01
6/17/2022 7:40	12.08	0.11	6/18/2022 9:24	11.58	-0.01	6/17/2022 7:27	11.63	0.03	6/17/2022 8:41	-0.04
6/17/2022 7:41	12.08	0.13	6/18/2022 9:25	11.55	0.02	6/17/2022 7:28	11.62	0.04	6/17/2022 8:42	0.00
6/17/2022 7:42	12.07	0.09	6/18/2022 9:26	11.58	0.01	6/17/2022 7:29	11.61	-0.01	6/17/2022 8:43	-0.06
6/17/2022 7:43	12.09	0.08	6/18/2022 9:27	11.57	-0.06	6/17/2022 7:30	11.61	0.01	6/17/2022 8:44	-0.09
6/17/2022 7:44	12.06	0.19	6/18/2022 9:28	11.56	-0.07	6/17/2022 7:31	11.59	0.00	6/17/2022 8:45	-0.09
6/17/2022 7:45	12.07	0.14	6/18/2022 9:29	11.57	-0.08	6/17/2022 7:32	11.62	0.02	6/17/2022 8:46	-0.01
6/17/2022 7:46	12.06	0.10	6/18/2022 9:30	11.59	-0.08	6/17/2022 7:33	11.60	0.03	6/17/2022 8:47	-0.05
6/17/2022 7:47	12.07	0.12	6/18/2022 9:31	11.58	-0.04	6/17/2022 7:34	11.61	0.00	6/17/2022 8:48	-0.05
6/17/2022 7:48	12.06	0.10	6/18/2022 9:32	11.57	0.00	6/17/2022 7:35	11.60	-0.01	6/17/2022 8:49	-0.01
6/17/2022 7:49	12.04	0.16	6/18/2022 9:33	11.58	-0.07	6/17/2022 7:36	11.64	0.02	6/17/2022 8:50	0.01
6/17/2022 7:50	12.07	0.11	6/18/2022 9:34	11.58	-0.02	6/17/2022 7:37	11.62	0.02	6/17/2022 8:51	-0.05
6/17/2022 7:51	12.07	0.16	6/18/2022 9:35	11.57	-0.07	6/17/2022 7:38	11.64	0.02	6/17/2022 8:52	-0.03
6/17/2022 7:52	12.08	0.15	6/18/2022 9:36	11.58	-0.09	6/17/2022 7:39	11.62	0.02	6/17/2022 8:53	-0.05
6/17/2022 7:53	12.05	0.15	6/18/2022 9:37	11.58	-0.06	6/17/2022 7:40	11.62	-0.05	6/17/2022 8:54	-0.03
6/17/2022 7:54	12.09	0.12	6/18/2022 9:38	11.60	-0.08	6/17/2022 7:41	11.62	0.02	6/17/2022 8:55	-0.04
6/17/2022 7:55	12.06	0.14	6/18/2022 9:39	11.61	0.02	6/17/2022 7:42	11.61	0.02	6/17/2022 8:56	-0.03
6/17/2022 7:56	12.06	0.10	6/18/2022 9:40	11.57	0.02	6/17/2022 7:43	11.58	0.04	6/17/2022 8:57	-0.03
6/17/2022 7:57	12.08	0.08	6/18/2022 9:41	11.58	0.00	6/17/2022 7:44	11.62	-0.01	6/17/2022 8:58	-0.07
6/17/2022 7:58	12.06	0.11	6/18/2022 9:42	11.60	-0.06	6/17/2022 7:45	11.63	-0.03	6/17/2022 8:59	-0.06
6/17/2022 7:59	12.07	0.16	6/18/2022 9:43	11.58	0.01	6/17/2022 7:46	11.61	0.02	6/17/2022 9:00	-0.05
6/17/2022 8:00	12.08	0.07	6/18/2022 9:44	11.56	0.03	6/17/2022 7:47	11.62	0.00	6/17/2022 9:01	-0.07
6/17/2022 8:01	12.07	0.14	6/18/2022 9:45	11.60	0.03	6/17/2022 7:48	11.61	0.01	6/17/2022 9:02	-0.02
6/17/2022 8:02	12.07	0.15	6/18/2022 9:46	11.56	-0.02	6/17/2022 7:49	11.60	-0.02	6/17/2022 9:03	-0.04
6/17/2022 8:03	12.08	0.16	6/18/2022 9:47	11.59	-0.03	6/17/2022 7:50	11.59	0.00	6/17/2022 9:04	0.00
6/17/2022 8:04	12.08	0.25	6/18/2022 9:48	11.57	-0.02	6/17/2022 7:51	11.60	0.02	6/17/2022 9:05	-0.01
6/17/2022 8:05	12.07	0.12	6/18/2022 9:49	11.59	-0.02	6/17/2022 7:52	11.62	0.02	6/17/2022 9:06	0.01
6/17/2022 8:06	12.06	0.08	6/18/2022 9:50	11.58	-0.02	6/17/2022 7:53	11.62	0.02	6/17/2022 9:07	-0.07
6/17/2022 8:07	12.07	0.15	6/18/2022 9:51	11.58	-0.03	6/17/2022 7:54	11.61	0.01	6/17/2022 9:08	-0.05
6/17/2022 8:08	12.07	0.11	6/18/2022 9:52	11.58	0.06	6/17/2022 7:55	11.64	0.00	6/17/2022 9:09	0.01
6/17/2022 8:09	12.08	0.20	6/18/2022 9:53	11.59	-0.01	6/17/2022 7:56	11.61	-0.03	6/17/2022 9:10	0.04
6/17/2022 8:10	12.06	0.10	6/18/2022 9:54	11.57	-0.02	6/17/2022 7:57	11.61	-0.01	6/17/2022 9:11	0.00
6/17/2022 8:11	12.04	0.17	6/18/2022 9:55	11.58	0.00	6/17/2022 7:58	11.61	0.00	6/17/2022 9:12	-0.03
6/17/2022 8:12	12.08	0.06	6/18/2022 9:56	11.57	-0.04	6/17/2022 7:59	11.59	-0.01	6/17/2022 9:13	-0.05
6/17/2022 8:13	12.07	0.11	6/18/2022 9:57	11.59	-0.05	6/17/2022 8:00	11.63	-0.02	6/17/2022 9:14	-0.03
6/17/2022 8:14	12.07	0.08	6/18/2022 9:58	11.58	0.03	6/17/2022 8:01	11.62	-0.01	6/17/2022 9:15	-0.04
6/17/2022 8:15	12.06	0.09	6/18/2022 9:59	11.59	-0.09	6/17/2022 8:02	11.60	0.03	6/17/2022 9:16	-0.08
6/17/2022 8:16	12.06	0.05	6/18/2022 10:00	11.61	-0.03	6/17/2022 8:03	11.62	0.00	6/17/2022 9:17	-0.02
6/17/2022 8:17	12.06	0.07	6/18/2022 10:01	11.60	-0.06	6/17/2022 8:04	11.60	-0.02	6/17/2022 9:18	0.00
6/17/2022 8:18	12.06	0.14	6/18/2022 10:02	11.60	-0.02	6/17/2022 8:05	11.64	-0.03	6/17/2022 9:19	-0.03
6/17/2022 8:19	12.06	0.16	6/18/2022 10:03	11.56	0.00	6/17/2022 8:06	11.62	0.00	6/17/2022 9:20	0.02
6/17/2022 8:20	12.06	0.15	6/18/2022 10:04	11.58	0.00	6/17/2022 8:07	11.63	0.02	6/17/2022 9:21	0.00
6/17/2022 8:21	12.05	0.11	6/18/2022 10:05	11.58	0.00	6/17/2022 8:08	11.62	0.01	6/17/2022 9:22	0.01
6/17/2022 8:22	12.08	0.08	6/18/2022 10:06	11.57	-0.04	6/17/2022 8:09	11.64	0.02	6/17/2022 9:23	-0.01
6/17/2022 8:23	12.07	0.14	6/18/2022 10:07	11.57	-0.09	6/17/2022 8:10	11.62	0.03	6/17/2022 9:24	0.00
6/17/2022 8:24	12.09	0.15	6/18/2022 10:08	11.57	0.04	6/17/2022 8:11	11.62	0.03	6/17/2022 9:25	-0.02
6/17/2022 8:25	12.05	0.14	6/18/2022 10:09	11.58	-0.05	6/17/2022 8:12	11.61	0.03	6/17/2022 9:26	-0.04
6/17/2022 8:26	12.08	0.07	6/18/2022 10:10	11.54	-0.01	6/17/2022 8:13	11.63	0.03	6/17/2022 9:27	0.00
6/17/2022 8:27	12.09	0.15	6/18/2022 10:11	11.58	0.02	6/17/2022 8:14	11.61	0.00	6/17/2022 9:28	-0.06
6/17/2022 8:28	12.08	0.21	6/18/2022 10:12	11.57	-0.09	6/17/2022 8:15	11.60	0.05	6/17/2022 9:29	-0.01
6/17/2022 8:29	12.06	0.11	6/18/2022 10:13	11.60	0.00	6/17/2022 8:16	11.61	0.05	6/17/2022 9:30	0.01
6/17/2022 8:30	12.06	0.11	6/18/2022 10:14	11.59	-0.11	6/17/2022 8:17	11.62	0.00	6/17/2022 9:31	0.01
6/17/2022 8:31	12.09	0.14	6/18/2022 10:15	11.57	0.00	6/17/2022 8:18	11.61	0.00	6/17/2022 9:32	-0.07
6/17/2022 8:32	12.08	0.14	6/18/2022 10:16	11.55	0.00	6/17/2022 8:19	11.62	0.01	6/17/2022 9:33	-0.05
6/17/2022 8:33	12.07	0.11	6/18/2022 10:17	11.57	-0.07	6/17/2022 8:20	11.60	0.01	6/17/2022 9:34	-0.01
6/17/2022 8:34	12.07	0.18	6/18/2022 10:18	11.58	-0.08	6/17/2022 8:21	11.61	-0.02	6/17/2022 9:35	-0.03
6/17/2022 8:35	12.07	0.10	6/18/2022 10:19	11.57	-0.03	6/17/2022 8:22	11.62	-0.04	6/17/2022 9:36	-0.02
6/17/2022 8:36	12.03	0.12	6/18/2022 10:20	11.57	-0.01	6/17/2022 8:23	11.62	0.01	6/17/2022 9:37	0.01
6/17/2022 8:37	12.04	0.13	6/18/2022 10:21	11.58	-0.03	6/17/2022 8:24	11.59	0.02	6/17/2022 9:38	0.00
6/17/2022 8:38	12.06	0.18	6/18/2022 10:22	11.57	-0.05	6/17/2022 8:25	11.61	0.01	6/17/2022 9:39	-0.01
6/17/2022 8:39	12.07	0.10	6/18/2022 10:23	11.57	-0.07	6/17/2022 8:26	11.62	-0.01	6/17/2022 9:40	-0.03
6/17/2022 8:40	12.06	0.14	6/18/2022 10:24	11.55	-0.02	6/17/2022 8:27	11.61	0.02	6/17/2022 9:41	0.00
6/17/2022 8:41	12.06	0.12	6/18/2022 10:25	11.59	-0.02	6/17/2022 8:28	11.60	-0.02	6/17/2022 9:42	-0.02
6/17/2022 8:42	12.07	0.13	6/18/2022 10:26	11.57	-0.04	6/17/2022 8:29	11.60	0.00	6/17/2022 9:43	0.00
6/17/2022 8:43	12.07	0.11	6/18/2022 10:27	11.58	-0.02	6/17/2022 8:30	11.62	0.01	6/17/2022 9:44	-0.04
6/17/2022 8:44	12.07	0.14	6/18/2022 10:28	11.56	-0.05	6/17/2022 8:31	11.62	0.01	6/17/2022 9:45	-0.02
6/17/2022 8:45	12.09	0.10	6/18/2022 10:29	11.60	-0.01	6/17/2022 8:32	11.62	0.03	6/17/2022 9:46	-0.01
6/17/2022 8:46	12.05	0.07	6/18/2022 10:30	11.59	-0.06	6/17/2022 8:33	11.62	0.05	6/17/2022 9:47	-0.03
6/17/2022 8:47	12.07	0.10	6/18/2022 10:31	11.59	0.00	6/17/2022 8:34	11.61	0.03	6/17/2022 9:48	-0.06
6/17/2022 8:48	12.08	0.15	6/18/2022 10:32	11.57	-0.10	6/17/2022 8:35	11.59	-0.02	6/17/2022 9:49	-0.02
6/17/2022 8:49	12.08	0.12	6/18/2022 10:33	11.58	-0.04	6/17/2022 8:36	11.62	-0.01	6/17/2022 9:50	-0.03
6/17/2022 8:50	12.06	0.06	6/18/2022 10:34	11.56	-0.12	6/17/2022 8:37	11.61	0.02	6/17/2022 9:51	-0.02
6/17/2022 8:51	12.08	0.08	6/18/2022 10:35	11.57	-0.08	6/17/2022 8:38	11.61	0.01	6/17/2022 9:52	-0.01
6/17/2022 8:52	12.09	0.08	6/18/2022 10:36	11.55	-0.01	6/17/2022 8:39	11.62	0.00	6/17/2022 9:53	-0.06
6/17/2022 8:53	12.08	0.13	6/18/2022 10:37	11.57	-0.01	6/17/2022 8:40	11.60	0.01	6/17/2022 9:54	-0.08
6/17/2022 8:54	12.06	0.13	6/18/2022 10:38	11.58	0.01	6/17/2022 8:41	11.61	0.02	6/17/2022 9:55	0.01
6/17/2022 8:55	12.08	0.15	6/18/2022 10:39	11.56	-0.04	6/17/2022 8:42	11.64	0.01	6/17/2022 9:56	-0.03
6/17/2022 8:56	12.08	0.12	6/18/2022 10:40	11.56	-0.04	6/17/2022 8:43	11.60	0.02	6/17/2022 9:57	-0.06
6/17/2022 8:57	12.06	0.13	6/18/2022 10:41	11.57	-0.01	6/17/2022 8:44	11.61	0.00	6/17/2022 9:58	-0.02
6/17/2022 8:58	12.08	0.06	6/18/2022 10:42	11.57	0.01	6/17/2022 8:45	11.62	0.05	6/17/2022 9:59	-0.04
6/17/2022 8:59	12.04	0.19	6/18/2022 10:43	11.57	-0.02	6/17/2022 8:46	11.62	0.02	6/17/2022 10:00	-0.04
6/17/2022 9:00	12.08	0.20	6/18/2022 10:44	11.59	-0.05	6/17/2022 8:47	11.60	0.05	6/17/2022 10:01	-0.05
6/17/2022 9:01	12.08	0.06	6/18/2022 10:45	11.59	0.05	6/17/2022 8:48	11.61	0.00	6/17/2022 10:02	-0.02
6/17/2022 9:02	12.06	0.19	6/18/2022 10:46	11.57	-0.02	6/17/2022 8:49	11.62	0.02	6/17/2022 10:03	0.04

6/17/2022 9:03	12.08	0.10	6/18/2022 10:47	11.56	-0.08	6/17/2022 8:50	11.64	0.02	6/17/2022 10:04	-0.06
6/17/2022 9:04	12.09	0.20	6/18/2022 10:48	11.60	0.09	6/17/2022 8:51	11.61	0.04	6/17/2022 10:05	-0.02
6/17/2022 9:05	12.06	0.23	6/18/2022 10:49	11.56	-0.02	6/17/2022 8:52	11.63	0.02	6/17/2022 10:06	0.00
6/17/2022 9:06	12.06	0.15	6/18/2022 10:50	11.59	-0.02	6/17/2022 8:53	11.62	0.01	6/17/2022 10:07	-0.03
6/17/2022 9:07	12.06	0.12	6/18/2022 10:51	11.56	0.02	6/17/2022 8:54	11.61	-0.01	6/17/2022 10:08	-0.02
6/17/2022 9:08	12.04	0.14	6/18/2022 10:52	11.57	0.00	6/17/2022 8:55	11.60	-0.02	6/17/2022 10:09	0.03
6/17/2022 9:09	12.08	0.12	6/18/2022 10:53	11.60	-0.01	6/17/2022 8:56	11.62	0.03	6/17/2022 10:10	-0.04
6/17/2022 9:10	12.09	0.14	6/18/2022 10:54	11.57	-0.03	6/17/2022 8:57	11.63	-0.01	6/17/2022 10:11	-0.03
6/17/2022 9:11	12.08	0.20	6/18/2022 10:55	11.57	-0.06	6/17/2022 8:58	11.61	0.01	6/17/2022 10:12	-0.01
6/17/2022 9:12	12.07	0.12	6/18/2022 10:56	11.57	-0.07	6/17/2022 8:59	11.64	-0.01	6/17/2022 10:13	-0.04
6/17/2022 9:13	12.05	0.14	6/18/2022 10:57	11.57	-0.04	6/17/2022 9:00	11.61	0.02	6/17/2022 10:14	-0.03
6/17/2022 9:14	12.06	0.16	6/18/2022 10:58	11.57	0.01	6/17/2022 9:01	11.59	0.03	6/17/2022 10:15	-0.05
6/17/2022 9:15	12.05	0.11	6/18/2022 10:59	11.59	-0.04	6/17/2022 9:02	11.61	0.01	6/17/2022 10:16	-0.03
6/17/2022 9:16	12.08	0.14	6/18/2022 11:00	11.59	0.03	6/17/2022 9:03	11.62	-0.02	6/17/2022 10:17	-0.03
6/17/2022 9:17	12.07	0.18	6/18/2022 11:01	11.57	-0.01	6/17/2022 9:04	11.63	0.00	6/17/2022 10:18	-0.04
6/17/2022 9:18	12.07	0.18	6/18/2022 11:02	11.57	0.05	6/17/2022 9:05	11.61	0.00	6/17/2022 10:19	0.00
6/17/2022 9:19	12.06	0.12	6/18/2022 11:03	11.58	-0.03	6/17/2022 9:06	11.63	0.00	6/17/2022 10:20	-0.07
6/17/2022 9:20	12.07	0.08	6/18/2022 11:04	11.57	-0.02	6/17/2022 9:07	11.61	0.01	6/17/2022 10:21	-0.03
6/17/2022 9:21	12.10	0.11	6/18/2022 11:05	11.59	-0.04	6/17/2022 9:08	11.62	-0.01	6/17/2022 10:22	-0.01
6/17/2022 9:22	12.10	0.12	6/18/2022 11:06	11.58	-0.01	6/17/2022 9:09	11.62	0.04	6/17/2022 10:23	0.00
6/17/2022 9:23	12.08	0.12	6/18/2022 11:07	11.58	-0.06	6/17/2022 9:10	11.62	0.01	6/17/2022 10:24	-0.06
6/17/2022 9:24	12.09	0.19	6/18/2022 11:08	11.60	-0.11	6/17/2022 9:11	11.62	0.00	6/17/2022 10:25	-0.05
6/17/2022 9:25	12.07	0.00	6/18/2022 11:09	11.58	-0.06	6/17/2022 9:12	11.62	0.02	6/17/2022 10:26	-0.01
6/17/2022 9:26	12.08	0.11	6/18/2022 11:10	11.57	-0.10	6/17/2022 9:13	11.62	0.01	6/17/2022 10:27	-0.04
6/17/2022 9:27	12.08	0.16	6/18/2022 11:11	11.57	-0.03	6/17/2022 9:14	11.65	-0.01	6/17/2022 10:28	-0.05
6/17/2022 9:28	12.05	0.10	6/18/2022 11:12	11.58	0.06	6/17/2022 9:15	11.62	0.00	6/17/2022 10:29	-0.03
6/17/2022 9:29	12.06	0.10	6/18/2022 11:13	11.58	-0.05	6/17/2022 9:16	11.64	0.01	6/17/2022 10:30	-0.02
6/17/2022 9:30	12.05	0.06	6/18/2022 11:14	11.57	0.06	6/17/2022 9:17	11.62	-0.01	6/17/2022 10:31	-0.04
6/17/2022 9:31	12.07	0.18	6/18/2022 11:15	11.60	-0.10	6/17/2022 9:18	11.62	-0.01	6/17/2022 10:32	-0.08
6/17/2022 9:32	12.07	0.17	6/18/2022 11:16	11.59	-0.05	6/17/2022 9:19	11.62	0.01	6/17/2022 10:33	-0.05
6/17/2022 9:33	12.08	0.07	6/18/2022 11:17	11.57	-0.07	6/17/2022 9:20	11.60	0.03	6/17/2022 10:34	-0.04
6/17/2022 9:34	12.08	0.14	6/18/2022 11:18	11.58	-0.04	6/17/2022 9:21	11.61	0.04	6/17/2022 10:35	-0.03
6/17/2022 9:35	12.09	0.19	6/18/2022 11:19	11.56	-0.03	6/17/2022 9:22	11.59	0.03	6/17/2022 10:36	-0.03
6/17/2022 9:36	12.08	0.11	6/18/2022 11:20	11.57	-0.01	6/17/2022 9:23	11.62	-0.04	6/17/2022 10:37	0.03
6/17/2022 9:37	12.09	0.11	6/18/2022 11:21	11.57	0.00	6/17/2022 9:24	11.64	0.03	6/17/2022 10:38	-0.04
6/17/2022 9:38	12.10	0.11	6/18/2022 11:22	11.60	-0.07	6/17/2022 9:25	11.61	-0.02	6/17/2022 10:39	-0.07
6/17/2022 9:39	12.07	0.12	6/18/2022 11:23	11.60	0.06	6/17/2022 9:26	11.63	0.00	6/17/2022 10:40	-0.06
6/17/2022 9:40	12.06	0.14	6/18/2022 11:24	11.58	-0.02	6/17/2022 9:27	11.63	0.02	6/17/2022 10:41	-0.03
6/17/2022 9:41	12.07	0.12	6/18/2022 11:25	11.60	-0.03	6/17/2022 9:28	11.61	0.01	6/17/2022 10:42	-0.08
6/17/2022 9:42	12.07	0.11	6/18/2022 11:26	11.59	-0.06	6/17/2022 9:29	11.61	-0.02	6/17/2022 10:43	-0.06
6/17/2022 9:43	12.06	0.06	6/18/2022 11:27	11.57	-0.06	6/17/2022 9:30	11.61	0.00	6/17/2022 10:44	0.01
6/17/2022 9:44	12.08	0.09	6/18/2022 11:28	11.57	-0.07	6/17/2022 9:31	11.61	0.02	6/17/2022 10:45	-0.02
6/17/2022 9:45	12.06	0.09	6/18/2022 11:29	11.58	-0.08	6/17/2022 9:32	11.64	0.02	6/17/2022 10:46	-0.06
6/17/2022 9:46	12.08	0.09	6/18/2022 11:30	11.60	0.01	6/17/2022 9:33	11.64	0.01	6/17/2022 10:47	-0.03
6/17/2022 9:47	12.08	0.13	6/18/2022 11:31	11.58	0.04	6/17/2022 9:34	11.63	-0.02	6/17/2022 10:48	0.02
6/17/2022 9:48	12.07	0.09	6/18/2022 11:32	11.56	-0.02	6/17/2022 9:35	11.61	0.01	6/17/2022 10:49	-0.01
6/17/2022 9:49	12.05	0.10	6/18/2022 11:33	11.60	-0.06	6/17/2022 9:36	11.61	-0.01	6/17/2022 10:50	-0.05
6/17/2022 9:50	12.07	0.12	6/18/2022 11:34	11.56	-0.03	6/17/2022 9:37	11.63	-0.01	6/17/2022 10:51	-0.01
6/17/2022 9:51	12.07	0.09	6/18/2022 11:35	11.59	-0.01	6/17/2022 9:38	11.61	0.02	6/17/2022 10:52	-0.05
6/17/2022 9:52	12.08	0.14	6/18/2022 11:36	11.57	-0.03	6/17/2022 9:39	11.63	0.01	6/17/2022 10:53	-0.01
6/17/2022 9:53	12.07	0.13	6/18/2022 11:37	11.57	0.00	6/17/2022 9:40	11.64	-0.01	6/17/2022 10:54	-0.02
6/17/2022 9:54	12.06	0.11	6/18/2022 11:38	11.57	-0.03	6/17/2022 9:41	11.61	0.02	6/17/2022 10:55	-0.01
6/17/2022 9:55	12.09	0.08	6/18/2022 11:39	11.58	0.02	6/17/2022 9:42	11.62	-0.02	6/17/2022 10:56	-0.05
6/17/2022 9:56	12.07	0.14	6/18/2022 11:40	11.56	-0.02	6/17/2022 9:43	11.64	0.01	6/17/2022 10:57	-0.05
6/17/2022 9:57	12.08	0.16	6/18/2022 11:41	11.58	-0.05	6/17/2022 9:44	11.62	-0.01	6/17/2022 10:58	0.03
6/17/2022 9:58	12.07	0.12	6/18/2022 11:42	11.57	0.01	6/17/2022 9:45	11.62	0.00	6/17/2022 10:59	-0.06
6/17/2022 9:59	12.06	0.19	6/18/2022 11:43	11.57	-0.02	6/17/2022 9:46	11.61	0.01	6/17/2022 11:00	0.01
6/17/2022 10:00	12.08	0.08	6/18/2022 11:44	11.56	0.02	6/17/2022 9:47	11.60	0.03	6/17/2022 11:01	-0.04
6/17/2022 10:01	12.08	0.17	6/18/2022 11:45	11.58	0.02	6/17/2022 9:48	11.61	0.02	6/17/2022 11:02	-0.04
6/17/2022 10:02	12.07	0.14	6/18/2022 11:46	11.59	-0.02	6/17/2022 9:49	11.61	0.02	6/17/2022 11:03	-0.03
6/17/2022 10:03	12.08	0.06	6/18/2022 11:47	11.58	0.05	6/17/2022 9:50	11.61	0.00	6/17/2022 11:04	0.07
6/17/2022 10:04	12.06	0.15	6/18/2022 11:48	11.60	0.02	6/17/2022 9:51	11.62	0.00	6/17/2022 11:05	-0.02
6/17/2022 10:05	12.08	0.10	6/18/2022 11:49	11.58	-0.11	6/17/2022 9:52	11.60	0.01	6/17/2022 11:06	-0.02
6/17/2022 10:06	12.07	0.10	6/18/2022 11:50	11.57	-0.07	6/17/2022 9:53	11.62	-0.03	6/17/2022 11:07	0.06
6/17/2022 10:07	12.08	0.16	6/18/2022 11:51	11.58	0.09	6/17/2022 9:54	11.60	0.01	6/17/2022 11:08	-0.03
6/17/2022 10:08	12.07	0.11	6/18/2022 11:52	11.56	-0.06	6/17/2022 9:55	11.61	0.02	6/17/2022 11:09	-0.03
6/17/2022 10:09	12.08	0.15	6/18/2022 11:53	11.57	-0.04	6/17/2022 9:56	11.61	0.02	6/17/2022 11:10	-0.01
6/17/2022 10:10	12.08	0.14	6/18/2022 11:54	11.58	-0.05	6/17/2022 9:57	11.63	-0.01	6/17/2022 11:11	-0.04
6/17/2022 10:11	12.06	0.12	6/18/2022 11:55	11.56	-0.02	6/17/2022 9:58	11.64	0.01	6/17/2022 11:12	-0.04
6/17/2022 10:12	12.07	0.02	6/18/2022 11:56	11.57	-0.01	6/17/2022 9:59	11.61	0.04	6/17/2022 11:13	-0.01
6/17/2022 10:13	12.08	0.08	6/18/2022 11:57	11.55	-0.03	6/17/2022 10:00	11.59	0.01	6/17/2022 11:14	0.00
6/17/2022 10:14	12.08	0.19	6/18/2022 11:58	11.58	-0.04	6/17/2022 10:01	11.63	0.00	6/17/2022 11:15	-0.02
6/17/2022 10:15	12.06	0.18	6/18/2022 11:59	11.58	0.12	6/17/2022 10:02	11.63	-0.01	6/17/2022 11:16	0.00
6/17/2022 10:16	12.08	0.06	6/18/2022 12:00	11.59	-0.13	6/17/2022 10:03	11.60	0.01	6/17/2022 11:17	-0.04
6/17/2022 10:17	12.08	0.05	6/18/2022 12:01	11.54	-0.07	6/17/2022 10:04	11.62	0.02	6/17/2022 11:18	0.04
6/17/2022 10:18	12.07	0.14	6/18/2022 12:02	11.56	-0.03	6/17/2022 10:05	11.61	0.03	6/17/2022 11:19	-0.04
6/17/2022 10:19	12.10	0.11	6/18/2022 12:03	11.58	-0.04	6/17/2022 10:06	11.62	0.04	6/17/2022 11:20	-0.06
6/17/2022 10:20	12.07	0.16	6/18/2022 12:04	11.59	-0.03	6/17/2022 10:07	11.62	-0.01	6/17/2022 11:21	-0.02
6/17/2022 10:21	12.07	0.15	6/18/2022 12:05	11.58	-0.05	6/17/2022 10:08	11.61	0.04	6/17/2022 11:22	-0.04
6/17/2022 10:22	12.07	0.12	6/18/2022 12:06	11.58	0.09	6/17/2022 10:09	11.62	0.00	6/17/2022 11:23	-0.05
6/17/2022 10:23	12.07	0.01	6/18/2022 12:07	11.58	-0.04	6/17/2022 10:10	11.61	0.00	6/17/2022 11:24	-0.02
6/17/2022 10:24	12.08	0.08	6/18/2022 12:08	11.58	-0.07	6/17/2022 10:11	11.61	0.00	6/17/2022 11:25	-0.01
6/17/2022 10:25	12.07	0.15	6/18/2022 12:09	11.59	-0.02	6/17/2022 10:12	11.60	0.03	6/17/2022 11:26	-0.04
6/17/2022 10:26	12.09	0.09	6/18/2022 12:10	11.60	0.00	6/17/2022 10:13	11.62	0.04	6/17/2022 11:27	-0.03
6/17/2022 10:27	12.05	0.14	6/18/2022 12:11	11.58	-0.03	6/17/2022 10:14	11.62	0.01	6/17/2022 11:28	-0.01
6/17/2022 10:28	12.07	0.18	6/18/2022 12:12	11.60	-0.05	6/17/2022 10:15	11.60	0.05	6/17/2022 11:29	0.01
6/17/2022 10:29	12.07	0.11	6/18/2022 12:13	11.55	0.04	6/17/2022 10:16	11.61	0.03	6/17/2022 11:30	0.01
6/17/2022 10:30	12.06	0.06	6/18/2022 12:14	11.58	0.03	6/17/2022 10:17	11.61	0.01	6/17/2022 11:31	0.02

6/17/2022 10:31	12.04	0.14	6/18/2022 12:15	11.60	0.16	6/17/2022 10:18	11.60	0.02	6/17/2022 11:32	0.04
6/17/2022 10:32	12.07	0.11	6/18/2022 12:16	11.58	-0.05	6/17/2022 10:19	11.62	0.04	6/17/2022 11:33	-0.05
6/17/2022 10:33	12.06	0.05	6/18/2022 12:17	11.58	0.00	6/17/2022 10:20	11.61	0.00	6/17/2022 11:34	-0.03
6/17/2022 10:34	12.06	0.03	6/18/2022 12:18	11.57	-0.05	6/17/2022 10:21	11.61	-0.02	6/17/2022 11:35	-0.01
6/17/2022 10:35	12.07	0.10	6/18/2022 12:19	11.56	0.05	6/17/2022 10:22	11.62	0.01	6/17/2022 11:36	0.00
6/17/2022 10:36	12.09	0.07	6/18/2022 12:20	11.58	-0.02	6/17/2022 10:23	11.63	-0.01	6/17/2022 11:37	0.03
6/17/2022 10:37	12.06	0.11	6/18/2022 12:21	11.60	-0.04	6/17/2022 10:24	11.65	0.01	6/17/2022 11:38	-0.02
6/17/2022 10:38	12.06	0.08	6/18/2022 12:22	11.59	0.00	6/17/2022 10:25	11.60	0.01	6/17/2022 11:39	0.03
6/17/2022 10:39	12.06	0.16	6/18/2022 12:23	11.57	0.02	6/17/2022 10:26	11.63	0.05	6/17/2022 11:40	-0.07
6/17/2022 10:40	12.06	0.12	6/18/2022 12:24	11.58	-0.02	6/17/2022 10:27	11.64	-0.02	6/17/2022 11:41	-0.03
6/17/2022 10:41	12.07	0.06	6/18/2022 12:25	11.59	-0.04	6/17/2022 10:28	11.62	0.04	6/17/2022 11:42	0.02
6/17/2022 10:42	12.07	0.14	6/18/2022 12:26	11.60	-0.04	6/17/2022 10:29	11.63	0.00	6/17/2022 11:43	-0.01
6/17/2022 10:43	12.06	0.17	6/18/2022 12:27	11.55	0.00	6/17/2022 10:30	11.61	-0.03	6/17/2022 11:44	0.00
6/17/2022 10:44	12.08	0.11	6/18/2022 12:28	11.59	0.04	6/17/2022 10:31	11.63	-0.02	6/17/2022 11:45	-0.03
6/17/2022 10:45	12.05	0.16	6/18/2022 12:29	11.56	-0.02	6/17/2022 10:32	11.63	0.02	6/17/2022 11:46	-0.01
6/17/2022 10:46	12.08	0.18	6/18/2022 12:30	11.56	-0.08	6/17/2022 10:33	11.61	0.02	6/17/2022 11:47	-0.01
6/17/2022 10:47	12.08	0.15	6/18/2022 12:31	11.56	0.03	6/17/2022 10:34	11.63	0.02	6/17/2022 11:48	-0.04
6/17/2022 10:48	12.07	0.18	6/18/2022 12:32	11.56	-0.06	6/17/2022 10:35	11.60	0.05	6/17/2022 11:49	0.03
6/17/2022 10:49	12.06	0.15	6/18/2022 12:33	11.60	-0.04	6/17/2022 10:36	11.61	0.03	6/17/2022 11:50	-0.01
6/17/2022 10:50	12.07	0.09	6/18/2022 12:34	11.59	-0.08	6/17/2022 10:37	11.62	0.01	6/17/2022 11:51	-0.05
6/17/2022 10:51	12.06	0.12	6/18/2022 12:35	11.56	-0.02	6/17/2022 10:38	11.65	-0.05	6/17/2022 11:52	0.00
6/17/2022 10:52	12.06	0.16	6/18/2022 12:36	11.57	0.00	6/17/2022 10:39	11.61	0.02	6/17/2022 11:53	-0.07
6/17/2022 10:53	12.06	0.14	6/18/2022 12:37	11.57	-0.06	6/17/2022 10:40	11.61	0.03	6/17/2022 11:54	-0.01
6/17/2022 10:54	12.08	0.25	6/18/2022 12:38	11.59	-0.02	6/17/2022 10:41	11.62	0.00	6/17/2022 11:55	-0.10
6/17/2022 10:55	12.06	0.07	6/18/2022 12:39	11.57	-0.01	6/17/2022 10:42	11.62	0.05	6/17/2022 11:56	-0.04
6/17/2022 10:56	12.08	0.14	6/18/2022 12:40	11.59	0.06	6/17/2022 10:43	11.63	0.01	6/17/2022 11:57	0.04
6/17/2022 10:57	12.07	0.15	6/18/2022 12:41	11.58	-0.06	6/17/2022 10:44	11.61	-0.02	6/17/2022 11:58	-0.01
6/17/2022 10:58	12.08	0.00	6/18/2022 12:42	11.57	0.02	6/17/2022 10:45	11.62	0.01	6/17/2022 11:59	-0.07
6/17/2022 10:59	12.06	0.11	6/18/2022 12:43	11.56	0.03	6/17/2022 10:46	11.62	-0.04	6/17/2022 12:00	0.02
6/17/2022 11:00	12.08	0.13	6/18/2022 12:44	11.59	-0.04	6/17/2022 10:47	11.62	0.03	6/17/2022 12:01	0.02
6/17/2022 11:01	12.06	0.07	6/18/2022 12:45	11.57	-0.10	6/17/2022 10:48	11.60	-0.04	6/17/2022 12:02	-0.04
6/17/2022 11:02	12.06	0.10	6/18/2022 12:46	11.58	-0.12	6/17/2022 10:49	11.63	-0.02	6/17/2022 12:03	-0.05
6/17/2022 11:03	12.08	0.07	6/18/2022 12:47	11.60	0.04	6/17/2022 10:50	11.61	0.00	6/17/2022 12:04	-0.05
6/17/2022 11:04	12.08	0.12	6/18/2022 12:48	11.60	0.02	6/17/2022 10:51	11.60	0.02	6/17/2022 12:05	0.02
6/17/2022 11:05	12.07	0.00	6/18/2022 12:49	11.56	-0.02	6/17/2022 10:52	11.60	0.00	6/17/2022 12:06	-0.11
6/17/2022 11:06	12.05	0.14	6/18/2022 12:50	11.57	0.01	6/17/2022 10:53	11.62	-0.01	6/17/2022 12:07	-0.02
6/17/2022 11:07	12.07	0.08	6/18/2022 12:51	11.58	-0.02	6/17/2022 10:54	11.62	-0.01	6/17/2022 12:08	0.02
6/17/2022 11:08	12.05	0.18	6/18/2022 12:52	11.59	-0.03	6/17/2022 10:55	11.60	0.00	6/17/2022 12:09	-0.02
6/17/2022 11:09	12.06	0.14	6/18/2022 12:53	11.59	-0.04	6/17/2022 10:56	11.62	0.03	6/17/2022 12:10	0.01
6/17/2022 11:10	12.06	0.12	6/18/2022 12:54	11.58	0.00	6/17/2022 10:57	11.62	0.01	6/17/2022 12:11	-0.06
6/17/2022 11:11	12.04	0.11	6/18/2022 12:55	11.59	-0.08	6/17/2022 10:58	11.64	-0.04	6/17/2022 12:12	-0.04
6/17/2022 11:12	12.06	0.08	6/18/2022 12:56	11.58	-0.06	6/17/2022 10:59	11.62	0.02	6/17/2022 12:13	-0.08
6/17/2022 11:13	12.07	0.06	6/18/2022 12:57	11.57	-0.05	6/17/2022 11:00	11.62	0.02	6/17/2022 12:14	0.05
6/17/2022 11:14	12.08	0.14	6/18/2022 12:58	11.58	0.00	6/17/2022 11:01	11.60	0.01	6/17/2022 12:15	-0.03
6/17/2022 11:15	12.07	0.13	6/18/2022 12:59	11.56	0.01	6/17/2022 11:02	11.62	0.02	6/17/2022 12:16	-0.06
6/17/2022 11:16	12.05	0.22	6/18/2022 13:00	11.59	-0.03	6/17/2022 11:03	11.62	0.02	6/17/2022 12:17	-0.06
6/17/2022 11:17	12.07	0.11	6/18/2022 13:01	11.57	-0.02	6/17/2022 11:04	11.64	-0.01	6/17/2022 12:18	0.01
6/17/2022 11:18	12.07	0.10	6/18/2022 13:02	11.58	-0.01	6/17/2022 11:05	11.60	0.06	6/17/2022 12:19	-0.08
6/17/2022 11:19	12.07	0.07	6/18/2022 13:03	11.57	-0.05	6/17/2022 11:06	11.61	0.01	6/17/2022 12:20	-0.02
6/17/2022 11:20	12.06	0.04	6/18/2022 13:04	11.60	-0.10	6/17/2022 11:07	11.60	-0.02	6/17/2022 12:21	-0.05
6/17/2022 11:21	12.04	0.16	6/18/2022 13:05	11.58	-0.03	6/17/2022 11:08	11.61	0.02	6/17/2022 12:22	-0.03
6/17/2022 11:22	12.08	0.16	6/18/2022 13:06	11.60	-0.06	6/17/2022 11:09	11.64	-0.01	6/17/2022 12:23	0.00
6/17/2022 11:23	12.07	0.18	6/18/2022 13:07	11.57	0.04	6/17/2022 11:10	11.60	0.02	6/17/2022 12:24	0.01
6/17/2022 11:24	12.08	0.16	6/18/2022 13:08	11.57	0.05	6/17/2022 11:11	11.59	0.00	6/17/2022 12:25	-0.05
6/17/2022 11:25	12.08	0.22	6/18/2022 13:09	11.59	0.01	6/17/2022 11:12	11.61	0.01	6/17/2022 12:26	-0.04
6/17/2022 11:26	12.07	0.17	6/18/2022 13:10	11.57	0.06	6/17/2022 11:13	11.62	0.03	6/17/2022 12:27	-0.03
6/17/2022 11:27	12.06	0.06	6/18/2022 13:11	11.59	0.00	6/17/2022 11:14	11.61	-0.01	6/17/2022 12:28	-0.02
6/17/2022 11:28	12.06	0.11	6/18/2022 13:12	11.58	-0.01	6/17/2022 11:15	11.60	0.00	6/17/2022 12:29	-0.02
6/17/2022 11:29	12.07	0.05	6/18/2022 13:13	11.55	-0.01	6/17/2022 11:16	11.64	-0.02	6/17/2022 12:30	-0.01
6/17/2022 11:30	12.07	0.13	6/18/2022 13:14	11.58	0.04	6/17/2022 11:17	11.64	0.01	6/17/2022 12:31	-0.01
6/17/2022 11:31	12.06	0.10	6/18/2022 13:15	11.60	-0.06	6/17/2022 11:18	11.61	-0.01	6/17/2022 12:32	-0.02
6/17/2022 11:32	12.07	0.11	6/18/2022 13:16	11.58	-0.04	6/17/2022 11:19	11.61	0.00	6/17/2022 12:33	-0.03
6/17/2022 11:33	12.08	0.12	6/18/2022 13:17	11.58	-0.02	6/17/2022 11:20	11.60	0.02	6/17/2022 12:34	0.02
6/17/2022 11:34	12.08	0.10	6/18/2022 13:18	11.58	0.02	6/17/2022 11:21	11.62	0.01	6/17/2022 12:35	0.01
6/17/2022 11:35	12.10	0.10	6/18/2022 13:19	11.57	-0.08	6/17/2022 11:22	11.63	0.01	6/17/2022 12:36	-0.05
6/17/2022 11:36	12.09	0.18	6/18/2022 13:20	11.58	-0.02	6/17/2022 11:23	11.62	0.00	6/17/2022 12:37	-0.02
6/17/2022 11:37	12.06	0.20	6/18/2022 13:21	11.55	-0.06	6/17/2022 11:24	11.59	-0.04	6/17/2022 12:38	-0.03
6/17/2022 11:38	12.04	0.06	6/18/2022 13:22	11.59	0.01	6/17/2022 11:25	11.62	-0.02	6/17/2022 12:39	-0.10
6/17/2022 11:39	12.07	0.11	6/18/2022 13:23	11.57	-0.04	6/17/2022 11:26	11.61	-0.02	6/17/2022 12:40	-0.10
6/17/2022 11:40	12.05	0.19	6/18/2022 13:24	11.57	-0.03	6/17/2022 11:27	11.63	0.02	6/17/2022 12:41	-0.02
6/17/2022 11:41	12.07	0.22	6/18/2022 13:25	11.55	-0.02	6/17/2022 11:28	11.60	-0.01	6/17/2022 12:42	-0.02
6/17/2022 11:42	12.08	0.16	6/18/2022 13:26	11.55	-0.11	6/17/2022 11:29	11.62	-0.03	6/17/2022 12:43	-0.01
6/17/2022 11:43	12.07	0.08	6/18/2022 13:27	11.59	0.03	6/17/2022 11:30	11.63	0.05	6/17/2022 12:44	-0.03
6/17/2022 11:44	12.08	0.17	6/18/2022 13:28	11.56	-0.07	6/17/2022 11:31	11.65	0.01	6/17/2022 12:45	-0.08
6/17/2022 11:45	12.06	0.12	6/18/2022 13:29	11.57	-0.04	6/17/2022 11:32	11.60	-0.04	6/17/2022 12:46	-0.01
6/17/2022 11:46	12.06	0.13	6/18/2022 13:30	11.58	0.00	6/17/2022 11:33	11.64	-0.02	6/17/2022 12:47	-0.05
6/17/2022 11:47	12.06	0.13	6/18/2022 13:31	11.58	-0.06	6/17/2022 11:34	11.64	-0.03	6/17/2022 12:48	-0.04
6/17/2022 11:48	12.05	0.20	6/18/2022 13:32	11.59	0.00	6/17/2022 11:35	11.62	0.03	6/17/2022 12:49	0.01
6/17/2022 11:49	12.07	0.13	6/18/2022 13:33	11.56	-0.01	6/17/2022 11:36	11.65	0.02	6/17/2022 12:50	-0.01
6/17/2022 11:50	12.06	0.19	6/18/2022 13:34	11.59	-0.06	6/17/2022 11:37	11.61	0.01	6/17/2022 12:51	-0.02
6/17/2022 11:51	12.05	0.17	6/18/2022 13:35	11.58	-0.01	6/17/2022 11:38	11.63	0.03	6/17/2022 12:52	-0.05
6/17/2022 11:52	12.07	0.10	6/18/2022 13:36	11.57	0.06	6/17/2022 11:39	11.59	0.05	6/17/2022 12:53	-0.08
6/17/2022 11:53	12.07	0.12	6/18/2022 13:37	11.58	0.01	6/17/2022 11:40	11.64	0.02	6/17/2022 12:54	-0.03
6/17/2022 11:54	12.05	0.13	6/18/2022 13:38	11.57	-0.06	6/17/2022 11:41	11.61	-0.01	6/17/2022 12:55	-0.03
6/17/2022 11:55	12.06	0.10	6/18/2022 13:39	11.57	0.00	6/17/2022 11:42	11.62	-0.02	6/17/2022 12:56	-0.03
6/17/2022 11:56	12.06	0.05	6/18/2022 13:40	11.56	-0.06	6/17/2022 11:43	11.61	0.00	6/17/2022 12:57	-0.03
6/17/2022 11:57	12.07	0.17	6/18/2022 13:41	11.60	-0.10	6/17/2022 11:44	11.63	0.05	6/17/2022 12:58	-0.05
6/17/2022 11:58	12.05	0.09	6/18/2022 13:42	11.59	-0.06	6/17/2022 11:45	11.61	0.02	6/17/2022 12:59	-0.01

6/17/2022 11:59	12.08	0.09	6/18/2022 13:43	11.59	-0.03	6/17/2022 11:46	11.61	-0.03	6/17/2022 13:00	-0.06
6/17/2022 12:00	12.07	0.14	6/18/2022 13:44	11.57	0.06	6/17/2022 11:47	11.62	-0.02	6/17/2022 13:01	-0.02
6/17/2022 12:01	12.06	0.15	6/18/2022 13:45	11.58	-0.03	6/17/2022 11:48	11.60	-0.03	6/17/2022 13:02	0.04
6/17/2022 12:02	12.09	0.15	6/18/2022 13:46	11.59	-0.05	6/17/2022 11:49	11.63	-0.02	6/17/2022 13:03	-0.08
6/17/2022 12:03	12.05	0.11	6/18/2022 13:47	11.60	-0.06	6/17/2022 11:50	11.62	0.02	6/17/2022 13:04	-0.03
6/17/2022 12:04	12.04	0.15	6/18/2022 13:48	11.55	0.02	6/17/2022 11:51	11.60	0.02	6/17/2022 13:05	-0.02
6/17/2022 12:05	12.06	0.09	6/18/2022 13:49	11.57	-0.06	6/17/2022 11:52	11.60	0.02	6/17/2022 13:06	-0.08
6/17/2022 12:06	12.06	0.13	6/18/2022 13:50	11.56	0.06	6/17/2022 11:53	11.62	-0.01	6/17/2022 13:07	-0.05
6/17/2022 12:07	12.07	0.11	6/18/2022 13:51	11.56	-0.10	6/17/2022 11:54	11.62	0.02	6/17/2022 13:08	0.01
6/17/2022 12:08	12.09	0.13	6/18/2022 13:52	11.59	0.00	6/17/2022 11:55	11.58	0.00	6/17/2022 13:09	0.00
6/17/2022 12:09	12.07	0.13	6/18/2022 13:53	11.56	0.03	6/17/2022 11:56	11.61	0.03	6/17/2022 13:10	0.02
6/17/2022 12:10	12.07	0.12	6/18/2022 13:54	11.59	0.01	6/17/2022 11:57	11.63	0.00	6/17/2022 13:11	0.02
6/17/2022 12:11	12.06	0.10	6/18/2022 13:55	11.59	-0.02	6/17/2022 11:58	11.60	0.06	6/17/2022 13:12	-0.02
6/17/2022 12:12	12.09	0.11	6/18/2022 13:56	11.57	0.00	6/17/2022 11:59	11.62	0.01	6/17/2022 13:13	-0.04
6/17/2022 12:13	12.08	0.08	6/18/2022 13:57	11.58	-0.13	6/17/2022 12:00	11.62	-0.01	6/17/2022 13:14	-0.04
6/17/2022 12:14	12.06	0.11	6/18/2022 13:58	11.58	-0.04	6/17/2022 12:01	11.63	0.06	6/17/2022 13:15	0.01
6/17/2022 12:15	12.05	0.08	6/18/2022 13:59	11.57	-0.06	6/17/2022 12:02	11.60	0.05	6/17/2022 13:16	-0.03
6/17/2022 12:16	12.09	0.11	6/18/2022 14:00	11.57	0.00	6/17/2022 12:03	11.63	0.01	6/17/2022 13:17	-0.01
6/17/2022 12:17	12.07	0.22	6/18/2022 14:01	11.56	-0.02	6/17/2022 12:04	11.60	-0.01	6/17/2022 13:18	-0.03
6/17/2022 12:18	12.08	0.06	6/18/2022 14:02	11.56	0.03	6/17/2022 12:05	11.62	0.02	6/17/2022 13:19	-0.07
6/17/2022 12:19	12.08	0.08	6/18/2022 14:03	11.59	-0.05	6/17/2022 12:06	11.62	-0.02	6/17/2022 13:20	-0.03
6/17/2022 12:20	12.04	0.10	6/18/2022 14:04	11.61	-0.04	6/17/2022 12:07	11.62	0.00	6/17/2022 13:24	-0.01
6/17/2022 12:21	12.07	0.12	6/18/2022 14:05	11.55	0.02	6/17/2022 12:08	11.60	0.03	6/17/2022 13:25	-0.01
6/17/2022 12:22	12.06	0.14	6/18/2022 14:06	11.59	-0.10	6/17/2022 12:09	11.62	0.02	6/17/2022 13:26	-0.05
6/17/2022 12:23	12.08	0.15	6/18/2022 14:07	11.57	-0.07	6/17/2022 12:10	11.62	-0.04	6/17/2022 13:27	-0.07
6/17/2022 12:24	12.08	0.13	6/18/2022 14:08	11.58	0.02	6/17/2022 12:11	11.62	-0.01	6/17/2022 13:28	-0.05
6/17/2022 12:25	12.07	0.08	6/18/2022 14:09	11.57	0.02	6/17/2022 12:12	11.60	-0.03	6/17/2022 13:29	-0.06
6/17/2022 12:26	12.07	0.04	6/18/2022 14:10	11.58	0.01	6/17/2022 12:13	11.63	0.04	6/17/2022 13:30	-0.05
6/17/2022 12:27	12.07	0.12	6/18/2022 14:11	11.59	-0.06	6/17/2022 12:14	11.63	0.01	6/17/2022 13:31	-0.04
6/17/2022 12:28	12.06	0.12	6/18/2022 14:12	11.58	-0.09	6/17/2022 12:15	11.60	0.00	6/17/2022 13:32	-0.09
6/17/2022 12:29	12.04	0.08	6/18/2022 14:13	11.58	0.02	6/17/2022 12:16	11.60	-0.02	6/17/2022 13:33	-0.08
6/17/2022 12:30	12.05	0.17	6/18/2022 14:14	11.57	0.01	6/17/2022 12:17	11.60	-0.03	6/17/2022 13:34	-0.04
6/17/2022 12:31	12.07	0.11	6/18/2022 14:15	11.56	-0.09	6/17/2022 12:18	11.63	-0.02	6/17/2022 13:35	-0.04
6/17/2022 12:32	12.07	0.08	6/18/2022 14:16	11.57	-0.06	6/17/2022 12:19	11.61	-0.03	6/17/2022 13:36	-0.02
6/17/2022 12:33	12.08	0.08	6/18/2022 14:17	11.58	-0.07	6/17/2022 12:20	11.64	-0.02	6/17/2022 13:37	-0.09
6/17/2022 12:34	12.06	0.05	6/18/2022 14:18	11.57	-0.01	6/17/2022 12:21	11.61	0.00	6/17/2022 13:38	-0.05
6/17/2022 12:35	12.06	0.20	6/18/2022 14:19	11.60	0.11	6/17/2022 12:22	11.62	0.00	6/17/2022 13:39	-0.12
6/17/2022 12:36	12.04	0.03	6/18/2022 14:20	11.59	-0.03	6/17/2022 12:23	11.59	0.00	6/17/2022 13:40	-0.02
6/17/2022 12:37	12.10	0.14	6/18/2022 14:21	11.56	-0.05	6/17/2022 12:24	11.62	0.00	6/17/2022 13:41	-0.07
6/17/2022 12:38	12.08	0.14	6/18/2022 14:22	11.56	-0.01	6/17/2022 12:25	11.62	-0.02	6/17/2022 13:42	-0.05
6/17/2022 12:39	12.06	0.13	6/18/2022 14:23	11.57	-0.02	6/17/2022 12:26	11.59	0.03	6/17/2022 13:43	-0.10
6/17/2022 12:40	12.07	0.11	6/18/2022 14:24	11.57	0.05	6/17/2022 12:27	11.61	0.01	6/17/2022 13:44	-0.03
6/17/2022 12:41	12.09	0.06	6/18/2022 14:25	11.56	0.00	6/17/2022 12:28	11.60	0.01	6/17/2022 13:45	-0.03
6/17/2022 12:42	12.06	0.17	6/18/2022 14:26	11.58	-0.01	6/17/2022 12:29	11.60	0.03	6/17/2022 13:46	-0.05
6/17/2022 12:43	12.06	0.12	6/18/2022 14:27	11.58	-0.03	6/17/2022 12:30	11.63	0.00	6/17/2022 13:47	-0.07
6/17/2022 12:44	12.07	0.15	6/18/2022 14:28	11.58	-0.06	6/17/2022 12:31	11.63	-0.01	6/17/2022 13:48	-0.05
6/17/2022 12:45	12.06	0.11	6/18/2022 14:29	11.59	-0.02	6/17/2022 12:32	11.62	0.04	6/17/2022 13:49	-0.05
6/17/2022 12:46	12.08	0.08	6/18/2022 14:30	11.58	-0.06	6/17/2022 12:33	11.59	0.02	6/17/2022 13:50	-0.09
6/17/2022 12:47	12.12	0.30	6/18/2022 14:31	11.56	-0.04	6/17/2022 12:34	11.61	-0.01	6/17/2022 13:51	-0.08
6/17/2022 12:48	12.08	0.17	6/18/2022 14:32	11.57	-0.05	6/17/2022 12:35	11.63	0.04	6/17/2022 13:52	-0.09
6/17/2022 12:49	12.06	0.09	6/18/2022 14:33	11.58	0.00	6/17/2022 12:36	11.59	-0.01	6/17/2022 13:53	-0.09
6/17/2022 12:50	12.09	0.16	6/18/2022 14:34	11.58	0.03	6/17/2022 12:37	11.61	0.00	6/17/2022 13:54	-0.06
6/17/2022 12:51	12.07	0.08	6/18/2022 14:35	11.57	-0.04	6/17/2022 12:38	11.63	0.00	6/17/2022 13:55	-0.09
6/17/2022 12:52	12.04	0.12	6/18/2022 14:36	11.56	0.02	6/17/2022 12:39	11.63	-0.01	6/17/2022 13:56	-0.07
6/17/2022 12:53	12.06	0.06	6/18/2022 14:37	11.57	0.00	6/17/2022 12:40	11.62	0.02	6/17/2022 13:57	-0.04
6/17/2022 12:54	12.06	0.11	6/18/2022 14:38	11.59	0.06	6/17/2022 12:41	11.62	0.00	6/17/2022 13:58	-0.04
6/17/2022 12:55	12.07	0.10	6/18/2022 14:39	11.56	-0.04	6/17/2022 12:42	11.60	0.01	6/17/2022 13:59	-0.02
6/17/2022 12:56	12.06	0.16	6/18/2022 14:40	11.59	-0.05	6/17/2022 12:43	11.61	0.01	6/17/2022 14:00	-0.06
6/17/2022 12:57	12.05	0.14	6/18/2022 14:41	11.59	0.07	6/17/2022 12:44	11.61	0.02	6/17/2022 14:01	-0.08
6/17/2022 12:58	12.06	0.20	6/18/2022 14:42	11.61	0.02	6/17/2022 12:45	11.62	-0.02	6/17/2022 14:02	-0.09
6/17/2022 12:59	12.07	0.07	6/18/2022 14:43	11.57	0.00	6/17/2022 12:46	11.63	0.00	6/17/2022 14:03	-0.12
6/17/2022 13:00	12.06	0.07	6/18/2022 14:44	11.57	0.04	6/17/2022 12:47	11.63	0.02	6/17/2022 14:04	-0.08
6/17/2022 13:01	12.06	0.21	6/18/2022 14:45	11.60	0.00	6/17/2022 12:48	11.63	0.03	6/17/2022 14:05	0.01
6/17/2022 13:02	12.05	0.14	6/18/2022 14:46	11.58	-0.05	6/17/2022 12:49	11.61	0.04	6/17/2022 14:06	-0.12
6/17/2022 13:03	12.07	0.10	6/18/2022 14:47	11.57	0.03	6/17/2022 12:50	11.62	0.02	6/17/2022 14:07	-0.10
6/17/2022 13:04	12.07	0.08	6/18/2022 14:48	11.61	-0.04	6/17/2022 12:51	11.61	-0.05	6/17/2022 14:08	-0.12
6/17/2022 13:05	12.03	0.16	6/18/2022 14:49	11.57	-0.08	6/17/2022 12:52	11.62	0.01	6/17/2022 14:09	-0.13
6/17/2022 13:06	12.04	0.19	6/18/2022 14:50	11.59	-0.02	6/17/2022 12:53	11.61	-0.01	6/17/2022 14:10	-0.04
6/17/2022 13:07	12.07	0.17	6/18/2022 14:51	11.60	-0.01	6/17/2022 12:54	11.60	0.01	6/17/2022 14:11	-0.05
6/17/2022 13:08	12.05	0.08	6/18/2022 14:52	11.58	-0.03	6/17/2022 12:55	11.62	0.01	6/17/2022 14:12	-0.09
6/17/2022 13:09	12.04	0.17	6/18/2022 14:53	11.58	0.05	6/17/2022 12:56	11.63	-0.02	6/17/2022 14:13	-0.08
6/17/2022 13:10	12.07	0.09	6/18/2022 14:54	11.58	0.05	6/17/2022 12:57	11.63	0.03	6/17/2022 14:14	-0.11
6/17/2022 13:11	12.10	0.12	6/18/2022 14:55	11.56	0.08	6/17/2022 12:58	11.60	0.00	6/17/2022 14:15	-0.06
6/17/2022 13:12	12.06	0.11	6/18/2022 14:56	11.57	0.04	6/17/2022 12:59	11.61	-0.03	6/17/2022 14:16	-0.10
6/17/2022 13:13	12.06	0.11	6/18/2022 14:57	11.60	-0.02	6/17/2022 13:00	11.63	-0.02	6/17/2022 14:17	-0.12
6/17/2022 13:14	12.07	0.15	6/18/2022 14:58	11.57	-0.07	6/17/2022 13:01	11.61	-0.01	6/17/2022 14:18	-0.11
6/17/2022 13:15	12.08	0.19	6/18/2022 14:59	11.57	0.03	6/17/2022 13:02	11.61	-0.02	6/17/2022 14:19	-0.05
6/17/2022 13:16	12.08	0.11	6/18/2022 15:00	11.57	-0.09	6/17/2022 13:03	11.61	0.04	6/17/2022 14:20	-0.07
6/17/2022 13:17	12.07	0.08	6/18/2022 15:01	11.59	0.05	6/17/2022 13:04	11.61	0.03	6/17/2022 14:21	-0.08
6/17/2022 13:18	12.07	0.12	6/18/2022 15:02	11.58	-0.06	6/17/2022 13:05	11.64	0.02	6/17/2022 14:22	-0.06
6/17/2022 13:19	12.08	0.19	6/18/2022 15:03	11.58	-0.04	6/17/2022 13:06	11.62	0.01	6/17/2022 14:23	-0.07
6/17/2022 13:20	12.06	0.14	6/18/2022 15:04	11.57	0.04	6/17/2022 13:07	11.61	-0.01	6/17/2022 14:24	-0.03
6/17/2022 13:21	12.05	0.13	6/18/2022 15:05	11.57	0.02	6/17/2022 13:08	11.65	0.00	6/17/2022 14:25	-0.05
6/17/2022 13:22	12.06	0.11	6/18/2022 15:06	11.55	-0.10	6/17/2022 13:09	11.62	-0.01	6/17/2022 14:26	-0.03
6/17/2022 13:23	12.08	0.06	6/18/2022 15:07	11.57	-0.02	6/17/2022 13:10	11.62	-0.02	6/17/2022 14:27	-0.06
6/17/2022 13:24	12.06	0.11	6/18/2022 15:08	11.58	-0.01	6/17/2022 13:11	11.61	-0.01	6/17/2022 14:28	-0.01
6/17/2022 13:25	12.07	0.17	6/18/2022 15:09	11.58	-0.03	6/17/2022 13:12	11.62	0.02	6/17/2022 14:29	-0.03
6/17/2022 13:26	12.06	0.13	6/18/2022 15:10	11.57	0.02	6/17/2022 13:13	11.62	-0.02	6/17/2022 14:30	-0.01

6/17/2022 13:27	12.06	0.13	6/18/2022 15:11	11.57	-0.01	6/17/2022 13:14	11.63	0.01	6/17/2022 14:31	-0.07
6/17/2022 13:28	12.07	0.10	6/18/2022 15:12	11.58	0.06	6/17/2022 13:15	11.57	0.03	6/17/2022 14:32	-0.03
6/17/2022 13:29	12.08	0.07	6/18/2022 15:13	11.58	-0.10	6/17/2022 13:16	11.62	0.03	6/17/2022 14:33	-0.06
6/17/2022 13:30	12.08	0.17	6/18/2022 15:14	11.58	-0.03	6/17/2022 13:17	11.63	0.00	6/17/2022 14:34	-0.07
6/17/2022 13:31	12.08	0.08	6/18/2022 15:15	11.58	-0.01	6/17/2022 13:18	11.61	-0.03	6/17/2022 14:35	-0.05
6/17/2022 13:32	12.05	0.17	6/18/2022 15:16	11.58	0.01	6/17/2022 13:19	11.63	0.02	6/17/2022 14:36	-0.07
6/17/2022 13:33	12.08	0.11	6/18/2022 15:17	11.60	-0.04	6/17/2022 13:20	11.62	-0.01	6/17/2022 14:37	-0.06
6/17/2022 13:34	12.06	0.11	6/18/2022 15:18	11.59	-0.09	6/17/2022 13:21	11.63	-0.05	6/17/2022 14:38	-0.09
6/17/2022 13:35	12.07	0.19	6/18/2022 15:19	11.58	0.06	6/17/2022 13:22	11.62	-0.01	6/17/2022 14:39	-0.09
6/17/2022 13:36	12.08	0.04	6/18/2022 15:20	11.57	-0.01	6/17/2022 13:23	11.61	0.03	6/17/2022 14:40	-0.06
6/17/2022 13:37	12.08	0.07	6/18/2022 15:21	11.57	-0.03	6/17/2022 13:24	11.62	0.02	6/17/2022 14:41	-0.09
6/17/2022 13:38	12.09	0.13	6/18/2022 15:22	11.58	0.02	6/17/2022 13:25	11.62	-0.01	6/17/2022 14:42	-0.08
6/17/2022 13:39	12.06	0.05	6/18/2022 15:23	11.59	-0.05	6/17/2022 13:26	11.60	0.06	6/17/2022 14:43	-0.08
6/17/2022 13:40	12.06	0.07	6/18/2022 15:24	11.58	0.05	6/17/2022 13:27	11.61	0.01	6/17/2022 14:44	-0.06
6/17/2022 13:41	12.06	0.09	6/18/2022 15:25	11.57	0.06	6/17/2022 13:28	11.60	0.04	6/17/2022 14:45	-0.09
6/17/2022 13:42	12.08	0.16	6/18/2022 15:26	11.58	-0.08	6/17/2022 13:29	11.61	-0.02	6/17/2022 14:46	-0.10
6/17/2022 13:43	12.06	0.11	6/18/2022 15:27	11.61	-0.12	6/17/2022 13:30	11.62	-0.02	6/17/2022 14:47	-0.08
6/17/2022 13:44	12.08	0.10	6/18/2022 15:28	11.56	0.02	6/17/2022 13:31	11.62	-0.02	6/17/2022 14:48	-0.10
6/17/2022 13:45	12.05	0.17	6/18/2022 15:29	11.55	-0.05	6/17/2022 13:32	11.62	0.00	6/17/2022 14:49	-0.04
6/17/2022 13:46	12.08	0.09	6/18/2022 15:30	11.58	-0.02	6/17/2022 13:33	11.63	-0.03	6/17/2022 14:50	-0.05
6/17/2022 13:47	12.06	0.07	6/18/2022 15:31	11.59	-0.05	6/17/2022 13:34	11.64	-0.01	6/17/2022 14:51	-0.09
6/17/2022 13:48	12.06	0.13	6/18/2022 15:32	11.58	-0.02	6/17/2022 13:35	11.61	0.00	6/17/2022 14:52	-0.03
6/17/2022 13:49	12.07	0.10	6/18/2022 15:33	11.58	-0.02	6/17/2022 13:36	11.60	0.00	6/17/2022 14:53	-0.08
6/17/2022 13:50	12.08	0.17	6/18/2022 15:34	11.56	0.04	6/17/2022 13:37	11.61	0.00	6/17/2022 14:54	-0.07
6/17/2022 13:51	12.04	0.12	6/18/2022 15:35	11.56	-0.10	6/17/2022 13:38	11.61	0.01	6/17/2022 14:55	-0.06
6/17/2022 13:52	12.07	0.13	6/18/2022 15:36	11.54	-0.09	6/17/2022 13:39	11.60	-0.04	6/17/2022 14:56	-0.08
6/17/2022 13:53	12.09	0.18	6/18/2022 15:37	11.59	-0.07	6/17/2022 13:40	11.62	-0.02	6/17/2022 14:57	-0.10
6/17/2022 13:54	12.05	0.09	6/18/2022 15:38	11.57	-0.02	6/17/2022 13:41	11.62	-0.03	6/17/2022 14:58	-0.04
6/17/2022 13:55	12.04	0.24	6/18/2022 15:39	11.57	-0.03	6/17/2022 13:42	11.64	-0.01	6/17/2022 14:59	-0.05
6/17/2022 13:56	12.07	0.16	6/18/2022 15:40	11.58	-0.02	6/17/2022 13:43	11.61	0.03	6/17/2022 15:00	-0.08
6/17/2022 13:57	12.07	0.17	6/18/2022 15:41	11.59	-0.06	6/17/2022 13:44	11.58	-0.04	6/17/2022 15:01	-0.07
6/17/2022 13:58	12.05	0.10	6/18/2022 15:42	11.58	-0.10	6/17/2022 13:45	11.63	-0.05	6/17/2022 15:02	-0.06
6/17/2022 13:59	12.05	0.20	6/18/2022 15:43	11.58	-0.04	6/17/2022 13:46	11.63	-0.04	6/17/2022 15:03	-0.05
6/17/2022 14:00	12.08	0.09	6/18/2022 15:44	11.57	-0.06	6/17/2022 13:47	11.61	-0.01	6/17/2022 15:04	-0.07
6/17/2022 14:01	12.05	0.03	6/18/2022 15:45	11.59	0.04	6/17/2022 13:48	11.64	0.01	6/17/2022 15:05	-0.03
6/17/2022 14:02	12.09	0.16	6/18/2022 15:46	11.58	-0.04	6/17/2022 13:49	11.62	0.02	6/17/2022 15:06	-0.03
6/17/2022 14:03	12.09	0.11	6/18/2022 15:47	11.59	-0.06	6/17/2022 13:50	11.64	-0.01	6/17/2022 15:07	-0.06
6/17/2022 14:04	12.07	0.22	6/18/2022 15:48	11.57	-0.03	6/17/2022 13:51	11.60	0.00	6/17/2022 15:08	-0.06
6/17/2022 14:05	12.08	0.15	6/18/2022 15:49	11.58	-0.08	6/17/2022 13:52	11.63	0.00	6/17/2022 15:09	-0.10
6/17/2022 14:06	12.07	0.15	6/18/2022 15:50	11.59	0.02	6/17/2022 13:53	11.60	0.02	6/17/2022 15:10	-0.04
6/17/2022 14:07	12.10	0.14	6/18/2022 15:51	11.58	-0.03	6/17/2022 13:54	11.61	0.00	6/17/2022 15:11	-0.08
6/17/2022 14:08	12.07	0.17	6/18/2022 15:52	11.57	0.04	6/17/2022 13:55	11.62	0.00	6/17/2022 15:12	-0.08
6/17/2022 14:09	12.08	0.07	6/18/2022 15:53	11.60	-0.02	6/17/2022 13:56	11.60	-0.03	6/17/2022 15:13	-0.05
6/17/2022 14:10	12.07	0.06	6/18/2022 15:54	11.58	0.00	6/17/2022 13:57	11.64	-0.04	6/17/2022 15:14	-0.05
6/17/2022 14:11	12.06	0.16	6/18/2022 15:55	11.56	-0.03	6/17/2022 13:58	11.62	-0.01	6/17/2022 15:15	-0.06
6/17/2022 14:12	12.07	0.15	6/18/2022 15:56	11.58	-0.01	6/17/2022 13:59	11.62	-0.01	6/17/2022 15:16	-0.09
6/17/2022 14:13	12.07	0.16	6/18/2022 15:57	11.57	-0.01	6/17/2022 14:00	11.60	0.00	6/17/2022 15:17	0.00
6/17/2022 14:14	12.05	0.15	6/18/2022 15:58	11.58	-0.03	6/17/2022 14:01	11.59	-0.02	6/17/2022 15:18	-0.05
6/17/2022 14:15	12.05	0.21	6/18/2022 15:59	11.56	0.01	6/17/2022 14:02	11.63	0.03	6/17/2022 15:19	-0.07
6/17/2022 14:16	12.06	0.10	6/18/2022 16:00	11.59	-0.05	6/17/2022 14:03	11.63	0.00	6/17/2022 15:20	-0.06
6/17/2022 14:17	12.06	0.16	6/18/2022 16:01	11.57	-0.03	6/17/2022 14:04	11.63	0.00	6/17/2022 15:21	-0.10
6/17/2022 14:18	12.06	0.17	6/18/2022 16:02	11.59	-0.04	6/17/2022 14:05	11.62	0.00	6/17/2022 15:22	0.02
6/17/2022 14:19	12.07	0.20	6/18/2022 16:03	11.57	-0.02	6/17/2022 14:06	11.60	-0.03	6/17/2022 15:23	-0.09
6/17/2022 14:20	12.09	0.06	6/18/2022 16:04	11.56	0.00	6/17/2022 14:07	11.62	-0.01	6/17/2022 15:24	-0.02
6/17/2022 14:21	12.06	0.07	6/18/2022 16:05	11.58	-0.11	6/17/2022 14:08	11.62	-0.02	6/17/2022 15:25	-0.03
6/17/2022 14:22	12.04	0.04	6/18/2022 16:06	11.57	-0.02	6/17/2022 14:09	11.59	0.00	6/17/2022 15:26	-0.04
6/17/2022 14:23	12.05	0.11	6/18/2022 16:07	11.60	-0.02	6/17/2022 14:10	11.61	0.01	6/17/2022 15:27	-0.06
6/17/2022 14:24	12.10	0.11	6/18/2022 16:08	11.56	-0.05	6/17/2022 14:11	11.63	-0.02	6/17/2022 15:28	-0.02
6/17/2022 14:25	12.07	0.12	6/18/2022 16:09	11.58	-0.04	6/17/2022 14:12	11.62	0.00	6/17/2022 15:29	-0.05
6/17/2022 14:26	12.06	0.11	6/18/2022 16:10	11.57	-0.04	6/17/2022 14:13	11.61	-0.04	6/17/2022 15:30	-0.06
6/17/2022 14:27	12.09	0.14	6/18/2022 16:11	11.57	-0.02	6/17/2022 14:14	11.59	0.01	6/17/2022 15:31	-0.07
6/17/2022 14:28	12.06	0.09	6/18/2022 16:12	11.57	-0.06	6/17/2022 14:15	11.61	0.02	6/17/2022 15:32	-0.06
6/17/2022 14:29	12.07	0.20	6/18/2022 16:13	11.58	0.02	6/17/2022 14:16	11.62	0.01	6/17/2022 15:33	-0.07
6/17/2022 14:30	12.07	0.14	6/18/2022 16:14	11.58	0.07	6/17/2022 14:17	11.60	-0.02	6/17/2022 15:34	-0.03
6/17/2022 14:31	12.07	0.10	6/18/2022 16:15	11.58	0.00	6/17/2022 14:18	11.62	0.00	6/17/2022 15:35	-0.07
6/17/2022 14:32	12.06	0.17	6/18/2022 16:16	11.57	-0.04	6/17/2022 14:19	11.60	0.02	6/17/2022 15:36	-0.06
6/17/2022 14:33	12.06	0.27	6/18/2022 16:17	11.60	-0.05	6/17/2022 14:20	11.61	-0.02	6/17/2022 15:37	-0.05
6/17/2022 14:34	12.05	0.01	6/18/2022 16:18	11.58	0.00	6/17/2022 14:21	11.63	-0.03	6/17/2022 15:38	-0.06
6/17/2022 14:35	12.06	0.08	6/18/2022 16:19	11.55	-0.01	6/17/2022 14:22	11.58	-0.01	6/17/2022 15:39	-0.09
6/17/2022 14:36	12.07	0.13	6/18/2022 16:20	11.56	-0.07	6/17/2022 14:23	11.60	0.01	6/17/2022 15:40	-0.04
6/17/2022 14:37	12.08	0.13	6/18/2022 16:21	11.56	-0.06	6/17/2022 14:24	11.63	-0.01	6/17/2022 15:41	-0.12
6/17/2022 14:38	12.07	0.09	6/18/2022 16:22	11.56	-0.08	6/17/2022 14:25	11.62	0.00	6/17/2022 15:42	-0.11
6/17/2022 14:39	12.08	0.06	6/18/2022 16:23	11.57	0.03	6/17/2022 14:26	11.62	-0.03	6/17/2022 15:43	-0.06
6/17/2022 14:40	12.08	0.27	6/18/2022 16:24	11.58	-0.05	6/17/2022 14:27	11.61	-0.03	6/17/2022 15:44	-0.09
6/17/2022 14:41	12.09	0.06	6/18/2022 16:25	11.58	0.07	6/17/2022 14:28	11.60	-0.01	6/17/2022 15:45	-0.01
6/17/2022 14:42	12.09	0.05	6/18/2022 16:26	11.60	-0.05	6/17/2022 14:29	11.63	-0.01	6/17/2022 15:46	-0.04
6/17/2022 14:43	12.09	0.08	6/18/2022 16:27	11.56	0.03	6/17/2022 14:30	11.62	-0.01	6/17/2022 15:47	-0.07
6/17/2022 14:44	12.07	0.06	6/18/2022 16:28	11.55	-0.05	6/17/2022 14:31	11.62	-0.02	6/17/2022 15:48	-0.09
6/17/2022 14:45	12.09	0.20	6/18/2022 16:29	11.59	0.00	6/17/2022 14:32	11.61	0.02	6/17/2022 15:49	-0.10
6/17/2022 14:46	12.06	0.16	6/18/2022 16:30	11.58	0.01	6/17/2022 14:33	11.61	-0.01	6/17/2022 15:50	-0.06
6/17/2022 14:47	12.07	0.15	6/18/2022 16:31	11.58	-0.03	6/17/2022 14:34	11.60	-0.01	6/17/2022 15:51	-0.09
6/17/2022 14:48	12.05	0.21	6/18/2022 16:32	11.59	-0.03	6/17/2022 14:35	11.62	-0.05	6/17/2022 15:52	-0.08
6/17/2022 14:49	12.10	0.08	6/18/2022 16:33	11.59	-0.07	6/17/2022 14:36	11.63	-0.02	6/17/2022 15:53	-0.05
6/17/2022 14:50	12.09	0.11	6/18/2022 16:34	11.57	0.03	6/17/2022 14:37	11.61	-0.02	6/17/2022 15:54	-0.06
6/17/2022 14:51	12.05	0.19	6/18/2022 16:35	11.58	-0.07	6/17/2022 14:38	11.61	0.00	6/17/2022 15:55	-0.03
6/17/2022 14:52	12.05	0.08	6/18/2022 16:36	11.56	-0.03	6/17/2022 14:39	11.60	0.00	6/17/2022 15:56	-0.07
6/17/2022 14:53	12.08	0.13	6/18/2022 16:37	11.59	-0.11	6/17/2022 14:40	11.62	0.03	6/17/2022 15:57	-0.10
6/17/2022 14:54	12.08	0.16	6/18/2022 16:38	11.58	0.05	6/17/2022 14:41	11.62	0.01	6/17/2022 15:58	-0.06

6/17/2022 14:55	12.07	0.11	6/18/2022 16:39	11.57	-0.02	6/17/2022 14:42	11.63	0.00	6/17/2022 15:59	-0.07
6/17/2022 14:56	12.06	0.08	6/18/2022 16:40	11.56	-0.04	6/17/2022 14:43	11.64	-0.03	6/17/2022 16:00	-0.06
6/17/2022 14:57	12.07	0.19	6/18/2022 16:41	11.57	0.06	6/17/2022 14:44	11.62	0.00	6/17/2022 16:01	-0.09
6/17/2022 14:58	12.03	0.12	6/18/2022 16:42	11.59	0.01	6/17/2022 14:45	11.60	0.00	6/17/2022 16:02	-0.01
6/17/2022 14:59	12.07	0.16	6/18/2022 16:43	11.56	0.10	6/17/2022 14:46	11.59	-0.01	6/17/2022 16:03	-0.05
6/17/2022 15:00	12.07	0.16	6/18/2022 16:44	11.55	0.02	6/17/2022 14:47	11.62	-0.01	6/17/2022 16:04	-0.07
6/17/2022 15:01	12.06	0.10	6/18/2022 16:45	11.58	-0.08	6/17/2022 14:48	11.61	-0.01	6/17/2022 16:05	-0.05
6/17/2022 15:02	12.05	0.06	6/18/2022 16:46	11.59	-0.08	6/17/2022 14:49	11.63	-0.01	6/17/2022 16:06	-0.04
6/17/2022 15:03	12.08	0.11	6/18/2022 16:47	11.59	-0.08	6/17/2022 14:50	11.62	0.03	6/17/2022 16:07	-0.03
6/17/2022 15:04	12.08	0.16	6/18/2022 16:48	11.59	0.03	6/17/2022 14:51	11.62	0.03	6/17/2022 16:08	0.02
6/17/2022 15:05	12.06	0.10	6/18/2022 16:49	11.55	-0.07	6/17/2022 14:52	11.63	-0.01	6/17/2022 16:09	-0.06
6/17/2022 15:06	12.05	0.16	6/18/2022 16:50	11.58	-0.01	6/17/2022 14:53	11.63	0.00	6/17/2022 16:10	-0.04
6/17/2022 15:07	12.07	0.14	6/18/2022 16:51	11.58	-0.03	6/17/2022 14:54	11.62	0.00	6/17/2022 16:11	-0.05
6/17/2022 15:08	12.09	0.11	6/18/2022 16:52	11.57	-0.07	6/17/2022 14:55	11.63	0.01	6/17/2022 16:12	-0.08
6/17/2022 15:09	12.07	0.08	6/18/2022 16:53	11.57	-0.02	6/17/2022 14:56	11.61	-0.02	6/17/2022 16:13	-0.02
6/17/2022 15:10	12.06	0.13	6/18/2022 16:54	11.57	-0.01	6/17/2022 14:57	11.63	-0.02	6/17/2022 16:14	-0.03
6/17/2022 15:11	12.05	0.12	6/18/2022 16:55	11.55	0.02	6/17/2022 14:58	11.64	-0.02	6/17/2022 16:15	-0.04
6/17/2022 15:12	12.05	0.13	6/18/2022 16:56	11.55	0.01	6/17/2022 14:59	11.62	-0.02	6/17/2022 16:16	-0.07
6/17/2022 15:13	12.07	0.13	6/18/2022 16:57	11.58	-0.07	6/17/2022 15:00	11.61	-0.03	6/17/2022 16:17	-0.07
6/17/2022 15:14	12.07	0.14	6/18/2022 16:58	11.60	-0.12	6/17/2022 15:01	11.59	0.01	6/17/2022 16:18	-0.04
6/17/2022 15:15	12.09	0.12	6/18/2022 16:59	11.59	-0.07	6/17/2022 15:02	11.62	-0.01	6/17/2022 16:19	-0.03
6/17/2022 15:16	12.07	0.04	6/18/2022 17:00	11.57	-0.01	6/17/2022 15:03	11.63	-0.01	6/17/2022 16:20	-0.04
6/17/2022 15:17	12.05	0.18	6/18/2022 17:01	11.57	0.02	6/17/2022 15:04	11.61	0.00	6/17/2022 16:21	-0.05
6/17/2022 15:18	12.06	0.11	6/18/2022 17:02	11.57	0.03	6/17/2022 15:05	11.60	-0.04	6/17/2022 16:22	-0.04
6/17/2022 15:19	12.05	0.12	6/18/2022 17:03	11.57	0.09	6/17/2022 15:06	11.63	-0.04	6/17/2022 16:23	-0.05
6/17/2022 15:20	12.05	0.13	6/18/2022 17:04	11.55	-0.06	6/17/2022 15:07	11.63	0.02	6/17/2022 16:24	-0.06
6/17/2022 15:21	12.05	0.05	6/18/2022 17:05	11.57	-0.10	6/17/2022 15:08	11.63	-0.02	6/17/2022 16:25	-0.07
6/17/2022 15:22	12.07	0.14	6/18/2022 17:06	11.57	-0.11	6/17/2022 15:09	11.59	-0.03	6/17/2022 16:26	-0.05
6/17/2022 15:23	12.08	0.09	6/18/2022 17:07	11.59	0.02	6/17/2022 15:10	11.65	-0.02	6/17/2022 16:27	-0.07
6/17/2022 15:24	12.04	0.13	6/18/2022 17:08	11.56	0.02	6/17/2022 15:11	11.63	-0.02	6/17/2022 16:28	-0.04
6/17/2022 15:25	12.05	0.12	6/18/2022 17:09	11.61	-0.05	6/17/2022 15:12	11.62	-0.01	6/17/2022 16:29	-0.09
6/17/2022 15:26	12.07	0.07	6/18/2022 17:10	11.57	0.04	6/17/2022 15:13	11.62	-0.01	6/17/2022 16:30	-0.08
6/17/2022 15:27	12.07	0.06	6/18/2022 17:11	11.57	-0.05	6/17/2022 15:14	11.62	0.00	6/17/2022 16:31	-0.06
6/17/2022 15:28	12.07	0.07	6/18/2022 17:12	11.55	-0.04	6/17/2022 15:15	11.61	-0.02	6/17/2022 16:32	-0.11
6/17/2022 15:29	12.06	0.08	6/18/2022 17:13	11.57	-0.04	6/17/2022 15:16	11.63	0.00	6/17/2022 16:33	-0.04
6/17/2022 15:30	12.06	0.11	6/18/2022 17:14	11.58	0.01	6/17/2022 15:17	11.63	-0.02	6/17/2022 16:34	-0.03
6/17/2022 15:31	12.08	0.12	6/18/2022 17:15	11.58	-0.09	6/17/2022 15:18	11.62	-0.05	6/17/2022 16:35	-0.07
6/17/2022 15:32	12.06	0.08	6/18/2022 17:16	11.55	-0.09	6/17/2022 15:19	11.59	-0.02	6/17/2022 16:36	-0.06
6/17/2022 15:33	12.07	0.13	6/18/2022 17:17	11.59	-0.10	6/17/2022 15:20	11.60	-0.01	6/17/2022 16:37	-0.03
6/17/2022 15:34	12.10	0.08	6/18/2022 17:18	11.58	0.03	6/17/2022 15:21	11.64	-0.05	6/17/2022 16:38	-0.03
6/17/2022 15:35	12.05	0.16	6/18/2022 17:19	11.59	-0.03	6/17/2022 15:22	11.63	-0.05	6/17/2022 16:39	-0.06
6/17/2022 15:36	12.07	0.12	6/18/2022 17:20	11.58	-0.03	6/17/2022 15:23	11.62	0.02	6/17/2022 16:40	-0.06
6/17/2022 15:37	12.05	0.12	6/18/2022 17:21	11.58	-0.01	6/17/2022 15:24	11.62	-0.02	6/17/2022 16:41	-0.05
6/17/2022 15:38	12.07	0.10	6/18/2022 17:22	11.58	-0.01	6/17/2022 15:25	11.62	-0.01	6/17/2022 16:42	-0.05
6/17/2022 15:39	12.05	0.09	6/18/2022 17:23	11.58	-0.01	6/17/2022 15:26	11.60	-0.02	6/17/2022 16:43	-0.03
6/17/2022 15:40	12.07	0.12	6/18/2022 17:24	11.58	0.02	6/17/2022 15:27	11.61	-0.01	6/17/2022 16:44	-0.10
6/17/2022 15:41	12.07	0.16	6/18/2022 17:25	11.57	-0.05	6/17/2022 15:28	11.63	-0.03	6/17/2022 16:45	-0.04
6/17/2022 15:42	12.05	0.11	6/18/2022 17:26	11.58	-0.06	6/17/2022 15:29	11.61	0.03	6/17/2022 16:46	-0.11
6/17/2022 15:43	12.05	0.17	6/18/2022 17:27	11.57	0.01	6/17/2022 15:30	11.64	-0.01	6/17/2022 16:47	-0.09
6/17/2022 15:44	12.06	0.05	6/18/2022 17:28	11.59	-0.01	6/17/2022 15:31	11.60	0.00	6/17/2022 16:48	-0.08
6/17/2022 15:45	12.05	0.09	6/18/2022 17:29	11.58	-0.03	6/17/2022 15:32	11.62	0.03	6/17/2022 16:49	-0.09
6/17/2022 15:46	12.08	0.13	6/18/2022 17:30	11.54	-0.11	6/17/2022 15:33	11.60	-0.01	6/17/2022 16:50	-0.09
6/17/2022 15:47	12.06	0.15	6/18/2022 17:31	11.58	-0.04	6/17/2022 15:34	11.62	-0.05	6/17/2022 16:51	-0.07
6/17/2022 15:48	12.05	0.14	6/18/2022 17:32	11.59	0.00	6/17/2022 15:35	11.63	0.03	6/17/2022 16:52	-0.02
6/17/2022 15:49	12.04	0.11	6/18/2022 17:33	11.59	0.02	6/17/2022 15:36	11.64	0.01	6/17/2022 16:53	-0.07
6/17/2022 15:50	12.08	0.18	6/18/2022 17:34	11.56	-0.01	6/17/2022 15:37	11.64	-0.04	6/17/2022 16:54	-0.06
6/17/2022 15:51	12.09	0.11	6/18/2022 17:35	11.58	-0.01	6/17/2022 15:38	11.60	-0.02	6/17/2022 16:55	-0.06
6/17/2022 15:52	12.04	0.11	6/18/2022 17:36	11.58	0.01	6/17/2022 15:39	11.61	-0.04	6/17/2022 16:56	-0.05
6/17/2022 15:53	12.08	0.06	6/18/2022 17:37	11.58	-0.10	6/17/2022 15:40	11.60	0.01	6/17/2022 16:57	-0.05
6/17/2022 15:54	12.06	0.08	6/18/2022 17:38	11.59	-0.03	6/17/2022 15:41	11.62	-0.03	6/17/2022 16:58	-0.03
6/17/2022 15:55	12.05	0.08	6/18/2022 17:39	11.57	0.01	6/17/2022 15:42	11.63	-0.04	6/17/2022 16:59	-0.05
6/17/2022 15:56	12.07	0.16	6/18/2022 17:40	11.56	-0.02	6/17/2022 15:43	11.63	0.02	6/17/2022 17:00	-0.04
6/17/2022 15:57	12.06	0.06	6/18/2022 17:41	11.59	0.02	6/17/2022 15:44	11.59	0.01	6/17/2022 17:01	-0.05
6/17/2022 15:58	12.06	0.18	6/18/2022 17:42	11.57	0.02	6/17/2022 15:45	11.64	0.00	6/17/2022 17:02	-0.04
6/17/2022 15:59	12.07	0.13	6/18/2022 17:43	11.57	-0.05	6/17/2022 15:46	11.62	-0.03	6/17/2022 17:03	-0.07
6/17/2022 16:00	12.06	0.13	6/18/2022 17:44	11.58	-0.02	6/17/2022 15:47	11.63	0.00	6/17/2022 17:04	-0.08
6/17/2022 16:01	12.07	0.13	6/18/2022 17:45	11.55	-0.05	6/17/2022 15:48	11.61	-0.03	6/17/2022 17:05	-0.07
6/17/2022 16:02	12.06	0.07	6/18/2022 17:46	11.57	-0.01	6/17/2022 15:49	11.61	0.00	6/17/2022 17:06	-0.04
6/17/2022 16:03	12.09	0.15	6/18/2022 17:47	11.60	-0.04	6/17/2022 15:50	11.60	0.02	6/17/2022 17:07	-0.06
6/17/2022 16:04	12.05	0.15	6/18/2022 17:48	11.58	-0.10	6/17/2022 15:51	11.63	-0.02	6/17/2022 17:08	-0.06
6/17/2022 16:05	12.08	0.03	6/18/2022 17:49	11.58	-0.06	6/17/2022 15:52	11.61	-0.04	6/17/2022 17:09	-0.11
6/17/2022 16:06	12.08	0.08	6/18/2022 17:50	11.59	-0.03	6/17/2022 15:53	11.62	-0.03	6/17/2022 17:10	-0.10
6/17/2022 16:07	12.08	0.11	6/18/2022 17:51	11.55	0.01	6/17/2022 15:54	11.62	0.00	6/17/2022 17:11	-0.01
6/17/2022 16:08	12.07	0.14	6/18/2022 17:52	11.58	-0.04	6/17/2022 15:55	11.62	-0.03	6/17/2022 17:12	-0.09
6/17/2022 16:09	12.08	0.17	6/18/2022 17:53	11.57	0.07	6/17/2022 15:56	11.63	-0.01	6/17/2022 17:13	-0.05
6/17/2022 16:10	12.07	0.06	6/18/2022 17:54	11.55	0.03	6/17/2022 15:57	11.61	-0.01	6/17/2022 17:14	-0.09
6/17/2022 16:11	12.09	0.20	6/18/2022 17:55	11.57	-0.02	6/17/2022 15:58	11.61	-0.02	6/17/2022 17:15	-0.05
6/17/2022 16:12	12.07	0.12	6/18/2022 17:56	11.57	-0.04	6/17/2022 15:59	11.61	-0.04	6/17/2022 17:16	-0.08
6/17/2022 16:13	12.07	0.07	6/18/2022 17:57	11.54	-0.07	6/17/2022 16:00	11.62	0.01	6/17/2022 17:17	-0.01
6/17/2022 16:14	12.07	0.17	6/18/2022 17:58	11.58	0.01	6/17/2022 16:01	11.62	-0.02	6/17/2022 17:18	-0.05
6/17/2022 16:15	12.06	0.06	6/18/2022 17:59	11.60	-0.02	6/17/2022 16:02	11.62	0.02	6/17/2022 17:19	-0.08
6/17/2022 16:16	12.08	0.10	6/18/2022 18:00	11.59	-0.03	6/17/2022 16:03	11.60	0.00	6/17/2022 17:20	-0.11
6/17/2022 16:17	12.06	0.18	6/18/2022 18:01	11.59	0.03	6/17/2022 16:04	11.63	-0.04	6/17/2022 17:21	-0.09
6/17/2022 16:18	12.06	0.15	6/18/2022 18:02	11.58	-0.04	6/17/2022 16:05	11.63	0.02	6/17/2022 17:22	0.02
6/17/2022 16:19	12.07	0.11	6/18/2022 18:03	11.62	-0.05	6/17/2022 16:06	11.61	-0.01	6/17/2022 17:23	-0.07
6/17/2022 16:20	12.07	0.16	6/18/2022 18:04	11.56	-0.02	6/17/2022 16:07	11.60	-0.02	6/17/2022 17:24	-0.06
6/17/2022 16:21	12.07	0.10	6/18/2022 18:05	11.58	-0.03	6/17/2022 16:08	11.60	0.00	6/17/2022 17:25	-0.06
6/17/2022 16:22	12.09	0.07	6/18/2022 18:06	11.57	-0.04	6/17/2022 16:09	11.61	-0.03	6/17/2022 17:26	-0.02

6/17/2022 16:23	12.06	0.16	6/18/2022 18:07	11.56	0.01	6/17/2022 16:10	11.61	-0.06	6/17/2022 17:27	-0.07
6/17/2022 16:24	12.05	0.15	6/18/2022 18:08	11.59	-0.09	6/17/2022 16:11	11.64	0.01	6/17/2022 17:28	-0.02
6/17/2022 16:25	12.07	0.04	6/18/2022 18:09	11.59	-0.07	6/17/2022 16:12	11.60	0.00	6/17/2022 17:29	-0.06
6/17/2022 16:26	12.04	0.13	6/18/2022 18:10	11.60	-0.05	6/17/2022 16:13	11.62	-0.05	6/17/2022 17:30	-0.07
6/17/2022 16:27	12.07	0.12	6/18/2022 18:11	11.55	-0.02	6/17/2022 16:14	11.60	-0.01	6/17/2022 17:31	-0.07
6/17/2022 16:28	12.05	0.14	6/18/2022 18:12	11.57	-0.07	6/17/2022 16:15	11.62	-0.01	6/17/2022 17:32	-0.06
6/17/2022 16:29	12.05	0.11	6/18/2022 18:13	11.58	-0.02	6/17/2022 16:16	11.62	-0.02	6/17/2022 17:33	-0.11
6/17/2022 16:30	12.05	0.08	6/18/2022 18:14	11.58	-0.01	6/17/2022 16:17	11.61	0.01	6/17/2022 17:34	-0.03
6/17/2022 16:31	12.08	0.01	6/18/2022 18:15	11.57	-0.01	6/17/2022 16:18	11.62	-0.05	6/17/2022 17:35	-0.10
6/17/2022 16:32	12.07	0.17	6/18/2022 18:16	11.58	-0.07	6/17/2022 16:19	11.61	-0.05	6/17/2022 17:36	-0.06
6/17/2022 16:33	12.05	0.11	6/18/2022 18:17	11.58	-0.02	6/17/2022 16:20	11.63	-0.04	6/17/2022 17:37	-0.06
6/17/2022 16:34	12.04	0.11	6/18/2022 18:18	11.57	-0.04	6/17/2022 16:21	11.60	-0.01	6/17/2022 17:38	-0.04
6/17/2022 16:35	12.04	0.12	6/18/2022 18:19	11.56	-0.12	6/17/2022 16:22	11.61	-0.04	6/17/2022 17:39	-0.08
6/17/2022 16:36	12.09	0.12	6/18/2022 18:20	11.58	-0.01	6/17/2022 16:23	11.61	0.00	6/17/2022 17:40	-0.07
6/17/2022 16:37	12.05	0.08	6/18/2022 18:21	11.54	-0.04	6/17/2022 16:24	11.59	0.01	6/17/2022 17:41	-0.08
6/17/2022 16:38	12.06	0.07	6/18/2022 18:22	11.56	0.01	6/17/2022 16:25	11.63	-0.02	6/17/2022 17:42	-0.11
6/17/2022 16:39	12.07	0.14	6/18/2022 18:23	11.57	0.00	6/17/2022 16:26	11.61	-0.01	6/17/2022 17:43	-0.08
6/17/2022 16:40	12.05	0.04	6/18/2022 18:24	11.58	-0.12	6/17/2022 16:27	11.62	-0.02	6/17/2022 17:44	-0.07
6/17/2022 16:41	12.06	0.06	6/18/2022 18:25	11.57	-0.02	6/17/2022 16:28	11.61	-0.01	6/17/2022 17:45	-0.07
6/17/2022 16:42	12.06	0.06	6/18/2022 18:26	11.57	-0.07	6/17/2022 16:29	11.64	-0.02	6/17/2022 17:46	-0.10
6/17/2022 16:43	12.05	0.07	6/18/2022 18:27	11.56	0.01	6/17/2022 16:30	11.63	-0.03	6/17/2022 17:47	-0.09
6/17/2022 16:44	12.08	0.01	6/18/2022 18:28	11.56	0.03	6/17/2022 16:31	11.61	0.01	6/17/2022 17:48	-0.12
6/17/2022 16:45	12.08	0.15	6/18/2022 18:29	11.57	-0.04	6/17/2022 16:32	11.62	-0.05	6/17/2022 17:49	-0.10
6/17/2022 16:46	12.09	0.06	6/18/2022 18:30	11.56	0.00	6/17/2022 16:33	11.63	0.00	6/17/2022 17:50	-0.05
6/17/2022 16:47	12.08	0.04	6/18/2022 18:31	11.57	0.02	6/17/2022 16:34	11.61	-0.03	6/17/2022 17:51	-0.06
6/17/2022 16:48	12.08	0.21	6/18/2022 18:32	11.55	-0.03	6/17/2022 16:35	11.62	-0.04	6/17/2022 17:52	-0.08
6/17/2022 16:49	12.07	0.11	6/18/2022 18:33	11.56	-0.12	6/17/2022 16:36	11.64	-0.04	6/17/2022 17:53	-0.09
6/17/2022 16:50	12.05	0.11	6/18/2022 18:34	11.57	-0.06	6/17/2022 16:37	11.61	-0.01	6/17/2022 17:54	-0.14
6/17/2022 16:51	12.07	0.19	6/18/2022 18:35	11.61	-0.02	6/17/2022 16:38	11.63	-0.02	6/17/2022 17:55	-0.11
6/17/2022 16:52	12.06	0.17	6/18/2022 18:36	11.57	-0.01	6/17/2022 16:39	11.61	-0.01	6/17/2022 17:56	-0.03
6/17/2022 16:53	12.07	0.08	6/18/2022 18:37	11.56	0.04	6/17/2022 16:40	11.63	-0.02	6/17/2022 17:57	-0.05
6/17/2022 16:54	12.04	0.07	6/18/2022 18:38	11.55	-0.01	6/17/2022 16:41	11.60	-0.05	6/17/2022 17:58	-0.01
6/17/2022 16:55	12.06	0.12	6/18/2022 18:39	11.57	0.02	6/17/2022 16:42	11.62	-0.07	6/17/2022 17:59	-0.06
6/17/2022 16:56	12.07	0.21	6/18/2022 18:40	11.57	-0.07	6/17/2022 16:43	11.62	0.01	6/17/2022 18:00	-0.05
6/17/2022 16:57	12.09	0.10	6/18/2022 18:41	11.57	-0.03	6/17/2022 16:44	11.61	-0.03	6/17/2022 18:01	-0.09
6/17/2022 16:58	12.05	0.16	6/18/2022 18:42	11.58	-0.06	6/17/2022 16:45	11.62	0.00	6/17/2022 18:02	-0.06
6/17/2022 16:59	12.07	0.05	6/18/2022 18:43	11.59	-0.03	6/17/2022 16:46	11.61	0.01	6/17/2022 18:03	-0.06
6/17/2022 17:00	12.07	0.11	6/18/2022 18:44	11.60	-0.03	6/17/2022 16:47	11.62	0.01	6/17/2022 18:04	-0.06
6/17/2022 17:01	12.09	0.06	6/18/2022 18:45	11.59	0.05	6/17/2022 16:48	11.62	0.02	6/17/2022 18:05	-0.07
6/17/2022 17:02	12.09	0.20	6/18/2022 18:46	11.56	-0.06	6/17/2022 16:49	11.61	-0.02	6/17/2022 18:06	-0.05
6/17/2022 17:03	12.08	0.13	6/18/2022 18:47	11.58	-0.06	6/17/2022 16:50	11.62	-0.02	6/17/2022 18:07	-0.05
6/17/2022 17:04	12.08	0.05	6/18/2022 18:48	11.59	-0.06	6/17/2022 16:51	11.61	-0.03	6/17/2022 18:08	-0.11
6/17/2022 17:05	12.05	0.10	6/18/2022 18:49	11.58	-0.02	6/17/2022 16:52	11.62	-0.06	6/17/2022 18:09	-0.06
6/17/2022 17:06	12.07	0.17	6/18/2022 18:50	11.58	0.02	6/17/2022 16:53	11.58	0.00	6/17/2022 18:10	-0.09
6/17/2022 17:07	12.04	0.15	6/18/2022 18:51	11.60	-0.03	6/17/2022 16:54	11.62	-0.01	6/17/2022 18:11	-0.06
6/17/2022 17:08	12.08	0.21	6/18/2022 18:52	11.57	0.03	6/17/2022 16:55	11.62	-0.04	6/17/2022 18:12	-0.05
6/17/2022 17:09	12.04	0.12	6/18/2022 18:53	11.58	-0.04	6/17/2022 16:56	11.60	-0.05	6/17/2022 18:13	-0.06
6/17/2022 17:10	12.08	0.20	6/18/2022 18:54	11.59	-0.04	6/17/2022 16:57	11.60	-0.04	6/17/2022 18:14	-0.13
6/17/2022 17:11	12.07	0.14	6/18/2022 18:55	11.57	-0.01	6/17/2022 16:58	11.61	-0.03	6/17/2022 18:15	-0.09
6/17/2022 17:12	12.06	0.12	6/18/2022 18:56	11.57	-0.02	6/17/2022 16:59	11.62	-0.02	6/17/2022 18:16	-0.07
6/17/2022 17:13	12.08	0.01	6/18/2022 18:57	11.56	-0.05	6/17/2022 17:00	11.63	-0.02	6/17/2022 18:17	-0.09
6/17/2022 17:14	12.08	0.06	6/18/2022 18:58	11.58	-0.03	6/17/2022 17:01	11.62	-0.02	6/17/2022 18:18	-0.09
6/17/2022 17:15	12.07	0.12	6/18/2022 18:59	11.60	-0.04	6/17/2022 17:02	11.62	0.00	6/17/2022 18:19	-0.08
6/17/2022 17:16	12.08	0.14	6/18/2022 19:00	11.57	0.02	6/17/2022 17:03	11.62	0.01	6/17/2022 18:20	-0.07
6/17/2022 17:17	12.07	0.12	6/18/2022 19:01	11.56	-0.02	6/17/2022 17:04	11.62	-0.04	6/17/2022 18:21	-0.11
6/17/2022 17:18	12.06	0.11	6/18/2022 19:02	11.58	-0.04	6/17/2022 17:05	11.59	-0.05	6/17/2022 18:22	-0.07
6/17/2022 17:19	12.05	0.15	6/18/2022 19:03	11.58	-0.07	6/17/2022 17:06	11.61	-0.01	6/17/2022 18:23	-0.12
6/17/2022 17:20	12.08	0.17	6/18/2022 19:04	11.57	0.02	6/17/2022 17:07	11.63	-0.01	6/17/2022 18:24	-0.11
6/17/2022 17:21	12.06	0.12	6/18/2022 19:05	11.58	-0.04	6/17/2022 17:08	11.60	-0.04	6/17/2022 18:25	-0.08
6/17/2022 17:22	12.09	0.10	6/18/2022 19:06	11.58	0.02	6/17/2022 17:09	11.61	-0.02	6/17/2022 18:26	-0.10
6/17/2022 17:23	12.07	0.11	6/18/2022 19:07	11.60	0.03	6/17/2022 17:10	11.63	0.01	6/17/2022 18:27	-0.05
6/17/2022 17:24	12.05	0.08	6/18/2022 19:08	11.58	-0.01	6/17/2022 17:11	11.61	0.01	6/17/2022 18:28	-0.10
6/17/2022 17:25	12.07	0.06	6/18/2022 19:09	11.58	-0.05	6/17/2022 17:12	11.62	0.01	6/17/2022 18:29	-0.07
6/17/2022 17:26	12.05	0.16	6/18/2022 19:10	11.58	0.00	6/17/2022 17:13	11.62	-0.01	6/17/2022 18:30	-0.10
6/17/2022 17:27	12.07	0.16	6/18/2022 19:11	11.59	0.03	6/17/2022 17:14	11.60	0.00	6/17/2022 18:31	-0.05
6/17/2022 17:28	12.06	0.05	6/18/2022 19:12	11.59	-0.01	6/17/2022 17:15	11.63	-0.01	6/17/2022 18:32	-0.09
6/17/2022 17:29	12.07	0.15	6/18/2022 19:13	11.57	0.06	6/17/2022 17:16	11.59	0.00	6/17/2022 18:33	-0.12
6/17/2022 17:30	12.06	0.09	6/18/2022 19:14	11.57	0.03	6/17/2022 17:17	11.62	0.01	6/17/2022 18:34	-0.10
6/17/2022 17:31	12.06	0.01	6/18/2022 19:15	11.61	-0.04	6/17/2022 17:18	11.62	0.00	6/17/2022 18:35	-0.09
6/17/2022 17:32	12.05	0.11	6/18/2022 19:16	11.57	-0.07	6/17/2022 17:19	11.61	0.00	6/17/2022 18:36	-0.08
6/17/2022 17:33	12.09	0.17	6/18/2022 19:17	11.60	-0.04	6/17/2022 17:20	11.62	-0.01	6/17/2022 18:37	-0.05
6/17/2022 17:34	12.08	0.17	6/18/2022 19:18	11.59	-0.01	6/17/2022 17:21	11.62	-0.03	6/17/2022 18:38	-0.08
6/17/2022 17:35	12.07	0.06	6/18/2022 19:19	11.56	-0.05	6/17/2022 17:22	11.62	-0.05	6/17/2022 18:39	-0.05
6/17/2022 17:36	12.07	0.04	6/18/2022 19:20	11.57	-0.06	6/17/2022 17:23	11.62	-0.01	6/17/2022 18:40	-0.06
6/17/2022 17:37	12.07	0.05	6/18/2022 19:21	11.59	-0.06	6/17/2022 17:24	11.58	0.02	6/17/2022 18:41	-0.08
6/17/2022 17:38	12.07	0.11	6/18/2022 19:22	11.58	-0.07	6/17/2022 17:25	11.61	0.02	6/17/2022 18:42	-0.04
6/17/2022 17:39	12.07	0.09	6/18/2022 19:23	11.57	0.08	6/17/2022 17:26	11.62	0.00	6/17/2022 18:43	-0.10
6/17/2022 17:40	12.07	0.14	6/18/2022 19:24	11.59	-0.06	6/17/2022 17:27	11.62	-0.05	6/17/2022 18:44	-0.04
6/17/2022 17:41	12.05	0.21	6/18/2022 19:25	11.58	-0.03	6/17/2022 17:28	11.63	-0.05	6/17/2022 18:45	-0.06
6/17/2022 17:42	12.09	0.17	6/18/2022 19:26	11.60	-0.01	6/17/2022 17:29	11.62	-0.02	6/17/2022 18:46	-0.06
6/17/2022 17:43	12.07	0.05	6/18/2022 19:27	11.56	0.02	6/17/2022 17:30	11.60	-0.03	6/17/2022 18:47	-0.06
6/17/2022 17:44	12.05	0.06	6/18/2022 19:28	11.58	-0.05	6/17/2022 17:31	11.61	-0.01	6/17/2022 18:48	-0.14
6/17/2022 17:45	12.05	0.07	6/18/2022 19:29	11.59	-0.04	6/17/2022 17:32	11.64	0.02	6/17/2022 18:49	-0.11
6/17/2022 17:46	12.08	0.20	6/18/2022 19:30	11.57	-0.02	6/17/2022 17:33	11.61	0.03	6/17/2022 18:50	-0.08
6/17/2022 17:47	12.08	0.13	6/18/2022 19:31	11.55	-0.02	6/17/2022 17:34	11.62	-0.01	6/17/2022 18:51	-0.10
6/17/2022 17:48	12.04	0.20	6/18/2022 19:32	11.56	-0.07	6/17/2022 17:35	11.61	-0.01	6/17/2022 18:52	-0.12
6/17/2022 17:49	12.08	0.10	6/18/2022 19:33	11.57	0.02	6/17/2022 17:36	11.62	-0.02	6/17/2022 18:53	-0.09
6/17/2022 17:50	12.08	0.10	6/18/2022 19:34	11.57	-0.10	6/17/2022 17:37	11.63	-0.02	6/17/2022 18:54	-0.06

6/17/2022 17:51	12.07	0.19	6/18/2022 19:35	11.58	-0.07	6/17/2022 17:38	11.62	-0.04	6/17/2022 18:55	-0.06
6/17/2022 17:52	12.06	0.15	6/18/2022 19:36	11.58	0.02	6/17/2022 17:39	11.58	-0.02	6/17/2022 18:56	-0.11
6/17/2022 17:53	12.06	0.11	6/18/2022 19:37	11.58	0.03	6/17/2022 17:40	11.60	-0.02	6/17/2022 18:57	-0.04
6/17/2022 17:54	12.10	0.16	6/18/2022 19:38	11.57	-0.03	6/17/2022 17:41	11.63	-0.05	6/17/2022 18:58	-0.06
6/17/2022 17:55	12.07	0.18	6/18/2022 19:39	11.59	0.02	6/17/2022 17:42	11.63	-0.02	6/17/2022 18:59	-0.06
6/17/2022 17:56	12.06	0.16	6/18/2022 19:40	11.56	-0.07	6/17/2022 17:43	11.61	-0.01	6/17/2022 19:00	-0.09
6/17/2022 17:57	12.09	0.05	6/18/2022 19:41	11.58	-0.06	6/17/2022 17:44	11.63	-0.02	6/17/2022 19:01	-0.12
6/17/2022 17:58	12.07	0.16	6/18/2022 19:42	11.56	0.00	6/17/2022 17:45	11.62	0.00	6/17/2022 19:02	-0.09
6/17/2022 17:59	12.09	0.11	6/18/2022 19:43	11.58	-0.10	6/17/2022 17:46	11.62	-0.02	6/17/2022 19:03	-0.09
6/17/2022 18:00	12.09	0.14	6/18/2022 19:44	11.59	-0.02	6/17/2022 17:47	11.62	-0.02	6/17/2022 19:04	-0.11
6/17/2022 18:01	12.11	0.11	6/18/2022 19:45	11.57	0.05	6/17/2022 17:48	11.61	-0.02	6/17/2022 19:05	-0.05
6/17/2022 18:02	12.09	0.08	6/18/2022 19:46	11.59	0.00	6/17/2022 17:49	11.61	-0.01	6/17/2022 19:06	-0.11
6/17/2022 18:03	12.07	0.14	6/18/2022 19:47	11.59	0.00	6/17/2022 17:50	11.62	-0.05	6/17/2022 19:07	-0.10
6/17/2022 18:04	12.06	0.14	6/18/2022 19:48	11.57	0.02	6/17/2022 17:51	11.61	-0.01	6/17/2022 19:08	-0.06
6/17/2022 18:05	12.05	0.08	6/18/2022 19:49	11.57	-0.04	6/17/2022 17:52	11.62	0.00	6/17/2022 19:09	-0.07
6/17/2022 18:06	12.09	0.13	6/18/2022 19:50	11.59	-0.02	6/17/2022 17:53	11.62	0.01	6/17/2022 19:10	-0.10
6/17/2022 18:07	12.07	0.14	6/18/2022 19:51	11.56	-0.01	6/17/2022 17:54	11.60	-0.03	6/17/2022 19:11	-0.07
6/17/2022 18:08	12.09	0.13	6/18/2022 19:52	11.58	-0.04	6/17/2022 17:55	11.61	-0.02	6/17/2022 19:12	-0.07
6/17/2022 18:09	12.05	0.10	6/18/2022 19:53	11.59	-0.02	6/17/2022 17:56	11.61	-0.03	6/17/2022 19:13	-0.04
6/17/2022 18:10	12.08	0.15	6/18/2022 19:54	11.59	-0.06	6/17/2022 17:57	11.63	0.01	6/17/2022 19:14	-0.13
6/17/2022 18:11	12.10	0.11	6/18/2022 19:55	11.57	-0.05	6/17/2022 17:58	11.62	-0.03	6/17/2022 19:15	-0.08
6/17/2022 18:12	12.05	0.14	6/18/2022 19:56	11.58	0.07	6/17/2022 17:59	11.63	-0.04	6/17/2022 19:16	-0.07
6/17/2022 18:13	12.06	0.11	6/18/2022 19:57	11.58	-0.02	6/17/2022 18:00	11.62	0.02	6/17/2022 19:17	-0.09
6/17/2022 18:14	12.05	0.01	6/18/2022 19:58	11.57	-0.02	6/17/2022 18:01	11.61	-0.06	6/17/2022 19:18	-0.10
6/17/2022 18:15	12.09	0.15	6/18/2022 19:59	11.57	0.03	6/17/2022 18:02	11.61	-0.03	6/17/2022 19:19	-0.06
6/17/2022 18:16	12.06	0.13	6/18/2022 20:00	11.60	0.04	6/17/2022 18:03	11.61	-0.02	6/17/2022 19:20	-0.11
6/17/2022 18:17	12.08	0.16	6/18/2022 20:01	11.55	-0.05	6/17/2022 18:04	11.63	-0.07	6/17/2022 19:21	-0.08
6/17/2022 18:18	12.05	0.20	6/18/2022 20:02	11.58	-0.06	6/17/2022 18:05	11.62	-0.03	6/17/2022 19:22	-0.10
6/17/2022 18:19	12.09	0.16	6/18/2022 20:03	11.59	-0.08	6/17/2022 18:06	11.61	0.00	6/17/2022 19:23	-0.12
6/17/2022 18:20	12.08	0.10	6/18/2022 20:04	11.57	0.01	6/17/2022 18:07	11.62	-0.05	6/17/2022 19:24	-0.13
6/17/2022 18:21	12.08	0.07	6/18/2022 20:05	11.57	-0.05	6/17/2022 18:08	11.62	-0.03	6/17/2022 19:25	-0.11
6/17/2022 18:22	12.06	0.14	6/18/2022 20:06	11.58	0.01	6/17/2022 18:09	11.62	-0.02	6/17/2022 19:26	-0.07
6/17/2022 18:23	12.06	0.15	6/18/2022 20:07	11.55	-0.04	6/17/2022 18:10	11.60	-0.02	6/17/2022 19:27	-0.10
6/17/2022 18:24	12.06	0.11	6/18/2022 20:08	11.59	-0.06	6/17/2022 18:11	11.63	-0.02	6/17/2022 19:28	-0.11
6/17/2022 18:25	12.09	0.11	6/18/2022 20:09	11.57	-0.03	6/17/2022 18:12	11.63	-0.03	6/17/2022 19:29	-0.07
6/17/2022 18:26	12.08	0.12	6/18/2022 20:10	11.58	-0.06	6/17/2022 18:13	11.60	-0.01	6/17/2022 19:30	-0.12
6/17/2022 18:27	12.04	0.14	6/18/2022 20:11	11.57	0.05	6/17/2022 18:14	11.62	-0.03	6/17/2022 19:31	-0.10
6/17/2022 18:28	12.07	0.19	6/18/2022 20:12	11.59	0.00	6/17/2022 18:15	11.60	0.00	6/17/2022 19:32	-0.07
6/17/2022 18:29	12.06	0.11	6/18/2022 20:13	11.58	-0.04	6/17/2022 18:16	11.63	-0.01	6/17/2022 19:33	-0.03
6/17/2022 18:30	12.08	0.08	6/18/2022 20:14	11.58	-0.06	6/17/2022 18:17	11.63	-0.05	6/17/2022 19:34	-0.09
6/17/2022 18:31	12.06	0.14	6/18/2022 20:15	11.56	-0.08	6/17/2022 18:18	11.60	-0.03	6/17/2022 19:35	-0.08
6/17/2022 18:32	12.05	0.12	6/18/2022 20:16	11.59	-0.02	6/17/2022 18:19	11.65	-0.03	6/17/2022 19:36	-0.09
6/17/2022 18:33	12.08	0.16	6/18/2022 20:17	11.58	-0.08	6/17/2022 18:20	11.59	0.03	6/17/2022 19:37	-0.05
6/17/2022 18:34	12.04	0.16	6/18/2022 20:18	11.58	-0.03	6/17/2022 18:21	11.62	0.02	6/17/2022 19:38	-0.07
6/17/2022 18:35	12.07	0.08	6/18/2022 20:19	11.57	-0.07	6/17/2022 18:22	11.63	0.00	6/17/2022 19:39	-0.05
6/17/2022 18:36	12.05	0.14	6/18/2022 20:20	11.57	-0.02	6/17/2022 18:23	11.63	0.00	6/17/2022 19:40	-0.09
6/17/2022 18:37	12.08	0.04	6/18/2022 20:21	11.57	-0.03	6/17/2022 18:24	11.61	-0.01	6/17/2022 19:41	-0.06
6/17/2022 18:38	12.07	0.08	6/18/2022 20:22	11.58	-0.03	6/17/2022 18:25	11.62	-0.06	6/17/2022 19:42	-0.09
6/17/2022 18:39	12.06	0.24	6/18/2022 20:23	11.56	-0.03	6/17/2022 18:26	11.62	-0.03	6/17/2022 19:43	-0.07
6/17/2022 18:40	12.08	0.16	6/18/2022 20:24	11.59	-0.08	6/17/2022 18:27	11.63	-0.02	6/17/2022 19:44	-0.03
6/17/2022 18:41	12.08	0.16	6/18/2022 20:25	11.55	-0.14	6/17/2022 18:28	11.60	0.00	6/17/2022 19:45	-0.09
6/17/2022 18:42	12.07	0.11	6/18/2022 20:26	11.57	-0.01	6/17/2022 18:29	11.61	-0.03	6/17/2022 19:46	-0.05
6/17/2022 18:43	12.08	0.13	6/18/2022 20:27	11.57	-0.05	6/17/2022 18:30	11.62	-0.05	6/17/2022 19:47	-0.12
6/17/2022 18:44	12.03	0.11	6/18/2022 20:28	11.57	0.02	6/17/2022 18:31	11.61	-0.02	6/17/2022 19:48	-0.06
6/17/2022 18:45	12.06	0.06	6/18/2022 20:29	11.57	-0.03	6/17/2022 18:32	11.63	-0.04	6/17/2022 19:49	-0.11
6/17/2022 18:46	12.06	0.10	6/18/2022 20:30	11.56	-0.06	6/17/2022 18:33	11.61	-0.03	6/17/2022 19:50	-0.07
6/17/2022 18:47	12.07	0.16	6/18/2022 20:31	11.57	-0.06	6/17/2022 18:34	11.63	-0.04	6/17/2022 19:51	-0.06
6/17/2022 18:48	12.07	0.03	6/18/2022 20:32	11.58	-0.05	6/17/2022 18:35	11.61	-0.03	6/17/2022 19:52	-0.07
6/17/2022 18:49	12.07	0.07	6/18/2022 20:33	11.57	0.06	6/17/2022 18:36	11.63	-0.01	6/17/2022 19:53	-0.09
6/17/2022 18:50	12.07	0.09	6/18/2022 20:34	11.58	-0.07	6/17/2022 18:37	11.62	0.00	6/17/2022 19:54	-0.05
6/17/2022 18:51	12.07	0.11	6/18/2022 20:35	11.57	-0.02	6/17/2022 18:38	11.61	-0.01	6/17/2022 19:55	-0.07
6/17/2022 18:52	12.04	0.15	6/18/2022 20:36	11.57	-0.02	6/17/2022 18:39	11.62	-0.03	6/17/2022 19:56	-0.08
6/17/2022 18:53	12.07	0.21	6/18/2022 20:37	11.59	-0.01	6/17/2022 18:40	11.61	-0.03	6/17/2022 19:57	-0.04
6/17/2022 18:54	12.06	0.16	6/18/2022 20:38	11.59	0.02	6/17/2022 18:41	11.61	-0.02	6/17/2022 19:58	-0.08
6/17/2022 18:55	12.07	0.14	6/18/2022 20:39	11.59	-0.03	6/17/2022 18:42	11.62	-0.06	6/17/2022 19:59	-0.11
6/17/2022 18:56	12.07	0.11	6/18/2022 20:40	11.58	-0.04	6/17/2022 18:43	11.63	-0.03	6/17/2022 20:00	-0.06
6/17/2022 18:57	12.06	0.07	6/18/2022 20:41	11.57	0.07	6/17/2022 18:44	11.63	0.01	6/17/2022 20:01	-0.14
6/17/2022 18:58	12.08	0.10	6/18/2022 20:42	11.57	0.00	6/17/2022 18:45	11.63	-0.04	6/17/2022 20:02	-0.02
6/17/2022 18:59	12.06	0.08	6/18/2022 20:43	11.59	-0.04	6/17/2022 18:46	11.62	0.02	6/17/2022 20:03	-0.06
6/17/2022 19:00	12.07	0.19	6/18/2022 20:44	11.58	-0.08	6/17/2022 18:47	11.63	-0.03	6/17/2022 20:04	-0.01
6/17/2022 19:01	12.06	0.11	6/18/2022 20:45	11.56	0.01	6/17/2022 18:48	11.61	0.00	6/17/2022 20:05	-0.07
6/17/2022 19:02	12.07	0.19	6/18/2022 20:46	11.57	0.02	6/17/2022 18:49	11.65	-0.07	6/17/2022 20:06	-0.05
6/17/2022 19:03	12.07	0.11	6/18/2022 20:47	11.59	0.00	6/17/2022 18:50	11.62	0.02	6/17/2022 20:07	-0.06
6/17/2022 19:04	12.07	0.21	6/18/2022 20:48	11.59	0.02	6/17/2022 18:51	11.63	-0.04	6/17/2022 20:08	-0.09
6/17/2022 19:05	12.07	0.12	6/18/2022 20:49	11.57	-0.07	6/17/2022 18:52	11.62	0.01	6/17/2022 20:09	-0.07
6/17/2022 19:06	12.09	0.05	6/18/2022 20:50	11.57	-0.10	6/17/2022 18:53	11.61	-0.04	6/17/2022 20:10	-0.12
6/17/2022 19:07	12.07	0.15	6/18/2022 20:51	11.58	-0.05	6/17/2022 18:54	11.61	-0.02	6/17/2022 20:11	-0.09
6/17/2022 19:08	12.07	0.06	6/18/2022 20:52	11.59	-0.10	6/17/2022 18:55	11.62	0.00	6/17/2022 20:12	-0.04
6/17/2022 19:09	12.06	0.25	6/18/2022 20:53	11.60	-0.03	6/17/2022 18:56	11.61	-0.04	6/17/2022 20:13	-0.07
6/17/2022 19:10	12.09	0.07	6/18/2022 20:54	11.59	-0.07	6/17/2022 18:57	11.60	-0.03	6/17/2022 20:14	-0.13
6/17/2022 19:11	12.07	0.06	6/18/2022 20:55	11.57	0.01	6/17/2022 18:58	11.63	0.03	6/17/2022 20:15	-0.01
6/17/2022 19:12	12.08	0.12	6/18/2022 20:56	11.58	-0.07	6/17/2022 18:59	11.61	-0.03	6/17/2022 20:16	-0.05
6/17/2022 19:13	12.05	0.19	6/18/2022 20:57	11.58	-0.03	6/17/2022 19:00	11.62	-0.04	6/17/2022 20:17	-0.05
6/17/2022 19:14	12.07	0.12	6/18/2022 20:58	11.55	-0.01	6/17/2022 19:01	11.61	-0.01	6/17/2022 20:18	-0.09
6/17/2022 19:15	12.05	0.14	6/18/2022 20:59	11.58	-0.08	6/17/2022 19:02	11.64	-0.01	6/17/2022 20:19	-0.08
6/17/2022 19:16	12.07	0.13	6/18/2022 21:00	11.60	-0.06	6/17/2022 19:03	11.63	-0.05	6/17/2022 20:20	-0.07
6/17/2022 19:17	12.09	0.10	6/18/2022 21:01	11.58	0.03	6/17/2022 19:04	11.61	0.01	6/17/2022 20:21	-0.07
6/17/2022 19:18	12.08	0.21	6/18/2022 21:02	11.57	-0.03	6/17/2022 19:05	11.61	0.01	6/17/2022 20:22	-0.06

6/17/2022 19:19	12.07	0.15	6/18/2022 21:03	11.57	-0.13	6/17/2022 19:06	11.62	-0.04	6/17/2022 20:23	-0.05
6/17/2022 19:20	12.06	0.11	6/18/2022 21:04	11.61	0.03	6/17/2022 19:07	11.60	-0.01	6/17/2022 20:24	-0.10
6/17/2022 19:21	12.08	0.17	6/18/2022 21:05	11.59	-0.07	6/17/2022 19:08	11.60	-0.03	6/17/2022 20:25	-0.07
6/17/2022 19:22	12.07	0.11	6/18/2022 21:06	11.58	0.02	6/17/2022 19:09	11.61	-0.02	6/17/2022 20:26	-0.10
6/17/2022 19:23	12.09	0.18	6/18/2022 21:07	11.59	0.03	6/17/2022 19:10	11.65	0.00	6/17/2022 20:27	-0.08
6/17/2022 19:24	12.05	0.14	6/18/2022 21:08	11.57	-0.06	6/17/2022 19:11	11.61	0.01	6/17/2022 20:28	-0.08
6/17/2022 19:25	12.05	0.11	6/18/2022 21:09	11.56	-0.11	6/17/2022 19:12	11.62	-0.03	6/17/2022 20:29	-0.11
6/17/2022 19:26	12.04	0.03	6/18/2022 21:10	11.59	0.01	6/17/2022 19:13	11.61	-0.05	6/17/2022 20:30	-0.08
6/17/2022 19:27	12.04	0.14	6/18/2022 21:11	11.58	0.04	6/17/2022 19:14	11.59	-0.02	6/17/2022 20:31	-0.11
6/17/2022 19:28	12.09	0.11	6/18/2022 21:12	11.57	-0.01	6/17/2022 19:15	11.63	-0.01	6/17/2022 20:32	-0.05
6/17/2022 19:29	12.06	0.11	6/18/2022 21:13	11.56	-0.05	6/17/2022 19:16	11.63	-0.02	6/17/2022 20:33	-0.13
6/17/2022 19:30	12.09	0.11	6/18/2022 21:14	11.58	0.08	6/17/2022 19:17	11.60	0.00	6/17/2022 20:34	-0.09
6/17/2022 19:31	12.05	0.11	6/18/2022 21:15	11.58	-0.05	6/17/2022 19:18	11.62	-0.01	6/17/2022 20:35	-0.09
6/17/2022 19:32	12.06	0.16	6/18/2022 21:16	11.57	-0.07	6/17/2022 19:19	11.62	-0.06	6/17/2022 20:36	-0.13
6/17/2022 19:33	12.07	0.12	6/18/2022 21:17	11.58	-0.04	6/17/2022 19:20	11.61	-0.02	6/17/2022 20:37	-0.16
6/17/2022 19:34	12.06	0.11	6/18/2022 21:18	11.58	-0.07	6/17/2022 19:21	11.63	-0.06	6/17/2022 20:38	-0.12
6/17/2022 19:35	12.10	0.15	6/18/2022 21:19	11.58	-0.03	6/17/2022 19:22	11.63	-0.01	6/17/2022 20:39	-0.04
6/17/2022 19:36	12.08	0.09	6/18/2022 21:20	11.59	0.01	6/17/2022 19:23	11.63	-0.04	6/17/2022 20:40	-0.11
6/17/2022 19:37	12.06	0.11	6/18/2022 21:21	11.57	-0.04	6/17/2022 19:24	11.61	-0.06	6/17/2022 20:41	-0.16
6/17/2022 19:38	12.06	0.09	6/18/2022 21:22	11.57	0.01	6/17/2022 19:25	11.60	-0.03	6/17/2022 20:42	-0.05
6/17/2022 19:39	12.05	0.11	6/18/2022 21:23	11.57	-0.04	6/17/2022 19:26	11.61	-0.03	6/17/2022 20:43	-0.03
6/17/2022 19:40	12.08	0.11	6/18/2022 21:24	11.60	-0.07	6/17/2022 19:27	11.62	-0.01	6/17/2022 20:44	-0.04
6/17/2022 19:41	12.08	0.00	6/18/2022 21:25	11.58	-0.15	6/17/2022 19:28	11.62	-0.05	6/17/2022 20:45	-0.08
6/17/2022 19:42	12.04	0.16	6/18/2022 21:26	11.59	0.01	6/17/2022 19:29	11.60	-0.03	6/17/2022 20:46	-0.04
6/17/2022 19:43	12.07	0.15	6/18/2022 21:27	11.57	0.06	6/17/2022 19:30	11.60	-0.04	6/17/2022 20:47	-0.10
6/17/2022 19:44	12.06	0.06	6/18/2022 21:28	11.57	-0.05	6/17/2022 19:31	11.63	-0.02	6/17/2022 20:48	-0.07
6/17/2022 19:45	12.08	0.09	6/18/2022 21:29	11.55	-0.05	6/17/2022 19:32	11.63	-0.01	6/17/2022 20:49	-0.10
6/17/2022 19:46	12.06	0.14	6/18/2022 21:30	11.56	-0.12	6/17/2022 19:33	11.61	0.00	6/17/2022 20:50	-0.02
6/17/2022 19:47	12.08	0.11	6/18/2022 21:31	11.60	0.02	6/17/2022 19:34	11.62	-0.03	6/17/2022 20:51	-0.09
6/17/2022 19:48	12.07	0.13	6/18/2022 21:32	11.60	0.01	6/17/2022 19:35	11.58	-0.04	6/17/2022 20:52	-0.09
6/17/2022 19:49	12.06	0.14	6/18/2022 21:33	11.58	-0.04	6/17/2022 19:36	11.63	-0.04	6/17/2022 20:53	-0.07
6/17/2022 19:50	12.05	0.03	6/18/2022 21:34	11.60	0.01	6/17/2022 19:37	11.63	-0.02	6/17/2022 20:54	-0.07
6/17/2022 19:51	12.03	0.12	6/18/2022 21:35	11.57	-0.01	6/17/2022 19:38	11.62	-0.01	6/17/2022 20:55	-0.10
6/17/2022 19:52	12.07	0.14	6/18/2022 21:36	11.58	-0.07	6/17/2022 19:39	11.62	-0.02	6/17/2022 20:56	-0.08
6/17/2022 19:53	12.09	0.21	6/18/2022 21:37	11.57	0.02	6/17/2022 19:40	11.61	-0.04	6/17/2022 20:57	-0.05
6/17/2022 19:54	12.09	0.19	6/18/2022 21:38	11.57	-0.11	6/17/2022 19:41	11.63	-0.03	6/17/2022 20:58	-0.04
6/17/2022 19:55	12.09	0.15	6/18/2022 21:39	11.59	-0.03	6/17/2022 19:42	11.61	0.00	6/17/2022 20:59	-0.09
6/17/2022 19:56	12.07	0.15	6/18/2022 21:40	11.58	0.02	6/17/2022 19:43	11.60	0.01	6/17/2022 21:00	-0.04
6/17/2022 19:57	12.08	0.14	6/18/2022 21:41	11.59	0.00	6/17/2022 19:44	11.63	-0.02	6/17/2022 21:01	-0.03
6/17/2022 19:58	12.09	-0.03	6/18/2022 21:42	11.56	0.05	6/17/2022 19:45	11.63	-0.01	6/17/2022 21:02	-0.08
6/17/2022 19:59	12.08	0.10	6/18/2022 21:43	11.57	-0.07	6/17/2022 19:46	11.61	-0.01	6/17/2022 21:03	-0.08
6/17/2022 20:00	12.06	0.13	6/18/2022 21:44	11.55	-0.01	6/17/2022 19:47	11.62	-0.03	6/17/2022 21:04	-0.14
6/17/2022 20:01	12.05	0.08	6/18/2022 21:45	11.55	-0.06	6/17/2022 19:48	11.62	-0.03	6/17/2022 21:05	-0.12
6/17/2022 20:02	12.05	0.13	6/18/2022 21:46	11.58	-0.02	6/17/2022 19:49	11.61	-0.04	6/17/2022 21:06	-0.07
6/17/2022 20:03	12.08	0.15	6/18/2022 21:47	11.57	-0.04	6/17/2022 19:50	11.62	-0.07	6/17/2022 21:07	-0.11
6/17/2022 20:04	12.10	0.10	6/18/2022 21:48	11.57	0.01	6/17/2022 19:51	11.62	-0.01	6/17/2022 21:08	-0.02
6/17/2022 20:05	12.08	0.07	6/18/2022 21:49	11.58	0.04	6/17/2022 19:52	11.60	-0.02	6/17/2022 21:09	-0.07
6/17/2022 20:06	12.09	0.13	6/18/2022 21:50	11.57	-0.01	6/17/2022 19:53	11.64	-0.02	6/17/2022 21:10	-0.08
6/17/2022 20:07	12.08	0.13	6/18/2022 21:51	11.56	-0.03	6/17/2022 19:54	11.59	-0.01	6/17/2022 21:11	-0.07
6/17/2022 20:08	12.06	0.07	6/18/2022 21:52	11.57	-0.01	6/17/2022 19:55	11.62	-0.03	6/17/2022 21:12	-0.06
6/17/2022 20:09	12.07	0.18	6/18/2022 21:53	11.57	-0.03	6/17/2022 19:56	11.62	-0.02	6/17/2022 21:13	-0.08
6/17/2022 20:10	12.07	0.09	6/18/2022 21:54	11.58	-0.08	6/17/2022 19:57	11.63	-0.06	6/17/2022 21:14	-0.10
6/17/2022 20:11	12.07	0.08	6/18/2022 21:55	11.56	0.02	6/17/2022 19:58	11.61	-0.06	6/17/2022 21:15	-0.09
6/17/2022 20:12	12.05	0.14	6/18/2022 21:56	11.56	-0.03	6/17/2022 19:59	11.61	-0.04	6/17/2022 21:16	-0.08
6/17/2022 20:13	12.08	0.05	6/18/2022 21:57	11.59	0.00	6/17/2022 20:00	11.63	-0.01	6/17/2022 21:17	-0.11
6/17/2022 20:14	12.07	0.15	6/18/2022 21:58	11.59	-0.02	6/17/2022 20:01	11.60	-0.03	6/17/2022 21:18	-0.08
6/17/2022 20:15	12.11	0.06	6/18/2022 21:59	11.60	0.00	6/17/2022 20:02	11.63	-0.01	6/17/2022 21:19	-0.08
6/17/2022 20:16	12.06	0.16	6/18/2022 22:00	11.57	0.10	6/17/2022 20:03	11.62	-0.01	6/17/2022 21:20	-0.08
6/17/2022 20:17	12.08	0.10	6/18/2022 22:01	11.59	0.04	6/17/2022 20:04	11.62	-0.02	6/17/2022 21:21	-0.06
6/17/2022 20:18	12.05	0.01	6/18/2022 22:02	11.58	-0.08	6/17/2022 20:05	11.63	-0.06	6/17/2022 21:22	-0.11
6/17/2022 20:19	12.05	0.06	6/18/2022 22:03	11.58	-0.02	6/17/2022 20:06	11.61	-0.03	6/17/2022 21:23	-0.04
6/17/2022 20:20	12.07	0.08	6/18/2022 22:04	11.57	-0.06	6/17/2022 20:07	11.62	-0.03	6/17/2022 21:24	-0.08
6/17/2022 20:21	12.08	0.11	6/18/2022 22:05	11.58	-0.09	6/17/2022 20:08	11.61	0.00	6/17/2022 21:25	-0.09
6/17/2022 20:22	12.07	0.06	6/18/2022 22:06	11.57	-0.05	6/17/2022 20:09	11.61	-0.03	6/17/2022 21:26	-0.06
6/17/2022 20:23	12.08	0.05	6/18/2022 22:07	11.58	-0.05	6/17/2022 20:10	11.61	-0.05	6/17/2022 21:27	-0.07
6/17/2022 20:24	12.08	0.13	6/18/2022 22:08	11.56	0.02	6/17/2022 20:11	11.61	-0.03	6/17/2022 21:28	-0.05
6/17/2022 20:25	12.07	0.12	6/18/2022 22:09	11.60	-0.06	6/17/2022 20:12	11.61	-0.04	6/17/2022 21:29	-0.06
6/17/2022 20:26	12.06	0.11	6/18/2022 22:10	11.59	0.03	6/17/2022 20:13	11.62	-0.02	6/17/2022 21:30	-0.11
6/17/2022 20:27	12.06	0.14	6/18/2022 22:11	11.59	0.01	6/17/2022 20:14	11.62	-0.04	6/17/2022 21:31	-0.08
6/17/2022 20:28	12.09	0.11	6/18/2022 22:12	11.57	0.02	6/17/2022 20:15	11.64	-0.05	6/17/2022 21:32	-0.11
6/17/2022 20:29	12.05	0.14	6/18/2022 22:13	11.56	-0.05	6/17/2022 20:16	11.60	-0.02	6/17/2022 21:33	-0.07
6/17/2022 20:30	12.09	0.11	6/18/2022 22:14	11.56	-0.10	6/17/2022 20:17	11.63	-0.05	6/17/2022 21:34	-0.03
6/17/2022 20:31	12.08	0.11	6/18/2022 22:15	11.59	-0.02	6/17/2022 20:18	11.63	-0.03	6/17/2022 21:35	-0.06
6/17/2022 20:32	12.08	0.09	6/18/2022 22:16	11.57	-0.04	6/17/2022 20:19	11.63	-0.04	6/17/2022 21:36	-0.09
6/17/2022 20:33	12.08	0.11	6/18/2022 22:17	11.60	-0.03	6/17/2022 20:20	11.64	-0.02	6/17/2022 21:37	-0.06
6/17/2022 20:34	12.06	0.06	6/18/2022 22:18	11.57	-0.01	6/17/2022 20:21	11.61	-0.03	6/17/2022 21:38	-0.06
6/17/2022 20:35	12.07	0.11	6/18/2022 22:19	11.58	0.01	6/17/2022 20:22	11.61	-0.02	6/17/2022 21:39	-0.08
6/17/2022 20:36	12.07	0.19	6/18/2022 22:20	11.58	-0.04	6/17/2022 20:23	11.60	-0.02	6/17/2022 21:40	-0.05
6/17/2022 20:37	12.09	0.05	6/18/2022 22:21	11.60	-0.04	6/17/2022 20:24	11.62	-0.02	6/17/2022 21:41	-0.10
6/17/2022 20:38	12.07	0.07	6/18/2022 22:22	11.59	-0.03	6/17/2022 20:25	11.62	-0.06	6/17/2022 21:42	-0.14
6/17/2022 20:39	12.07	0.16	6/18/2022 22:23	11.57	-0.04	6/17/2022 20:26	11.63	-0.02	6/17/2022 21:43	-0.08
6/17/2022 20:40	12.09	0.14	6/18/2022 22:24	11.58	0.01	6/17/2022 20:27	11.61	-0.02	6/17/2022 21:44	0.00
6/17/2022 20:41	12.06	0.20	6/18/2022 22:25	11.58	0.03	6/17/2022 20:28	11.63	-0.02	6/17/2022 21:45	-0.10
6/17/2022 20:42	12.08	0.16	6/18/2022 22:26	11.59	-0.04	6/17/2022 20:29	11.62	-0.02	6/17/2022 21:46	-0.05
6/17/2022 20:43	12.09	0.10	6/18/2022 22:27	11.61	-0.05	6/17/2022 20:30	11.61	-0.04	6/17/2022 21:47	-0.08
6/17/2022 20:44	12.07	0.10	6/18/2022 22:28	11.57	-0.04	6/17/2022 20:31	11.62	0.00	6/17/2022 21:48	-0.12
6/17/2022 20:45	12.08	0.15	6/18/2022 22:29	11.58	0.05	6/17/2022 20:32	11.62	0.02	6/17/2022 21:49	-0.13
6/17/2022 20:46	12.08	0.09	6/18/2022 22:30	11.60	0.06	6/17/2022 20:33	11.61	-0.03	6/17/2022 21:50	-0.05

6/17/2022 20:47	12.08	0.08	6/18/2022 22:31	11.59	0.01	6/17/2022 20:34	11.63	-0.04	6/17/2022 21:51	-0.12
6/17/2022 20:48	12.09	0.10	6/18/2022 22:32	11.58	-0.05	6/17/2022 20:35	11.63	0.01	6/17/2022 21:52	-0.12
6/17/2022 20:49	12.08	0.16	6/18/2022 22:33	11.57	0.02	6/17/2022 20:36	11.60	-0.05	6/17/2022 21:53	-0.13
6/17/2022 20:50	12.05	0.14	6/18/2022 22:34	11.58	-0.12	6/17/2022 20:37	11.62	-0.04	6/17/2022 21:54	-0.09
6/17/2022 20:51	12.09	0.05	6/18/2022 22:35	11.58	-0.05	6/17/2022 20:38	11.63	-0.02	6/17/2022 21:55	-0.10
6/17/2022 20:52	12.07	0.04	6/18/2022 22:36	11.58	-0.04	6/17/2022 20:39	11.61	-0.03	6/17/2022 21:56	-0.06
6/17/2022 20:53	12.08	0.17	6/18/2022 22:37	11.60	-0.02	6/17/2022 20:40	11.61	-0.05	6/17/2022 21:57	-0.11
6/17/2022 20:54	12.09	0.12	6/18/2022 22:38	11.58	0.03	6/17/2022 20:41	11.61	0.00	6/17/2022 21:58	-0.08
6/17/2022 20:55	12.06	0.14	6/18/2022 22:39	11.58	0.00	6/17/2022 20:42	11.62	-0.03	6/17/2022 21:59	-0.12
6/17/2022 20:56	12.07	0.01	6/18/2022 22:40	11.58	0.02	6/17/2022 20:43	11.62	0.00	6/17/2022 22:00	-0.08
6/17/2022 20:57	12.06	0.17	6/18/2022 22:41	11.57	-0.09	6/17/2022 20:44	11.61	-0.01	6/17/2022 22:01	-0.08
6/17/2022 20:58	12.09	0.14	6/18/2022 22:42	11.58	-0.11	6/17/2022 20:45	11.61	0.00	6/17/2022 22:02	-0.10
6/17/2022 20:59	12.06	0.06	6/18/2022 22:43	11.59	-0.07	6/17/2022 20:46	11.60	-0.03	6/17/2022 22:03	-0.08
6/17/2022 21:00	12.06	0.02	6/18/2022 22:44	11.58	-0.04	6/17/2022 20:47	11.62	-0.01	6/17/2022 22:04	-0.13
6/17/2022 21:01	12.06	0.11	6/18/2022 22:45	11.58	0.05	6/17/2022 20:48	11.62	-0.05	6/17/2022 22:05	-0.11
6/17/2022 21:02	12.09	0.15	6/18/2022 22:46	11.58	-0.04	6/17/2022 20:49	11.61	-0.02	6/17/2022 22:06	-0.06
6/17/2022 21:03	12.07	0.06	6/18/2022 22:47	11.61	0.06	6/17/2022 20:50	11.61	-0.04	6/17/2022 22:07	-0.03
6/17/2022 21:04	12.09	0.12	6/18/2022 22:48	11.60	-0.06	6/17/2022 20:51	11.62	-0.06	6/17/2022 22:08	-0.10
6/17/2022 21:05	12.07	0.11	6/18/2022 22:49	11.58	-0.07	6/17/2022 20:52	11.60	-0.05	6/17/2022 22:09	-0.12
6/17/2022 21:06	12.06	0.15	6/18/2022 22:50	11.60	-0.04	6/17/2022 20:53	11.62	0.00	6/17/2022 22:10	-0.03
6/17/2022 21:07	12.05	0.09	6/18/2022 22:51	11.56	-0.02	6/17/2022 20:54	11.60	-0.02	6/17/2022 22:11	-0.09
6/17/2022 21:08	12.08	0.07	6/18/2022 22:52	11.57	-0.06	6/17/2022 20:55	11.63	-0.02	6/17/2022 22:12	-0.09
6/17/2022 21:09	12.07	0.14	6/18/2022 22:53	11.61	0.01	6/17/2022 20:56	11.59	0.03	6/17/2022 22:13	-0.11
6/17/2022 21:10	12.07	0.09	6/18/2022 22:54	11.58	0.00	6/17/2022 20:57	11.61	0.00	6/17/2022 22:14	-0.15
6/17/2022 21:11	12.08	0.05	6/18/2022 22:55	11.57	-0.09	6/17/2022 20:58	11.63	0.00	6/17/2022 22:15	-0.10
6/17/2022 21:12	12.07	0.11	6/18/2022 22:56	11.57	-0.05	6/17/2022 20:59	11.63	-0.01	6/17/2022 22:16	-0.04
6/17/2022 21:13	12.08	0.07	6/18/2022 22:57	11.58	-0.06	6/17/2022 21:00	11.62	0.02	6/17/2022 22:17	-0.10
6/17/2022 21:14	12.08	0.05	6/18/2022 22:58	11.58	0.04	6/17/2022 21:01	11.60	-0.02	6/17/2022 22:18	-0.09
6/17/2022 21:15	12.10	0.15	6/18/2022 22:59	11.61	0.04	6/17/2022 21:02	11.60	-0.03	6/17/2022 22:19	-0.08
6/17/2022 21:16	12.07	0.09	6/18/2022 23:00	11.58	0.02	6/17/2022 21:03	11.63	-0.04	6/17/2022 22:20	-0.10
6/17/2022 21:17	12.06	0.11	6/18/2022 23:01	11.58	-0.10	6/17/2022 21:04	11.60	-0.03	6/17/2022 22:21	-0.08
6/17/2022 21:18	12.10	0.10	6/18/2022 23:02	11.57	0.03	6/17/2022 21:05	11.61	0.00	6/17/2022 22:22	-0.09
6/17/2022 21:19	12.06	0.18	6/18/2022 23:03	11.59	0.00	6/17/2022 21:06	11.62	-0.04	6/17/2022 22:23	-0.12
6/17/2022 21:20	12.08	0.13	6/18/2022 23:04	11.56	-0.01	6/17/2022 21:07	11.61	-0.05	6/17/2022 22:24	-0.03
6/17/2022 21:21	12.10	0.15	6/18/2022 23:05	11.58	0.00	6/17/2022 21:08	11.62	-0.01	6/17/2022 22:25	-0.03
6/17/2022 21:22	12.08	0.12	6/18/2022 23:06	11.59	0.04	6/17/2022 21:09	11.63	-0.02	6/17/2022 22:26	-0.03
6/17/2022 21:23	12.06	0.06	6/18/2022 23:07	11.57	0.02	6/17/2022 21:10	11.59	-0.01	6/17/2022 22:27	-0.08
6/17/2022 21:24	12.09	0.06	6/18/2022 23:08	11.60	0.01	6/17/2022 21:11	11.59	-0.01	6/17/2022 22:28	-0.06
6/17/2022 21:25	12.06	0.03	6/18/2022 23:09	11.57	-0.01	6/17/2022 21:12	11.60	0.01	6/17/2022 22:29	-0.09
6/17/2022 21:26	12.10	0.10	6/18/2022 23:10	11.59	-0.07	6/17/2022 21:13	11.62	-0.03	6/17/2022 22:30	-0.10
6/17/2022 21:27	12.07	0.18	6/18/2022 23:11	11.59	-0.02	6/17/2022 21:14	11.61	-0.01	6/17/2022 22:31	-0.06
6/17/2022 21:28	12.08	0.09	6/18/2022 23:12	11.57	-0.01	6/17/2022 21:15	11.61	0.00	6/17/2022 22:32	-0.07
6/17/2022 21:29	12.07	0.10	6/18/2022 23:13	11.57	-0.07	6/17/2022 21:16	11.62	-0.01	6/17/2022 22:33	-0.12
6/17/2022 21:30	12.07	0.15	6/18/2022 23:14	11.60	0.03	6/17/2022 21:17	11.63	-0.03	6/17/2022 22:34	-0.09
6/17/2022 21:31	12.07	0.10	6/18/2022 23:15	11.57	0.05	6/17/2022 21:18	11.64	-0.02	6/17/2022 22:35	-0.09
6/17/2022 21:32	12.07	0.05	6/18/2022 23:16	11.60	-0.05	6/17/2022 21:19	11.60	-0.01	6/17/2022 22:36	-0.10
6/17/2022 21:33	12.07	0.05	6/18/2022 23:17	11.56	-0.03	6/17/2022 21:20	11.61	-0.03	6/17/2022 22:37	-0.06
6/17/2022 21:34	12.10	0.06	6/18/2022 23:18	11.56	-0.01	6/17/2022 21:21	11.61	0.00	6/17/2022 22:38	-0.06
6/17/2022 21:35	12.07	0.13	6/18/2022 23:19	11.58	-0.02	6/17/2022 21:22	11.63	-0.02	6/17/2022 22:39	-0.06
6/17/2022 21:36	12.08	0.10	6/18/2022 23:20	11.60	-0.14	6/17/2022 21:23	11.62	-0.01	6/17/2022 22:40	-0.10
6/17/2022 21:37	12.05	0.11	6/18/2022 23:21	11.60	-0.04	6/17/2022 21:24	11.59	-0.04	6/17/2022 22:41	-0.06
6/17/2022 21:38	12.05	0.08	6/18/2022 23:22	11.59	0.00	6/17/2022 21:25	11.64	-0.01	6/17/2022 22:42	-0.04
6/17/2022 21:39	12.07	0.11	6/18/2022 23:23	11.57	-0.07	6/17/2022 21:26	11.61	-0.03	6/17/2022 22:43	-0.05
6/17/2022 21:40	12.08	0.15	6/18/2022 23:24	11.59	-0.05	6/17/2022 21:27	11.62	-0.02	6/17/2022 22:44	-0.02
6/17/2022 21:41	12.06	0.19	6/18/2022 23:25	11.58	-0.02	6/17/2022 21:28	11.63	0.01	6/17/2022 22:45	-0.08
6/17/2022 21:42	12.05	0.12	6/18/2022 23:26	11.59	-0.04	6/17/2022 21:29	11.62	-0.02	6/17/2022 22:46	-0.10
6/17/2022 21:43	12.09	0.11	6/18/2022 23:27	11.60	0.00	6/17/2022 21:30	11.61	-0.03	6/17/2022 22:47	-0.07
6/17/2022 21:44	12.07	0.08	6/18/2022 23:28	11.59	-0.02	6/17/2022 21:31	11.61	-0.02	6/17/2022 22:48	-0.13
6/17/2022 21:45	12.09	0.04	6/18/2022 23:29	11.59	-0.05	6/17/2022 21:32	11.62	-0.03	6/17/2022 22:49	-0.14
6/17/2022 21:46	12.07	0.11	6/18/2022 23:30	11.58	0.03	6/17/2022 21:33	11.64	0.02	6/17/2022 22:50	-0.12
6/17/2022 21:47	12.08	0.12	6/18/2022 23:31	11.56	-0.05	6/17/2022 21:34	11.59	-0.01	6/17/2022 22:51	-0.05
6/17/2022 21:48	12.07	0.06	6/18/2022 23:32	11.58	-0.02	6/17/2022 21:35	11.62	-0.03	6/17/2022 22:52	-0.09
6/17/2022 21:49	12.07	0.09	6/18/2022 23:33	11.57	-0.03	6/17/2022 21:36	11.62	-0.01	6/17/2022 22:53	-0.12
6/17/2022 21:50	12.06	0.10	6/18/2022 23:34	11.58	0.02	6/17/2022 21:37	11.60	-0.01	6/17/2022 22:54	-0.14
6/17/2022 21:51	12.05	0.14	6/18/2022 23:35	11.57	0.04	6/17/2022 21:38	11.62	-0.04	6/17/2022 22:55	-0.14
6/17/2022 21:52	12.08	0.11	6/18/2022 23:36	11.55	-0.04	6/17/2022 21:39	11.62	-0.04	6/17/2022 22:56	-0.10
6/17/2022 21:53	12.07	0.05	6/18/2022 23:37	11.56	-0.02	6/17/2022 21:40	11.62	-0.01	6/17/2022 22:57	-0.09
6/17/2022 21:54	12.07	0.10	6/18/2022 23:38	11.57	-0.06	6/17/2022 21:41	11.61	0.00	6/17/2022 22:58	-0.08
6/17/2022 21:55	12.08	0.15	6/18/2022 23:39	11.62	-0.01	6/17/2022 21:42	11.65	-0.05	6/17/2022 22:59	-0.03
6/17/2022 21:56	12.06	0.18	6/18/2022 23:40	11.60	-0.07	6/17/2022 21:43	11.63	-0.04	6/17/2022 23:00	-0.13
6/17/2022 21:57	12.06	0.07	6/18/2022 23:41	11.56	0.08	6/17/2022 21:44	11.64	-0.01	6/17/2022 23:01	-0.09
6/17/2022 21:58	12.07	0.17	6/18/2022 23:42	11.58	-0.02	6/17/2022 21:45	11.59	0.01	6/17/2022 23:02	-0.08
6/17/2022 21:59	12.09	0.15	6/18/2022 23:43	11.58	-0.03	6/17/2022 21:46	11.62	0.04	6/17/2022 23:03	-0.09
6/17/2022 22:00	12.07	0.17	6/18/2022 23:44	11.56	0.06	6/17/2022 21:47	11.62	-0.03	6/17/2022 23:04	-0.06
6/17/2022 22:01	12.06	0.13	6/18/2022 23:45	11.60	-0.08	6/17/2022 21:48	11.63	-0.07	6/17/2022 23:05	-0.13
6/17/2022 22:02	12.06	0.13	6/18/2022 23:46	11.58	-0.06	6/17/2022 21:49	11.63	-0.02	6/17/2022 23:06	-0.10
6/17/2022 22:03	12.07	0.06	6/18/2022 23:47	11.60	-0.03	6/17/2022 21:50	11.62	-0.01	6/17/2022 23:07	-0.13
6/17/2022 22:04	12.07	0.12	6/18/2022 23:48	11.56	-0.05	6/17/2022 21:51	11.61	-0.03	6/17/2022 23:08	-0.10
6/17/2022 22:05	12.07	0.14	6/18/2022 23:49	11.58	-0.05	6/17/2022 21:52	11.61	0.01	6/17/2022 23:09	-0.05
6/17/2022 22:06	12.07	0.14	6/18/2022 23:50	11.57	-0.08	6/17/2022 21:53	11.60	0.03	6/17/2022 23:10	-0.09
6/17/2022 22:07	12.07	0.15	6/18/2022 23:51	11.58	-0.05	6/17/2022 21:54	11.62	-0.02	6/17/2022 23:11	-0.04
6/17/2022 22:08	12.09	0.01	6/18/2022 23:52	11.60	-0.01	6/17/2022 21:55	11.59	-0.06	6/17/2022 23:12	-0.08
6/17/2022 22:09	12.08	0.11	6/18/2022 23:53	11.56	0.00	6/17/2022 21:56	11.62	0.00	6/17/2022 23:13	-0.07
6/17/2022 22:10	12.07	0.11	6/18/2022 23:54	11.57	-0.03	6/17/2022 21:57	11.61	0.00	6/17/2022 23:14	-0.10
6/17/2022 22:11	12.06	0.14	6/18/2022 23:55	11.62	-0.02	6/17/2022 21:58	11.61	0.00	6/17/2022 23:15	-0.04
6/17/2022 22:12	12.07	0.11	6/18/2022 23:56	11.60	-0.11	6/17/2022 21:59	11.60	0.00	6/17/2022 23:16	-0.07
6/17/2022 22:13	12.09	0.15	6/18/2022 23:57	11.58	0.04	6/17/2022 22:00	11.61	-0.01	6/17/2022 23:17	-0.09
6/17/2022 22:14	12.07	0.17	6/18/2022 23:58	11.57	0.00	6/17/2022 22:01	11.62	-0.01	6/17/2022 23:18	-0.05

6/17/2022 22:15	12.07	0.07	6/18/2022 23:59	11.59	-0.02	6/17/2022 22:02	11.60	-0.01	6/17/2022 23:19	-0.06
6/17/2022 22:16	12.07	0.05	6/19/2022 0:00	11.59	-0.02	6/17/2022 22:03	11.61	-0.04	6/17/2022 23:20	-0.01
6/17/2022 22:17	12.07	0.08	6/19/2022 0:01	11.58	0.02	6/17/2022 22:04	11.61	-0.01	6/17/2022 23:21	-0.13
6/17/2022 22:18	12.07	0.13	6/19/2022 0:02	11.57	0.05	6/17/2022 22:05	11.61	0.01	6/17/2022 23:22	-0.10
6/17/2022 22:19	12.06	0.08	6/19/2022 0:03	11.60	0.01	6/17/2022 22:06	11.59	-0.01	6/17/2022 23:23	-0.08
6/17/2022 22:20	12.08	0.14	6/19/2022 0:04	11.55	-0.06	6/17/2022 22:07	11.61	-0.03	6/17/2022 23:24	-0.11
6/17/2022 22:21	12.06	0.14	6/19/2022 0:05	11.57	0.00	6/17/2022 22:08	11.60	-0.01	6/17/2022 23:25	-0.05
6/17/2022 22:22	12.08	0.10	6/19/2022 0:06	11.57	-0.03	6/17/2022 22:09	11.63	-0.08	6/17/2022 23:26	-0.10
6/17/2022 22:23	12.08	0.04	6/19/2022 0:07	11.60	-0.05	6/17/2022 22:10	11.59	-0.02	6/17/2022 23:27	-0.08
6/17/2022 22:24	12.10	0.14	6/19/2022 0:08	11.58	-0.08	6/17/2022 22:11	11.63	-0.01	6/17/2022 23:28	-0.08
6/17/2022 22:25	12.07	0.08	6/19/2022 0:09	11.58	0.01	6/17/2022 22:12	11.63	-0.03	6/17/2022 23:29	-0.02
6/17/2022 22:26	12.06	0.13	6/19/2022 0:10	11.56	0.03	6/17/2022 22:13	11.60	-0.03	6/17/2022 23:30	-0.07
6/17/2022 22:27	12.06	0.17	6/19/2022 0:11	11.58	-0.09	6/17/2022 22:14	11.61	-0.01	6/17/2022 23:31	-0.11
6/17/2022 22:28	12.06	0.16	6/19/2022 0:12	11.58	0.04	6/17/2022 22:15	11.62	0.01	6/17/2022 23:32	-0.08
6/17/2022 22:29	12.09	0.10	6/19/2022 0:13	11.60	-0.03	6/17/2022 22:16	11.60	-0.02	6/17/2022 23:33	-0.13
6/17/2022 22:30	12.07	0.07	6/19/2022 0:14	11.58	-0.06	6/17/2022 22:17	11.61	-0.04	6/17/2022 23:34	-0.07
6/17/2022 22:31	12.06	0.07	6/19/2022 0:15	11.58	-0.01	6/17/2022 22:18	11.61	-0.05	6/17/2022 23:35	-0.04
6/17/2022 22:32	12.08	0.11	6/19/2022 0:16	11.59	-0.10	6/17/2022 22:19	11.62	0.00	6/17/2022 23:36	-0.10
6/17/2022 22:33	12.10	0.13	6/19/2022 0:17	11.57	0.01	6/17/2022 22:20	11.62	-0.02	6/17/2022 23:37	-0.08
6/17/2022 22:34	12.09	0.08	6/19/2022 0:18	11.57	-0.05	6/17/2022 22:21	11.60	-0.03	6/17/2022 23:38	-0.07
6/17/2022 22:35	12.06	0.16	6/19/2022 0:19	11.57	0.03	6/17/2022 22:22	11.63	-0.04	6/17/2022 23:39	-0.13
6/17/2022 22:36	12.06	0.11	6/19/2022 0:20	11.57	0.01	6/17/2022 22:23	11.62	-0.04	6/17/2022 23:40	-0.05
6/17/2022 22:37	12.06	0.09	6/19/2022 0:21	11.58	-0.08	6/17/2022 22:24	11.61	0.00	6/17/2022 23:41	-0.07
6/17/2022 22:38	12.06	0.11	6/19/2022 0:22	11.57	-0.01	6/17/2022 22:25	11.62	-0.02	6/17/2022 23:42	-0.09
6/17/2022 22:39	12.08	0.09	6/19/2022 0:23	11.58	0.10	6/17/2022 22:26	11.62	-0.04	6/17/2022 23:43	-0.09
6/17/2022 22:40	12.05	0.08	6/19/2022 0:24	11.56	-0.07	6/17/2022 22:27	11.62	-0.02	6/17/2022 23:44	-0.07
6/17/2022 22:41	12.07	0.07	6/19/2022 0:25	11.57	-0.07	6/17/2022 22:28	11.62	-0.04	6/17/2022 23:45	-0.06
6/17/2022 22:42	12.06	0.10	6/19/2022 0:26	11.59	-0.02	6/17/2022 22:29	11.62	0.00	6/17/2022 23:46	-0.07
6/17/2022 22:43	12.06	0.16	6/19/2022 0:27	11.58	0.01	6/17/2022 22:30	11.61	-0.02	6/17/2022 23:47	-0.12
6/17/2022 22:44	12.08	0.12	6/19/2022 0:28	11.58	-0.01	6/17/2022 22:31	11.60	-0.02	6/17/2022 23:48	-0.10
6/17/2022 22:45	12.07	0.15	6/19/2022 0:29	11.55	-0.02	6/17/2022 22:32	11.62	-0.03	6/17/2022 23:49	-0.05
6/17/2022 22:46	12.07	0.21	6/19/2022 0:30	11.58	-0.10	6/17/2022 22:33	11.62	-0.04	6/17/2022 23:50	-0.07
6/17/2022 22:47	12.09	0.11	6/19/2022 0:31	11.58	-0.01	6/17/2022 22:34	11.61	-0.02	6/17/2022 23:51	-0.12
6/17/2022 22:48	12.08	0.12	6/19/2022 0:32	11.57	0.00	6/17/2022 22:35	11.63	-0.01	6/17/2022 23:52	-0.12
6/17/2022 22:49	12.07	0.19	6/19/2022 0:33	11.57	0.05	6/17/2022 22:36	11.62	-0.03	6/17/2022 23:53	-0.08
6/17/2022 22:50	12.09	0.15	6/19/2022 0:34	11.59	0.01	6/17/2022 22:37	11.62	0.01	6/17/2022 23:54	-0.04
6/17/2022 22:51	12.07	0.11	6/19/2022 0:35	11.59	-0.10	6/17/2022 22:38	11.62	-0.02	6/17/2022 23:55	-0.06
6/17/2022 22:52	12.05	0.11	6/19/2022 0:36	11.57	0.02	6/17/2022 22:39	11.61	-0.04	6/17/2022 23:56	-0.03
6/17/2022 22:53	12.08	0.16	6/19/2022 0:37	11.57	-0.01	6/17/2022 22:40	11.62	-0.01	6/17/2022 23:57	-0.09
6/17/2022 22:54	12.07	0.15	6/19/2022 0:38	11.57	-0.01	6/17/2022 22:41	11.61	-0.02	6/17/2022 23:58	-0.07
6/17/2022 22:55	12.05	0.11	6/19/2022 0:39	11.58	-0.11	6/17/2022 22:42	11.62	-0.06	6/17/2022 23:59	-0.08
6/17/2022 22:56	12.07	0.08	6/19/2022 0:40	11.59	0.05	6/17/2022 22:43	11.62	-0.01	6/18/2022 0:00	-0.05
6/17/2022 22:57	12.09	0.11	6/19/2022 0:41	11.61	-0.11	6/17/2022 22:44	11.64	-0.03	6/18/2022 0:01	-0.12
6/17/2022 22:58	12.07	0.03	6/19/2022 0:42	11.57	-0.04	6/17/2022 22:45	11.63	-0.02	6/18/2022 0:02	-0.12
6/17/2022 22:59	12.08	0.08	6/19/2022 0:43	11.58	0.00	6/17/2022 22:46	11.62	-0.01	6/18/2022 0:03	-0.03
6/17/2022 23:00	12.06	0.11	6/19/2022 0:44	11.59	-0.04	6/17/2022 22:47	11.63	-0.07	6/18/2022 0:04	-0.11
6/17/2022 23:01	12.08	0.11	6/19/2022 0:45	11.57	0.02	6/17/2022 22:48	11.64	-0.02	6/18/2022 0:05	-0.07
6/17/2022 23:02	12.09	0.16	6/19/2022 0:46	11.57	-0.06	6/17/2022 22:49	11.60	0.00	6/18/2022 0:06	-0.04
6/17/2022 23:03	12.08	0.09	6/19/2022 0:47	11.58	-0.07	6/17/2022 22:50	11.62	0.00	6/18/2022 0:07	-0.08
6/17/2022 23:04	12.08	0.11	6/19/2022 0:48	11.57	-0.06	6/17/2022 22:51	11.62	-0.04	6/18/2022 0:08	-0.11
6/17/2022 23:05	12.08	0.16	6/19/2022 0:49	11.59	0.02	6/17/2022 22:52	11.64	-0.05	6/18/2022 0:09	-0.08
6/17/2022 23:06	12.07	0.05	6/19/2022 0:50	11.57	-0.04	6/17/2022 22:53	11.63	0.01	6/18/2022 0:10	-0.06
6/17/2022 23:07	12.06	0.07	6/19/2022 0:51	11.61	-0.02	6/17/2022 22:54	11.61	-0.07	6/18/2022 0:11	-0.07
6/17/2022 23:08	12.06	0.09	6/19/2022 0:52	11.58	0.02	6/17/2022 22:55	11.62	-0.03	6/18/2022 0:12	-0.04
6/17/2022 23:09	12.08	0.11	6/19/2022 0:53	11.58	-0.01	6/17/2022 22:56	11.62	-0.04	6/18/2022 0:13	-0.10
6/17/2022 23:10	12.07	0.10	6/19/2022 0:54	11.57	-0.01	6/17/2022 22:57	11.59	-0.05	6/18/2022 0:14	-0.06
6/17/2022 23:11	12.05	0.15	6/19/2022 0:55	11.59	-0.02	6/17/2022 22:58	11.60	-0.04	6/18/2022 0:15	-0.08
6/17/2022 23:12	12.09	0.11	6/19/2022 0:56	11.60	-0.09	6/17/2022 22:59	11.62	-0.07	6/18/2022 0:16	-0.07
6/17/2022 23:13	12.07	0.11	6/19/2022 0:57	11.60	-0.01	6/17/2022 23:00	11.60	-0.02	6/18/2022 0:17	-0.09
6/17/2022 23:14	12.06	0.10	6/19/2022 0:58	11.58	0.00	6/17/2022 23:01	11.64	-0.03	6/18/2022 0:18	-0.09
6/17/2022 23:15	12.09	0.18	6/19/2022 0:59	11.58	-0.03	6/17/2022 23:02	11.63	-0.04	6/18/2022 0:19	-0.07
6/17/2022 23:16	12.08	0.13	6/19/2022 1:00	11.62	0.01	6/17/2022 23:03	11.60	-0.01	6/18/2022 0:20	-0.08
6/17/2022 23:17	12.06	0.15	6/19/2022 1:01	11.57	-0.10	6/17/2022 23:04	11.59	0.00	6/18/2022 0:21	-0.07
6/17/2022 23:18	12.04	0.14	6/19/2022 1:02	11.57	-0.03	6/17/2022 23:05	11.63	0.01	6/18/2022 0:22	-0.02
6/17/2022 23:19	12.06	0.10	6/19/2022 1:03	11.56	-0.07	6/17/2022 23:06	11.61	-0.02	6/18/2022 0:23	0.01
6/17/2022 23:20	12.07	0.11	6/19/2022 1:04	11.58	0.00	6/17/2022 23:07	11.62	-0.03	6/18/2022 0:24	-0.17
6/17/2022 23:21	12.08	0.15	6/19/2022 1:05	11.58	-0.02	6/17/2022 23:08	11.62	-0.04	6/18/2022 0:25	-0.11
6/17/2022 23:22	12.06	0.14	6/19/2022 1:06	11.57	-0.03	6/17/2022 23:09	11.60	0.01	6/18/2022 0:26	-0.04
6/17/2022 23:23	12.07	0.07	6/19/2022 1:07	11.60	0.01	6/17/2022 23:10	11.60	-0.02	6/18/2022 0:27	-0.09
6/17/2022 23:24	12.07	0.15	6/19/2022 1:08	11.58	-0.01	6/17/2022 23:11	11.61	-0.03	6/18/2022 0:28	-0.12
6/17/2022 23:25	12.10	0.15	6/19/2022 1:09	11.60	-0.10	6/17/2022 23:12	11.62	-0.02	6/18/2022 0:29	-0.07
6/17/2022 23:26	12.07	0.11	6/19/2022 1:10	11.53	0.10	6/17/2022 23:13	11.62	-0.03	6/18/2022 0:30	-0.09
6/17/2022 23:27	12.06	0.15	6/19/2022 1:11	11.59	0.03	6/17/2022 23:14	11.63	-0.02	6/18/2022 0:31	-0.06
6/17/2022 23:28	12.07	0.07	6/19/2022 1:12	11.56	-0.02	6/17/2022 23:15	11.62	-0.05	6/18/2022 0:32	-0.04
6/17/2022 23:29	12.06	0.20	6/19/2022 1:13	11.57	-0.04	6/17/2022 23:16	11.62	0.00	6/18/2022 0:33	-0.02
6/17/2022 23:30	12.07	0.16	6/19/2022 1:14	11.57	-0.04	6/17/2022 23:17	11.63	-0.01	6/18/2022 0:34	-0.13
6/17/2022 23:31	12.11	0.15	6/19/2022 1:15	11.55	-0.02	6/17/2022 23:18	11.63	0.00	6/18/2022 0:35	-0.07
6/17/2022 23:32	12.08	0.11	6/19/2022 1:16	11.56	0.02	6/17/2022 23:19	11.63	-0.03	6/18/2022 0:36	-0.10
6/17/2022 23:33	12.06	0.09	6/19/2022 1:17	11.59	0.01	6/17/2022 23:20	11.63	-0.03	6/18/2022 0:37	-0.08
6/17/2022 23:34	12.03	0.14	6/19/2022 1:18	11.57	-0.08	6/17/2022 23:21	11.59	-0.03	6/18/2022 0:38	-0.10
6/17/2022 23:35	12.06	0.17	6/19/2022 1:19	11.58	-0.09	6/17/2022 23:22	11.64	-0.06	6/18/2022 0:39	-0.09
6/17/2022 23:36	12.09	0.18	6/19/2022 1:20	11.57	0.00	6/17/2022 23:23	11.65	-0.03	6/18/2022 0:40	-0.10
6/17/2022 23:37	12.06	0.10	6/19/2022 1:21	11.55	0.00	6/17/2022 23:24	11.59	-0.01	6/18/2022 0:41	-0.07
6/17/2022 23:38	12.06	0.15	6/19/2022 1:22	11.57	-0.03	6/17/2022 23:25	11.60	-0.02	6/18/2022 0:42	-0.14
6/17/2022 23:39	12.10	0.10	6/19/2022 1:23	11.58	0.00	6/17/2022 23:26	11.63	-0.02	6/18/2022 0:43	-0.06
6/17/2022 23:40	12.09	0.26	6/19/2022 1:24	11.57	-0.05	6/17/2022 23:27	11.63	-0.01	6/18/2022 0:44	-0.09
6/17/2022 23:41	12.06	0.06	6/19/2022 1:25	11.59	-0.07	6/17/2022 23:28	11.62	-0.04	6/18/2022 0:45	-0.09
6/17/2022 23:42	12.06	0.16	6/19/2022 1:26	11.57	-0.09	6/17/2022 23:29	11.60	-0.04	6/18/2022 0:46	-0.10

6/17/2022 23:43	12.07	0.09	6/19/2022 1:27	11.56	0.04	6/17/2022 23:30	11.61	0.01	6/18/2022 0:47	-0.07
6/17/2022 23:44	12.07	0.09	6/19/2022 1:28	11.57	-0.02	6/17/2022 23:31	11.61	-0.04	6/18/2022 0:48	-0.13
6/17/2022 23:45	12.07	0.05	6/19/2022 1:29	11.59	-0.12	6/17/2022 23:32	11.62	-0.02	6/18/2022 0:49	-0.09
6/17/2022 23:46	12.06	0.11	6/19/2022 1:30	11.58	-0.02	6/17/2022 23:33	11.63	0.01	6/18/2022 0:50	-0.16
6/17/2022 23:47	12.06	0.06	6/19/2022 1:31	11.59	-0.03	6/17/2022 23:34	11.62	0.01	6/18/2022 0:51	-0.08
6/17/2022 23:48	12.09	0.16	6/19/2022 1:32	11.57	-0.03	6/17/2022 23:35	11.63	-0.02	6/18/2022 0:52	-0.05
6/17/2022 23:49	12.06	0.10	6/19/2022 1:33	11.57	0.02	6/17/2022 23:36	11.61	-0.03	6/18/2022 0:53	-0.06
6/17/2022 23:50	12.06	0.16	6/19/2022 1:34	11.59	-0.02	6/17/2022 23:37	11.61	-0.03	6/18/2022 0:54	-0.06
6/17/2022 23:51	12.06	0.11	6/19/2022 1:35	11.57	0.01	6/17/2022 23:38	11.60	-0.02	6/18/2022 0:55	-0.13
6/17/2022 23:52	12.07	0.08	6/19/2022 1:36	11.56	0.05	6/17/2022 23:39	11.66	-0.05	6/18/2022 0:56	-0.08
6/17/2022 23:53	12.07	0.10	6/19/2022 1:37	11.57	0.04	6/17/2022 23:40	11.62	-0.01	6/18/2022 0:57	-0.05
6/17/2022 23:54	12.07	0.14	6/19/2022 1:38	11.58	-0.10	6/17/2022 23:41	11.61	-0.05	6/18/2022 0:58	-0.10
6/17/2022 23:55	12.05	0.18	6/19/2022 1:39	11.58	-0.08	6/17/2022 23:42	11.63	0.00	6/18/2022 0:59	-0.05
6/17/2022 23:56	12.09	0.18	6/19/2022 1:40	11.57	-0.11	6/17/2022 23:43	11.60	0.00	6/18/2022 1:00	-0.06
6/17/2022 23:57	12.05	0.11	6/19/2022 1:41	11.60	-0.04	6/17/2022 23:44	11.62	0.03	6/18/2022 1:01	-0.07
6/17/2022 23:58	12.05	0.02	6/19/2022 1:42	11.60	-0.05	6/17/2022 23:45	11.61	-0.03	6/18/2022 1:02	-0.09
6/17/2022 23:59	12.08	0.10	6/19/2022 1:43	11.59	0.06	6/17/2022 23:46	11.62	-0.02	6/18/2022 1:03	-0.02
6/18/2022 0:00	12.10	0.14	6/19/2022 1:44	11.58	-0.07	6/17/2022 23:47	11.62	-0.01	6/18/2022 1:04	-0.10
6/18/2022 0:01	12.08	0.11	6/19/2022 1:45	11.58	-0.06	6/17/2022 23:48	11.62	0.00	6/18/2022 1:05	-0.08
6/18/2022 0:02	12.09	0.07	6/19/2022 1:46	11.58	-0.01	6/17/2022 23:49	11.62	-0.07	6/18/2022 1:06	-0.09
6/18/2022 0:03	12.07	0.08	6/19/2022 1:47	11.58	-0.01	6/17/2022 23:50	11.61	-0.05	6/18/2022 1:07	-0.10
6/18/2022 0:04	12.07	0.09	6/19/2022 1:48	11.57	-0.02	6/17/2022 23:51	11.64	-0.06	6/18/2022 1:08	-0.13
6/18/2022 0:05	12.07	0.09	6/19/2022 1:49	11.57	-0.09	6/17/2022 23:52	11.60	-0.04	6/18/2022 1:09	-0.11
6/18/2022 0:06	12.07	0.01	6/19/2022 1:50	11.60	-0.06	6/17/2022 23:53	11.62	-0.01	6/18/2022 1:10	-0.08
6/18/2022 0:07	12.07	0.15	6/19/2022 1:51	11.58	-0.01	6/17/2022 23:54	11.61	-0.03	6/18/2022 1:11	-0.10
6/18/2022 0:08	12.09	0.14	6/19/2022 1:52	11.60	0.01	6/17/2022 23:55	11.62	-0.02	6/18/2022 1:12	-0.15
6/18/2022 0:09	12.08	0.09	6/19/2022 1:53	11.61	-0.01	6/17/2022 23:56	11.59	0.01	6/18/2022 1:13	-0.09
6/18/2022 0:10	12.06	0.12	6/19/2022 1:54	11.58	-0.04	6/17/2022 23:57	11.60	-0.03	6/18/2022 1:14	-0.12
6/18/2022 0:11	12.08	0.14	6/19/2022 1:55	11.53	-0.05	6/17/2022 23:58	11.62	0.00	6/18/2022 1:15	-0.07
6/18/2022 0:12	12.07	0.07	6/19/2022 1:56	11.58	-0.02	6/17/2022 23:59	11.62	0.00	6/18/2022 1:16	-0.11
6/18/2022 0:13	12.08	0.09	6/19/2022 1:57	11.55	-0.06	6/18/2022 0:00	11.62	-0.02	6/18/2022 1:17	-0.07
6/18/2022 0:14	12.09	0.11	6/19/2022 1:58	11.56	-0.11	6/18/2022 0:01	11.63	-0.05	6/18/2022 1:18	-0.01
6/18/2022 0:15	12.10	0.13	6/19/2022 1:59	11.57	-0.08	6/18/2022 0:02	11.63	-0.01	6/18/2022 1:19	-0.06
6/18/2022 0:16	12.07	0.14	6/19/2022 2:00	11.60	-0.01	6/18/2022 0:03	11.60	-0.03	6/18/2022 1:20	-0.14
6/18/2022 0:17	12.07	0.10	6/19/2022 2:01	11.58	-0.10	6/18/2022 0:04	11.61	-0.06	6/18/2022 1:21	-0.11
6/18/2022 0:18	12.06	0.10	6/19/2022 2:02	11.59	-0.07	6/18/2022 0:05	11.62	0.02	6/18/2022 1:22	-0.08
6/18/2022 0:19	12.07	0.11	6/19/2022 2:03	11.60	0.02	6/18/2022 0:06	11.63	-0.03	6/18/2022 1:23	-0.10
6/18/2022 0:20	12.10	0.10	6/19/2022 2:04	11.55	-0.08	6/18/2022 0:07	11.62	-0.04	6/18/2022 1:24	-0.09
6/18/2022 0:21	12.09	0.13	6/19/2022 2:05	11.56	0.03	6/18/2022 0:08	11.62	-0.03	6/18/2022 1:25	-0.07
6/18/2022 0:22	12.06	0.13	6/19/2022 2:06	11.57	-0.04	6/18/2022 0:09	11.63	-0.02	6/18/2022 1:26	-0.12
6/18/2022 0:23	12.06	0.10	6/19/2022 2:07	11.58	-0.07	6/18/2022 0:10	11.62	-0.03	6/18/2022 1:27	-0.09
6/18/2022 0:24	12.07	0.08	6/19/2022 2:08	11.55	-0.02	6/18/2022 0:11	11.63	-0.01	6/18/2022 1:28	-0.08
6/18/2022 0:25	12.07	0.08	6/19/2022 2:09	11.58	-0.05	6/18/2022 0:12	11.60	-0.01	6/18/2022 1:29	-0.08
6/18/2022 0:26	12.08	0.08	6/19/2022 2:10	11.57	0.02	6/18/2022 0:13	11.61	-0.03	6/18/2022 1:30	-0.08
6/18/2022 0:27	12.08	0.02	6/19/2022 2:11	11.57	-0.03	6/18/2022 0:14	11.63	0.00	6/18/2022 1:31	-0.05
6/18/2022 0:28	12.09	0.14	6/19/2022 2:12	11.58	0.05	6/18/2022 0:15	11.62	-0.02	6/18/2022 1:32	-0.07
6/18/2022 0:29	12.06	0.05	6/19/2022 2:13	11.57	0.00	6/18/2022 0:16	11.61	0.01	6/18/2022 1:33	-0.08
6/18/2022 0:30	12.07	0.22	6/19/2022 2:14	11.58	0.00	6/18/2022 0:17	11.62	-0.01	6/18/2022 1:34	-0.09
6/18/2022 0:31	12.07	0.17	6/19/2022 2:15	11.57	-0.03	6/18/2022 0:18	11.62	-0.01	6/18/2022 1:35	-0.05
6/18/2022 0:32	12.07	0.14	6/19/2022 2:16	11.55	-0.03	6/18/2022 0:19	11.62	-0.02	6/18/2022 1:36	-0.09
6/18/2022 0:33	12.09	0.09	6/19/2022 2:17	11.55	-0.04	6/18/2022 0:20	11.62	-0.06	6/18/2022 1:37	-0.10
6/18/2022 0:34	12.07	0.12	6/19/2022 2:18	11.55	-0.05	6/18/2022 0:21	11.61	-0.01	6/18/2022 1:38	-0.11
6/18/2022 0:35	12.09	0.16	6/19/2022 2:19	11.58	-0.05	6/18/2022 0:22	11.62	-0.04	6/18/2022 1:39	-0.09
6/18/2022 0:36	12.09	0.08	6/19/2022 2:20	11.59	-0.03	6/18/2022 0:23	11.62	-0.02	6/18/2022 1:40	-0.07
6/18/2022 0:37	12.08	0.08	6/19/2022 2:21	11.58	0.06	6/18/2022 0:24	11.64	-0.06	6/18/2022 1:41	-0.03
6/18/2022 0:38	12.08	0.07	6/19/2022 2:22	11.55	0.03	6/18/2022 0:25	11.64	-0.02	6/18/2022 1:42	-0.09
6/18/2022 0:39	12.06	0.03	6/19/2022 2:23	11.58	-0.02	6/18/2022 0:26	11.65	-0.01	6/18/2022 1:43	-0.08
6/18/2022 0:40	12.07	0.04	6/19/2022 2:24	11.57	0.00	6/18/2022 0:27	11.60	-0.04	6/18/2022 1:44	-0.08
6/18/2022 0:41	12.07	0.08	6/19/2022 2:25	11.59	-0.03	6/18/2022 0:28	11.64	0.02	6/18/2022 1:45	-0.08
6/18/2022 0:42	12.08	0.20	6/19/2022 2:26	11.57	-0.03	6/18/2022 0:29	11.65	0.00	6/18/2022 1:46	-0.03
6/18/2022 0:43	12.05	0.15	6/19/2022 2:27	11.61	-0.04	6/18/2022 0:30	11.66	-0.05	6/18/2022 1:47	-0.10
6/18/2022 0:44	12.06	0.06	6/19/2022 2:28	11.59	0.00	6/18/2022 0:31	11.62	0.01	6/18/2022 1:48	-0.08
6/18/2022 0:45	12.07	0.12	6/19/2022 2:29	11.58	-0.02	6/18/2022 0:32	11.62	-0.03	6/18/2022 1:49	-0.06
6/18/2022 0:46	12.07	0.08	6/19/2022 2:30	11.57	0.04	6/18/2022 0:33	11.63	-0.02	6/18/2022 1:50	-0.07
6/18/2022 0:47	12.07	0.13	6/19/2022 2:31	11.56	0.00	6/18/2022 0:34	11.61	-0.04	6/18/2022 1:51	-0.11
6/18/2022 0:48	12.09	0.04	6/19/2022 2:32	11.56	-0.02	6/18/2022 0:35	11.62	-0.06	6/18/2022 1:52	-0.10
6/18/2022 0:49	12.08	0.11	6/19/2022 2:33	11.55	-0.06	6/18/2022 0:36	11.61	-0.02	6/18/2022 1:53	-0.05
6/18/2022 0:50	12.07	0.11	6/19/2022 2:34	11.60	-0.07	6/18/2022 0:37	11.62	-0.03	6/18/2022 1:54	-0.07
6/18/2022 0:51	12.06	0.10	6/19/2022 2:35	11.58	0.05	6/18/2022 0:38	11.63	-0.01	6/18/2022 1:55	-0.05
6/18/2022 0:52	12.06	0.11	6/19/2022 2:36	11.55	0.04	6/18/2022 0:39	11.62	-0.01	6/18/2022 1:56	-0.06
6/18/2022 0:53	12.07	0.12	6/19/2022 2:37	11.60	-0.04	6/18/2022 0:40	11.62	-0.02	6/18/2022 1:57	-0.08
6/18/2022 0:54	12.07	0.15	6/19/2022 2:38	11.57	0.00	6/18/2022 0:41	11.62	-0.03	6/18/2022 1:58	-0.07
6/18/2022 0:55	12.06	0.10	6/19/2022 2:39	11.60	-0.03	6/18/2022 0:42	11.65	-0.01	6/18/2022 1:59	-0.13
6/18/2022 0:56	12.08	0.11	6/19/2022 2:40	11.59	-0.02	6/18/2022 0:43	11.61	-0.01	6/18/2022 2:00	-0.08
6/18/2022 0:57	12.07	0.12	6/19/2022 2:41	11.59	0.10	6/18/2022 0:44	11.64	-0.05	6/18/2022 2:01	-0.07
6/18/2022 0:58	12.10	0.03	6/19/2022 2:42	11.59	-0.06	6/18/2022 0:45	11.62	-0.03	6/18/2022 2:02	-0.11
6/18/2022 0:59	12.08	0.17	6/19/2022 2:43	11.58	0.01	6/18/2022 0:46	11.60	-0.03	6/18/2022 2:03	-0.12
6/18/2022 1:00	12.09	0.14	6/19/2022 2:44	11.59	-0.04	6/18/2022 0:47	11.62	-0.03	6/18/2022 2:04	-0.11
6/18/2022 1:01	12.07	0.10	6/19/2022 2:45	11.57	-0.01	6/18/2022 0:48	11.62	-0.05	6/18/2022 2:05	-0.10
6/18/2022 1:02	12.08	0.15	6/19/2022 2:46	11.57	-0.01	6/18/2022 0:49	11.63	-0.01	6/18/2022 2:06	-0.07
6/18/2022 1:03	12.07	0.02	6/19/2022 2:47	11.58	0.01	6/18/2022 0:50	11.63	-0.01	6/18/2022 2:07	-0.06
6/18/2022 1:04	12.09	0.11	6/19/2022 2:48	11.58	0.04	6/18/2022 0:51	11.63	0.00	6/18/2022 2:08	-0.04
6/18/2022 1:05	12.06	0.18	6/19/2022 2:49	11.57	-0.02	6/18/2022 0:52	11.63	-0.05	6/18/2022 2:09	-0.11
6/18/2022 1:06	12.08	0.14	6/19/2022 2:50	11.59	0.04	6/18/2022 0:53	11.64	-0.03	6/18/2022 2:10	-0.09
6/18/2022 1:07	12.07	0.13	6/19/2022 2:51	11.57	-0.04	6/18/2022 0:54	11.61	-0.07	6/18/2022 2:11	-0.06
6/18/2022 1:08	12.09	0.11	6/19/2022 2:52	11.58	-0.07	6/18/2022 0:55	11.62	-0.02	6/18/2022 2:12	-0.07
6/18/2022 1:09	12.05	0.09	6/19/2022 2:53	11.57	-0.05	6/18/2022 0:56	11.62	-0.03	6/18/2022 2:13	-0.08
6/18/2022 1:10	12.07	0.10	6/19/2022 2:54	11.60	-0.08	6/18/2022 0:57	11.64	-0.04	6/18/2022 2:14	-0.08

6/18/2022 1:11	12.06	0.08	6/19/2022 2:55	11.56	-0.11	6/18/2022 0:58	11.62	-0.02	6/18/2022 2:15	-0.10
6/18/2022 1:12	12.11	0.13	6/19/2022 2:56	11.57	-0.05	6/18/2022 0:59	11.64	-0.01	6/18/2022 2:16	-0.05
6/18/2022 1:13	12.08	0.09	6/19/2022 2:57	11.58	-0.13	6/18/2022 1:00	11.63	0.00	6/18/2022 2:17	-0.03
6/18/2022 1:14	12.06	0.16	6/19/2022 2:58	11.59	0.10	6/18/2022 1:01	11.62	0.00	6/18/2022 2:18	-0.05
6/18/2022 1:15	12.06	0.09	6/19/2022 2:59	11.57	-0.04	6/18/2022 1:02	11.61	-0.06	6/18/2022 2:19	-0.06
6/18/2022 1:16	12.07	0.06	6/19/2022 3:00	11.57	0.00	6/18/2022 1:03	11.63	-0.02	6/18/2022 2:20	-0.10
6/18/2022 1:17	12.06	0.15	6/19/2022 3:01	11.59	0.01	6/18/2022 1:04	11.63	0.01	6/18/2022 2:21	-0.08
6/18/2022 1:18	12.05	0.13	6/19/2022 3:02	11.57	0.02	6/18/2022 1:05	11.62	0.01	6/18/2022 2:22	-0.05
6/18/2022 1:19	12.09	0.09	6/19/2022 3:03	11.58	-0.01	6/18/2022 1:06	11.62	-0.02	6/18/2022 2:23	-0.09
6/18/2022 1:20	12.08	0.07	6/19/2022 3:04	11.57	-0.11	6/18/2022 1:07	11.62	-0.02	6/18/2022 2:24	-0.07
6/18/2022 1:21	12.05	0.03	6/19/2022 3:05	11.59	-0.05	6/18/2022 1:08	11.62	-0.03	6/18/2022 2:25	-0.09
6/18/2022 1:22	12.07	0.03	6/19/2022 3:06	11.55	-0.13	6/18/2022 1:09	11.62	0.01	6/18/2022 2:26	-0.07
6/18/2022 1:23	12.07	0.01	6/19/2022 3:07	11.60	0.02	6/18/2022 1:10	11.60	0.00	6/18/2022 2:27	-0.02
6/18/2022 1:24	12.07	0.14	6/19/2022 3:08	11.60	0.03	6/18/2022 1:11	11.63	-0.05	6/18/2022 2:28	-0.09
6/18/2022 1:25	12.06	0.11	6/19/2022 3:09	11.57	0.04	6/18/2022 1:12	11.62	0.00	6/18/2022 2:29	-0.05
6/18/2022 1:26	12.04	0.10	6/19/2022 3:10	11.58	-0.05	6/18/2022 1:13	11.63	-0.02	6/18/2022 2:30	-0.10
6/18/2022 1:27	12.09	0.08	6/19/2022 3:11	11.58	-0.01	6/18/2022 1:14	11.60	-0.06	6/18/2022 2:31	-0.12
6/18/2022 1:28	12.06	0.13	6/19/2022 3:12	11.57	0.01	6/18/2022 1:15	11.62	-0.04	6/18/2022 2:32	-0.07
6/18/2022 1:29	12.07	0.15	6/19/2022 3:13	11.60	-0.06	6/18/2022 1:16	11.61	-0.01	6/18/2022 2:33	-0.07
6/18/2022 1:30	12.08	0.15	6/19/2022 3:14	11.57	0.02	6/18/2022 1:17	11.60	-0.02	6/18/2022 2:34	-0.05
6/18/2022 1:31	12.07	0.08	6/19/2022 3:15	11.57	-0.10	6/18/2022 1:18	11.59	-0.01	6/18/2022 2:35	-0.05
6/18/2022 1:32	12.07	0.12	6/19/2022 3:16	11.58	-0.05	6/18/2022 1:19	11.61	0.03	6/18/2022 2:36	-0.11
6/18/2022 1:33	12.05	0.15	6/19/2022 3:17	11.61	0.04	6/18/2022 1:20	11.65	-0.04	6/18/2022 2:37	-0.12
6/18/2022 1:34	12.06	0.25	6/19/2022 3:18	11.58	0.04	6/18/2022 1:21	11.62	-0.02	6/18/2022 2:38	-0.10
6/18/2022 1:35	12.06	0.07	6/19/2022 3:19	11.56	0.05	6/18/2022 1:22	11.65	0.01	6/18/2022 2:39	-0.08
6/18/2022 1:36	12.07	0.11	6/19/2022 3:20	11.57	0.00	6/18/2022 1:23	11.62	-0.03	6/18/2022 2:40	-0.11
6/18/2022 1:37	12.06	0.10	6/19/2022 3:21	11.58	-0.08	6/18/2022 1:24	11.62	-0.04	6/18/2022 2:41	-0.10
6/18/2022 1:38	12.06	0.09	6/19/2022 3:22	11.56	-0.04	6/18/2022 1:25	11.61	-0.08	6/18/2022 2:42	-0.08
6/18/2022 1:39	12.06	0.09	6/19/2022 3:23	11.57	-0.02	6/18/2022 1:26	11.62	-0.03	6/18/2022 2:43	-0.10
6/18/2022 1:40	12.06	0.12	6/19/2022 3:24	11.59	-0.08	6/18/2022 1:27	11.63	-0.03	6/18/2022 2:44	-0.09
6/18/2022 1:41	12.08	0.15	6/19/2022 3:25	11.58	-0.03	6/18/2022 1:28	11.62	-0.01	6/18/2022 2:45	-0.12
6/18/2022 1:42	12.08	0.00	6/19/2022 3:26	11.57	0.01	6/18/2022 1:29	11.62	-0.01	6/18/2022 2:46	-0.08
6/18/2022 1:43	12.06	0.21	6/19/2022 3:27	11.59	-0.04	6/18/2022 1:30	11.60	-0.03	6/18/2022 2:47	-0.06
6/18/2022 1:44	12.06	0.18	6/19/2022 3:28	11.56	-0.01	6/18/2022 1:31	11.62	-0.02	6/18/2022 2:48	-0.04
6/18/2022 1:45	12.06	0.14	6/19/2022 3:29	11.58	-0.05	6/18/2022 1:32	11.62	0.00	6/18/2022 2:49	-0.03
6/18/2022 1:46	12.09	0.01	6/19/2022 3:30	11.57	0.05	6/18/2022 1:33	11.64	-0.05	6/18/2022 2:50	-0.09
6/18/2022 1:47	12.07	0.05	6/19/2022 3:31	11.57	-0.02	6/18/2022 1:34	11.63	-0.03	6/18/2022 2:51	-0.06
6/18/2022 1:48	12.09	0.10	6/19/2022 3:32	11.55	-0.01	6/18/2022 1:35	11.61	-0.02	6/18/2022 2:52	-0.11
6/18/2022 1:49	12.07	0.06	6/19/2022 3:33	11.58	-0.03	6/18/2022 1:36	11.63	0.01	6/18/2022 2:53	-0.10
6/18/2022 1:50	12.06	0.20	6/19/2022 3:34	11.58	-0.03	6/18/2022 1:37	11.62	0.01	6/18/2022 2:54	-0.08
6/18/2022 1:51	12.07	0.15	6/19/2022 3:35	11.57	-0.02	6/18/2022 1:38	11.59	0.01	6/18/2022 2:55	-0.05
6/18/2022 1:52	12.06	0.08	6/19/2022 3:36	11.58	-0.08	6/18/2022 1:39	11.62	-0.01	6/18/2022 2:56	-0.07
6/18/2022 1:53	12.07	0.08	6/19/2022 3:37	11.60	0.00	6/18/2022 1:40	11.64	-0.02	6/18/2022 2:57	-0.08
6/18/2022 1:54	12.07	0.11	6/19/2022 3:38	11.57	-0.06	6/18/2022 1:41	11.62	-0.04	6/18/2022 2:58	-0.09
6/18/2022 1:55	12.04	0.02	6/19/2022 3:39	11.58	-0.07	6/18/2022 1:42	11.62	-0.05	6/18/2022 2:59	-0.03
6/18/2022 1:56	12.07	0.09	6/19/2022 3:40	11.58	-0.01	6/18/2022 1:43	11.62	-0.04	6/18/2022 3:00	-0.09
6/18/2022 1:57	12.06	0.06	6/19/2022 3:41	11.57	0.01	6/18/2022 1:44	11.59	-0.01	6/18/2022 3:01	-0.10
6/18/2022 1:58	12.07	0.10	6/19/2022 3:42	11.60	-0.02	6/18/2022 1:45	11.61	-0.03	6/18/2022 3:02	-0.07
6/18/2022 1:59	12.07	0.06	6/19/2022 3:43	11.58	-0.09	6/18/2022 1:46	11.62	-0.04	6/18/2022 3:03	-0.09
6/18/2022 2:00	12.07	0.11	6/19/2022 3:44	11.57	0.02	6/18/2022 1:47	11.61	-0.02	6/18/2022 3:04	-0.14
6/18/2022 2:01	12.07	0.10	6/19/2022 3:45	11.59	-0.07	6/18/2022 1:48	11.60	-0.03	6/18/2022 3:05	-0.06
6/18/2022 2:02	12.07	0.17	6/19/2022 3:46	11.57	-0.02	6/18/2022 1:49	11.59	-0.05	6/18/2022 3:06	-0.08
6/18/2022 2:03	12.09	0.06	6/19/2022 3:47	11.58	0.05	6/18/2022 1:50	11.60	0.01	6/18/2022 3:07	-0.14
6/18/2022 2:04	12.06	0.21	6/19/2022 3:48	11.58	-0.07	6/18/2022 1:51	11.61	-0.02	6/18/2022 3:08	-0.10
6/18/2022 2:05	12.07	0.07	6/19/2022 3:49	11.60	-0.03	6/18/2022 1:52	11.63	0.04	6/18/2022 3:09	-0.09
6/18/2022 2:06	12.08	0.15	6/19/2022 3:50	11.58	-0.04	6/18/2022 1:53	11.60	-0.04	6/18/2022 3:10	-0.03
6/18/2022 2:07	12.06	0.07	6/19/2022 3:51	11.60	-0.06	6/18/2022 1:54	11.62	0.02	6/18/2022 3:11	-0.07
6/18/2022 2:08	12.07	0.11	6/19/2022 3:52	11.56	0.07	6/18/2022 1:55	11.60	-0.04	6/18/2022 3:12	-0.06
6/18/2022 2:09	12.07	0.05	6/19/2022 3:53	11.60	-0.08	6/18/2022 1:56	11.61	-0.06	6/18/2022 3:13	-0.03
6/18/2022 2:10	12.07	0.10	6/19/2022 3:54	11.60	-0.04	6/18/2022 1:57	11.61	0.01	6/18/2022 3:14	-0.08
6/18/2022 2:11	12.08	0.13	6/19/2022 3:55	11.58	-0.02	6/18/2022 1:58	11.66	-0.03	6/18/2022 3:15	-0.08
6/18/2022 2:12	12.07	0.15	6/19/2022 3:56	11.57	0.03	6/18/2022 1:59	11.63	-0.07	6/18/2022 3:16	-0.09
6/18/2022 2:13	12.07	0.14	6/19/2022 3:57	11.58	-0.04	6/18/2022 2:00	11.63	-0.05	6/18/2022 3:17	-0.08
6/18/2022 2:14	12.07	0.14	6/19/2022 3:58	11.55	0.01	6/18/2022 2:01	11.61	-0.04	6/18/2022 3:18	-0.04
6/18/2022 2:15	12.05	0.11	6/19/2022 3:59	11.58	-0.01	6/18/2022 2:02	11.62	-0.04	6/18/2022 3:19	-0.03
6/18/2022 2:16	12.08	0.07	6/19/2022 4:00	11.55	-0.01	6/18/2022 2:03	11.63	-0.02	6/18/2022 3:20	-0.08
6/18/2022 2:17	12.09	0.07	6/19/2022 4:01	11.56	-0.01	6/18/2022 2:04	11.61	-0.01	6/18/2022 3:21	-0.09
6/18/2022 2:18	12.07	0.06	6/19/2022 4:02	11.58	0.00	6/18/2022 2:05	11.62	-0.01	6/18/2022 3:22	-0.08
6/18/2022 2:19	12.09	0.12	6/19/2022 4:03	11.58	-0.01	6/18/2022 2:06	11.62	-0.02	6/18/2022 3:23	-0.14
6/18/2022 2:20	12.07	0.19	6/19/2022 4:04	11.61	-0.03	6/18/2022 2:07	11.60	-0.04	6/18/2022 3:24	-0.14
6/18/2022 2:21	12.07	0.16	6/19/2022 4:05	11.55	-0.07	6/18/2022 2:08	11.62	-0.05	6/18/2022 3:25	-0.06
6/18/2022 2:22	12.08	0.14	6/19/2022 4:06	11.59	-0.04	6/18/2022 2:09	11.62	-0.03	6/18/2022 3:26	-0.09
6/18/2022 2:23	12.06	0.05	6/19/2022 4:07	11.57	-0.01	6/18/2022 2:10	11.62	-0.03	6/18/2022 3:27	-0.10
6/18/2022 2:24	12.09	0.14	6/19/2022 4:08	11.58	-0.08	6/18/2022 2:11	11.63	-0.03	6/18/2022 3:28	-0.08
6/18/2022 2:25	12.09	0.24	6/19/2022 4:09	11.60	-0.08	6/18/2022 2:12	11.59	-0.08	6/18/2022 3:29	-0.07
6/18/2022 2:26	12.07	0.06	6/19/2022 4:10	11.59	0.01	6/18/2022 2:13	11.62	-0.04	6/18/2022 3:30	-0.09
6/18/2022 2:27	12.08	0.17	6/19/2022 4:11	11.59	-0.02	6/18/2022 2:14	11.58	-0.02	6/18/2022 3:31	-0.09
6/18/2022 2:28	12.06	0.10	6/19/2022 4:12	11.60	0.06	6/18/2022 2:15	11.61	0.01	6/18/2022 3:32	-0.07
6/18/2022 2:29	12.07	0.07	6/19/2022 4:13	11.58	-0.03	6/18/2022 2:16	11.62	0.02	6/18/2022 3:33	-0.08
6/18/2022 2:30	12.05	0.11	6/19/2022 4:14	11.59	0.00	6/18/2022 2:17	11.64	-0.05	6/18/2022 3:34	-0.06
6/18/2022 2:31	12.07	0.10	6/19/2022 4:15	11.57	0.01	6/18/2022 2:18	11.62	-0.03	6/18/2022 3:35	-0.10
6/18/2022 2:32	12.09	0.15	6/19/2022 4:16	11.57	-0.04	6/18/2022 2:19	11.62	-0.02	6/18/2022 3:36	-0.06
6/18/2022 2:33	12.05	0.08	6/19/2022 4:17	11.58	0.05	6/18/2022 2:20	11.62	0.01	6/18/2022 3:37	-0.05
6/18/2022 2:34	12.05	0.14	6/19/2022 4:18	11.60	-0.12	6/18/2022 2:21	11.61	-0.06	6/18/2022 3:38	-0.08
6/18/2022 2:35	12.06	0.18	6/19/2022 4:19	11.57	-0.04	6/18/2022 2:22	11.61	-0.02	6/18/2022 3:39	-0.02
6/18/2022 2:36	12.05	0.01	6/19/2022 4:20	11.57	0.03	6/18/2022 2:23	11.61	-0.04	6/18/2022 3:40	-0.03
6/18/2022 2:37	12.06	0.13	6/19/2022 4:21	11.56	-0.02	6/18/2022 2:24	11.62	-0.03	6/18/2022 3:41	-0.06
6/18/2022 2:38	12.08	0.06	6/19/2022 4:22	11.56	0.03	6/18/2022 2:25	11.60	-0.03	6/18/2022 3:42	-0.06

6/18/2022 2:39	12.10	0.15	6/19/2022 4:23	11.58	-0.03	6/18/2022 2:26	11.61	-0.07	6/18/2022 3:43	-0.13
6/18/2022 2:40	12.07	-0.01	6/19/2022 4:24	11.56	-0.05	6/18/2022 2:27	11.63	-0.01	6/18/2022 3:44	-0.09
6/18/2022 2:41	12.08	0.07	6/19/2022 4:25	11.57	-0.05	6/18/2022 2:28	11.63	0.00	6/18/2022 3:45	-0.08
6/18/2022 2:42	12.05	0.10	6/19/2022 4:26	11.58	-0.01	6/18/2022 2:29	11.60	-0.02	6/18/2022 3:46	-0.10
6/18/2022 2:43	12.05	0.13	6/19/2022 4:27	11.60	0.01	6/18/2022 2:30	11.61	-0.01	6/18/2022 3:47	-0.07
6/18/2022 2:44	12.07	0.07	6/19/2022 4:28	11.60	-0.02	6/18/2022 2:31	11.62	-0.05	6/18/2022 3:48	-0.10
6/18/2022 2:45	12.06	0.12	6/19/2022 4:29	11.56	-0.04	6/18/2022 2:32	11.61	-0.05	6/18/2022 3:49	-0.08
6/18/2022 2:46	12.05	0.16	6/19/2022 4:30	11.54	-0.05	6/18/2022 2:33	11.64	-0.05	6/18/2022 3:50	-0.09
6/18/2022 2:47	12.09	0.02	6/19/2022 4:31	11.57	-0.02	6/18/2022 2:34	11.60	-0.01	6/18/2022 3:51	-0.14
6/18/2022 2:48	12.09	0.15	6/19/2022 4:32	11.57	-0.01	6/18/2022 2:35	11.63	0.01	6/18/2022 3:52	-0.13
6/18/2022 2:49	12.08	0.17	6/19/2022 4:33	11.57	-0.10	6/18/2022 2:36	11.61	-0.01	6/18/2022 3:53	-0.05
6/18/2022 2:50	12.08	0.14	6/19/2022 4:34	11.60	-0.01	6/18/2022 2:37	11.61	0.00	6/18/2022 3:54	-0.10
6/18/2022 2:51	12.09	0.13	6/19/2022 4:35	11.57	0.06	6/18/2022 2:38	11.63	-0.03	6/18/2022 3:55	-0.12
6/18/2022 2:52	12.07	0.09	6/19/2022 4:36	11.58	-0.06	6/18/2022 2:39	11.61	-0.03	6/18/2022 3:56	-0.14
6/18/2022 2:53	12.05	0.09	6/19/2022 4:37	11.60	-0.11	6/18/2022 2:40	11.62	0.02	6/18/2022 3:57	-0.05
6/18/2022 2:54	12.07	0.11	6/19/2022 4:38	11.56	-0.03	6/18/2022 2:41	11.61	-0.01	6/18/2022 3:58	-0.15
6/18/2022 2:55	12.05	0.11	6/19/2022 4:39	11.57	0.03	6/18/2022 2:42	11.61	-0.07	6/18/2022 3:59	-0.08
6/18/2022 2:56	12.08	0.08	6/19/2022 4:40	11.57	0.00	6/18/2022 2:43	11.59	0.05	6/18/2022 4:00	-0.02
6/18/2022 2:57	12.06	0.06	6/19/2022 4:41	11.58	-0.06	6/18/2022 2:44	11.63	-0.01	6/18/2022 4:01	-0.09
6/18/2022 2:58	12.07	0.07	6/19/2022 4:42	11.58	0.01	6/18/2022 2:45	11.61	-0.04	6/18/2022 4:02	-0.13
6/18/2022 2:59	12.06	0.17	6/19/2022 4:43	11.57	-0.05	6/18/2022 2:46	11.61	-0.01	6/18/2022 4:03	-0.13
6/18/2022 3:00	12.07	0.11	6/19/2022 4:44	11.56	-0.05	6/18/2022 2:47	11.60	-0.01	6/18/2022 4:04	-0.07
6/18/2022 3:01	12.07	0.08	6/19/2022 4:45	11.57	-0.11	6/18/2022 2:48	11.63	0.03	6/18/2022 4:05	-0.08
6/18/2022 3:02	12.07	0.15	6/19/2022 4:46	11.59	-0.06	6/18/2022 2:49	11.62	-0.02	6/18/2022 4:06	-0.09
6/18/2022 3:03	12.07	0.16	6/19/2022 4:47	11.59	0.00	6/18/2022 2:50	11.62	-0.03	6/18/2022 4:07	-0.09
6/18/2022 3:04	12.07	0.14	6/19/2022 4:48	11.60	0.01	6/18/2022 2:51	11.59	-0.02	6/18/2022 4:08	-0.07
6/18/2022 3:05	12.06	0.14	6/19/2022 4:49	11.58	0.00	6/18/2022 2:52	11.64	-0.03	6/18/2022 4:09	-0.09
6/18/2022 3:06	12.07	0.15	6/19/2022 4:50	11.56	-0.02	6/18/2022 2:53	11.62	-0.01	6/18/2022 4:10	-0.12
6/18/2022 3:07	12.09	0.11	6/19/2022 4:51	11.60	-0.01	6/18/2022 2:54	11.61	-0.02	6/18/2022 4:11	-0.08
6/18/2022 3:08	12.07	0.09	6/19/2022 4:52	11.58	-0.01	6/18/2022 2:55	11.62	-0.03	6/18/2022 4:12	-0.12
6/18/2022 3:09	12.06	0.10	6/19/2022 4:53	11.56	0.02	6/18/2022 2:56	11.63	-0.04	6/18/2022 4:13	-0.09
6/18/2022 3:10	12.07	0.07	6/19/2022 4:54	11.58	0.06	6/18/2022 2:57	11.62	-0.04	6/18/2022 4:14	-0.09
6/18/2022 3:11	12.06	0.12	6/19/2022 4:55	11.58	-0.04	6/18/2022 2:58	11.61	-0.05	6/18/2022 4:15	-0.05
6/18/2022 3:12	12.06	0.01	6/19/2022 4:56	11.59	-0.09	6/18/2022 2:59	11.62	-0.05	6/18/2022 4:16	-0.05
6/18/2022 3:13	12.11	0.14	6/19/2022 4:57	11.59	-0.04	6/18/2022 3:00	11.61	0.00	6/18/2022 4:17	-0.10
6/18/2022 3:14	12.06	0.04	6/19/2022 4:58	11.57	-0.06	6/18/2022 3:01	11.62	-0.02	6/18/2022 4:18	-0.08
6/18/2022 3:15	12.08	0.07	6/19/2022 4:59	11.57	0.00	6/18/2022 3:02	11.62	0.01	6/18/2022 4:19	-0.09
6/18/2022 3:16	12.08	0.11	6/19/2022 5:00	11.58	-0.01	6/18/2022 3:03	11.61	-0.02	6/18/2022 4:20	-0.08
6/18/2022 3:17	12.07	0.15	6/19/2022 5:01	11.60	-0.04	6/18/2022 3:04	11.63	-0.06	6/18/2022 4:21	-0.06
6/18/2022 3:18	12.05	0.09	6/19/2022 5:02	11.59	-0.01	6/18/2022 3:05	11.62	-0.04	6/18/2022 4:22	-0.12
6/18/2022 3:19	12.08	0.16	6/19/2022 5:03	11.57	-0.02	6/18/2022 3:06	11.60	0.00	6/18/2022 4:23	-0.13
6/18/2022 3:20	12.10	0.07	6/19/2022 5:04	11.56	-0.03	6/18/2022 3:07	11.62	-0.05	6/18/2022 4:24	-0.07
6/18/2022 3:21	12.06	0.11	6/19/2022 5:05	11.55	-0.01	6/18/2022 3:08	11.61	-0.02	6/18/2022 4:25	-0.09
6/18/2022 3:22	12.06	0.09	6/19/2022 5:06	11.57	-0.04	6/18/2022 3:09	11.60	0.02	6/18/2022 4:26	-0.13
6/18/2022 3:23	12.06	0.11	6/19/2022 5:07	11.55	-0.02	6/18/2022 3:10	11.59	-0.01	6/18/2022 4:27	-0.07
6/18/2022 3:24	12.08	0.06	6/19/2022 5:08	11.57	-0.11	6/18/2022 3:11	11.61	-0.01	6/18/2022 4:28	-0.09
6/18/2022 3:25	12.06	0.07	6/19/2022 5:09	11.57	-0.03	6/18/2022 3:12	11.61	-0.01	6/18/2022 4:29	-0.14
6/18/2022 3:26	12.08	0.13	6/19/2022 5:10	11.58	0.03	6/18/2022 3:13	11.62	-0.01	6/18/2022 4:30	-0.09
6/18/2022 3:27	12.11	0.03	6/19/2022 5:11	11.57	-0.07	6/18/2022 3:14	11.61	-0.01	6/18/2022 4:31	-0.04
6/18/2022 3:28	12.07	0.09	6/19/2022 5:12	11.57	-0.02	6/18/2022 3:15	11.64	-0.02	6/18/2022 4:32	-0.09
6/18/2022 3:29	12.08	0.14	6/19/2022 5:13	11.56	-0.06	6/18/2022 3:16	11.63	-0.02	6/18/2022 4:33	-0.06
6/18/2022 3:30	12.08	0.04	6/19/2022 5:14	11.60	-0.03	6/18/2022 3:17	11.63	-0.04	6/18/2022 4:34	-0.09
6/18/2022 3:31	12.06	0.10	6/19/2022 5:15	11.58	-0.04	6/18/2022 3:18	11.61	0.00	6/18/2022 4:35	-0.04
6/18/2022 3:32	12.08	0.16	6/19/2022 5:16	11.61	-0.04	6/18/2022 3:19	11.62	-0.02	6/18/2022 4:36	-0.08
6/18/2022 3:33	12.06	0.14	6/19/2022 5:17	11.57	-0.06	6/18/2022 3:20	11.62	-0.04	6/18/2022 4:37	-0.07
6/18/2022 3:34	12.07	0.15	6/19/2022 5:18	11.58	0.04	6/18/2022 3:21	11.62	-0.02	6/18/2022 4:38	-0.09
6/18/2022 3:35	12.07	0.11	6/19/2022 5:19	11.58	0.00	6/18/2022 3:22	11.61	-0.03	6/18/2022 4:39	-0.11
6/18/2022 3:36	12.06	0.12	6/19/2022 5:20	11.57	0.01	6/18/2022 3:23	11.61	0.00	6/18/2022 4:40	-0.11
6/18/2022 3:37	12.07	0.05	6/19/2022 5:21	11.57	-0.08	6/18/2022 3:24	11.61	-0.05	6/18/2022 4:41	-0.10
6/18/2022 3:38	12.08	0.14	6/19/2022 5:22	11.57	-0.09	6/18/2022 3:25	11.63	-0.01	6/18/2022 4:42	-0.09
6/18/2022 3:39	12.07	0.11	6/19/2022 5:23	11.59	-0.01	6/18/2022 3:26	11.64	-0.02	6/18/2022 4:43	-0.09
6/18/2022 3:40	12.08	0.20	6/19/2022 5:24	11.60	-0.07	6/18/2022 3:27	11.60	-0.01	6/18/2022 4:44	-0.08
6/18/2022 3:41	12.09	0.11	6/19/2022 5:25	11.58	-0.02	6/18/2022 3:28	11.62	-0.05	6/18/2022 4:45	-0.10
6/18/2022 3:42	12.07	0.10	6/19/2022 5:26	11.57	-0.01	6/18/2022 3:29	11.61	0.04	6/18/2022 4:46	-0.10
6/18/2022 3:43	12.07	0.09	6/19/2022 5:27	11.60	-0.03	6/18/2022 3:30	11.61	-0.02	6/18/2022 4:47	-0.08
6/18/2022 3:44	12.10	0.06	6/19/2022 5:28	11.57	0.03	6/18/2022 3:31	11.61	-0.03	6/18/2022 4:48	-0.15
6/18/2022 3:45	12.07	0.15	6/19/2022 5:29	11.60	0.02	6/18/2022 3:32	11.61	0.01	6/18/2022 4:49	-0.11
6/18/2022 3:46	12.07	0.14	6/19/2022 5:30	11.57	-0.02	6/18/2022 3:33	11.62	-0.01	6/18/2022 4:50	-0.14
6/18/2022 3:47	12.08	0.14	6/19/2022 5:31	11.59	-0.08	6/18/2022 3:34	11.62	-0.04	6/18/2022 4:51	-0.11
6/18/2022 3:48	12.07	0.11	6/19/2022 5:32	11.54	0.04	6/18/2022 3:35	11.63	-0.01	6/18/2022 4:52	-0.09
6/18/2022 3:49	12.08	0.10	6/19/2022 5:33	11.57	0.00	6/18/2022 3:36	11.62	0.03	6/18/2022 4:53	-0.10
6/18/2022 3:50	12.07	0.13	6/19/2022 5:34	11.58	0.04	6/18/2022 3:37	11.60	-0.07	6/18/2022 4:54	-0.15
6/18/2022 3:51	12.07	0.09	6/19/2022 5:35	11.58	-0.05	6/18/2022 3:38	11.61	-0.02	6/18/2022 4:55	-0.07
6/18/2022 3:52	12.06	0.05	6/19/2022 5:36	11.58	-0.06	6/18/2022 3:39	11.62	0.02	6/18/2022 4:56	-0.09
6/18/2022 3:53	12.06	0.08	6/19/2022 5:37	11.60	-0.02	6/18/2022 3:40	11.59	0.00	6/18/2022 4:57	-0.06
6/18/2022 3:54	12.08	0.06	6/19/2022 5:38	11.57	0.05	6/18/2022 3:41	11.62	-0.05	6/18/2022 4:58	-0.10
6/18/2022 3:55	12.04	0.12	6/19/2022 5:39	11.59	0.05	6/18/2022 3:42	11.61	-0.04	6/18/2022 4:59	-0.11
6/18/2022 3:56	12.04	0.11	6/19/2022 5:40	11.59	0.11	6/18/2022 3:43	11.59	-0.05	6/18/2022 5:00	-0.09
6/18/2022 3:57	12.07	0.05	6/19/2022 5:41	11.58	-0.01	6/18/2022 3:44	11.63	0.00	6/18/2022 5:01	-0.11
6/18/2022 3:58	12.07	0.08	6/19/2022 5:42	11.56	-0.09	6/18/2022 3:45	11.63	0.01	6/18/2022 5:02	-0.13
6/18/2022 3:59	12.06	0.11	6/19/2022 5:43	11.59	0.00	6/18/2022 3:46	11.61	-0.02	6/18/2022 5:03	-0.12
6/18/2022 4:00	12.04	0.14	6/19/2022 5:44	11.59	0.00	6/18/2022 3:47	11.63	-0.01	6/18/2022 5:04	-0.05
6/18/2022 4:01	12.10	0.14	6/19/2022 5:45	11.59	0.03	6/18/2022 3:48	11.63	-0.04	6/18/2022 5:05	-0.12
6/18/2022 4:02	12.05	0.15	6/19/2022 5:46	11.58	0.08	6/18/2022 3:49	11.63	-0.02	6/18/2022 5:06	-0.04
6/18/2022 4:03	12.08	0.11	6/19/2022 5:47	11.60	0.06	6/18/2022 3:50	11.61	0.00	6/18/2022 5:07	-0.09
6/18/2022 4:04	12.04	0.17	6/19/2022 5:48	11.58	-0.09	6/18/2022 3:51	11.63	-0.02	6/18/2022 5:08	-0.09
6/18/2022 4:05	12.06	0.16	6/19/2022 5:49	11.57	-0.07	6/18/2022 3:52	11.60	0.00	6/18/2022 5:09	-0.09
6/18/2022 4:06	12.06	0.05	6/19/2022 5:50	11.57	-0.02	6/18/2022 3:53	11.61	-0.02	6/18/2022 5:10	-0.06

6/18/2022 4:07	12.05	0.13	6/19/2022 5:51	11.54	0.01	6/18/2022 3:54	11.59	-0.04	6/18/2022 5:11	-0.11
6/18/2022 4:08	12.07	0.11	6/19/2022 5:52	11.57	-0.07	6/18/2022 3:55	11.63	-0.05	6/18/2022 5:12	-0.10
6/18/2022 4:09	12.05	0.03	6/19/2022 5:53	11.58	0.00	6/18/2022 3:56	11.63	-0.02	6/18/2022 5:13	-0.11
6/18/2022 4:10	12.06	0.20	6/19/2022 5:54	11.59	-0.07	6/18/2022 3:57	11.62	0.00	6/18/2022 5:14	-0.11
6/18/2022 4:11	12.09	0.08	6/19/2022 5:55	11.60	-0.01	6/18/2022 3:58	11.61	-0.03	6/18/2022 5:15	-0.08
6/18/2022 4:12	12.06	0.10	6/19/2022 5:56	11.58	-0.09	6/18/2022 3:59	11.62	0.00	6/18/2022 5:16	-0.11
6/18/2022 4:13	12.06	0.13	6/19/2022 5:57	11.57	-0.02	6/18/2022 4:00	11.62	-0.02	6/18/2022 5:17	-0.04
6/18/2022 4:14	12.07	0.06	6/19/2022 5:58	11.59	0.06	6/18/2022 4:01	11.63	-0.03	6/18/2022 5:18	-0.12
6/18/2022 4:15	12.11	0.09	6/19/2022 5:59	11.58	0.00	6/18/2022 4:02	11.63	-0.03	6/18/2022 5:19	-0.12
6/18/2022 4:16	12.08	0.11	6/19/2022 6:00	11.59	0.01	6/18/2022 4:03	11.64	-0.05	6/18/2022 5:20	-0.09
6/18/2022 4:17	12.06	0.14	6/19/2022 6:01	11.56	0.04	6/18/2022 4:04	11.65	-0.02	6/18/2022 5:21	-0.05
6/18/2022 4:18	12.09	0.06	6/19/2022 6:02	11.58	0.01	6/18/2022 4:05	11.60	0.01	6/18/2022 5:22	-0.12
6/18/2022 4:19	12.06	0.06	6/19/2022 6:03	11.57	-0.03	6/18/2022 4:06	11.62	-0.02	6/18/2022 5:23	-0.10
6/18/2022 4:20	12.06	0.17	6/19/2022 6:04	11.57	-0.04	6/18/2022 4:07	11.61	0.03	6/18/2022 5:24	-0.08
6/18/2022 4:21	12.07	0.12	6/19/2022 6:05	11.56	-0.02	6/18/2022 4:08	11.62	-0.05	6/18/2022 5:25	-0.07
6/18/2022 4:22	12.09	0.14	6/19/2022 6:06	11.58	0.01	6/18/2022 4:09	11.61	0.00	6/18/2022 5:26	-0.08
6/18/2022 4:23	12.08	0.19	6/19/2022 6:07	11.60	-0.01	6/18/2022 4:10	11.60	-0.04	6/18/2022 5:27	-0.09
6/18/2022 4:24	12.07	0.14	6/19/2022 6:08	11.57	0.01	6/18/2022 4:11	11.63	-0.03	6/18/2022 5:28	-0.17
6/18/2022 4:25	12.09	0.18	6/19/2022 6:09	11.59	-0.05	6/18/2022 4:12	11.61	-0.03	6/18/2022 5:29	-0.14
6/18/2022 4:26	12.10	0.12	6/19/2022 6:10	11.57	-0.02	6/18/2022 4:13	11.61	-0.06	6/18/2022 5:30	-0.09
6/18/2022 4:27	12.06	0.10	6/19/2022 6:11	11.57	-0.03	6/18/2022 4:14	11.60	-0.03	6/18/2022 5:31	-0.13
6/18/2022 4:28	12.08	0.11	6/19/2022 6:12	11.56	-0.01	6/18/2022 4:15	11.59	0.02	6/18/2022 5:32	-0.12
6/18/2022 4:29	12.06	0.09	6/19/2022 6:13	11.57	-0.04	6/18/2022 4:16	11.61	-0.02	6/18/2022 5:33	-0.04
6/18/2022 4:30	12.07	0.19	6/19/2022 6:14	11.56	0.01	6/18/2022 4:17	11.61	-0.04	6/18/2022 5:34	-0.14
6/18/2022 4:31	12.08	0.14	6/19/2022 6:15	11.57	0.00	6/18/2022 4:18	11.63	-0.01	6/18/2022 5:35	-0.09
6/18/2022 4:32	12.06	0.13	6/19/2022 6:16	11.56	0.01	6/18/2022 4:19	11.61	0.02	6/18/2022 5:36	-0.13
6/18/2022 4:33	12.07	0.14	6/19/2022 6:17	11.56	0.03	6/18/2022 4:20	11.61	-0.07	6/18/2022 5:37	-0.11
6/18/2022 4:34	12.06	0.06	6/19/2022 6:18	11.57	-0.01	6/18/2022 4:21	11.61	0.00	6/18/2022 5:38	-0.08
6/18/2022 4:35	12.07	0.15	6/19/2022 6:19	11.56	-0.02	6/18/2022 4:22	11.59	0.02	6/18/2022 5:39	-0.10
6/18/2022 4:36	12.06	0.11	6/19/2022 6:20	11.61	-0.05	6/18/2022 4:23	11.61	0.00	6/18/2022 5:40	-0.09
6/18/2022 4:37	12.08	0.13	6/19/2022 6:21	11.59	-0.01	6/18/2022 4:24	11.61	-0.02	6/18/2022 5:41	-0.16
6/18/2022 4:38	12.10	0.04	6/19/2022 6:22	11.57	0.03	6/18/2022 4:25	11.62	-0.06	6/18/2022 5:42	-0.16
6/18/2022 4:39	12.08	0.08	6/19/2022 6:23	11.58	0.06	6/18/2022 4:26	11.61	-0.04	6/18/2022 5:43	-0.10
6/18/2022 4:40	12.06	0.05	6/19/2022 6:24	11.56	-0.03	6/18/2022 4:27	11.62	0.00	6/18/2022 5:44	-0.09
6/18/2022 4:41	12.09	0.11	6/19/2022 6:25	11.58	-0.05	6/18/2022 4:28	11.60	-0.03	6/18/2022 5:45	-0.15
6/18/2022 4:42	12.07	0.15	6/19/2022 6:26	11.59	0.02	6/18/2022 4:29	11.61	-0.03	6/18/2022 5:46	-0.06
6/18/2022 4:43	12.07	0.08	6/19/2022 6:27	11.57	-0.06	6/18/2022 4:30	11.64	-0.05	6/18/2022 5:47	-0.06
6/18/2022 4:44	12.05	0.08	6/19/2022 6:28	11.58	-0.01	6/18/2022 4:31	11.63	-0.05	6/18/2022 5:48	-0.11
6/18/2022 4:45	12.08	0.06	6/19/2022 6:29	11.57	-0.01	6/18/2022 4:32	11.59	-0.01	6/18/2022 5:49	-0.14
6/18/2022 4:46	12.08	0.06	6/19/2022 6:30	11.58	0.02	6/18/2022 4:33	11.62	-0.02	6/18/2022 5:50	-0.13
6/18/2022 4:47	12.07	0.12	6/19/2022 6:31	11.59	-0.04	6/18/2022 4:34	11.63	-0.01	6/18/2022 5:51	-0.09
6/18/2022 4:48	12.09	0.16	6/19/2022 6:32	11.57	-0.03	6/18/2022 4:35	11.62	-0.02	6/18/2022 5:52	-0.12
6/18/2022 4:49	12.07	0.12	6/19/2022 6:33	11.57	0.02	6/18/2022 4:36	11.63	-0.01	6/18/2022 5:53	-0.13
6/18/2022 4:50	12.08	0.15	6/19/2022 6:34	11.60	-0.03	6/18/2022 4:37	11.60	-0.03	6/18/2022 5:54	-0.10
6/18/2022 4:51	12.08	0.13	6/19/2022 6:35	11.58	-0.06	6/18/2022 4:38	11.61	0.00	6/18/2022 5:55	-0.14
6/18/2022 4:52	12.06	0.14	6/19/2022 6:36	11.57	0.05	6/18/2022 4:39	11.64	-0.06	6/18/2022 5:56	-0.10
6/18/2022 4:53	12.07	0.03	6/19/2022 6:37	11.56	-0.06	6/18/2022 4:40	11.64	-0.02	6/18/2022 5:57	-0.10
6/18/2022 4:54	12.06	0.23	6/19/2022 6:38	11.57	0.01	6/18/2022 4:41	11.61	-0.03	6/18/2022 5:58	-0.13
6/18/2022 4:55	12.07	0.09	6/19/2022 6:39	11.58	-0.03	6/18/2022 4:42	11.61	-0.07	6/18/2022 5:59	-0.08
6/18/2022 4:56	12.08	0.18	6/19/2022 6:40	11.57	-0.03	6/18/2022 4:43	11.62	-0.01	6/18/2022 6:00	-0.08
6/18/2022 4:57	12.07	0.14	6/19/2022 6:41	11.58	0.01	6/18/2022 4:44	11.63	-0.01	6/18/2022 6:01	-0.09
6/18/2022 4:58	12.08	0.19	6/19/2022 6:42	11.57	-0.10	6/18/2022 4:45	11.60	-0.01	6/18/2022 6:02	-0.12
6/18/2022 4:59	12.06	0.14	6/19/2022 6:43	11.56	0.00	6/18/2022 4:46	11.62	-0.10	6/18/2022 6:03	-0.12
6/18/2022 5:00	12.08	0.08	6/19/2022 6:44	11.56	-0.05	6/18/2022 4:47	11.64	-0.06	6/18/2022 6:04	-0.08
6/18/2022 5:01	12.07	0.14	6/19/2022 6:45	11.58	-0.08	6/18/2022 4:48	11.61	0.00	6/18/2022 6:05	-0.04
6/18/2022 5:02	12.09	0.06	6/19/2022 6:46	11.59	0.00	6/18/2022 4:49	11.61	-0.01	6/18/2022 6:06	-0.07
6/18/2022 5:03	12.08	0.12	6/19/2022 6:47	11.57	-0.06	6/18/2022 4:50	11.62	0.00	6/18/2022 6:07	-0.14
6/18/2022 5:04	12.08	0.16	6/19/2022 6:48	11.58	-0.01	6/18/2022 4:51	11.61	-0.01	6/18/2022 6:08	-0.08
6/18/2022 5:05	12.06	0.05	6/19/2022 6:49	11.60	-0.03	6/18/2022 4:52	11.63	-0.03	6/18/2022 6:09	-0.08
6/18/2022 5:06	12.08	0.10	6/19/2022 6:50	11.57	-0.01	6/18/2022 4:53	11.62	-0.06	6/18/2022 6:10	-0.10
6/18/2022 5:07	12.08	0.14	6/19/2022 6:51	11.58	0.00	6/18/2022 4:54	11.63	0.00	6/18/2022 6:11	-0.08
6/18/2022 5:08	12.07	0.10	6/19/2022 6:52	11.57	0.03	6/18/2022 4:55	11.62	-0.02	6/18/2022 6:12	-0.14
6/18/2022 5:09	12.09	0.08	6/19/2022 6:53	11.58	0.00	6/18/2022 4:56	11.63	-0.07	6/18/2022 6:13	-0.07
6/18/2022 5:10	12.08	0.11	6/19/2022 6:54	11.58	0.04	6/18/2022 4:57	11.61	-0.01	6/18/2022 6:14	-0.08
6/18/2022 5:11	12.06	0.11	6/19/2022 6:55	11.57	-0.07	6/18/2022 4:58	11.63	0.01	6/18/2022 6:15	-0.07
6/18/2022 5:12	12.08	0.13	6/19/2022 6:56	11.58	0.06	6/18/2022 4:59	11.62	-0.01	6/18/2022 6:16	-0.13
6/18/2022 5:13	12.06	0.07	6/19/2022 6:57	11.61	-0.01	6/18/2022 5:00	11.62	-0.08	6/18/2022 6:17	-0.07
6/18/2022 5:14	12.06	0.03	6/19/2022 6:58	11.56	-0.11	6/18/2022 5:01	11.61	-0.02	6/18/2022 6:18	-0.11
6/18/2022 5:15	12.05	0.11	6/19/2022 6:59	11.59	-0.04	6/18/2022 5:02	11.63	-0.07	6/18/2022 6:19	-0.09
6/18/2022 5:16	12.06	0.08	6/19/2022 7:00	11.58	-0.05	6/18/2022 5:03	11.62	0.00	6/18/2022 6:20	-0.09
6/18/2022 5:17	12.07	0.07	6/19/2022 7:01	11.57	-0.05	6/18/2022 5:04	11.62	-0.04	6/18/2022 6:21	-0.11
6/18/2022 5:18	12.05	0.14	6/19/2022 7:02	11.58	-0.09	6/18/2022 5:05	11.59	0.00	6/18/2022 6:22	-0.13
6/18/2022 5:19	12.08	0.05	6/19/2022 7:03	11.58	-0.09	6/18/2022 5:06	11.61	-0.03	6/18/2022 6:23	-0.10
6/18/2022 5:20	12.10	0.10	6/19/2022 7:04	11.55	0.03	6/18/2022 5:07	11.61	-0.01	6/18/2022 6:24	-0.07
6/18/2022 5:21	12.08	0.07	6/19/2022 7:05	11.57	-0.07	6/18/2022 5:08	11.61	-0.07	6/18/2022 6:25	-0.13
6/18/2022 5:22	12.08	0.07	6/19/2022 7:06	11.58	-0.07	6/18/2022 5:09	11.63	0.01	6/18/2022 6:26	-0.06
6/18/2022 5:23	12.07	0.09	6/19/2022 7:07	11.55	0.00	6/18/2022 5:10	11.60	-0.07	6/18/2022 6:27	-0.09
6/18/2022 5:24	12.06	0.12	6/19/2022 7:08	11.55	0.05	6/18/2022 5:11	11.63	-0.03	6/18/2022 6:28	-0.15
6/18/2022 5:25	12.06	0.12	6/19/2022 7:09	11.60	0.05	6/18/2022 5:12	11.61	-0.02	6/18/2022 6:29	-0.08
6/18/2022 5:26	12.08	0.10	6/19/2022 7:10	11.57	0.02	6/18/2022 5:13	11.62	0.00	6/18/2022 6:30	-0.06
6/18/2022 5:27	12.08	0.11	6/19/2022 7:11	11.57	0.00	6/18/2022 5:14	11.62	0.00	6/18/2022 6:31	-0.09
6/18/2022 5:28	12.04	0.10	6/19/2022 7:12	11.56	-0.04	6/18/2022 5:15	11.60	-0.04	6/18/2022 6:32	-0.14
6/18/2022 5:29	12.06	0.11	6/19/2022 7:13	11.59	-0.01	6/18/2022 5:16	11.59	-0.02	6/18/2022 6:33	-0.10
6/18/2022 5:30	12.07	0.11	6/19/2022 7:14	11.61	0.02	6/18/2022 5:17	11.62	-0.02	6/18/2022 6:34	-0.08
6/18/2022 5:31	12.07	0.15	6/19/2022 7:15	11.58	0.01	6/18/2022 5:18	11.63	0.01	6/18/2022 6:35	-0.09
6/18/2022 5:32	12.08	0.07	6/19/2022 7:16	11.60	-0.01	6/18/2022 5:19	11.63	-0.03	6/18/2022 6:36	-0.11
6/18/2022 5:33	12.07	0.18	6/19/2022 7:17	11.56	-0.11	6/18/2022 5:20	11.61	-0.02	6/18/2022 6:37	-0.09
6/18/2022 5:34	12.10	0.23	6/19/2022 7:18	11.59	-0.04	6/18/2022 5:21	11.62	-0.02	6/18/2022 6:38	-0.09

6/18/2022 5:35	12.07	0.12	6/19/2022 7:19	11.58	-0.04	6/18/2022 5:22	11.64	0.00	6/18/2022 6:39	-0.13
6/18/2022 5:36	12.06	0.11	6/19/2022 7:20	11.58	-0.01	6/18/2022 5:23	11.63	-0.05	6/18/2022 6:40	-0.14
6/18/2022 5:37	12.05	0.11	6/19/2022 7:21	11.60	-0.08	6/18/2022 5:24	11.63	-0.03	6/18/2022 6:41	-0.11
6/18/2022 5:38	12.08	0.11	6/19/2022 7:22	11.56	0.00	6/18/2022 5:25	11.62	-0.03	6/18/2022 6:42	-0.10
6/18/2022 5:39	12.07	0.18	6/19/2022 7:23	11.57	-0.02	6/18/2022 5:26	11.62	-0.02	6/18/2022 6:43	-0.07
6/18/2022 5:40	12.08	0.17	6/19/2022 7:24	11.56	-0.07	6/18/2022 5:27	11.62	-0.03	6/18/2022 6:44	-0.10
6/18/2022 5:41	12.05	0.06	6/19/2022 7:25	11.56	0.03	6/18/2022 5:28	11.60	0.00	6/18/2022 6:45	-0.12
6/18/2022 5:42	12.04	0.02	6/19/2022 7:26	11.59	0.00	6/18/2022 5:29	11.61	-0.03	6/18/2022 6:46	-0.11
6/18/2022 5:43	12.04	0.13	6/19/2022 7:27	11.58	-0.04	6/18/2022 5:30	11.61	0.00	6/18/2022 6:47	-0.09
6/18/2022 5:44	12.06	0.19	6/19/2022 7:28	11.56	-0.02	6/18/2022 5:31	11.61	-0.02	6/18/2022 6:48	-0.13
6/18/2022 5:45	12.06	0.00	6/19/2022 7:29	11.57	0.01	6/18/2022 5:32	11.62	-0.06	6/18/2022 6:49	-0.11
6/18/2022 5:46	12.06	0.10	6/19/2022 7:30	11.57	-0.06	6/18/2022 5:33	11.62	-0.01	6/18/2022 6:50	-0.13
6/18/2022 5:47	12.07	0.12	6/19/2022 7:31	11.61	-0.02	6/18/2022 5:34	11.62	-0.01	6/18/2022 6:51	-0.10
6/18/2022 5:48	12.03	0.07	6/19/2022 7:32	11.59	-0.02	6/18/2022 5:35	11.62	-0.01	6/18/2022 6:52	-0.11
6/18/2022 5:49	12.08	0.13	6/19/2022 7:33	11.57	0.01	6/18/2022 5:36	11.60	-0.05	6/18/2022 6:53	-0.10
6/18/2022 5:50	12.08	0.04	6/19/2022 7:34	11.56	-0.01	6/18/2022 5:37	11.60	-0.05	6/18/2022 6:54	-0.11
6/18/2022 5:51	12.06	0.14	6/19/2022 7:35	11.58	-0.11	6/18/2022 5:38	11.62	-0.01	6/18/2022 6:55	-0.08
6/18/2022 5:52	12.08	0.07	6/19/2022 7:36	11.56	-0.02	6/18/2022 5:39	11.61	-0.01	6/18/2022 6:56	-0.11
6/18/2022 5:53	12.05	0.11	6/19/2022 7:37	11.55	0.05	6/18/2022 5:40	11.62	-0.02	6/18/2022 6:57	-0.12
6/18/2022 5:54	12.07	0.14	6/19/2022 7:38	11.57	0.00	6/18/2022 5:41	11.62	-0.02	6/18/2022 6:58	-0.08
6/18/2022 5:55	12.06	0.10	6/19/2022 7:39	11.59	-0.01	6/18/2022 5:42	11.61	-0.03	6/18/2022 6:59	-0.06
6/18/2022 5:56	12.07	0.11	6/19/2022 7:40	11.60	0.06	6/18/2022 5:43	11.62	-0.04	6/18/2022 7:00	-0.05
6/18/2022 5:57	12.09	0.11	6/19/2022 7:41	11.56	0.06	6/18/2022 5:44	11.62	-0.05	6/18/2022 7:01	-0.11
6/18/2022 5:58	12.05	0.21	6/19/2022 7:42	11.57	-0.08	6/18/2022 5:45	11.62	-0.02	6/18/2022 7:02	-0.10
6/18/2022 5:59	12.07	0.16	6/19/2022 7:43	11.59	0.01	6/18/2022 5:46	11.62	0.02	6/18/2022 7:03	-0.11
6/18/2022 6:00	12.04	0.14	6/19/2022 7:44	11.57	0.03	6/18/2022 5:47	11.61	-0.04	6/18/2022 7:04	-0.07
6/18/2022 6:01	12.10	0.11	6/19/2022 7:45	11.58	0.01	6/18/2022 5:48	11.61	-0.05	6/18/2022 7:05	-0.13
6/18/2022 6:02	12.06	0.11	6/19/2022 7:46	11.58	-0.06	6/18/2022 5:49	11.61	-0.02	6/18/2022 7:06	-0.08
6/18/2022 6:03	12.06	0.07	6/19/2022 7:47	11.57	0.00	6/18/2022 5:50	11.60	-0.05	6/18/2022 7:07	-0.15
6/18/2022 6:04	12.09	0.10	6/19/2022 7:48	11.59	-0.05	6/18/2022 5:51	11.60	-0.01	6/18/2022 7:08	-0.12
6/18/2022 6:05	12.07	0.11	6/19/2022 7:49	11.57	0.02	6/18/2022 5:52	11.59	0.00	6/18/2022 7:09	-0.12
6/18/2022 6:06	12.08	0.13	6/19/2022 7:50	11.60	-0.02	6/18/2022 5:53	11.62	0.01	6/18/2022 7:10	-0.11
6/18/2022 6:07	12.08	0.13	6/19/2022 7:51	11.57	0.03	6/18/2022 5:54	11.60	0.01	6/18/2022 7:11	-0.12
6/18/2022 6:08	12.08	0.19	6/19/2022 7:52	11.58	-0.04	6/18/2022 5:55	11.63	-0.06	6/18/2022 7:12	-0.09
6/18/2022 6:09	12.06	0.15	6/19/2022 7:53	11.57	0.01	6/18/2022 5:56	11.60	-0.02	6/18/2022 7:13	-0.08
6/18/2022 6:10	12.06	0.05	6/19/2022 7:54	11.57	-0.05	6/18/2022 5:57	11.63	-0.03	6/18/2022 7:14	-0.01
6/18/2022 6:11	12.08	0.04	6/19/2022 7:55	11.57	-0.03	6/18/2022 5:58	11.61	0.04	6/18/2022 7:15	-0.06
6/18/2022 6:12	12.08	0.04	6/19/2022 7:56	11.58	-0.06	6/18/2022 5:59	11.61	-0.01	6/18/2022 7:16	-0.10
6/18/2022 6:13	12.07	0.10	6/19/2022 7:57	11.59	-0.05	6/18/2022 6:00	11.64	-0.02	6/18/2022 7:17	-0.07
6/18/2022 6:14	12.07	0.07	6/19/2022 7:58	11.58	-0.06	6/18/2022 6:01	11.63	-0.05	6/18/2022 7:18	-0.10
6/18/2022 6:15	12.07	0.13	6/19/2022 7:59	11.55	-0.05	6/18/2022 6:02	11.63	-0.02	6/18/2022 7:19	-0.05
6/18/2022 6:16	12.08	0.13	6/19/2022 8:00	11.58	-0.03	6/18/2022 6:03	11.62	-0.05	6/18/2022 7:20	-0.09
6/18/2022 6:17	12.07	0.15	6/19/2022 8:01	11.60	-0.04	6/18/2022 6:04	11.63	0.02	6/18/2022 7:21	-0.10
6/18/2022 6:18	12.08	0.10	6/19/2022 8:02	11.56	0.02	6/18/2022 6:05	11.61	-0.02	6/18/2022 7:22	-0.03
6/18/2022 6:19	12.07	0.11	6/19/2022 8:03	11.56	-0.01	6/18/2022 6:06	11.62	-0.05	6/18/2022 7:23	-0.11
6/18/2022 6:20	12.05	0.13	6/19/2022 8:04	11.57	-0.01	6/18/2022 6:07	11.61	-0.04	6/18/2022 7:24	-0.10
6/18/2022 6:21	12.05	0.09	6/19/2022 8:05	11.59	-0.08	6/18/2022 6:08	11.60	-0.01	6/18/2022 7:25	-0.11
6/18/2022 6:22	12.06	0.10	6/19/2022 8:06	11.59	-0.04	6/18/2022 6:09	11.61	-0.03	6/18/2022 7:26	-0.11
6/18/2022 6:23	12.06	0.16	6/19/2022 8:07	11.60	-0.12	6/18/2022 6:10	11.62	-0.04	6/18/2022 7:27	-0.07
6/18/2022 6:24	12.07	0.11	6/19/2022 8:08	11.57	-0.05	6/18/2022 6:11	11.59	0.00	6/18/2022 7:28	-0.09
6/18/2022 6:25	12.05	0.06	6/19/2022 8:09	11.58	0.03	6/18/2022 6:12	11.60	0.00	6/18/2022 7:29	-0.07
6/18/2022 6:26	12.04	0.12	6/19/2022 8:10	11.58	-0.06	6/18/2022 6:13	11.62	-0.04	6/18/2022 7:30	-0.13
6/18/2022 6:27	12.07	0.09	6/19/2022 8:11	11.58	0.01	6/18/2022 6:14	11.62	-0.02	6/18/2022 7:31	-0.07
6/18/2022 6:28	12.07	0.23	6/19/2022 8:12	11.58	0.04	6/18/2022 6:15	11.63	-0.03	6/18/2022 7:32	-0.03
6/18/2022 6:29	12.07	0.10	6/19/2022 8:13	11.59	0.01	6/18/2022 6:16	11.61	-0.04	6/18/2022 7:33	-0.06
6/18/2022 6:30	12.08	0.11	6/19/2022 8:14	11.60	0.05	6/18/2022 6:17	11.62	-0.03	6/18/2022 7:34	-0.06
6/18/2022 6:31	12.04	0.06	6/19/2022 8:15	11.57	0.08	6/18/2022 6:18	11.61	-0.01	6/18/2022 7:35	-0.14
6/18/2022 6:32	12.08	0.11	6/19/2022 8:16	11.59	-0.05	6/18/2022 6:19	11.63	-0.03	6/18/2022 7:36	-0.12
6/18/2022 6:33	12.05	0.16	6/19/2022 8:17	11.57	0.03	6/18/2022 6:20	11.62	-0.02	6/18/2022 7:37	-0.14
6/18/2022 6:34	12.06	0.12	6/19/2022 8:18	11.57	0.00	6/18/2022 6:21	11.60	-0.03	6/18/2022 7:38	-0.09
6/18/2022 6:35	12.08	0.14	6/19/2022 8:19	11.60	-0.10	6/18/2022 6:22	11.60	-0.05	6/18/2022 7:39	-0.07
6/18/2022 6:36	12.08	0.00	6/19/2022 8:20	11.57	0.03	6/18/2022 6:23	11.62	-0.03	6/18/2022 7:40	-0.08
6/18/2022 6:37	12.08	0.19	6/19/2022 8:21	11.58	-0.02	6/18/2022 6:24	11.63	-0.01	6/18/2022 7:41	-0.08
6/18/2022 6:38	12.07	0.04	6/19/2022 8:22	11.58	-0.07	6/18/2022 6:25	11.62	-0.01	6/18/2022 7:42	-0.16
6/18/2022 6:39	12.07	0.15	6/19/2022 8:23	11.58	-0.04	6/18/2022 6:26	11.60	-0.03	6/18/2022 7:43	-0.12
6/18/2022 6:40	12.06	0.07	6/19/2022 8:24	11.57	-0.01	6/18/2022 6:27	11.62	-0.03	6/18/2022 7:44	-0.09
6/18/2022 6:41	12.07	0.20	6/19/2022 8:25	11.56	0.01	6/18/2022 6:28	11.62	-0.04	6/18/2022 7:45	-0.14
6/18/2022 6:42	12.10	0.07	6/19/2022 8:26	11.57	0.02	6/18/2022 6:29	11.59	-0.02	6/18/2022 7:46	-0.14
6/18/2022 6:43	12.08	0.16	6/19/2022 8:27	11.57	0.06	6/18/2022 6:30	11.61	-0.03	6/18/2022 7:47	-0.11
6/18/2022 6:44	12.07	0.18	6/19/2022 8:28	11.58	0.02	6/18/2022 6:31	11.64	-0.05	6/18/2022 7:48	-0.05
6/18/2022 6:45	12.06	0.10	6/19/2022 8:29	11.60	-0.01	6/18/2022 6:32	11.62	-0.01	6/18/2022 7:49	-0.11
6/18/2022 6:46	12.05	0.12	6/19/2022 8:30	11.58	-0.12	6/18/2022 6:33	11.62	-0.03	6/18/2022 7:50	-0.12
6/18/2022 6:47	12.08	0.06	6/19/2022 8:31	11.58	-0.06	6/18/2022 6:34	11.63	-0.06	6/18/2022 7:51	-0.11
6/18/2022 6:48	12.07	0.17	6/19/2022 8:32	11.57	-0.06	6/18/2022 6:35	11.63	0.01	6/18/2022 7:52	-0.09
6/18/2022 6:49	12.08	0.11	6/19/2022 8:33	11.58	-0.05	6/18/2022 6:36	11.61	-0.05	6/18/2022 7:53	-0.08
6/18/2022 6:50	12.07	0.18	6/19/2022 8:34	11.57	0.04	6/18/2022 6:37	11.60	-0.05	6/18/2022 7:54	-0.09
6/18/2022 6:51	12.05	0.20	6/19/2022 8:35	11.60	0.03	6/18/2022 6:38	11.62	-0.07	6/18/2022 7:55	-0.07
6/18/2022 6:52	12.09	0.07	6/19/2022 8:36	11.58	0.04	6/18/2022 6:39	11.60	-0.03	6/18/2022 7:56	-0.14
6/18/2022 6:53	12.09	0.08	6/19/2022 8:37	11.59	-0.13	6/18/2022 6:40	11.63	-0.03	6/18/2022 7:57	-0.11
6/18/2022 6:54	12.07	0.08	6/19/2022 8:38	11.58	-0.10	6/18/2022 6:41	11.62	0.01	6/18/2022 7:58	-0.13
6/18/2022 6:55	12.09	0.14	6/19/2022 8:39	11.60	-0.07	6/18/2022 6:42	11.64	-0.01	6/18/2022 7:59	-0.11
6/18/2022 6:56	12.07	0.19	6/19/2022 8:40	11.60	0.01	6/18/2022 6:43	11.60	-0.01	6/18/2022 8:00	-0.12
6/18/2022 6:57	12.08	0.10	6/19/2022 8:41	11.58	-0.01	6/18/2022 6:44	11.61	-0.06	6/18/2022 8:01	-0.06
6/18/2022 6:58	12.09	0.14	6/19/2022 8:42	11.59	-0.07	6/18/2022 6:45	11.64	-0.03	6/18/2022 8:02	-0.10
6/18/2022 6:59	12.09	0.10	6/19/2022 8:43	11.58	0.07	6/18/2022 6:46	11.63	-0.01	6/18/2022 8:03	-0.12
6/18/2022 7:00	12.09	0.16	6/19/2022 8:44	11.58	0.03	6/18/2022 6:47	11.63	-0.03	6/18/2022 8:04	-0.03
6/18/2022 7:01	12.07	0.05	6/19/2022 8:45	11.58	-0.10	6/18/2022 6:48	11.62	-0.04	6/18/2022 8:05	-0.07
6/18/2022 7:02	12.06	0.11	6/19/2022 8:46	11.57	-0.05	6/18/2022 6:49	11.61	0.01	6/18/2022 8:06	-0.09

6/18/2022 7:03	12.07	0.11	6/19/2022 8:47	11.58	0.00	6/18/2022 6:50	11.62	-0.05	6/18/2022 8:07	-0.11
6/18/2022 7:04	12.09	0.05	6/19/2022 8:48	11.59	-0.06	6/18/2022 6:51	11.62	-0.02	6/18/2022 8:08	-0.05
6/18/2022 7:05	12.09	0.03	6/19/2022 8:49	11.58	-0.02	6/18/2022 6:52	11.64	-0.01	6/18/2022 8:09	-0.09
6/18/2022 7:06	12.10	0.15	6/19/2022 8:50	11.57	0.01	6/18/2022 6:53	11.63	-0.02	6/18/2022 8:10	-0.07
6/18/2022 7:07	12.07	0.12	6/19/2022 8:51	11.58	0.00	6/18/2022 6:54	11.63	-0.03	6/18/2022 8:11	-0.10
6/18/2022 7:08	12.10	0.06	6/19/2022 8:52	11.57	-0.07	6/18/2022 6:55	11.60	0.01	6/18/2022 8:12	-0.10
6/18/2022 7:09	12.09	0.11	6/19/2022 8:53	11.58	0.02	6/18/2022 6:56	11.61	-0.04	6/18/2022 8:13	-0.08
6/18/2022 7:10	12.09	0.08	6/19/2022 8:54	11.57	0.04	6/18/2022 6:57	11.63	-0.05	6/18/2022 8:14	-0.09
6/18/2022 7:11	12.08	0.05	6/19/2022 8:55	11.57	-0.03	6/18/2022 6:58	11.59	-0.01	6/18/2022 8:15	-0.11
6/18/2022 7:12	12.09	0.07	6/19/2022 8:56	11.57	-0.01	6/18/2022 6:59	11.62	-0.04	6/18/2022 8:16	-0.11
6/18/2022 7:13	12.06	0.15	6/19/2022 8:57	11.57	-0.04	6/18/2022 7:00	11.62	-0.02	6/18/2022 8:17	-0.09
6/18/2022 7:14	12.07	0.08	6/19/2022 8:58	11.58	0.00	6/18/2022 7:01	11.64	-0.05	6/18/2022 8:18	-0.08
6/18/2022 7:15	12.06	0.07	6/19/2022 8:59	11.58	-0.06	6/18/2022 7:02	11.60	0.03	6/18/2022 8:19	-0.07
6/18/2022 7:16	12.08	0.15	6/19/2022 9:00	11.57	-0.05	6/18/2022 7:03	11.63	-0.03	6/18/2022 8:20	-0.14
6/18/2022 7:17	12.09	0.13	6/19/2022 9:01	11.58	-0.08	6/18/2022 7:04	11.62	-0.01	6/18/2022 8:21	-0.11
6/18/2022 7:18	12.09	0.14	6/19/2022 9:02	11.58	0.02	6/18/2022 7:05	11.63	-0.08	6/18/2022 8:22	-0.07
6/18/2022 7:19	12.08	0.10	6/19/2022 9:03	11.55	-0.03	6/18/2022 7:06	11.64	-0.04	6/18/2022 8:23	-0.07
6/18/2022 7:20	12.07	0.13	6/19/2022 9:04	11.61	-0.03	6/18/2022 7:07	11.60	-0.03	6/18/2022 8:24	-0.10
6/18/2022 7:21	12.10	0.14	6/19/2022 9:05	11.58	0.00	6/18/2022 7:08	11.64	-0.02	6/18/2022 8:25	-0.06
6/18/2022 7:22	12.10	0.10	6/19/2022 9:06	11.59	0.05	6/18/2022 7:09	11.62	0.00	6/18/2022 8:26	-0.09
6/18/2022 7:23	12.11	0.09	6/19/2022 9:07	11.56	0.03	6/18/2022 7:10	11.63	-0.05	6/18/2022 8:27	-0.08
6/18/2022 7:24	12.08	0.09	6/19/2022 9:08	11.57	-0.05	6/18/2022 7:11	11.60	-0.07	6/18/2022 8:28	-0.08
6/18/2022 7:25	12.09	0.10	6/19/2022 9:09	11.57	-0.06	6/18/2022 7:12	11.62	-0.03	6/18/2022 8:29	-0.11
6/18/2022 7:26	12.09	0.09	6/19/2022 9:10	11.59	-0.01	6/18/2022 7:13	11.61	-0.03	6/18/2022 8:30	-0.09
6/18/2022 7:27	12.07	0.04	6/19/2022 9:11	11.57	-0.05	6/18/2022 7:14	11.64	-0.06	6/18/2022 8:31	-0.08
6/18/2022 7:28	12.12	0.08	6/19/2022 9:12	11.56	0.02	6/18/2022 7:15	11.62	-0.03	6/18/2022 8:32	-0.09
6/18/2022 7:29	12.09	0.08	6/19/2022 9:13	11.58	0.02	6/18/2022 7:16	11.62	0.01	6/18/2022 8:33	-0.07
6/18/2022 7:30	12.07	0.11	6/19/2022 9:14	11.62	-0.08	6/18/2022 7:17	11.60	0.00	6/18/2022 8:34	-0.03
6/18/2022 7:31	12.07	0.12	6/19/2022 9:15	11.57	-0.02	6/18/2022 7:18	11.63	0.01	6/18/2022 8:35	-0.06
6/18/2022 7:32	12.08	0.10	6/19/2022 9:16	11.58	-0.04	6/18/2022 7:19	11.61	-0.03	6/18/2022 8:36	-0.08
6/18/2022 7:33	12.09	0.14	6/19/2022 9:17	11.56	-0.08	6/18/2022 7:20	11.63	-0.03	6/18/2022 8:37	-0.09
6/18/2022 7:34	12.09	0.13	6/19/2022 9:18	11.59	0.03	6/18/2022 7:21	11.62	0.00	6/18/2022 8:38	-0.13
6/18/2022 7:35	12.09	0.19	6/19/2022 9:19	11.58	-0.02	6/18/2022 7:22	11.62	-0.08	6/18/2022 8:39	-0.07
6/18/2022 7:36	12.06	0.05	6/19/2022 9:20	11.57	0.04	6/18/2022 7:23	11.61	-0.01	6/18/2022 8:40	-0.12
6/18/2022 7:37	12.08	0.12	6/19/2022 9:21	11.58	-0.02	6/18/2022 7:24	11.62	-0.05	6/18/2022 8:41	-0.07
6/18/2022 7:38	12.06	0.05	6/19/2022 9:22	11.56	0.00	6/18/2022 7:25	11.61	0.01	6/18/2022 8:42	0.00
6/18/2022 7:39	12.09	0.15	6/19/2022 9:23	11.58	-0.01	6/18/2022 7:26	11.63	-0.01	6/18/2022 8:43	-0.07
6/18/2022 7:40	12.07	0.19	6/19/2022 9:24	11.55	-0.03	6/18/2022 7:27	11.63	-0.01	6/18/2022 8:44	-0.09
6/18/2022 7:41	12.06	0.14	6/19/2022 9:25	11.57	0.03	6/18/2022 7:28	11.61	-0.02	6/18/2022 8:45	-0.12
6/18/2022 7:42	12.07	0.13	6/19/2022 9:26	11.58	-0.08	6/18/2022 7:29	11.63	-0.01	6/18/2022 8:46	-0.11
6/18/2022 7:43	12.07	0.15	6/19/2022 9:27	11.58	0.03	6/18/2022 7:30	11.64	0.03	6/18/2022 8:47	-0.10
6/18/2022 7:44	12.09	0.12	6/19/2022 9:28	11.59	-0.09	6/18/2022 7:31	11.60	-0.02	6/18/2022 8:48	-0.18
6/18/2022 7:45	12.07	0.09	6/19/2022 9:29	11.58	-0.05	6/18/2022 7:32	11.61	-0.04	6/18/2022 8:49	-0.12
6/18/2022 7:46	12.05	0.10	6/19/2022 9:30	11.55	0.05	6/18/2022 7:33	11.63	-0.04	6/18/2022 8:50	-0.11
6/18/2022 7:47	12.07	0.08	6/19/2022 9:31	11.57	-0.02	6/18/2022 7:34	11.63	-0.02	6/18/2022 8:51	-0.11
6/18/2022 7:48	12.08	0.13	6/19/2022 9:32	11.60	-0.03	6/18/2022 7:35	11.60	-0.03	6/18/2022 8:52	-0.09
6/18/2022 7:49	12.07	0.12	6/19/2022 9:33	11.58	0.10	6/18/2022 7:36	11.60	-0.02	6/18/2022 8:53	-0.12
6/18/2022 7:50	12.08	0.20	6/19/2022 9:34	11.56	-0.08	6/18/2022 7:37	11.61	-0.01	6/18/2022 8:54	-0.10
6/18/2022 7:51	12.05	0.11	6/19/2022 9:35	11.59	-0.01	6/18/2022 7:38	11.60	0.01	6/18/2022 8:55	-0.08
6/18/2022 7:52	12.06	0.04	6/19/2022 9:36	11.58	0.02	6/18/2022 7:39	11.64	0.02	6/18/2022 8:56	-0.03
6/18/2022 7:53	12.10	0.08	6/19/2022 9:37	11.58	-0.06	6/18/2022 7:40	11.61	-0.02	6/18/2022 8:57	-0.07
6/18/2022 7:54	12.07	0.03	6/19/2022 9:38	11.59	-0.03	6/18/2022 7:41	11.60	-0.01	6/18/2022 8:58	-0.12
6/18/2022 7:55	12.09	0.11	6/19/2022 9:39	11.58	0.05	6/18/2022 7:42	11.64	-0.01	6/18/2022 8:59	-0.11
6/18/2022 7:56	12.09	0.18	6/19/2022 9:40	11.61	-0.03	6/18/2022 7:43	11.62	-0.05	6/18/2022 9:00	-0.12
6/18/2022 7:57	12.08	0.08	6/19/2022 9:41	11.60	-0.02	6/18/2022 7:44	11.63	-0.02	6/18/2022 9:01	-0.13
6/18/2022 7:58	12.10	0.12	6/19/2022 9:42	11.60	0.02	6/18/2022 7:45	11.63	-0.01	6/18/2022 9:02	-0.09
6/18/2022 7:59	12.07	0.07	6/19/2022 9:43	11.58	-0.03	6/18/2022 7:46	11.61	-0.01	6/18/2022 9:03	-0.13
6/18/2022 8:00	12.10	0.05	6/19/2022 9:44	11.57	-0.02	6/18/2022 7:47	11.62	-0.07	6/18/2022 9:04	-0.07
6/18/2022 8:01	12.09	0.08	6/19/2022 9:45	11.61	-0.03	6/18/2022 7:48	11.62	-0.06	6/18/2022 9:05	-0.04
6/18/2022 8:02	12.08	0.12	6/19/2022 9:46	11.63	-0.03	6/18/2022 7:49	11.61	-0.06	6/18/2022 9:06	-0.04
6/18/2022 8:03	12.12	0.03	6/19/2022 9:47	11.58	-0.05	6/18/2022 7:50	11.63	-0.01	6/18/2022 9:07	-0.08
6/18/2022 8:04	12.07	0.11	6/19/2022 9:48	11.60	-0.09	6/18/2022 7:51	11.63	-0.05	6/18/2022 9:08	-0.07
6/18/2022 8:05	12.08	0.13	6/19/2022 9:49	11.58	0.01	6/18/2022 7:52	11.61	-0.02	6/18/2022 9:09	-0.08
6/18/2022 8:06	12.08	0.13	6/19/2022 9:50	11.56	0.10	6/18/2022 7:53	11.63	-0.02	6/18/2022 9:10	-0.10
6/18/2022 8:07	12.06	0.14	6/19/2022 9:51	11.58	-0.05	6/18/2022 7:54	11.62	-0.04	6/18/2022 9:11	-0.06
6/18/2022 8:08	12.08	0.12	6/19/2022 9:52	11.59	-0.01	6/18/2022 7:55	11.63	-0.01	6/18/2022 9:12	-0.09
6/18/2022 8:09	12.07	0.04	6/19/2022 9:53	11.57	-0.03	6/18/2022 7:56	11.62	-0.03	6/18/2022 9:13	-0.05
6/18/2022 8:10	12.09	0.17	6/19/2022 9:54	11.57	0.02	6/18/2022 7:57	11.60	-0.06	6/18/2022 9:14	-0.07
6/18/2022 8:11	12.09	0.08	6/19/2022 9:55	11.54	-0.04	6/18/2022 7:58	11.61	0.00	6/18/2022 9:15	-0.08
6/18/2022 8:12	12.06	0.10	6/19/2022 9:56	11.57	0.08	6/18/2022 7:59	11.63	0.02	6/18/2022 9:16	-0.13
6/18/2022 8:13	12.06	0.09	6/19/2022 9:57	11.60	0.00	6/18/2022 8:00	11.59	-0.05	6/18/2022 9:17	-0.14
6/18/2022 8:14	12.07	0.09	6/19/2022 9:58	11.58	-0.06	6/18/2022 8:01	11.60	-0.02	6/18/2022 9:18	-0.12
6/18/2022 8:15	12.08	0.09	6/19/2022 9:59	11.57	-0.07	6/18/2022 8:02	11.60	-0.05	6/18/2022 9:19	-0.06
6/18/2022 8:16	12.07	0.09	6/19/2022 10:00	11.60	0.00	6/18/2022 8:03	11.62	-0.01	6/18/2022 9:20	-0.12
6/18/2022 8:17	12.08	0.13	6/19/2022 10:01	11.58	0.01	6/18/2022 8:04	11.61	-0.03	6/18/2022 9:21	-0.08
6/18/2022 8:18	12.09	0.13	6/19/2022 10:02	11.60	0.03	6/18/2022 8:05	11.62	-0.04	6/18/2022 9:22	-0.09
6/18/2022 8:19	12.07	0.24	6/19/2022 10:03	11.58	-0.08	6/18/2022 8:06	11.64	-0.05	6/18/2022 9:23	-0.04
6/18/2022 8:20	12.09	0.04	6/19/2022 10:04	11.59	0.02	6/18/2022 8:07	11.61	0.00	6/18/2022 9:24	-0.07
6/18/2022 8:21	12.07	0.11	6/19/2022 10:05	11.60	0.01	6/18/2022 8:08	11.64	-0.02	6/18/2022 9:25	-0.11
6/18/2022 8:22	12.08	0.13	6/19/2022 10:06	11.58	-0.03	6/18/2022 8:09	11.64	-0.02	6/18/2022 9:26	-0.10
6/18/2022 8:23	12.09	0.04	6/19/2022 10:07	11.57	0.00	6/18/2022 8:10	11.63	0.00	6/18/2022 9:27	-0.13
6/18/2022 8:24	12.09	0.06	6/19/2022 10:08	11.56	-0.05	6/18/2022 8:11	11.63	0.00	6/18/2022 9:28	-0.11
6/18/2022 8:25	12.09	0.10	6/19/2022 10:09	11.54	0.00	6/18/2022 8:12	11.62	-0.06	6/18/2022 9:29	-0.12
6/18/2022 8:26	12.09	0.15	6/19/2022 10:10	11.56	0.00	6/18/2022 8:13	11.62	-0.04	6/18/2022 9:30	-0.09
6/18/2022 8:27	12.08	0.09	6/19/2022 10:11	11.58	-0.05	6/18/2022 8:14	11.60	0.03	6/18/2022 9:31	-0.06
6/18/2022 8:28	12.05	0.05	6/19/2022 10:12	11.58	-0.02	6/18/2022 8:15	11.59	-0.05	6/18/2022 9:32	-0.13
6/18/2022 8:29	12.10	0.12	6/19/2022 10:13	11.59	-0.03	6/18/2022 8:16	11.59	0.03	6/18/2022 9:33	-0.10
6/18/2022 8:30	12.06	0.14	6/19/2022 10:14	11.58	0.08	6/18/2022 8:17	11.64	-0.04	6/18/2022 9:34	-0.11

6/18/2022 8:31	12.06	0.08	6/19/2022 10:15	11.58	-0.02	6/18/2022 8:18	11.62	-0.03	6/18/2022 9:35	-0.11
6/18/2022 8:32	12.06	0.11	6/19/2022 10:16	11.57	0.04	6/18/2022 8:19	11.63	-0.02	6/18/2022 9:36	-0.08
6/18/2022 8:33	12.05	0.16	6/19/2022 10:17	11.59	0.00	6/18/2022 8:20	11.60	-0.07	6/18/2022 9:37	-0.10
6/18/2022 8:34	12.06	0.12	6/19/2022 10:18	11.58	0.02	6/18/2022 8:21	11.63	-0.06	6/18/2022 9:38	-0.11
6/18/2022 8:35	12.08	0.15	6/19/2022 10:19	11.57	0.00	6/18/2022 8:22	11.62	-0.03	6/18/2022 9:39	-0.10
6/18/2022 8:36	12.07	0.12	6/19/2022 10:20	11.59	-0.04	6/18/2022 8:23	11.61	-0.02	6/18/2022 9:40	-0.12
6/18/2022 8:37	12.08	0.20	6/19/2022 10:21	11.60	-0.09	6/18/2022 8:24	11.62	0.00	6/18/2022 9:41	-0.08
6/18/2022 8:38	12.10	0.08	6/19/2022 10:22	11.59	-0.02	6/18/2022 8:25	11.64	-0.04	6/18/2022 9:42	-0.15
6/18/2022 8:39	12.06	0.10	6/19/2022 10:23	11.56	-0.10	6/18/2022 8:26	11.62	-0.03	6/18/2022 9:43	-0.10
6/18/2022 8:40	12.09	0.16	6/19/2022 10:24	11.56	-0.06	6/18/2022 8:27	11.65	-0.04	6/18/2022 9:44	-0.10
6/18/2022 8:41	12.10	0.10	6/19/2022 10:25	11.56	0.07	6/18/2022 8:28	11.63	-0.06	6/18/2022 9:45	-0.09
6/18/2022 8:42	12.08	0.10	6/19/2022 10:26	11.55	-0.05	6/18/2022 8:29	11.60	-0.06	6/18/2022 9:46	-0.11
6/18/2022 8:43	12.05	0.19	6/19/2022 10:27	11.57	-0.04	6/18/2022 8:30	11.61	-0.04	6/18/2022 9:47	-0.10
6/18/2022 8:44	12.08	0.18	6/19/2022 10:28	11.59	-0.06	6/18/2022 8:31	11.63	-0.05	6/18/2022 9:48	-0.09
6/18/2022 8:45	12.09	0.05	6/19/2022 10:29	11.59	0.03	6/18/2022 8:32	11.62	-0.02	6/18/2022 9:49	-0.11
6/18/2022 8:46	12.07	0.13	6/19/2022 10:30	11.59	0.00	6/18/2022 8:33	11.62	0.00	6/18/2022 9:50	-0.10
6/18/2022 8:47	12.08	0.13	6/19/2022 10:31	11.57	-0.07	6/18/2022 8:34	11.60	-0.03	6/18/2022 9:51	-0.14
6/18/2022 8:48	12.06	0.08	6/19/2022 10:32	11.58	0.00	6/18/2022 8:35	11.62	-0.02	6/18/2022 9:52	-0.07
6/18/2022 8:49	12.09	0.06	6/19/2022 10:33	11.59	-0.11	6/18/2022 8:36	11.61	-0.04	6/18/2022 9:53	-0.09
6/18/2022 8:50	12.08	0.11	6/19/2022 10:34	11.58	-0.01	6/18/2022 8:37	11.62	-0.05	6/18/2022 9:54	-0.10
6/18/2022 8:51	12.04	0.11	6/19/2022 10:35	11.58	0.04	6/18/2022 8:38	11.62	-0.03	6/18/2022 9:55	-0.11
6/18/2022 8:52	12.08	0.20	6/19/2022 10:36	11.58	-0.03	6/18/2022 8:39	11.63	-0.04	6/18/2022 9:56	-0.09
6/18/2022 8:53	12.09	0.10	6/19/2022 10:37	11.57	0.02	6/18/2022 8:40	11.62	-0.03	6/18/2022 9:57	-0.08
6/18/2022 8:54	12.06	0.09	6/19/2022 10:38	11.60	0.02	6/18/2022 8:41	11.61	-0.03	6/18/2022 9:58	-0.07
6/18/2022 8:55	12.09	0.08	6/19/2022 10:39	11.59	-0.08	6/18/2022 8:42	11.60	-0.02	6/18/2022 9:59	-0.07
6/18/2022 8:56	12.07	0.10	6/19/2022 10:40	11.58	0.02	6/18/2022 8:43	11.59	-0.01	6/18/2022 10:00	-0.12
6/18/2022 8:57	12.08	0.05	6/19/2022 10:41	11.56	0.00	6/18/2022 8:44	11.61	-0.05	6/18/2022 10:01	-0.10
6/18/2022 8:58	12.09	0.06	6/19/2022 10:42	11.57	-0.06	6/18/2022 8:45	11.60	-0.02	6/18/2022 10:02	-0.10
6/18/2022 8:59	12.06	0.06	6/19/2022 10:43	11.56	-0.08	6/18/2022 8:46	11.65	-0.01	6/18/2022 10:03	-0.11
6/18/2022 9:00	12.08	0.10	6/19/2022 10:44	11.60	-0.02	6/18/2022 8:47	11.61	-0.04	6/18/2022 10:04	-0.11
6/18/2022 9:01	12.06	0.05	6/19/2022 10:45	11.57	-0.05	6/18/2022 8:48	11.62	0.01	6/18/2022 10:05	-0.16
6/18/2022 9:02	12.08	0.13	6/19/2022 10:46	11.62	-0.01	6/18/2022 8:49	11.60	0.00	6/18/2022 10:06	-0.10
6/18/2022 9:03	12.07	0.09	6/19/2022 10:47	11.55	-0.05	6/18/2022 8:50	11.61	0.05	6/18/2022 10:07	-0.09
6/18/2022 9:04	12.09	0.05	6/19/2022 10:48	11.56	-0.08	6/18/2022 8:51	11.61	-0.06	6/18/2022 10:08	-0.09
6/18/2022 9:05	12.08	0.15	6/19/2022 10:49	11.60	-0.11	6/18/2022 8:52	11.60	0.01	6/18/2022 10:09	-0.08
6/18/2022 9:06	12.07	0.10	6/19/2022 10:50	11.55	-0.11	6/18/2022 8:53	11.62	-0.09	6/18/2022 10:10	-0.14
6/18/2022 9:07	12.10	0.08	6/19/2022 10:51	11.57	0.04	6/18/2022 8:54	11.63	0.00	6/18/2022 10:11	-0.10
6/18/2022 9:08	12.08	0.11	6/19/2022 10:52	11.57	-0.01	6/18/2022 8:55	11.63	-0.02	6/18/2022 10:12	-0.12
6/18/2022 9:09	12.08	0.12	6/19/2022 10:53	11.59	0.03	6/18/2022 8:56	11.62	-0.07	6/18/2022 10:13	-0.05
6/18/2022 9:10	12.10	0.03	6/19/2022 10:54	11.58	-0.02	6/18/2022 8:57	11.62	-0.01	6/18/2022 10:14	-0.11
6/18/2022 9:11	12.07	0.15	6/19/2022 10:55	11.59	-0.03	6/18/2022 8:58	11.61	-0.04	6/18/2022 10:15	-0.11
6/18/2022 9:12	12.07	0.10	6/19/2022 10:56	11.57	-0.11	6/18/2022 8:59	11.64	-0.01	6/18/2022 10:16	-0.10
6/18/2022 9:13	12.06	0.11	6/19/2022 10:57	11.59	-0.03	6/18/2022 9:00	11.63	-0.03	6/18/2022 10:17	-0.17
6/18/2022 9:14	12.10	0.04	6/19/2022 10:58	11.57	-0.02	6/18/2022 9:01	11.60	-0.07	6/18/2022 10:18	-0.10
6/18/2022 9:15	12.07	0.13	6/19/2022 10:59	11.58	-0.02	6/18/2022 9:02	11.62	-0.04	6/18/2022 10:19	-0.11
6/18/2022 9:16	12.08	0.09	6/19/2022 11:00	11.57	0.00	6/18/2022 9:03	11.60	-0.01	6/18/2022 10:20	-0.11
6/18/2022 9:17	12.07	0.09	6/19/2022 11:01	11.58	-0.05	6/18/2022 9:04	11.61	-0.03	6/18/2022 10:21	-0.11
6/18/2022 9:18	12.06	0.14	6/19/2022 11:02	11.60	0.05	6/18/2022 9:05	11.63	-0.03	6/18/2022 10:22	-0.08
6/18/2022 9:19	12.09	0.11	6/19/2022 11:03	11.59	-0.08	6/18/2022 9:06	11.60	-0.04	6/18/2022 10:23	-0.12
6/18/2022 9:20	12.10	0.06	6/19/2022 11:04	11.58	-0.07	6/18/2022 9:07	11.61	-0.02	6/18/2022 10:24	-0.10
6/18/2022 9:21	12.08	0.20	6/19/2022 11:05	11.57	-0.05	6/18/2022 9:08	11.58	-0.07	6/18/2022 10:25	-0.13
6/18/2022 9:22	12.08	0.13	6/19/2022 11:06	11.59	0.02	6/18/2022 9:09	11.63	-0.03	6/18/2022 10:26	-0.09
6/18/2022 9:23	12.08	0.17	6/19/2022 11:07	11.59	-0.03	6/18/2022 9:10	11.60	-0.06	6/18/2022 10:27	-0.11
6/18/2022 9:24	12.09	0.10	6/19/2022 11:08	11.58	-0.03	6/18/2022 9:11	11.62	0.01	6/18/2022 10:28	-0.09
6/18/2022 9:25	12.09	0.10	6/19/2022 11:09	11.59	-0.05	6/18/2022 9:12	11.61	-0.04	6/18/2022 10:29	-0.11
6/18/2022 9:26	12.09	0.14	6/19/2022 11:10	11.59	-0.02	6/18/2022 9:13	11.61	-0.03	6/18/2022 10:30	-0.11
6/18/2022 9:27	12.07	0.17	6/19/2022 11:11	11.60	-0.09	6/18/2022 9:14	11.60	-0.03	6/18/2022 10:31	-0.13
6/18/2022 9:28	12.07	0.05	6/19/2022 11:12	11.57	-0.10	6/18/2022 9:15	11.60	-0.01	6/18/2022 10:32	-0.03
6/18/2022 9:29	12.08	0.13	6/19/2022 11:13	11.58	-0.04	6/18/2022 9:16	11.61	-0.03	6/18/2022 10:33	-0.09
6/18/2022 9:30	12.08	0.10	6/19/2022 11:14	11.57	-0.08	6/18/2022 9:17	11.63	-0.02	6/18/2022 10:34	-0.13
6/18/2022 9:31	12.06	0.14	6/19/2022 11:15	11.57	0.04	6/18/2022 9:18	11.61	-0.01	6/18/2022 10:35	-0.12
6/18/2022 9:32	12.07	0.03	6/19/2022 11:16	11.59	0.00	6/18/2022 9:19	11.63	-0.04	6/18/2022 10:36	-0.03
6/18/2022 9:33	12.06	0.12	6/19/2022 11:17	11.58	-0.05	6/18/2022 9:20	11.63	-0.06	6/18/2022 10:37	-0.10
6/18/2022 9:34	12.08	0.18	6/19/2022 11:18	11.57	-0.02	6/18/2022 9:21	11.62	-0.04	6/18/2022 10:38	-0.13
6/18/2022 9:35	12.10	0.13	6/19/2022 11:19	11.58	-0.04	6/18/2022 9:22	11.63	-0.01	6/18/2022 10:39	-0.07
6/18/2022 9:36	12.08	0.15	6/19/2022 11:20	11.58	-0.12	6/18/2022 9:23	11.62	-0.06	6/18/2022 10:40	-0.18
6/18/2022 9:37	12.07	0.10	6/19/2022 11:21	11.58	-0.05	6/18/2022 9:24	11.63	0.01	6/18/2022 10:41	-0.12
6/18/2022 9:38	12.09	0.09	6/19/2022 11:22	11.55	0.02	6/18/2022 9:25	11.60	-0.01	6/18/2022 10:42	-0.11
6/18/2022 9:39	12.08	0.10	6/19/2022 11:23	11.61	0.03	6/18/2022 9:26	11.61	0.00	6/18/2022 10:43	-0.08
6/18/2022 9:40	12.08	0.13	6/19/2022 11:24	11.58	0.00	6/18/2022 9:27	11.62	-0.02	6/18/2022 10:44	-0.09
6/18/2022 9:41	12.10	0.13	6/19/2022 11:25	11.57	-0.04	6/18/2022 9:28	11.61	-0.03	6/18/2022 10:45	-0.10
6/18/2022 9:42	12.09	0.09	6/19/2022 11:26	11.56	-0.06	6/18/2022 9:29	11.61	-0.03	6/18/2022 10:46	-0.08
6/18/2022 9:43	12.08	0.11	6/19/2022 11:27	11.59	0.01	6/18/2022 9:30	11.62	-0.03	6/18/2022 10:47	-0.13
6/18/2022 9:44	12.09	0.07	6/19/2022 11:28	11.58	0.00	6/18/2022 9:31	11.60	-0.04	6/18/2022 10:48	-0.08
6/18/2022 9:45	12.08	0.11	6/19/2022 11:29	11.58	-0.03	6/18/2022 9:32	11.63	-0.05	6/18/2022 10:49	-0.11
6/18/2022 9:46	12.07	0.14	6/19/2022 11:30	11.58	-0.05	6/18/2022 9:33	11.62	-0.03	6/18/2022 10:50	-0.02
6/18/2022 9:47	12.09	0.04	6/19/2022 11:31	11.61	-0.07	6/18/2022 9:34	11.63	-0.03	6/18/2022 10:51	-0.13
6/18/2022 9:48	12.08	0.15	6/19/2022 11:32	11.59	0.03	6/18/2022 9:35	11.62	-0.04	6/18/2022 10:52	-0.10
6/18/2022 9:49	12.08	0.14	6/19/2022 11:33	11.59	-0.01	6/18/2022 9:36	11.60	0.04	6/18/2022 10:53	-0.07
6/18/2022 9:50	12.06	0.11	6/19/2022 11:34	11.60	-0.04	6/18/2022 9:37	11.61	-0.04	6/18/2022 10:54	-0.11
6/18/2022 9:51	12.06	0.16	6/19/2022 11:35	11.57	-0.06	6/18/2022 9:38	11.62	-0.02	6/18/2022 10:55	-0.12
6/18/2022 9:52	12.07	0.10	6/19/2022 11:36	11.57	-0.05	6/18/2022 9:39	11.60	0.00	6/18/2022 10:56	-0.10
6/18/2022 9:53	12.06	0.06	6/19/2022 11:37	11.56	-0.03	6/18/2022 9:40	11.61	-0.02	6/18/2022 10:57	-0.08
6/18/2022 9:54	12.07	0.10	6/19/2022 11:38	11.58	-0.01	6/18/2022 9:41	11.62	-0.04	6/18/2022 10:58	-0.11
6/18/2022 9:55	12.05	0.09	6/19/2022 11:39	11.56	-0.01	6/18/2022 9:42	11.62	-0.01	6/18/2022 10:59	-0.14
6/18/2022 9:56	12.07	0.05	6/19/2022 11:40	11.55	-0.08	6/18/2022 9:43	11.61	-0.08	6/18/2022 11:00	-0.09
6/18/2022 9:57	12.07	0.10	6/19/2022 11:41	11.58	-0.08	6/18/2022 9:44	11.62	-0.02	6/18/2022 11:01	-0.07
6/18/2022 9:58	12.09	0.06	6/19/2022 11:42	11.58	-0.01	6/18/2022 9:45	11.63	-0.02	6/18/2022 11:02	-0.14

6/18/2022 9:59	12.08	0.09	6/19/2022 11:43	11.58	-0.09	6/18/2022 9:46	11.61	-0.01	6/18/2022 11:03	-0.09
6/18/2022 10:00	12.08	0.15	6/19/2022 11:44	11.58	0.00	6/18/2022 9:47	11.61	-0.05	6/18/2022 11:04	-0.11
6/18/2022 10:01	12.09	0.11	6/19/2022 11:45	11.58	-0.05	6/18/2022 9:48	11.61	-0.04	6/18/2022 11:05	-0.11
6/18/2022 10:02	12.07	0.10	6/19/2022 11:46	11.58	0.02	6/18/2022 9:49	11.63	-0.04	6/18/2022 11:06	-0.10
6/18/2022 10:03	12.08	0.08	6/19/2022 11:47	11.60	0.07	6/18/2022 9:50	11.60	-0.03	6/18/2022 11:07	-0.10
6/18/2022 10:04	12.08	0.10	6/19/2022 11:48	11.58	-0.04	6/18/2022 9:51	11.63	-0.03	6/18/2022 11:08	-0.08
6/18/2022 10:05	12.08	0.07	6/19/2022 11:49	11.60	-0.04	6/18/2022 9:52	11.62	-0.05	6/18/2022 11:09	-0.13
6/18/2022 10:06	12.06	0.11	6/19/2022 11:50	11.58	-0.01	6/18/2022 9:53	11.61	0.02	6/18/2022 11:10	-0.13
6/18/2022 10:07	12.06	0.07	6/19/2022 11:51	11.57	0.01	6/18/2022 9:54	11.60	-0.05	6/18/2022 11:11	-0.12
6/18/2022 10:08	12.11	0.14	6/19/2022 11:52	11.58	0.00	6/18/2022 9:55	11.60	-0.05	6/18/2022 11:12	-0.12
6/18/2022 10:09	12.06	0.11	6/19/2022 11:53	11.58	-0.02	6/18/2022 9:56	11.63	-0.01	6/18/2022 11:13	-0.15
6/18/2022 10:10	12.06	0.13	6/19/2022 11:54	11.59	-0.04	6/18/2022 9:57	11.62	-0.07	6/18/2022 11:14	-0.08
6/18/2022 10:11	12.08	0.11	6/19/2022 11:55	11.57	0.00	6/18/2022 9:58	11.61	-0.03	6/18/2022 11:15	-0.11
6/18/2022 10:12	12.08	0.12	6/19/2022 11:56	11.54	0.02	6/18/2022 9:59	11.64	-0.01	6/18/2022 11:16	-0.08
6/18/2022 10:13	12.08	0.01	6/19/2022 11:57	11.57	-0.06	6/18/2022 10:00	11.62	0.00	6/18/2022 11:17	-0.09
6/18/2022 10:14	12.08	0.16	6/19/2022 11:58	11.58	-0.05	6/18/2022 10:01	11.63	-0.01	6/18/2022 11:18	-0.10
6/18/2022 10:15	12.07	0.18	6/19/2022 11:59	11.57	-0.08	6/18/2022 10:02	11.64	-0.04	6/18/2022 11:19	-0.10
6/18/2022 10:16	12.10	0.14	6/19/2022 12:00	11.58	0.06	6/18/2022 10:03	11.60	-0.03	6/18/2022 11:20	-0.07
6/18/2022 10:17	12.08	0.19	6/19/2022 12:01	11.58	0.06	6/18/2022 10:04	11.62	-0.04	6/18/2022 11:21	-0.09
6/18/2022 10:18	12.05	0.10	6/19/2022 12:02	11.59	-0.05	6/18/2022 10:05	11.63	0.01	6/18/2022 11:22	-0.08
6/18/2022 10:19	12.07	0.11	6/19/2022 12:03	11.57	-0.02	6/18/2022 10:06	11.60	-0.02	6/18/2022 11:23	-0.11
6/18/2022 10:20	12.10	0.10	6/19/2022 12:04	11.57	0.00	6/18/2022 10:07	11.62	-0.04	6/18/2022 11:24	-0.08
6/18/2022 10:21	12.07	0.14	6/19/2022 12:05	11.60	-0.03	6/18/2022 10:08	11.62	-0.04	6/18/2022 11:25	-0.07
6/18/2022 10:22	12.07	0.11	6/19/2022 12:06	11.59	-0.01	6/18/2022 10:09	11.64	-0.05	6/18/2022 11:26	-0.06
6/18/2022 10:23	12.09	0.11	6/19/2022 12:07	11.57	0.00	6/18/2022 10:10	11.62	0.00	6/18/2022 11:27	-0.08
6/18/2022 10:24	12.09	0.09	6/19/2022 12:08	11.56	-0.02	6/18/2022 10:11	11.62	-0.03	6/18/2022 11:28	-0.11
6/18/2022 10:25	12.07	0.14	6/19/2022 12:09	11.59	-0.02	6/18/2022 10:12	11.61	-0.05	6/18/2022 11:29	-0.12
6/18/2022 10:26	12.08	0.13	6/19/2022 12:10	11.58	0.02	6/18/2022 10:13	11.61	-0.03	6/18/2022 11:30	-0.12
6/18/2022 10:27	12.07	0.05	6/19/2022 12:11	11.58	-0.09	6/18/2022 10:14	11.60	-0.04	6/18/2022 11:31	-0.11
6/18/2022 10:28	12.06	0.14	6/19/2022 12:12	11.56	-0.01	6/18/2022 10:15	11.60	-0.03	6/18/2022 11:32	-0.15
6/18/2022 10:29	12.06	0.10	6/19/2022 12:13	11.56	-0.05	6/18/2022 10:16	11.63	-0.04	6/18/2022 11:33	-0.10
6/18/2022 10:30	12.09	0.09	6/19/2022 12:14	11.57	-0.03	6/18/2022 10:17	11.62	-0.04	6/18/2022 11:34	-0.08
6/18/2022 10:31	12.08	0.14	6/19/2022 12:15	11.60	0.00	6/18/2022 10:18	11.60	-0.04	6/18/2022 11:35	-0.10
6/18/2022 10:32	12.07	0.10	6/19/2022 12:16	11.56	0.01	6/18/2022 10:19	11.63	-0.02	6/18/2022 11:36	-0.09
6/18/2022 10:33	12.10	0.13	6/19/2022 12:17	11.57	-0.06	6/18/2022 10:20	11.62	-0.06	6/18/2022 11:37	-0.09
6/18/2022 10:34	12.07	0.09	6/19/2022 12:18	11.58	-0.05	6/18/2022 10:21	11.63	-0.03	6/18/2022 11:38	-0.07
6/18/2022 10:35	12.09	0.08	6/19/2022 12:19	11.58	0.00	6/18/2022 10:22	11.59	-0.01	6/18/2022 11:39	-0.13
6/18/2022 10:36	12.08	0.09	6/19/2022 12:20	11.58	-0.07	6/18/2022 10:23	11.62	-0.06	6/18/2022 11:40	-0.07
6/18/2022 10:37	12.10	0.06	6/19/2022 12:21	11.58	0.06	6/18/2022 10:24	11.60	-0.02	6/18/2022 11:41	-0.14
6/18/2022 10:38	12.09	0.03	6/19/2022 12:22	11.60	-0.08	6/18/2022 10:25	11.63	-0.06	6/18/2022 11:42	-0.06
6/18/2022 10:39	12.07	0.11	6/19/2022 12:23	11.57	-0.08	6/18/2022 10:26	11.61	-0.01	6/18/2022 11:43	-0.12
6/18/2022 10:40	12.06	0.08	6/19/2022 12:24	11.59	-0.06	6/18/2022 10:27	11.61	-0.01	6/18/2022 11:44	-0.06
6/18/2022 10:41	12.09	0.20	6/19/2022 12:25	11.58	0.04	6/18/2022 10:28	11.64	-0.01	6/18/2022 11:45	-0.08
6/18/2022 10:42	12.10	0.10	6/19/2022 12:26	11.57	-0.05	6/18/2022 10:29	11.62	-0.03	6/18/2022 11:46	-0.06
6/18/2022 10:43	12.08	0.02	6/19/2022 12:27	11.59	-0.06	6/18/2022 10:30	11.64	-0.02	6/18/2022 11:47	-0.11
6/18/2022 10:44	12.10	0.09	6/19/2022 12:28	11.60	-0.04	6/18/2022 10:31	11.61	-0.02	6/18/2022 11:48	-0.10
6/18/2022 10:45	12.07	0.11	6/19/2022 12:29	11.59	-0.10	6/18/2022 10:32	11.62	-0.02	6/18/2022 11:49	-0.13
6/18/2022 10:46	12.08	0.08	6/19/2022 12:30	11.60	-0.03	6/18/2022 10:33	11.61	-0.01	6/18/2022 11:50	-0.07
6/18/2022 10:47	12.07	0.10	6/19/2022 12:31	11.57	0.02	6/18/2022 10:34	11.63	-0.01	6/18/2022 11:51	-0.11
6/18/2022 10:48	12.07	0.08	6/19/2022 12:32	11.59	0.03	6/18/2022 10:35	11.60	-0.02	6/18/2022 11:52	-0.09
6/18/2022 10:49	12.10	0.11	6/19/2022 12:33	11.56	-0.05	6/18/2022 10:36	11.62	-0.04	6/18/2022 11:53	-0.09
6/18/2022 10:50	12.07	0.06	6/19/2022 12:34	11.59	-0.06	6/18/2022 10:37	11.62	-0.06	6/18/2022 11:54	-0.06
6/18/2022 10:51	12.07	0.09	6/19/2022 12:35	11.59	-0.08	6/18/2022 10:38	11.63	0.00	6/18/2022 11:55	-0.09
6/18/2022 10:52	12.07	0.14	6/19/2022 12:36	11.58	-0.01	6/18/2022 10:39	11.62	-0.04	6/18/2022 11:56	-0.16
6/18/2022 10:53	12.09	0.12	6/19/2022 12:37	11.59	-0.05	6/18/2022 10:40	11.64	-0.04	6/18/2022 11:57	-0.10
6/18/2022 10:54	12.07	0.09	6/19/2022 12:38	11.59	0.00	6/18/2022 10:41	11.61	-0.03	6/18/2022 11:58	-0.11
6/18/2022 10:55	12.08	0.10	6/19/2022 12:39	11.60	0.08	6/18/2022 10:42	11.63	-0.01	6/18/2022 11:59	-0.12
6/18/2022 10:56	12.07	0.05	6/19/2022 12:40	11.60	-0.06	6/18/2022 10:43	11.61	-0.03	6/18/2022 12:00	-0.11
6/18/2022 10:57	12.08	0.11	6/19/2022 12:41	11.58	0.00	6/18/2022 10:44	11.64	-0.04	6/18/2022 12:01	-0.08
6/18/2022 10:58	12.07	0.09	6/19/2022 12:42	11.60	-0.05	6/18/2022 10:45	11.62	-0.04	6/18/2022 12:02	-0.06
6/18/2022 10:59	12.06	0.19	6/19/2022 12:43	11.57	0.00	6/18/2022 10:46	11.62	-0.03	6/18/2022 12:03	-0.04
6/18/2022 11:00	12.10	0.09	6/19/2022 12:44	11.59	-0.06	6/18/2022 10:47	11.62	-0.03	6/18/2022 12:04	-0.05
6/18/2022 11:01	12.08	0.16	6/19/2022 12:45	11.57	-0.05	6/18/2022 10:48	11.61	-0.05	6/18/2022 12:05	-0.14
6/18/2022 11:02	12.07	0.09	6/19/2022 12:46	11.58	-0.06	6/18/2022 10:49	11.63	-0.04	6/18/2022 12:06	-0.15
6/18/2022 11:03	12.09	0.14	6/19/2022 12:47	11.57	-0.01	6/18/2022 10:50	11.61	-0.02	6/18/2022 12:07	-0.12
6/18/2022 11:04	12.09	0.08	6/19/2022 12:48	11.59	-0.01	6/18/2022 10:51	11.64	-0.02	6/18/2022 12:08	-0.11
6/18/2022 11:05	12.08	0.08	6/19/2022 12:49	11.58	0.00	6/18/2022 10:52	11.63	-0.04	6/18/2022 12:09	-0.10
6/18/2022 11:06	12.08	0.09	6/19/2022 12:50	11.58	0.00	6/18/2022 10:53	11.60	-0.06	6/18/2022 12:10	-0.10
6/18/2022 11:07	12.05	0.05	6/19/2022 12:51	11.57	-0.04	6/18/2022 10:54	11.60	-0.03	6/18/2022 12:11	-0.05
6/18/2022 11:08	12.07	0.10	6/19/2022 12:52	11.58	-0.04	6/18/2022 10:55	11.62	-0.05	6/18/2022 12:12	-0.10
6/18/2022 11:09	12.08	0.10	6/19/2022 12:53	11.57	0.03	6/18/2022 10:56	11.63	-0.04	6/18/2022 12:13	-0.11
6/18/2022 11:10	12.09	0.17	6/19/2022 12:54	11.58	-0.07	6/18/2022 10:57	11.62	-0.04	6/18/2022 12:14	-0.09
6/18/2022 11:11	12.10	0.09	6/19/2022 12:55	11.60	-0.02	6/18/2022 10:58	11.61	-0.02	6/18/2022 12:15	-0.10
6/18/2022 11:12	12.08	0.19	6/19/2022 12:56	11.58	-0.07	6/18/2022 10:59	11.61	-0.01	6/18/2022 12:16	-0.12
6/18/2022 11:13	12.09	0.24	6/19/2022 12:57	11.59	-0.07	6/18/2022 11:00	11.62	-0.02	6/18/2022 12:17	-0.11
6/18/2022 11:14	12.06	0.10	6/19/2022 12:58	11.59	0.00	6/18/2022 11:01	11.61	0.03	6/18/2022 12:18	-0.09
6/18/2022 11:15	12.09	0.07	6/19/2022 12:59	11.58	-0.06	6/18/2022 11:02	11.62	0.00	6/18/2022 12:19	-0.06
6/18/2022 11:16	12.07	0.10	6/19/2022 13:00	11.56	-0.06	6/18/2022 11:03	11.61	-0.02	6/18/2022 12:20	-0.11
6/18/2022 11:17	12.08	0.09	6/19/2022 13:01	11.57	0.00	6/18/2022 11:04	11.62	-0.02	6/18/2022 12:21	-0.08
6/18/2022 11:18	12.09	0.07	6/19/2022 13:02	11.56	0.00	6/18/2022 11:05	11.61	-0.05	6/18/2022 12:22	-0.13
6/18/2022 11:19	12.07	0.14	6/19/2022 13:03	11.60	0.04	6/18/2022 11:06	11.60	-0.03	6/18/2022 12:23	-0.12
6/18/2022 11:20	12.10	0.09	6/19/2022 13:04	11.56	-0.01	6/18/2022 11:07	11.61	-0.04	6/18/2022 12:24	-0.09
6/18/2022 11:21	12.08	0.09	6/19/2022 13:05	11.55	-0.02	6/18/2022 11:08	11.61	-0.01	6/18/2022 12:25	-0.12
6/18/2022 11:22	12.08	0.13	6/19/2022 13:06	11.57	0.03	6/18/2022 11:09	11.61	0.02	6/18/2022 12:26	-0.10
6/18/2022 11:23	12.08	0.06	6/19/2022 13:07	11.58	-0.06	6/18/2022 11:10	11.62	-0.01	6/18/2022 12:27	-0.11
6/18/2022 11:24	12.04	0.08	6/19/2022 13:08	11.58	0.00	6/18/2022 11:11	11.62	-0.07	6/18/2022 12:28	-0.12
6/18/2022 11:25	12.11	0.11	6/19/2022 13:09	11.57	0.02	6/18/2022 11:12	11.62	-0.04	6/18/2022 12:29	-0.10
6/18/2022 11:26	12.10	0.14	6/19/2022 13:10	11.57	0.02	6/18/2022 11:13	11.61	-0.05	6/18/2022 12:30	-0.07

6/18/2022 11:27	12.08	0.00	6/19/2022 13:11	11.60	-0.05	6/18/2022 11:14	11.62	-0.03	6/18/2022 12:31	-0.07
6/18/2022 11:28	12.09	0.10	6/19/2022 13:12	11.57	-0.06	6/18/2022 11:15	11.58	-0.03	6/18/2022 12:32	-0.17
6/18/2022 11:29	12.07	0.09	6/19/2022 13:13	11.57	-0.05	6/18/2022 11:16	11.61	-0.03	6/18/2022 12:33	-0.03
6/18/2022 11:30	12.08	0.04	6/19/2022 13:14	11.57	-0.03	6/18/2022 11:17	11.60	-0.03	6/18/2022 12:34	-0.09
6/18/2022 11:31	12.08	0.10	6/19/2022 13:15	11.58	-0.06	6/18/2022 11:18	11.61	0.01	6/18/2022 12:35	-0.13
6/18/2022 11:32	12.08	0.02	6/19/2022 13:16	11.57	-0.04	6/18/2022 11:19	11.63	-0.02	6/18/2022 12:36	-0.10
6/18/2022 11:33	12.07	0.15	6/19/2022 13:17	11.57	-0.03	6/18/2022 11:20	11.62	-0.02	6/18/2022 12:37	-0.08
6/18/2022 11:34	12.08	0.01	6/19/2022 13:18	11.56	-0.04	6/18/2022 11:21	11.64	-0.04	6/18/2022 12:38	-0.11
6/18/2022 11:35	12.07	0.04	6/19/2022 13:19	11.57	-0.06	6/18/2022 11:22	11.63	-0.03	6/18/2022 12:39	-0.11
6/18/2022 11:36	12.08	-0.03	6/19/2022 13:20	11.56	0.00	6/18/2022 11:23	11.61	-0.09	6/18/2022 12:40	-0.06
6/18/2022 11:37	12.09	0.10	6/19/2022 13:21	11.62	-0.06	6/18/2022 11:24	11.60	0.00	6/18/2022 12:41	-0.10
6/18/2022 11:38	12.09	0.19	6/19/2022 13:22	11.56	-0.09	6/18/2022 11:25	11.63	-0.02	6/18/2022 12:42	-0.08
6/18/2022 11:39	12.07	0.11	6/19/2022 13:23	11.58	0.01	6/18/2022 11:26	11.61	-0.04	6/18/2022 12:43	-0.11
6/18/2022 11:40	12.04	0.07	6/19/2022 13:24	11.58	-0.04	6/18/2022 11:27	11.60	-0.06	6/18/2022 12:44	-0.07
6/18/2022 11:41	12.09	0.11	6/19/2022 13:25	11.57	0.00	6/18/2022 11:28	11.62	-0.02	6/18/2022 12:45	-0.07
6/18/2022 11:42	12.07	0.10	6/19/2022 13:26	11.59	-0.01	6/18/2022 11:29	11.60	0.02	6/18/2022 12:46	-0.08
6/18/2022 11:43	12.08	0.12	6/19/2022 13:27	11.59	0.02	6/18/2022 11:30	11.60	-0.05	6/18/2022 12:47	-0.07
6/18/2022 11:44	12.08	0.17	6/19/2022 13:28	11.58	0.03	6/18/2022 11:31	11.62	-0.03	6/18/2022 12:48	-0.06
6/18/2022 11:45	12.06	0.18	6/19/2022 13:29	11.57	0.04	6/18/2022 11:32	11.61	-0.04	6/18/2022 12:49	-0.06
6/18/2022 11:46	12.09	0.10	6/19/2022 13:30	11.60	-0.01	6/18/2022 11:33	11.61	-0.05	6/18/2022 12:50	-0.07
6/18/2022 11:47	12.08	0.12	6/19/2022 13:31	11.57	-0.10	6/18/2022 11:34	11.62	-0.05	6/18/2022 12:51	-0.11
6/18/2022 11:48	12.09	0.08	6/19/2022 13:32	11.56	0.05	6/18/2022 11:35	11.61	-0.06	6/18/2022 12:52	-0.08
6/18/2022 11:49	12.10	0.14	6/19/2022 13:33	11.58	-0.07	6/18/2022 11:36	11.64	-0.04	6/18/2022 12:53	-0.06
6/18/2022 11:50	12.07	0.10	6/19/2022 13:34	11.55	-0.03	6/18/2022 11:37	11.62	-0.06	6/18/2022 12:54	-0.03
6/18/2022 11:51	12.08	0.13	6/19/2022 13:35	11.58	-0.08	6/18/2022 11:38	11.62	-0.06	6/18/2022 12:55	-0.10
6/18/2022 11:52	12.09	0.14	6/19/2022 13:36	11.58	0.01	6/18/2022 11:39	11.59	-0.04	6/18/2022 12:56	-0.12
6/18/2022 11:53	12.09	0.14	6/19/2022 13:37	11.59	-0.01	6/18/2022 11:40	11.63	-0.04	6/18/2022 12:57	-0.08
6/18/2022 11:54	12.09	0.12	6/19/2022 13:38	11.59	0.03	6/18/2022 11:41	11.63	-0.02	6/18/2022 12:58	-0.08
6/18/2022 11:55	12.10	0.14	6/19/2022 13:39	11.57	-0.05	6/18/2022 11:42	11.64	-0.04	6/18/2022 12:59	-0.08
6/18/2022 11:56	12.07	0.06	6/19/2022 13:40	11.59	-0.05	6/18/2022 11:43	11.60	-0.01	6/18/2022 13:00	-0.10
6/18/2022 11:57	12.08	0.15	6/19/2022 13:41	11.55	0.04	6/18/2022 11:44	11.63	0.00	6/18/2022 13:01	-0.14
6/18/2022 11:58	12.07	0.11	6/19/2022 13:42	11.56	0.05	6/18/2022 11:45	11.60	-0.03	6/18/2022 13:02	-0.12
6/18/2022 11:59	12.08	0.09	6/19/2022 13:43	11.56	0.02	6/18/2022 11:46	11.61	-0.01	6/18/2022 13:03	-0.11
6/18/2022 12:00	12.08	0.15	6/19/2022 13:44	11.59	-0.04	6/18/2022 11:47	11.61	-0.07	6/18/2022 13:04	-0.07
6/18/2022 12:01	12.08	0.12	6/19/2022 13:45	11.56	-0.09	6/18/2022 11:48	11.62	0.00	6/18/2022 13:05	-0.06
6/18/2022 12:02	12.08	0.15	6/19/2022 13:46	11.57	0.01	6/18/2022 11:49	11.61	-0.01	6/18/2022 13:06	-0.08
6/18/2022 12:03	12.10	0.10	6/19/2022 13:47	11.57	0.01	6/18/2022 11:50	11.62	-0.05	6/18/2022 13:07	-0.07
6/18/2022 12:04	12.08	0.07	6/19/2022 13:48	11.58	-0.07	6/18/2022 11:51	11.63	-0.04	6/18/2022 13:08	-0.12
6/18/2022 12:05	12.06	0.13	6/19/2022 13:49	11.60	-0.02	6/18/2022 11:52	11.60	-0.03	6/18/2022 13:09	-0.08
6/18/2022 12:06	12.07	0.09	6/19/2022 13:50	11.60	-0.02	6/18/2022 11:53	11.64	-0.02	6/18/2022 13:10	-0.05
6/18/2022 12:07	12.09	0.10	6/19/2022 13:51	11.57	-0.05	6/18/2022 11:54	11.63	0.03	6/18/2022 13:11	-0.10
6/18/2022 12:08	12.08	0.14	6/19/2022 13:52	11.56	-0.06	6/18/2022 11:55	11.61	-0.04	6/18/2022 13:12	-0.09
6/18/2022 12:09	12.09	0.10	6/19/2022 13:53	11.57	-0.08	6/18/2022 11:56	11.62	-0.04	6/18/2022 13:13	-0.09
6/18/2022 12:10	12.06	0.09	6/19/2022 13:54	11.57	-0.03	6/18/2022 11:57	11.62	-0.06	6/18/2022 13:14	-0.07
6/18/2022 12:11	12.08	0.11	6/19/2022 13:55	11.57	-0.02	6/18/2022 11:58	11.62	-0.05	6/18/2022 13:15	-0.14
6/18/2022 12:12	12.10	0.16	6/19/2022 13:56	11.57	0.09	6/18/2022 11:59	11.61	-0.01	6/18/2022 13:16	-0.09
6/18/2022 12:13	12.08	0.09	6/19/2022 13:57	11.58	-0.05	6/18/2022 12:00	11.60	-0.03	6/18/2022 13:17	-0.07
6/18/2022 12:14	12.08	0.08	6/19/2022 13:58	11.59	-0.01	6/18/2022 12:01	11.63	-0.03	6/18/2022 13:18	-0.05
6/18/2022 12:15	12.09	0.16	6/19/2022 13:59	11.60	0.00	6/18/2022 12:02	11.62	-0.06	6/18/2022 13:19	-0.10
6/18/2022 12:16	12.07	0.11	6/19/2022 14:00	11.61	0.05	6/18/2022 12:03	11.62	-0.04	6/18/2022 13:20	0.01
6/18/2022 12:17	12.07	0.11	6/19/2022 14:01	11.58	-0.13	6/18/2022 12:04	11.62	-0.02	6/18/2022 13:21	-0.05
6/18/2022 12:18	12.09	0.17	6/19/2022 14:02	11.59	0.05	6/18/2022 12:05	11.61	-0.01	6/18/2022 13:22	0.00
6/18/2022 12:19	12.08	0.14	6/19/2022 14:03	11.58	-0.02	6/18/2022 12:06	11.60	0.00	6/18/2022 13:23	-0.08
6/18/2022 12:20	12.07	0.13	6/19/2022 14:04	11.58	-0.03	6/18/2022 12:07	11.61	0.00	6/18/2022 13:24	-0.04
6/18/2022 12:21	12.08	0.09	6/19/2022 14:05	11.57	-0.11	6/18/2022 12:08	11.64	-0.03	6/18/2022 13:25	-0.08
6/18/2022 12:22	12.06	0.11	6/19/2022 14:06	11.59	-0.03	6/18/2022 12:09	11.61	0.00	6/18/2022 13:26	-0.07
6/18/2022 12:23	12.07	0.10	6/19/2022 14:07	11.56	0.00	6/18/2022 12:10	11.62	-0.03	6/18/2022 13:27	-0.12
6/18/2022 12:24	12.07	0.15	6/19/2022 14:08	11.58	-0.07	6/18/2022 12:11	11.61	-0.06	6/18/2022 13:28	-0.08
6/18/2022 12:25	12.08	0.11	6/19/2022 14:09	11.59	-0.05	6/18/2022 12:12	11.61	-0.01	6/18/2022 13:29	-0.07
6/18/2022 12:26	12.07	0.09	6/19/2022 14:10	11.60	-0.02	6/18/2022 12:13	11.62	-0.04	6/18/2022 13:30	-0.11
6/18/2022 12:27	12.08	0.00	6/19/2022 14:11	11.55	-0.10	6/18/2022 12:14	11.62	-0.04	6/18/2022 13:31	-0.14
6/18/2022 12:28	12.09	0.07	6/19/2022 14:12	11.59	-0.07	6/18/2022 12:15	11.61	-0.07	6/18/2022 13:32	-0.08
6/18/2022 12:29	12.09	0.10	6/19/2022 14:13	11.58	-0.07	6/18/2022 12:16	11.61	-0.04	6/18/2022 13:33	-0.08
6/18/2022 12:30	12.06	0.15	6/19/2022 14:14	11.55	-0.04	6/18/2022 12:17	11.63	-0.07	6/18/2022 13:34	-0.05
6/18/2022 12:31	12.08	0.14	6/19/2022 14:15	11.59	-0.09	6/18/2022 12:18	11.60	-0.02	6/18/2022 13:35	-0.07
6/18/2022 12:32	12.06	0.04	6/19/2022 14:16	11.58	0.06	6/18/2022 12:19	11.61	-0.04	6/18/2022 13:36	-0.07
6/18/2022 12:33	12.08	0.09	6/19/2022 14:17	11.56	-0.03	6/18/2022 12:20	11.63	-0.01	6/18/2022 13:37	-0.03
6/18/2022 12:34	12.10	0.08	6/19/2022 14:18	11.54	-0.05	6/18/2022 12:21	11.61	-0.01	6/18/2022 13:38	-0.09
6/18/2022 12:35	12.07	0.14	6/19/2022 14:19	11.57	-0.04	6/18/2022 12:22	11.62	-0.04	6/18/2022 13:39	-0.06
6/18/2022 12:36	12.05	0.16	6/19/2022 14:20	11.60	-0.03	6/18/2022 12:23	11.61	-0.01	6/18/2022 13:40	-0.15
6/18/2022 12:37	12.08	0.06	6/19/2022 14:21	11.56	-0.03	6/18/2022 12:24	11.62	-0.03	6/18/2022 13:41	-0.06
6/18/2022 12:38	12.08	0.11	6/19/2022 14:22	11.58	-0.02	6/18/2022 12:25	11.61	-0.01	6/18/2022 13:42	-0.06
6/18/2022 12:39	12.05	0.16	6/19/2022 14:23	11.60	-0.07	6/18/2022 12:26	11.63	0.00	6/18/2022 13:43	-0.05
6/18/2022 12:40	12.08	0.06	6/19/2022 14:24	11.59	-0.02	6/18/2022 12:27	11.63	-0.04	6/18/2022 13:44	-0.06
6/18/2022 12:41	12.09	0.10	6/19/2022 14:25	11.57	0.04	6/18/2022 12:28	11.65	-0.01	6/18/2022 13:45	-0.07
6/18/2022 12:42	12.07	0.08	6/19/2022 14:26	11.58	-0.05	6/18/2022 12:29	11.63	-0.02	6/18/2022 13:46	-0.09
6/18/2022 12:43	12.07	0.11	6/19/2022 14:27	11.57	-0.08	6/18/2022 12:30	11.61	-0.02	6/18/2022 13:47	-0.05
6/18/2022 12:44	12.09	0.15	6/19/2022 14:28	11.59	-0.14	6/18/2022 12:31	11.62	-0.02	6/18/2022 13:48	-0.08
6/18/2022 12:45	12.08	0.19	6/19/2022 14:29	11.58	-0.01	6/18/2022 12:32	11.59	-0.04	6/18/2022 13:49	-0.14
6/18/2022 12:46	12.09	0.05	6/19/2022 14:30	11.59	-0.10	6/18/2022 12:33	11.64	-0.05	6/18/2022 13:50	-0.06
6/18/2022 12:47	12.10	0.13	6/19/2022 14:31	11.58	-0.02	6/18/2022 12:34	11.61	-0.01	6/18/2022 13:51	-0.11
6/18/2022 12:48	12.09	0.13	6/19/2022 14:32	11.59	-0.03	6/18/2022 12:35	11.60	-0.02	6/18/2022 13:52	-0.08
6/18/2022 12:49	12.07	0.09	6/19/2022 14:33	11.58	-0.14	6/18/2022 12:36	11.63	-0.01	6/18/2022 13:53	-0.08
6/18/2022 12:50	12.08	0.11	6/19/2022 14:34	11.58	0.01	6/18/2022 12:37	11.60	0.04	6/18/2022 13:54	-0.09
6/18/2022 12:51	12.07	0.09	6/19/2022 14:35	11.57	-0.06	6/18/2022 12:38	11.63	-0.03	6/18/2022 13:55	-0.06
6/18/2022 12:52	12.09	0.09	6/19/2022 14:36	11.57	-0.05	6/18/2022 12:39	11.58	-0.02	6/18/2022 13:56	-0.07
6/18/2022 12:53	12.08	0.15	6/19/2022 14:37	11.57	-0.02	6/18/2022 12:40	11.63	-0.04	6/18/2022 13:57	-0.07
6/18/2022 12:54	12.10	0.17	6/19/2022 14:38	11.60	-0.03	6/18/2022 12:41	11.59	-0.03	6/18/2022 13:58	-0.10

6/18/2022 12:55	12.11	0.10	6/19/2022 14:39	11.59	-0.01	6/18/2022 12:42	11.62	0.01	6/18/2022 13:59	-0.09
6/18/2022 12:56	12.07	0.10	6/19/2022 14:40	11.59	0.00	6/18/2022 12:43	11.60	-0.02	6/18/2022 14:00	-0.08
6/18/2022 12:57	12.10	0.10	6/19/2022 14:41	11.58	-0.11	6/18/2022 12:44	11.63	-0.06	6/18/2022 14:01	-0.05
6/18/2022 12:58	12.07	0.05	6/19/2022 14:42	11.59	-0.04	6/18/2022 12:45	11.61	-0.02	6/18/2022 14:02	-0.06
6/18/2022 12:59	12.07	0.13	6/19/2022 14:43	11.60	-0.07	6/18/2022 12:46	11.60	-0.02	6/18/2022 14:03	-0.11
6/18/2022 13:00	12.05	0.15	6/19/2022 14:44	11.56	-0.08	6/18/2022 12:47	11.63	-0.06	6/18/2022 14:04	-0.10
6/18/2022 13:01	12.09	0.09	6/19/2022 14:45	11.58	0.08	6/18/2022 12:48	11.60	-0.06	6/18/2022 14:05	-0.06
6/18/2022 13:02	12.07	-0.01	6/19/2022 14:46	11.58	0.00	6/18/2022 12:49	11.61	-0.05	6/18/2022 14:06	-0.09
6/18/2022 13:03	12.07	0.10	6/19/2022 14:47	11.57	0.01	6/18/2022 12:50	11.64	-0.01	6/18/2022 14:07	-0.09
6/18/2022 13:04	12.11	0.10	6/19/2022 14:48	11.57	-0.06	6/18/2022 12:51	11.61	0.00	6/18/2022 14:08	-0.04
6/18/2022 13:05	12.08	0.09	6/19/2022 14:49	11.57	-0.02	6/18/2022 12:52	11.64	-0.03	6/18/2022 14:09	-0.08
6/18/2022 13:06	12.08	0.10	6/19/2022 14:50	11.58	-0.04	6/18/2022 12:53	11.61	-0.01	6/18/2022 14:10	-0.12
6/18/2022 13:07	12.08	0.13	6/19/2022 14:51	11.57	0.03	6/18/2022 12:54	11.64	-0.04	6/18/2022 14:11	-0.07
6/18/2022 13:08	12.07	0.19	6/19/2022 14:52	11.58	0.00	6/18/2022 12:55	11.60	-0.04	6/18/2022 14:12	-0.07
6/18/2022 13:09	12.07	0.10	6/19/2022 14:53	11.57	0.03	6/18/2022 12:56	11.61	-0.02	6/18/2022 14:13	-0.09
6/18/2022 13:10	12.11	0.09	6/19/2022 14:54	11.57	-0.02	6/18/2022 12:57	11.62	-0.04	6/18/2022 14:14	-0.10
6/18/2022 13:11	12.07	0.12	6/19/2022 14:55	11.56	-0.01	6/18/2022 12:58	11.62	-0.03	6/18/2022 14:15	-0.06
6/18/2022 13:12	12.09	0.04	6/19/2022 14:56	11.55	0.02	6/18/2022 12:59	11.61	-0.02	6/18/2022 14:16	-0.12
6/18/2022 13:13	12.08	-0.01	6/19/2022 14:57	11.59	-0.02	6/18/2022 13:00	11.61	-0.04	6/18/2022 14:17	-0.11
6/18/2022 13:14	12.09	0.20	6/19/2022 14:58	11.59	0.00	6/18/2022 13:01	11.63	-0.03	6/18/2022 14:18	-0.04
6/18/2022 13:15	12.08	0.16	6/19/2022 14:59	11.59	-0.03	6/18/2022 13:02	11.60	-0.03	6/18/2022 14:19	-0.09
6/18/2022 13:16	12.05	0.17	6/19/2022 15:00	11.58	-0.05	6/18/2022 13:03	11.65	-0.02	6/18/2022 14:20	-0.07
6/18/2022 13:17	12.10	0.10	6/19/2022 15:01	11.57	0.04	6/18/2022 13:04	11.63	-0.01	6/18/2022 14:21	-0.09
6/18/2022 13:18	12.08	0.15	6/19/2022 15:02	11.57	-0.06	6/18/2022 13:05	11.63	-0.02	6/18/2022 14:22	-0.12
6/18/2022 13:19	12.08	0.18	6/19/2022 15:03	11.59	-0.09	6/18/2022 13:06	11.61	-0.02	6/18/2022 14:23	-0.09
6/18/2022 13:20	12.10	0.03	6/19/2022 15:04	11.57	0.01	6/18/2022 13:07	11.60	-0.05	6/18/2022 14:24	-0.10
6/18/2022 13:21	12.10	0.11	6/19/2022 15:05	11.62	-0.07	6/18/2022 13:08	11.61	-0.01	6/18/2022 14:25	-0.07
6/18/2022 13:22	12.10	0.10	6/19/2022 15:06	11.56	-0.04	6/18/2022 13:09	11.63	-0.05	6/18/2022 14:26	-0.10
6/18/2022 13:23	12.06	0.08	6/19/2022 15:07	11.55	-0.02	6/18/2022 13:10	11.62	0.02	6/18/2022 14:27	-0.12
6/18/2022 13:24	12.07	0.09	6/19/2022 15:08	11.60	-0.07	6/18/2022 13:11	11.62	0.00	6/18/2022 14:28	-0.05
6/18/2022 13:25	12.07	0.15	6/19/2022 15:09	11.58	-0.02	6/18/2022 13:12	11.62	-0.01	6/18/2022 14:29	-0.07
6/18/2022 13:26	12.09	0.06	6/19/2022 15:10	11.58	0.00	6/18/2022 13:13	11.61	-0.02	6/18/2022 14:30	-0.11
6/18/2022 13:27	12.07	0.14	6/19/2022 15:11	11.58	0.00	6/18/2022 13:14	11.65	0.00	6/18/2022 14:31	-0.09
6/18/2022 13:28	12.08	0.12	6/19/2022 15:12	11.58	-0.05	6/18/2022 13:15	11.62	0.01	6/18/2022 14:32	-0.09
6/18/2022 13:29	12.06	0.16	6/19/2022 15:13	11.60	-0.01	6/18/2022 13:16	11.61	0.01	6/18/2022 14:33	-0.06
6/18/2022 13:30	12.08	0.10	6/19/2022 15:14	11.58	-0.01	6/18/2022 13:17	11.63	-0.01	6/18/2022 14:34	-0.09
6/18/2022 13:31	12.07	0.10	6/19/2022 15:15	11.57	0.05	6/18/2022 13:18	11.62	-0.03	6/18/2022 14:35	-0.10
6/18/2022 13:32	12.07	0.04	6/19/2022 15:16	11.60	0.03	6/18/2022 13:19	11.63	-0.05	6/18/2022 14:36	-0.11
6/18/2022 13:33	12.08	0.11	6/19/2022 15:17	11.57	-0.01	6/18/2022 13:20	11.62	-0.03	6/18/2022 14:37	-0.08
6/18/2022 13:34	12.07	0.10	6/19/2022 15:18	11.56	-0.08	6/18/2022 13:21	11.60	0.00	6/18/2022 14:38	-0.11
6/18/2022 13:35	12.07	0.08	6/19/2022 15:19	11.58	-0.01	6/18/2022 13:22	11.62	0.00	6/18/2022 14:39	-0.06
6/18/2022 13:36	12.06	0.09	6/19/2022 15:20	11.58	-0.13	6/18/2022 13:23	11.63	-0.01	6/18/2022 14:40	-0.09
6/18/2022 13:37	12.09	0.18	6/19/2022 15:21	11.56	0.00	6/18/2022 13:24	11.64	-0.06	6/18/2022 14:41	-0.10
6/18/2022 13:38	12.07	0.05	6/19/2022 15:22	11.58	-0.01	6/18/2022 13:25	11.63	-0.05	6/18/2022 14:42	-0.08
6/18/2022 13:39	12.06	0.09	6/19/2022 15:23	11.61	-0.07	6/18/2022 13:26	11.64	-0.05	6/18/2022 14:43	-0.11
6/18/2022 13:40	12.08	0.09	6/19/2022 15:24	11.57	0.02	6/18/2022 13:27	11.61	-0.01	6/18/2022 14:44	-0.10
6/18/2022 13:41	12.08	0.13	6/19/2022 15:25	11.56	-0.07	6/18/2022 13:28	11.62	-0.04	6/18/2022 14:45	-0.09
6/18/2022 13:42	12.07	0.15	6/19/2022 15:26	11.57	-0.01	6/18/2022 13:29	11.62	-0.04	6/18/2022 14:46	-0.10
6/18/2022 13:43	12.07	0.07	6/19/2022 15:27	11.59	-0.06	6/18/2022 13:30	11.63	-0.02	6/18/2022 14:47	-0.07
6/18/2022 13:44	12.09	0.11	6/19/2022 15:28	11.59	-0.09	6/18/2022 13:31	11.62	0.02	6/18/2022 14:48	-0.04
6/18/2022 13:45	12.09	0.18	6/19/2022 15:29	11.58	-0.09	6/18/2022 13:32	11.58	-0.05	6/18/2022 14:49	-0.13
6/18/2022 13:46	12.10	0.10	6/19/2022 15:30	11.56	0.00	6/18/2022 13:33	11.62	-0.04	6/18/2022 14:50	-0.11
6/18/2022 13:47	12.08	0.04	6/19/2022 15:31	11.58	0.07	6/18/2022 13:34	11.63	-0.01	6/18/2022 14:51	-0.06
6/18/2022 13:48	12.08	0.10	6/19/2022 15:32	11.55	-0.04	6/18/2022 13:35	11.64	-0.03	6/18/2022 14:52	-0.06
6/18/2022 13:49	12.10	0.10	6/19/2022 15:33	11.59	-0.06	6/18/2022 13:36	11.60	-0.01	6/18/2022 14:53	-0.04
6/18/2022 13:50	12.10	0.10	6/19/2022 15:34	11.56	-0.03	6/18/2022 13:37	11.62	-0.03	6/18/2022 14:54	-0.15
6/18/2022 13:51	12.09	0.06	6/19/2022 15:35	11.57	-0.11	6/18/2022 13:38	11.62	-0.01	6/18/2022 14:55	-0.06
6/18/2022 13:52	12.08	0.10	6/19/2022 15:36	11.57	-0.01	6/18/2022 13:39	11.62	-0.02	6/18/2022 14:56	-0.06
6/18/2022 13:53	12.09	0.20	6/19/2022 15:37	11.57	0.06	6/18/2022 13:40	11.60	-0.04	6/18/2022 14:57	-0.03
6/18/2022 13:54	12.08	0.04	6/19/2022 15:38	11.58	0.03	6/18/2022 13:41	11.61	-0.01	6/18/2022 14:58	-0.08
6/18/2022 13:55	12.07	0.09	6/19/2022 15:39	11.58	0.02	6/18/2022 13:42	11.60	-0.06	6/18/2022 14:59	-0.11
6/18/2022 13:56	12.09	0.10	6/19/2022 15:40	11.57	-0.04	6/18/2022 13:43	11.61	-0.05	6/18/2022 15:00	-0.05
6/18/2022 13:57	12.08	0.08	6/19/2022 15:41	11.57	-0.06	6/18/2022 13:44	11.61	-0.04	6/18/2022 15:01	-0.08
6/18/2022 13:58	12.07	0.00	6/19/2022 15:42	11.58	-0.09	6/18/2022 13:45	11.63	0.03	6/18/2022 15:02	-0.14
6/18/2022 13:59	12.07	0.11	6/19/2022 15:43	11.57	-0.11	6/18/2022 13:46	11.63	-0.04	6/18/2022 15:03	-0.11
6/18/2022 14:00	12.07	0.08	6/19/2022 15:44	11.57	-0.09	6/18/2022 13:47	11.63	0.00	6/18/2022 15:04	-0.05
6/18/2022 14:01	12.08	0.10	6/19/2022 15:45	11.57	0.01	6/18/2022 13:48	11.61	-0.06	6/18/2022 15:05	-0.07
6/18/2022 14:02	12.10	0.15	6/19/2022 15:46	11.56	0.03	6/18/2022 13:49	11.64	0.00	6/18/2022 15:06	-0.06
6/18/2022 14:03	12.07	0.00	6/19/2022 15:47	11.58	0.01	6/18/2022 13:50	11.63	0.00	6/18/2022 15:07	-0.07
6/18/2022 14:04	12.07	0.04	6/19/2022 15:48	11.58	-0.11	6/18/2022 13:51	11.61	0.00	6/18/2022 15:08	-0.10
6/18/2022 14:05	12.08	0.05	6/19/2022 15:49	11.61	0.00	6/18/2022 13:52	11.62	-0.01	6/18/2022 15:09	-0.11
6/18/2022 14:06	12.06	0.10	6/19/2022 15:50	11.57	-0.04	6/18/2022 13:53	11.59	-0.03	6/18/2022 15:10	-0.08
6/18/2022 14:07	12.06	0.19	6/19/2022 15:51	11.56	0.01	6/18/2022 13:54	11.63	-0.03	6/18/2022 15:11	-0.06
6/18/2022 14:08	12.08	0.14	6/19/2022 15:52	11.58	-0.05	6/18/2022 13:55	11.62	0.00	6/18/2022 15:12	-0.05
6/18/2022 14:09	12.07	0.03	6/19/2022 15:53	11.59	0.00	6/18/2022 13:56	11.62	-0.03	6/18/2022 15:13	-0.12
6/18/2022 14:10	12.07	0.11	6/19/2022 15:54	11.60	-0.03	6/18/2022 13:57	11.60	-0.03	6/18/2022 15:14	-0.05
6/18/2022 14:11	12.12	0.10	6/19/2022 15:55	11.58	0.01	6/18/2022 13:58	11.62	-0.05	6/18/2022 15:15	-0.12
6/18/2022 14:12	12.08	0.11	6/19/2022 15:56	11.58	0.02	6/18/2022 13:59	11.63	-0.04	6/18/2022 15:16	-0.11
6/18/2022 14:13	12.07	0.13	6/19/2022 15:57	11.58	0.04	6/18/2022 14:00	11.61	-0.04	6/18/2022 15:17	-0.09
6/18/2022 14:14	12.08	0.13	6/19/2022 15:58	11.57	-0.11	6/18/2022 14:01	11.60	-0.06	6/18/2022 15:18	-0.09
6/18/2022 14:15	12.08	0.09	6/19/2022 15:59	11.58	0.00	6/18/2022 14:02	11.62	-0.02	6/18/2022 15:19	-0.10
6/18/2022 14:16	12.07	0.11	6/19/2022 16:00	11.58	-0.10	6/18/2022 14:03	11.61	-0.03	6/18/2022 15:20	-0.09
6/18/2022 14:17	12.10	0.08	6/19/2022 16:01	11.56	-0.11	6/18/2022 14:04	11.62	0.02	6/18/2022 15:21	-0.04
6/18/2022 14:18	12.08	0.08	6/19/2022 16:02	11.57	-0.01	6/18/2022 14:05	11.60	-0.07	6/18/2022 15:22	-0.09
6/18/2022 14:19	12.09	0.18	6/19/2022 16:03	11.59	-0.06	6/18/2022 14:06	11.62	-0.04	6/18/2022 15:23	-0.11
6/18/2022 14:20	12.08	0.05	6/19/2022 16:04	11.57	0.00	6/18/2022 14:07	11.62	-0.03	6/18/2022 15:24	-0.13
6/18/2022 14:21	12.08	0.08	6/19/2022 16:05	11.57	0.01	6/18/2022 14:08	11.63	-0.04	6/18/2022 15:25	-0.11
6/18/2022 14:22	12.08	0.09	6/19/2022 16:06	11.59	-0.03	6/18/2022 14:09	11.61	-0.03	6/18/2022 15:26	-0.05

6/18/2022 14:23	12.08	0.08	6/19/2022 16:07	11.58	0.00	6/18/2022 14:10	11.62	-0.02	6/18/2022 15:27	-0.11
6/18/2022 14:24	12.09	0.09	6/19/2022 16:08	11.58	-0.01	6/18/2022 14:11	11.62	-0.09	6/18/2022 15:28	-0.12
6/18/2022 14:25	12.11	0.09	6/19/2022 16:09	11.59	-0.01	6/18/2022 14:12	11.62	-0.04	6/18/2022 15:29	-0.05
6/18/2022 14:26	12.07	0.13	6/19/2022 16:10	11.56	0.01	6/18/2022 14:13	11.62	-0.01	6/18/2022 15:30	-0.13
6/18/2022 14:27	12.07	0.09	6/19/2022 16:11	11.59	-0.08	6/18/2022 14:14	11.61	-0.03	6/18/2022 15:31	-0.08
6/18/2022 14:28	12.09	0.14	6/19/2022 16:12	11.57	0.02	6/18/2022 14:15	11.62	-0.05	6/18/2022 15:32	-0.08
6/18/2022 14:29	12.08	0.13	6/19/2022 16:13	11.58	-0.05	6/18/2022 14:16	11.61	-0.02	6/18/2022 15:33	-0.11
6/18/2022 14:30	12.07	0.15	6/19/2022 16:14	11.60	-0.02	6/18/2022 14:17	11.62	-0.02	6/18/2022 15:34	-0.06
6/18/2022 14:31	12.08	0.02	6/19/2022 16:15	11.54	0.03	6/18/2022 14:18	11.60	-0.04	6/18/2022 15:35	-0.12
6/18/2022 14:32	12.08	0.09	6/19/2022 16:16	11.58	-0.08	6/18/2022 14:19	11.60	0.00	6/18/2022 15:36	-0.09
6/18/2022 14:33	12.05	0.15	6/19/2022 16:17	11.57	-0.04	6/18/2022 14:20	11.61	-0.02	6/18/2022 15:37	-0.09
6/18/2022 14:34	12.06	0.14	6/19/2022 16:18	11.55	-0.09	6/18/2022 14:21	11.61	-0.02	6/18/2022 15:38	-0.11
6/18/2022 14:35	12.09	0.11	6/19/2022 16:19	11.57	-0.03	6/18/2022 14:22	11.60	-0.05	6/18/2022 15:39	-0.02
6/18/2022 14:36	12.07	0.19	6/19/2022 16:20	11.58	0.00	6/18/2022 14:23	11.62	-0.06	6/18/2022 15:40	-0.03
6/18/2022 14:37	12.09	0.10	6/19/2022 16:21	11.58	0.01	6/18/2022 14:24	11.60	-0.02	6/18/2022 15:41	-0.01
6/18/2022 14:38	12.07	0.13	6/19/2022 16:22	11.58	-0.01	6/18/2022 14:25	11.60	-0.01	6/18/2022 15:42	-0.13
6/18/2022 14:39	12.09	0.09	6/19/2022 16:23	11.58	-0.07	6/18/2022 14:26	11.62	-0.02	6/18/2022 15:43	-0.13
6/18/2022 14:40	12.06	0.05	6/19/2022 16:24	11.58	-0.06	6/18/2022 14:27	11.63	0.03	6/18/2022 15:44	-0.08
6/18/2022 14:41	12.08	0.14	6/19/2022 16:25	11.58	-0.03	6/18/2022 14:28	11.64	-0.03	6/18/2022 15:45	-0.03
6/18/2022 14:42	12.06	0.08	6/19/2022 16:26	11.55	0.00	6/18/2022 14:29	11.62	-0.01	6/18/2022 15:46	-0.08
6/18/2022 14:43	12.07	0.06	6/19/2022 16:27	11.57	-0.10	6/18/2022 14:30	11.61	-0.03	6/18/2022 15:47	-0.08
6/18/2022 14:44	12.09	0.07	6/19/2022 16:28	11.58	0.00	6/18/2022 14:31	11.63	0.00	6/18/2022 15:48	-0.07
6/18/2022 14:45	12.08	0.10	6/19/2022 16:29	11.56	-0.06	6/18/2022 14:32	11.62	-0.04	6/18/2022 15:49	-0.08
6/18/2022 14:46	12.06	0.08	6/19/2022 16:30	11.61	0.08	6/18/2022 14:33	11.60	-0.02	6/18/2022 15:50	-0.11
6/18/2022 14:47	12.08	0.13	6/19/2022 16:31	11.58	-0.04	6/18/2022 14:34	11.63	-0.04	6/18/2022 15:51	-0.13
6/18/2022 14:48	12.08	0.10	6/19/2022 16:32	11.56	0.01	6/18/2022 14:35	11.59	-0.02	6/18/2022 15:52	-0.04
6/18/2022 14:49	12.09	0.00	6/19/2022 16:33	11.57	-0.02	6/18/2022 14:36	11.62	0.02	6/18/2022 15:53	-0.05
6/18/2022 14:50	12.06	0.08	6/19/2022 16:34	11.58	-0.05	6/18/2022 14:37	11.61	-0.03	6/18/2022 15:54	0.00
6/18/2022 14:51	12.07	0.05	6/19/2022 16:35	11.59	0.01	6/18/2022 14:38	11.62	-0.03	6/18/2022 15:55	-0.10
6/18/2022 14:52	12.09	0.10	6/19/2022 16:36	11.59	-0.09	6/18/2022 14:39	11.61	-0.05	6/18/2022 15:56	-0.08
6/18/2022 14:53	12.05	0.14	6/19/2022 16:37	11.60	-0.05	6/18/2022 14:40	11.63	-0.05	6/18/2022 15:57	-0.09
6/18/2022 14:54	12.07	0.14	6/19/2022 16:38	11.57	-0.02	6/18/2022 14:41	11.61	0.03	6/18/2022 15:58	-0.11
6/18/2022 14:55	12.11	0.06	6/19/2022 16:39	11.58	-0.10	6/18/2022 14:42	11.61	-0.01	6/18/2022 15:59	-0.07
6/18/2022 14:56	12.08	0.07	6/19/2022 16:40	11.57	-0.04	6/18/2022 14:43	11.62	-0.02	6/18/2022 16:00	-0.12
6/18/2022 14:57	12.08	0.12	6/19/2022 16:41	11.56	-0.01	6/18/2022 14:44	11.60	-0.02	6/18/2022 16:01	-0.10
6/18/2022 14:58	12.05	0.13	6/19/2022 16:42	11.56	-0.08	6/18/2022 14:45	11.61	-0.06	6/18/2022 16:02	-0.05
6/18/2022 14:59	12.09	0.01	6/19/2022 16:43	11.57	-0.02	6/18/2022 14:46	11.60	0.00	6/18/2022 16:03	-0.07
6/18/2022 15:00	12.06	0.09	6/19/2022 16:44	11.57	-0.02	6/18/2022 14:47	11.64	-0.03	6/18/2022 16:04	-0.08
6/18/2022 15:01	12.08	0.06	6/19/2022 16:45	11.58	-0.06	6/18/2022 14:48	11.63	-0.02	6/18/2022 16:05	-0.09
6/18/2022 15:02	12.04	0.10	6/19/2022 16:46	11.60	0.00	6/18/2022 14:49	11.63	-0.04	6/18/2022 16:06	-0.10
6/18/2022 15:03	12.07	0.13	6/19/2022 16:47	11.60	-0.04	6/18/2022 14:50	11.61	-0.05	6/18/2022 16:07	-0.08
6/18/2022 15:04	12.08	0.03	6/19/2022 16:48	11.57	-0.12	6/18/2022 14:51	11.61	-0.01	6/18/2022 16:08	-0.10
6/18/2022 15:05	12.09	0.06	6/19/2022 16:49	11.58	-0.06	6/18/2022 14:52	11.60	-0.02	6/18/2022 16:09	-0.06
6/18/2022 15:06	12.07	0.04	6/19/2022 16:50	11.56	-0.04	6/18/2022 14:53	11.60	-0.03	6/18/2022 16:10	-0.10
6/18/2022 15:07	12.06	0.06	6/19/2022 16:51	11.59	-0.04	6/18/2022 14:54	11.62	-0.04	6/18/2022 16:11	-0.08
6/18/2022 15:08	12.06	0.15	6/19/2022 16:52	11.58	-0.01	6/18/2022 14:55	11.61	0.00	6/18/2022 16:12	-0.05
6/18/2022 15:09	12.08	0.14	6/19/2022 16:53	11.58	-0.10	6/18/2022 14:56	11.63	0.00	6/18/2022 16:13	-0.10
6/18/2022 15:10	12.08	0.01	6/19/2022 16:54	11.57	-0.08	6/18/2022 14:57	11.62	0.03	6/18/2022 16:14	-0.06
6/18/2022 15:11	12.10	0.09	6/19/2022 16:55	11.58	0.03	6/18/2022 14:58	11.61	-0.06	6/18/2022 16:15	-0.14
6/18/2022 15:12	12.08	0.15	6/19/2022 16:56	11.58	0.06	6/18/2022 14:59	11.64	0.01	6/18/2022 16:16	-0.08
6/18/2022 15:13	12.07	0.07	6/19/2022 16:57	11.56	-0.09	6/18/2022 15:00	11.62	-0.04	6/18/2022 16:17	-0.12
6/18/2022 15:14	12.08	0.14	6/19/2022 16:58	11.58	0.00	6/18/2022 15:01	11.61	-0.04	6/18/2022 16:18	-0.12
6/18/2022 15:15	12.08	0.01	6/19/2022 16:59	11.58	0.03	6/18/2022 15:02	11.62	-0.01	6/18/2022 16:19	-0.13
6/18/2022 15:16	12.06	0.15	6/19/2022 17:00	11.58	-0.06	6/18/2022 15:03	11.61	-0.03	6/18/2022 16:20	-0.09
6/18/2022 15:17	12.08	0.25	6/19/2022 17:01	11.58	0.05	6/18/2022 15:04	11.62	-0.05	6/18/2022 16:21	-0.09
6/18/2022 15:18	12.10	0.06	6/19/2022 17:02	11.58	-0.05	6/18/2022 15:05	11.62	-0.04	6/18/2022 16:22	-0.14
6/18/2022 15:19	12.08	0.03	6/19/2022 17:03	11.57	-0.01	6/18/2022 15:06	11.62	-0.02	6/18/2022 16:23	-0.11
6/18/2022 15:20	12.08	0.08	6/19/2022 17:04	11.58	-0.05	6/18/2022 15:07	11.61	-0.01	6/18/2022 16:24	-0.11
6/18/2022 15:21	12.08	0.18	6/19/2022 17:05	11.58	0.06	6/18/2022 15:08	11.64	-0.03	6/18/2022 16:25	-0.08
6/18/2022 15:22	12.07	0.06	6/19/2022 17:06	11.59	0.02	6/18/2022 15:09	11.62	-0.06	6/18/2022 16:26	-0.10
6/18/2022 15:23	12.08	0.09	6/19/2022 17:07	11.58	0.10	6/18/2022 15:10	11.63	-0.03	6/18/2022 16:27	-0.03
6/18/2022 15:24	12.07	0.10	6/19/2022 17:08	11.57	-0.02	6/18/2022 15:11	11.61	-0.03	6/18/2022 16:28	-0.14
6/18/2022 15:25	12.09	0.14	6/19/2022 17:09	11.57	-0.02	6/18/2022 15:12	11.58	-0.03	6/18/2022 16:29	-0.08
6/18/2022 15:26	12.08	0.08	6/19/2022 17:10	11.57	0.00	6/18/2022 15:13	11.60	0.01	6/18/2022 16:30	-0.12
6/18/2022 15:27	12.10	0.13	6/19/2022 17:11	11.57	0.02	6/18/2022 15:14	11.61	-0.02	6/18/2022 16:31	-0.03
6/18/2022 15:28	12.09	0.04	6/19/2022 17:12	11.58	-0.07	6/18/2022 15:15	11.60	0.00	6/18/2022 16:32	-0.06
6/18/2022 15:29	12.08	0.14	6/19/2022 17:13	11.58	0.00	6/18/2022 15:16	11.59	-0.03	6/18/2022 16:33	-0.13
6/18/2022 15:30	12.07	0.07	6/19/2022 17:14	11.57	0.04	6/18/2022 15:17	11.63	-0.05	6/18/2022 16:34	-0.11
6/18/2022 15:31	12.08	0.04	6/19/2022 17:15	11.56	-0.06	6/18/2022 15:18	11.61	-0.01	6/18/2022 16:35	-0.10
6/18/2022 15:32	12.08	0.04	6/19/2022 17:16	11.59	-0.09	6/18/2022 15:19	11.63	0.00	6/18/2022 16:36	-0.09
6/18/2022 15:33	12.06	0.12	6/19/2022 17:17	11.57	0.02	6/18/2022 15:20	11.61	-0.03	6/18/2022 16:37	-0.15
6/18/2022 15:34	12.07	0.04	6/19/2022 17:18	11.59	0.06	6/18/2022 15:21	11.62	-0.02	6/18/2022 16:38	-0.12
6/18/2022 15:35	12.07	0.19	6/19/2022 17:19	11.60	0.01	6/18/2022 15:22	11.64	-0.07	6/18/2022 16:39	-0.11
6/18/2022 15:36	12.10	0.10	6/19/2022 17:20	11.58	0.00	6/18/2022 15:23	11.63	-0.04	6/18/2022 16:40	-0.13
6/18/2022 15:37	12.09	0.11	6/19/2022 17:21	11.58	-0.11	6/18/2022 15:24	11.63	-0.02	6/18/2022 16:41	-0.15
6/18/2022 15:38	12.08	0.15	6/19/2022 17:22	11.59	-0.02	6/18/2022 15:25	11.62	-0.03	6/18/2022 16:42	-0.08
6/18/2022 15:39	12.06	0.07	6/19/2022 17:23	11.57	-0.04	6/18/2022 15:26	11.61	-0.01	6/18/2022 16:43	-0.05
6/18/2022 15:40	12.08	0.04	6/19/2022 17:24	11.59	-0.09	6/18/2022 15:27	11.63	-0.05	6/18/2022 16:44	-0.08
6/18/2022 15:41	12.08	0.08	6/19/2022 17:25	11.57	0.06	6/18/2022 15:28	11.62	0.00	6/18/2022 16:45	-0.11
6/18/2022 15:42	12.09	0.13	6/19/2022 17:26	11.58	-0.10	6/18/2022 15:29	11.63	-0.03	6/18/2022 16:46	-0.02
6/18/2022 15:43	12.06	0.03	6/19/2022 17:27	11.60	-0.10	6/18/2022 15:30	11.62	0.02	6/18/2022 16:47	-0.10
6/18/2022 15:44	12.07	0.14	6/19/2022 17:28	11.57	-0.02	6/18/2022 15:31	11.62	-0.01	6/18/2022 16:48	-0.10
6/18/2022 15:45	12.06	0.09	6/19/2022 17:29	11.59	0.02	6/18/2022 15:32	11.62	-0.06	6/18/2022 16:49	-0.10
6/18/2022 15:46	12.07	0.04	6/19/2022 17:30	11.58	-0.01	6/18/2022 15:33	11.62	-0.02	6/18/2022 16:50	-0.09
6/18/2022 15:47	12.07	0.15	6/19/2022 17:31	11.57	0.05	6/18/2022 15:34	11.60	-0.04	6/18/2022 16:51	-0.12
6/18/2022 15:48	12.08	0.10	6/19/2022 17:32	11.59	0.03	6/18/2022 15:35	11.60	-0.01	6/18/2022 16:52	-0.06
6/18/2022 15:49	12.07	0.18	6/19/2022 17:33	11.57	-0.03	6/18/2022 15:36	11.62	-0.02	6/18/2022 16:53	-0.03
6/18/2022 15:50	12.07	0.04	6/19/2022 17:34	11.57	0.01	6/18/2022 15:37	11.63	-0.03	6/18/2022 16:54	-0.10

6/18/2022 15:51	12.08	0.10	6/19/2022 17:35	11.57	0.02	6/18/2022 15:38	11.63	-0.03	6/18/2022 16:55	-0.08
6/18/2022 15:52	12.05	0.08	6/19/2022 17:36	11.56	0.02	6/18/2022 15:39	11.60	-0.01	6/18/2022 16:56	-0.05
6/18/2022 15:53	12.09	0.08	6/19/2022 17:37	11.59	-0.01	6/18/2022 15:40	11.60	0.01	6/18/2022 16:57	-0.15
6/18/2022 15:54	12.08	0.10	6/19/2022 17:38	11.58	-0.11	6/18/2022 15:41	11.64	-0.02	6/18/2022 16:58	-0.10
6/18/2022 15:55	12.09	0.08	6/19/2022 17:39	11.61	-0.08	6/18/2022 15:42	11.63	-0.04	6/18/2022 16:59	-0.08
6/18/2022 15:56	12.08	0.10	6/19/2022 17:40	11.58	0.01	6/18/2022 15:43	11.60	-0.05	6/18/2022 17:00	-0.10
6/18/2022 15:57	12.07	0.06	6/19/2022 17:41	11.57	-0.09	6/18/2022 15:44	11.61	-0.03	6/18/2022 17:01	-0.08
6/18/2022 15:58	12.08	0.08	6/19/2022 17:42	11.56	-0.02	6/18/2022 15:45	11.62	-0.03	6/18/2022 17:02	-0.11
6/18/2022 15:59	12.07	0.09	6/19/2022 17:43	11.58	0.03	6/18/2022 15:46	11.62	0.00	6/18/2022 17:03	-0.12
6/18/2022 16:00	12.06	0.02	6/19/2022 17:44	11.57	-0.02	6/18/2022 15:47	11.63	-0.02	6/18/2022 17:04	-0.07
6/18/2022 16:01	12.09	0.09	6/19/2022 17:45	11.57	-0.03	6/18/2022 15:48	11.61	-0.03	6/18/2022 17:05	-0.14
6/18/2022 16:02	12.11	0.08	6/19/2022 17:46	11.57	0.02	6/18/2022 15:49	11.63	-0.02	6/18/2022 17:06	-0.15
6/18/2022 16:03	12.07	0.08	6/19/2022 17:47	11.57	-0.03	6/18/2022 15:50	11.60	-0.08	6/18/2022 17:07	-0.10
6/18/2022 16:04	12.08	0.06	6/19/2022 17:48	11.58	0.03	6/18/2022 15:51	11.63	0.01	6/18/2022 17:08	-0.07
6/18/2022 16:05	12.07	0.12	6/19/2022 17:49	11.56	-0.04	6/18/2022 15:52	11.62	0.01	6/18/2022 17:09	-0.06
6/18/2022 16:06	12.09	0.18	6/19/2022 17:50	11.56	-0.09	6/18/2022 15:53	11.62	-0.06	6/18/2022 17:10	-0.06
6/18/2022 16:07	12.07	0.09	6/19/2022 17:51	11.58	-0.03	6/18/2022 15:54	11.64	-0.03	6/18/2022 17:11	-0.07
6/18/2022 16:08	12.08	0.08	6/19/2022 17:52	11.59	0.05	6/18/2022 15:55	11.61	-0.01	6/18/2022 17:12	-0.08
6/18/2022 16:09	12.06	0.11	6/19/2022 17:53	11.57	-0.10	6/18/2022 15:56	11.60	0.00	6/18/2022 17:13	-0.08
6/18/2022 16:10	12.10	0.16	6/19/2022 17:54	11.57	-0.02	6/18/2022 15:57	11.62	-0.04	6/18/2022 17:14	-0.11
6/18/2022 16:11	12.08	0.06	6/19/2022 17:55	11.58	0.03	6/18/2022 15:58	11.63	-0.05	6/18/2022 17:15	-0.11
6/18/2022 16:12	12.09	0.19	6/19/2022 17:56	11.57	-0.08	6/18/2022 15:59	11.61	-0.03	6/18/2022 17:16	-0.09
6/18/2022 16:13	12.07	0.10	6/19/2022 17:57	11.59	0.01	6/18/2022 16:00	11.64	-0.04	6/18/2022 17:17	-0.04
6/18/2022 16:14	12.06	0.04	6/19/2022 17:58	11.57	-0.10	6/18/2022 16:01	11.60	-0.04	6/18/2022 17:18	-0.09
6/18/2022 16:15	12.08	0.10	6/19/2022 17:59	11.57	-0.01	6/18/2022 16:02	11.60	-0.03	6/18/2022 17:19	-0.06
6/18/2022 16:16	12.07	0.06	6/19/2022 18:00	11.60	-0.06	6/18/2022 16:03	11.62	-0.02	6/18/2022 17:20	-0.09
6/18/2022 16:17	12.08	0.06	6/19/2022 18:01	11.58	0.00	6/18/2022 16:04	11.60	-0.03	6/18/2022 17:21	-0.06
6/18/2022 16:18	12.09	0.18	6/19/2022 18:02	11.57	0.00	6/18/2022 16:05	11.64	0.02	6/18/2022 17:22	-0.09
6/18/2022 16:19	12.08	0.14	6/19/2022 18:03	11.58	-0.06	6/18/2022 16:06	11.60	-0.05	6/18/2022 17:23	-0.10
6/18/2022 16:20	12.11	0.06	6/19/2022 18:04	11.57	-0.03	6/18/2022 16:07	11.62	-0.02	6/18/2022 17:24	-0.09
6/18/2022 16:21	12.09	0.14	6/19/2022 18:05	11.56	-0.04	6/18/2022 16:08	11.61	-0.01	6/18/2022 17:25	-0.04
6/18/2022 16:22	12.08	0.09	6/19/2022 18:06	11.56	0.01	6/18/2022 16:09	11.64	-0.04	6/18/2022 17:26	-0.10
6/18/2022 16:23	12.08	0.10	6/19/2022 18:07	11.55	-0.05	6/18/2022 16:10	11.61	-0.04	6/18/2022 17:27	-0.11
6/18/2022 16:24	12.09	0.12	6/19/2022 18:08	11.58	0.03	6/18/2022 16:11	11.60	0.00	6/18/2022 17:28	-0.15
6/18/2022 16:25	12.10	0.14	6/19/2022 18:09	11.56	0.01	6/18/2022 16:12	11.60	-0.02	6/18/2022 17:29	-0.08
6/18/2022 16:26	12.06	0.07	6/19/2022 18:10	11.59	0.02	6/18/2022 16:13	11.63	-0.01	6/18/2022 17:30	-0.11
6/18/2022 16:27	12.07	0.09	6/19/2022 18:11	11.59	0.07	6/18/2022 16:14	11.64	-0.06	6/18/2022 17:31	-0.08
6/18/2022 16:28	12.07	0.05	6/19/2022 18:12	11.57	0.01	6/18/2022 16:15	11.60	-0.03	6/18/2022 17:32	-0.13
6/18/2022 16:29	12.08	0.09	6/19/2022 18:13	11.56	-0.01	6/18/2022 16:16	11.61	-0.03	6/18/2022 17:33	-0.10
6/18/2022 16:30	12.06	0.10	6/19/2022 18:14	11.58	-0.03	6/18/2022 16:17	11.61	-0.03	6/18/2022 17:34	-0.05
6/18/2022 16:31	12.09	0.18	6/19/2022 18:15	11.58	-0.01	6/18/2022 16:18	11.62	-0.03	6/18/2022 17:35	-0.13
6/18/2022 16:32	12.10	0.14	6/19/2022 18:16	11.59	-0.08	6/18/2022 16:19	11.62	-0.03	6/18/2022 17:36	-0.10
6/18/2022 16:33	12.07	0.13	6/19/2022 18:17	11.58	-0.05	6/18/2022 16:20	11.62	-0.01	6/18/2022 17:37	-0.10
6/18/2022 16:34	12.07	0.12	6/19/2022 18:18	11.54	0.00	6/18/2022 16:21	11.61	-0.01	6/18/2022 17:38	-0.10
6/18/2022 16:35	12.04	0.17	6/19/2022 18:19	11.56	-0.03	6/18/2022 16:22	11.62	-0.04	6/18/2022 17:39	-0.12
6/18/2022 16:36	12.08	0.19	6/19/2022 18:20	11.57	0.03	6/18/2022 16:23	11.62	-0.04	6/18/2022 17:40	-0.11
6/18/2022 16:37	12.06	0.14	6/19/2022 18:21	11.59	-0.06	6/18/2022 16:24	11.61	-0.01	6/18/2022 17:41	-0.12
6/18/2022 16:38	12.08	0.12	6/19/2022 18:22	11.58	-0.02	6/18/2022 16:25	11.62	-0.07	6/18/2022 17:42	-0.09
6/18/2022 16:39	12.09	0.08	6/19/2022 18:23	11.59	-0.03	6/18/2022 16:26	11.63	-0.01	6/18/2022 17:43	-0.12
6/18/2022 16:40	12.07	0.08	6/19/2022 18:24	11.56	-0.01	6/18/2022 16:27	11.60	-0.02	6/18/2022 17:44	-0.08
6/18/2022 16:41	12.09	0.13	6/19/2022 18:25	11.58	-0.09	6/18/2022 16:28	11.60	-0.04	6/18/2022 17:45	-0.09
6/18/2022 16:42	12.10	0.13	6/19/2022 18:26	11.57	-0.09	6/18/2022 16:29	11.61	-0.03	6/18/2022 17:46	-0.05
6/18/2022 16:43	12.08	0.13	6/19/2022 18:27	11.58	-0.10	6/18/2022 16:30	11.64	-0.06	6/18/2022 17:47	-0.09
6/18/2022 16:44	12.08	0.05	6/19/2022 18:28	11.58	-0.06	6/18/2022 16:31	11.61	-0.02	6/18/2022 17:48	-0.08
6/18/2022 16:45	12.08	-0.01	6/19/2022 18:29	11.57	0.02	6/18/2022 16:32	11.61	-0.02	6/18/2022 17:49	-0.07
6/18/2022 16:46	12.05	0.06	6/19/2022 18:30	11.55	0.06	6/18/2022 16:33	11.62	-0.06	6/18/2022 17:50	-0.13
6/18/2022 16:47	12.07	0.13	6/19/2022 18:31	11.58	0.01	6/18/2022 16:34	11.62	-0.02	6/18/2022 17:51	-0.02
6/18/2022 16:48	12.08	0.10	6/19/2022 18:32	11.56	-0.06	6/18/2022 16:35	11.61	-0.05	6/18/2022 17:52	-0.06
6/18/2022 16:49	12.06	0.10	6/19/2022 18:33	11.55	0.01	6/18/2022 16:36	11.61	-0.06	6/18/2022 17:53	-0.10
6/18/2022 16:50	12.07	0.09	6/19/2022 18:34	11.57	-0.03	6/18/2022 16:37	11.62	-0.01	6/18/2022 17:54	-0.08
6/18/2022 16:51	12.09	0.12	6/19/2022 18:35	11.56	0.00	6/18/2022 16:38	11.62	0.00	6/18/2022 17:55	-0.10
6/18/2022 16:52	12.08	0.09	6/19/2022 18:36	11.57	-0.09	6/18/2022 16:39	11.63	-0.05	6/18/2022 17:56	-0.08
6/18/2022 16:53	12.09	0.06	6/19/2022 18:37	11.59	-0.08	6/18/2022 16:40	11.62	0.00	6/18/2022 17:57	-0.11
6/18/2022 16:54	12.09	0.18	6/19/2022 18:38	11.55	-0.01	6/18/2022 16:41	11.62	-0.01	6/18/2022 17:58	-0.12
6/18/2022 16:55	12.09	0.13	6/19/2022 18:39	11.57	-0.06	6/18/2022 16:42	11.61	-0.04	6/18/2022 17:59	-0.08
6/18/2022 16:56	12.10	0.03	6/19/2022 18:40	11.58	-0.06	6/18/2022 16:43	11.63	-0.05	6/18/2022 18:00	-0.07
6/18/2022 16:57	12.07	0.10	6/19/2022 18:41	11.58	-0.02	6/18/2022 16:44	11.61	-0.01	6/18/2022 18:01	-0.11
6/18/2022 16:58	12.09	0.14	6/19/2022 18:42	11.57	0.08	6/18/2022 16:45	11.61	-0.02	6/18/2022 18:02	-0.08
6/18/2022 16:59	12.07	0.05	6/19/2022 18:43	11.56	-0.04	6/18/2022 16:46	11.64	-0.01	6/18/2022 18:03	-0.10
6/18/2022 17:00	12.09	0.09	6/19/2022 18:44	11.59	-0.04	6/18/2022 16:47	11.62	-0.03	6/18/2022 18:04	-0.06
6/18/2022 17:01	12.07	0.12	6/19/2022 18:45	11.56	-0.13	6/18/2022 16:48	11.63	-0.02	6/18/2022 18:05	-0.07
6/18/2022 17:02	12.08	0.07	6/19/2022 18:46	11.57	0.07	6/18/2022 16:49	11.61	-0.01	6/18/2022 18:06	-0.13
6/18/2022 17:03	12.08	0.15	6/19/2022 18:47	11.57	0.12	6/18/2022 16:50	11.61	-0.06	6/18/2022 18:07	-0.13
6/18/2022 17:04	12.06	0.15	6/19/2022 18:48	11.58	0.02	6/18/2022 16:51	11.60	-0.05	6/18/2022 18:08	-0.12
6/18/2022 17:05	12.09	0.24	6/19/2022 18:49	11.56	-0.04	6/18/2022 16:52	11.63	-0.04	6/18/2022 18:09	-0.07
6/18/2022 17:06	12.05	0.04	6/19/2022 18:50	11.59	-0.08	6/18/2022 16:53	11.65	-0.07	6/18/2022 18:10	-0.08
6/18/2022 17:07	12.08	0.11	6/19/2022 18:51	11.58	-0.05	6/18/2022 16:54	11.63	-0.03	6/18/2022 18:11	-0.13
6/18/2022 17:08	12.06	0.11	6/19/2022 18:52	11.56	0.02	6/18/2022 16:55	11.63	-0.03	6/18/2022 18:12	-0.11
6/18/2022 17:09	12.08	0.09	6/19/2022 18:53	11.57	-0.04	6/18/2022 16:56	11.63	-0.02	6/18/2022 18:13	-0.03
6/18/2022 17:10	12.08	0.10	6/19/2022 18:54	11.59	-0.09	6/18/2022 16:57	11.60	-0.03	6/18/2022 18:14	-0.09
6/18/2022 17:11	12.09	0.10	6/19/2022 18:55	11.58	-0.06	6/18/2022 16:58	11.62	-0.01	6/18/2022 18:15	-0.04
6/18/2022 17:12	12.09	0.10	6/19/2022 18:56	11.56	-0.02	6/18/2022 16:59	11.63	-0.03	6/18/2022 18:16	-0.13
6/18/2022 17:13	12.08	-0.01	6/19/2022 18:57	11.56	-0.02	6/18/2022 17:00	11.64	-0.01	6/18/2022 18:17	-0.16
6/18/2022 17:14	12.08	0.14	6/19/2022 18:58	11.57	-0.02	6/18/2022 17:01	11.61	-0.05	6/18/2022 18:18	-0.08
6/18/2022 17:15	12.12	0.02	6/19/2022 18:59	11.59	0.03	6/18/2022 17:02	11.62	-0.03	6/18/2022 18:19	-0.11
6/18/2022 17:16	12.08	0.09	6/19/2022 19:00	11.56	-0.09	6/18/2022 17:03	11.63	-0.06	6/18/2022 18:20	-0.11
6/18/2022 17:17	12.07	0.10	6/19/2022 19:01	11.61	0.02	6/18/2022 17:04	11.60	0.00	6/18/2022 18:21	-0.08
6/18/2022 17:18	12.08	0.10	6/19/2022 19:02	11.58	-0.06	6/18/2022 17:05	11.63	-0.01	6/18/2022 18:22	-0.09

6/18/2022 17:19	12.05	0.19	6/19/2022 19:03	11.58	-0.08	6/18/2022 17:06	11.62	-0.01	6/18/2022 18:23	-0.12
6/18/2022 17:20	12.07	0.05	6/19/2022 19:04	11.56	-0.02	6/18/2022 17:07	11.63	-0.04	6/18/2022 18:24	-0.08
6/18/2022 17:21	12.09	0.12	6/19/2022 19:05	11.58	-0.04	6/18/2022 17:08	11.62	-0.03	6/18/2022 18:25	-0.06
6/18/2022 17:22	12.07	0.09	6/19/2022 19:06	11.55	0.01	6/18/2022 17:09	11.59	-0.04	6/18/2022 18:26	-0.06
6/18/2022 17:23	12.09	0.10	6/19/2022 19:07	11.58	-0.16	6/18/2022 17:10	11.63	0.00	6/18/2022 18:27	-0.10
6/18/2022 17:24	12.06	0.04	6/19/2022 19:08	11.58	0.00	6/18/2022 17:11	11.61	0.02	6/18/2022 18:28	-0.08
6/18/2022 17:25	12.06	0.23	6/19/2022 19:09	11.58	0.05	6/18/2022 17:12	11.63	-0.05	6/18/2022 18:29	-0.08
6/18/2022 17:26	12.08	0.10	6/19/2022 19:10	11.58	-0.02	6/18/2022 17:13	11.61	-0.04	6/18/2022 18:30	-0.12
6/18/2022 17:27	12.08	0.09	6/19/2022 19:11	11.59	-0.03	6/18/2022 17:14	11.62	-0.01	6/18/2022 18:31	-0.02
6/18/2022 17:28	12.06	0.15	6/19/2022 19:12	11.56	-0.04	6/18/2022 17:15	11.59	-0.01	6/18/2022 18:32	-0.03
6/18/2022 17:29	12.06	0.11	6/19/2022 19:13	11.59	-0.03	6/18/2022 17:16	11.60	-0.05	6/18/2022 18:33	-0.11
6/18/2022 17:30	12.09	0.10	6/19/2022 19:14	11.58	-0.06	6/18/2022 17:17	11.61	0.00	6/18/2022 18:34	-0.05
6/18/2022 17:31	12.08	0.05	6/19/2022 19:15	11.57	-0.08	6/18/2022 17:18	11.63	0.02	6/18/2022 18:35	-0.13
6/18/2022 17:32	12.08	0.07	6/19/2022 19:16	11.58	0.02	6/18/2022 17:19	11.61	-0.03	6/18/2022 18:36	-0.09
6/18/2022 17:33	12.06	0.03	6/19/2022 19:17	11.56	-0.03	6/18/2022 17:20	11.60	-0.04	6/18/2022 18:37	-0.05
6/18/2022 17:34	12.08	0.02	6/19/2022 19:18	11.57	-0.01	6/18/2022 17:21	11.62	-0.03	6/18/2022 18:38	-0.10
6/18/2022 17:35	12.08	0.05	6/19/2022 19:19	11.61	0.03	6/18/2022 17:22	11.60	-0.04	6/18/2022 18:39	-0.13
6/18/2022 17:36	12.08	0.01	6/19/2022 19:20	11.59	-0.13	6/18/2022 17:23	11.63	-0.04	6/18/2022 18:40	-0.09
6/18/2022 17:37	12.08	0.03	6/19/2022 19:21	11.56	-0.03	6/18/2022 17:24	11.63	-0.05	6/18/2022 18:41	-0.05
6/18/2022 17:38	12.08	0.14	6/19/2022 19:22	11.59	-0.08	6/18/2022 17:25	11.63	-0.01	6/18/2022 18:42	-0.10
6/18/2022 17:39	12.06	0.12	6/19/2022 19:23	11.53	-0.05	6/18/2022 17:26	11.60	-0.03	6/18/2022 18:43	-0.10
6/18/2022 17:40	12.09	0.10	6/19/2022 19:24	11.56	-0.02	6/18/2022 17:27	11.62	-0.05	6/18/2022 18:44	-0.05
6/18/2022 17:41	12.10	0.16	6/19/2022 19:25	11.58	-0.02	6/18/2022 17:28	11.63	-0.02	6/18/2022 18:45	-0.11
6/18/2022 17:42	12.06	0.11	6/19/2022 19:26	11.58	0.01	6/18/2022 17:29	11.63	-0.06	6/18/2022 18:46	-0.11
6/18/2022 17:43	12.07	0.13	6/19/2022 19:27	11.59	-0.05	6/18/2022 17:30	11.61	0.00	6/18/2022 18:47	-0.09
6/18/2022 17:44	12.09	0.08	6/19/2022 19:28	11.56	-0.07	6/18/2022 17:31	11.63	0.00	6/18/2022 18:48	-0.09
6/18/2022 17:45	12.06	0.09	6/19/2022 19:29	11.59	-0.10	6/18/2022 17:32	11.62	-0.01	6/18/2022 18:49	-0.10
6/18/2022 17:46	12.08	0.12	6/19/2022 19:30	11.58	-0.05	6/18/2022 17:33	11.60	-0.03	6/18/2022 18:50	-0.10
6/18/2022 17:47	12.07	0.10	6/19/2022 19:31	11.59	-0.05	6/18/2022 17:34	11.61	-0.04	6/18/2022 18:51	-0.10
6/18/2022 17:48	12.08	0.10	6/19/2022 19:32	11.60	0.01	6/18/2022 17:35	11.61	0.01	6/18/2022 18:52	-0.09
6/18/2022 17:49	12.09	0.10	6/19/2022 19:33	11.53	0.00	6/18/2022 17:36	11.60	0.00	6/18/2022 18:53	-0.08
6/18/2022 17:50	12.07	0.19	6/19/2022 19:34	11.57	-0.03	6/18/2022 17:37	11.61	-0.03	6/18/2022 18:54	-0.08
6/18/2022 17:51	12.08	0.19	6/19/2022 19:35	11.57	-0.04	6/18/2022 17:38	11.61	-0.04	6/18/2022 18:55	-0.07
6/18/2022 17:52	12.04	0.09	6/19/2022 19:36	11.57	0.00	6/18/2022 17:39	11.60	-0.02	6/18/2022 18:56	-0.07
6/18/2022 17:53	12.09	0.10	6/19/2022 19:37	11.58	0.05	6/18/2022 17:40	11.61	-0.01	6/18/2022 18:57	-0.09
6/18/2022 17:54	12.07	0.14	6/19/2022 19:38	11.59	0.00	6/18/2022 17:41	11.63	-0.04	6/18/2022 18:58	-0.08
6/18/2022 17:55	12.07	0.06	6/19/2022 19:39	11.56	-0.08	6/18/2022 17:42	11.62	-0.08	6/18/2022 18:59	-0.12
6/18/2022 17:56	12.08	0.14	6/19/2022 19:40	11.58	0.00	6/18/2022 17:43	11.63	-0.01	6/18/2022 19:00	-0.12
6/18/2022 17:57	12.09	0.05	6/19/2022 19:41	11.59	-0.05	6/18/2022 17:44	11.62	-0.03	6/18/2022 19:01	-0.11
6/18/2022 17:58	12.06	0.15	6/19/2022 19:42	11.55	0.00	6/18/2022 17:45	11.63	-0.05	6/18/2022 19:02	-0.10
6/18/2022 17:59	12.07	0.09	6/19/2022 19:43	11.59	0.01	6/18/2022 17:46	11.58	-0.02	6/18/2022 19:03	-0.05
6/18/2022 18:00	12.06	0.10	6/19/2022 19:44	11.57	-0.04	6/18/2022 17:47	11.61	-0.04	6/18/2022 19:04	-0.11
6/18/2022 18:01	12.09	0.11	6/19/2022 19:45	11.55	-0.03	6/18/2022 17:48	11.62	-0.04	6/18/2022 19:05	-0.06
6/18/2022 18:02	12.10	0.14	6/19/2022 19:46	11.58	-0.04	6/18/2022 17:49	11.61	-0.04	6/18/2022 19:06	-0.10
6/18/2022 18:03	12.06	0.06	6/19/2022 19:47	11.60	0.02	6/18/2022 17:50	11.62	-0.03	6/18/2022 19:07	-0.15
6/18/2022 18:04	12.09	0.08	6/19/2022 19:48	11.57	0.00	6/18/2022 17:51	11.62	-0.01	6/18/2022 19:08	-0.10
6/18/2022 18:05	12.07	0.10	6/19/2022 19:49	11.60	-0.02	6/18/2022 17:52	11.60	-0.03	6/18/2022 19:09	-0.14
6/18/2022 18:06	12.06	0.12	6/19/2022 19:50	11.57	-0.07	6/18/2022 17:53	11.62	-0.02	6/18/2022 19:10	-0.09
6/18/2022 18:07	12.09	0.05	6/19/2022 19:51	11.58	-0.01	6/18/2022 17:54	11.60	-0.03	6/18/2022 19:11	-0.08
6/18/2022 18:08	12.07	0.09	6/19/2022 19:52	11.58	-0.04	6/18/2022 17:55	11.63	-0.01	6/18/2022 19:12	-0.12
6/18/2022 18:09	12.09	0.10	6/19/2022 19:53	11.57	-0.05	6/18/2022 17:56	11.61	-0.05	6/18/2022 19:13	-0.10
6/18/2022 18:10	12.10	0.15	6/19/2022 19:54	11.57	0.01	6/18/2022 17:57	11.60	-0.01	6/18/2022 19:14	-0.10
6/18/2022 18:11	12.04	0.04	6/19/2022 19:55	11.59	0.02	6/18/2022 17:58	11.61	-0.06	6/18/2022 19:15	-0.09
6/18/2022 18:12	12.10	0.12	6/19/2022 19:56	11.57	-0.05	6/18/2022 17:59	11.61	-0.01	6/18/2022 19:16	-0.08
6/18/2022 18:13	12.09	0.14	6/19/2022 19:57	11.56	0.01	6/18/2022 18:00	11.61	-0.03	6/18/2022 19:17	-0.10
6/18/2022 18:14	12.08	0.10	6/19/2022 19:58	11.54	0.03	6/18/2022 18:01	11.60	-0.03	6/18/2022 19:18	-0.09
6/18/2022 18:15	12.07	0.04	6/19/2022 19:59	11.57	-0.01	6/18/2022 18:02	11.62	-0.06	6/18/2022 19:19	-0.11
6/18/2022 18:16	12.07	0.09	6/19/2022 20:00	11.56	0.10	6/18/2022 18:03	11.64	-0.03	6/18/2022 19:20	-0.15
6/18/2022 18:17	12.08	0.07	6/19/2022 20:01	11.55	-0.07	6/18/2022 18:04	11.62	-0.03	6/18/2022 19:21	-0.10
6/18/2022 18:18	12.09	0.03	6/19/2022 20:02	11.57	-0.06	6/18/2022 18:05	11.63	-0.03	6/18/2022 19:22	-0.14
6/18/2022 18:19	12.11	0.20	6/19/2022 20:03	11.59	-0.07	6/18/2022 18:06	11.61	-0.06	6/18/2022 19:23	-0.07
6/18/2022 18:20	12.07	0.04	6/19/2022 20:04	11.59	-0.02	6/18/2022 18:07	11.62	-0.01	6/18/2022 19:24	-0.12
6/18/2022 18:21	12.08	0.12	6/19/2022 20:05	11.60	0.00	6/18/2022 18:08	11.63	-0.05	6/18/2022 19:25	-0.07
6/18/2022 18:22	12.07	0.19	6/19/2022 20:06	11.56	0.00	6/18/2022 18:09	11.64	-0.05	6/18/2022 19:26	-0.10
6/18/2022 18:23	12.09	0.06	6/19/2022 20:07	11.56	-0.05	6/18/2022 18:10	11.61	-0.05	6/18/2022 19:27	-0.09
6/18/2022 18:24	12.09	0.09	6/19/2022 20:08	11.56	-0.06	6/18/2022 18:11	11.59	-0.02	6/18/2022 19:28	-0.10
6/18/2022 18:25	12.07	0.11	6/19/2022 20:09	11.57	-0.07	6/18/2022 18:12	11.63	-0.02	6/18/2022 19:29	-0.02
6/18/2022 18:26	12.07	0.21	6/19/2022 20:10	11.59	-0.05	6/18/2022 18:13	11.64	0.03	6/18/2022 19:30	-0.05
6/18/2022 18:27	12.06	0.09	6/19/2022 20:11	11.61	-0.09	6/18/2022 18:14	11.65	-0.01	6/18/2022 19:31	-0.10
6/18/2022 18:28	12.09	-0.01	6/19/2022 20:12	11.58	-0.05	6/18/2022 18:15	11.61	-0.03	6/18/2022 19:32	-0.08
6/18/2022 18:29	12.09	0.09	6/19/2022 20:13	11.59	-0.12	6/18/2022 18:16	11.60	-0.01	6/18/2022 19:33	-0.15
6/18/2022 18:30	12.07	0.05	6/19/2022 20:14	11.58	0.02	6/18/2022 18:17	11.60	-0.04	6/18/2022 19:34	-0.10
6/18/2022 18:31	12.09	0.13	6/19/2022 20:15	11.59	-0.03	6/18/2022 18:18	11.62	-0.05	6/18/2022 19:35	-0.10
6/18/2022 18:32	12.08	0.18	6/19/2022 20:16	11.57	0.02	6/18/2022 18:19	11.64	0.01	6/18/2022 19:36	-0.11
6/18/2022 18:33	12.08	0.10	6/19/2022 20:17	11.58	0.02	6/18/2022 18:20	11.61	-0.04	6/18/2022 19:37	-0.13
6/18/2022 18:34	12.07	0.07	6/19/2022 20:18	11.57	0.00	6/18/2022 18:21	11.62	-0.05	6/18/2022 19:38	-0.05
6/18/2022 18:35	12.08	0.09	6/19/2022 20:19	11.58	-0.08	6/18/2022 18:22	11.63	-0.02	6/18/2022 19:39	-0.14
6/18/2022 18:36	12.06	0.12	6/19/2022 20:20	11.57	-0.06	6/18/2022 18:23	11.61	0.00	6/18/2022 19:40	-0.07
6/18/2022 18:37	12.10	0.03	6/19/2022 20:21	11.56	-0.12	6/18/2022 18:24	11.63	-0.04	6/18/2022 19:41	-0.09
6/18/2022 18:38	12.08	0.09	6/19/2022 20:22	11.58	-0.01	6/18/2022 18:25	11.62	-0.01	6/18/2022 19:42	-0.13
6/18/2022 18:39	12.10	0.06	6/19/2022 20:23	11.57	0.01	6/18/2022 18:26	11.61	-0.01	6/18/2022 19:43	-0.09
6/18/2022 18:40	12.08	0.14	6/19/2022 20:24	11.59	0.05	6/18/2022 18:27	11.61	-0.04	6/18/2022 19:44	-0.09
6/18/2022 18:41	12.10	0.09	6/19/2022 20:25	11.57	0.00	6/18/2022 18:28	11.62	-0.05	6/18/2022 19:45	-0.07
6/18/2022 18:42	12.07	0.10	6/19/2022 20:26	11.60	-0.07	6/18/2022 18:29	11.62	-0.05	6/18/2022 19:46	-0.09
6/18/2022 18:43	12.08	0.08	6/19/2022 20:27	11.55	0.03	6/18/2022 18:30	11.61	-0.03	6/18/2022 19:47	-0.04
6/18/2022 18:44	12.08	0.05	6/19/2022 20:28	11.56	0.00	6/18/2022 18:31	11.62	-0.03	6/18/2022 19:48	-0.07
6/18/2022 18:45	12.08	0.14	6/19/2022 20:29	11.58	-0.03	6/18/2022 18:32	11.61	0.00	6/18/2022 19:49	-0.06
6/18/2022 18:46	12.09	0.08	6/19/2022 20:30	11.58	-0.01	6/18/2022 18:33	11.64	-0.04	6/18/2022 19:50	-0.10

6/18/2022 18:47	12.09	0.00	6/19/2022 20:31	11.57	-0.06	6/18/2022 18:34	11.62	-0.04	6/18/2022 19:51	-0.07
6/18/2022 18:48	12.08	0.17	6/19/2022 20:32	11.57	-0.09	6/18/2022 18:35	11.62	-0.03	6/18/2022 19:52	-0.07
6/18/2022 18:49	12.07	0.18	6/19/2022 20:33	11.58	0.01	6/18/2022 18:36	11.60	-0.05	6/18/2022 19:53	-0.08
6/18/2022 18:50	12.09	0.09	6/19/2022 20:34	11.57	0.01	6/18/2022 18:37	11.62	-0.05	6/18/2022 19:54	-0.10
6/18/2022 18:51	12.08	0.10	6/19/2022 20:35	11.59	-0.02	6/18/2022 18:38	11.62	-0.04	6/18/2022 19:55	-0.14
6/18/2022 18:52	12.08	0.10	6/19/2022 20:36	11.56	-0.05	6/18/2022 18:39	11.63	-0.01	6/18/2022 19:56	-0.07
6/18/2022 18:53	12.08	0.04	6/19/2022 20:37	11.57	-0.07	6/18/2022 18:40	11.61	-0.02	6/18/2022 19:57	-0.13
6/18/2022 18:54	12.07	0.06	6/19/2022 20:38	11.58	0.02	6/18/2022 18:41	11.63	-0.05	6/18/2022 19:58	-0.11
6/18/2022 18:55	12.10	0.06	6/19/2022 20:39	11.56	-0.08	6/18/2022 18:42	11.61	-0.02	6/18/2022 19:59	-0.10
6/18/2022 18:56	12.08	0.05	6/19/2022 20:40	11.57	-0.02	6/18/2022 18:43	11.62	-0.05	6/18/2022 20:00	-0.05
6/18/2022 18:57	12.07	0.09	6/19/2022 20:41	11.59	-0.03	6/18/2022 18:44	11.60	0.02	6/18/2022 20:01	-0.04
6/18/2022 18:58	12.09	0.11	6/19/2022 20:42	11.59	-0.07	6/18/2022 18:45	11.61	-0.02	6/18/2022 20:02	-0.10
6/18/2022 18:59	12.07	0.10	6/19/2022 20:43	11.56	0.03	6/18/2022 18:46	11.63	-0.04	6/18/2022 20:03	-0.08
6/18/2022 19:00	12.08	0.14	6/19/2022 20:44	11.56	-0.05	6/18/2022 18:47	11.62	-0.06	6/18/2022 20:04	-0.11
6/18/2022 19:01	12.09	0.10	6/19/2022 20:45	11.59	-0.03	6/18/2022 18:48	11.63	0.02	6/18/2022 20:05	-0.09
6/18/2022 19:02	12.06	0.08	6/19/2022 20:46	11.61	0.01	6/18/2022 18:49	11.61	-0.05	6/18/2022 20:06	-0.15
6/18/2022 19:03	12.08	0.05	6/19/2022 20:47	11.55	-0.12	6/18/2022 18:50	11.61	-0.02	6/18/2022 20:07	-0.14
6/18/2022 19:04	12.06	0.09	6/19/2022 20:48	11.58	0.01	6/18/2022 18:51	11.64	-0.05	6/18/2022 20:08	-0.10
6/18/2022 19:05	12.08	0.12	6/19/2022 20:49	11.59	-0.02	6/18/2022 18:52	11.61	-0.06	6/18/2022 20:09	-0.07
6/18/2022 19:06	12.08	0.09	6/19/2022 20:50	11.58	-0.07	6/18/2022 18:53	11.61	-0.03	6/18/2022 20:10	-0.09
6/18/2022 19:07	12.10	0.16	6/19/2022 20:51	11.58	-0.08	6/18/2022 18:54	11.60	-0.03	6/18/2022 20:11	-0.06
6/18/2022 19:08	12.08	0.14	6/19/2022 20:52	11.58	-0.08	6/18/2022 18:55	11.60	-0.04	6/18/2022 20:12	-0.11
6/18/2022 19:09	12.05	0.09	6/19/2022 20:53	11.57	0.05	6/18/2022 18:56	11.59	-0.01	6/18/2022 20:13	-0.04
6/18/2022 19:10	12.08	0.03	6/19/2022 20:54	11.58	0.00	6/18/2022 18:57	11.62	-0.05	6/18/2022 20:14	-0.11
6/18/2022 19:11	12.07	0.08	6/19/2022 20:55	11.56	-0.04	6/18/2022 18:58	11.63	-0.05	6/18/2022 20:15	-0.10
6/18/2022 19:12	12.07	0.18	6/19/2022 20:56	11.57	0.03	6/18/2022 18:59	11.64	-0.04	6/18/2022 20:16	-0.12
6/18/2022 19:13	12.07	0.13	6/19/2022 20:57	11.58	-0.01	6/18/2022 19:00	11.61	-0.03	6/18/2022 20:17	-0.07
6/18/2022 19:14	12.09	0.07	6/19/2022 20:58	11.56	-0.07	6/18/2022 19:01	11.63	-0.01	6/18/2022 20:18	-0.11
6/18/2022 19:15	12.08	0.12	6/19/2022 20:59	11.54	-0.02	6/18/2022 19:02	11.61	-0.02	6/18/2022 20:19	-0.08
6/18/2022 19:16	12.07	0.10	6/19/2022 21:00	11.58	-0.09	6/18/2022 19:03	11.63	-0.05	6/18/2022 20:20	-0.09
6/18/2022 19:17	12.07	0.09	6/19/2022 21:01	11.59	0.01	6/18/2022 19:04	11.63	-0.02	6/18/2022 20:21	-0.11
6/18/2022 19:18	12.08	0.09	6/19/2022 21:02	11.59	0.02	6/18/2022 19:05	11.63	-0.02	6/18/2022 20:22	-0.06
6/18/2022 19:19	12.07	-0.01	6/19/2022 21:03	11.58	-0.02	6/18/2022 19:06	11.65	-0.04	6/18/2022 20:23	-0.09
6/18/2022 19:20	12.08	0.05	6/19/2022 21:04	11.59	0.04	6/18/2022 19:07	11.63	-0.04	6/18/2022 20:24	-0.11
6/18/2022 19:21	12.08	0.04	6/19/2022 21:05	11.56	-0.05	6/18/2022 19:08	11.63	-0.03	6/18/2022 20:25	-0.11
6/18/2022 19:22	12.05	0.05	6/19/2022 21:06	11.58	-0.06	6/18/2022 19:09	11.62	-0.03	6/18/2022 20:26	-0.08
6/18/2022 19:23	12.09	0.06	6/19/2022 21:07	11.59	-0.07	6/18/2022 19:10	11.62	-0.02	6/18/2022 20:27	-0.08
6/18/2022 19:24	12.07	0.08	6/19/2022 21:08	11.55	0.06	6/18/2022 19:11	11.61	-0.05	6/18/2022 20:28	-0.12
6/18/2022 19:25	12.05	0.07	6/19/2022 21:09	11.58	0.04	6/18/2022 19:12	11.62	0.00	6/18/2022 20:29	-0.17
6/18/2022 19:26	12.09	0.17	6/19/2022 21:10	11.58	-0.02	6/18/2022 19:13	11.60	-0.07	6/18/2022 20:30	-0.06
6/18/2022 19:27	12.07	0.13	6/19/2022 21:11	11.57	-0.04	6/18/2022 19:14	11.62	-0.01	6/18/2022 20:31	-0.07
6/18/2022 19:28	12.09	0.07	6/19/2022 21:12	11.58	-0.05	6/18/2022 19:15	11.59	-0.05	6/18/2022 20:32	-0.11
6/18/2022 19:29	12.05	0.12	6/19/2022 21:13	11.60	0.00	6/18/2022 19:16	11.62	-0.01	6/18/2022 20:33	-0.07
6/18/2022 19:30	12.09	0.11	6/19/2022 21:14	11.58	-0.07	6/18/2022 19:17	11.59	-0.01	6/18/2022 20:34	-0.13
6/18/2022 19:31	12.09	0.04	6/19/2022 21:15	11.57	-0.01	6/18/2022 19:18	11.60	-0.04	6/18/2022 20:35	-0.07
6/18/2022 19:32	12.07	0.17	6/19/2022 21:16	11.58	-0.06	6/18/2022 19:19	11.60	0.02	6/18/2022 20:36	-0.14
6/18/2022 19:33	12.07	0.08	6/19/2022 21:17	11.59	-0.04	6/18/2022 19:20	11.62	-0.05	6/18/2022 20:37	-0.09
6/18/2022 19:34	12.07	0.08	6/19/2022 21:18	11.58	-0.01	6/18/2022 19:21	11.61	-0.04	6/18/2022 20:38	-0.09
6/18/2022 19:35	12.08	0.13	6/19/2022 21:19	11.58	-0.07	6/18/2022 19:22	11.62	-0.02	6/18/2022 20:39	-0.12
6/18/2022 19:36	12.05	0.13	6/19/2022 21:20	11.56	-0.01	6/18/2022 19:23	11.60	-0.06	6/18/2022 20:40	-0.08
6/18/2022 19:37	12.09	0.06	6/19/2022 21:21	11.58	0.02	6/18/2022 19:24	11.60	0.00	6/18/2022 20:41	-0.10
6/18/2022 19:38	12.09	0.11	6/19/2022 21:22	11.58	-0.02	6/18/2022 19:25	11.61	-0.02	6/18/2022 20:42	-0.11
6/18/2022 19:39	12.07	0.01	6/19/2022 21:23	11.58	-0.06	6/18/2022 19:26	11.62	-0.03	6/18/2022 20:43	-0.10
6/18/2022 19:40	12.09	0.09	6/19/2022 21:24	11.56	0.01	6/18/2022 19:27	11.59	-0.02	6/18/2022 20:44	-0.11
6/18/2022 19:41	12.08	0.06	6/19/2022 21:25	11.57	-0.05	6/18/2022 19:28	11.62	-0.02	6/18/2022 20:45	-0.06
6/18/2022 19:42	12.09	0.06	6/19/2022 21:26	11.59	0.02	6/18/2022 19:29	11.61	-0.03	6/18/2022 20:46	-0.12
6/18/2022 19:43	12.07	0.14	6/19/2022 21:27	11.60	-0.07	6/18/2022 19:30	11.59	-0.01	6/18/2022 20:47	-0.11
6/18/2022 19:44	12.09	0.15	6/19/2022 21:28	11.60	0.01	6/18/2022 19:31	11.62	-0.07	6/18/2022 20:48	-0.09
6/18/2022 19:45	12.07	0.15	6/19/2022 21:29	11.59	0.04	6/18/2022 19:32	11.63	-0.02	6/18/2022 20:49	-0.14
6/18/2022 19:46	12.06	0.18	6/19/2022 21:30	11.58	-0.03	6/18/2022 19:33	11.63	-0.03	6/18/2022 20:50	-0.13
6/18/2022 19:47	12.07	0.10	6/19/2022 21:31	11.59	-0.08	6/18/2022 19:34	11.63	-0.08	6/18/2022 20:51	-0.13
6/18/2022 19:48	12.09	0.00	6/19/2022 21:32	11.57	-0.10	6/18/2022 19:35	11.62	-0.02	6/18/2022 20:52	-0.07
6/18/2022 19:49	12.08	0.19	6/19/2022 21:33	11.56	-0.03	6/18/2022 19:36	11.61	-0.01	6/18/2022 20:53	-0.11
6/18/2022 19:50	12.07	0.13	6/19/2022 21:34	11.58	-0.03	6/18/2022 19:37	11.61	-0.01	6/18/2022 20:54	-0.08
6/18/2022 19:51	12.06	0.13	6/19/2022 21:35	11.56	-0.06	6/18/2022 19:38	11.62	-0.01	6/18/2022 20:55	-0.15
6/18/2022 19:52	12.07	0.06	6/19/2022 21:36	11.56	-0.06	6/18/2022 19:39	11.62	0.00	6/18/2022 20:56	-0.09
6/18/2022 19:53	12.07	0.06	6/19/2022 21:37	11.56	-0.01	6/18/2022 19:40	11.62	0.01	6/18/2022 20:57	-0.13
6/18/2022 19:54	12.09	0.09	6/19/2022 21:38	11.56	-0.06	6/18/2022 19:41	11.62	-0.06	6/18/2022 20:58	-0.07
6/18/2022 19:55	12.07	0.10	6/19/2022 21:39	11.58	0.01	6/18/2022 19:42	11.62	-0.08	6/18/2022 20:59	-0.13
6/18/2022 19:56	12.11	0.17	6/19/2022 21:40	11.56	0.03	6/18/2022 19:43	11.64	-0.05	6/18/2022 21:00	-0.15
6/18/2022 19:57	12.06	0.07	6/19/2022 21:41	11.57	-0.06	6/18/2022 19:44	11.62	-0.06	6/18/2022 21:01	-0.06
6/18/2022 19:58	12.07	0.14	6/19/2022 21:42	11.60	-0.04	6/18/2022 19:45	11.60	-0.04	6/18/2022 21:02	-0.10
6/18/2022 19:59	12.08	0.14	6/19/2022 21:43	11.55	0.05	6/18/2022 19:46	11.64	-0.06	6/18/2022 21:03	-0.11
6/18/2022 20:00	12.09	0.08	6/19/2022 21:44	11.59	-0.09	6/18/2022 19:47	11.62	-0.04	6/18/2022 21:04	-0.06
6/18/2022 20:01	12.06	0.12	6/19/2022 21:45	11.58	-0.02	6/18/2022 19:48	11.60	-0.02	6/18/2022 21:05	-0.10
6/18/2022 20:02	12.08	0.08	6/19/2022 21:46	11.57	-0.06	6/18/2022 19:49	11.61	-0.04	6/18/2022 21:06	-0.07
6/18/2022 20:03	12.08	0.11	6/19/2022 21:47	11.59	0.02	6/18/2022 19:50	11.63	-0.03	6/18/2022 21:07	-0.09
6/18/2022 20:04	12.05	0.07	6/19/2022 21:48	11.59	-0.03	6/18/2022 19:51	11.61	-0.02	6/18/2022 21:08	-0.08
6/18/2022 20:05	12.08	0.05	6/19/2022 21:49	11.58	0.00	6/18/2022 19:52	11.63	0.02	6/18/2022 21:09	-0.12
6/18/2022 20:06	12.09	0.16	6/19/2022 21:50	11.57	-0.02	6/18/2022 19:53	11.62	-0.01	6/18/2022 21:10	-0.10
6/18/2022 20:07	12.08	0.11	6/19/2022 21:51	11.56	-0.10	6/18/2022 19:54	11.61	-0.02	6/18/2022 21:11	-0.06
6/18/2022 20:08	12.08	0.10	6/19/2022 21:52	11.55	0.00	6/18/2022 19:55	11.62	-0.03	6/18/2022 21:12	-0.11
6/18/2022 20:09	12.07	0.10	6/19/2022 21:53	11.56	-0.02	6/18/2022 19:56	11.61	-0.04	6/18/2022 21:13	-0.09
6/18/2022 20:10	12.08	0.13	6/19/2022 21:54	11.57	-0.05	6/18/2022 19:57	11.61	-0.05	6/18/2022 21:14	-0.06
6/18/2022 20:11	12.08	0.11	6/19/2022 21:55	11.56	-0.02	6/18/2022 19:58	11.62	-0.01	6/18/2022 21:15	-0.11
6/18/2022 20:12	12.08	0.09	6/19/2022 21:56	11.58	-0.01	6/18/2022 19:59	11.62	-0.07	6/18/2022 21:16	-0.09
6/18/2022 20:13	12.08	0.00	6/19/2022 21:57	11.56	-0.10	6/18/2022 20:00	11.60	-0.02	6/18/2022 21:17	-0.06
6/18/2022 20:14	12.05	0.07	6/19/2022 21:58	11.58	0.02	6/18/2022 20:01	11.63	-0.01	6/18/2022 21:18	-0.11

6/18/2022 20:15	12.08	0.10	6/19/2022 21:59	11.58	-0.11	6/18/2022 20:02	11.66	-0.05	6/18/2022 21:19	-0.09
6/18/2022 20:16	12.10	0.15	6/19/2022 22:00	11.58	-0.08	6/18/2022 20:03	11.65	0.03	6/18/2022 21:20	-0.10
6/18/2022 20:17	12.08	0.11	6/19/2022 22:01	11.57	-0.03	6/18/2022 20:04	11.62	-0.02	6/18/2022 21:21	-0.10
6/18/2022 20:18	12.06	0.10	6/19/2022 22:02	11.56	0.03	6/18/2022 20:05	11.63	-0.01	6/18/2022 21:22	-0.12
6/18/2022 20:19	12.10	0.18	6/19/2022 22:03	11.57	0.00	6/18/2022 20:06	11.61	-0.02	6/18/2022 21:23	-0.09
6/18/2022 20:20	12.07	0.13	6/19/2022 22:04	11.58	-0.03	6/18/2022 20:07	11.61	-0.07	6/18/2022 21:24	-0.11
6/18/2022 20:21	12.07	0.13	6/19/2022 22:05	11.58	0.01	6/18/2022 20:08	11.61	-0.07	6/18/2022 21:25	-0.11
6/18/2022 20:22	12.09	0.18	6/19/2022 22:06	11.58	-0.03	6/18/2022 20:09	11.63	-0.03	6/18/2022 21:26	-0.04
6/18/2022 20:23	12.09	0.09	6/19/2022 22:07	11.60	0.05	6/18/2022 20:10	11.63	-0.03	6/18/2022 21:27	-0.08
6/18/2022 20:24	12.07	0.09	6/19/2022 22:08	11.56	-0.03	6/18/2022 20:11	11.62	-0.04	6/18/2022 21:28	-0.08
6/18/2022 20:25	12.08	0.11	6/19/2022 22:09	11.59	-0.02	6/18/2022 20:12	11.60	-0.02	6/18/2022 21:29	-0.10
6/18/2022 20:26	12.09	0.17	6/19/2022 22:10	11.58	0.02	6/18/2022 20:13	11.62	-0.03	6/18/2022 21:30	-0.06
6/18/2022 20:27	12.07	0.15	6/19/2022 22:11	11.58	-0.09	6/18/2022 20:14	11.64	-0.06	6/18/2022 21:31	-0.11
6/18/2022 20:28	12.10	0.08	6/19/2022 22:12	11.59	0.03	6/18/2022 20:15	11.60	-0.04	6/18/2022 21:32	-0.12
6/18/2022 20:29	12.07	0.13	6/19/2022 22:13	11.58	-0.01	6/18/2022 20:16	11.62	-0.03	6/18/2022 21:33	-0.09
6/18/2022 20:30	12.06	0.14	6/19/2022 22:14	11.58	0.06	6/18/2022 20:17	11.62	-0.02	6/18/2022 21:34	-0.13
6/18/2022 20:31	12.10	0.10	6/19/2022 22:15	11.59	-0.03	6/18/2022 20:18	11.59	-0.02	6/18/2022 21:35	-0.11
6/18/2022 20:32	12.08	0.09	6/19/2022 22:16	11.58	-0.10	6/18/2022 20:19	11.62	-0.01	6/18/2022 21:36	-0.10
6/18/2022 20:33	12.07	0.07	6/19/2022 22:17	11.57	-0.08	6/18/2022 20:20	11.61	-0.02	6/18/2022 21:37	-0.09
6/18/2022 20:34	12.08	0.12	6/19/2022 22:18	11.58	-0.04	6/18/2022 20:21	11.62	-0.04	6/18/2022 21:38	-0.11
6/18/2022 20:35	12.07	0.12	6/19/2022 22:19	11.59	-0.03	6/18/2022 20:22	11.63	-0.03	6/18/2022 21:39	-0.15
6/18/2022 20:36	12.09	0.09	6/19/2022 22:20	11.60	0.00	6/18/2022 20:23	11.61	-0.04	6/18/2022 21:40	-0.11
6/18/2022 20:37	12.08	0.06	6/19/2022 22:21	11.58	0.03	6/18/2022 20:24	11.61	-0.01	6/18/2022 21:41	-0.10
6/18/2022 20:38	12.08	0.19	6/19/2022 22:22	11.58	-0.02	6/18/2022 20:25	11.61	-0.03	6/18/2022 21:42	-0.04
6/18/2022 20:39	12.08	0.13	6/19/2022 22:23	11.59	-0.07	6/18/2022 20:26	11.64	0.00	6/18/2022 21:43	-0.11
6/18/2022 20:40	12.08	0.08	6/19/2022 22:24	11.57	-0.01	6/18/2022 20:27	11.62	0.04	6/18/2022 21:44	-0.11
6/18/2022 20:41	12.08	0.09	6/19/2022 22:25	11.59	0.01	6/18/2022 20:28	11.63	-0.02	6/18/2022 21:45	-0.07
6/18/2022 20:42	12.08	0.08	6/19/2022 22:26	11.58	0.00	6/18/2022 20:29	11.63	-0.03	6/18/2022 21:46	-0.10
6/18/2022 20:43	12.05	0.08	6/19/2022 22:27	11.57	-0.06	6/18/2022 20:30	11.62	-0.05	6/18/2022 21:47	-0.10
6/18/2022 20:44	12.08	0.05	6/19/2022 22:28	11.57	-0.02	6/18/2022 20:31	11.61	0.00	6/18/2022 21:48	-0.09
6/18/2022 20:45	12.08	0.09	6/19/2022 22:29	11.57	-0.01	6/18/2022 20:32	11.63	-0.04	6/18/2022 21:49	-0.10
6/18/2022 20:46	12.09	0.10	6/19/2022 22:30	11.57	0.02	6/18/2022 20:33	11.60	-0.03	6/18/2022 21:50	-0.10
6/18/2022 20:47	12.11	0.14	6/19/2022 22:31	11.60	0.02	6/18/2022 20:34	11.63	0.01	6/18/2022 21:51	-0.12
6/18/2022 20:48	12.06	0.10	6/19/2022 22:32	11.58	-0.06	6/18/2022 20:35	11.60	-0.06	6/18/2022 21:52	-0.09
6/18/2022 20:49	12.09	0.14	6/19/2022 22:33	11.56	-0.01	6/18/2022 20:36	11.63	-0.06	6/18/2022 21:53	-0.07
6/18/2022 20:50	12.07	0.08	6/19/2022 22:34	11.58	-0.14	6/18/2022 20:37	11.64	-0.06	6/18/2022 21:54	-0.11
6/18/2022 20:51	12.10	0.16	6/19/2022 22:35	11.57	-0.06	6/18/2022 20:38	11.60	-0.07	6/18/2022 21:55	-0.14
6/18/2022 20:52	12.07	0.09	6/19/2022 22:36	11.56	0.00	6/18/2022 20:39	11.61	-0.07	6/18/2022 21:56	-0.11
6/18/2022 20:53	12.08	0.12	6/19/2022 22:37	11.58	-0.05	6/18/2022 20:40	11.60	-0.05	6/18/2022 21:57	-0.02
6/18/2022 20:54	12.07	0.12	6/19/2022 22:38	11.61	-0.08	6/18/2022 20:41	11.61	-0.03	6/18/2022 21:58	-0.05
6/18/2022 20:55	12.08	0.04	6/19/2022 22:39	11.58	-0.05	6/18/2022 20:42	11.63	-0.04	6/18/2022 21:59	-0.10
6/18/2022 20:56	12.06	0.08	6/19/2022 22:40	11.60	0.03	6/18/2022 20:43	11.61	-0.05	6/18/2022 22:00	-0.08
6/18/2022 20:57	12.07	0.15	6/19/2022 22:41	11.59	-0.03	6/18/2022 20:44	11.61	-0.05	6/18/2022 22:01	-0.07
6/18/2022 20:58	12.10	0.13	6/19/2022 22:42	11.57	0.00	6/18/2022 20:45	11.63	-0.04	6/18/2022 22:02	-0.09
6/18/2022 20:59	12.07	0.15	6/19/2022 22:43	11.59	-0.02	6/18/2022 20:46	11.62	-0.05	6/18/2022 22:03	-0.05
6/18/2022 21:00	12.06	0.13	6/19/2022 22:44	11.56	-0.09	6/18/2022 20:47	11.62	-0.04	6/18/2022 22:04	-0.11
6/18/2022 21:01	12.07	0.11	6/19/2022 22:45	11.57	-0.02	6/18/2022 20:48	11.63	-0.08	6/18/2022 22:05	-0.08
6/18/2022 21:02	12.09	0.07	6/19/2022 22:46	11.58	0.00	6/18/2022 20:49	11.63	-0.03	6/18/2022 22:06	-0.08
6/18/2022 21:03	12.09	0.07	6/19/2022 22:47	11.58	-0.02	6/18/2022 20:50	11.62	0.00	6/18/2022 22:07	-0.09
6/18/2022 21:04	12.09	0.23	6/19/2022 22:48	11.58	-0.01	6/18/2022 20:51	11.63	-0.05	6/18/2022 22:08	-0.08
6/18/2022 21:05	12.06	0.14	6/19/2022 22:49	11.60	0.00	6/18/2022 20:52	11.63	-0.03	6/18/2022 22:09	-0.13
6/18/2022 21:06	12.11	0.09	6/19/2022 22:50	11.57	-0.05	6/18/2022 20:53	11.62	0.00	6/18/2022 22:10	-0.09
6/18/2022 21:07	12.11	0.14	6/19/2022 22:51	11.59	0.01	6/18/2022 20:54	11.61	-0.04	6/18/2022 22:11	-0.11
6/18/2022 21:08	12.08	0.05	6/19/2022 22:52	11.59	0.00	6/18/2022 20:55	11.61	-0.07	6/18/2022 22:12	-0.07
6/18/2022 21:09	12.10	0.19	6/19/2022 22:53	11.57	0.01	6/18/2022 20:56	11.58	-0.04	6/18/2022 22:13	-0.13
6/18/2022 21:10	12.08	0.14	6/19/2022 22:54	11.61	0.09	6/18/2022 20:57	11.62	-0.03	6/18/2022 22:14	-0.11
6/18/2022 21:11	12.09	0.12	6/19/2022 22:55	11.56	0.01	6/18/2022 20:58	11.63	-0.03	6/18/2022 22:15	-0.09
6/18/2022 21:12	12.07	0.08	6/19/2022 22:56	11.56	-0.03	6/18/2022 20:59	11.63	-0.03	6/18/2022 22:16	-0.05
6/18/2022 21:13	12.09	0.10	6/19/2022 22:57	11.60	0.01	6/18/2022 21:00	11.62	0.00	6/18/2022 22:17	-0.07
6/18/2022 21:14	12.09	0.10	6/19/2022 22:58	11.58	0.01	6/18/2022 21:01	11.61	-0.03	6/18/2022 22:18	-0.12
6/18/2022 21:15	12.06	0.11	6/19/2022 22:59	11.55	-0.01	6/18/2022 21:02	11.61	-0.03	6/18/2022 22:19	-0.07
6/18/2022 21:16	12.09	0.06	6/19/2022 23:00	11.59	0.00	6/18/2022 21:03	11.63	-0.02	6/18/2022 22:20	-0.09
6/18/2022 21:17	12.07	0.08	6/19/2022 23:01	11.60	-0.05	6/18/2022 21:04	11.62	-0.01	6/18/2022 22:21	-0.09
6/18/2022 21:18	12.09	0.05	6/19/2022 23:02	11.58	0.03	6/18/2022 21:05	11.65	-0.04	6/18/2022 22:22	-0.07
6/18/2022 21:19	12.10	0.14	6/19/2022 23:03	11.58	0.00	6/18/2022 21:06	11.65	-0.01	6/18/2022 22:23	-0.07
6/18/2022 21:20	12.08	0.17	6/19/2022 23:04	11.58	0.02	6/18/2022 21:07	11.60	-0.04	6/18/2022 22:24	-0.13
6/18/2022 21:21	12.11	0.14	6/19/2022 23:05	11.58	-0.06	6/18/2022 21:08	11.58	-0.03	6/18/2022 22:25	-0.07
6/18/2022 21:22	12.10	0.09	6/19/2022 23:06	11.56	0.00	6/18/2022 21:09	11.60	-0.07	6/18/2022 22:26	-0.14
6/18/2022 21:23	12.07	0.11	6/19/2022 23:07	11.56	0.01	6/18/2022 21:10	11.62	0.02	6/18/2022 22:27	-0.12
6/18/2022 21:24	12.08	0.16	6/19/2022 23:08	11.57	-0.04	6/18/2022 21:11	11.60	-0.04	6/18/2022 22:28	-0.06
6/18/2022 21:25	12.07	0.04	6/19/2022 23:09	11.57	0.01	6/18/2022 21:12	11.63	-0.01	6/18/2022 22:29	-0.03
6/18/2022 21:26	12.09	0.11	6/19/2022 23:10	11.59	-0.11	6/18/2022 21:13	11.61	-0.05	6/18/2022 22:30	-0.12
6/18/2022 21:27	12.09	0.14	6/19/2022 23:11	11.60	-0.07	6/18/2022 21:14	11.60	-0.05	6/18/2022 22:31	-0.08
6/18/2022 21:28	12.08	0.11	6/19/2022 23:12	11.56	0.03	6/18/2022 21:15	11.61	-0.03	6/18/2022 22:32	-0.09
6/18/2022 21:29	12.09	0.13	6/19/2022 23:13	11.59	-0.07	6/18/2022 21:16	11.61	-0.06	6/18/2022 22:33	-0.09
6/18/2022 21:30	12.12	0.14	6/19/2022 23:14	11.61	-0.01	6/18/2022 21:17	11.63	-0.02	6/18/2022 22:34	-0.12
6/18/2022 21:31	12.07	0.09	6/19/2022 23:15	11.55	0.10	6/18/2022 21:18	11.63	-0.03	6/18/2022 22:35	-0.09
6/18/2022 21:32	12.07	0.05	6/19/2022 23:16	11.58	-0.05	6/18/2022 21:19	11.63	-0.02	6/18/2022 22:36	-0.09
6/18/2022 21:33	12.08	0.02	6/19/2022 23:17	11.58	0.00	6/18/2022 21:20	11.63	-0.02	6/18/2022 22:37	-0.11
6/18/2022 21:34	12.09	0.03	6/19/2022 23:18	11.60	0.01	6/18/2022 21:21	11.62	-0.05	6/18/2022 22:38	-0.10
6/18/2022 21:35	12.09	0.13	6/19/2022 23:19	11.60	0.05	6/18/2022 21:22	11.60	-0.05	6/18/2022 22:39	-0.13
6/18/2022 21:36	12.09	0.04	6/19/2022 23:20	11.56	-0.02	6/18/2022 21:23	11.63	-0.07	6/18/2022 22:40	-0.13
6/18/2022 21:37	12.04	0.14	6/19/2022 23:21	11.55	-0.03	6/18/2022 21:24	11.62	-0.04	6/18/2022 22:41	-0.04
6/18/2022 21:38	12.08	0.14	6/19/2022 23:22	11.56	0.04	6/18/2022 21:25	11.61	-0.05	6/18/2022 22:42	-0.05
6/18/2022 21:39	12.11	0.19	6/19/2022 23:23	11.58	0.02	6/18/2022 21:26	11.61	-0.01	6/18/2022 22:43	-0.11
6/18/2022 21:40	12.09	0.12	6/19/2022 23:24	11.56	0.00	6/18/2022 21:27	11.62	-0.04	6/18/2022 22:44	-0.11
6/18/2022 21:41	12.08	0.10	6/19/2022 23:25	11.58	-0.03	6/18/2022 21:28	11.61	-0.04	6/18/2022 22:45	-0.08
6/18/2022 21:42	12.06	0.02	6/19/2022 23:26	11.58	0.02	6/18/2022 21:29	11.63	-0.01	6/18/2022 22:46	-0.12

6/18/2022 21:43	12.09	0.10	6/19/2022 23:27	11.56	-0.08	6/18/2022 21:30	11.62	-0.05	6/18/2022 22:47	-0.07
6/18/2022 21:44	12.09	0.04	6/19/2022 23:28	11.57	-0.04	6/18/2022 21:31	11.61	-0.03	6/18/2022 22:48	-0.05
6/18/2022 21:45	12.06	0.13	6/19/2022 23:29	11.57	-0.04	6/18/2022 21:32	11.64	-0.01	6/18/2022 22:49	-0.10
6/18/2022 21:46	12.09	0.08	6/19/2022 23:30	11.55	-0.01	6/18/2022 21:33	11.61	-0.01	6/18/2022 22:50	-0.13
6/18/2022 21:47	12.09	0.09	6/19/2022 23:31	11.59	0.03	6/18/2022 21:34	11.63	-0.01	6/18/2022 22:51	-0.10
6/18/2022 21:48	12.10	0.09	6/19/2022 23:32	11.58	-0.08	6/18/2022 21:35	11.61	-0.02	6/18/2022 22:52	-0.15
6/18/2022 21:49	12.09	0.12	6/19/2022 23:33	11.58	0.02	6/18/2022 21:36	11.63	0.00	6/18/2022 22:53	-0.09
6/18/2022 21:50	12.08	0.03	6/19/2022 23:34	11.60	-0.04	6/18/2022 21:37	11.61	-0.03	6/18/2022 22:54	-0.09
6/18/2022 21:51	12.10	0.09	6/19/2022 23:35	11.59	-0.06	6/18/2022 21:38	11.60	-0.08	6/18/2022 22:55	-0.11
6/18/2022 21:52	12.08	0.04	6/19/2022 23:36	11.60	0.03	6/18/2022 21:39	11.63	-0.01	6/18/2022 22:56	-0.11
6/18/2022 21:53	12.09	0.12	6/19/2022 23:37	11.58	-0.06	6/18/2022 21:40	11.60	-0.02	6/18/2022 22:57	-0.14
6/18/2022 21:54	12.07	0.04	6/19/2022 23:38	11.61	-0.02	6/18/2022 21:41	11.61	-0.04	6/18/2022 22:58	-0.10
6/18/2022 21:55	12.09	0.16	6/19/2022 23:39	11.59	-0.06	6/18/2022 21:42	11.61	0.01	6/18/2022 22:59	-0.09
6/18/2022 21:56	12.07	0.13	6/19/2022 23:40	11.59	-0.05	6/18/2022 21:43	11.62	-0.03	6/18/2022 23:00	-0.13
6/18/2022 21:57	12.10	0.11	6/19/2022 23:41	11.58	-0.07	6/18/2022 21:44	11.63	-0.02	6/18/2022 23:01	-0.10
6/18/2022 21:58	12.08	0.08	6/19/2022 23:42	11.56	-0.02	6/18/2022 21:45	11.61	-0.03	6/18/2022 23:02	-0.11
6/18/2022 21:59	12.07	0.07	6/19/2022 23:43	11.57	-0.06	6/18/2022 21:46	11.62	-0.05	6/18/2022 23:03	-0.13
6/18/2022 22:00	12.05	0.08	6/19/2022 23:44	11.59	-0.09	6/18/2022 21:47	11.62	-0.01	6/18/2022 23:04	-0.08
6/18/2022 22:01	12.06	0.02	6/19/2022 23:45	11.59	-0.01	6/18/2022 21:48	11.62	-0.04	6/18/2022 23:05	-0.15
6/18/2022 22:02	12.08	0.09	6/19/2022 23:46	11.60	-0.07	6/18/2022 21:49	11.62	-0.04	6/18/2022 23:06	-0.12
6/18/2022 22:03	12.08	0.10	6/19/2022 23:47	11.59	0.00	6/18/2022 21:50	11.62	-0.03	6/18/2022 23:07	-0.12
6/18/2022 22:04	12.08	0.10	6/19/2022 23:48	11.59	-0.06	6/18/2022 21:51	11.62	-0.05	6/18/2022 23:08	-0.09
6/18/2022 22:05	12.09	0.16	6/19/2022 23:49	11.58	0.01	6/18/2022 21:52	11.61	-0.01	6/18/2022 23:09	-0.11
6/18/2022 22:06	12.09	0.12	6/19/2022 23:50	11.60	-0.03	6/18/2022 21:53	11.63	-0.05	6/18/2022 23:10	-0.09
6/18/2022 22:07	12.07	0.12	6/19/2022 23:51	11.57	-0.09	6/18/2022 21:54	11.61	-0.05	6/18/2022 23:11	-0.12
6/18/2022 22:08	12.06	0.11	6/19/2022 23:52	11.59	-0.10	6/18/2022 21:55	11.63	-0.04	6/18/2022 23:12	-0.11
6/18/2022 22:09	12.08	0.11	6/19/2022 23:53	11.58	-0.03	6/18/2022 21:56	11.63	-0.04	6/18/2022 23:13	-0.07
6/18/2022 22:10	12.09	0.08	6/19/2022 23:54	11.57	0.05	6/18/2022 21:57	11.63	-0.01	6/18/2022 23:14	-0.10
6/18/2022 22:11	12.09	0.09	6/19/2022 23:55	11.57	-0.07	6/18/2022 21:58	11.57	-0.02	6/18/2022 23:15	-0.09
6/18/2022 22:12	12.09	0.14	6/19/2022 23:56	11.58	0.01	6/18/2022 21:59	11.62	-0.09	6/18/2022 23:16	-0.16
6/18/2022 22:13	12.10	0.08	6/19/2022 23:57	11.57	-0.02	6/18/2022 22:00	11.60	-0.01	6/18/2022 23:17	-0.12
6/18/2022 22:14	12.11	0.09	6/19/2022 23:58	11.58	-0.02	6/18/2022 22:01	11.62	0.00	6/18/2022 23:18	-0.11
6/18/2022 22:15	12.08	0.08	6/19/2022 23:59	11.59	-0.01	6/18/2022 22:02	11.62	-0.01	6/18/2022 23:19	-0.08
6/18/2022 22:16	12.10	0.06	6/20/2022 0:00	11.61	-0.02	6/18/2022 22:03	11.61	-0.02	6/18/2022 23:20	-0.05
6/18/2022 22:17	12.09	0.13	6/20/2022 0:01	11.58	-0.03	6/18/2022 22:04	11.60	-0.06	6/18/2022 23:21	-0.14
6/18/2022 22:18	12.09	0.14	6/20/2022 0:02	11.58	-0.04	6/18/2022 22:05	11.61	-0.05	6/18/2022 23:22	-0.12
6/18/2022 22:19	12.07	0.04	6/20/2022 0:03	11.59	-0.03	6/18/2022 22:06	11.62	-0.02	6/18/2022 23:23	-0.08
6/18/2022 22:20	12.09	0.12	6/20/2022 0:04	11.58	-0.08	6/18/2022 22:07	11.61	-0.05	6/18/2022 23:24	-0.03
6/18/2022 22:21	12.08	0.17	6/20/2022 0:05	11.58	0.00	6/18/2022 22:08	11.60	-0.03	6/18/2022 23:25	-0.08
6/18/2022 22:22	12.08	0.05	6/20/2022 0:06	11.58	-0.01	6/18/2022 22:09	11.63	-0.02	6/18/2022 23:26	-0.10
6/18/2022 22:23	12.08	0.08	6/20/2022 0:07	11.57	0.01	6/18/2022 22:10	11.62	-0.03	6/18/2022 23:27	-0.04
6/18/2022 22:24	12.08	0.11	6/20/2022 0:08	11.58	-0.01	6/18/2022 22:11	11.63	-0.04	6/18/2022 23:28	-0.09
6/18/2022 22:25	12.08	0.13	6/20/2022 0:09	11.55	-0.11	6/18/2022 22:12	11.62	-0.04	6/18/2022 23:29	-0.07
6/18/2022 22:26	12.07	0.16	6/20/2022 0:10	11.61	-0.04	6/18/2022 22:13	11.63	-0.02	6/18/2022 23:30	-0.06
6/18/2022 22:27	12.07	0.08	6/20/2022 0:11	11.59	-0.02	6/18/2022 22:14	11.64	0.00	6/18/2022 23:31	-0.06
6/18/2022 22:28	12.06	0.12	6/20/2022 0:12	11.57	-0.04	6/18/2022 22:15	11.62	-0.04	6/18/2022 23:32	-0.08
6/18/2022 22:29	12.09	0.00	6/20/2022 0:13	11.60	-0.03	6/18/2022 22:16	11.62	-0.05	6/18/2022 23:33	-0.12
6/18/2022 22:30	12.09	0.02	6/20/2022 0:14	11.57	0.06	6/18/2022 22:17	11.61	-0.05	6/18/2022 23:34	-0.10
6/18/2022 22:31	12.07	0.11	6/20/2022 0:15	11.57	0.06	6/18/2022 22:18	11.62	-0.04	6/18/2022 23:35	-0.11
6/18/2022 22:32	12.06	0.07	6/20/2022 0:16	11.56	-0.04	6/18/2022 22:19	11.63	-0.05	6/18/2022 23:36	-0.07
6/18/2022 22:33	12.09	0.13	6/20/2022 0:17	11.58	-0.03	6/18/2022 22:20	11.62	-0.05	6/18/2022 23:37	-0.11
6/18/2022 22:34	12.09	0.18	6/20/2022 0:18	11.57	0.00	6/18/2022 22:21	11.63	-0.04	6/18/2022 23:38	-0.10
6/18/2022 22:35	12.07	0.09	6/20/2022 0:19	11.56	0.01	6/18/2022 22:22	11.62	-0.05	6/18/2022 23:39	-0.09
6/18/2022 22:36	12.08	0.06	6/20/2022 0:20	11.59	-0.04	6/18/2022 22:23	11.62	0.03	6/18/2022 23:40	-0.11
6/18/2022 22:37	12.10	0.08	6/20/2022 0:21	11.57	-0.04	6/18/2022 22:24	11.63	-0.05	6/18/2022 23:41	-0.11
6/18/2022 22:38	12.11	0.03	6/20/2022 0:22	11.59	0.06	6/18/2022 22:25	11.59	-0.02	6/18/2022 23:42	-0.09
6/18/2022 22:39	12.08	0.09	6/20/2022 0:23	11.58	-0.02	6/18/2022 22:26	11.61	-0.07	6/18/2022 23:43	-0.06
6/18/2022 22:40	12.08	0.04	6/20/2022 0:24	11.58	-0.03	6/18/2022 22:27	11.63	0.00	6/18/2022 23:44	-0.11
6/18/2022 22:41	12.08	0.13	6/20/2022 0:25	11.58	-0.04	6/18/2022 22:28	11.64	-0.03	6/18/2022 23:45	-0.16
6/18/2022 22:42	12.10	0.08	6/20/2022 0:26	11.58	0.01	6/18/2022 22:29	11.61	-0.07	6/18/2022 23:46	-0.10
6/18/2022 22:43	12.08	0.08	6/20/2022 0:27	11.59	-0.05	6/18/2022 22:30	11.62	-0.02	6/18/2022 23:47	-0.13
6/18/2022 22:44	12.08	0.08	6/20/2022 0:28	11.58	-0.03	6/18/2022 22:31	11.61	-0.03	6/18/2022 23:48	-0.08
6/18/2022 22:45	12.09	0.14	6/20/2022 0:29	11.58	0.02	6/18/2022 22:32	11.63	-0.05	6/18/2022 23:49	-0.10
6/18/2022 22:46	12.05	0.10	6/20/2022 0:30	11.56	-0.03	6/18/2022 22:33	11.62	-0.05	6/18/2022 23:50	-0.10
6/18/2022 22:47	12.08	0.05	6/20/2022 0:31	11.58	0.05	6/18/2022 22:34	11.61	-0.02	6/18/2022 23:51	-0.06
6/18/2022 22:48	12.08	0.09	6/20/2022 0:32	11.58	-0.02	6/18/2022 22:35	11.63	-0.05	6/18/2022 23:52	-0.14
6/18/2022 22:49	12.09	0.08	6/20/2022 0:33	11.60	-0.02	6/18/2022 22:36	11.62	-0.04	6/18/2022 23:53	-0.05
6/18/2022 22:50	12.09	0.09	6/20/2022 0:34	11.58	0.01	6/18/2022 22:37	11.61	-0.04	6/18/2022 23:54	-0.08
6/18/2022 22:51	12.07	-0.01	6/20/2022 0:35	11.58	0.03	6/18/2022 22:38	11.63	0.01	6/18/2022 23:55	-0.10
6/18/2022 22:52	12.09	0.07	6/20/2022 0:36	11.57	-0.10	6/18/2022 22:39	11.63	-0.07	6/18/2022 23:56	-0.07
6/18/2022 22:53	12.08	0.06	6/20/2022 0:37	11.58	-0.09	6/18/2022 22:40	11.61	-0.03	6/18/2022 23:57	-0.10
6/18/2022 22:54	12.08	0.11	6/20/2022 0:38	11.59	0.00	6/18/2022 22:41	11.64	-0.01	6/18/2022 23:58	-0.12
6/18/2022 22:55	12.10	0.08	6/20/2022 0:39	11.61	-0.01	6/18/2022 22:42	11.60	-0.02	6/18/2022 23:59	-0.07
6/18/2022 22:56	12.09	0.08	6/20/2022 0:40	11.58	-0.01	6/18/2022 22:43	11.63	-0.05	6/19/2022 0:00	-0.10
6/18/2022 22:57	12.07	0.19	6/20/2022 0:41	11.57	-0.03	6/18/2022 22:44	11.60	-0.01	6/19/2022 0:01	-0.12
6/18/2022 22:58	12.07	0.09	6/20/2022 0:42	11.59	0.01	6/18/2022 22:45	11.62	-0.03	6/19/2022 0:02	-0.10
6/18/2022 22:59	12.07	0.04	6/20/2022 0:43	11.58	-0.07	6/18/2022 22:46	11.62	-0.04	6/19/2022 0:03	-0.10
6/18/2022 23:00	12.08	0.11	6/20/2022 0:44	11.57	-0.02	6/18/2022 22:47	11.63	-0.01	6/19/2022 0:04	-0.11
6/18/2022 23:01	12.09	0.10	6/20/2022 0:45	11.58	-0.02	6/18/2022 22:48	11.61	-0.03	6/19/2022 0:05	-0.10
6/18/2022 23:02	12.11	0.13	6/20/2022 0:46	11.60	-0.07	6/18/2022 22:49	11.61	-0.03	6/19/2022 0:06	-0.11
6/18/2022 23:03	12.06	0.15	6/20/2022 0:47	11.60	-0.01	6/18/2022 22:50	11.60	0.01	6/19/2022 0:07	-0.11
6/18/2022 23:04	12.09	0.15	6/20/2022 0:48	11.56	-0.02	6/18/2022 22:51	11.64	-0.04	6/19/2022 0:08	-0.13
6/18/2022 23:05	12.09	0.19	6/20/2022 0:49	11.58	0.04	6/18/2022 22:52	11.60	-0.02	6/19/2022 0:09	-0.08
6/18/2022 23:06	12.12	0.09	6/20/2022 0:50	11.58	-0.07	6/18/2022 22:53	11.60	-0.04	6/19/2022 0:10	-0.09
6/18/2022 23:07	12.09	0.13	6/20/2022 0:51	11.59	-0.02	6/18/2022 22:54	11.59	-0.04	6/19/2022 0:11	-0.12
6/18/2022 23:08	12.07	0.05	6/20/2022 0:52	11.60	-0.03	6/18/2022 22:55	11.60	-0.04	6/19/2022 0:12	-0.08
6/18/2022 23:09	12.09	0.09	6/20/2022 0:53	11.59	-0.03	6/18/2022 22:56	11.61	-0.02	6/19/2022 0:13	-0.10
6/18/2022 23:10	12.10	0.07	6/20/2022 0:54	11.55	-0.05	6/18/2022 22:57	11.61	-0.03	6/19/2022 0:14	-0.12

6/18/2022 23:11	12.07	0.01	6/20/2022 0:55	11.59	-0.11	6/18/2022 22:58	11.62	-0.05	6/19/2022 0:15	-0.12
6/18/2022 23:12	12.07	0.05	6/20/2022 0:56	11.58	-0.06	6/18/2022 22:59	11.61	-0.03	6/19/2022 0:16	-0.09
6/18/2022 23:13	12.08	0.08	6/20/2022 0:57	11.55	0.06	6/18/2022 23:00	11.62	0.02	6/19/2022 0:17	-0.11
6/18/2022 23:14	12.10	0.14	6/20/2022 0:58	11.57	0.04	6/18/2022 23:01	11.63	-0.02	6/19/2022 0:18	-0.07
6/18/2022 23:15	12.09	0.12	6/20/2022 0:59	11.58	-0.10	6/18/2022 23:02	11.60	-0.06	6/19/2022 0:19	-0.14
6/18/2022 23:16	12.09	0.08	6/20/2022 1:00	11.58	-0.01	6/18/2022 23:03	11.62	-0.05	6/19/2022 0:20	-0.13
6/18/2022 23:17	12.08	0.08	6/20/2022 1:01	11.57	-0.04	6/18/2022 23:04	11.62	-0.09	6/19/2022 0:21	-0.06
6/18/2022 23:18	12.07	0.09	6/20/2022 1:02	11.60	-0.05	6/18/2022 23:05	11.60	-0.04	6/19/2022 0:22	-0.08
6/18/2022 23:19	12.10	0.12	6/20/2022 1:03	11.60	-0.05	6/18/2022 23:06	11.62	0.03	6/19/2022 0:23	-0.11
6/18/2022 23:20	12.07	0.08	6/20/2022 1:04	11.59	0.01	6/18/2022 23:07	11.59	0.00	6/19/2022 0:24	-0.06
6/18/2022 23:21	12.09	0.06	6/20/2022 1:05	11.55	-0.07	6/18/2022 23:08	11.60	-0.01	6/19/2022 0:25	-0.14
6/18/2022 23:22	12.09	0.14	6/20/2022 1:06	11.58	0.05	6/18/2022 23:09	11.61	0.00	6/19/2022 0:26	-0.09
6/18/2022 23:23	12.09	0.10	6/20/2022 1:07	11.58	0.01	6/18/2022 23:10	11.63	-0.07	6/19/2022 0:27	-0.15
6/18/2022 23:24	12.08	0.17	6/20/2022 1:08	11.57	0.01	6/18/2022 23:11	11.60	-0.05	6/19/2022 0:28	-0.10
6/18/2022 23:25	12.12	0.03	6/20/2022 1:09	11.57	0.05	6/18/2022 23:12	11.60	-0.01	6/19/2022 0:29	-0.08
6/18/2022 23:26	12.08	0.08	6/20/2022 1:10	11.57	-0.02	6/18/2022 23:13	11.61	-0.07	6/19/2022 0:30	-0.11
6/18/2022 23:27	12.07	0.04	6/20/2022 1:11	11.59	-0.01	6/18/2022 23:14	11.61	-0.01	6/19/2022 0:31	-0.07
6/18/2022 23:28	12.06	0.15	6/20/2022 1:12	11.57	-0.04	6/18/2022 23:15	11.62	-0.02	6/19/2022 0:32	-0.11
6/18/2022 23:29	12.10	0.15	6/20/2022 1:13	11.57	-0.04	6/18/2022 23:16	11.61	-0.02	6/19/2022 0:33	-0.11
6/18/2022 23:30	12.09	0.10	6/20/2022 1:14	11.58	-0.04	6/18/2022 23:17	11.60	-0.02	6/19/2022 0:34	-0.13
6/18/2022 23:31	12.09	0.13	6/20/2022 1:15	11.58	0.06	6/18/2022 23:18	11.63	-0.01	6/19/2022 0:35	-0.07
6/18/2022 23:32	12.07	0.13	6/20/2022 1:16	11.56	-0.01	6/18/2022 23:19	11.62	-0.02	6/19/2022 0:36	-0.14
6/18/2022 23:33	12.10	0.09	6/20/2022 1:17	11.57	0.00	6/18/2022 23:20	11.60	-0.05	6/19/2022 0:37	-0.14
6/18/2022 23:34	12.10	0.04	6/20/2022 1:18	11.57	-0.02	6/18/2022 23:21	11.63	-0.05	6/19/2022 0:38	-0.14
6/18/2022 23:35	12.08	0.10	6/20/2022 1:19	11.58	0.02	6/18/2022 23:22	11.63	-0.02	6/19/2022 0:39	-0.08
6/18/2022 23:36	12.05	0.12	6/20/2022 1:20	11.57	-0.05	6/18/2022 23:23	11.61	-0.04	6/19/2022 0:40	-0.08
6/18/2022 23:37	12.07	0.06	6/20/2022 1:21	11.57	-0.04	6/18/2022 23:24	11.60	-0.04	6/19/2022 0:41	-0.11
6/18/2022 23:38	12.05	0.07	6/20/2022 1:22	11.59	-0.04	6/18/2022 23:25	11.63	-0.04	6/19/2022 0:42	-0.12
6/18/2022 23:39	12.11	0.09	6/20/2022 1:23	11.59	-0.01	6/18/2022 23:26	11.62	-0.04	6/19/2022 0:43	-0.04
6/18/2022 23:40	12.06	0.08	6/20/2022 1:24	11.59	-0.07	6/18/2022 23:27	11.60	-0.03	6/19/2022 0:44	-0.08
6/18/2022 23:41	12.08	0.08	6/20/2022 1:25	11.57	0.04	6/18/2022 23:28	11.61	-0.05	6/19/2022 0:45	-0.14
6/18/2022 23:42	12.05	0.11	6/20/2022 1:26	11.58	0.03	6/18/2022 23:29	11.63	-0.02	6/19/2022 0:46	-0.12
6/18/2022 23:43	12.07	0.06	6/20/2022 1:27	11.55	-0.08	6/18/2022 23:30	11.62	-0.03	6/19/2022 0:47	-0.08
6/18/2022 23:44	12.08	0.05	6/20/2022 1:28	11.59	0.01	6/18/2022 23:31	11.62	-0.01	6/19/2022 0:48	-0.11
6/18/2022 23:45	12.07	0.13	6/20/2022 1:29	11.57	0.02	6/18/2022 23:32	11.62	0.00	6/19/2022 0:49	-0.08
6/18/2022 23:46	12.08	0.13	6/20/2022 1:30	11.57	-0.02	6/18/2022 23:33	11.62	-0.01	6/19/2022 0:50	-0.07
6/18/2022 23:47	12.08	0.11	6/20/2022 1:31	11.58	0.00	6/18/2022 23:34	11.60	-0.05	6/19/2022 0:51	-0.10
6/18/2022 23:48	12.09	0.11	6/20/2022 1:32	11.55	-0.02	6/18/2022 23:35	11.62	-0.01	6/19/2022 0:52	-0.11
6/18/2022 23:49	12.07	0.07	6/20/2022 1:33	11.58	-0.03	6/18/2022 23:36	11.62	-0.03	6/19/2022 0:53	-0.06
6/18/2022 23:50	12.07	0.04	6/20/2022 1:34	11.55	0.00	6/18/2022 23:37	11.60	-0.03	6/19/2022 0:54	-0.11
6/18/2022 23:51	12.09	0.08	6/20/2022 1:35	11.56	0.01	6/18/2022 23:38	11.61	-0.04	6/19/2022 0:55	-0.08
6/18/2022 23:52	12.07	0.03	6/20/2022 1:36	11.58	0.02	6/18/2022 23:39	11.60	0.02	6/19/2022 0:56	-0.12
6/18/2022 23:53	12.11	0.13	6/20/2022 1:37	11.57	-0.06	6/18/2022 23:40	11.62	-0.06	6/19/2022 0:57	-0.07
6/18/2022 23:54	12.10	0.09	6/20/2022 1:38	11.58	0.00	6/18/2022 23:41	11.61	-0.05	6/19/2022 0:58	-0.12
6/18/2022 23:55	12.10	0.08	6/20/2022 1:39	11.56	-0.01	6/18/2022 23:42	11.63	-0.05	6/19/2022 0:59	-0.08
6/18/2022 23:56	12.06	0.07	6/20/2022 1:40	11.58	-0.04	6/18/2022 23:43	11.61	-0.01	6/19/2022 1:00	-0.12
6/18/2022 23:57	12.10	0.23	6/20/2022 1:41	11.55	-0.01	6/18/2022 23:44	11.62	-0.03	6/19/2022 1:01	-0.15
6/18/2022 23:58	12.09	0.14	6/20/2022 1:42	11.58	0.00	6/18/2022 23:45	11.64	-0.01	6/19/2022 1:02	-0.08
6/18/2022 23:59	12.09	0.07	6/20/2022 1:43	11.59	-0.03	6/18/2022 23:46	11.62	-0.05	6/19/2022 1:03	-0.11
6/19/2022 0:00	12.09	0.10	6/20/2022 1:44	11.56	-0.06	6/18/2022 23:47	11.62	-0.04	6/19/2022 1:04	-0.10
6/19/2022 0:01	12.08	0.12	6/20/2022 1:45	11.58	-0.02	6/18/2022 23:48	11.62	-0.01	6/19/2022 1:05	-0.12
6/19/2022 0:02	12.08	0.19	6/20/2022 1:46	11.58	-0.07	6/18/2022 23:49	11.65	-0.05	6/19/2022 1:06	-0.07
6/19/2022 0:03	12.12	0.03	6/20/2022 1:47	11.57	0.02	6/18/2022 23:50	11.62	-0.03	6/19/2022 1:07	-0.11
6/19/2022 0:04	12.08	0.14	6/20/2022 1:48	11.56	0.02	6/18/2022 23:51	11.62	-0.04	6/19/2022 1:08	-0.13
6/19/2022 0:05	12.06	0.17	6/20/2022 1:49	11.58	0.05	6/18/2022 23:52	11.65	-0.01	6/19/2022 1:09	-0.07
6/19/2022 0:06	12.09	0.14	6/20/2022 1:50	11.59	0.02	6/18/2022 23:53	11.64	-0.04	6/19/2022 1:10	-0.10
6/19/2022 0:07	12.10	0.03	6/20/2022 1:51	11.59	-0.01	6/18/2022 23:54	11.60	0.02	6/19/2022 1:11	-0.09
6/19/2022 0:08	12.09	0.04	6/20/2022 1:52	11.58	-0.01	6/18/2022 23:55	11.58	-0.02	6/19/2022 1:12	-0.06
6/19/2022 0:09	12.09	0.10	6/20/2022 1:53	11.58	-0.01	6/18/2022 23:56	11.64	-0.02	6/19/2022 1:13	-0.14
6/19/2022 0:10	12.11	0.17	6/20/2022 1:54	11.54	-0.01	6/18/2022 23:57	11.61	-0.02	6/19/2022 1:14	-0.11
6/19/2022 0:11	12.08	0.16	6/20/2022 1:55	11.56	0.02	6/18/2022 23:58	11.65	-0.02	6/19/2022 1:15	-0.08
6/19/2022 0:12	12.10	0.18	6/20/2022 1:56	11.58	-0.08	6/18/2022 23:59	11.63	-0.03	6/19/2022 1:16	-0.11
6/19/2022 0:13	12.08	0.10	6/20/2022 1:57	11.57	0.02	6/19/2022 0:00	11.64	-0.03	6/19/2022 1:17	-0.08
6/19/2022 0:14	12.10	0.12	6/20/2022 1:58	11.58	-0.06	6/19/2022 0:01	11.61	-0.05	6/19/2022 1:18	-0.11
6/19/2022 0:15	12.10	0.10	6/20/2022 1:59	11.57	-0.01	6/19/2022 0:02	11.61	-0.03	6/19/2022 1:19	-0.10
6/19/2022 0:16	12.07	0.18	6/20/2022 2:00	11.57	-0.01	6/19/2022 0:03	11.62	-0.01	6/19/2022 1:20	-0.10
6/19/2022 0:17	12.07	0.10	6/20/2022 2:01	11.58	0.04	6/19/2022 0:04	11.62	-0.04	6/19/2022 1:21	-0.08
6/19/2022 0:18	12.11	0.19	6/20/2022 2:02	11.58	0.06	6/19/2022 0:05	11.61	-0.02	6/19/2022 1:22	-0.11
6/19/2022 0:19	12.07	0.18	6/20/2022 2:03	11.60	-0.01	6/19/2022 0:06	11.65	-0.07	6/19/2022 1:23	-0.06
6/19/2022 0:20	12.09	0.09	6/20/2022 2:04	11.56	0.05	6/19/2022 0:07	11.63	-0.05	6/19/2022 1:24	-0.05
6/19/2022 0:21	12.07	0.14	6/20/2022 2:05	11.56	-0.11	6/19/2022 0:08	11.63	-0.03	6/19/2022 1:25	-0.11
6/19/2022 0:22	12.06	-0.05	6/20/2022 2:06	11.56	-0.13	6/19/2022 0:09	11.60	-0.04	6/19/2022 1:26	-0.14
6/19/2022 0:23	12.10	0.06	6/20/2022 2:07	11.59	-0.02	6/19/2022 0:10	11.61	-0.01	6/19/2022 1:27	-0.15
6/19/2022 0:24	12.10	0.11	6/20/2022 2:08	11.58	0.01	6/19/2022 0:11	11.64	-0.01	6/19/2022 1:28	-0.14
6/19/2022 0:25	12.06	0.09	6/20/2022 2:09	11.60	-0.02	6/19/2022 0:12	11.63	-0.03	6/19/2022 1:29	-0.08
6/19/2022 0:26	12.08	0.09	6/20/2022 2:10	11.56	-0.05	6/19/2022 0:13	11.63	0.01	6/19/2022 1:30	-0.09
6/19/2022 0:27	12.08	0.17	6/20/2022 2:11	11.58	-0.04	6/19/2022 0:14	11.61	-0.01	6/19/2022 1:31	-0.11
6/19/2022 0:28	12.09	0.06	6/20/2022 2:12	11.58	0.00	6/19/2022 0:15	11.60	-0.03	6/19/2022 1:32	-0.08
6/19/2022 0:29	12.10	0.14	6/20/2022 2:13	11.58	-0.03	6/19/2022 0:16	11.63	-0.07	6/19/2022 1:33	-0.08
6/19/2022 0:30	12.08	0.14	6/20/2022 2:14	11.57	-0.09	6/19/2022 0:17	11.61	0.00	6/19/2022 1:34	-0.15
6/19/2022 0:31	12.08	0.14	6/20/2022 2:15	11.59	0.00	6/19/2022 0:18	11.64	-0.03	6/19/2022 1:35	-0.07
6/19/2022 0:32	12.10	0.13	6/20/2022 2:16	11.58	0.03	6/19/2022 0:19	11.63	-0.06	6/19/2022 1:36	-0.14
6/19/2022 0:33	12.06	0.07	6/20/2022 2:17	11.57	-0.05	6/19/2022 0:20	11.63	-0.02	6/19/2022 1:37	-0.14
6/19/2022 0:34	12.08	0.09	6/20/2022 2:18	11.57	-0.07	6/19/2022 0:21	11.62	-0.06	6/19/2022 1:38	-0.09
6/19/2022 0:35	12.09	0.06	6/20/2022 2:19	11.58	-0.02	6/19/2022 0:22	11.60	0.02	6/19/2022 1:39	-0.10
6/19/2022 0:36	12.08	0.07	6/20/2022 2:20	11.57	-0.09	6/19/2022 0:23	11.61	-0.03	6/19/2022 1:40	-0.12
6/19/2022 0:37	12.09	0.16	6/20/2022 2:21	11.58	-0.07	6/19/2022 0:24	11.63	0.00	6/19/2022 1:41	-0.10
6/19/2022 0:38	12.06	0.11	6/20/2022 2:22	11.60	0.03	6/19/2022 0:25	11.63	-0.01	6/19/2022 1:42	-0.10

6/19/2022 0:39	12.08	0.12	6/20/2022 2:23	11.61	-0.02	6/19/2022 0:26	11.62	-0.01	6/19/2022 1:43	-0.11
6/19/2022 0:40	12.08	0.16	6/20/2022 2:24	11.56	-0.11	6/19/2022 0:27	11.62	-0.01	6/19/2022 1:44	-0.14
6/19/2022 0:41	12.08	0.22	6/20/2022 2:25	11.58	-0.09	6/19/2022 0:28	11.63	-0.04	6/19/2022 1:45	-0.09
6/19/2022 0:42	12.09	0.04	6/20/2022 2:26	11.59	0.00	6/19/2022 0:29	11.63	-0.03	6/19/2022 1:46	-0.11
6/19/2022 0:43	12.07	0.09	6/20/2022 2:27	11.59	0.00	6/19/2022 0:30	11.62	-0.04	6/19/2022 1:47	-0.12
6/19/2022 0:44	12.06	0.08	6/20/2022 2:28	11.55	-0.04	6/19/2022 0:31	11.62	-0.06	6/19/2022 1:48	-0.13
6/19/2022 0:45	12.11	0.17	6/20/2022 2:29	11.59	-0.02	6/19/2022 0:32	11.61	-0.08	6/19/2022 1:49	-0.14
6/19/2022 0:46	12.11	0.11	6/20/2022 2:30	11.57	0.02	6/19/2022 0:33	11.60	-0.04	6/19/2022 1:50	-0.06
6/19/2022 0:47	12.08	0.15	6/20/2022 2:31	11.58	-0.11	6/19/2022 0:34	11.61	-0.03	6/19/2022 1:51	-0.11
6/19/2022 0:48	12.06	0.09	6/20/2022 2:32	11.58	0.00	6/19/2022 0:35	11.64	-0.02	6/19/2022 1:52	-0.12
6/19/2022 0:49	12.06	0.06	6/20/2022 2:33	11.59	-0.07	6/19/2022 0:36	11.62	-0.06	6/19/2022 1:53	-0.09
6/19/2022 0:50	12.08	0.15	6/20/2022 2:34	11.58	-0.03	6/19/2022 0:37	11.63	-0.06	6/19/2022 1:54	-0.15
6/19/2022 0:51	12.10	0.08	6/20/2022 2:35	11.55	-0.03	6/19/2022 0:38	11.62	0.00	6/19/2022 1:55	-0.10
6/19/2022 0:52	12.07	0.04	6/20/2022 2:36	11.60	-0.04	6/19/2022 0:39	11.59	-0.04	6/19/2022 1:56	-0.11
6/19/2022 0:53	12.08	0.10	6/20/2022 2:37	11.61	-0.02	6/19/2022 0:40	11.60	-0.01	6/19/2022 1:57	-0.12
6/19/2022 0:54	12.07	0.04	6/20/2022 2:38	11.57	-0.05	6/19/2022 0:41	11.62	0.00	6/19/2022 1:58	-0.12
6/19/2022 0:55	12.07	0.19	6/20/2022 2:39	11.58	-0.02	6/19/2022 0:42	11.60	-0.06	6/19/2022 1:59	-0.11
6/19/2022 0:56	12.07	0.10	6/20/2022 2:40	11.57	-0.04	6/19/2022 0:43	11.64	-0.04	6/19/2022 2:00	-0.09
6/19/2022 0:57	12.09	0.12	6/20/2022 2:41	11.57	-0.05	6/19/2022 0:44	11.62	-0.05	6/19/2022 2:01	-0.12
6/19/2022 0:58	12.08	-0.05	6/20/2022 2:42	11.57	-0.02	6/19/2022 0:45	11.62	-0.04	6/19/2022 2:02	-0.13
6/19/2022 0:59	12.10	0.12	6/20/2022 2:43	11.58	-0.04	6/19/2022 0:46	11.63	-0.03	6/19/2022 2:03	-0.13
6/19/2022 1:00	12.07	0.07	6/20/2022 2:44	11.59	-0.06	6/19/2022 0:47	11.63	-0.04	6/19/2022 2:04	-0.11
6/19/2022 1:01	12.07	0.09	6/20/2022 2:45	11.57	-0.03	6/19/2022 0:48	11.62	0.02	6/19/2022 2:05	-0.13
6/19/2022 1:02	12.07	0.16	6/20/2022 2:46	11.58	-0.04	6/19/2022 0:49	11.62	-0.03	6/19/2022 2:06	-0.13
6/19/2022 1:03	12.08	0.12	6/20/2022 2:47	11.59	0.02	6/19/2022 0:50	11.63	-0.02	6/19/2022 2:07	-0.11
6/19/2022 1:04	12.09	0.12	6/20/2022 2:48	11.58	-0.02	6/19/2022 0:51	11.59	0.02	6/19/2022 2:08	-0.12
6/19/2022 1:05	12.09	0.13	6/20/2022 2:49	11.59	-0.06	6/19/2022 0:52	11.62	-0.07	6/19/2022 2:09	-0.12
6/19/2022 1:06	12.07	0.08	6/20/2022 2:50	11.58	0.00	6/19/2022 0:53	11.60	-0.03	6/19/2022 2:10	-0.08
6/19/2022 1:07	12.08	0.09	6/20/2022 2:51	11.58	-0.09	6/19/2022 0:54	11.62	-0.04	6/19/2022 2:11	-0.11
6/19/2022 1:08	12.06	0.10	6/20/2022 2:52	11.59	-0.06	6/19/2022 0:55	11.62	-0.02	6/19/2022 2:12	-0.08
6/19/2022 1:09	12.06	0.07	6/20/2022 2:53	11.58	0.01	6/19/2022 0:56	11.62	-0.05	6/19/2022 2:13	-0.12
6/19/2022 1:10	12.09	0.08	6/20/2022 2:54	11.60	-0.05	6/19/2022 0:57	11.60	-0.02	6/19/2022 2:14	-0.14
6/19/2022 1:11	12.07	0.16	6/20/2022 2:55	11.58	-0.02	6/19/2022 0:58	11.60	-0.01	6/19/2022 2:15	-0.15
6/19/2022 1:12	12.09	0.08	6/20/2022 2:56	11.57	-0.16	6/19/2022 0:59	11.62	0.01	6/19/2022 2:16	-0.11
6/19/2022 1:13	12.08	0.10	6/20/2022 2:57	11.56	-0.10	6/19/2022 1:00	11.61	-0.05	6/19/2022 2:17	-0.10
6/19/2022 1:14	12.08	0.15	6/20/2022 2:58	11.58	-0.01	6/19/2022 1:01	11.60	-0.03	6/19/2022 2:18	-0.12
6/19/2022 1:15	12.09	0.09	6/20/2022 2:59	11.58	-0.06	6/19/2022 1:02	11.62	-0.02	6/19/2022 2:19	-0.08
6/19/2022 1:16	12.09	0.04	6/20/2022 3:00	11.59	-0.07	6/19/2022 1:03	11.64	-0.03	6/19/2022 2:20	-0.08
6/19/2022 1:17	12.10	0.08	6/20/2022 3:01	11.61	-0.07	6/19/2022 1:04	11.64	-0.04	6/19/2022 2:21	-0.12
6/19/2022 1:18	12.09	0.13	6/20/2022 3:02	11.56	0.03	6/19/2022 1:05	11.64	-0.01	6/19/2022 2:22	-0.10
6/19/2022 1:19	12.08	0.17	6/20/2022 3:03	11.56	-0.16	6/19/2022 1:06	11.62	-0.01	6/19/2022 2:23	-0.09
6/19/2022 1:20	12.08	0.04	6/20/2022 3:04	11.57	-0.02	6/19/2022 1:07	11.63	-0.02	6/19/2022 2:24	-0.09
6/19/2022 1:21	12.07	0.09	6/20/2022 3:05	11.57	-0.04	6/19/2022 1:08	11.61	0.00	6/19/2022 2:25	-0.10
6/19/2022 1:22	12.11	0.09	6/20/2022 3:06	11.59	0.02	6/19/2022 1:09	11.60	-0.06	6/19/2022 2:26	-0.13
6/19/2022 1:23	12.09	0.08	6/20/2022 3:07	11.58	-0.10	6/19/2022 1:10	11.58	-0.04	6/19/2022 2:27	-0.12
6/19/2022 1:24	12.07	0.08	6/20/2022 3:08	11.58	0.00	6/19/2022 1:11	11.61	-0.04	6/19/2022 2:28	-0.14
6/19/2022 1:25	12.07	0.07	6/20/2022 3:09	11.59	-0.06	6/19/2022 1:12	11.63	-0.03	6/19/2022 2:29	-0.10
6/19/2022 1:26	12.07	0.16	6/20/2022 3:10	11.58	-0.13	6/19/2022 1:13	11.62	0.00	6/19/2022 2:30	-0.10
6/19/2022 1:27	12.07	0.10	6/20/2022 3:11	11.57	-0.05	6/19/2022 1:14	11.60	-0.03	6/19/2022 2:31	-0.09
6/19/2022 1:28	12.08	0.03	6/20/2022 3:12	11.57	-0.03	6/19/2022 1:15	11.61	-0.05	6/19/2022 2:32	-0.11
6/19/2022 1:29	12.12	0.03	6/20/2022 3:13	11.60	0.02	6/19/2022 1:16	11.63	-0.04	6/19/2022 2:33	-0.11
6/19/2022 1:30	12.09	0.13	6/20/2022 3:14	11.59	-0.02	6/19/2022 1:17	11.63	-0.02	6/19/2022 2:34	-0.11
6/19/2022 1:31	12.09	0.08	6/20/2022 3:15	11.58	-0.05	6/19/2022 1:18	11.61	0.00	6/19/2022 2:35	-0.12
6/19/2022 1:32	12.08	0.09	6/20/2022 3:16	11.60	0.01	6/19/2022 1:19	11.61	0.00	6/19/2022 2:36	-0.10
6/19/2022 1:33	12.08	0.13	6/20/2022 3:17	11.59	0.10	6/19/2022 1:20	11.62	-0.05	6/19/2022 2:37	-0.11
6/19/2022 1:34	12.08	0.07	6/20/2022 3:18	11.57	0.00	6/19/2022 1:21	11.60	-0.05	6/19/2022 2:38	-0.08
6/19/2022 1:35	12.08	0.14	6/20/2022 3:19	11.56	-0.07	6/19/2022 1:22	11.59	-0.03	6/19/2022 2:39	-0.09
6/19/2022 1:36	12.10	0.09	6/20/2022 3:20	11.56	0.03	6/19/2022 1:23	11.60	-0.04	6/19/2022 2:40	-0.07
6/19/2022 1:37	12.09	0.17	6/20/2022 3:21	11.56	-0.01	6/19/2022 1:24	11.61	-0.06	6/19/2022 2:41	-0.11
6/19/2022 1:38	12.12	0.08	6/20/2022 3:22	11.59	0.07	6/19/2022 1:25	11.61	-0.01	6/19/2022 2:42	-0.10
6/19/2022 1:39	12.10	0.08	6/20/2022 3:23	11.57	0.00	6/19/2022 1:26	11.61	-0.03	6/19/2022 2:43	-0.11
6/19/2022 1:40	12.08	0.09	6/20/2022 3:24	11.58	-0.05	6/19/2022 1:27	11.62	-0.03	6/19/2022 2:44	-0.12
6/19/2022 1:41	12.08	0.10	6/20/2022 3:25	11.55	-0.10	6/19/2022 1:28	11.61	-0.01	6/19/2022 2:45	-0.14
6/19/2022 1:42	12.08	0.07	6/20/2022 3:26	11.57	-0.08	6/19/2022 1:29	11.63	-0.04	6/19/2022 2:46	-0.09
6/19/2022 1:43	12.10	0.09	6/20/2022 3:27	11.60	-0.05	6/19/2022 1:30	11.62	-0.07	6/19/2022 2:47	-0.10
6/19/2022 1:44	12.08	0.09	6/20/2022 3:28	11.58	-0.09	6/19/2022 1:31	11.62	-0.02	6/19/2022 2:48	-0.11
6/19/2022 1:45	12.07	0.17	6/20/2022 3:29	11.59	-0.04	6/19/2022 1:32	11.64	-0.07	6/19/2022 2:49	-0.15
6/19/2022 1:46	12.06	0.04	6/20/2022 3:30	11.55	-0.08	6/19/2022 1:33	11.62	-0.02	6/19/2022 2:50	-0.06
6/19/2022 1:47	12.09	0.10	6/20/2022 3:31	11.56	0.01	6/19/2022 1:34	11.62	-0.02	6/19/2022 2:51	-0.07
6/19/2022 1:48	12.09	0.07	6/20/2022 3:32	11.56	-0.06	6/19/2022 1:35	11.63	-0.04	6/19/2022 2:52	-0.06
6/19/2022 1:49	12.07	0.05	6/20/2022 3:33	11.57	0.00	6/19/2022 1:36	11.64	-0.04	6/19/2022 2:53	-0.12
6/19/2022 1:50	12.07	0.11	6/20/2022 3:34	11.58	0.02	6/19/2022 1:37	11.64	0.00	6/19/2022 2:54	-0.11
6/19/2022 1:51	12.09	0.06	6/20/2022 3:35	11.57	-0.05	6/19/2022 1:38	11.63	-0.02	6/19/2022 2:55	-0.07
6/19/2022 1:52	12.09	0.18	6/20/2022 3:36	11.59	0.07	6/19/2022 1:39	11.61	-0.06	6/19/2022 2:56	-0.12
6/19/2022 1:53	12.08	0.13	6/20/2022 3:37	11.58	-0.05	6/19/2022 1:40	11.60	-0.02	6/19/2022 2:57	-0.09
6/19/2022 1:54	12.08	0.09	6/20/2022 3:38	11.58	-0.10	6/19/2022 1:41	11.63	-0.04	6/19/2022 2:58	-0.09
6/19/2022 1:55	12.10	0.05	6/20/2022 3:39	11.58	-0.07	6/19/2022 1:42	11.60	0.00	6/19/2022 2:59	-0.04
6/19/2022 1:56	12.09	0.10	6/20/2022 3:40	11.57	-0.08	6/19/2022 1:43	11.61	-0.03	6/19/2022 3:00	-0.10
6/19/2022 1:57	12.09	0.06	6/20/2022 3:41	11.57	-0.02	6/19/2022 1:44	11.62	-0.03	6/19/2022 3:01	-0.10
6/19/2022 1:58	12.10	0.11	6/20/2022 3:42	11.59	-0.02	6/19/2022 1:45	11.61	-0.06	6/19/2022 3:02	-0.06
6/19/2022 1:59	12.08	0.09	6/20/2022 3:43	11.57	-0.02	6/19/2022 1:46	11.63	-0.02	6/19/2022 3:03	-0.18
6/19/2022 2:00	12.09	0.15	6/20/2022 3:44	11.56	-0.11	6/19/2022 1:47	11.62	0.00	6/19/2022 3:04	-0.11
6/19/2022 2:01	12.08	0.14	6/20/2022 3:45	11.58	0.02	6/19/2022 1:48	11.61	-0.06	6/19/2022 3:05	-0.11
6/19/2022 2:02	12.09	0.18	6/20/2022 3:46	11.59	-0.08	6/19/2022 1:49	11.62	-0.04	6/19/2022 3:06	-0.10
6/19/2022 2:03	12.07	0.08	6/20/2022 3:47	11.59	-0.03	6/19/2022 1:50	11.62	0.00	6/19/2022 3:07	-0.07
6/19/2022 2:04	12.08	0.12	6/20/2022 3:48	11.56	-0.06	6/19/2022 1:51	11.63	-0.01	6/19/2022 3:08	-0.13
6/19/2022 2:05	12.09	0.13	6/20/2022 3:49	11.59	-0.01	6/19/2022 1:52	11.62	0.02	6/19/2022 3:09	-0.14
6/19/2022 2:06	12.09	0.14	6/20/2022 3:50	11.61	-0.05	6/19/2022 1:53	11.62	-0.03	6/19/2022 3:10	-0.08

6/19/2022 2:07	12.08	0.12	6/20/2022 3:51	11.59	0.02	6/19/2022 1:54	11.63	-0.02	6/19/2022 3:11	-0.07
6/19/2022 2:08	12.05	0.03	6/20/2022 3:52	11.58	0.00	6/19/2022 1:55	11.60	-0.06	6/19/2022 3:12	-0.08
6/19/2022 2:09	12.07	0.07	6/20/2022 3:53	11.56	-0.07	6/19/2022 1:56	11.58	-0.01	6/19/2022 3:13	-0.05
6/19/2022 2:10	12.06	0.22	6/20/2022 3:54	11.60	0.03	6/19/2022 1:57	11.61	-0.04	6/19/2022 3:14	-0.09
6/19/2022 2:11	12.09	0.07	6/20/2022 3:55	11.58	-0.04	6/19/2022 1:58	11.61	-0.02	6/19/2022 3:15	-0.07
6/19/2022 2:12	12.08	0.11	6/20/2022 3:56	11.59	-0.06	6/19/2022 1:59	11.60	-0.06	6/19/2022 3:16	-0.05
6/19/2022 2:13	12.09	0.17	6/20/2022 3:57	11.57	0.05	6/19/2022 2:00	11.61	-0.04	6/19/2022 3:17	-0.08
6/19/2022 2:14	12.08	0.07	6/20/2022 3:58	11.57	-0.04	6/19/2022 2:01	11.59	-0.06	6/19/2022 3:18	-0.08
6/19/2022 2:15	12.06	0.10	6/20/2022 3:59	11.57	-0.07	6/19/2022 2:02	11.61	-0.05	6/19/2022 3:19	-0.12
6/19/2022 2:16	12.07	0.05	6/20/2022 4:00	11.58	-0.09	6/19/2022 2:03	11.61	-0.04	6/19/2022 3:20	-0.10
6/19/2022 2:17	12.05	0.14	6/20/2022 4:01	11.61	-0.05	6/19/2022 2:04	11.60	-0.03	6/19/2022 3:21	-0.14
6/19/2022 2:18	12.09	0.11	6/20/2022 4:02	11.58	-0.05	6/19/2022 2:05	11.62	-0.04	6/19/2022 3:22	-0.09
6/19/2022 2:19	12.09	0.10	6/20/2022 4:03	11.57	0.00	6/19/2022 2:06	11.62	-0.02	6/19/2022 3:23	-0.12
6/19/2022 2:20	12.08	0.06	6/20/2022 4:04	11.58	0.08	6/19/2022 2:07	11.61	-0.05	6/19/2022 3:24	-0.06
6/19/2022 2:21	12.07	0.09	6/20/2022 4:05	11.58	-0.01	6/19/2022 2:08	11.62	-0.02	6/19/2022 3:25	-0.07
6/19/2022 2:22	12.07	0.10	6/20/2022 4:06	11.61	-0.02	6/19/2022 2:09	11.62	-0.06	6/19/2022 3:26	-0.12
6/19/2022 2:23	12.08	0.10	6/20/2022 4:07	11.56	-0.07	6/19/2022 2:10	11.62	-0.06	6/19/2022 3:27	-0.11
6/19/2022 2:24	12.06	0.08	6/20/2022 4:08	11.60	-0.08	6/19/2022 2:11	11.62	-0.01	6/19/2022 3:28	-0.08
6/19/2022 2:25	12.10	0.17	6/20/2022 4:09	11.60	0.02	6/19/2022 2:12	11.62	-0.03	6/19/2022 3:29	-0.06
6/19/2022 2:26	12.09	0.03	6/20/2022 4:10	11.59	-0.01	6/19/2022 2:13	11.63	-0.04	6/19/2022 3:30	-0.11
6/19/2022 2:27	12.10	0.12	6/20/2022 4:11	11.57	0.05	6/19/2022 2:14	11.63	-0.02	6/19/2022 3:31	-0.07
6/19/2022 2:28	12.06	0.09	6/20/2022 4:12	11.55	0.01	6/19/2022 2:15	11.63	-0.03	6/19/2022 3:32	-0.07
6/19/2022 2:29	12.09	0.13	6/20/2022 4:13	11.59	-0.11	6/19/2022 2:16	11.61	-0.02	6/19/2022 3:33	-0.12
6/19/2022 2:30	12.10	0.08	6/20/2022 4:14	11.57	-0.02	6/19/2022 2:17	11.63	0.01	6/19/2022 3:34	-0.07
6/19/2022 2:31	12.11	0.14	6/20/2022 4:15	11.58	-0.14	6/19/2022 2:18	11.63	-0.03	6/19/2022 3:35	-0.06
6/19/2022 2:32	12.09	0.12	6/20/2022 4:16	11.58	-0.08	6/19/2022 2:19	11.62	-0.07	6/19/2022 3:36	-0.07
6/19/2022 2:33	12.07	0.14	6/20/2022 4:17	11.55	0.01	6/19/2022 2:20	11.59	-0.02	6/19/2022 3:37	-0.05
6/19/2022 2:34	12.07	0.08	6/20/2022 4:18	11.59	-0.02	6/19/2022 2:21	11.62	-0.02	6/19/2022 3:38	-0.16
6/19/2022 2:35	12.09	0.18	6/20/2022 4:19	11.58	-0.02	6/19/2022 2:22	11.61	0.00	6/19/2022 3:39	-0.13
6/19/2022 2:36	12.08	0.07	6/20/2022 4:20	11.57	-0.01	6/19/2022 2:23	11.62	-0.05	6/19/2022 3:40	-0.07
6/19/2022 2:37	12.08	0.09	6/20/2022 4:21	11.60	-0.08	6/19/2022 2:24	11.63	0.01	6/19/2022 3:41	-0.06
6/19/2022 2:38	12.06	0.07	6/20/2022 4:22	11.57	-0.05	6/19/2022 2:25	11.61	-0.03	6/19/2022 3:42	-0.07
6/19/2022 2:39	12.07	0.05	6/20/2022 4:23	11.58	0.00	6/19/2022 2:26	11.61	0.00	6/19/2022 3:43	-0.13
6/19/2022 2:40	12.11	0.07	6/20/2022 4:24	11.55	0.00	6/19/2022 2:27	11.61	-0.02	6/19/2022 3:44	-0.08
6/19/2022 2:41	12.09	0.14	6/20/2022 4:25	11.57	-0.02	6/19/2022 2:28	11.60	-0.02	6/19/2022 3:45	-0.12
6/19/2022 2:42	12.04	0.07	6/20/2022 4:26	11.58	0.01	6/19/2022 2:29	11.63	-0.04	6/19/2022 3:46	-0.14
6/19/2022 2:43	12.07	0.16	6/20/2022 4:27	11.58	0.01	6/19/2022 2:30	11.62	-0.01	6/19/2022 3:47	-0.14
6/19/2022 2:44	12.08	0.00	6/20/2022 4:28	11.58	-0.01	6/19/2022 2:31	11.59	-0.02	6/19/2022 3:48	-0.09
6/19/2022 2:45	12.07	0.07	6/20/2022 4:29	11.57	0.02	6/19/2022 2:32	11.63	-0.05	6/19/2022 3:49	-0.13
6/19/2022 2:46	12.08	0.06	6/20/2022 4:30	11.60	-0.12	6/19/2022 2:33	11.62	-0.04	6/19/2022 3:50	-0.04
6/19/2022 2:47	12.09	0.03	6/20/2022 4:31	11.59	-0.08	6/19/2022 2:34	11.63	0.01	6/19/2022 3:51	-0.12
6/19/2022 2:48	12.08	0.13	6/20/2022 4:32	11.56	-0.03	6/19/2022 2:35	11.60	-0.05	6/19/2022 3:52	-0.07
6/19/2022 2:49	12.09	0.08	6/20/2022 4:33	11.58	-0.02	6/19/2022 2:36	11.63	-0.03	6/19/2022 3:53	-0.09
6/19/2022 2:50	12.07	0.13	6/20/2022 4:34	11.58	0.08	6/19/2022 2:37	11.60	-0.02	6/19/2022 3:54	-0.08
6/19/2022 2:51	12.09	0.01	6/20/2022 4:35	11.57	-0.06	6/19/2022 2:38	11.60	-0.05	6/19/2022 3:55	-0.08
6/19/2022 2:52	12.10	0.09	6/20/2022 4:36	11.58	-0.05	6/19/2022 2:39	11.61	-0.08	6/19/2022 3:56	-0.12
6/19/2022 2:53	12.08	0.09	6/20/2022 4:37	11.58	0.00	6/19/2022 2:40	11.60	-0.02	6/19/2022 3:57	-0.09
6/19/2022 2:54	12.09	0.13	6/20/2022 4:38	11.59	0.00	6/19/2022 2:41	11.62	0.01	6/19/2022 3:58	-0.16
6/19/2022 2:55	12.09	0.18	6/20/2022 4:39	11.57	-0.07	6/19/2022 2:42	11.62	0.00	6/19/2022 3:59	-0.10
6/19/2022 2:56	12.08	0.13	6/20/2022 4:40	11.58	-0.14	6/19/2022 2:43	11.60	-0.07	6/19/2022 4:00	-0.08
6/19/2022 2:57	12.08	0.09	6/20/2022 4:41	11.57	-0.06	6/19/2022 2:44	11.63	-0.01	6/19/2022 4:01	-0.07
6/19/2022 2:58	12.06	0.10	6/20/2022 4:42	11.57	-0.02	6/19/2022 2:45	11.61	-0.05	6/19/2022 4:02	-0.14
6/19/2022 2:59	12.07	0.10	6/20/2022 4:43	11.55	-0.02	6/19/2022 2:46	11.62	-0.06	6/19/2022 4:03	-0.08
6/19/2022 3:00	12.08	0.09	6/20/2022 4:44	11.59	-0.05	6/19/2022 2:47	11.62	-0.06	6/19/2022 4:04	-0.06
6/19/2022 3:01	12.07	0.04	6/20/2022 4:45	11.60	-0.04	6/19/2022 2:48	11.61	-0.03	6/19/2022 4:05	-0.12
6/19/2022 3:02	12.10	0.05	6/20/2022 4:46	11.59	0.00	6/19/2022 2:49	11.60	-0.02	6/19/2022 4:06	-0.16
6/19/2022 3:03	12.10	0.14	6/20/2022 4:47	11.58	-0.01	6/19/2022 2:50	11.61	0.02	6/19/2022 4:07	-0.04
6/19/2022 3:04	12.09	0.15	6/20/2022 4:48	11.56	-0.06	6/19/2022 2:51	11.62	-0.06	6/19/2022 4:08	-0.07
6/19/2022 3:05	12.10	0.18	6/20/2022 4:49	11.59	0.06	6/19/2022 2:52	11.62	-0.04	6/19/2022 4:09	-0.10
6/19/2022 3:06	12.07	0.14	6/20/2022 4:50	11.59	0.01	6/19/2022 2:53	11.61	-0.04	6/19/2022 4:10	-0.10
6/19/2022 3:07	12.09	0.05	6/20/2022 4:51	11.56	-0.03	6/19/2022 2:54	11.60	-0.09	6/19/2022 4:11	-0.15
6/19/2022 3:08	12.08	0.06	6/20/2022 4:52	11.61	-0.10	6/19/2022 2:55	11.65	-0.04	6/19/2022 4:12	-0.09
6/19/2022 3:09	12.10	0.14	6/20/2022 4:53	11.59	0.06	6/19/2022 2:56	11.62	-0.03	6/19/2022 4:13	-0.06
6/19/2022 3:10	12.09	-0.01	6/20/2022 4:54	11.59	0.02	6/19/2022 2:57	11.64	-0.03	6/19/2022 4:14	-0.12
6/19/2022 3:11	12.10	0.02	6/20/2022 4:55	11.59	-0.05	6/19/2022 2:58	11.62	0.00	6/19/2022 4:15	-0.09
6/19/2022 3:12	12.09	0.18	6/20/2022 4:56	11.56	0.01	6/19/2022 2:59	11.60	-0.06	6/19/2022 4:16	-0.06
6/19/2022 3:13	12.08	0.03	6/20/2022 4:57	11.56	-0.02	6/19/2022 3:00	11.60	-0.05	6/19/2022 4:17	-0.12
6/19/2022 3:14	12.10	0.08	6/20/2022 4:58	11.57	-0.03	6/19/2022 3:01	11.62	0.03	6/19/2022 4:18	-0.13
6/19/2022 3:15	12.10	0.09	6/20/2022 4:59	11.56	-0.05	6/19/2022 3:02	11.63	-0.03	6/19/2022 4:19	-0.12
6/19/2022 3:16	12.08	0.05	6/20/2022 5:00	11.58	-0.01	6/19/2022 3:03	11.63	-0.01	6/19/2022 4:20	-0.08
6/19/2022 3:17	12.10	0.04	6/20/2022 5:01	11.58	-0.01	6/19/2022 3:04	11.61	-0.02	6/19/2022 4:21	-0.12
6/19/2022 3:18	12.11	0.11	6/20/2022 5:02	11.59	0.01	6/19/2022 3:05	11.63	-0.02	6/19/2022 4:22	-0.11
6/19/2022 3:19	12.10	0.06	6/20/2022 5:03	11.58	-0.02	6/19/2022 3:06	11.61	-0.06	6/19/2022 4:23	-0.10
6/19/2022 3:20	12.09	0.08	6/20/2022 5:04	11.58	-0.02	6/19/2022 3:07	11.63	-0.03	6/19/2022 4:24	-0.12
6/19/2022 3:21	12.09	0.08	6/20/2022 5:05	11.58	-0.01	6/19/2022 3:08	11.62	-0.01	6/19/2022 4:25	-0.09
6/19/2022 3:22	12.08	0.14	6/20/2022 5:06	11.57	-0.13	6/19/2022 3:09	11.63	-0.02	6/19/2022 4:26	-0.11
6/19/2022 3:23	12.09	0.09	6/20/2022 5:07	11.56	0.04	6/19/2022 3:10	11.61	-0.03	6/19/2022 4:27	-0.13
6/19/2022 3:24	12.06	0.11	6/20/2022 5:08	11.58	0.00	6/19/2022 3:11	11.61	-0.02	6/19/2022 4:28	-0.06
6/19/2022 3:25	12.07	0.10	6/20/2022 5:09	11.57	-0.07	6/19/2022 3:12	11.61	-0.06	6/19/2022 4:29	-0.06
6/19/2022 3:26	12.08	0.07	6/20/2022 5:10	11.58	0.02	6/19/2022 3:13	11.61	-0.07	6/19/2022 4:30	-0.08
6/19/2022 3:27	12.09	0.12	6/20/2022 5:11	11.54	-0.01	6/19/2022 3:14	11.60	-0.07	6/19/2022 4:31	-0.11
6/19/2022 3:28	12.10	0.13	6/20/2022 5:12	11.57	0.02	6/19/2022 3:15	11.63	-0.05	6/19/2022 4:32	-0.10
6/19/2022 3:29	12.08	0.14	6/20/2022 5:13	11.57	0.03	6/19/2022 3:16	11.59	0.00	6/19/2022 4:33	-0.11
6/19/2022 3:30	12.08	0.10	6/20/2022 5:14	11.58	-0.06	6/19/2022 3:17	11.63	-0.02	6/19/2022 4:34	-0.13
6/19/2022 3:31	12.10	0.14	6/20/2022 5:15	11.58	-0.02	6/19/2022 3:18	11.60	0.01	6/19/2022 4:35	-0.15
6/19/2022 3:32	12.09	0.12	6/20/2022 5:16	11.61	0.05	6/19/2022 3:19	11.61	-0.05	6/19/2022 4:36	-0.11
6/19/2022 3:33	12.12	0.06	6/20/2022 5:17	11.57	-0.05	6/19/2022 3:20	11.62	-0.01	6/19/2022 4:37	-0.10
6/19/2022 3:34	12.07	0.12	6/20/2022 5:18	11.57	0.01	6/19/2022 3:21	11.60	-0.01	6/19/2022 4:38	-0.15

6/19/2022 3:35	12.09	0.07	6/20/2022 5:19	11.57	-0.03	6/19/2022 3:22	11.65	-0.07	6/19/2022 4:39	-0.11
6/19/2022 3:36	12.06	0.09	6/20/2022 5:20	11.59	-0.02	6/19/2022 3:23	11.64	-0.04	6/19/2022 4:40	-0.10
6/19/2022 3:37	12.06	0.23	6/20/2022 5:21	11.58	-0.02	6/19/2022 3:24	11.61	-0.05	6/19/2022 4:41	-0.14
6/19/2022 3:38	12.08	0.09	6/20/2022 5:22	11.58	-0.04	6/19/2022 3:25	11.62	-0.01	6/19/2022 4:42	-0.06
6/19/2022 3:39	12.09	0.12	6/20/2022 5:23	11.57	-0.04	6/19/2022 3:26	11.63	-0.04	6/19/2022 4:43	-0.09
6/19/2022 3:40	12.10	0.14	6/20/2022 5:24	11.56	-0.02	6/19/2022 3:27	11.61	-0.02	6/19/2022 4:44	-0.08
6/19/2022 3:41	12.09	0.09	6/20/2022 5:25	11.57	0.03	6/19/2022 3:28	11.63	-0.02	6/19/2022 4:45	-0.06
6/19/2022 3:42	12.09	0.18	6/20/2022 5:26	11.55	-0.04	6/19/2022 3:29	11.63	-0.02	6/19/2022 4:46	-0.14
6/19/2022 3:43	12.08	0.08	6/20/2022 5:27	11.57	-0.02	6/19/2022 3:30	11.63	-0.04	6/19/2022 4:47	-0.09
6/19/2022 3:44	12.09	0.12	6/20/2022 5:28	11.56	0.02	6/19/2022 3:31	11.63	-0.03	6/19/2022 4:48	-0.08
6/19/2022 3:45	12.11	0.10	6/20/2022 5:29	11.60	0.00	6/19/2022 3:32	11.60	-0.04	6/19/2022 4:49	-0.12
6/19/2022 3:46	12.09	0.18	6/20/2022 5:30	11.57	-0.01	6/19/2022 3:33	11.61	-0.06	6/19/2022 4:50	-0.08
6/19/2022 3:47	12.08	0.09	6/20/2022 5:31	11.57	-0.03	6/19/2022 3:34	11.62	-0.03	6/19/2022 4:51	-0.08
6/19/2022 3:48	12.07	0.06	6/20/2022 5:32	11.58	-0.02	6/19/2022 3:35	11.62	-0.05	6/19/2022 4:52	-0.05
6/19/2022 3:49	12.08	0.01	6/20/2022 5:33	11.58	-0.01	6/19/2022 3:36	11.59	-0.04	6/19/2022 4:53	-0.05
6/19/2022 3:50	12.06	0.09	6/20/2022 5:34	11.58	-0.03	6/19/2022 3:37	11.61	-0.02	6/19/2022 4:54	-0.11
6/19/2022 3:51	12.09	0.12	6/20/2022 5:35	11.58	-0.04	6/19/2022 3:38	11.62	-0.02	6/19/2022 4:55	-0.09
6/19/2022 3:52	12.08	0.18	6/20/2022 5:36	11.58	-0.08	6/19/2022 3:39	11.64	-0.04	6/19/2022 4:56	-0.07
6/19/2022 3:53	12.08	0.11	6/20/2022 5:37	11.58	0.05	6/19/2022 3:40	11.60	-0.04	6/19/2022 4:57	-0.06
6/19/2022 3:54	12.09	0.07	6/20/2022 5:38	11.55	-0.03	6/19/2022 3:41	11.62	-0.04	6/19/2022 4:58	-0.06
6/19/2022 3:55	12.09	0.09	6/20/2022 5:39	11.58	-0.05	6/19/2022 3:42	11.64	-0.05	6/19/2022 4:59	-0.10
6/19/2022 3:56	12.08	0.05	6/20/2022 5:40	11.59	-0.05	6/19/2022 3:43	11.61	-0.04	6/19/2022 5:00	-0.05
6/19/2022 3:57	12.07	0.15	6/20/2022 5:41	11.59	0.01	6/19/2022 3:44	11.60	-0.04	6/19/2022 5:01	-0.11
6/19/2022 3:58	12.07	0.08	6/20/2022 5:42	11.59	-0.03	6/19/2022 3:45	11.61	-0.04	6/19/2022 5:02	-0.05
6/19/2022 3:59	12.08	0.03	6/20/2022 5:43	11.54	0.06	6/19/2022 3:46	11.61	-0.07	6/19/2022 5:03	-0.09
6/19/2022 4:00	12.08	0.14	6/20/2022 5:44	11.60	0.06	6/19/2022 3:47	11.61	-0.04	6/19/2022 5:04	-0.13
6/19/2022 4:01	12.10	0.09	6/20/2022 5:45	11.58	-0.02	6/19/2022 3:48	11.62	-0.04	6/19/2022 5:05	-0.07
6/19/2022 4:02	12.09	0.04	6/20/2022 5:46	11.59	-0.09	6/19/2022 3:49	11.61	0.01	6/19/2022 5:06	-0.07
6/19/2022 4:03	12.08	0.04	6/20/2022 5:47	11.55	-0.08	6/19/2022 3:50	11.60	-0.05	6/19/2022 5:07	-0.07
6/19/2022 4:04	12.07	0.07	6/20/2022 5:48	11.58	0.08	6/19/2022 3:51	11.61	0.00	6/19/2022 5:08	-0.08
6/19/2022 4:05	12.09	0.15	6/20/2022 5:49	11.57	0.00	6/19/2022 3:52	11.62	-0.08	6/19/2022 5:09	-0.09
6/19/2022 4:06	12.08	0.19	6/20/2022 5:50	11.56	-0.05	6/19/2022 3:53	11.61	-0.04	6/19/2022 5:10	-0.07
6/19/2022 4:07	12.10	0.21	6/20/2022 5:51	11.58	-0.12	6/19/2022 3:54	11.63	-0.08	6/19/2022 5:11	-0.11
6/19/2022 4:08	12.10	0.14	6/20/2022 5:52	11.57	-0.04	6/19/2022 3:55	11.61	0.01	6/19/2022 5:12	-0.10
6/19/2022 4:09	12.09	0.06	6/20/2022 5:53	11.59	0.00	6/19/2022 3:56	11.62	-0.07	6/19/2022 5:13	-0.07
6/19/2022 4:10	12.06	0.11	6/20/2022 5:54	11.57	0.07	6/19/2022 3:57	11.64	-0.03	6/19/2022 5:14	-0.10
6/19/2022 4:11	12.10	0.09	6/20/2022 5:55	11.57	0.01	6/19/2022 3:58	11.62	-0.01	6/19/2022 5:15	-0.10
6/19/2022 4:12	12.04	0.17	6/20/2022 5:56	11.58	-0.05	6/19/2022 3:59	11.62	0.02	6/19/2022 5:16	-0.11
6/19/2022 4:13	12.10	0.08	6/20/2022 5:57	11.57	0.00	6/19/2022 4:00	11.63	0.01	6/19/2022 5:17	-0.07
6/19/2022 4:14	12.08	0.06	6/20/2022 5:58	11.58	0.00	6/19/2022 4:01	11.60	-0.02	6/19/2022 5:18	-0.09
6/19/2022 4:15	12.08	0.08	6/20/2022 5:59	11.59	0.04	6/19/2022 4:02	11.62	-0.01	6/19/2022 5:19	-0.09
6/19/2022 4:16	12.10	0.08	6/20/2022 6:00	11.56	0.02	6/19/2022 4:03	11.63	-0.04	6/19/2022 5:20	-0.06
6/19/2022 4:17	12.07	0.10	6/20/2022 6:01	11.57	-0.07	6/19/2022 4:04	11.60	-0.05	6/19/2022 5:21	-0.14
6/19/2022 4:18	12.07	0.08	6/20/2022 6:02	11.57	-0.04	6/19/2022 4:05	11.63	-0.06	6/19/2022 5:22	-0.06
6/19/2022 4:19	12.09	0.15	6/20/2022 6:03	11.57	-0.05	6/19/2022 4:06	11.60	-0.05	6/19/2022 5:23	-0.08
6/19/2022 4:20	12.10	0.08	6/20/2022 6:04	11.59	-0.03	6/19/2022 4:07	11.62	-0.06	6/19/2022 5:24	-0.09
6/19/2022 4:21	12.06	0.14	6/20/2022 6:05	11.57	-0.06	6/19/2022 4:08	11.63	-0.03	6/19/2022 5:25	-0.10
6/19/2022 4:22	12.07	0.13	6/20/2022 6:06	11.58	0.05	6/19/2022 4:09	11.61	-0.07	6/19/2022 5:26	-0.13
6/19/2022 4:23	12.08	0.13	6/20/2022 6:07	11.58	0.00	6/19/2022 4:10	11.62	-0.06	6/19/2022 5:27	-0.10
6/19/2022 4:24	12.07	0.10	6/20/2022 6:08	11.58	-0.07	6/19/2022 4:11	11.62	0.01	6/19/2022 5:28	-0.09
6/19/2022 4:25	12.08	0.16	6/20/2022 6:09	11.58	-0.09	6/19/2022 4:12	11.60	0.01	6/19/2022 5:29	-0.10
6/19/2022 4:26	12.09	0.16	6/20/2022 6:10	11.56	-0.06	6/19/2022 4:13	11.61	-0.04	6/19/2022 5:30	-0.09
6/19/2022 4:27	12.07	0.12	6/20/2022 6:11	11.58	-0.04	6/19/2022 4:14	11.62	0.00	6/19/2022 5:31	-0.10
6/19/2022 4:28	12.06	0.09	6/20/2022 6:12	11.57	0.02	6/19/2022 4:15	11.61	-0.04	6/19/2022 5:32	-0.08
6/19/2022 4:29	12.11	0.05	6/20/2022 6:13	11.59	-0.04	6/19/2022 4:16	11.62	-0.04	6/19/2022 5:33	-0.10
6/19/2022 4:30	12.09	0.17	6/20/2022 6:14	11.58	-0.09	6/19/2022 4:17	11.61	0.01	6/19/2022 5:34	-0.10
6/19/2022 4:31	12.07	0.09	6/20/2022 6:15	11.59	0.01	6/19/2022 4:18	11.63	-0.06	6/19/2022 5:35	-0.07
6/19/2022 4:32	12.10	0.12	6/20/2022 6:16	11.58	0.01	6/19/2022 4:19	11.61	-0.02	6/19/2022 5:36	-0.08
6/19/2022 4:33	12.09	0.08	6/20/2022 6:17	11.57	-0.14	6/19/2022 4:20	11.62	-0.03	6/19/2022 5:37	-0.11
6/19/2022 4:34	12.08	0.04	6/20/2022 6:18	11.57	-0.09	6/19/2022 4:21	11.60	-0.04	6/19/2022 5:38	-0.07
6/19/2022 4:35	12.08	0.10	6/20/2022 6:19	11.58	-0.02	6/19/2022 4:22	11.63	-0.05	6/19/2022 5:39	-0.13
6/19/2022 4:36	12.08	0.09	6/20/2022 6:20	11.57	-0.01	6/19/2022 4:23	11.60	-0.07	6/19/2022 5:40	-0.05
6/19/2022 4:37	12.09	0.04	6/20/2022 6:21	11.60	-0.02	6/19/2022 4:24	11.61	-0.04	6/19/2022 5:41	-0.09
6/19/2022 4:38	12.07	0.06	6/20/2022 6:22	11.58	0.03	6/19/2022 4:25	11.61	-0.03	6/19/2022 5:42	-0.05
6/19/2022 4:39	12.07	0.18	6/20/2022 6:23	11.59	0.01	6/19/2022 4:26	11.59	-0.02	6/19/2022 5:43	-0.12
6/19/2022 4:40	12.06	0.08	6/20/2022 6:24	11.55	0.00	6/19/2022 4:27	11.62	-0.01	6/19/2022 5:44	-0.10
6/19/2022 4:41	12.09	0.12	6/20/2022 6:25	11.56	-0.02	6/19/2022 4:28	11.60	-0.03	6/19/2022 5:45	-0.06
6/19/2022 4:42	12.11	0.10	6/20/2022 6:26	11.56	-0.11	6/19/2022 4:29	11.61	-0.03	6/19/2022 5:46	-0.08
6/19/2022 4:43	12.09	0.10	6/20/2022 6:27	11.59	-0.03	6/19/2022 4:30	11.62	-0.09	6/19/2022 5:47	-0.10
6/19/2022 4:44	12.09	0.04	6/20/2022 6:28	11.59	-0.03	6/19/2022 4:31	11.62	-0.01	6/19/2022 5:48	-0.06
6/19/2022 4:45	12.09	0.14	6/20/2022 6:29	11.58	-0.01	6/19/2022 4:32	11.61	-0.04	6/19/2022 5:49	-0.07
6/19/2022 4:46	12.09	0.13	6/20/2022 6:30	11.56	-0.06	6/19/2022 4:33	11.60	-0.04	6/19/2022 5:50	-0.06
6/19/2022 4:47	12.07	0.08	6/20/2022 6:31	11.56	-0.11	6/19/2022 4:34	11.63	-0.04	6/19/2022 5:51	-0.11
6/19/2022 4:48	12.09	0.06	6/20/2022 6:32	11.57	0.03	6/19/2022 4:35	11.62	-0.05	6/19/2022 5:52	-0.07
6/19/2022 4:49	12.09	0.08	6/20/2022 6:33	11.59	0.00	6/19/2022 4:36	11.60	-0.02	6/19/2022 5:53	-0.09
6/19/2022 4:50	12.09	0.07	6/20/2022 6:34	11.58	0.01	6/19/2022 4:37	11.61	-0.02	6/19/2022 5:54	-0.08
6/19/2022 4:51	12.07	0.13	6/20/2022 6:35	11.58	0.00	6/19/2022 4:38	11.63	-0.04	6/19/2022 5:55	-0.12
6/19/2022 4:52	12.07	0.12	6/20/2022 6:36	11.58	-0.08	6/19/2022 4:39	11.61	-0.03	6/19/2022 5:56	-0.11
6/19/2022 4:53	12.08	0.18	6/20/2022 6:37	11.60	0.04	6/19/2022 4:40	11.61	0.01	6/19/2022 5:57	-0.11
6/19/2022 4:54	12.08	0.11	6/20/2022 6:38	11.57	-0.01	6/19/2022 4:41	11.61	-0.03	6/19/2022 5:58	-0.06
6/19/2022 4:55	12.10	0.12	6/20/2022 6:39	11.59	-0.07	6/19/2022 4:42	11.61	0.02	6/19/2022 5:59	-0.05
6/19/2022 4:56	12.09	0.07	6/20/2022 6:40	11.59	0.03	6/19/2022 4:43	11.63	-0.04	6/19/2022 6:00	-0.10
6/19/2022 4:57	12.07	0.11	6/20/2022 6:41	11.56	-0.03	6/19/2022 4:44	11.58	-0.01	6/19/2022 6:01	-0.09
6/19/2022 4:58	12.07	0.12	6/20/2022 6:42	11.57	0.00	6/19/2022 4:45	11.61	-0.06	6/19/2022 6:02	-0.09
6/19/2022 4:59	12.08	0.04	6/20/2022 6:43	11.58	-0.04	6/19/2022 4:46	11.59	-0.02	6/19/2022 6:03	-0.06
6/19/2022 5:00	12.08	0.07	6/20/2022 6:44	11.60	-0.06	6/19/2022 4:47	11.61	-0.03	6/19/2022 6:04	-0.08
6/19/2022 5:01	12.07	0.11	6/20/2022 6:45	11.61	-0.10	6/19/2022 4:48	11.59	-0.05	6/19/2022 6:05	-0.09
6/19/2022 5:02	12.07	0.02	6/20/2022 6:46	11.58	-0.04	6/19/2022 4:49	11.61	-0.05	6/19/2022 6:06	-0.15

6/19/2022 5:03	12.08	0.14	6/20/2022 6:47	11.57	-0.06	6/19/2022 4:50	11.60	0.02	6/19/2022 6:07	-0.05
6/19/2022 5:04	12.06	0.04	6/20/2022 6:48	11.59	-0.08	6/19/2022 4:51	11.60	-0.05	6/19/2022 6:08	-0.06
6/19/2022 5:05	12.09	0.08	6/20/2022 6:49	11.58	0.03	6/19/2022 4:52	11.63	-0.07	6/19/2022 6:09	-0.11
6/19/2022 5:06	12.07	0.14	6/20/2022 6:50	11.58	0.01	6/19/2022 4:53	11.59	-0.04	6/19/2022 6:10	-0.03
6/19/2022 5:07	12.07	0.08	6/20/2022 6:51	11.59	-0.01	6/19/2022 4:54	11.60	-0.03	6/19/2022 6:11	-0.14
6/19/2022 5:08	12.09	0.06	6/20/2022 6:52	11.59	0.05	6/19/2022 4:55	11.62	-0.03	6/19/2022 6:12	-0.10
6/19/2022 5:09	12.08	0.06	6/20/2022 6:53	11.59	0.00	6/19/2022 4:56	11.61	-0.03	6/19/2022 6:13	-0.08
6/19/2022 5:10	12.08	0.12	6/20/2022 6:54	11.59	-0.02	6/19/2022 4:57	11.63	-0.05	6/19/2022 6:14	-0.11
6/19/2022 5:11	12.07	0.03	6/20/2022 6:55	11.57	-0.07	6/19/2022 4:58	11.61	0.00	6/19/2022 6:15	-0.06
6/19/2022 5:12	12.09	0.13	6/20/2022 6:56	11.56	-0.12	6/19/2022 4:59	11.61	-0.05	6/19/2022 6:16	-0.08
6/19/2022 5:13	12.09	0.12	6/20/2022 6:57	11.57	-0.06	6/19/2022 5:00	11.63	-0.04	6/19/2022 6:17	-0.14
6/19/2022 5:14	12.09	0.09	6/20/2022 6:58	11.58	-0.03	6/19/2022 5:01	11.62	-0.02	6/19/2022 6:18	-0.07
6/19/2022 5:15	12.09	0.14	6/20/2022 6:59	11.59	0.00	6/19/2022 5:02	11.60	-0.04	6/19/2022 6:19	-0.07
6/19/2022 5:16	12.09	0.06	6/20/2022 7:00	11.59	0.05	6/19/2022 5:03	11.60	-0.06	6/19/2022 6:20	-0.11
6/19/2022 5:17	12.07	0.09	6/20/2022 7:01	11.57	-0.04	6/19/2022 5:04	11.59	-0.02	6/19/2022 6:21	-0.15
6/19/2022 5:18	12.08	0.06	6/20/2022 7:02	11.57	-0.01	6/19/2022 5:05	11.60	-0.02	6/19/2022 6:22	-0.10
6/19/2022 5:19	12.09	0.13	6/20/2022 7:03	11.61	0.03	6/19/2022 5:06	11.61	-0.06	6/19/2022 6:23	-0.16
6/19/2022 5:20	12.10	0.06	6/20/2022 7:04	11.57	0.02	6/19/2022 5:07	11.61	-0.04	6/19/2022 6:24	-0.10
6/19/2022 5:21	12.09	0.15	6/20/2022 7:05	11.58	0.00	6/19/2022 5:08	11.62	-0.03	6/19/2022 6:25	-0.11
6/19/2022 5:22	12.10	0.12	6/20/2022 7:06	11.55	-0.04	6/19/2022 5:09	11.62	-0.05	6/19/2022 6:26	-0.11
6/19/2022 5:23	12.07	0.16	6/20/2022 7:07	11.58	-0.01	6/19/2022 5:10	11.63	-0.03	6/19/2022 6:27	-0.14
6/19/2022 5:24	12.08	0.17	6/20/2022 7:08	11.58	0.05	6/19/2022 5:11	11.63	0.00	6/19/2022 6:28	-0.10
6/19/2022 5:25	12.07	0.09	6/20/2022 7:09	11.58	-0.06	6/19/2022 5:12	11.64	-0.04	6/19/2022 6:29	-0.07
6/19/2022 5:26	12.12	0.11	6/20/2022 7:10	11.56	-0.13	6/19/2022 5:13	11.63	-0.05	6/19/2022 6:30	-0.07
6/19/2022 5:27	12.08	0.12	6/20/2022 7:11	11.59	-0.10	6/19/2022 5:14	11.64	-0.03	6/19/2022 6:31	-0.08
6/19/2022 5:28	12.08	0.01	6/20/2022 7:12	11.58	-0.08	6/19/2022 5:15	11.61	-0.04	6/19/2022 6:32	-0.07
6/19/2022 5:29	12.08	0.09	6/20/2022 7:13	11.56	0.01	6/19/2022 5:16	11.62	-0.03	6/19/2022 6:33	-0.11
6/19/2022 5:30	12.11	0.08	6/20/2022 7:14	11.58	-0.09	6/19/2022 5:17	11.64	-0.04	6/19/2022 6:34	-0.10
6/19/2022 5:31	12.10	0.03	6/20/2022 7:15	11.59	-0.06	6/19/2022 5:18	11.63	-0.04	6/19/2022 6:35	-0.06
6/19/2022 5:32	12.09	0.07	6/20/2022 7:16	11.59	-0.02	6/19/2022 5:19	11.61	0.01	6/19/2022 6:36	-0.09
6/19/2022 5:33	12.08	0.08	6/20/2022 7:17	11.58	0.01	6/19/2022 5:20	11.62	-0.05	6/19/2022 6:37	-0.08
6/19/2022 5:34	12.10	0.15	6/20/2022 7:18	11.57	-0.07	6/19/2022 5:21	11.62	-0.03	6/19/2022 6:38	-0.17
6/19/2022 5:35	12.12	0.10	6/20/2022 7:19	11.56	0.01	6/19/2022 5:22	11.61	0.01	6/19/2022 6:39	-0.06
6/19/2022 5:36	12.09	0.07	6/20/2022 7:20	11.56	-0.05	6/19/2022 5:23	11.60	-0.05	6/19/2022 6:40	-0.08
6/19/2022 5:37	12.10	0.10	6/20/2022 7:21	11.57	-0.08	6/19/2022 5:24	11.63	-0.04	6/19/2022 6:41	-0.09
6/19/2022 5:38	12.09	0.08	6/20/2022 7:22	11.58	-0.05	6/19/2022 5:25	11.60	-0.04	6/19/2022 6:42	-0.13
6/19/2022 5:39	12.06	0.12	6/20/2022 7:23	11.56	-0.12	6/19/2022 5:26	11.61	-0.04	6/19/2022 6:43	-0.07
6/19/2022 5:40	12.07	0.03	6/20/2022 7:24	11.57	0.00	6/19/2022 5:27	11.60	0.00	6/19/2022 6:44	-0.08
6/19/2022 5:41	12.08	0.06	6/20/2022 7:25	11.57	-0.03	6/19/2022 5:28	11.61	-0.05	6/19/2022 6:45	-0.12
6/19/2022 5:42	12.11	0.12	6/20/2022 7:26	11.56	0.00	6/19/2022 5:29	11.62	-0.04	6/19/2022 6:46	-0.10
6/19/2022 5:43	12.09	0.10	6/20/2022 7:27	11.58	-0.08	6/19/2022 5:30	11.63	-0.05	6/19/2022 6:47	-0.11
6/19/2022 5:44	12.04	0.14	6/20/2022 7:28	11.58	0.00	6/19/2022 5:31	11.61	-0.05	6/19/2022 6:48	-0.03
6/19/2022 5:45	12.08	0.10	6/20/2022 7:29	11.57	-0.05	6/19/2022 5:32	11.63	-0.06	6/19/2022 6:49	-0.11
6/19/2022 5:46	12.10	0.14	6/20/2022 7:30	11.56	0.01	6/19/2022 5:33	11.62	-0.06	6/19/2022 6:50	-0.13
6/19/2022 5:47	12.09	0.13	6/20/2022 7:31	11.57	-0.06	6/19/2022 5:34	11.61	0.00	6/19/2022 6:51	-0.09
6/19/2022 5:48	12.07	0.08	6/20/2022 7:32	11.57	0.00	6/19/2022 5:35	11.62	-0.02	6/19/2022 6:52	-0.11
6/19/2022 5:49	12.07	0.11	6/20/2022 7:33	11.56	0.02	6/19/2022 5:36	11.62	-0.04	6/19/2022 6:53	-0.10
6/19/2022 5:50	12.06	0.05	6/20/2022 7:34	11.58	0.03	6/19/2022 5:37	11.64	0.00	6/19/2022 6:54	-0.12
6/19/2022 5:51	12.10	0.12	6/20/2022 7:35	11.57	0.00	6/19/2022 5:38	11.63	-0.06	6/19/2022 6:55	-0.13
6/19/2022 5:52	12.09	0.18	6/20/2022 7:36	11.60	0.00	6/19/2022 5:39	11.63	-0.06	6/19/2022 6:56	-0.05
6/19/2022 5:53	12.08	0.09	6/20/2022 7:37	11.58	0.03	6/19/2022 5:40	11.61	-0.09	6/19/2022 6:57	-0.10
6/19/2022 5:54	12.11	0.20	6/20/2022 7:38	11.58	-0.02	6/19/2022 5:41	11.63	-0.07	6/19/2022 6:58	-0.11
6/19/2022 5:55	12.09	0.12	6/20/2022 7:39	11.58	-0.04	6/19/2022 5:42	11.61	-0.06	6/19/2022 6:59	-0.11
6/19/2022 5:56	12.08	0.03	6/20/2022 7:40	11.55	0.04	6/19/2022 5:43	11.62	-0.03	6/19/2022 7:00	-0.11
6/19/2022 5:57	12.08	0.08	6/20/2022 7:41	11.58	-0.01	6/19/2022 5:44	11.61	0.01	6/19/2022 7:01	-0.10
6/19/2022 5:58	12.06	0.09	6/20/2022 7:42	11.58	0.00	6/19/2022 5:45	11.63	-0.05	6/19/2022 7:02	-0.15
6/19/2022 5:59	12.10	0.09	6/20/2022 7:43	11.58	-0.01	6/19/2022 5:46	11.60	-0.05	6/19/2022 7:03	-0.10
6/19/2022 6:00	12.08	0.08	6/20/2022 7:44	11.56	0.06	6/19/2022 5:47	11.62	-0.04	6/19/2022 7:04	-0.07
6/19/2022 6:01	12.06	0.14	6/20/2022 7:45	11.59	0.00	6/19/2022 5:48	11.63	0.00	6/19/2022 7:05	-0.14
6/19/2022 6:02	12.09	0.09	6/20/2022 7:46	11.58	-0.11	6/19/2022 5:49	11.63	-0.01	6/19/2022 7:06	-0.11
6/19/2022 6:03	12.08	0.09	6/20/2022 7:47	11.58	0.04	6/19/2022 5:50	11.61	-0.07	6/19/2022 7:07	-0.09
6/19/2022 6:04	12.08	0.08	6/20/2022 7:48	11.58	-0.01	6/19/2022 5:51	11.60	-0.06	6/19/2022 7:08	-0.11
6/19/2022 6:05	12.10	0.10	6/20/2022 7:49	11.57	0.06	6/19/2022 5:52	11.62	0.02	6/19/2022 7:09	-0.09
6/19/2022 6:06	12.07	0.08	6/20/2022 7:50	11.58	-0.06	6/19/2022 5:53	11.64	-0.03	6/19/2022 7:10	-0.04
6/19/2022 6:07	12.05	0.04	6/20/2022 7:51	11.56	0.03	6/19/2022 5:54	11.63	-0.05	6/19/2022 7:11	-0.06
6/19/2022 6:08	12.06	0.14	6/20/2022 7:52	11.60	0.00	6/19/2022 5:55	11.62	-0.02	6/19/2022 7:12	-0.12
6/19/2022 6:09	12.10	0.19	6/20/2022 7:53	11.58	0.00	6/19/2022 5:56	11.61	-0.02	6/19/2022 7:13	-0.09
6/19/2022 6:10	12.09	0.10	6/20/2022 7:54	11.56	0.03	6/19/2022 5:57	11.60	-0.02	6/19/2022 7:14	-0.11
6/19/2022 6:11	12.07	0.03	6/20/2022 7:55	11.57	0.06	6/19/2022 5:58	11.63	-0.03	6/19/2022 7:15	-0.08
6/19/2022 6:12	12.11	0.14	6/20/2022 7:56	11.58	0.00	6/19/2022 5:59	11.62	-0.03	6/19/2022 7:16	-0.10
6/19/2022 6:13	12.08	0.04	6/20/2022 7:57	11.59	-0.04	6/19/2022 6:00	11.62	-0.03	6/19/2022 7:17	-0.03
6/19/2022 6:14	12.08	0.10	6/20/2022 7:58	11.57	-0.08	6/19/2022 6:01	11.60	-0.03	6/19/2022 7:18	-0.09
6/19/2022 6:15	12.07	0.03	6/20/2022 7:59	11.57	-0.03	6/19/2022 6:02	11.62	-0.01	6/19/2022 7:19	-0.14
6/19/2022 6:16	12.06	0.14	6/20/2022 8:00	11.60	-0.09	6/19/2022 6:03	11.61	-0.05	6/19/2022 7:20	-0.13
6/19/2022 6:17	12.08	0.08	6/20/2022 8:01	11.58	-0.01	6/19/2022 6:04	11.62	-0.02	6/19/2022 7:21	-0.07
6/19/2022 6:18	12.08	0.06	6/20/2022 8:02	11.58	-0.02	6/19/2022 6:05	11.63	0.01	6/19/2022 7:22	-0.07
6/19/2022 6:19	12.08	0.14	6/20/2022 8:03	11.56	0.01	6/19/2022 6:06	11.60	-0.03	6/19/2022 7:23	-0.10
6/19/2022 6:20	12.09	0.11	6/20/2022 8:04	11.58	-0.02	6/19/2022 6:07	11.62	-0.05	6/19/2022 7:24	-0.06
6/19/2022 6:21	12.09	0.23	6/20/2022 8:05	11.57	0.04	6/19/2022 6:08	11.63	-0.01	6/19/2022 7:25	-0.08
6/19/2022 6:22	12.06	0.09	6/20/2022 8:06	11.57	-0.04	6/19/2022 6:09	11.64	-0.04	6/19/2022 7:26	-0.08
6/19/2022 6:23	12.08	0.10	6/20/2022 8:07	11.59	-0.03	6/19/2022 6:10	11.63	0.01	6/19/2022 7:27	-0.11
6/19/2022 6:24	12.09	0.04	6/20/2022 8:08	11.57	-0.07	6/19/2022 6:11	11.63	-0.03	6/19/2022 7:28	-0.11
6/19/2022 6:25	12.06	0.18	6/20/2022 8:09	11.57	-0.08	6/19/2022 6:12	11.63	-0.04	6/19/2022 7:29	-0.12
6/19/2022 6:26	12.09	0.03	6/20/2022 8:10	11.59	-0.08	6/19/2022 6:13	11.61	-0.05	6/19/2022 7:30	-0.07
6/19/2022 6:27	12.06	0.06	6/20/2022 8:11	11.57	0.02	6/19/2022 6:14	11.64	0.00	6/19/2022 7:31	-0.08
6/19/2022 6:28	12.08	0.10	6/20/2022 8:12	11.58	-0.12	6/19/2022 6:15	11.62	-0.03	6/19/2022 7:32	-0.16
6/19/2022 6:29	12.09	0.07	6/20/2022 8:13	11.56	-0.09	6/19/2022 6:16	11.62	-0.05	6/19/2022 7:33	-0.12
6/19/2022 6:30	12.08	0.16	6/20/2022 8:14	11.58	0.00	6/19/2022 6:17	11.64	-0.01	6/19/2022 7:34	-0.12

6/19/2022 6:31	12.08	0.11	6/20/2022 8:15	11.60	-0.03	6/19/2022 6:18	11.65	-0.01	6/19/2022 7:35	-0.10
6/19/2022 6:32	12.09	0.09	6/20/2022 8:16	11.60	-0.10	6/19/2022 6:19	11.64	-0.04	6/19/2022 7:36	-0.09
6/19/2022 6:33	12.06	0.04	6/20/2022 8:17	11.60	0.00	6/19/2022 6:20	11.61	-0.02	6/19/2022 7:37	-0.09
6/19/2022 6:34	12.07	0.05	6/20/2022 8:18	11.60	-0.02	6/19/2022 6:21	11.61	-0.03	6/19/2022 7:38	-0.11
6/19/2022 6:35	12.08	0.13	6/20/2022 8:19	11.58	0.02	6/19/2022 6:22	11.63	-0.03	6/19/2022 7:39	-0.09
6/19/2022 6:36	12.10	0.11	6/20/2022 8:20	11.57	0.02	6/19/2022 6:23	11.61	-0.04	6/19/2022 7:40	-0.07
6/19/2022 6:37	12.06	0.03	6/20/2022 8:21	11.56	-0.04	6/19/2022 6:24	11.62	-0.03	6/19/2022 7:41	-0.03
6/19/2022 6:38	12.08	0.12	6/20/2022 8:22	11.56	-0.06	6/19/2022 6:25	11.62	-0.06	6/19/2022 7:42	-0.08
6/19/2022 6:39	12.10	0.08	6/20/2022 8:23	11.58	-0.05	6/19/2022 6:26	11.63	-0.03	6/19/2022 7:43	-0.09
6/19/2022 6:40	12.11	0.15	6/20/2022 8:24	11.58	-0.04	6/19/2022 6:27	11.61	-0.04	6/19/2022 7:44	-0.07
6/19/2022 6:41	12.07	0.12	6/20/2022 8:25	11.56	-0.11	6/19/2022 6:28	11.61	-0.06	6/19/2022 7:45	-0.12
6/19/2022 6:42	12.10	0.02	6/20/2022 8:26	11.57	-0.04	6/19/2022 6:29	11.62	-0.02	6/19/2022 7:46	-0.08
6/19/2022 6:43	12.08	0.11	6/20/2022 8:27	11.58	-0.08	6/19/2022 6:30	11.63	-0.01	6/19/2022 7:47	-0.05
6/19/2022 6:44	12.07	0.06	6/20/2022 8:28	11.57	-0.08	6/19/2022 6:31	11.62	-0.02	6/19/2022 7:48	-0.06
6/19/2022 6:45	12.08	0.10	6/20/2022 8:29	11.58	-0.03	6/19/2022 6:32	11.65	-0.02	6/19/2022 7:49	-0.09
6/19/2022 6:46	12.08	0.12	6/20/2022 8:30	11.58	0.09	6/19/2022 6:33	11.61	-0.03	6/19/2022 7:50	-0.06
6/19/2022 6:47	12.08	0.13	6/20/2022 8:31	11.57	0.00	6/19/2022 6:34	11.62	-0.08	6/19/2022 7:51	-0.03
6/19/2022 6:48	12.06	0.03	6/20/2022 8:32	11.58	-0.02	6/19/2022 6:35	11.61	-0.06	6/19/2022 7:52	-0.09
6/19/2022 6:49	12.08	0.15	6/20/2022 8:33	11.56	-0.06	6/19/2022 6:36	11.63	0.00	6/19/2022 7:53	-0.08
6/19/2022 6:50	12.10	0.09	6/20/2022 8:34	11.58	-0.01	6/19/2022 6:37	11.61	-0.03	6/19/2022 7:54	-0.09
6/19/2022 6:51	12.10	0.03	6/20/2022 8:35	11.58	-0.05	6/19/2022 6:38	11.61	-0.03	6/19/2022 7:55	-0.05
6/19/2022 6:52	12.09	0.08	6/20/2022 8:36	11.55	-0.02	6/19/2022 6:39	11.62	-0.03	6/19/2022 7:56	-0.04
6/19/2022 6:53	12.07	0.14	6/20/2022 8:37	11.61	-0.04	6/19/2022 6:40	11.62	-0.06	6/19/2022 7:57	-0.10
6/19/2022 6:54	12.08	0.11	6/20/2022 8:38	11.57	-0.07	6/19/2022 6:41	11.62	-0.03	6/19/2022 7:58	-0.10
6/19/2022 6:55	12.08	0.09	6/20/2022 8:39	11.59	0.05	6/19/2022 6:42	11.62	-0.05	6/19/2022 7:59	-0.09
6/19/2022 6:56	12.10	0.14	6/20/2022 8:40	11.57	-0.06	6/19/2022 6:43	11.63	-0.03	6/19/2022 8:00	-0.07
6/19/2022 6:57	12.07	0.14	6/20/2022 8:41	11.58	-0.03	6/19/2022 6:44	11.62	-0.04	6/19/2022 8:01	-0.06
6/19/2022 6:58	12.06	0.13	6/20/2022 8:42	11.58	0.05	6/19/2022 6:45	11.59	-0.03	6/19/2022 8:02	-0.07
6/19/2022 6:59	12.09	0.04	6/20/2022 8:43	11.57	0.05	6/19/2022 6:46	11.61	-0.06	6/19/2022 8:03	-0.10
6/19/2022 7:00	12.09	0.10	6/20/2022 8:44	11.56	-0.06	6/19/2022 6:47	11.63	-0.03	6/19/2022 8:04	-0.04
6/19/2022 7:01	12.09	0.14	6/20/2022 8:45	11.58	-0.04	6/19/2022 6:48	11.62	-0.08	6/19/2022 8:05	-0.06
6/19/2022 7:02	12.10	0.13	6/20/2022 8:46	11.60	-0.11	6/19/2022 6:49	11.60	-0.04	6/19/2022 8:06	-0.09
6/19/2022 7:03	12.11	0.19	6/20/2022 8:47	11.58	-0.03	6/19/2022 6:50	11.62	-0.04	6/19/2022 8:07	-0.04
6/19/2022 7:04	12.07	0.09	6/20/2022 8:48	11.56	-0.05	6/19/2022 6:51	11.61	0.01	6/19/2022 8:08	-0.12
6/19/2022 7:05	12.12	0.11	6/20/2022 8:49	11.56	0.01	6/19/2022 6:52	11.61	-0.03	6/19/2022 8:09	-0.10
6/19/2022 7:06	12.07	0.13	6/20/2022 8:50	11.59	-0.06	6/19/2022 6:53	11.61	0.01	6/19/2022 8:10	-0.10
6/19/2022 7:07	12.07	0.20	6/20/2022 8:51	11.57	-0.01	6/19/2022 6:54	11.61	-0.06	6/19/2022 8:11	-0.11
6/19/2022 7:08	12.10	0.15	6/20/2022 8:52	11.60	0.00	6/19/2022 6:55	11.63	-0.04	6/19/2022 8:12	-0.07
6/19/2022 7:09	12.04	0.10	6/20/2022 8:53	11.58	0.00	6/19/2022 6:56	11.62	-0.05	6/19/2022 8:13	-0.09
6/19/2022 7:10	12.09	0.14	6/20/2022 8:54	11.57	-0.02	6/19/2022 6:57	11.61	-0.03	6/19/2022 8:14	-0.03
6/19/2022 7:11	12.07	0.04	6/20/2022 8:55	11.62	-0.04	6/19/2022 6:58	11.64	0.00	6/19/2022 8:15	-0.13
6/19/2022 7:12	12.08	0.13	6/20/2022 8:56	11.58	0.00	6/19/2022 6:59	11.60	-0.03	6/19/2022 8:16	-0.12
6/19/2022 7:13	12.10	0.13	6/20/2022 8:57	11.59	-0.02	6/19/2022 7:00	11.62	-0.05	6/19/2022 8:17	-0.09
6/19/2022 7:14	12.09	0.07	6/20/2022 8:58	11.59	-0.01	6/19/2022 7:01	11.60	-0.05	6/19/2022 8:18	-0.13
6/19/2022 7:15	12.09	0.08	6/20/2022 8:59	11.58	-0.06	6/19/2022 7:02	11.62	-0.04	6/19/2022 8:19	-0.07
6/19/2022 7:16	12.08	0.12	6/20/2022 9:00	11.57	-0.05	6/19/2022 7:03	11.62	-0.04	6/19/2022 8:20	-0.11
6/19/2022 7:17	12.07	0.09	6/20/2022 9:01	11.59	-0.01	6/19/2022 7:04	11.61	-0.03	6/19/2022 8:21	-0.07
6/19/2022 7:18	12.09	0.08	6/20/2022 9:02	11.57	0.02	6/19/2022 7:05	11.64	-0.01	6/19/2022 8:22	-0.06
6/19/2022 7:19	12.09	0.16	6/20/2022 9:03	11.58	-0.01	6/19/2022 7:06	11.58	-0.02	6/19/2022 8:23	-0.08
6/19/2022 7:20	12.08	0.12	6/20/2022 9:04	11.59	-0.08	6/19/2022 7:07	11.60	-0.04	6/19/2022 8:24	-0.07
6/19/2022 7:21	12.07	0.07	6/20/2022 9:05	11.58	-0.02	6/19/2022 7:08	11.62	-0.07	6/19/2022 8:25	-0.08
6/19/2022 7:22	12.08	0.05	6/20/2022 9:06	11.56	0.01	6/19/2022 7:09	11.61	-0.03	6/19/2022 8:26	-0.09
6/19/2022 7:23	12.08	0.17	6/20/2022 9:07	11.57	0.02	6/19/2022 7:10	11.63	-0.04	6/19/2022 8:27	-0.14
6/19/2022 7:24	12.08	0.09	6/20/2022 9:08	11.59	0.07	6/19/2022 7:11	11.64	-0.02	6/19/2022 8:28	-0.09
6/19/2022 7:25	12.08	0.08	6/20/2022 9:09	11.56	0.04	6/19/2022 7:12	11.59	-0.02	6/19/2022 8:29	-0.11
6/19/2022 7:26	12.09	0.13	6/20/2022 9:10	11.55	-0.01	6/19/2022 7:13	11.59	-0.02	6/19/2022 8:30	-0.11
6/19/2022 7:27	12.06	0.10	6/20/2022 9:11	11.57	0.03	6/19/2022 7:14	11.62	-0.03	6/19/2022 8:31	-0.13
6/19/2022 7:28	12.05	0.10	6/20/2022 9:12	11.56	-0.04	6/19/2022 7:15	11.62	-0.03	6/19/2022 8:32	-0.12
6/19/2022 7:29	12.09	0.09	6/20/2022 9:13	11.57	-0.01	6/19/2022 7:16	11.59	0.00	6/19/2022 8:33	-0.13
6/19/2022 7:30	12.08	0.15	6/20/2022 9:14	11.57	-0.06	6/19/2022 7:17	11.62	-0.03	6/19/2022 8:34	-0.15
6/19/2022 7:31	12.08	0.06	6/20/2022 9:15	11.58	-0.02	6/19/2022 7:18	11.63	-0.02	6/19/2022 8:35	-0.03
6/19/2022 7:32	12.07	0.14	6/20/2022 9:16	11.56	-0.05	6/19/2022 7:19	11.62	-0.01	6/19/2022 8:36	-0.08
6/19/2022 7:33	12.05	0.05	6/20/2022 9:17	11.59	-0.09	6/19/2022 7:20	11.63	-0.04	6/19/2022 8:37	-0.07
6/19/2022 7:34	12.07	0.10	6/20/2022 9:18	11.58	-0.01	6/19/2022 7:21	11.61	-0.03	6/19/2022 8:38	-0.08
6/19/2022 7:35	12.11	0.06	6/20/2022 9:19	11.57	-0.01	6/19/2022 7:22	11.59	-0.02	6/19/2022 8:39	-0.11
6/19/2022 7:36	12.05	0.08	6/20/2022 9:20	11.56	-0.07	6/19/2022 7:23	11.61	-0.02	6/19/2022 8:40	-0.13
6/19/2022 7:37	12.06	0.09	6/20/2022 9:21	11.58	-0.05	6/19/2022 7:24	11.62	-0.08	6/19/2022 8:41	-0.07
6/19/2022 7:38	12.07	0.11	6/20/2022 9:22	11.58	-0.06	6/19/2022 7:25	11.60	-0.05	6/19/2022 8:42	-0.13
6/19/2022 7:39	12.12	0.09	6/20/2022 9:23	11.58	-0.04	6/19/2022 7:26	11.60	-0.03	6/19/2022 8:43	-0.14
6/19/2022 7:40	12.10	0.08	6/20/2022 9:24	11.57	-0.09	6/19/2022 7:27	11.62	-0.04	6/19/2022 8:44	-0.08
6/19/2022 7:41	12.07	0.11	6/20/2022 9:25	11.58	-0.01	6/19/2022 7:28	11.62	-0.01	6/19/2022 8:45	-0.08
6/19/2022 7:42	12.08	0.00	6/20/2022 9:26	11.56	-0.05	6/19/2022 7:29	11.63	-0.04	6/19/2022 8:46	-0.06
6/19/2022 7:43	12.08	0.14	6/20/2022 9:27	11.58	-0.04	6/19/2022 7:30	11.60	-0.02	6/19/2022 8:47	-0.08
6/19/2022 7:44	12.08	0.12	6/20/2022 9:28	11.59	0.01	6/19/2022 7:31	11.62	-0.05	6/19/2022 8:48	-0.10
6/19/2022 7:45	12.08	0.08	6/20/2022 9:29	11.58	-0.07	6/19/2022 7:32	11.63	-0.03	6/19/2022 8:49	-0.12
6/19/2022 7:46	12.08	0.00	6/20/2022 9:30	11.56	-0.05	6/19/2022 7:33	11.63	0.00	6/19/2022 8:50	-0.10
6/19/2022 7:47	12.08	0.08	6/20/2022 9:31	11.57	-0.13	6/19/2022 7:34	11.62	-0.03	6/19/2022 8:51	-0.07
6/19/2022 7:48	12.07	0.06	6/20/2022 9:32	11.59	-0.09	6/19/2022 7:35	11.60	-0.01	6/19/2022 8:52	-0.08
6/19/2022 7:49	12.07	0.14	6/20/2022 9:33	11.57	-0.04	6/19/2022 7:36	11.60	-0.05	6/19/2022 8:53	-0.09
6/19/2022 7:50	12.09	0.10	6/20/2022 9:34	11.57	-0.06	6/19/2022 7:37	11.61	-0.04	6/19/2022 8:54	-0.13
6/19/2022 7:51	12.10	0.13	6/20/2022 9:35	11.57	-0.07	6/19/2022 7:38	11.62	-0.06	6/19/2022 8:55	-0.10
6/19/2022 7:52	12.06	0.09	6/20/2022 9:36	11.56	-0.05	6/19/2022 7:39	11.60	0.00	6/19/2022 8:56	-0.10
6/19/2022 7:53	12.06	0.10	6/20/2022 9:37	11.55	-0.05	6/19/2022 7:40	11.62	-0.01	6/19/2022 8:57	-0.04
6/19/2022 7:54	12.08	0.10	6/20/2022 9:38	11.57	0.01	6/19/2022 7:41	11.61	-0.03	6/19/2022 8:58	-0.05
6/19/2022 7:55	12.09	0.14	6/20/2022 9:39	11.60	-0.04	6/19/2022 7:42	11.61	-0.03	6/19/2022 8:59	-0.10
6/19/2022 7:56	12.07	0.07	6/20/2022 9:40	11.57	0.01	6/19/2022 7:43	11.61	-0.02	6/19/2022 9:00	-0.05
6/19/2022 7:57	12.07	0.12	6/20/2022 9:41	11.59	-0.05	6/19/2022 7:44	11.59	-0.08	6/19/2022 9:01	-0.15
6/19/2022 7:58	12.10	0.03	6/20/2022 9:42	11.57	-0.03	6/19/2022 7:45	11.62	0.00	6/19/2022 9:02	-0.10

6/19/2022 7:59	12.09	0.06	6/20/2022 9:43	11.59	-0.10	6/19/2022 7:46	11.62	-0.05	6/19/2022 9:03	-0.10
6/19/2022 8:00	12.06	0.12	6/20/2022 9:44	11.56	0.06	6/19/2022 7:47	11.64	-0.07	6/19/2022 9:04	-0.05
6/19/2022 8:01	12.06	0.09	6/20/2022 9:45	11.57	0.03	6/19/2022 7:48	11.63	-0.02	6/19/2022 9:05	-0.09
6/19/2022 8:02	12.09	0.07	6/20/2022 9:46	11.56	-0.12	6/19/2022 7:49	11.62	-0.01	6/19/2022 9:06	-0.08
6/19/2022 8:03	12.09	0.09	6/20/2022 9:47	11.58	-0.02	6/19/2022 7:50	11.59	-0.04	6/19/2022 9:07	-0.05
6/19/2022 8:04	12.09	0.08	6/20/2022 9:48	11.56	-0.07	6/19/2022 7:51	11.62	-0.02	6/19/2022 9:08	-0.10
6/19/2022 8:05	12.08	0.08	6/20/2022 9:49	11.60	-0.03	6/19/2022 7:52	11.65	-0.02	6/19/2022 9:09	-0.09
6/19/2022 8:06	12.08	0.10	6/20/2022 9:50	11.59	-0.10	6/19/2022 7:53	11.60	-0.03	6/19/2022 9:10	-0.07
6/19/2022 8:07	12.11	0.15	6/20/2022 9:51	11.59	-0.08	6/19/2022 7:54	11.63	-0.05	6/19/2022 9:11	-0.05
6/19/2022 8:08	12.07	-0.02	6/20/2022 9:52	11.58	0.02	6/19/2022 7:55	11.61	-0.03	6/19/2022 9:12	-0.10
6/19/2022 8:09	12.08	0.07	6/20/2022 9:53	11.56	0.02	6/19/2022 7:56	11.62	-0.06	6/19/2022 9:13	-0.12
6/19/2022 8:10	12.09	0.10	6/20/2022 9:54	11.58	-0.05	6/19/2022 7:57	11.61	-0.02	6/19/2022 9:14	-0.06
6/19/2022 8:11	12.08	0.10	6/20/2022 9:55	11.58	0.00	6/19/2022 7:58	11.61	-0.05	6/19/2022 9:15	-0.10
6/19/2022 8:12	12.09	0.08	6/20/2022 9:56	11.59	-0.02	6/19/2022 7:59	11.63	-0.01	6/19/2022 9:16	-0.05
6/19/2022 8:13	12.06	0.13	6/20/2022 9:57	11.56	-0.05	6/19/2022 8:00	11.61	0.01	6/19/2022 9:17	-0.08
6/19/2022 8:14	12.07	0.10	6/20/2022 9:58	11.57	0.01	6/19/2022 8:01	11.61	-0.05	6/19/2022 9:18	-0.08
6/19/2022 8:15	12.08	0.14	6/20/2022 9:59	11.57	-0.10	6/19/2022 8:02	11.62	-0.01	6/19/2022 9:19	-0.08
6/19/2022 8:16	12.10	0.06	6/20/2022 10:00	11.58	-0.02	6/19/2022 8:03	11.59	0.00	6/19/2022 9:20	-0.10
6/19/2022 8:17	12.08	0.14	6/20/2022 10:01	11.60	0.04	6/19/2022 8:04	11.63	-0.03	6/19/2022 9:21	-0.07
6/19/2022 8:18	12.05	0.19	6/20/2022 10:02	11.57	-0.03	6/19/2022 8:05	11.62	-0.05	6/19/2022 9:22	-0.09
6/19/2022 8:19	12.08	0.10	6/20/2022 10:03	11.57	-0.07	6/19/2022 8:06	11.60	-0.05	6/19/2022 9:23	-0.04
6/19/2022 8:20	12.09	0.19	6/20/2022 10:04	11.56	-0.02	6/19/2022 8:07	11.61	-0.03	6/19/2022 9:24	-0.08
6/19/2022 8:21	12.07	0.14	6/20/2022 10:05	11.58	0.01	6/19/2022 8:08	11.59	-0.02	6/19/2022 9:25	-0.09
6/19/2022 8:22	12.05	0.12	6/20/2022 10:06	11.59	0.03	6/19/2022 8:09	11.60	0.01	6/19/2022 9:26	-0.03
6/19/2022 8:23	12.09	0.04	6/20/2022 10:07	11.58	0.01	6/19/2022 8:10	11.61	-0.04	6/19/2022 9:27	-0.09
6/19/2022 8:24	12.10	0.09	6/20/2022 10:08	11.56	0.03	6/19/2022 8:11	11.61	-0.03	6/19/2022 9:28	-0.12
6/19/2022 8:25	12.06	0.12	6/20/2022 10:09	11.57	-0.03	6/19/2022 8:12	11.61	-0.05	6/19/2022 9:29	-0.12
6/19/2022 8:26	12.09	0.09	6/20/2022 10:10	11.60	-0.08	6/19/2022 8:13	11.62	-0.04	6/19/2022 9:30	-0.06
6/19/2022 8:27	12.08	0.18	6/20/2022 10:11	11.55	-0.05	6/19/2022 8:14	11.62	-0.03	6/19/2022 9:31	-0.13
6/19/2022 8:28	12.10	0.06	6/20/2022 10:12	11.58	-0.03	6/19/2022 8:15	11.61	0.03	6/19/2022 9:32	-0.08
6/19/2022 8:29	12.11	0.20	6/20/2022 10:13	11.57	13.27	6/19/2022 8:16	11.61	-0.02	6/19/2022 9:33	-0.08
6/19/2022 8:30	12.08	0.16	6/20/2022 10:14	11.59	3.62	6/19/2022 8:17	11.61	-0.07	6/19/2022 9:34	-0.07
6/19/2022 8:31	12.09	0.08	6/20/2022 10:15	11.60	1.17	6/19/2022 8:18	11.62	-0.05	6/19/2022 9:35	-0.14
6/19/2022 8:32	12.09	0.12	6/20/2022 10:16	11.59	0.20	6/19/2022 8:19	11.61	0.00	6/19/2022 9:36	-0.06
6/19/2022 8:33	12.09	0.01	6/20/2022 10:17	11.59	-0.29	6/19/2022 8:20	11.65	-0.05	6/19/2022 9:37	-0.04
6/19/2022 8:34	12.07	0.04	6/20/2022 10:18	11.59	-0.32	6/19/2022 8:21	11.61	-0.08	6/19/2022 9:38	-0.08
6/19/2022 8:35	12.11	0.08	6/20/2022 10:19	11.60	-0.31	6/19/2022 8:22	11.62	-0.06	6/19/2022 9:39	-0.10
6/19/2022 8:36	12.08	0.11	6/20/2022 10:20	11.61	-0.28	6/19/2022 8:23	11.63	-0.01	6/19/2022 9:40	-0.11
6/19/2022 8:37	12.10	0.09	6/20/2022 10:21	11.58	-0.38	6/19/2022 8:24	11.61	-0.03	6/19/2022 9:41	-0.10
6/19/2022 8:38	12.07	0.10	6/20/2022 10:22	11.60	-0.37	6/19/2022 8:25	11.62	-0.02	6/19/2022 9:42	-0.07
6/19/2022 8:39	12.08	0.05	6/20/2022 10:23	11.62	-0.31	6/19/2022 8:26	11.63	-0.03	6/19/2022 9:43	-0.15
6/19/2022 8:40	12.10	0.17	6/20/2022 10:24	11.65	-0.36	6/19/2022 8:27	11.65	-0.05	6/19/2022 9:44	-0.04
6/19/2022 8:41	12.07	0.06	6/20/2022 10:25	11.62	-0.30	6/19/2022 8:28	11.61	0.01	6/19/2022 9:45	-0.10
6/19/2022 8:42	12.08	0.07	6/20/2022 10:26	11.65	-0.34	6/19/2022 8:29	11.62	-0.01	6/19/2022 9:46	-0.09
6/19/2022 8:43	12.06	0.12	6/20/2022 10:27	11.66	-0.34	6/19/2022 8:30	11.61	-0.02	6/19/2022 9:47	-0.05
6/19/2022 8:44	12.08	0.08	6/20/2022 10:28	11.69	-0.26	6/19/2022 8:31	11.62	0.00	6/19/2022 9:48	-0.09
6/19/2022 8:45	12.07	-0.01	6/20/2022 10:29	11.66	-0.29	6/19/2022 8:32	11.61	-0.01	6/19/2022 9:49	-0.14
6/19/2022 8:46	12.10	0.13	6/20/2022 10:30	11.68	-0.22	6/19/2022 8:33	11.61	-0.05	6/19/2022 9:50	-0.09
6/19/2022 8:47	12.08	0.03	6/20/2022 10:31	11.66	-0.32	6/19/2022 8:34	11.62	-0.03	6/19/2022 9:51	-0.09
6/19/2022 8:48	12.06	0.09	6/20/2022 10:32	11.67	-0.28	6/19/2022 8:35	11.62	0.00	6/19/2022 9:52	-0.07
6/19/2022 8:49	12.11	0.08	6/20/2022 10:33	11.69	-0.33	6/19/2022 8:36	11.60	-0.05	6/19/2022 9:53	-0.05
6/19/2022 8:50	12.09	0.09	6/20/2022 10:34	11.68	-0.32	6/19/2022 8:37	11.62	-0.05	6/19/2022 9:54	-0.07
6/19/2022 8:51	12.09	0.12	6/20/2022 10:35	11.71	-0.33	6/19/2022 8:38	11.62	-0.04	6/19/2022 9:55	-0.02
6/19/2022 8:52	12.08	0.12	6/20/2022 10:36	11.68	-0.27	6/19/2022 8:39	11.62	-0.08	6/19/2022 9:56	-0.05
6/19/2022 8:53	12.08	0.12	6/20/2022 10:37	11.67	-0.25	6/19/2022 8:40	11.62	-0.02	6/19/2022 9:57	-0.06
6/19/2022 8:54	12.06	0.09	6/20/2022 10:38	11.69	-0.30	6/19/2022 8:41	11.63	-0.06	6/19/2022 9:58	-0.04
6/19/2022 8:55	12.10	0.08	6/20/2022 10:39	11.67	-0.33	6/19/2022 8:42	11.63	-0.07	6/19/2022 9:59	-0.06
6/19/2022 8:56	12.10	0.10	6/20/2022 10:40	11.66	-0.38	6/19/2022 8:43	11.58	-0.06	6/19/2022 10:00	-0.09
6/19/2022 8:57	12.11	0.15	6/20/2022 10:41	11.70	-0.21	6/19/2022 8:44	11.63	-0.06	6/19/2022 10:01	-0.04
6/19/2022 8:58	12.09	0.10	6/20/2022 10:42	11.67	-0.30	6/19/2022 8:45	11.63	-0.03	6/19/2022 10:02	-0.10
6/19/2022 8:59	12.11	0.12	6/20/2022 10:43	11.70	-0.27	6/19/2022 8:46	11.60	-0.04	6/19/2022 10:03	-0.08
6/19/2022 9:00	12.06	0.21	6/20/2022 10:44	11.68	-0.34	6/19/2022 8:47	11.61	-0.05	6/19/2022 10:04	-0.12
6/19/2022 9:01	12.06	0.12	6/20/2022 10:45	11.70	3.81	6/19/2022 8:48	11.60	-0.06	6/19/2022 10:05	-0.04
6/19/2022 9:02	12.09	0.08	6/20/2022 10:46	11.66	27.16	6/19/2022 8:49	11.63	0.01	6/19/2022 10:06	-0.12
6/19/2022 9:03	12.09	0.11	6/20/2022 10:47	11.63	36.42	6/19/2022 8:50	11.61	-0.03	6/19/2022 10:07	-0.11
6/19/2022 9:04	12.05	0.12	6/20/2022 10:48	11.58	39.36	6/19/2022 8:51	11.61	-0.03	6/19/2022 10:08	-0.10
6/19/2022 9:05	12.10	0.13	6/20/2022 10:49	11.57	40.59	6/19/2022 8:52	11.62	-0.01	6/19/2022 10:09	-0.07
6/19/2022 9:06	12.09	0.07	6/20/2022 10:50	11.52	37.53	6/19/2022 8:53	11.61	-0.02	6/19/2022 10:10	-0.08
6/19/2022 9:07	12.08	0.14	6/20/2022 10:51	11.50	36.69	6/19/2022 8:54	11.62	-0.02	6/19/2022 10:11	-0.09
6/19/2022 9:08	12.06	0.12	6/20/2022 10:52	11.48	36.60	6/19/2022 8:55	11.62	-0.02	6/19/2022 10:12	-0.10
6/19/2022 9:09	12.09	0.08	6/20/2022 10:53	11.42	37.16	6/19/2022 8:56	11.64	-0.05	6/19/2022 10:13	-0.08
6/19/2022 9:10	12.08	0.10	6/20/2022 10:54	11.38	37.65	6/19/2022 8:57	11.62	-0.04	6/19/2022 10:14	-0.08
6/19/2022 9:11	12.09	0.13	6/20/2022 10:55	11.39	38.61	6/19/2022 8:58	11.62	0.01	6/19/2022 10:15	-0.03
6/19/2022 9:12	12.08	0.07	6/20/2022 10:56	11.37	39.39	6/19/2022 8:59	11.60	0.01	6/19/2022 10:16	-0.07
6/19/2022 9:13	12.07	0.14	6/20/2022 10:57	11.39	39.71	6/19/2022 9:00	11.60	-0.03	6/19/2022 10:17	-0.05
6/19/2022 9:14	12.07	0.08	6/20/2022 10:58	11.36	40.35	6/19/2022 9:01	11.63	-0.03	6/19/2022 10:18	-0.10
6/19/2022 9:15	12.09	0.10	6/20/2022 10:59	11.36	40.99	6/19/2022 9:02	11.61	-0.07	6/19/2022 10:19	-0.12
6/19/2022 9:16	12.09	0.07	6/20/2022 11:00	11.37	41.42	6/19/2022 9:03	11.62	-0.04	6/19/2022 10:20	-0.12
6/19/2022 9:17	12.08	0.09	6/20/2022 11:01	11.34	42.05	6/19/2022 9:04	11.60	-0.05	6/19/2022 10:21	-0.01
6/19/2022 9:18	12.10	0.03	6/20/2022 11:02	11.37	42.77	6/19/2022 9:05	11.62	-0.03	6/19/2022 10:22	-0.08
6/19/2022 9:19	12.06	0.12	6/20/2022 11:03	11.39	43.17	6/19/2022 9:06	11.62	-0.04	6/19/2022 10:23	-0.10
6/19/2022 9:20	12.08	0.05	6/20/2022 11:04	11.37	43.64	6/19/2022 9:07	11.63	-0.05	6/19/2022 10:24	-0.02
6/19/2022 9:21	12.10	0.12	6/20/2022 11:05	11.38	44.01	6/19/2022 9:08	11.63	-0.04	6/19/2022 10:25	-0.09
6/19/2022 9:22	12.09	0.04	6/20/2022 11:06	11.35	44.79	6/19/2022 9:09	11.60	-0.04	6/19/2022 10:26	-0.09
6/19/2022 9:23	12.05	0.13	6/20/2022 11:07	11.35	44.95	6/19/2022 9:10	11.62	-0.01	6/19/2022 10:27	-0.11
6/19/2022 9:24	12.09	0.06	6/20/2022 11:08	11.34	45.63	6/19/2022 9:11	11.63	-0.04	6/19/2022 10:28	-0.11
6/19/2022 9:25	12.07	0.14	6/20/2022 11:09	11.33	46.01	6/19/2022 9:12	11.62	-0.01	6/19/2022 10:29	-0.02
6/19/2022 9:26	12.08	0.11	6/20/2022 11:10	11.36	46.39	6/19/2022 9:13	11.61	-0.04	6/19/2022 10:30	-0.18

6/19/2022 9:27	12.09	0.12	6/20/2022 11:11	11.33	46.73	6/19/2022 9:14	11.62	0.00	6/19/2022 10:31	-0.03
6/19/2022 9:28	12.07	0.08	6/20/2022 11:12	11.35	47.04	6/19/2022 9:15	11.60	-0.01	6/19/2022 10:32	-0.08
6/19/2022 9:29	12.08	0.07	6/20/2022 11:13	11.34	47.53	6/19/2022 9:16	11.63	-0.04	6/19/2022 10:33	-0.08
6/19/2022 9:30	12.07	-0.01	6/20/2022 11:14	11.34	47.83	6/19/2022 9:17	11.61	-0.05	6/19/2022 10:34	-0.10
6/19/2022 9:31	12.07	0.06	6/20/2022 11:15	11.34	48.28	6/19/2022 9:18	11.61	-0.06	6/19/2022 10:35	-0.07
6/19/2022 9:32	12.10	0.13	6/20/2022 11:16	11.32	48.44	6/19/2022 9:19	11.60	-0.03	6/19/2022 10:36	-0.04
6/19/2022 9:33	12.09	0.05	6/20/2022 11:17	11.33	48.73	6/19/2022 9:20	11.61	-0.07	6/19/2022 10:37	-0.10
6/19/2022 9:34	12.07	0.05	6/20/2022 11:18	11.35	49.22	6/19/2022 9:21	11.62	-0.08	6/19/2022 10:38	-0.08
6/19/2022 9:35	12.07	0.07	6/20/2022 11:19	11.33	49.77	6/19/2022 9:22	11.62	-0.07	6/19/2022 10:39	-0.06
6/19/2022 9:36	12.09	0.13	6/20/2022 11:20	11.33	49.96	6/19/2022 9:23	11.60	0.00	6/19/2022 10:40	-0.14
6/19/2022 9:37	12.07	0.12	6/20/2022 11:21	11.33	49.92	6/19/2022 9:24	11.62	-0.01	6/19/2022 10:41	-0.05
6/19/2022 9:38	12.09	0.09	6/20/2022 11:22	11.34	50.48	6/19/2022 9:25	11.61	-0.04	6/19/2022 10:42	-0.05
6/19/2022 9:39	12.08	0.06	6/20/2022 11:23	11.35	50.62	6/19/2022 9:26	11.61	-0.05	6/19/2022 10:43	-0.08
6/19/2022 9:40	12.07	0.12	6/20/2022 11:24	11.33	50.82	6/19/2022 9:27	11.63	-0.04	6/19/2022 10:44	-0.11
6/19/2022 9:41	12.09	0.11	6/20/2022 11:25	11.32	51.00	6/19/2022 9:28	11.64	-0.04	6/19/2022 10:45	-0.10
6/19/2022 9:42	12.08	0.08	6/20/2022 11:26	11.31	51.41	6/19/2022 9:29	11.63	-0.05	6/19/2022 10:46	-0.06
6/19/2022 9:43	12.06	0.13	6/20/2022 11:27	11.32	51.61	6/19/2022 9:30	11.60	-0.06	6/19/2022 10:47	-0.08
6/19/2022 9:44	12.09	0.09	6/20/2022 11:28	11.30	51.68	6/19/2022 9:31	11.62	-0.02	6/19/2022 10:48	-0.12
6/19/2022 9:45	12.07	0.16	6/20/2022 11:29	11.32	51.96	6/19/2022 9:32	11.60	-0.04	6/19/2022 10:49	-0.09
6/19/2022 9:46	12.11	0.13	6/20/2022 11:30	11.33	52.38	6/19/2022 9:33	11.62	-0.05	6/19/2022 10:50	-0.17
6/19/2022 9:47	12.07	0.21	6/20/2022 11:31	11.32	52.55	6/19/2022 9:34	11.61	-0.02	6/19/2022 10:51	-0.09
6/19/2022 9:48	12.08	0.04	6/20/2022 11:32	11.32	52.58	6/19/2022 9:35	11.61	0.00	6/19/2022 10:52	-0.05
6/19/2022 9:49	12.07	0.12	6/20/2022 11:33	11.35	52.78	6/19/2022 9:36	11.63	-0.02	6/19/2022 10:53	-0.08
6/19/2022 9:50	12.08	0.13	6/20/2022 11:34	11.32	52.91	6/19/2022 9:37	11.62	-0.01	6/19/2022 10:54	-0.05
6/19/2022 9:51	12.09	0.15	6/20/2022 11:35	11.30	53.25	6/19/2022 9:38	11.62	-0.04	6/19/2022 10:55	-0.07
6/19/2022 9:52	12.10	0.21	6/20/2022 11:36	11.33	53.45	6/19/2022 9:39	11.62	-0.04	6/19/2022 10:56	-0.07
6/19/2022 9:53	12.08	0.12	6/20/2022 11:37	11.33	53.62	6/19/2022 9:40	11.61	-0.02	6/19/2022 10:57	-0.13
6/19/2022 9:54	12.08	0.11	6/20/2022 11:38	11.32	53.89	6/19/2022 9:41	11.61	-0.07	6/19/2022 10:58	-0.15
6/19/2022 9:55	12.08	0.15	6/20/2022 11:39	11.29	53.78	6/19/2022 9:42	11.62	-0.02	6/19/2022 10:59	-0.07
6/19/2022 9:56	12.07	0.11	6/20/2022 11:40	11.33	53.98	6/19/2022 9:43	11.63	-0.03	6/19/2022 11:00	-0.11
6/19/2022 9:57	12.10	0.08	6/20/2022 11:41	11.32	54.31	6/19/2022 9:44	11.61	-0.02	6/19/2022 11:01	-0.09
6/19/2022 9:58	12.09	0.19	6/20/2022 11:42	11.33	54.48	6/19/2022 9:45	11.62	-0.01	6/19/2022 11:02	-0.06
6/19/2022 9:59	12.07	0.10	6/20/2022 11:43	11.33	54.68	6/19/2022 9:46	11.61	-0.05	6/19/2022 11:03	-0.05
6/19/2022 10:00	12.09	0.16	6/20/2022 11:44	11.31	54.93	6/19/2022 9:47	11.61	-0.01	6/19/2022 11:04	-0.10
6/19/2022 10:01	12.08	0.09	6/20/2022 11:45	11.34	55.06	6/19/2022 9:48	11.64	-0.05	6/19/2022 11:05	-0.07
6/19/2022 10:02	12.08	0.09	6/20/2022 11:46	11.32	54.91	6/19/2022 9:49	11.64	-0.07	6/19/2022 11:06	-0.07
6/19/2022 10:03	12.06	0.12	6/20/2022 11:47	11.32	55.27	6/19/2022 9:50	11.63	-0.03	6/19/2022 11:07	-0.06
6/19/2022 10:04	12.11	0.08	6/20/2022 11:48	11.30	55.26	6/19/2022 9:51	11.59	-0.04	6/19/2022 11:08	-0.07
6/19/2022 10:05	12.10	0.12	6/20/2022 11:49	11.32	55.53	6/19/2022 9:52	11.62	-0.05	6/19/2022 11:09	-0.08
6/19/2022 10:06	12.07	0.08	6/20/2022 11:50	11.35	55.79	6/19/2022 9:53	11.61	-0.03	6/19/2022 11:10	-0.09
6/19/2022 10:07	12.07	0.03	6/20/2022 11:51	11.29	55.72	6/19/2022 9:54	11.63	-0.08	6/19/2022 11:11	-0.05
6/19/2022 10:08	12.10	0.19	6/20/2022 11:52	11.32	55.94	6/19/2022 9:55	11.61	-0.07	6/19/2022 11:12	-0.14
6/19/2022 10:09	12.09	0.10	6/20/2022 11:53	11.30	55.92	6/19/2022 9:56	11.60	-0.04	6/19/2022 11:13	-0.07
6/19/2022 10:10	12.08	0.10	6/20/2022 11:54	11.31	56.32	6/19/2022 9:57	11.63	-0.02	6/19/2022 11:14	-0.09
6/19/2022 10:11	12.09	0.12	6/20/2022 11:55	11.31	56.47	6/19/2022 9:58	11.63	0.00	6/19/2022 11:15	-0.07
6/19/2022 10:12	12.10	0.08	6/20/2022 11:56	11.32	56.49	6/19/2022 9:59	11.60	-0.06	6/19/2022 11:16	-0.07
6/19/2022 10:13	12.10	0.09	6/20/2022 11:57	11.32	56.65	6/19/2022 10:00	11.62	-0.06	6/19/2022 11:17	-0.08
6/19/2022 10:14	12.07	0.07	6/20/2022 11:58	11.32	56.82	6/19/2022 10:01	11.61	-0.04	6/19/2022 11:18	-0.06
6/19/2022 10:15	12.07	0.13	6/20/2022 11:59	11.31	56.85	6/19/2022 10:02	11.63	-0.03	6/19/2022 11:19	-0.05
6/19/2022 10:16	12.07	0.07	6/20/2022 12:00	11.31	57.11	6/19/2022 10:03	11.62	-0.07	6/19/2022 11:20	-0.08
6/19/2022 10:17	12.08	0.03	6/20/2022 12:01	11.33	57.08	6/19/2022 10:04	11.63	0.01	6/19/2022 11:21	-0.06
6/19/2022 10:18	12.10	0.09	6/20/2022 12:02	11.30	57.49	6/19/2022 10:05	11.62	-0.04	6/19/2022 11:22	-0.12
6/19/2022 10:19	12.07	0.12	6/20/2022 12:03	11.30	57.34	6/19/2022 10:06	11.61	-0.09	6/19/2022 11:23	-0.07
6/19/2022 10:20	12.07	0.10	6/20/2022 12:04	11.32	57.80	6/19/2022 10:07	11.64	-0.02	6/19/2022 11:24	-0.11
6/19/2022 10:21	12.08	0.14	6/20/2022 12:05	11.33	57.67	6/19/2022 10:08	11.61	-0.02	6/19/2022 11:25	-0.05
6/19/2022 10:22	12.08	0.09	6/20/2022 12:06	11.29	57.87	6/19/2022 10:09	11.62	-0.06	6/19/2022 11:26	-0.09
6/19/2022 10:23	12.11	0.09	6/20/2022 12:07	11.30	57.80	6/19/2022 10:10	11.63	-0.06	6/19/2022 11:27	-0.01
6/19/2022 10:24	12.07	0.09	6/20/2022 12:08	11.33	57.82	6/19/2022 10:11	11.61	-0.04	6/19/2022 11:28	-0.08
6/19/2022 10:25	12.10	0.07	6/20/2022 12:09	11.33	58.05	6/19/2022 10:12	11.62	-0.02	6/19/2022 11:29	-0.10
6/19/2022 10:26	12.09	0.03	6/20/2022 12:10	11.27	58.21	6/19/2022 10:13	11.62	-0.05	6/19/2022 11:30	-0.06
6/19/2022 10:27	12.08	0.15	6/20/2022 12:11	11.32	58.25	6/19/2022 10:14	11.63	-0.02	6/19/2022 11:31	-0.06
6/19/2022 10:28	12.04	0.09	6/20/2022 12:12	11.32	58.17	6/19/2022 10:15	11.63	-0.04	6/19/2022 11:32	-0.08
6/19/2022 10:29	12.06	0.13	6/20/2022 12:13	11.31	58.54	6/19/2022 10:16	11.61	-0.05	6/19/2022 11:33	-0.05
6/19/2022 10:30	12.07	0.18	6/20/2022 12:14	11.32	58.38	6/19/2022 10:17	11.64	-0.03	6/19/2022 11:34	-0.12
6/19/2022 10:31	12.09	0.13	6/20/2022 12:15	11.31	58.61	6/19/2022 10:18	11.61	-0.04	6/19/2022 11:35	-0.10
6/19/2022 10:32	12.09	0.12	6/20/2022 12:16	11.34	58.63	6/19/2022 10:19	11.61	-0.05	6/19/2022 11:36	-0.08
6/19/2022 10:33	12.08	0.04	6/20/2022 12:17	11.29	58.71	6/19/2022 10:20	11.61	-0.05	6/19/2022 11:37	-0.10
6/19/2022 10:34	12.10	0.08	6/20/2022 12:18	11.31	58.69	6/19/2022 10:21	11.62	-0.05	6/19/2022 11:38	-0.05
6/19/2022 10:35	12.06	0.12	6/20/2022 12:19	11.33	58.91	6/19/2022 10:22	11.62	-0.02	6/19/2022 11:39	-0.08
6/19/2022 10:36	12.09	0.02	6/20/2022 12:20	11.29	58.92	6/19/2022 10:23	11.64	-0.02	6/19/2022 11:40	-0.11
6/19/2022 10:37	12.12	0.08	6/20/2022 12:21	11.31	58.98	6/19/2022 10:24	11.60	0.00	6/19/2022 11:41	-0.10
6/19/2022 10:38	12.09	0.16	6/20/2022 12:22	11.31	59.22	6/19/2022 10:25	11.64	-0.03	6/19/2022 11:42	-0.09
6/19/2022 10:39	12.11	0.19	6/20/2022 12:23	11.33	59.32	6/19/2022 10:26	11.64	-0.03	6/19/2022 11:43	-0.06
6/19/2022 10:40	12.07	0.02	6/20/2022 12:24	11.31	59.82	6/19/2022 10:27	11.60	-0.03	6/19/2022 11:44	-0.11
6/19/2022 10:41	12.07	0.13	6/20/2022 12:25	11.33	60.52	6/19/2022 10:28	11.63	-0.05	6/19/2022 11:45	-0.07
6/19/2022 10:42	12.09	0.11	6/20/2022 12:26	11.30	60.61	6/19/2022 10:29	11.62	-0.06	6/19/2022 11:46	-0.06
6/19/2022 10:43	12.09	0.18	6/20/2022 12:27	11.30	61.18	6/19/2022 10:30	11.60	-0.03	6/19/2022 11:47	-0.09
6/19/2022 10:44	12.07	0.13	6/20/2022 12:28	11.30	61.61	6/19/2022 10:31	11.61	-0.05	6/19/2022 11:48	-0.09
6/19/2022 10:45	12.09	0.15	6/20/2022 12:29	11.31	61.75	6/19/2022 10:32	11.62	-0.01	6/19/2022 11:49	-0.10
6/19/2022 10:46	12.09	0.09	6/20/2022 12:30	11.30	62.22	6/19/2022 10:33	11.62	-0.04	6/19/2022 11:50	-0.06
6/19/2022 10:47	12.09	0.13	6/20/2022 12:31	11.26	62.58	6/19/2022 10:34	11.63	-0.02	6/19/2022 11:51	-0.07
6/19/2022 10:48	12.09	0.11	6/20/2022 12:32	11.29	63.04	6/19/2022 10:35	11.64	-0.04	6/19/2022 11:52	-0.04
6/19/2022 10:49	12.10	0.10	6/20/2022 12:33	11.32	63.53	6/19/2022 10:36	11.63	-0.06	6/19/2022 11:53	-0.14
6/19/2022 10:50	12.09	0.14	6/20/2022 12:34	11.30	63.82	6/19/2022 10:37	11.61	0.01	6/19/2022 11:54	-0.11
6/19/2022 10:51	12.10	0.01	6/20/2022 12:35	11.30	63.88	6/19/2022 10:38	11.62	-0.01	6/19/2022 11:55	-0.07
6/19/2022 10:52	12.07	0.09	6/20/2022 12:36	11.35	64.33	6/19/2022 10:39	11.61	-0.05	6/19/2022 11:56	-0.08
6/19/2022 10:53	12.07	0.14	6/20/2022 12:37	11.30	64.50	6/19/2022 10:40	11.62	-0.07	6/19/2022 11:57	-0.11
6/19/2022 10:54	12.10	0.08	6/20/2022 12:38	11.29	64.99	6/19/2022 10:41	11.61	-0.01	6/19/2022 11:58	-0.08

6/19/2022 10:55	12.08	0.05	6/20/2022 12:39	11.32	65.13	6/19/2022 10:42	11.62	-0.02	6/19/2022 11:59	-0.07
6/19/2022 10:56	12.07	0.08	6/20/2022 12:40	11.32	65.50	6/19/2022 10:43	11.62	-0.05	6/19/2022 12:00	-0.09
6/19/2022 10:57	12.10	0.12	6/20/2022 12:41	11.29	65.54	6/19/2022 10:44	11.63	-0.01	6/19/2022 12:01	-0.09
6/19/2022 10:58	12.11	0.14	6/20/2022 12:42	11.31	65.98	6/19/2022 10:45	11.61	-0.06	6/19/2022 12:02	-0.07
6/19/2022 10:59	12.05	0.05	6/20/2022 12:43	11.31	66.17	6/19/2022 10:46	11.61	-0.01	6/19/2022 12:03	-0.07
6/19/2022 11:00	12.08	0.03	6/20/2022 12:44	11.32	66.36	6/19/2022 10:47	11.60	-0.05	6/19/2022 12:04	-0.10
6/19/2022 11:01	12.11	0.05	6/20/2022 12:45	11.31	66.55	6/19/2022 10:48	11.65	-0.06	6/19/2022 12:05	-0.06
6/19/2022 11:02	12.08	0.07	6/20/2022 12:46	11.31	66.81	6/19/2022 10:49	11.63	-0.02	6/19/2022 12:06	-0.04
6/19/2022 11:03	12.08	-0.02	6/20/2022 12:47	11.30	66.97	6/19/2022 10:50	11.64	-0.07	6/19/2022 12:07	-0.07
6/19/2022 11:04	12.10	0.08	6/20/2022 12:48	11.31	67.26	6/19/2022 10:51	11.61	-0.04	6/19/2022 12:08	-0.08
6/19/2022 11:05	12.08	0.16	6/20/2022 12:49	11.33	67.43	6/19/2022 10:52	11.62	-0.05	6/19/2022 12:09	-0.08
6/19/2022 11:06	12.11	0.10	6/20/2022 12:50	11.34	67.52	6/19/2022 10:53	11.61	0.01	6/19/2022 12:10	-0.05
6/19/2022 11:07	12.08	0.07	6/20/2022 12:51	11.31	67.71	6/19/2022 10:54	11.65	-0.05	6/19/2022 12:11	-0.03
6/19/2022 11:08	12.08	0.12	6/20/2022 12:52	11.32	67.96	6/19/2022 10:55	11.63	-0.02	6/19/2022 12:12	-0.11
6/19/2022 11:09	12.07	0.18	6/20/2022 12:53	11.29	68.05	6/19/2022 10:56	11.63	-0.01	6/19/2022 12:13	-0.04
6/19/2022 11:10	12.10	0.09	6/20/2022 12:54	11.29	68.26	6/19/2022 10:57	11.61	-0.05	6/19/2022 12:14	-0.13
6/19/2022 11:11	12.08	0.14	6/20/2022 12:55	11.30	68.37	6/19/2022 10:58	11.61	-0.05	6/19/2022 12:15	-0.11
6/19/2022 11:12	12.06	0.07	6/20/2022 12:56	11.30	68.65	6/19/2022 10:59	11.60	-0.01	6/19/2022 12:16	-0.03
6/19/2022 11:13	12.09	0.07	6/20/2022 12:57	11.27	68.81	6/19/2022 11:00	11.63	-0.02	6/19/2022 12:17	-0.09
6/19/2022 11:14	12.09	0.13	6/20/2022 12:58	11.30	68.78	6/19/2022 11:01	11.61	-0.03	6/19/2022 12:18	-0.08
6/19/2022 11:15	12.09	0.09	6/20/2022 12:59	11.31	68.93	6/19/2022 11:02	11.63	-0.06	6/19/2022 12:19	-0.12
6/19/2022 11:16	12.09	0.06	6/20/2022 13:00	11.29	69.41	6/19/2022 11:03	11.60	-0.04	6/19/2022 12:20	-0.07
6/19/2022 11:17	12.11	0.14	6/20/2022 13:01	11.30	69.32	6/19/2022 11:04	11.60	-0.03	6/19/2022 12:21	-0.09
6/19/2022 11:18	12.08	0.14	6/20/2022 13:02	11.30	69.40	6/19/2022 11:05	11.63	-0.07	6/19/2022 12:22	-0.04
6/19/2022 11:19	12.07	0.12	6/20/2022 13:03	11.29	69.87	6/19/2022 11:06	11.62	-0.03	6/19/2022 12:23	-0.09
6/19/2022 11:20	12.07	0.06	6/20/2022 13:04	11.33	69.95	6/19/2022 11:07	11.60	-0.08	6/19/2022 12:24	-0.02
6/19/2022 11:21	12.10	0.07	6/20/2022 13:05	11.26	69.98	6/19/2022 11:08	11.61	0.00	6/19/2022 12:25	-0.05
6/19/2022 11:22	12.07	-0.01	6/20/2022 13:06	11.30	70.02	6/19/2022 11:09	11.62	-0.06	6/19/2022 12:26	-0.07
6/19/2022 11:23	12.09	0.08	6/20/2022 13:07	11.30	70.21	6/19/2022 11:10	11.62	-0.02	6/19/2022 12:27	-0.10
6/19/2022 11:24	12.09	0.03	6/20/2022 13:08	11.31	70.64	6/19/2022 11:11	11.61	-0.06	6/19/2022 12:28	-0.06
6/19/2022 11:25	12.08	0.02	6/20/2022 13:09	11.31	70.26	6/19/2022 11:12	11.60	-0.03	6/19/2022 12:29	-0.10
6/19/2022 11:26	12.10	0.06	6/20/2022 13:10	11.29	70.92	6/19/2022 11:13	11.61	-0.05	6/19/2022 12:30	-0.07
6/19/2022 11:27	12.09	0.12	6/20/2022 13:11	11.30	70.94	6/19/2022 11:14	11.62	0.01	6/19/2022 12:31	-0.09
6/19/2022 11:28	12.11	0.10	6/20/2022 13:12	11.31	70.85	6/19/2022 11:15	11.61	-0.06	6/19/2022 12:32	-0.11
6/19/2022 11:29	12.07	0.10	6/20/2022 13:13	11.30	71.09	6/19/2022 11:16	11.62	-0.05	6/19/2022 12:33	-0.09
6/19/2022 11:30	12.07	0.12	6/20/2022 13:14	11.28	71.17	6/19/2022 11:17	11.62	-0.02	6/19/2022 12:34	-0.07
6/19/2022 11:31	12.10	0.16	6/20/2022 13:15	11.32	71.19	6/19/2022 11:18	11.62	-0.04	6/19/2022 12:35	-0.09
6/19/2022 11:32	12.07	0.19	6/20/2022 13:16	11.32	71.54	6/19/2022 11:19	11.62	-0.04	6/19/2022 12:36	-0.06
6/19/2022 11:33	12.08	0.14	6/20/2022 13:17	11.29	71.51	6/19/2022 11:20	11.61	-0.04	6/19/2022 12:37	-0.06
6/19/2022 11:34	12.10	0.07	6/20/2022 13:18	11.31	71.25	6/19/2022 11:21	11.63	-0.02	6/19/2022 12:38	-0.06
6/19/2022 11:35	12.09	0.10	6/20/2022 13:19	11.29	71.41	6/19/2022 11:22	11.64	-0.02	6/19/2022 12:39	-0.10
6/19/2022 11:36	12.10	0.06	6/20/2022 13:20	11.28	71.81	6/19/2022 11:23	11.62	-0.02	6/19/2022 12:40	-0.10
6/19/2022 11:37	12.08	-0.01	6/20/2022 13:21	11.29	71.68	6/19/2022 11:24	11.63	-0.07	6/19/2022 12:41	-0.04
6/19/2022 11:38	12.05	0.09	6/20/2022 13:22	11.32	71.77	6/19/2022 11:25	11.62	-0.02	6/19/2022 12:42	-0.11
6/19/2022 11:39	12.10	0.12	6/20/2022 13:23	11.30	72.04	6/19/2022 11:26	11.62	-0.02	6/19/2022 12:43	-0.12
6/19/2022 11:40	12.10	0.18	6/20/2022 13:24	11.30	72.20	6/19/2022 11:27	11.62	-0.01	6/19/2022 12:44	-0.07
6/19/2022 11:41	12.07	0.03	6/20/2022 13:25	11.31	72.16	6/19/2022 11:28	11.60	-0.05	6/19/2022 12:45	-0.09
6/19/2022 11:42	12.07	0.15	6/20/2022 13:26	11.29	72.09	6/19/2022 11:29	11.62	-0.06	6/19/2022 12:46	-0.09
6/19/2022 11:43	12.07	0.03	6/20/2022 13:27	11.29	72.27	6/19/2022 11:30	11.61	-0.01	6/19/2022 12:47	-0.12
6/19/2022 11:44	12.08	0.08	6/20/2022 13:28	11.29	72.23	6/19/2022 11:31	11.61	-0.04	6/19/2022 12:48	-0.08
6/19/2022 11:45	12.13	0.13	6/20/2022 13:29	11.30	72.70	6/19/2022 11:32	11.63	-0.01	6/19/2022 12:49	-0.13
6/19/2022 11:46	12.11	0.07	6/20/2022 13:30	11.32	72.53	6/19/2022 11:33	11.62	-0.04	6/19/2022 12:50	-0.09
6/19/2022 11:47	12.07	0.08	6/20/2022 13:31	11.30	72.52	6/19/2022 11:34	11.64	-0.04	6/19/2022 12:51	-0.13
6/19/2022 11:48	12.08	0.14	6/20/2022 13:32	11.30	72.75	6/19/2022 11:35	11.63	-0.03	6/19/2022 12:52	-0.09
6/19/2022 11:49	12.09	0.09	6/20/2022 13:33	11.31	72.80	6/19/2022 11:36	11.62	-0.05	6/19/2022 12:53	-0.06
6/19/2022 11:50	12.11	0.13	6/20/2022 13:34	11.29	73.00	6/19/2022 11:37	11.60	0.03	6/19/2022 12:54	-0.12
6/19/2022 11:51	12.07	0.10	6/20/2022 13:35	11.31	72.95	6/19/2022 11:38	11.62	-0.06	6/19/2022 12:55	-0.08
6/19/2022 11:52	12.09	0.02	6/20/2022 13:36	11.29	72.96	6/19/2022 11:39	11.59	-0.03	6/19/2022 12:56	-0.07
6/19/2022 11:53	12.09	0.04	6/20/2022 13:37	11.30	73.07	6/19/2022 11:40	11.59	-0.02	6/19/2022 12:57	-0.12
6/19/2022 11:54	12.08	0.14	6/20/2022 13:38	11.31	73.17	6/19/2022 11:41	11.60	-0.03	6/19/2022 12:58	-0.14
6/19/2022 11:55	12.05	0.10	6/20/2022 13:39	11.31	73.34	6/19/2022 11:42	11.62	-0.08	6/19/2022 12:59	-0.09
6/19/2022 11:56	12.09	0.04	6/20/2022 13:40	11.29	73.13	6/19/2022 11:43	11.61	-0.01	6/19/2022 13:00	-0.05
6/19/2022 11:57	12.08	0.13	6/20/2022 13:41	11.29	73.35	6/19/2022 11:44	11.65	-0.05	6/19/2022 13:01	-0.11
6/19/2022 11:58	12.06	0.12	6/20/2022 13:42	11.28	73.49	6/19/2022 11:45	11.63	0.01	6/19/2022 13:02	-0.14
6/19/2022 11:59	12.07	0.09	6/20/2022 13:43	11.29	73.50	6/19/2022 11:46	11.62	-0.07	6/19/2022 13:03	-0.07
6/19/2022 12:00	12.07	0.17	6/20/2022 13:44	11.31	73.47	6/19/2022 11:47	11.61	-0.04	6/19/2022 13:04	-0.11
6/19/2022 12:01	12.08	0.08	6/20/2022 13:45	11.29	73.62	6/19/2022 11:48	11.61	-0.03	6/19/2022 13:05	-0.09
6/19/2022 12:02	12.08	0.18	6/20/2022 13:46	11.28	73.76	6/19/2022 11:49	11.60	-0.03	6/19/2022 13:06	-0.10
6/19/2022 12:03	12.08	0.03	6/20/2022 13:47	11.28	73.97	6/19/2022 11:50	11.61	-0.05	6/19/2022 13:07	-0.11
6/19/2022 12:04	12.09	0.10	6/20/2022 13:48	11.31	74.03	6/19/2022 11:51	11.60	-0.05	6/19/2022 13:08	-0.10
6/19/2022 12:05	12.05	0.12	6/20/2022 13:49	11.28	73.81	6/19/2022 11:52	11.61	-0.04	6/19/2022 13:09	-0.11
6/19/2022 12:06	12.10	0.10	6/20/2022 13:50	11.31	74.02	6/19/2022 11:53	11.63	-0.04	6/19/2022 13:10	-0.04
6/19/2022 12:07	12.05	0.10	6/20/2022 13:51	11.29	74.11	6/19/2022 11:54	11.59	-0.03	6/19/2022 13:11	-0.13
6/19/2022 12:08	12.08	0.04	6/20/2022 13:52	11.27	74.19	6/19/2022 11:55	11.61	-0.04	6/19/2022 13:12	-0.07
6/19/2022 12:09	12.09	0.08	6/20/2022 13:53	11.30	74.16	6/19/2022 11:56	11.61	-0.03	6/19/2022 13:13	-0.10
6/19/2022 12:10	12.06	0.08	6/20/2022 13:54	11.28	74.32	6/19/2022 11:57	11.65	-0.03	6/19/2022 13:14	-0.14
6/19/2022 12:11	12.10	0.09	6/20/2022 13:55	11.25	74.37	6/19/2022 11:58	11.60	-0.05	6/19/2022 13:15	-0.07
6/19/2022 12:12	12.08	0.09	6/20/2022 13:56	11.32	74.21	6/19/2022 11:59	11.60	-0.04	6/19/2022 13:16	-0.14
6/19/2022 12:13	12.07	0.12	6/20/2022 13:57	11.28	74.61	6/19/2022 12:00	11.62	-0.04	6/19/2022 13:17	-0.07
6/19/2022 12:14	12.10	0.10	6/20/2022 13:58	11.32	74.58	6/19/2022 12:01	11.62	-0.07	6/19/2022 13:18	-0.13
6/19/2022 12:15	12.10	0.07	6/20/2022 13:59	11.28	74.59	6/19/2022 12:02	11.60	0.03	6/19/2022 13:19	-0.06
6/19/2022 12:16	12.09	0.08	6/20/2022 14:00	11.30	74.75	6/19/2022 12:03	11.60	-0.06	6/19/2022 13:20	-0.15
6/19/2022 12:17	12.11	0.02	6/20/2022 14:01	11.32	74.65	6/19/2022 12:04	11.59	-0.03	6/19/2022 13:21	-0.08
6/19/2022 12:18	12.06	0.10	6/20/2022 14:02	11.32	74.85	6/19/2022 12:05	11.61	-0.04	6/19/2022 13:22	-0.09
6/19/2022 12:19	12.09	0.09	6/20/2022 14:03	11.28	75.17	6/19/2022 12:06	11.60	-0.04	6/19/2022 13:23	-0.10
6/19/2022 12:20	12.09	0.07	6/20/2022 14:04	11.32	74.90	6/19/2022 12:07	11.62	-0.04	6/19/2022 13:24	-0.13
6/19/2022 12:21	12.07	0.11	6/20/2022 14:05	11.30	75.04	6/19/2022 12:08	11.60	-0.02	6/19/2022 13:25	-0.05
6/19/2022 12:22	12.09	0.11	6/20/2022 14:06	11.31	74.96	6/19/2022 12:09	11.62	-0.06	6/19/2022 13:26	-0.08

6/19/2022 12:23	12.07	0.12	6/20/2022 14:07	11.30	75.13	6/19/2022 12:10	11.63	-0.07	6/19/2022 13:27	-0.09
6/19/2022 12:24	12.10	0.08	6/20/2022 14:08	11.31	75.08	6/19/2022 12:11	11.60	-0.03	6/19/2022 13:28	-0.10
6/19/2022 12:25	12.10	0.10	6/20/2022 14:09	11.30	75.24	6/19/2022 12:12	11.63	-0.04	6/19/2022 13:29	-0.13
6/19/2022 12:26	12.06	0.17	6/20/2022 14:10	11.29	75.20	6/19/2022 12:13	11.64	-0.02	6/19/2022 13:30	-0.08
6/19/2022 12:27	12.09	0.14	6/20/2022 14:11	11.29	75.48	6/19/2022 12:14	11.62	-0.01	6/19/2022 13:31	-0.08
6/19/2022 12:28	12.07	0.06	6/20/2022 14:12	11.28	75.45	6/19/2022 12:15	11.61	-0.01	6/19/2022 13:32	-0.07
6/19/2022 12:29	12.06	0.03	6/20/2022 14:13	11.28	75.41	6/19/2022 12:16	11.62	-0.04	6/19/2022 13:33	-0.09
6/19/2022 12:30	12.07	0.04	6/20/2022 14:14	11.26	75.41	6/19/2022 12:17	11.62	-0.01	6/19/2022 13:34	-0.05
6/19/2022 12:31	12.07	0.07	6/20/2022 14:15	11.30	75.48	6/19/2022 12:18	11.64	0.00	6/19/2022 13:35	-0.08
6/19/2022 12:32	12.07	0.06	6/20/2022 14:16	11.29	75.82	6/19/2022 12:19	11.63	-0.02	6/19/2022 13:36	-0.06
6/19/2022 12:33	12.09	0.00	6/20/2022 14:17	11.30	75.73	6/19/2022 12:20	11.64	-0.01	6/19/2022 13:37	-0.06
6/19/2022 12:34	12.09	0.03	6/20/2022 14:18	11.27	75.69	6/19/2022 12:21	11.63	-0.05	6/19/2022 13:38	-0.09
6/19/2022 12:35	12.06	0.09	6/20/2022 14:19	11.28	75.97	6/19/2022 12:22	11.61	-0.04	6/19/2022 13:39	-0.08
6/19/2022 12:36	12.08	0.13	6/20/2022 14:20	11.29	75.90	6/19/2022 12:23	11.60	-0.03	6/19/2022 13:40	-0.07
6/19/2022 12:37	12.08	0.08	6/20/2022 14:21	11.28	75.84	6/19/2022 12:24	11.62	-0.06	6/19/2022 13:41	-0.09
6/19/2022 12:38	12.08	0.12	6/20/2022 14:22	11.28	75.92	6/19/2022 12:25	11.61	-0.03	6/19/2022 13:42	-0.07
6/19/2022 12:39	12.09	0.18	6/20/2022 14:23	11.29	76.12	6/19/2022 12:26	11.62	-0.04	6/19/2022 13:43	-0.05
6/19/2022 12:40	12.09	0.11	6/20/2022 14:24	11.29	76.14	6/19/2022 12:27	11.60	-0.04	6/19/2022 13:44	-0.10
6/19/2022 12:41	12.08	0.13	6/20/2022 14:25	11.30	76.10	6/19/2022 12:28	11.62	-0.01	6/19/2022 13:45	-0.08
6/19/2022 12:42	12.08	0.04	6/20/2022 14:26	11.31	76.13	6/19/2022 12:29	11.63	0.01	6/19/2022 13:46	-0.05
6/19/2022 12:43	12.08	0.11	6/20/2022 14:27	11.29	76.40	6/19/2022 12:30	11.61	-0.02	6/19/2022 13:47	-0.08
6/19/2022 12:44	12.08	0.11	6/20/2022 14:28	11.27	76.30	6/19/2022 12:31	11.60	-0.01	6/19/2022 13:48	-0.07
6/19/2022 12:45	12.08	0.07	6/20/2022 14:29	11.29	76.48	6/19/2022 12:32	11.60	-0.09	6/19/2022 13:49	-0.07
6/19/2022 12:46	12.07	0.15	6/20/2022 14:30	11.28	76.41	6/19/2022 12:33	11.62	-0.03	6/19/2022 13:50	-0.10
6/19/2022 12:47	12.07	0.07	6/20/2022 14:31	11.28	76.46	6/19/2022 12:34	11.66	-0.02	6/19/2022 13:51	-0.07
6/19/2022 12:48	12.08	0.15	6/20/2022 14:32	11.28	76.58	6/19/2022 12:35	11.60	-0.02	6/19/2022 13:52	-0.11
6/19/2022 12:49	12.10	0.08	6/20/2022 14:33	11.29	76.55	6/19/2022 12:36	11.62	0.00	6/19/2022 13:53	-0.04
6/19/2022 12:50	12.08	0.16	6/20/2022 14:34	11.28	76.57	6/19/2022 12:37	11.63	-0.02	6/19/2022 13:54	-0.14
6/19/2022 12:51	12.09	0.13	6/20/2022 14:35	11.30	76.64	6/19/2022 12:38	11.61	-0.03	6/19/2022 13:55	-0.08
6/19/2022 12:52	12.09	0.15	6/20/2022 14:36	11.30	76.55	6/19/2022 12:39	11.61	-0.03	6/19/2022 13:56	-0.08
6/19/2022 12:53	12.08	0.06	6/20/2022 14:37	11.29	76.84	6/19/2022 12:40	11.64	-0.05	6/19/2022 13:57	-0.05
6/19/2022 12:54	12.07	0.06	6/20/2022 14:38	11.27	76.65	6/19/2022 12:41	11.62	-0.04	6/19/2022 13:58	-0.07
6/19/2022 12:55	12.07	0.10	6/20/2022 14:39	11.29	76.75	6/19/2022 12:42	11.63	-0.02	6/19/2022 13:59	-0.08
6/19/2022 12:56	12.08	0.11	6/20/2022 14:40	11.28	76.73	6/19/2022 12:43	11.63	-0.04	6/19/2022 14:00	-0.13
6/19/2022 12:57	12.07	0.19	6/20/2022 14:41	11.28	77.15	6/19/2022 12:44	11.62	-0.07	6/19/2022 14:01	-0.08
6/19/2022 12:58	12.07	0.08	6/20/2022 14:42	11.29	76.94	6/19/2022 12:45	11.59	-0.05	6/19/2022 14:02	-0.10
6/19/2022 12:59	12.07	0.09	6/20/2022 14:43	11.30	76.79	6/19/2022 12:46	11.63	-0.03	6/19/2022 14:03	-0.10
6/19/2022 13:00	12.08	0.13	6/20/2022 14:44	11.31	77.02	6/19/2022 12:47	11.63	-0.02	6/19/2022 14:04	-0.07
6/19/2022 13:01	12.07	0.14	6/20/2022 14:45	11.28	77.06	6/19/2022 12:48	11.64	-0.08	6/19/2022 14:05	-0.10
6/19/2022 13:02	12.09	0.05	6/20/2022 14:46	11.28	77.32	6/19/2022 12:49	11.61	-0.02	6/19/2022 14:06	-0.06
6/19/2022 13:03	12.08	0.09	6/20/2022 14:47	11.26	77.09	6/19/2022 12:50	11.59	-0.05	6/19/2022 14:07	-0.09
6/19/2022 13:04	12.07	0.13	6/20/2022 14:48	11.30	77.31	6/19/2022 12:51	11.61	-0.02	6/19/2022 14:08	-0.06
6/19/2022 13:05	12.08	0.10	6/20/2022 14:49	11.28	77.39	6/19/2022 12:52	11.63	-0.04	6/19/2022 14:09	-0.10
6/19/2022 13:06	12.09	0.08	6/20/2022 14:50	11.28	77.45	6/19/2022 12:53	11.63	-0.03	6/19/2022 14:10	-0.08
6/19/2022 13:07	12.06	0.07	6/20/2022 14:51	11.29	77.42	6/19/2022 12:54	11.61	-0.02	6/19/2022 14:11	-0.06
6/19/2022 13:08	12.07	0.13	6/20/2022 14:52	11.27	77.17	6/19/2022 12:55	11.62	-0.01	6/19/2022 14:12	-0.09
6/19/2022 13:09	12.07	0.16	6/20/2022 14:53	11.26	77.47	6/19/2022 12:56	11.62	-0.01	6/19/2022 14:13	-0.05
6/19/2022 13:10	12.08	0.14	6/20/2022 14:54	11.27	77.51	6/19/2022 12:57	11.61	-0.03	6/19/2022 14:14	-0.07
6/19/2022 13:11	12.09	0.12	6/20/2022 14:55	11.27	77.52	6/19/2022 12:58	11.62	-0.03	6/19/2022 14:15	-0.05
6/19/2022 13:12	12.08	0.12	6/20/2022 14:56	11.30	77.57	6/19/2022 12:59	11.60	-0.05	6/19/2022 14:16	-0.09
6/19/2022 13:13	12.09	0.12	6/20/2022 14:57	11.29	77.58	6/19/2022 13:00	11.61	-0.04	6/19/2022 14:17	-0.06
6/19/2022 13:14	12.10	0.09	6/20/2022 14:58	11.27	77.63	6/19/2022 13:01	11.61	-0.02	6/19/2022 14:18	-0.07
6/19/2022 13:15	12.09	0.06	6/20/2022 14:59	11.29	77.52	6/19/2022 13:02	11.63	-0.04	6/19/2022 14:19	-0.06
6/19/2022 13:16	12.08	0.05	6/20/2022 15:00	11.28	77.68	6/19/2022 13:03	11.61	-0.02	6/19/2022 14:20	-0.07
6/19/2022 13:17	12.08	0.11	6/20/2022 15:01	11.32	77.83	6/19/2022 13:04	11.62	-0.02	6/19/2022 14:21	-0.08
6/19/2022 13:18	12.07	0.13	6/20/2022 15:02	11.29	77.89	6/19/2022 13:05	11.62	0.00	6/19/2022 14:22	-0.07
6/19/2022 13:19	12.09	0.03	6/20/2022 15:03	11.26	77.76	6/19/2022 13:06	11.60	-0.02	6/19/2022 14:23	-0.07
6/19/2022 13:20	12.10	0.07	6/20/2022 15:04	11.28	77.82	6/19/2022 13:07	11.61	-0.03	6/19/2022 14:24	-0.10
6/19/2022 13:21	12.09	0.09	6/20/2022 15:05	11.27	77.90	6/19/2022 13:08	11.63	-0.04	6/19/2022 14:25	-0.08
6/19/2022 13:22	12.07	0.12	6/20/2022 15:06	11.28	77.85	6/19/2022 13:09	11.62	-0.01	6/19/2022 14:26	-0.08
6/19/2022 13:23	12.08	0.09	6/20/2022 15:07	11.29	77.93	6/19/2022 13:10	11.61	-0.03	6/19/2022 14:27	-0.07
6/19/2022 13:24	12.10	0.12	6/20/2022 15:08	11.30	78.03	6/19/2022 13:11	11.60	-0.03	6/19/2022 14:28	-0.07
6/19/2022 13:25	12.07	0.09	6/20/2022 15:09	11.31	78.16	6/19/2022 13:12	11.64	-0.04	6/19/2022 14:29	-0.08
6/19/2022 13:26	12.08	0.04	6/20/2022 15:10	11.29	78.18	6/19/2022 13:13	11.61	-0.02	6/19/2022 14:30	-0.02
6/19/2022 13:27	12.10	0.04	6/20/2022 15:11	11.28	78.08	6/19/2022 13:14	11.63	-0.04	6/19/2022 14:31	-0.04
6/19/2022 13:28	12.09	0.12	6/20/2022 15:12	11.28	78.20	6/19/2022 13:15	11.61	-0.07	6/19/2022 14:32	-0.11
6/19/2022 13:29	12.05	0.12	6/20/2022 15:13	11.30	78.18	6/19/2022 13:16	11.62	-0.02	6/19/2022 14:33	-0.14
6/19/2022 13:30	12.08	0.19	6/20/2022 15:14	11.29	78.30	6/19/2022 13:17	11.61	-0.04	6/19/2022 14:34	-0.08
6/19/2022 13:31	12.10	0.14	6/20/2022 15:15	11.27	78.23	6/19/2022 13:18	11.60	-0.01	6/19/2022 14:35	-0.08
6/19/2022 13:32	12.09	0.09	6/20/2022 15:16	11.32	78.33	6/19/2022 13:19	11.60	-0.06	6/19/2022 14:36	-0.10
6/19/2022 13:33	12.07	0.08	6/20/2022 15:17	11.31	78.30	6/19/2022 13:20	11.63	-0.04	6/19/2022 14:37	-0.10
6/19/2022 13:34	12.06	0.11	6/20/2022 15:18	11.31	78.53	6/19/2022 13:21	11.62	-0.04	6/19/2022 14:38	-0.10
6/19/2022 13:35	12.10	0.08	6/20/2022 15:19	11.28	78.27	6/19/2022 13:22	11.62	-0.02	6/19/2022 14:39	-0.09
6/19/2022 13:36	12.10	0.10	6/20/2022 15:20	11.28	78.37	6/19/2022 13:23	11.63	0.01	6/19/2022 14:40	-0.08
6/19/2022 13:37	12.10	0.13	6/20/2022 15:21	11.30	78.34	6/19/2022 13:24	11.62	0.01	6/19/2022 14:41	-0.09
6/19/2022 13:38	12.11	0.17	6/20/2022 15:22	11.27	78.41	6/19/2022 13:25	11.63	-0.02	6/19/2022 14:42	-0.09
6/19/2022 13:39	12.09	0.08	6/20/2022 15:23	11.28	78.58	6/19/2022 13:26	11.61	0.00	6/19/2022 14:43	-0.12
6/19/2022 13:40	12.07	0.12	6/20/2022 15:24	11.30	78.72	6/19/2022 13:27	11.59	-0.03	6/19/2022 14:44	-0.06
6/19/2022 13:41	12.08	0.10	6/20/2022 15:25	11.29	78.58	6/19/2022 13:28	11.60	-0.06	6/19/2022 14:45	-0.12
6/19/2022 13:42	12.10	0.10	6/20/2022 15:26	11.31	78.63	6/19/2022 13:29	11.61	0.00	6/19/2022 14:46	-0.08
6/19/2022 13:43	12.07	0.08	6/20/2022 15:27	11.29	78.62	6/19/2022 13:30	11.62	-0.03	6/19/2022 14:47	-0.10
6/19/2022 13:44	12.11	0.12	6/20/2022 15:28	11.30	78.82	6/19/2022 13:31	11.60	-0.05	6/19/2022 14:48	-0.06
6/19/2022 13:45	12.08	0.11	6/20/2022 15:29	11.29	78.75	6/19/2022 13:32	11.62	-0.04	6/19/2022 14:49	-0.05
6/19/2022 13:46	12.09	0.06	6/20/2022 15:30	11.29	78.59	6/19/2022 13:33	11.61	-0.03	6/19/2022 14:50	-0.04
6/19/2022 13:47	12.08	0.10	6/20/2022 15:31	11.28	78.76	6/19/2022 13:34	11.62	0.00	6/19/2022 14:51	-0.02
6/19/2022 13:48	12.08	0.13	6/20/2022 15:32	11.28	78.87	6/19/2022 13:35	11.60	-0.02	6/19/2022 14:52	-0.05
6/19/2022 13:49	12.10	0.03	6/20/2022 15:33	11.29	78.84	6/19/2022 13:36	11.64	-0.02	6/19/2022 14:53	-0.09
6/19/2022 13:50	12.11	0.12	6/20/2022 15:34	11.30	78.84	6/19/2022 13:37	11.62	-0.03	6/19/2022 14:54	-0.04

6/19/2022 13:51	12.07	0.08	6/20/2022 15:35	11.29	78.68	6/19/2022 13:38	11.62	-0.07	6/19/2022 14:55	-0.05
6/19/2022 13:52	12.09	0.11	6/20/2022 15:36	11.26	79.02	6/19/2022 13:39	11.62	-0.04	6/19/2022 14:56	-0.10
6/19/2022 13:53	12.09	0.08	6/20/2022 15:37	11.28	78.83	6/19/2022 13:40	11.62	-0.04	6/19/2022 14:57	0.01
6/19/2022 13:54	12.08	0.09	6/20/2022 15:38	11.27	79.10	6/19/2022 13:41	11.61	-0.03	6/19/2022 14:58	-0.04
6/19/2022 13:55	12.07	0.16	6/20/2022 15:39	11.29	78.99	6/19/2022 13:42	11.58	0.00	6/19/2022 14:59	-0.05
6/19/2022 13:56	12.09	0.12	6/20/2022 15:40	11.30	78.92	6/19/2022 13:43	11.62	-0.04	6/19/2022 15:00	-0.04
6/19/2022 13:57	12.09	0.07	6/20/2022 15:41	11.28	79.01	6/19/2022 13:44	11.61	-0.06	6/19/2022 15:01	0.01
6/19/2022 13:58	12.07	0.03	6/20/2022 15:42	11.29	79.15	6/19/2022 13:45	11.60	-0.03	6/19/2022 15:02	-0.08
6/19/2022 13:59	12.08	0.15	6/20/2022 15:43	11.29	78.99	6/19/2022 13:46	11.62	-0.07	6/19/2022 15:03	-0.06
6/19/2022 14:00	12.10	0.13	6/20/2022 15:44	11.31	79.03	6/19/2022 13:47	11.63	-0.03	6/19/2022 15:04	-0.04
6/19/2022 14:01	12.08	0.04	6/20/2022 15:45	11.27	79.17	6/19/2022 13:48	11.62	-0.02	6/19/2022 15:05	-0.09
6/19/2022 14:02	12.08	0.18	6/20/2022 15:46	11.30	79.11	6/19/2022 13:49	11.63	-0.04	6/19/2022 15:06	-0.06
6/19/2022 14:03	12.09	0.11	6/20/2022 15:47	11.28	79.15	6/19/2022 13:50	11.61	0.00	6/19/2022 15:07	-0.07
6/19/2022 14:04	12.07	0.10	6/20/2022 15:48	11.27	79.44	6/19/2022 13:51	11.63	-0.04	6/19/2022 15:08	-0.08
6/19/2022 14:05	12.08	0.06	6/20/2022 15:49	11.29	79.26	6/19/2022 13:52	11.58	-0.04	6/19/2022 15:09	-0.04
6/19/2022 14:06	12.09	0.12	6/20/2022 15:50	11.29	79.27	6/19/2022 13:53	11.61	-0.01	6/19/2022 15:10	-0.05
6/19/2022 14:07	12.11	0.15	6/20/2022 15:51	11.28	79.45	6/19/2022 13:54	11.63	-0.04	6/19/2022 15:11	-0.03
6/19/2022 14:08	12.10	0.10	6/20/2022 15:52	11.28	79.54	6/19/2022 13:55	11.64	-0.01	6/19/2022 15:12	-0.04
6/19/2022 14:09	12.09	0.09	6/20/2022 15:53	11.29	79.35	6/19/2022 13:56	11.62	-0.05	6/19/2022 15:13	-0.10
6/19/2022 14:10	12.08	-0.01	6/20/2022 15:54	11.25	79.40	6/19/2022 13:57	11.62	-0.04	6/19/2022 15:14	-0.14
6/19/2022 14:11	12.08	0.16	6/20/2022 15:55	11.28	79.27	6/19/2022 13:58	11.62	-0.02	6/19/2022 15:15	-0.08
6/19/2022 14:12	12.08	0.07	6/20/2022 15:56	11.28	79.55	6/19/2022 13:59	11.64	-0.06	6/19/2022 15:16	-0.06
6/19/2022 14:13	12.08	0.12	6/20/2022 15:57	11.30	79.60	6/19/2022 14:00	11.59	-0.05	6/19/2022 15:17	-0.07
6/19/2022 14:14	12.08	0.11	6/20/2022 15:58	11.28	79.53	6/19/2022 14:01	11.61	-0.01	6/19/2022 15:18	0.01
6/19/2022 14:15	12.08	0.14	6/20/2022 15:59	11.25	79.69	6/19/2022 14:02	11.63	-0.01	6/19/2022 15:19	-0.02
6/19/2022 14:16	12.09	0.11	6/20/2022 16:00	11.29	79.75	6/19/2022 14:03	11.62	-0.03	6/19/2022 15:20	-0.14
6/19/2022 14:17	12.09	0.10	6/20/2022 16:01	11.29	79.88	6/19/2022 14:04	11.61	-0.01	6/19/2022 15:21	-0.01
6/19/2022 14:18	12.08	0.05	6/20/2022 16:02	11.27	79.72	6/19/2022 14:05	11.60	-0.03	6/19/2022 15:22	-0.06
6/19/2022 14:19	12.08	0.08	6/20/2022 16:03	11.28	79.77	6/19/2022 14:06	11.59	-0.04	6/19/2022 15:23	-0.06
6/19/2022 14:20	12.09	0.21	6/20/2022 16:04	11.27	79.90	6/19/2022 14:07	11.60	-0.03	6/19/2022 15:24	-0.07
6/19/2022 14:21	12.07	0.12	6/20/2022 16:05	11.29	79.57	6/19/2022 14:08	11.63	-0.01	6/19/2022 15:25	-0.03
6/19/2022 14:22	12.10	0.08	6/20/2022 16:06	11.29	79.62	6/19/2022 14:09	11.62	-0.03	6/19/2022 15:26	-0.08
6/19/2022 14:23	12.05	0.15	6/20/2022 16:07	11.29	79.84	6/19/2022 14:10	11.62	-0.05	6/19/2022 15:27	-0.05
6/19/2022 14:24	12.09	0.07	6/20/2022 16:08	11.28	79.67	6/19/2022 14:11	11.63	-0.05	6/19/2022 15:28	-0.05
6/19/2022 14:25	12.09	0.12	6/20/2022 16:09	11.27	79.89	6/19/2022 14:12	11.61	-0.03	6/19/2022 15:29	-0.05
6/19/2022 14:26	12.09	0.13	6/20/2022 16:10	11.28	79.80	6/19/2022 14:13	11.61	-0.05	6/19/2022 15:30	-0.07
6/19/2022 14:27	12.08	0.06	6/20/2022 16:11	11.29	80.01	6/19/2022 14:14	11.62	-0.02	6/19/2022 15:31	-0.04
6/19/2022 14:28	12.09	0.08	6/20/2022 16:12	11.29	80.03	6/19/2022 14:15	11.64	-0.06	6/19/2022 15:32	-0.10
6/19/2022 14:29	12.06	0.21	6/20/2022 16:13	11.28	80.09	6/19/2022 14:16	11.61	-0.04	6/19/2022 15:33	-0.15
6/19/2022 14:30	12.08	0.05	6/20/2022 16:14	11.28	80.15	6/19/2022 14:17	11.63	-0.04	6/19/2022 15:34	-0.06
6/19/2022 14:31	12.09	0.19	6/20/2022 16:15	11.28	79.88	6/19/2022 14:18	11.63	-0.03	6/19/2022 15:35	-0.07
6/19/2022 14:32	12.09	0.13	6/20/2022 16:16	11.26	79.99	6/19/2022 14:19	11.59	-0.01	6/19/2022 15:36	-0.11
6/19/2022 14:33	12.06	0.18	6/20/2022 16:17	11.30	80.03	6/19/2022 14:20	11.60	-0.03	6/19/2022 15:37	-0.07
6/19/2022 14:34	12.09	0.12	6/20/2022 16:18	11.25	80.26	6/19/2022 14:21	11.60	0.00	6/19/2022 15:38	-0.07
6/19/2022 14:35	12.08	0.07	6/20/2022 16:19	11.29	80.07	6/19/2022 14:22	11.62	-0.05	6/19/2022 15:39	-0.13
6/19/2022 14:36	12.08	0.06	6/20/2022 16:20	11.32	80.17	6/19/2022 14:23	11.64	-0.08	6/19/2022 15:40	-0.05
6/19/2022 14:37	12.07	0.17	6/20/2022 16:21	11.26	80.20	6/19/2022 14:24	11.62	-0.04	6/19/2022 15:41	-0.11
6/19/2022 14:38	12.09	0.16	6/20/2022 16:22	11.30	79.99	6/19/2022 14:25	11.62	-0.06	6/19/2022 15:42	-0.06
6/19/2022 14:39	12.08	0.11	6/20/2022 16:23	11.27	80.32	6/19/2022 14:26	11.61	0.00	6/19/2022 15:43	-0.07
6/19/2022 14:40	12.06	0.10	6/20/2022 16:24	11.25	80.41	6/19/2022 14:27	11.63	-0.05	6/19/2022 15:44	-0.06
6/19/2022 14:41	12.12	0.13	6/20/2022 16:25	11.29	80.19	6/19/2022 14:28	11.63	0.00	6/19/2022 15:45	-0.09
6/19/2022 14:42	12.07	0.12	6/20/2022 16:26	11.28	80.22	6/19/2022 14:29	11.61	-0.02	6/19/2022 15:46	-0.08
6/19/2022 14:43	12.09	0.13	6/20/2022 16:27	11.29	80.20	6/19/2022 14:30	11.62	-0.01	6/19/2022 15:47	-0.03
6/19/2022 14:44	12.06	0.10	6/20/2022 16:28	11.26	80.38	6/19/2022 14:31	11.61	-0.02	6/19/2022 15:48	-0.02
6/19/2022 14:45	12.07	0.07	6/20/2022 16:29	11.29	80.34	6/19/2022 14:32	11.62	-0.01	6/19/2022 15:49	-0.07
6/19/2022 14:46	12.09	0.08	6/20/2022 16:30	11.29	80.44	6/19/2022 14:33	11.60	-0.05	6/19/2022 15:50	-0.06
6/19/2022 14:47	12.07	0.18	6/20/2022 16:31	11.26	80.49	6/19/2022 14:34	11.63	-0.06	6/19/2022 15:51	-0.12
6/19/2022 14:48	12.06	0.07	6/20/2022 16:32	11.29	80.46	6/19/2022 14:35	11.62	-0.03	6/19/2022 15:52	-0.04
6/19/2022 14:49	12.08	0.13	6/20/2022 16:33	11.28	80.47	6/19/2022 14:36	11.63	-0.02	6/19/2022 15:53	-0.11
6/19/2022 14:50	12.09	0.08	6/20/2022 16:34	11.28	80.49	6/19/2022 14:37	11.61	-0.01	6/19/2022 15:54	-0.15
6/19/2022 14:51	12.09	0.09	6/20/2022 16:35	11.29	80.43	6/19/2022 14:38	11.62	-0.05	6/19/2022 15:55	-0.09
6/19/2022 14:52	12.10	0.15	6/20/2022 16:36	11.26	80.46	6/19/2022 14:39	11.63	-0.05	6/19/2022 15:56	-0.10
6/19/2022 14:53	12.10	0.04	6/20/2022 16:37	11.29	80.53	6/19/2022 14:40	11.61	-0.02	6/19/2022 15:57	-0.06
6/19/2022 14:54	12.08	0.07	6/20/2022 16:38	11.29	80.54	6/19/2022 14:41	11.63	-0.07	6/19/2022 15:58	-0.07
6/19/2022 14:55	12.06	0.06	6/20/2022 16:39	11.28	80.62	6/19/2022 14:42	11.62	-0.01	6/19/2022 15:59	-0.10
6/19/2022 14:56	12.08	0.09	6/20/2022 16:40	11.31	80.56	6/19/2022 14:43	11.61	-0.08	6/19/2022 16:00	-0.04
6/19/2022 14:57	12.09	0.11	6/20/2022 16:41	11.27	80.66	6/19/2022 14:44	11.61	0.01	6/19/2022 16:01	-0.09
6/19/2022 14:58	12.08	0.08	6/20/2022 16:42	11.29	80.59	6/19/2022 14:45	11.63	-0.05	6/19/2022 16:02	-0.05
6/19/2022 14:59	12.08	0.03	6/20/2022 16:43	11.29	80.89	6/19/2022 14:46	11.60	-0.01	6/19/2022 16:03	-0.06
6/19/2022 15:00	12.05	0.07	6/20/2022 16:44	11.28	80.77	6/19/2022 14:47	11.63	-0.06	6/19/2022 16:04	-0.09
6/19/2022 15:01	12.08	0.13	6/20/2022 16:45	11.28	80.83	6/19/2022 14:48	11.61	-0.03	6/19/2022 16:05	-0.09
6/19/2022 15:02	12.09	0.08	6/20/2022 16:46	11.28	80.81	6/19/2022 14:49	11.61	-0.04	6/19/2022 16:06	-0.03
6/19/2022 15:03	12.07	0.10	6/20/2022 16:47	11.31	80.78	6/19/2022 14:50	11.62	-0.05	6/19/2022 16:07	-0.07
6/19/2022 15:04	12.08	0.17	6/20/2022 16:48	11.28	80.71	6/19/2022 14:51	11.62	0.00	6/19/2022 16:08	-0.08
6/19/2022 15:05	12.08	0.11	6/20/2022 16:49	11.29	80.73	6/19/2022 14:52	11.60	-0.02	6/19/2022 16:09	-0.03
6/19/2022 15:06	12.08	0.10	6/20/2022 16:50	11.28	80.71	6/19/2022 14:53	11.61	-0.06	6/19/2022 16:10	-0.08
6/19/2022 15:07	12.08	0.11	6/20/2022 16:51	11.26	80.97	6/19/2022 14:54	11.62	-0.02	6/19/2022 16:11	-0.07
6/19/2022 15:08	12.09	0.09	6/20/2022 16:52	11.26	80.73	6/19/2022 14:55	11.62	-0.01	6/19/2022 16:12	-0.09
6/19/2022 15:09	12.09	0.07	6/20/2022 16:53	11.28	80.98	6/19/2022 14:56	11.63	-0.02	6/19/2022 16:13	-0.07
6/19/2022 15:10	12.09	0.04	6/20/2022 16:54	11.29	80.96	6/19/2022 14:57	11.62	-0.02	6/19/2022 16:14	-0.03
6/19/2022 15:11	12.08	0.07	6/20/2022 16:55	11.29	80.92	6/19/2022 14:58	11.61	-0.05	6/19/2022 16:15	-0.09
6/19/2022 15:12	12.07	0.08	6/20/2022 16:56	11.28	81.04	6/19/2022 14:59	11.60	-0.06	6/19/2022 16:16	-0.07
6/19/2022 15:13	12.08	0.15	6/20/2022 16:57	11.27	80.86	6/19/2022 15:00	11.61	-0.04	6/19/2022 16:17	-0.09
6/19/2022 15:14	12.10	0.10	6/20/2022 16:58	11.30	80.99	6/19/2022 15:01	11.63	-0.05	6/19/2022 16:18	-0.11
6/19/2022 15:15	12.08	0.11	6/20/2022 16:59	11.27	81.24	6/19/2022 15:02	11.62	-0.02	6/19/2022 16:19	-0.10
6/19/2022 15:16	12.08	0.11	6/20/2022 17:00	11.29	80.93	6/19/2022 15:03	11.61	-0.05	6/19/2022 16:20	-0.13
6/19/2022 15:17	12.10	0.12	6/20/2022 17:01	11.29	80.91	6/19/2022 15:04	11.62	-0.05	6/19/2022 16:21	-0.06
6/19/2022 15:18	12.06	0.05	6/20/2022 17:02	11.27	81.05	6/19/2022 15:05	11.64	-0.03	6/19/2022 16:22	-0.08

6/19/2022 15:19	12.08	0.08	6/20/2022 17:03	11.29	81.00	6/19/2022 15:06	11.61	-0.04	6/19/2022 16:23	-0.07
6/19/2022 15:20	12.09	0.10	6/20/2022 17:04	11.29	81.05	6/19/2022 15:07	11.61	-0.07	6/19/2022 16:24	-0.05
6/19/2022 15:21	12.06	0.12	6/20/2022 17:05	11.27	81.16	6/19/2022 15:08	11.62	-0.05	6/19/2022 16:25	-0.10
6/19/2022 15:22	12.07	0.04	6/20/2022 17:06	11.28	81.06	6/19/2022 15:09	11.61	0.00	6/19/2022 16:26	-0.05
6/19/2022 15:23	12.10	-0.03	6/20/2022 17:07	11.28	81.15	6/19/2022 15:10	11.63	-0.02	6/19/2022 16:27	-0.10
6/19/2022 15:24	12.08	0.18	6/20/2022 17:08	11.31	81.15	6/19/2022 15:11	11.63	-0.02	6/19/2022 16:28	-0.07
6/19/2022 15:25	12.07	0.03	6/20/2022 17:09	11.28	81.27	6/19/2022 15:12	11.63	-0.01	6/19/2022 16:29	-0.07
6/19/2022 15:26	12.08	0.08	6/20/2022 17:10	11.24	81.25	6/19/2022 15:13	11.64	-0.07	6/19/2022 16:30	-0.06
6/19/2022 15:27	12.07	0.05	6/20/2022 17:11	11.31	81.21	6/19/2022 15:14	11.61	-0.02	6/19/2022 16:31	-0.11
6/19/2022 15:28	12.08	0.10	6/20/2022 17:12	11.26	81.23	6/19/2022 15:15	11.64	-0.06	6/19/2022 16:32	-0.07
6/19/2022 15:29	12.07	0.11	6/20/2022 17:13	11.27	81.26	6/19/2022 15:16	11.60	-0.03	6/19/2022 16:33	-0.09
6/19/2022 15:30	12.11	0.12	6/20/2022 17:14	11.26	81.35	6/19/2022 15:17	11.62	-0.01	6/19/2022 16:34	-0.04
6/19/2022 15:31	12.08	0.05	6/20/2022 17:15	11.25	81.32	6/19/2022 15:18	11.62	-0.05	6/19/2022 16:35	-0.04
6/19/2022 15:32	12.11	0.16	6/20/2022 17:16	11.29	81.35	6/19/2022 15:19	11.62	-0.02	6/19/2022 16:36	-0.13
6/19/2022 15:33	12.06	-0.01	6/20/2022 17:17	11.27	81.55	6/19/2022 15:20	11.60	-0.02	6/19/2022 16:37	-0.06
6/19/2022 15:34	12.09	0.16	6/20/2022 17:18	11.29	81.51	6/19/2022 15:21	11.62	-0.10	6/19/2022 16:38	-0.07
6/19/2022 15:35	12.07	0.13	6/20/2022 17:19	11.30	81.54	6/19/2022 15:22	11.64	-0.01	6/19/2022 16:39	-0.06
6/19/2022 15:36	12.08	0.13	6/20/2022 17:20	11.30	81.52	6/19/2022 15:23	11.60	-0.04	6/19/2022 16:40	-0.06
6/19/2022 15:37	12.07	0.03	6/20/2022 17:21	11.29	81.74	6/19/2022 15:24	11.64	-0.01	6/19/2022 16:41	-0.09
6/19/2022 15:38	12.07	0.07	6/20/2022 17:22	11.27	81.59	6/19/2022 15:25	11.64	-0.04	6/19/2022 16:42	-0.08
6/19/2022 15:39	12.08	0.14	6/20/2022 17:23	11.29	81.76	6/19/2022 15:26	11.63	-0.04	6/19/2022 16:43	-0.04
6/19/2022 15:40	12.08	0.14	6/20/2022 17:24	11.27	81.57	6/19/2022 15:27	11.64	-0.05	6/19/2022 16:44	-0.08
6/19/2022 15:41	12.08	0.12	6/20/2022 17:25	11.28	81.85	6/19/2022 15:28	11.63	-0.01	6/19/2022 16:45	-0.05
6/19/2022 15:42	12.09	0.08	6/20/2022 17:26	11.29	81.71	6/19/2022 15:29	11.63	0.00	6/19/2022 16:46	-0.07
6/19/2022 15:43	12.09	-0.01	6/20/2022 17:27	11.28	81.70	6/19/2022 15:30	11.61	-0.02	6/19/2022 16:47	-0.06
6/19/2022 15:44	12.07	0.10	6/20/2022 17:28	11.29	81.75	6/19/2022 15:31	11.61	-0.03	6/19/2022 16:48	-0.07
6/19/2022 15:45	12.09	0.13	6/20/2022 17:29	11.25	81.69	6/19/2022 15:32	11.62	-0.05	6/19/2022 16:49	-0.03
6/19/2022 15:46	12.08	0.05	6/20/2022 17:30	11.28	81.86	6/19/2022 15:33	11.60	-0.03	6/19/2022 16:50	-0.04
6/19/2022 15:47	12.12	0.13	6/20/2022 17:31	11.30	81.88	6/19/2022 15:34	11.60	-0.01	6/19/2022 16:51	-0.04
6/19/2022 15:48	12.09	0.12	6/20/2022 17:32	11.28	82.05	6/19/2022 15:35	11.59	-0.05	6/19/2022 16:52	-0.08
6/19/2022 15:49	12.11	0.13	6/20/2022 17:33	11.28	81.94	6/19/2022 15:36	11.62	-0.06	6/19/2022 16:53	-0.07
6/19/2022 15:50	12.12	0.13	6/20/2022 17:34	11.30	81.93	6/19/2022 15:37	11.63	-0.02	6/19/2022 16:54	-0.04
6/19/2022 15:51	12.10	0.06	6/20/2022 17:35	11.27	82.01	6/19/2022 15:38	11.63	-0.05	6/19/2022 16:55	-0.04
6/19/2022 15:52	12.09	0.08	6/20/2022 17:36	11.28	81.96	6/19/2022 15:39	11.62	-0.05	6/19/2022 16:56	0.01
6/19/2022 15:53	12.09	0.10	6/20/2022 17:37	11.30	82.25	6/19/2022 15:40	11.63	-0.05	6/19/2022 16:57	-0.08
6/19/2022 15:54	12.06	0.13	6/20/2022 17:38	11.26	81.93	6/19/2022 15:41	11.63	-0.06	6/19/2022 16:58	-0.08
6/19/2022 15:55	12.09	0.08	6/20/2022 17:39	11.28	81.72	6/19/2022 15:42	11.61	-0.03	6/19/2022 16:59	-0.09
6/19/2022 15:56	12.09	0.13	6/20/2022 17:40	11.27	81.95	6/19/2022 15:43	11.62	-0.02	6/19/2022 17:00	-0.06
6/19/2022 15:57	12.09	0.12	6/20/2022 17:41	11.28	82.25	6/19/2022 15:44	11.61	0.00	6/19/2022 17:01	-0.05
6/19/2022 15:58	12.10	0.09	6/20/2022 17:42	11.26	82.28	6/19/2022 15:45	11.60	-0.04	6/19/2022 17:02	-0.05
6/19/2022 15:59	12.09	0.18	6/20/2022 17:43	11.30	82.33	6/19/2022 15:46	11.62	-0.06	6/19/2022 17:03	-0.08
6/19/2022 16:00	12.08	0.02	6/20/2022 17:44	11.28	82.11	6/19/2022 15:47	11.62	-0.01	6/19/2022 17:04	-0.10
6/19/2022 16:01	12.09	0.08	6/20/2022 17:45	11.26	82.21	6/19/2022 15:48	11.60	-0.02	6/19/2022 17:05	-0.06
6/19/2022 16:02	12.09	0.07	6/20/2022 17:46	11.26	82.29	6/19/2022 15:49	11.62	-0.05	6/19/2022 17:06	-0.09
6/19/2022 16:03	12.09	0.13	6/20/2022 17:47	11.30	82.35	6/19/2022 15:50	11.60	-0.05	6/19/2022 17:07	-0.08
6/19/2022 16:04	12.08	0.12	6/20/2022 17:48	11.29	82.42	6/19/2022 15:51	11.61	-0.03	6/19/2022 17:08	-0.06
6/19/2022 16:05	12.07	0.08	6/20/2022 17:49	11.31	82.31	6/19/2022 15:52	11.62	-0.02	6/19/2022 17:09	-0.09
6/19/2022 16:06	12.09	0.08	6/20/2022 17:50	11.26	82.47	6/19/2022 15:53	11.61	-0.05	6/19/2022 17:10	-0.08
6/19/2022 16:07	12.08	0.07	6/20/2022 17:51	11.25	82.47	6/19/2022 15:54	11.61	-0.01	6/19/2022 17:11	-0.06
6/19/2022 16:08	12.09	0.07	6/20/2022 17:52	11.27	82.38	6/19/2022 15:55	11.59	-0.02	6/19/2022 17:12	-0.13
6/19/2022 16:09	12.09	0.15	6/20/2022 17:53	11.30	82.39	6/19/2022 15:56	11.60	-0.03	6/19/2022 17:13	-0.04
6/19/2022 16:10	12.09	0.11	6/20/2022 17:54	11.29	82.46	6/19/2022 15:57	11.64	-0.05	6/19/2022 17:14	-0.05
6/19/2022 16:11	12.08	0.04	6/20/2022 17:55	11.28	82.28	6/19/2022 15:58	11.58	-0.04	6/19/2022 17:15	-0.10
6/19/2022 16:12	12.10	0.09	6/20/2022 17:56	11.29	82.64	6/19/2022 15:59	11.63	-0.05	6/19/2022 17:16	-0.06
6/19/2022 16:13	12.12	0.13	6/20/2022 17:57	11.28	82.54	6/19/2022 16:00	11.63	-0.05	6/19/2022 17:17	-0.06
6/19/2022 16:14	12.08	0.09	6/20/2022 17:58	11.30	82.56	6/19/2022 16:01	11.62	-0.03	6/19/2022 17:18	-0.11
6/19/2022 16:15	12.10	0.13	6/20/2022 17:59	11.29	82.63	6/19/2022 16:02	11.63	-0.07	6/19/2022 17:19	-0.04
6/19/2022 16:16	12.08	0.10	6/20/2022 18:00	11.27	82.59	6/19/2022 16:03	11.63	-0.04	6/19/2022 17:20	-0.04
6/19/2022 16:17	12.09	0.08	6/20/2022 18:01	11.26	82.60	6/19/2022 16:04	11.61	-0.07	6/19/2022 17:21	-0.06
6/19/2022 16:18	12.10	0.04	6/20/2022 18:02	11.27	82.57	6/19/2022 16:05	11.63	-0.06	6/19/2022 17:22	-0.04
6/19/2022 16:19	12.08	0.08	6/20/2022 18:03	11.28	82.72	6/19/2022 16:06	11.62	-0.07	6/19/2022 17:23	-0.03
6/19/2022 16:20	12.07	0.08	6/20/2022 18:04	11.25	82.61	6/19/2022 16:07	11.63	-0.05	6/19/2022 17:24	-0.09
6/19/2022 16:21	12.07	0.04	6/20/2022 18:05	11.29	82.75	6/19/2022 16:08	11.61	-0.03	6/19/2022 17:25	-0.06
6/19/2022 16:22	12.09	0.09	6/20/2022 18:06	11.25	82.62	6/19/2022 16:09	11.63	-0.05	6/19/2022 17:26	-0.08
6/19/2022 16:23	12.07	0.17	6/20/2022 18:07	11.27	82.80	6/19/2022 16:10	11.62	0.01	6/19/2022 17:27	-0.06
6/19/2022 16:24	12.08	0.13	6/20/2022 18:08	11.28	82.84	6/19/2022 16:11	11.60	-0.06	6/19/2022 17:28	-0.12
6/19/2022 16:25	12.08	0.12	6/20/2022 18:09	11.25	82.61	6/19/2022 16:12	11.62	-0.05	6/19/2022 17:29	-0.08
6/19/2022 16:26	12.10	0.15	6/20/2022 18:10	11.28	82.73	6/19/2022 16:13	11.60	-0.08	6/19/2022 17:30	-0.06
6/19/2022 16:27	12.10	0.10	6/20/2022 18:11	11.27	82.91	6/19/2022 16:14	11.62	-0.02	6/19/2022 17:31	-0.05
6/19/2022 16:28	12.05	0.04	6/20/2022 18:12	11.27	82.79	6/19/2022 16:15	11.63	-0.04	6/19/2022 17:32	-0.08
6/19/2022 16:29	12.08	0.06	6/20/2022 18:13	11.28	82.96	6/19/2022 16:16	11.63	-0.03	6/19/2022 17:33	-0.09
6/19/2022 16:30	12.08	0.07	6/20/2022 18:14	11.26	83.02	6/19/2022 16:17	11.59	-0.02	6/19/2022 17:34	-0.04
6/19/2022 16:31	12.09	0.17	6/20/2022 18:15	11.26	82.87	6/19/2022 16:18	11.62	-0.06	6/19/2022 17:35	-0.05
6/19/2022 16:32	12.07	0.09	6/20/2022 18:16	11.28	83.03	6/19/2022 16:19	11.59	-0.04	6/19/2022 17:36	-0.05
6/19/2022 16:33	12.09	0.15	6/20/2022 18:17	11.27	83.10	6/19/2022 16:20	11.60	-0.02	6/19/2022 17:37	-0.10
6/19/2022 16:34	12.07	0.13	6/20/2022 18:18	11.30	83.04	6/19/2022 16:21	11.63	-0.04	6/19/2022 17:38	-0.11
6/19/2022 16:35	12.09	0.06	6/20/2022 18:19	11.29	83.28	6/19/2022 16:22	11.63	-0.05	6/19/2022 17:39	-0.10
6/19/2022 16:36	12.07	0.00	6/20/2022 18:20	11.29	83.12	6/19/2022 16:23	11.62	-0.02	6/19/2022 17:40	-0.04
6/19/2022 16:37	12.10	0.07	6/20/2022 18:21	11.33	83.08	6/19/2022 16:24	11.63	-0.02	6/19/2022 17:41	-0.06
6/19/2022 16:38	12.09	0.04	6/20/2022 18:22	11.26	83.24	6/19/2022 16:25	11.61	-0.04	6/19/2022 17:42	-0.10
6/19/2022 16:39	12.11	0.10	6/20/2022 18:23	11.29	83.27	6/19/2022 16:26	11.61	-0.02	6/19/2022 17:43	-0.07
6/19/2022 16:40	12.11	0.21	6/20/2022 18:24	11.27	83.33	6/19/2022 16:27	11.62	-0.02	6/19/2022 17:44	-0.01
6/19/2022 16:41	12.08	0.05	6/20/2022 18:25	11.28	83.26	6/19/2022 16:28	11.63	0.00	6/19/2022 17:45	-0.03
6/19/2022 16:42	12.08	0.06	6/20/2022 18:26	11.27	83.53	6/19/2022 16:29	11.60	-0.06	6/19/2022 17:46	-0.09
6/19/2022 16:43	12.07	0.08	6/20/2022 18:27	11.27	83.40	6/19/2022 16:30	11.62	-0.03	6/19/2022 17:47	-0.06
6/19/2022 16:44	12.07	0.13	6/20/2022 18:28	11.28	83.32	6/19/2022 16:31	11.62	-0.03	6/19/2022 17:48	-0.09
6/19/2022 16:45	12.10	0.09	6/20/2022 18:29	11.29	83.49	6/19/2022 16:32	11.62	-0.01	6/19/2022 17:49	-0.07
6/19/2022 16:46	12.07	0.12	6/20/2022 18:30	11.28	83.54	6/19/2022 16:33	11.59	-0.04	6/19/2022 17:50	-0.06

6/19/2022 16:47	12.07	0.10	6/20/2022 18:31	11.28	83.39	6/19/2022 16:34	11.62	-0.04	6/19/2022 17:51	-0.08
6/19/2022 16:48	12.07	0.04	6/20/2022 18:32	11.25	83.56	6/19/2022 16:35	11.63	0.00	6/19/2022 17:52	-0.07
6/19/2022 16:49	12.08	0.04	6/20/2022 18:33	11.29	83.55	6/19/2022 16:36	11.62	-0.02	6/19/2022 17:53	-0.04
6/19/2022 16:50	12.10	0.08	6/20/2022 18:34	11.27	83.59	6/19/2022 16:37	11.62	-0.05	6/19/2022 17:54	-0.07
6/19/2022 16:51	12.07	0.14	6/20/2022 18:35	11.29	83.48	6/19/2022 16:38	11.61	-0.04	6/19/2022 17:55	-0.11
6/19/2022 16:52	12.11	0.13	6/20/2022 18:36	11.26	83.75	6/19/2022 16:39	11.63	-0.05	6/19/2022 17:56	-0.07
6/19/2022 16:53	12.09	0.10	6/20/2022 18:37	11.29	83.49	6/19/2022 16:40	11.64	-0.05	6/19/2022 17:57	-0.04
6/19/2022 16:54	12.11	0.09	6/20/2022 18:38	11.27	83.55	6/19/2022 16:41	11.63	-0.05	6/19/2022 17:58	-0.07
6/19/2022 16:55	12.09	0.09	6/20/2022 18:39	11.27	83.88	6/19/2022 16:42	11.61	-0.08	6/19/2022 17:59	-0.09
6/19/2022 16:56	12.06	0.06	6/20/2022 18:40	11.28	83.67	6/19/2022 16:43	11.62	-0.04	6/19/2022 18:00	-0.05
6/19/2022 16:57	12.09	0.12	6/20/2022 18:41	11.30	83.81	6/19/2022 16:44	11.63	-0.05	6/19/2022 18:01	-0.04
6/19/2022 16:58	12.08	0.09	6/20/2022 18:42	11.29	83.74	6/19/2022 16:45	11.61	-0.02	6/19/2022 18:02	-0.05
6/19/2022 16:59	12.09	0.09	6/20/2022 18:43	11.28	83.82	6/19/2022 16:46	11.61	-0.05	6/19/2022 18:03	-0.06
6/19/2022 17:00	12.08	0.03	6/20/2022 18:44	11.27	83.75	6/19/2022 16:47	11.61	0.01	6/19/2022 18:04	-0.10
6/19/2022 17:01	12.08	0.14	6/20/2022 18:45	11.25	83.92	6/19/2022 16:48	11.59	-0.08	6/19/2022 18:05	-0.06
6/19/2022 17:02	12.08	0.07	6/20/2022 18:46	11.31	83.85	6/19/2022 16:49	11.63	-0.04	6/19/2022 18:06	-0.06
6/19/2022 17:03	12.11	0.05	6/20/2022 18:47	11.30	83.93	6/19/2022 16:50	11.60	-0.04	6/19/2022 18:07	-0.05
6/19/2022 17:04	12.08	0.08	6/20/2022 18:48	11.28	84.02	6/19/2022 16:51	11.60	-0.01	6/19/2022 18:08	-0.10
6/19/2022 17:05	12.08	0.21	6/20/2022 18:49	11.26	83.60	6/19/2022 16:52	11.62	-0.07	6/19/2022 18:09	-0.06
6/19/2022 17:06	12.09	0.05	6/20/2022 18:50	11.28	84.28	6/19/2022 16:53	11.61	0.00	6/19/2022 18:10	-0.10
6/19/2022 17:07	12.10	0.09	6/20/2022 18:51	11.27	84.07	6/19/2022 16:54	11.60	-0.01	6/19/2022 18:11	-0.04
6/19/2022 17:08	12.10	0.08	6/20/2022 18:52	11.26	84.06	6/19/2022 16:55	11.61	-0.03	6/19/2022 18:12	-0.05
6/19/2022 17:09	12.07	0.03	6/20/2022 18:53	11.29	84.12	6/19/2022 16:56	11.62	-0.04	6/19/2022 18:13	-0.07
6/19/2022 17:10	12.06	0.17	6/20/2022 18:54	11.30	83.96	6/19/2022 16:57	11.60	-0.05	6/19/2022 18:14	-0.02
6/19/2022 17:11	12.10	0.13	6/20/2022 18:55	11.26	84.11	6/19/2022 16:58	11.61	0.02	6/19/2022 18:15	-0.04
6/19/2022 17:12	12.07	0.07	6/20/2022 18:56	11.26	84.16	6/19/2022 16:59	11.59	-0.02	6/19/2022 18:16	-0.07
6/19/2022 17:13	12.06	0.08	6/20/2022 18:57	11.28	84.28	6/19/2022 17:00	11.63	-0.07	6/19/2022 18:17	-0.07
6/19/2022 17:14	12.09	0.08	6/20/2022 18:58	11.27	84.06	6/19/2022 17:01	11.62	-0.05	6/19/2022 18:18	-0.07
6/19/2022 17:15	12.07	0.03	6/20/2022 18:59	11.28	84.24	6/19/2022 17:02	11.60	-0.02	6/19/2022 18:19	-0.03
6/19/2022 17:16	12.07	0.03	6/20/2022 19:00	11.27	84.10	6/19/2022 17:03	11.63	-0.03	6/19/2022 18:20	-0.03
6/19/2022 17:17	12.07	0.18	6/20/2022 19:01	11.27	84.29	6/19/2022 17:04	11.62	-0.04	6/19/2022 18:21	-0.03
6/19/2022 17:18	12.09	0.05	6/20/2022 19:02	11.27	84.02	6/19/2022 17:05	11.62	-0.01	6/19/2022 18:22	-0.06
6/19/2022 17:19	12.08	0.06	6/20/2022 19:03	11.28	84.24	6/19/2022 17:06	11.62	-0.05	6/19/2022 18:23	-0.07
6/19/2022 17:20	12.08	0.13	6/20/2022 19:04	11.25	84.42	6/19/2022 17:07	11.61	-0.03	6/19/2022 18:24	-0.07
6/19/2022 17:21	12.10	0.09	6/20/2022 19:05	11.28	84.24	6/19/2022 17:08	11.60	-0.06	6/19/2022 18:25	-0.08
6/19/2022 17:22	12.09	0.13	6/20/2022 19:06	11.29	84.04	6/19/2022 17:09	11.62	-0.01	6/19/2022 18:26	-0.08
6/19/2022 17:23	12.10	0.08	6/20/2022 19:07	11.26	84.43	6/19/2022 17:10	11.61	-0.04	6/19/2022 18:27	-0.09
6/19/2022 17:24	12.09	0.05	6/20/2022 19:08	11.26	84.49	6/19/2022 17:11	11.62	-0.01	6/19/2022 18:28	-0.01
6/19/2022 17:25	12.07	0.07	6/20/2022 19:09	11.27	84.39	6/19/2022 17:12	11.62	-0.04	6/19/2022 18:29	-0.04
6/19/2022 17:26	12.07	0.10	6/20/2022 19:10	11.25	84.48	6/19/2022 17:13	11.62	-0.04	6/19/2022 18:30	-0.09
6/19/2022 17:27	12.10	0.10	6/20/2022 19:11	11.28	84.45	6/19/2022 17:14	11.65	-0.06	6/19/2022 18:31	-0.06
6/19/2022 17:28	12.06	0.04	6/20/2022 19:12	11.30	84.62	6/19/2022 17:15	11.62	0.02	6/19/2022 18:32	-0.07
6/19/2022 17:29	12.09	0.11	6/20/2022 19:13	11.26	84.31	6/19/2022 17:16	11.61	-0.02	6/19/2022 18:33	-0.07
6/19/2022 17:30	12.08	0.06	6/20/2022 19:14	11.28	84.49	6/19/2022 17:17	11.60	-0.06	6/19/2022 18:34	-0.10
6/19/2022 17:31	12.10	0.11	6/20/2022 19:15	11.28	84.35	6/19/2022 17:18	11.62	-0.03	6/19/2022 18:35	-0.11
6/19/2022 17:32	12.08	0.10	6/20/2022 19:16	11.28	84.61	6/19/2022 17:19	11.61	0.00	6/19/2022 18:36	-0.11
6/19/2022 17:33	12.09	0.12	6/20/2022 19:17	11.26	84.55	6/19/2022 17:20	11.61	0.02	6/19/2022 18:37	-0.07
6/19/2022 17:34	12.07	0.09	6/20/2022 19:18	11.27	84.60	6/19/2022 17:21	11.59	-0.01	6/19/2022 18:38	-0.12
6/19/2022 17:35	12.09	0.14	6/20/2022 19:19	11.29	84.65	6/19/2022 17:22	11.61	-0.04	6/19/2022 18:39	-0.10
6/19/2022 17:36	12.07	0.10	6/20/2022 19:20	11.28	84.59	6/19/2022 17:23	11.62	-0.03	6/19/2022 18:40	-0.09
6/19/2022 17:37	12.10	0.12	6/20/2022 19:21	11.29	84.53	6/19/2022 17:24	11.62	-0.06	6/19/2022 18:41	-0.11
6/19/2022 17:38	12.08	0.12	6/20/2022 19:22	11.28	84.79	6/19/2022 17:25	11.60	-0.04	6/19/2022 18:42	-0.04
6/19/2022 17:39	12.09	0.07	6/20/2022 19:23	11.27	84.61	6/19/2022 17:26	11.65	-0.04	6/19/2022 18:43	-0.07
6/19/2022 17:40	12.08	0.09	6/20/2022 19:24	11.28	84.65	6/19/2022 17:27	11.62	-0.06	6/19/2022 18:44	-0.10
6/19/2022 17:41	12.10	0.05	6/20/2022 19:25	11.27	84.64	6/19/2022 17:28	11.63	-0.01	6/19/2022 18:45	-0.05
6/19/2022 17:42	12.08	0.08	6/20/2022 19:26	11.25	84.70	6/19/2022 17:29	11.62	-0.03	6/19/2022 18:46	-0.13
6/19/2022 17:43	12.07	0.11	6/20/2022 19:27	11.28	84.60	6/19/2022 17:30	11.61	-0.05	6/19/2022 18:47	-0.07
6/19/2022 17:44	12.10	0.07	6/20/2022 19:28	11.27	84.63	6/19/2022 17:31	11.61	-0.04	6/19/2022 18:48	-0.08
6/19/2022 17:45	12.09	0.06	6/20/2022 19:29	11.29	84.70	6/19/2022 17:32	11.61	-0.04	6/19/2022 18:49	0.00
6/19/2022 17:46	12.10	0.08	6/20/2022 19:30	11.28	84.97	6/19/2022 17:33	11.62	-0.05	6/19/2022 18:50	-0.09
6/19/2022 17:47	12.07	0.14	6/20/2022 19:31	11.28	84.85	6/19/2022 17:34	11.62	-0.07	6/19/2022 18:51	-0.05
6/19/2022 17:48	12.09	0.09	6/20/2022 19:32	11.27	84.92	6/19/2022 17:35	11.61	-0.02	6/19/2022 18:52	-0.09
6/19/2022 17:49	12.09	0.09	6/20/2022 19:33	11.28	84.91	6/19/2022 17:36	11.60	-0.05	6/19/2022 18:53	-0.05
6/19/2022 17:50	12.07	0.15	6/20/2022 19:34	11.25	84.98	6/19/2022 17:37	11.61	0.02	6/19/2022 18:54	-0.08
6/19/2022 17:51	12.11	0.00	6/20/2022 19:35	11.26	84.87	6/19/2022 17:38	11.63	-0.05	6/19/2022 18:55	-0.07
6/19/2022 17:52	12.10	0.12	6/20/2022 19:36	11.28	84.94	6/19/2022 17:39	11.63	-0.06	6/19/2022 18:56	-0.06
6/19/2022 17:53	12.08	0.13	6/20/2022 19:37	11.28	84.97	6/19/2022 17:40	11.63	-0.07	6/19/2022 18:57	-0.09
6/19/2022 17:54	12.11	0.13	6/20/2022 19:38	11.29	85.06	6/19/2022 17:41	11.61	0.02	6/19/2022 18:58	-0.09
6/19/2022 17:55	12.09	0.07	6/20/2022 19:39	11.27	85.26	6/19/2022 17:42	11.63	-0.03	6/19/2022 18:59	-0.07
6/19/2022 17:56	12.07	0.09	6/20/2022 19:40	11.26	84.96	6/19/2022 17:43	11.61	-0.05	6/19/2022 19:00	-0.11
6/19/2022 17:57	12.09	0.05	6/20/2022 19:41	11.27	85.08	6/19/2022 17:44	11.62	-0.01	6/19/2022 19:01	0.00
6/19/2022 17:58	12.07	0.20	6/20/2022 19:42	11.29	85.22	6/19/2022 17:45	11.63	-0.05	6/19/2022 19:02	-0.11
6/19/2022 17:59	12.08	0.09	6/20/2022 19:43	11.27	85.12	6/19/2022 17:46	11.64	-0.06	6/19/2022 19:03	-0.09
6/19/2022 18:00	12.09	0.13	6/20/2022 19:44	11.25	85.19	6/19/2022 17:47	11.63	0.00	6/19/2022 19:04	-0.10
6/19/2022 18:01	12.07	0.05	6/20/2022 19:45	11.29	85.24	6/19/2022 17:48	11.63	-0.07	6/19/2022 19:05	-0.08
6/19/2022 18:02	12.10	0.08	6/20/2022 19:46	11.29	85.12	6/19/2022 17:49	11.62	-0.04	6/19/2022 19:06	-0.09
6/19/2022 18:03	12.08	0.09	6/20/2022 19:47	11.29	85.25	6/19/2022 17:50	11.62	-0.06	6/19/2022 19:07	-0.03
6/19/2022 18:04	12.06	0.03	6/20/2022 19:48	11.26	85.46	6/19/2022 17:51	11.60	-0.04	6/19/2022 19:08	-0.08
6/19/2022 18:05	12.11	0.07	6/20/2022 19:49	11.28	85.12	6/19/2022 17:52	11.65	-0.07	6/19/2022 19:09	-0.05
6/19/2022 18:06	12.10	0.05	6/20/2022 19:50	11.27	85.40	6/19/2022 17:53	11.63	-0.03	6/19/2022 19:10	-0.08
6/19/2022 18:07	12.08	0.03	6/20/2022 19:51	11.28	85.52	6/19/2022 17:54	11.61	-0.05	6/19/2022 19:11	-0.07
6/19/2022 18:08	12.09	0.13	6/20/2022 19:52	11.28	85.61	6/19/2022 17:55	11.61	-0.03	6/19/2022 19:12	-0.04
6/19/2022 18:09	12.10	0.15	6/20/2022 19:53	11.27	85.42	6/19/2022 17:56	11.61	-0.03	6/19/2022 19:13	-0.12
6/19/2022 18:10	12.07	0.15	6/20/2022 19:54	11.28	85.49	6/19/2022 17:57	11.63	-0.06	6/19/2022 19:14	-0.05
6/19/2022 18:11	12.08	0.13	6/20/2022 19:55	11.27	85.41	6/19/2022 17:58	11.63	-0.05	6/19/2022 19:15	-0.05
6/19/2022 18:12	12.11	0.06	6/20/2022 19:56	11.29	85.62	6/19/2022 17:59	11.63	-0.04	6/19/2022 19:16	-0.06
6/19/2022 18:13	12.07	0.09	6/20/2022 19:57	11.27	85.65	6/19/2022 18:00	11.60	-0.05	6/19/2022 19:17	-0.06
6/19/2022 18:14	12.08	0.17	6/20/2022 19:58	11.27	85.42	6/19/2022 18:01	11.61	-0.04	6/19/2022 19:18	-0.12

6/19/2022 18:15	12.09	0.11	6/20/2022 19:59	11.29	85.35	6/19/2022 18:02	11.61	-0.04	6/19/2022 19:19	-0.12
6/19/2022 18:16	12.09	0.03	6/20/2022 20:00	11.26	85.61	6/19/2022 18:03	11.62	-0.09	6/19/2022 19:20	-0.09
6/19/2022 18:17	12.09	0.10	6/20/2022 20:01	11.28	85.53	6/19/2022 18:04	11.62	-0.04	6/19/2022 19:21	-0.08
6/19/2022 18:18	12.09	0.08	6/20/2022 20:02	11.25	85.42	6/19/2022 18:05	11.59	-0.03	6/19/2022 19:22	-0.06
6/19/2022 18:19	12.10	0.08	6/20/2022 20:03	11.29	85.73	6/19/2022 18:06	11.60	-0.08	6/19/2022 19:23	-0.12
6/19/2022 18:20	12.04	0.11	6/20/2022 20:04	11.28	85.54	6/19/2022 18:07	11.61	-0.02	6/19/2022 19:24	-0.11
6/19/2022 18:21	12.07	0.04	6/20/2022 20:05	11.29	85.60	6/19/2022 18:08	11.64	-0.03	6/19/2022 19:25	-0.07
6/19/2022 18:22	12.08	0.12	6/20/2022 20:06	11.29	85.80	6/19/2022 18:09	11.63	-0.07	6/19/2022 19:26	-0.12
6/19/2022 18:23	12.07	-0.01	6/20/2022 20:07	11.24	85.51	6/19/2022 18:10	11.62	-0.02	6/19/2022 19:27	-0.05
6/19/2022 18:24	12.09	0.11	6/20/2022 20:08	11.28	85.76	6/19/2022 18:11	11.60	-0.03	6/19/2022 19:28	-0.10
6/19/2022 18:25	12.09	0.09	6/20/2022 20:09	11.29	85.80	6/19/2022 18:12	11.62	-0.03	6/19/2022 19:29	-0.07
6/19/2022 18:26	12.08	0.13	6/20/2022 20:10	11.26	85.58	6/19/2022 18:13	11.61	-0.02	6/19/2022 19:30	-0.09
6/19/2022 18:27	12.08	0.17	6/20/2022 20:11	11.27	85.57	6/19/2022 18:14	11.63	-0.04	6/19/2022 19:31	-0.09
6/19/2022 18:28	12.10	0.07	6/20/2022 20:12	11.25	85.68	6/19/2022 18:15	11.62	-0.07	6/19/2022 19:32	-0.08
6/19/2022 18:29	12.11	0.05	6/20/2022 20:13	11.26	85.60	6/19/2022 18:16	11.61	-0.04	6/19/2022 19:33	-0.10
6/19/2022 18:30	12.08	0.16	6/20/2022 20:14	11.27	85.99	6/19/2022 18:17	11.63	0.01	6/19/2022 19:34	-0.07
6/19/2022 18:31	12.05	0.10	6/20/2022 20:15	11.28	85.97	6/19/2022 18:18	11.62	-0.04	6/19/2022 19:35	-0.07
6/19/2022 18:32	12.10	0.08	6/20/2022 20:16	11.27	85.80	6/19/2022 18:19	11.60	-0.03	6/19/2022 19:36	-0.06
6/19/2022 18:33	12.08	0.12	6/20/2022 20:17	11.29	85.80	6/19/2022 18:20	11.62	-0.03	6/19/2022 19:37	-0.04
6/19/2022 18:34	12.08	0.09	6/20/2022 20:18	11.28	85.74	6/19/2022 18:21	11.64	-0.04	6/19/2022 19:38	-0.06
6/19/2022 18:35	12.08	0.13	6/20/2022 20:19	11.26	85.81	6/19/2022 18:22	11.58	-0.05	6/19/2022 19:39	-0.08
6/19/2022 18:36	12.09	-0.01	6/20/2022 20:20	11.25	86.05	6/19/2022 18:23	11.61	-0.05	6/19/2022 19:40	-0.10
6/19/2022 18:37	12.08	0.15	6/20/2022 20:21	11.28	85.87	6/19/2022 18:24	11.61	-0.03	6/19/2022 19:41	-0.06
6/19/2022 18:38	12.07	0.13	6/20/2022 20:22	11.24	86.10	6/19/2022 18:25	11.63	-0.07	6/19/2022 19:42	-0.05
6/19/2022 18:39	12.10	0.04	6/20/2022 20:23	11.27	85.80	6/19/2022 18:26	11.61	0.00	6/19/2022 19:43	-0.04
6/19/2022 18:40	12.09	0.11	6/20/2022 20:24	11.28	86.12	6/19/2022 18:27	11.61	-0.05	6/19/2022 19:44	-0.12
6/19/2022 18:41	12.09	0.16	6/20/2022 20:25	11.29	86.34	6/19/2022 18:28	11.62	-0.02	6/19/2022 19:45	-0.14
6/19/2022 18:42	12.10	0.14	6/20/2022 20:26	11.30	86.05	6/19/2022 18:29	11.62	-0.02	6/19/2022 19:46	-0.06
6/19/2022 18:43	12.08	0.08	6/20/2022 20:27	11.27	86.32	6/19/2022 18:30	11.60	-0.05	6/19/2022 19:47	-0.12
6/19/2022 18:44	12.06	0.14	6/20/2022 20:28	11.27	86.16	6/19/2022 18:31	11.63	-0.02	6/19/2022 19:48	-0.05
6/19/2022 18:45	12.09	0.14	6/20/2022 20:29	11.28	86.33	6/19/2022 18:32	11.62	-0.02	6/19/2022 19:49	-0.09
6/19/2022 18:46	12.06	0.17	6/20/2022 20:30	11.29	86.16	6/19/2022 18:33	11.61	-0.04	6/19/2022 19:50	-0.12
6/19/2022 18:47	12.09	0.04	6/20/2022 20:31	11.27	86.10	6/19/2022 18:34	11.62	-0.04	6/19/2022 19:51	-0.08
6/19/2022 18:48	12.07	0.10	6/20/2022 20:32	11.31	86.08	6/19/2022 18:35	11.61	-0.05	6/19/2022 19:52	-0.07
6/19/2022 18:49	12.08	0.14	6/20/2022 20:33	11.28	86.33	6/19/2022 18:36	11.63	-0.05	6/19/2022 19:53	-0.08
6/19/2022 18:50	12.07	0.05	6/20/2022 20:34	11.27	86.37	6/19/2022 18:37	11.63	-0.02	6/19/2022 19:54	-0.11
6/19/2022 18:51	12.08	0.09	6/20/2022 20:35	11.29	86.31	6/19/2022 18:38	11.62	-0.02	6/19/2022 19:55	-0.12
6/19/2022 18:52	12.07	0.04	6/20/2022 20:36	11.29	86.31	6/19/2022 18:39	11.61	-0.03	6/19/2022 19:56	-0.03
6/19/2022 18:53	12.10	0.03	6/20/2022 20:37	11.27	86.55	6/19/2022 18:40	11.62	-0.03	6/19/2022 19:57	-0.10
6/19/2022 18:54	12.09	0.16	6/20/2022 20:38	11.27	86.47	6/19/2022 18:41	11.62	-0.02	6/19/2022 19:58	-0.09
6/19/2022 18:55	12.08	0.15	6/20/2022 20:39	11.29	86.19	6/19/2022 18:42	11.61	-0.05	6/19/2022 19:59	-0.09
6/19/2022 18:56	12.11	0.09	6/20/2022 20:40	11.27	86.47	6/19/2022 18:43	11.63	-0.08	6/19/2022 20:00	-0.09
6/19/2022 18:57	12.07	0.03	6/20/2022 20:41	11.28	86.33	6/19/2022 18:44	11.63	-0.03	6/19/2022 20:01	-0.03
6/19/2022 18:58	12.07	0.20	6/20/2022 20:42	11.26	86.37	6/19/2022 18:45	11.64	-0.05	6/19/2022 20:02	-0.14
6/19/2022 18:59	12.08	0.09	6/20/2022 20:43	11.25	86.56	6/19/2022 18:46	11.64	-0.08	6/19/2022 20:03	-0.07
6/19/2022 19:00	12.09	0.08	6/20/2022 20:44	11.28	86.62	6/19/2022 18:47	11.64	-0.02	6/19/2022 20:04	-0.06
6/19/2022 19:01	12.10	0.14	6/20/2022 20:45	11.27	86.59	6/19/2022 18:48	11.60	-0.05	6/19/2022 20:05	-0.03
6/19/2022 19:02	12.06	0.10	6/20/2022 20:46	11.28	86.38	6/19/2022 18:49	11.61	-0.06	6/19/2022 20:06	-0.10
6/19/2022 19:03	12.10	0.06	6/20/2022 20:47	11.27	86.53	6/19/2022 18:50	11.60	-0.05	6/19/2022 20:07	-0.06
6/19/2022 19:04	12.09	0.13	6/20/2022 20:48	11.27	86.78	6/19/2022 18:51	11.61	-0.02	6/19/2022 20:08	-0.10
6/19/2022 19:05	12.09	0.11	6/20/2022 20:49	11.29	86.54	6/19/2022 18:52	11.62	-0.02	6/19/2022 20:09	-0.07
6/19/2022 19:06	12.10	0.07	6/20/2022 20:50	11.27	86.48	6/19/2022 18:53	11.62	-0.05	6/19/2022 20:10	-0.10
6/19/2022 19:07	12.11	0.11	6/20/2022 20:51	11.27	86.58	6/19/2022 18:54	11.62	0.00	6/19/2022 20:11	-0.14
6/19/2022 19:08	12.09	0.09	6/20/2022 20:52	11.27	86.67	6/19/2022 18:55	11.60	-0.01	6/19/2022 20:12	-0.08
6/19/2022 19:09	12.10	0.03	6/20/2022 20:53	11.28	86.50	6/19/2022 18:56	11.61	-0.04	6/19/2022 20:13	-0.13
6/19/2022 19:10	12.08	0.09	6/20/2022 20:54	11.26	86.75	6/19/2022 18:57	11.61	-0.03	6/19/2022 20:14	-0.07
6/19/2022 19:11	12.07	0.08	6/20/2022 20:55	11.28	86.71	6/19/2022 18:58	11.64	-0.01	6/19/2022 20:15	-0.10
6/19/2022 19:12	12.07	0.10	6/20/2022 20:56	11.26	86.72	6/19/2022 18:59	11.64	-0.01	6/19/2022 20:16	-0.09
6/19/2022 19:13	12.09	0.13	6/20/2022 20:57	11.29	86.82	6/19/2022 19:00	11.62	-0.02	6/19/2022 20:17	-0.10
6/19/2022 19:14	12.08	0.04	6/20/2022 20:58	11.27	86.68	6/19/2022 19:01	11.60	0.00	6/19/2022 20:18	-0.09
6/19/2022 19:15	12.07	0.09	6/20/2022 20:59	11.26	86.65	6/19/2022 19:02	11.63	0.00	6/19/2022 20:19	-0.05
6/19/2022 19:16	12.10	0.06	6/20/2022 21:00	11.26	86.79	6/19/2022 19:03	11.62	-0.05	6/19/2022 20:20	-0.12
6/19/2022 19:17	12.06	0.05	6/20/2022 21:01	11.28	86.86	6/19/2022 19:04	11.61	-0.05	6/19/2022 20:21	-0.14
6/19/2022 19:18	12.09	0.19	6/20/2022 21:02	11.29	86.84	6/19/2022 19:05	11.61	-0.01	6/19/2022 20:22	-0.11
6/19/2022 19:19	12.08	0.05	6/20/2022 21:03	11.28	87.01	6/19/2022 19:06	11.59	-0.03	6/19/2022 20:23	-0.12
6/19/2022 19:20	12.10	0.13	6/20/2022 21:04	11.26	86.93	6/19/2022 19:07	11.62	-0.06	6/19/2022 20:24	-0.12
6/19/2022 19:21	12.07	0.18	6/20/2022 21:05	11.28	87.07	6/19/2022 19:08	11.61	-0.04	6/19/2022 20:25	-0.12
6/19/2022 19:22	12.09	0.09	6/20/2022 21:06	11.28	86.82	6/19/2022 19:09	11.63	-0.02	6/19/2022 20:26	-0.05
6/19/2022 19:23	12.09	0.10	6/20/2022 21:07	11.27	86.89	6/19/2022 19:10	11.61	-0.06	6/19/2022 20:27	-0.06
6/19/2022 19:24	12.07	0.07	6/20/2022 21:08	11.26	87.03	6/19/2022 19:11	11.63	-0.02	6/19/2022 20:28	-0.12
6/19/2022 19:25	12.07	0.05	6/20/2022 21:09	11.28	87.06	6/19/2022 19:12	11.60	0.00	6/19/2022 20:29	-0.11
6/19/2022 19:26	12.08	0.15	6/20/2022 21:10	11.28	87.06	6/19/2022 19:13	11.61	-0.06	6/19/2022 20:30	-0.06
6/19/2022 19:27	12.10	0.06	6/20/2022 21:11	11.25	86.89	6/19/2022 19:14	11.63	0.01	6/19/2022 20:31	-0.07
6/19/2022 19:28	12.07	0.05	6/20/2022 21:12	11.27	87.07	6/19/2022 19:15	11.61	-0.04	6/19/2022 20:32	-0.02
6/19/2022 19:29	12.07	0.10	6/20/2022 21:13	11.28	87.08	6/19/2022 19:16	11.59	-0.04	6/19/2022 20:33	-0.08
6/19/2022 19:30	12.08	0.15	6/20/2022 21:14	11.26	87.16	6/19/2022 19:17	11.64	-0.05	6/19/2022 20:34	-0.11
6/19/2022 19:31	12.07	0.17	6/20/2022 21:15	11.27	87.16	6/19/2022 19:18	11.61	-0.05	6/19/2022 20:35	-0.11
6/19/2022 19:32	12.09	-0.02	6/20/2022 21:16	11.27	87.00	6/19/2022 19:19	11.61	-0.08	6/19/2022 20:36	-0.10
6/19/2022 19:33	12.09	0.09	6/20/2022 21:17	11.28	86.97	6/19/2022 19:20	11.60	-0.06	6/19/2022 20:37	-0.06
6/19/2022 19:34	12.08	0.04	6/20/2022 21:18	11.28	87.11	6/19/2022 19:21	11.62	-0.03	6/19/2022 20:38	-0.09
6/19/2022 19:35	12.10	0.14	6/20/2022 21:19	11.26	86.96	6/19/2022 19:22	11.65	-0.05	6/19/2022 20:39	-0.10
6/19/2022 19:36	12.09	0.10	6/20/2022 21:20	11.27	87.17	6/19/2022 19:23	11.61	-0.03	6/19/2022 20:40	-0.06
6/19/2022 19:37	12.08	0.13	6/20/2022 21:21	11.29	87.35	6/19/2022 19:24	11.59	-0.05	6/19/2022 20:41	-0.06
6/19/2022 19:38	12.10	0.05	6/20/2022 21:22	11.25	87.25	6/19/2022 19:25	11.62	-0.05	6/19/2022 20:42	-0.09
6/19/2022 19:39	12.09	0.07	6/20/2022 21:23	11.27	87.19	6/19/2022 19:26	11.61	-0.06	6/19/2022 20:43	-0.06
6/19/2022 19:40	12.09	0.08	6/20/2022 21:24	11.30	87.29	6/19/2022 19:27	11.63	0.01	6/19/2022 20:44	-0.09
6/19/2022 19:41	12.09	0.12	6/20/2022 21:25	11.26	87.05	6/19/2022 19:28	11.61	-0.03	6/19/2022 20:45	-0.08
6/19/2022 19:42	12.08	0.13	6/20/2022 21:26	11.29	87.22	6/19/2022 19:29	11.61	0.00	6/19/2022 20:46	-0.08

6/19/2022 19:43	12.08	0.12	6/20/2022 21:27	11.28	87.13	6/19/2022 19:30	11.61	-0.04	6/19/2022 20:47	-0.08
6/19/2022 19:44	12.08	0.06	6/20/2022 21:28	11.29	87.37	6/19/2022 19:31	11.60	-0.05	6/19/2022 20:48	-0.04
6/19/2022 19:45	12.07	0.05	6/20/2022 21:29	11.27	87.28	6/19/2022 19:32	11.62	-0.09	6/19/2022 20:49	-0.02
6/19/2022 19:46	12.09	0.00	6/20/2022 21:30	11.26	87.14	6/19/2022 19:33	11.62	-0.04	6/19/2022 20:50	-0.08
6/19/2022 19:47	12.06	0.06	6/20/2022 21:31	11.27	87.32	6/19/2022 19:34	11.63	-0.05	6/19/2022 20:51	-0.12
6/19/2022 19:48	12.09	0.00	6/20/2022 21:32	11.28	87.44	6/19/2022 19:35	11.65	-0.05	6/19/2022 20:52	-0.11
6/19/2022 19:49	12.07	0.10	6/20/2022 21:33	11.27	87.29	6/19/2022 19:36	11.60	-0.01	6/19/2022 20:53	-0.09
6/19/2022 19:50	12.06	0.13	6/20/2022 21:34	11.27	87.49	6/19/2022 19:37	11.63	-0.06	6/19/2022 20:54	-0.06
6/19/2022 19:51	12.08	0.02	6/20/2022 21:35	11.28	87.36	6/19/2022 19:38	11.61	-0.03	6/19/2022 20:55	-0.08
6/19/2022 19:52	12.09	0.08	6/20/2022 21:36	11.28	87.40	6/19/2022 19:39	11.64	-0.05	6/19/2022 20:56	-0.08
6/19/2022 19:53	12.09	0.10	6/20/2022 21:37	11.26	87.44	6/19/2022 19:40	11.62	-0.07	6/19/2022 20:57	-0.06
6/19/2022 19:54	12.11	0.08	6/20/2022 21:38	11.27	87.57	6/19/2022 19:41	11.62	0.00	6/19/2022 20:58	-0.10
6/19/2022 19:55	12.08	0.11	6/20/2022 21:39	11.28	87.58	6/19/2022 19:42	11.60	-0.01	6/19/2022 20:59	-0.09
6/19/2022 19:56	12.08	0.09	6/20/2022 21:40	11.27	87.68	6/19/2022 19:43	11.63	-0.05	6/19/2022 21:00	-0.07
6/19/2022 19:57	12.08	0.09	6/20/2022 21:41	11.27	87.40	6/19/2022 19:44	11.62	-0.04	6/19/2022 21:01	-0.05
6/19/2022 19:58	12.08	0.03	6/20/2022 21:42	11.26	87.46	6/19/2022 19:45	11.63	-0.03	6/19/2022 21:02	-0.08
6/19/2022 19:59	12.09	0.03	6/20/2022 21:43	11.28	87.85	6/19/2022 19:46	11.60	-0.02	6/19/2022 21:03	-0.05
6/19/2022 20:00	12.08	0.06	6/20/2022 21:44	11.28	87.63	6/19/2022 19:47	11.61	0.00	6/19/2022 21:04	-0.10
6/19/2022 20:01	12.09	0.06	6/20/2022 21:45	11.28	87.66	6/19/2022 19:48	11.61	-0.01	6/19/2022 21:05	-0.12
6/19/2022 20:02	12.08	0.12	6/20/2022 21:46	11.27	87.62	6/19/2022 19:49	11.60	-0.05	6/19/2022 21:06	-0.08
6/19/2022 20:03	12.08	0.20	6/20/2022 21:47	11.28	87.71	6/19/2022 19:50	11.64	-0.04	6/19/2022 21:07	-0.10
6/19/2022 20:04	12.07	0.08	6/20/2022 21:48	11.26	87.64	6/19/2022 19:51	11.63	-0.01	6/19/2022 21:08	-0.10
6/19/2022 20:05	12.07	0.11	6/20/2022 21:49	11.29	87.70	6/19/2022 19:52	11.60	-0.03	6/19/2022 21:09	-0.14
6/19/2022 20:06	12.11	0.18	6/20/2022 21:50	11.27	87.77	6/19/2022 19:53	11.60	-0.04	6/19/2022 21:10	-0.11
6/19/2022 20:07	12.09	0.06	6/20/2022 21:51	11.29	87.77	6/19/2022 19:54	11.64	-0.02	6/19/2022 21:11	-0.14
6/19/2022 20:08	12.10	0.15	6/20/2022 21:52	11.28	87.90	6/19/2022 19:55	11.64	-0.03	6/19/2022 21:12	-0.03
6/19/2022 20:09	12.08	0.06	6/20/2022 21:53	11.25	87.80	6/19/2022 19:56	11.62	-0.02	6/19/2022 21:13	-0.10
6/19/2022 20:10	12.06	0.13	6/20/2022 21:54	11.30	87.71	6/19/2022 19:57	11.63	-0.09	6/19/2022 21:14	-0.08
6/19/2022 20:11	12.07	0.13	6/20/2022 21:55	11.30	87.90	6/19/2022 19:58	11.62	-0.01	6/19/2022 21:15	-0.04
6/19/2022 20:12	12.08	0.14	6/20/2022 21:56	11.27	87.80	6/19/2022 19:59	11.62	-0.04	6/19/2022 21:16	-0.08
6/19/2022 20:13	12.09	0.06	6/20/2022 21:57	11.26	87.96	6/19/2022 20:00	11.64	-0.05	6/19/2022 21:17	-0.08
6/19/2022 20:14	12.07	0.18	6/20/2022 21:58	11.26	87.84	6/19/2022 20:01	11.62	-0.04	6/19/2022 21:18	-0.12
6/19/2022 20:15	12.08	0.12	6/20/2022 21:59	11.29	87.70	6/19/2022 20:02	11.63	-0.03	6/19/2022 21:19	-0.04
6/19/2022 20:16	12.11	0.05	6/20/2022 22:00	11.28	87.82	6/19/2022 20:03	11.60	-0.02	6/19/2022 21:20	-0.08
6/19/2022 20:17	12.11	0.01	6/20/2022 22:01	11.28	87.77	6/19/2022 20:04	11.62	-0.03	6/19/2022 21:21	-0.07
6/19/2022 20:18	12.09	0.12	6/20/2022 22:02	11.28	87.99	6/19/2022 20:05	11.58	-0.04	6/19/2022 21:22	-0.07
6/19/2022 20:19	12.10	0.04	6/20/2022 22:03	11.27	87.81	6/19/2022 20:06	11.61	-0.01	6/19/2022 21:23	-0.11
6/19/2022 20:20	12.07	0.12	6/20/2022 22:04	11.26	87.83	6/19/2022 20:07	11.62	-0.03	6/19/2022 21:24	-0.05
6/19/2022 20:21	12.07	0.14	6/20/2022 22:05	11.27	87.87	6/19/2022 20:08	11.64	-0.02	6/19/2022 21:25	-0.12
6/19/2022 20:22	12.10	0.09	6/20/2022 22:06	11.26	87.99	6/19/2022 20:09	11.59	-0.04	6/19/2022 21:26	-0.03
6/19/2022 20:23	12.09	0.07	6/20/2022 22:07	11.25	88.07	6/19/2022 20:10	11.61	-0.07	6/19/2022 21:27	-0.11
6/19/2022 20:24	12.11	0.08	6/20/2022 22:08	11.30	87.87	6/19/2022 20:11	11.62	-0.03	6/19/2022 21:28	-0.07
6/19/2022 20:25	12.09	0.10	6/20/2022 22:09	11.28	88.00	6/19/2022 20:12	11.61	-0.08	6/19/2022 21:29	-0.15
6/19/2022 20:26	12.08	0.12	6/20/2022 22:10	11.29	88.03	6/19/2022 20:13	11.63	-0.05	6/19/2022 21:30	-0.08
6/19/2022 20:27	12.07	0.09	6/20/2022 22:11	11.26	87.96	6/19/2022 20:14	11.61	-0.03	6/19/2022 21:31	-0.09
6/19/2022 20:28	12.08	0.08	6/20/2022 22:12	11.28	87.90	6/19/2022 20:15	11.63	-0.04	6/19/2022 21:32	-0.12
6/19/2022 20:29	12.09	0.14	6/20/2022 22:13	11.27	88.10	6/19/2022 20:16	11.61	-0.04	6/19/2022 21:33	-0.15
6/19/2022 20:30	12.13	0.16	6/20/2022 22:14	11.25	87.93	6/19/2022 20:17	11.62	-0.08	6/19/2022 21:34	-0.09
6/19/2022 20:31	12.08	0.20	6/20/2022 22:15	11.26	88.12	6/19/2022 20:18	11.62	-0.01	6/19/2022 21:35	-0.11
6/19/2022 20:32	12.09	0.08	6/20/2022 22:16	11.27	88.12	6/19/2022 20:19	11.60	-0.03	6/19/2022 21:36	-0.10
6/19/2022 20:33	12.09	0.06	6/20/2022 22:17	11.26	88.12	6/19/2022 20:20	11.63	-0.03	6/19/2022 21:37	-0.12
6/19/2022 20:34	12.10	0.02	6/20/2022 22:18	11.26	88.21	6/19/2022 20:21	11.60	0.00	6/19/2022 21:38	-0.07
6/19/2022 20:35	12.08	0.09	6/20/2022 22:19	11.28	88.08	6/19/2022 20:22	11.61	-0.06	6/19/2022 21:39	-0.09
6/19/2022 20:36	12.10	0.11	6/20/2022 22:20	11.27	88.12	6/19/2022 20:23	11.64	-0.05	6/19/2022 21:40	-0.09
6/19/2022 20:37	12.09	0.08	6/20/2022 22:21	11.24	88.24	6/19/2022 20:24	11.62	-0.05	6/19/2022 21:41	-0.06
6/19/2022 20:38	12.10	0.11	6/20/2022 22:22	11.29	88.21	6/19/2022 20:25	11.61	-0.03	6/19/2022 21:42	-0.10
6/19/2022 20:39	12.06	0.08	6/20/2022 22:23	11.25	88.24	6/19/2022 20:26	11.60	-0.03	6/19/2022 21:43	-0.07
6/19/2022 20:40	12.09	0.10	6/20/2022 22:24	11.27	88.17	6/19/2022 20:27	11.62	-0.03	6/19/2022 21:44	-0.09
6/19/2022 20:41	12.10	0.13	6/20/2022 22:25	11.28	88.18	6/19/2022 20:28	11.62	-0.03	6/19/2022 21:45	-0.10
6/19/2022 20:42	12.07	0.12	6/20/2022 22:26	11.26	88.26	6/19/2022 20:29	11.62	-0.08	6/19/2022 21:46	-0.12
6/19/2022 20:43	12.09	0.15	6/20/2022 22:27	11.28	88.04	6/19/2022 20:30	11.62	-0.01	6/19/2022 21:47	-0.05
6/19/2022 20:44	12.07	0.15	6/20/2022 22:28	11.25	88.31	6/19/2022 20:31	11.63	-0.04	6/19/2022 21:48	-0.10
6/19/2022 20:45	12.10	-0.01	6/20/2022 22:29	11.30	88.13	6/19/2022 20:32	11.62	-0.01	6/19/2022 21:49	-0.05
6/19/2022 20:46	12.06	0.10	6/20/2022 22:30	11.28	88.30	6/19/2022 20:33	11.61	-0.04	6/19/2022 21:50	-0.12
6/19/2022 20:47	12.10	0.08	6/20/2022 22:31	11.28	88.22	6/19/2022 20:34	11.63	-0.03	6/19/2022 21:51	-0.09
6/19/2022 20:48	12.11	0.13	6/20/2022 22:32	11.27	88.36	6/19/2022 20:35	11.62	-0.04	6/19/2022 21:52	-0.06
6/19/2022 20:49	12.07	0.13	6/20/2022 22:33	11.26	88.48	6/19/2022 20:36	11.60	-0.05	6/19/2022 21:53	-0.13
6/19/2022 20:50	12.08	0.11	6/20/2022 22:34	11.28	88.44	6/19/2022 20:37	11.62	-0.07	6/19/2022 21:54	-0.10
6/19/2022 20:51	12.07	0.10	6/20/2022 22:35	11.27	88.43	6/19/2022 20:38	11.62	-0.02	6/19/2022 21:55	-0.05
6/19/2022 20:52	12.11	0.08	6/20/2022 22:36	11.27	88.51	6/19/2022 20:39	11.62	-0.03	6/19/2022 21:56	-0.09
6/19/2022 20:53	12.08	0.11	6/20/2022 22:37	11.29	88.38	6/19/2022 20:40	11.62	-0.05	6/19/2022 21:57	-0.12
6/19/2022 20:54	12.09	0.18	6/20/2022 22:38	11.28	88.38	6/19/2022 20:41	11.62	-0.02	6/19/2022 21:58	-0.11
6/19/2022 20:55	12.10	0.15	6/20/2022 22:39	11.29	88.42	6/19/2022 20:42	11.62	-0.03	6/19/2022 21:59	-0.09
6/19/2022 20:56	12.09	0.13	6/20/2022 22:40	11.24	88.50	6/19/2022 20:43	11.61	-0.03	6/19/2022 22:00	-0.07
6/19/2022 20:57	12.06	0.08	6/20/2022 22:41	11.26	88.35	6/19/2022 20:44	11.61	-0.05	6/19/2022 22:01	-0.12
6/19/2022 20:58	12.09	0.03	6/20/2022 22:42	11.27	88.51	6/19/2022 20:45	11.62	-0.08	6/19/2022 22:02	-0.06
6/19/2022 20:59	12.09	0.15	6/20/2022 22:43	11.29	88.43	6/19/2022 20:46	11.60	-0.05	6/19/2022 22:03	-0.06
6/19/2022 21:00	12.09	0.09	6/20/2022 22:44	11.26	88.45	6/19/2022 20:47	11.61	-0.06	6/19/2022 22:04	-0.10
6/19/2022 21:01	12.09	0.14	6/20/2022 22:45	11.27	88.50	6/19/2022 20:48	11.61	-0.04	6/19/2022 22:05	-0.14
6/19/2022 21:02	12.07	0.06	6/20/2022 22:46	11.26	88.67	6/19/2022 20:49	11.61	-0.06	6/19/2022 22:06	-0.05
6/19/2022 21:03	12.08	0.08	6/20/2022 22:47	11.26	88.81	6/19/2022 20:50	11.63	-0.03	6/19/2022 22:07	-0.05
6/19/2022 21:04	12.10	0.12	6/20/2022 22:48	11.27	88.48	6/19/2022 20:51	11.60	-0.04	6/19/2022 22:08	-0.13
6/19/2022 21:05	12.09	0.05	6/20/2022 22:49	11.25	88.66	6/19/2022 20:52	11.60	-0.03	6/19/2022 22:09	-0.11
6/19/2022 21:06	12.10	0.12	6/20/2022 22:50	11.26	88.70	6/19/2022 20:53	11.60	-0.03	6/19/2022 22:10	-0.06
6/19/2022 21:07	12.08	0.13	6/20/2022 22:51	11.30	88.82	6/19/2022 20:54	11.61	-0.03	6/19/2022 22:11	-0.04
6/19/2022 21:08	12.10	0.07	6/20/2022 22:52	11.23	88.59	6/19/2022 20:55	11.63	-0.07	6/19/2022 22:12	-0.10
6/19/2022 21:09	12.08	0.03	6/20/2022 22:53	11.28	88.72	6/19/2022 20:56	11.62	-0.03	6/19/2022 22:13	-0.10
6/19/2022 21:10	12.06	0.11	6/20/2022 22:54	11.27	88.73	6/19/2022 20:57	11.61	-0.05	6/19/2022 22:14	-0.10

6/19/2022 21:11	12.10	0.09	6/20/2022 22:55	11.26	88.69	6/19/2022 20:58	11.61	-0.06	6/19/2022 22:15	-0.09
6/19/2022 21:12	12.06	0.04	6/20/2022 22:56	11.27	88.82	6/19/2022 20:59	11.62	-0.06	6/19/2022 22:16	-0.09
6/19/2022 21:13	12.09	0.07	6/20/2022 22:57	11.26	88.59	6/19/2022 21:00	11.61	-0.06	6/19/2022 22:17	-0.13
6/19/2022 21:14	12.07	0.18	6/20/2022 22:58	11.29	88.90	6/19/2022 21:01	11.61	-0.03	6/19/2022 22:18	-0.05
6/19/2022 21:15	12.07	0.13	6/20/2022 22:59	11.27	88.81	6/19/2022 21:02	11.61	-0.04	6/19/2022 22:19	-0.03
6/19/2022 21:16	12.11	0.13	6/20/2022 23:00	11.27	88.70	6/19/2022 21:03	11.62	-0.03	6/19/2022 22:20	-0.09
6/19/2022 21:17	12.09	0.08	6/20/2022 23:01	11.29	88.67	6/19/2022 21:04	11.62	-0.06	6/19/2022 22:21	-0.07
6/19/2022 21:18	12.04	0.08	6/20/2022 23:02	11.28	88.85	6/19/2022 21:05	11.62	-0.06	6/19/2022 22:22	-0.09
6/19/2022 21:19	12.07	0.03	6/20/2022 23:03	11.26	88.80	6/19/2022 21:06	11.59	-0.05	6/19/2022 22:23	-0.05
6/19/2022 21:20	12.07	0.03	6/20/2022 23:04	11.27	88.77	6/19/2022 21:07	11.61	0.00	6/19/2022 22:24	-0.07
6/19/2022 21:21	12.09	0.14	6/20/2022 23:05	11.25	88.85	6/19/2022 21:08	11.61	-0.03	6/19/2022 22:25	-0.07
6/19/2022 21:22	12.11	0.13	6/20/2022 23:06	11.26	88.72	6/19/2022 21:09	11.60	0.00	6/19/2022 22:26	-0.07
6/19/2022 21:23	12.07	0.12	6/20/2022 23:07	11.29	88.98	6/19/2022 21:10	11.60	-0.02	6/19/2022 22:27	-0.08
6/19/2022 21:24	12.10	0.15	6/20/2022 23:08	11.28	88.86	6/19/2022 21:11	11.63	-0.01	6/19/2022 22:28	-0.09
6/19/2022 21:25	12.09	0.13	6/20/2022 23:09	11.26	88.85	6/19/2022 21:12	11.63	-0.03	6/19/2022 22:29	-0.05
6/19/2022 21:26	12.05	0.13	6/20/2022 23:10	11.27	88.78	6/19/2022 21:13	11.63	-0.04	6/19/2022 22:30	-0.07
6/19/2022 21:27	12.09	0.01	6/20/2022 23:11	11.28	88.93	6/19/2022 21:14	11.61	-0.05	6/19/2022 22:31	-0.10
6/19/2022 21:28	12.12	0.10	6/20/2022 23:12	11.28	88.81	6/19/2022 21:15	11.64	-0.01	6/19/2022 22:32	-0.09
6/19/2022 21:29	12.09	0.15	6/20/2022 23:13	11.26	88.80	6/19/2022 21:16	11.63	0.01	6/19/2022 22:33	-0.06
6/19/2022 21:30	12.06	0.15	6/20/2022 23:14	11.26	88.90	6/19/2022 21:17	11.61	-0.03	6/19/2022 22:34	-0.07
6/19/2022 21:31	12.08	0.09	6/20/2022 23:15	11.26	88.90	6/19/2022 21:18	11.60	-0.05	6/19/2022 22:35	-0.05
6/19/2022 21:32	12.09	0.08	6/20/2022 23:16	11.27	89.02	6/19/2022 21:19	11.63	-0.05	6/19/2022 22:36	-0.09
6/19/2022 21:33	12.12	0.08	6/20/2022 23:17	11.30	88.87	6/19/2022 21:20	11.61	-0.09	6/19/2022 22:37	-0.06
6/19/2022 21:34	12.08	0.00	6/20/2022 23:18	11.26	88.84	6/19/2022 21:21	11.62	-0.04	6/19/2022 22:38	-0.09
6/19/2022 21:35	12.08	0.08	6/20/2022 23:19	11.28	88.93	6/19/2022 21:22	11.61	-0.05	6/19/2022 22:39	-0.11
6/19/2022 21:36	12.08	0.08	6/20/2022 23:20	11.27	89.12	6/19/2022 21:23	11.61	-0.01	6/19/2022 22:40	-0.09
6/19/2022 21:37	12.10	0.10	6/20/2022 23:21	11.26	88.99	6/19/2022 21:24	11.61	-0.01	6/19/2022 22:41	-0.16
6/19/2022 21:38	12.09	0.09	6/20/2022 23:22	11.24	89.17	6/19/2022 21:25	11.62	-0.03	6/19/2022 22:42	-0.07
6/19/2022 21:39	12.09	0.11	6/20/2022 23:23	11.28	89.18	6/19/2022 21:26	11.62	-0.01	6/19/2022 22:43	-0.04
6/19/2022 21:40	12.08	0.12	6/20/2022 23:24	11.29	89.14	6/19/2022 21:27	11.62	-0.04	6/19/2022 22:44	-0.14
6/19/2022 21:41	12.08	0.07	6/20/2022 23:25	11.30	89.07	6/19/2022 21:28	11.61	-0.03	6/19/2022 22:45	-0.07
6/19/2022 21:42	12.08	0.08	6/20/2022 23:26	11.29	89.09	6/19/2022 21:29	11.62	0.00	6/19/2022 22:46	-0.09
6/19/2022 21:43	12.07	0.06	6/20/2022 23:27	11.28	89.05	6/19/2022 21:30	11.61	-0.02	6/19/2022 22:47	-0.10
6/19/2022 21:44	12.09	0.08	6/20/2022 23:28	11.28	89.09	6/19/2022 21:31	11.61	-0.01	6/19/2022 22:48	-0.10
6/19/2022 21:45	12.11	0.10	6/20/2022 23:29	11.27	89.06	6/19/2022 21:32	11.64	-0.04	6/19/2022 22:49	-0.03
6/19/2022 21:46	12.09	0.13	6/20/2022 23:30	11.24	89.33	6/19/2022 21:33	11.62	-0.02	6/19/2022 22:50	-0.10
6/19/2022 21:47	12.10	0.08	6/20/2022 23:31	11.28	89.14	6/19/2022 21:34	11.63	-0.06	6/19/2022 22:51	-0.09
6/19/2022 21:48	12.08	0.08	6/20/2022 23:32	11.29	89.14	6/19/2022 21:35	11.63	-0.04	6/19/2022 22:52	-0.10
6/19/2022 21:49	12.09	0.17	6/20/2022 23:33	11.29	89.08	6/19/2022 21:36	11.62	-0.03	6/19/2022 22:53	-0.14
6/19/2022 21:50	12.10	0.00	6/20/2022 23:34	11.26	89.32	6/19/2022 21:37	11.62	-0.03	6/19/2022 22:54	-0.10
6/19/2022 21:51	12.09	0.06	6/20/2022 23:35	11.28	89.46	6/19/2022 21:38	11.61	-0.01	6/19/2022 22:55	-0.08
6/19/2022 21:52	12.10	0.08	6/20/2022 23:36	11.27	89.39	6/19/2022 21:39	11.61	-0.02	6/19/2022 22:56	-0.08
6/19/2022 21:53	12.08	0.08	6/20/2022 23:37	11.27	89.44	6/19/2022 21:40	11.62	-0.02	6/19/2022 22:57	-0.12
6/19/2022 21:54	12.07	0.17	6/20/2022 23:38	11.25	89.37	6/19/2022 21:41	11.62	-0.05	6/19/2022 22:58	-0.08
6/19/2022 21:55	12.08	0.12	6/20/2022 23:39	11.29	89.55	6/19/2022 21:42	11.60	-0.02	6/19/2022 22:59	-0.14
6/19/2022 21:56	12.07	0.15	6/20/2022 23:40	11.28	89.24	6/19/2022 21:43	11.60	-0.02	6/19/2022 23:00	-0.14
6/19/2022 21:57	12.07	0.08	6/20/2022 23:41	11.30	89.42	6/19/2022 21:44	11.62	-0.03	6/19/2022 23:01	-0.15
6/19/2022 21:58	12.07	0.09	6/20/2022 23:42	11.29	89.52	6/19/2022 21:45	11.62	-0.02	6/19/2022 23:02	-0.10
6/19/2022 21:59	12.11	0.10	6/20/2022 23:43	11.28	89.34	6/19/2022 21:46	11.60	-0.03	6/19/2022 23:03	-0.12
6/19/2022 22:00	12.08	0.10	6/20/2022 23:44	11.27	89.45	6/19/2022 21:47	11.62	-0.05	6/19/2022 23:04	-0.03
6/19/2022 22:01	12.10	0.10	6/20/2022 23:45	11.25	89.36	6/19/2022 21:48	11.63	-0.01	6/19/2022 23:05	-0.08
6/19/2022 22:02	12.07	0.13	6/20/2022 23:46	11.28	89.43	6/19/2022 21:49	11.62	-0.03	6/19/2022 23:06	-0.09
6/19/2022 22:03	12.08	0.16	6/20/2022 23:47	11.25	89.32	6/19/2022 21:50	11.62	-0.05	6/19/2022 23:07	-0.11
6/19/2022 22:04	12.09	0.12	6/20/2022 23:48	11.27	89.59	6/19/2022 21:51	11.62	-0.03	6/19/2022 23:08	-0.08
6/19/2022 22:05	12.09	0.07	6/20/2022 23:49	11.26	89.47	6/19/2022 21:52	11.60	-0.05	6/19/2022 23:09	-0.10
6/19/2022 22:06	12.11	0.10	6/20/2022 23:50	11.29	89.42	6/19/2022 21:53	11.62	0.00	6/19/2022 23:10	-0.05
6/19/2022 22:07	12.07	0.09	6/20/2022 23:51	11.24	89.51	6/19/2022 21:54	11.59	-0.02	6/19/2022 23:11	-0.10
6/19/2022 22:08	12.09	0.09	6/20/2022 23:52	11.27	89.56	6/19/2022 21:55	11.62	0.01	6/19/2022 23:12	-0.10
6/19/2022 22:09	12.08	0.10	6/20/2022 23:53	11.27	89.57	6/19/2022 21:56	11.63	-0.05	6/19/2022 23:13	-0.07
6/19/2022 22:10	12.09	0.10	6/20/2022 23:54	11.28	89.64	6/19/2022 21:57	11.63	-0.05	6/19/2022 23:14	-0.14
6/19/2022 22:11	12.09	0.17	6/20/2022 23:55	11.27	89.51	6/19/2022 21:58	11.62	-0.02	6/19/2022 23:15	-0.06
6/19/2022 22:12	12.09	0.11	6/20/2022 23:56	11.27	89.64	6/19/2022 21:59	11.64	-0.04	6/19/2022 23:16	-0.10
6/19/2022 22:13	12.08	0.05	6/20/2022 23:57	11.30	89.51	6/19/2022 22:00	11.62	-0.03	6/19/2022 23:17	-0.10
6/19/2022 22:14	12.08	0.12	6/20/2022 23:58	11.27	89.51	6/19/2022 22:01	11.61	-0.04	6/19/2022 23:18	-0.08
6/19/2022 22:15	12.09	0.07	6/20/2022 23:59	11.26	89.65	6/19/2022 22:02	11.61	-0.06	6/19/2022 23:19	-0.11
6/19/2022 22:16	12.12	0.10	6/21/2022 0:00	11.27	89.70	6/19/2022 22:03	11.63	-0.02	6/19/2022 23:20	-0.12
6/19/2022 22:17	12.10	0.07	6/21/2022 0:01	11.27	89.87	6/19/2022 22:04	11.63	-0.04	6/19/2022 23:21	-0.11
6/19/2022 22:18	12.08	0.08	6/21/2022 0:02	11.25	89.59	6/19/2022 22:05	11.61	-0.04	6/19/2022 23:22	-0.08
6/19/2022 22:19	12.09	0.03	6/21/2022 0:03	11.28	89.66	6/19/2022 22:06	11.64	-0.06	6/19/2022 23:23	-0.10
6/19/2022 22:20	12.08	0.09	6/21/2022 0:04	11.26	89.58	6/19/2022 22:07	11.62	-0.03	6/19/2022 23:24	-0.11
6/19/2022 22:21	12.09	0.11	6/21/2022 0:05	11.28	89.63	6/19/2022 22:08	11.63	-0.04	6/19/2022 23:25	-0.12
6/19/2022 22:22	12.08	0.02	6/21/2022 0:06	11.29	89.60	6/19/2022 22:09	11.61	-0.06	6/19/2022 23:26	-0.10
6/19/2022 22:23	12.07	0.10	6/21/2022 0:07	11.28	89.93	6/19/2022 22:10	11.63	-0.03	6/19/2022 23:27	-0.10
6/19/2022 22:24	12.07	0.10	6/21/2022 0:08	11.26	89.82	6/19/2022 22:11	11.61	-0.04	6/19/2022 23:28	-0.10
6/19/2022 22:25	12.10	0.06	6/21/2022 0:09	11.27	89.91	6/19/2022 22:12	11.63	-0.04	6/19/2022 23:29	-0.09
6/19/2022 22:26	12.11	0.12	6/21/2022 0:10	11.27	89.71	6/19/2022 22:13	11.61	-0.01	6/19/2022 23:30	-0.06
6/19/2022 22:27	12.10	0.07	6/21/2022 0:11	11.29	89.54	6/19/2022 22:14	11.61	-0.05	6/19/2022 23:31	-0.12
6/19/2022 22:28	12.08	0.12	6/21/2022 0:12	11.28	89.97	6/19/2022 22:15	11.61	-0.01	6/19/2022 23:32	-0.11
6/19/2022 22:29	12.09	0.06	6/21/2022 0:13	11.28	89.74	6/19/2022 22:16	11.60	-0.03	6/19/2022 23:33	-0.03
6/19/2022 22:30	12.09	0.07	6/21/2022 0:14	11.30	89.95	6/19/2022 22:17	11.61	-0.04	6/19/2022 23:34	-0.11
6/19/2022 22:31	12.11	0.09	6/21/2022 0:15	11.28	89.93	6/19/2022 22:18	11.60	-0.03	6/19/2022 23:35	-0.13
6/19/2022 22:32	12.10	0.07	6/21/2022 0:16	11.28	89.95	6/19/2022 22:19	11.63	-0.04	6/19/2022 23:36	-0.11
6/19/2022 22:33	12.11	0.05	6/21/2022 0:17	11.26	89.97	6/19/2022 22:20	11.62	-0.06	6/19/2022 23:37	-0.08
6/19/2022 22:34	12.08	0.00	6/21/2022 0:18	11.27	89.97	6/19/2022 22:21	11.63	0.00	6/19/2022 23:38	-0.04
6/19/2022 22:35	12.09	0.11	6/21/2022 0:19	11.31	89.95	6/19/2022 22:22	11.62	-0.02	6/19/2022 23:39	-0.09
6/19/2022 22:36	12.10	0.07	6/21/2022 0:20	11.28	90.05	6/19/2022 22:23	11.60	-0.02	6/19/2022 23:40	-0.11
6/19/2022 22:37	12.08	0.12	6/21/2022 0:21	11.28	90.01	6/19/2022 22:24	11.61	-0.04	6/19/2022 23:41	-0.11
6/19/2022 22:38	12.12	0.28	6/21/2022 0:22	11.28	90.07	6/19/2022 22:25	11.62	-0.06	6/19/2022 23:42	-0.11

6/19/2022 22:39	12.10	0.07	6/21/2022 0:23	11.29	89.83	6/19/2022 22:26	11.62	-0.04	6/19/2022 23:43	-0.14
6/19/2022 22:40	12.08	0.09	6/21/2022 0:24	11.29	89.96	6/19/2022 22:27	11.63	-0.03	6/19/2022 23:44	-0.09
6/19/2022 22:41	12.10	0.09	6/21/2022 0:25	11.29	90.12	6/19/2022 22:28	11.62	-0.07	6/19/2022 23:45	-0.09
6/19/2022 22:42	12.07	0.03	6/21/2022 0:26	11.26	90.05	6/19/2022 22:29	11.60	-0.04	6/19/2022 23:46	-0.10
6/19/2022 22:43	12.09	0.08	6/21/2022 0:27	11.26	90.12	6/19/2022 22:30	11.62	-0.01	6/19/2022 23:47	-0.10
6/19/2022 22:44	12.08	0.16	6/21/2022 0:28	11.26	90.11	6/19/2022 22:31	11.63	-0.04	6/19/2022 23:48	-0.07
6/19/2022 22:45	12.11	0.19	6/21/2022 0:29	11.26	90.06	6/19/2022 22:32	11.62	-0.07	6/19/2022 23:49	-0.14
6/19/2022 22:46	12.09	0.13	6/21/2022 0:30	11.29	90.09	6/19/2022 22:33	11.60	-0.07	6/19/2022 23:50	-0.10
6/19/2022 22:47	12.07	0.08	6/21/2022 0:31	11.26	90.07	6/19/2022 22:34	11.61	-0.04	6/19/2022 23:51	-0.03
6/19/2022 22:48	12.08	0.04	6/21/2022 0:32	11.28	90.08	6/19/2022 22:35	11.61	-0.06	6/19/2022 23:52	-0.09
6/19/2022 22:49	12.09	0.04	6/21/2022 0:33	11.28	90.04	6/19/2022 22:36	11.62	-0.02	6/19/2022 23:53	-0.12
6/19/2022 22:50	12.09	0.06	6/21/2022 0:34	11.27	90.25	6/19/2022 22:37	11.63	-0.07	6/19/2022 23:54	-0.02
6/19/2022 22:51	12.11	0.13	6/21/2022 0:35	11.27	90.13	6/19/2022 22:38	11.61	-0.03	6/19/2022 23:55	-0.10
6/19/2022 22:52	12.10	0.07	6/21/2022 0:36	11.27	90.07	6/19/2022 22:39	11.62	-0.07	6/19/2022 23:56	-0.11
6/19/2022 22:53	12.11	0.14	6/21/2022 0:37	11.25	90.27	6/19/2022 22:40	11.63	-0.02	6/19/2022 23:57	-0.10
6/19/2022 22:54	12.09	0.07	6/21/2022 0:38	11.26	90.26	6/19/2022 22:41	11.63	0.00	6/19/2022 23:58	-0.14
6/19/2022 22:55	12.11	-0.01	6/21/2022 0:39	11.28	90.28	6/19/2022 22:42	11.63	-0.06	6/19/2022 23:59	-0.08
6/19/2022 22:56	12.05	0.11	6/21/2022 0:40	11.27	90.21	6/19/2022 22:43	11.59	-0.09	6/20/2022 0:00	-0.05
6/19/2022 22:57	12.10	0.08	6/21/2022 0:41	11.26	90.19	6/19/2022 22:44	11.61	-0.07	6/20/2022 0:01	-0.14
6/19/2022 22:58	12.07	0.09	6/21/2022 0:42	11.28	90.20	6/19/2022 22:45	11.63	-0.06	6/20/2022 0:02	-0.07
6/19/2022 22:59	12.07	0.10	6/21/2022 0:43	11.28	90.16	6/19/2022 22:46	11.62	-0.09	6/20/2022 0:03	-0.11
6/19/2022 23:00	12.09	0.08	6/21/2022 0:44	11.27	90.36	6/19/2022 22:47	11.64	-0.04	6/20/2022 0:04	-0.08
6/19/2022 23:01	12.06	0.11	6/21/2022 0:45	11.26	90.31	6/19/2022 22:48	11.62	-0.06	6/20/2022 0:05	-0.09
6/19/2022 23:02	12.10	0.12	6/21/2022 0:46	11.26	90.17	6/19/2022 22:49	11.64	-0.08	6/20/2022 0:06	-0.12
6/19/2022 23:03	12.07	0.18	6/21/2022 0:47	11.27	90.30	6/19/2022 22:50	11.63	-0.06	6/20/2022 0:07	-0.08
6/19/2022 23:04	12.09	0.10	6/21/2022 0:48	11.27	90.44	6/19/2022 22:51	11.61	-0.01	6/20/2022 0:08	-0.09
6/19/2022 23:05	12.08	0.09	6/21/2022 0:49	11.26	90.34	6/19/2022 22:52	11.63	-0.01	6/20/2022 0:09	-0.09
6/19/2022 23:06	12.06	0.13	6/21/2022 0:50	11.27	90.59	6/19/2022 22:53	11.63	-0.04	6/20/2022 0:10	-0.08
6/19/2022 23:07	12.09	0.11	6/21/2022 0:51	11.26	90.13	6/19/2022 22:54	11.64	-0.02	6/20/2022 0:11	-0.11
6/19/2022 23:08	12.08	0.05	6/21/2022 0:52	11.26	90.44	6/19/2022 22:55	11.62	-0.01	6/20/2022 0:12	-0.11
6/19/2022 23:09	12.09	0.08	6/21/2022 0:53	11.28	90.76	6/19/2022 22:56	11.61	-0.05	6/20/2022 0:13	-0.05
6/19/2022 23:10	12.07	0.03	6/21/2022 0:54	11.25	90.29	6/19/2022 22:57	11.61	-0.01	6/20/2022 0:14	-0.13
6/19/2022 23:11	12.09	0.09	6/21/2022 0:55	11.29	90.39	6/19/2022 22:58	11.61	-0.02	6/20/2022 0:15	-0.04
6/19/2022 23:12	12.09	0.03	6/21/2022 0:56	11.29	90.59	6/19/2022 22:59	11.61	-0.06	6/20/2022 0:16	-0.08
6/19/2022 23:13	12.08	0.04	6/21/2022 0:57	11.30	90.38	6/19/2022 23:00	11.59	-0.06	6/20/2022 0:17	-0.05
6/19/2022 23:14	12.10	0.14	6/21/2022 0:58	11.29	90.20	6/19/2022 23:01	11.61	-0.02	6/20/2022 0:18	-0.07
6/19/2022 23:15	12.08	0.07	6/21/2022 0:59	11.27	90.23	6/19/2022 23:02	11.61	-0.03	6/20/2022 0:19	-0.08
6/19/2022 23:16	12.08	0.02	6/21/2022 1:00	11.28	90.56	6/19/2022 23:03	11.64	-0.03	6/20/2022 0:20	-0.11
6/19/2022 23:17	12.09	0.10	6/21/2022 1:01	11.26	90.51	6/19/2022 23:04	11.62	-0.04	6/20/2022 0:21	-0.13
6/19/2022 23:18	12.10	-0.01	6/21/2022 1:02	11.25	90.45	6/19/2022 23:05	11.62	-0.03	6/20/2022 0:22	-0.12
6/19/2022 23:19	12.09	0.09	6/21/2022 1:03	11.29	90.49	6/19/2022 23:06	11.63	-0.03	6/20/2022 0:23	-0.07
6/19/2022 23:20	12.09	0.14	6/21/2022 1:04	11.27	90.23	6/19/2022 23:07	11.63	0.00	6/20/2022 0:24	-0.07
6/19/2022 23:21	12.07	0.13	6/21/2022 1:05	11.30	90.53	6/19/2022 23:08	11.59	-0.01	6/20/2022 0:25	-0.11
6/19/2022 23:22	12.09	0.02	6/21/2022 1:06	11.29	90.60	6/19/2022 23:09	11.62	-0.05	6/20/2022 0:26	-0.09
6/19/2022 23:23	12.08	0.13	6/21/2022 1:07	11.25	90.50	6/19/2022 23:10	11.63	-0.03	6/20/2022 0:27	-0.06
6/19/2022 23:24	12.07	0.14	6/21/2022 1:08	11.26	90.53	6/19/2022 23:11	11.61	-0.01	6/20/2022 0:28	-0.10
6/19/2022 23:25	12.07	0.12	6/21/2022 1:09	11.29	90.79	6/19/2022 23:12	11.63	-0.02	6/20/2022 0:29	-0.09
6/19/2022 23:26	12.06	0.00	6/21/2022 1:10	11.27	90.65	6/19/2022 23:13	11.62	0.00	6/20/2022 0:30	-0.12
6/19/2022 23:27	12.07	0.08	6/21/2022 1:11	11.28	90.56	6/19/2022 23:14	11.61	-0.05	6/20/2022 0:31	-0.08
6/19/2022 23:28	12.08	0.07	6/21/2022 1:12	11.27	90.67	6/19/2022 23:15	11.61	-0.01	6/20/2022 0:32	-0.12
6/19/2022 23:29	12.10	0.01	6/21/2022 1:13	11.28	90.74	6/19/2022 23:16	11.62	-0.05	6/20/2022 0:33	-0.08
6/19/2022 23:30	12.09	0.13	6/21/2022 1:14	11.27	90.73	6/19/2022 23:17	11.61	-0.06	6/20/2022 0:34	-0.11
6/19/2022 23:31	12.10	0.18	6/21/2022 1:15	11.27	90.73	6/19/2022 23:18	11.61	-0.06	6/20/2022 0:35	-0.11
6/19/2022 23:32	12.09	0.05	6/21/2022 1:16	11.27	90.65	6/19/2022 23:19	11.62	-0.04	6/20/2022 0:36	-0.09
6/19/2022 23:33	12.09	0.09	6/21/2022 1:17	11.24	90.48	6/19/2022 23:20	11.62	-0.03	6/20/2022 0:37	-0.15
6/19/2022 23:34	12.07	0.12	6/21/2022 1:18	11.27	90.64	6/19/2022 23:21	11.62	-0.04	6/20/2022 0:38	-0.07
6/19/2022 23:35	12.10	0.04	6/21/2022 1:19	11.29	90.63	6/19/2022 23:22	11.61	-0.07	6/20/2022 0:39	-0.10
6/19/2022 23:36	12.08	0.10	6/21/2022 1:20	11.28	90.66	6/19/2022 23:23	11.62	-0.01	6/20/2022 0:40	-0.10
6/19/2022 23:37	12.11	0.10	6/21/2022 1:21	11.29	90.86	6/19/2022 23:24	11.60	-0.03	6/20/2022 0:41	-0.11
6/19/2022 23:38	12.07	0.15	6/21/2022 1:22	11.27	90.76	6/19/2022 23:25	11.60	-0.02	6/20/2022 0:42	-0.12
6/19/2022 23:39	12.08	0.05	6/21/2022 1:23	11.27	90.89	6/19/2022 23:26	11.59	-0.03	6/20/2022 0:43	-0.07
6/19/2022 23:40	12.08	0.22	6/21/2022 1:24	11.26	90.76	6/19/2022 23:27	11.61	-0.03	6/20/2022 0:44	-0.14
6/19/2022 23:41	12.10	0.07	6/21/2022 1:25	11.28	90.64	6/19/2022 23:28	11.64	-0.06	6/20/2022 0:45	-0.07
6/19/2022 23:42	12.07	-0.02	6/21/2022 1:26	11.28	90.78	6/19/2022 23:29	11.62	-0.01	6/20/2022 0:46	-0.10
6/19/2022 23:43	12.10	0.04	6/21/2022 1:27	11.28	90.59	6/19/2022 23:30	11.65	-0.03	6/20/2022 0:47	-0.11
6/19/2022 23:44	12.08	0.14	6/21/2022 1:28	11.28	90.97	6/19/2022 23:31	11.63	-0.05	6/20/2022 0:48	-0.10
6/19/2022 23:45	12.07	0.13	6/21/2022 1:29	11.27	90.70	6/19/2022 23:32	11.63	-0.07	6/20/2022 0:49	-0.07
6/19/2022 23:46	12.08	-0.07	6/21/2022 1:30	11.27	90.76	6/19/2022 23:33	11.63	0.00	6/20/2022 0:50	-0.06
6/19/2022 23:47	12.09	-0.01	6/21/2022 1:31	11.26	90.74	6/19/2022 23:34	11.60	-0.06	6/20/2022 0:51	-0.11
6/19/2022 23:48	12.10	0.16	6/21/2022 1:32	11.29	90.81	6/19/2022 23:35	11.63	-0.04	6/20/2022 0:52	-0.11
6/19/2022 23:49	12.10	0.01	6/21/2022 1:33	11.27	90.84	6/19/2022 23:36	11.63	0.00	6/20/2022 0:53	-0.05
6/19/2022 23:50	12.08	0.05	6/21/2022 1:34	11.25	90.70	6/19/2022 23:37	11.62	-0.01	6/20/2022 0:54	-0.13
6/19/2022 23:51	12.06	0.07	6/21/2022 1:35	11.26	91.05	6/19/2022 23:38	11.63	-0.05	6/20/2022 0:55	-0.08
6/19/2022 23:52	12.07	0.15	6/21/2022 1:36	11.28	91.03	6/19/2022 23:39	11.63	0.00	6/20/2022 0:56	-0.08
6/19/2022 23:53	12.08	0.18	6/21/2022 1:37	11.28	90.84	6/19/2022 23:40	11.64	-0.06	6/20/2022 0:57	-0.11
6/19/2022 23:54	12.09	0.11	6/21/2022 1:38	11.30	90.95	6/19/2022 23:41	11.63	-0.06	6/20/2022 0:58	-0.07
6/19/2022 23:55	12.12	0.10	6/21/2022 1:39	11.28	90.80	6/19/2022 23:42	11.59	-0.06	6/20/2022 0:59	-0.05
6/19/2022 23:56	12.09	0.05	6/21/2022 1:40	11.25	91.05	6/19/2022 23:43	11.62	-0.01	6/20/2022 1:00	-0.10
6/19/2022 23:57	12.12	0.11	6/21/2022 1:41	11.28	90.95	6/19/2022 23:44	11.62	-0.06	6/20/2022 1:01	-0.09
6/19/2022 23:58	12.10	0.08	6/21/2022 1:42	11.25	90.99	6/19/2022 23:45	11.61	-0.07	6/20/2022 1:02	-0.05
6/19/2022 23:59	12.09	0.12	6/21/2022 1:43	11.24	90.99	6/19/2022 23:46	11.62	-0.01	6/20/2022 1:03	-0.07
6/20/2022 0:00	12.10	0.10	6/21/2022 1:44	11.29	91.13	6/19/2022 23:47	11.61	0.00	6/20/2022 1:04	-0.09
6/20/2022 0:01	12.10	0.07	6/21/2022 1:45	11.27	91.10	6/19/2022 23:48	11.59	-0.04	6/20/2022 1:05	-0.09
6/20/2022 0:02	12.10	0.10	6/21/2022 1:46	11.26	90.85	6/19/2022 23:49	11.63	-0.01	6/20/2022 1:06	-0.10
6/20/2022 0:03	12.11	0.13	6/21/2022 1:47	11.29	90.98	6/19/2022 23:50	11.63	-0.03	6/20/2022 1:07	-0.10
6/20/2022 0:04	12.08	0.12	6/21/2022 1:48	11.27	90.99	6/19/2022 23:51	11.61	-0.04	6/20/2022 1:08	-0.14
6/20/2022 0:05	12.08	0.07	6/21/2022 1:49	11.28	90.98	6/19/2022 23:52	11.61	0.00	6/20/2022 1:09	-0.06
6/20/2022 0:06	12.07	0.09	6/21/2022 1:50	11.27	91.05	6/19/2022 23:53	11.61	-0.04	6/20/2022 1:10	-0.12

6/20/2022 0:07	12.10	0.07	6/21/2022 1:51	11.27	90.98	6/19/2022 23:54	11.62	0.00	6/20/2022 1:11	-0.07
6/20/2022 0:08	12.08	0.04	6/21/2022 1:52	11.29	91.15	6/19/2022 23:55	11.60	-0.04	6/20/2022 1:12	-0.09
6/20/2022 0:09	12.04	0.02	6/21/2022 1:53	11.28	91.20	6/19/2022 23:56	11.61	-0.04	6/20/2022 1:13	-0.03
6/20/2022 0:10	12.13	0.14	6/21/2022 1:54	11.28	91.13	6/19/2022 23:57	11.60	-0.06	6/20/2022 1:14	-0.03
6/20/2022 0:11	12.09	0.04	6/21/2022 1:55	11.29	91.13	6/19/2022 23:58	11.61	-0.04	6/20/2022 1:15	-0.10
6/20/2022 0:12	12.10	0.04	6/21/2022 1:56	11.29	91.09	6/19/2022 23:59	11.61	0.02	6/20/2022 1:16	-0.09
6/20/2022 0:13	12.08	-0.02	6/21/2022 1:57	11.27	91.08	6/20/2022 0:00	11.62	-0.03	6/20/2022 1:17	-0.05
6/20/2022 0:14	12.12	0.11	6/21/2022 1:58	11.27	91.19	6/20/2022 0:01	11.61	-0.02	6/20/2022 1:18	-0.07
6/20/2022 0:15	12.08	0.07	6/21/2022 1:59	11.28	91.22	6/20/2022 0:02	11.62	-0.04	6/20/2022 1:19	-0.12
6/20/2022 0:16	12.07	0.08	6/21/2022 2:00	11.26	91.36	6/20/2022 0:03	11.59	-0.06	6/20/2022 1:20	-0.10
6/20/2022 0:17	12.10	0.10	6/21/2022 2:01	11.28	91.14	6/20/2022 0:04	11.60	-0.01	6/20/2022 1:21	-0.10
6/20/2022 0:18	12.09	0.09	6/21/2022 2:02	11.27	91.21	6/20/2022 0:05	11.61	-0.02	6/20/2022 1:22	-0.08
6/20/2022 0:19	12.10	0.06	6/21/2022 2:03	11.24	91.18	6/20/2022 0:06	11.64	-0.05	6/20/2022 1:23	-0.09
6/20/2022 0:20	12.11	0.02	6/21/2022 2:04	11.27	91.27	6/20/2022 0:07	11.62	-0.02	6/20/2022 1:24	-0.04
6/20/2022 0:21	12.07	0.12	6/21/2022 2:05	11.26	91.11	6/20/2022 0:08	11.65	-0.03	6/20/2022 1:25	-0.13
6/20/2022 0:22	12.08	0.11	6/21/2022 2:06	11.26	91.37	6/20/2022 0:09	11.62	-0.04	6/20/2022 1:26	-0.07
6/20/2022 0:23	12.08	0.05	6/21/2022 2:07	11.27	91.37	6/20/2022 0:10	11.59	-0.04	6/20/2022 1:27	-0.09
6/20/2022 0:24	12.09	0.07	6/21/2022 2:08	11.27	91.31	6/20/2022 0:11	11.63	-0.07	6/20/2022 1:28	-0.04
6/20/2022 0:25	12.07	0.04	6/21/2022 2:09	11.26	91.45	6/20/2022 0:12	11.62	-0.06	6/20/2022 1:29	-0.06
6/20/2022 0:26	12.09	0.07	6/21/2022 2:10	11.28	91.24	6/20/2022 0:13	11.60	-0.04	6/20/2022 1:30	-0.09
6/20/2022 0:27	12.08	0.10	6/21/2022 2:11	11.26	91.42	6/20/2022 0:14	11.62	-0.07	6/20/2022 1:31	-0.10
6/20/2022 0:28	12.09	0.08	6/21/2022 2:12	11.29	91.51	6/20/2022 0:15	11.60	-0.06	6/20/2022 1:32	-0.10
6/20/2022 0:29	12.06	0.08	6/21/2022 2:13	11.27	91.42	6/20/2022 0:16	11.62	-0.05	6/20/2022 1:33	-0.11
6/20/2022 0:30	12.05	0.13	6/21/2022 2:14	11.29	91.52	6/20/2022 0:17	11.61	-0.04	6/20/2022 1:34	-0.06
6/20/2022 0:31	12.07	0.12	6/21/2022 2:15	11.27	91.37	6/20/2022 0:18	11.61	-0.05	6/20/2022 1:35	-0.10
6/20/2022 0:32	12.09	0.10	6/21/2022 2:16	11.26	91.55	6/20/2022 0:19	11.62	-0.04	6/20/2022 1:36	-0.11
6/20/2022 0:33	12.08	0.10	6/21/2022 2:17	11.23	91.48	6/20/2022 0:20	11.61	-0.04	6/20/2022 1:37	-0.03
6/20/2022 0:34	12.09	0.17	6/21/2022 2:18	11.27	91.46	6/20/2022 0:21	11.60	-0.02	6/20/2022 1:38	-0.07
6/20/2022 0:35	12.10	0.06	6/21/2022 2:19	11.27	91.39	6/20/2022 0:22	11.64	-0.03	6/20/2022 1:39	-0.04
6/20/2022 0:36	12.07	0.13	6/21/2022 2:20	11.28	91.49	6/20/2022 0:23	11.63	-0.07	6/20/2022 1:40	-0.09
6/20/2022 0:37	12.08	0.13	6/21/2022 2:21	11.28	91.40	6/20/2022 0:24	11.63	-0.03	6/20/2022 1:41	-0.07
6/20/2022 0:38	12.09	0.13	6/21/2022 2:22	11.27	91.40	6/20/2022 0:25	11.60	-0.02	6/20/2022 1:42	-0.10
6/20/2022 0:39	12.06	0.14	6/21/2022 2:23	11.28	91.51	6/20/2022 0:26	11.63	-0.02	6/20/2022 1:43	-0.10
6/20/2022 0:40	12.08	0.06	6/21/2022 2:24	11.28	91.40	6/20/2022 0:27	11.62	0.00	6/20/2022 1:44	-0.11
6/20/2022 0:41	12.08	0.14	6/21/2022 2:25	11.27	91.52	6/20/2022 0:28	11.60	-0.01	6/20/2022 1:45	-0.13
6/20/2022 0:42	12.09	0.10	6/21/2022 2:26	11.29	91.45	6/20/2022 0:29	11.62	-0.03	6/20/2022 1:46	-0.05
6/20/2022 0:43	12.09	0.10	6/21/2022 2:27	11.27	91.67	6/20/2022 0:30	11.62	-0.05	6/20/2022 1:47	-0.12
6/20/2022 0:44	12.08	-0.02	6/21/2022 2:28	11.26	91.54	6/20/2022 0:31	11.64	-0.03	6/20/2022 1:48	-0.09
6/20/2022 0:45	12.11	0.14	6/21/2022 2:29	11.26	91.60	6/20/2022 0:32	11.60	-0.04	6/20/2022 1:49	-0.07
6/20/2022 0:46	12.06	0.14	6/21/2022 2:30	11.28	91.53	6/20/2022 0:33	11.63	-0.07	6/20/2022 1:50	-0.04
6/20/2022 0:47	12.10	0.14	6/21/2022 2:31	11.27	91.54	6/20/2022 0:34	11.61	-0.05	6/20/2022 1:51	-0.13
6/20/2022 0:48	12.08	0.13	6/21/2022 2:32	11.26	91.69	6/20/2022 0:35	11.63	-0.01	6/20/2022 1:52	-0.08
6/20/2022 0:49	12.08	-0.01	6/21/2022 2:33	11.26	91.74	6/20/2022 0:36	11.62	-0.03	6/20/2022 1:53	-0.11
6/20/2022 0:50	12.09	0.08	6/21/2022 2:34	11.29	91.73	6/20/2022 0:37	11.61	-0.05	6/20/2022 1:54	-0.13
6/20/2022 0:51	12.08	0.07	6/21/2022 2:35	11.29	91.69	6/20/2022 0:38	11.59	-0.02	6/20/2022 1:55	-0.13
6/20/2022 0:52	12.09	0.09	6/21/2022 2:36	11.27	91.62	6/20/2022 0:39	11.63	-0.04	6/20/2022 1:56	-0.15
6/20/2022 0:53	12.10	0.02	6/21/2022 2:37	11.26	91.70	6/20/2022 0:40	11.64	-0.04	6/20/2022 1:57	-0.09
6/20/2022 0:54	12.09	0.09	6/21/2022 2:38	11.26	91.66	6/20/2022 0:41	11.61	0.00	6/20/2022 1:58	-0.06
6/20/2022 0:55	12.12	0.17	6/21/2022 2:39	11.27	91.73	6/20/2022 0:42	11.60	-0.03	6/20/2022 1:59	-0.07
6/20/2022 0:56	12.08	0.04	6/21/2022 2:40	11.28	91.69	6/20/2022 0:43	11.60	-0.02	6/20/2022 2:00	-0.13
6/20/2022 0:57	12.10	0.14	6/21/2022 2:41	11.27	91.67	6/20/2022 0:44	11.62	-0.04	6/20/2022 2:01	-0.12
6/20/2022 0:58	12.08	0.13	6/21/2022 2:42	11.28	91.69	6/20/2022 0:45	11.60	-0.03	6/20/2022 2:02	-0.02
6/20/2022 0:59	12.07	0.11	6/21/2022 2:43	11.29	91.85	6/20/2022 0:46	11.64	-0.06	6/20/2022 2:03	-0.09
6/20/2022 1:00	12.08	0.08	6/21/2022 2:44	11.29	91.67	6/20/2022 0:47	11.61	-0.05	6/20/2022 2:04	-0.06
6/20/2022 1:01	12.07	0.08	6/21/2022 2:45	11.29	91.82	6/20/2022 0:48	11.61	-0.05	6/20/2022 2:05	-0.11
6/20/2022 1:02	12.07	0.06	6/21/2022 2:46	11.25	91.79	6/20/2022 0:49	11.61	-0.05	6/20/2022 2:06	-0.08
6/20/2022 1:03	12.10	0.14	6/21/2022 2:47	11.27	91.64	6/20/2022 0:50	11.62	-0.06	6/20/2022 2:07	-0.10
6/20/2022 1:04	12.06	0.07	6/21/2022 2:48	11.24	91.75	6/20/2022 0:51	11.60	-0.03	6/20/2022 2:08	-0.10
6/20/2022 1:05	12.11	0.13	6/21/2022 2:49	11.27	91.95	6/20/2022 0:52	11.60	-0.07	6/20/2022 2:09	-0.11
6/20/2022 1:06	12.07	0.13	6/21/2022 2:50	11.26	91.96	6/20/2022 0:53	11.63	0.02	6/20/2022 2:10	-0.02
6/20/2022 1:07	12.08	0.09	6/21/2022 2:51	11.29	91.91	6/20/2022 0:54	11.63	-0.04	6/20/2022 2:11	-0.08
6/20/2022 1:08	12.11	0.11	6/21/2022 2:52	11.27	91.78	6/20/2022 0:55	11.60	-0.04	6/20/2022 2:12	-0.09
6/20/2022 1:09	12.09	0.10	6/21/2022 2:53	11.28	92.21	6/20/2022 0:56	11.61	-0.08	6/20/2022 2:13	-0.08
6/20/2022 1:10	12.09	0.12	6/21/2022 2:54	11.25	91.87	6/20/2022 0:57	11.65	-0.04	6/20/2022 2:14	-0.12
6/20/2022 1:11	12.10	0.06	6/21/2022 2:55	11.27	92.08	6/20/2022 0:58	11.63	-0.05	6/20/2022 2:15	-0.08
6/20/2022 1:12	12.06	0.10	6/21/2022 2:56	11.27	92.02	6/20/2022 0:59	11.60	-0.05	6/20/2022 2:16	-0.13
6/20/2022 1:13	12.11	0.12	6/21/2022 2:57	11.25	92.00	6/20/2022 1:00	11.64	-0.06	6/20/2022 2:17	-0.09
6/20/2022 1:14	12.11	0.12	6/21/2022 2:58	11.27	91.90	6/20/2022 1:01	11.61	-0.06	6/20/2022 2:18	-0.09
6/20/2022 1:15	12.08	0.12	6/21/2022 2:59	11.27	91.89	6/20/2022 1:02	11.61	-0.02	6/20/2022 2:19	-0.05
6/20/2022 1:16	12.11	0.05	6/21/2022 3:00	11.27	91.85	6/20/2022 1:03	11.61	0.00	6/20/2022 2:20	-0.08
6/20/2022 1:17	12.08	0.12	6/21/2022 3:01	11.27	91.85	6/20/2022 1:04	11.62	-0.01	6/20/2022 2:21	-0.08
6/20/2022 1:18	12.08	0.04	6/21/2022 3:02	11.26	92.00	6/20/2022 1:05	11.63	-0.07	6/20/2022 2:22	-0.09
6/20/2022 1:19	12.09	0.04	6/21/2022 3:03	11.26	91.94	6/20/2022 1:06	11.61	-0.02	6/20/2022 2:23	-0.10
6/20/2022 1:20	12.09	0.07	6/21/2022 3:04	11.26	92.07	6/20/2022 1:07	11.61	-0.06	6/20/2022 2:24	-0.10
6/20/2022 1:21	12.08	0.12	6/21/2022 3:05	11.27	92.07	6/20/2022 1:08	11.62	-0.05	6/20/2022 2:25	-0.10
6/20/2022 1:22	12.08	0.12	6/21/2022 3:06	11.27	91.96	6/20/2022 1:09	11.61	-0.03	6/20/2022 2:26	-0.10
6/20/2022 1:23	12.09	0.09	6/21/2022 3:07	11.28	92.14	6/20/2022 1:10	11.61	-0.04	6/20/2022 2:27	-0.10
6/20/2022 1:24	12.08	0.02	6/21/2022 3:08	11.30	91.93	6/20/2022 1:11	11.64	-0.05	6/20/2022 2:28	-0.07
6/20/2022 1:25	12.08	0.08	6/21/2022 3:09	11.26	91.94	6/20/2022 1:12	11.62	-0.05	6/20/2022 2:29	-0.07
6/20/2022 1:26	12.09	0.06	6/21/2022 3:10	11.28	92.06	6/20/2022 1:13	11.63	-0.03	6/20/2022 2:30	-0.14
6/20/2022 1:27	12.08	0.12	6/21/2022 3:11	11.27	91.98	6/20/2022 1:14	11.64	-0.07	6/20/2022 2:31	-0.07
6/20/2022 1:28	12.11	0.08	6/21/2022 3:12	11.28	92.08	6/20/2022 1:15	11.60	-0.05	6/20/2022 2:32	-0.12
6/20/2022 1:29	12.08	0.03	6/21/2022 3:13	11.27	92.13	6/20/2022 1:16	11.64	-0.04	6/20/2022 2:33	-0.05
6/20/2022 1:30	12.10	0.12	6/21/2022 3:14	11.28	92.12	6/20/2022 1:17	11.60	-0.05	6/20/2022 2:34	-0.06
6/20/2022 1:31	12.07	0.08	6/21/2022 3:15	11.26	92.19	6/20/2022 1:18	11.60	-0.05	6/20/2022 2:35	-0.14
6/20/2022 1:32	12.10	0.10	6/21/2022 3:16	11.28	92.08	6/20/2022 1:19	11.62	-0.08	6/20/2022 2:36	-0.09
6/20/2022 1:33	12.08	0.02	6/21/2022 3:17	11.28	92.40	6/20/2022 1:20	11.62	0.01	6/20/2022 2:37	-0.05
6/20/2022 1:34	12.05	0.07	6/21/2022 3:18	11.25	92.29	6/20/2022 1:21	11.63	-0.06	6/20/2022 2:38	-0.10

6/20/2022 1:35	12.09	0.07	6/21/2022 3:19	11.26	92.01	6/20/2022 1:22	11.62	-0.02	6/20/2022 2:39	-0.08
6/20/2022 1:36	12.07	0.07	6/21/2022 3:20	11.26	92.14	6/20/2022 1:23	11.64	-0.03	6/20/2022 2:40	-0.08
6/20/2022 1:37	12.09	0.16	6/21/2022 3:21	11.27	92.24	6/20/2022 1:24	11.62	-0.01	6/20/2022 2:41	-0.12
6/20/2022 1:38	12.08	0.04	6/21/2022 3:22	11.27	92.04	6/20/2022 1:25	11.62	-0.01	6/20/2022 2:42	-0.12
6/20/2022 1:39	12.08	0.07	6/21/2022 3:23	11.27	92.43	6/20/2022 1:26	11.62	-0.04	6/20/2022 2:43	-0.13
6/20/2022 1:40	12.09	0.09	6/21/2022 3:24	11.27	92.42	6/20/2022 1:27	11.61	-0.02	6/20/2022 2:44	-0.10
6/20/2022 1:41	12.08	0.05	6/21/2022 3:25	11.27	92.16	6/20/2022 1:28	11.58	-0.04	6/20/2022 2:45	-0.04
6/20/2022 1:42	12.10	0.18	6/21/2022 3:26	11.28	92.04	6/20/2022 1:29	11.61	-0.04	6/20/2022 2:46	-0.12
6/20/2022 1:43	12.10	0.04	6/21/2022 3:27	11.25	92.08	6/20/2022 1:30	11.60	-0.04	6/20/2022 2:47	-0.07
6/20/2022 1:44	12.08	0.12	6/21/2022 3:28	11.28	92.23	6/20/2022 1:31	11.63	0.00	6/20/2022 2:48	-0.10
6/20/2022 1:45	12.09	0.06	6/21/2022 3:29	11.29	92.45	6/20/2022 1:32	11.61	-0.01	6/20/2022 2:49	-0.08
6/20/2022 1:46	12.06	0.09	6/21/2022 3:30	11.26	92.21	6/20/2022 1:33	11.64	-0.05	6/20/2022 2:50	-0.09
6/20/2022 1:47	12.07	0.01	6/21/2022 3:31	11.26	92.27	6/20/2022 1:34	11.63	-0.05	6/20/2022 2:51	-0.12
6/20/2022 1:48	12.08	0.11	6/21/2022 3:32	11.24	92.37	6/20/2022 1:35	11.60	-0.04	6/20/2022 2:52	-0.06
6/20/2022 1:49	12.09	0.06	6/21/2022 3:33	11.26	92.40	6/20/2022 1:36	11.63	-0.05	6/20/2022 2:53	-0.08
6/20/2022 1:50	12.08	-0.04	6/21/2022 3:34	11.26	92.42	6/20/2022 1:37	11.60	-0.08	6/20/2022 2:54	-0.08
6/20/2022 1:51	12.09	0.09	6/21/2022 3:35	11.26	92.36	6/20/2022 1:38	11.62	-0.05	6/20/2022 2:55	-0.16
6/20/2022 1:52	12.08	0.11	6/21/2022 3:36	11.28	92.49	6/20/2022 1:39	11.60	0.00	6/20/2022 2:56	-0.09
6/20/2022 1:53	12.09	0.09	6/21/2022 3:37	11.27	92.53	6/20/2022 1:40	11.62	-0.02	6/20/2022 2:57	-0.08
6/20/2022 1:54	12.09	0.07	6/21/2022 3:38	11.27	92.45	6/20/2022 1:41	11.63	-0.03	6/20/2022 2:58	-0.12
6/20/2022 1:55	12.09	0.14	6/21/2022 3:39	11.26	92.45	6/20/2022 1:42	11.59	-0.04	6/20/2022 2:59	-0.07
6/20/2022 1:56	12.09	0.12	6/21/2022 3:40	11.27	92.47	6/20/2022 1:43	11.62	-0.08	6/20/2022 3:00	-0.05
6/20/2022 1:57	12.10	0.06	6/21/2022 3:41	11.29	92.48	6/20/2022 1:44	11.61	-0.06	6/20/2022 3:01	-0.06
6/20/2022 1:58	12.11	0.08	6/21/2022 3:42	11.28	92.48	6/20/2022 1:45	11.63	-0.07	6/20/2022 3:02	-0.12
6/20/2022 1:59	12.09	0.10	6/21/2022 3:43	11.29	92.54	6/20/2022 1:46	11.63	-0.03	6/20/2022 3:03	-0.04
6/20/2022 2:00	12.09	0.13	6/21/2022 3:44	11.27	92.54	6/20/2022 1:47	11.64	-0.01	6/20/2022 3:04	-0.09
6/20/2022 2:01	12.08	0.05	6/21/2022 3:45	11.28	92.37	6/20/2022 1:48	11.61	-0.04	6/20/2022 3:05	-0.05
6/20/2022 2:02	12.09	0.06	6/21/2022 3:46	11.29	92.44	6/20/2022 1:49	11.60	-0.03	6/20/2022 3:06	-0.10
6/20/2022 2:03	12.07	0.18	6/21/2022 3:47	11.27	92.56	6/20/2022 1:50	11.62	-0.05	6/20/2022 3:07	-0.08
6/20/2022 2:04	12.08	0.18	6/21/2022 3:48	11.30	92.72	6/20/2022 1:51	11.61	0.00	6/20/2022 3:08	-0.11
6/20/2022 2:05	12.09	0.11	6/21/2022 3:49	11.28	92.59	6/20/2022 1:52	11.62	0.00	6/20/2022 3:09	-0.10
6/20/2022 2:06	12.11	0.06	6/21/2022 3:50	11.25	92.55	6/20/2022 1:53	11.61	-0.01	6/20/2022 3:10	-0.10
6/20/2022 2:07	12.13	0.12	6/21/2022 3:51	11.28	92.71	6/20/2022 1:54	11.60	0.00	6/20/2022 3:11	-0.06
6/20/2022 2:08	12.08	0.04	6/21/2022 3:52	11.28	92.55	6/20/2022 1:55	11.63	-0.04	6/20/2022 3:12	-0.03
6/20/2022 2:09	12.10	0.09	6/21/2022 3:53	11.27	92.74	6/20/2022 1:56	11.61	0.00	6/20/2022 3:13	-0.05
6/20/2022 2:10	12.09	0.08	6/21/2022 3:54	11.26	92.78	6/20/2022 1:57	11.62	-0.02	6/20/2022 3:14	-0.10
6/20/2022 2:11	12.10	-0.02	6/21/2022 3:55	11.26	92.83	6/20/2022 1:58	11.61	-0.04	6/20/2022 3:15	-0.11
6/20/2022 2:12	12.08	0.15	6/21/2022 3:56	11.26	92.61	6/20/2022 1:59	11.62	-0.04	6/20/2022 3:16	-0.09
6/20/2022 2:13	12.09	0.10	6/21/2022 3:57	11.29	92.57	6/20/2022 2:00	11.63	-0.06	6/20/2022 3:17	-0.06
6/20/2022 2:14	12.08	0.08	6/21/2022 3:58	11.26	92.65	6/20/2022 2:01	11.61	-0.09	6/20/2022 3:18	-0.07
6/20/2022 2:15	12.08	0.07	6/21/2022 3:59	11.30	92.62	6/20/2022 2:02	11.61	-0.04	6/20/2022 3:19	-0.06
6/20/2022 2:16	12.08	0.09	6/21/2022 4:00	11.26	92.66	6/20/2022 2:03	11.63	-0.04	6/20/2022 3:20	-0.09
6/20/2022 2:17	12.12	0.13	6/21/2022 4:01	11.28	92.87	6/20/2022 2:04	11.62	-0.05	6/20/2022 3:21	-0.05
6/20/2022 2:18	12.09	0.08	6/21/2022 4:02	11.31	92.74	6/20/2022 2:05	11.63	-0.05	6/20/2022 3:22	-0.06
6/20/2022 2:19	12.09	0.08	6/21/2022 4:03	11.26	92.81	6/20/2022 2:06	11.62	-0.04	6/20/2022 3:23	-0.04
6/20/2022 2:20	12.11	0.02	6/21/2022 4:04	11.26	92.85	6/20/2022 2:07	11.63	-0.03	6/20/2022 3:24	-0.09
6/20/2022 2:21	12.09	0.12	6/21/2022 4:05	11.26	92.65	6/20/2022 2:08	11.61	-0.03	6/20/2022 3:25	-0.03
6/20/2022 2:22	12.07	-0.02	6/21/2022 4:06	11.29	92.75	6/20/2022 2:09	11.62	-0.01	6/20/2022 3:26	-0.07
6/20/2022 2:23	12.11	0.15	6/21/2022 4:07	11.28	92.76	6/20/2022 2:10	11.62	-0.08	6/20/2022 3:27	-0.08
6/20/2022 2:24	12.08	0.11	6/21/2022 4:08	11.27	92.93	6/20/2022 2:11	11.64	-0.03	6/20/2022 3:28	-0.05
6/20/2022 2:25	12.09	0.16	6/21/2022 4:09	11.25	92.90	6/20/2022 2:12	11.62	-0.04	6/20/2022 3:29	-0.06
6/20/2022 2:26	12.08	0.03	6/21/2022 4:10	11.26	92.81	6/20/2022 2:13	11.64	-0.01	6/20/2022 3:30	-0.07
6/20/2022 2:27	12.09	0.13	6/21/2022 4:11	11.26	92.71	6/20/2022 2:14	11.62	-0.04	6/20/2022 3:31	-0.04
6/20/2022 2:28	12.12	0.10	6/21/2022 4:12	11.28	92.73	6/20/2022 2:15	11.60	-0.04	6/20/2022 3:32	-0.07
6/20/2022 2:29	12.10	0.02	6/21/2022 4:13	11.24	92.88	6/20/2022 2:16	11.63	0.00	6/20/2022 3:33	-0.09
6/20/2022 2:30	12.08	0.08	6/21/2022 4:14	11.26	92.91	6/20/2022 2:17	11.62	-0.05	6/20/2022 3:34	-0.09
6/20/2022 2:31	12.06	0.03	6/21/2022 4:15	11.26	93.12	6/20/2022 2:18	11.61	-0.01	6/20/2022 3:35	-0.04
6/20/2022 2:32	12.06	0.09	6/21/2022 4:16	11.26	92.90	6/20/2022 2:19	11.62	-0.04	6/20/2022 3:36	-0.05
6/20/2022 2:33	12.09	0.08	6/21/2022 4:17	11.28	92.96	6/20/2022 2:20	11.62	-0.06	6/20/2022 3:37	-0.07
6/20/2022 2:34	12.06	0.12	6/21/2022 4:18	11.25	92.93	6/20/2022 2:21	11.61	-0.01	6/20/2022 3:38	-0.07
6/20/2022 2:35	12.09	0.12	6/21/2022 4:19	11.25	92.82	6/20/2022 2:22	11.59	-0.03	6/20/2022 3:39	-0.07
6/20/2022 2:36	12.05	0.24	6/21/2022 4:20	11.28	92.94	6/20/2022 2:23	11.61	-0.03	6/20/2022 3:40	-0.10
6/20/2022 2:37	12.09	0.12	6/21/2022 4:21	11.26	92.85	6/20/2022 2:24	11.60	-0.02	6/20/2022 3:41	-0.09
6/20/2022 2:38	12.06	0.06	6/21/2022 4:22	11.29	93.20	6/20/2022 2:25	11.61	-0.03	6/20/2022 3:42	-0.13
6/20/2022 2:39	12.08	0.13	6/21/2022 4:23	11.28	93.05	6/20/2022 2:26	11.61	-0.03	6/20/2022 3:43	-0.12
6/20/2022 2:40	12.07	0.03	6/21/2022 4:24	11.26	93.03	6/20/2022 2:27	11.62	-0.05	6/20/2022 3:44	-0.05
6/20/2022 2:41	12.08	0.08	6/21/2022 4:25	11.25	93.14	6/20/2022 2:28	11.64	-0.04	6/20/2022 3:45	-0.10
6/20/2022 2:42	12.12	0.08	6/21/2022 4:26	11.27	93.09	6/20/2022 2:29	11.64	-0.04	6/20/2022 3:46	-0.08
6/20/2022 2:43	12.10	0.16	6/21/2022 4:27	11.27	93.04	6/20/2022 2:30	11.62	-0.08	6/20/2022 3:47	-0.08
6/20/2022 2:44	12.10	0.12	6/21/2022 4:28	11.28	92.91	6/20/2022 2:31	11.60	-0.05	6/20/2022 3:48	-0.09
6/20/2022 2:45	12.10	0.05	6/21/2022 4:29	11.26	93.32	6/20/2022 2:32	11.61	-0.05	6/20/2022 3:49	-0.05
6/20/2022 2:46	12.10	0.15	6/21/2022 4:30	11.25	93.19	6/20/2022 2:33	11.63	-0.04	6/20/2022 3:50	-0.07
6/20/2022 2:47	12.10	0.13	6/21/2022 4:31	11.26	93.13	6/20/2022 2:34	11.61	0.01	6/20/2022 3:51	-0.03
6/20/2022 2:48	12.10	0.11	6/21/2022 4:32	11.27	93.12	6/20/2022 2:35	11.62	-0.07	6/20/2022 3:52	-0.08
6/20/2022 2:49	12.10	0.03	6/21/2022 4:33	11.27	93.14	6/20/2022 2:36	11.62	-0.02	6/20/2022 3:53	-0.08
6/20/2022 2:50	12.09	0.17	6/21/2022 4:34	11.26	93.15	6/20/2022 2:37	11.60	-0.04	6/20/2022 3:54	-0.14
6/20/2022 2:51	12.07	0.16	6/21/2022 4:35	11.26	93.22	6/20/2022 2:38	11.61	-0.05	6/20/2022 3:55	-0.06
6/20/2022 2:52	12.08	0.09	6/21/2022 4:36	11.29	93.03	6/20/2022 2:39	11.60	-0.04	6/20/2022 3:56	-0.07
6/20/2022 2:53	12.09	0.09	6/21/2022 4:37	11.28	93.29	6/20/2022 2:40	11.62	-0.04	6/20/2022 3:57	-0.04
6/20/2022 2:54	12.10	0.14	6/21/2022 4:38	11.27	93.15	6/20/2022 2:41	11.60	-0.01	6/20/2022 3:58	-0.10
6/20/2022 2:55	12.08	0.10	6/21/2022 4:39	11.27	93.16	6/20/2022 2:42	11.61	-0.05	6/20/2022 3:59	-0.06
6/20/2022 2:56	12.11	0.10	6/21/2022 4:40	11.26	93.23	6/20/2022 2:43	11.63	-0.02	6/20/2022 4:00	-0.05
6/20/2022 2:57	12.08	0.07	6/21/2022 4:41	11.27	93.12	6/20/2022 2:44	11.60	-0.03	6/20/2022 4:01	-0.10
6/20/2022 2:58	12.07	0.12	6/21/2022 4:42	11.28	93.33	6/20/2022 2:45	11.62	-0.04	6/20/2022 4:02	-0.08
6/20/2022 2:59	12.07	0.18	6/21/2022 4:43	11.26	93.23	6/20/2022 2:46	11.63	-0.04	6/20/2022 4:03	-0.06
6/20/2022 3:00	12.08	0.05	6/21/2022 4:44	11.27	93.39	6/20/2022 2:47	11.61	-0.03	6/20/2022 4:04	-0.10
6/20/2022 3:01	12.09	0.08	6/21/2022 4:45	11.28	93.28	6/20/2022 2:48	11.61	-0.01	6/20/2022 4:05	-0.08
6/20/2022 3:02	12.09	0.02	6/21/2022 4:46	11.27	93.34	6/20/2022 2:49	11.62	-0.06	6/20/2022 4:06	-0.09

6/20/2022 3:03	12.08	0.14	6/21/2022 4:47	11.25	93.29	6/20/2022 2:50	11.60	-0.05	6/20/2022 4:07	-0.05
6/20/2022 3:04	12.06	0.13	6/21/2022 4:48	11.26	93.37	6/20/2022 2:51	11.61	-0.05	6/20/2022 4:08	-0.11
6/20/2022 3:05	12.09	0.15	6/21/2022 4:49	11.27	93.47	6/20/2022 2:52	11.62	-0.04	6/20/2022 4:09	-0.02
6/20/2022 3:06	12.08	0.11	6/21/2022 4:50	11.26	93.23	6/20/2022 2:53	11.63	-0.06	6/20/2022 4:10	-0.09
6/20/2022 3:07	12.08	0.02	6/21/2022 4:51	11.27	93.18	6/20/2022 2:54	11.61	-0.06	6/20/2022 4:11	-0.09
6/20/2022 3:08	12.09	0.12	6/21/2022 4:52	11.28	93.37	6/20/2022 2:55	11.63	-0.06	6/20/2022 4:12	-0.06
6/20/2022 3:09	12.09	0.14	6/21/2022 4:53	11.25	93.26	6/20/2022 2:56	11.61	-0.06	6/20/2022 4:13	-0.07
6/20/2022 3:10	12.08	0.17	6/21/2022 4:54	11.25	93.25	6/20/2022 2:57	11.62	0.00	6/20/2022 4:14	-0.13
6/20/2022 3:11	12.09	0.19	6/21/2022 4:55	11.28	93.33	6/20/2022 2:58	11.64	-0.01	6/20/2022 4:15	-0.06
6/20/2022 3:12	12.07	0.13	6/21/2022 4:56	11.27	93.28	6/20/2022 2:59	11.62	-0.02	6/20/2022 4:16	-0.09
6/20/2022 3:13	12.12	0.08	6/21/2022 4:57	11.27	93.43	6/20/2022 3:00	11.62	-0.02	6/20/2022 4:17	-0.06
6/20/2022 3:14	12.10	0.11	6/21/2022 4:58	11.26	93.44	6/20/2022 3:01	11.59	-0.02	6/20/2022 4:18	-0.05
6/20/2022 3:15	12.08	0.08	6/21/2022 4:59	11.28	93.55	6/20/2022 3:02	11.61	-0.03	6/20/2022 4:19	-0.04
6/20/2022 3:16	12.07	0.08	6/21/2022 5:00	11.28	93.43	6/20/2022 3:03	11.62	-0.07	6/20/2022 4:20	-0.08
6/20/2022 3:17	12.12	0.11	6/21/2022 5:01	11.29	93.36	6/20/2022 3:04	11.61	-0.02	6/20/2022 4:21	-0.09
6/20/2022 3:18	12.06	0.12	6/21/2022 5:02	11.29	93.42	6/20/2022 3:05	11.64	-0.02	6/20/2022 4:22	-0.11
6/20/2022 3:19	12.09	0.10	6/21/2022 5:03	11.26	93.35	6/20/2022 3:06	11.60	-0.04	6/20/2022 4:23	-0.08
6/20/2022 3:20	12.09	0.00	6/21/2022 5:04	11.29	93.48	6/20/2022 3:07	11.64	-0.02	6/20/2022 4:24	-0.08
6/20/2022 3:21	12.07	0.12	6/21/2022 5:05	11.25	93.45	6/20/2022 3:08	11.61	-0.04	6/20/2022 4:25	-0.10
6/20/2022 3:22	12.09	0.14	6/21/2022 5:06	11.27	93.61	6/20/2022 3:09	11.61	-0.04	6/20/2022 4:26	-0.08
6/20/2022 3:23	12.07	0.10	6/21/2022 5:07	11.27	93.49	6/20/2022 3:10	11.60	-0.05	6/20/2022 4:27	-0.10
6/20/2022 3:24	12.10	0.08	6/21/2022 5:08	11.27	93.49	6/20/2022 3:11	11.61	-0.06	6/20/2022 4:28	-0.10
6/20/2022 3:25	12.09	0.12	6/21/2022 5:09	11.28	93.60	6/20/2022 3:12	11.63	-0.07	6/20/2022 4:29	-0.13
6/20/2022 3:26	12.08	0.08	6/21/2022 5:10	11.27	93.50	6/20/2022 3:13	11.60	-0.02	6/20/2022 4:30	-0.07
6/20/2022 3:27	12.05	0.08	6/21/2022 5:11	11.28	93.48	6/20/2022 3:14	11.62	-0.05	6/20/2022 4:31	-0.12
6/20/2022 3:28	12.10	0.04	6/21/2022 5:12	11.27	93.56	6/20/2022 3:15	11.62	-0.05	6/20/2022 4:32	-0.10
6/20/2022 3:29	12.07	0.07	6/21/2022 5:13	11.25	93.50	6/20/2022 3:16	11.61	0.01	6/20/2022 4:33	-0.10
6/20/2022 3:30	12.07	0.05	6/21/2022 5:14	11.29	93.60	6/20/2022 3:17	11.63	-0.03	6/20/2022 4:34	-0.10
6/20/2022 3:31	12.08	0.17	6/21/2022 5:15	11.27	93.56	6/20/2022 3:18	11.63	-0.04	6/20/2022 4:35	-0.07
6/20/2022 3:32	12.08	0.08	6/21/2022 5:16	11.26	93.58	6/20/2022 3:19	11.61	-0.01	6/20/2022 4:36	-0.08
6/20/2022 3:33	12.09	0.08	6/21/2022 5:17	11.25	93.59	6/20/2022 3:20	11.62	-0.03	6/20/2022 4:37	-0.06
6/20/2022 3:34	12.09	0.12	6/21/2022 5:18	11.26	93.58	6/20/2022 3:21	11.62	-0.03	6/20/2022 4:38	-0.07
6/20/2022 3:35	12.08	0.11	6/21/2022 5:19	11.27	93.72	6/20/2022 3:22	11.60	-0.01	6/20/2022 4:39	-0.10
6/20/2022 3:36	12.08	0.06	6/21/2022 5:20	11.27	93.75	6/20/2022 3:23	11.65	-0.03	6/20/2022 4:40	-0.14
6/20/2022 3:37	12.07	0.13	6/21/2022 5:21	11.26	93.69	6/20/2022 3:24	11.61	-0.01	6/20/2022 4:41	-0.09
6/20/2022 3:38	12.09	0.09	6/21/2022 5:22	11.28	93.82	6/20/2022 3:25	11.62	-0.02	6/20/2022 4:42	-0.10
6/20/2022 3:39	12.08	0.06	6/21/2022 5:23	11.27	93.94	6/20/2022 3:26	11.61	-0.02	6/20/2022 4:43	-0.08
6/20/2022 3:40	12.08	0.07	6/21/2022 5:24	11.30	93.59	6/20/2022 3:27	11.63	-0.05	6/20/2022 4:44	-0.08
6/20/2022 3:41	12.10	0.08	6/21/2022 5:25	11.29	93.66	6/20/2022 3:28	11.60	-0.04	6/20/2022 4:45	-0.03
6/20/2022 3:42	12.07	0.14	6/21/2022 5:26	11.26	93.88	6/20/2022 3:29	11.60	0.01	6/20/2022 4:46	-0.05
6/20/2022 3:43	12.10	0.11	6/21/2022 5:27	11.25	93.78	6/20/2022 3:30	11.64	-0.05	6/20/2022 4:47	-0.09
6/20/2022 3:44	12.08	0.09	6/21/2022 5:28	11.24	93.79	6/20/2022 3:31	11.61	-0.01	6/20/2022 4:48	-0.08
6/20/2022 3:45	12.06	0.16	6/21/2022 5:29	11.26	93.75	6/20/2022 3:32	11.63	-0.01	6/20/2022 4:49	-0.02
6/20/2022 3:46	12.08	0.14	6/21/2022 5:30	11.26	93.88	6/20/2022 3:33	11.61	-0.05	6/20/2022 4:50	-0.06
6/20/2022 3:47	12.07	0.10	6/21/2022 5:31	11.28	93.80	6/20/2022 3:34	11.62	-0.04	6/20/2022 4:51	-0.08
6/20/2022 3:48	12.10	0.13	6/21/2022 5:32	11.27	93.80	6/20/2022 3:35	11.61	-0.06	6/20/2022 4:52	-0.08
6/20/2022 3:49	12.07	0.03	6/21/2022 5:33	11.25	93.94	6/20/2022 3:36	11.63	-0.03	6/20/2022 4:53	-0.10
6/20/2022 3:50	12.08	0.06	6/21/2022 5:34	11.28	93.75	6/20/2022 3:37	11.61	-0.06	6/20/2022 4:54	-0.07
6/20/2022 3:51	12.09	0.11	6/21/2022 5:35	11.27	93.89	6/20/2022 3:38	11.63	-0.03	6/20/2022 4:55	-0.11
6/20/2022 3:52	12.07	0.03	6/21/2022 5:36	11.25	93.92	6/20/2022 3:39	11.61	-0.04	6/20/2022 4:56	-0.06
6/20/2022 3:53	12.07	0.09	6/21/2022 5:37	11.28	93.92	6/20/2022 3:40	11.63	-0.07	6/20/2022 4:57	-0.06
6/20/2022 3:54	12.08	0.10	6/21/2022 5:38	11.28	93.95	6/20/2022 3:41	11.60	-0.04	6/20/2022 4:58	-0.05
6/20/2022 3:55	12.12	0.12	6/21/2022 5:39	11.25	93.72	6/20/2022 3:42	11.62	-0.03	6/20/2022 4:59	-0.12
6/20/2022 3:56	12.06	0.03	6/21/2022 5:40	11.26	93.90	6/20/2022 3:43	11.62	-0.05	6/20/2022 5:00	-0.06
6/20/2022 3:57	12.07	0.08	6/21/2022 5:41	11.25	93.92	6/20/2022 3:44	11.63	-0.02	6/20/2022 5:01	-0.12
6/20/2022 3:58	12.08	0.08	6/21/2022 5:42	11.28	93.96	6/20/2022 3:45	11.61	-0.04	6/20/2022 5:02	-0.05
6/20/2022 3:59	12.08	0.08	6/21/2022 5:43	11.26	93.77	6/20/2022 3:46	11.61	-0.05	6/20/2022 5:03	-0.04
6/20/2022 4:00	12.09	0.03	6/21/2022 5:44	11.26	93.77	6/20/2022 3:47	11.60	-0.05	6/20/2022 5:04	-0.04
6/20/2022 4:01	12.10	0.05	6/21/2022 5:45	11.24	94.10	6/20/2022 3:48	11.64	-0.03	6/20/2022 5:05	-0.08
6/20/2022 4:02	12.08	0.11	6/21/2022 5:46	11.26	94.02	6/20/2022 3:49	11.62	-0.08	6/20/2022 5:06	-0.05
6/20/2022 4:03	12.09	0.12	6/21/2022 5:47	11.25	94.01	6/20/2022 3:50	11.61	0.01	6/20/2022 5:07	-0.10
6/20/2022 4:04	12.10	0.09	6/21/2022 5:48	11.28	93.98	6/20/2022 3:51	11.62	-0.03	6/20/2022 5:08	-0.10
6/20/2022 4:05	12.05	0.04	6/21/2022 5:49	11.26	94.02	6/20/2022 3:52	11.62	-0.06	6/20/2022 5:09	-0.14
6/20/2022 4:06	12.09	0.07	6/21/2022 5:50	11.27	94.20	6/20/2022 3:53	11.61	-0.03	6/20/2022 5:10	-0.09
6/20/2022 4:07	12.05	0.11	6/21/2022 5:51	11.28	93.81	6/20/2022 3:54	11.61	-0.02	6/20/2022 5:11	-0.09
6/20/2022 4:08	12.08	0.12	6/21/2022 5:52	11.25	94.08	6/20/2022 3:55	11.63	-0.05	6/20/2022 5:12	-0.09
6/20/2022 4:09	12.11	0.10	6/21/2022 5:53	11.26	93.84	6/20/2022 3:56	11.60	0.02	6/20/2022 5:13	-0.12
6/20/2022 4:10	12.06	0.09	6/21/2022 5:54	11.28	93.90	6/20/2022 3:57	11.62	-0.05	6/20/2022 5:14	-0.08
6/20/2022 4:11	12.09	0.12	6/21/2022 5:55	11.27	94.13	6/20/2022 3:58	11.61	-0.07	6/20/2022 5:15	-0.09
6/20/2022 4:12	12.07	0.06	6/21/2022 5:56	11.28	94.01	6/20/2022 3:59	11.61	-0.03	6/20/2022 5:16	-0.10
6/20/2022 4:13	12.10	0.15	6/21/2022 5:57	11.25	94.10	6/20/2022 4:00	11.63	-0.03	6/20/2022 5:17	-0.12
6/20/2022 4:14	12.09	0.10	6/21/2022 5:58	11.26	94.17	6/20/2022 4:01	11.62	-0.06	6/20/2022 5:18	-0.07
6/20/2022 4:15	12.08	0.20	6/21/2022 5:59	11.28	94.11	6/20/2022 4:02	11.62	-0.03	6/20/2022 5:19	-0.07
6/20/2022 4:16	12.08	0.02	6/21/2022 6:00	11.27	94.04	6/20/2022 4:03	11.63	-0.06	6/20/2022 5:20	-0.07
6/20/2022 4:17	12.08	0.08	6/21/2022 6:01	11.28	93.97	6/20/2022 4:04	11.61	0.01	6/20/2022 5:21	-0.08
6/20/2022 4:18	12.07	0.08	6/21/2022 6:02	11.29	94.18	6/20/2022 4:05	11.62	-0.04	6/20/2022 5:22	-0.09
6/20/2022 4:19	12.07	0.08	6/21/2022 6:03	11.30	94.10	6/20/2022 4:06	11.62	-0.02	6/20/2022 5:23	-0.12
6/20/2022 4:20	12.11	0.17	6/21/2022 6:04	11.25	94.14	6/20/2022 4:07	11.62	-0.03	6/20/2022 5:24	-0.11
6/20/2022 4:21	12.09	0.05	6/21/2022 6:05	11.28	94.07	6/20/2022 4:08	11.64	-0.07	6/20/2022 5:25	-0.06
6/20/2022 4:22	12.07	0.06	6/21/2022 6:06	11.25	94.22	6/20/2022 4:09	11.61	-0.05	6/20/2022 5:26	-0.08
6/20/2022 4:23	12.09	0.14	6/21/2022 6:07	11.29	94.03	6/20/2022 4:10	11.63	-0.04	6/20/2022 5:27	-0.06
6/20/2022 4:24	12.08	0.04	6/21/2022 6:08	11.27	94.22	6/20/2022 4:11	11.63	-0.03	6/20/2022 5:28	-0.12
6/20/2022 4:25	12.07	0.13	6/21/2022 6:09	11.25	94.28	6/20/2022 4:12	11.62	-0.03	6/20/2022 5:29	-0.08
6/20/2022 4:26	12.10	0.11	6/21/2022 6:10	11.27	94.28	6/20/2022 4:13	11.61	-0.04	6/20/2022 5:30	-0.06
6/20/2022 4:27	12.08	0.12	6/21/2022 6:11	11.27	94.24	6/20/2022 4:14	11.63	-0.02	6/20/2022 5:31	-0.09
6/20/2022 4:28	12.10	0.12	6/21/2022 6:12	11.29	93.98	6/20/2022 4:15	11.62	-0.02	6/20/2022 5:32	-0.07
6/20/2022 4:29	12.07	0.01	6/21/2022 6:13	11.27	94.08	6/20/2022 4:16	11.62	-0.05	6/20/2022 5:33	-0.05
6/20/2022 4:30	12.09	0.13	6/21/2022 6:14	11.27	94.17	6/20/2022 4:17	11.62	-0.06	6/20/2022 5:34	-0.07

6/20/2022 4:31	12.08	0.05	6/21/2022 6:15	11.31	94.25	6/20/2022 4:18	11.61	0.01	6/20/2022 5:35	-0.05
6/20/2022 4:32	12.08	0.10	6/21/2022 6:16	11.26	94.25	6/20/2022 4:19	11.62	-0.05	6/20/2022 5:36	-0.08
6/20/2022 4:33	12.10	0.13	6/21/2022 6:17	11.26	94.27	6/20/2022 4:20	11.62	-0.05	6/20/2022 5:37	-0.08
6/20/2022 4:34	12.11	0.07	6/21/2022 6:18	11.27	94.38	6/20/2022 4:21	11.60	-0.01	6/20/2022 5:38	-0.10
6/20/2022 4:35	12.09	0.08	6/21/2022 6:19	11.26	94.50	6/20/2022 4:22	11.63	0.00	6/20/2022 5:39	-0.06
6/20/2022 4:36	12.07	0.06	6/21/2022 6:20	11.30	94.31	6/20/2022 4:23	11.62	0.00	6/20/2022 5:40	-0.06
6/20/2022 4:37	12.08	0.11	6/21/2022 6:21	11.28	94.35	6/20/2022 4:24	11.63	-0.07	6/20/2022 5:41	-0.04
6/20/2022 4:38	12.09	0.06	6/21/2022 6:22	11.25	94.29	6/20/2022 4:25	11.62	-0.07	6/20/2022 5:42	-0.14
6/20/2022 4:39	12.10	0.09	6/21/2022 6:23	11.28	94.19	6/20/2022 4:26	11.62	-0.04	6/20/2022 5:43	-0.07
6/20/2022 4:40	12.06	0.13	6/21/2022 6:24	11.27	94.30	6/20/2022 4:27	11.65	-0.06	6/20/2022 5:44	-0.11
6/20/2022 4:41	12.09	0.11	6/21/2022 6:25	11.27	94.43	6/20/2022 4:28	11.62	-0.05	6/20/2022 5:45	-0.09
6/20/2022 4:42	12.09	0.10	6/21/2022 6:26	11.28	94.36	6/20/2022 4:29	11.62	0.03	6/20/2022 5:46	-0.08
6/20/2022 4:43	12.08	0.09	6/21/2022 6:27	11.26	94.44	6/20/2022 4:30	11.63	-0.02	6/20/2022 5:47	-0.04
6/20/2022 4:44	12.07	0.12	6/21/2022 6:28	11.29	94.56	6/20/2022 4:31	11.62	-0.07	6/20/2022 5:48	-0.07
6/20/2022 4:45	12.08	0.08	6/21/2022 6:29	11.28	94.52	6/20/2022 4:32	11.60	-0.04	6/20/2022 5:49	-0.08
6/20/2022 4:46	12.09	0.07	6/21/2022 6:30	11.28	94.51	6/20/2022 4:33	11.63	-0.05	6/20/2022 5:50	-0.12
6/20/2022 4:47	12.06	0.02	6/21/2022 6:31	11.28	94.27	6/20/2022 4:34	11.61	-0.02	6/20/2022 5:51	-0.05
6/20/2022 4:48	12.08	0.07	6/21/2022 6:32	11.30	94.47	6/20/2022 4:35	11.62	-0.03	6/20/2022 5:52	-0.11
6/20/2022 4:49	12.07	0.07	6/21/2022 6:33	11.29	94.72	6/20/2022 4:36	11.62	-0.07	6/20/2022 5:53	-0.05
6/20/2022 4:50	12.09	0.08	6/21/2022 6:34	11.25	94.52	6/20/2022 4:37	11.63	-0.04	6/20/2022 5:54	-0.07
6/20/2022 4:51	12.11	0.11	6/21/2022 6:35	11.26	94.66	6/20/2022 4:38	11.61	-0.04	6/20/2022 5:55	-0.07
6/20/2022 4:52	12.08	0.09	6/21/2022 6:36	11.30	94.65	6/20/2022 4:39	11.60	-0.01	6/20/2022 5:56	-0.12
6/20/2022 4:53	12.07	0.11	6/21/2022 6:37	11.27	94.59	6/20/2022 4:40	11.64	-0.05	6/20/2022 5:57	-0.08
6/20/2022 4:54	12.10	0.14	6/21/2022 6:38	11.27	94.67	6/20/2022 4:41	11.63	0.00	6/20/2022 5:58	-0.13
6/20/2022 4:55	12.10	0.16	6/21/2022 6:39	11.29	94.52	6/20/2022 4:42	11.62	-0.02	6/20/2022 5:59	-0.09
6/20/2022 4:56	12.08	0.10	6/21/2022 6:40	11.29	94.43	6/20/2022 4:43	11.61	-0.04	6/20/2022 6:00	-0.09
6/20/2022 4:57	12.11	0.07	6/21/2022 6:41	11.29	94.68	6/20/2022 4:44	11.63	-0.02	6/20/2022 6:01	-0.08
6/20/2022 4:58	12.06	0.03	6/21/2022 6:42	11.27	94.49	6/20/2022 4:45	11.63	-0.01	6/20/2022 6:02	-0.09
6/20/2022 4:59	12.09	-0.01	6/21/2022 6:43	11.27	94.62	6/20/2022 4:46	11.63	-0.04	6/20/2022 6:03	-0.09
6/20/2022 5:00	12.08	0.04	6/21/2022 6:44	11.26	94.57	6/20/2022 4:47	11.62	-0.04	6/20/2022 6:04	-0.07
6/20/2022 5:01	12.08	0.03	6/21/2022 6:45	11.26	94.58	6/20/2022 4:48	11.63	-0.02	6/20/2022 6:05	-0.10
6/20/2022 5:02	12.05	0.03	6/21/2022 6:46	11.29	94.50	6/20/2022 4:49	11.60	-0.04	6/20/2022 6:06	-0.02
6/20/2022 5:03	12.07	0.08	6/21/2022 6:47	11.26	94.71	6/20/2022 4:50	11.61	-0.08	6/20/2022 6:07	-0.14
6/20/2022 5:04	12.10	0.09	6/21/2022 6:48	11.28	94.69	6/20/2022 4:51	11.61	-0.04	6/20/2022 6:08	-0.15
6/20/2022 5:05	12.09	0.15	6/21/2022 6:49	11.28	94.62	6/20/2022 4:52	11.60	-0.03	6/20/2022 6:09	-0.06
6/20/2022 5:06	12.07	0.08	6/21/2022 6:50	11.29	94.64	6/20/2022 4:53	11.61	-0.05	6/20/2022 6:10	-0.10
6/20/2022 5:07	12.08	0.11	6/21/2022 6:51	11.29	94.67	6/20/2022 4:54	11.60	-0.06	6/20/2022 6:11	-0.08
6/20/2022 5:08	12.07	-0.01	6/21/2022 6:52	11.26	94.74	6/20/2022 4:55	11.61	-0.04	6/20/2022 6:12	-0.07
6/20/2022 5:09	12.09	0.14	6/21/2022 6:53	11.24	94.74	6/20/2022 4:56	11.62	-0.07	6/20/2022 6:13	-0.09
6/20/2022 5:10	12.08	0.08	6/21/2022 6:54	11.26	94.74	6/20/2022 4:57	11.60	-0.02	6/20/2022 6:14	-0.08
6/20/2022 5:11	12.07	0.09	6/21/2022 6:55	11.26	94.76	6/20/2022 4:58	11.60	-0.04	6/20/2022 6:15	-0.03
6/20/2022 5:12	12.11	0.07	6/21/2022 6:56	11.27	94.77	6/20/2022 4:59	11.60	-0.01	6/20/2022 6:16	-0.07
6/20/2022 5:13	12.08	0.06	6/21/2022 6:57	11.27	94.66	6/20/2022 5:00	11.62	-0.04	6/20/2022 6:17	-0.13
6/20/2022 5:14	12.09	0.10	6/21/2022 6:58	11.29	94.84	6/20/2022 5:01	11.63	-0.04	6/20/2022 6:18	-0.08
6/20/2022 5:15	12.08	0.14	6/21/2022 6:59	11.27	94.68	6/20/2022 5:02	11.62	-0.02	6/20/2022 6:19	-0.10
6/20/2022 5:16	12.07	0.09	6/21/2022 7:00	11.26	94.80	6/20/2022 5:03	11.61	-0.05	6/20/2022 6:20	-0.11
6/20/2022 5:17	12.10	0.17	6/21/2022 7:01	11.28	94.81	6/20/2022 5:04	11.63	-0.05	6/20/2022 6:21	-0.06
6/20/2022 5:18	12.08	0.12	6/21/2022 7:02	11.27	94.88	6/20/2022 5:05	11.59	-0.04	6/20/2022 6:22	-0.12
6/20/2022 5:19	12.08	0.05	6/21/2022 7:03	11.25	94.96	6/20/2022 5:06	11.62	-0.02	6/20/2022 6:23	-0.07
6/20/2022 5:20	12.08	0.10	6/21/2022 7:04	11.29	94.90	6/20/2022 5:07	11.63	-0.05	6/20/2022 6:24	-0.05
6/20/2022 5:21	12.08	0.13	6/21/2022 7:05	11.28	94.89	6/20/2022 5:08	11.60	-0.02	6/20/2022 6:25	-0.13
6/20/2022 5:22	12.12	0.09	6/21/2022 7:06	11.28	94.85	6/20/2022 5:09	11.63	-0.07	6/20/2022 6:26	-0.12
6/20/2022 5:23	12.11	0.03	6/21/2022 7:07	11.25	94.71	6/20/2022 5:10	11.63	-0.03	6/20/2022 6:27	-0.07
6/20/2022 5:24	12.10	0.14	6/21/2022 7:08	11.28	94.56	6/20/2022 5:11	11.61	-0.04	6/20/2022 6:28	-0.13
6/20/2022 5:25	12.06	0.09	6/21/2022 7:09	11.26	94.90	6/20/2022 5:12	11.62	-0.06	6/20/2022 6:29	-0.09
6/20/2022 5:26	12.10	0.12	6/21/2022 7:10	11.27	94.89	6/20/2022 5:13	11.62	-0.03	6/20/2022 6:30	-0.05
6/20/2022 5:27	12.09	0.05	6/21/2022 7:11	11.27	94.70	6/20/2022 5:14	11.63	-0.01	6/20/2022 6:31	-0.09
6/20/2022 5:28	12.08	0.06	6/21/2022 7:12	11.30	94.89	6/20/2022 5:15	11.61	-0.01	6/20/2022 6:32	-0.03
6/20/2022 5:29	12.09	0.03	6/21/2022 7:13	11.29	95.01	6/20/2022 5:16	11.61	-0.07	6/20/2022 6:33	-0.11
6/20/2022 5:30	12.09	0.06	6/21/2022 7:14	11.24	95.03	6/20/2022 5:17	11.61	-0.01	6/20/2022 6:34	-0.12
6/20/2022 5:31	12.09	0.08	6/21/2022 7:15	11.27	94.99	6/20/2022 5:18	11.60	-0.06	6/20/2022 6:35	-0.03
6/20/2022 5:32	12.07	0.10	6/21/2022 7:16	11.27	94.98	6/20/2022 5:19	11.62	-0.04	6/20/2022 6:36	-0.05
6/20/2022 5:33	12.09	0.10	6/21/2022 7:17	11.28	94.94	6/20/2022 5:20	11.62	-0.02	6/20/2022 6:37	-0.05
6/20/2022 5:34	12.08	0.08	6/21/2022 7:18	11.28	94.84	6/20/2022 5:21	11.62	-0.05	6/20/2022 6:38	-0.09
6/20/2022 5:35	12.09	0.16	6/21/2022 7:19	11.26	94.92	6/20/2022 5:22	11.61	-0.02	6/20/2022 6:39	-0.10
6/20/2022 5:36	12.08	0.05	6/21/2022 7:20	11.27	95.13	6/20/2022 5:23	11.63	-0.05	6/20/2022 6:40	-0.10
6/20/2022 5:37	12.08	0.06	6/21/2022 7:21	11.27	94.85	6/20/2022 5:24	11.62	-0.04	6/20/2022 6:41	-0.10
6/20/2022 5:38	12.09	0.11	6/21/2022 7:22	11.26	94.94	6/20/2022 5:25	11.61	-0.05	6/20/2022 6:42	-0.07
6/20/2022 5:39	12.07	0.14	6/21/2022 7:23	11.27	95.06	6/20/2022 5:26	11.62	-0.03	6/20/2022 6:43	-0.07
6/20/2022 5:40	12.09	0.11	6/21/2022 7:24	11.29	94.94	6/20/2022 5:27	11.63	0.01	6/20/2022 6:44	-0.12
6/20/2022 5:41	12.06	0.11	6/21/2022 7:25	11.27	95.14	6/20/2022 5:28	11.60	-0.05	6/20/2022 6:45	-0.08
6/20/2022 5:42	12.09	0.08	6/21/2022 7:26	11.25	94.97	6/20/2022 5:29	11.60	-0.02	6/20/2022 6:46	-0.09
6/20/2022 5:43	12.08	0.07	6/21/2022 7:27	11.26	95.13	6/20/2022 5:30	11.63	-0.06	6/20/2022 6:47	-0.09
6/20/2022 5:44	12.10	0.08	6/21/2022 7:28	11.27	95.03	6/20/2022 5:31	11.59	-0.03	6/20/2022 6:48	-0.11
6/20/2022 5:45	12.07	0.15	6/21/2022 7:29	11.27	95.13	6/20/2022 5:32	11.62	-0.04	6/20/2022 6:49	-0.04
6/20/2022 5:46	12.08	0.08	6/21/2022 7:30	11.28	95.00	6/20/2022 5:33	11.62	-0.04	6/20/2022 6:50	-0.03
6/20/2022 5:47	12.07	0.15	6/21/2022 7:31	11.27	95.11	6/20/2022 5:34	11.63	-0.04	6/20/2022 6:51	-0.06
6/20/2022 5:48	12.08	0.05	6/21/2022 7:32	11.27	95.19	6/20/2022 5:35	11.60	-0.06	6/20/2022 6:52	-0.06
6/20/2022 5:49	12.11	0.09	6/21/2022 7:33	11.28	95.02	6/20/2022 5:36	11.61	-0.06	6/20/2022 6:53	-0.05
6/20/2022 5:50	12.10	0.13	6/21/2022 7:34	11.28	95.28	6/20/2022 5:37	11.61	-0.07	6/20/2022 6:54	-0.03
6/20/2022 5:51	12.06	0.08	6/21/2022 7:35	11.26	95.22	6/20/2022 5:38	11.61	0.01	6/20/2022 6:55	-0.10
6/20/2022 5:52	12.08	0.08	6/21/2022 7:36	11.27	95.13	6/20/2022 5:39	11.61	-0.05	6/20/2022 6:56	-0.06
6/20/2022 5:53	12.09	0.14	6/21/2022 7:37	11.26	95.12	6/20/2022 5:40	11.63	-0.07	6/20/2022 6:57	-0.08
6/20/2022 5:54	12.11	0.07	6/21/2022 7:38	11.25	95.10	6/20/2022 5:41	11.62	-0.08	6/20/2022 6:58	-0.08
6/20/2022 5:55	12.08	0.08	6/21/2022 7:39	11.27	95.01	6/20/2022 5:42	11.60	-0.05	6/20/2022 6:59	-0.10
6/20/2022 5:56	12.10	0.05	6/21/2022 7:40	11.27	95.21	6/20/2022 5:43	11.62	0.00	6/20/2022 7:00	-0.05
6/20/2022 5:57	12.06	0.05	6/21/2022 7:41	11.27	95.10	6/20/2022 5:44	11.61	-0.04	6/20/2022 7:01	-0.03
6/20/2022 5:58	12.07	0.11	6/21/2022 7:42	11.26	95.13	6/20/2022 5:45	11.61	-0.02	6/20/2022 7:02	-0.06

6/20/2022 5:59	12.08	0.11	6/21/2022 7:43	11.28	95.14	6/20/2022 5:46	11.65	-0.04	6/20/2022 7:03	-0.08
6/20/2022 6:00	12.10	0.08	6/21/2022 7:44	11.28	95.31	6/20/2022 5:47	11.63	-0.03	6/20/2022 7:04	-0.09
6/20/2022 6:01	12.10	0.11	6/21/2022 7:45	11.26	95.14	6/20/2022 5:48	11.62	-0.03	6/20/2022 7:05	-0.13
6/20/2022 6:02	12.10	0.04	6/21/2022 7:46	11.27	95.26	6/20/2022 5:49	11.61	-0.04	6/20/2022 7:06	-0.04
6/20/2022 6:03	12.10	0.15	6/21/2022 7:47	11.28	95.10	6/20/2022 5:50	11.61	-0.02	6/20/2022 7:07	-0.09
6/20/2022 6:04	12.10	0.07	6/21/2022 7:48	11.25	95.27	6/20/2022 5:51	11.62	-0.05	6/20/2022 7:08	-0.05
6/20/2022 6:05	12.08	0.13	6/21/2022 7:49	11.28	95.00	6/20/2022 5:52	11.63	-0.04	6/20/2022 7:09	-0.06
6/20/2022 6:06	12.09	0.09	6/21/2022 7:50	11.26	95.27	6/20/2022 5:53	11.59	-0.04	6/20/2022 7:10	-0.09
6/20/2022 6:07	12.08	0.02	6/21/2022 7:51	11.27	95.35	6/20/2022 5:54	11.62	-0.02	6/20/2022 7:11	-0.10
6/20/2022 6:08	12.09	0.03	6/21/2022 7:52	11.26	95.39	6/20/2022 5:55	11.65	-0.04	6/20/2022 7:12	-0.13
6/20/2022 6:09	12.07	0.14	6/21/2022 7:53	11.27	95.19	6/20/2022 5:56	11.62	-0.05	6/20/2022 7:13	-0.07
6/20/2022 6:10	12.06	0.08	6/21/2022 7:54	11.26	95.48	6/20/2022 5:57	11.62	-0.07	6/20/2022 7:14	-0.02
6/20/2022 6:11	12.11	0.06	6/21/2022 7:55	11.30	95.15	6/20/2022 5:58	11.62	-0.04	6/20/2022 7:15	-0.07
6/20/2022 6:12	12.09	0.13	6/21/2022 7:56	11.27	95.31	6/20/2022 5:59	11.61	-0.02	6/20/2022 7:16	-0.09
6/20/2022 6:13	12.09	0.03	6/21/2022 7:57	11.26	95.21	6/20/2022 6:00	11.63	-0.04	6/20/2022 7:17	-0.06
6/20/2022 6:14	12.07	0.12	6/21/2022 7:58	11.26	95.34	6/20/2022 6:01	11.63	0.01	6/20/2022 7:18	-0.03
6/20/2022 6:15	12.06	0.03	6/21/2022 7:59	11.27	95.23	6/20/2022 6:02	11.60	-0.06	6/20/2022 7:19	-0.12
6/20/2022 6:16	12.10	0.08	6/21/2022 8:00	11.26	95.34	6/20/2022 6:03	11.63	-0.05	6/20/2022 7:20	-0.07
6/20/2022 6:17	12.05	0.12	6/21/2022 8:01	11.27	95.31	6/20/2022 6:04	11.62	-0.04	6/20/2022 7:21	-0.11
6/20/2022 6:18	12.09	0.14	6/21/2022 8:02	11.27	95.31	6/20/2022 6:05	11.63	0.01	6/20/2022 7:22	-0.06
6/20/2022 6:19	12.06	0.09	6/21/2022 8:03	11.28	95.56	6/20/2022 6:06	11.61	-0.01	6/20/2022 7:23	-0.07
6/20/2022 6:20	12.04	0.08	6/21/2022 8:04	11.25	95.25	6/20/2022 6:07	11.62	-0.04	6/20/2022 7:24	-0.12
6/20/2022 6:21	12.08	0.09	6/21/2022 8:05	11.27	95.23	6/20/2022 6:08	11.60	-0.07	6/20/2022 7:25	-0.08
6/20/2022 6:22	12.06	0.08	6/21/2022 8:06	11.28	95.47	6/20/2022 6:09	11.62	-0.06	6/20/2022 7:26	-0.13
6/20/2022 6:23	12.09	0.09	6/21/2022 8:07	11.27	95.35	6/20/2022 6:10	11.60	-0.05	6/20/2022 7:27	-0.13
6/20/2022 6:24	12.08	0.11	6/21/2022 8:08	11.26	95.49	6/20/2022 6:11	11.64	-0.02	6/20/2022 7:28	-0.12
6/20/2022 6:25	12.09	0.19	6/21/2022 8:09	11.26	95.38	6/20/2022 6:12	11.63	-0.02	6/20/2022 7:29	-0.09
6/20/2022 6:26	12.07	0.11	6/21/2022 8:10	11.26	95.38	6/20/2022 6:13	11.63	-0.04	6/20/2022 7:30	-0.08
6/20/2022 6:27	12.08	0.10	6/21/2022 8:11	11.29	95.44	6/20/2022 6:14	11.63	-0.06	6/20/2022 7:31	-0.10
6/20/2022 6:28	12.10	0.07	6/21/2022 8:12	11.26	95.44	6/20/2022 6:15	11.61	-0.07	6/20/2022 7:32	-0.04
6/20/2022 6:29	12.11	0.02	6/21/2022 8:13	11.26	95.33	6/20/2022 6:16	11.62	-0.06	6/20/2022 7:33	-0.08
6/20/2022 6:30	12.08	0.07	6/21/2022 8:14	11.26	95.46	6/20/2022 6:17	11.62	-0.02	6/20/2022 7:34	-0.05
6/20/2022 6:31	12.08	0.15	6/21/2022 8:15	11.25	95.34	6/20/2022 6:18	11.62	-0.01	6/20/2022 7:35	-0.07
6/20/2022 6:32	12.10	0.13	6/21/2022 8:16	11.27	95.45	6/20/2022 6:19	11.61	-0.04	6/20/2022 7:36	-0.02
6/20/2022 6:33	12.08	0.17	6/21/2022 8:17	11.26	95.60	6/20/2022 6:20	11.65	-0.01	6/20/2022 7:37	-0.07
6/20/2022 6:34	12.09	0.24	6/21/2022 8:18	11.27	95.46	6/20/2022 6:21	11.60	-0.03	6/20/2022 7:38	-0.06
6/20/2022 6:35	12.10	0.13	6/21/2022 8:19	11.25	95.58	6/20/2022 6:22	11.62	-0.03	6/20/2022 7:39	-0.12
6/20/2022 6:36	12.07	0.11	6/21/2022 8:20	11.28	95.54	6/20/2022 6:23	11.61	-0.01	6/20/2022 7:40	-0.03
6/20/2022 6:37	12.10	0.10	6/21/2022 8:21	11.28	95.56	6/20/2022 6:24	11.61	-0.05	6/20/2022 7:41	-0.02
6/20/2022 6:38	12.08	0.02	6/21/2022 8:22	11.27	95.46	6/20/2022 6:25	11.63	-0.05	6/20/2022 7:42	-0.07
6/20/2022 6:39	12.11	0.07	6/21/2022 8:23	11.27	95.44	6/20/2022 6:26	11.62	-0.03	6/20/2022 7:43	-0.07
6/20/2022 6:40	12.08	0.11	6/21/2022 8:24	11.28	95.35	6/20/2022 6:27	11.62	-0.06	6/20/2022 7:44	-0.08
6/20/2022 6:41	12.11	0.12	6/21/2022 8:25	11.30	95.72	6/20/2022 6:28	11.61	-0.04	6/20/2022 7:45	-0.09
6/20/2022 6:42	12.09	0.16	6/21/2022 8:26	11.27	95.30	6/20/2022 6:29	11.62	-0.06	6/20/2022 7:46	-0.06
6/20/2022 6:43	12.09	0.12	6/21/2022 8:27	11.25	95.53	6/20/2022 6:30	11.61	-0.06	6/20/2022 7:47	-0.05
6/20/2022 6:44	12.09	0.08	6/21/2022 8:28	11.29	95.73	6/20/2022 6:31	11.63	-0.07	6/20/2022 7:48	-0.10
6/20/2022 6:45	12.10	0.10	6/21/2022 8:29	11.28	95.35	6/20/2022 6:32	11.62	-0.04	6/20/2022 7:49	-0.04
6/20/2022 6:46	12.10	0.08	6/21/2022 8:30	11.24	95.51	6/20/2022 6:33	11.61	-0.01	6/20/2022 7:50	-0.10
6/20/2022 6:47	12.10	0.06	6/21/2022 8:31	11.27	95.50	6/20/2022 6:34	11.61	-0.02	6/20/2022 7:51	-0.08
6/20/2022 6:48	12.10	0.08	6/21/2022 8:32	11.26	95.56	6/20/2022 6:35	11.60	-0.03	6/20/2022 7:52	-0.05
6/20/2022 6:49	12.10	0.08	6/21/2022 8:33	11.27	95.64	6/20/2022 6:36	11.60	-0.05	6/20/2022 7:53	-0.03
6/20/2022 6:50	12.07	0.10	6/21/2022 8:34	11.26	95.63	6/20/2022 6:37	11.62	-0.07	6/20/2022 7:54	-0.08
6/20/2022 6:51	12.09	0.12	6/21/2022 8:35	11.25	95.67	6/20/2022 6:38	11.62	-0.02	6/20/2022 7:55	-0.12
6/20/2022 6:52	12.08	0.07	6/21/2022 8:36	11.25	95.57	6/20/2022 6:39	11.59	-0.05	6/20/2022 7:56	-0.10
6/20/2022 6:53	12.11	0.06	6/21/2022 8:37	11.26	95.65	6/20/2022 6:40	11.63	-0.09	6/20/2022 7:57	-0.11
6/20/2022 6:54	12.09	0.10	6/21/2022 8:38	11.25	95.63	6/20/2022 6:41	11.64	-0.06	6/20/2022 7:58	-0.10
6/20/2022 6:55	12.09	0.08	6/21/2022 8:39	11.28	95.50	6/20/2022 6:42	11.62	-0.03	6/20/2022 7:59	-0.09
6/20/2022 6:56	12.09	0.10	6/21/2022 8:40	11.26	95.67	6/20/2022 6:43	11.62	-0.02	6/20/2022 8:00	-0.05
6/20/2022 6:57	12.07	0.09	6/21/2022 8:41	11.27	95.69	6/20/2022 6:44	11.63	-0.04	6/20/2022 8:01	-0.08
6/20/2022 6:58	12.10	0.11	6/21/2022 8:42	11.26	95.49	6/20/2022 6:45	11.60	-0.02	6/20/2022 8:02	-0.07
6/20/2022 6:59	12.09	0.15	6/21/2022 8:43	11.30	95.61	6/20/2022 6:46	11.63	-0.05	6/20/2022 8:03	-0.12
6/20/2022 7:00	12.11	0.12	6/21/2022 8:44	11.30	95.70	6/20/2022 6:47	11.62	-0.04	6/20/2022 8:04	-0.10
6/20/2022 7:01	12.07	0.10	6/21/2022 8:45	11.27	95.78	6/20/2022 6:48	11.59	-0.03	6/20/2022 8:05	-0.05
6/20/2022 7:02	12.08	0.13	6/21/2022 8:46	11.28	95.62	6/20/2022 6:49	11.63	-0.03	6/20/2022 8:06	-0.09
6/20/2022 7:03	12.10	0.05	6/21/2022 8:47	11.25	95.68	6/20/2022 6:50	11.61	-0.03	6/20/2022 8:07	-0.07
6/20/2022 7:04	12.08	0.10	6/21/2022 8:48	11.27	95.68	6/20/2022 6:51	11.61	-0.07	6/20/2022 8:08	-0.09
6/20/2022 7:05	12.07	0.14	6/21/2022 8:49	11.26	95.59	6/20/2022 6:52	11.62	-0.03	6/20/2022 8:09	-0.08
6/20/2022 7:06	12.11	0.09	6/21/2022 8:50	11.28	95.77	6/20/2022 6:53	11.60	-0.05	6/20/2022 8:10	-0.07
6/20/2022 7:07	12.08	0.18	6/21/2022 8:51	11.27	95.85	6/20/2022 6:54	11.60	-0.05	6/20/2022 8:11	-0.09
6/20/2022 7:08	12.08	0.06	6/21/2022 8:52	11.28	95.83	6/20/2022 6:55	11.63	-0.02	6/20/2022 8:12	-0.10
6/20/2022 7:09	12.09	0.06	6/21/2022 8:53	11.28	95.60	6/20/2022 6:56	11.63	-0.07	6/20/2022 8:13	-0.04
6/20/2022 7:10	12.08	0.08	6/21/2022 8:54	11.27	95.80	6/20/2022 6:57	11.63	-0.08	6/20/2022 8:14	-0.06
6/20/2022 7:11	12.06	0.10	6/21/2022 8:55	11.26	95.68	6/20/2022 6:58	11.60	-0.01	6/20/2022 8:15	-0.08
6/20/2022 7:12	12.06	0.02	6/21/2022 8:56	11.28	95.83	6/20/2022 6:59	11.61	-0.04	6/20/2022 8:16	-0.13
6/20/2022 7:13	12.08	0.16	6/21/2022 8:57	11.28	95.71	6/20/2022 7:00	11.59	-0.07	6/20/2022 8:17	-0.11
6/20/2022 7:14	12.13	0.02	6/21/2022 8:58	11.26	95.64	6/20/2022 7:01	11.62	-0.02	6/20/2022 8:18	-0.04
6/20/2022 7:15	12.07	0.12	6/21/2022 8:59	11.28	95.81	6/20/2022 7:02	11.64	-0.04	6/20/2022 8:19	-0.09
6/20/2022 7:16	12.11	0.14	6/21/2022 9:00	11.29	95.62	6/20/2022 7:03	11.62	-0.03	6/20/2022 8:20	-0.11
6/20/2022 7:17	12.12	0.06	6/21/2022 9:01	11.28	95.79	6/20/2022 7:04	11.62	-0.05	6/20/2022 8:21	-0.07
6/20/2022 7:18	12.09	0.12	6/21/2022 9:02	11.27	95.97	6/20/2022 7:05	11.60	-0.07	6/20/2022 8:22	-0.06
6/20/2022 7:19	12.09	0.08	6/21/2022 9:03	11.29	95.71	6/20/2022 7:06	11.62	-0.04	6/20/2022 8:23	-0.06
6/20/2022 7:20	12.06	0.07	6/21/2022 9:04	11.25	95.81	6/20/2022 7:07	11.62	-0.03	6/20/2022 8:24	-0.05
6/20/2022 7:21	12.10	0.08	6/21/2022 9:05	11.25	95.71	6/20/2022 7:08	11.62	-0.05	6/20/2022 8:25	-0.07
6/20/2022 7:22	12.07	0.16	6/21/2022 9:06	11.26	95.85	6/20/2022 7:09	11.62	-0.02	6/20/2022 8:26	0.02
6/20/2022 7:23	12.08	0.12	6/21/2022 9:07	11.26	95.81	6/20/2022 7:10	11.61	-0.06	6/20/2022 8:27	-0.09
6/20/2022 7:24	12.07	0.17	6/21/2022 9:08	11.27	95.81	6/20/2022 7:11	11.61	-0.05	6/20/2022 8:28	-0.06
6/20/2022 7:25	12.10	0.10	6/21/2022 9:09	11.25	95.98	6/20/2022 7:12	11.62	-0.01	6/20/2022 8:29	-0.10
6/20/2022 7:26	12.09	0.16	6/21/2022 9:10	11.27	95.72	6/20/2022 7:13	11.62	-0.07	6/20/2022 8:30	-0.09

6/20/2022 7:27	12.08	0.04	6/21/2022 9:11	11.28	95.94	6/20/2022 7:14	11.64	0.00	6/20/2022 8:31	-0.13
6/20/2022 7:28	12.07	0.12	6/21/2022 9:12	11.28	95.88	6/20/2022 7:15	11.58	0.03	6/20/2022 8:32	-0.04
6/20/2022 7:29	12.07	0.18	6/21/2022 9:13	11.28	95.90	6/20/2022 7:16	11.62	-0.02	6/20/2022 8:33	-0.03
6/20/2022 7:30	12.09	0.04	6/21/2022 9:14	11.27	95.86	6/20/2022 7:17	11.62	-0.07	6/20/2022 8:34	-0.08
6/20/2022 7:31	12.07	0.03	6/21/2022 9:15	11.26	95.80	6/20/2022 7:18	11.63	-0.05	6/20/2022 8:35	-0.08
6/20/2022 7:32	12.07	0.17	6/21/2022 9:16	11.26	95.87	6/20/2022 7:19	11.62	-0.03	6/20/2022 8:36	-0.06
6/20/2022 7:33	12.08	0.11	6/21/2022 9:17	11.27	95.71	6/20/2022 7:20	11.62	-0.05	6/20/2022 8:37	-0.02
6/20/2022 7:34	12.11	0.07	6/21/2022 9:18	11.28	95.99	6/20/2022 7:21	11.61	-0.05	6/20/2022 8:38	-0.13
6/20/2022 7:35	12.07	0.12	6/21/2022 9:19	11.27	96.04	6/20/2022 7:22	11.60	-0.01	6/20/2022 8:39	-0.06
6/20/2022 7:36	12.08	0.02	6/21/2022 9:20	11.24	95.92	6/20/2022 7:23	11.62	-0.03	6/20/2022 8:40	-0.07
6/20/2022 7:37	12.08	0.08	6/21/2022 9:21	11.27	95.88	6/20/2022 7:24	11.62	-0.01	6/20/2022 8:41	-0.06
6/20/2022 7:38	12.10	0.20	6/21/2022 9:22	11.27	95.97	6/20/2022 7:25	11.61	-0.02	6/20/2022 8:42	-0.07
6/20/2022 7:39	12.08	0.14	6/21/2022 9:23	11.28	95.82	6/20/2022 7:26	11.62	-0.05	6/20/2022 8:43	-0.08
6/20/2022 7:40	12.10	0.08	6/21/2022 9:24	11.24	96.02	6/20/2022 7:27	11.61	-0.02	6/20/2022 8:44	-0.08
6/20/2022 7:41	12.10	0.07	6/21/2022 9:25	11.27	95.85	6/20/2022 7:28	11.63	-0.05	6/20/2022 8:45	-0.07
6/20/2022 7:42	12.09	0.09	6/21/2022 9:26	11.28	95.76	6/20/2022 7:29	11.61	-0.05	6/20/2022 8:46	-0.09
6/20/2022 7:43	12.10	0.07	6/21/2022 9:27	11.27	95.96	6/20/2022 7:30	11.60	-0.07	6/20/2022 8:47	-0.09
6/20/2022 7:44	12.11	0.06	6/21/2022 9:28	11.26	95.82	6/20/2022 7:31	11.63	-0.03	6/20/2022 8:48	-0.10
6/20/2022 7:45	12.09	0.10	6/21/2022 9:29	11.27	95.82	6/20/2022 7:32	11.60	-0.07	6/20/2022 8:49	-0.12
6/20/2022 7:46	12.06	0.07	6/21/2022 9:30	11.29	95.97	6/20/2022 7:33	11.62	-0.05	6/20/2022 8:50	-0.04
6/20/2022 7:47	12.08	0.11	6/21/2022 9:31	11.26	95.93	6/20/2022 7:34	11.64	-0.06	6/20/2022 8:51	-0.06
6/20/2022 7:48	12.09	0.10	6/21/2022 9:32	11.27	96.04	6/20/2022 7:35	11.61	-0.05	6/20/2022 8:52	-0.06
6/20/2022 7:49	12.09	0.18	6/21/2022 9:33	11.28	95.98	6/20/2022 7:36	11.63	-0.04	6/20/2022 8:53	-0.06
6/20/2022 7:50	12.09	0.06	6/21/2022 9:34	11.28	95.89	6/20/2022 7:37	11.60	-0.04	6/20/2022 8:54	-0.04
6/20/2022 7:51	12.09	0.13	6/21/2022 9:35	11.29	96.04	6/20/2022 7:38	11.61	-0.05	6/20/2022 8:55	-0.07
6/20/2022 7:52	12.08	0.09	6/21/2022 9:36	11.30	95.82	6/20/2022 7:39	11.63	-0.04	6/20/2022 8:56	-0.08
6/20/2022 7:53	12.09	0.13	6/21/2022 9:37	11.28	96.04	6/20/2022 7:40	11.61	-0.01	6/20/2022 8:57	-0.07
6/20/2022 7:54	12.09	0.18	6/21/2022 9:38	11.28	95.97	6/20/2022 7:41	11.62	-0.05	6/20/2022 8:58	-0.06
6/20/2022 7:55	12.08	0.08	6/21/2022 9:39	11.29	95.94	6/20/2022 7:42	11.65	-0.03	6/20/2022 8:59	-0.08
6/20/2022 7:56	12.08	0.13	6/21/2022 9:40	11.28	96.01	6/20/2022 7:43	11.65	-0.07	6/20/2022 9:00	-0.07
6/20/2022 7:57	12.06	0.08	6/21/2022 9:41	11.28	95.92	6/20/2022 7:44	11.63	-0.05	6/20/2022 9:01	-0.08
6/20/2022 7:58	12.10	0.16	6/21/2022 9:42	11.27	95.96	6/20/2022 7:45	11.62	0.00	6/20/2022 9:02	-0.05
6/20/2022 7:59	12.07	0.14	6/21/2022 9:43	11.29	95.86	6/20/2022 7:46	11.61	-0.06	6/20/2022 9:03	-0.05
6/20/2022 8:00	12.08	-0.03	6/21/2022 9:44	11.24	96.00	6/20/2022 7:47	11.60	-0.02	6/20/2022 9:04	-0.08
6/20/2022 8:01	12.09	0.08	6/21/2022 9:45	11.26	95.87	6/20/2022 7:48	11.61	-0.03	6/20/2022 9:05	-0.06
6/20/2022 8:02	12.10	0.05	6/21/2022 9:46	11.26	95.95	6/20/2022 7:49	11.62	-0.02	6/20/2022 9:06	-0.09
6/20/2022 8:03	12.09	0.07	6/21/2022 9:47	11.25	95.85	6/20/2022 7:50	11.63	-0.05	6/20/2022 9:07	-0.06
6/20/2022 8:04	12.08	0.07	6/21/2022 9:48	11.27	96.09	6/20/2022 7:51	11.62	-0.02	6/20/2022 9:08	-0.05
6/20/2022 8:05	12.08	0.07	6/21/2022 9:49	11.28	96.13	6/20/2022 7:52	11.61	-0.01	6/20/2022 9:09	-0.07
6/20/2022 8:06	12.10	0.09	6/21/2022 9:50	11.28	96.01	6/20/2022 7:53	11.61	-0.01	6/20/2022 9:10	-0.08
6/20/2022 8:07	12.08	0.16	6/21/2022 9:51	11.29	96.20	6/20/2022 7:54	11.62	-0.02	6/20/2022 9:11	-0.07
6/20/2022 8:08	12.08	0.10	6/21/2022 9:52	11.28	96.23	6/20/2022 7:55	11.62	-0.06	6/20/2022 9:12	-0.07
6/20/2022 8:09	12.09	0.00	6/21/2022 9:53	11.27	96.25	6/20/2022 7:56	11.64	-0.01	6/20/2022 9:13	-0.08
6/20/2022 8:10	12.07	0.14	6/21/2022 9:54	11.29	96.13	6/20/2022 7:57	11.61	-0.04	6/20/2022 9:14	-0.11
6/20/2022 8:11	12.08	0.13	6/21/2022 9:55	11.29	96.17	6/20/2022 7:58	11.62	-0.06	6/20/2022 9:15	-0.10
6/20/2022 8:12	12.09	0.04	6/21/2022 9:56	11.25	96.06	6/20/2022 7:59	11.62	-0.07	6/20/2022 9:16	-0.11
6/20/2022 8:13	12.08	0.09	6/21/2022 9:57	11.26	96.24	6/20/2022 8:00	11.63	-0.05	6/20/2022 9:17	-0.08
6/20/2022 8:14	12.08	0.06	6/21/2022 9:58	11.28	96.17	6/20/2022 8:01	11.62	-0.07	6/20/2022 9:18	-0.06
6/20/2022 8:15	12.09	0.14	6/21/2022 9:59	11.27	96.24	6/20/2022 8:02	11.61	-0.04	6/20/2022 9:19	-0.06
6/20/2022 8:16	12.09	0.13	6/21/2022 10:00	11.28	96.17	6/20/2022 8:03	11.63	-0.07	6/20/2022 9:20	-0.11
6/20/2022 8:17	12.09	0.08	6/21/2022 10:01	11.24	96.19	6/20/2022 8:04	11.60	-0.07	6/20/2022 9:21	-0.09
6/20/2022 8:18	12.11	0.22	6/21/2022 10:02	11.27	96.18	6/20/2022 8:05	11.61	-0.02	6/20/2022 9:22	-0.01
6/20/2022 8:19	12.07	0.13	6/21/2022 10:03	11.27	96.25	6/20/2022 8:06	11.62	-0.01	6/20/2022 9:23	-0.08
6/20/2022 8:20	12.11	0.17	6/21/2022 10:04	11.26	96.11	6/20/2022 8:07	11.62	-0.02	6/20/2022 9:24	-0.04
6/20/2022 8:21	12.10	0.09	6/21/2022 10:05	11.27	96.04	6/20/2022 8:08	11.62	-0.03	6/20/2022 9:25	-0.06
6/20/2022 8:22	12.10	0.18	6/21/2022 10:06	11.27	96.21	6/20/2022 8:09	11.63	-0.07	6/20/2022 9:26	-0.09
6/20/2022 8:23	12.11	0.11	6/21/2022 10:07	11.27	96.18	6/20/2022 8:10	11.61	-0.04	6/20/2022 9:27	-0.05
6/20/2022 8:24	12.08	0.11	6/21/2022 10:08	11.29	96.20	6/20/2022 8:11	11.60	-0.03	6/20/2022 9:28	-0.09
6/20/2022 8:25	12.08	0.07	6/21/2022 10:09	11.25	96.07	6/20/2022 8:12	11.61	-0.06	6/20/2022 9:29	-0.10
6/20/2022 8:26	12.10	0.11	6/21/2022 10:10	11.24	96.21	6/20/2022 8:13	11.60	-0.02	6/20/2022 9:30	-0.09
6/20/2022 8:27	12.11	0.09	6/21/2022 10:11	11.25	96.25	6/20/2022 8:14	11.61	-0.02	6/20/2022 9:31	-0.09
6/20/2022 8:28	12.09	0.13	6/21/2022 10:12	11.28	96.19	6/20/2022 8:15	11.60	-0.05	6/20/2022 9:32	-0.08
6/20/2022 8:29	12.09	0.06	6/21/2022 10:13	11.27	96.40	6/20/2022 8:16	11.60	-0.06	6/20/2022 9:33	-0.05
6/20/2022 8:30	12.08	0.04	6/21/2022 10:14	11.28	96.26	6/20/2022 8:17	11.64	-0.03	6/20/2022 9:34	-0.01
6/20/2022 8:31	12.10	0.15	6/21/2022 10:15	11.27	96.39	6/20/2022 8:18	11.63	-0.01	6/20/2022 9:35	-0.04
6/20/2022 8:32	12.07	0.15	6/21/2022 10:16	11.27	96.26	6/20/2022 8:19	11.59	-0.08	6/20/2022 9:36	-0.06
6/20/2022 8:33	12.10	0.18	6/21/2022 10:17	11.29	96.15	6/20/2022 8:20	11.62	-0.09	6/20/2022 9:37	-0.05
6/20/2022 8:34	12.08	0.17	6/21/2022 10:18	11.26	96.33	6/20/2022 8:21	11.63	-0.02	6/20/2022 9:38	-0.05
6/20/2022 8:35	12.10	0.04	6/21/2022 10:19	11.28	96.22	6/20/2022 8:22	11.62	-0.04	6/20/2022 9:39	-0.09
6/20/2022 8:36	12.09	0.09	6/21/2022 10:20	11.28	96.34	6/20/2022 8:23	11.61	-0.02	6/20/2022 9:40	-0.10
6/20/2022 8:37	12.11	0.10	6/21/2022 10:21	11.27	96.49	6/20/2022 8:24	11.62	-0.02	6/20/2022 9:41	-0.08
6/20/2022 8:38	12.08	0.06	6/21/2022 10:22	11.25	96.39	6/20/2022 8:25	11.63	0.00	6/20/2022 9:42	-0.10
6/20/2022 8:39	12.07	0.08	6/21/2022 10:23	11.26	96.33	6/20/2022 8:26	11.63	-0.03	6/20/2022 9:43	-0.07
6/20/2022 8:40	12.09	0.12	6/21/2022 10:24	11.25	96.26	6/20/2022 8:27	11.62	-0.02	6/20/2022 9:44	-0.06
6/20/2022 8:41	12.09	0.09	6/21/2022 10:25	11.26	96.24	6/20/2022 8:28	11.63	-0.08	6/20/2022 9:45	-0.07
6/20/2022 8:42	12.09	0.08	6/21/2022 10:26	11.28	96.52	6/20/2022 8:29	11.61	-0.04	6/20/2022 9:46	-0.14
6/20/2022 8:43	12.10	0.17	6/21/2022 10:27	11.27	96.46	6/20/2022 8:30	11.65	-0.02	6/20/2022 9:47	-0.10
6/20/2022 8:44	12.07	0.06	6/21/2022 10:28	11.27	96.30	6/20/2022 8:31	11.62	-0.06	6/20/2022 9:48	-0.09
6/20/2022 8:45	12.09	0.02	6/21/2022 10:29	11.26	96.60	6/20/2022 8:32	11.63	-0.02	6/20/2022 9:49	-0.11
6/20/2022 8:46	12.10	0.12	6/21/2022 10:30	11.27	96.28	6/20/2022 8:33	11.61	-0.07	6/20/2022 9:50	-0.10
6/20/2022 8:47	12.11	0.12	6/21/2022 10:31	11.28	96.25	6/20/2022 8:34	11.62	-0.08	6/20/2022 9:51	-0.14
6/20/2022 8:48	12.09	0.05	6/21/2022 10:32	11.25	96.46	6/20/2022 8:35	11.60	-0.02	6/20/2022 9:52	-0.05
6/20/2022 8:49	12.08	0.08	6/21/2022 10:33	11.27	96.44	6/20/2022 8:36	11.61	-0.05	6/20/2022 9:53	-0.08
6/20/2022 8:50	12.08	0.10	6/21/2022 10:34	11.31	96.39	6/20/2022 8:37	11.61	-0.05	6/20/2022 9:54	-0.05
6/20/2022 8:51	12.08	0.08	6/21/2022 10:35	11.24	96.40	6/20/2022 8:38	11.63	-0.06	6/20/2022 9:55	-0.08
6/20/2022 8:52	12.09	0.05	6/21/2022 10:36	11.28	96.37	6/20/2022 8:39	11.63	-0.04	6/20/2022 9:56	-0.04
6/20/2022 8:53	12.08	0.07	6/21/2022 10:37	11.29	96.29	6/20/2022 8:40	11.63	-0.02	6/20/2022 9:57	-0.12
6/20/2022 8:54	12.10	0.13	6/21/2022 10:38	11.27	96.37	6/20/2022 8:41	11.62	-0.03	6/20/2022 9:58	-0.07

6/20/2022 8:55	12.09	0.16	6/21/2022 10:39	11.26	96.49	6/20/2022 8:42	11.61	0.00	6/20/2022 9:59	-0.10
6/20/2022 8:56	12.10	0.08	6/21/2022 10:40	11.27	96.53	6/20/2022 8:43	11.59	-0.03	6/20/2022 10:00	-0.10
6/20/2022 8:57	12.08	0.11	6/21/2022 10:41	11.28	96.58	6/20/2022 8:44	11.62	-0.03	6/20/2022 10:01	-0.03
6/20/2022 8:58	12.11	0.19	6/21/2022 10:42	11.27	96.46	6/20/2022 8:45	11.59	-0.04	6/20/2022 10:02	0.01
6/20/2022 8:59	12.11	0.15	6/21/2022 10:43	11.28	96.43	6/20/2022 8:46	11.62	-0.01	6/20/2022 10:03	-0.05
6/20/2022 9:00	12.07	0.11	6/21/2022 10:44	11.25	96.46	6/20/2022 8:47	11.61	-0.06	6/20/2022 10:04	-0.03
6/20/2022 9:01	12.06	0.08	6/21/2022 10:45	11.29	96.52	6/20/2022 8:48	11.60	-0.04	6/20/2022 10:05	-0.07
6/20/2022 9:02	12.08	0.16	6/21/2022 10:46	11.26	96.45	6/20/2022 8:49	11.61	-0.04	6/20/2022 10:06	-0.05
6/20/2022 9:03	12.11	0.13	6/21/2022 10:47	11.29	96.37	6/20/2022 8:50	11.62	-0.08	6/20/2022 10:07	-0.09
6/20/2022 9:04	12.09	0.09	6/21/2022 10:48	11.27	96.38	6/20/2022 8:51	11.64	-0.05	6/20/2022 10:08	-0.09
6/20/2022 9:05	12.09	0.09	6/21/2022 10:49	11.28	96.45	6/20/2022 8:52	11.60	-0.03	6/20/2022 10:09	-0.10
6/20/2022 9:06	12.07	0.12	6/21/2022 10:50	11.27	96.59	6/20/2022 8:53	11.62	-0.02	6/20/2022 10:10	-0.13
6/20/2022 9:07	12.10	0.11	6/21/2022 10:51	11.28	96.43	6/20/2022 8:54	11.61	-0.07	6/20/2022 10:11	-0.08
6/20/2022 9:08	12.11	0.08	6/21/2022 10:52	11.29	96.55	6/20/2022 8:55	11.60	-0.02	6/20/2022 10:12	-0.08
6/20/2022 9:09	12.11	0.04	6/21/2022 10:53	11.28	96.65	6/20/2022 8:56	11.63	-0.04	6/20/2022 10:13	-0.10
6/20/2022 9:10	12.10	0.15	6/21/2022 10:54	11.26	96.39	6/20/2022 8:57	11.59	-0.02	6/20/2022 10:14	-0.06
6/20/2022 9:11	12.05	0.12	6/21/2022 10:55	11.26	96.47	6/20/2022 8:58	11.62	-0.06	6/20/2022 10:15	-0.06
6/20/2022 9:12	12.09	0.07	6/21/2022 10:56	11.25	96.51	6/20/2022 8:59	11.61	-0.01	6/20/2022 10:16	-0.07
6/20/2022 9:13	12.10	0.08	6/21/2022 10:57	11.29	96.74	6/20/2022 9:00	11.61	-0.04	6/20/2022 10:17	-0.05
6/20/2022 9:14	12.10	0.17	6/21/2022 10:58	11.27	96.59	6/20/2022 9:01	11.63	-0.06	6/20/2022 10:18	-0.08
6/20/2022 9:15	12.13	0.07	6/21/2022 10:59	11.29	96.54	6/20/2022 9:02	11.61	-0.03	6/20/2022 10:19	-0.10
6/20/2022 9:16	12.11	0.09	6/21/2022 11:00	11.26	96.66	6/20/2022 9:03	11.63	-0.04	6/20/2022 10:20	-0.09
6/20/2022 9:17	12.09	0.11	6/21/2022 11:01	11.26	96.54	6/20/2022 9:04	11.60	-0.04	6/20/2022 10:21	-0.13
6/20/2022 9:18	12.10	0.03	6/21/2022 11:02	11.28	96.57	6/20/2022 9:05	11.61	-0.05	6/20/2022 10:22	-0.06
6/20/2022 9:19	12.09	0.07	6/21/2022 11:03	11.25	96.50	6/20/2022 9:06	11.63	-0.02	6/20/2022 10:23	-0.08
6/20/2022 9:20	12.06	0.06	6/21/2022 11:04	11.26	96.44	6/20/2022 9:07	11.60	0.00	6/20/2022 10:24	-0.09
6/20/2022 9:21	12.09	0.05	6/21/2022 11:05	11.27	96.73	6/20/2022 9:08	11.63	-0.01	6/20/2022 10:25	-0.06
6/20/2022 9:22	12.08	0.08	6/21/2022 11:06	11.28	96.49	6/20/2022 9:09	11.62	-0.02	6/20/2022 10:26	-0.11
6/20/2022 9:23	12.10	0.03	6/21/2022 11:07	11.25	96.50	6/20/2022 9:10	11.61	-0.06	6/20/2022 10:27	-0.06
6/20/2022 9:24	12.08	0.08	6/21/2022 11:08	11.30	96.72	6/20/2022 9:11	11.62	0.02	6/20/2022 10:28	-0.08
6/20/2022 9:25	12.09	0.13	6/21/2022 11:09	11.27	96.47	6/20/2022 9:12	11.62	-0.02	6/20/2022 10:29	-0.08
6/20/2022 9:26	12.09	0.10	6/21/2022 11:10	11.27	96.70	6/20/2022 9:13	11.62	-0.06	6/20/2022 10:30	-0.11
6/20/2022 9:27	12.08	0.17	6/21/2022 11:11	11.25	96.77	6/20/2022 9:14	11.61	-0.07	6/20/2022 10:31	-0.06
6/20/2022 9:28	12.09	0.10	6/21/2022 11:12	11.27	96.47	6/20/2022 9:15	11.62	-0.05	6/20/2022 10:32	-0.11
6/20/2022 9:29	12.09	0.15	6/21/2022 11:13	11.26	96.42	6/20/2022 9:16	11.63	-0.04	6/20/2022 10:33	-0.05
6/20/2022 9:30	12.09	0.10	6/21/2022 11:14	11.27	96.67	6/20/2022 9:17	11.63	-0.02	6/20/2022 10:34	-0.05
6/20/2022 9:31	12.08	0.10	6/21/2022 11:15	11.26	96.69	6/20/2022 9:18	11.60	0.01	6/20/2022 10:35	-0.06
6/20/2022 9:32	12.07	0.00	6/21/2022 11:16	11.26	96.61	6/20/2022 9:19	11.62	-0.03	6/20/2022 10:36	-0.05
6/20/2022 9:33	12.09	0.14	6/21/2022 11:17	11.26	96.68	6/20/2022 9:20	11.60	-0.02	6/20/2022 10:37	-0.07
6/20/2022 9:34	12.09	0.07	6/21/2022 11:18	11.28	96.55	6/20/2022 9:21	11.60	-0.05	6/20/2022 10:38	-0.08
6/20/2022 9:35	12.08	0.08	6/21/2022 11:19	11.29	96.63	6/20/2022 9:22	11.62	-0.03	6/20/2022 10:39	-0.05
6/20/2022 9:36	12.10	0.14	6/21/2022 11:20	11.28	96.64	6/20/2022 9:23	11.60	-0.10	6/20/2022 10:40	-0.08
6/20/2022 9:37	12.10	0.12	6/21/2022 11:21	11.28	96.61	6/20/2022 9:24	11.62	-0.04	6/20/2022 10:41	-0.01
6/20/2022 9:38	12.11	0.09	6/21/2022 11:22	11.27	96.67	6/20/2022 9:25	11.62	-0.02	6/20/2022 10:42	-0.07
6/20/2022 9:39	12.07	0.09	6/21/2022 11:23	11.30	96.69	6/20/2022 9:26	11.62	-0.01	6/20/2022 10:43	-0.11
6/20/2022 9:40	12.11	0.19	6/21/2022 11:24	11.28	96.64	6/20/2022 9:27	11.62	-0.01	6/20/2022 10:44	-0.04
6/20/2022 9:41	12.07	0.07	6/21/2022 11:25	11.26	96.62	6/20/2022 9:28	11.63	-0.05	6/20/2022 10:45	-0.05
6/20/2022 9:42	12.12	0.04	6/21/2022 11:26	11.26	96.72	6/20/2022 9:29	11.63	0.00	6/20/2022 10:46	-0.05
6/20/2022 9:43	12.10	0.07	6/21/2022 11:27	11.26	96.83	6/20/2022 9:30	11.62	-0.02	6/20/2022 10:47	-0.10
6/20/2022 9:44	12.08	0.13	6/21/2022 11:28	11.28	96.80	6/20/2022 9:31	11.62	-0.03	6/20/2022 10:48	-0.06
6/20/2022 9:45	12.11	0.10	6/21/2022 11:29	11.28	96.79	6/20/2022 9:32	11.62	-0.03	6/20/2022 10:49	-0.06
6/20/2022 9:46	12.08	0.10	6/21/2022 11:30	11.26	96.72	6/20/2022 9:33	11.63	-0.05	6/20/2022 10:50	-0.06
6/20/2022 9:47	12.08	0.08	6/21/2022 11:31	11.27	96.77	6/20/2022 9:34	11.63	-0.04	6/20/2022 10:51	-0.07
6/20/2022 9:48	12.10	0.06	6/21/2022 11:32	11.27	96.72	6/20/2022 9:35	11.60	-0.05	6/20/2022 10:52	-0.10
6/20/2022 9:49	12.10	0.13	6/21/2022 11:33	11.26	96.76	6/20/2022 9:36	11.62	-0.07	6/20/2022 10:53	-0.09
6/20/2022 9:50	12.10	0.13	6/21/2022 11:34	11.29	96.85	6/20/2022 9:37	11.60	-0.04	6/20/2022 10:54	-0.07
6/20/2022 9:51	12.09	0.07	6/21/2022 11:35	11.30	96.83	6/20/2022 9:38	11.61	-0.05	6/20/2022 10:55	-0.08
6/20/2022 9:52	12.06	0.04	6/21/2022 11:36	11.26	96.77	6/20/2022 9:39	11.62	-0.04	6/20/2022 10:56	-0.06
6/20/2022 9:53	12.11	0.08	6/21/2022 11:37	11.27	96.58	6/20/2022 9:40	11.61	-0.07	6/20/2022 10:57	-0.04
6/20/2022 9:54	12.06	0.08	6/21/2022 11:38	11.26	96.78	6/20/2022 9:41	11.62	-0.03	6/20/2022 10:58	-0.09
6/20/2022 9:55	12.09	0.08	6/21/2022 11:39	11.28	96.69	6/20/2022 9:42	11.61	-0.05	6/20/2022 10:59	-0.09
6/20/2022 9:56	12.07	0.10	6/21/2022 11:40	11.27	96.80	6/20/2022 9:43	11.64	0.00	6/20/2022 11:00	-0.04
6/20/2022 9:57	12.08	0.07	6/21/2022 11:41	11.26	96.84	6/20/2022 9:44	11.62	-0.04	6/20/2022 11:01	-0.09
6/20/2022 9:58	12.07	0.15	6/21/2022 11:42	11.29	96.67	6/20/2022 9:45	11.63	-0.02	6/20/2022 11:02	-0.03
6/20/2022 9:59	12.09	0.13	6/21/2022 11:43	11.27	96.70	6/20/2022 9:46	11.62	-0.02	6/20/2022 11:03	-0.10
6/20/2022 10:00	12.09	0.12	6/21/2022 11:44	11.27	96.90	6/20/2022 9:47	11.63	0.02	6/20/2022 11:04	-0.04
6/20/2022 10:01	12.10	0.09	6/21/2022 11:45	11.26	96.63	6/20/2022 9:48	11.60	-0.05	6/20/2022 11:05	-0.11
6/20/2022 10:02	12.10	0.05	6/21/2022 11:46	11.27	96.86	6/20/2022 9:49	11.66	-0.13	6/20/2022 11:06	-0.07
6/20/2022 10:03	12.10	0.10	6/21/2022 11:47	11.26	96.78	6/20/2022 9:50	11.68	0.02	6/20/2022 11:07	-0.07
6/20/2022 10:04	12.11	0.04	6/21/2022 11:48	11.27	97.01	6/20/2022 9:51	11.65	-0.07	6/20/2022 11:08	-0.04
6/20/2022 10:05	12.07	0.10	6/21/2022 11:49	11.26	97.00	6/20/2022 9:52	11.67	-0.08	6/20/2022 11:09	-0.07
6/20/2022 10:06	12.10	0.12	6/21/2022 11:50	11.27	96.78	6/20/2022 9:53	11.65	-0.09	6/20/2022 11:10	-0.02
6/20/2022 10:07	12.07	0.12	6/21/2022 11:51	11.25	96.94	6/20/2022 9:54	11.61	0.00	6/20/2022 11:11	-0.06
6/20/2022 10:08	12.09	0.03	6/21/2022 11:52	11.26	96.86	6/20/2022 9:55	11.63	-0.05	6/20/2022 11:12	-0.10
6/20/2022 10:09	12.10	0.03	6/21/2022 11:53	11.25	97.04	6/20/2022 9:56	11.64	-0.04	6/20/2022 11:13	-0.11
6/20/2022 10:10	12.08	0.05	6/21/2022 11:54	11.28	96.74	6/20/2022 9:57	11.65	-0.09	6/20/2022 11:14	-0.11
6/20/2022 10:11	12.07	0.13	6/21/2022 11:55	11.26	97.05	6/20/2022 9:58	11.60	-0.01	6/20/2022 11:15	-0.08
6/20/2022 10:12	12.13	0.14	6/21/2022 11:56	11.26	97.15	6/20/2022 9:59	11.59	0.03	6/20/2022 11:16	-0.04
6/20/2022 10:13	12.08	5.79	6/21/2022 11:57	11.28	97.33	6/20/2022 10:00	11.60	-0.02	6/20/2022 11:17	-0.04
6/20/2022 10:14	12.08	3.80	6/21/2022 11:58	11.26	97.30	6/20/2022 10:01	11.63	-0.04	6/20/2022 11:18	-0.06
6/20/2022 10:15	12.05	1.62	6/21/2022 11:59	11.25	97.13	6/20/2022 10:02	11.61	-0.07	6/20/2022 11:19	-0.09
6/20/2022 10:16	12.08	0.30	6/21/2022 12:00	11.26	97.16	6/20/2022 10:03	11.64	-0.06	6/20/2022 11:20	-0.03
6/20/2022 10:17	12.04	0.14	6/21/2022 12:01	11.25	97.51	6/20/2022 10:04	11.62	-0.02	6/20/2022 11:21	-0.07
6/20/2022 10:18	12.01	0.18	6/21/2022 12:02	11.25	97.42	6/20/2022 10:05	11.62	-0.01	6/20/2022 11:22	-0.07
6/20/2022 10:19	12.02	0.12	6/21/2022 12:03	11.26	97.41	6/20/2022 10:06	11.63	-0.06	6/20/2022 11:23	-0.07
6/20/2022 10:20	12.03	0.19	6/21/2022 12:04	11.24	97.42	6/20/2022 10:07	11.61	-0.05	6/20/2022 11:24	-0.12
6/20/2022 10:21	12.01	0.09	6/21/2022 12:05	11.26	97.29	6/20/2022 10:08	11.65	-0.06	6/20/2022 11:25	-0.06
6/20/2022 10:22	12.05	0.09	6/21/2022 12:06	11.27	97.23	6/20/2022 10:09	11.58	-0.01	6/20/2022 11:26	-0.05

6/20/2022 10:23	12.04	0.14	6/21/2022 12:07	11.25	97.20	6/20/2022 10:10	11.62	-0.04	6/20/2022 11:27	-0.06
6/20/2022 10:24	12.06	0.18	6/21/2022 12:08	11.26	97.39	6/20/2022 10:11	11.63	-0.02	6/20/2022 11:28	-0.07
6/20/2022 10:25	12.06	0.11	6/21/2022 12:09	11.28	97.33	6/20/2022 10:12	11.62	-0.02	6/20/2022 11:29	-0.09
6/20/2022 10:26	12.05	0.16	6/21/2022 12:10	11.25	97.20	6/20/2022 10:13	11.60	-0.03	6/20/2022 11:30	-0.07
6/20/2022 10:27	12.05	0.05	6/21/2022 12:11	11.27	97.08	6/20/2022 10:14	11.62	-0.06	6/20/2022 11:31	-0.03
6/20/2022 10:28	12.07	0.14	6/21/2022 12:12	11.28	97.23	6/20/2022 10:15	11.62	-0.01	6/20/2022 11:32	-0.06
6/20/2022 10:29	12.08	0.08	6/21/2022 12:13	11.27	97.28	6/20/2022 10:16	11.60	0.00	6/20/2022 11:33	-0.10
6/20/2022 10:30	12.03	0.10	6/21/2022 12:14	11.26	97.47	6/20/2022 10:17	11.61	0.00	6/20/2022 11:34	-0.04
6/20/2022 10:31	12.07	0.07	6/21/2022 12:15	11.26	97.36	6/20/2022 10:18	11.63	-0.04	6/20/2022 11:35	-0.08
6/20/2022 10:32	12.09	0.11	6/21/2022 12:16	11.24	97.35	6/20/2022 10:19	11.62	-0.03	6/20/2022 11:36	-0.12
6/20/2022 10:33	12.11	0.16	6/21/2022 12:17	11.28	97.25	6/20/2022 10:20	11.62	0.02	6/20/2022 11:37	-0.09
6/20/2022 10:34	12.08	0.12	6/21/2022 12:18	11.28	97.38	6/20/2022 10:21	11.63	-0.01	6/20/2022 11:38	-0.12
6/20/2022 10:35	12.08	0.11	6/21/2022 12:19	11.28	97.22	6/20/2022 10:22	11.60	-0.03	6/20/2022 11:39	-0.04
6/20/2022 10:36	12.08	0.16	6/21/2022 12:20	11.27	97.38	6/20/2022 10:23	11.62	-0.01	6/20/2022 11:40	-0.05
6/20/2022 10:37	12.09	0.11	6/21/2022 12:21	11.27	97.39	6/20/2022 10:24	11.60	-0.05	6/20/2022 11:41	-0.08
6/20/2022 10:38	12.11	0.12	6/21/2022 12:22	11.26	97.09	6/20/2022 10:25	11.63	-0.04	6/20/2022 11:42	-0.07
6/20/2022 10:39	12.08	0.12	6/21/2022 12:23	11.28	97.24	6/20/2022 10:26	11.63	-0.07	6/20/2022 11:43	-0.03
6/20/2022 10:40	12.10	0.13	6/21/2022 12:24	11.28	97.16	6/20/2022 10:27	11.62	-0.05	6/20/2022 11:44	-0.09
6/20/2022 10:41	12.07	0.12	6/21/2022 12:25	11.27	97.25	6/20/2022 10:28	11.63	-0.06	6/20/2022 11:45	-0.10
6/20/2022 10:42	12.11	0.17	6/21/2022 12:26	11.28	97.23	6/20/2022 10:29	11.60	0.01	6/20/2022 11:46	-0.11
6/20/2022 10:43	12.08	0.16	6/21/2022 12:27	11.28	97.15	6/20/2022 10:30	11.63	-0.05	6/20/2022 11:47	-0.05
6/20/2022 10:44	12.08	0.11	6/21/2022 12:28	11.23	97.02	6/20/2022 10:31	11.62	0.02	6/20/2022 11:48	-0.03
6/20/2022 10:45	12.14	0.12	6/21/2022 12:29	11.26	97.37	6/20/2022 10:32	11.61	-0.06	6/20/2022 11:49	-0.05
6/20/2022 10:46	12.07	0.17	6/21/2022 12:30	11.25	97.06	6/20/2022 10:33	11.63	-0.03	6/20/2022 11:50	-0.04
6/20/2022 10:47	12.11	0.13	6/21/2022 12:31	11.29	97.13	6/20/2022 10:34	11.63	-0.04	6/20/2022 11:51	-0.08
6/20/2022 10:48	12.07	0.17	6/21/2022 12:32	11.25	97.20	6/20/2022 10:35	11.64	-0.05	6/20/2022 11:52	-0.03
6/20/2022 10:49	12.00	0.11	6/21/2022 12:33	11.26	97.31	6/20/2022 10:36	11.62	-0.01	6/20/2022 11:53	-0.01
6/20/2022 10:50	11.96	0.15	6/21/2022 12:34	11.28	97.27	6/20/2022 10:37	11.64	-0.04	6/20/2022 11:54	-0.05
6/20/2022 10:51	11.94	0.20	6/21/2022 12:35	11.27	97.18	6/20/2022 10:38	11.61	-0.06	6/20/2022 11:55	-0.05
6/20/2022 10:52	11.97	0.29	6/21/2022 12:36	11.28	97.18	6/20/2022 10:39	11.61	-0.03	6/20/2022 11:56	-0.09
6/20/2022 10:53	11.94	0.20	6/21/2022 12:37	11.28	97.19	6/20/2022 10:40	11.59	-0.02	6/20/2022 11:57	-0.09
6/20/2022 10:54	12.00	0.21	6/21/2022 12:38	11.25	97.27	6/20/2022 10:41	11.63	-0.07	6/20/2022 11:58	-0.11
6/20/2022 10:55	12.03	0.19	6/21/2022 12:39	11.27	97.06	6/20/2022 10:42	11.58	0.01	6/20/2022 11:59	-0.09
6/20/2022 10:56	12.04	0.08	6/21/2022 12:40	11.24	97.39	6/20/2022 10:43	11.57	-0.01	6/20/2022 12:00	-0.06
6/20/2022 10:57	12.05	0.24	6/21/2022 12:41	11.27	97.45	6/20/2022 10:44	11.58	-0.03	6/20/2022 12:01	-0.06
6/20/2022 10:58	12.03	0.18	6/21/2022 12:42	11.31	97.35	6/20/2022 10:45	11.61	-0.05	6/20/2022 12:02	-0.06
6/20/2022 10:59	12.07	0.23	6/21/2022 12:43	11.27	97.55	6/20/2022 10:46	11.58	0.00	6/20/2022 12:03	-0.05
6/20/2022 11:00	12.07	0.17	6/21/2022 12:44	11.29	97.55	6/20/2022 10:47	11.61	-0.05	6/20/2022 12:04	-0.07
6/20/2022 11:01	12.09	0.26	6/21/2022 12:45	11.29	97.52	6/20/2022 10:48	11.63	-0.04	6/20/2022 12:05	-0.06
6/20/2022 11:02	12.06	0.20	6/21/2022 12:46	11.27	97.57	6/20/2022 10:49	11.65	-0.07	6/20/2022 12:06	-0.03
6/20/2022 11:03	12.09	0.18	6/21/2022 12:47	11.27	97.68	6/20/2022 10:50	11.59	-0.04	6/20/2022 12:07	-0.06
6/20/2022 11:04	12.11	0.19	6/21/2022 12:48	11.28	97.54	6/20/2022 10:51	11.63	-0.06	6/20/2022 12:08	-0.10
6/20/2022 11:05	12.10	0.17	6/21/2022 12:49	11.26	97.48	6/20/2022 10:52	11.61	-0.03	6/20/2022 12:09	-0.06
6/20/2022 11:06	12.08	0.19	6/21/2022 12:50	11.28	97.71	6/20/2022 10:53	11.62	-0.09	6/20/2022 12:10	-0.11
6/20/2022 11:07	12.13	0.23	6/21/2022 12:51	11.25	97.49	6/20/2022 10:54	11.62	-0.05	6/20/2022 12:11	-0.07
6/20/2022 11:08	12.17	0.24	6/21/2022 12:52	11.26	97.27	6/20/2022 10:55	11.60	-0.05	6/20/2022 12:12	-0.06
6/20/2022 11:09	12.13	0.31	6/21/2022 12:53	11.27	97.43	6/20/2022 10:56	11.60	-0.04	6/20/2022 12:13	-0.05
6/20/2022 11:10	12.10	0.38	6/21/2022 12:54	11.27	97.41	6/20/2022 10:57	11.62	-0.04	6/20/2022 12:14	-0.07
6/20/2022 11:11	12.08	0.42	6/21/2022 12:55	11.28	97.54	6/20/2022 10:58	11.60	-0.07	6/20/2022 12:15	-0.09
6/20/2022 11:12	12.09	0.47	6/21/2022 12:56	11.29	97.47	6/20/2022 10:59	11.60	-0.03	6/20/2022 12:16	-0.11
6/20/2022 11:13	12.10	0.54	6/21/2022 12:57	11.27	97.44	6/20/2022 11:00	11.63	-0.03	6/20/2022 12:17	-0.08
6/20/2022 11:14	12.12	0.54	6/21/2022 12:58	11.29	97.25	6/20/2022 11:01	11.62	-0.04	6/20/2022 12:18	-0.03
6/20/2022 11:15	12.12	0.65	6/21/2022 12:59	11.28	97.23	6/20/2022 11:02	11.63	-0.07	6/20/2022 12:19	-0.09
6/20/2022 11:16	12.09	0.67	6/21/2022 13:00	11.28	97.28	6/20/2022 11:03	11.58	-0.03	6/20/2022 12:20	-0.10
6/20/2022 11:17	12.11	0.69	6/21/2022 13:01	11.27	97.37	6/20/2022 11:04	11.63	-0.06	6/20/2022 12:21	-0.09
6/20/2022 11:18	12.11	0.72	6/21/2022 13:02	11.29	97.32	6/20/2022 11:05	11.63	-0.07	6/20/2022 12:22	-0.08
6/20/2022 11:19	12.12	0.87	6/21/2022 13:03	11.30	97.29	6/20/2022 11:06	11.61	-0.07	6/20/2022 12:23	-0.08
6/20/2022 11:20	12.13	0.87	6/21/2022 13:04	11.26	97.43	6/20/2022 11:07	11.63	-0.01	6/20/2022 12:24	-0.07
6/20/2022 11:21	12.14	1.01	6/21/2022 13:05	11.26	97.17	6/20/2022 11:08	11.60	-0.07	6/20/2022 12:25	-0.06
6/20/2022 11:22	12.13	1.00	6/21/2022 13:06	11.29	97.45	6/20/2022 11:09	11.62	0.01	6/20/2022 12:26	-0.10
6/20/2022 11:23	12.12	1.08	6/21/2022 13:07	11.27	97.31	6/20/2022 11:10	11.61	-0.01	6/20/2022 12:27	-0.04
6/20/2022 11:24	12.14	1.11	6/21/2022 13:08	11.28	97.54	6/20/2022 11:11	11.64	-0.09	6/20/2022 12:28	-0.02
6/20/2022 11:25	12.17	1.16	6/21/2022 13:09	11.27	97.38	6/20/2022 11:12	11.65	-0.02	6/20/2022 12:29	-0.12
6/20/2022 11:26	12.12	1.27	6/21/2022 13:10	11.30	97.62	6/20/2022 11:13	11.58	0.00	6/20/2022 12:30	0.00
6/20/2022 11:27	12.11	1.25	6/21/2022 13:11	11.27	97.34	6/20/2022 11:14	11.60	0.01	6/20/2022 12:31	-0.08
6/20/2022 11:28	12.11	1.26	6/21/2022 13:12	11.28	97.29	6/20/2022 11:15	11.64	-0.04	6/20/2022 12:32	-0.05
6/20/2022 11:29	12.13	1.34	6/21/2022 13:13	11.27	97.31	6/20/2022 11:16	11.62	-0.01	6/20/2022 12:33	-0.06
6/20/2022 11:30	12.15	1.33	6/21/2022 13:14	11.24	97.47	6/20/2022 11:17	11.59	-0.02	6/20/2022 12:34	-0.06
6/20/2022 11:31	12.14	1.47	6/21/2022 13:15	11.27	97.49	6/20/2022 11:18	11.65	-0.11	6/20/2022 12:35	-0.05
6/20/2022 11:32	12.13	1.47	6/21/2022 13:16	11.24	97.50	6/20/2022 11:19	11.62	-0.04	6/20/2022 12:36	-0.05
6/20/2022 11:33	12.15	1.54	6/21/2022 13:17	11.26	97.56	6/20/2022 11:20	11.61	-0.02	6/20/2022 12:37	-0.04
6/20/2022 11:34	12.15	1.63	6/21/2022 13:18	11.27	97.50	6/20/2022 11:21	11.60	-0.08	6/20/2022 12:38	-0.06
6/20/2022 11:35	12.14	1.64	6/21/2022 13:19	11.27	97.51	6/20/2022 11:22	11.62	0.04	6/20/2022 12:39	-0.07
6/20/2022 11:36	12.15	1.67	6/21/2022 13:20	11.28	97.59	6/20/2022 11:23	11.59	-0.06	6/20/2022 12:40	-0.04
6/20/2022 11:37	12.15	1.71	6/21/2022 13:21	11.29	97.56	6/20/2022 11:24	11.58	5.61	6/20/2022 12:41	-0.06
6/20/2022 11:38	12.18	1.68	6/21/2022 13:22	11.25	97.44	6/20/2022 11:25	11.57	5.93	6/20/2022 12:42	-0.08
6/20/2022 11:39	12.18	1.74	6/21/2022 13:23	11.28	97.62	6/20/2022 11:26	11.59	0.73	6/20/2022 12:43	-0.11
6/20/2022 11:40	12.19	1.75	6/21/2022 13:24	11.28	97.62	6/20/2022 11:27	11.62	-0.16	6/20/2022 12:44	0.00
6/20/2022 11:41	12.18	1.83	6/21/2022 13:25	11.29	97.49	6/20/2022 11:28	11.60	-0.10	6/20/2022 12:45	-0.08
6/20/2022 11:42	12.22	1.92	6/21/2022 13:26	11.27	97.51	6/20/2022 11:29	11.60	-0.15	6/20/2022 12:46	-0.06
6/20/2022 11:43	12.21	1.93	6/21/2022 13:27	11.28	97.51	6/20/2022 11:30	11.57	-0.04	6/20/2022 12:47	-0.07
6/20/2022 11:44	12.19	1.99	6/21/2022 13:28	11.25	97.42	6/20/2022 11:31	11.57	-0.03	6/20/2022 12:48	-0.05
6/20/2022 11:45	12.19	2.04	6/21/2022 13:29	11.24	97.32	6/20/2022 11:32	11.56	-0.02	6/20/2022 12:49	-0.07
6/20/2022 11:46	12.20	2.04	6/21/2022 13:30	11.28	97.43	6/20/2022 11:33	11.59	-0.08	6/20/2022 12:50	-0.05
6/20/2022 11:47	12.20	2.03	6/21/2022 13:31	11.28	97.52	6/20/2022 11:34	11.55	-0.04	6/20/2022 12:51	-0.05
6/20/2022 11:48	12.20	2.08	6/21/2022 13:32	11.30	97.69	6/20/2022 11:35	11.54	-0.06	6/20/2022 12:52	-0.01
6/20/2022 11:49	12.19	2.20	6/21/2022 13:33	11.26	97.54	6/20/2022 11:36	11.54	-0.05	6/20/2022 12:53	-0.05
6/20/2022 11:50	12.19	2.05	6/21/2022 13:34	11.27	97.49	6/20/2022 11:37	11.58	-0.11	6/20/2022 12:54	-0.07

6/20/2022 11:51	12.21	2.28	6/21/2022 13:35	11.28	97.57	6/20/2022 11:38	11.59	-0.09	6/20/2022 12:55	-0.10
6/20/2022 11:52	12.18	2.11	6/21/2022 13:36	11.27	97.49	6/20/2022 11:39	11.55	-0.05	6/20/2022 12:56	-0.06
6/20/2022 11:53	12.20	2.30	6/21/2022 13:37	11.27	97.46	6/20/2022 11:40	11.52	-0.06	6/20/2022 12:57	-0.08
6/20/2022 11:54	12.21	2.33	6/21/2022 13:38	11.27	97.46	6/20/2022 11:41	11.54	-0.09	6/20/2022 12:58	-0.05
6/20/2022 11:55	12.18	2.28	6/21/2022 13:39	11.27	97.65	6/20/2022 11:42	11.52	-0.05	6/20/2022 12:59	-0.04
6/20/2022 11:56	12.19	2.42	6/21/2022 13:40	11.25	97.49	6/20/2022 11:43	11.56	-0.07	6/20/2022 13:00	-0.09
6/20/2022 11:57	12.20	2.37	6/21/2022 13:41	11.29	97.61	6/20/2022 11:44	11.58	-0.13	6/20/2022 13:01	-0.06
6/20/2022 11:58	12.20	2.41	6/21/2022 13:42	11.26	97.62	6/20/2022 11:45	11.58	-0.08	6/20/2022 13:02	-0.06
6/20/2022 11:59	12.21	2.52	6/21/2022 13:43	11.28	97.60	6/20/2022 11:46	11.55	-0.07	6/20/2022 13:03	-0.02
6/20/2022 12:00	12.22	2.48	6/21/2022 13:44	11.24	97.59	6/20/2022 11:47	11.55	-0.09	6/20/2022 13:04	-0.07
6/20/2022 12:01	12.23	2.51	6/21/2022 13:45	11.27	97.56	6/20/2022 11:48	11.58	-0.14	6/20/2022 13:05	-0.10
6/20/2022 12:02	12.21	2.53	6/21/2022 13:46	11.27	97.64	6/20/2022 11:49	11.58	-0.10	6/20/2022 13:06	-0.08
6/20/2022 12:03	12.18	2.62	6/21/2022 13:47	11.28	97.51	6/20/2022 11:50	11.56	-0.10	6/20/2022 13:07	-0.07
6/20/2022 12:04	12.20	2.62	6/21/2022 13:48	11.27	97.60	6/20/2022 11:51	11.58	-0.14	6/20/2022 13:08	-0.03
6/20/2022 12:05	12.21	2.75	6/21/2022 13:49	11.27	97.59	6/20/2022 11:52	11.56	-0.07	6/20/2022 13:09	-0.04
6/20/2022 12:06	12.21	2.72	6/21/2022 13:50	11.28	97.65	6/20/2022 11:53	11.60	-0.05	6/20/2022 13:10	-0.03
6/20/2022 12:07	12.25	2.74	6/21/2022 13:51	11.26	97.56	6/20/2022 11:54	11.60	-0.10	6/20/2022 13:11	-0.04
6/20/2022 12:08	12.22	2.75	6/21/2022 13:52	11.26	97.86	6/20/2022 11:55	11.58	-0.12	6/20/2022 13:12	0.00
6/20/2022 12:09	12.18	2.79	6/21/2022 13:53	11.24	97.45	6/20/2022 11:56	11.59	-0.06	6/20/2022 13:13	-0.04
6/20/2022 12:10	12.21	2.81	6/21/2022 13:54	11.27	97.65	6/20/2022 11:57	11.60	-0.09	6/20/2022 13:14	-0.01
6/20/2022 12:11	12.20	2.83	6/21/2022 13:55	11.26	97.72	6/20/2022 11:58	11.56	-0.06	6/20/2022 13:15	-0.04
6/20/2022 12:12	12.20	2.85	6/21/2022 13:56	11.26	97.60	6/20/2022 11:59	11.56	-0.03	6/20/2022 13:16	-0.05
6/20/2022 12:13	12.20	2.88	6/21/2022 13:57	11.25	97.54	6/20/2022 12:00	11.56	-0.04	6/20/2022 13:17	-0.02
6/20/2022 12:14	12.22	2.86	6/21/2022 13:58	11.28	97.74	6/20/2022 12:01	11.61	-0.11	6/20/2022 13:18	-0.09
6/20/2022 12:15	12.19	2.88	6/21/2022 13:59	11.29	97.75	6/20/2022 12:02	11.58	-0.04	6/20/2022 13:19	-0.08
6/20/2022 12:16	12.20	3.01	6/21/2022 14:00	11.26	97.73	6/20/2022 12:03	11.57	-0.06	6/20/2022 13:20	-0.02
6/20/2022 12:17	12.21	3.00	6/21/2022 14:01	11.28	97.75	6/20/2022 12:04	11.59	-0.05	6/20/2022 13:21	-0.07
6/20/2022 12:18	12.21	2.99	6/21/2022 14:02	11.28	97.71	6/20/2022 12:05	11.62	-0.07	6/20/2022 13:22	-0.07
6/20/2022 12:19	12.21	3.11	6/21/2022 14:03	11.24	97.59	6/20/2022 12:06	11.61	-0.10	6/20/2022 13:23	-0.04
6/20/2022 12:20	12.21	3.05	6/21/2022 14:04	11.27	97.79	6/20/2022 12:07	11.61	-0.09	6/20/2022 13:24	-0.05
6/20/2022 12:21	12.22	5.35	6/21/2022 14:05	11.29	97.65	6/20/2022 12:08	11.64	-0.10	6/20/2022 13:25	-0.04
6/20/2022 12:22	12.19	18.40	6/21/2022 14:06	11.27	97.75	6/20/2022 12:09	11.60	-0.10	6/20/2022 13:26	-0.04
6/20/2022 12:23	12.15	31.41	6/21/2022 14:07	11.27	97.68	6/20/2022 12:10	11.59	-0.13	6/20/2022 13:27	-0.06
6/20/2022 12:24	12.14	41.51	6/21/2022 14:08	11.27	97.62	6/20/2022 12:11	11.64	-0.08	6/20/2022 13:28	-0.04
6/20/2022 12:25	12.11	47.52	6/21/2022 14:09	11.30	97.87	6/20/2022 12:12	11.63	-0.10	6/20/2022 13:29	-0.05
6/20/2022 12:26	12.11	52.91	6/21/2022 14:10	11.23	97.84	6/20/2022 12:13	11.63	-0.05	6/20/2022 13:30	-0.07
6/20/2022 12:27	12.09	58.07	6/21/2022 14:11	11.29	97.70	6/20/2022 12:14	11.65	-0.09	6/20/2022 13:31	-0.07
6/20/2022 12:28	12.06	62.20	6/21/2022 14:12	11.29	97.61	6/20/2022 12:15	11.63	-0.10	6/20/2022 13:32	-0.05
6/20/2022 12:29	12.08	66.44	6/21/2022 14:13	11.26	97.82	6/20/2022 12:16	11.63	-0.10	6/20/2022 13:33	-0.08
6/20/2022 12:30	12.06	70.34	6/21/2022 14:14	11.29	97.73	6/20/2022 12:17	11.63	-0.10	6/20/2022 13:34	-0.07
6/20/2022 12:31	12.04	73.51	6/21/2022 14:15	11.26	97.70	6/20/2022 12:18	11.62	-0.05	6/20/2022 13:35	-0.07
6/20/2022 12:32	12.02	76.14	6/21/2022 14:16	11.28	97.86	6/20/2022 12:19	11.62	-0.03	6/20/2022 13:36	-0.12
6/20/2022 12:33	12.01	79.19	6/21/2022 14:17	11.24	97.68	6/20/2022 12:20	11.60	-0.06	6/20/2022 13:37	-0.08
6/20/2022 12:34	12.03	81.80	6/21/2022 14:18	11.29	97.56	6/20/2022 12:21	11.62	-0.12	6/20/2022 13:38	-0.07
6/20/2022 12:35	12.00	84.37	6/21/2022 14:19	11.27	97.51	6/20/2022 12:22	11.66	-0.06	6/20/2022 13:39	-0.05
6/20/2022 12:36	12.00	86.52	6/21/2022 14:20	11.25	97.68	6/20/2022 12:23	11.65	-0.10	6/20/2022 13:40	-0.11
6/20/2022 12:37	11.99	88.88	6/21/2022 14:21	11.30	97.76	6/20/2022 12:24	11.65	-0.10	6/20/2022 13:41	-0.07
6/20/2022 12:38	11.97	91.08	6/21/2022 14:22	11.26	97.83	6/20/2022 12:25	11.63	-0.09	6/20/2022 13:42	-0.02
6/20/2022 12:39	11.96	92.54	6/21/2022 14:23	11.23	97.79	6/20/2022 12:26	11.61	-0.05	6/20/2022 13:43	-0.07
6/20/2022 12:40	11.97	94.54	6/21/2022 14:24	11.24	97.90	6/20/2022 12:27	11.65	-0.02	6/20/2022 13:44	-0.10
6/20/2022 12:41	11.94	96.50	6/21/2022 14:25	11.26	97.80	6/20/2022 12:28	11.62	-0.06	6/20/2022 13:45	-0.04
6/20/2022 12:42	11.95	98.12	6/21/2022 14:26	11.26	97.83	6/20/2022 12:29	11.62	-0.06	6/20/2022 13:46	-0.04
6/20/2022 12:43	11.96	100.22	6/21/2022 14:27	11.27	97.70	6/20/2022 12:30	11.66	-0.05	6/20/2022 13:47	-0.04
6/20/2022 12:44	11.92	103.16	6/21/2022 14:28	11.25	97.84	6/20/2022 12:31	11.65	-0.02	6/20/2022 13:48	-0.04
6/20/2022 12:45	11.94	105.82	6/21/2022 14:29	11.27	97.97	6/20/2022 12:32	11.65	-0.06	6/20/2022 13:49	-0.06
6/20/2022 12:46	11.95	108.35	6/21/2022 14:30	11.26	97.70	6/20/2022 12:33	11.67	-0.07	6/20/2022 13:50	-0.06
6/20/2022 12:47	11.92	111.09	6/21/2022 14:31	11.27	97.66	6/20/2022 12:34	11.65	-0.08	6/20/2022 13:51	-0.07
6/20/2022 12:48	11.89	112.99	6/21/2022 14:32	11.30	97.78	6/20/2022 12:35	11.60	-0.07	6/20/2022 13:52	-0.03
6/20/2022 12:49	11.89	115.43	6/21/2022 14:33	11.29	97.67	6/20/2022 12:36	11.66	-0.03	6/20/2022 13:53	-0.05
6/20/2022 12:50	11.90	117.11	6/21/2022 14:34	11.28	97.81	6/20/2022 12:37	11.63	-0.06	6/20/2022 13:54	-0.07
6/20/2022 12:51	11.86	118.98	6/21/2022 14:35	11.28	97.71	6/20/2022 12:38	11.64	-0.09	6/20/2022 13:55	-0.03
6/20/2022 12:52	11.88	120.61	6/21/2022 14:36	11.27	97.80	6/20/2022 12:39	11.60	-0.08	6/20/2022 13:56	-0.09
6/20/2022 12:53	11.90	122.19	6/21/2022 14:37	11.25	97.81	6/20/2022 12:40	11.67	-0.13	6/20/2022 13:57	-0.07
6/20/2022 12:54	11.87	123.88	6/21/2022 14:38	11.24	97.75	6/20/2022 12:41	11.67	-0.12	6/20/2022 13:58	-0.06
6/20/2022 12:55	11.88	125.39	6/21/2022 14:39	11.26	97.90	6/20/2022 12:42	11.65	-0.07	6/20/2022 13:59	-0.04
6/20/2022 12:56	11.89	127.17	6/21/2022 14:40	11.28	97.89	6/20/2022 12:43	11.65	-0.05	6/20/2022 14:00	-0.07
6/20/2022 12:57	11.87	128.32	6/21/2022 14:41	11.28	97.84	6/20/2022 12:44	11.67	-0.09	6/20/2022 14:01	-0.08
6/20/2022 12:58	11.88	129.60	6/21/2022 14:42	11.28	97.88	6/20/2022 12:45	11.66	-0.12	6/20/2022 14:02	-0.03
6/20/2022 12:59	11.82	131.10	6/21/2022 14:43	11.25	97.87	6/20/2022 12:46	11.61	-0.08	6/20/2022 14:03	-0.09
6/20/2022 13:00	11.85	132.36	6/21/2022 14:44	11.25	97.79	6/20/2022 12:47	11.63	-0.09	6/20/2022 14:04	-0.04
6/20/2022 13:01	11.84	133.41	6/21/2022 14:45	11.26	97.87	6/20/2022 12:48	11.62	-0.08	6/20/2022 14:05	-0.04
6/20/2022 13:02	11.86	134.47	6/21/2022 14:46	11.25	97.81	6/20/2022 12:49	11.65	-0.01	6/20/2022 14:06	-0.11
6/20/2022 13:03	11.84	135.75	6/21/2022 14:47	11.29	98.04	6/20/2022 12:50	11.67	-0.11	6/20/2022 14:07	-0.02
6/20/2022 13:04	11.85	137.04	6/21/2022 14:48	11.28	97.86	6/20/2022 12:51	11.63	-0.05	6/20/2022 14:08	-0.03
6/20/2022 13:05	11.79	138.00	6/21/2022 14:49	11.28	97.84	6/20/2022 12:52	11.64	-0.10	6/20/2022 14:09	-0.06
6/20/2022 13:06	11.85	139.31	6/21/2022 14:50	11.26	97.73	6/20/2022 12:53	11.65	-0.08	6/20/2022 14:10	-0.06
6/20/2022 13:07	11.84	140.16	6/21/2022 14:51	11.27	98.00	6/20/2022 12:54	11.67	-0.11	6/20/2022 14:11	-0.08
6/20/2022 13:08	11.85	141.21	6/21/2022 14:52	11.28	97.97	6/20/2022 12:55	11.62	-0.01	6/20/2022 14:12	-0.05
6/20/2022 13:09	11.80	142.27	6/21/2022 14:53	11.24	98.25	6/20/2022 12:56	11.64	-0.09	6/20/2022 14:13	-0.05
6/20/2022 13:10	11.83	143.38	6/21/2022 14:54	11.27	98.57	6/20/2022 12:57	11.63	-0.10	6/20/2022 14:14	-0.07
6/20/2022 13:11	11.84	144.40	6/21/2022 14:55	11.28	98.46	6/20/2022 12:58	11.65	-0.11	6/20/2022 14:15	-0.13
6/20/2022 13:12	11.81	145.17	6/21/2022 14:56	11.27	98.68	6/20/2022 12:59	11.65	-0.07	6/20/2022 14:16	-0.03
6/20/2022 13:13	11.83	145.01	6/21/2022 14:57	11.27	98.39	6/20/2022 13:00	11.64	0.00	6/20/2022 14:17	-0.06
6/20/2022 13:14	11.83	144.14	6/21/2022 14:58	11.28	98.51	6/20/2022 13:01	11.65	-0.10	6/20/2022 14:18	-0.09
6/20/2022 13:15	11.82	142.98	6/21/2022 14:59	11.28	98.70	6/20/2022 13:02	11.66	-0.12	6/20/2022 14:19	-0.05
6/20/2022 13:16	11.81	142.92	6/21/2022 15:00	11.27	98.68	6/20/2022 13:03	11.64	-0.08	6/20/2022 14:20	-0.06
6/20/2022 13:17	11.84	142.32	6/21/2022 15:01	11.26	98.62	6/20/2022 13:04	11.62	-0.07	6/20/2022 14:21	-0.09
6/20/2022 13:18	11.79	142.15	6/21/2022 15:02	11.29	98.51	6/20/2022 13:05	11.62	-0.03	6/20/2022 14:22	0.01

6/20/2022 13:19	11.84	141.87	6/21/2022 15:03	11.27	98.50	6/20/2022 13:06	11.67	-0.12	6/20/2022 14:23	-0.06
6/20/2022 13:20	11.82	142.00	6/21/2022 15:04	11.28	98.66	6/20/2022 13:07	11.65	-0.05	6/20/2022 14:24	-0.07
6/20/2022 13:21	11.85	142.32	6/21/2022 15:05	11.29	98.43	6/20/2022 13:08	11.65	-0.12	6/20/2022 14:25	-0.06
6/20/2022 13:22	11.81	142.06	6/21/2022 15:06	11.28	98.55	6/20/2022 13:09	11.64	-0.09	6/20/2022 14:26	-0.07
6/20/2022 13:23	11.79	142.16	6/21/2022 15:07	11.25	98.40	6/20/2022 13:10	11.61	-0.02	6/20/2022 14:27	-0.11
6/20/2022 13:24	11.84	142.35	6/21/2022 15:08	11.29	98.46	6/20/2022 13:11	11.65	-0.10	6/20/2022 14:28	-0.06
6/20/2022 13:25	11.80	142.64	6/21/2022 15:09	11.27	98.35	6/20/2022 13:12	11.62	-0.10	6/20/2022 14:29	-0.02
6/20/2022 13:26	11.82	142.98	6/21/2022 15:10	11.27	98.56	6/20/2022 13:13	11.61	-0.09	6/20/2022 14:30	-0.05
6/20/2022 13:27	11.82	143.09	6/21/2022 15:11	11.26	98.57	6/20/2022 13:14	11.65	-0.04	6/20/2022 14:31	-0.04
6/20/2022 13:28	11.81	143.61	6/21/2022 15:12	11.28	98.75	6/20/2022 13:15	11.64	-0.05	6/20/2022 14:32	-0.06
6/20/2022 13:29	11.80	143.85	6/21/2022 15:13	11.29	98.62	6/20/2022 13:16	11.60	-0.03	6/20/2022 14:33	-0.02
6/20/2022 13:30	11.84	143.99	6/21/2022 15:14	11.24	98.50	6/20/2022 13:17	11.64	-0.07	6/20/2022 14:34	-0.05
6/20/2022 13:31	11.80	144.23	6/21/2022 15:15	11.25	98.76	6/20/2022 13:18	11.60	-0.02	6/20/2022 14:35	-0.05
6/20/2022 13:32	11.82	144.74	6/21/2022 15:16	11.28	98.51	6/20/2022 13:19	11.64	-0.10	6/20/2022 14:36	-0.03
6/20/2022 13:33	11.81	145.23	6/21/2022 15:17	11.25	98.57	6/20/2022 13:20	11.61	-0.10	6/20/2022 14:37	-0.03
6/20/2022 13:34	11.84	145.43	6/21/2022 15:18	11.28	98.55	6/20/2022 13:21	11.62	-0.05	6/20/2022 14:38	-0.03
6/20/2022 13:35	11.80	145.75	6/21/2022 15:19	11.29	98.44	6/20/2022 13:22	11.64	-0.05	6/20/2022 14:39	-0.10
6/20/2022 13:36	11.81	146.21	6/21/2022 15:20	11.27	98.57	6/20/2022 13:23	11.63	-0.10	6/20/2022 14:40	-0.07
6/20/2022 13:37	11.82	146.39	6/21/2022 15:21	11.26	98.53	6/20/2022 13:24	11.67	-0.07	6/20/2022 14:41	-0.08
6/20/2022 13:38	11.81	146.64	6/21/2022 15:22	11.27	98.70	6/20/2022 13:25	11.64	-0.08	6/20/2022 14:42	-0.04
6/20/2022 13:39	11.80	147.15	6/21/2022 15:23	11.26	98.51	6/20/2022 13:26	11.63	-0.05	6/20/2022 14:43	-0.05
6/20/2022 13:40	11.83	147.12	6/21/2022 15:24	11.26	98.39	6/20/2022 13:27	11.59	-0.09	6/20/2022 14:44	-0.08
6/20/2022 13:41	11.81	147.40	6/21/2022 15:25	11.28	98.57	6/20/2022 13:28	11.61	-0.08	6/20/2022 14:45	-0.05
6/20/2022 13:42	11.83	148.04	6/21/2022 15:26	11.26	98.53	6/20/2022 13:29	11.62	-0.08	6/20/2022 14:46	-0.07
6/20/2022 13:43	11.82	148.46	6/21/2022 15:27	11.28	98.56	6/20/2022 13:30	11.62	-0.07	6/20/2022 14:47	-0.08
6/20/2022 13:44	11.79	148.75	6/21/2022 15:28	11.27	98.46	6/20/2022 13:31	11.61	-0.06	6/20/2022 14:48	-0.08
6/20/2022 13:45	11.83	148.99	6/21/2022 15:29	11.27	98.76	6/20/2022 13:32	11.66	-0.09	6/20/2022 14:49	-0.08
6/20/2022 13:46	11.83	149.58	6/21/2022 15:30	11.26	98.41	6/20/2022 13:33	11.62	-0.12	6/20/2022 14:50	-0.04
6/20/2022 13:47	11.78	149.85	6/21/2022 15:31	11.29	98.65	6/20/2022 13:34	11.65	-0.12	6/20/2022 14:51	-0.05
6/20/2022 13:48	11.81	150.17	6/21/2022 15:32	11.27	98.37	6/20/2022 13:35	11.63	-0.04	6/20/2022 14:52	-0.08
6/20/2022 13:49	11.81	150.55	6/21/2022 15:33	11.24	98.39	6/20/2022 13:36	11.64	-0.10	6/20/2022 14:53	-0.04
6/20/2022 13:50	11.79	150.88	6/21/2022 15:34	11.24	98.52	6/20/2022 13:37	11.63	-0.07	6/20/2022 14:54	-0.10
6/20/2022 13:51	11.82	151.05	6/21/2022 15:35	11.28	98.57	6/20/2022 13:38	11.61	-0.08	6/20/2022 14:55	-0.08
6/20/2022 13:52	11.80	151.75	6/21/2022 15:36	11.26	98.65	6/20/2022 13:39	11.58	-0.07	6/20/2022 14:56	-0.10
6/20/2022 13:53	11.81	151.76	6/21/2022 15:37	11.26	98.40	6/20/2022 13:40	11.59	-0.08	6/20/2022 14:57	-0.11
6/20/2022 13:54	11.80	152.26	6/21/2022 15:38	11.25	98.57	6/20/2022 13:41	11.64	-0.10	6/20/2022 14:58	-0.05
6/20/2022 13:55	11.77	152.50	6/21/2022 15:39	11.25	98.65	6/20/2022 13:42	11.63	-0.09	6/20/2022 14:59	-0.07
6/20/2022 13:56	11.81	152.86	6/21/2022 15:40	11.23	98.63	6/20/2022 13:43	11.65	-0.09	6/20/2022 15:00	-0.10
6/20/2022 13:57	11.85	153.27	6/21/2022 15:41	11.26	98.55	6/20/2022 13:44	11.64	-0.05	6/20/2022 15:01	-0.06
6/20/2022 13:58	11.83	153.45	6/21/2022 15:42	11.28	98.61	6/20/2022 13:45	11.65	-0.07	6/20/2022 15:02	-0.07
6/20/2022 13:59	11.81	153.76	6/21/2022 15:43	11.25	98.71	6/20/2022 13:46	11.62	-0.09	6/20/2022 15:03	-0.06
6/20/2022 14:00	11.82	154.06	6/21/2022 15:44	11.27	98.66	6/20/2022 13:47	11.64	-0.11	6/20/2022 15:04	-0.05
6/20/2022 14:01	11.78	154.36	6/21/2022 15:45	11.26	98.62	6/20/2022 13:48	11.62	-0.09	6/20/2022 15:05	0.00
6/20/2022 14:02	11.81	155.01	6/21/2022 15:46	11.28	98.63	6/20/2022 13:49	11.66	-0.05	6/20/2022 15:06	-0.09
6/20/2022 14:03	11.81	155.36	6/21/2022 15:47	11.26	98.65	6/20/2022 13:50	11.64	-0.10	6/20/2022 15:07	-0.05
6/20/2022 14:04	11.80	155.46	6/21/2022 15:48	11.29	98.56	6/20/2022 13:51	11.60	-0.06	6/20/2022 15:08	-0.05
6/20/2022 14:05	11.81	155.69	6/21/2022 15:49	11.28	98.57	6/20/2022 13:52	11.67	-0.07	6/20/2022 15:09	-0.05
6/20/2022 14:06	11.79	156.11	6/21/2022 15:50	11.27	98.34	6/20/2022 13:53	11.66	-0.04	6/20/2022 15:10	-0.03
6/20/2022 14:07	11.81	156.29	6/21/2022 15:51	11.27	98.46	6/20/2022 13:54	11.63	-0.08	6/20/2022 15:11	-0.04
6/20/2022 14:08	11.80	156.58	6/21/2022 15:52	11.26	98.67	6/20/2022 13:55	11.65	-0.04	6/20/2022 15:12	-0.03
6/20/2022 14:09	11.80	157.13	6/21/2022 15:53	11.26	98.65	6/20/2022 13:56	11.64	-0.12	6/20/2022 15:13	-0.04
6/20/2022 14:10	11.75	157.47	6/21/2022 15:54	11.27	98.56	6/20/2022 13:57	11.62	-0.04	6/20/2022 15:14	-0.06
6/20/2022 14:11	11.76	157.60	6/21/2022 15:55	11.28	98.38	6/20/2022 13:58	11.61	-0.08	6/20/2022 15:15	-0.08
6/20/2022 14:12	11.80	158.09	6/21/2022 15:56	11.27	98.54	6/20/2022 13:59	11.64	-0.12	6/20/2022 15:16	-0.09
6/20/2022 14:13	11.79	158.06	6/21/2022 15:57	11.28	98.61	6/20/2022 14:00	11.64	-0.06	6/20/2022 15:17	-0.04
6/20/2022 14:14	11.80	158.48	6/21/2022 15:58	11.28	98.49	6/20/2022 14:01	11.61	-0.09	6/20/2022 15:18	-0.03
6/20/2022 14:15	11.77	158.66	6/21/2022 15:59	11.26	98.55	6/20/2022 14:02	11.65	-0.08	6/20/2022 15:19	-0.04
6/20/2022 14:16	11.77	158.94	6/21/2022 16:00	11.26	98.67	6/20/2022 14:03	11.62	-0.07	6/20/2022 15:20	-0.05
6/20/2022 14:17	11.79	159.55	6/21/2022 16:01	11.29	98.52	6/20/2022 14:04	11.63	-0.04	6/20/2022 15:21	-0.09
6/20/2022 14:18	11.79	159.78	6/21/2022 16:02	11.29	98.53	6/20/2022 14:05	11.62	-0.10	6/20/2022 15:22	0.00
6/20/2022 14:19	11.78	159.82	6/21/2022 16:03	11.26	98.49	6/20/2022 14:06	11.61	-0.02	6/20/2022 15:23	-0.06
6/20/2022 14:20	11.78	160.20	6/21/2022 16:04	11.26	98.70	6/20/2022 14:07	11.61	-0.10	6/20/2022 15:24	-0.04
6/20/2022 14:21	11.81	160.29	6/21/2022 16:05	11.29	98.57	6/20/2022 14:08	11.64	-0.06	6/20/2022 15:25	-0.07
6/20/2022 14:22	11.81	160.86	6/21/2022 16:06	11.29	98.55	6/20/2022 14:09	11.62	-0.04	6/20/2022 15:26	-0.08
6/20/2022 14:23	11.76	161.25	6/21/2022 16:07	11.27	98.45	6/20/2022 14:10	11.64	-0.08	6/20/2022 15:27	-0.01
6/20/2022 14:24	11.79	161.52	6/21/2022 16:08	11.28	98.83	6/20/2022 14:11	11.64	-0.09	6/20/2022 15:28	-0.08
6/20/2022 14:25	11.79	161.80	6/21/2022 16:09	11.27	98.60	6/20/2022 14:12	11.62	-0.06	6/20/2022 15:29	-0.09
6/20/2022 14:26	11.79	161.86	6/21/2022 16:10	11.27	98.61	6/20/2022 14:13	11.60	-0.06	6/20/2022 15:30	-0.06
6/20/2022 14:27	11.76	162.31	6/21/2022 16:11	11.26	98.50	6/20/2022 14:14	11.62	-0.07	6/20/2022 15:31	-0.07
6/20/2022 14:28	11.79	162.41	6/21/2022 16:12	11.28	98.59	6/20/2022 14:15	11.64	-0.06	6/20/2022 15:32	-0.05
6/20/2022 14:29	11.78	162.97	6/21/2022 16:13	11.27	98.73	6/20/2022 14:16	11.64	-0.05	6/20/2022 15:33	-0.02
6/20/2022 14:30	11.76	163.13	6/21/2022 16:14	11.28	99.09	6/20/2022 14:17	11.64	-0.07	6/20/2022 15:34	-0.03
6/20/2022 14:31	11.77	163.29	6/21/2022 16:15	11.27	99.19	6/20/2022 14:18	11.62	-0.08	6/20/2022 15:35	-0.12
6/20/2022 14:32	11.78	163.46	6/21/2022 16:16	11.25	99.03	6/20/2022 14:19	11.60	-0.06	6/20/2022 15:36	-0.10
6/20/2022 14:33	11.78	163.69	6/21/2022 16:17	11.28	99.08	6/20/2022 14:20	11.61	-0.10	6/20/2022 15:37	0.00
6/20/2022 14:34	11.78	164.10	6/21/2022 16:18	11.28	99.12	6/20/2022 14:21	11.61	-0.09	6/20/2022 15:38	-0.10
6/20/2022 14:35	11.77	164.26	6/21/2022 16:19	11.27	99.13	6/20/2022 14:22	11.65	-0.09	6/20/2022 15:39	-0.03
6/20/2022 14:36	11.76	164.59	6/21/2022 16:20	11.28	99.38	6/20/2022 14:23	11.63	-0.09	6/20/2022 15:40	-0.05
6/20/2022 14:37	11.80	164.69	6/21/2022 16:21	11.27	99.02	6/20/2022 14:24	11.64	-0.05	6/20/2022 15:41	-0.03
6/20/2022 14:38	11.76	164.91	6/21/2022 16:22	11.27	99.17	6/20/2022 14:25	11.63	-0.09	6/20/2022 15:42	0.00
6/20/2022 14:39	11.80	165.00	6/21/2022 16:23	11.25	99.41	6/20/2022 14:26	11.65	-0.09	6/20/2022 15:43	-0.07
6/20/2022 14:40	11.77	165.27	6/21/2022 16:24	11.27	99.34	6/20/2022 14:27	11.63	-0.06	6/20/2022 15:44	-0.07
6/20/2022 14:41	11.79	165.63	6/21/2022 16:25	11.27	99.21	6/20/2022 14:28	11.60	-0.08	6/20/2022 15:45	-0.09
6/20/2022 14:42	11.78	165.97	6/21/2022 16:26	11.25	99.34	6/20/2022 14:29	11.59	-0.05	6/20/2022 15:46	-0.04
6/20/2022 14:43	11.77	166.23	6/21/2022 16:27	11.28	99.17	6/20/2022 14:30	11.65	-0.11	6/20/2022 15:47	-0.03
6/20/2022 14:44	11.78	166.21	6/21/2022 16:28	11.27	99.32	6/20/2022 14:31	11.62	-0.11	6/20/2022 15:48	-0.01
6/20/2022 14:45	11.79	166.63	6/21/2022 16:29	11.28	99.21	6/20/2022 14:32	11.63	-0.07	6/20/2022 15:49	-0.05
6/20/2022 14:46	11.78	166.69	6/21/2022 16:30	11.28	99.14	6/20/2022 14:33	11.62	-0.07	6/20/2022 15:50	-0.11

6/20/2022 14:47	11.80	166.89	6/21/2022 16:31	11.26	99.13	6/20/2022 14:34	11.62	-0.03	6/20/2022 15:51	-0.05
6/20/2022 14:48	11.79	167.30	6/21/2022 16:32	11.28	99.30	6/20/2022 14:35	11.63	-0.08	6/20/2022 15:52	-0.04
6/20/2022 14:49	11.75	167.32	6/21/2022 16:33	11.28	99.40	6/20/2022 14:36	11.62	-0.07	6/20/2022 15:53	-0.09
6/20/2022 14:50	11.78	167.67	6/21/2022 16:34	11.30	99.15	6/20/2022 14:37	11.64	-0.08	6/20/2022 15:54	-0.07
6/20/2022 14:51	11.74	167.84	6/21/2022 16:35	11.26	99.42	6/20/2022 14:38	11.62	-0.11	6/20/2022 15:55	0.02
6/20/2022 14:52	11.74	168.22	6/21/2022 16:36	11.26	99.41	6/20/2022 14:39	11.61	-0.10	6/20/2022 15:56	0.02
6/20/2022 14:53	11.76	168.45	6/21/2022 16:37	11.26	99.32	6/20/2022 14:40	11.62	-0.05	6/20/2022 15:57	-0.02
6/20/2022 14:54	11.78	168.63	6/21/2022 16:38	11.30	99.44	6/20/2022 14:41	11.64	-0.07	6/20/2022 15:58	-0.03
6/20/2022 14:55	11.79	168.81	6/21/2022 16:39	11.26	99.25	6/20/2022 14:42	11.63	-0.12	6/20/2022 15:59	-0.05
6/20/2022 14:56	11.78	168.90	6/21/2022 16:40	11.26	99.19	6/20/2022 14:43	11.63	-0.04	6/20/2022 16:00	-0.05
6/20/2022 14:57	11.78	169.38	6/21/2022 16:41	11.27	99.43	6/20/2022 14:44	11.64	-0.11	6/20/2022 16:01	-0.06
6/20/2022 14:58	11.76	169.26	6/21/2022 16:42	11.27	99.10	6/20/2022 14:45	11.63	-0.06	6/20/2022 16:02	0.04
6/20/2022 14:59	11.79	169.59	6/21/2022 16:43	11.26	99.47	6/20/2022 14:46	11.63	-0.06	6/20/2022 16:03	-0.06
6/20/2022 15:00	11.76	169.52	6/21/2022 16:44	11.27	99.24	6/20/2022 14:47	11.62	-0.08	6/20/2022 16:04	-0.09
6/20/2022 15:01	11.79	170.08	6/21/2022 16:45	11.25	99.39	6/20/2022 14:48	11.62	-0.06	6/20/2022 16:05	-0.05
6/20/2022 15:02	11.77	170.33	6/21/2022 16:46	11.27	99.43	6/20/2022 14:49	11.63	-0.09	6/20/2022 16:06	-0.05
6/20/2022 15:03	11.76	170.27	6/21/2022 16:47	11.25	99.66	6/20/2022 14:50	11.63	-0.12	6/20/2022 16:07	-0.04
6/20/2022 15:04	11.76	170.67	6/21/2022 16:48	11.27	99.42	6/20/2022 14:51	11.63	-0.06	6/20/2022 16:08	-0.07
6/20/2022 15:05	11.77	170.83	6/21/2022 16:49	11.29	99.37	6/20/2022 14:52	11.63	-0.09	6/20/2022 16:09	-0.07
6/20/2022 15:06	11.79	170.87	6/21/2022 16:50	11.27	99.36	6/20/2022 14:53	11.64	-0.03	6/20/2022 16:10	-0.08
6/20/2022 15:07	11.77	171.26	6/21/2022 16:51	11.29	99.48	6/20/2022 14:54	11.62	-0.09	6/20/2022 16:11	-0.08
6/20/2022 15:08	11.76	171.40	6/21/2022 16:52	11.28	99.50	6/20/2022 14:55	11.60	-0.08	6/20/2022 16:12	-0.08
6/20/2022 15:09	11.80	171.57	6/21/2022 16:53	11.25	99.45	6/20/2022 14:56	11.64	-0.09	6/20/2022 16:13	-0.05
6/20/2022 15:10	11.75	171.88	6/21/2022 16:54	11.27	99.45	6/20/2022 14:57	11.63	-0.11	6/20/2022 16:14	-0.08
6/20/2022 15:11	11.77	171.94	6/21/2022 16:55	11.26	99.49	6/20/2022 14:58	11.63	-0.09	6/20/2022 16:15	-0.07
6/20/2022 15:12	11.77	172.50	6/21/2022 16:56	11.27	99.57	6/20/2022 14:59	11.61	-0.10	6/20/2022 16:16	-0.08
6/20/2022 15:13	11.76	172.39	6/21/2022 16:57	11.26	99.44	6/20/2022 15:00	11.60	-0.06	6/20/2022 16:17	-0.04
6/20/2022 15:14	11.76	172.64	6/21/2022 16:58	11.26	99.50	6/20/2022 15:01	11.63	-0.10	6/20/2022 16:18	-0.03
6/20/2022 15:15	11.75	172.69	6/21/2022 16:59	11.28	99.41	6/20/2022 15:02	11.64	-0.10	6/20/2022 16:19	-0.10
6/20/2022 15:16	11.78	172.90	6/21/2022 17:00	11.26	99.65	6/20/2022 15:03	11.62	-0.07	6/20/2022 16:20	-0.04
6/20/2022 15:17	11.76	173.19	6/21/2022 17:01	11.26	99.73	6/20/2022 15:04	11.64	-0.08	6/20/2022 16:21	-0.04
6/20/2022 15:18	11.75	173.23	6/21/2022 17:02	11.27	99.57	6/20/2022 15:05	11.61	-0.08	6/20/2022 16:22	-0.08
6/20/2022 15:19	11.79	173.49	6/21/2022 17:03	11.25	99.55	6/20/2022 15:06	11.63	-0.08	6/20/2022 16:23	-0.05
6/20/2022 15:20	11.77	173.67	6/21/2022 17:04	11.28	99.69	6/20/2022 15:07	11.59	-0.09	6/20/2022 16:24	-0.04
6/20/2022 15:21	11.76	173.77	6/21/2022 17:05	11.30	99.39	6/20/2022 15:08	11.62	-0.08	6/20/2022 16:25	-0.08
6/20/2022 15:22	11.78	174.02	6/21/2022 17:06	11.27	99.71	6/20/2022 15:09	11.60	-0.07	6/20/2022 16:26	-0.06
6/20/2022 15:23	11.76	174.27	6/21/2022 17:07	11.27	99.84	6/20/2022 15:10	11.64	-0.08	6/20/2022 16:27	-0.05
6/20/2022 15:24	11.77	174.42	6/21/2022 17:08	11.28	99.70	6/20/2022 15:11	11.60	-0.07	6/20/2022 16:28	-0.07
6/20/2022 15:25	11.77	174.79	6/21/2022 17:09	11.24	99.83	6/20/2022 15:12	11.62	-0.07	6/20/2022 16:29	0.03
6/20/2022 15:26	11.79	174.73	6/21/2022 17:10	11.27	99.57	6/20/2022 15:13	11.61	-0.06	6/20/2022 16:30	-0.01
6/20/2022 15:27	11.75	175.01	6/21/2022 17:11	11.27	99.44	6/20/2022 15:14	11.62	-0.02	6/20/2022 16:31	-0.01
6/20/2022 15:28	11.75	175.04	6/21/2022 17:12	11.27	99.59	6/20/2022 15:15	11.62	-0.11	6/20/2022 16:32	0.00
6/20/2022 15:29	11.78	175.20	6/21/2022 17:13	11.25	99.57	6/20/2022 15:16	11.63	-0.07	6/20/2022 16:33	-0.04
6/20/2022 15:30	11.77	175.63	6/21/2022 17:14	11.28	99.62	6/20/2022 15:17	11.64	-0.08	6/20/2022 16:34	-0.05
6/20/2022 15:31	11.78	175.76	6/21/2022 17:15	11.24	99.61	6/20/2022 15:18	11.61	-0.07	6/20/2022 16:35	-0.03
6/20/2022 15:32	11.79	175.56	6/21/2022 17:16	11.25	99.72	6/20/2022 15:19	11.61	-0.13	6/20/2022 16:36	-0.05
6/20/2022 15:33	11.79	175.96	6/21/2022 17:17	11.25	99.78	6/20/2022 15:20	11.62	-0.09	6/20/2022 16:37	-0.06
6/20/2022 15:34	11.79	176.17	6/21/2022 17:18	11.30	100.01	6/20/2022 15:21	11.65	-0.10	6/20/2022 16:38	-0.05
6/20/2022 15:35	11.77	176.36	6/21/2022 17:19	11.27	99.78	6/20/2022 15:22	11.63	-0.09	6/20/2022 16:39	-0.07
6/20/2022 15:36	11.77	176.70	6/21/2022 17:20	11.28	99.92	6/20/2022 15:23	11.63	-0.09	6/20/2022 16:40	-0.04
6/20/2022 15:37	11.77	176.33	6/21/2022 17:21	11.27	99.69	6/20/2022 15:24	11.63	-0.10	6/20/2022 16:41	-0.08
6/20/2022 15:38	11.77	176.78	6/21/2022 17:22	11.27	99.89	6/20/2022 15:25	11.61	-0.08	6/20/2022 16:42	-0.10
6/20/2022 15:39	11.78	177.26	6/21/2022 17:23	11.28	99.77	6/20/2022 15:26	11.64	-0.06	6/20/2022 16:43	-0.05
6/20/2022 15:40	11.74	176.95	6/21/2022 17:24	11.25	99.96	6/20/2022 15:27	11.61	-0.05	6/20/2022 16:44	-0.07
6/20/2022 15:41	11.78	177.25	6/21/2022 17:25	11.28	99.73	6/20/2022 15:28	11.61	-0.04	6/20/2022 16:45	-0.12
6/20/2022 15:42	11.80	177.11	6/21/2022 17:26	11.28	99.97	6/20/2022 15:29	11.64	-0.07	6/20/2022 16:46	-0.08
6/20/2022 15:43	11.77	177.46	6/21/2022 17:27	11.28	99.66	6/20/2022 15:30	11.62	-0.12	6/20/2022 16:47	-0.05
6/20/2022 15:44	11.75	177.60	6/21/2022 17:28	11.29	99.85	6/20/2022 15:31	11.61	-0.08	6/20/2022 16:48	-0.01
6/20/2022 15:45	11.76	177.73	6/21/2022 17:29	11.26	99.72	6/20/2022 15:32	11.63	-0.07	6/20/2022 16:49	-0.08
6/20/2022 15:46	11.73	178.07	6/21/2022 17:30	11.27	99.59	6/20/2022 15:33	11.64	-0.05	6/20/2022 16:50	-0.07
6/20/2022 15:47	11.75	178.15	6/21/2022 17:31	11.26	99.73	6/20/2022 15:34	11.63	-0.10	6/20/2022 16:51	-0.04
6/20/2022 15:48	11.77	178.32	6/21/2022 17:32	11.27	99.81	6/20/2022 15:35	11.64	-0.08	6/20/2022 16:52	-0.09
6/20/2022 15:49	11.76	178.38	6/21/2022 17:33	11.26	99.74	6/20/2022 15:36	11.62	-0.05	6/20/2022 16:53	-0.09
6/20/2022 15:50	11.78	178.54	6/21/2022 17:34	11.27	99.87	6/20/2022 15:37	11.64	-0.08	6/20/2022 16:54	-0.08
6/20/2022 15:51	11.77	178.78	6/21/2022 17:35	11.27	99.75	6/20/2022 15:38	11.62	-0.12	6/20/2022 16:55	-0.03
6/20/2022 15:52	11.77	178.88	6/21/2022 17:36	11.25	99.83	6/20/2022 15:39	11.61	-0.08	6/20/2022 16:56	-0.08
6/20/2022 15:53	11.73	178.89	6/21/2022 17:37	11.27	99.79	6/20/2022 15:40	11.62	-0.09	6/20/2022 16:57	-0.01
6/20/2022 15:54	11.78	179.32	6/21/2022 17:38	11.29	99.94	6/20/2022 15:41	11.65	-0.06	6/20/2022 16:58	-0.05
6/20/2022 15:55	11.75	179.46	6/21/2022 17:39	11.26	100.06	6/20/2022 15:42	11.62	-0.07	6/20/2022 16:59	-0.06
6/20/2022 15:56	11.77	179.39	6/21/2022 17:40	11.27	99.81	6/20/2022 15:43	11.62	-0.10	6/20/2022 17:00	-0.05
6/20/2022 15:57	11.77	179.74	6/21/2022 17:41	11.27	99.97	6/20/2022 15:44	11.63	-0.03	6/20/2022 17:01	-0.07
6/20/2022 15:58	11.74	179.90	6/21/2022 17:42	11.26	99.69	6/20/2022 15:45	11.62	-0.07	6/20/2022 17:02	-0.07
6/20/2022 15:59	11.78	179.79	6/21/2022 17:43	11.28	100.04	6/20/2022 15:46	11.64	-0.09	6/20/2022 17:03	-0.05
6/20/2022 16:00	11.73	179.90	6/21/2022 17:44	11.26	100.11	6/20/2022 15:47	11.62	-0.06	6/20/2022 17:04	-0.08
6/20/2022 16:01	11.75	179.95	6/21/2022 17:45	11.28	99.87	6/20/2022 15:48	11.63	-0.05	6/20/2022 17:05	-0.11
6/20/2022 16:02	11.75	180.32	6/21/2022 17:46	11.29	100.00	6/20/2022 15:49	11.65	-0.10	6/20/2022 17:06	-0.04
6/20/2022 16:03	11.77	180.68	6/21/2022 17:47	11.29	100.07	6/20/2022 15:50	11.59	-0.05	6/20/2022 17:07	-0.09
6/20/2022 16:04	11.75	180.51	6/21/2022 17:48	11.26	100.10	6/20/2022 15:51	11.62	-0.07	6/20/2022 17:08	-0.09
6/20/2022 16:05	11.77	180.70	6/21/2022 17:49	11.28	99.98	6/20/2022 15:52	11.61	-0.10	6/20/2022 17:09	-0.08
6/20/2022 16:06	11.73	180.80	6/21/2022 17:50	11.27	100.07	6/20/2022 15:53	11.60	-0.08	6/20/2022 17:10	-0.04
6/20/2022 16:07	11.77	180.96	6/21/2022 17:51	11.24	100.06	6/20/2022 15:54	11.64	-0.08	6/20/2022 17:11	-0.06
6/20/2022 16:08	11.73	181.17	6/21/2022 17:52	11.29	99.95	6/20/2022 15:55	11.64	-0.06	6/20/2022 17:12	0.00
6/20/2022 16:09	11.77	181.11	6/21/2022 17:53	11.25	100.03	6/20/2022 15:56	11.61	-0.06	6/20/2022 17:13	-0.06
6/20/2022 16:10	11.78	181.33	6/21/2022 17:54	11.25	99.87	6/20/2022 15:57	11.62	-0.12	6/20/2022 17:14	-0.04
6/20/2022 16:11	11.75	181.38	6/21/2022 17:55	11.26	100.00	6/20/2022 15:58	11.63	-0.09	6/20/2022 17:15	-0.06
6/20/2022 16:12	11.76	181.74	6/21/2022 17:56	11.26	100.19	6/20/2022 15:59	11.62	-0.06	6/20/2022 17:16	-0.09
6/20/2022 16:13	11.76	181.56	6/21/2022 17:57	11.26	100.05	6/20/2022 16:00	11.64	-0.08	6/20/2022 17:17	-0.04
6/20/2022 16:14	11.77	181.85	6/21/2022 17:58	11.28	99.90	6/20/2022 16:01	11.61	-0.08	6/20/2022 17:18	-0.10

6/20/2022 16:15	11.75	181.90	6/21/2022 17:59	11.26	99.99	6/20/2022 16:02	11.61	-0.11	6/20/2022 17:19	-0.09
6/20/2022 16:16	11.79	182.07	6/21/2022 18:00	11.27	100.02	6/20/2022 16:03	11.65	-0.10	6/20/2022 17:20	-0.12
6/20/2022 16:17	11.77	182.14	6/21/2022 18:01	11.26	100.12	6/20/2022 16:04	11.63	-0.08	6/20/2022 17:21	-0.11
6/20/2022 16:18	11.76	182.57	6/21/2022 18:02	11.28	100.12	6/20/2022 16:05	11.64	-0.07	6/20/2022 17:22	-0.06
6/20/2022 16:19	11.76	182.57	6/21/2022 18:03	11.25	99.89	6/20/2022 16:06	11.65	-0.02	6/20/2022 17:23	-0.07
6/20/2022 16:20	11.74	182.67	6/21/2022 18:04	11.24	100.03	6/20/2022 16:07	11.61	-0.06	6/20/2022 17:24	-0.07
6/20/2022 16:21	11.74	182.81	6/21/2022 18:05	11.28	100.15	6/20/2022 16:08	11.62	-0.05	6/20/2022 17:25	-0.07
6/20/2022 16:22	11.75	183.02	6/21/2022 18:06	11.24	99.87	6/20/2022 16:09	11.65	-0.06	6/20/2022 17:26	-0.10
6/20/2022 16:23	11.75	182.49	6/21/2022 18:07	11.29	99.95	6/20/2022 16:10	11.62	-0.05	6/20/2022 17:27	-0.11
6/20/2022 16:24	11.75	183.06	6/21/2022 18:08	11.28	100.07	6/20/2022 16:11	11.63	-0.08	6/20/2022 17:28	-0.12
6/20/2022 16:25	11.77	183.15	6/21/2022 18:09	11.27	99.97	6/20/2022 16:12	11.63	-0.11	6/20/2022 17:29	-0.05
6/20/2022 16:26	11.75	183.39	6/21/2022 18:10	11.29	100.15	6/20/2022 16:13	11.62	-0.07	6/20/2022 17:30	-0.06
6/20/2022 16:27	11.75	183.34	6/21/2022 18:11	11.28	100.05	6/20/2022 16:14	11.62	-0.10	6/20/2022 17:31	-0.07
6/20/2022 16:28	11.76	183.93	6/21/2022 18:12	11.29	100.02	6/20/2022 16:15	11.63	-0.08	6/20/2022 17:32	-0.05
6/20/2022 16:29	11.76	183.57	6/21/2022 18:13	11.27	100.18	6/20/2022 16:16	11.61	-0.07	6/20/2022 17:33	-0.07
6/20/2022 16:30	11.73	183.69	6/21/2022 18:14	11.28	100.27	6/20/2022 16:17	11.62	-0.08	6/20/2022 17:34	-0.05
6/20/2022 16:31	11.75	183.85	6/21/2022 18:15	11.28	99.88	6/20/2022 16:18	11.63	-0.09	6/20/2022 17:35	-0.08
6/20/2022 16:32	11.75	184.16	6/21/2022 18:16	11.25	99.93	6/20/2022 16:19	11.61	-0.07	6/20/2022 17:36	-0.07
6/20/2022 16:33	11.74	184.24	6/21/2022 18:17	11.29	99.98	6/20/2022 16:20	11.61	-0.09	6/20/2022 17:37	-0.09
6/20/2022 16:34	11.76	184.14	6/21/2022 18:18	11.27	100.01	6/20/2022 16:21	11.62	-0.07	6/20/2022 17:38	-0.07
6/20/2022 16:35	11.75	184.22	6/21/2022 18:19	11.29	100.15	6/20/2022 16:22	11.64	-0.10	6/20/2022 17:39	-0.05
6/20/2022 16:36	11.76	184.61	6/21/2022 18:20	11.28	100.10	6/20/2022 16:23	11.62	-0.11	6/20/2022 17:40	-0.12
6/20/2022 16:37	11.76	184.76	6/21/2022 18:21	11.26	100.06	6/20/2022 16:24	11.63	-0.10	6/20/2022 17:41	-0.06
6/20/2022 16:38	11.76	184.82	6/21/2022 18:22	11.26	100.13	6/20/2022 16:25	11.63	-0.08	6/20/2022 17:42	-0.11
6/20/2022 16:39	11.74	184.94	6/21/2022 18:23	11.29	100.28	6/20/2022 16:26	11.64	-0.09	6/20/2022 17:43	-0.06
6/20/2022 16:40	11.75	185.02	6/21/2022 18:24	11.27	100.18	6/20/2022 16:27	11.64	-0.11	6/20/2022 17:44	-0.07
6/20/2022 16:41	11.76	185.05	6/21/2022 18:25	11.27	99.84	6/20/2022 16:28	11.62	-0.09	6/20/2022 17:45	-0.10
6/20/2022 16:42	11.76	185.12	6/21/2022 18:26	11.27	100.04	6/20/2022 16:29	11.62	-0.07	6/20/2022 17:46	-0.05
6/20/2022 16:43	11.74	185.23	6/21/2022 18:27	11.23	99.97	6/20/2022 16:30	11.63	-0.10	6/20/2022 17:47	-0.06
6/20/2022 16:44	11.73	185.52	6/21/2022 18:28	11.26	100.02	6/20/2022 16:31	11.61	-0.10	6/20/2022 17:48	-0.06
6/20/2022 16:45	11.72	185.72	6/21/2022 18:29	11.29	100.12	6/20/2022 16:32	11.61	7.27	6/20/2022 17:49	-0.06
6/20/2022 16:46	11.77	185.98	6/21/2022 18:30	11.26	100.07	6/20/2022 16:33	11.62	2.57	6/20/2022 17:50	-0.02
6/20/2022 16:47	11.76	185.85	6/21/2022 18:31	11.28	100.00	6/20/2022 16:34	11.61	-0.10	6/20/2022 17:51	-0.06
6/20/2022 16:48	11.74	186.03	6/21/2022 18:32	11.26	100.31	6/20/2022 16:35	11.60	-0.07	6/20/2022 17:52	-0.04
6/20/2022 16:49	11.76	186.00	6/21/2022 18:33	11.25	100.06	6/20/2022 16:36	11.62	-0.11	6/20/2022 17:53	-0.03
6/20/2022 16:50	11.75	186.21	6/21/2022 18:34	11.27	100.24	6/20/2022 16:37	11.62	-0.07	6/20/2022 17:54	-0.09
6/20/2022 16:51	11.76	186.23	6/21/2022 18:35	11.26	100.14	6/20/2022 16:38	11.61	5.34	6/20/2022 17:55	-0.06
6/20/2022 16:52	11.73	186.42	6/21/2022 18:36	11.28	100.26	6/20/2022 16:39	11.62	13.95	6/20/2022 17:56	-0.08
6/20/2022 16:53	11.77	186.52	6/21/2022 18:37	11.26	100.02	6/20/2022 16:40	11.57	18.86	6/20/2022 17:57	-0.06
6/20/2022 16:54	11.77	186.48	6/21/2022 18:38	11.28	100.09	6/20/2022 16:41	11.55	22.51	6/20/2022 17:58	-0.02
6/20/2022 16:55	11.76	186.69	6/21/2022 18:39	11.27	100.17	6/20/2022 16:42	11.53	24.44	6/20/2022 17:59	-0.04
6/20/2022 16:56	11.75	187.05	6/21/2022 18:40	11.26	100.07	6/20/2022 16:43	11.49	27.09	6/20/2022 18:00	-0.03
6/20/2022 16:57	11.80	186.95	6/21/2022 18:41	11.24	100.33	6/20/2022 16:44	11.47	27.94	6/20/2022 18:01	-0.06
6/20/2022 16:58	11.81	186.80	6/21/2022 18:42	11.29	99.88	6/20/2022 16:45	11.47	28.16	6/20/2022 18:02	-0.05
6/20/2022 16:59	11.80	187.21	6/21/2022 18:43	11.25	100.28	6/20/2022 16:46	11.42	31.48	6/20/2022 18:03	-0.05
6/20/2022 17:00	11.83	187.04	6/21/2022 18:44	11.29	100.24	6/20/2022 16:47	11.41	30.80	6/20/2022 18:04	-0.08
6/20/2022 17:01	11.85	187.43	6/21/2022 18:45	11.27	100.12	6/20/2022 16:48	11.39	32.25	6/20/2022 18:05	-0.04
6/20/2022 17:02	11.82	187.56	6/21/2022 18:46	11.27	100.25	6/20/2022 16:49	11.40	31.72	6/20/2022 18:06	-0.05
6/20/2022 17:03	11.81	187.39	6/21/2022 18:47	11.27	100.28	6/20/2022 16:50	11.43	32.22	6/20/2022 18:07	-0.04
6/20/2022 17:04	11.84	187.58	6/21/2022 18:48	11.25	99.89	6/20/2022 16:51	11.41	34.55	6/20/2022 18:08	-0.05
6/20/2022 17:05	11.84	187.83	6/21/2022 18:49	11.27	100.39	6/20/2022 16:52	11.40	41.72	6/20/2022 18:09	-0.08
6/20/2022 17:06	11.83	187.62	6/21/2022 18:50	11.28	100.21	6/20/2022 16:53	11.38	46.17	6/20/2022 18:10	-0.06
6/20/2022 17:07	11.83	187.76	6/21/2022 18:51	11.26	100.16	6/20/2022 16:54	11.39	49.10	6/20/2022 18:11	-0.05
6/20/2022 17:08	11.83	188.16	6/21/2022 18:52	11.29	100.31	6/20/2022 16:55	11.37	47.16	6/20/2022 18:12	-0.04
6/20/2022 17:09	11.83	187.92	6/21/2022 18:53	11.28	100.10	6/20/2022 16:56	11.36	47.67	6/20/2022 18:13	-0.04
6/20/2022 17:10	11.83	188.14	6/21/2022 18:54	11.26	100.03	6/20/2022 16:57	11.35	48.75	6/20/2022 18:14	-0.06
6/20/2022 17:11	11.84	188.15	6/21/2022 18:55	11.24	100.13	6/20/2022 16:58	11.34	48.95	6/20/2022 18:15	-0.09
6/20/2022 17:12	11.85	188.38	6/21/2022 18:56	11.25	100.17	6/20/2022 16:59	11.34	50.54	6/20/2022 18:16	-0.02
6/20/2022 17:13	11.82	188.41	6/21/2022 18:57	11.25	100.06	6/20/2022 17:00	11.35	50.15	6/20/2022 18:17	-0.08
6/20/2022 17:14	11.84	188.40	6/21/2022 18:58	11.28	100.16	6/20/2022 17:01	11.37	51.33	6/20/2022 18:18	-0.01
6/20/2022 17:15	11.85	188.63	6/21/2022 18:59	11.27	100.36	6/20/2022 17:02	11.35	51.72	6/20/2022 18:19	-0.10
6/20/2022 17:16	11.84	188.64	6/21/2022 19:00	11.31	100.48	6/20/2022 17:03	11.34	52.35	6/20/2022 18:20	-0.12
6/20/2022 17:17	11.84	188.88	6/21/2022 19:01	11.26	100.15	6/20/2022 17:04	11.34	52.71	6/20/2022 18:21	-0.11
6/20/2022 17:18	11.83	188.94	6/21/2022 19:02	11.27	100.30	6/20/2022 17:05	11.34	52.27	6/20/2022 18:22	-0.08
6/20/2022 17:19	11.84	188.82	6/21/2022 19:03	11.27	100.11	6/20/2022 17:06	11.34	52.87	6/20/2022 18:23	-0.08
6/20/2022 17:20	11.85	189.03	6/21/2022 19:04	11.27	100.23	6/20/2022 17:07	11.33	53.72	6/20/2022 18:24	-0.08
6/20/2022 17:21	11.86	189.34	6/21/2022 19:05	11.29	100.23	6/20/2022 17:08	11.32	55.11	6/20/2022 18:25	-0.06
6/20/2022 17:22	11.83	189.28	6/21/2022 19:06	11.27	100.18	6/20/2022 17:09	11.33	53.48	6/20/2022 18:26	-0.06
6/20/2022 17:23	11.83	189.51	6/21/2022 19:07	11.27	100.32	6/20/2022 17:10	11.35	54.36	6/20/2022 18:27	-0.03
6/20/2022 17:24	11.83	189.35	6/21/2022 19:08	11.27	100.20	6/20/2022 17:11	11.36	55.97	6/20/2022 18:28	-0.06
6/20/2022 17:25	11.84	189.48	6/21/2022 19:09	11.25	100.24	6/20/2022 17:12	11.34	55.37	6/20/2022 18:29	-0.10
6/20/2022 17:26	11.84	189.86	6/21/2022 19:10	11.28	100.08	6/20/2022 17:13	11.34	55.33	6/20/2022 18:30	-0.07
6/20/2022 17:27	11.84	190.05	6/21/2022 19:11	11.26	100.20	6/20/2022 17:14	11.31	55.99	6/20/2022 18:31	-0.07
6/20/2022 17:28	11.85	190.03	6/21/2022 19:12	11.27	100.41	6/20/2022 17:15	11.34	56.83	6/20/2022 18:32	-0.09
6/20/2022 17:29	11.82	189.88	6/21/2022 19:13	11.25	100.30	6/20/2022 17:16	11.34	56.64	6/20/2022 18:33	-0.07
6/20/2022 17:30	11.84	190.19	6/21/2022 19:14	11.27	100.41	6/20/2022 17:17	11.34	56.57	6/20/2022 18:34	-0.09
6/20/2022 17:31	11.86	190.23	6/21/2022 19:15	11.26	100.25	6/20/2022 17:18	11.34	55.90	6/20/2022 18:35	-0.04
6/20/2022 17:32	11.82	190.06	6/21/2022 19:16	11.30	100.03	6/20/2022 17:19	11.35	56.56	6/20/2022 18:36	-0.07
6/20/2022 17:33	11.82	190.39	6/21/2022 19:17	11.26	100.05	6/20/2022 17:20	11.33	56.38	6/20/2022 18:37	-0.07
6/20/2022 17:34	11.84	190.32	6/21/2022 19:18	11.27	100.22	6/20/2022 17:21	11.33	56.86	6/20/2022 18:38	-0.07
6/20/2022 17:35	11.83	190.49	6/21/2022 19:19	11.29	100.28	6/20/2022 17:22	11.33	56.97	6/20/2022 18:39	-0.07
6/20/2022 17:36	11.86	190.44	6/21/2022 19:20	11.29	100.16	6/20/2022 17:23	11.32	57.66	6/20/2022 18:40	-0.06
6/20/2022 17:37	11.83	190.78	6/21/2022 19:21	11.26	100.24	6/20/2022 17:24	11.36	58.33	6/20/2022 18:41	-0.06
6/20/2022 17:38	11.84	190.87	6/21/2022 19:22	11.26	100.09	6/20/2022 17:25	11.34	58.23	6/20/2022 18:42	-0.06
6/20/2022 17:39	11.82	190.72	6/21/2022 19:23	11.27	100.13	6/20/2022 17:26	11.35	57.10	6/20/2022 18:43	-0.06
6/20/2022 17:40	11.84	190.89	6/21/2022 19:24	11.28	100.17	6/20/2022 17:27	11.33	59.07	6/20/2022 18:44	-0.10
6/20/2022 17:41	11.82	191.04	6/21/2022 19:25	11.27	99.91	6/20/2022 17:28	11.35	59.01	6/20/2022 18:45	-0.10
6/20/2022 17:42	11.83	191.31	6/21/2022 19:26	11.26	100.09	6/20/2022 17:29	11.32	59.09	6/20/2022 18:46	-0.07

6/20/2022 17:43	11.84	191.18	6/21/2022 19:27	11.24	99.96	6/20/2022 17:30	11.32	59.19	6/20/2022 18:47	-0.06
6/20/2022 17:44	11.82	190.99	6/21/2022 19:28	11.28	99.93	6/20/2022 17:31	11.33	58.42	6/20/2022 18:48	-0.05
6/20/2022 17:45	11.83	191.60	6/21/2022 19:29	11.25	100.20	6/20/2022 17:32	11.32	60.08	6/20/2022 18:49	-0.08
6/20/2022 17:46	11.86	191.30	6/21/2022 19:30	11.28	100.19	6/20/2022 17:33	11.34	58.42	6/20/2022 18:50	-0.05
6/20/2022 17:47	11.85	191.71	6/21/2022 19:31	11.27	100.28	6/20/2022 17:34	11.34	59.18	6/20/2022 18:51	-0.10
6/20/2022 17:48	11.83	191.87	6/21/2022 19:32	11.25	100.19	6/20/2022 17:35	11.32	57.99	6/20/2022 18:52	-0.07
6/20/2022 17:49	11.85	191.60	6/21/2022 19:33	11.25	100.17	6/20/2022 17:36	11.33	58.76	6/20/2022 18:53	-0.09
6/20/2022 17:50	11.82	191.85	6/21/2022 19:34	11.27	100.21	6/20/2022 17:37	11.35	58.72	6/20/2022 18:54	-0.11
6/20/2022 17:51	11.82	192.09	6/21/2022 19:35	11.27	100.10	6/20/2022 17:38	11.37	59.70	6/20/2022 18:55	-0.07
6/20/2022 17:52	11.83	192.27	6/21/2022 19:36	11.25	100.11	6/20/2022 17:39	11.34	58.71	6/20/2022 18:56	-0.04
6/20/2022 17:53	11.84	192.35	6/21/2022 19:37	11.26	100.18	6/20/2022 17:40	11.35	59.16	6/20/2022 18:57	-0.08
6/20/2022 17:54	11.86	192.24	6/21/2022 19:38	11.27	100.26	6/20/2022 17:41	11.32	58.13	6/20/2022 18:58	-0.08
6/20/2022 17:55	11.82	192.36	6/21/2022 19:39	11.25	100.22	6/20/2022 17:42	11.34	58.83	6/20/2022 18:59	-0.04
6/20/2022 17:56	11.83	192.18	6/21/2022 19:40	11.26	100.32	6/20/2022 17:43	11.35	56.70	6/20/2022 19:00	-0.07
6/20/2022 17:57	11.83	192.44	6/21/2022 19:41	11.26	100.25	6/20/2022 17:44	11.31	56.90	6/20/2022 19:01	-0.05
6/20/2022 17:58	11.83	192.74	6/21/2022 19:42	11.25	100.27	6/20/2022 17:45	11.34	57.23	6/20/2022 19:02	-0.10
6/20/2022 17:59	11.84	192.58	6/21/2022 19:43	11.26	100.28	6/20/2022 17:46	11.36	56.20	6/20/2022 19:03	-0.11
6/20/2022 18:00	11.85	192.88	6/21/2022 19:44	11.27	100.30	6/20/2022 17:47	11.35	57.55	6/20/2022 19:04	-0.07
6/20/2022 18:01	11.83	193.06	6/21/2022 19:45	11.28	100.05	6/20/2022 17:48	11.34	56.71	6/20/2022 19:05	-0.07
6/20/2022 18:02	11.81	192.73	6/21/2022 19:46	11.27	100.37	6/20/2022 17:49	11.35	57.70	6/20/2022 19:06	-0.04
6/20/2022 18:03	11.83	192.75	6/21/2022 19:47	11.26	100.23	6/20/2022 17:50	11.34	56.81	6/20/2022 19:07	0.00
6/20/2022 18:04	11.82	193.13	6/21/2022 19:48	11.27	100.06	6/20/2022 17:51	11.32	57.81	6/20/2022 19:08	-0.07
6/20/2022 18:05	11.85	193.30	6/21/2022 19:49	11.26	100.24	6/20/2022 17:52	11.36	58.27	6/20/2022 19:09	-0.07
6/20/2022 18:06	11.82	193.21	6/21/2022 19:50	11.28	100.30	6/20/2022 17:53	11.34	56.94	6/20/2022 19:10	-0.06
6/20/2022 18:07	11.84	193.38	6/21/2022 19:51	11.28	100.25	6/20/2022 17:54	11.33	56.11	6/20/2022 19:11	-0.09
6/20/2022 18:08	11.82	193.47	6/21/2022 19:52	11.25	100.15	6/20/2022 17:55	11.35	56.79	6/20/2022 19:12	-0.04
6/20/2022 18:09	11.82	193.53	6/21/2022 19:53	11.26	100.08	6/20/2022 17:56	11.32	57.47	6/20/2022 19:13	-0.11
6/20/2022 18:10	11.82	193.80	6/21/2022 19:54	11.30	100.05	6/20/2022 17:57	11.30	56.67	6/20/2022 19:14	-0.05
6/20/2022 18:11	11.82	193.79	6/21/2022 19:55	11.27	100.33	6/20/2022 17:58	11.34	57.93	6/20/2022 19:15	-0.11
6/20/2022 18:12	11.85	193.60	6/21/2022 19:56	11.26	100.19	6/20/2022 17:59	11.37	57.22	6/20/2022 19:16	-0.06
6/20/2022 18:13	11.84	193.68	6/21/2022 19:57	11.28	100.28	6/20/2022 18:00	11.31	57.65	6/20/2022 19:17	-0.11
6/20/2022 18:14	11.84	194.11	6/21/2022 19:58	11.26	100.33	6/20/2022 18:01	11.32	56.80	6/20/2022 19:18	-0.09
6/20/2022 18:15	11.84	193.94	6/21/2022 19:59	11.26	100.33	6/20/2022 18:02	11.30	57.78	6/20/2022 19:19	-0.08
6/20/2022 18:16	11.85	194.03	6/21/2022 20:00	11.26	100.09	6/20/2022 18:03	11.33	58.13	6/20/2022 19:20	-0.06
6/20/2022 18:17	11.83	194.30	6/21/2022 20:01	11.29	100.50	6/20/2022 18:04	11.34	57.77	6/20/2022 19:21	-0.08
6/20/2022 18:18	11.83	194.17	6/21/2022 20:02	11.25	100.38	6/20/2022 18:05	11.34	58.60	6/20/2022 19:22	-0.01
6/20/2022 18:19	11.83	194.26	6/21/2022 20:03	11.27	100.16	6/20/2022 18:06	11.36	57.42	6/20/2022 19:23	-0.04
6/20/2022 18:20	11.87	194.35	6/21/2022 20:04	11.24	100.22	6/20/2022 18:07	11.31	57.92	6/20/2022 19:24	-0.06
6/20/2022 18:21	11.82	194.38	6/21/2022 20:05	11.27	100.32	6/20/2022 18:08	11.30	58.24	6/20/2022 19:25	-0.03
6/20/2022 18:22	11.82	194.32	6/21/2022 20:06	11.27	100.33	6/20/2022 18:09	11.34	58.24	6/20/2022 19:26	-0.06
6/20/2022 18:23	11.81	194.39	6/21/2022 20:07	11.27	100.17	6/20/2022 18:10	11.32	58.29	6/20/2022 19:27	-0.07
6/20/2022 18:24	11.83	194.63	6/21/2022 20:08	11.26	100.25	6/20/2022 18:11	11.35	59.03	6/20/2022 19:28	-0.05
6/20/2022 18:25	11.84	194.51	6/21/2022 20:09	11.26	100.21	6/20/2022 18:12	11.32	58.09	6/20/2022 19:29	-0.11
6/20/2022 18:26	11.85	194.62	6/21/2022 20:10	11.27	100.30	6/20/2022 18:13	11.32	58.57	6/20/2022 19:30	-0.10
6/20/2022 18:27	11.82	194.69	6/21/2022 20:11	11.25	100.26	6/20/2022 18:14	11.36	58.69	6/20/2022 19:31	-0.11
6/20/2022 18:28	11.86	195.00	6/21/2022 20:12	11.28	100.31	6/20/2022 18:15	11.32	58.29	6/20/2022 19:32	-0.03
6/20/2022 18:29	11.82	195.03	6/21/2022 20:13	11.26	100.13	6/20/2022 18:16	11.31	57.30	6/20/2022 19:33	-0.06
6/20/2022 18:30	11.84	194.96	6/21/2022 20:14	11.26	100.16	6/20/2022 18:17	11.32	59.28	6/20/2022 19:34	-0.06
6/20/2022 18:31	11.83	194.93	6/21/2022 20:15	11.25	100.34	6/20/2022 18:18	11.32	59.63	6/20/2022 19:35	-0.11
6/20/2022 18:32	11.83	195.13	6/21/2022 20:16	11.26	100.28	6/20/2022 18:19	11.37	59.33	6/20/2022 19:36	-0.04
6/20/2022 18:33	11.84	195.27	6/21/2022 20:17	11.28	100.42	6/20/2022 18:20	11.31	58.77	6/20/2022 19:37	-0.08
6/20/2022 18:34	11.85	195.12	6/21/2022 20:18	11.28	100.34	6/20/2022 18:21	11.31	59.53	6/20/2022 19:38	-0.07
6/20/2022 18:35	11.85	195.19	6/21/2022 20:19	11.26	100.47	6/20/2022 18:22	11.35	58.97	6/20/2022 19:39	-0.05
6/20/2022 18:36	11.84	195.36	6/21/2022 20:20	11.27	100.26	6/20/2022 18:23	11.29	60.38	6/20/2022 19:40	-0.08
6/20/2022 18:37	11.85	195.47	6/21/2022 20:21	11.29	100.38	6/20/2022 18:24	11.32	60.18	6/20/2022 19:41	-0.14
6/20/2022 18:38	11.84	195.67	6/21/2022 20:22	11.26	100.35	6/20/2022 18:25	11.35	59.59	6/20/2022 19:42	-0.07
6/20/2022 18:39	11.83	195.70	6/21/2022 20:23	11.26	100.31	6/20/2022 18:26	11.32	60.58	6/20/2022 19:43	-0.03
6/20/2022 18:40	11.82	195.61	6/21/2022 20:24	11.29	100.45	6/20/2022 18:27	11.36	59.71	6/20/2022 19:44	-0.02
6/20/2022 18:41	11.84	195.86	6/21/2022 20:25	11.25	100.57	6/20/2022 18:28	11.36	60.21	6/20/2022 19:45	-0.05
6/20/2022 18:42	11.85	195.79	6/21/2022 20:26	11.27	100.20	6/20/2022 18:29	11.32	59.22	6/20/2022 19:46	-0.04
6/20/2022 18:43	11.84	196.28	6/21/2022 20:27	11.27	100.25	6/20/2022 18:30	11.39	59.66	6/20/2022 19:47	-0.06
6/20/2022 18:44	11.83	195.96	6/21/2022 20:28	11.29	100.31	6/20/2022 18:31	11.38	60.02	6/20/2022 19:48	-0.09
6/20/2022 18:45	11.83	196.14	6/21/2022 20:29	11.29	100.12	6/20/2022 18:32	11.35	60.86	6/20/2022 19:49	-0.10
6/20/2022 18:46	11.83	196.18	6/21/2022 20:30	11.27	100.19	6/20/2022 18:33	11.35	60.76	6/20/2022 19:50	-0.07
6/20/2022 18:47	11.85	196.28	6/21/2022 20:31	11.25	100.34	6/20/2022 18:34	11.34	59.63	6/20/2022 19:51	-0.09
6/20/2022 18:48	11.82	196.17	6/21/2022 20:32	11.26	100.40	6/20/2022 18:35	11.35	60.17	6/20/2022 19:52	-0.12
6/20/2022 18:49	11.87	196.45	6/21/2022 20:33	11.28	100.24	6/20/2022 18:36	11.31	60.70	6/20/2022 19:53	-0.06
6/20/2022 18:50	11.83	196.33	6/21/2022 20:34	11.26	100.47	6/20/2022 18:37	11.34	60.14	6/20/2022 19:54	-0.08
6/20/2022 18:51	11.82	196.28	6/21/2022 20:35	11.26	100.25	6/20/2022 18:38	11.33	59.74	6/20/2022 19:55	-0.07
6/20/2022 18:52	11.83	196.33	6/21/2022 20:36	11.25	100.37	6/20/2022 18:39	11.34	60.98	6/20/2022 19:56	-0.07
6/20/2022 18:53	11.82	196.66	6/21/2022 20:37	11.26	100.23	6/20/2022 18:40	11.33	61.05	6/20/2022 19:57	-0.06
6/20/2022 18:54	11.82	196.67	6/21/2022 20:38	11.26	100.09	6/20/2022 18:41	11.35	61.02	6/20/2022 19:58	-0.04
6/20/2022 18:55	11.85	196.75	6/21/2022 20:39	11.26	100.30	6/20/2022 18:42	11.39	61.28	6/20/2022 19:59	-0.10
6/20/2022 18:56	11.80	196.95	6/21/2022 20:40	11.26	100.50	6/20/2022 18:43	11.33	61.51	6/20/2022 20:00	-0.05
6/20/2022 18:57	11.86	196.90	6/21/2022 20:41	11.26	100.26	6/20/2022 18:44	11.33	59.92	6/20/2022 20:01	-0.08
6/20/2022 18:58	11.82	196.81	6/21/2022 20:42	11.30	100.33	6/20/2022 18:45	11.31	60.31	6/20/2022 20:02	-0.06
6/20/2022 18:59	11.84	197.04	6/21/2022 20:43	11.25	100.38	6/20/2022 18:46	11.33	61.92	6/20/2022 20:03	-0.09
6/20/2022 19:00	11.83	197.00	6/21/2022 20:44	11.25	100.32	6/20/2022 18:47	11.37	60.25	6/20/2022 20:04	-0.05
6/20/2022 19:01	11.87	197.06	6/21/2022 20:45	11.27	100.54	6/20/2022 18:48	11.35	60.91	6/20/2022 20:05	-0.08
6/20/2022 19:02	11.81	197.15	6/21/2022 20:46	11.27	100.32	6/20/2022 18:49	11.31	61.52	6/20/2022 20:06	-0.01
6/20/2022 19:03	11.84	197.15	6/21/2022 20:47	11.26	100.41	6/20/2022 18:50	11.37	61.36	6/20/2022 20:07	-0.08
6/20/2022 19:04	11.83	197.25	6/21/2022 20:48	11.29	100.34	6/20/2022 18:51	11.35	61.42	6/20/2022 20:08	-0.12
6/20/2022 19:05	11.82	197.45	6/21/2022 20:49	11.26	100.33	6/20/2022 18:52	11.38	60.88	6/20/2022 20:09	-0.09
6/20/2022 19:06	11.83	197.35	6/21/2022 20:50	11.26	100.39	6/20/2022 18:53	11.35	61.47	6/20/2022 20:10	-0.08
6/20/2022 19:07	11.83	197.44	6/21/2022 20:51	11.27	100.14	6/20/2022 18:54	11.36	61.49	6/20/2022 20:11	-0.07
6/20/2022 19:08	11.83	197.40	6/21/2022 20:52	11.29	100.48	6/20/2022 18:55	11.31	61.92	6/20/2022 20:12	-0.05
6/20/2022 19:09	11.85	197.74	6/21/2022 20:53	11.27	100.33	6/20/2022 18:56	11.33	61.51	6/20/2022 20:13	-0.08
6/20/2022 19:10	11.84	197.68	6/21/2022 20:54	11.28	100.54	6/20/2022 18:57	11.33	62.24	6/20/2022 20:14	-0.03

6/20/2022 19:11	11.81	197.60	6/21/2022 20:55	11.25	100.50	6/20/2022 18:58	11.38	62.46	6/20/2022 20:15	-0.11
6/20/2022 19:12	11.83	197.93	6/21/2022 20:56	11.29	100.50	6/20/2022 18:59	11.32	62.45	6/20/2022 20:16	-0.05
6/20/2022 19:13	11.85	197.61	6/21/2022 20:57	11.27	100.32	6/20/2022 19:00	11.35	62.67	6/20/2022 20:17	-0.07
6/20/2022 19:14	11.83	197.72	6/21/2022 20:58	11.28	100.45	6/20/2022 19:01	11.35	62.60	6/20/2022 20:18	-0.07
6/20/2022 19:15	11.84	198.02	6/21/2022 20:59	11.27	100.51	6/20/2022 19:02	11.34	62.17	6/20/2022 20:19	-0.05
6/20/2022 19:16	11.83	197.97	6/21/2022 21:00	11.26	100.45	6/20/2022 19:03	11.36	62.24	6/20/2022 20:20	-0.06
6/20/2022 19:17	11.85	198.06	6/21/2022 21:01	11.27	100.48	6/20/2022 19:04	11.32	62.16	6/20/2022 20:21	-0.08
6/20/2022 19:18	11.82	197.79	6/21/2022 21:02	11.27	100.20	6/20/2022 19:05	11.32	62.92	6/20/2022 20:22	-0.04
6/20/2022 19:19	11.81	198.07	6/21/2022 21:03	11.25	100.32	6/20/2022 19:06	11.36	63.33	6/20/2022 20:23	-0.07
6/20/2022 19:20	11.79	198.24	6/21/2022 21:04	11.27	100.44	6/20/2022 19:07	11.32	63.16	6/20/2022 20:24	-0.07
6/20/2022 19:21	11.82	198.30	6/21/2022 21:05	11.26	100.41	6/20/2022 19:08	11.32	62.30	6/20/2022 20:25	-0.06
6/20/2022 19:22	11.82	198.33	6/21/2022 21:06	11.29	100.30	6/20/2022 19:09	11.37	63.26	6/20/2022 20:26	-0.08
6/20/2022 19:23	11.82	198.50	6/21/2022 21:07	11.28	100.52	6/20/2022 19:10	11.34	63.00	6/20/2022 20:27	-0.07
6/20/2022 19:24	11.81	198.55	6/21/2022 21:08	11.28	100.46	6/20/2022 19:11	11.35	62.73	6/20/2022 20:28	-0.02
6/20/2022 19:25	11.82	198.51	6/21/2022 21:09	11.27	100.34	6/20/2022 19:12	11.32	63.51	6/20/2022 20:29	-0.02
6/20/2022 19:26	11.82	198.80	6/21/2022 21:10	11.28	100.30	6/20/2022 19:13	11.31	63.17	6/20/2022 20:30	-0.09
6/20/2022 19:27	11.82	198.66	6/21/2022 21:11	11.27	100.55	6/20/2022 19:14	11.31	61.86	6/20/2022 20:31	-0.10
6/20/2022 19:28	11.84	198.94	6/21/2022 21:12	11.27	100.31	6/20/2022 19:15	11.33	62.86	6/20/2022 20:32	-0.09
6/20/2022 19:29	11.83	198.72	6/21/2022 21:13	11.28	100.24	6/20/2022 19:16	11.32	63.17	6/20/2022 20:33	-0.07
6/20/2022 19:30	11.86	198.67	6/21/2022 21:14	11.26	100.35	6/20/2022 19:17	11.36	63.52	6/20/2022 20:34	-0.04
6/20/2022 19:31	11.82	199.02	6/21/2022 21:15	11.26	100.47	6/20/2022 19:18	11.36	63.08	6/20/2022 20:35	-0.08
6/20/2022 19:32	11.86	199.17	6/21/2022 21:16	11.27	100.53	6/20/2022 19:19	11.37	62.89	6/20/2022 20:36	-0.07
6/20/2022 19:33	11.84	199.10	6/21/2022 21:17	11.25	100.74	6/20/2022 19:20	11.30	63.48	6/20/2022 20:37	-0.04
6/20/2022 19:34	11.84	199.05	6/21/2022 21:18	11.26	100.90	6/20/2022 19:21	11.31	62.32	6/20/2022 20:38	-0.05
6/20/2022 19:35	11.84	199.14	6/21/2022 21:19	11.26	100.63	6/20/2022 19:22	11.30	62.73	6/20/2022 20:39	-0.05
6/20/2022 19:36	11.85	199.18	6/21/2022 21:20	11.27	100.68	6/20/2022 19:23	11.30	63.89	6/20/2022 20:40	-0.02
6/20/2022 19:37	11.81	199.57	6/21/2022 21:21	11.27	100.62	6/20/2022 19:24	11.31	63.40	6/20/2022 20:41	-0.10
6/20/2022 19:38	11.83	199.49	6/21/2022 21:22	11.26	100.65	6/20/2022 19:25	11.36	63.38	6/20/2022 20:42	-0.03
6/20/2022 19:39	11.82	199.30	6/21/2022 21:23	11.27	100.78	6/20/2022 19:26	11.35	63.29	6/20/2022 20:43	-0.05
6/20/2022 19:40	11.81	199.37	6/21/2022 21:24	11.28	100.56	6/20/2022 19:27	11.31	63.92	6/20/2022 20:44	-0.07
6/20/2022 19:41	11.82	199.49	6/21/2022 21:25	11.29	100.45	6/20/2022 19:28	11.32	63.18	6/20/2022 20:45	-0.10
6/20/2022 19:42	11.85	199.48	6/21/2022 21:26	11.28	100.61	6/20/2022 19:29	11.35	63.10	6/20/2022 20:46	-0.04
6/20/2022 19:43	11.81	199.57	6/21/2022 21:27	11.28	100.53	6/20/2022 19:30	11.32	64.44	6/20/2022 20:47	-0.06
6/20/2022 19:44	11.83	199.61	6/21/2022 21:28	11.27	100.65	6/20/2022 19:31	11.33	63.20	6/20/2022 20:48	-0.12
6/20/2022 19:45	11.82	199.68	6/21/2022 21:29	11.28	100.57	6/20/2022 19:32	11.31	64.25	6/20/2022 20:49	-0.05
6/20/2022 19:46	11.85	199.73	6/21/2022 21:30	11.26	100.38	6/20/2022 19:33	11.33	63.69	6/20/2022 20:50	-0.08
6/20/2022 19:47	11.81	200.03	6/21/2022 21:31	11.28	100.73	6/20/2022 19:34	11.38	63.01	6/20/2022 20:51	-0.08
6/20/2022 19:48	11.84	199.87	6/21/2022 21:32	11.27	100.67	6/20/2022 19:35	11.33	64.29	6/20/2022 20:52	-0.11
6/20/2022 19:49	11.82	199.87	6/21/2022 21:33	11.27	100.83	6/20/2022 19:36	11.38	64.94	6/20/2022 20:53	-0.07
6/20/2022 19:50	11.84	199.87	6/21/2022 21:34	11.28	100.54	6/20/2022 19:37	11.35	64.75	6/20/2022 20:54	-0.07
6/20/2022 19:51	11.83	199.97	6/21/2022 21:35	11.24	100.45	6/20/2022 19:38	11.33	64.17	6/20/2022 20:55	-0.12
6/20/2022 19:52	11.82	200.01	6/21/2022 21:36	11.28	100.56	6/20/2022 19:39	11.32	64.67	6/20/2022 20:56	-0.08
6/20/2022 19:53	11.84	200.18	6/21/2022 21:37	11.27	100.75	6/20/2022 19:40	11.31	64.88	6/20/2022 20:57	-0.04
6/20/2022 19:54	11.82	200.42	6/21/2022 21:38	11.28	100.30	6/20/2022 19:41	11.35	65.50	6/20/2022 20:58	-0.06
6/20/2022 19:55	11.81	200.16	6/21/2022 21:39	11.29	100.63	6/20/2022 19:42	11.31	64.22	6/20/2022 20:59	-0.05
6/20/2022 19:56	11.81	200.25	6/21/2022 21:40	11.27	100.51	6/20/2022 19:43	11.34	64.91	6/20/2022 21:00	-0.05
6/20/2022 19:57	11.83	200.55	6/21/2022 21:41	11.28	100.61	6/20/2022 19:44	11.33	65.12	6/20/2022 21:01	-0.11
6/20/2022 19:58	11.81	200.20	6/21/2022 21:42	11.25	100.48	6/20/2022 19:45	11.32	65.39	6/20/2022 21:02	-0.09
6/20/2022 19:59	11.82	200.67	6/21/2022 21:43	11.28	100.48	6/20/2022 19:46	11.34	64.88	6/20/2022 21:03	-0.09
6/20/2022 20:00	11.82	200.45	6/21/2022 21:44	11.26	100.68	6/20/2022 19:47	11.34	64.71	6/20/2022 21:04	-0.11
6/20/2022 20:01	11.84	200.64	6/21/2022 21:45	11.25	100.59	6/20/2022 19:48	11.37	65.05	6/20/2022 21:05	-0.02
6/20/2022 20:02	11.83	200.41	6/21/2022 21:46	11.28	100.43	6/20/2022 19:49	11.34	65.06	6/20/2022 21:06	-0.04
6/20/2022 20:03	11.82	200.86	6/21/2022 21:47	11.28	100.56	6/20/2022 19:50	11.33	65.98	6/20/2022 21:07	-0.11
6/20/2022 20:04	11.84	200.92	6/21/2022 21:48	11.25	100.32	6/20/2022 19:51	11.30	66.11	6/20/2022 21:08	-0.10
6/20/2022 20:05	11.82	200.62	6/21/2022 21:49	11.25	100.49	6/20/2022 19:52	11.31	66.22	6/20/2022 21:09	-0.08
6/20/2022 20:06	11.81	200.92	6/21/2022 21:50	11.28	100.75	6/20/2022 19:53	11.33	66.00	6/20/2022 21:10	-0.07
6/20/2022 20:07	11.83	200.74	6/21/2022 21:51	11.26	100.51	6/20/2022 19:54	11.33	64.58	6/20/2022 21:11	-0.04
6/20/2022 20:08	11.79	200.85	6/21/2022 21:52	11.23	100.59	6/20/2022 19:55	11.35	65.40	6/20/2022 21:12	-0.14
6/20/2022 20:09	11.82	201.13	6/21/2022 21:53	11.27	100.76	6/20/2022 19:56	11.31	65.67	6/20/2022 21:13	-0.06
6/20/2022 20:10	11.81	201.09	6/21/2022 21:54	11.28	100.65	6/20/2022 19:57	11.35	66.12	6/20/2022 21:14	-0.12
6/20/2022 20:11	11.79	201.23	6/21/2022 21:55	11.29	100.61	6/20/2022 19:58	11.36	65.39	6/20/2022 21:15	-0.02
6/20/2022 20:12	11.79	201.15	6/21/2022 21:56	11.26	100.67	6/20/2022 19:59	11.36	65.74	6/20/2022 21:16	-0.05
6/20/2022 20:13	11.81	201.16	6/21/2022 21:57	11.26	100.48	6/20/2022 20:00	11.35	65.84	6/20/2022 21:17	-0.08
6/20/2022 20:14	11.84	201.50	6/21/2022 21:58	11.25	100.78	6/20/2022 20:01	11.35	66.18	6/20/2022 21:18	-0.12
6/20/2022 20:15	11.80	201.48	6/21/2022 21:59	11.27	100.66	6/20/2022 20:02	11.34	65.57	6/20/2022 21:19	-0.08
6/20/2022 20:16	11.84	201.48	6/21/2022 22:00	11.24	100.54	6/20/2022 20:03	11.33	65.96	6/20/2022 21:20	-0.07
6/20/2022 20:17	11.82	201.32	6/21/2022 22:01	11.25	100.51	6/20/2022 20:04	11.32	65.33	6/20/2022 21:21	-0.03
6/20/2022 20:18	11.81	201.68	6/21/2022 22:02	11.29	100.66	6/20/2022 20:05	11.32	66.03	6/20/2022 21:22	-0.06
6/20/2022 20:19	11.80	201.76	6/21/2022 22:03	11.25	100.48	6/20/2022 20:06	11.33	66.72	6/20/2022 21:23	-0.06
6/20/2022 20:20	11.83	201.76	6/21/2022 22:04	11.27	100.46	6/20/2022 20:07	11.35	65.65	6/20/2022 21:24	-0.09
6/20/2022 20:21	11.83	201.66	6/21/2022 22:05	11.26	100.84	6/20/2022 20:08	11.33	66.53	6/20/2022 21:25	-0.06
6/20/2022 20:22	11.82	201.88	6/21/2022 22:06	11.28	100.65	6/20/2022 20:09	11.32	65.96	6/20/2022 21:26	-0.06
6/20/2022 20:23	11.83	201.86	6/21/2022 22:07	11.24	100.62	6/20/2022 20:10	11.37	67.29	6/20/2022 21:27	-0.10
6/20/2022 20:24	11.83	201.90	6/21/2022 22:08	11.28	100.79	6/20/2022 20:11	11.35	66.97	6/20/2022 21:28	-0.03
6/20/2022 20:25	11.81	202.03	6/21/2022 22:09	11.26	100.53	6/20/2022 20:12	11.32	65.70	6/20/2022 21:29	-0.05
6/20/2022 20:26	11.82	202.08	6/21/2022 22:10	11.25	100.65	6/20/2022 20:13	11.32	66.29	6/20/2022 21:30	-0.07
6/20/2022 20:27	11.82	202.05	6/21/2022 22:11	11.27	100.58	6/20/2022 20:14	11.35	66.70	6/20/2022 21:31	-0.09
6/20/2022 20:28	11.82	202.03	6/21/2022 22:12	11.29	100.66	6/20/2022 20:15	11.37	67.31	6/20/2022 21:32	-0.07
6/20/2022 20:29	11.82	202.23	6/21/2022 22:13	11.30	100.50	6/20/2022 20:16	11.36	65.91	6/20/2022 21:33	-0.05
6/20/2022 20:30	11.82	202.21	6/21/2022 22:14	11.25	100.66	6/20/2022 20:17	11.35	66.38	6/20/2022 21:34	-0.04
6/20/2022 20:31	11.82	202.40	6/21/2022 22:15	11.26	100.55	6/20/2022 20:18	11.33	65.83	6/20/2022 21:35	-0.06
6/20/2022 20:32	11.80	202.52	6/21/2022 22:16	11.27	100.51	6/20/2022 20:19	11.37	67.41	6/20/2022 21:36	-0.04
6/20/2022 20:33	11.84	202.34	6/21/2022 22:17	11.25	100.61	6/20/2022 20:20	11.32	66.52	6/20/2022 21:37	-0.08
6/20/2022 20:34	11.83	202.39	6/21/2022 22:18	11.27	100.64	6/20/2022 20:21	11.36	66.52	6/20/2022 21:38	-0.08
6/20/2022 20:35	11.83	202.65	6/21/2022 22:19	11.26	100.55	6/20/2022 20:22	11.35	66.63	6/20/2022 21:39	-0.10
6/20/2022 20:36	11.83	202.54	6/21/2022 22:20	11.28	100.77	6/20/2022 20:23	11.37	67.37	6/20/2022 21:40	-0.02
6/20/2022 20:37	11.84	202.59	6/21/2022 22:21	11.25	100.75	6/20/2022 20:24	11.35	67.10	6/20/2022 21:41	-0.02
6/20/2022 20:38	11.83	202.47	6/21/2022 22:22	11.26	100.48	6/20/2022 20:25	11.32	66.67	6/20/2022 21:42	-0.08

6/20/2022 20:39	11.82	202.77	6/21/2022 22:23	11.29	100.66	6/20/2022 20:26	11.35	67.62	6/20/2022 21:43	-0.04
6/20/2022 20:40	11.83	202.85	6/21/2022 22:24	11.27	100.66	6/20/2022 20:27	11.34	67.51	6/20/2022 21:44	-0.01
6/20/2022 20:41	11.85	202.92	6/21/2022 22:25	11.27	100.63	6/20/2022 20:28	11.32	68.04	6/20/2022 21:45	-0.03
6/20/2022 20:42	11.83	202.75	6/21/2022 22:26	11.29	100.83	6/20/2022 20:29	11.31	66.55	6/20/2022 21:46	0.01
6/20/2022 20:43	11.81	202.98	6/21/2022 22:27	11.26	100.48	6/20/2022 20:30	11.34	67.01	6/20/2022 21:47	-0.04
6/20/2022 20:44	11.80	203.00	6/21/2022 22:28	11.26	100.63	6/20/2022 20:31	11.37	66.80	6/20/2022 21:48	-0.04
6/20/2022 20:45	11.85	203.00	6/21/2022 22:29	11.26	100.72	6/20/2022 20:32	11.33	67.48	6/20/2022 21:49	-0.04
6/20/2022 20:46	11.83	203.16	6/21/2022 22:30	11.26	100.92	6/20/2022 20:33	11.34	66.33	6/20/2022 21:50	0.00
6/20/2022 20:47	11.82	203.14	6/21/2022 22:31	11.27	100.65	6/20/2022 20:34	11.32	66.90	6/20/2022 21:51	-0.05
6/20/2022 20:48	11.82	203.29	6/21/2022 22:32	11.26	100.61	6/20/2022 20:35	11.31	67.76	6/20/2022 21:52	0.00
6/20/2022 20:49	11.83	203.41	6/21/2022 22:33	11.27	100.58	6/20/2022 20:36	11.32	67.87	6/20/2022 21:53	0.02
6/20/2022 20:50	11.83	203.07	6/21/2022 22:34	11.26	100.74	6/20/2022 20:37	11.31	67.09	6/20/2022 21:54	-0.02
6/20/2022 20:51	11.82	203.42	6/21/2022 22:35	11.26	100.76	6/20/2022 20:38	11.31	67.30	6/20/2022 21:55	-0.04
6/20/2022 20:52	11.85	203.37	6/21/2022 22:36	11.26	100.69	6/20/2022 20:39	11.33	67.57	6/20/2022 21:56	-0.05
6/20/2022 20:53	11.82	203.42	6/21/2022 22:37	11.25	100.67	6/20/2022 20:40	11.33	67.46	6/20/2022 21:57	-0.04
6/20/2022 20:54	11.83	203.61	6/21/2022 22:38	11.29	100.77	6/20/2022 20:41	11.33	67.57	6/20/2022 21:58	0.03
6/20/2022 20:55	11.81	203.56	6/21/2022 22:39	11.27	100.72	6/20/2022 20:42	11.35	67.83	6/20/2022 21:59	0.02
6/20/2022 20:56	11.81	203.45	6/21/2022 22:40	11.26	100.64	6/20/2022 20:43	11.31	67.99	6/20/2022 22:00	0.05
6/20/2022 20:57	11.81	203.80	6/21/2022 22:41	11.28	100.72	6/20/2022 20:44	11.36	67.74	6/20/2022 22:01	0.02
6/20/2022 20:58	11.83	203.61	6/21/2022 22:42	11.28	100.68	6/20/2022 20:45	11.32	67.46	6/20/2022 22:02	0.01
6/20/2022 20:59	11.83	203.70	6/21/2022 22:43	11.27	100.82	6/20/2022 20:46	11.35	67.74	6/20/2022 22:03	0.01
6/20/2022 21:00	11.85	203.78	6/21/2022 22:44	11.26	100.53	6/20/2022 20:47	11.31	67.88	6/20/2022 22:04	0.02
6/20/2022 21:01	11.82	204.08	6/21/2022 22:45	11.26	100.72	6/20/2022 20:48	11.30	68.31	6/20/2022 22:05	0.05
6/20/2022 21:02	11.83	204.01	6/21/2022 22:46	11.28	100.88	6/20/2022 20:49	11.32	69.16	6/20/2022 22:06	0.08
6/20/2022 21:03	11.83	204.00	6/21/2022 22:47	11.28	100.71	6/20/2022 20:50	11.33	68.16	6/20/2022 22:07	0.04
6/20/2022 21:04	11.83	204.19	6/21/2022 22:48	11.28	100.84	6/20/2022 20:51	11.32	68.68	6/20/2022 22:08	0.10
6/20/2022 21:05	11.84	204.20	6/21/2022 22:49	11.25	100.94	6/20/2022 20:52	11.32	66.51	6/20/2022 22:09	-0.04
6/20/2022 21:06	11.81	204.24	6/21/2022 22:50	11.27	100.78	6/20/2022 20:53	11.34	67.75	6/20/2022 22:10	0.05
6/20/2022 21:07	11.84	204.09	6/21/2022 22:51	11.30	100.74	6/20/2022 20:54	11.34	67.74	6/20/2022 22:11	0.08
6/20/2022 21:08	11.82	204.25	6/21/2022 22:52	11.28	100.57	6/20/2022 20:55	11.30	67.79	6/20/2022 22:12	0.05
6/20/2022 21:09	11.85	204.31	6/21/2022 22:53	11.26	100.88	6/20/2022 20:56	11.35	68.64	6/20/2022 22:13	0.06
6/20/2022 21:10	11.82	204.29	6/21/2022 22:54	11.26	100.90	6/20/2022 20:57	11.36	68.51	6/20/2022 22:14	0.08
6/20/2022 21:11	11.79	204.28	6/21/2022 22:55	11.28	100.81	6/20/2022 20:58	11.32	67.40	6/20/2022 22:15	0.12
6/20/2022 21:12	11.82	204.23	6/21/2022 22:56	11.26	100.94	6/20/2022 20:59	11.35	67.74	6/20/2022 22:16	0.04
6/20/2022 21:13	11.81	204.44	6/21/2022 22:57	11.26	100.80	6/20/2022 21:00	11.36	68.47	6/20/2022 22:17	0.09
6/20/2022 21:14	11.83	204.62	6/21/2022 22:58	11.25	100.78	6/20/2022 21:01	11.35	68.17	6/20/2022 22:18	0.11
6/20/2022 21:15	11.81	204.78	6/21/2022 22:59	11.26	100.80	6/20/2022 21:02	11.35	67.49	6/20/2022 22:19	0.09
6/20/2022 21:16	11.82	204.87	6/21/2022 23:00	11.28	100.67	6/20/2022 21:03	11.35	68.63	6/20/2022 22:20	0.11
6/20/2022 21:17	11.82	204.73	6/21/2022 23:01	11.28	100.72	6/20/2022 21:04	11.32	67.69	6/20/2022 22:21	0.08
6/20/2022 21:18	11.81	204.77	6/21/2022 23:02	11.27	100.88	6/20/2022 21:05	11.30	68.26	6/20/2022 22:22	0.12
6/20/2022 21:19	11.85	204.88	6/21/2022 23:03	11.27	100.81	6/20/2022 21:06	11.32	67.60	6/20/2022 22:23	0.14
6/20/2022 21:20	11.79	204.98	6/21/2022 23:04	11.28	100.76	6/20/2022 21:07	11.31	68.76	6/20/2022 22:24	0.08
6/20/2022 21:21	11.83	205.08	6/21/2022 23:05	11.25	100.94	6/20/2022 21:08	11.30	68.19	6/20/2022 22:25	0.11
6/20/2022 21:22	11.83	205.12	6/21/2022 23:06	11.23	100.79	6/20/2022 21:09	11.35	69.07	6/20/2022 22:26	0.08
6/20/2022 21:23	11.82	204.97	6/21/2022 23:07	11.27	100.63	6/20/2022 21:10	11.32	68.81	6/20/2022 22:27	0.11
6/20/2022 21:24	11.82	205.06	6/21/2022 23:08	11.26	100.65	6/20/2022 21:11	11.31	69.11	6/20/2022 22:28	0.11
6/20/2022 21:25	11.83	205.16	6/21/2022 23:09	11.26	101.10	6/20/2022 21:12	11.33	68.85	6/20/2022 22:29	0.16
6/20/2022 21:26	11.81	205.28	6/21/2022 23:10	11.27	101.14	6/20/2022 21:13	11.33	68.48	6/20/2022 22:30	0.12
6/20/2022 21:27	11.82	205.33	6/21/2022 23:11	11.28	101.02	6/20/2022 21:14	11.31	68.31	6/20/2022 22:31	0.14
6/20/2022 21:28	11.82	205.43	6/21/2022 23:12	11.28	101.13	6/20/2022 21:15	11.34	69.04	6/20/2022 22:32	0.14
6/20/2022 21:29	11.84	205.33	6/21/2022 23:13	11.29	100.91	6/20/2022 21:16	11.32	68.75	6/20/2022 22:33	0.12
6/20/2022 21:30	11.80	205.43	6/21/2022 23:14	11.30	100.96	6/20/2022 21:17	11.31	69.37	6/20/2022 22:34	0.15
6/20/2022 21:31	11.79	205.27	6/21/2022 23:15	11.26	101.08	6/20/2022 21:18	11.35	69.10	6/20/2022 22:35	0.11
6/20/2022 21:32	11.82	205.50	6/21/2022 23:16	11.30	101.08	6/20/2022 21:19	11.37	68.72	6/20/2022 22:36	0.14
6/20/2022 21:33	11.81	205.40	6/21/2022 23:17	11.27	100.95	6/20/2022 21:20	11.35	68.57	6/20/2022 22:37	0.16
6/20/2022 21:34	11.83	205.68	6/21/2022 23:18	11.26	100.89	6/20/2022 21:21	11.35	69.37	6/20/2022 22:38	0.16
6/20/2022 21:35	11.83	205.59	6/21/2022 23:19	11.27	101.12	6/20/2022 21:22	11.33	69.80	6/20/2022 22:39	0.14
6/20/2022 21:36	11.82	205.64	6/21/2022 23:20	11.29	101.22	6/20/2022 21:23	11.35	71.14	6/20/2022 22:40	0.18
6/20/2022 21:37	11.81	205.64	6/21/2022 23:21	11.26	100.92	6/20/2022 21:24	11.33	69.46	6/20/2022 22:41	0.21
6/20/2022 21:38	11.81	205.80	6/21/2022 23:22	11.25	101.11	6/20/2022 21:25	11.34	69.21	6/20/2022 22:42	0.15
6/20/2022 21:39	11.83	205.78	6/21/2022 23:23	11.26	101.12	6/20/2022 21:26	11.33	69.29	6/20/2022 22:43	0.13
6/20/2022 21:40	11.82	205.59	6/21/2022 23:24	11.28	101.01	6/20/2022 21:27	11.34	69.04	6/20/2022 22:44	0.19
6/20/2022 21:41	11.81	205.94	6/21/2022 23:25	11.28	100.90	6/20/2022 21:28	11.36	69.96	6/20/2022 22:45	0.21
6/20/2022 21:42	11.83	205.90	6/21/2022 23:26	11.27	100.93	6/20/2022 21:29	11.30	69.86	6/20/2022 22:46	0.17
6/20/2022 21:43	11.81	206.17	6/21/2022 23:27	11.29	101.05	6/20/2022 21:30	11.31	69.43	6/20/2022 22:47	0.24
6/20/2022 21:44	11.80	205.81	6/21/2022 23:28	11.28	101.06	6/20/2022 21:31	11.36	69.26	6/20/2022 22:48	0.25
6/20/2022 21:45	11.83	206.13	6/21/2022 23:29	11.26	100.82	6/20/2022 21:32	11.36	69.90	6/20/2022 22:49	0.26
6/20/2022 21:46	11.81	206.09	6/21/2022 23:30	11.23	101.01	6/20/2022 21:33	11.33	70.95	6/20/2022 22:50	0.30
6/20/2022 21:47	11.83	206.22	6/21/2022 23:31	11.26	100.88	6/20/2022 21:34	11.35	69.55	6/20/2022 22:51	0.25
6/20/2022 21:48	11.82	206.27	6/21/2022 23:32	11.28	100.98	6/20/2022 21:35	11.33	69.80	6/20/2022 22:52	0.21
6/20/2022 21:49	11.82	206.12	6/21/2022 23:33	11.27	101.14	6/20/2022 21:36	11.35	69.71	6/20/2022 22:53	0.21
6/20/2022 21:50	11.83	206.14	6/21/2022 23:34	11.27	101.16	6/20/2022 21:37	11.34	69.99	6/20/2022 22:54	0.33
6/20/2022 21:51	11.80	206.04	6/21/2022 23:35	11.27	101.09	6/20/2022 21:38	11.30	70.62	6/20/2022 22:55	0.22
6/20/2022 21:52	11.83	206.20	6/21/2022 23:36	11.26	101.01	6/20/2022 21:39	11.35	70.12	6/20/2022 22:56	0.27
6/20/2022 21:53	11.82	206.31	6/21/2022 23:37	11.26	100.98	6/20/2022 21:40	11.35	70.46	6/20/2022 22:57	0.29
6/20/2022 21:54	11.82	206.32	6/21/2022 23:38	11.26	100.86	6/20/2022 21:41	11.33	70.91	6/20/2022 22:58	0.24
6/20/2022 21:55	11.81	206.46	6/21/2022 23:39	11.28	100.95	6/20/2022 21:42	11.33	69.15	6/20/2022 22:59	0.28
6/20/2022 21:56	11.78	206.53	6/21/2022 23:40	11.25	100.91	6/20/2022 21:43	11.34	70.43	6/20/2022 23:00	0.30
6/20/2022 21:57	11.80	206.62	6/21/2022 23:41	11.29	101.25	6/20/2022 21:44	11.34	70.01	6/20/2022 23:01	0.26
6/20/2022 21:58	11.82	206.25	6/21/2022 23:42	11.27	101.02	6/20/2022 21:45	11.33	70.34	6/20/2022 23:02	0.28
6/20/2022 21:59	11.80	206.53	6/21/2022 23:43	11.25	100.91	6/20/2022 21:46	11.30	70.95	6/20/2022 23:03	0.30
6/20/2022 22:00	11.81	206.52	6/21/2022 23:44	11.28	101.24	6/20/2022 21:47	11.36	70.43	6/20/2022 23:04	0.34
6/20/2022 22:01	11.80	206.67	6/21/2022 23:45	11.28	100.96	6/20/2022 21:48	11.32	70.57	6/20/2022 23:05	0.35
6/20/2022 22:02	11.82	206.66	6/21/2022 23:46	11.27	101.05	6/20/2022 21:49	11.34	70.35	6/20/2022 23:06	0.34
6/20/2022 22:03	11.81	206.99	6/21/2022 23:47	11.25	101.00	6/20/2022 21:50	11.31	70.31	6/20/2022 23:07	0.40
6/20/2022 22:04	11.82	206.91	6/21/2022 23:48	11.27	100.94	6/20/2022 21:51	11.34	70.16	6/20/2022 23:08	0.38
6/20/2022 22:05	11.82	206.84	6/21/2022 23:49	11.27	100.84	6/20/2022 21:52	11.36	69.79	6/20/2022 23:09	0.39
6/20/2022 22:06	11.82	206.90	6/21/2022 23:50	11.29	101.03	6/20/2022 21:53	11.33	71.33	6/20/2022 23:10	0.39

6/20/2022 22:07	11.83	207.08	6/21/2022 23:51	11.26	101.01	6/20/2022 21:54	11.33	70.61	6/20/2022 23:11	0.44
6/20/2022 22:08	11.85	207.06	6/21/2022 23:52	11.26	101.00	6/20/2022 21:55	11.32	70.59	6/20/2022 23:12	0.38
6/20/2022 22:09	11.80	207.13	6/21/2022 23:53	11.28	101.01	6/20/2022 21:56	11.31	70.99	6/20/2022 23:13	0.46
6/20/2022 22:10	11.84	207.09	6/21/2022 23:54	11.26	101.09	6/20/2022 21:57	11.36	71.07	6/20/2022 23:14	0.41
6/20/2022 22:11	11.83	207.02	6/21/2022 23:55	11.28	101.08	6/20/2022 21:58	11.34	70.20	6/20/2022 23:15	0.41
6/20/2022 22:12	11.83	207.28	6/21/2022 23:56	11.26	101.30	6/20/2022 21:59	11.32	70.38	6/20/2022 23:16	0.47
6/20/2022 22:13	11.82	207.24	6/21/2022 23:57	11.28	101.41	6/20/2022 22:00	11.33	70.89	6/20/2022 23:17	0.46
6/20/2022 22:14	11.79	207.45	6/21/2022 23:58	11.26	101.48	6/20/2022 22:01	11.33	71.20	6/20/2022 23:18	0.47
6/20/2022 22:15	11.83	207.10	6/21/2022 23:59	11.25	101.43	6/20/2022 22:02	11.35	70.78	6/20/2022 23:19	0.49
6/20/2022 22:16	11.83	207.25	6/22/2022 0:00	11.27	101.48	6/20/2022 22:03	11.35	70.57	6/20/2022 23:20	0.46
6/20/2022 22:17	11.80	207.21	6/22/2022 0:01	11.26	101.46	6/20/2022 22:04	11.36	71.27	6/20/2022 23:21	0.52
6/20/2022 22:18	11.80	207.25	6/22/2022 0:02	11.27	101.33	6/20/2022 22:05	11.35	71.04	6/20/2022 23:22	0.55
6/20/2022 22:19	11.83	207.57	6/22/2022 0:03	11.26	101.46	6/20/2022 22:06	11.32	71.51	6/20/2022 23:23	0.52
6/20/2022 22:20	11.84	207.28	6/22/2022 0:04	11.25	101.37	6/20/2022 22:07	11.39	70.77	6/20/2022 23:24	0.49
6/20/2022 22:21	11.83	207.77	6/22/2022 0:05	11.26	101.43	6/20/2022 22:08	11.32	71.30	6/20/2022 23:25	0.58
6/20/2022 22:22	11.83	207.60	6/22/2022 0:06	11.27	101.39	6/20/2022 22:09	11.30	71.07	6/20/2022 23:26	0.54
6/20/2022 22:23	11.82	207.51	6/22/2022 0:07	11.28	101.44	6/20/2022 22:10	11.30	71.43	6/20/2022 23:27	0.55
6/20/2022 22:24	11.81	207.51	6/22/2022 0:08	11.26	101.43	6/20/2022 22:11	11.33	71.71	6/20/2022 23:28	0.61
6/20/2022 22:25	11.82	207.78	6/22/2022 0:09	11.26	101.32	6/20/2022 22:12	11.33	70.76	6/20/2022 23:29	0.55
6/20/2022 22:26	11.81	207.85	6/22/2022 0:10	11.27	101.60	6/20/2022 22:13	11.35	71.00	6/20/2022 23:30	0.56
6/20/2022 22:27	11.83	207.70	6/22/2022 0:11	11.25	101.27	6/20/2022 22:14	11.33	70.49	6/20/2022 23:31	0.63
6/20/2022 22:28	11.83	207.98	6/22/2022 0:12	11.28	101.30	6/20/2022 22:15	11.35	70.66	6/20/2022 23:32	0.60
6/20/2022 22:29	11.82	207.96	6/22/2022 0:13	11.26	101.49	6/20/2022 22:16	11.31	71.58	6/20/2022 23:33	0.64
6/20/2022 22:30	11.81	207.78	6/22/2022 0:14	11.25	101.45	6/20/2022 22:17	11.33	71.46	6/20/2022 23:34	0.60
6/20/2022 22:31	11.84	208.07	6/22/2022 0:15	11.26	101.34	6/20/2022 22:18	11.34	72.39	6/20/2022 23:35	0.67
6/20/2022 22:32	11.83	207.98	6/22/2022 0:16	11.26	101.44	6/20/2022 22:19	11.34	71.62	6/20/2022 23:36	0.64
6/20/2022 22:33	11.81	208.07	6/22/2022 0:17	11.25	101.38	6/20/2022 22:20	11.36	72.81	6/20/2022 23:37	0.67
6/20/2022 22:34	11.81	208.10	6/22/2022 0:18	11.22	101.43	6/20/2022 22:21	11.34	70.72	6/20/2022 23:38	0.68
6/20/2022 22:35	11.81	207.87	6/22/2022 0:19	11.27	101.39	6/20/2022 22:22	11.36	70.65	6/20/2022 23:39	0.69
6/20/2022 22:36	11.82	207.98	6/22/2022 0:20	11.27	101.36	6/20/2022 22:23	11.33	71.33	6/20/2022 23:40	0.72
6/20/2022 22:37	11.79	208.08	6/22/2022 0:21	11.27	101.36	6/20/2022 22:24	11.33	70.78	6/20/2022 23:41	0.74
6/20/2022 22:38	11.82	208.10	6/22/2022 0:22	11.26	101.60	6/20/2022 22:25	11.34	70.78	6/20/2022 23:42	0.76
6/20/2022 22:39	11.82	208.06	6/22/2022 0:23	11.27	101.39	6/20/2022 22:26	11.30	71.90	6/20/2022 23:43	0.77
6/20/2022 22:40	11.82	208.23	6/22/2022 0:24	11.27	101.40	6/20/2022 22:27	11.33	71.73	6/20/2022 23:44	0.75
6/20/2022 22:41	11.81	208.24	6/22/2022 0:25	11.25	101.32	6/20/2022 22:28	11.37	71.44	6/20/2022 23:45	0.80
6/20/2022 22:42	11.83	208.31	6/22/2022 0:26	11.28	101.29	6/20/2022 22:29	11.32	72.30	6/20/2022 23:46	0.72
6/20/2022 22:43	11.81	208.45	6/22/2022 0:27	11.24	101.49	6/20/2022 22:30	11.31	72.35	6/20/2022 23:47	0.74
6/20/2022 22:44	11.85	208.42	6/22/2022 0:28	11.25	101.32	6/20/2022 22:31	11.34	71.50	6/20/2022 23:48	0.79
6/20/2022 22:45	11.84	208.52	6/22/2022 0:29	11.25	101.29	6/20/2022 22:32	11.34	71.98	6/20/2022 23:49	0.81
6/20/2022 22:46	11.82	208.65	6/22/2022 0:30	11.26	101.36	6/20/2022 22:33	11.32	72.16	6/20/2022 23:50	0.82
6/20/2022 22:47	11.82	208.35	6/22/2022 0:31	11.29	101.23	6/20/2022 22:34	11.31	71.99	6/20/2022 23:51	0.81
6/20/2022 22:48	11.83	208.43	6/22/2022 0:32	11.24	101.27	6/20/2022 22:35	11.31	71.51	6/20/2022 23:52	0.86
6/20/2022 22:49	11.82	208.58	6/22/2022 0:33	11.28	101.29	6/20/2022 22:36	11.34	71.68	6/20/2022 23:53	0.84
6/20/2022 22:50	11.82	208.47	6/22/2022 0:34	11.28	101.46	6/20/2022 22:37	11.35	73.03	6/20/2022 23:54	0.80
6/20/2022 22:51	11.82	208.50	6/22/2022 0:35	11.27	101.20	6/20/2022 22:38	11.29	72.14	6/20/2022 23:55	0.79
6/20/2022 22:52	11.85	208.40	6/22/2022 0:36	11.27	101.39	6/20/2022 22:39	11.37	71.90	6/20/2022 23:56	0.83
6/20/2022 22:53	11.83	208.97	6/22/2022 0:37	11.27	101.32	6/20/2022 22:40	11.36	73.09	6/20/2022 23:57	0.87
6/20/2022 22:54	11.79	208.45	6/22/2022 0:38	11.26	101.52	6/20/2022 22:41	11.38	72.97	6/20/2022 23:58	0.86
6/20/2022 22:55	11.84	208.57	6/22/2022 0:39	11.27	101.27	6/20/2022 22:42	11.36	72.74	6/20/2022 23:59	0.87
6/20/2022 22:56	11.82	208.61	6/22/2022 0:40	11.27	101.20	6/20/2022 22:43	11.30	72.94	6/21/2022 0:00	0.93
6/20/2022 22:57	11.83	208.84	6/22/2022 0:41	11.27	101.23	6/20/2022 22:44	11.34	72.31	6/21/2022 0:01	0.95
6/20/2022 22:58	11.84	208.85	6/22/2022 0:42	11.27	101.35	6/20/2022 22:45	11.33	72.78	6/21/2022 0:02	0.90
6/20/2022 22:59	11.83	208.61	6/22/2022 0:43	11.27	101.14	6/20/2022 22:46	11.34	72.22	6/21/2022 0:03	0.92
6/20/2022 23:00	11.82	209.10	6/22/2022 0:44	11.28	101.33	6/20/2022 22:47	11.35	71.98	6/21/2022 0:04	0.95
6/20/2022 23:01	11.82	209.12	6/22/2022 0:45	11.29	101.38	6/20/2022 22:48	11.34	73.53	6/21/2022 0:05	0.97
6/20/2022 23:02	11.83	208.85	6/22/2022 0:46	11.28	101.46	6/20/2022 22:49	11.34	73.13	6/21/2022 0:06	1.00
6/20/2022 23:03	11.84	209.08	6/22/2022 0:47	11.27	101.52	6/20/2022 22:50	11.35	73.90	6/21/2022 0:07	0.98
6/20/2022 23:04	11.83	208.96	6/22/2022 0:48	11.27	101.56	6/20/2022 22:51	11.31	72.95	6/21/2022 0:08	1.02
6/20/2022 23:05	11.82	209.09	6/22/2022 0:49	11.25	101.74	6/20/2022 22:52	11.32	72.62	6/21/2022 0:09	1.01
6/20/2022 23:06	11.83	209.28	6/22/2022 0:50	11.28	101.64	6/20/2022 22:53	11.34	72.43	6/21/2022 0:10	0.99
6/20/2022 23:07	11.83	209.21	6/22/2022 0:51	11.26	101.80	6/20/2022 22:54	11.34	71.74	6/21/2022 0:11	0.99
6/20/2022 23:08	11.83	209.20	6/22/2022 0:52	11.26	101.50	6/20/2022 22:55	11.34	72.86	6/21/2022 0:12	1.04
6/20/2022 23:09	11.86	209.24	6/22/2022 0:53	11.24	101.56	6/20/2022 22:56	11.33	73.46	6/21/2022 0:13	1.05
6/20/2022 23:10	11.84	209.29	6/22/2022 0:54	11.27	101.62	6/20/2022 22:57	11.32	72.33	6/21/2022 0:14	1.02
6/20/2022 23:11	11.81	209.45	6/22/2022 0:55	11.27	101.55	6/20/2022 22:58	11.34	73.81	6/21/2022 0:15	1.14
6/20/2022 23:12	11.81	209.47	6/22/2022 0:56	11.27	101.77	6/20/2022 22:59	11.33	72.41	6/21/2022 0:16	1.09
6/20/2022 23:13	11.83	209.41	6/22/2022 0:57	11.28	101.62	6/20/2022 23:00	11.35	73.85	6/21/2022 0:17	1.06
6/20/2022 23:14	11.84	209.41	6/22/2022 0:58	11.27	101.65	6/20/2022 23:01	11.36	74.13	6/21/2022 0:18	1.09
6/20/2022 23:15	11.81	209.46	6/22/2022 0:59	11.28	101.61	6/20/2022 23:02	11.32	73.47	6/21/2022 0:19	1.14
6/20/2022 23:16	11.83	209.49	6/22/2022 1:00	11.25	101.72	6/20/2022 23:03	11.33	72.21	6/21/2022 0:20	1.08
6/20/2022 23:17	11.84	209.28	6/22/2022 1:01	11.26	101.83	6/20/2022 23:04	11.34	73.28	6/21/2022 0:21	1.17
6/20/2022 23:18	11.84	209.54	6/22/2022 1:02	11.26	101.84	6/20/2022 23:05	11.33	73.04	6/21/2022 0:22	1.10
6/20/2022 23:19	11.81	209.74	6/22/2022 1:03	11.25	101.81	6/20/2022 23:06	11.32	73.28	6/21/2022 0:23	1.12
6/20/2022 23:20	11.82	209.70	6/22/2022 1:04	11.29	101.81	6/20/2022 23:07	11.33	73.01	6/21/2022 0:24	1.15
6/20/2022 23:21	11.80	209.79	6/22/2022 1:05	11.27	101.68	6/20/2022 23:08	11.35	73.61	6/21/2022 0:25	1.18
6/20/2022 23:22	11.81	209.77	6/22/2022 1:06	11.25	101.84	6/20/2022 23:09	11.34	73.41	6/21/2022 0:26	1.16
6/20/2022 23:23	11.82	209.94	6/22/2022 1:07	11.28	101.85	6/20/2022 23:10	11.32	74.10	6/21/2022 0:27	1.22
6/20/2022 23:24	11.84	209.57	6/22/2022 1:08	11.24	101.78	6/20/2022 23:11	11.34	74.65	6/21/2022 0:28	1.19
6/20/2022 23:25	11.85	209.90	6/22/2022 1:09	11.29	101.72	6/20/2022 23:12	11.33	74.27	6/21/2022 0:29	1.18
6/20/2022 23:26	11.83	209.80	6/22/2022 1:10	11.27	101.95	6/20/2022 23:13	11.31	74.43	6/21/2022 0:30	1.15
6/20/2022 23:27	11.82	209.74	6/22/2022 1:11	11.28	101.71	6/20/2022 23:14	11.32	73.89	6/21/2022 0:31	1.24
6/20/2022 23:28	11.80	209.96	6/22/2022 1:12	11.27	101.76	6/20/2022 23:15	11.34	73.91	6/21/2022 0:32	1.24
6/20/2022 23:29	11.82	209.98	6/22/2022 1:13	11.26	101.63	6/20/2022 23:16	11.37	73.52	6/21/2022 0:33	1.22
6/20/2022 23:30	11.84	210.06	6/22/2022 1:14	11.30	101.77	6/20/2022 23:17	11.34	74.49	6/21/2022 0:34	1.25
6/20/2022 23:31	11.82	210.24	6/22/2022 1:15	11.27	101.86	6/20/2022 23:18	11.37	73.70	6/21/2022 0:35	1.20
6/20/2022 23:32	11.82	209.98	6/22/2022 1:16	11.25	102.02	6/20/2022 23:19	11.34	73.46	6/21/2022 0:36	1.26
6/20/2022 23:33	11.80	210.32	6/22/2022 1:17	11.28	101.76	6/20/2022 23:20	11.34	73.74	6/21/2022 0:37	1.26
6/20/2022 23:34	11.82	210.13	6/22/2022 1:18	11.28	102.12	6/20/2022 23:21	11.33	73.40	6/21/2022 0:38	1.30

6/20/2022 23:35	11.81	210.31	6/22/2022 1:19	11.28	101.63	6/20/2022 23:22	11.35	74.00	6/21/2022 0:39	1.26
6/20/2022 23:36	11.85	210.44	6/22/2022 1:20	11.25	101.73	6/20/2022 23:23	11.30	73.13	6/21/2022 0:40	1.32
6/20/2022 23:37	11.85	210.31	6/22/2022 1:21	11.27	101.78	6/20/2022 23:24	11.34	72.54	6/21/2022 0:41	1.29
6/20/2022 23:38	11.82	210.47	6/22/2022 1:22	11.25	101.76	6/20/2022 23:25	11.34	74.29	6/21/2022 0:42	1.30
6/20/2022 23:39	11.82	210.48	6/22/2022 1:23	11.26	101.67	6/20/2022 23:26	11.33	73.56	6/21/2022 0:43	1.31
6/20/2022 23:40	11.84	210.24	6/22/2022 1:24	11.26	101.72	6/20/2022 23:27	11.35	72.78	6/21/2022 0:44	1.33
6/20/2022 23:41	11.79	210.37	6/22/2022 1:25	11.26	101.69	6/20/2022 23:28	11.35	72.99	6/21/2022 0:45	1.34
6/20/2022 23:42	11.82	210.54	6/22/2022 1:26	11.27	101.73	6/20/2022 23:29	11.33	74.17	6/21/2022 0:46	1.29
6/20/2022 23:43	11.84	210.41	6/22/2022 1:27	11.26	101.76	6/20/2022 23:30	11.35	73.13	6/21/2022 0:47	1.35
6/20/2022 23:44	11.83	210.64	6/22/2022 1:28	11.26	101.68	6/20/2022 23:31	11.35	75.10	6/21/2022 0:48	1.35
6/20/2022 23:45	11.80	210.65	6/22/2022 1:29	11.26	101.77	6/20/2022 23:32	11.33	73.86	6/21/2022 0:49	1.33
6/20/2022 23:46	11.83	210.42	6/22/2022 1:30	11.26	101.94	6/20/2022 23:33	11.32	74.04	6/21/2022 0:50	1.35
6/20/2022 23:47	11.82	210.65	6/22/2022 1:31	11.25	101.71	6/20/2022 23:34	11.35	73.41	6/21/2022 0:51	1.39
6/20/2022 23:48	11.80	210.61	6/22/2022 1:32	11.26	101.73	6/20/2022 23:35	11.31	74.19	6/21/2022 0:52	1.39
6/20/2022 23:49	11.82	210.59	6/22/2022 1:33	11.28	101.68	6/20/2022 23:36	11.34	73.71	6/21/2022 0:53	1.40
6/20/2022 23:50	11.82	210.78	6/22/2022 1:34	11.27	101.76	6/20/2022 23:37	11.34	73.87	6/21/2022 0:54	1.36
6/20/2022 23:51	11.84	210.85	6/22/2022 1:35	11.27	101.69	6/20/2022 23:38	11.31	75.26	6/21/2022 0:55	1.42
6/20/2022 23:52	11.82	210.76	6/22/2022 1:36	11.25	101.67	6/20/2022 23:39	11.34	74.10	6/21/2022 0:56	1.45
6/20/2022 23:53	11.84	211.10	6/22/2022 1:37	11.26	101.83	6/20/2022 23:40	11.33	73.51	6/21/2022 0:57	1.42
6/20/2022 23:54	11.81	211.03	6/22/2022 1:38	11.27	101.56	6/20/2022 23:41	11.33	73.80	6/21/2022 0:58	1.46
6/20/2022 23:55	11.83	211.11	6/22/2022 1:39	11.27	101.77	6/20/2022 23:42	11.35	74.09	6/21/2022 0:59	1.45
6/20/2022 23:56	11.83	211.14	6/22/2022 1:40	11.26	101.73	6/20/2022 23:43	11.32	74.53	6/21/2022 1:00	1.48
6/20/2022 23:57	11.82	210.89	6/22/2022 1:41	11.26	101.76	6/20/2022 23:44	11.32	74.62	6/21/2022 1:01	1.49
6/20/2022 23:58	11.83	211.04	6/22/2022 1:42	11.29	101.72	6/20/2022 23:45	11.33	75.40	6/21/2022 1:02	1.44
6/20/2022 23:59	11.83	210.98	6/22/2022 1:43	11.28	101.48	6/20/2022 23:46	11.33	74.92	6/21/2022 1:03	1.44
6/21/2022 0:00	11.80	211.07	6/22/2022 1:44	11.26	101.74	6/20/2022 23:47	11.34	74.18	6/21/2022 1:04	1.46
6/21/2022 0:01	11.83	210.98	6/22/2022 1:45	11.27	101.81	6/20/2022 23:48	11.36	75.12	6/21/2022 1:05	1.49
6/21/2022 0:02	11.81	211.13	6/22/2022 1:46	11.25	101.64	6/20/2022 23:49	11.36	73.76	6/21/2022 1:06	1.51
6/21/2022 0:03	11.82	211.11	6/22/2022 1:47	11.26	101.71	6/20/2022 23:50	11.33	75.53	6/21/2022 1:07	1.53
6/21/2022 0:04	11.82	211.40	6/22/2022 1:48	11.24	101.80	6/20/2022 23:51	11.33	73.76	6/21/2022 1:08	1.52
6/21/2022 0:05	11.84	211.13	6/22/2022 1:49	11.25	101.52	6/20/2022 23:52	11.34	74.77	6/21/2022 1:09	1.45
6/21/2022 0:06	11.82	211.23	6/22/2022 1:50	11.25	101.79	6/20/2022 23:53	11.34	74.19	6/21/2022 1:10	1.51
6/21/2022 0:07	11.80	211.23	6/22/2022 1:51	11.28	101.60	6/20/2022 23:54	11.30	74.80	6/21/2022 1:11	1.51
6/21/2022 0:08	11.83	211.37	6/22/2022 1:52	11.26	101.71	6/20/2022 23:55	11.34	74.65	6/21/2022 1:12	1.54
6/21/2022 0:09	11.85	211.48	6/22/2022 1:53	11.27	101.71	6/20/2022 23:56	11.32	74.30	6/21/2022 1:13	1.56
6/21/2022 0:10	11.82	211.44	6/22/2022 1:54	11.28	101.69	6/20/2022 23:57	11.32	75.15	6/21/2022 1:14	1.56
6/21/2022 0:11	11.80	211.54	6/22/2022 1:55	11.25	101.61	6/20/2022 23:58	11.33	75.11	6/21/2022 1:15	1.53
6/21/2022 0:12	11.81	211.43	6/22/2022 1:56	11.27	101.75	6/20/2022 23:59	11.33	75.41	6/21/2022 1:16	1.59
6/21/2022 0:13	11.82	211.50	6/22/2022 1:57	11.27	101.70	6/21/2022 0:00	11.34	75.04	6/21/2022 1:17	1.61
6/21/2022 0:14	11.82	211.41	6/22/2022 1:58	11.28	101.63	6/21/2022 0:01	11.34	75.45	6/21/2022 1:18	1.58
6/21/2022 0:15	11.82	211.62	6/22/2022 1:59	11.28	101.77	6/21/2022 0:02	11.33	74.79	6/21/2022 1:19	1.59
6/21/2022 0:16	11.83	211.54	6/22/2022 2:00	11.29	101.84	6/21/2022 0:03	11.36	74.22	6/21/2022 1:20	1.60
6/21/2022 0:17	11.80	211.71	6/22/2022 2:01	11.31	101.81	6/21/2022 0:04	11.35	75.52	6/21/2022 1:21	1.61
6/21/2022 0:18	11.81	211.84	6/22/2022 2:02	11.26	101.76	6/21/2022 0:05	11.33	75.12	6/21/2022 1:22	1.63
6/21/2022 0:19	11.83	211.87	6/22/2022 2:03	11.25	101.68	6/21/2022 0:06	11.34	76.00	6/21/2022 1:23	1.65
6/21/2022 0:20	11.82	211.91	6/22/2022 2:04	11.28	101.76	6/21/2022 0:07	11.36	74.85	6/21/2022 1:24	1.56
6/21/2022 0:21	11.81	211.82	6/22/2022 2:05	11.26	101.70	6/21/2022 0:08	11.32	75.56	6/21/2022 1:25	1.62
6/21/2022 0:22	11.81	211.89	6/22/2022 2:06	11.26	101.81	6/21/2022 0:09	11.35	75.34	6/21/2022 1:26	1.61
6/21/2022 0:23	11.84	211.89	6/22/2022 2:07	11.28	101.73	6/21/2022 0:10	11.34	75.12	6/21/2022 1:27	1.61
6/21/2022 0:24	11.85	211.68	6/22/2022 2:08	11.27	101.82	6/21/2022 0:11	11.35	76.05	6/21/2022 1:28	1.65
6/21/2022 0:25	11.82	212.05	6/22/2022 2:09	11.25	101.69	6/21/2022 0:12	11.36	75.80	6/21/2022 1:29	1.67
6/21/2022 0:26	11.81	211.82	6/22/2022 2:10	11.29	101.74	6/21/2022 0:13	11.34	75.26	6/21/2022 1:30	1.67
6/21/2022 0:27	11.82	211.82	6/22/2022 2:11	11.27	101.78	6/21/2022 0:14	11.34	75.28	6/21/2022 1:31	1.67
6/21/2022 0:28	11.82	211.71	6/22/2022 2:12	11.28	101.67	6/21/2022 0:15	11.33	75.17	6/21/2022 1:32	1.67
6/21/2022 0:29	11.82	211.91	6/22/2022 2:13	11.25	101.57	6/21/2022 0:16	11.33	76.07	6/21/2022 1:33	1.67
6/21/2022 0:30	11.83	211.96	6/22/2022 2:14	11.27	101.72	6/21/2022 0:17	11.34	75.35	6/21/2022 1:34	1.73
6/21/2022 0:31	11.80	212.02	6/22/2022 2:15	11.26	101.66	6/21/2022 0:18	11.35	75.28	6/21/2022 1:35	1.69
6/21/2022 0:32	11.83	211.93	6/22/2022 2:16	11.26	101.70	6/21/2022 0:19	11.34	76.15	6/21/2022 1:36	1.71
6/21/2022 0:33	11.83	212.05	6/22/2022 2:17	11.27	101.87	6/21/2022 0:20	11.32	75.32	6/21/2022 1:37	1.68
6/21/2022 0:34	11.80	212.15	6/22/2022 2:18	11.27	101.78	6/21/2022 0:21	11.33	77.14	6/21/2022 1:38	1.73
6/21/2022 0:35	11.82	212.27	6/22/2022 2:19	11.28	101.75	6/21/2022 0:22	11.33	76.37	6/21/2022 1:39	1.68
6/21/2022 0:36	11.79	212.21	6/22/2022 2:20	11.28	101.72	6/21/2022 0:23	11.34	75.24	6/21/2022 1:40	1.74
6/21/2022 0:37	11.81	212.37	6/22/2022 2:21	11.28	101.73	6/21/2022 0:24	11.35	75.95	6/21/2022 1:41	1.74
6/21/2022 0:38	11.83	212.30	6/22/2022 2:22	11.28	101.80	6/21/2022 0:25	11.32	75.03	6/21/2022 1:42	1.72
6/21/2022 0:39	11.81	212.39	6/22/2022 2:23	11.27	101.90	6/21/2022 0:26	11.37	75.12	6/21/2022 1:43	1.81
6/21/2022 0:40	11.84	212.57	6/22/2022 2:24	11.27	101.72	6/21/2022 0:27	11.34	74.69	6/21/2022 1:44	1.76
6/21/2022 0:41	11.86	212.46	6/22/2022 2:25	11.25	101.71	6/21/2022 0:28	11.32	76.57	6/21/2022 1:45	1.75
6/21/2022 0:42	11.79	212.43	6/22/2022 2:26	11.28	101.67	6/21/2022 0:29	11.35	75.93	6/21/2022 1:46	1.78
6/21/2022 0:43	11.83	212.58	6/22/2022 2:27	11.27	101.95	6/21/2022 0:30	11.35	75.46	6/21/2022 1:47	1.78
6/21/2022 0:44	11.85	212.27	6/22/2022 2:28	11.25	101.67	6/21/2022 0:31	11.34	75.48	6/21/2022 1:48	1.80
6/21/2022 0:45	11.83	212.40	6/22/2022 2:29	11.28	101.81	6/21/2022 0:32	11.34	75.51	6/21/2022 1:49	1.85
6/21/2022 0:46	11.79	212.48	6/22/2022 2:30	11.26	101.76	6/21/2022 0:33	11.31	76.78	6/21/2022 1:50	1.80
6/21/2022 0:47	11.82	212.33	6/22/2022 2:31	11.26	101.69	6/21/2022 0:34	11.33	76.90	6/21/2022 1:51	1.81
6/21/2022 0:48	11.82	212.59	6/22/2022 2:32	11.26	101.91	6/21/2022 0:35	11.34	76.51	6/21/2022 1:52	1.86
6/21/2022 0:49	11.83	212.74	6/22/2022 2:33	11.26	101.60	6/21/2022 0:36	11.34	76.26	6/21/2022 1:53	1.82
6/21/2022 0:50	11.84	212.48	6/22/2022 2:34	11.29	101.54	6/21/2022 0:37	11.33	75.98	6/21/2022 1:54	1.82
6/21/2022 0:51	11.82	212.69	6/22/2022 2:35	11.27	101.86	6/21/2022 0:38	11.31	76.21	6/21/2022 1:55	1.86
6/21/2022 0:52	11.81	212.81	6/22/2022 2:36	11.28	101.82	6/21/2022 0:39	11.35	75.95	6/21/2022 1:56	1.83
6/21/2022 0:53	11.82	212.78	6/22/2022 2:37	11.27	101.82	6/21/2022 0:40	11.34	75.60	6/21/2022 1:57	1.87
6/21/2022 0:54	11.82	212.62	6/22/2022 2:38	11.28	101.76	6/21/2022 0:41	11.35	76.44	6/21/2022 1:58	1.85
6/21/2022 0:55	11.82	212.62	6/22/2022 2:39	11.27	101.66	6/21/2022 0:42	11.36	75.70	6/21/2022 1:59	1.83
6/21/2022 0:56	11.81	212.91	6/22/2022 2:40	11.28	101.85	6/21/2022 0:43	11.33	76.04	6/21/2022 2:00	1.84
6/21/2022 0:57	11.80	212.88	6/22/2022 2:41	11.28	101.67	6/21/2022 0:44	11.34	76.32	6/21/2022 2:01	1.83
6/21/2022 0:58	11.83	212.71	6/22/2022 2:42	11.25	101.83	6/21/2022 0:45	11.33	75.71	6/21/2022 2:02	1.84
6/21/2022 0:59	11.79	212.96	6/22/2022 2:43	11.25	101.70	6/21/2022 0:46	11.35	75.87	6/21/2022 2:03	1.89
6/21/2022 1:00	11.81	212.94	6/22/2022 2:44	11.28	101.73	6/21/2022 0:47	11.35	77.27	6/21/2022 2:04	1.89
6/21/2022 1:01	11.82	213.07	6/22/2022 2:45	11.27	101.72	6/21/2022 0:48	11.34	76.35	6/21/2022 2:05	1.94
6/21/2022 1:02	11.85	213.07	6/22/2022 2:46	11.26	101.65	6/21/2022 0:49	11.35	77.17	6/21/2022 2:06	1.89

6/21/2022 1:03	11.83	213.20	6/22/2022 2:47	11.25	101.89	6/21/2022 0:50	11.35	76.05	6/21/2022 2:07	1.89
6/21/2022 1:04	11.85	212.96	6/22/2022 2:48	11.24	101.83	6/21/2022 0:51	11.35	76.55	6/21/2022 2:08	1.88
6/21/2022 1:05	11.83	213.12	6/22/2022 2:49	11.27	101.90	6/21/2022 0:52	11.34	76.54	6/21/2022 2:09	1.93
6/21/2022 1:06	11.80	212.98	6/22/2022 2:50	11.26	101.86	6/21/2022 0:53	11.32	76.58	6/21/2022 2:10	1.92
6/21/2022 1:07	11.83	213.09	6/22/2022 2:51	11.25	101.62	6/21/2022 0:54	11.32	76.24	6/21/2022 2:11	1.95
6/21/2022 1:08	11.81	213.27	6/22/2022 2:52	11.22	101.93	6/21/2022 0:55	11.37	76.07	6/21/2022 2:12	1.93
6/21/2022 1:09	11.83	213.16	6/22/2022 2:53	11.29	101.78	6/21/2022 0:56	11.34	76.40	6/21/2022 2:13	1.94
6/21/2022 1:10	11.80	213.34	6/22/2022 2:54	11.29	102.01	6/21/2022 0:57	11.32	76.39	6/21/2022 2:14	1.91
6/21/2022 1:11	11.82	213.37	6/22/2022 2:55	11.26	102.23	6/21/2022 0:58	11.33	76.91	6/21/2022 2:15	1.96
6/21/2022 1:12	11.81	213.26	6/22/2022 2:56	11.25	102.16	6/21/2022 0:59	11.35	76.02	6/21/2022 2:16	1.97
6/21/2022 1:13	11.79	213.40	6/22/2022 2:57	11.28	102.30	6/21/2022 1:00	11.34	77.08	6/21/2022 2:17	1.95
6/21/2022 1:14	11.80	213.55	6/22/2022 2:58	11.29	102.09	6/21/2022 1:01	11.32	76.85	6/21/2022 2:18	2.03
6/21/2022 1:15	11.84	213.53	6/22/2022 2:59	11.28	102.23	6/21/2022 1:02	11.32	76.72	6/21/2022 2:19	1.98
6/21/2022 1:16	11.78	213.39	6/22/2022 3:00	11.27	102.13	6/21/2022 1:03	11.32	76.47	6/21/2022 2:20	2.00
6/21/2022 1:17	11.82	213.50	6/22/2022 3:01	11.26	102.50	6/21/2022 1:04	11.31	76.02	6/21/2022 2:21	1.96
6/21/2022 1:18	11.82	213.41	6/22/2022 3:02	11.25	102.35	6/21/2022 1:05	11.34	76.51	6/21/2022 2:22	1.97
6/21/2022 1:19	11.80	213.65	6/22/2022 3:03	11.23	102.39	6/21/2022 1:06	11.33	75.45	6/21/2022 2:23	2.04
6/21/2022 1:20	11.80	213.71	6/22/2022 3:04	11.26	102.50	6/21/2022 1:07	11.31	76.19	6/21/2022 2:24	2.00
6/21/2022 1:21	11.83	213.68	6/22/2022 3:05	11.27	102.44	6/21/2022 1:08	11.36	77.97	6/21/2022 2:25	2.05
6/21/2022 1:22	11.82	213.82	6/22/2022 3:06	11.26	102.60	6/21/2022 1:09	11.35	76.99	6/21/2022 2:26	2.04
6/21/2022 1:23	11.83	213.77	6/22/2022 3:07	11.26	102.38	6/21/2022 1:10	11.35	76.50	6/21/2022 2:27	2.06
6/21/2022 1:24	11.84	213.77	6/22/2022 3:08	11.26	102.36	6/21/2022 1:11	11.32	77.69	6/21/2022 2:28	1.99
6/21/2022 1:25	11.80	213.65	6/22/2022 3:09	11.26	102.31	6/21/2022 1:12	11.32	76.51	6/21/2022 2:29	2.06
6/21/2022 1:26	11.82	213.77	6/22/2022 3:10	11.27	102.40	6/21/2022 1:13	11.34	77.09	6/21/2022 2:30	2.06
6/21/2022 1:27	11.82	213.99	6/22/2022 3:11	11.26	102.54	6/21/2022 1:14	11.34	77.02	6/21/2022 2:31	2.07
6/21/2022 1:28	11.82	213.98	6/22/2022 3:12	11.29	102.26	6/21/2022 1:15	11.33	76.92	6/21/2022 2:32	2.08
6/21/2022 1:29	11.83	213.88	6/22/2022 3:13	11.28	102.33	6/21/2022 1:16	11.34	77.91	6/21/2022 2:33	2.06
6/21/2022 1:30	11.83	213.99	6/22/2022 3:14	11.27	102.57	6/21/2022 1:17	11.33	77.63	6/21/2022 2:34	2.07
6/21/2022 1:31	11.82	213.90	6/22/2022 3:15	11.26	102.44	6/21/2022 1:18	11.34	77.00	6/21/2022 2:35	2.12
6/21/2022 1:32	11.83	213.92	6/22/2022 3:16	11.26	102.29	6/21/2022 1:19	11.34	77.53	6/21/2022 2:36	2.16
6/21/2022 1:33	11.83	214.16	6/22/2022 3:17	11.26	102.29	6/21/2022 1:20	11.32	77.07	6/21/2022 2:37	2.09
6/21/2022 1:34	11.81	214.02	6/22/2022 3:18	11.26	102.25	6/21/2022 1:21	11.32	77.15	6/21/2022 2:38	2.16
6/21/2022 1:35	11.83	213.81	6/22/2022 3:19	11.27	102.38	6/21/2022 1:22	11.34	76.58	6/21/2022 2:39	2.13
6/21/2022 1:36	11.83	214.11	6/22/2022 3:20	11.30	102.16	6/21/2022 1:23	11.35	77.54	6/21/2022 2:40	2.11
6/21/2022 1:37	11.81	214.27	6/22/2022 3:21	11.28	102.38	6/21/2022 1:24	11.34	75.77	6/21/2022 2:41	2.13
6/21/2022 1:38	11.82	214.00	6/22/2022 3:22	11.25	102.29	6/21/2022 1:25	11.34	77.68	6/21/2022 2:42	2.18
6/21/2022 1:39	11.79	214.01	6/22/2022 3:23	11.26	102.43	6/21/2022 1:26	11.33	77.40	6/21/2022 2:43	2.19
6/21/2022 1:40	11.81	214.18	6/22/2022 3:24	11.26	102.34	6/21/2022 1:27	11.34	77.59	6/21/2022 2:44	2.11
6/21/2022 1:41	11.83	214.23	6/22/2022 3:25	11.28	102.30	6/21/2022 1:28	11.35	76.52	6/21/2022 2:45	2.19
6/21/2022 1:42	11.82	214.45	6/22/2022 3:26	11.27	102.42	6/21/2022 1:29	11.32	77.09	6/21/2022 2:46	2.25
6/21/2022 1:43	11.84	214.24	6/22/2022 3:27	11.29	102.22	6/21/2022 1:30	11.35	77.42	6/21/2022 2:47	2.18
6/21/2022 1:44	11.83	214.36	6/22/2022 3:28	11.26	102.22	6/21/2022 1:31	11.35	77.24	6/21/2022 2:48	2.21
6/21/2022 1:45	11.81	214.38	6/22/2022 3:29	11.28	102.25	6/21/2022 1:32	11.33	77.62	6/21/2022 2:49	2.22
6/21/2022 1:46	11.84	214.37	6/22/2022 3:30	11.27	102.19	6/21/2022 1:33	11.34	76.62	6/21/2022 2:50	2.17
6/21/2022 1:47	11.81	214.45	6/22/2022 3:31	11.25	102.52	6/21/2022 1:34	11.34	77.19	6/21/2022 2:51	2.23
6/21/2022 1:48	11.82	214.37	6/22/2022 3:32	11.28	102.21	6/21/2022 1:35	11.34	77.60	6/21/2022 2:52	2.24
6/21/2022 1:49	11.82	214.44	6/22/2022 3:33	11.28	102.17	6/21/2022 1:36	11.33	77.40	6/21/2022 2:53	2.23
6/21/2022 1:50	11.83	214.58	6/22/2022 3:34	11.25	102.01	6/21/2022 1:37	11.33	77.11	6/21/2022 2:54	2.23
6/21/2022 1:51	11.81	214.59	6/22/2022 3:35	11.25	102.25	6/21/2022 1:38	11.34	77.05	6/21/2022 2:55	2.21
6/21/2022 1:52	11.82	214.35	6/22/2022 3:36	11.28	102.40	6/21/2022 1:39	11.31	77.61	6/21/2022 2:56	2.21
6/21/2022 1:53	11.83	214.55	6/22/2022 3:37	11.26	102.27	6/21/2022 1:40	11.33	77.11	6/21/2022 2:57	2.23
6/21/2022 1:54	11.83	214.54	6/22/2022 3:38	11.28	102.24	6/21/2022 1:41	11.33	77.51	6/21/2022 2:58	2.21
6/21/2022 1:55	11.80	214.58	6/22/2022 3:39	11.27	102.23	6/21/2022 1:42	11.33	76.65	6/21/2022 2:59	2.27
6/21/2022 1:56	11.83	214.57	6/22/2022 3:40	11.29	102.41	6/21/2022 1:43	11.32	77.54	6/21/2022 3:00	2.24
6/21/2022 1:57	11.80	214.57	6/22/2022 3:41	11.26	102.18	6/21/2022 1:44	11.33	77.42	6/21/2022 3:01	2.34
6/21/2022 1:58	11.83	214.59	6/22/2022 3:42	11.26	102.35	6/21/2022 1:45	11.34	78.03	6/21/2022 3:02	2.29
6/21/2022 1:59	11.82	214.54	6/22/2022 3:43	11.27	102.24	6/21/2022 1:46	11.34	78.49	6/21/2022 3:03	2.27
6/21/2022 2:00	11.82	214.81	6/22/2022 3:44	11.27	102.36	6/21/2022 1:47	11.35	77.61	6/21/2022 3:04	2.31
6/21/2022 2:01	11.81	214.67	6/22/2022 3:45	11.27	102.35	6/21/2022 1:48	11.35	77.41	6/21/2022 3:05	2.33
6/21/2022 2:02	11.81	214.62	6/22/2022 3:46	11.27	102.09	6/21/2022 1:49	11.32	77.58	6/21/2022 3:06	2.26
6/21/2022 2:03	11.78	214.78	6/22/2022 3:47	11.27	102.13	6/21/2022 1:50	11.34	77.94	6/21/2022 3:07	2.33
6/21/2022 2:04	11.85	214.79	6/22/2022 3:48	11.26	102.29	6/21/2022 1:51	11.35	77.58	6/21/2022 3:08	2.23
6/21/2022 2:05	11.82	215.12	6/22/2022 3:49	11.27	102.17	6/21/2022 1:52	11.35	77.44	6/21/2022 3:09	2.38
6/21/2022 2:06	11.81	214.97	6/22/2022 3:50	11.26	102.20	6/21/2022 1:53	11.35	77.89	6/21/2022 3:10	2.36
6/21/2022 2:07	11.81	214.92	6/22/2022 3:51	11.29	102.31	6/21/2022 1:54	11.33	78.40	6/21/2022 3:11	2.36
6/21/2022 2:08	11.78	214.99	6/22/2022 3:52	11.27	102.27	6/21/2022 1:55	11.35	78.37	6/21/2022 3:12	2.39
6/21/2022 2:09	11.83	214.73	6/22/2022 3:53	11.25	102.13	6/21/2022 1:56	11.33	77.56	6/21/2022 3:13	2.33
6/21/2022 2:10	11.80	214.93	6/22/2022 3:54	11.26	102.16	6/21/2022 1:57	11.33	78.24	6/21/2022 3:14	2.37
6/21/2022 2:11	11.82	215.03	6/22/2022 3:55	11.26	102.27	6/21/2022 1:58	11.34	77.58	6/21/2022 3:15	2.36
6/21/2022 2:12	11.81	214.93	6/22/2022 3:56	11.27	102.28	6/21/2022 1:59	11.34	76.76	6/21/2022 3:16	2.41
6/21/2022 2:13	11.83	215.02	6/22/2022 3:57	11.28	102.20	6/21/2022 2:00	11.34	77.66	6/21/2022 3:17	2.38
6/21/2022 2:14	11.80	214.87	6/22/2022 3:58	11.27	102.23	6/21/2022 2:01	11.34	78.13	6/21/2022 3:18	2.36
6/21/2022 2:15	11.81	215.29	6/22/2022 3:59	11.25	102.41	6/21/2022 2:02	11.32	77.38	6/21/2022 3:19	2.38
6/21/2022 2:16	11.82	215.05	6/22/2022 4:00	11.26	102.25	6/21/2022 2:03	11.33	77.92	6/21/2022 3:20	2.37
6/21/2022 2:17	11.84	215.21	6/22/2022 4:01	11.26	102.45	6/21/2022 2:04	11.34	78.35	6/21/2022 3:21	2.40
6/21/2022 2:18	11.83	215.07	6/22/2022 4:02	11.24	102.28	6/21/2022 2:05	11.32	78.59	6/21/2022 3:22	2.43
6/21/2022 2:19	11.81	215.16	6/22/2022 4:03	11.28	102.19	6/21/2022 2:06	11.34	78.03	6/21/2022 3:23	2.34
6/21/2022 2:20	11.80	215.16	6/22/2022 4:04	11.27	102.04	6/21/2022 2:07	11.33	78.80	6/21/2022 3:24	2.38
6/21/2022 2:21	11.81	215.32	6/22/2022 4:05	11.27	102.20	6/21/2022 2:08	11.33	77.80	6/21/2022 3:25	2.44
6/21/2022 2:22	11.80	215.33	6/22/2022 4:06	11.28	102.32	6/21/2022 2:09	11.33	78.54	6/21/2022 3:26	2.37
6/21/2022 2:23	11.82	215.32	6/22/2022 4:07	11.29	102.21	6/21/2022 2:10	11.32	78.45	6/21/2022 3:27	2.43
6/21/2022 2:24	11.80	215.47	6/22/2022 4:08	11.25	102.21	6/21/2022 2:11	11.33	78.44	6/21/2022 3:28	2.45
6/21/2022 2:25	11.83	215.36	6/22/2022 4:09	11.26	102.23	6/21/2022 2:12	11.34	78.62	6/21/2022 3:29	2.42
6/21/2022 2:26	11.82	215.51	6/22/2022 4:10	11.28	102.33	6/21/2022 2:13	11.34	78.65	6/21/2022 3:30	2.40
6/21/2022 2:27	11.82	215.51	6/22/2022 4:11	11.26	102.20	6/21/2022 2:14	11.33	79.29	6/21/2022 3:31	2.42
6/21/2022 2:28	11.80	215.44	6/22/2022 4:12	11.25	102.09	6/21/2022 2:15	11.33	77.92	6/21/2022 3:32	2.44
6/21/2022 2:29	11.85	215.54	6/22/2022 4:13	11.25	102.13	6/21/2022 2:16	11.33	78.63	6/21/2022 3:33	2.44
6/21/2022 2:30	11.83	215.55	6/22/2022 4:14	11.27	102.10	6/21/2022 2:17	11.31	78.79	6/21/2022 3:34	2.40

6/21/2022 2:31	11.80	215.54	6/22/2022 4:15	11.28	102.09	6/21/2022 2:18	11.36	78.92	6/21/2022 3:35	2.51
6/21/2022 2:32	11.84	215.45	6/22/2022 4:16	11.29	102.08	6/21/2022 2:19	11.33	78.21	6/21/2022 3:36	2.48
6/21/2022 2:33	11.79	215.69	6/22/2022 4:17	11.30	102.24	6/21/2022 2:20	11.36	78.61	6/21/2022 3:37	2.46
6/21/2022 2:34	11.80	215.73	6/22/2022 4:18	11.26	102.04	6/21/2022 2:21	11.33	78.51	6/21/2022 3:38	2.48
6/21/2022 2:35	11.82	215.85	6/22/2022 4:19	11.29	102.04	6/21/2022 2:22	11.35	78.80	6/21/2022 3:39	2.46
6/21/2022 2:36	11.82	215.78	6/22/2022 4:20	11.27	102.15	6/21/2022 2:23	11.33	78.71	6/21/2022 3:40	2.52
6/21/2022 2:37	11.83	215.78	6/22/2022 4:21	11.26	102.47	6/21/2022 2:24	11.33	79.29	6/21/2022 3:41	2.51
6/21/2022 2:38	11.80	215.89	6/22/2022 4:22	11.28	102.24	6/21/2022 2:25	11.35	79.29	6/21/2022 3:42	2.46
6/21/2022 2:39	11.80	215.63	6/22/2022 4:23	11.27	102.28	6/21/2022 2:26	11.34	78.13	6/21/2022 3:43	2.48
6/21/2022 2:40	11.80	215.98	6/22/2022 4:24	11.26	102.08	6/21/2022 2:27	11.35	78.97	6/21/2022 3:44	2.47
6/21/2022 2:41	11.81	216.08	6/22/2022 4:25	11.26	102.07	6/21/2022 2:28	11.33	78.72	6/21/2022 3:45	2.53
6/21/2022 2:42	11.80	215.94	6/22/2022 4:26	11.25	102.09	6/21/2022 2:29	11.32	79.13	6/21/2022 3:46	2.55
6/21/2022 2:43	11.83	215.98	6/22/2022 4:27	11.25	102.28	6/21/2022 2:30	11.35	78.90	6/21/2022 3:47	2.55
6/21/2022 2:44	11.81	216.00	6/22/2022 4:28	11.26	102.11	6/21/2022 2:31	11.33	79.67	6/21/2022 3:48	2.56
6/21/2022 2:45	11.80	216.03	6/22/2022 4:29	11.29	102.22	6/21/2022 2:32	11.36	78.68	6/21/2022 3:49	2.56
6/21/2022 2:46	11.82	216.26	6/22/2022 4:30	11.24	102.24	6/21/2022 2:33	11.36	78.88	6/21/2022 3:50	2.51
6/21/2022 2:47	11.80	216.16	6/22/2022 4:31	11.25	102.41	6/21/2022 2:34	11.31	78.79	6/21/2022 3:51	2.57
6/21/2022 2:48	11.82	216.05	6/22/2022 4:32	11.27	102.16	6/21/2022 2:35	11.33	78.90	6/21/2022 3:52	2.59
6/21/2022 2:49	11.83	216.24	6/22/2022 4:33	11.27	102.33	6/21/2022 2:36	11.34	78.61	6/21/2022 3:53	2.52
6/21/2022 2:50	11.81	216.10	6/22/2022 4:34	11.28	102.08	6/21/2022 2:37	11.33	79.83	6/21/2022 3:54	2.54
6/21/2022 2:51	11.82	216.29	6/22/2022 4:35	11.28	102.14	6/21/2022 2:38	11.35	78.61	6/21/2022 3:55	2.56
6/21/2022 2:52	11.83	216.25	6/22/2022 4:36	11.26	102.32	6/21/2022 2:39	11.34	78.09	6/21/2022 3:56	2.58
6/21/2022 2:53	11.78	216.39	6/22/2022 4:37	11.28	102.12	6/21/2022 2:40	11.33	79.79	6/21/2022 3:57	2.56
6/21/2022 2:54	11.83	216.18	6/22/2022 4:38	11.27	102.21	6/21/2022 2:41	11.32	78.59	6/21/2022 3:58	2.60
6/21/2022 2:55	11.80	216.36	6/22/2022 4:39	11.27	102.19	6/21/2022 2:42	11.34	78.85	6/21/2022 3:59	2.58
6/21/2022 2:56	11.81	216.28	6/22/2022 4:40	11.28	102.38	6/21/2022 2:43	11.35	78.88	6/21/2022 4:00	2.61
6/21/2022 2:57	11.81	216.62	6/22/2022 4:41	11.26	102.15	6/21/2022 2:44	11.36	79.98	6/21/2022 4:01	2.62
6/21/2022 2:58	11.81	216.49	6/22/2022 4:42	11.27	102.24	6/21/2022 2:45	11.32	80.24	6/21/2022 4:02	2.61
6/21/2022 2:59	11.83	216.49	6/22/2022 4:43	11.28	102.04	6/21/2022 2:46	11.31	78.84	6/21/2022 4:03	2.62
6/21/2022 3:00	11.80	216.50	6/22/2022 4:44	11.25	102.22	6/21/2022 2:47	11.33	79.03	6/21/2022 4:04	2.65
6/21/2022 3:01	11.82	216.65	6/22/2022 4:45	11.28	102.15	6/21/2022 2:48	11.33	79.50	6/21/2022 4:05	2.66
6/21/2022 3:02	11.80	216.55	6/22/2022 4:46	11.26	102.25	6/21/2022 2:49	11.35	79.88	6/21/2022 4:06	2.64
6/21/2022 3:03	11.80	216.46	6/22/2022 4:47	11.26	102.25	6/21/2022 2:50	11.33	79.30	6/21/2022 4:07	2.65
6/21/2022 3:04	11.82	216.62	6/22/2022 4:48	11.25	102.29	6/21/2022 2:51	11.35	79.80	6/21/2022 4:08	2.69
6/21/2022 3:05	11.83	216.58	6/22/2022 4:49	11.26	102.28	6/21/2022 2:52	11.34	79.59	6/21/2022 4:09	2.69
6/21/2022 3:06	11.78	216.41	6/22/2022 4:50	11.26	102.26	6/21/2022 2:53	11.36	78.80	6/21/2022 4:10	2.67
6/21/2022 3:07	11.82	216.60	6/22/2022 4:51	11.27	102.34	6/21/2022 2:54	11.34	79.38	6/21/2022 4:11	2.70
6/21/2022 3:08	11.78	216.72	6/22/2022 4:52	11.27	102.03	6/21/2022 2:55	11.34	78.84	6/21/2022 4:12	2.68
6/21/2022 3:09	11.82	216.80	6/22/2022 4:53	11.26	102.43	6/21/2022 2:56	11.36	78.93	6/21/2022 4:13	2.63
6/21/2022 3:10	11.81	216.76	6/22/2022 4:54	11.27	102.33	6/21/2022 2:57	11.35	80.50	6/21/2022 4:14	2.66
6/21/2022 3:11	11.80	216.79	6/22/2022 4:55	11.25	102.28	6/21/2022 2:58	11.33	79.97	6/21/2022 4:15	2.71
6/21/2022 3:12	11.81	216.75	6/22/2022 4:56	11.28	102.18	6/21/2022 2:59	11.33	80.26	6/21/2022 4:16	2.70
6/21/2022 3:13	11.79	216.76	6/22/2022 4:57	11.27	102.26	6/21/2022 3:00	11.34	80.54	6/21/2022 4:17	2.71
6/21/2022 3:14	11.81	216.86	6/22/2022 4:58	11.27	102.27	6/21/2022 3:01	11.35	79.17	6/21/2022 4:18	2.70
6/21/2022 3:15	11.81	216.80	6/22/2022 4:59	11.26	102.17	6/21/2022 3:02	11.35	80.11	6/21/2022 4:19	2.67
6/21/2022 3:16	11.80	216.94	6/22/2022 5:00	11.26	102.14	6/21/2022 3:03	11.35	80.41	6/21/2022 4:20	2.71
6/21/2022 3:17	11.80	216.96	6/22/2022 5:01	11.27	102.39	6/21/2022 3:04	11.32	78.96	6/21/2022 4:21	2.69
6/21/2022 3:18	11.83	216.99	6/22/2022 5:02	11.26	102.41	6/21/2022 3:05	11.35	80.96	6/21/2022 4:22	2.70
6/21/2022 3:19	11.80	217.08	6/22/2022 5:03	11.27	102.26	6/21/2022 3:06	11.31	79.41	6/21/2022 4:23	2.72
6/21/2022 3:20	11.81	217.07	6/22/2022 5:04	11.26	102.27	6/21/2022 3:07	11.31	80.28	6/21/2022 4:24	2.69
6/21/2022 3:21	11.77	217.10	6/22/2022 5:05	11.28	102.31	6/21/2022 3:08	11.33	80.14	6/21/2022 4:25	2.68
6/21/2022 3:22	11.81	216.82	6/22/2022 5:06	11.26	102.31	6/21/2022 3:09	11.32	79.63	6/21/2022 4:26	2.75
6/21/2022 3:23	11.82	217.11	6/22/2022 5:07	11.26	102.45	6/21/2022 3:10	11.31	80.11	6/21/2022 4:27	2.78
6/21/2022 3:24	11.80	217.06	6/22/2022 5:08	11.26	102.40	6/21/2022 3:11	11.37	81.02	6/21/2022 4:28	2.70
6/21/2022 3:25	11.80	216.88	6/22/2022 5:09	11.31	102.50	6/21/2022 3:12	11.35	79.85	6/21/2022 4:29	2.74
6/21/2022 3:26	11.82	217.09	6/22/2022 5:10	11.26	102.45	6/21/2022 3:13	11.32	80.48	6/21/2022 4:30	2.76
6/21/2022 3:27	11.81	217.51	6/22/2022 5:11	11.26	102.54	6/21/2022 3:14	11.32	80.89	6/21/2022 4:31	2.74
6/21/2022 3:28	11.79	217.30	6/22/2022 5:12	11.26	102.40	6/21/2022 3:15	11.34	80.50	6/21/2022 4:32	2.82
6/21/2022 3:29	11.82	217.14	6/22/2022 5:13	11.26	102.57	6/21/2022 3:16	11.34	80.27	6/21/2022 4:33	2.73
6/21/2022 3:30	11.83	217.34	6/22/2022 5:14	11.27	102.37	6/21/2022 3:17	11.33	79.52	6/21/2022 4:34	2.75
6/21/2022 3:31	11.81	217.36	6/22/2022 5:15	11.27	102.38	6/21/2022 3:18	11.35	80.20	6/21/2022 4:35	2.82
6/21/2022 3:32	11.82	217.40	6/22/2022 5:16	11.26	102.40	6/21/2022 3:19	11.38	80.01	6/21/2022 4:36	2.77
6/21/2022 3:33	11.81	217.38	6/22/2022 5:17	11.25	102.47	6/21/2022 3:20	11.35	79.90	6/21/2022 4:37	2.76
6/21/2022 3:34	11.82	217.08	6/22/2022 5:18	11.27	102.47	6/21/2022 3:21	11.33	79.77	6/21/2022 4:38	2.76
6/21/2022 3:35	11.81	217.45	6/22/2022 5:19	11.24	102.56	6/21/2022 3:22	11.34	80.65	6/21/2022 4:39	2.77
6/21/2022 3:36	11.80	217.40	6/22/2022 5:20	11.26	102.82	6/21/2022 3:23	11.35	80.08	6/21/2022 4:40	2.78
6/21/2022 3:37	11.78	217.49	6/22/2022 5:21	11.26	102.81	6/21/2022 3:24	11.33	80.43	6/21/2022 4:41	2.79
6/21/2022 3:38	11.83	217.50	6/22/2022 5:22	11.26	103.01	6/21/2022 3:25	11.33	80.25	6/21/2022 4:42	2.81
6/21/2022 3:39	11.82	217.31	6/22/2022 5:23	11.26	103.09	6/21/2022 3:26	11.32	80.34	6/21/2022 4:43	2.80
6/21/2022 3:40	11.80	217.50	6/22/2022 5:24	11.27	103.06	6/21/2022 3:27	11.36	80.88	6/21/2022 4:44	2.81
6/21/2022 3:41	11.80	217.53	6/22/2022 5:25	11.26	103.04	6/21/2022 3:28	11.33	80.86	6/21/2022 4:45	2.86
6/21/2022 3:42	11.82	217.53	6/22/2022 5:26	11.26	103.16	6/21/2022 3:29	11.36	81.02	6/21/2022 4:46	2.84
6/21/2022 3:43	11.81	217.65	6/22/2022 5:27	11.28	102.99	6/21/2022 3:30	11.35	80.13	6/21/2022 4:47	2.85
6/21/2022 3:44	11.82	217.50	6/22/2022 5:28	11.24	103.13	6/21/2022 3:31	11.33	80.26	6/21/2022 4:48	2.81
6/21/2022 3:45	11.78	217.58	6/22/2022 5:29	11.29	103.26	6/21/2022 3:32	11.35	80.86	6/21/2022 4:49	2.81
6/21/2022 3:46	11.80	217.63	6/22/2022 5:30	11.26	103.10	6/21/2022 3:33	11.32	80.89	6/21/2022 4:50	2.88
6/21/2022 3:47	11.80	217.65	6/22/2022 5:31	11.26	103.13	6/21/2022 3:34	11.35	80.97	6/21/2022 4:51	2.87
6/21/2022 3:48	11.82	217.65	6/22/2022 5:32	11.23	103.14	6/21/2022 3:35	11.31	80.87	6/21/2022 4:52	2.83
6/21/2022 3:49	11.81	217.68	6/22/2022 5:33	11.26	103.07	6/21/2022 3:36	11.34	79.39	6/21/2022 4:53	2.84
6/21/2022 3:50	11.81	217.73	6/22/2022 5:34	11.28	103.09	6/21/2022 3:37	11.32	80.11	6/21/2022 4:54	2.88
6/21/2022 3:51	11.79	217.60	6/22/2022 5:35	11.27	103.02	6/21/2022 3:38	11.32	80.63	6/21/2022 4:55	2.85
6/21/2022 3:52	11.80	217.70	6/22/2022 5:36	11.27	103.27	6/21/2022 3:39	11.33	81.61	6/21/2022 4:56	2.86
6/21/2022 3:53	11.79	217.67	6/22/2022 5:37	11.27	103.10	6/21/2022 3:40	11.33	80.69	6/21/2022 4:57	2.86
6/21/2022 3:54	11.81	217.92	6/22/2022 5:38	11.28	103.02	6/21/2022 3:41	11.34	80.22	6/21/2022 4:58	2.85
6/21/2022 3:55	11.82	217.82	6/22/2022 5:39	11.28	103.01	6/21/2022 3:42	11.35	79.83	6/21/2022 4:59	2.90
6/21/2022 3:56	11.80	217.78	6/22/2022 5:40	11.26	103.21	6/21/2022 3:43	11.35	80.60	6/21/2022 5:00	2.89
6/21/2022 3:57	11.81	217.74	6/22/2022 5:41	11.28	103.20	6/21/2022 3:44	11.36	80.14	6/21/2022 5:01	2.93
6/21/2022 3:58	11.81	217.84	6/22/2022 5:42	11.27	103.12	6/21/2022 3:45	11.31	80.25	6/21/2022 5:02	2.91

6/21/2022 3:59	11.81	217.97	6/22/2022 5:43	11.26	103.02	6/21/2022 3:46	11.33	81.38	6/21/2022 5:03	2.90
6/21/2022 4:00	11.80	218.12	6/22/2022 5:44	11.27	103.13	6/21/2022 3:47	11.34	80.90	6/21/2022 5:04	2.92
6/21/2022 4:01	11.80	218.04	6/22/2022 5:45	11.26	103.13	6/21/2022 3:48	11.33	80.22	6/21/2022 5:05	2.91
6/21/2022 4:02	11.81	217.93	6/22/2022 5:46	11.26	103.00	6/21/2022 3:49	11.34	81.11	6/21/2022 5:06	2.93
6/21/2022 4:03	11.79	217.88	6/22/2022 5:47	11.26	103.13	6/21/2022 3:50	11.31	80.89	6/21/2022 5:07	2.90
6/21/2022 4:04	11.81	217.97	6/22/2022 5:48	11.27	102.89	6/21/2022 3:51	11.32	81.62	6/21/2022 5:08	2.89
6/21/2022 4:05	11.81	218.11	6/22/2022 5:49	11.28	102.97	6/21/2022 3:52	11.32	80.67	6/21/2022 5:09	2.93
6/21/2022 4:06	11.81	218.05	6/22/2022 5:50	11.25	102.95	6/21/2022 3:53	11.35	81.20	6/21/2022 5:10	2.91
6/21/2022 4:07	11.78	218.26	6/22/2022 5:51	11.26	102.94	6/21/2022 3:54	11.34	81.44	6/21/2022 5:11	2.93
6/21/2022 4:08	11.83	218.09	6/22/2022 5:52	11.23	103.24	6/21/2022 3:55	11.34	81.00	6/21/2022 5:12	3.00
6/21/2022 4:09	11.79	218.14	6/22/2022 5:53	11.28	103.15	6/21/2022 3:56	11.35	81.36	6/21/2022 5:13	2.94
6/21/2022 4:10	11.80	218.21	6/22/2022 5:54	11.27	103.03	6/21/2022 3:57	11.33	80.30	6/21/2022 5:14	2.98
6/21/2022 4:11	11.81	218.38	6/22/2022 5:55	11.29	103.10	6/21/2022 3:58	11.31	80.16	6/21/2022 5:15	2.95
6/21/2022 4:12	11.81	218.37	6/22/2022 5:56	11.26	103.05	6/21/2022 3:59	11.34	80.70	6/21/2022 5:16	2.98
6/21/2022 4:13	11.77	218.35	6/22/2022 5:57	11.25	103.15	6/21/2022 4:00	11.33	80.90	6/21/2022 5:17	2.95
6/21/2022 4:14	11.83	218.42	6/22/2022 5:58	11.26	103.34	6/21/2022 4:01	11.34	81.22	6/21/2022 5:18	2.97
6/21/2022 4:15	11.84	218.34	6/22/2022 5:59	11.28	103.32	6/21/2022 4:02	11.34	80.20	6/21/2022 5:19	2.96
6/21/2022 4:16	11.80	218.50	6/22/2022 6:00	11.27	103.07	6/21/2022 4:03	11.36	80.26	6/21/2022 5:20	2.96
6/21/2022 4:17	11.81	218.43	6/22/2022 6:01	11.29	103.03	6/21/2022 4:04	11.33	81.58	6/21/2022 5:21	3.01
6/21/2022 4:18	11.81	218.51	6/22/2022 6:02	11.26	103.03	6/21/2022 4:05	11.33	81.70	6/21/2022 5:22	2.95
6/21/2022 4:19	11.82	218.39	6/22/2022 6:03	11.26	103.22	6/21/2022 4:06	11.31	80.22	6/21/2022 5:23	2.98
6/21/2022 4:20	11.80	218.32	6/22/2022 6:04	11.28	103.02	6/21/2022 4:07	11.32	81.26	6/21/2022 5:24	3.01
6/21/2022 4:21	11.83	218.61	6/22/2022 6:05	11.25	103.12	6/21/2022 4:08	11.33	80.32	6/21/2022 5:25	2.99
6/21/2022 4:22	11.81	218.59	6/22/2022 6:06	11.25	103.07	6/21/2022 4:09	11.31	81.43	6/21/2022 5:26	3.00
6/21/2022 4:23	11.79	218.56	6/22/2022 6:07	11.25	103.05	6/21/2022 4:10	11.33	81.86	6/21/2022 5:27	3.01
6/21/2022 4:24	11.82	218.77	6/22/2022 6:08	11.25	103.12	6/21/2022 4:11	11.35	81.19	6/21/2022 5:28	3.02
6/21/2022 4:25	11.85	218.55	6/22/2022 6:09	11.25	103.09	6/21/2022 4:12	11.34	81.79	6/21/2022 5:29	3.04
6/21/2022 4:26	11.83	218.55	6/22/2022 6:10	11.25	103.05	6/21/2022 4:13	11.34	81.37	6/21/2022 5:30	3.06
6/21/2022 4:27	11.78	218.56	6/22/2022 6:11	11.28	103.06	6/21/2022 4:14	11.32	81.13	6/21/2022 5:31	3.04
6/21/2022 4:28	11.82	218.52	6/22/2022 6:12	11.25	103.02	6/21/2022 4:15	11.34	80.46	6/21/2022 5:32	3.02
6/21/2022 4:29	11.81	218.70	6/22/2022 6:13	11.26	103.17	6/21/2022 4:16	11.36	81.14	6/21/2022 5:33	3.02
6/21/2022 4:30	11.81	218.72	6/22/2022 6:14	11.28	102.94	6/21/2022 4:17	11.32	81.42	6/21/2022 5:34	3.06
6/21/2022 4:31	11.80	218.67	6/22/2022 6:15	11.27	102.90	6/21/2022 4:18	11.34	80.90	6/21/2022 5:35	3.01
6/21/2022 4:32	11.79	218.89	6/22/2022 6:16	11.25	103.06	6/21/2022 4:19	11.36	81.47	6/21/2022 5:36	3.01
6/21/2022 4:33	11.81	218.60	6/22/2022 6:17	11.24	103.11	6/21/2022 4:20	11.33	81.61	6/21/2022 5:37	3.08
6/21/2022 4:34	11.81	218.72	6/22/2022 6:18	11.25	103.01	6/21/2022 4:21	11.31	81.55	6/21/2022 5:38	2.99
6/21/2022 4:35	11.84	218.73	6/22/2022 6:19	11.24	103.11	6/21/2022 4:22	11.34	81.73	6/21/2022 5:39	3.07
6/21/2022 4:36	11.83	218.86	6/22/2022 6:20	11.27	103.11	6/21/2022 4:23	11.36	80.90	6/21/2022 5:40	3.04
6/21/2022 4:37	11.80	218.78	6/22/2022 6:21	11.26	102.83	6/21/2022 4:24	11.34	80.84	6/21/2022 5:41	3.10
6/21/2022 4:38	11.81	218.85	6/22/2022 6:22	11.29	103.05	6/21/2022 4:25	11.34	81.86	6/21/2022 5:42	3.04
6/21/2022 4:39	11.79	218.76	6/22/2022 6:23	11.29	103.06	6/21/2022 4:26	11.33	82.79	6/21/2022 5:43	3.09
6/21/2022 4:40	11.84	218.85	6/22/2022 6:24	11.27	103.12	6/21/2022 4:27	11.36	81.77	6/21/2022 5:44	3.07
6/21/2022 4:41	11.82	218.95	6/22/2022 6:25	11.28	103.19	6/21/2022 4:28	11.34	81.34	6/21/2022 5:45	3.05
6/21/2022 4:42	11.79	218.98	6/22/2022 6:26	11.27	103.48	6/21/2022 4:29	11.34	82.09	6/21/2022 5:46	3.14
6/21/2022 4:43	11.82	218.98	6/22/2022 6:27	11.26	103.39	6/21/2022 4:30	11.33	81.39	6/21/2022 5:47	3.07
6/21/2022 4:44	11.82	218.98	6/22/2022 6:28	11.26	103.23	6/21/2022 4:31	11.35	80.90	6/21/2022 5:48	3.07
6/21/2022 4:45	11.83	219.00	6/22/2022 6:29	11.26	103.49	6/21/2022 4:32	11.34	81.66	6/21/2022 5:49	3.18
6/21/2022 4:46	11.79	219.04	6/22/2022 6:30	11.28	103.43	6/21/2022 4:33	11.33	82.32	6/21/2022 5:50	3.14
6/21/2022 4:47	11.81	219.11	6/22/2022 6:31	11.25	103.49	6/21/2022 4:34	11.33	82.09	6/21/2022 5:51	3.16
6/21/2022 4:48	11.81	218.93	6/22/2022 6:32	11.27	103.39	6/21/2022 4:35	11.33	81.76	6/21/2022 5:52	3.08
6/21/2022 4:49	11.83	219.04	6/22/2022 6:33	11.27	103.36	6/21/2022 4:36	11.33	81.97	6/21/2022 5:53	3.12
6/21/2022 4:50	11.81	218.98	6/22/2022 6:34	11.26	103.29	6/21/2022 4:37	11.34	80.81	6/21/2022 5:54	3.10
6/21/2022 4:51	11.80	219.15	6/22/2022 6:35	11.27	103.50	6/21/2022 4:38	11.34	81.59	6/21/2022 5:55	3.13
6/21/2022 4:52	11.80	219.32	6/22/2022 6:36	11.23	103.38	6/21/2022 4:39	11.33	81.37	6/21/2022 5:56	3.12
6/21/2022 4:53	11.81	219.26	6/22/2022 6:37	11.27	103.44	6/21/2022 4:40	11.32	81.90	6/21/2022 5:57	3.08
6/21/2022 4:54	11.78	219.14	6/22/2022 6:38	11.28	103.41	6/21/2022 4:41	11.34	80.94	6/21/2022 5:58	3.13
6/21/2022 4:55	11.77	219.44	6/22/2022 6:39	11.27	103.50	6/21/2022 4:42	11.34	81.30	6/21/2022 5:59	3.12
6/21/2022 4:56	11.77	219.32	6/22/2022 6:40	11.27	103.43	6/21/2022 4:43	11.33	82.22	6/21/2022 6:00	3.16
6/21/2022 4:57	11.78	219.40	6/22/2022 6:41	11.28	103.32	6/21/2022 4:44	11.35	81.04	6/21/2022 6:01	3.14
6/21/2022 4:58	11.78	219.28	6/22/2022 6:42	11.29	103.51	6/21/2022 4:45	11.34	81.60	6/21/2022 6:02	3.20
6/21/2022 4:59	11.76	219.27	6/22/2022 6:43	11.25	103.19	6/21/2022 4:46	11.35	81.67	6/21/2022 6:03	3.16
6/21/2022 5:00	11.77	219.39	6/22/2022 6:44	11.29	103.43	6/21/2022 4:47	11.34	80.83	6/21/2022 6:04	3.20
6/21/2022 5:01	11.79	219.29	6/22/2022 6:45	11.25	103.20	6/21/2022 4:48	11.32	81.39	6/21/2022 6:05	3.15
6/21/2022 5:02	11.76	219.46	6/22/2022 6:46	11.26	103.55	6/21/2022 4:49	11.33	81.91	6/21/2022 6:06	3.20
6/21/2022 5:03	11.78	219.65	6/22/2022 6:47	11.27	103.35	6/21/2022 4:50	11.34	81.18	6/21/2022 6:07	3.20
6/21/2022 5:04	11.77	219.38	6/22/2022 6:48	11.25	103.48	6/21/2022 4:51	11.33	80.67	6/21/2022 6:08	3.20
6/21/2022 5:05	11.75	219.37	6/22/2022 6:49	11.28	103.36	6/21/2022 4:52	11.32	81.70	6/21/2022 6:09	3.19
6/21/2022 5:06	11.76	219.58	6/22/2022 6:50	11.26	103.31	6/21/2022 4:53	11.33	81.30	6/21/2022 6:10	3.21
6/21/2022 5:07	11.78	219.53	6/22/2022 6:51	11.25	103.36	6/21/2022 4:54	11.31	81.65	6/21/2022 6:11	3.22
6/21/2022 5:08	11.76	219.73	6/22/2022 6:52	11.27	103.39	6/21/2022 4:55	11.34	82.30	6/21/2022 6:12	3.21
6/21/2022 5:09	11.76	219.77	6/22/2022 6:53	11.28	103.32	6/21/2022 4:56	11.36	81.19	6/21/2022 6:13	3.22
6/21/2022 5:10	11.76	219.53	6/22/2022 6:54	11.27	103.55	6/21/2022 4:57	11.35	81.92	6/21/2022 6:14	3.18
6/21/2022 5:11	11.77	219.49	6/22/2022 6:55	11.27	103.27	6/21/2022 4:58	11.35	81.69	6/21/2022 6:15	3.18
6/21/2022 5:12	11.78	219.69	6/22/2022 6:56	11.27	103.60	6/21/2022 4:59	11.32	81.47	6/21/2022 6:16	3.19
6/21/2022 5:13	11.77	219.52	6/22/2022 6:57	11.23	103.34	6/21/2022 5:00	11.33	81.39	6/21/2022 6:17	3.21
6/21/2022 5:14	11.79	219.88	6/22/2022 6:58	11.27	103.36	6/21/2022 5:01	11.33	82.89	6/21/2022 6:18	3.25
6/21/2022 5:15	11.78	219.74	6/22/2022 6:59	11.25	103.24	6/21/2022 5:02	11.34	81.40	6/21/2022 6:19	3.21
6/21/2022 5:16	11.76	219.56	6/22/2022 7:00	11.28	103.40	6/21/2022 5:03	11.35	81.75	6/21/2022 6:20	3.29
6/21/2022 5:17	11.77	219.82	6/22/2022 7:01	11.29	103.38	6/21/2022 5:04	11.33	82.75	6/21/2022 6:21	3.23
6/21/2022 5:18	11.79	219.65	6/22/2022 7:02	11.27	103.10	6/21/2022 5:05	11.35	80.88	6/21/2022 6:22	3.25
6/21/2022 5:19	11.75	219.96	6/22/2022 7:03	11.24	103.18	6/21/2022 5:06	11.35	81.59	6/21/2022 6:23	3.23
6/21/2022 5:20	11.76	219.68	6/22/2022 7:04	11.27	103.38	6/21/2022 5:07	11.34	80.21	6/21/2022 6:24	3.25
6/21/2022 5:21	11.79	219.80	6/22/2022 7:05	11.23	103.42	6/21/2022 5:08	11.33	82.21	6/21/2022 6:25	3.27
6/21/2022 5:22	11.78	219.78	6/22/2022 7:06	11.29	103.35	6/21/2022 5:09	11.34	81.00	6/21/2022 6:26	3.24
6/21/2022 5:23	11.75	219.87	6/22/2022 7:07	11.28	103.36	6/21/2022 5:10	11.35	81.39	6/21/2022 6:27	3.24
6/21/2022 5:24	11.77	219.89	6/22/2022 7:08	11.26	103.42	6/21/2022 5:11	11.33	81.17	6/21/2022 6:28	3.31
6/21/2022 5:25	11.77	219.86	6/22/2022 7:09	11.27	103.17	6/21/2022 5:12	11.33	81.13	6/21/2022 6:29	3.24
6/21/2022 5:26	11.76	219.99	6/22/2022 7:10	11.26	103.41	6/21/2022 5:13	11.36	80.76	6/21/2022 6:30	3.23

6/21/2022 5:27	11.79	219.91	6/22/2022 7:11	11.27	103.45	6/21/2022 5:14	11.33	81.00	6/21/2022 6:31	3.32
6/21/2022 5:28	11.77	219.84	6/22/2022 7:12	11.26	103.17	6/21/2022 5:15	11.34	81.83	6/21/2022 6:32	3.31
6/21/2022 5:29	11.78	219.92	6/22/2022 7:13	11.26	103.48	6/21/2022 5:16	11.35	82.14	6/21/2022 6:33	3.28
6/21/2022 5:30	11.79	220.01	6/22/2022 7:14	11.24	103.14	6/21/2022 5:17	11.33	81.34	6/21/2022 6:34	3.30
6/21/2022 5:31	11.77	219.91	6/22/2022 7:15	11.27	103.35	6/21/2022 5:18	11.33	82.10	6/21/2022 6:35	3.30
6/21/2022 5:32	11.80	219.97	6/22/2022 7:16	11.29	103.34	6/21/2022 5:19	11.32	82.02	6/21/2022 6:36	3.26
6/21/2022 5:33	11.77	220.05	6/22/2022 7:17	11.28	103.39	6/21/2022 5:20	11.36	82.13	6/21/2022 6:37	3.30
6/21/2022 5:34	11.80	220.13	6/22/2022 7:18	11.27	103.33	6/21/2022 5:21	11.33	81.76	6/21/2022 6:38	3.31
6/21/2022 5:35	11.79	220.01	6/22/2022 7:19	11.23	103.34	6/21/2022 5:22	11.36	80.98	6/21/2022 6:39	3.27
6/21/2022 5:36	11.75	220.07	6/22/2022 7:20	11.25	103.30	6/21/2022 5:23	11.33	82.34	6/21/2022 6:40	3.31
6/21/2022 5:37	11.76	220.17	6/22/2022 7:21	11.30	103.13	6/21/2022 5:24	11.32	81.45	6/21/2022 6:41	3.34
6/21/2022 5:38	11.76	220.26	6/22/2022 7:22	11.27	103.39	6/21/2022 5:25	11.30	80.79	6/21/2022 6:42	3.29
6/21/2022 5:39	11.78	220.17	6/22/2022 7:23	11.27	103.14	6/21/2022 5:26	11.34	81.61	6/21/2022 6:43	3.33
6/21/2022 5:40	11.79	220.09	6/22/2022 7:24	11.29	103.11	6/21/2022 5:27	11.32	82.25	6/21/2022 6:44	3.36
6/21/2022 5:41	11.79	220.22	6/22/2022 7:25	11.28	103.17	6/21/2022 5:28	11.33	82.07	6/21/2022 6:45	3.33
6/21/2022 5:42	11.76	220.26	6/22/2022 7:26	11.27	103.25	6/21/2022 5:29	11.34	82.09	6/21/2022 6:46	3.31
6/21/2022 5:43	11.80	220.34	6/22/2022 7:27	11.28	103.25	6/21/2022 5:30	11.34	81.23	6/21/2022 6:47	3.32
6/21/2022 5:44	11.80	220.28	6/22/2022 7:28	11.29	103.12	6/21/2022 5:31	11.33	81.93	6/21/2022 6:48	3.39
6/21/2022 5:45	11.79	220.27	6/22/2022 7:29	11.26	103.13	6/21/2022 5:32	11.32	81.24	6/21/2022 6:49	3.38
6/21/2022 5:46	11.77	220.52	6/22/2022 7:30	11.27	103.08	6/21/2022 5:33	11.33	82.74	6/21/2022 6:50	3.39
6/21/2022 5:47	11.77	220.34	6/22/2022 7:31	11.28	103.37	6/21/2022 5:34	11.32	82.17	6/21/2022 6:51	3.40
6/21/2022 5:48	11.78	220.53	6/22/2022 7:32	11.27	103.24	6/21/2022 5:35	11.35	82.62	6/21/2022 6:52	3.31
6/21/2022 5:49	11.79	220.56	6/22/2022 7:33	11.27	103.39	6/21/2022 5:36	11.35	81.65	6/21/2022 6:53	3.37
6/21/2022 5:50	11.80	220.76	6/22/2022 7:34	11.25	103.27	6/21/2022 5:37	11.34	81.73	6/21/2022 6:54	3.39
6/21/2022 5:51	11.78	220.39	6/22/2022 7:35	11.26	103.27	6/21/2022 5:38	11.33	82.25	6/21/2022 6:55	3.38
6/21/2022 5:52	11.78	220.37	6/22/2022 7:36	11.27	103.29	6/21/2022 5:39	11.33	81.80	6/21/2022 6:56	3.31
6/21/2022 5:53	11.78	220.65	6/22/2022 7:37	11.28	103.18	6/21/2022 5:40	11.32	82.54	6/21/2022 6:57	3.35
6/21/2022 5:54	11.79	220.70	6/22/2022 7:38	11.29	103.01	6/21/2022 5:41	11.35	82.07	6/21/2022 6:58	3.33
6/21/2022 5:55	11.77	220.74	6/22/2022 7:39	11.26	103.17	6/21/2022 5:42	11.30	81.55	6/21/2022 6:59	3.36
6/21/2022 5:56	11.75	220.73	6/22/2022 7:40	11.27	103.25	6/21/2022 5:43	11.33	83.00	6/21/2022 7:00	3.37
6/21/2022 5:57	11.77	220.61	6/22/2022 7:41	11.27	103.38	6/21/2022 5:44	11.33	81.64	6/21/2022 7:01	3.37
6/21/2022 5:58	11.79	220.68	6/22/2022 7:42	11.24	103.07	6/21/2022 5:45	11.35	82.72	6/21/2022 7:02	3.41
6/21/2022 5:59	11.81	220.45	6/22/2022 7:43	11.26	103.24	6/21/2022 5:46	11.34	82.26	6/21/2022 7:03	3.36
6/21/2022 6:00	11.80	220.52	6/22/2022 7:44	11.23	103.31	6/21/2022 5:47	11.33	82.20	6/21/2022 7:04	3.40
6/21/2022 6:01	11.80	220.72	6/22/2022 7:45	11.25	103.45	6/21/2022 5:48	11.32	81.54	6/21/2022 7:05	3.40
6/21/2022 6:02	11.78	220.68	6/22/2022 7:46	11.27	103.54	6/21/2022 5:49	11.32	82.03	6/21/2022 7:06	3.43
6/21/2022 6:03	11.79	220.77	6/22/2022 7:47	11.28	103.49	6/21/2022 5:50	11.38	82.11	6/21/2022 7:07	3.38
6/21/2022 6:04	11.79	220.84	6/22/2022 7:48	11.28	103.74	6/21/2022 5:51	11.35	82.76	6/21/2022 7:08	3.40
6/21/2022 6:05	11.79	220.88	6/22/2022 7:49	11.25	103.53	6/21/2022 5:52	11.36	81.94	6/21/2022 7:09	3.46
6/21/2022 6:06	11.77	221.12	6/22/2022 7:50	11.25	103.54	6/21/2022 5:53	11.33	83.07	6/21/2022 7:10	3.39
6/21/2022 6:07	11.78	220.99	6/22/2022 7:51	11.27	103.60	6/21/2022 5:54	11.35	81.50	6/21/2022 7:11	3.45
6/21/2022 6:08	11.76	220.75	6/22/2022 7:52	11.28	103.62	6/21/2022 5:55	11.35	81.58	6/21/2022 7:12	3.39
6/21/2022 6:09	11.77	221.12	6/22/2022 7:53	11.27	103.67	6/21/2022 5:56	11.37	82.68	6/21/2022 7:13	3.41
6/21/2022 6:10	11.76	220.96	6/22/2022 7:54	11.24	103.49	6/21/2022 5:57	11.35	81.72	6/21/2022 7:14	3.45
6/21/2022 6:11	11.77	220.86	6/22/2022 7:55	11.27	103.49	6/21/2022 5:58	11.34	82.06	6/21/2022 7:15	3.43
6/21/2022 6:12	11.78	220.99	6/22/2022 7:56	11.30	103.76	6/21/2022 5:59	11.33	81.84	6/21/2022 7:16	3.50
6/21/2022 6:13	11.76	221.03	6/22/2022 7:57	11.28	103.66	6/21/2022 6:00	11.33	81.40	6/21/2022 7:17	3.44
6/21/2022 6:14	11.77	220.93	6/22/2022 7:58	11.28	103.68	6/21/2022 6:01	11.32	82.18	6/21/2022 7:18	3.44
6/21/2022 6:15	11.79	221.08	6/22/2022 7:59	11.29	103.63	6/21/2022 6:02	11.34	81.64	6/21/2022 7:19	3.44
6/21/2022 6:16	11.74	221.10	6/22/2022 8:00	11.27	103.53	6/21/2022 6:03	11.34	81.55	6/21/2022 7:20	3.50
6/21/2022 6:17	11.74	221.04	6/22/2022 8:01	11.24	103.53	6/21/2022 6:04	11.36	82.32	6/21/2022 7:21	3.43
6/21/2022 6:18	11.77	221.24	6/22/2022 8:02	11.26	103.57	6/21/2022 6:05	11.33	83.24	6/21/2022 7:22	3.44
6/21/2022 6:19	11.75	221.10	6/22/2022 8:03	11.27	103.27	6/21/2022 6:06	11.32	82.82	6/21/2022 7:23	3.45
6/21/2022 6:20	11.77	221.14	6/22/2022 8:04	11.29	103.60	6/21/2022 6:07	11.31	81.73	6/21/2022 7:24	3.47
6/21/2022 6:21	11.76	221.04	6/22/2022 8:05	11.25	103.47	6/21/2022 6:08	11.32	82.14	6/21/2022 7:25	3.50
6/21/2022 6:22	11.77	221.20	6/22/2022 8:06	11.26	103.48	6/21/2022 6:09	11.31	82.08	6/21/2022 7:26	3.47
6/21/2022 6:23	11.79	221.20	6/22/2022 8:07	11.27	103.37	6/21/2022 6:10	11.35	82.15	6/21/2022 7:27	3.48
6/21/2022 6:24	11.76	221.21	6/22/2022 8:08	11.27	103.52	6/21/2022 6:11	11.31	82.33	6/21/2022 7:28	3.49
6/21/2022 6:25	11.77	221.17	6/22/2022 8:09	11.26	103.48	6/21/2022 6:12	11.30	83.12	6/21/2022 7:29	3.50
6/21/2022 6:26	11.78	221.23	6/22/2022 8:10	11.27	103.55	6/21/2022 6:13	11.36	81.87	6/21/2022 7:30	3.49
6/21/2022 6:27	11.75	221.40	6/22/2022 8:11	11.25	103.74	6/21/2022 6:14	11.34	82.36	6/21/2022 7:31	3.53
6/21/2022 6:28	11.78	221.22	6/22/2022 8:12	11.26	103.38	6/21/2022 6:15	11.33	82.03	6/21/2022 7:32	3.49
6/21/2022 6:29	11.78	221.32	6/22/2022 8:13	11.28	103.52	6/21/2022 6:16	11.34	81.54	6/21/2022 7:33	3.54
6/21/2022 6:30	11.78	221.29	6/22/2022 8:14	11.25	103.34	6/21/2022 6:17	11.33	82.95	6/21/2022 7:34	3.49
6/21/2022 6:31	11.76	221.49	6/22/2022 8:15	11.29	103.49	6/21/2022 6:18	11.33	82.44	6/21/2022 7:35	3.48
6/21/2022 6:32	11.77	221.41	6/22/2022 8:16	11.25	103.45	6/21/2022 6:19	11.32	82.01	6/21/2022 7:36	3.53
6/21/2022 6:33	11.74	221.40	6/22/2022 8:17	11.29	103.46	6/21/2022 6:20	11.33	81.66	6/21/2022 7:37	3.53
6/21/2022 6:34	11.81	221.46	6/22/2022 8:18	11.29	103.54	6/21/2022 6:21	11.33	82.54	6/21/2022 7:38	3.46
6/21/2022 6:35	11.81	221.14	6/22/2022 8:19	11.28	103.24	6/21/2022 6:22	11.35	83.08	6/21/2022 7:39	3.54
6/21/2022 6:36	11.77	221.66	6/22/2022 8:20	11.26	103.47	6/21/2022 6:23	11.34	83.03	6/21/2022 7:40	3.52
6/21/2022 6:37	11.78	221.45	6/22/2022 8:21	11.26	103.34	6/21/2022 6:24	11.33	83.45	6/21/2022 7:41	3.51
6/21/2022 6:38	11.77	221.34	6/22/2022 8:22	11.26	103.52	6/21/2022 6:25	11.33	81.99	6/21/2022 7:42	3.57
6/21/2022 6:39	11.77	221.48	6/22/2022 8:23	11.27	103.59	6/21/2022 6:26	11.33	82.10	6/21/2022 7:43	3.52
6/21/2022 6:40	11.77	221.70	6/22/2022 8:24	11.27	103.38	6/21/2022 6:27	11.36	82.80	6/21/2022 7:44	3.54
6/21/2022 6:41	11.75	221.46	6/22/2022 8:25	11.27	103.29	6/21/2022 6:28	11.34	82.57	6/21/2022 7:45	3.50
6/21/2022 6:42	11.80	221.64	6/22/2022 8:26	11.26	103.40	6/21/2022 6:29	11.32	82.89	6/21/2022 7:46	3.52
6/21/2022 6:43	11.79	221.56	6/22/2022 8:27	11.26	103.43	6/21/2022 6:30	11.34	81.95	6/21/2022 7:47	3.51
6/21/2022 6:44	11.77	221.68	6/22/2022 8:28	11.26	103.42	6/21/2022 6:31	11.32	83.56	6/21/2022 7:48	3.51
6/21/2022 6:45	11.78	221.75	6/22/2022 8:29	11.26	103.61	6/21/2022 6:32	11.32	82.55	6/21/2022 7:49	3.49
6/21/2022 6:46	11.77	221.80	6/22/2022 8:30	11.27	103.57	6/21/2022 6:33	11.33	83.21	6/21/2022 7:50	3.54
6/21/2022 6:47	11.76	221.64	6/22/2022 8:31	11.27	103.59	6/21/2022 6:34	11.33	83.69	6/21/2022 7:51	3.50
6/21/2022 6:48	11.79	221.55	6/22/2022 8:32	11.25	103.50	6/21/2022 6:35	11.32	83.35	6/21/2022 7:52	3.57
6/21/2022 6:49	11.78	221.62	6/22/2022 8:33	11.30	103.53	6/21/2022 6:36	11.35	83.01	6/21/2022 7:53	3.58
6/21/2022 6:50	11.77	221.74	6/22/2022 8:34	11.29	103.52	6/21/2022 6:37	11.32	82.09	6/21/2022 7:54	3.59
6/21/2022 6:51	11.78	221.64	6/22/2022 8:35	11.27	103.69	6/21/2022 6:38	11.31	82.97	6/21/2022 7:55	3.56
6/21/2022 6:52	11.77	221.75	6/22/2022 8:36	11.28	103.69	6/21/2022 6:39	11.33	83.22	6/21/2022 7:56	3.53
6/21/2022 6:53	11.77	221.73	6/22/2022 8:37	11.24	104.03	6/21/2022 6:40	11.35	82.74	6/21/2022 7:57	3.66
6/21/2022 6:54	11.79	221.70	6/22/2022 8:38	11.26	103.78	6/21/2022 6:41	11.32	82.50	6/21/2022 7:58	3.55

6/21/2022 6:55	11.78	221.85	6/22/2022 8:39	11.28	103.79	6/21/2022 6:42	11.34	83.25	6/21/2022 7:59	3.60
6/21/2022 6:56	11.77	221.88	6/22/2022 8:40	11.29	103.84	6/21/2022 6:43	11.35	83.73	6/21/2022 8:00	3.58
6/21/2022 6:57	11.75	222.06	6/22/2022 8:41	11.26	103.73	6/21/2022 6:44	11.34	82.60	6/21/2022 8:01	3.58
6/21/2022 6:58	11.78	221.81	6/22/2022 8:42	11.26	103.93	6/21/2022 6:45	11.35	83.80	6/21/2022 8:02	3.54
6/21/2022 6:59	11.79	222.01	6/22/2022 8:43	11.28	103.85	6/21/2022 6:46	11.33	84.02	6/21/2022 8:03	3.57
6/21/2022 7:00	11.78	222.10	6/22/2022 8:44	11.26	103.71	6/21/2022 6:47	11.34	82.33	6/21/2022 8:04	3.55
6/21/2022 7:01	11.79	222.10	6/22/2022 8:45	11.26	103.89	6/21/2022 6:48	11.33	83.28	6/21/2022 8:05	3.60
6/21/2022 7:02	11.79	221.81	6/22/2022 8:46	11.28	103.67	6/21/2022 6:49	11.32	82.73	6/21/2022 8:06	3.55
6/21/2022 7:03	11.78	221.91	6/22/2022 8:47	11.26	103.85	6/21/2022 6:50	11.34	82.85	6/21/2022 8:07	3.54
6/21/2022 7:04	11.75	221.88	6/22/2022 8:48	11.27	103.68	6/21/2022 6:51	11.36	82.09	6/21/2022 8:08	3.57
6/21/2022 7:05	11.77	221.76	6/22/2022 8:49	11.27	104.02	6/21/2022 6:52	11.31	83.31	6/21/2022 8:09	3.55
6/21/2022 7:06	11.75	222.03	6/22/2022 8:50	11.24	103.63	6/21/2022 6:53	11.32	83.41	6/21/2022 8:10	3.65
6/21/2022 7:07	11.77	222.08	6/22/2022 8:51	11.26	103.77	6/21/2022 6:54	11.33	83.96	6/21/2022 8:11	3.60
6/21/2022 7:08	11.79	222.15	6/22/2022 8:52	11.25	103.78	6/21/2022 6:55	11.33	83.35	6/21/2022 8:12	3.60
6/21/2022 7:09	11.76	222.11	6/22/2022 8:53	11.25	103.58	6/21/2022 6:56	11.35	82.61	6/21/2022 8:13	3.60
6/21/2022 7:10	11.76	222.10	6/22/2022 8:54	11.25	103.81	6/21/2022 6:57	11.33	83.17	6/21/2022 8:14	3.64
6/21/2022 7:11	11.81	222.07	6/22/2022 8:55	11.24	103.45	6/21/2022 6:58	11.37	83.38	6/21/2022 8:15	3.63
6/21/2022 7:12	11.80	222.06	6/22/2022 8:56	11.25	103.47	6/21/2022 6:59	11.33	83.38	6/21/2022 8:16	3.63
6/21/2022 7:13	11.81	222.31	6/22/2022 8:57	11.25	103.45	6/21/2022 7:00	11.35	83.33	6/21/2022 8:17	3.61
6/21/2022 7:14	11.77	222.09	6/22/2022 8:58	11.26	103.46	6/21/2022 7:01	11.34	83.10	6/21/2022 8:18	3.65
6/21/2022 7:15	11.77	222.10	6/22/2022 8:59	11.24	103.32	6/21/2022 7:02	11.35	83.31	6/21/2022 8:19	3.62
6/21/2022 7:16	11.79	222.36	6/22/2022 9:00	11.25	103.35	6/21/2022 7:03	11.34	82.38	6/21/2022 8:20	3.67
6/21/2022 7:17	11.82	222.07	6/22/2022 9:01	11.25	103.28	6/21/2022 7:04	11.35	82.62	6/21/2022 8:21	3.61
6/21/2022 7:18	11.80	222.15	6/22/2022 9:02	11.28	103.60	6/21/2022 7:05	11.34	82.80	6/21/2022 8:22	3.57
6/21/2022 7:19	11.77	222.52	6/22/2022 9:03	11.28	103.46	6/21/2022 7:06	11.38	82.89	6/21/2022 8:23	3.64
6/21/2022 7:20	11.79	222.31	6/22/2022 9:04	11.29	103.34	6/21/2022 7:07	11.34	83.46	6/21/2022 8:24	3.58
6/21/2022 7:21	11.77	222.61	6/22/2022 9:05	11.25	103.22	6/21/2022 7:08	11.33	83.79	6/21/2022 8:25	3.57
6/21/2022 7:22	11.77	222.13	6/22/2022 9:06	11.28	103.59	6/21/2022 7:09	11.36	82.88	6/21/2022 8:26	3.55
6/21/2022 7:23	11.76	222.36	6/22/2022 9:07	11.27	103.39	6/21/2022 7:10	11.34	83.51	6/21/2022 8:27	3.53
6/21/2022 7:24	11.75	222.39	6/22/2022 9:08	11.26	103.57	6/21/2022 7:11	11.35	83.51	6/21/2022 8:28	3.59
6/21/2022 7:25	11.78	222.44	6/22/2022 9:09	11.28	103.57	6/21/2022 7:12	11.33	82.98	6/21/2022 8:29	3.58
6/21/2022 7:26	11.78	222.37	6/22/2022 9:10	11.26	103.55	6/21/2022 7:13	11.37	83.96	6/21/2022 8:30	3.53
6/21/2022 7:27	11.80	222.33	6/22/2022 9:11	11.28	103.38	6/21/2022 7:14	11.34	83.46	6/21/2022 8:31	3.55
6/21/2022 7:28	11.75	222.63	6/22/2022 9:12	11.28	103.30	6/21/2022 7:15	11.34	83.15	6/21/2022 8:32	3.57
6/21/2022 7:29	11.80	222.48	6/22/2022 9:13	11.26	103.35	6/21/2022 7:16	11.35	83.65	6/21/2022 8:33	3.57
6/21/2022 7:30	11.77	222.21	6/22/2022 9:14	11.25	103.43	6/21/2022 7:17	11.35	83.80	6/21/2022 8:34	3.63
6/21/2022 7:31	11.77	222.53	6/22/2022 9:15	11.27	103.44	6/21/2022 7:18	11.34	82.46	6/21/2022 8:35	3.59
6/21/2022 7:32	11.79	222.43	6/22/2022 9:16	11.26	103.40	6/21/2022 7:19	11.34	83.62	6/21/2022 8:36	3.57
6/21/2022 7:33	11.76	222.46	6/22/2022 9:17	11.28	103.48	6/21/2022 7:20	11.35	83.60	6/21/2022 8:37	3.49
6/21/2022 7:34	11.79	222.50	6/22/2022 9:18	11.25	103.58	6/21/2022 7:21	11.34	83.80	6/21/2022 8:38	3.58
6/21/2022 7:35	11.77	222.54	6/22/2022 9:19	11.27	103.59	6/21/2022 7:22	11.32	82.89	6/21/2022 8:39	3.55
6/21/2022 7:36	11.76	222.60	6/22/2022 9:20	11.28	103.62	6/21/2022 7:23	11.38	81.97	6/21/2022 8:40	3.59
6/21/2022 7:37	11.77	222.82	6/22/2022 9:21	11.26	103.45	6/21/2022 7:24	11.40	83.35	6/21/2022 8:41	3.60
6/21/2022 7:38	11.77	222.56	6/22/2022 9:22	11.27	103.44	6/21/2022 7:25	11.37	83.74	6/21/2022 8:42	3.53
6/21/2022 7:39	11.80	222.72	6/22/2022 9:23	11.28	103.43	6/21/2022 7:26	11.36	83.32	6/21/2022 8:43	3.57
6/21/2022 7:40	11.78	222.78	6/22/2022 9:24	11.27	103.42	6/21/2022 7:27	11.35	82.29	6/21/2022 8:44	3.55
6/21/2022 7:41	11.77	222.75	6/22/2022 9:25	11.26	103.46	6/21/2022 7:28	11.38	83.10	6/21/2022 8:45	3.55
6/21/2022 7:42	11.77	222.56	6/22/2022 9:26	11.29	103.36	6/21/2022 7:29	11.38	83.25	6/21/2022 8:46	3.56
6/21/2022 7:43	11.78	222.69	6/22/2022 9:27	11.26	103.64	6/21/2022 7:30	11.32	83.82	6/21/2022 8:47	3.56
6/21/2022 7:44	11.78	222.81	6/22/2022 9:28	11.22	103.45	6/21/2022 7:31	11.35	83.34	6/21/2022 8:48	3.53
6/21/2022 7:45	11.76	222.68	6/22/2022 9:29	11.26	103.46	6/21/2022 7:32	11.38	83.05	6/21/2022 8:49	3.54
6/21/2022 7:46	11.76	222.68	6/22/2022 9:30	11.23	103.41	6/21/2022 7:33	11.36	83.39	6/21/2022 8:50	3.58
6/21/2022 7:47	11.78	222.72	6/22/2022 9:31	11.30	103.35	6/21/2022 7:34	11.38	84.41	6/21/2022 8:51	3.56
6/21/2022 7:48	11.76	222.79	6/22/2022 9:32	11.26	103.38	6/21/2022 7:35	11.37	83.57	6/21/2022 8:52	3.60
6/21/2022 7:49	11.77	222.87	6/22/2022 9:33	11.26	103.66	6/21/2022 7:36	11.32	84.17	6/21/2022 8:53	3.56
6/21/2022 7:50	11.76	222.71	6/22/2022 9:34	11.27	103.71	6/21/2022 7:37	11.32	84.55	6/21/2022 8:54	3.49
6/21/2022 7:51	11.79	222.99	6/22/2022 9:35	11.28	103.66	6/21/2022 7:38	11.29	83.48	6/21/2022 8:55	3.53
6/21/2022 7:52	11.77	223.07	6/22/2022 9:36	11.29	103.53	6/21/2022 7:39	11.33	84.04	6/21/2022 8:56	3.55
6/21/2022 7:53	11.78	222.44	6/22/2022 9:37	11.26	103.25	6/21/2022 7:40	11.34	83.77	6/21/2022 8:57	3.50
6/21/2022 7:54	11.78	222.70	6/22/2022 9:38	11.27	103.48	6/21/2022 7:41	11.35	85.49	6/21/2022 8:58	3.52
6/21/2022 7:55	11.75	222.96	6/22/2022 9:39	11.29	103.70	6/21/2022 7:42	11.31	82.97	6/21/2022 8:59	3.52
6/21/2022 7:56	11.79	223.13	6/22/2022 9:40	11.28	103.30	6/21/2022 7:43	11.39	83.58	6/21/2022 9:00	3.55
6/21/2022 7:57	11.76	222.92	6/22/2022 9:41	11.26	103.42	6/21/2022 7:44	11.38	83.33	6/21/2022 9:01	3.52
6/21/2022 7:58	11.78	222.93	6/22/2022 9:42	11.27	103.53	6/21/2022 7:45	11.32	84.79	6/21/2022 9:02	3.53
6/21/2022 7:59	11.78	222.81	6/22/2022 9:43	11.30	103.54	6/21/2022 7:46	11.32	84.07	6/21/2022 9:03	3.50
6/21/2022 8:00	11.75	222.95	6/22/2022 9:44	11.26	103.45	6/21/2022 7:47	11.32	82.75	6/21/2022 9:04	3.51
6/21/2022 8:01	11.78	222.89	6/22/2022 9:45	11.26	103.59	6/21/2022 7:48	11.38	83.62	6/21/2022 9:05	3.54
6/21/2022 8:02	11.76	222.78	6/22/2022 9:46	11.25	103.49	6/21/2022 7:49	11.39	84.71	6/21/2022 9:06	3.52
6/21/2022 8:03	11.77	222.93	6/22/2022 9:47	11.28	103.43	6/21/2022 7:50	11.37	84.02	6/21/2022 9:07	3.53
6/21/2022 8:04	11.79	222.91	6/22/2022 9:48	11.26	103.53	6/21/2022 7:51	11.33	83.72	6/21/2022 9:08	3.51
6/21/2022 8:05	11.82	223.12	6/22/2022 9:49	11.25	103.28	6/21/2022 7:52	11.36	84.40	6/21/2022 9:09	3.53
6/21/2022 8:06	11.77	223.06	6/22/2022 9:50	11.28	103.55	6/21/2022 7:53	11.38	83.82	6/21/2022 9:10	3.52
6/21/2022 8:07	11.78	223.01	6/22/2022 9:51	11.26	103.49	6/21/2022 7:54	11.32	84.69	6/21/2022 9:11	3.50
6/21/2022 8:08	11.77	223.05	6/22/2022 9:52	11.26	103.43	6/21/2022 7:55	11.35	83.44	6/21/2022 9:12	3.53
6/21/2022 8:09	11.78	223.06	6/22/2022 9:53	11.26	103.41	6/21/2022 7:56	11.33	85.10	6/21/2022 9:13	3.54
6/21/2022 8:10	11.76	222.97	6/22/2022 9:54	11.26	103.44	6/21/2022 7:57	11.33	83.66	6/21/2022 9:14	3.50
6/21/2022 8:11	11.78	222.92	6/22/2022 9:55	11.29	103.47	6/21/2022 7:58	11.36	84.28	6/21/2022 9:15	3.55
6/21/2022 8:12	11.75	223.16	6/22/2022 9:56	11.26	103.64	6/21/2022 7:59	11.30	84.08	6/21/2022 9:16	3.52
6/21/2022 8:13	11.75	223.17	6/22/2022 9:57	11.25	103.50	6/21/2022 8:00	11.31	83.48	6/21/2022 9:17	3.51
6/21/2022 8:14	11.76	223.06	6/22/2022 9:58	11.26	103.47	6/21/2022 8:01	11.38	84.23	6/21/2022 9:18	3.54
6/21/2022 8:15	11.77	223.06	6/22/2022 9:59	11.26	103.63	6/21/2022 8:02	11.33	83.93	6/21/2022 9:19	3.59
6/21/2022 8:16	11.77	223.05	6/22/2022 10:00	11.27	103.35	6/21/2022 8:03	11.35	84.13	6/21/2022 9:20	3.48
6/21/2022 8:17	11.79	223.17	6/22/2022 10:01	11.22	103.65	6/21/2022 8:04	11.32	84.54	6/21/2022 9:21	3.53
6/21/2022 8:18	11.77	223.15	6/22/2022 10:02	11.26	103.36	6/21/2022 8:05	11.37	84.84	6/21/2022 9:22	3.53
6/21/2022 8:19	11.77	223.01	6/22/2022 10:03	11.28	103.52	6/21/2022 8:06	11.34	84.18	6/21/2022 9:23	3.56
6/21/2022 8:20	11.77	223.17	6/22/2022 10:04	11.26	103.55	6/21/2022 8:07	11.31	84.59	6/21/2022 9:24	3.54
6/21/2022 8:21	11.75	223.05	6/22/2022 10:05	11.28	103.57	6/21/2022 8:08	11.35	84.77	6/21/2022 9:25	3.53
6/21/2022 8:22	11.78	223.17	6/22/2022 10:06	11.25	103.47	6/21/2022 8:09	11.36	84.22	6/21/2022 9:26	3.58

6/21/2022 8:23	11.75	223.21	6/22/2022 10:07	11.24	103.47	6/21/2022 8:10	11.36	84.16	6/21/2022 9:27	3.53
6/21/2022 8:24	11.79	223.12	6/22/2022 10:08	11.27	103.81	6/21/2022 8:11	11.35	84.70	6/21/2022 9:28	3.55
6/21/2022 8:25	11.74	223.24	6/22/2022 10:09	11.29	103.59	6/21/2022 8:12	11.33	84.17	6/21/2022 9:29	3.54
6/21/2022 8:26	11.78	223.31	6/22/2022 10:10	11.29	103.57	6/21/2022 8:13	11.36	84.53	6/21/2022 9:30	3.56
6/21/2022 8:27	11.78	223.06	6/22/2022 10:11	11.25	103.50	6/21/2022 8:14	11.37	83.30	6/21/2022 9:31	3.52
6/21/2022 8:28	11.80	223.04	6/22/2022 10:12	11.26	103.52	6/21/2022 8:15	11.34	82.91	6/21/2022 9:32	3.57
6/21/2022 8:29	11.75	223.01	6/22/2022 10:13	11.29	103.50	6/21/2022 8:16	11.32	84.79	6/21/2022 9:33	3.53
6/21/2022 8:30	11.76	223.38	6/22/2022 10:14	11.29	103.53	6/21/2022 8:17	11.36	85.08	6/21/2022 9:34	3.52
6/21/2022 8:31	11.78	223.28	6/22/2022 10:15	11.28	103.29	6/21/2022 8:18	11.30	83.91	6/21/2022 9:35	3.50
6/21/2022 8:32	11.78	223.34	6/22/2022 10:16	11.26	103.68	6/21/2022 8:19	11.33	84.31	6/21/2022 9:36	3.53
6/21/2022 8:33	11.78	223.31	6/22/2022 10:17	11.28	103.50	6/21/2022 8:20	11.31	83.92	6/21/2022 9:37	3.58
6/21/2022 8:34	11.75	223.16	6/22/2022 10:18	11.24	103.53	6/21/2022 8:21	11.31	84.05	6/21/2022 9:38	3.57
6/21/2022 8:35	11.73	223.22	6/22/2022 10:19	11.28	103.58	6/21/2022 8:22	11.32	84.54	6/21/2022 9:39	3.50
6/21/2022 8:36	11.77	223.23	6/22/2022 10:20	11.28	103.76	6/21/2022 8:23	11.32	84.64	6/21/2022 9:40	3.60
6/21/2022 8:37	11.79	223.21	6/22/2022 10:21	11.25	103.62	6/21/2022 8:24	11.35	84.03	6/21/2022 9:41	3.52
6/21/2022 8:38	11.75	223.25	6/22/2022 10:22	11.26	103.53	6/21/2022 8:25	11.38	84.57	6/21/2022 9:42	3.60
6/21/2022 8:39	11.76	223.26	6/22/2022 10:23	11.25	103.68	6/21/2022 8:26	11.35	84.07	6/21/2022 9:43	3.56
6/21/2022 8:40	11.76	223.45	6/22/2022 10:24	11.24	103.83	6/21/2022 8:27	11.35	84.06	6/21/2022 9:44	3.54
6/21/2022 8:41	11.76	223.29	6/22/2022 10:25	11.28	103.75	6/21/2022 8:28	11.33	85.43	6/21/2022 9:45	3.51
6/21/2022 8:42	11.79	223.39	6/22/2022 10:26	11.28	103.43	6/21/2022 8:29	11.33	84.71	6/21/2022 9:46	3.53
6/21/2022 8:43	11.80	223.44	6/22/2022 10:27	11.25	103.54	6/21/2022 8:30	11.38	84.40	6/21/2022 9:47	3.59
6/21/2022 8:44	11.74	223.43	6/22/2022 10:28	11.25	103.63	6/21/2022 8:31	11.33	83.83	6/21/2022 9:48	3.55
6/21/2022 8:45	11.76	223.29	6/22/2022 10:29	11.26	103.69	6/21/2022 8:32	11.32	85.05	6/21/2022 9:49	3.56
6/21/2022 8:46	11.78	223.54	6/22/2022 10:30	11.28	103.78	6/21/2022 8:33	11.35	84.69	6/21/2022 9:50	3.58
6/21/2022 8:47	11.77	223.21	6/22/2022 10:31	11.23	103.74	6/21/2022 8:34	11.38	84.06	6/21/2022 9:51	3.58
6/21/2022 8:48	11.75	223.60	6/22/2022 10:32	11.27	103.68	6/21/2022 8:35	11.33	84.41	6/21/2022 9:52	3.52
6/21/2022 8:49	11.78	223.31	6/22/2022 10:33	11.26	103.71	6/21/2022 8:36	11.34	83.14	6/21/2022 9:53	3.57
6/21/2022 8:50	11.78	223.42	6/22/2022 10:34	11.28	103.69	6/21/2022 8:37	11.36	84.07	6/21/2022 9:54	3.57
6/21/2022 8:51	11.80	223.57	6/22/2022 10:35	11.26	103.70	6/21/2022 8:38	11.32	84.75	6/21/2022 9:55	3.56
6/21/2022 8:52	11.77	223.51	6/22/2022 10:36	11.28	103.67	6/21/2022 8:39	11.36	84.78	6/21/2022 9:56	3.60
6/21/2022 8:53	11.77	223.45	6/22/2022 10:37	11.26	103.76	6/21/2022 8:40	11.36	84.62	6/21/2022 9:57	3.61
6/21/2022 8:54	11.77	223.22	6/22/2022 10:38	11.27	103.69	6/21/2022 8:41	11.30	85.27	6/21/2022 9:58	3.55
6/21/2022 8:55	11.78	223.43	6/22/2022 10:39	11.28	103.70	6/21/2022 8:42	11.36	85.06	6/21/2022 9:59	3.55
6/21/2022 8:56	11.77	223.33	6/22/2022 10:40	11.25	103.88	6/21/2022 8:43	11.32	84.37	6/21/2022 10:00	3.60
6/21/2022 8:57	11.75	223.36	6/22/2022 10:41	11.26	103.46	6/21/2022 8:44	11.36	85.12	6/21/2022 10:01	3.58
6/21/2022 8:58	11.78	223.32	6/22/2022 10:42	11.26	103.69	6/21/2022 8:45	11.32	83.90	6/21/2022 10:02	3.58
6/21/2022 8:59	11.74	223.41	6/22/2022 10:43	11.26	103.58	6/21/2022 8:46	11.36	83.95	6/21/2022 10:03	3.61
6/21/2022 9:00	11.79	223.53	6/22/2022 10:44	11.27	103.71	6/21/2022 8:47	11.30	84.27	6/21/2022 10:04	3.52
6/21/2022 9:01	11.75	223.59	6/22/2022 10:45	11.27	103.72	6/21/2022 8:48	11.37	84.02	6/21/2022 10:05	3.54
6/21/2022 9:02	11.78	223.72	6/22/2022 10:46	11.25	103.85	6/21/2022 8:49	11.33	82.94	6/21/2022 10:06	3.54
6/21/2022 9:03	11.75	223.32	6/22/2022 10:47	11.28	103.65	6/21/2022 8:50	11.33	84.59	6/21/2022 10:07	3.62
6/21/2022 9:04	11.76	223.50	6/22/2022 10:48	11.26	103.57	6/21/2022 8:51	11.32	84.90	6/21/2022 10:08	3.59
6/21/2022 9:05	11.78	223.31	6/22/2022 10:49	11.25	103.56	6/21/2022 8:52	11.36	83.93	6/21/2022 10:09	3.59
6/21/2022 9:06	11.77	223.48	6/22/2022 10:50	11.27	103.81	6/21/2022 8:53	11.33	84.11	6/21/2022 10:10	3.57
6/21/2022 9:07	11.77	223.65	6/22/2022 10:51	11.26	103.67	6/21/2022 8:54	11.36	84.64	6/21/2022 10:11	3.58
6/21/2022 9:08	11.80	223.60	6/22/2022 10:52	11.22	103.77	6/21/2022 8:55	11.35	83.74	6/21/2022 10:12	3.56
6/21/2022 9:09	11.74	223.28	6/22/2022 10:53	11.27	103.75	6/21/2022 8:56	11.33	84.95	6/21/2022 10:13	3.53
6/21/2022 9:10	11.76	223.74	6/22/2022 10:54	11.27	103.66	6/21/2022 8:57	11.32	84.13	6/21/2022 10:14	3.61
6/21/2022 9:11	11.78	223.41	6/22/2022 10:55	11.26	103.72	6/21/2022 8:58	11.35	84.28	6/21/2022 10:15	3.55
6/21/2022 9:12	11.77	223.49	6/22/2022 10:56	11.29	103.64	6/21/2022 8:59	11.33	84.71	6/21/2022 10:16	3.61
6/21/2022 9:13	11.77	223.59	6/22/2022 10:57	11.26	103.66	6/21/2022 9:00	11.32	85.07	6/21/2022 10:17	3.62
6/21/2022 9:14	11.74	223.52	6/22/2022 10:58	11.26	103.62	6/21/2022 9:01	11.33	84.70	6/21/2022 10:18	3.58
6/21/2022 9:15	11.76	223.70	6/22/2022 10:59	11.27	103.72	6/21/2022 9:02	11.33	84.64	6/21/2022 10:19	3.58
6/21/2022 9:16	11.75	223.53	6/22/2022 11:00	11.26	103.74	6/21/2022 9:03	11.33	84.69	6/21/2022 10:20	3.55
6/21/2022 9:17	11.77	223.72	6/22/2022 11:01	11.26	103.85	6/21/2022 9:04	11.33	85.84	6/21/2022 10:21	3.58
6/21/2022 9:18	11.77	223.54	6/22/2022 11:02	11.26	103.69	6/21/2022 9:05	11.34	84.89	6/21/2022 10:22	3.61
6/21/2022 9:19	11.74	223.61	6/22/2022 11:03	11.24	103.69	6/21/2022 9:06	11.32	85.88	6/21/2022 10:23	3.58
6/21/2022 9:20	11.74	223.51	6/22/2022 11:04	11.27	103.82	6/21/2022 9:07	11.35	83.89	6/21/2022 10:24	3.59
6/21/2022 9:21	11.74	223.76	6/22/2022 11:05	11.26	103.70	6/21/2022 9:08	11.33	84.86	6/21/2022 10:25	3.59
6/21/2022 9:22	11.75	223.60	6/22/2022 11:06	11.29	103.81	6/21/2022 9:09	11.36	85.65	6/21/2022 10:26	3.59
6/21/2022 9:23	11.76	223.74	6/22/2022 11:07	11.27	103.81	6/21/2022 9:10	11.33	84.76	6/21/2022 10:27	3.58
6/21/2022 9:24	11.73	223.87	6/22/2022 11:08	11.25	103.68	6/21/2022 9:11	11.35	84.70	6/21/2022 10:28	3.63
6/21/2022 9:25	11.75	223.75	6/22/2022 11:09	11.27	103.84	6/21/2022 9:12	11.31	86.20	6/21/2022 10:29	3.60
6/21/2022 9:26	11.73	223.80	6/22/2022 11:10	11.26	103.84	6/21/2022 9:13	11.37	84.50	6/21/2022 10:30	3.69
6/21/2022 9:27	11.77	223.66	6/22/2022 11:11	11.27	103.73	6/21/2022 9:14	11.31	85.25	6/21/2022 10:31	3.69
6/21/2022 9:28	11.77	223.94	6/22/2022 11:12	11.25	103.86	6/21/2022 9:15	11.36	84.94	6/21/2022 10:32	3.67
6/21/2022 9:29	11.78	223.60	6/22/2022 11:13	11.29	103.90	6/21/2022 9:16	11.36	84.70	6/21/2022 10:33	3.65
6/21/2022 9:30	11.74	223.83	6/22/2022 11:14	11.26	103.87	6/21/2022 9:17	11.33	85.52	6/21/2022 10:34	3.65
6/21/2022 9:31	11.76	223.86	6/22/2022 11:15	11.26	103.60	6/21/2022 9:18	11.35	86.45	6/21/2022 10:35	3.62
6/21/2022 9:32	11.75	223.73	6/22/2022 11:16	11.26	103.78	6/21/2022 9:19	11.33	85.66	6/21/2022 10:36	3.61
6/21/2022 9:33	11.74	223.61	6/22/2022 11:17	11.25	103.69	6/21/2022 9:20	11.32	85.42	6/21/2022 10:37	3.66
6/21/2022 9:34	11.78	223.78	6/22/2022 11:18	11.26	103.76	6/21/2022 9:21	11.34	85.07	6/21/2022 10:38	3.63
6/21/2022 9:35	11.78	223.86	6/22/2022 11:19	11.26	103.85	6/21/2022 9:22	11.36	85.13	6/21/2022 10:39	3.66
6/21/2022 9:36	11.77	223.85	6/22/2022 11:20	11.27	103.65	6/21/2022 9:23	11.32	85.23	6/21/2022 10:40	3.65
6/21/2022 9:37	11.75	223.93	6/22/2022 11:21	11.27	103.72	6/21/2022 9:24	11.33	84.82	6/21/2022 10:41	3.65
6/21/2022 9:38	11.77	223.82	6/22/2022 11:22	11.28	103.75	6/21/2022 9:25	11.31	84.53	6/21/2022 10:42	3.63
6/21/2022 9:39	11.78	223.96	6/22/2022 11:23	11.26	103.49	6/21/2022 9:26	11.33	84.75	6/21/2022 10:43	3.66
6/21/2022 9:40	11.77	223.89	6/22/2022 11:24	11.26	103.75	6/21/2022 9:27	11.32	84.48	6/21/2022 10:44	3.72
6/21/2022 9:41	11.78	223.93	6/22/2022 11:25	11.28	103.75	6/21/2022 9:28	11.35	85.34	6/21/2022 10:45	3.65
6/21/2022 9:42	11.76	223.86	6/22/2022 11:26	11.26	103.81	6/21/2022 9:29	11.35	85.98	6/21/2022 10:46	3.66
6/21/2022 9:43	11.75	223.76	6/22/2022 11:27	11.25	103.76	6/21/2022 9:30	11.34	85.39	6/21/2022 10:47	3.67
6/21/2022 9:44	11.74	223.95	6/22/2022 11:28	11.26	103.88	6/21/2022 9:31	11.33	85.60	6/21/2022 10:48	3.66
6/21/2022 9:45	11.77	224.04	6/22/2022 11:29	11.24	103.82	6/21/2022 9:32	11.34	84.84	6/21/2022 10:49	3.65
6/21/2022 9:46	11.77	223.93	6/22/2022 11:30	11.26	103.74	6/21/2022 9:33	11.37	85.51	6/21/2022 10:50	3.66
6/21/2022 9:47	11.75	223.82	6/22/2022 11:31	11.25	103.89	6/21/2022 9:34	11.32	84.95	6/21/2022 10:51	3.70
6/21/2022 9:48	11.72	223.98	6/22/2022 11:32	11.27	103.79	6/21/2022 9:35	11.34	84.35	6/21/2022 10:52	3.66
6/21/2022 9:49	11.77	223.76	6/22/2022 11:33	11.27	103.78	6/21/2022 9:36	11.32	85.27	6/21/2022 10:53	3.67
6/21/2022 9:50	11.77	223.90	6/22/2022 11:34	11.24	103.76	6/21/2022 9:37	11.31	85.21	6/21/2022 10:54	3.69

6/21/2022 9:51	11.76	223.94	6/22/2022 11:35	11.26	103.82	6/21/2022 9:38	11.33	84.77	6/21/2022 10:55	3.68
6/21/2022 9:52	11.75	224.27	6/22/2022 11:36	11.27	103.81	6/21/2022 9:39	11.34	85.99	6/21/2022 10:56	3.66
6/21/2022 9:53	11.76	223.69	6/22/2022 11:37	11.27	103.84	6/21/2022 9:40	11.35	84.60	6/21/2022 10:57	3.67
6/21/2022 9:54	11.76	224.03	6/22/2022 11:38	11.26	103.80	6/21/2022 9:41	11.31	84.98	6/21/2022 10:58	3.71
6/21/2022 9:55	11.76	224.19	6/22/2022 11:39	11.27	103.92	6/21/2022 9:42	11.31	84.74	6/21/2022 10:59	3.70
6/21/2022 9:56	11.76	224.13	6/22/2022 11:40	11.26	103.80	6/21/2022 9:43	11.34	85.25	6/21/2022 11:00	3.71
6/21/2022 9:57	11.75	223.82	6/22/2022 11:41	11.27	103.94	6/21/2022 9:44	11.32	86.39	6/21/2022 11:01	3.69
6/21/2022 9:58	11.77	224.14	6/22/2022 11:42	11.28	103.90	6/21/2022 9:45	11.33	85.92	6/21/2022 11:02	3.66
6/21/2022 9:59	11.74	224.24	6/22/2022 11:43	11.27	103.84	6/21/2022 9:46	11.32	86.23	6/21/2022 11:03	3.68
6/21/2022 10:00	11.73	224.00	6/22/2022 11:44	11.27	104.12	6/21/2022 9:47	11.32	85.71	6/21/2022 11:04	3.73
6/21/2022 10:01	11.76	224.25	6/22/2022 11:45	11.26	103.98	6/21/2022 9:48	11.33	85.33	6/21/2022 11:05	3.73
6/21/2022 10:02	11.75	224.02	6/22/2022 11:46	11.26	103.58	6/21/2022 9:49	11.35	85.80	6/21/2022 11:06	3.72
6/21/2022 10:03	11.74	224.11	6/22/2022 11:47	11.23	103.80	6/21/2022 9:50	11.38	86.05	6/21/2022 11:07	3.69
6/21/2022 10:04	11.75	224.08	6/22/2022 11:48	11.26	103.96	6/21/2022 9:51	11.33	85.08	6/21/2022 11:08	3.71
6/21/2022 10:05	11.77	224.09	6/22/2022 11:49	11.26	103.86	6/21/2022 9:52	11.32	85.03	6/21/2022 11:09	3.70
6/21/2022 10:06	11.76	224.23	6/22/2022 11:50	11.26	103.89	6/21/2022 9:53	11.33	85.95	6/21/2022 11:10	3.72
6/21/2022 10:07	11.75	224.24	6/22/2022 11:51	11.28	103.91	6/21/2022 9:54	11.34	85.94	6/21/2022 11:11	3.72
6/21/2022 10:08	11.76	224.39	6/22/2022 11:52	11.26	103.83	6/21/2022 9:55	11.36	85.64	6/21/2022 11:12	3.76
6/21/2022 10:09	11.77	224.48	6/22/2022 11:53	11.25	103.94	6/21/2022 9:56	11.33	86.23	6/21/2022 11:13	3.71
6/21/2022 10:10	11.75	224.27	6/22/2022 11:54	11.27	104.09	6/21/2022 9:57	11.33	85.53	6/21/2022 11:14	3.72
6/21/2022 10:11	11.78	224.25	6/22/2022 11:55	11.28	104.02	6/21/2022 9:58	11.33	85.39	6/21/2022 11:15	3.73
6/21/2022 10:12	11.76	224.46	6/22/2022 11:56	11.27	103.94	6/21/2022 9:59	11.35	86.50	6/21/2022 11:16	3.73
6/21/2022 10:13	11.76	224.47	6/22/2022 11:57	11.26	103.72	6/21/2022 10:00	11.34	85.10	6/21/2022 11:17	3.73
6/21/2022 10:14	11.74	224.32	6/22/2022 11:58	11.26	104.02	6/21/2022 10:01	11.36	84.86	6/21/2022 11:18	3.73
6/21/2022 10:15	11.78	224.39	6/22/2022 11:59	11.27	103.95	6/21/2022 10:02	11.34	85.03	6/21/2022 11:19	3.72
6/21/2022 10:16	11.73	224.21	6/22/2022 12:00	11.26	103.98	6/21/2022 10:03	11.33	85.34	6/21/2022 11:20	3.75
6/21/2022 10:17	11.78	224.37	6/22/2022 12:01	11.25	103.80	6/21/2022 10:04	11.33	85.15	6/21/2022 11:21	3.74
6/21/2022 10:18	11.75	224.33	6/22/2022 12:02	11.27	103.78	6/21/2022 10:05	11.33	85.45	6/21/2022 11:22	3.74
6/21/2022 10:19	11.75	224.43	6/22/2022 12:03	11.25	103.94	6/21/2022 10:06	11.32	86.21	6/21/2022 11:23	3.71
6/21/2022 10:20	11.76	224.67	6/22/2022 12:04	11.27	104.00	6/21/2022 10:07	11.32	85.57	6/21/2022 11:24	3.74
6/21/2022 10:21	11.75	224.43	6/22/2022 12:05	11.27	103.98	6/21/2022 10:08	11.35	85.61	6/21/2022 11:25	3.74
6/21/2022 10:22	11.76	224.55	6/22/2022 12:06	11.28	103.98	6/21/2022 10:09	11.33	86.31	6/21/2022 11:26	3.77
6/21/2022 10:23	11.76	224.34	6/22/2022 12:07	11.27	103.88	6/21/2022 10:10	11.34	86.00	6/21/2022 11:27	3.77
6/21/2022 10:24	11.74	224.59	6/22/2022 12:08	11.24	103.92	6/21/2022 10:11	11.36	85.28	6/21/2022 11:28	3.76
6/21/2022 10:25	11.74	224.62	6/22/2022 12:09	11.27	104.03	6/21/2022 10:12	11.32	84.23	6/21/2022 11:29	3.75
6/21/2022 10:26	11.75	224.78	6/22/2022 12:10	11.28	103.82	6/21/2022 10:13	11.36	85.48	6/21/2022 11:30	3.76
6/21/2022 10:27	11.74	224.53	6/22/2022 12:11	11.27	103.83	6/21/2022 10:14	11.34	84.97	6/21/2022 11:31	3.75
6/21/2022 10:28	11.74	224.64	6/22/2022 12:12	11.26	103.96	6/21/2022 10:15	11.33	86.75	6/21/2022 11:32	3.71
6/21/2022 10:29	11.71	224.50	6/22/2022 12:13	11.28	103.97	6/21/2022 10:16	11.33	85.38	6/21/2022 11:33	3.80
6/21/2022 10:30	11.73	224.66	6/22/2022 12:14	11.27	103.87	6/21/2022 10:17	11.34	87.30	6/21/2022 11:34	3.75
6/21/2022 10:31	11.74	224.54	6/22/2022 12:15	11.25	103.87	6/21/2022 10:18	11.37	86.34	6/21/2022 11:35	3.75
6/21/2022 10:32	11.77	224.74	6/22/2022 12:16	11.25	104.15	6/21/2022 10:19	11.34	85.88	6/21/2022 11:36	3.82
6/21/2022 10:33	11.77	224.48	6/22/2022 12:17	11.28	104.00	6/21/2022 10:20	11.36	85.22	6/21/2022 11:37	3.77
6/21/2022 10:34	11.74	224.52	6/22/2022 12:18	11.27	104.13	6/21/2022 10:21	11.31	87.05	6/21/2022 11:38	3.83
6/21/2022 10:35	11.74	224.72	6/22/2022 12:19	11.25	103.86	6/21/2022 10:22	11.34	86.29	6/21/2022 11:39	3.82
6/21/2022 10:36	11.77	224.67	6/22/2022 12:20	11.28	103.94	6/21/2022 10:23	11.35	86.81	6/21/2022 11:40	3.76
6/21/2022 10:37	11.75	224.77	6/22/2022 12:21	11.25	103.96	6/21/2022 10:24	11.33	85.81	6/21/2022 11:41	3.80
6/21/2022 10:38	11.75	224.91	6/22/2022 12:22	11.27	103.82	6/21/2022 10:25	11.34	85.91	6/21/2022 11:42	3.80
6/21/2022 10:39	11.74	224.66	6/22/2022 12:23	11.26	104.02	6/21/2022 10:26	11.32	85.10	6/21/2022 11:43	3.85
6/21/2022 10:40	11.76	224.78	6/22/2022 12:24	11.27	104.04	6/21/2022 10:27	11.33	85.64	6/21/2022 11:44	3.82
6/21/2022 10:41	11.76	224.78	6/22/2022 12:25	11.26	103.82	6/21/2022 10:28	11.35	86.29	6/21/2022 11:45	3.80
6/21/2022 10:42	11.76	224.95	6/22/2022 12:26	11.26	104.05	6/21/2022 10:29	11.32	86.02	6/21/2022 11:46	3.80
6/21/2022 10:43	11.74	225.16	6/22/2022 12:27	11.23	104.08	6/21/2022 10:30	11.35	86.10	6/21/2022 11:47	3.80
6/21/2022 10:44	11.75	225.00	6/22/2022 12:28	11.28	104.04	6/21/2022 10:31	11.33	86.61	6/21/2022 11:48	3.77
6/21/2022 10:45	11.77	224.83	6/22/2022 12:29	11.27	103.97	6/21/2022 10:32	11.34	85.76	6/21/2022 11:49	3.83
6/21/2022 10:46	11.76	224.76	6/22/2022 12:30	11.26	104.01	6/21/2022 10:33	11.33	85.77	6/21/2022 11:50	3.79
6/21/2022 10:47	11.77	224.75	6/22/2022 12:31	11.26	103.98	6/21/2022 10:34	11.35	86.28	6/21/2022 11:51	3.81
6/21/2022 10:48	11.78	224.96	6/22/2022 12:32	11.25	104.11	6/21/2022 10:35	11.35	86.27	6/21/2022 11:52	3.81
6/21/2022 10:49	11.77	225.06	6/22/2022 12:33	11.26	103.99	6/21/2022 10:36	11.34	84.54	6/21/2022 11:53	3.80
6/21/2022 10:50	11.74	224.89	6/22/2022 12:34	11.28	104.07	6/21/2022 10:37	11.33	85.73	6/21/2022 11:54	3.83
6/21/2022 10:51	11.74	224.90	6/22/2022 12:35	11.24	104.09	6/21/2022 10:38	11.34	86.29	6/21/2022 11:55	3.85
6/21/2022 10:52	11.77	225.00	6/22/2022 12:36	11.27	103.94	6/21/2022 10:39	11.33	85.76	6/21/2022 11:56	3.85
6/21/2022 10:53	11.75	224.95	6/22/2022 12:37	11.28	103.99	6/21/2022 10:40	11.34	86.83	6/21/2022 11:57	3.80
6/21/2022 10:54	11.76	225.08	6/22/2022 12:38	11.26	104.19	6/21/2022 10:41	11.38	86.73	6/21/2022 11:58	3.79
6/21/2022 10:55	11.75	225.30	6/22/2022 12:39	11.26	104.07	6/21/2022 10:42	11.35	86.67	6/21/2022 11:59	3.85
6/21/2022 10:56	11.76	225.20	6/22/2022 12:40	11.26	104.10	6/21/2022 10:43	11.35	85.53	6/21/2022 12:00	3.80
6/21/2022 10:57	11.76	225.01	6/22/2022 12:41	11.25	103.97	6/21/2022 10:44	11.35	86.60	6/21/2022 12:01	3.82
6/21/2022 10:58	11.73	225.19	6/22/2022 12:42	11.25	104.13	6/21/2022 10:45	11.36	86.62	6/21/2022 12:02	3.84
6/21/2022 10:59	11.75	225.27	6/22/2022 12:43	11.23	104.20	6/21/2022 10:46	11.31	86.10	6/21/2022 12:03	3.78
6/21/2022 11:00	11.75	225.43	6/22/2022 12:44	11.24	103.99	6/21/2022 10:47	11.35	85.74	6/21/2022 12:04	3.83
6/21/2022 11:01	11.75	225.26	6/22/2022 12:45	11.26	104.12	6/21/2022 10:48	11.34	85.84	6/21/2022 12:05	3.80
6/21/2022 11:02	11.75	225.23	6/22/2022 12:46	11.25	104.07	6/21/2022 10:49	11.35	85.98	6/21/2022 12:06	3.83
6/21/2022 11:03	11.75	225.53	6/22/2022 12:47	11.26	104.04	6/21/2022 10:50	11.34	86.59	6/21/2022 12:07	3.83
6/21/2022 11:04	11.76	225.29	6/22/2022 12:48	11.26	104.19	6/21/2022 10:51	11.35	86.32	6/21/2022 12:08	3.89
6/21/2022 11:05	11.76	225.50	6/22/2022 12:49	11.27	103.95	6/21/2022 10:52	11.33	85.95	6/21/2022 12:09	3.92
6/21/2022 11:06	11.75	225.50	6/22/2022 12:50	11.28	104.05	6/21/2022 10:53	11.36	86.13	6/21/2022 12:10	3.89
6/21/2022 11:07	11.74	225.59	6/22/2022 12:51	11.25	104.24	6/21/2022 10:54	11.31	86.44	6/21/2022 12:11	3.99
6/21/2022 11:08	11.75	225.30	6/22/2022 12:52	11.25	104.02	6/21/2022 10:55	11.34	85.60	6/21/2022 12:12	3.96
6/21/2022 11:09	11.76	225.24	6/22/2022 12:53	11.28	103.96	6/21/2022 10:56	11.35	85.99	6/21/2022 12:13	3.97
6/21/2022 11:10	11.75	225.44	6/22/2022 12:54	11.29	104.20	6/21/2022 10:57	11.34	86.61	6/21/2022 12:14	4.02
6/21/2022 11:11	11.72	225.59	6/22/2022 12:55	11.26	103.88	6/21/2022 10:58	11.34	86.45	6/21/2022 12:15	4.05
6/21/2022 11:12	11.75	225.50	6/22/2022 12:56	11.26	104.23	6/21/2022 10:59	11.36	85.70	6/21/2022 12:16	4.02
6/21/2022 11:13	11.76	225.30	6/22/2022 12:57	11.25	104.06	6/21/2022 11:00	11.35	86.54	6/21/2022 12:17	4.06
6/21/2022 11:14	11.76	225.45	6/22/2022 12:58	11.27	104.07	6/21/2022 11:01	11.36	86.64	6/21/2022 12:18	4.07
6/21/2022 11:15	11.74	225.44	6/22/2022 12:59	11.25	104.06	6/21/2022 11:02	11.35	86.89	6/21/2022 12:19	4.03
6/21/2022 11:16	11.72	225.27	6/22/2022 13:00	11.27	103.82	6/21/2022 11:03	11.33	86.83	6/21/2022 12:20	4.07
6/21/2022 11:17	11.77	225.30	6/22/2022 13:01	11.24	103.99	6/21/2022 11:04	11.32	86.69	6/21/2022 12:21	4.06
6/21/2022 11:18	11.75	225.54	6/22/2022 13:02	11.26	104.21	6/21/2022 11:05	11.31	86.10	6/21/2022 12:22	4.10

6/21/2022 11:19	11.73	225.69	6/22/2022 13:03	11.29	104.16	6/21/2022 11:06	11.34	86.47	6/21/2022 12:23	4.13
6/21/2022 11:20	11.78	225.34	6/22/2022 13:04	11.28	104.20	6/21/2022 11:07	11.34	86.16	6/21/2022 12:24	4.18
6/21/2022 11:21	11.74	225.51	6/22/2022 13:05	11.27	103.98	6/21/2022 11:08	11.36	86.37	6/21/2022 12:25	4.17
6/21/2022 11:22	11.75	225.47	6/22/2022 13:06	11.28	104.10	6/21/2022 11:09	11.33	86.45	6/21/2022 12:26	4.20
6/21/2022 11:23	11.75	225.46	6/22/2022 13:07	11.27	104.02	6/21/2022 11:10	11.32	86.28	6/21/2022 12:27	4.15
6/21/2022 11:24	11.78	225.60	6/22/2022 13:08	11.25	104.06	6/21/2022 11:11	11.35	86.29	6/21/2022 12:28	4.18
6/21/2022 11:25	11.73	225.44	6/22/2022 13:09	11.28	104.20	6/21/2022 11:12	11.34	85.99	6/21/2022 12:29	4.19
6/21/2022 11:26	11.76	225.73	6/22/2022 13:10	11.26	104.08	6/21/2022 11:13	11.32	86.29	6/21/2022 12:30	4.23
6/21/2022 11:27	11.74	225.40	6/22/2022 13:11	11.26	104.13	6/21/2022 11:14	11.33	86.67	6/21/2022 12:31	4.24
6/21/2022 11:28	11.75	225.54	6/22/2022 13:12	11.26	104.13	6/21/2022 11:15	11.36	87.01	6/21/2022 12:32	4.28
6/21/2022 11:29	11.73	225.62	6/22/2022 13:13	11.27	104.15	6/21/2022 11:16	11.34	86.06	6/21/2022 12:33	4.28
6/21/2022 11:30	11.75	225.57	6/22/2022 13:14	11.25	104.03	6/21/2022 11:17	11.32	87.15	6/21/2022 12:34	4.28
6/21/2022 11:31	11.76	225.48	6/22/2022 13:15	11.24	104.24	6/21/2022 11:18	11.35	86.38	6/21/2022 12:35	4.25
6/21/2022 11:32	11.76	225.80	6/22/2022 13:16	11.29	104.14	6/21/2022 11:19	11.32	86.42	6/21/2022 12:36	4.25
6/21/2022 11:33	11.77	225.72	6/22/2022 13:17	11.26	104.01	6/21/2022 11:20	11.36	85.54	6/21/2022 12:37	4.27
6/21/2022 11:34	11.75	225.54	6/22/2022 13:18	11.26	104.18	6/21/2022 11:21	11.29	86.39	6/21/2022 12:38	4.27
6/21/2022 11:35	11.73	225.96	6/22/2022 13:19	11.29	104.19	6/21/2022 11:22	11.36	85.76	6/21/2022 12:39	4.27
6/21/2022 11:36	11.77	225.92	6/22/2022 13:20	11.27	104.23	6/21/2022 11:23	11.34	86.96	6/21/2022 12:40	4.33
6/21/2022 11:37	11.76	225.79	6/22/2022 13:21	11.25	104.21	6/21/2022 11:24	11.31	87.19	6/21/2022 12:41	4.28
6/21/2022 11:38	11.77	225.98	6/22/2022 13:22	11.28	104.18	6/21/2022 11:25	11.32	87.13	6/21/2022 12:42	4.29
6/21/2022 11:39	11.73	225.99	6/22/2022 13:23	11.27	103.98	6/21/2022 11:26	11.33	85.96	6/21/2022 12:43	4.29
6/21/2022 11:40	11.77	225.91	6/22/2022 13:24	11.25	104.31	6/21/2022 11:27	11.35	87.02	6/21/2022 12:44	4.34
6/21/2022 11:41	11.74	225.87	6/22/2022 13:25	11.25	104.08	6/21/2022 11:28	11.33	86.95	6/21/2022 12:45	4.27
6/21/2022 11:42	11.71	226.06	6/22/2022 13:26	11.27	104.19	6/21/2022 11:29	11.34	86.97	6/21/2022 12:46	4.24
6/21/2022 11:43	11.76	226.27	6/22/2022 13:27	11.26	104.06	6/21/2022 11:30	11.36	86.31	6/21/2022 12:47	4.30
6/21/2022 11:44	11.73	226.27	6/22/2022 13:28	11.24	104.33	6/21/2022 11:31	11.38	87.48	6/21/2022 12:48	4.29
6/21/2022 11:45	11.74	226.76	6/22/2022 13:29	11.28	104.36	6/21/2022 11:32	11.36	87.03	6/21/2022 12:49	4.34
6/21/2022 11:46	11.76	226.82	6/22/2022 13:30	11.26	104.29	6/21/2022 11:33	11.33	86.29	6/21/2022 12:50	4.28
6/21/2022 11:47	11.74	226.88	6/22/2022 13:31	11.27	104.11	6/21/2022 11:34	11.33	86.76	6/21/2022 12:51	4.25
6/21/2022 11:48	11.77	226.76	6/22/2022 13:32	11.25	104.15	6/21/2022 11:35	11.37	86.89	6/21/2022 12:52	4.30
6/21/2022 11:49	11.77	227.19	6/22/2022 13:33	11.28	104.20	6/21/2022 11:36	11.37	86.64	6/21/2022 12:53	4.32
6/21/2022 11:50	11.74	227.14	6/22/2022 13:34	11.26	104.14	6/21/2022 11:37	11.33	86.76	6/21/2022 12:54	4.30
6/21/2022 11:51	11.78	227.46	6/22/2022 13:35	11.27	104.12	6/21/2022 11:38	11.34	86.90	6/21/2022 12:55	4.31
6/21/2022 11:52	11.74	227.28	6/22/2022 13:36	11.29	104.17	6/21/2022 11:39	11.34	86.83	6/21/2022 12:56	4.31
6/21/2022 11:53	11.75	227.49	6/22/2022 13:37	11.27	104.28	6/21/2022 11:40	11.33	86.68	6/21/2022 12:57	4.24
6/21/2022 11:54	11.76	227.28	6/22/2022 13:38	11.26	104.26	6/21/2022 11:41	11.34	86.82	6/21/2022 12:58	4.27
6/21/2022 11:55	11.73	227.43	6/22/2022 13:39	11.26	104.27	6/21/2022 11:42	11.34	87.09	6/21/2022 12:59	4.34
6/21/2022 11:56	11.74	227.48	6/22/2022 13:40	11.26	104.39	6/21/2022 11:43	11.35	86.44	6/21/2022 13:00	4.30
6/21/2022 11:57	11.75	227.54	6/22/2022 13:41	11.25	104.31	6/21/2022 11:44	11.33	86.50	6/21/2022 13:01	4.34
6/21/2022 11:58	11.75	227.61	6/22/2022 13:42	11.26	104.25	6/21/2022 11:45	11.38	88.09	6/21/2022 13:02	4.28
6/21/2022 11:59	11.75	227.79	6/22/2022 13:43	11.28	104.22	6/21/2022 11:46	11.34	87.20	6/21/2022 13:03	4.30
6/21/2022 12:00	11.73	227.92	6/22/2022 13:44	11.25	104.20	6/21/2022 11:47	11.34	85.76	6/21/2022 13:04	4.25
6/21/2022 12:01	11.75	228.00	6/22/2022 13:45	11.28	104.13	6/21/2022 11:48	11.32	87.34	6/21/2022 13:05	4.32
6/21/2022 12:02	11.75	227.96	6/22/2022 13:46	11.25	104.07	6/21/2022 11:49	11.36	87.12	6/21/2022 13:06	4.25
6/21/2022 12:03	11.74	227.86	6/22/2022 13:47	11.25	104.02	6/21/2022 11:50	11.33	87.26	6/21/2022 13:07	4.29
6/21/2022 12:04	11.75	227.91	6/22/2022 13:48	11.29	104.33	6/21/2022 11:51	11.32	86.33	6/21/2022 13:08	4.26
6/21/2022 12:05	11.75	227.95	6/22/2022 13:49	11.28	104.27	6/21/2022 11:52	11.37	85.80	6/21/2022 13:09	4.25
6/21/2022 12:06	11.79	228.12	6/22/2022 13:50	11.26	104.30	6/21/2022 11:53	11.34	86.03	6/21/2022 13:10	4.28
6/21/2022 12:07	11.76	228.04	6/22/2022 13:51	11.25	104.35	6/21/2022 11:54	11.33	86.63	6/21/2022 13:11	4.31
6/21/2022 12:08	11.72	228.04	6/22/2022 13:52	11.27	104.19	6/21/2022 11:55	11.34	87.30	6/21/2022 13:12	4.32
6/21/2022 12:09	11.72	228.02	6/22/2022 13:53	11.27	104.38	6/21/2022 11:56	11.33	87.27	6/21/2022 13:13	4.30
6/21/2022 12:10	11.76	228.02	6/22/2022 13:54	11.25	104.28	6/21/2022 11:57	11.35	87.54	6/21/2022 13:14	4.31
6/21/2022 12:11	11.74	228.14	6/22/2022 13:55	11.27	104.44	6/21/2022 11:58	11.35	86.50	6/21/2022 13:15	4.26
6/21/2022 12:12	11.75	228.17	6/22/2022 13:56	11.25	104.29	6/21/2022 11:59	11.35	86.76	6/21/2022 13:16	4.29
6/21/2022 12:13	11.74	227.97	6/22/2022 13:57	11.27	104.45	6/21/2022 12:00	11.35	87.26	6/21/2022 13:17	4.34
6/21/2022 12:14	11.73	228.48	6/22/2022 13:58	11.27	104.27	6/21/2022 12:01	11.36	87.03	6/21/2022 13:18	4.31
6/21/2022 12:15	11.77	228.35	6/22/2022 13:59	11.26	104.34	6/21/2022 12:02	11.37	86.53	6/21/2022 13:19	4.29
6/21/2022 12:16	11.74	228.25	6/22/2022 14:00	11.26	104.32	6/21/2022 12:03	11.32	86.84	6/21/2022 13:20	4.34
6/21/2022 12:17	11.76	228.28	6/22/2022 14:01	11.25	104.30	6/21/2022 12:04	11.38	87.18	6/21/2022 13:21	4.33
6/21/2022 12:18	11.74	228.39	6/22/2022 14:02	11.26	104.28	6/21/2022 12:05	11.36	87.10	6/21/2022 13:22	4.33
6/21/2022 12:19	11.76	228.39	6/22/2022 14:03	11.28	104.42	6/21/2022 12:06	11.36	87.29	6/21/2022 13:23	4.31
6/21/2022 12:20	11.75	228.21	6/22/2022 14:04	11.26	104.35	6/21/2022 12:07	11.33	86.85	6/21/2022 13:24	4.35
6/21/2022 12:21	11.76	228.50	6/22/2022 14:05	11.28	104.26	6/21/2022 12:08	11.35	87.64	6/21/2022 13:25	4.36
6/21/2022 12:22	11.75	228.21	6/22/2022 14:06	11.28	104.27	6/21/2022 12:09	11.33	87.09	6/21/2022 13:26	4.43
6/21/2022 12:23	11.76	228.51	6/22/2022 14:07	11.26	104.42	6/21/2022 12:10	11.33	87.03	6/21/2022 13:27	4.36
6/21/2022 12:24	11.76	228.46	6/22/2022 14:08	11.27	104.17	6/21/2022 12:11	11.33	87.09	6/21/2022 13:28	4.40
6/21/2022 12:25	11.77	228.59	6/22/2022 14:09	11.30	104.17	6/21/2022 12:12	11.35	87.07	6/21/2022 13:29	4.38
6/21/2022 12:26	11.74	228.47	6/22/2022 14:10	11.23	104.33	6/21/2022 12:13	11.35	87.70	6/21/2022 13:30	4.40
6/21/2022 12:27	11.78	228.40	6/22/2022 14:11	11.26	104.34	6/21/2022 12:14	11.35	88.01	6/21/2022 13:31	4.36
6/21/2022 12:28	11.75	228.56	6/22/2022 14:12	11.27	104.32	6/21/2022 12:15	11.33	87.52	6/21/2022 13:32	4.44
6/21/2022 12:29	11.76	228.58	6/22/2022 14:13	11.25	104.48	6/21/2022 12:16	11.33	86.58	6/21/2022 13:33	4.43
6/21/2022 12:30	11.74	228.79	6/22/2022 14:14	11.28	104.46	6/21/2022 12:17	11.32	87.42	6/21/2022 13:34	4.39
6/21/2022 12:31	11.78	228.54	6/22/2022 14:15	11.27	104.26	6/21/2022 12:18	11.32	87.15	6/21/2022 13:35	4.46
6/21/2022 12:32	11.74	228.66	6/22/2022 14:16	11.27	104.36	6/21/2022 12:19	11.33	86.85	6/21/2022 13:36	4.44
6/21/2022 12:33	11.75	228.61	6/22/2022 14:17	11.26	104.45	6/21/2022 12:20	11.31	87.46	6/21/2022 13:37	4.46
6/21/2022 12:34	11.73	228.74	6/22/2022 14:18	11.28	104.52	6/21/2022 12:21	11.34	86.97	6/21/2022 13:38	4.45
6/21/2022 12:35	11.76	228.90	6/22/2022 14:19	11.28	104.30	6/21/2022 12:22	11.37	86.10	6/21/2022 13:39	4.45
6/21/2022 12:36	11.75	228.77	6/22/2022 14:20	11.26	104.43	6/21/2022 12:23	11.35	87.35	6/21/2022 13:40	4.48
6/21/2022 12:37	11.78	228.95	6/22/2022 14:21	11.26	104.22	6/21/2022 12:24	11.34	87.34	6/21/2022 13:41	4.47
6/21/2022 12:38	11.75	228.74	6/22/2022 14:22	11.24	104.28	6/21/2022 12:25	11.34	86.34	6/21/2022 13:42	4.45
6/21/2022 12:39	11.75	228.87	6/22/2022 14:23	11.28	104.48	6/21/2022 12:26	11.36	86.67	6/21/2022 13:43	4.43
6/21/2022 12:40	11.75	228.79	6/22/2022 14:24	11.25	104.32	6/21/2022 12:27	11.36	87.87	6/21/2022 13:44	4.51
6/21/2022 12:41	11.77	228.98	6/22/2022 14:25	11.25	104.24	6/21/2022 12:28	11.33	87.77	6/21/2022 13:45	4.42
6/21/2022 12:42	11.75	229.01	6/22/2022 14:26	11.26	104.50	6/21/2022 12:29	11.31	87.82	6/21/2022 13:46	4.50
6/21/2022 12:43	11.74	228.95	6/22/2022 14:27	11.28	104.45	6/21/2022 12:30	11.30	86.64	6/21/2022 13:47	4.48
6/21/2022 12:44	11.72	228.77	6/22/2022 14:28	11.25	104.26	6/21/2022 12:31	11.37	87.88	6/21/2022 13:48	4.49
6/21/2022 12:45	11.76	228.79	6/22/2022 14:29	11.26	104.54	6/21/2022 12:32	11.33	87.51	6/21/2022 13:49	4.48
6/21/2022 12:46	11.74	229.07	6/22/2022 14:30	11.27	104.59	6/21/2022 12:33	11.31	87.32	6/21/2022 13:50	4.53

6/21/2022 12:47	11.74	228.89	6/22/2022 14:31	11.25	104.52	6/21/2022 12:34	11.35	87.45	6/21/2022 13:51	4.48
6/21/2022 12:48	11.77	228.98	6/22/2022 14:32	11.25	104.52	6/21/2022 12:35	11.36	87.75	6/21/2022 13:52	4.47
6/21/2022 12:49	11.73	228.99	6/22/2022 14:33	11.26	104.48	6/21/2022 12:36	11.35	87.38	6/21/2022 13:53	4.49
6/21/2022 12:50	11.74	229.07	6/22/2022 14:34	11.28	104.33	6/21/2022 12:37	11.33	86.72	6/21/2022 13:54	4.51
6/21/2022 12:51	11.75	228.90	6/22/2022 14:35	11.27	104.42	6/21/2022 12:38	11.34	87.56	6/21/2022 13:55	4.49
6/21/2022 12:52	11.75	229.09	6/22/2022 14:36	11.28	104.48	6/21/2022 12:39	11.33	87.50	6/21/2022 13:56	4.54
6/21/2022 12:53	11.77	229.11	6/22/2022 14:37	11.25	104.53	6/21/2022 12:40	11.33	88.10	6/21/2022 13:57	4.50
6/21/2022 12:54	11.75	229.03	6/22/2022 14:38	11.27	104.45	6/21/2022 12:41	11.35	87.39	6/21/2022 13:58	4.53
6/21/2022 12:55	11.74	229.01	6/22/2022 14:39	11.29	104.30	6/21/2022 12:42	11.33	87.53	6/21/2022 13:59	4.52
6/21/2022 12:56	11.74	229.18	6/22/2022 14:40	11.27	104.53	6/21/2022 12:43	11.33	87.21	6/21/2022 14:00	4.51
6/21/2022 12:57	11.75	228.93	6/22/2022 14:41	11.25	104.45	6/21/2022 12:44	11.32	87.83	6/21/2022 14:01	4.56
6/21/2022 12:58	11.73	229.09	6/22/2022 14:42	11.27	104.69	6/21/2022 12:45	11.38	88.09	6/21/2022 14:02	4.55
6/21/2022 12:59	11.72	229.20	6/22/2022 14:43	11.28	104.48	6/21/2022 12:46	11.34	86.79	6/21/2022 14:03	4.54
6/21/2022 13:00	11.75	229.09	6/22/2022 14:44	11.26	104.48	6/21/2022 12:47	11.35	87.12	6/21/2022 14:04	4.54
6/21/2022 13:01	11.75	229.16	6/22/2022 14:45	11.28	104.63	6/21/2022 12:48	11.33	87.77	6/21/2022 14:05	4.56
6/21/2022 13:02	11.74	229.27	6/22/2022 14:46	11.26	104.33	6/21/2022 12:49	11.36	87.67	6/21/2022 14:06	4.56
6/21/2022 13:03	11.74	229.25	6/22/2022 14:47	11.24	104.31	6/21/2022 12:50	11.34	87.29	6/21/2022 14:07	4.55
6/21/2022 13:04	11.77	229.31	6/22/2022 14:48	11.25	104.43	6/21/2022 12:51	11.31	87.46	6/21/2022 14:08	4.59
6/21/2022 13:05	11.74	228.98	6/22/2022 14:49	11.29	104.51	6/21/2022 12:52	11.35	87.42	6/21/2022 14:09	4.60
6/21/2022 13:06	11.71	229.18	6/22/2022 14:50	11.25	104.41	6/21/2022 12:53	11.36	87.94	6/21/2022 14:10	4.55
6/21/2022 13:07	11.74	229.17	6/22/2022 14:51	11.24	104.63	6/21/2022 12:54	11.34	87.75	6/21/2022 14:11	4.61
6/21/2022 13:08	11.74	229.37	6/22/2022 14:52	11.28	104.43	6/21/2022 12:55	11.33	87.78	6/21/2022 14:12	4.47
6/21/2022 13:09	11.76	229.47	6/22/2022 14:53	11.29	104.31	6/21/2022 12:56	11.34	86.83	6/21/2022 14:13	4.56
6/21/2022 13:10	11.74	229.31	6/22/2022 14:54	11.26	104.53	6/21/2022 12:57	11.37	87.71	6/21/2022 14:14	4.60
6/21/2022 13:11	11.75	229.25	6/22/2022 14:55	11.27	104.30	6/21/2022 12:58	11.31	87.04	6/21/2022 14:15	4.52
6/21/2022 13:12	11.73	229.33	6/22/2022 14:56	11.27	104.72	6/21/2022 12:59	11.33	87.96	6/21/2022 14:16	4.54
6/21/2022 13:13	11.70	229.23	6/22/2022 14:57	11.25	104.30	6/21/2022 13:00	11.35	88.49	6/21/2022 14:17	4.62
6/21/2022 13:14	11.74	229.27	6/22/2022 14:58	11.27	104.50	6/21/2022 13:01	11.35	87.61	6/21/2022 14:18	4.62
6/21/2022 13:15	11.71	229.37	6/22/2022 14:59	11.28	104.51	6/21/2022 13:02	11.32	87.18	6/21/2022 14:19	4.63
6/21/2022 13:16	11.72	229.27	6/22/2022 15:00	11.27	104.45	6/21/2022 13:03	11.34	88.42	6/21/2022 14:20	4.59
6/21/2022 13:17	11.74	229.46	6/22/2022 15:01	11.26	104.45	6/21/2022 13:04	11.33	88.17	6/21/2022 14:21	4.63
6/21/2022 13:18	11.75	229.51	6/22/2022 15:02	11.25	104.44	6/21/2022 13:05	11.34	88.42	6/21/2022 14:22	4.63
6/21/2022 13:19	11.75	229.45	6/22/2022 15:03	11.25	104.48	6/21/2022 13:06	11.35	87.18	6/21/2022 14:23	4.63
6/21/2022 13:20	11.71	229.43	6/22/2022 15:04	11.27	104.61	6/21/2022 13:07	11.35	87.38	6/21/2022 14:24	4.60
6/21/2022 13:21	11.73	229.47	6/22/2022 15:05	11.29	104.53	6/21/2022 13:08	11.32	86.98	6/21/2022 14:25	4.61
6/21/2022 13:22	11.72	229.35	6/22/2022 15:06	11.26	104.58	6/21/2022 13:09	11.34	87.57	6/21/2022 14:26	4.62
6/21/2022 13:23	11.73	229.54	6/22/2022 15:07	11.29	104.42	6/21/2022 13:10	11.36	87.17	6/21/2022 14:27	4.61
6/21/2022 13:24	11.75	229.51	6/22/2022 15:08	11.28	104.72	6/21/2022 13:11	11.32	87.00	6/21/2022 14:28	4.62
6/21/2022 13:25	11.72	229.50	6/22/2022 15:09	11.25	104.29	6/21/2022 13:12	11.35	88.00	6/21/2022 14:29	4.65
6/21/2022 13:26	11.73	229.92	6/22/2022 15:10	11.22	104.47	6/21/2022 13:13	11.32	88.53	6/21/2022 14:30	4.66
6/21/2022 13:27	11.76	229.40	6/22/2022 15:11	11.25	104.55	6/21/2022 13:14	11.36	87.65	6/21/2022 14:31	4.69
6/21/2022 13:28	11.74	229.62	6/22/2022 15:12	11.23	104.48	6/21/2022 13:15	11.33	88.25	6/21/2022 14:32	4.63
6/21/2022 13:29	11.75	229.67	6/22/2022 15:13	11.26	104.54	6/21/2022 13:16	11.31	88.33	6/21/2022 14:33	4.61
6/21/2022 13:30	11.75	229.34	6/22/2022 15:14	11.27	104.49	6/21/2022 13:17	11.33	87.61	6/21/2022 14:34	4.67
6/21/2022 13:31	11.76	229.71	6/22/2022 15:15	11.25	104.65	6/21/2022 13:18	11.36	87.66	6/21/2022 14:35	4.64
6/21/2022 13:32	11.73	229.55	6/22/2022 15:16	11.30	104.53	6/21/2022 13:19	11.33	86.88	6/21/2022 14:36	4.67
6/21/2022 13:33	11.76	229.62	6/22/2022 15:17	11.26	104.65	6/21/2022 13:20	11.33	87.80	6/21/2022 14:37	4.67
6/21/2022 13:34	11.75	229.51	6/22/2022 15:18	11.28	104.50	6/21/2022 13:21	11.33	87.49	6/21/2022 14:38	4.68
6/21/2022 13:35	11.71	229.81	6/22/2022 15:19	11.27	104.42	6/21/2022 13:22	11.34	87.47	6/21/2022 14:39	4.62
6/21/2022 13:36	11.76	229.52	6/22/2022 15:20	11.26	104.70	6/21/2022 13:23	11.32	87.58	6/21/2022 14:40	4.67
6/21/2022 13:37	11.75	229.75	6/22/2022 15:21	11.26	104.44	6/21/2022 13:24	11.36	88.17	6/21/2022 14:41	4.71
6/21/2022 13:38	11.78	229.54	6/22/2022 15:22	11.26	104.45	6/21/2022 13:25	11.36	87.70	6/21/2022 14:42	4.70
6/21/2022 13:39	11.77	229.81	6/22/2022 15:23	11.29	104.54	6/21/2022 13:26	11.34	88.34	6/21/2022 14:43	4.71
6/21/2022 13:40	11.74	229.52	6/22/2022 15:24	11.26	104.61	6/21/2022 13:27	11.34	87.05	6/21/2022 14:44	4.69
6/21/2022 13:41	11.75	229.61	6/22/2022 15:25	11.29	104.51	6/21/2022 13:28	11.38	87.59	6/21/2022 14:45	4.67
6/21/2022 13:42	11.77	229.89	6/22/2022 15:26	11.28	104.62	6/21/2022 13:29	11.32	88.40	6/21/2022 14:46	4.63
6/21/2022 13:43	11.74	229.57	6/22/2022 15:27	11.27	104.65	6/21/2022 13:30	11.32	88.13	6/21/2022 14:47	4.60
6/21/2022 13:44	11.76	229.90	6/22/2022 15:28	11.28	104.66	6/21/2022 13:31	11.33	88.00	6/21/2022 14:48	4.68
6/21/2022 13:45	11.76	229.76	6/22/2022 15:29	11.29	104.54	6/21/2022 13:32	11.32	87.41	6/21/2022 14:49	4.62
6/21/2022 13:46	11.79	229.79	6/22/2022 15:30	11.27	104.60	6/21/2022 13:33	11.32	88.05	6/21/2022 14:50	4.53
6/21/2022 13:47	11.75	229.91	6/22/2022 15:31	11.28	104.76	6/21/2022 13:34	11.33	88.19	6/21/2022 14:51	4.54
6/21/2022 13:48	11.75	229.83	6/22/2022 15:32	11.27	104.70	6/21/2022 13:35	11.34	88.15	6/21/2022 14:52	4.54
6/21/2022 13:49	11.77	229.75	6/22/2022 15:33	11.24	104.58	6/21/2022 13:36	11.36	88.51	6/21/2022 14:53	4.57
6/21/2022 13:50	11.73	229.84	6/22/2022 15:34	11.26	104.59	6/21/2022 13:37	11.33	87.77	6/21/2022 14:54	4.54
6/21/2022 13:51	11.73	229.86	6/22/2022 15:35	11.28	104.69	6/21/2022 13:38	11.35	87.90	6/21/2022 14:55	4.50
6/21/2022 13:52	11.75	229.94	6/22/2022 15:36	11.27	104.59	6/21/2022 13:39	11.35	88.94	6/21/2022 14:56	4.50
6/21/2022 13:53	11.74	229.83	6/22/2022 15:37	11.30	104.83	6/21/2022 13:40	11.32	88.35	6/21/2022 14:57	4.47
6/21/2022 13:54	11.73	229.98	6/22/2022 15:38	11.28	104.60	6/21/2022 13:41	11.33	88.31	6/21/2022 14:58	4.39
6/21/2022 13:55	11.75	229.94	6/22/2022 15:39	11.25	104.55	6/21/2022 13:42	11.31	88.06	6/21/2022 14:59	4.47
6/21/2022 13:56	11.73	229.90	6/22/2022 15:40	11.25	104.63	6/21/2022 13:43	11.34	87.30	6/21/2022 15:00	4.39
6/21/2022 13:57	11.74	229.76	6/22/2022 15:41	11.28	104.77	6/21/2022 13:44	11.33	88.37	6/21/2022 15:01	4.40
6/21/2022 13:58	11.76	230.02	6/22/2022 15:42	11.26	104.75	6/21/2022 13:45	11.30	87.99	6/21/2022 15:02	4.33
6/21/2022 13:59	11.71	229.92	6/22/2022 15:43	11.25	104.68	6/21/2022 13:46	11.33	87.69	6/21/2022 15:03	4.34
6/21/2022 14:00	11.74	229.90	6/22/2022 15:44	11.29	104.63	6/21/2022 13:47	11.35	87.60	6/21/2022 15:04	4.34
6/21/2022 14:01	11.74	229.93	6/22/2022 15:45	11.25	104.66	6/21/2022 13:48	11.37	88.53	6/21/2022 15:05	4.39
6/21/2022 14:02	11.75	229.72	6/22/2022 15:46	11.26	104.67	6/21/2022 13:49	11.31	88.36	6/21/2022 15:06	4.36
6/21/2022 14:03	11.75	230.05	6/22/2022 15:47	11.28	104.52	6/21/2022 13:50	11.32	88.75	6/21/2022 15:07	4.42
6/21/2022 14:04	11.76	229.91	6/22/2022 15:48	11.28	104.60	6/21/2022 13:51	11.30	87.90	6/21/2022 15:08	4.35
6/21/2022 14:05	11.75	229.98	6/22/2022 15:49	11.27	104.66	6/21/2022 13:52	11.32	88.55	6/21/2022 15:09	4.41
6/21/2022 14:06	11.74	230.03	6/22/2022 15:50	11.25	104.73	6/21/2022 13:53	11.34	87.88	6/21/2022 15:10	4.40
6/21/2022 14:07	11.73	230.09	6/22/2022 15:51	11.26	104.81	6/21/2022 13:54	11.34	88.66	6/21/2022 15:11	4.44
6/21/2022 14:08	11.75	229.98	6/22/2022 15:52	11.26	104.49	6/21/2022 13:55	11.31	88.34	6/21/2022 15:12	4.36
6/21/2022 14:09	11.74	230.04	6/22/2022 15:53	11.27	104.78	6/21/2022 13:56	11.36	88.67	6/21/2022 15:13	4.36
6/21/2022 14:10	11.75	230.23	6/22/2022 15:54	11.26	104.89	6/21/2022 13:57	11.33	88.32	6/21/2022 15:14	4.37
6/21/2022 14:11	11.74	230.36	6/22/2022 15:55	11.28	104.58	6/21/2022 13:58	11.33	88.58	6/21/2022 15:15	4.39
6/21/2022 14:12	11.75	230.25	6/22/2022 15:56	11.26	104.54	6/21/2022 13:59	11.36	87.59	6/21/2022 15:16	4.41
6/21/2022 14:13	11.74	230.26	6/22/2022 15:57	11.28	104.73	6/21/2022 14:00	11.36	88.33	6/21/2022 15:17	4.43
6/21/2022 14:14	11.73	229.98	6/22/2022 15:58	11.27	104.80	6/21/2022 14:01	11.35	87.99	6/21/2022 15:18	4.45

6/21/2022 14:15	11.75	230.24	6/22/2022 15:59	11.27	104.77	6/21/2022 14:02	11.32	88.53	6/21/2022 15:19	4.45
6/21/2022 14:16	11.72	230.11	6/22/2022 16:00	11.25	104.66	6/21/2022 14:03	11.33	87.37	6/21/2022 15:20	4.41
6/21/2022 14:17	11.75	230.22	6/22/2022 16:01	11.29	104.71	6/21/2022 14:04	11.34	88.16	6/21/2022 15:21	4.38
6/21/2022 14:18	11.75	230.14	6/22/2022 16:02	11.27	104.91	6/21/2022 14:05	11.34	88.34	6/21/2022 15:22	4.44
6/21/2022 14:19	11.75	230.08	6/22/2022 16:03	11.27	104.74	6/21/2022 14:06	11.33	87.92	6/21/2022 15:23	4.45
6/21/2022 14:20	11.76	230.22	6/22/2022 16:04	11.25	104.97	6/21/2022 14:07	11.35	88.38	6/21/2022 15:24	4.41
6/21/2022 14:21	11.74	230.12	6/22/2022 16:05	11.24	104.52	6/21/2022 14:08	11.33	88.44	6/21/2022 15:25	4.47
6/21/2022 14:22	11.72	230.43	6/22/2022 16:06	11.25	104.68	6/21/2022 14:09	11.37	88.44	6/21/2022 15:26	4.40
6/21/2022 14:23	11.74	230.38	6/22/2022 16:07	11.28	104.87	6/21/2022 14:10	11.34	88.19	6/21/2022 15:27	4.45
6/21/2022 14:24	11.73	230.25	6/22/2022 16:08	11.25	104.52	6/21/2022 14:11	11.31	89.50	6/21/2022 15:28	4.49
6/21/2022 14:25	11.73	230.35	6/22/2022 16:09	11.26	104.64	6/21/2022 14:12	11.31	88.56	6/21/2022 15:29	4.47
6/21/2022 14:26	11.78	230.22	6/22/2022 16:10	11.27	104.66	6/21/2022 14:13	11.32	89.00	6/21/2022 15:30	4.49
6/21/2022 14:27	11.75	230.18	6/22/2022 16:11	11.25	104.59	6/21/2022 14:14	11.34	88.02	6/21/2022 15:31	4.52
6/21/2022 14:28	11.74	230.44	6/22/2022 16:12	11.27	104.80	6/21/2022 14:15	11.30	87.94	6/21/2022 15:32	4.45
6/21/2022 14:29	11.77	230.30	6/22/2022 16:13	11.28	104.60	6/21/2022 14:16	11.33	88.95	6/21/2022 15:33	4.46
6/21/2022 14:30	11.74	230.34	6/22/2022 16:14	11.26	104.74	6/21/2022 14:17	11.32	87.44	6/21/2022 15:34	4.50
6/21/2022 14:31	11.75	230.36	6/22/2022 16:15	11.25	104.62	6/21/2022 14:18	11.31	88.73	6/21/2022 15:35	4.51
6/21/2022 14:32	11.74	230.36	6/22/2022 16:16	11.27	104.80	6/21/2022 14:19	11.34	88.15	6/21/2022 15:36	4.50
6/21/2022 14:33	11.77	230.45	6/22/2022 16:17	11.25	104.77	6/21/2022 14:20	11.30	87.67	6/21/2022 15:37	4.44
6/21/2022 14:34	11.75	230.49	6/22/2022 16:18	11.25	104.77	6/21/2022 14:21	11.32	89.32	6/21/2022 15:38	4.44
6/21/2022 14:35	11.73	230.49	6/22/2022 16:19	11.26	104.87	6/21/2022 14:22	11.36	88.62	6/21/2022 15:39	4.48
6/21/2022 14:36	11.73	230.46	6/22/2022 16:20	11.27	104.76	6/21/2022 14:23	11.37	87.56	6/21/2022 15:40	4.47
6/21/2022 14:37	11.74	230.24	6/22/2022 16:21	11.26	104.69	6/21/2022 14:24	11.33	88.87	6/21/2022 15:41	4.49
6/21/2022 14:38	11.74	230.43	6/22/2022 16:22	11.25	104.61	6/21/2022 14:25	11.36	87.31	6/21/2022 15:42	4.46
6/21/2022 14:39	11.76	230.45	6/22/2022 16:23	11.26	104.85	6/21/2022 14:26	11.31	88.36	6/21/2022 15:43	4.48
6/21/2022 14:40	11.75	230.68	6/22/2022 16:24	11.26	104.83	6/21/2022 14:27	11.32	88.78	6/21/2022 15:44	4.48
6/21/2022 14:41	11.75	230.66	6/22/2022 16:25	11.31	104.86	6/21/2022 14:28	11.34	88.51	6/21/2022 15:45	4.52
6/21/2022 14:42	11.74	230.58	6/22/2022 16:26	11.28	105.02	6/21/2022 14:29	11.31	88.75	6/21/2022 15:46	4.50
6/21/2022 14:43	11.74	230.46	6/22/2022 16:27	11.26	104.81	6/21/2022 14:30	11.34	89.02	6/21/2022 15:47	4.50
6/21/2022 14:44	11.73	230.71	6/22/2022 16:28	11.26	104.82	6/21/2022 14:31	11.31	88.35	6/21/2022 15:48	4.54
6/21/2022 14:45	11.75	230.55	6/22/2022 16:29	11.25	105.04	6/21/2022 14:32	11.33	88.43	6/21/2022 15:49	4.46
6/21/2022 14:46	11.73	230.68	6/22/2022 16:30	11.27	104.65	6/21/2022 14:33	11.35	88.48	6/21/2022 15:50	4.49
6/21/2022 14:47	11.75	230.77	6/22/2022 16:31	11.25	104.75	6/21/2022 14:34	11.32	88.79	6/21/2022 15:51	4.54
6/21/2022 14:48	11.73	230.67	6/22/2022 16:32	11.26	104.85	6/21/2022 14:35	11.37	89.18	6/21/2022 15:52	4.49
6/21/2022 14:49	11.73	230.78	6/22/2022 16:33	11.25	104.92	6/21/2022 14:36	11.30	88.74	6/21/2022 15:53	4.48
6/21/2022 14:50	11.73	230.87	6/22/2022 16:34	11.27	104.90	6/21/2022 14:37	11.33	87.47	6/21/2022 15:54	4.54
6/21/2022 14:51	11.76	230.57	6/22/2022 16:35	11.25	104.83	6/21/2022 14:38	11.36	89.29	6/21/2022 15:55	4.46
6/21/2022 14:52	11.74	230.73	6/22/2022 16:36	11.24	104.77	6/21/2022 14:39	11.33	88.94	6/21/2022 15:56	4.48
6/21/2022 14:53	11.75	230.67	6/22/2022 16:37	11.25	104.83	6/21/2022 14:40	11.32	88.64	6/21/2022 15:57	4.46
6/21/2022 14:54	11.76	230.56	6/22/2022 16:38	11.27	105.02	6/21/2022 14:41	11.32	88.01	6/21/2022 15:58	4.44
6/21/2022 14:55	11.77	230.71	6/22/2022 16:39	11.25	104.83	6/21/2022 14:42	11.34	89.38	6/21/2022 15:59	4.41
6/21/2022 14:56	11.73	230.87	6/22/2022 16:40	11.27	104.87	6/21/2022 14:43	11.34	88.99	6/21/2022 16:00	4.43
6/21/2022 14:57	11.75	230.76	6/22/2022 16:41	11.25	105.03	6/21/2022 14:44	11.34	88.68	6/21/2022 16:01	4.51
6/21/2022 14:58	11.73	230.73	6/22/2022 16:42	11.29	104.76	6/21/2022 14:45	11.36	89.25	6/21/2022 16:02	4.51
6/21/2022 14:59	11.74	230.90	6/22/2022 16:43	11.27	104.75	6/21/2022 14:46	11.34	88.41	6/21/2022 16:03	4.52
6/21/2022 15:00	11.71	230.60	6/22/2022 16:44	11.27	104.80	6/21/2022 14:47	11.37	88.60	6/21/2022 16:04	4.45
6/21/2022 15:01	11.74	230.99	6/22/2022 16:45	11.27	104.89	6/21/2022 14:48	11.36	89.30	6/21/2022 16:05	4.49
6/21/2022 15:02	11.75	230.80	6/22/2022 16:46	11.26	104.94	6/21/2022 14:49	11.31	89.01	6/21/2022 16:06	4.45
6/21/2022 15:03	11.76	230.77	6/22/2022 16:47	11.25	104.80	6/21/2022 14:50	11.39	89.02	6/21/2022 16:07	4.49
6/21/2022 15:04	11.75	230.95	6/22/2022 16:48	11.27	104.79	6/21/2022 14:51	11.34	88.93	6/21/2022 16:08	4.45
6/21/2022 15:05	11.75	230.63	6/22/2022 16:49	11.29	104.79	6/21/2022 14:52	11.35	88.18	6/21/2022 16:09	4.46
6/21/2022 15:06	11.74	230.75	6/22/2022 16:50	11.26	104.99	6/21/2022 14:53	11.33	88.98	6/21/2022 16:10	4.49
6/21/2022 15:07	11.77	230.81	6/22/2022 16:51	11.29	104.83	6/21/2022 14:54	11.31	88.62	6/21/2022 16:11	4.47
6/21/2022 15:08	11.76	231.02	6/22/2022 16:52	11.26	104.98	6/21/2022 14:55	11.37	88.52	6/21/2022 16:12	4.46
6/21/2022 15:09	11.73	230.86	6/22/2022 16:53	11.26	104.89	6/21/2022 14:56	11.35	88.92	6/21/2022 16:13	4.50
6/21/2022 15:10	11.75	230.94	6/22/2022 16:54	11.27	104.97	6/21/2022 14:57	11.33	89.01	6/21/2022 16:14	4.52
6/21/2022 15:11	11.74	230.98	6/22/2022 16:55	11.26	104.89	6/21/2022 14:58	11.36	89.05	6/21/2022 16:15	4.47
6/21/2022 15:12	11.75	230.72	6/22/2022 16:56	11.26	104.97	6/21/2022 14:59	11.33	88.43	6/21/2022 16:16	4.47
6/21/2022 15:13	11.75	230.78	6/22/2022 16:57	11.28	105.13	6/21/2022 15:00	11.33	89.09	6/21/2022 16:17	4.50
6/21/2022 15:14	11.76	230.83	6/22/2022 16:58	11.25	104.86	6/21/2022 15:01	11.35	89.29	6/21/2022 16:18	4.52
6/21/2022 15:15	11.76	230.86	6/22/2022 16:59	11.28	104.91	6/21/2022 15:02	11.33	88.92	6/21/2022 16:19	4.51
6/21/2022 15:16	11.77	230.96	6/22/2022 17:00	11.25	104.85	6/21/2022 15:03	11.35	89.25	6/21/2022 16:20	4.47
6/21/2022 15:17	11.73	230.97	6/22/2022 17:01	11.28	104.89	6/21/2022 15:04	11.37	88.19	6/21/2022 16:21	4.54
6/21/2022 15:18	11.74	230.94	6/22/2022 17:02	11.26	104.91	6/21/2022 15:05	11.36	89.87	6/21/2022 16:22	4.50
6/21/2022 15:19	11.71	231.13	6/22/2022 17:03	11.28	104.73	6/21/2022 15:06	11.34	88.45	6/21/2022 16:23	4.52
6/21/2022 15:20	11.74	231.25	6/22/2022 17:04	11.24	104.94	6/21/2022 15:07	11.35	89.47	6/21/2022 16:24	4.50
6/21/2022 15:21	11.72	231.08	6/22/2022 17:05	11.26	105.04	6/21/2022 15:08	11.36	89.14	6/21/2022 16:25	4.48
6/21/2022 15:22	11.75	231.07	6/22/2022 17:06	11.28	104.88	6/21/2022 15:09	11.32	88.56	6/21/2022 16:26	4.52
6/21/2022 15:23	11.74	230.98	6/22/2022 17:07	11.25	105.09	6/21/2022 15:10	11.35	88.51	6/21/2022 16:27	4.55
6/21/2022 15:24	11.76	231.05	6/22/2022 17:08	11.29	105.01	6/21/2022 15:11	11.32	89.68	6/21/2022 16:28	4.59
6/21/2022 15:25	11.74	231.19	6/22/2022 17:09	11.26	104.78	6/21/2022 15:12	11.36	89.23	6/21/2022 16:29	4.56
6/21/2022 15:26	11.75	231.12	6/22/2022 17:10	11.28	104.86	6/21/2022 15:13	11.37	89.04	6/21/2022 16:30	4.52
6/21/2022 15:27	11.75	231.05	6/22/2022 17:11	11.29	104.94	6/21/2022 15:14	11.34	88.93	6/21/2022 16:31	4.52
6/21/2022 15:28	11.71	231.23	6/22/2022 17:12	11.25	104.99	6/21/2022 15:15	11.33	88.60	6/21/2022 16:32	4.55
6/21/2022 15:29	11.73	231.10	6/22/2022 17:13	11.26	104.94	6/21/2022 15:16	11.30	88.75	6/21/2022 16:33	4.52
6/21/2022 15:30	11.74	231.40	6/22/2022 17:14	11.26	104.79	6/21/2022 15:17	11.36	89.29	6/21/2022 16:34	4.55
6/21/2022 15:31	11.73	231.17	6/22/2022 17:15	11.27	104.82	6/21/2022 15:18	11.34	89.15	6/21/2022 16:35	4.53
6/21/2022 15:32	11.74	231.11	6/22/2022 17:16	11.27	105.12	6/21/2022 15:19	11.34	88.94	6/21/2022 16:36	4.59
6/21/2022 15:33	11.73	231.15	6/22/2022 17:17	11.26	105.02	6/21/2022 15:20	11.35	88.74	6/21/2022 16:37	4.59
6/21/2022 15:34	11.73	231.17	6/22/2022 17:18	11.28	104.98	6/21/2022 15:21	11.30	89.07	6/21/2022 16:38	4.55
6/21/2022 15:35	11.75	231.19	6/22/2022 17:19	11.29	104.97	6/21/2022 15:22	11.36	89.45	6/21/2022 16:39	4.60
6/21/2022 15:36	11.74	231.04	6/22/2022 17:20	11.27	104.95	6/21/2022 15:23	11.37	89.66	6/21/2022 16:40	4.55
6/21/2022 15:37	11.72	231.23	6/22/2022 17:21	11.27	104.88	6/21/2022 15:24	11.34	88.78	6/21/2022 16:41	4.62
6/21/2022 15:38	11.74	231.23	6/22/2022 17:22	11.27	105.11	6/21/2022 15:25	11.34	89.06	6/21/2022 16:42	4.61
6/21/2022 15:39	11.72	231.33	6/22/2022 17:23	11.27	104.82	6/21/2022 15:26	11.33	88.91	6/21/2022 16:43	4.61
6/21/2022 15:40	11.73	231.22	6/22/2022 17:24	11.27	105.03	6/21/2022 15:27	11.33	88.93	6/21/2022 16:44	4.63
6/21/2022 15:41	11.72	231.15	6/22/2022 17:25	11.28	104.98	6/21/2022 15:28	11.32	88.89	6/21/2022 16:45	4.64
6/21/2022 15:42	11.71	231.29	6/22/2022 17:26	11.25	105.06	6/21/2022 15:29	11.33	89.01	6/21/2022 16:46	4.62

6/21/2022 15:43	11.77	231.33	6/22/2022 17:27	11.28	104.97	6/21/2022 15:30	11.36	89.70	6/21/2022 16:47	4.65
6/21/2022 15:44	11.74	231.37	6/22/2022 17:28	11.26	105.09	6/21/2022 15:31	11.35	89.70	6/21/2022 16:48	4.63
6/21/2022 15:45	11.74	231.16	6/22/2022 17:29	11.26	104.79	6/21/2022 15:32	11.33	88.70	6/21/2022 16:49	4.64
6/21/2022 15:46	11.74	231.35	6/22/2022 17:30	11.27	104.87	6/21/2022 15:33	11.32	89.55	6/21/2022 16:50	4.60
6/21/2022 15:47	11.76	231.22	6/22/2022 17:31	11.26	104.86	6/21/2022 15:34	11.34	89.50	6/21/2022 16:51	4.59
6/21/2022 15:48	11.73	231.50	6/22/2022 17:32	11.27	105.04	6/21/2022 15:35	11.35	88.92	6/21/2022 16:52	4.71
6/21/2022 15:49	11.73	231.45	6/22/2022 17:33	11.27	104.77	6/21/2022 15:36	11.33	89.26	6/21/2022 16:53	4.71
6/21/2022 15:50	11.74	231.34	6/22/2022 17:34	11.28	104.91	6/21/2022 15:37	11.34	89.22	6/21/2022 16:54	4.67
6/21/2022 15:51	11.73	231.43	6/22/2022 17:35	11.25	105.06	6/21/2022 15:38	11.36	89.23	6/21/2022 16:55	4.69
6/21/2022 15:52	11.74	231.35	6/22/2022 17:36	11.27	105.27	6/21/2022 15:39	11.34	88.94	6/21/2022 16:56	4.65
6/21/2022 15:53	11.75	231.36	6/22/2022 17:37	11.26	104.69	6/21/2022 15:40	11.31	89.02	6/21/2022 16:57	4.67
6/21/2022 15:54	11.72	231.24	6/22/2022 17:38	11.23	104.80	6/21/2022 15:41	11.33	89.28	6/21/2022 16:58	4.68
6/21/2022 15:55	11.73	231.37	6/22/2022 17:39	11.26	104.93	6/21/2022 15:42	11.31	89.27	6/21/2022 16:59	4.70
6/21/2022 15:56	11.75	231.37	6/22/2022 17:40	11.25	105.16	6/21/2022 15:43	11.32	89.46	6/21/2022 17:00	4.70
6/21/2022 15:57	11.75	231.47	6/22/2022 17:41	11.26	104.77	6/21/2022 15:44	11.35	89.91	6/21/2022 17:01	4.67
6/21/2022 15:58	11.71	231.48	6/22/2022 17:42	11.26	105.15	6/21/2022 15:45	11.36	89.25	6/21/2022 17:02	4.69
6/21/2022 15:59	11.75	231.42	6/22/2022 17:43	11.29	105.11	6/21/2022 15:46	11.33	89.14	6/21/2022 17:03	4.68
6/21/2022 16:00	11.74	231.36	6/22/2022 17:44	11.28	104.99	6/21/2022 15:47	11.35	88.40	6/21/2022 17:04	4.75
6/21/2022 16:01	11.74	231.29	6/22/2022 17:45	11.25	104.85	6/21/2022 15:48	11.33	89.77	6/21/2022 17:05	4.74
6/21/2022 16:02	11.76	231.61	6/22/2022 17:46	11.25	104.98	6/21/2022 15:49	11.31	88.82	6/21/2022 17:06	4.72
6/21/2022 16:03	11.78	231.55	6/22/2022 17:47	11.26	105.11	6/21/2022 15:50	11.34	89.90	6/21/2022 17:07	4.72
6/21/2022 16:04	11.73	231.45	6/22/2022 17:48	11.26	104.95	6/21/2022 15:51	11.34	89.56	6/21/2022 17:08	4.72
6/21/2022 16:05	11.75	231.70	6/22/2022 17:49	11.29	105.16	6/21/2022 15:52	11.34	90.06	6/21/2022 17:09	4.76
6/21/2022 16:06	11.76	231.47	6/22/2022 17:50	11.28	105.04	6/21/2022 15:53	11.35	89.15	6/21/2022 17:10	4.76
6/21/2022 16:07	11.73	231.36	6/22/2022 17:51	11.28	104.94	6/21/2022 15:54	11.36	89.58	6/21/2022 17:11	4.71
6/21/2022 16:08	11.75	231.48	6/22/2022 17:52	11.26	104.96	6/21/2022 15:55	11.33	89.50	6/21/2022 17:12	4.72
6/21/2022 16:09	11.75	231.62	6/22/2022 17:53	11.26	105.17	6/21/2022 15:56	11.35	89.59	6/21/2022 17:13	4.73
6/21/2022 16:10	11.76	231.51	6/22/2022 17:54	11.26	105.06	6/21/2022 15:57	11.35	89.49	6/21/2022 17:14	4.74
6/21/2022 16:11	11.75	231.48	6/22/2022 17:55	11.29	105.14	6/21/2022 15:58	11.35	89.40	6/21/2022 17:15	4.73
6/21/2022 16:12	11.74	231.73	6/22/2022 17:56	11.23	104.79	6/21/2022 15:59	11.34	89.45	6/21/2022 17:16	4.69
6/21/2022 16:13	11.75	231.71	6/22/2022 17:57	11.25	104.99	6/21/2022 16:00	11.35	89.83	6/21/2022 17:17	4.76
6/21/2022 16:14	11.74	231.62	6/22/2022 17:58	11.29	105.11	6/21/2022 16:01	11.34	88.36	6/21/2022 17:18	4.73
6/21/2022 16:15	11.73	231.48	6/22/2022 17:59	11.27	105.08	6/21/2022 16:02	11.34	89.89	6/21/2022 17:19	4.74
6/21/2022 16:16	11.73	231.71	6/22/2022 18:00	11.26	105.06	6/21/2022 16:03	11.33	90.21	6/21/2022 17:20	4.76
6/21/2022 16:17	11.74	231.75	6/22/2022 18:01	11.24	105.02	6/21/2022 16:04	11.36	89.75	6/21/2022 17:21	4.80
6/21/2022 16:18	11.76	231.63	6/22/2022 18:02	11.26	105.06	6/21/2022 16:05	11.36	89.71	6/21/2022 17:22	4.75
6/21/2022 16:19	11.73	231.68	6/22/2022 18:03	11.25	104.98	6/21/2022 16:06	11.36	89.64	6/21/2022 17:23	4.73
6/21/2022 16:20	11.73	231.60	6/22/2022 18:04	11.29	104.91	6/21/2022 16:07	11.32	89.91	6/21/2022 17:24	4.77
6/21/2022 16:21	11.76	231.48	6/22/2022 18:05	11.27	105.12	6/21/2022 16:08	11.36	90.10	6/21/2022 17:25	4.77
6/21/2022 16:22	11.71	231.83	6/22/2022 18:06	11.27	104.97	6/21/2022 16:09	11.36	89.75	6/21/2022 17:26	4.79
6/21/2022 16:23	11.76	231.77	6/22/2022 18:07	11.26	105.04	6/21/2022 16:10	11.39	89.31	6/21/2022 17:27	4.76
6/21/2022 16:24	11.72	231.73	6/22/2022 18:08	11.25	105.23	6/21/2022 16:11	11.33	89.58	6/21/2022 17:28	4.82
6/21/2022 16:25	11.72	231.84	6/22/2022 18:09	11.28	105.01	6/21/2022 16:12	11.34	88.59	6/21/2022 17:29	4.79
6/21/2022 16:26	11.73	231.87	6/22/2022 18:10	11.28	105.01	6/21/2022 16:13	11.34	89.65	6/21/2022 17:30	4.82
6/21/2022 16:27	11.78	231.84	6/22/2022 18:11	11.25	105.18	6/21/2022 16:14	11.33	89.90	6/21/2022 17:31	4.79
6/21/2022 16:28	11.75	231.80	6/22/2022 18:12	11.25	105.02	6/21/2022 16:15	11.31	89.20	6/21/2022 17:32	4.81
6/21/2022 16:29	11.73	232.18	6/22/2022 18:13	11.26	105.10	6/21/2022 16:16	11.33	90.46	6/21/2022 17:33	4.84
6/21/2022 16:30	11.75	232.02	6/22/2022 18:14	11.29	105.03	6/21/2022 16:17	11.33	89.66	6/21/2022 17:34	4.84
6/21/2022 16:31	11.71	231.92	6/22/2022 18:15	11.28	105.00	6/21/2022 16:18	11.33	89.01	6/21/2022 17:35	4.84
6/21/2022 16:32	11.72	231.88	6/22/2022 18:16	11.25	105.07	6/21/2022 16:19	11.35	89.14	6/21/2022 17:36	4.86
6/21/2022 16:33	11.73	231.92	6/22/2022 18:17	11.26	105.00	6/21/2022 16:20	11.34	89.82	6/21/2022 17:37	4.81
6/21/2022 16:34	11.75	231.87	6/22/2022 18:18	11.26	105.07	6/21/2022 16:21	11.35	89.44	6/21/2022 17:38	4.86
6/21/2022 16:35	11.76	232.00	6/22/2022 18:19	11.26	105.00	6/21/2022 16:22	11.34	90.07	6/21/2022 17:39	4.91
6/21/2022 16:36	11.73	231.93	6/22/2022 18:20	11.26	105.36	6/21/2022 16:23	11.36	89.67	6/21/2022 17:40	4.91
6/21/2022 16:37	11.75	232.06	6/22/2022 18:21	11.26	105.22	6/21/2022 16:24	11.34	89.90	6/21/2022 17:41	4.85
6/21/2022 16:38	11.76	231.83	6/22/2022 18:22	11.29	105.08	6/21/2022 16:25	11.32	88.87	6/21/2022 17:42	4.84
6/21/2022 16:39	11.73	232.08	6/22/2022 18:23	11.26	105.30	6/21/2022 16:26	11.35	90.07	6/21/2022 17:43	4.88
6/21/2022 16:40	11.74	232.14	6/22/2022 18:24	11.27	104.96	6/21/2022 16:27	11.34	89.41	6/21/2022 17:44	4.92
6/21/2022 16:41	11.75	231.89	6/22/2022 18:25	11.27	105.12	6/21/2022 16:28	11.35	90.16	6/21/2022 17:45	4.91
6/21/2022 16:42	11.72	232.09	6/22/2022 18:26	11.28	105.10	6/21/2022 16:29	11.36	88.64	6/21/2022 17:46	4.93
6/21/2022 16:43	11.72	232.05	6/22/2022 18:27	11.26	105.19	6/21/2022 16:30	11.35	89.37	6/21/2022 17:47	4.91
6/21/2022 16:44	11.76	232.23	6/22/2022 18:28	11.26	105.08	6/21/2022 16:31	11.34	90.05	6/21/2022 17:48	4.94
6/21/2022 16:45	11.77	232.23	6/22/2022 18:29	11.26	105.15	6/21/2022 16:32	11.35	89.26	6/21/2022 17:49	4.92
6/21/2022 16:46	11.74	232.32	6/22/2022 18:30	11.26	104.86	6/21/2022 16:33	11.34	89.48	6/21/2022 17:50	4.97
6/21/2022 16:47	11.73	232.11	6/22/2022 18:31	11.28	105.12	6/21/2022 16:34	11.33	89.48	6/21/2022 17:51	4.91
6/21/2022 16:48	11.72	232.12	6/22/2022 18:32	11.24	105.25	6/21/2022 16:35	11.34	90.02	6/21/2022 17:52	4.94
6/21/2022 16:49	11.75	232.10	6/22/2022 18:33	11.27	105.07	6/21/2022 16:36	11.31	90.08	6/21/2022 17:53	4.89
6/21/2022 16:50	11.73	232.25	6/22/2022 18:34	11.25	105.16	6/21/2022 16:37	11.36	88.78	6/21/2022 17:54	4.97
6/21/2022 16:51	11.76	232.21	6/22/2022 18:35	11.26	105.27	6/21/2022 16:38	11.38	89.80	6/21/2022 17:55	5.01
6/21/2022 16:52	11.73	232.03	6/22/2022 18:36	11.29	105.02	6/21/2022 16:39	11.35	89.35	6/21/2022 17:56	4.92
6/21/2022 16:53	11.75	232.31	6/22/2022 18:37	11.26	105.03	6/21/2022 16:40	11.36	89.08	6/21/2022 17:57	4.97
6/21/2022 16:54	11.76	232.27	6/22/2022 18:38	11.27	105.18	6/21/2022 16:41	11.31	89.53	6/21/2022 17:58	4.94
6/21/2022 16:55	11.73	232.29	6/22/2022 18:39	11.25	105.19	6/21/2022 16:42	11.33	89.29	6/21/2022 17:59	4.97
6/21/2022 16:56	11.72	232.32	6/22/2022 18:40	11.24	105.30	6/21/2022 16:43	11.33	89.54	6/21/2022 18:00	5.01
6/21/2022 16:57	11.73	232.21	6/22/2022 18:41	11.27	105.01	6/21/2022 16:44	11.35	89.59	6/21/2022 18:01	4.96
6/21/2022 16:58	11.76	232.35	6/22/2022 18:42	11.26	105.31	6/21/2022 16:45	11.34	89.31	6/21/2022 18:02	5.00
6/21/2022 16:59	11.71	232.30	6/22/2022 18:43	11.29	105.21	6/21/2022 16:46	11.33	90.09	6/21/2022 18:03	4.96
6/21/2022 17:00	11.72	232.21	6/22/2022 18:44	11.27	105.28	6/21/2022 16:47	11.35	89.86	6/21/2022 18:04	4.99
6/21/2022 17:01	11.72	232.46	6/22/2022 18:45	11.27	105.46	6/21/2022 16:48	11.33	89.68	6/21/2022 18:05	5.03
6/21/2022 17:02	11.75	232.53	6/22/2022 18:46	11.26	105.09	6/21/2022 16:49	11.32	90.24	6/21/2022 18:06	5.09
6/21/2022 17:03	11.76	232.28	6/22/2022 18:47	11.28	105.18	6/21/2022 16:50	11.34	89.32	6/21/2022 18:07	5.04
6/21/2022 17:04	11.77	232.30	6/22/2022 18:48	11.26	105.06	6/21/2022 16:51	11.29	89.70	6/21/2022 18:08	4.98
6/21/2022 17:05	11.75	232.39	6/22/2022 18:49	11.26	105.22	6/21/2022 16:52	11.33	89.82	6/21/2022 18:09	5.04
6/21/2022 17:06	11.73	232.33	6/22/2022 18:50	11.26	105.05	6/21/2022 16:53	11.36	90.03	6/21/2022 18:10	5.07
6/21/2022 17:07	11.77	232.61	6/22/2022 18:51	11.27	105.30	6/21/2022 16:54	11.36	89.75	6/21/2022 18:11	5.03
6/21/2022 17:08	11.74	232.48	6/22/2022 18:52	11.25	105.02	6/21/2022 16:55	11.34	90.69	6/21/2022 18:12	5.04
6/21/2022 17:09	11.75	232.62	6/22/2022 18:53	11.27	105.16	6/21/2022 16:56	11.34	89.82	6/21/2022 18:13	5.05
6/21/2022 17:10	11.73	232.31	6/22/2022 18:54	11.27	105.13	6/21/2022 16:57	11.35	90.53	6/21/2022 18:14	5.07

6/21/2022 17:11	11.75	232.39	6/22/2022 18:55	11.27	105.19	6/21/2022 16:58	11.33	89.56	6/21/2022 18:15	5.13
6/21/2022 17:12	11.73	232.50	6/22/2022 18:56	11.27	105.09	6/21/2022 16:59	11.34	90.16	6/21/2022 18:16	5.04
6/21/2022 17:13	11.76	232.49	6/22/2022 18:57	11.29	105.38	6/21/2022 17:00	11.36	89.88	6/21/2022 18:17	5.06
6/21/2022 17:14	11.74	232.57	6/22/2022 18:58	11.27	105.05	6/21/2022 17:01	11.33	90.21	6/21/2022 18:18	5.09
6/21/2022 17:15	11.75	232.55	6/22/2022 18:59	11.27	105.15	6/21/2022 17:02	11.33	89.96	6/21/2022 18:19	5.03
6/21/2022 17:16	11.75	232.65	6/22/2022 19:00	11.27	105.18	6/21/2022 17:03	11.33	90.11	6/21/2022 18:20	5.08
6/21/2022 17:17	11.71	232.68	6/22/2022 19:01	11.28	105.17	6/21/2022 17:04	11.31	90.64	6/21/2022 18:21	5.14
6/21/2022 17:18	11.74	232.64	6/22/2022 19:02	11.28	105.23	6/21/2022 17:05	11.31	89.94	6/21/2022 18:22	5.06
6/21/2022 17:19	11.75	232.64	6/22/2022 19:03	11.24	105.08	6/21/2022 17:06	11.35	90.03	6/21/2022 18:23	5.16
6/21/2022 17:20	11.75	232.72	6/22/2022 19:04	11.27	105.28	6/21/2022 17:07	11.33	89.99	6/21/2022 18:24	5.15
6/21/2022 17:21	11.72	232.51	6/22/2022 19:05	11.26	105.19	6/21/2022 17:08	11.35	89.30	6/21/2022 18:25	5.14
6/21/2022 17:22	11.74	232.80	6/22/2022 19:06	11.27	105.09	6/21/2022 17:09	11.34	90.27	6/21/2022 18:26	5.17
6/21/2022 17:23	11.75	232.70	6/22/2022 19:07	11.25	105.11	6/21/2022 17:10	11.35	89.40	6/21/2022 18:27	5.10
6/21/2022 17:24	11.74	232.68	6/22/2022 19:08	11.26	105.13	6/21/2022 17:11	11.36	90.50	6/21/2022 18:28	5.15
6/21/2022 17:25	11.73	232.74	6/22/2022 19:09	11.26	105.24	6/21/2022 17:12	11.35	90.10	6/21/2022 18:29	5.15
6/21/2022 17:26	11.76	232.82	6/22/2022 19:10	11.24	105.16	6/21/2022 17:13	11.37	90.06	6/21/2022 18:30	5.16
6/21/2022 17:27	11.77	232.95	6/22/2022 19:11	11.27	105.30	6/21/2022 17:14	11.35	90.13	6/21/2022 18:31	5.21
6/21/2022 17:28	11.76	232.88	6/22/2022 19:12	11.27	105.30	6/21/2022 17:15	11.31	89.64	6/21/2022 18:32	5.22
6/21/2022 17:29	11.71	232.79	6/22/2022 19:13	11.29	105.33	6/21/2022 17:16	11.37	90.35	6/21/2022 18:33	5.24
6/21/2022 17:30	11.74	232.99	6/22/2022 19:14	11.24	105.26	6/21/2022 17:17	11.33	89.95	6/21/2022 18:34	5.15
6/21/2022 17:31	11.76	232.82	6/22/2022 19:15	11.28	105.35	6/21/2022 17:18	11.35	89.92	6/21/2022 18:35	5.20
6/21/2022 17:32	11.75	232.78	6/22/2022 19:16	11.27	105.25	6/21/2022 17:19	11.35	89.74	6/21/2022 18:36	5.21
6/21/2022 17:33	11.76	233.01	6/22/2022 19:17	11.30	105.10	6/21/2022 17:20	11.37	90.49	6/21/2022 18:37	5.23
6/21/2022 17:34	11.76	232.89	6/22/2022 19:18	11.27	105.31	6/21/2022 17:21	11.34	90.41	6/21/2022 18:38	5.17
6/21/2022 17:35	11.72	233.06	6/22/2022 19:19	11.25	105.28	6/21/2022 17:22	11.35	88.63	6/21/2022 18:39	5.25
6/21/2022 17:36	11.75	233.01	6/22/2022 19:20	11.26	105.10	6/21/2022 17:23	11.32	90.34	6/21/2022 18:40	5.24
6/21/2022 17:37	11.76	233.08	6/22/2022 19:21	11.27	105.18	6/21/2022 17:24	11.34	90.19	6/21/2022 18:41	5.31
6/21/2022 17:38	11.74	233.10	6/22/2022 19:22	11.27	105.40	6/21/2022 17:25	11.35	90.54	6/21/2022 18:42	5.27
6/21/2022 17:39	11.73	233.01	6/22/2022 19:23	11.27	105.42	6/21/2022 17:26	11.34	90.09	6/21/2022 18:43	5.30
6/21/2022 17:40	11.75	232.91	6/22/2022 19:24	11.26	105.20	6/21/2022 17:27	11.33	91.01	6/21/2022 18:44	5.22
6/21/2022 17:41	11.74	232.68	6/22/2022 19:25	11.26	105.19	6/21/2022 17:28	11.33	89.86	6/21/2022 18:45	5.32
6/21/2022 17:42	11.75	232.94	6/22/2022 19:26	11.26	105.22	6/21/2022 17:29	11.35	90.03	6/21/2022 18:46	5.28
6/21/2022 17:43	11.75	233.01	6/22/2022 19:27	11.24	105.16	6/21/2022 17:30	11.38	90.36	6/21/2022 18:47	5.32
6/21/2022 17:44	11.75	232.93	6/22/2022 19:28	11.28	105.22	6/21/2022 17:31	11.34	90.05	6/21/2022 18:48	5.35
6/21/2022 17:45	11.76	233.07	6/22/2022 19:29	11.26	105.42	6/21/2022 17:32	11.38	90.30	6/21/2022 18:49	5.34
6/21/2022 17:46	11.75	233.11	6/22/2022 19:30	11.28	105.30	6/21/2022 17:33	11.32	90.28	6/21/2022 18:50	5.32
6/21/2022 17:47	11.73	232.98	6/22/2022 19:31	11.26	105.43	6/21/2022 17:34	11.33	89.90	6/21/2022 18:51	5.33
6/21/2022 17:48	11.76	232.98	6/22/2022 19:32	11.28	105.50	6/21/2022 17:35	11.32	90.53	6/21/2022 18:52	5.31
6/21/2022 17:49	11.74	232.95	6/22/2022 19:33	11.25	105.23	6/21/2022 17:36	11.32	89.71	6/21/2022 18:53	5.28
6/21/2022 17:50	11.75	232.98	6/22/2022 19:34	11.26	105.47	6/21/2022 17:37	11.29	90.21	6/21/2022 18:54	5.30
6/21/2022 17:51	11.75	232.81	6/22/2022 19:35	11.25	105.26	6/21/2022 17:38	11.32	89.58	6/21/2022 18:55	5.30
6/21/2022 17:52	11.77	232.98	6/22/2022 19:36	11.25	105.20	6/21/2022 17:39	11.33	90.69	6/21/2022 18:56	5.26
6/21/2022 17:53	11.72	232.87	6/22/2022 19:37	11.26	105.15	6/21/2022 17:40	11.33	90.61	6/21/2022 18:57	5.33
6/21/2022 17:54	11.74	232.96	6/22/2022 19:38	11.26	105.25	6/21/2022 17:41	11.35	90.44	6/21/2022 18:58	5.34
6/21/2022 17:55	11.74	232.97	6/22/2022 19:39	11.27	105.38	6/21/2022 17:42	11.36	90.22	6/21/2022 18:59	5.32
6/21/2022 17:56	11.71	232.88	6/22/2022 19:40	11.26	105.36	6/21/2022 17:43	11.34	89.95	6/21/2022 19:00	5.33
6/21/2022 17:57	11.72	232.80	6/22/2022 19:41	11.24	105.37	6/21/2022 17:44	11.35	90.43	6/21/2022 19:01	5.28
6/21/2022 17:58	11.74	232.87	6/22/2022 19:42	11.25	105.26	6/21/2022 17:45	11.33	89.92	6/21/2022 19:02	5.33
6/21/2022 17:59	11.74	232.88	6/22/2022 19:43	11.27	105.43	6/21/2022 17:46	11.34	90.49	6/21/2022 19:03	5.27
6/21/2022 18:00	11.74	232.83	6/22/2022 19:44	11.27	105.28	6/21/2022 17:47	11.35	90.65	6/21/2022 19:04	5.35
6/21/2022 18:01	11.74	232.86	6/22/2022 19:45	11.25	105.09	6/21/2022 17:48	11.32	90.45	6/21/2022 19:05	5.28
6/21/2022 18:02	11.76	232.90	6/22/2022 19:46	11.27	105.20	6/21/2022 17:49	11.34	90.52	6/21/2022 19:06	5.31
6/21/2022 18:03	11.75	232.73	6/22/2022 19:47	11.26	105.33	6/21/2022 17:50	11.34	89.65	6/21/2022 19:07	5.32
6/21/2022 18:04	11.73	232.84	6/22/2022 19:48	11.27	105.31	6/21/2022 17:51	11.36	90.37	6/21/2022 19:08	5.33
6/21/2022 18:05	11.72	232.56	6/22/2022 19:49	11.24	105.24	6/21/2022 17:52	11.34	90.22	6/21/2022 19:09	5.35
6/21/2022 18:06	11.76	232.62	6/22/2022 19:50	11.25	105.33	6/21/2022 17:53	11.36	89.20	6/21/2022 19:10	5.31
6/21/2022 18:07	11.76	232.68	6/22/2022 19:51	11.27	105.39	6/21/2022 17:54	11.32	90.57	6/21/2022 19:11	5.37
6/21/2022 18:08	11.76	232.64	6/22/2022 19:52	11.27	105.23	6/21/2022 17:55	11.35	90.46	6/21/2022 19:12	5.30
6/21/2022 18:09	11.76	232.77	6/22/2022 19:53	11.27	105.32	6/21/2022 17:56	11.34	90.23	6/21/2022 19:13	5.35
6/21/2022 18:10	11.74	232.48	6/22/2022 19:54	11.26	105.37	6/21/2022 17:57	11.35	90.23	6/21/2022 19:14	5.32
6/21/2022 18:11	11.73	232.50	6/22/2022 19:55	11.27	105.33	6/21/2022 17:58	11.33	90.16	6/21/2022 19:15	5.35
6/21/2022 18:12	11.74	232.63	6/22/2022 19:56	11.25	105.46	6/21/2022 17:59	11.38	89.63	6/21/2022 19:16	5.30
6/21/2022 18:13	11.75	232.72	6/22/2022 19:57	11.27	105.44	6/21/2022 18:00	11.35	89.44	6/21/2022 19:17	5.31
6/21/2022 18:14	11.72	232.67	6/22/2022 19:58	11.27	105.22	6/21/2022 18:01	11.32	90.78	6/21/2022 19:18	5.34
6/21/2022 18:15	11.75	232.72	6/22/2022 19:59	11.26	105.11	6/21/2022 18:02	11.35	89.91	6/21/2022 19:19	5.31
6/21/2022 18:16	11.75	232.77	6/22/2022 20:00	11.26	105.41	6/21/2022 18:03	11.30	90.62	6/21/2022 19:20	5.31
6/21/2022 18:17	11.74	232.67	6/22/2022 20:01	11.26	105.42	6/21/2022 18:04	11.36	90.07	6/21/2022 19:21	5.34
6/21/2022 18:18	11.77	232.50	6/22/2022 20:02	11.28	105.34	6/21/2022 18:05	11.37	90.53	6/21/2022 19:22	5.28
6/21/2022 18:19	11.74	232.39	6/22/2022 20:03	11.28	105.39	6/21/2022 18:06	11.33	89.54	6/21/2022 19:23	5.37
6/21/2022 18:20	11.72	232.64	6/22/2022 20:04	11.27	105.14	6/21/2022 18:07	11.36	91.29	6/21/2022 19:24	5.34
6/21/2022 18:21	11.75	232.31	6/22/2022 20:05	11.27	105.51	6/21/2022 18:08	11.33	90.50	6/21/2022 19:25	5.34
6/21/2022 18:22	11.74	232.45	6/22/2022 20:06	11.27	105.20	6/21/2022 18:09	11.34	90.68	6/21/2022 19:26	5.32
6/21/2022 18:23	11.73	232.59	6/22/2022 20:07	11.28	105.29	6/21/2022 18:10	11.36	90.44	6/21/2022 19:27	5.33
6/21/2022 18:24	11.74	232.68	6/22/2022 20:08	11.29	105.36	6/21/2022 18:11	11.33	90.94	6/21/2022 19:28	5.37
6/21/2022 18:25	11.73	232.59	6/22/2022 20:09	11.25	105.43	6/21/2022 18:12	11.36	90.39	6/21/2022 19:29	5.37
6/21/2022 18:26	11.72	232.68	6/22/2022 20:10	11.28	105.22	6/21/2022 18:13	11.37	90.63	6/21/2022 19:30	5.38
6/21/2022 18:27	11.76	232.46	6/22/2022 20:11	11.27	105.19	6/21/2022 18:14	11.33	90.73	6/21/2022 19:31	5.31
6/21/2022 18:28	11.75	232.56	6/22/2022 20:12	11.25	105.36	6/21/2022 18:15	11.35	90.84	6/21/2022 19:32	5.36
6/21/2022 18:29	11.73	232.68	6/22/2022 20:13	11.25	105.37	6/21/2022 18:16	11.32	90.89	6/21/2022 19:33	5.26
6/21/2022 18:30	11.75	232.62	6/22/2022 20:14	11.28	105.30	6/21/2022 18:17	11.29	90.40	6/21/2022 19:34	5.37
6/21/2022 18:31	11.75	232.59	6/22/2022 20:15	11.28	105.29	6/21/2022 18:18	11.33	91.04	6/21/2022 19:35	5.38
6/21/2022 18:32	11.75	232.64	6/22/2022 20:16	11.27	105.34	6/21/2022 18:19	11.32	90.45	6/21/2022 19:36	5.33
6/21/2022 18:33	11.76	232.40	6/22/2022 20:17	11.27	105.42	6/21/2022 18:20	11.34	91.14	6/21/2022 19:37	5.35
6/21/2022 18:34	11.76	232.58	6/22/2022 20:18	11.28	105.40	6/21/2022 18:21	11.36	90.95	6/21/2022 19:38	5.33
6/21/2022 18:35	11.76	232.63	6/22/2022 20:19	11.24	105.53	6/21/2022 18:22	11.36	90.50	6/21/2022 19:39	5.38
6/21/2022 18:36	11.74	232.65	6/22/2022 20:20	11.26	105.24	6/21/2022 18:23	11.35	91.12	6/21/2022 19:40	5.42
6/21/2022 18:37	11.75	232.64	6/22/2022 20:21	11.25	105.35	6/21/2022 18:24	11.33	90.34	6/21/2022 19:41	5.38
6/21/2022 18:38	11.75	232.49	6/22/2022 20:22	11.26	105.45	6/21/2022 18:25	11.35	90.75	6/21/2022 19:42	5.36

6/21/2022 18:39	11.74	232.43	6/22/2022 20:23	11.27	105.41	6/21/2022 18:26	11.36	90.99	6/21/2022 19:43	5.36
6/21/2022 18:40	11.72	232.48	6/22/2022 20:24	11.28	105.36	6/21/2022 18:27	11.34	89.97	6/21/2022 19:44	5.35
6/21/2022 18:41	11.75	232.24	6/22/2022 20:25	11.27	105.52	6/21/2022 18:28	11.33	90.17	6/21/2022 19:45	5.36
6/21/2022 18:42	11.74	232.41	6/22/2022 20:26	11.29	105.62	6/21/2022 18:29	11.33	90.00	6/21/2022 19:46	5.40
6/21/2022 18:43	11.74	232.39	6/22/2022 20:27	11.25	105.25	6/21/2022 18:30	11.34	89.38	6/21/2022 19:47	5.34
6/21/2022 18:44	11.72	232.44	6/22/2022 20:28	11.27	105.20	6/21/2022 18:31	11.32	90.77	6/21/2022 19:48	5.37
6/21/2022 18:45	11.75	232.29	6/22/2022 20:29	11.25	105.44	6/21/2022 18:32	11.35	90.29	6/21/2022 19:49	5.36
6/21/2022 18:46	11.77	232.39	6/22/2022 20:30	11.28	105.42	6/21/2022 18:33	11.33	90.56	6/21/2022 19:50	5.41
6/21/2022 18:47	11.75	232.47	6/22/2022 20:31	11.26	105.26	6/21/2022 18:34	11.31	90.24	6/21/2022 19:51	5.34
6/21/2022 18:48	11.75	232.43	6/22/2022 20:32	11.28	105.40	6/21/2022 18:35	11.34	90.59	6/21/2022 19:52	5.41
6/21/2022 18:49	11.75	232.19	6/22/2022 20:33	11.27	105.55	6/21/2022 18:36	11.36	90.55	6/21/2022 19:53	5.39
6/21/2022 18:50	11.76	232.21	6/22/2022 20:34	11.26	105.51	6/21/2022 18:37	11.31	91.01	6/21/2022 19:54	5.37
6/21/2022 18:51	11.73	232.14	6/22/2022 20:35	11.28	105.31	6/21/2022 18:38	11.33	90.43	6/21/2022 19:55	5.41
6/21/2022 18:52	11.73	232.41	6/22/2022 20:36	11.27	105.52	6/21/2022 18:39	11.35	90.48	6/21/2022 19:56	5.39
6/21/2022 18:53	11.74	232.38	6/22/2022 20:37	11.25	105.54	6/21/2022 18:40	11.35	90.59	6/21/2022 19:57	5.38
6/21/2022 18:54	11.74	232.42	6/22/2022 20:38	11.26	105.37	6/21/2022 18:41	11.35	91.46	6/21/2022 19:58	5.37
6/21/2022 18:55	11.73	232.38	6/22/2022 20:39	11.28	105.55	6/21/2022 18:42	11.32	91.32	6/21/2022 19:59	5.45
6/21/2022 18:56	11.74	232.51	6/22/2022 20:40	11.26	105.62	6/21/2022 18:43	11.33	90.80	6/21/2022 20:00	5.47
6/21/2022 18:57	11.73	232.25	6/22/2022 20:41	11.26	105.53	6/21/2022 18:44	11.35	90.13	6/21/2022 20:01	5.44
6/21/2022 18:58	11.75	232.26	6/22/2022 20:42	11.26	105.54	6/21/2022 18:45	11.30	90.73	6/21/2022 20:02	5.39
6/21/2022 18:59	11.74	232.23	6/22/2022 20:43	11.26	105.48	6/21/2022 18:46	11.33	90.50	6/21/2022 20:03	5.45
6/21/2022 19:00	11.73	232.23	6/22/2022 20:44	11.26	105.45	6/21/2022 18:47	11.35	90.47	6/21/2022 20:04	5.42
6/21/2022 19:01	11.73	232.24	6/22/2022 20:45	11.27	105.47	6/21/2022 18:48	11.33	91.50	6/21/2022 20:05	5.42
6/21/2022 19:02	11.72	232.27	6/22/2022 20:46	11.27	105.34	6/21/2022 18:49	11.37	91.10	6/21/2022 20:06	5.41
6/21/2022 19:03	11.73	232.14	6/22/2022 20:47	11.28	105.39	6/21/2022 18:50	11.32	90.82	6/21/2022 20:07	5.42
6/21/2022 19:04	11.73	232.19	6/22/2022 20:48	11.27	105.35	6/21/2022 18:51	11.34	91.10	6/21/2022 20:08	5.38
6/21/2022 19:05	11.72	232.39	6/22/2022 20:49	11.26	105.47	6/21/2022 18:52	11.29	90.81	6/21/2022 20:09	5.42
6/21/2022 19:06	11.74	232.23	6/22/2022 20:50	11.28	105.52	6/21/2022 18:53	11.30	90.42	6/21/2022 20:10	5.36
6/21/2022 19:07	11.74	232.07	6/22/2022 20:51	11.23	105.39	6/21/2022 18:54	11.31	90.68	6/21/2022 20:11	5.42
6/21/2022 19:08	11.73	232.28	6/22/2022 20:52	11.27	105.51	6/21/2022 18:55	11.32	91.09	6/21/2022 20:12	5.43
6/21/2022 19:09	11.75	232.14	6/22/2022 20:53	11.25	105.65	6/21/2022 18:56	11.34	91.63	6/21/2022 20:13	5.45
6/21/2022 19:10	11.73	232.44	6/22/2022 20:54	11.26	105.57	6/21/2022 18:57	11.33	90.65	6/21/2022 20:14	5.45
6/21/2022 19:11	11.76	232.28	6/22/2022 20:55	11.28	105.64	6/21/2022 18:58	11.38	91.13	6/21/2022 20:15	5.45
6/21/2022 19:12	11.75	232.29	6/22/2022 20:56	11.27	105.39	6/21/2022 18:59	11.35	91.26	6/21/2022 20:16	5.45
6/21/2022 19:13	11.75	232.25	6/22/2022 20:57	11.28	105.45	6/21/2022 19:00	11.36	91.31	6/21/2022 20:17	5.47
6/21/2022 19:14	11.76	232.42	6/22/2022 20:58	11.27	105.62	6/21/2022 19:01	11.32	90.97	6/21/2022 20:18	5.49
6/21/2022 19:15	11.73	232.19	6/22/2022 20:59	11.25	105.47	6/21/2022 19:02	11.32	90.27	6/21/2022 20:19	5.44
6/21/2022 19:16	11.71	232.39	6/22/2022 21:00	11.27	105.46	6/21/2022 19:03	11.36	91.60	6/21/2022 20:20	5.44
6/21/2022 19:17	11.75	232.42	6/22/2022 21:01	11.28	105.54	6/21/2022 19:04	11.33	91.41	6/21/2022 20:21	5.47
6/21/2022 19:18	11.75	232.55	6/22/2022 21:02	11.26	105.34	6/21/2022 19:05	11.30	90.86	6/21/2022 20:22	5.47
6/21/2022 19:19	11.74	232.32	6/22/2022 21:03	11.24	105.54	6/21/2022 19:06	11.34	91.74	6/21/2022 20:23	5.43
6/21/2022 19:20	11.74	232.47	6/22/2022 21:04	11.30	105.44	6/21/2022 19:07	11.33	91.20	6/21/2022 20:24	5.50
6/21/2022 19:21	11.75	232.50	6/22/2022 21:05	11.26	105.73	6/21/2022 19:08	11.32	90.62	6/21/2022 20:25	5.42
6/21/2022 19:22	11.73	232.43	6/22/2022 21:06	11.28	105.58	6/21/2022 19:09	11.32	91.72	6/21/2022 20:26	5.40
6/21/2022 19:23	11.74	232.29	6/22/2022 21:07	11.26	105.58	6/21/2022 19:10	11.39	90.86	6/21/2022 20:27	5.46
6/21/2022 19:24	11.73	232.47	6/22/2022 21:08	11.27	105.40	6/21/2022 19:11	11.34	90.93	6/21/2022 20:28	5.47
6/21/2022 19:25	11.75	232.38	6/22/2022 21:09	11.23	105.70	6/21/2022 19:12	11.35	91.23	6/21/2022 20:29	5.50
6/21/2022 19:26	11.74	232.32	6/22/2022 21:10	11.27	105.57	6/21/2022 19:13	11.35	90.98	6/21/2022 20:30	5.48
6/21/2022 19:27	11.74	232.25	6/22/2022 21:11	11.25	105.63	6/21/2022 19:14	11.33	91.19	6/21/2022 20:31	5.47
6/21/2022 19:28	11.75	232.47	6/22/2022 21:12	11.28	105.52	6/21/2022 19:15	11.34	90.98	6/21/2022 20:32	5.45
6/21/2022 19:29	11.74	232.42	6/22/2022 21:13	11.25	105.48	6/21/2022 19:16	11.37	90.02	6/21/2022 20:33	5.45
6/21/2022 19:30	11.73	232.26	6/22/2022 21:14	11.26	105.55	6/21/2022 19:17	11.33	90.59	6/21/2022 20:34	5.47
6/21/2022 19:31	11.72	232.32	6/22/2022 21:15	11.24	105.68	6/21/2022 19:18	11.35	90.94	6/21/2022 20:35	5.49
6/21/2022 19:32	11.75	232.59	6/22/2022 21:16	11.29	105.50	6/21/2022 19:19	11.35	91.25	6/21/2022 20:36	5.44
6/21/2022 19:33	11.71	232.63	6/22/2022 21:17	11.29	105.53	6/21/2022 19:20	11.31	90.74	6/21/2022 20:37	5.46
6/21/2022 19:34	11.73	232.44	6/22/2022 21:18	11.26	105.57	6/21/2022 19:21	11.35	91.72	6/21/2022 20:38	5.50
6/21/2022 19:35	11.74	232.23	6/22/2022 21:19	11.26	105.58	6/21/2022 19:22	11.34	91.98	6/21/2022 20:39	5.46
6/21/2022 19:36	11.73	232.51	6/22/2022 21:20	11.29	105.61	6/21/2022 19:23	11.32	91.16	6/21/2022 20:40	5.50
6/21/2022 19:37	11.74	232.38	6/22/2022 21:21	11.27	105.64	6/21/2022 19:24	11.34	91.48	6/21/2022 20:41	5.45
6/21/2022 19:38	11.73	232.38	6/22/2022 21:22	11.27	105.81	6/21/2022 19:25	11.36	91.15	6/21/2022 20:42	5.46
6/21/2022 19:39	11.69	232.58	6/22/2022 21:23	11.26	105.47	6/21/2022 19:26	11.30	91.44	6/21/2022 20:43	5.52
6/21/2022 19:40	11.73	232.47	6/22/2022 21:24	11.27	105.47	6/21/2022 19:27	11.35	91.45	6/21/2022 20:44	5.48
6/21/2022 19:41	11.74	232.43	6/22/2022 21:25	11.27	105.52	6/21/2022 19:28	11.34	91.53	6/21/2022 20:45	5.47
6/21/2022 19:42	11.72	232.43	6/22/2022 21:26	11.26	105.67	6/21/2022 19:29	11.30	91.46	6/21/2022 20:46	5.46
6/21/2022 19:43	11.73	232.34	6/22/2022 21:27	11.30	105.63	6/21/2022 19:30	11.33	90.91	6/21/2022 20:47	5.45
6/21/2022 19:44	11.72	232.39	6/22/2022 21:28	11.24	105.62	6/21/2022 19:31	11.38	91.16	6/21/2022 20:48	5.50
6/21/2022 19:45	11.72	232.65	6/22/2022 21:29	11.26	105.50	6/21/2022 19:32	11.32	90.39	6/21/2022 20:49	5.47
6/21/2022 19:46	11.73	232.48	6/22/2022 21:30	11.24	105.77	6/21/2022 19:33	11.34	91.19	6/21/2022 20:50	5.52
6/21/2022 19:47	11.75	232.62	6/22/2022 21:31	11.25	105.74	6/21/2022 19:34	11.36	91.35	6/21/2022 20:51	5.45
6/21/2022 19:48	11.72	232.33	6/22/2022 21:32	11.25	105.52	6/21/2022 19:35	11.32	91.26	6/21/2022 20:52	5.43
6/21/2022 19:49	11.73	232.48	6/22/2022 21:33	11.27	105.74	6/21/2022 19:36	11.30	91.30	6/21/2022 20:53	5.53
6/21/2022 19:50	11.74	232.49	6/22/2022 21:34	11.28	105.57	6/21/2022 19:37	11.33	91.28	6/21/2022 20:54	5.47
6/21/2022 19:51	11.73	232.39	6/22/2022 21:35	11.26	105.53	6/21/2022 19:38	11.32	91.19	6/21/2022 20:55	5.47
6/21/2022 19:52	11.73	232.46	6/22/2022 21:36	11.30	105.55	6/21/2022 19:39	11.34	91.36	6/21/2022 20:56	5.44
6/21/2022 19:53	11.72	232.41	6/22/2022 21:37	11.27	105.74	6/21/2022 19:40	11.40	91.46	6/21/2022 20:57	5.48
6/21/2022 19:54	11.73	232.51	6/22/2022 21:38	11.26	105.51	6/21/2022 19:41	11.34	90.39	6/21/2022 20:58	5.51
6/21/2022 19:55	11.74	232.34	6/22/2022 21:39	11.26	105.75	6/21/2022 19:42	11.32	90.15	6/21/2022 20:59	5.45
6/21/2022 19:56	11.70	232.51	6/22/2022 21:40	11.26	105.66	6/21/2022 19:43	11.35	91.85	6/21/2022 21:00	5.48
6/21/2022 19:57	11.73	232.48	6/22/2022 21:41	11.27	105.46	6/21/2022 19:44	11.35	91.72	6/21/2022 21:01	5.48
6/21/2022 19:58	11.73	232.33	6/22/2022 21:42	11.25	105.52	6/21/2022 19:45	11.30	91.17	6/21/2022 21:02	5.46
6/21/2022 19:59	11.73	232.47	6/22/2022 21:43	11.25	105.74	6/21/2022 19:46	11.38	91.75	6/21/2022 21:03	5.48
6/21/2022 20:00	11.76	232.53	6/22/2022 21:44	11.27	105.67	6/21/2022 19:47	11.33	91.23	6/21/2022 21:04	5.49
6/21/2022 20:01	11.75	232.33	6/22/2022 21:45	11.27	105.64	6/21/2022 19:48	11.38	90.93	6/21/2022 21:05	5.50
6/21/2022 20:02	11.71	232.63	6/22/2022 21:46	11.28	105.76	6/21/2022 19:49	11.34	91.16	6/21/2022 21:06	5.48
6/21/2022 20:03	11.73	232.67	6/22/2022 21:47	11.27	105.68	6/21/2022 19:50	11.35	91.12	6/21/2022 21:07	5.50
6/21/2022 20:04	11.71	232.53	6/22/2022 21:48	11.26	105.81	6/21/2022 19:51	11.36	91.97	6/21/2022 21:08	5.47
6/21/2022 20:05	11.74	232.67	6/22/2022 21:49	11.27	105.67	6/21/2022 19:52	11.35	91.36	6/21/2022 21:09	5.48
6/21/2022 20:06	11.73	232.50	6/22/2022 21:50	11.26	105.67	6/21/2022 19:53	11.37	90.67	6/21/2022 21:10	5.46

6/21/2022 20:07	11.70	232.44	6/22/2022 21:51	11.25	105.70	6/21/2022 19:54	11.38	91.63	6/21/2022 21:11	5.48
6/21/2022 20:08	11.70	232.72	6/22/2022 21:52	11.28	105.59	6/21/2022 19:55	11.36	91.95	6/21/2022 21:12	5.46
6/21/2022 20:09	11.71	232.86	6/22/2022 21:53	11.25	105.89	6/21/2022 19:56	11.33	90.89	6/21/2022 21:13	5.48
6/21/2022 20:10	11.71	232.53	6/22/2022 21:54	11.25	105.76	6/21/2022 19:57	11.34	91.24	6/21/2022 21:14	5.44
6/21/2022 20:11	11.75	232.63	6/22/2022 21:55	11.27	105.78	6/21/2022 19:58	11.32	92.02	6/21/2022 21:15	5.50
6/21/2022 20:12	11.74	232.40	6/22/2022 21:56	11.27	105.67	6/21/2022 19:59	11.36	91.24	6/21/2022 21:16	5.46
6/21/2022 20:13	11.73	232.64	6/22/2022 21:57	11.26	105.51	6/21/2022 20:00	11.33	90.69	6/21/2022 21:17	5.45
6/21/2022 20:14	11.74	232.50	6/22/2022 21:58	11.24	105.61	6/21/2022 20:01	11.33	91.63	6/21/2022 21:18	5.44
6/21/2022 20:15	11.74	232.62	6/22/2022 21:59	11.24	105.71	6/21/2022 20:02	11.33	91.32	6/21/2022 21:19	5.45
6/21/2022 20:16	11.72	232.74	6/22/2022 22:00	11.27	105.63	6/21/2022 20:03	11.31	91.58	6/21/2022 21:20	5.40
6/21/2022 20:17	11.72	232.57	6/22/2022 22:01	11.25	105.69	6/21/2022 20:04	11.36	90.73	6/21/2022 21:21	5.45
6/21/2022 20:18	11.74	232.51	6/22/2022 22:02	11.27	105.71	6/21/2022 20:05	11.36	91.33	6/21/2022 21:22	5.47
6/21/2022 20:19	11.73	232.59	6/22/2022 22:03	11.27	105.89	6/21/2022 20:06	11.34	90.70	6/21/2022 21:23	5.47
6/21/2022 20:20	11.72	232.74	6/22/2022 22:04	11.27	105.66	6/21/2022 20:07	11.34	92.14	6/21/2022 21:24	5.48
6/21/2022 20:21	11.70	232.65	6/22/2022 22:05	11.26	105.70	6/21/2022 20:08	11.33	91.50	6/21/2022 21:25	5.47
6/21/2022 20:22	11.71	232.67	6/22/2022 22:06	11.27	105.75	6/21/2022 20:09	11.34	91.73	6/21/2022 21:26	5.44
6/21/2022 20:23	11.75	232.77	6/22/2022 22:07	11.27	105.59	6/21/2022 20:10	11.37	91.16	6/21/2022 21:27	5.46
6/21/2022 20:24	11.72	232.69	6/22/2022 22:08	11.26	105.69	6/21/2022 20:11	11.32	91.64	6/21/2022 21:28	5.47
6/21/2022 20:25	11.75	232.79	6/22/2022 22:09	11.26	105.70	6/21/2022 20:12	11.34	91.38	6/21/2022 21:29	5.42
6/21/2022 20:26	11.71	232.59	6/22/2022 22:10	11.27	105.67	6/21/2022 20:13	11.32	91.06	6/21/2022 21:30	5.38
6/21/2022 20:27	11.74	232.88	6/22/2022 22:11	11.25	105.63	6/21/2022 20:14	11.32	91.54	6/21/2022 21:31	5.43
6/21/2022 20:28	11.72	232.77	6/22/2022 22:12	11.25	105.67	6/21/2022 20:15	11.35	90.47	6/21/2022 21:32	5.42
6/21/2022 20:29	11.72	232.65	6/22/2022 22:13	11.27	105.73	6/21/2022 20:16	11.37	90.69	6/21/2022 21:33	5.47
6/21/2022 20:30	11.71	232.72	6/22/2022 22:14	11.28	105.92	6/21/2022 20:17	11.30	91.77	6/21/2022 21:34	5.43
6/21/2022 20:31	11.72	232.81	6/22/2022 22:15	11.28	105.53	6/21/2022 20:18	11.31	92.04	6/21/2022 21:35	5.43
6/21/2022 20:32	11.71	232.67	6/22/2022 22:16	11.27	105.82	6/21/2022 20:19	11.32	91.49	6/21/2022 21:36	5.43
6/21/2022 20:33	11.71	232.70	6/22/2022 22:17	11.28	105.80	6/21/2022 20:20	11.30	91.88	6/21/2022 21:37	5.47
6/21/2022 20:34	11.71	232.65	6/22/2022 22:18	11.28	105.86	6/21/2022 20:21	11.34	91.16	6/21/2022 21:38	5.40
6/21/2022 20:35	11.74	233.01	6/22/2022 22:19	11.28	105.72	6/21/2022 20:22	11.34	91.34	6/21/2022 21:39	5.39
6/21/2022 20:36	11.75	232.88	6/22/2022 22:20	11.25	105.70	6/21/2022 20:23	11.35	91.19	6/21/2022 21:40	5.42
6/21/2022 20:37	11.71	232.67	6/22/2022 22:21	11.27	105.68	6/21/2022 20:24	11.32	91.67	6/21/2022 21:41	5.45
6/21/2022 20:38	11.75	232.73	6/22/2022 22:22	11.27	105.74	6/21/2022 20:25	11.30	91.23	6/21/2022 21:42	5.44
6/21/2022 20:39	11.71	232.90	6/22/2022 22:23	11.28	105.72	6/21/2022 20:26	11.32	92.17	6/21/2022 21:43	5.42
6/21/2022 20:40	11.72	232.92	6/22/2022 22:24	11.27	105.71	6/21/2022 20:27	11.34	91.34	6/21/2022 21:44	5.44
6/21/2022 20:41	11.71	232.58	6/22/2022 22:25	11.26	105.84	6/21/2022 20:28	11.30	91.81	6/21/2022 21:45	5.40
6/21/2022 20:42	11.71	232.65	6/22/2022 22:26	11.28	105.69	6/21/2022 20:29	11.31	92.15	6/21/2022 21:46	5.43
6/21/2022 20:43	11.74	232.78	6/22/2022 22:27	11.26	105.87	6/21/2022 20:30	11.35	91.27	6/21/2022 21:47	5.46
6/21/2022 20:44	11.74	232.76	6/22/2022 22:28	11.28	105.85	6/21/2022 20:31	11.37	91.91	6/21/2022 21:48	5.45
6/21/2022 20:45	11.73	232.99	6/22/2022 22:29	11.26	105.71	6/21/2022 20:32	11.33	91.22	6/21/2022 21:49	5.46
6/21/2022 20:46	11.72	233.00	6/22/2022 22:30	11.28	105.68	6/21/2022 20:33	11.32	90.33	6/21/2022 21:50	5.52
6/21/2022 20:47	11.72	232.72	6/22/2022 22:31	11.29	105.78	6/21/2022 20:34	11.37	91.69	6/21/2022 21:51	5.43
6/21/2022 20:48	11.73	232.68	6/22/2022 22:32	11.27	105.79	6/21/2022 20:35	11.35	91.91	6/21/2022 21:52	5.47
6/21/2022 20:49	11.73	232.92	6/22/2022 22:33	11.26	105.81	6/21/2022 20:36	11.34	90.89	6/21/2022 21:53	5.44
6/21/2022 20:50	11.75	232.84	6/22/2022 22:34	11.26	105.93	6/21/2022 20:37	11.30	91.83	6/21/2022 21:54	5.44
6/21/2022 20:51	11.74	232.91	6/22/2022 22:35	11.24	105.73	6/21/2022 20:38	11.30	91.02	6/21/2022 21:55	5.45
6/21/2022 20:52	11.75	232.83	6/22/2022 22:36	11.26	105.94	6/21/2022 20:39	11.31	92.19	6/21/2022 21:56	5.45
6/21/2022 20:53	11.71	232.93	6/22/2022 22:37	11.24	105.97	6/21/2022 20:40	11.37	90.69	6/21/2022 21:57	5.46
6/21/2022 20:54	11.73	232.73	6/22/2022 22:38	11.25	106.02	6/21/2022 20:41	11.30	92.07	6/21/2022 21:58	5.42
6/21/2022 20:55	11.72	233.12	6/22/2022 22:39	11.27	105.65	6/21/2022 20:42	11.32	91.10	6/21/2022 21:59	5.46
6/21/2022 20:56	11.74	232.91	6/22/2022 22:40	11.28	105.59	6/21/2022 20:43	11.33	90.40	6/21/2022 22:00	5.43
6/21/2022 20:57	11.71	232.87	6/22/2022 22:41	11.28	105.51	6/21/2022 20:44	11.39	91.66	6/21/2022 22:01	5.46
6/21/2022 20:58	11.72	232.85	6/22/2022 22:42	11.25	105.78	6/21/2022 20:45	11.37	90.87	6/21/2022 22:02	5.47
6/21/2022 20:59	11.72	232.86	6/22/2022 22:43	11.25	105.66	6/21/2022 20:46	11.33	91.70	6/21/2022 22:03	5.43
6/21/2022 21:00	11.75	232.86	6/22/2022 22:44	11.28	105.83	6/21/2022 20:47	11.31	91.16	6/21/2022 22:04	5.47
6/21/2022 21:01	11.74	232.86	6/22/2022 22:45	11.25	105.73	6/21/2022 20:48	11.35	92.15	6/21/2022 22:05	5.45
6/21/2022 21:02	11.74	232.65	6/22/2022 22:46	11.25	106.03	6/21/2022 20:49	11.39	92.10	6/21/2022 22:06	5.44
6/21/2022 21:03	11.74	232.83	6/22/2022 22:47	11.26	105.80	6/21/2022 20:50	11.35	90.95	6/21/2022 22:07	5.51
6/21/2022 21:04	11.70	232.94	6/22/2022 22:48	11.26	105.89	6/21/2022 20:51	11.37	90.69	6/21/2022 22:08	5.46
6/21/2022 21:05	11.71	232.94	6/22/2022 22:49	11.27	105.93	6/21/2022 20:52	11.34	91.05	6/21/2022 22:09	5.44
6/21/2022 21:06	11.72	232.81	6/22/2022 22:50	11.30	105.69	6/21/2022 20:53	11.32	91.82	6/21/2022 22:10	5.47
6/21/2022 21:07	11.74	232.90	6/22/2022 22:51	11.27	105.82	6/21/2022 20:54	11.35	92.14	6/21/2022 22:11	5.44
6/21/2022 21:08	11.74	232.79	6/22/2022 22:52	11.27	105.71	6/21/2022 20:55	11.38	91.46	6/21/2022 22:12	5.48
6/21/2022 21:09	11.71	233.07	6/22/2022 22:53	11.22	105.83	6/21/2022 20:56	11.30	90.82	6/21/2022 22:13	5.48
6/21/2022 21:10	11.73	232.82	6/22/2022 22:54	11.27	105.99	6/21/2022 20:57	11.31	91.85	6/21/2022 22:14	5.46
6/21/2022 21:11	11.74	232.94	6/22/2022 22:55	11.26	105.77	6/21/2022 20:58	11.36	90.94	6/21/2022 22:15	5.42
6/21/2022 21:12	11.71	232.85	6/22/2022 22:56	11.25	105.85	6/21/2022 20:59	11.33	91.79	6/21/2022 22:16	5.52
6/21/2022 21:13	11.73	232.92	6/22/2022 22:57	11.28	106.05	6/21/2022 21:00	11.37	91.40	6/21/2022 22:17	5.42
6/21/2022 21:14	11.72	232.93	6/22/2022 22:58	11.25	105.71	6/21/2022 21:01	11.35	91.10	6/21/2022 22:18	5.44
6/21/2022 21:15	11.72	232.72	6/22/2022 22:59	11.27	105.95	6/21/2022 21:02	11.32	91.09	6/21/2022 22:19	5.45
6/21/2022 21:16	11.72	232.86	6/22/2022 23:00	11.25	105.80	6/21/2022 21:03	11.36	91.17	6/21/2022 22:20	5.42
6/21/2022 21:17	11.74	232.94	6/22/2022 23:01	11.27	105.86	6/21/2022 21:04	11.35	91.83	6/21/2022 22:21	5.45
6/21/2022 21:18	11.72	232.78	6/22/2022 23:02	11.29	105.83	6/21/2022 21:05	11.34	91.59	6/21/2022 22:22	5.46
6/21/2022 21:19	11.72	232.84	6/22/2022 23:03	11.26	105.93	6/21/2022 21:06	11.35	91.38	6/21/2022 22:23	5.41
6/21/2022 21:20	11.73	232.88	6/22/2022 23:04	11.27	105.69	6/21/2022 21:07	11.34	91.89	6/21/2022 22:24	5.51
6/21/2022 21:21	11.71	232.86	6/22/2022 23:05	11.25	105.81	6/21/2022 21:08	11.39	92.49	6/21/2022 22:25	5.49
6/21/2022 21:22	11.72	232.79	6/22/2022 23:06	11.27	105.96	6/21/2022 21:09	11.35	91.18	6/21/2022 22:26	5.48
6/21/2022 21:23	11.73	233.04	6/22/2022 23:07	11.28	105.85	6/21/2022 21:10	11.37	91.45	6/21/2022 22:27	5.50
6/21/2022 21:24	11.72	232.94	6/22/2022 23:08	11.26	105.84	6/21/2022 21:11	11.37	91.42	6/21/2022 22:28	5.45
6/21/2022 21:25	11.71	232.90	6/22/2022 23:09	11.26	105.78	6/21/2022 21:12	11.35	91.99	6/21/2022 22:29	5.42
6/21/2022 21:26	11.74	232.78	6/22/2022 23:10	11.26	105.80	6/21/2022 21:13	11.32	91.52	6/21/2022 22:30	5.41
6/21/2022 21:27	11.74	232.96	6/22/2022 23:11	11.27	105.86	6/21/2022 21:14	11.37	92.02	6/21/2022 22:31	5.51
6/21/2022 21:28	11.74	232.94	6/22/2022 23:12	11.24	105.78	6/21/2022 21:15	11.34	91.70	6/21/2022 22:32	5.44
6/21/2022 21:29	11.72	232.82	6/22/2022 23:13	11.24	105.85	6/21/2022 21:16	11.35	91.24	6/21/2022 22:33	5.42
6/21/2022 21:30	11.70	233.03	6/22/2022 23:14	11.28	105.90	6/21/2022 21:17	11.36	91.54	6/21/2022 22:34	5.46
6/21/2022 21:31	11.72	232.75	6/22/2022 23:15	11.24	105.98	6/21/2022 21:18	11.36	91.56	6/21/2022 22:35	5.48
6/21/2022 21:32	11.74	233.00	6/22/2022 23:16	11.25	105.80	6/21/2022 21:19	11.35	91.44	6/21/2022 22:36	5.42
6/21/2022 21:33	11.72	232.82	6/22/2022 23:17	11.26	105.93	6/21/2022 21:20	11.32	91.83	6/21/2022 22:37	5.42
6/21/2022 21:34	11.73	232.73	6/22/2022 23:18	11.27	105.92	6/21/2022 21:21	11.37	91.45	6/21/2022 22:38	5.48

6/21/2022 21:35	11.73	232.90	6/22/2022 23:19	11.27	105.81	6/21/2022 21:22	11.34	91.79	6/21/2022 22:39	5.41
6/21/2022 21:36	11.76	232.77	6/22/2022 23:20	11.28	106.09	6/21/2022 21:23	11.37	91.84	6/21/2022 22:40	5.43
6/21/2022 21:37	11.74	232.85	6/22/2022 23:21	11.26	105.76	6/21/2022 21:24	11.31	92.18	6/21/2022 22:41	5.43
6/21/2022 21:38	11.75	232.94	6/22/2022 23:22	11.27	105.91	6/21/2022 21:25	11.33	91.76	6/21/2022 22:42	5.47
6/21/2022 21:39	11.76	232.70	6/22/2022 23:23	11.27	105.88	6/21/2022 21:26	11.32	91.00	6/21/2022 22:43	5.39
6/21/2022 21:40	11.74	232.73	6/22/2022 23:24	11.28	105.99	6/21/2022 21:27	11.35	91.76	6/21/2022 22:44	5.47
6/21/2022 21:41	11.73	233.06	6/22/2022 23:25	11.26	105.98	6/21/2022 21:28	11.35	91.66	6/21/2022 22:45	5.46
6/21/2022 21:42	11.73	232.81	6/22/2022 23:26	11.26	105.85	6/21/2022 21:29	11.37	91.72	6/21/2022 22:46	5.45
6/21/2022 21:43	11.75	232.91	6/22/2022 23:27	11.25	105.78	6/21/2022 21:30	11.35	91.70	6/21/2022 22:47	5.50
6/21/2022 21:44	11.73	233.02	6/22/2022 23:28	11.23	105.76	6/21/2022 21:31	11.32	92.11	6/21/2022 22:48	5.47
6/21/2022 21:45	11.74	233.12	6/22/2022 23:29	11.27	105.88	6/21/2022 21:32	11.33	91.92	6/21/2022 22:49	5.41
6/21/2022 21:46	11.74	232.76	6/22/2022 23:30	11.27	105.68	6/21/2022 21:33	11.35	92.23	6/21/2022 22:50	5.48
6/21/2022 21:47	11.73	232.94	6/22/2022 23:31	11.27	106.01	6/21/2022 21:34	11.34	91.61	6/21/2022 22:51	5.44
6/21/2022 21:48	11.76	232.98	6/22/2022 23:32	11.27	105.82	6/21/2022 21:35	11.36	91.46	6/21/2022 22:52	5.47
6/21/2022 21:49	11.72	232.94	6/22/2022 23:33	11.28	105.76	6/21/2022 21:36	11.38	92.28	6/21/2022 22:53	5.46
6/21/2022 21:50	11.73	233.05	6/22/2022 23:34	11.25	106.04	6/21/2022 21:37	11.37	91.86	6/21/2022 22:54	5.51
6/21/2022 21:51	11.70	233.05	6/22/2022 23:35	11.26	105.97	6/21/2022 21:38	11.34	92.15	6/21/2022 22:55	5.49
6/21/2022 21:52	11.73	232.86	6/22/2022 23:36	11.25	105.89	6/21/2022 21:39	11.37	92.34	6/21/2022 22:56	5.39
6/21/2022 21:53	11.71	233.01	6/22/2022 23:37	11.27	105.79	6/21/2022 21:40	11.34	91.88	6/21/2022 22:57	5.49
6/21/2022 21:54	11.75	233.08	6/22/2022 23:38	11.27	106.04	6/21/2022 21:41	11.37	92.32	6/21/2022 22:58	5.44
6/21/2022 21:55	11.73	232.92	6/22/2022 23:39	11.27	105.87	6/21/2022 21:42	11.32	92.24	6/21/2022 22:59	5.46
6/21/2022 21:56	11.74	232.99	6/22/2022 23:40	11.29	105.69	6/21/2022 21:43	11.32	91.85	6/21/2022 23:00	5.45
6/21/2022 21:57	11.75	233.06	6/22/2022 23:41	11.26	105.91	6/21/2022 21:44	11.35	92.30	6/21/2022 23:01	5.48
6/21/2022 21:58	11.76	233.07	6/22/2022 23:42	11.26	105.98	6/21/2022 21:45	11.35	92.70	6/21/2022 23:02	5.44
6/21/2022 21:59	11.74	232.82	6/22/2022 23:43	11.29	105.91	6/21/2022 21:46	11.36	92.16	6/21/2022 23:03	5.47
6/21/2022 22:00	11.74	232.83	6/22/2022 23:44	11.27	105.91	6/21/2022 21:47	11.32	92.35	6/21/2022 23:04	5.46
6/21/2022 22:01	11.75	233.16	6/22/2022 23:45	11.28	106.04	6/21/2022 21:48	11.36	91.70	6/21/2022 23:05	5.42
6/21/2022 22:02	11.74	233.01	6/22/2022 23:46	11.26	105.77	6/21/2022 21:49	11.36	91.92	6/21/2022 23:06	5.46
6/21/2022 22:03	11.74	232.76	6/22/2022 23:47	11.26	105.89	6/21/2022 21:50	11.34	92.40	6/21/2022 23:07	5.40
6/21/2022 22:04	11.74	232.98	6/22/2022 23:48	11.27	105.83	6/21/2022 21:51	11.37	91.78	6/21/2022 23:08	5.46
6/21/2022 22:05	11.75	232.89	6/22/2022 23:49	11.28	105.96	6/21/2022 21:52	11.32	91.61	6/21/2022 23:09	5.49
6/21/2022 22:06	11.76	232.92	6/22/2022 23:50	11.27	106.03	6/21/2022 21:53	11.36	92.23	6/21/2022 23:10	5.47
6/21/2022 22:07	11.74	233.08	6/22/2022 23:51	11.26	105.99	6/21/2022 21:54	11.32	91.54	6/21/2022 23:11	5.45
6/21/2022 22:08	11.75	232.87	6/22/2022 23:52	11.24	105.98	6/21/2022 21:55	11.31	92.12	6/21/2022 23:12	5.49
6/21/2022 22:09	11.73	232.96	6/22/2022 23:53	11.26	105.96	6/21/2022 21:56	11.35	91.94	6/21/2022 23:13	5.50
6/21/2022 22:10	11.76	233.10	6/22/2022 23:54	11.28	105.97	6/21/2022 21:57	11.36	92.07	6/21/2022 23:14	5.49
6/21/2022 22:11	11.77	232.92	6/22/2022 23:55	11.26	105.96	6/21/2022 21:58	11.36	91.87	6/21/2022 23:15	5.47
6/21/2022 22:12	11.75	232.94	6/22/2022 23:56	11.28	105.79	6/21/2022 21:59	11.33	92.18	6/21/2022 23:16	5.47
6/21/2022 22:13	11.75	232.90	6/22/2022 23:57	11.26	105.83	6/21/2022 22:00	11.39	90.62	6/21/2022 23:17	5.47
6/21/2022 22:14	11.74	232.78	6/22/2022 23:58	11.29	106.01	6/21/2022 22:01	11.31	92.14	6/21/2022 23:18	5.51
6/21/2022 22:15	11.72	232.94	6/22/2022 23:59	11.26	106.02	6/21/2022 22:02	11.36	91.42	6/21/2022 23:19	5.46
6/21/2022 22:16	11.73	233.04	6/23/2022 0:00	11.26	105.93	6/21/2022 22:03	11.32	91.70	6/21/2022 23:20	5.51
6/21/2022 22:17	11.72	232.78	6/23/2022 0:01	11.30	106.07	6/21/2022 22:04	11.37	91.96	6/21/2022 23:21	5.51
6/21/2022 22:18	11.73	233.00	6/23/2022 0:02	11.26	106.05	6/21/2022 22:05	11.32	92.21	6/21/2022 23:22	5.48
6/21/2022 22:19	11.74	232.92	6/23/2022 0:03	11.26	105.86	6/21/2022 22:06	11.35	92.11	6/21/2022 23:23	5.52
6/21/2022 22:20	11.75	232.78	6/23/2022 0:04	11.26	105.91	6/21/2022 22:07	11.31	91.91	6/21/2022 23:24	5.48
6/21/2022 22:21	11.74	233.00	6/23/2022 0:05	11.25	105.96	6/21/2022 22:08	11.33	91.33	6/21/2022 23:25	5.52
6/21/2022 22:22	11.72	233.00	6/23/2022 0:06	11.25	106.14	6/21/2022 22:09	11.32	92.20	6/21/2022 23:26	5.51
6/21/2022 22:23	11.73	232.93	6/23/2022 0:07	11.25	105.94	6/21/2022 22:10	11.31	92.07	6/21/2022 23:27	5.54
6/21/2022 22:24	11.75	232.94	6/23/2022 0:08	11.27	106.13	6/21/2022 22:11	11.36	92.10	6/21/2022 23:28	5.50
6/21/2022 22:25	11.72	233.08	6/23/2022 0:09	11.27	105.93	6/21/2022 22:12	11.36	91.75	6/21/2022 23:29	5.48
6/21/2022 22:26	11.74	233.01	6/23/2022 0:10	11.27	106.12	6/21/2022 22:13	11.33	91.77	6/21/2022 23:30	5.56
6/21/2022 22:27	11.74	233.11	6/23/2022 0:11	11.27	105.93	6/21/2022 22:14	11.30	92.09	6/21/2022 23:31	5.55
6/21/2022 22:28	11.76	232.91	6/23/2022 0:12	11.29	106.02	6/21/2022 22:15	11.29	92.55	6/21/2022 23:32	5.53
6/21/2022 22:29	11.74	233.01	6/23/2022 0:13	11.24	105.96	6/21/2022 22:16	11.33	92.34	6/21/2022 23:33	5.49
6/21/2022 22:30	11.75	232.91	6/23/2022 0:14	11.27	106.01	6/21/2022 22:17	11.34	92.01	6/21/2022 23:34	5.52
6/21/2022 22:31	11.75	233.32	6/23/2022 0:15	11.23	106.15	6/21/2022 22:18	11.36	91.57	6/21/2022 23:35	5.56
6/21/2022 22:32	11.75	233.16	6/23/2022 0:16	11.27	106.15	6/21/2022 22:19	11.36	91.98	6/21/2022 23:36	5.49
6/21/2022 22:33	11.74	233.09	6/23/2022 0:17	11.26	105.84	6/21/2022 22:20	11.34	92.06	6/21/2022 23:37	5.55
6/21/2022 22:34	11.75	233.12	6/23/2022 0:18	11.25	106.06	6/21/2022 22:21	11.31	93.50	6/21/2022 23:38	5.49
6/21/2022 22:35	11.75	233.05	6/23/2022 0:19	11.28	106.14	6/21/2022 22:22	11.32	92.22	6/21/2022 23:39	5.49
6/21/2022 22:36	11.75	233.11	6/23/2022 0:20	11.28	106.18	6/21/2022 22:23	11.35	92.12	6/21/2022 23:40	5.55
6/21/2022 22:37	11.74	233.08	6/23/2022 0:21	11.25	105.92	6/21/2022 22:24	11.33	92.10	6/21/2022 23:41	5.49
6/21/2022 22:38	11.76	233.03	6/23/2022 0:22	11.25	105.98	6/21/2022 22:25	11.37	92.80	6/21/2022 23:42	5.51
6/21/2022 22:39	11.75	233.12	6/23/2022 0:23	11.27	105.95	6/21/2022 22:26	11.35	92.78	6/21/2022 23:43	5.56
6/21/2022 22:40	11.74	232.92	6/23/2022 0:24	11.26	106.19	6/21/2022 22:27	11.36	91.87	6/21/2022 23:44	5.57
6/21/2022 22:41	11.76	233.07	6/23/2022 0:25	11.27	105.95	6/21/2022 22:28	11.31	92.10	6/21/2022 23:45	5.54
6/21/2022 22:42	11.72	233.12	6/23/2022 0:26	11.26	106.27	6/21/2022 22:29	11.32	91.57	6/21/2022 23:46	5.49
6/21/2022 22:43	11.75	233.24	6/23/2022 0:27	11.28	106.12	6/21/2022 22:30	11.34	92.27	6/21/2022 23:47	5.60
6/21/2022 22:44	11.72	232.94	6/23/2022 0:28	11.24	106.06	6/21/2022 22:31	11.36	92.46	6/21/2022 23:48	5.56
6/21/2022 22:45	11.74	233.26	6/23/2022 0:29	11.30	105.79	6/21/2022 22:32	11.30	91.55	6/21/2022 23:49	5.54
6/21/2022 22:46	11.75	233.32	6/23/2022 0:30	11.25	106.06	6/21/2022 22:33	11.33	93.23	6/21/2022 23:50	5.53
6/21/2022 22:47	11.75	233.15	6/23/2022 0:31	11.27	105.94	6/21/2022 22:34	11.35	93.20	6/21/2022 23:51	5.56
6/21/2022 22:48	11.77	233.20	6/23/2022 0:32	11.27	106.01	6/21/2022 22:35	11.34	92.06	6/21/2022 23:52	5.57
6/21/2022 22:49	11.76	233.34	6/23/2022 0:33	11.28	105.97	6/21/2022 22:36	11.34	92.19	6/21/2022 23:53	5.47
6/21/2022 22:50	11.74	233.32	6/23/2022 0:34	11.26	105.97	6/21/2022 22:37	11.33	92.58	6/21/2022 23:54	5.57
6/21/2022 22:51	11.73	233.43	6/23/2022 0:35	11.26	106.20	6/21/2022 22:38	11.36	91.14	6/21/2022 23:55	5.53
6/21/2022 22:52	11.74	233.01	6/23/2022 0:36	11.29	106.04	6/21/2022 22:39	11.32	92.14	6/21/2022 23:56	5.52
6/21/2022 22:53	11.74	233.22	6/23/2022 0:37	11.29	106.06	6/21/2022 22:40	11.35	92.59	6/21/2022 23:57	5.56
6/21/2022 22:54	11.76	233.16	6/23/2022 0:38	11.29	106.29	6/21/2022 22:41	11.31	92.53	6/21/2022 23:58	5.50
6/21/2022 22:55	11.76	233.12	6/23/2022 0:39	11.23	106.03	6/21/2022 22:42	11.33	92.81	6/21/2022 23:59	5.57
6/21/2022 22:56	11.75	233.02	6/23/2022 0:40	11.25	106.18	6/21/2022 22:43	11.34	92.12	6/22/2022 0:00	5.60
6/21/2022 22:57	11.74	233.23	6/23/2022 0:41	11.27	106.10	6/21/2022 22:44	11.38	92.36	6/22/2022 0:01	5.56
6/21/2022 22:58	11.75	233.29	6/23/2022 0:42	11.24	105.89	6/21/2022 22:45	11.35	92.19	6/22/2022 0:02	5.56
6/21/2022 22:59	11.78	233.34	6/23/2022 0:43	11.28	106.10	6/21/2022 22:46	11.32	92.75	6/22/2022 0:03	5.47
6/21/2022 23:00	11.77	233.38	6/23/2022 0:44	11.28	106.04	6/21/2022 22:47	11.32	91.95	6/22/2022 0:04	5.57
6/21/2022 23:01	11.75	233.33	6/23/2022 0:45	11.26	106.04	6/21/2022 22:48	11.38	91.81	6/22/2022 0:05	5.55
6/21/2022 23:02	11.74	233.34	6/23/2022 0:46	11.27	106.00	6/21/2022 22:49	11.37	91.68	6/22/2022 0:06	5.56

6/21/2022 23:03	11.73	233.51	6/23/2022 0:47	11.27	105.97	6/21/2022 22:50	11.32	92.55	6/22/2022 0:07	5.52
6/21/2022 23:04	11.74	233.22	6/23/2022 0:48	11.28	106.30	6/21/2022 22:51	11.31	92.32	6/22/2022 0:08	5.52
6/21/2022 23:05	11.76	233.31	6/23/2022 0:49	11.26	106.08	6/21/2022 22:52	11.30	91.73	6/22/2022 0:09	5.60
6/21/2022 23:06	11.75	233.50	6/23/2022 0:50	11.27	106.01	6/21/2022 22:53	11.35	92.07	6/22/2022 0:10	5.63
6/21/2022 23:07	11.71	233.16	6/23/2022 0:51	11.27	106.20	6/21/2022 22:54	11.31	92.84	6/22/2022 0:11	5.64
6/21/2022 23:08	11.72	233.26	6/23/2022 0:52	11.28	106.09	6/21/2022 22:55	11.33	92.00	6/22/2022 0:12	5.60
6/21/2022 23:09	11.72	233.26	6/23/2022 0:53	11.24	105.90	6/21/2022 22:56	11.36	92.50	6/22/2022 0:13	5.60
6/21/2022 23:10	11.72	233.38	6/23/2022 0:54	11.26	105.84	6/21/2022 22:57	11.34	92.80	6/22/2022 0:14	5.60
6/21/2022 23:11	11.73	233.29	6/23/2022 0:55	11.26	106.30	6/21/2022 22:58	11.32	92.53	6/22/2022 0:15	5.59
6/21/2022 23:12	11.77	233.41	6/23/2022 0:56	11.25	106.16	6/21/2022 22:59	11.38	92.93	6/22/2022 0:16	5.62
6/21/2022 23:13	11.75	233.34	6/23/2022 0:57	11.28	106.00	6/21/2022 23:00	11.34	91.86	6/22/2022 0:17	5.57
6/21/2022 23:14	11.76	233.46	6/23/2022 0:58	11.26	106.09	6/21/2022 23:01	11.35	93.24	6/22/2022 0:18	5.54
6/21/2022 23:15	11.75	233.18	6/23/2022 0:59	11.24	106.09	6/21/2022 23:02	11.35	93.23	6/22/2022 0:19	5.60
6/21/2022 23:16	11.72	233.44	6/23/2022 1:00	11.27	106.14	6/21/2022 23:03	11.35	92.16	6/22/2022 0:20	5.55
6/21/2022 23:17	11.72	233.34	6/23/2022 1:01	11.28	106.14	6/21/2022 23:04	11.35	92.64	6/22/2022 0:21	5.59
6/21/2022 23:18	11.72	233.31	6/23/2022 1:02	11.27	106.22	6/21/2022 23:05	11.36	92.14	6/22/2022 0:22	5.59
6/21/2022 23:19	11.74	233.40	6/23/2022 1:03	11.27	106.07	6/21/2022 23:06	11.36	93.21	6/22/2022 0:23	5.60
6/21/2022 23:20	11.76	233.48	6/23/2022 1:04	11.27	106.28	6/21/2022 23:07	11.32	92.74	6/22/2022 0:24	5.61
6/21/2022 23:21	11.78	233.45	6/23/2022 1:05	11.26	106.04	6/21/2022 23:08	11.36	92.26	6/22/2022 0:25	5.62
6/21/2022 23:22	11.76	233.37	6/23/2022 1:06	11.27	106.02	6/21/2022 23:09	11.31	92.99	6/22/2022 0:26	5.62
6/21/2022 23:23	11.75	233.46	6/23/2022 1:07	11.29	106.06	6/21/2022 23:10	11.35	92.21	6/22/2022 0:27	5.61
6/21/2022 23:24	11.75	233.55	6/23/2022 1:08	11.27	106.06	6/21/2022 23:11	11.34	91.61	6/22/2022 0:28	5.62
6/21/2022 23:25	11.73	233.36	6/23/2022 1:09	11.26	106.09	6/21/2022 23:12	11.36	93.09	6/22/2022 0:29	5.59
6/21/2022 23:26	11.72	233.25	6/23/2022 1:10	11.27	106.20	6/21/2022 23:13	11.34	93.31	6/22/2022 0:30	5.62
6/21/2022 23:27	11.71	233.56	6/23/2022 1:11	11.27	106.07	6/21/2022 23:14	11.38	92.68	6/22/2022 0:31	5.59
6/21/2022 23:28	11.72	233.48	6/23/2022 1:12	11.26	106.25	6/21/2022 23:15	11.36	92.18	6/22/2022 0:32	5.61
6/21/2022 23:29	11.74	233.25	6/23/2022 1:13	11.25	106.20	6/21/2022 23:16	11.33	93.03	6/22/2022 0:33	5.62
6/21/2022 23:30	11.73	233.35	6/23/2022 1:14	11.25	106.31	6/21/2022 23:17	11.33	92.35	6/22/2022 0:34	5.60
6/21/2022 23:31	11.75	233.53	6/23/2022 1:15	11.26	106.19	6/21/2022 23:18	11.37	93.05	6/22/2022 0:35	5.64
6/21/2022 23:32	11.72	233.71	6/23/2022 1:16	11.28	106.23	6/21/2022 23:19	11.36	92.21	6/22/2022 0:36	5.66
6/21/2022 23:33	11.74	233.55	6/23/2022 1:17	11.25	106.27	6/21/2022 23:20	11.33	93.37	6/22/2022 0:37	5.64
6/21/2022 23:34	11.76	233.47	6/23/2022 1:18	11.27	106.21	6/21/2022 23:21	11.34	92.44	6/22/2022 0:38	5.64
6/21/2022 23:35	11.75	233.57	6/23/2022 1:19	11.25	106.34	6/21/2022 23:22	11.33	93.25	6/22/2022 0:39	5.65
6/21/2022 23:36	11.75	233.31	6/23/2022 1:20	11.26	106.08	6/21/2022 23:23	11.36	93.10	6/22/2022 0:40	5.68
6/21/2022 23:37	11.73	233.60	6/23/2022 1:21	11.26	106.03	6/21/2022 23:24	11.37	93.18	6/22/2022 0:41	5.62
6/21/2022 23:38	11.74	233.63	6/23/2022 1:22	11.25	106.24	6/21/2022 23:25	11.31	92.43	6/22/2022 0:42	5.64
6/21/2022 23:39	11.73	233.54	6/23/2022 1:23	11.26	106.23	6/21/2022 23:26	11.36	91.36	6/22/2022 0:43	5.69
6/21/2022 23:40	11.76	233.65	6/23/2022 1:24	11.29	106.17	6/21/2022 23:27	11.32	91.79	6/22/2022 0:44	5.63
6/21/2022 23:41	11.76	233.48	6/23/2022 1:25	11.27	106.22	6/21/2022 23:28	11.31	92.54	6/22/2022 0:45	5.69
6/21/2022 23:42	11.74	233.62	6/23/2022 1:26	11.27	106.48	6/21/2022 23:29	11.36	92.82	6/22/2022 0:46	5.60
6/21/2022 23:43	11.76	233.59	6/23/2022 1:27	11.28	106.00	6/21/2022 23:30	11.35	91.78	6/22/2022 0:47	5.63
6/21/2022 23:44	11.73	233.54	6/23/2022 1:28	11.26	106.14	6/21/2022 23:31	11.34	93.36	6/22/2022 0:48	5.64
6/21/2022 23:45	11.73	233.46	6/23/2022 1:29	11.24	106.14	6/21/2022 23:32	11.33	92.47	6/22/2022 0:49	5.66
6/21/2022 23:46	11.73	233.50	6/23/2022 1:30	11.27	106.18	6/21/2022 23:33	11.38	92.52	6/22/2022 0:50	5.67
6/21/2022 23:47	11.75	233.57	6/23/2022 1:31	11.25	106.21	6/21/2022 23:34	11.37	92.55	6/22/2022 0:51	5.65
6/21/2022 23:48	11.74	233.27	6/23/2022 1:32	11.26	106.21	6/21/2022 23:35	11.39	92.51	6/22/2022 0:52	5.58
6/21/2022 23:49	11.73	233.62	6/23/2022 1:33	11.27	106.18	6/21/2022 23:36	11.38	92.58	6/22/2022 0:53	5.63
6/21/2022 23:50	11.73	233.56	6/23/2022 1:34	11.27	106.11	6/21/2022 23:37	11.36	92.31	6/22/2022 0:54	5.63
6/21/2022 23:51	11.75	233.62	6/23/2022 1:35	11.28	106.29	6/21/2022 23:38	11.33	92.96	6/22/2022 0:55	5.62
6/21/2022 23:52	11.74	233.69	6/23/2022 1:36	11.25	106.10	6/21/2022 23:39	11.35	91.93	6/22/2022 0:56	5.66
6/21/2022 23:53	11.73	233.65	6/23/2022 1:37	11.31	106.30	6/21/2022 23:40	11.38	92.55	6/22/2022 0:57	5.69
6/21/2022 23:54	11.73	233.51	6/23/2022 1:38	11.27	106.13	6/21/2022 23:41	11.37	93.57	6/22/2022 0:58	5.64
6/21/2022 23:55	11.74	233.73	6/23/2022 1:39	11.28	106.28	6/21/2022 23:42	11.36	92.28	6/22/2022 0:59	5.66
6/21/2022 23:56	11.74	233.58	6/23/2022 1:40	11.26	106.33	6/21/2022 23:43	11.38	92.24	6/22/2022 1:00	5.67
6/21/2022 23:57	11.73	233.73	6/23/2022 1:41	11.27	106.41	6/21/2022 23:44	11.34	92.90	6/22/2022 1:01	5.70
6/21/2022 23:58	11.75	233.79	6/23/2022 1:42	11.27	106.34	6/21/2022 23:45	11.37	92.54	6/22/2022 1:02	5.71
6/21/2022 23:59	11.74	233.57	6/23/2022 1:43	11.27	106.11	6/21/2022 23:46	11.35	92.44	6/22/2022 1:03	5.67
6/22/2022 0:00	11.75	233.70	6/23/2022 1:44	11.25	106.13	6/21/2022 23:47	11.36	92.36	6/22/2022 1:04	5.65
6/22/2022 0:01	11.74	233.61	6/23/2022 1:45	11.27	106.05	6/21/2022 23:48	11.32	92.41	6/22/2022 1:05	5.64
6/22/2022 0:02	11.74	233.78	6/23/2022 1:46	11.26	106.16	6/21/2022 23:49	11.34	92.75	6/22/2022 1:06	5.68
6/22/2022 0:03	11.75	233.65	6/23/2022 1:47	11.27	106.20	6/21/2022 23:50	11.37	92.57	6/22/2022 1:07	5.69
6/22/2022 0:04	11.75	233.54	6/23/2022 1:48	11.26	106.24	6/21/2022 23:51	11.34	92.63	6/22/2022 1:08	5.69
6/22/2022 0:05	11.73	233.60	6/23/2022 1:49	11.28	106.28	6/21/2022 23:52	11.39	91.94	6/22/2022 1:09	5.60
6/22/2022 0:06	11.73	233.77	6/23/2022 1:50	11.27	106.30	6/21/2022 23:53	11.33	93.11	6/22/2022 1:10	5.68
6/22/2022 0:07	11.74	233.45	6/23/2022 1:51	11.26	106.38	6/21/2022 23:54	11.32	92.79	6/22/2022 1:11	5.66
6/22/2022 0:08	11.74	233.84	6/23/2022 1:52	11.29	106.25	6/21/2022 23:55	11.36	91.84	6/22/2022 1:12	5.67
6/22/2022 0:09	11.72	233.65	6/23/2022 1:53	11.26	106.30	6/21/2022 23:56	11.33	92.56	6/22/2022 1:13	5.68
6/22/2022 0:10	11.74	233.55	6/23/2022 1:54	11.27	106.21	6/21/2022 23:57	11.30	92.71	6/22/2022 1:14	5.70
6/22/2022 0:11	11.75	233.74	6/23/2022 1:55	11.24	106.26	6/21/2022 23:58	11.38	93.02	6/22/2022 1:15	5.71
6/22/2022 0:12	11.76	233.74	6/23/2022 1:56	11.27	106.16	6/21/2022 23:59	11.35	92.89	6/22/2022 1:16	5.64
6/22/2022 0:13	11.74	233.61	6/23/2022 1:57	11.27	106.21	6/22/2022 0:00	11.33	91.88	6/22/2022 1:17	5.68
6/22/2022 0:14	11.74	233.83	6/23/2022 1:58	11.25	106.51	6/22/2022 0:01	11.37	92.34	6/22/2022 1:18	5.71
6/22/2022 0:15	11.73	233.71	6/23/2022 1:59	11.26	106.32	6/22/2022 0:02	11.32	92.08	6/22/2022 1:19	5.65
6/22/2022 0:16	11.74	233.76	6/23/2022 2:00	11.28	106.28	6/22/2022 0:03	11.34	92.53	6/22/2022 1:20	5.74
6/22/2022 0:17	11.76	233.78	6/23/2022 2:01	11.25	106.41	6/22/2022 0:04	11.31	92.47	6/22/2022 1:21	5.69
6/22/2022 0:18	11.77	233.67	6/23/2022 2:02	11.26	106.37	6/22/2022 0:05	11.35	92.11	6/22/2022 1:22	5.70
6/22/2022 0:19	11.73	233.75	6/23/2022 2:03	11.27	106.17	6/22/2022 0:06	11.38	92.16	6/22/2022 1:23	5.68
6/22/2022 0:20	11.72	233.88	6/23/2022 2:04	11.27	106.50	6/22/2022 0:07	11.40	93.18	6/22/2022 1:24	5.67
6/22/2022 0:21	11.76	233.78	6/23/2022 2:05	11.25	106.28	6/22/2022 0:08	11.33	92.13	6/22/2022 1:25	5.71
6/22/2022 0:22	11.76	233.83	6/23/2022 2:06	11.28	106.55	6/22/2022 0:09	11.31	92.83	6/22/2022 1:26	5.77
6/22/2022 0:23	11.76	233.93	6/23/2022 2:07	11.28	106.39	6/22/2022 0:10	11.29	92.38	6/22/2022 1:27	5.70
6/22/2022 0:24	11.74	233.84	6/23/2022 2:08	11.26	106.52	6/22/2022 0:11	11.37	93.31	6/22/2022 1:28	5.72
6/22/2022 0:25	11.75	233.83	6/23/2022 2:09	11.28	106.39	6/22/2022 0:12	11.32	91.76	6/22/2022 1:29	5.71
6/22/2022 0:26	11.79	233.93	6/23/2022 2:10	11.28	106.40	6/22/2022 0:13	11.32	92.81	6/22/2022 1:30	5.65
6/22/2022 0:27	11.75	234.01	6/23/2022 2:11	11.25	106.23	6/22/2022 0:14	11.34	93.46	6/22/2022 1:31	5.70
6/22/2022 0:28	11.74	233.95	6/23/2022 2:12	11.24	106.44	6/22/2022 0:15	11.32	93.00	6/22/2022 1:32	5.73
6/22/2022 0:29	11.75	234.11	6/23/2022 2:13	11.26	106.22	6/22/2022 0:16	11.36	92.05	6/22/2022 1:33	5.69
6/22/2022 0:30	11.74	234.03	6/23/2022 2:14	11.29	106.37	6/22/2022 0:17	11.30	92.46	6/22/2022 1:34	5.71

6/22/2022 0:31	11.74	234.05	6/23/2022 2:15	11.30	106.50	6/22/2022 0:18	11.32	93.08	6/22/2022 1:35	5.70
6/22/2022 0:32	11.76	234.16	6/23/2022 2:16	11.29	106.40	6/22/2022 0:19	11.34	92.62	6/22/2022 1:36	5.70
6/22/2022 0:33	11.71	234.19	6/23/2022 2:17	11.27	106.51	6/22/2022 0:20	11.36	92.43	6/22/2022 1:37	5.71
6/22/2022 0:34	11.72	234.00	6/23/2022 2:18	11.25	106.39	6/22/2022 0:21	11.37	92.46	6/22/2022 1:38	5.66
6/22/2022 0:35	11.76	234.24	6/23/2022 2:19	11.26	106.53	6/22/2022 0:22	11.31	93.08	6/22/2022 1:39	5.65
6/22/2022 0:36	11.76	234.32	6/23/2022 2:20	11.26	106.36	6/22/2022 0:23	11.38	93.34	6/22/2022 1:40	5.72
6/22/2022 0:37	11.77	234.13	6/23/2022 2:21	11.28	106.43	6/22/2022 0:24	11.29	93.11	6/22/2022 1:41	5.70
6/22/2022 0:38	11.72	234.09	6/23/2022 2:22	11.28	106.22	6/22/2022 0:25	11.31	92.37	6/22/2022 1:42	5.71
6/22/2022 0:39	11.75	234.28	6/23/2022 2:23	11.24	106.23	6/22/2022 0:26	11.39	93.42	6/22/2022 1:43	5.70
6/22/2022 0:40	11.75	234.05	6/23/2022 2:24	11.25	106.35	6/22/2022 0:27	11.35	92.40	6/22/2022 1:44	5.73
6/22/2022 0:41	11.76	234.29	6/23/2022 2:25	11.26	106.37	6/22/2022 0:28	11.33	92.83	6/22/2022 1:45	5.69
6/22/2022 0:42	11.72	234.28	6/23/2022 2:26	11.27	106.18	6/22/2022 0:29	11.31	93.04	6/22/2022 1:46	5.76
6/22/2022 0:43	11.72	234.04	6/23/2022 2:27	11.26	106.42	6/22/2022 0:30	11.34	92.75	6/22/2022 1:47	5.75
6/22/2022 0:44	11.76	234.18	6/23/2022 2:28	11.28	106.25	6/22/2022 0:31	11.31	93.10	6/22/2022 1:48	5.70
6/22/2022 0:45	11.73	234.19	6/23/2022 2:29	11.27	106.33	6/22/2022 0:32	11.33	93.93	6/22/2022 1:49	5.75
6/22/2022 0:46	11.74	234.26	6/23/2022 2:30	11.26	106.48	6/22/2022 0:33	11.37	93.26	6/22/2022 1:50	5.77
6/22/2022 0:47	11.74	234.41	6/23/2022 2:31	11.27	106.18	6/22/2022 0:34	11.33	93.07	6/22/2022 1:51	5.76
6/22/2022 0:48	11.76	234.27	6/23/2022 2:32	11.24	106.41	6/22/2022 0:35	11.35	92.96	6/22/2022 1:52	5.67
6/22/2022 0:49	11.75	234.17	6/23/2022 2:33	11.23	106.26	6/22/2022 0:36	11.37	92.99	6/22/2022 1:53	5.70
6/22/2022 0:50	11.73	234.38	6/23/2022 2:34	11.26	106.42	6/22/2022 0:37	11.38	93.05	6/22/2022 1:54	5.71
6/22/2022 0:51	11.74	234.36	6/23/2022 2:35	11.25	106.37	6/22/2022 0:38	11.32	92.74	6/22/2022 1:55	5.70
6/22/2022 0:52	11.77	234.21	6/23/2022 2:36	11.27	106.28	6/22/2022 0:39	11.33	92.98	6/22/2022 1:56	5.70
6/22/2022 0:53	11.75	234.36	6/23/2022 2:37	11.27	106.30	6/22/2022 0:40	11.31	92.88	6/22/2022 1:57	5.74
6/22/2022 0:54	11.74	234.32	6/23/2022 2:38	11.26	106.62	6/22/2022 0:41	11.30	93.20	6/22/2022 1:58	5.71
6/22/2022 0:55	11.75	234.66	6/23/2022 2:39	11.27	106.42	6/22/2022 0:42	11.38	93.26	6/22/2022 1:59	5.70
6/22/2022 0:56	11.75	234.30	6/23/2022 2:40	11.26	106.30	6/22/2022 0:43	11.36	93.20	6/22/2022 2:00	5.68
6/22/2022 0:57	11.74	234.37	6/23/2022 2:41	11.24	106.32	6/22/2022 0:44	11.38	92.87	6/22/2022 2:01	5.74
6/22/2022 0:58	11.75	234.41	6/23/2022 2:42	11.26	106.23	6/22/2022 0:45	11.30	93.58	6/22/2022 2:02	5.72
6/22/2022 0:59	11.75	234.61	6/23/2022 2:43	11.25	106.44	6/22/2022 0:46	11.38	93.03	6/22/2022 2:03	5.74
6/22/2022 1:00	11.76	234.38	6/23/2022 2:44	11.27	106.33	6/22/2022 0:47	11.32	93.55	6/22/2022 2:04	5.72
6/22/2022 1:01	11.75	234.42	6/23/2022 2:45	11.29	106.36	6/22/2022 0:48	11.31	92.85	6/22/2022 2:05	5.67
6/22/2022 1:02	11.77	234.40	6/23/2022 2:46	11.25	106.25	6/22/2022 0:49	11.32	93.57	6/22/2022 2:06	5.70
6/22/2022 1:03	11.73	234.47	6/23/2022 2:47	11.26	106.38	6/22/2022 0:50	11.34	93.62	6/22/2022 2:07	5.76
6/22/2022 1:04	11.76	234.57	6/23/2022 2:48	11.25	106.49	6/22/2022 0:51	11.31	93.15	6/22/2022 2:08	5.71
6/22/2022 1:05	11.75	234.60	6/23/2022 2:49	11.27	106.24	6/22/2022 0:52	11.31	92.88	6/22/2022 2:09	5.75
6/22/2022 1:06	11.75	234.37	6/23/2022 2:50	11.28	106.43	6/22/2022 0:53	11.33	92.65	6/22/2022 2:10	5.77
6/22/2022 1:07	11.73	234.33	6/23/2022 2:51	11.26	106.46	6/22/2022 0:54	11.32	93.63	6/22/2022 2:11	5.74
6/22/2022 1:08	11.76	234.56	6/23/2022 2:52	11.25	106.54	6/22/2022 0:55	11.34	92.48	6/22/2022 2:12	5.73
6/22/2022 1:09	11.74	234.44	6/23/2022 2:53	11.28	106.46	6/22/2022 0:56	11.35	93.24	6/22/2022 2:13	5.75
6/22/2022 1:10	11.74	234.72	6/23/2022 2:54	11.26	106.48	6/22/2022 0:57	11.36	92.63	6/22/2022 2:14	5.75
6/22/2022 1:11	11.74	234.40	6/23/2022 2:55	11.26	106.32	6/22/2022 0:58	11.36	92.99	6/22/2022 2:15	5.72
6/22/2022 1:12	11.72	234.61	6/23/2022 2:56	11.28	106.29	6/22/2022 0:59	11.33	92.78	6/22/2022 2:16	5.75
6/22/2022 1:13	11.76	234.51	6/23/2022 2:57	11.31	106.39	6/22/2022 1:00	11.33	93.75	6/22/2022 2:17	5.77
6/22/2022 1:14	11.77	234.58	6/23/2022 2:58	11.27	106.47	6/22/2022 1:01	11.31	94.13	6/22/2022 2:18	5.77
6/22/2022 1:15	11.73	234.46	6/23/2022 2:59	11.24	106.37	6/22/2022 1:02	11.31	94.10	6/22/2022 2:19	5.77
6/22/2022 1:16	11.74	234.76	6/23/2022 3:00	11.27	106.45	6/22/2022 1:03	11.33	92.91	6/22/2022 2:20	5.80
6/22/2022 1:17	11.75	234.41	6/23/2022 3:01	11.26	106.53	6/22/2022 1:04	11.39	93.91	6/22/2022 2:21	5.78
6/22/2022 1:18	11.76	234.71	6/23/2022 3:02	11.27	106.47	6/22/2022 1:05	11.32	93.27	6/22/2022 2:22	5.76
6/22/2022 1:19	11.76	234.47	6/23/2022 3:03	11.26	106.62	6/22/2022 1:06	11.39	93.60	6/22/2022 2:23	5.73
6/22/2022 1:20	11.76	234.59	6/23/2022 3:04	11.29	106.64	6/22/2022 1:07	11.31	93.29	6/22/2022 2:24	5.75
6/22/2022 1:21	11.76	234.66	6/23/2022 3:05	11.25	106.48	6/22/2022 1:08	11.39	93.47	6/22/2022 2:25	5.83
6/22/2022 1:22	11.73	234.74	6/23/2022 3:06	11.28	106.41	6/22/2022 1:09	11.35	93.47	6/22/2022 2:26	5.76
6/22/2022 1:23	11.74	234.60	6/23/2022 3:07	11.27	106.48	6/22/2022 1:10	11.30	93.72	6/22/2022 2:27	5.77
6/22/2022 1:24	11.74	234.55	6/23/2022 3:08	11.28	106.37	6/22/2022 1:11	11.35	92.74	6/22/2022 2:28	5.79
6/22/2022 1:25	11.72	234.64	6/23/2022 3:09	11.28	106.56	6/22/2022 1:12	11.33	93.72	6/22/2022 2:29	5.73
6/22/2022 1:26	11.74	234.74	6/23/2022 3:10	11.25	106.49	6/22/2022 1:13	11.32	93.84	6/22/2022 2:30	5.84
6/22/2022 1:27	11.75	234.79	6/23/2022 3:11	11.28	106.65	6/22/2022 1:14	11.36	93.59	6/22/2022 2:31	5.74
6/22/2022 1:28	11.76	234.71	6/23/2022 3:12	11.26	106.54	6/22/2022 1:15	11.31	93.60	6/22/2022 2:32	5.79
6/22/2022 1:29	11.76	234.77	6/23/2022 3:13	11.26	106.49	6/22/2022 1:16	11.35	92.64	6/22/2022 2:33	5.85
6/22/2022 1:30	11.72	234.86	6/23/2022 3:14	11.28	106.73	6/22/2022 1:17	11.34	93.26	6/22/2022 2:34	5.78
6/22/2022 1:31	11.78	235.04	6/23/2022 3:15	11.26	106.59	6/22/2022 1:18	11.33	93.45	6/22/2022 2:35	5.78
6/22/2022 1:32	11.77	234.95	6/23/2022 3:16	11.26	106.62	6/22/2022 1:19	11.35	93.35	6/22/2022 2:36	5.78
6/22/2022 1:33	11.75	235.29	6/23/2022 3:17	11.25	106.73	6/22/2022 1:20	11.35	93.65	6/22/2022 2:37	5.79
6/22/2022 1:34	11.74	235.24	6/23/2022 3:18	11.27	106.57	6/22/2022 1:21	11.32	93.09	6/22/2022 2:38	5.79
6/22/2022 1:35	11.75	234.94	6/23/2022 3:19	11.26	106.43	6/22/2022 1:22	11.32	93.57	6/22/2022 2:39	5.80
6/22/2022 1:36	11.75	235.22	6/23/2022 3:20	11.28	106.56	6/22/2022 1:23	11.37	93.14	6/22/2022 2:40	5.82
6/22/2022 1:37	11.76	234.97	6/23/2022 3:21	11.26	106.61	6/22/2022 1:24	11.33	93.64	6/22/2022 2:41	5.78
6/22/2022 1:38	11.76	234.94	6/23/2022 3:22	11.25	106.44	6/22/2022 1:25	11.37	93.58	6/22/2022 2:42	5.80
6/22/2022 1:39	11.76	235.10	6/23/2022 3:23	11.27	106.57	6/22/2022 1:26	11.33	92.66	6/22/2022 2:43	5.81
6/22/2022 1:40	11.74	235.14	6/23/2022 3:24	11.27	106.54	6/22/2022 1:27	11.33	92.74	6/22/2022 2:44	5.83
6/22/2022 1:41	11.73	235.04	6/23/2022 3:25	11.29	106.44	6/22/2022 1:28	11.38	94.24	6/22/2022 2:45	5.85
6/22/2022 1:42	11.74	234.95	6/23/2022 3:26	11.27	106.65	6/22/2022 1:29	11.32	93.33	6/22/2022 2:46	5.82
6/22/2022 1:43	11.76	235.11	6/23/2022 3:27	11.30	106.62	6/22/2022 1:30	11.33	93.88	6/22/2022 2:47	5.82
6/22/2022 1:44	11.73	235.06	6/23/2022 3:28	11.26	106.57	6/22/2022 1:31	11.31	93.82	6/22/2022 2:48	5.83
6/22/2022 1:45	11.76	235.30	6/23/2022 3:29	11.27	106.40	6/22/2022 1:32	11.37	94.70	6/22/2022 2:49	5.82
6/22/2022 1:46	11.76	235.23	6/23/2022 3:30	11.24	106.49	6/22/2022 1:33	11.33	94.03	6/22/2022 2:50	5.83
6/22/2022 1:47	11.74	235.06	6/23/2022 3:31	11.28	106.52	6/22/2022 1:34	11.38	93.14	6/22/2022 2:51	5.82
6/22/2022 1:48	11.75	235.30	6/23/2022 3:32	11.26	106.62	6/22/2022 1:35	11.35	93.30	6/22/2022 2:52	5.85
6/22/2022 1:49	11.75	235.17	6/23/2022 3:33	11.26	106.38	6/22/2022 1:36	11.37	93.21	6/22/2022 2:53	5.77
6/22/2022 1:50	11.74	235.37	6/23/2022 3:34	11.26	106.50	6/22/2022 1:37	11.37	93.47	6/22/2022 2:54	5.85
6/22/2022 1:51	11.77	235.22	6/23/2022 3:35	11.26	106.53	6/22/2022 1:38	11.36	94.18	6/22/2022 2:55	5.83
6/22/2022 1:52	11.74	235.19	6/23/2022 3:36	11.26	106.73	6/22/2022 1:39	11.37	93.53	6/22/2022 2:56	5.81
6/22/2022 1:53	11.74	235.47	6/23/2022 3:37	11.27	106.65	6/22/2022 1:40	11.35	94.13	6/22/2022 2:57	5.82
6/22/2022 1:54	11.78	235.18	6/23/2022 3:38	11.24	106.73	6/22/2022 1:41	11.34	93.80	6/22/2022 2:58	5.85
6/22/2022 1:55	11.75	235.27	6/23/2022 3:39	11.27	106.63	6/22/2022 1:42	11.37	93.77	6/22/2022 2:59	5.87
6/22/2022 1:56	11.74	235.30	6/23/2022 3:40	11.24	106.49	6/22/2022 1:43	11.34	93.54	6/22/2022 3:00	5.85
6/22/2022 1:57	11.74	235.54	6/23/2022 3:41	11.29	106.61	6/22/2022 1:44	11.36	93.04	6/22/2022 3:01	5.89
6/22/2022 1:58	11.75	235.29	6/23/2022 3:42	11.29	106.50	6/22/2022 1:45	11.33	93.94	6/22/2022 3:02	5.78

6/22/2022 1:59	11.72	235.56	6/23/2022 3:43	11.26	106.54	6/22/2022 1:46	11.38	93.48	6/22/2022 3:03	5.83
6/22/2022 2:00	11.77	235.39	6/23/2022 3:44	11.27	106.82	6/22/2022 1:47	11.38	93.53	6/22/2022 3:04	5.84
6/22/2022 2:01	11.77	235.30	6/23/2022 3:45	11.28	106.61	6/22/2022 1:48	11.34	93.94	6/22/2022 3:05	5.89
6/22/2022 2:02	11.74	235.31	6/23/2022 3:46	11.26	106.52	6/22/2022 1:49	11.36	93.17	6/22/2022 3:06	5.85
6/22/2022 2:03	11.75	235.49	6/23/2022 3:47	11.27	106.47	6/22/2022 1:50	11.37	93.09	6/22/2022 3:07	5.87
6/22/2022 2:04	11.75	235.47	6/23/2022 3:48	11.25	106.47	6/22/2022 1:51	11.35	93.30	6/22/2022 3:08	5.82
6/22/2022 2:05	11.76	235.51	6/23/2022 3:49	11.26	106.44	6/22/2022 1:52	11.32	93.90	6/22/2022 3:09	5.80
6/22/2022 2:06	11.75	235.43	6/23/2022 3:50	11.29	106.74	6/22/2022 1:53	11.37	93.26	6/22/2022 3:10	5.85
6/22/2022 2:07	11.75	235.32	6/23/2022 3:51	11.27	106.53	6/22/2022 1:54	11.38	93.19	6/22/2022 3:11	5.85
6/22/2022 2:08	11.75	235.52	6/23/2022 3:52	11.27	106.49	6/22/2022 1:55	11.35	92.81	6/22/2022 3:12	5.90
6/22/2022 2:09	11.74	235.61	6/23/2022 3:53	11.27	106.54	6/22/2022 1:56	11.32	93.80	6/22/2022 3:13	5.84
6/22/2022 2:10	11.76	235.40	6/23/2022 3:54	11.24	106.50	6/22/2022 1:57	11.38	93.46	6/22/2022 3:14	5.85
6/22/2022 2:11	11.71	235.67	6/23/2022 3:55	11.27	106.90	6/22/2022 1:58	11.30	94.82	6/22/2022 3:15	5.84
6/22/2022 2:12	11.75	235.54	6/23/2022 3:56	11.26	106.57	6/22/2022 1:59	11.35	93.31	6/22/2022 3:16	5.88
6/22/2022 2:13	11.73	235.64	6/23/2022 3:57	11.26	106.55	6/22/2022 2:00	11.39	94.30	6/22/2022 3:17	5.86
6/22/2022 2:14	11.76	235.43	6/23/2022 3:58	11.26	106.71	6/22/2022 2:01	11.34	93.70	6/22/2022 3:18	5.87
6/22/2022 2:15	11.76	235.57	6/23/2022 3:59	11.25	106.52	6/22/2022 2:02	11.37	93.95	6/22/2022 3:19	5.83
6/22/2022 2:16	11.75	235.50	6/23/2022 4:00	11.23	106.70	6/22/2022 2:03	11.37	94.01	6/22/2022 3:20	5.89
6/22/2022 2:17	11.75	235.60	6/23/2022 4:01	11.27	106.88	6/22/2022 2:04	11.34	94.34	6/22/2022 3:21	5.89
6/22/2022 2:18	11.75	235.47	6/23/2022 4:02	11.26	106.71	6/22/2022 2:05	11.36	92.99	6/22/2022 3:22	5.93
6/22/2022 2:19	11.75	235.53	6/23/2022 4:03	11.27	106.82	6/22/2022 2:06	11.35	93.33	6/22/2022 3:23	5.92
6/22/2022 2:20	11.74	235.55	6/23/2022 4:04	11.25	106.56	6/22/2022 2:07	11.36	94.13	6/22/2022 3:24	5.87
6/22/2022 2:21	11.73	235.48	6/23/2022 4:05	11.24	106.48	6/22/2022 2:08	11.36	93.79	6/22/2022 3:25	5.87
6/22/2022 2:22	11.73	235.68	6/23/2022 4:06	11.28	106.63	6/22/2022 2:09	11.32	93.83	6/22/2022 3:26	5.89
6/22/2022 2:23	11.76	235.55	6/23/2022 4:07	11.26	106.67	6/22/2022 2:10	11.37	94.36	6/22/2022 3:27	5.89
6/22/2022 2:24	11.73	235.63	6/23/2022 4:08	11.26	106.82	6/22/2022 2:11	11.33	93.17	6/22/2022 3:28	5.88
6/22/2022 2:25	11.78	235.61	6/23/2022 4:09	11.28	106.70	6/22/2022 2:12	11.35	94.33	6/22/2022 3:29	5.89
6/22/2022 2:26	11.75	235.74	6/23/2022 4:10	11.27	106.63	6/22/2022 2:13	11.33	93.54	6/22/2022 3:30	5.90
6/22/2022 2:27	11.76	235.70	6/23/2022 4:11	11.27	106.57	6/22/2022 2:14	11.33	93.25	6/22/2022 3:31	5.93
6/22/2022 2:28	11.73	235.68	6/23/2022 4:12	11.28	106.75	6/22/2022 2:15	11.34	94.05	6/22/2022 3:32	5.95
6/22/2022 2:29	11.76	235.60	6/23/2022 4:13	11.26	106.55	6/22/2022 2:16	11.35	92.88	6/22/2022 3:33	5.94
6/22/2022 2:30	11.74	235.74	6/23/2022 4:14	11.26	106.77	6/22/2022 2:17	11.37	94.26	6/22/2022 3:34	5.92
6/22/2022 2:31	11.75	235.58	6/23/2022 4:15	11.26	106.84	6/22/2022 2:18	11.35	92.72	6/22/2022 3:35	5.89
6/22/2022 2:32	11.76	235.79	6/23/2022 4:16	11.26	106.61	6/22/2022 2:19	11.31	93.12	6/22/2022 3:36	5.90
6/22/2022 2:33	11.75	235.64	6/23/2022 4:17	11.25	106.65	6/22/2022 2:20	11.34	94.16	6/22/2022 3:37	5.93
6/22/2022 2:34	11.78	235.53	6/23/2022 4:18	11.25	106.48	6/22/2022 2:21	11.35	94.50	6/22/2022 3:38	5.92
6/22/2022 2:35	11.74	235.72	6/23/2022 4:19	11.25	106.68	6/22/2022 2:22	11.36	93.26	6/22/2022 3:39	5.88
6/22/2022 2:36	11.77	235.92	6/23/2022 4:20	11.26	106.74	6/22/2022 2:23	11.37	93.25	6/22/2022 3:40	5.97
6/22/2022 2:37	11.75	235.82	6/23/2022 4:21	11.24	106.62	6/22/2022 2:24	11.33	93.28	6/22/2022 3:41	5.92
6/22/2022 2:38	11.75	235.48	6/23/2022 4:22	11.24	106.78	6/22/2022 2:25	11.36	93.44	6/22/2022 3:42	5.90
6/22/2022 2:39	11.75	235.61	6/23/2022 4:23	11.27	106.55	6/22/2022 2:26	11.34	93.09	6/22/2022 3:43	5.94
6/22/2022 2:40	11.76	235.78	6/23/2022 4:24	11.26	106.69	6/22/2022 2:27	11.36	93.40	6/22/2022 3:44	5.91
6/22/2022 2:41	11.77	235.89	6/23/2022 4:25	11.26	106.75	6/22/2022 2:28	11.38	93.35	6/22/2022 3:45	5.91
6/22/2022 2:42	11.76	236.00	6/23/2022 4:26	11.28	106.70	6/22/2022 2:29	11.36	92.86	6/22/2022 3:46	5.91
6/22/2022 2:43	11.75	235.79	6/23/2022 4:27	11.26	106.77	6/22/2022 2:30	11.31	92.62	6/22/2022 3:47	5.97
6/22/2022 2:44	11.73	235.72	6/23/2022 4:28	11.23	106.51	6/22/2022 2:31	11.36	93.00	6/22/2022 3:48	5.93
6/22/2022 2:45	11.73	235.95	6/23/2022 4:29	11.26	106.68	6/22/2022 2:32	11.37	93.14	6/22/2022 3:49	5.93
6/22/2022 2:46	11.76	235.80	6/23/2022 4:30	11.25	106.66	6/22/2022 2:33	11.36	93.30	6/22/2022 3:50	5.91
6/22/2022 2:47	11.73	235.83	6/23/2022 4:31	11.26	106.64	6/22/2022 2:34	11.32	93.11	6/22/2022 3:51	5.99
6/22/2022 2:48	11.77	235.75	6/23/2022 4:32	11.24	106.83	6/22/2022 2:35	11.38	93.44	6/22/2022 3:52	5.90
6/22/2022 2:49	11.74	235.76	6/23/2022 4:33	11.29	106.68	6/22/2022 2:36	11.30	94.27	6/22/2022 3:53	5.92
6/22/2022 2:50	11.76	236.01	6/23/2022 4:34	11.27	106.71	6/22/2022 2:37	11.33	93.59	6/22/2022 3:54	5.88
6/22/2022 2:51	11.76	235.96	6/23/2022 4:35	11.26	106.69	6/22/2022 2:38	11.38	92.94	6/22/2022 3:55	5.91
6/22/2022 2:52	11.75	235.78	6/23/2022 4:36	11.28	106.72	6/22/2022 2:39	11.33	93.32	6/22/2022 3:56	5.91
6/22/2022 2:53	11.74	235.87	6/23/2022 4:37	11.26	106.96	6/22/2022 2:40	11.32	94.44	6/22/2022 3:57	5.95
6/22/2022 2:54	11.71	235.67	6/23/2022 4:38	11.28	106.74	6/22/2022 2:41	11.33	94.20	6/22/2022 3:58	5.87
6/22/2022 2:55	11.76	236.06	6/23/2022 4:39	11.27	106.62	6/22/2022 2:42	11.33	93.68	6/22/2022 3:59	5.90
6/22/2022 2:56	11.74	235.93	6/23/2022 4:40	11.27	106.80	6/22/2022 2:43	11.37	93.22	6/22/2022 4:00	5.99
6/22/2022 2:57	11.75	235.95	6/23/2022 4:41	11.27	106.85	6/22/2022 2:44	11.33	93.73	6/22/2022 4:01	5.92
6/22/2022 2:58	11.74	235.99	6/23/2022 4:42	11.24	106.72	6/22/2022 2:45	11.32	93.39	6/22/2022 4:02	5.91
6/22/2022 2:59	11.76	235.98	6/23/2022 4:43	11.27	106.73	6/22/2022 2:46	11.30	92.97	6/22/2022 4:03	5.92
6/22/2022 3:00	11.75	236.02	6/23/2022 4:44	11.24	106.74	6/22/2022 2:47	11.34	93.56	6/22/2022 4:04	5.92
6/22/2022 3:01	11.72	236.08	6/23/2022 4:45	11.28	106.80	6/22/2022 2:48	11.35	93.74	6/22/2022 4:05	5.96
6/22/2022 3:02	11.76	235.96	6/23/2022 4:46	11.25	106.69	6/22/2022 2:49	11.32	93.77	6/22/2022 4:06	5.92
6/22/2022 3:03	11.74	236.16	6/23/2022 4:47	11.25	106.66	6/22/2022 2:50	11.35	93.07	6/22/2022 4:07	5.95
6/22/2022 3:04	11.76	236.04	6/23/2022 4:48	11.22	106.85	6/22/2022 2:51	11.32	93.64	6/22/2022 4:08	6.00
6/22/2022 3:05	11.73	236.29	6/23/2022 4:49	11.29	106.62	6/22/2022 2:52	11.35	93.74	6/22/2022 4:09	5.95
6/22/2022 3:06	11.74	235.91	6/23/2022 4:50	11.27	106.72	6/22/2022 2:53	11.36	93.46	6/22/2022 4:10	5.88
6/22/2022 3:07	11.74	235.92	6/23/2022 4:51	11.28	106.73	6/22/2022 2:54	11.31	94.38	6/22/2022 4:11	5.93
6/22/2022 3:08	11.75	235.96	6/23/2022 4:52	11.26	106.69	6/22/2022 2:55	11.34	92.31	6/22/2022 4:12	5.89
6/22/2022 3:09	11.76	235.97	6/23/2022 4:53	11.27	106.76	6/22/2022 2:56	11.37	93.19	6/22/2022 4:13	5.96
6/22/2022 3:10	11.75	236.16	6/23/2022 4:54	11.26	106.84	6/22/2022 2:57	11.34	93.66	6/22/2022 4:14	5.94
6/22/2022 3:11	11.75	236.09	6/23/2022 4:55	11.27	106.60	6/22/2022 2:58	11.36	93.41	6/22/2022 4:15	5.93
6/22/2022 3:12	11.77	236.28	6/23/2022 4:56	11.25	106.98	6/22/2022 2:59	11.38	93.75	6/22/2022 4:16	5.98
6/22/2022 3:13	11.75	236.07	6/23/2022 4:57	11.25	106.66	6/22/2022 3:00	11.35	93.83	6/22/2022 4:17	5.89
6/22/2022 3:14	11.75	235.95	6/23/2022 4:58	11.28	106.56	6/22/2022 3:01	11.33	93.54	6/22/2022 4:18	5.92
6/22/2022 3:15	11.73	236.31	6/23/2022 4:59	11.26	106.61	6/22/2022 3:02	11.35	93.78	6/22/2022 4:19	5.89
6/22/2022 3:16	11.77	236.22	6/23/2022 5:00	11.26	106.86	6/22/2022 3:03	11.32	93.89	6/22/2022 4:20	5.93
6/22/2022 3:17	11.75	236.11	6/23/2022 5:01	11.26	106.83	6/22/2022 3:04	11.36	93.86	6/22/2022 4:21	5.97
6/22/2022 3:18	11.73	236.28	6/23/2022 5:02	11.27	106.90	6/22/2022 3:05	11.36	94.16	6/22/2022 4:22	5.94
6/22/2022 3:19	11.73	236.28	6/23/2022 5:03	11.26	106.76	6/22/2022 3:06	11.34	93.63	6/22/2022 4:23	5.96
6/22/2022 3:20	11.73	236.35	6/23/2022 5:04	11.25	106.88	6/22/2022 3:07	11.35	93.37	6/22/2022 4:24	5.92
6/22/2022 3:21	11.75	236.43	6/23/2022 5:05	11.26	106.78	6/22/2022 3:08	11.33	94.43	6/22/2022 4:25	5.92
6/22/2022 3:22	11.76	236.46	6/23/2022 5:06	11.28	106.89	6/22/2022 3:09	11.35	93.53	6/22/2022 4:26	5.96
6/22/2022 3:23	11.74	236.30	6/23/2022 5:07	11.27	106.80	6/22/2022 3:10	11.39	93.08	6/22/2022 4:27	6.01
6/22/2022 3:24	11.77	236.25	6/23/2022 5:08	11.27	106.70	6/22/2022 3:11	11.30	93.47	6/22/2022 4:28	5.98
6/22/2022 3:25	11.73	236.20	6/23/2022 5:09	11.27	106.79	6/22/2022 3:12	11.33	93.87	6/22/2022 4:29	5.97
6/22/2022 3:26	11.73	236.21	6/23/2022 5:10	11.25	106.73	6/22/2022 3:13	11.33	93.49	6/22/2022 4:30	5.97

6/22/2022 3:27	11.75	236.25	6/23/2022 5:11	11.25	106.80	6/22/2022 3:14	11.33	93.80	6/22/2022 4:31	5.95
6/22/2022 3:28	11.78	236.22	6/23/2022 5:12	11.27	106.96	6/22/2022 3:15	11.37	93.71	6/22/2022 4:32	5.96
6/22/2022 3:29	11.76	236.51	6/23/2022 5:13	11.28	106.83	6/22/2022 3:16	11.33	93.41	6/22/2022 4:33	6.00
6/22/2022 3:30	11.78	236.19	6/23/2022 5:14	11.27	106.86	6/22/2022 3:17	11.36	93.05	6/22/2022 4:34	6.00
6/22/2022 3:31	11.72	236.14	6/23/2022 5:15	11.26	106.76	6/22/2022 3:18	11.33	93.28	6/22/2022 4:35	5.90
6/22/2022 3:32	11.75	236.34	6/23/2022 5:16	11.26	106.68	6/22/2022 3:19	11.37	92.95	6/22/2022 4:36	5.96
6/22/2022 3:33	11.74	236.21	6/23/2022 5:17	11.25	106.78	6/22/2022 3:20	11.36	94.02	6/22/2022 4:37	5.95
6/22/2022 3:34	11.75	236.27	6/23/2022 5:18	11.25	106.78	6/22/2022 3:21	11.32	94.77	6/22/2022 4:38	5.96
6/22/2022 3:35	11.74	236.28	6/23/2022 5:19	11.25	106.91	6/22/2022 3:22	11.34	93.32	6/22/2022 4:39	5.93
6/22/2022 3:36	11.76	236.32	6/23/2022 5:20	11.27	106.77	6/22/2022 3:23	11.31	93.89	6/22/2022 4:40	5.95
6/22/2022 3:37	11.74	236.44	6/23/2022 5:21	11.23	106.86	6/22/2022 3:24	11.34	93.58	6/22/2022 4:41	5.98
6/22/2022 3:38	11.75	236.44	6/23/2022 5:22	11.26	106.95	6/22/2022 3:25	11.33	93.37	6/22/2022 4:42	5.95
6/22/2022 3:39	11.74	236.35	6/23/2022 5:23	11.26	106.73	6/22/2022 3:26	11.31	93.65	6/22/2022 4:43	5.96
6/22/2022 3:40	11.77	236.52	6/23/2022 5:24	11.27	106.84	6/22/2022 3:27	11.34	91.51	6/22/2022 4:44	5.96
6/22/2022 3:41	11.75	236.70	6/23/2022 5:25	11.27	106.79	6/22/2022 3:28	11.36	93.34	6/22/2022 4:45	5.98
6/22/2022 3:42	11.73	236.46	6/23/2022 5:26	11.29	106.90	6/22/2022 3:29	11.32	93.07	6/22/2022 4:46	5.97
6/22/2022 3:43	11.75	236.43	6/23/2022 5:27	11.28	106.77	6/22/2022 3:30	11.31	94.08	6/22/2022 4:47	5.98
6/22/2022 3:44	11.74	236.17	6/23/2022 5:28	11.26	106.66	6/22/2022 3:31	11.35	92.94	6/22/2022 4:48	5.97
6/22/2022 3:45	11.76	236.32	6/23/2022 5:29	11.28	106.88	6/22/2022 3:32	11.34	93.49	6/22/2022 4:49	5.95
6/22/2022 3:46	11.75	236.23	6/23/2022 5:30	11.26	106.98	6/22/2022 3:33	11.36	94.22	6/22/2022 4:50	5.94
6/22/2022 3:47	11.73	236.40	6/23/2022 5:31	11.24	106.78	6/22/2022 3:34	11.36	94.62	6/22/2022 4:51	5.96
6/22/2022 3:48	11.76	236.60	6/23/2022 5:32	11.27	106.75	6/22/2022 3:35	11.32	93.73	6/22/2022 4:52	5.97
6/22/2022 3:49	11.76	236.60	6/23/2022 5:33	11.27	106.96	6/22/2022 3:36	11.34	94.35	6/22/2022 4:53	5.97
6/22/2022 3:50	11.75	236.46	6/23/2022 5:34	11.28	106.86	6/22/2022 3:37	11.35	93.88	6/22/2022 4:54	5.95
6/22/2022 3:51	11.75	236.39	6/23/2022 5:35	11.28	106.78	6/22/2022 3:38	11.33	93.34	6/22/2022 4:55	6.00
6/22/2022 3:52	11.78	236.58	6/23/2022 5:36	11.28	106.87	6/22/2022 3:39	11.34	93.16	6/22/2022 4:56	5.94
6/22/2022 3:53	11.74	236.43	6/23/2022 5:37	11.26	106.92	6/22/2022 3:40	11.35	93.63	6/22/2022 4:57	5.95
6/22/2022 3:54	11.76	236.56	6/23/2022 5:38	11.27	106.85	6/22/2022 3:41	11.36	93.88	6/22/2022 4:58	5.96
6/22/2022 3:55	11.74	236.62	6/23/2022 5:39	11.26	106.93	6/22/2022 3:42	11.31	93.63	6/22/2022 4:59	5.99
6/22/2022 3:56	11.75	236.46	6/23/2022 5:40	11.25	106.82	6/22/2022 3:43	11.37	93.46	6/22/2022 5:00	6.00
6/22/2022 3:57	11.77	236.60	6/23/2022 5:41	11.26	106.97	6/22/2022 3:44	11.37	93.96	6/22/2022 5:01	5.97
6/22/2022 3:58	11.76	236.60	6/23/2022 5:42	11.28	107.01	6/22/2022 3:45	11.36	93.39	6/22/2022 5:02	5.96
6/22/2022 3:59	11.73	236.57	6/23/2022 5:43	11.27	106.95	6/22/2022 3:46	11.34	93.66	6/22/2022 5:03	5.96
6/22/2022 4:00	11.76	236.64	6/23/2022 5:44	11.27	107.10	6/22/2022 3:47	11.35	94.28	6/22/2022 5:04	6.01
6/22/2022 4:01	11.73	236.51	6/23/2022 5:45	11.25	107.10	6/22/2022 3:48	11.34	94.11	6/22/2022 5:05	5.96
6/22/2022 4:02	11.76	236.65	6/23/2022 5:46	11.27	106.83	6/22/2022 3:49	11.35	94.91	6/22/2022 5:06	5.98
6/22/2022 4:03	11.74	236.74	6/23/2022 5:47	11.26	106.81	6/22/2022 3:50	11.37	93.42	6/22/2022 5:07	5.95
6/22/2022 4:04	11.75	236.54	6/23/2022 5:48	11.25	106.93	6/22/2022 3:51	11.35	93.79	6/22/2022 5:08	5.98
6/22/2022 4:05	11.75	236.67	6/23/2022 5:49	11.24	106.68	6/22/2022 3:52	11.36	94.13	6/22/2022 5:09	5.97
6/22/2022 4:06	11.75	236.60	6/23/2022 5:50	11.28	106.81	6/22/2022 3:53	11.34	93.80	6/22/2022 5:10	5.97
6/22/2022 4:07	11.77	236.63	6/23/2022 5:51	11.26	106.89	6/22/2022 3:54	11.37	94.16	6/22/2022 5:11	5.99
6/22/2022 4:08	11.73	236.59	6/23/2022 5:52	11.28	106.97	6/22/2022 3:55	11.31	94.57	6/22/2022 5:12	6.01
6/22/2022 4:09	11.75	236.44	6/23/2022 5:53	11.27	106.87	6/22/2022 3:56	11.36	93.86	6/22/2022 5:13	5.99
6/22/2022 4:10	11.76	236.67	6/23/2022 5:54	11.26	106.84	6/22/2022 3:57	11.37	94.40	6/22/2022 5:14	6.01
6/22/2022 4:11	11.72	236.60	6/23/2022 5:55	11.25	106.80	6/22/2022 3:58	11.37	93.76	6/22/2022 5:15	6.01
6/22/2022 4:12	11.77	236.66	6/23/2022 5:56	11.28	106.91	6/22/2022 3:59	11.35	94.42	6/22/2022 5:16	5.99
6/22/2022 4:13	11.76	236.71	6/23/2022 5:57	11.25	107.25	6/22/2022 4:00	11.32	93.83	6/22/2022 5:17	5.98
6/22/2022 4:14	11.76	236.69	6/23/2022 5:58	11.27	107.23	6/22/2022 4:01	11.35	93.59	6/22/2022 5:18	6.03
6/22/2022 4:15	11.76	236.82	6/23/2022 5:59	11.24	106.70	6/22/2022 4:02	11.38	94.26	6/22/2022 5:19	6.00
6/22/2022 4:16	11.72	236.59	6/23/2022 6:00	11.27	106.94	6/22/2022 4:03	11.36	93.74	6/22/2022 5:20	5.99
6/22/2022 4:17	11.72	236.77	6/23/2022 6:01	11.27	106.90	6/22/2022 4:04	11.31	94.34	6/22/2022 5:21	5.99
6/22/2022 4:18	11.74	236.84	6/23/2022 6:02	11.26	107.09	6/22/2022 4:05	11.34	94.04	6/22/2022 5:22	5.98
6/22/2022 4:19	11.75	236.67	6/23/2022 6:03	11.25	107.02	6/22/2022 4:06	11.33	94.41	6/22/2022 5:23	5.99
6/22/2022 4:20	11.77	236.65	6/23/2022 6:04	11.26	107.06	6/22/2022 4:07	11.37	94.58	6/22/2022 5:24	5.96
6/22/2022 4:21	11.72	236.71	6/23/2022 6:05	11.26	106.85	6/22/2022 4:08	11.35	94.41	6/22/2022 5:25	6.04
6/22/2022 4:22	11.79	236.59	6/23/2022 6:06	11.25	107.01	6/22/2022 4:09	11.33	93.99	6/22/2022 5:26	5.98
6/22/2022 4:23	11.73	236.86	6/23/2022 6:07	11.25	107.07	6/22/2022 4:10	11.31	93.28	6/22/2022 5:27	6.02
6/22/2022 4:24	11.74	236.70	6/23/2022 6:08	11.27	106.93	6/22/2022 4:11	11.31	92.82	6/22/2022 5:28	5.98
6/22/2022 4:25	11.77	236.52	6/23/2022 6:09	11.26	106.71	6/22/2022 4:12	11.35	94.60	6/22/2022 5:29	6.01
6/22/2022 4:26	11.71	236.84	6/23/2022 6:10	11.27	106.97	6/22/2022 4:13	11.32	94.64	6/22/2022 5:30	6.03
6/22/2022 4:27	11.75	236.76	6/23/2022 6:11	11.27	106.91	6/22/2022 4:14	11.33	93.18	6/22/2022 5:31	6.03
6/22/2022 4:28	11.76	236.65	6/23/2022 6:12	11.28	107.02	6/22/2022 4:15	11.35	93.28	6/22/2022 5:32	6.03
6/22/2022 4:29	11.76	236.87	6/23/2022 6:13	11.28	107.02	6/22/2022 4:16	11.35	94.09	6/22/2022 5:33	6.03
6/22/2022 4:30	11.72	236.90	6/23/2022 6:14	11.25	106.93	6/22/2022 4:17	11.34	94.73	6/22/2022 5:34	5.96
6/22/2022 4:31	11.75	236.85	6/23/2022 6:15	11.26	106.87	6/22/2022 4:18	11.32	93.64	6/22/2022 5:35	5.95
6/22/2022 4:32	11.76	236.71	6/23/2022 6:16	11.28	107.02	6/22/2022 4:19	11.36	93.56	6/22/2022 5:36	5.97
6/22/2022 4:33	11.73	236.90	6/23/2022 6:17	11.27	107.00	6/22/2022 4:20	11.30	93.25	6/22/2022 5:37	6.07
6/22/2022 4:34	11.75	236.73	6/23/2022 6:18	11.25	107.23	6/22/2022 4:21	11.35	93.53	6/22/2022 5:38	6.08
6/22/2022 4:35	11.76	236.68	6/23/2022 6:19	11.26	107.03	6/22/2022 4:22	11.33	93.80	6/22/2022 5:39	6.03
6/22/2022 4:36	11.76	236.88	6/23/2022 6:20	11.28	107.04	6/22/2022 4:23	11.32	94.92	6/22/2022 5:40	6.00
6/22/2022 4:37	11.76	236.98	6/23/2022 6:21	11.27	107.02	6/22/2022 4:24	11.34	93.28	6/22/2022 5:41	6.06
6/22/2022 4:38	11.74	236.82	6/23/2022 6:22	11.28	106.91	6/22/2022 4:25	11.30	94.42	6/22/2022 5:42	6.05
6/22/2022 4:39	11.76	236.75	6/23/2022 6:23	11.26	107.11	6/22/2022 4:26	11.37	93.75	6/22/2022 5:43	6.06
6/22/2022 4:40	11.70	236.92	6/23/2022 6:24	11.28	106.95	6/22/2022 4:27	11.36	93.81	6/22/2022 5:44	6.02
6/22/2022 4:41	11.74	237.09	6/23/2022 6:25	11.28	107.16	6/22/2022 4:28	11.35	93.22	6/22/2022 5:45	5.97
6/22/2022 4:42	11.75	236.78	6/23/2022 6:26	11.26	106.99	6/22/2022 4:29	11.32	94.47	6/22/2022 5:46	6.09
6/22/2022 4:43	11.73	236.74	6/23/2022 6:27	11.28	107.09	6/22/2022 4:30	11.31	94.67	6/22/2022 5:47	6.03
6/22/2022 4:44	11.75	236.99	6/23/2022 6:28	11.29	107.02	6/22/2022 4:31	11.38	94.38	6/22/2022 5:48	6.03
6/22/2022 4:45	11.75	236.94	6/23/2022 6:29	11.27	107.00	6/22/2022 4:32	11.35	94.53	6/22/2022 5:49	6.03
6/22/2022 4:46	11.75	237.04	6/23/2022 6:30	11.27	106.92	6/22/2022 4:33	11.35	94.31	6/22/2022 5:50	6.02
6/22/2022 4:47	11.76	237.03	6/23/2022 6:31	11.27	106.98	6/22/2022 4:34	11.38	94.05	6/22/2022 5:51	6.04
6/22/2022 4:48	11.75	237.03	6/23/2022 6:32	11.27	107.21	6/22/2022 4:35	11.35	93.72	6/22/2022 5:52	6.06
6/22/2022 4:49	11.74	237.08	6/23/2022 6:33	11.30	107.09	6/22/2022 4:36	11.35	94.55	6/22/2022 5:53	6.04
6/22/2022 4:50	11.74	236.88	6/23/2022 6:34	11.28	107.05	6/22/2022 4:37	11.36	94.61	6/22/2022 5:54	6.04
6/22/2022 4:51	11.75	236.87	6/23/2022 6:35	11.26	107.01	6/22/2022 4:38	11.31	95.20	6/22/2022 5:55	6.07
6/22/2022 4:52	11.75	236.90	6/23/2022 6:36	11.23	106.94	6/22/2022 4:39	11.32	94.24	6/22/2022 5:56	6.02
6/22/2022 4:53	11.76	237.02	6/23/2022 6:37	11.26	106.99	6/22/2022 4:40	11.32	93.41	6/22/2022 5:57	6.08
6/22/2022 4:54	11.74	236.93	6/23/2022 6:38	11.27	107.07	6/22/2022 4:41	11.34	93.93	6/22/2022 5:58	6.07

6/22/2022 4:55	11.78	237.00	6/23/2022 6:39	11.25	106.94	6/22/2022 4:42	11.38	94.68	6/22/2022 5:59	6.04
6/22/2022 4:56	11.74	236.88	6/23/2022 6:40	11.26	107.05	6/22/2022 4:43	11.30	93.80	6/22/2022 6:00	6.10
6/22/2022 4:57	11.75	237.03	6/23/2022 6:41	11.26	107.15	6/22/2022 4:44	11.35	93.97	6/22/2022 6:01	6.05
6/22/2022 4:58	11.74	236.95	6/23/2022 6:42	11.26	106.89	6/22/2022 4:45	11.32	94.49	6/22/2022 6:02	6.04
6/22/2022 4:59	11.75	237.07	6/23/2022 6:43	11.24	107.02	6/22/2022 4:46	11.35	94.94	6/22/2022 6:03	6.05
6/22/2022 5:00	11.74	236.87	6/23/2022 6:44	11.28	106.94	6/22/2022 4:47	11.31	94.56	6/22/2022 6:04	6.02
6/22/2022 5:01	11.76	237.26	6/23/2022 6:45	11.26	107.02	6/22/2022 4:48	11.36	94.98	6/22/2022 6:05	6.04
6/22/2022 5:02	11.74	236.89	6/23/2022 6:46	11.27	107.11	6/22/2022 4:49	11.37	94.92	6/22/2022 6:06	6.02
6/22/2022 5:03	11.76	237.14	6/23/2022 6:47	11.25	107.10	6/22/2022 4:50	11.31	95.01	6/22/2022 6:07	6.03
6/22/2022 5:04	11.75	236.95	6/23/2022 6:48	11.26	107.18	6/22/2022 4:51	11.32	94.39	6/22/2022 6:08	6.06
6/22/2022 5:05	11.73	236.99	6/23/2022 6:49	11.27	107.06	6/22/2022 4:52	11.35	94.29	6/22/2022 6:09	6.02
6/22/2022 5:06	11.75	237.29	6/23/2022 6:50	11.27	107.02	6/22/2022 4:53	11.34	95.28	6/22/2022 6:10	6.01
6/22/2022 5:07	11.77	237.05	6/23/2022 6:51	11.26	107.08	6/22/2022 4:54	11.33	94.48	6/22/2022 6:11	6.11
6/22/2022 5:08	11.76	237.04	6/23/2022 6:52	11.27	106.98	6/22/2022 4:55	11.33	95.00	6/22/2022 6:12	6.06
6/22/2022 5:09	11.73	237.07	6/23/2022 6:53	11.27	107.03	6/22/2022 4:56	11.34	94.83	6/22/2022 6:13	6.01
6/22/2022 5:10	11.74	237.18	6/23/2022 6:54	11.28	107.15	6/22/2022 4:57	11.35	95.01	6/22/2022 6:14	6.09
6/22/2022 5:11	11.76	237.13	6/23/2022 6:55	11.26	107.00	6/22/2022 4:58	11.39	94.26	6/22/2022 6:15	6.08
6/22/2022 5:12	11.75	237.09	6/23/2022 6:56	11.26	107.30	6/22/2022 4:59	11.35	94.41	6/22/2022 6:16	6.08
6/22/2022 5:13	11.73	237.14	6/23/2022 6:57	11.26	107.15	6/22/2022 5:00	11.32	95.10	6/22/2022 6:17	6.07
6/22/2022 5:14	11.75	237.05	6/23/2022 6:58	11.26	106.88	6/22/2022 5:01	11.34	95.02	6/22/2022 6:18	6.08
6/22/2022 5:15	11.75	237.19	6/23/2022 6:59	11.26	107.10	6/22/2022 5:02	11.34	94.84	6/22/2022 6:19	6.04
6/22/2022 5:16	11.74	237.17	6/23/2022 7:00	11.27	107.10	6/22/2022 5:03	11.36	95.38	6/22/2022 6:20	6.08
6/22/2022 5:17	11.74	236.94	6/23/2022 7:01	11.29	107.03	6/22/2022 5:04	11.32	95.15	6/22/2022 6:21	6.02
6/22/2022 5:18	11.73	237.19	6/23/2022 7:02	11.23	107.11	6/22/2022 5:05	11.36	94.17	6/22/2022 6:22	6.05
6/22/2022 5:19	11.73	237.07	6/23/2022 7:03	11.29	107.28	6/22/2022 5:06	11.36	94.93	6/22/2022 6:23	6.08
6/22/2022 5:20	11.74	237.08	6/23/2022 7:04	11.27	107.16	6/22/2022 5:07	11.37	93.93	6/22/2022 6:24	6.03
6/22/2022 5:21	11.78	237.05	6/23/2022 7:05	11.24	107.01	6/22/2022 5:08	11.31	93.71	6/22/2022 6:25	6.14
6/22/2022 5:22	11.74	237.11	6/23/2022 7:06	11.28	107.05	6/22/2022 5:09	11.33	94.46	6/22/2022 6:26	6.12
6/22/2022 5:23	11.75	237.30	6/23/2022 7:07	11.26	107.18	6/22/2022 5:10	11.33	94.79	6/22/2022 6:27	6.04
6/22/2022 5:24	11.72	237.16	6/23/2022 7:08	11.25	107.02	6/22/2022 5:11	11.33	94.36	6/22/2022 6:28	6.08
6/22/2022 5:25	11.75	237.11	6/23/2022 7:09	11.25	107.27	6/22/2022 5:12	11.35	94.68	6/22/2022 6:29	6.06
6/22/2022 5:26	11.78	237.14	6/23/2022 7:10	11.26	106.99	6/22/2022 5:13	11.35	94.44	6/22/2022 6:30	6.11
6/22/2022 5:27	11.74	237.13	6/23/2022 7:11	11.28	107.23	6/22/2022 5:14	11.33	95.45	6/22/2022 6:31	6.09
6/22/2022 5:28	11.77	237.09	6/23/2022 7:12	11.27	107.26	6/22/2022 5:15	11.37	94.31	6/22/2022 6:32	6.08
6/22/2022 5:29	11.73	237.11	6/23/2022 7:13	11.27	107.10	6/22/2022 5:16	11.30	94.15	6/22/2022 6:33	6.09
6/22/2022 5:30	11.75	237.17	6/23/2022 7:14	11.27	107.09	6/22/2022 5:17	11.31	95.67	6/22/2022 6:34	6.12
6/22/2022 5:31	11.75	237.23	6/23/2022 7:15	11.26	107.17	6/22/2022 5:18	11.38	95.03	6/22/2022 6:35	6.15
6/22/2022 5:32	11.75	237.12	6/23/2022 7:16	11.25	107.23	6/22/2022 5:19	11.31	94.75	6/22/2022 6:36	6.15
6/22/2022 5:33	11.72	237.23	6/23/2022 7:17	11.29	107.20	6/22/2022 5:20	11.32	94.88	6/22/2022 6:37	6.14
6/22/2022 5:34	11.76	237.20	6/23/2022 7:18	11.26	107.23	6/22/2022 5:21	11.30	94.58	6/22/2022 6:38	6.09
6/22/2022 5:35	11.75	237.25	6/23/2022 7:19	11.27	107.45	6/22/2022 5:22	11.31	95.70	6/22/2022 6:39	6.09
6/22/2022 5:36	11.76	237.50	6/23/2022 7:20	11.25	106.98	6/22/2022 5:23	11.34	93.85	6/22/2022 6:40	6.16
6/22/2022 5:37	11.75	237.31	6/23/2022 7:21	11.27	107.28	6/22/2022 5:24	11.35	95.16	6/22/2022 6:41	6.10
6/22/2022 5:38	11.75	237.19	6/23/2022 7:22	11.27	107.29	6/22/2022 5:25	11.31	95.07	6/22/2022 6:42	6.07
6/22/2022 5:39	11.76	237.17	6/23/2022 7:23	11.29	107.06	6/22/2022 5:26	11.32	95.63	6/22/2022 6:43	6.09
6/22/2022 5:40	11.74	237.37	6/23/2022 7:24	11.25	107.09	6/22/2022 5:27	11.32	94.56	6/22/2022 6:44	6.11
6/22/2022 5:41	11.74	237.52	6/23/2022 7:25	11.27	106.99	6/22/2022 5:28	11.34	94.98	6/22/2022 6:45	6.11
6/22/2022 5:42	11.75	237.09	6/23/2022 7:26	11.26	107.17	6/22/2022 5:29	11.36	95.15	6/22/2022 6:46	6.17
6/22/2022 5:43	11.72	237.25	6/23/2022 7:27	11.26	107.13	6/22/2022 5:30	11.31	95.48	6/22/2022 6:47	6.16
6/22/2022 5:44	11.75	237.33	6/23/2022 7:28	11.25	107.14	6/22/2022 5:31	11.34	94.75	6/22/2022 6:48	6.17
6/22/2022 5:45	11.75	237.49	6/23/2022 7:29	11.28	107.30	6/22/2022 5:32	11.36	94.95	6/22/2022 6:49	6.14
6/22/2022 5:46	11.77	237.25	6/23/2022 7:30	11.29	107.30	6/22/2022 5:33	11.35	94.22	6/22/2022 6:50	6.15
6/22/2022 5:47	11.72	237.39	6/23/2022 7:31	11.25	107.27	6/22/2022 5:34	11.32	94.84	6/22/2022 6:51	6.16
6/22/2022 5:48	11.76	237.33	6/23/2022 7:32	11.28	107.33	6/22/2022 5:35	11.33	95.18	6/22/2022 6:52	6.13
6/22/2022 5:49	11.74	237.26	6/23/2022 7:33	11.25	107.18	6/22/2022 5:36	11.33	95.19	6/22/2022 6:53	6.13
6/22/2022 5:50	11.74	237.35	6/23/2022 7:34	11.26	107.19	6/22/2022 5:37	11.36	94.53	6/22/2022 6:54	6.13
6/22/2022 5:51	11.72	237.34	6/23/2022 7:35	11.25	107.10	6/22/2022 5:38	11.37	94.34	6/22/2022 6:55	6.18
6/22/2022 5:52	11.78	237.42	6/23/2022 7:36	11.25	107.23	6/22/2022 5:39	11.35	94.28	6/22/2022 6:56	6.13
6/22/2022 5:53	11.75	237.38	6/23/2022 7:37	11.29	107.24	6/22/2022 5:40	11.34	95.29	6/22/2022 6:57	6.16
6/22/2022 5:54	11.74	237.22	6/23/2022 7:38	11.27	107.39	6/22/2022 5:41	11.34	95.46	6/22/2022 6:58	6.16
6/22/2022 5:55	11.76	237.55	6/23/2022 7:39	11.26	107.27	6/22/2022 5:42	11.36	95.78	6/22/2022 6:59	6.12
6/22/2022 5:56	11.76	237.42	6/23/2022 7:40	11.26	107.33	6/22/2022 5:43	11.36	94.20	6/22/2022 7:00	6.19
6/22/2022 5:57	11.75	237.53	6/23/2022 7:41	11.28	107.22	6/22/2022 5:44	11.37	95.15	6/22/2022 7:01	6.13
6/22/2022 5:58	11.72	237.48	6/23/2022 7:42	11.28	107.19	6/22/2022 5:45	11.36	95.13	6/22/2022 7:02	6.16
6/22/2022 5:59	11.76	237.48	6/23/2022 7:43	11.27	107.20	6/22/2022 5:46	11.33	95.08	6/22/2022 7:03	6.15
6/22/2022 6:00	11.74	237.23	6/23/2022 7:44	11.26	107.16	6/22/2022 5:47	11.38	95.05	6/22/2022 7:04	6.16
6/22/2022 6:01	11.75	237.23	6/23/2022 7:45	11.26	107.30	6/22/2022 5:48	11.32	94.62	6/22/2022 7:05	6.17
6/22/2022 6:02	11.74	237.59	6/23/2022 7:46	11.28	107.49	6/22/2022 5:49	11.36	95.36	6/22/2022 7:06	6.16
6/22/2022 6:03	11.75	237.45	6/23/2022 7:47	11.26	107.08	6/22/2022 5:50	11.35	95.85	6/22/2022 7:07	6.20
6/22/2022 6:04	11.75	237.47	6/23/2022 7:48	11.30	107.15	6/22/2022 5:51	11.35	94.44	6/22/2022 7:08	6.18
6/22/2022 6:05	11.72	237.29	6/23/2022 7:49	11.28	107.30	6/22/2022 5:52	11.33	95.09	6/22/2022 7:09	6.18
6/22/2022 6:06	11.75	237.45	6/23/2022 7:50	11.27	107.26	6/22/2022 5:53	11.32	96.06	6/22/2022 7:10	6.19
6/22/2022 6:07	11.77	237.58	6/23/2022 7:51	11.26	107.19	6/22/2022 5:54	11.35	96.47	6/22/2022 7:11	6.17
6/22/2022 6:08	11.76	237.30	6/23/2022 7:52	11.25	107.14	6/22/2022 5:55	11.31	94.73	6/22/2022 7:12	6.19
6/22/2022 6:09	11.76	237.61	6/23/2022 7:53	11.29	107.19	6/22/2022 5:56	11.36	94.29	6/22/2022 7:13	6.16
6/22/2022 6:10	11.73	237.49	6/23/2022 7:54	11.29	107.33	6/22/2022 5:57	11.33	96.23	6/22/2022 7:14	6.22
6/22/2022 6:11	11.74	237.50	6/23/2022 7:55	11.26	107.41	6/22/2022 5:58	11.36	94.12	6/22/2022 7:15	6.21
6/22/2022 6:12	11.73	237.62	6/23/2022 7:56	11.24	107.46	6/22/2022 5:59	11.33	94.77	6/22/2022 7:16	6.18
6/22/2022 6:13	11.75	237.57	6/23/2022 7:57	11.28	107.31	6/22/2022 6:00	11.36	96.09	6/22/2022 7:17	6.11
6/22/2022 6:14	11.75	237.63	6/23/2022 7:58	11.28	107.37	6/22/2022 6:01	11.36	96.08	6/22/2022 7:18	6.20
6/22/2022 6:15	11.76	237.42	6/23/2022 7:59	11.26	107.28	6/22/2022 6:02	11.37	94.35	6/22/2022 7:19	6.13
6/22/2022 6:16	11.76	237.50	6/23/2022 8:00	11.26	107.44	6/22/2022 6:03	11.34	95.18	6/22/2022 7:20	6.20
6/22/2022 6:17	11.75	237.70	6/23/2022 8:01	11.25	107.26	6/22/2022 6:04	11.37	94.54	6/22/2022 7:21	6.19
6/22/2022 6:18	11.74	237.52	6/23/2022 8:02	11.27	107.34	6/22/2022 6:05	11.36	93.47	6/22/2022 7:22	6.17
6/22/2022 6:19	11.76	237.58	6/23/2022 8:03	11.26	107.38	6/22/2022 6:06	11.39	95.34	6/22/2022 7:23	6.20
6/22/2022 6:20	11.74	237.55	6/23/2022 8:04	11.27	107.34	6/22/2022 6:07	11.35	95.37	6/22/2022 7:24	6.11
6/22/2022 6:21	11.72	237.31	6/23/2022 8:05	11.26	107.25	6/22/2022 6:08	11.31	95.12	6/22/2022 7:25	6.19
6/22/2022 6:22	11.75	237.58	6/23/2022 8:06	11.28	107.23	6/22/2022 6:09	11.33	95.47	6/22/2022 7:26	6.17

6/22/2022 6:23	11.74	237.50	6/23/2022 8:07	11.26	107.36	6/22/2022 6:10	11.30	95.80	6/22/2022 7:27	6.20
6/22/2022 6:24	11.74	237.63	6/23/2022 8:08	11.23	107.19	6/22/2022 6:11	11.36	94.28	6/22/2022 7:28	6.21
6/22/2022 6:25	11.74	237.62	6/23/2022 8:09	11.27	107.21	6/22/2022 6:12	11.35	95.37	6/22/2022 7:29	6.23
6/22/2022 6:26	11.77	237.66	6/23/2022 8:10	11.29	107.26	6/22/2022 6:13	11.32	95.02	6/22/2022 7:30	6.24
6/22/2022 6:27	11.76	237.52	6/23/2022 8:11	11.27	107.15	6/22/2022 6:14	11.35	95.26	6/22/2022 7:31	6.13
6/22/2022 6:28	11.73	237.63	6/23/2022 8:12	11.29	107.26	6/22/2022 6:15	11.34	95.45	6/22/2022 7:32	6.21
6/22/2022 6:29	11.76	237.56	6/23/2022 8:13	11.28	107.33	6/22/2022 6:16	11.35	94.28	6/22/2022 7:33	6.18
6/22/2022 6:30	11.72	237.70	6/23/2022 8:14	11.26	107.27	6/22/2022 6:17	11.35	95.32	6/22/2022 7:34	6.19
6/22/2022 6:31	11.74	237.58	6/23/2022 8:15	11.27	107.27	6/22/2022 6:18	11.35	95.56	6/22/2022 7:35	6.15
6/22/2022 6:32	11.74	237.81	6/23/2022 8:16	11.27	107.25	6/22/2022 6:19	11.36	94.93	6/22/2022 7:36	6.20
6/22/2022 6:33	11.75	237.54	6/23/2022 8:17	11.27	107.26	6/22/2022 6:20	11.32	95.66	6/22/2022 7:37	6.19
6/22/2022 6:34	11.76	237.53	6/23/2022 8:18	11.25	107.30	6/22/2022 6:21	11.35	94.39	6/22/2022 7:38	6.18
6/22/2022 6:35	11.75	238.04	6/23/2022 8:19	11.28	107.29	6/22/2022 6:22	11.36	94.91	6/22/2022 7:39	6.14
6/22/2022 6:36	11.78	237.79	6/23/2022 8:20	11.26	107.25	6/22/2022 6:23	11.34	95.41	6/22/2022 7:40	6.15
6/22/2022 6:37	11.76	237.63	6/23/2022 8:21	11.27	107.30	6/22/2022 6:24	11.30	95.72	6/22/2022 7:41	6.25
6/22/2022 6:38	11.72	237.91	6/23/2022 8:22	11.29	107.39	6/22/2022 6:25	11.36	95.47	6/22/2022 7:42	6.14
6/22/2022 6:39	11.72	237.81	6/23/2022 8:23	11.27	107.53	6/22/2022 6:26	11.35	95.21	6/22/2022 7:43	6.21
6/22/2022 6:40	11.75	237.73	6/23/2022 8:24	11.24	107.41	6/22/2022 6:27	11.38	95.40	6/22/2022 7:44	6.19
6/22/2022 6:41	11.77	237.59	6/23/2022 8:25	11.27	107.37	6/22/2022 6:28	11.32	94.48	6/22/2022 7:45	6.17
6/22/2022 6:42	11.75	237.77	6/23/2022 8:26	11.27	107.40	6/22/2022 6:29	11.35	94.94	6/22/2022 7:46	6.22
6/22/2022 6:43	11.75	237.50	6/23/2022 8:27	11.27	107.38	6/22/2022 6:30	11.36	95.67	6/22/2022 7:47	6.19
6/22/2022 6:44	11.72	237.70	6/23/2022 8:28	11.28	107.35	6/22/2022 6:31	11.32	95.84	6/22/2022 7:48	6.22
6/22/2022 6:45	11.76	237.91	6/23/2022 8:29	11.24	107.35	6/22/2022 6:32	11.34	95.32	6/22/2022 7:49	6.18
6/22/2022 6:46	11.71	237.54	6/23/2022 8:30	11.24	107.39	6/22/2022 6:33	11.30	95.47	6/22/2022 7:50	6.22
6/22/2022 6:47	11.75	237.87	6/23/2022 8:31	11.24	107.11	6/22/2022 6:34	11.34	94.66	6/22/2022 7:51	6.24
6/22/2022 6:48	11.76	238.18	6/23/2022 8:32	11.28	107.50	6/22/2022 6:35	11.31	96.30	6/22/2022 7:52	6.23
6/22/2022 6:49	11.77	237.81	6/23/2022 8:33	11.27	107.19	6/22/2022 6:36	11.36	94.97	6/22/2022 7:53	6.20
6/22/2022 6:50	11.73	237.74	6/23/2022 8:34	11.28	107.30	6/22/2022 6:37	11.29	95.99	6/22/2022 7:54	6.16
6/22/2022 6:51	11.77	237.70	6/23/2022 8:35	11.25	107.36	6/22/2022 6:38	11.35	96.10	6/22/2022 7:55	6.18
6/22/2022 6:52	11.76	238.04	6/23/2022 8:36	11.26	107.47	6/22/2022 6:39	11.36	96.38	6/22/2022 7:56	6.21
6/22/2022 6:53	11.75	237.85	6/23/2022 8:37	11.26	107.17	6/22/2022 6:40	11.36	95.47	6/22/2022 7:57	6.20
6/22/2022 6:54	11.75	237.88	6/23/2022 8:38	11.27	107.35	6/22/2022 6:41	11.30	94.79	6/22/2022 7:58	6.29
6/22/2022 6:55	11.76	238.08	6/23/2022 8:39	11.27	107.33	6/22/2022 6:42	11.36	95.96	6/22/2022 7:59	6.19
6/22/2022 6:56	11.76	237.89	6/23/2022 8:40	11.25	107.27	6/22/2022 6:43	11.34	96.11	6/22/2022 8:00	6.21
6/22/2022 6:57	11.76	237.90	6/23/2022 8:41	11.28	107.49	6/22/2022 6:44	11.34	95.50	6/22/2022 8:01	6.19
6/22/2022 6:58	11.76	237.89	6/23/2022 8:42	11.27	107.41	6/22/2022 6:45	11.33	95.72	6/22/2022 8:02	6.20
6/22/2022 6:59	11.74	238.13	6/23/2022 8:43	11.27	107.39	6/22/2022 6:46	11.35	94.94	6/22/2022 8:03	6.26
6/22/2022 7:00	11.73	237.90	6/23/2022 8:44	11.26	107.31	6/22/2022 6:47	11.34	95.33	6/22/2022 8:04	6.23
6/22/2022 7:01	11.72	237.89	6/23/2022 8:45	11.26	107.46	6/22/2022 6:48	11.32	95.42	6/22/2022 8:05	6.22
6/22/2022 7:02	11.74	237.89	6/23/2022 8:46	11.26	107.60	6/22/2022 6:49	11.33	95.04	6/22/2022 8:06	6.20
6/22/2022 7:03	11.72	238.01	6/23/2022 8:47	11.28	107.42	6/22/2022 6:50	11.33	95.82	6/22/2022 8:07	6.26
6/22/2022 7:04	11.73	238.11	6/23/2022 8:48	11.24	107.34	6/22/2022 6:51	11.32	95.88	6/22/2022 8:08	6.21
6/22/2022 7:05	11.74	237.99	6/23/2022 8:49	11.25	107.35	6/22/2022 6:52	11.37	95.12	6/22/2022 8:09	6.25
6/22/2022 7:06	11.76	237.87	6/23/2022 8:50	11.28	107.46	6/22/2022 6:53	11.35	95.63	6/22/2022 8:10	6.27
6/22/2022 7:07	11.75	237.90	6/23/2022 8:51	11.29	107.62	6/22/2022 6:54	11.35	96.01	6/22/2022 8:11	6.23
6/22/2022 7:08	11.75	237.99	6/23/2022 8:52	11.25	107.55	6/22/2022 6:55	11.33	95.34	6/22/2022 8:12	6.22
6/22/2022 7:09	11.73	238.07	6/23/2022 8:53	11.25	107.43	6/22/2022 6:56	11.33	96.57	6/22/2022 8:13	6.23
6/22/2022 7:10	11.72	237.87	6/23/2022 8:54	11.26	107.54	6/22/2022 6:57	11.33	96.23	6/22/2022 8:14	6.21
6/22/2022 7:11	11.75	238.08	6/23/2022 8:55	11.28	107.40	6/22/2022 6:58	11.34	96.11	6/22/2022 8:15	6.26
6/22/2022 7:12	11.75	238.09	6/23/2022 8:56	11.25	107.45	6/22/2022 6:59	11.33	96.01	6/22/2022 8:16	6.26
6/22/2022 7:13	11.76	238.17	6/23/2022 8:57	11.25	107.44	6/22/2022 7:00	11.36	95.61	6/22/2022 8:17	6.27
6/22/2022 7:14	11.72	237.93	6/23/2022 8:58	11.25	107.53	6/22/2022 7:01	11.31	96.05	6/22/2022 8:18	6.22
6/22/2022 7:15	11.76	238.07	6/23/2022 8:59	11.24	107.52	6/22/2022 7:02	11.33	96.25	6/22/2022 8:19	6.30
6/22/2022 7:16	11.75	237.92	6/23/2022 9:00	11.27	107.40	6/22/2022 7:03	11.32	94.68	6/22/2022 8:20	6.28
6/22/2022 7:17	11.74	238.02	6/23/2022 9:01	11.29	107.39	6/22/2022 7:04	11.32	96.09	6/22/2022 8:21	6.29
6/22/2022 7:18	11.71	238.04	6/23/2022 9:02	11.27	107.52	6/22/2022 7:05	11.35	97.03	6/22/2022 8:22	6.26
6/22/2022 7:19	11.74	238.08	6/23/2022 9:03	11.28	107.48	6/22/2022 7:06	11.33	96.27	6/22/2022 8:23	6.20
6/22/2022 7:20	11.79	238.11	6/23/2022 9:04	11.25	107.48	6/22/2022 7:07	11.33	96.25	6/22/2022 8:24	6.27
6/22/2022 7:21	11.76	238.11	6/23/2022 9:05	11.28	107.40	6/22/2022 7:08	11.32	96.30	6/22/2022 8:25	6.27
6/22/2022 7:22	11.76	237.78	6/23/2022 9:06	11.27	107.45	6/22/2022 7:09	11.31	95.53	6/22/2022 8:26	6.30
6/22/2022 7:23	11.73	238.09	6/23/2022 9:07	11.28	107.70	6/22/2022 7:10	11.32	95.68	6/22/2022 8:27	6.22
6/22/2022 7:24	11.75	237.97	6/23/2022 9:08	11.27	107.60	6/22/2022 7:11	11.32	96.25	6/22/2022 8:28	6.23
6/22/2022 7:25	11.72	238.04	6/23/2022 9:09	11.24	107.57	6/22/2022 7:12	11.35	96.79	6/22/2022 8:29	6.26
6/22/2022 7:26	11.79	238.08	6/23/2022 9:10	11.24	107.56	6/22/2022 7:13	11.35	95.54	6/22/2022 8:30	6.28
6/22/2022 7:27	11.73	238.14	6/23/2022 9:11	11.26	107.48	6/22/2022 7:14	11.34	96.19	6/22/2022 8:31	6.24
6/22/2022 7:28	11.76	238.10	6/23/2022 9:12	11.27	107.71	6/22/2022 7:15	11.34	95.20	6/22/2022 8:32	6.25
6/22/2022 7:29	11.76	237.89	6/23/2022 9:13	11.28	107.45	6/22/2022 7:16	11.33	96.04	6/22/2022 8:33	6.22
6/22/2022 7:30	11.72	238.11	6/23/2022 9:14	11.27	107.73	6/22/2022 7:17	11.33	96.56	6/22/2022 8:34	6.28
6/22/2022 7:31	11.74	238.11	6/23/2022 9:15	11.26	107.61	6/22/2022 7:18	11.32	96.78	6/22/2022 8:35	6.22
6/22/2022 7:32	11.75	238.11	6/23/2022 9:16	11.25	107.69	6/22/2022 7:19	11.34	96.62	6/22/2022 8:36	6.21
6/22/2022 7:33	11.75	238.22	6/23/2022 9:17	11.27	107.66	6/22/2022 7:20	11.35	96.38	6/22/2022 8:37	6.24
6/22/2022 7:34	11.76	238.04	6/23/2022 9:18	11.26	107.50	6/22/2022 7:21	11.34	96.83	6/22/2022 8:38	6.26
6/22/2022 7:35	11.75	238.21	6/23/2022 9:19	11.26	107.57	6/22/2022 7:22	11.35	96.34	6/22/2022 8:39	6.23
6/22/2022 7:36	11.73	238.11	6/23/2022 9:20	11.26	107.78	6/22/2022 7:23	11.33	95.87	6/22/2022 8:40	6.23
6/22/2022 7:37	11.76	238.19	6/23/2022 9:21	11.26	107.64	6/22/2022 7:24	11.37	95.17	6/22/2022 8:41	6.27
6/22/2022 7:38	11.74	238.16	6/23/2022 9:22	11.27	107.52	6/22/2022 7:25	11.35	96.18	6/22/2022 8:42	6.25
6/22/2022 7:39	11.74	238.16	6/23/2022 9:23	11.26	107.76	6/22/2022 7:26	11.38	95.72	6/22/2022 8:43	6.30
6/22/2022 7:40	11.75	238.19	6/23/2022 9:24	11.28	107.57	6/22/2022 7:27	11.35	96.02	6/22/2022 8:44	6.28
6/22/2022 7:41	11.73	238.28	6/23/2022 9:25	11.27	107.71	6/22/2022 7:28	11.34	96.68	6/22/2022 8:45	6.23
6/22/2022 7:42	11.74	238.09	6/23/2022 9:26	11.25	107.70	6/22/2022 7:29	11.35	95.70	6/22/2022 8:46	6.21
6/22/2022 7:43	11.74	238.26	6/23/2022 9:27	11.24	107.63	6/22/2022 7:30	11.33	96.03	6/22/2022 8:47	6.28
6/22/2022 7:44	11.77	238.16	6/23/2022 9:28	11.25	107.56	6/22/2022 7:31	11.36	95.92	6/22/2022 8:48	6.26
6/22/2022 7:45	11.77	238.25	6/23/2022 9:29	11.25	107.58	6/22/2022 7:32	11.32	96.02	6/22/2022 8:49	6.25
6/22/2022 7:46	11.75	238.18	6/23/2022 9:30	11.26	107.69	6/22/2022 7:33	11.33	96.47	6/22/2022 8:50	6.26
6/22/2022 7:47	11.77	238.22	6/23/2022 9:31	11.28	107.49	6/22/2022 7:34	11.35	96.66	6/22/2022 8:51	6.22
6/22/2022 7:48	11.75	238.39	6/23/2022 9:32	11.26	107.52	6/22/2022 7:35	11.35	95.76	6/22/2022 8:52	6.26
6/22/2022 7:49	11.73	238.05	6/23/2022 9:33	11.28	107.60	6/22/2022 7:36	11.35	95.52	6/22/2022 8:53	6.26
6/22/2022 7:50	11.74	238.45	6/23/2022 9:34	11.27	107.68	6/22/2022 7:37	11.36	95.71	6/22/2022 8:54	6.23

6/22/2022 7:51	11.75	238.20	6/23/2022 9:35	11.25	107.55	6/22/2022 7:38	11.35	96.36	6/22/2022 8:55	6.26
6/22/2022 7:52	11.74	238.01	6/23/2022 9:36	11.26	107.67	6/22/2022 7:39	11.32	96.60	6/22/2022 8:56	6.24
6/22/2022 7:53	11.75	238.26	6/23/2022 9:37	11.27	107.60	6/22/2022 7:40	11.37	95.37	6/22/2022 8:57	6.26
6/22/2022 7:54	11.75	238.43	6/23/2022 9:38	11.28	107.64	6/22/2022 7:41	11.35	96.75	6/22/2022 8:58	6.29
6/22/2022 7:55	11.72	238.33	6/23/2022 9:39	11.27	107.58	6/22/2022 7:42	11.35	96.52	6/22/2022 8:59	6.24
6/22/2022 7:56	11.75	238.25	6/23/2022 9:40	11.24	107.62	6/22/2022 7:43	11.36	95.95	6/22/2022 9:00	6.16
6/22/2022 7:57	11.76	238.17	6/23/2022 9:41	11.26	107.56	6/22/2022 7:44	11.35	96.31	6/22/2022 9:01	6.23
6/22/2022 7:58	11.74	238.21	6/23/2022 9:42	11.29	107.70	6/22/2022 7:45	11.32	96.49	6/22/2022 9:02	6.20
6/22/2022 7:59	11.74	238.25	6/23/2022 9:43	11.25	107.80	6/22/2022 7:46	11.36	96.26	6/22/2022 9:03	6.22
6/22/2022 8:00	11.72	238.27	6/23/2022 9:44	11.27	107.57	6/22/2022 7:47	11.36	96.77	6/22/2022 9:04	6.23
6/22/2022 8:01	11.78	238.32	6/23/2022 9:45	11.25	107.71	6/22/2022 7:48	11.37	95.93	6/22/2022 9:05	6.19
6/22/2022 8:02	11.73	238.11	6/23/2022 9:46	11.27	107.81	6/22/2022 7:49	11.35	96.68	6/22/2022 9:06	6.29
6/22/2022 8:03	11.73	238.27	6/23/2022 9:47	11.26	107.59	6/22/2022 7:50	11.33	97.35	6/22/2022 9:07	6.19
6/22/2022 8:04	11.75	238.15	6/23/2022 9:48	11.26	107.77	6/22/2022 7:51	11.35	97.21	6/22/2022 9:08	6.22
6/22/2022 8:05	11.71	238.37	6/23/2022 9:49	11.28	107.60	6/22/2022 7:52	11.36	96.50	6/22/2022 9:09	6.25
6/22/2022 8:06	11.75	238.32	6/23/2022 9:50	11.26	107.66	6/22/2022 7:53	11.35	96.77	6/22/2022 9:10	6.22
6/22/2022 8:07	11.75	238.11	6/23/2022 9:51	11.28	107.45	6/22/2022 7:54	11.35	96.81	6/22/2022 9:11	6.19
6/22/2022 8:08	11.73	238.35	6/23/2022 9:52	11.28	107.59	6/22/2022 7:55	11.33	96.88	6/22/2022 9:12	6.23
6/22/2022 8:09	11.73	238.28	6/23/2022 9:53	11.26	107.71	6/22/2022 7:56	11.36	96.27	6/22/2022 9:13	6.23
6/22/2022 8:10	11.72	238.30	6/23/2022 9:54	11.29	107.67	6/22/2022 7:57	11.35	96.37	6/22/2022 9:14	6.22
6/22/2022 8:11	11.74	238.48	6/23/2022 9:55	11.26	107.73	6/22/2022 7:58	11.35	96.54	6/22/2022 9:15	6.21
6/22/2022 8:12	11.75	238.30	6/23/2022 9:56	11.25	107.64	6/22/2022 7:59	11.34	97.03	6/22/2022 9:16	6.27
6/22/2022 8:13	11.74	238.45	6/23/2022 9:57	11.24	107.46	6/22/2022 8:00	11.33	96.99	6/22/2022 9:17	6.23
6/22/2022 8:14	11.72	238.43	6/23/2022 9:58	11.28	107.51	6/22/2022 8:01	11.33	96.99	6/22/2022 9:18	6.18
6/22/2022 8:15	11.73	238.44	6/23/2022 9:59	11.25	107.56	6/22/2022 8:02	11.35	96.75	6/22/2022 9:19	6.17
6/22/2022 8:16	11.74	238.29	6/23/2022 10:00	11.27	107.73	6/22/2022 8:03	11.35	96.83	6/22/2022 9:20	6.15
6/22/2022 8:17	11.73	238.33	6/23/2022 10:01	11.26	107.68	6/22/2022 8:04	11.34	96.71	6/22/2022 9:21	6.18
6/22/2022 8:18	11.75	238.53	6/23/2022 10:02	11.24	107.76	6/22/2022 8:05	11.35	96.25	6/22/2022 9:22	6.15
6/22/2022 8:19	11.75	238.57	6/23/2022 10:03	11.26	107.64	6/22/2022 8:06	11.34	96.67	6/22/2022 9:23	6.20
6/22/2022 8:20	11.74	238.45	6/23/2022 10:04	11.26	107.61	6/22/2022 8:07	11.36	96.29	6/22/2022 9:24	6.14
6/22/2022 8:21	11.72	238.30	6/23/2022 10:05	11.28	107.46	6/22/2022 8:08	11.34	96.67	6/22/2022 9:25	6.17
6/22/2022 8:22	11.74	238.50	6/23/2022 10:06	11.26	107.65	6/22/2022 8:09	11.38	96.86	6/22/2022 9:26	6.22
6/22/2022 8:23	11.71	238.64	6/23/2022 10:07	11.25	107.71	6/22/2022 8:10	11.36	96.32	6/22/2022 9:27	6.18
6/22/2022 8:24	11.74	238.27	6/23/2022 10:08	11.29	107.66	6/22/2022 8:11	11.34	95.42	6/22/2022 9:28	6.16
6/22/2022 8:25	11.73	238.58	6/23/2022 10:09	11.28	107.69	6/22/2022 8:12	11.35	97.29	6/22/2022 9:29	6.18
6/22/2022 8:26	11.74	238.48	6/23/2022 10:10	11.26	107.63	6/22/2022 8:13	11.34	96.20	6/22/2022 9:30	6.11
6/22/2022 8:27	11.75	238.49	6/23/2022 10:11	11.26	107.59	6/22/2022 8:14	11.37	97.15	6/22/2022 9:31	6.17
6/22/2022 8:28	11.75	238.66	6/23/2022 10:12	11.24	107.69	6/22/2022 8:15	11.37	96.48	6/22/2022 9:32	6.14
6/22/2022 8:29	11.69	238.55	6/23/2022 10:13	11.27	107.67	6/22/2022 8:16	11.33	95.73	6/22/2022 9:33	6.17
6/22/2022 8:30	11.72	238.40	6/23/2022 10:14	11.25	107.56	6/22/2022 8:17	11.33	96.79	6/22/2022 9:34	6.21
6/22/2022 8:31	11.75	238.48	6/23/2022 10:15	11.28	107.69	6/22/2022 8:18	11.34	96.98	6/22/2022 9:35	6.26
6/22/2022 8:32	11.73	238.67	6/23/2022 10:16	11.26	107.49	6/22/2022 8:19	11.32	97.23	6/22/2022 9:36	6.18
6/22/2022 8:33	11.74	238.53	6/23/2022 10:17	11.26	107.42	6/22/2022 8:20	11.34	96.47	6/22/2022 9:37	6.19
6/22/2022 8:34	11.72	238.52	6/23/2022 10:18	11.26	107.53	6/22/2022 8:21	11.38	96.51	6/22/2022 9:38	6.23
6/22/2022 8:35	11.72	238.65	6/23/2022 10:19	11.27	107.64	6/22/2022 8:22	11.33	96.41	6/22/2022 9:39	6.19
6/22/2022 8:36	11.77	238.68	6/23/2022 10:20	11.27	107.59	6/22/2022 8:23	11.30	97.33	6/22/2022 9:40	6.26
6/22/2022 8:37	11.71	238.47	6/23/2022 10:21	11.27	107.64	6/22/2022 8:24	11.34	96.49	6/22/2022 9:41	6.19
6/22/2022 8:38	11.74	238.53	6/23/2022 10:22	11.28	107.57	6/22/2022 8:25	11.38	96.01	6/22/2022 9:42	6.30
6/22/2022 8:39	11.74	238.39	6/23/2022 10:23	11.26	107.66	6/22/2022 8:26	11.34	97.65	6/22/2022 9:43	6.27
6/22/2022 8:40	11.72	238.50	6/23/2022 10:24	11.26	107.48	6/22/2022 8:27	11.34	97.13	6/22/2022 9:44	6.25
6/22/2022 8:41	11.74	238.75	6/23/2022 10:25	11.25	107.60	6/22/2022 8:28	11.29	96.62	6/22/2022 9:45	6.22
6/22/2022 8:42	11.72	238.71	6/23/2022 10:26	11.24	107.72	6/22/2022 8:29	11.34	96.19	6/22/2022 9:46	6.28
6/22/2022 8:43	11.73	238.83	6/23/2022 10:27	11.27	107.67	6/22/2022 8:30	11.37	96.51	6/22/2022 9:47	6.32
6/22/2022 8:44	11.74	238.67	6/23/2022 10:28	11.26	107.64	6/22/2022 8:31	11.36	96.13	6/22/2022 9:48	6.26
6/22/2022 8:45	11.75	238.61	6/23/2022 10:29	11.26	107.79	6/22/2022 8:32	11.35	96.54	6/22/2022 9:49	6.25
6/22/2022 8:46	11.74	238.70	6/23/2022 10:30	11.27	107.69	6/22/2022 8:33	11.33	96.35	6/22/2022 9:50	6.24
6/22/2022 8:47	11.74	238.53	6/23/2022 10:31	11.27	107.67	6/22/2022 8:34	11.32	97.69	6/22/2022 9:51	6.29
6/22/2022 8:48	11.73	238.37	6/23/2022 10:32	11.25	107.85	6/22/2022 8:35	11.36	97.33	6/22/2022 9:52	6.29
6/22/2022 8:49	11.74	238.54	6/23/2022 10:33	11.26	107.72	6/22/2022 8:36	11.36	96.49	6/22/2022 9:53	6.25
6/22/2022 8:50	11.74	238.40	6/23/2022 10:34	11.28	107.63	6/22/2022 8:37	11.33	96.88	6/22/2022 9:54	6.33
6/22/2022 8:51	11.73	238.29	6/23/2022 10:35	11.26	107.89	6/22/2022 8:38	11.38	97.46	6/22/2022 9:55	6.29
6/22/2022 8:52	11.72	238.39	6/23/2022 10:36	11.25	107.76	6/22/2022 8:39	11.33	97.23	6/22/2022 9:56	6.32
6/22/2022 8:53	11.69	238.39	6/23/2022 10:37	11.27	107.59	6/22/2022 8:40	11.36	96.09	6/22/2022 9:57	6.28
6/22/2022 8:54	11.75	238.25	6/23/2022 10:38	11.26	107.64	6/22/2022 8:41	11.30	96.05	6/22/2022 9:58	6.28
6/22/2022 8:55	11.73	238.40	6/23/2022 10:39	11.27	107.56	6/22/2022 8:42	11.35	96.92	6/22/2022 9:59	6.29
6/22/2022 8:56	11.74	238.44	6/23/2022 10:40	11.25	107.83	6/22/2022 8:43	11.34	96.13	6/22/2022 10:00	6.32
6/22/2022 8:57	11.72	238.23	6/23/2022 10:41	11.29	107.61	6/22/2022 8:44	11.32	96.82	6/22/2022 10:01	6.31
6/22/2022 8:58	11.73	238.36	6/23/2022 10:42	11.23	107.62	6/22/2022 8:45	11.32	96.54	6/22/2022 10:02	6.35
6/22/2022 8:59	11.73	238.35	6/23/2022 10:43	11.26	107.80	6/22/2022 8:46	11.37	96.68	6/22/2022 10:03	6.27
6/22/2022 9:00	11.73	238.25	6/23/2022 10:44	11.27	107.73	6/22/2022 8:47	11.36	96.75	6/22/2022 10:04	6.40
6/22/2022 9:01	11.73	238.48	6/23/2022 10:45	11.26	107.68	6/22/2022 8:48	11.34	97.47	6/22/2022 10:05	6.34
6/22/2022 9:02	11.73	238.43	6/23/2022 10:46	11.27	107.48	6/22/2022 8:49	11.31	97.73	6/22/2022 10:06	6.34
6/22/2022 9:03	11.74	238.23	6/23/2022 10:47	11.25	107.97	6/22/2022 8:50	11.35	97.69	6/22/2022 10:07	6.35
6/22/2022 9:04	11.74	238.05	6/23/2022 10:48	11.26	107.82	6/22/2022 8:51	11.36	97.42	6/22/2022 10:08	6.33
6/22/2022 9:05	11.74	238.18	6/23/2022 10:49	11.27	107.68	6/22/2022 8:52	11.32	97.51	6/22/2022 10:09	6.36
6/22/2022 9:06	11.73	238.28	6/23/2022 10:50	11.26	107.68	6/22/2022 8:53	11.38	97.27	6/22/2022 10:10	6.33
6/22/2022 9:07	11.72	238.23	6/23/2022 10:51	11.26	107.80	6/22/2022 8:54	11.36	97.79	6/22/2022 10:11	6.36
6/22/2022 9:08	11.72	238.19	6/23/2022 10:52	11.28	107.81	6/22/2022 8:55	11.34	97.39	6/22/2022 10:12	6.32
6/22/2022 9:09	11.73	238.25	6/23/2022 10:53	11.28	107.69	6/22/2022 8:56	11.37	96.68	6/22/2022 10:13	6.36
6/22/2022 9:10	11.75	238.25	6/23/2022 10:54	11.28	107.87	6/22/2022 8:57	11.33	97.76	6/22/2022 10:14	6.37
6/22/2022 9:11	11.76	238.29	6/23/2022 10:55	11.26	107.81	6/22/2022 8:58	11.30	97.17	6/22/2022 10:15	6.34
6/22/2022 9:12	11.72	238.10	6/23/2022 10:56	11.28	107.67	6/22/2022 8:59	11.35	96.88	6/22/2022 10:16	6.34
6/22/2022 9:13	11.75	238.34	6/23/2022 10:57	11.27	107.71	6/22/2022 9:00	11.34	97.62	6/22/2022 10:17	6.40
6/22/2022 9:14	11.75	238.06	6/23/2022 10:58	11.26	107.67	6/22/2022 9:01	11.36	96.88	6/22/2022 10:18	6.33
6/22/2022 9:15	11.73	238.11	6/23/2022 10:59	11.25	107.62	6/22/2022 9:02	11.33	97.55	6/22/2022 10:19	6.34
6/22/2022 9:16	11.73	238.13	6/23/2022 11:00	11.25	107.75	6/22/2022 9:03	11.36	97.79	6/22/2022 10:20	6.39
6/22/2022 9:17	11.74	238.05	6/23/2022 11:01	11.25	107.76	6/22/2022 9:04	11.33	96.57	6/22/2022 10:21	6.34
6/22/2022 9:18	11.76	238.14	6/23/2022 11:02	11.27	107.70	6/22/2022 9:05	11.34	97.49	6/22/2022 10:22	6.34

6/22/2022 9:19	11.72	238.16	6/23/2022 11:03	11.25	107.74	6/22/2022 9:06	11.33	98.05	6/22/2022 10:23	6.40
6/22/2022 9:20	11.75	238.20	6/23/2022 11:04	11.27	107.72	6/22/2022 9:07	11.38	96.97	6/22/2022 10:24	6.35
6/22/2022 9:21	11.75	238.18	6/23/2022 11:05	11.28	107.77	6/22/2022 9:08	11.30	97.72	6/22/2022 10:25	6.44
6/22/2022 9:22	11.73	238.19	6/23/2022 11:06	11.26	107.66	6/22/2022 9:09	11.38	96.65	6/22/2022 10:26	6.37
6/22/2022 9:23	11.72	237.95	6/23/2022 11:07	11.29	107.72	6/22/2022 9:10	11.33	97.23	6/22/2022 10:27	6.35
6/22/2022 9:24	11.74	237.93	6/23/2022 11:08	11.28	107.62	6/22/2022 9:11	11.33	97.17	6/22/2022 10:28	6.39
6/22/2022 9:25	11.73	238.01	6/23/2022 11:09	11.28	107.80	6/22/2022 9:12	11.38	98.12	6/22/2022 10:29	6.33
6/22/2022 9:26	11.75	238.09	6/23/2022 11:10	11.27	107.81	6/22/2022 9:13	11.37	96.51	6/22/2022 10:30	6.42
6/22/2022 9:27	11.75	238.12	6/23/2022 11:11	11.25	107.84	6/22/2022 9:14	11.33	97.12	6/22/2022 10:31	6.36
6/22/2022 9:28	11.73	238.06	6/23/2022 11:12	11.26	107.74	6/22/2022 9:15	11.34	96.77	6/22/2022 10:32	6.31
6/22/2022 9:29	11.72	238.11	6/23/2022 11:13	11.26	107.81	6/22/2022 9:16	11.34	97.71	6/22/2022 10:33	6.39
6/22/2022 9:30	11.72	238.25	6/23/2022 11:14	11.29	107.91	6/22/2022 9:17	11.39	97.92	6/22/2022 10:34	6.34
6/22/2022 9:31	11.75	238.04	6/23/2022 11:15	11.23	107.83	6/22/2022 9:18	11.33	97.63	6/22/2022 10:35	6.39
6/22/2022 9:32	11.73	238.26	6/23/2022 11:16	11.25	107.80	6/22/2022 9:19	11.36	97.67	6/22/2022 10:36	6.38
6/22/2022 9:33	11.75	238.25	6/23/2022 11:17	11.26	107.88	6/22/2022 9:20	11.34	96.80	6/22/2022 10:37	6.36
6/22/2022 9:34	11.73	238.19	6/23/2022 11:18	11.27	107.89	6/22/2022 9:21	11.32	97.68	6/22/2022 10:38	6.38
6/22/2022 9:35	11.73	238.05	6/23/2022 11:19	11.26	107.76	6/22/2022 9:22	11.36	96.92	6/22/2022 10:39	6.36
6/22/2022 9:36	11.75	238.14	6/23/2022 11:20	11.26	107.77	6/22/2022 9:23	11.33	96.81	6/22/2022 10:40	6.30
6/22/2022 9:37	11.74	238.20	6/23/2022 11:21	11.26	107.89	6/22/2022 9:24	11.32	98.18	6/22/2022 10:41	6.38
6/22/2022 9:38	11.72	238.16	6/23/2022 11:22	11.30	107.69	6/22/2022 9:25	11.32	96.92	6/22/2022 10:42	6.33
6/22/2022 9:39	11.72	238.18	6/23/2022 11:23	11.28	107.95	6/22/2022 9:26	11.32	97.27	6/22/2022 10:43	6.36
6/22/2022 9:40	11.71	238.01	6/23/2022 11:24	11.28	107.88	6/22/2022 9:27	11.31	98.12	6/22/2022 10:44	6.36
6/22/2022 9:41	11.75	238.15	6/23/2022 11:25	11.27	107.78	6/22/2022 9:28	11.35	97.37	6/22/2022 10:45	6.32
6/22/2022 9:42	11.74	238.18	6/23/2022 11:26	11.25	107.81	6/22/2022 9:29	11.32	98.03	6/22/2022 10:46	6.35
6/22/2022 9:43	11.74	238.12	6/23/2022 11:27	11.28	107.78	6/22/2022 9:30	11.34	97.52	6/22/2022 10:47	6.33
6/22/2022 9:44	11.74	238.34	6/23/2022 11:28	11.25	107.91	6/22/2022 9:31	11.32	98.28	6/22/2022 10:48	6.34
6/22/2022 9:45	11.73	238.05	6/23/2022 11:29	11.25	107.96	6/22/2022 9:32	11.34	97.40	6/22/2022 10:49	6.37
6/22/2022 9:46	11.71	238.22	6/23/2022 11:30	11.26	107.76	6/22/2022 9:33	11.35	97.30	6/22/2022 10:50	6.33
6/22/2022 9:47	11.74	238.06	6/23/2022 11:31	11.27	107.85	6/22/2022 9:34	11.33	97.67	6/22/2022 10:51	6.29
6/22/2022 9:48	11.73	238.15	6/23/2022 11:32	11.26	107.72	6/22/2022 9:35	11.35	98.06	6/22/2022 10:52	6.29
6/22/2022 9:49	11.74	238.24	6/23/2022 11:33	11.26	107.59	6/22/2022 9:36	11.32	96.76	6/22/2022 10:53	6.36
6/22/2022 9:50	11.77	238.20	6/23/2022 11:34	11.25	107.78	6/22/2022 9:37	11.34	96.84	6/22/2022 10:54	6.38
6/22/2022 9:51	11.73	238.10	6/23/2022 11:35	11.26	107.86	6/22/2022 9:38	11.34	97.26	6/22/2022 10:55	6.34
6/22/2022 9:52	11.73	238.30	6/23/2022 11:36	11.26	107.85	6/22/2022 9:39	11.32	98.28	6/22/2022 10:56	6.36
6/22/2022 9:53	11.76	238.25	6/23/2022 11:37	11.28	107.88	6/22/2022 9:40	11.31	98.04	6/22/2022 10:57	6.33
6/22/2022 9:54	11.73	238.22	6/23/2022 11:38	11.24	107.59	6/22/2022 9:41	11.34	97.06	6/22/2022 10:58	6.41
6/22/2022 9:55	11.74	238.18	6/23/2022 11:39	11.26	107.80	6/22/2022 9:42	11.32	96.78	6/22/2022 10:59	6.39
6/22/2022 9:56	11.75	238.26	6/23/2022 11:40	11.28	107.78	6/22/2022 9:43	11.29	98.29	6/22/2022 11:00	6.39
6/22/2022 9:57	11.72	238.25	6/23/2022 11:41	11.26	107.92	6/22/2022 9:44	11.34	97.42	6/22/2022 11:01	6.33
6/22/2022 9:58	11.73	238.25	6/23/2022 11:42	11.27	107.77	6/22/2022 9:45	11.34	97.40	6/22/2022 11:02	6.32
6/22/2022 9:59	11.73	238.07	6/23/2022 11:43	11.27	107.88	6/22/2022 9:46	11.35	97.87	6/22/2022 11:03	6.35
6/22/2022 10:00	11.72	238.11	6/23/2022 11:44	11.28	107.94	6/22/2022 9:47	11.37	96.51	6/22/2022 11:04	6.34
6/22/2022 10:01	11.75	238.25	6/23/2022 11:45	11.28	107.81	6/22/2022 9:48	11.36	97.56	6/22/2022 11:05	6.35
6/22/2022 10:02	11.75	238.15	6/23/2022 11:46	11.27	107.95	6/22/2022 9:49	11.30	96.80	6/22/2022 11:06	6.33
6/22/2022 10:03	11.76	238.14	6/23/2022 11:47	11.28	107.83	6/22/2022 9:50	11.32	97.15	6/22/2022 11:07	6.35
6/22/2022 10:04	11.75	238.32	6/23/2022 11:48	11.27	107.73	6/22/2022 9:51	11.36	98.10	6/22/2022 11:08	6.33
6/22/2022 10:05	11.72	238.16	6/23/2022 11:49	11.27	108.01	6/22/2022 9:52	11.35	96.98	6/22/2022 11:09	6.34
6/22/2022 10:06	11.74	238.19	6/23/2022 11:50	11.26	107.76	6/22/2022 9:53	11.34	97.63	6/22/2022 11:10	6.35
6/22/2022 10:07	11.72	238.49	6/23/2022 11:51	11.26	107.87	6/22/2022 9:54	11.38	98.33	6/22/2022 11:11	6.30
6/22/2022 10:08	11.76	238.25	6/23/2022 11:52	11.25	108.00	6/22/2022 9:55	11.36	97.41	6/22/2022 11:12	6.35
6/22/2022 10:09	11.73	238.21	6/23/2022 11:53	11.26	107.97	6/22/2022 9:56	11.35	96.99	6/22/2022 11:13	6.31
6/22/2022 10:10	11.76	238.30	6/23/2022 11:54	11.27	107.82	6/22/2022 9:57	11.37	96.93	6/22/2022 11:14	6.31
6/22/2022 10:11	11.72	238.28	6/23/2022 11:55	11.27	107.72	6/22/2022 9:58	11.35	98.48	6/22/2022 11:15	6.35
6/22/2022 10:12	11.73	238.26	6/23/2022 11:56	11.26	107.77	6/22/2022 9:59	11.29	97.52	6/22/2022 11:16	6.29
6/22/2022 10:13	11.75	238.10	6/23/2022 11:57	11.26	107.90	6/22/2022 10:00	11.36	98.07	6/22/2022 11:17	6.29
6/22/2022 10:14	11.72	238.21	6/23/2022 11:58	11.25	107.88	6/22/2022 10:01	11.33	98.22	6/22/2022 11:18	6.26
6/22/2022 10:15	11.75	238.30	6/23/2022 11:59	11.24	107.86	6/22/2022 10:02	11.37	96.89	6/22/2022 11:19	6.29
6/22/2022 10:16	11.71	238.21	6/23/2022 12:00	11.25	107.74	6/22/2022 10:03	11.33	97.73	6/22/2022 11:20	6.23
6/22/2022 10:17	11.73	238.21	6/23/2022 12:01	11.28	107.84	6/22/2022 10:04	11.37	96.90	6/22/2022 11:21	6.29
6/22/2022 10:18	11.75	238.28	6/23/2022 12:02	11.26	107.81	6/22/2022 10:05	11.31	98.32	6/22/2022 11:22	6.27
6/22/2022 10:19	11.72	238.14	6/23/2022 12:03	11.27	108.06	6/22/2022 10:06	11.33	98.21	6/22/2022 11:23	6.28
6/22/2022 10:20	11.75	238.00	6/23/2022 12:04	11.26	107.94	6/22/2022 10:07	11.36	98.35	6/22/2022 11:24	6.31
6/22/2022 10:21	11.74	238.19	6/23/2022 12:05	11.28	107.83	6/22/2022 10:08	11.31	97.86	6/22/2022 11:25	6.26
6/22/2022 10:22	11.74	238.36	6/23/2022 12:06	11.26	108.16	6/22/2022 10:09	11.33	97.59	6/22/2022 11:26	6.33
6/22/2022 10:23	11.75	238.44	6/23/2022 12:07	11.25	107.70	6/22/2022 10:10	11.35	97.65	6/22/2022 11:27	6.30
6/22/2022 10:24	11.74	238.26	6/23/2022 12:08	11.28	108.05	6/22/2022 10:11	11.37	98.11	6/22/2022 11:28	6.30
6/22/2022 10:25	11.72	238.20	6/23/2022 12:09	11.26	107.74	6/22/2022 10:12	11.38	97.67	6/22/2022 11:29	6.34
6/22/2022 10:26	11.71	238.31	6/23/2022 12:10	11.26	108.00	6/22/2022 10:13	11.33	97.88	6/22/2022 11:30	6.32
6/22/2022 10:27	11.71	238.27	6/23/2022 12:11	11.27	107.92	6/22/2022 10:14	11.34	97.16	6/22/2022 11:31	6.32
6/22/2022 10:28	11.73	238.40	6/23/2022 12:12	11.29	107.90	6/22/2022 10:15	11.32	97.37	6/22/2022 11:32	6.28
6/22/2022 10:29	11.75	238.11	6/23/2022 12:13	11.24	107.87	6/22/2022 10:16	11.33	97.35	6/22/2022 11:33	6.25
6/22/2022 10:30	11.74	238.05	6/23/2022 12:14	11.26	107.93	6/22/2022 10:17	11.37	97.45	6/22/2022 11:34	6.23
6/22/2022 10:31	11.74	238.32	6/23/2022 12:15	11.26	107.88	6/22/2022 10:18	11.32	97.41	6/22/2022 11:35	6.27
6/22/2022 10:32	11.76	238.24	6/23/2022 12:16	11.25	108.01	6/22/2022 10:19	11.36	97.49	6/22/2022 11:36	6.35
6/22/2022 10:33	11.73	238.36	6/23/2022 12:17	11.28	107.83	6/22/2022 10:20	11.36	98.22	6/22/2022 11:37	6.34
6/22/2022 10:34	11.76	238.27	6/23/2022 12:18	11.28	107.91	6/22/2022 10:21	11.33	98.23	6/22/2022 11:38	6.28
6/22/2022 10:35	11.73	238.36	6/23/2022 12:19	11.26	107.80	6/22/2022 10:22	11.37	97.48	6/22/2022 11:39	6.25
6/22/2022 10:36	11.75	238.46	6/23/2022 12:20	11.26	107.86	6/22/2022 10:23	11.32	98.00	6/22/2022 11:40	6.29
6/22/2022 10:37	11.73	238.14	6/23/2022 12:21	11.27	107.90	6/22/2022 10:24	11.36	97.22	6/22/2022 11:41	6.28
6/22/2022 10:38	11.70	238.26	6/23/2022 12:22	11.27	107.88	6/22/2022 10:25	11.36	97.97	6/22/2022 11:42	6.30
6/22/2022 10:39	11.75	238.28	6/23/2022 12:23	11.25	108.01	6/22/2022 10:26	11.38	97.03	6/22/2022 11:43	6.29
6/22/2022 10:40	11.73	238.42	6/23/2022 12:24	11.29	107.97	6/22/2022 10:27	11.35	98.52	6/22/2022 11:44	6.25
6/22/2022 10:41	11.72	238.21	6/23/2022 12:25	11.24	107.90	6/22/2022 10:28	11.33	96.86	6/22/2022 11:45	6.31
6/22/2022 10:42	11.74	238.45	6/23/2022 12:26	11.26	107.66	6/22/2022 10:29	11.37	97.53	6/22/2022 11:46	6.32
6/22/2022 10:43	11.72	238.39	6/23/2022 12:27	11.28	107.79	6/22/2022 10:30	11.38	98.12	6/22/2022 11:47	6.29
6/22/2022 10:44	11.75	238.50	6/23/2022 12:28	11.27	107.80	6/22/2022 10:31	11.33	97.79	6/22/2022 11:48	6.34
6/22/2022 10:45	11.72	238.48	6/23/2022 12:29	11.27	107.92	6/22/2022 10:32	11.30	96.91	6/22/2022 11:49	6.34
6/22/2022 10:46	11.75	238.16	6/23/2022 12:30	11.26	107.89	6/22/2022 10:33	11.36	97.19	6/22/2022 11:50	6.32

6/22/2022 10:47	11.76	238.48	6/23/2022 12:31	11.25	107.89	6/22/2022 10:34	11.35	97.99	6/22/2022 11:51	6.34
6/22/2022 10:48	11.77	238.48	6/23/2022 12:32	11.25	107.91	6/22/2022 10:35	11.33	97.69	6/22/2022 11:52	6.31
6/22/2022 10:49	11.75	238.28	6/23/2022 12:33	11.27	108.05	6/22/2022 10:36	11.33	98.46	6/22/2022 11:53	6.33
6/22/2022 10:50	11.75	238.19	6/23/2022 12:34	11.26	107.94	6/22/2022 10:37	11.33	98.97	6/22/2022 11:54	6.26
6/22/2022 10:51	11.75	238.09	6/23/2022 12:35	11.24	108.06	6/22/2022 10:38	11.32	98.65	6/22/2022 11:55	6.34
6/22/2022 10:52	11.74	238.21	6/23/2022 12:36	11.27	108.01	6/22/2022 10:39	11.36	97.58	6/22/2022 11:56	6.30
6/22/2022 10:53	11.73	238.54	6/23/2022 12:37	11.26	107.88	6/22/2022 10:40	11.36	97.36	6/22/2022 11:57	6.26
6/22/2022 10:54	11.74	238.52	6/23/2022 12:38	11.25	107.94	6/22/2022 10:41	11.38	98.35	6/22/2022 11:58	6.34
6/22/2022 10:55	11.74	238.21	6/23/2022 12:39	11.27	108.01	6/22/2022 10:42	11.35	98.51	6/22/2022 11:59	6.36
6/22/2022 10:56	11.75	238.43	6/23/2022 12:40	11.25	107.92	6/22/2022 10:43	11.33	97.82	6/22/2022 12:00	6.32
6/22/2022 10:57	11.73	238.35	6/23/2022 12:41	11.29	107.91	6/22/2022 10:44	11.34	97.56	6/22/2022 12:01	6.32
6/22/2022 10:58	11.71	238.15	6/23/2022 12:42	11.27	108.00	6/22/2022 10:45	11.34	97.70	6/22/2022 12:02	6.36
6/22/2022 10:59	11.75	238.51	6/23/2022 12:43	11.26	108.02	6/22/2022 10:46	11.32	97.33	6/22/2022 12:03	6.31
6/22/2022 11:00	11.74	238.37	6/23/2022 12:44	11.26	107.86	6/22/2022 10:47	11.35	97.15	6/22/2022 12:04	6.34
6/22/2022 11:01	11.73	238.30	6/23/2022 12:45	11.25	107.99	6/22/2022 10:48	11.32	96.76	6/22/2022 12:05	6.28
6/22/2022 11:02	11.75	238.38	6/23/2022 12:46	11.28	107.98	6/22/2022 10:49	11.31	98.17	6/22/2022 12:06	6.26
6/22/2022 11:03	11.72	238.19	6/23/2022 12:47	11.28	108.12	6/22/2022 10:50	11.33	98.08	6/22/2022 12:07	6.32
6/22/2022 11:04	11.73	238.54	6/23/2022 12:48	11.26	107.96	6/22/2022 10:51	11.36	97.14	6/22/2022 12:08	6.32
6/22/2022 11:05	11.71	238.35	6/23/2022 12:49	11.27	108.23	6/22/2022 10:52	11.36	98.33	6/22/2022 12:09	6.35
6/22/2022 11:06	11.74	238.29	6/23/2022 12:50	11.26	107.93	6/22/2022 10:53	11.31	97.97	6/22/2022 12:10	6.32
6/22/2022 11:07	11.73	238.21	6/23/2022 12:51	11.26	107.91	6/22/2022 10:54	11.37	96.96	6/22/2022 12:11	6.33
6/22/2022 11:08	11.74	238.37	6/23/2022 12:52	11.24	107.93	6/22/2022 10:55	11.37	97.60	6/22/2022 12:12	6.33
6/22/2022 11:09	11.72	238.41	6/23/2022 12:53	11.27	108.09	6/22/2022 10:56	11.34	97.84	6/22/2022 12:13	6.29
6/22/2022 11:10	11.72	238.49	6/23/2022 12:54	11.23	108.05	6/22/2022 10:57	11.37	98.53	6/22/2022 12:14	6.29
6/22/2022 11:11	11.73	238.20	6/23/2022 12:55	11.25	107.93	6/22/2022 10:58	11.31	98.03	6/22/2022 12:15	6.30
6/22/2022 11:12	11.76	238.47	6/23/2022 12:56	11.27	108.05	6/22/2022 10:59	11.32	97.87	6/22/2022 12:16	6.33
6/22/2022 11:13	11.74	238.35	6/23/2022 12:57	11.29	108.14	6/22/2022 11:00	11.34	98.85	6/22/2022 12:17	6.29
6/22/2022 11:14	11.75	238.40	6/23/2022 12:58	11.26	107.91	6/22/2022 11:01	11.34	98.47	6/22/2022 12:18	6.33
6/22/2022 11:15	11.73	238.45	6/23/2022 12:59	11.27	107.91	6/22/2022 11:02	11.36	97.19	6/22/2022 12:19	6.34
6/22/2022 11:16	11.73	238.40	6/23/2022 13:00	11.25	107.95	6/22/2022 11:03	11.36	97.66	6/22/2022 12:20	6.31
6/22/2022 11:17	11.76	238.49	6/23/2022 13:01	11.28	107.92	6/22/2022 11:04	11.36	98.09	6/22/2022 12:21	6.36
6/22/2022 11:18	11.73	238.27	6/23/2022 13:02	11.26	108.05	6/22/2022 11:05	11.38	97.06	6/22/2022 12:22	6.33
6/22/2022 11:19	11.72	238.37	6/23/2022 13:03	11.26	107.94	6/22/2022 11:06	11.35	98.38	6/22/2022 12:23	6.38
6/22/2022 11:20	11.74	238.47	6/23/2022 13:04	11.26	108.05	6/22/2022 11:07	11.36	98.08	6/22/2022 12:24	6.31
6/22/2022 11:21	11.73	238.29	6/23/2022 13:05	11.28	107.99	6/22/2022 11:08	11.33	98.89	6/22/2022 12:25	6.33
6/22/2022 11:22	11.73	238.41	6/23/2022 13:06	11.25	108.17	6/22/2022 11:09	11.36	98.02	6/22/2022 12:26	6.29
6/22/2022 11:23	11.72	238.36	6/23/2022 13:07	11.25	108.01	6/22/2022 11:10	11.34	97.93	6/22/2022 12:27	6.36
6/22/2022 11:24	11.72	238.48	6/23/2022 13:08	11.27	107.91	6/22/2022 11:11	11.35	97.89	6/22/2022 12:28	6.33
6/22/2022 11:25	11.70	238.36	6/23/2022 13:09	11.26	107.97	6/22/2022 11:12	11.35	98.11	6/22/2022 12:29	6.32
6/22/2022 11:26	11.73	238.46	6/23/2022 13:10	11.26	107.97	6/22/2022 11:13	11.33	99.75	6/22/2022 12:30	6.29
6/22/2022 11:27	11.73	238.29	6/23/2022 13:11	11.29	108.05	6/22/2022 11:14	11.33	97.97	6/22/2022 12:31	6.36
6/22/2022 11:28	11.75	238.29	6/23/2022 13:12	11.25	107.98	6/22/2022 11:15	11.33	98.56	6/22/2022 12:32	6.27
6/22/2022 11:29	11.74	238.40	6/23/2022 13:13	11.26	107.99	6/22/2022 11:16	11.35	98.69	6/22/2022 12:33	6.27
6/22/2022 11:30	11.74	238.59	6/23/2022 13:14	11.28	107.95	6/22/2022 11:17	11.32	98.25	6/22/2022 12:34	6.33
6/22/2022 11:31	11.72	238.39	6/23/2022 13:15	11.28	108.12	6/22/2022 11:18	11.36	97.36	6/22/2022 12:35	6.28
6/22/2022 11:32	11.72	238.32	6/23/2022 13:16	11.28	108.08	6/22/2022 11:19	11.38	98.21	6/22/2022 12:36	6.29
6/22/2022 11:33	11.74	238.29	6/23/2022 13:17	11.26	108.08	6/22/2022 11:20	11.30	99.32	6/22/2022 12:37	6.26
6/22/2022 11:34	11.76	238.52	6/23/2022 13:18	11.26	108.19	6/22/2022 11:21	11.32	97.33	6/22/2022 12:38	6.23
6/22/2022 11:35	11.73	238.58	6/23/2022 13:19	11.27	108.20	6/22/2022 11:22	11.39	99.42	6/22/2022 12:39	6.27
6/22/2022 11:36	11.71	238.62	6/23/2022 13:20	11.25	108.19	6/22/2022 11:23	11.35	97.76	6/22/2022 12:40	6.23
6/22/2022 11:37	11.74	238.44	6/23/2022 13:21	11.27	108.02	6/22/2022 11:24	11.33	98.10	6/22/2022 12:41	6.30
6/22/2022 11:38	11.74	238.73	6/23/2022 13:22	11.28	108.01	6/22/2022 11:25	11.33	97.37	6/22/2022 12:42	6.29
6/22/2022 11:39	11.72	238.58	6/23/2022 13:23	11.28	108.16	6/22/2022 11:26	11.37	98.39	6/22/2022 12:43	6.26
6/22/2022 11:40	11.73	238.51	6/23/2022 13:24	11.25	108.08	6/22/2022 11:27	11.39	98.49	6/22/2022 12:44	6.24
6/22/2022 11:41	11.73	238.43	6/23/2022 13:25	11.26	108.08	6/22/2022 11:28	11.35	98.68	6/22/2022 12:45	6.25
6/22/2022 11:42	11.74	238.40	6/23/2022 13:26	11.25	108.09	6/22/2022 11:29	11.34	97.55	6/22/2022 12:46	6.17
6/22/2022 11:43	11.75	238.25	6/23/2022 13:27	11.26	108.18	6/22/2022 11:30	11.30	98.02	6/22/2022 12:47	6.20
6/22/2022 11:44	11.74	238.56	6/23/2022 13:28	11.26	107.90	6/22/2022 11:31	11.37	98.59	6/22/2022 12:48	6.26
6/22/2022 11:45	11.73	238.41	6/23/2022 13:29	11.27	108.02	6/22/2022 11:32	11.38	98.08	6/22/2022 12:49	6.24
6/22/2022 11:46	11.74	238.51	6/23/2022 13:30	11.28	108.23	6/22/2022 11:33	11.34	98.23	6/22/2022 12:50	6.22
6/22/2022 11:47	11.71	238.53	6/23/2022 13:31	11.27	107.96	6/22/2022 11:34	11.33	98.66	6/22/2022 12:51	6.27
6/22/2022 11:48	11.74	238.47	6/23/2022 13:32	11.28	107.97	6/22/2022 11:35	11.32	98.38	6/22/2022 12:52	6.18
6/22/2022 11:49	11.75	238.44	6/23/2022 13:33	11.27	108.22	6/22/2022 11:36	11.36	97.95	6/22/2022 12:53	6.21
6/22/2022 11:50	11.76	238.69	6/23/2022 13:34	11.27	108.10	6/22/2022 11:37	11.36	99.03	6/22/2022 12:54	6.25
6/22/2022 11:51	11.76	238.51	6/23/2022 13:35	11.25	108.02	6/22/2022 11:38	11.35	97.77	6/22/2022 12:55	6.25
6/22/2022 11:52	11.73	238.64	6/23/2022 13:36	11.28	108.18	6/22/2022 11:39	11.38	98.81	6/22/2022 12:56	6.27
6/22/2022 11:53	11.75	238.53	6/23/2022 13:37	11.27	107.86	6/22/2022 11:40	11.37	97.77	6/22/2022 12:57	6.21
6/22/2022 11:54	11.74	238.40	6/23/2022 13:38	11.25	107.99	6/22/2022 11:41	11.36	99.69	6/22/2022 12:58	6.20
6/22/2022 11:55	11.71	238.64	6/23/2022 13:39	11.26	108.36	6/22/2022 11:42	11.34	97.66	6/22/2022 12:59	6.22
6/22/2022 11:56	11.77	238.68	6/23/2022 13:40	11.27	108.14	6/22/2022 11:43	11.37	98.01	6/22/2022 13:00	6.23
6/22/2022 11:57	11.73	238.44	6/23/2022 13:41	11.27	108.03	6/22/2022 11:44	11.36	98.69	6/22/2022 13:01	6.19
6/22/2022 11:58	11.73	238.69	6/23/2022 13:42	11.27	108.19	6/22/2022 11:45	11.35	99.30	6/22/2022 13:02	6.20
6/22/2022 11:59	11.72	238.41	6/23/2022 13:43	11.26	108.16	6/22/2022 11:46	11.34	98.38	6/22/2022 13:03	6.19
6/22/2022 12:00	11.72	238.73	6/23/2022 13:44	11.25	108.10	6/22/2022 11:47	11.34	98.70	6/22/2022 13:04	6.17
6/22/2022 12:01	11.74	238.43	6/23/2022 13:45	11.27	108.14	6/22/2022 11:48	11.34	98.82	6/22/2022 13:05	6.15
6/22/2022 12:02	11.77	238.40	6/23/2022 13:46	11.26	108.23	6/22/2022 11:49	11.34	98.43	6/22/2022 13:06	6.20
6/22/2022 12:03	11.76	238.70	6/23/2022 13:47	11.26	108.15	6/22/2022 11:50	11.33	97.69	6/22/2022 13:07	6.15
6/22/2022 12:04	11.75	238.55	6/23/2022 13:48	11.29	108.11	6/22/2022 11:51	11.36	98.93	6/22/2022 13:08	6.20
6/22/2022 12:05	11.73	238.42	6/23/2022 13:49	11.26	108.18	6/22/2022 11:52	11.34	98.71	6/22/2022 13:09	6.18
6/22/2022 12:06	11.76	238.39	6/23/2022 13:50	11.26	108.39	6/22/2022 11:53	11.34	98.59	6/22/2022 13:10	6.20
6/22/2022 12:07	11.75	238.60	6/23/2022 13:51	11.26	108.15	6/22/2022 11:54	11.31	98.13	6/22/2022 13:11	6.19
6/22/2022 12:08	11.73	238.59	6/23/2022 13:52	11.27	108.25	6/22/2022 11:55	11.31	98.45	6/22/2022 13:12	6.20
6/22/2022 12:09	11.69	238.63	6/23/2022 13:53	11.26	108.12	6/22/2022 11:56	11.33	98.33	6/22/2022 13:13	6.17
6/22/2022 12:10	11.73	238.67	6/23/2022 13:54	11.27	108.12	6/22/2022 11:57	11.33	97.98	6/22/2022 13:14	6.16
6/22/2022 12:11	11.71	238.58	6/23/2022 13:55	11.27	108.14	6/22/2022 11:58	11.37	99.34	6/22/2022 13:15	6.17
6/22/2022 12:12	11.71	238.77	6/23/2022 13:56	11.28	108.28	6/22/2022 11:59	11.31	98.89	6/22/2022 13:16	6.21
6/22/2022 12:13	11.73	238.62	6/23/2022 13:57	11.27	108.13	6/22/2022 12:00	11.33	98.70	6/22/2022 13:17	6.10
6/22/2022 12:14	11.74	238.52	6/23/2022 13:58	11.28	108.13	6/22/2022 12:01	11.31	97.29	6/22/2022 13:18	6.15

6/22/2022 12:15	11.73	238.73	6/23/2022 13:59	11.25	108.29	6/22/2022 12:02	11.37	98.45	6/22/2022 13:19	6.20
6/22/2022 12:16	11.75	238.78	6/23/2022 14:00	11.26	108.23	6/22/2022 12:03	11.36	98.01	6/22/2022 13:20	6.18
6/22/2022 12:17	11.72	238.84	6/23/2022 14:01	11.25	108.04	6/22/2022 12:04	11.32	98.72	6/22/2022 13:21	6.16
6/22/2022 12:18	11.73	238.69	6/23/2022 14:02	11.26	108.27	6/22/2022 12:05	11.37	98.56	6/22/2022 13:22	6.15
6/22/2022 12:19	11.74	238.76	6/23/2022 14:03	11.28	108.32	6/22/2022 12:06	11.39	98.95	6/22/2022 13:23	6.17
6/22/2022 12:20	11.73	238.55	6/23/2022 14:04	11.27	108.28	6/22/2022 12:07	11.37	99.11	6/22/2022 13:24	6.13
6/22/2022 12:21	11.73	238.56	6/23/2022 14:05	11.27	108.17	6/22/2022 12:08	11.34	98.77	6/22/2022 13:25	6.20
6/22/2022 12:22	11.74	238.67	6/23/2022 14:06	11.26	108.13	6/22/2022 12:09	11.38	97.70	6/22/2022 13:26	6.15
6/22/2022 12:23	11.74	238.83	6/23/2022 14:07	11.28	108.22	6/22/2022 12:10	11.31	98.80	6/22/2022 13:27	6.17
6/22/2022 12:24	11.73	238.50	6/23/2022 14:08	11.27	108.25	6/22/2022 12:11	11.33	99.22	6/22/2022 13:28	6.13
6/22/2022 12:25	11.73	238.75	6/23/2022 14:09	11.28	108.27	6/22/2022 12:12	11.38	99.85	6/22/2022 13:29	6.17
6/22/2022 12:26	11.74	238.73	6/23/2022 14:10	11.27	108.22	6/22/2022 12:13	11.32	98.62	6/22/2022 13:30	6.20
6/22/2022 12:27	11.74	238.79	6/23/2022 14:11	11.28	108.27	6/22/2022 12:14	11.35	99.25	6/22/2022 13:31	6.18
6/22/2022 12:28	11.72	238.71	6/23/2022 14:12	11.26	108.15	6/22/2022 12:15	11.35	97.23	6/22/2022 13:32	6.19
6/22/2022 12:29	11.72	238.66	6/23/2022 14:13	11.25	108.43	6/22/2022 12:16	11.36	97.95	6/22/2022 13:33	6.16
6/22/2022 12:30	11.75	238.44	6/23/2022 14:14	11.26	108.18	6/22/2022 12:17	11.34	98.11	6/22/2022 13:34	6.16
6/22/2022 12:31	11.73	238.48	6/23/2022 14:15	11.26	108.23	6/22/2022 12:18	11.32	98.77	6/22/2022 13:35	6.09
6/22/2022 12:32	11.72	238.81	6/23/2022 14:16	11.27	108.14	6/22/2022 12:19	11.38	98.84	6/22/2022 13:36	6.19
6/22/2022 12:33	11.74	238.68	6/23/2022 14:17	11.25	108.05	6/22/2022 12:20	11.37	98.87	6/22/2022 13:37	6.09
6/22/2022 12:34	11.74	238.88	6/23/2022 14:18	11.27	108.25	6/22/2022 12:21	11.33	98.56	6/22/2022 13:38	6.17
6/22/2022 12:35	11.71	238.56	6/23/2022 14:19	11.26	108.19	6/22/2022 12:22	11.35	99.10	6/22/2022 13:39	6.18
6/22/2022 12:36	11.73	238.73	6/23/2022 14:20	11.25	108.30	6/22/2022 12:23	11.31	99.08	6/22/2022 13:40	6.15
6/22/2022 12:37	11.75	238.51	6/23/2022 14:21	11.28	108.47	6/22/2022 12:24	11.35	98.67	6/22/2022 13:41	6.14
6/22/2022 12:38	11.74	238.65	6/23/2022 14:22	11.27	108.36	6/22/2022 12:25	11.32	98.44	6/22/2022 13:42	6.18
6/22/2022 12:39	11.75	238.70	6/23/2022 14:23	11.26	108.33	6/22/2022 12:26	11.38	98.39	6/22/2022 13:43	6.18
6/22/2022 12:40	11.75	238.91	6/23/2022 14:24	11.23	108.30	6/22/2022 12:27	11.37	99.20	6/22/2022 13:44	6.18
6/22/2022 12:41	11.72	238.66	6/23/2022 14:25	11.27	108.19	6/22/2022 12:28	11.34	99.53	6/22/2022 13:45	6.17
6/22/2022 12:42	11.72	238.76	6/23/2022 14:26	11.27	108.24	6/22/2022 12:29	11.33	98.79	6/22/2022 13:46	6.18
6/22/2022 12:43	11.74	238.59	6/23/2022 14:27	11.25	108.15	6/22/2022 12:30	11.32	98.58	6/22/2022 13:47	6.17
6/22/2022 12:44	11.77	238.70	6/23/2022 14:28	11.26	108.22	6/22/2022 12:31	11.38	98.44	6/22/2022 13:48	6.19
6/22/2022 12:45	11.75	238.76	6/23/2022 14:29	11.25	108.38	6/22/2022 12:32	11.32	97.96	6/22/2022 13:49	6.14
6/22/2022 12:46	11.74	238.65	6/23/2022 14:30	11.23	108.24	6/22/2022 12:33	11.38	98.72	6/22/2022 13:50	6.15
6/22/2022 12:47	11.74	238.58	6/23/2022 14:31	11.28	108.30	6/22/2022 12:34	11.34	99.40	6/22/2022 13:51	6.11
6/22/2022 12:48	11.74	238.75	6/23/2022 14:32	11.29	108.27	6/22/2022 12:35	11.29	98.78	6/22/2022 13:52	6.17
6/22/2022 12:49	11.73	238.96	6/23/2022 14:33	11.27	108.29	6/22/2022 12:36	11.35	99.45	6/22/2022 13:53	6.13
6/22/2022 12:50	11.73	238.88	6/23/2022 14:34	11.26	108.45	6/22/2022 12:37	11.32	99.23	6/22/2022 13:54	6.21
6/22/2022 12:51	11.72	238.90	6/23/2022 14:35	11.28	108.21	6/22/2022 12:38	11.30	99.14	6/22/2022 13:55	6.14
6/22/2022 12:52	11.73	238.84	6/23/2022 14:36	11.27	108.24	6/22/2022 12:39	11.31	98.46	6/22/2022 13:56	6.17
6/22/2022 12:53	11.73	238.92	6/23/2022 14:37	11.25	108.14	6/22/2022 12:40	11.36	98.29	6/22/2022 13:57	6.15
6/22/2022 12:54	11.76	238.69	6/23/2022 14:38	11.28	108.23	6/22/2022 12:41	11.33	100.00	6/22/2022 13:58	6.16
6/22/2022 12:55	11.73	238.83	6/23/2022 14:39	11.26	108.18	6/22/2022 12:42	11.33	98.53	6/22/2022 13:59	6.16
6/22/2022 12:56	11.74	238.64	6/23/2022 14:40	11.27	108.28	6/22/2022 12:43	11.37	99.86	6/22/2022 14:00	6.19
6/22/2022 12:57	11.74	238.89	6/23/2022 14:41	11.25	108.17	6/22/2022 12:44	11.35	98.97	6/22/2022 14:01	6.15
6/22/2022 12:58	11.73	238.84	6/23/2022 14:42	11.31	108.28	6/22/2022 12:45	11.35	98.01	6/22/2022 14:02	6.15
6/22/2022 12:59	11.73	238.88	6/23/2022 14:43	11.28	108.35	6/22/2022 12:46	11.32	98.27	6/22/2022 14:03	6.20
6/22/2022 13:00	11.73	238.68	6/23/2022 14:44	11.26	108.29	6/22/2022 12:47	11.34	99.20	6/22/2022 14:04	6.16
6/22/2022 13:01	11.74	238.84	6/23/2022 14:45	11.27	108.23	6/22/2022 12:48	11.36	99.07	6/22/2022 14:05	6.24
6/22/2022 13:02	11.73	238.65	6/23/2022 14:46	11.28	108.28	6/22/2022 12:49	11.29	99.30	6/22/2022 14:06	6.19
6/22/2022 13:03	11.74	238.82	6/23/2022 14:47	11.29	108.24	6/22/2022 12:50	11.35	99.36	6/22/2022 14:07	6.12
6/22/2022 13:04	11.70	238.77	6/23/2022 14:48	11.26	108.02	6/22/2022 12:51	11.34	98.57	6/22/2022 14:08	6.16
6/22/2022 13:05	11.74	238.78	6/23/2022 14:49	11.29	108.20	6/22/2022 12:52	11.33	98.86	6/22/2022 14:09	6.15
6/22/2022 13:06	11.73	238.92	6/23/2022 14:50	11.25	108.32	6/22/2022 12:53	11.36	98.14	6/22/2022 14:10	6.17
6/22/2022 13:07	11.72	238.69	6/23/2022 14:51	11.26	108.29	6/22/2022 12:54	11.36	99.14	6/22/2022 14:11	6.18
6/22/2022 13:08	11.72	238.49	6/23/2022 14:52	11.27	108.39	6/22/2022 12:55	11.34	99.15	6/22/2022 14:12	6.15
6/22/2022 13:09	11.73	238.74	6/23/2022 14:53	11.27	108.43	6/22/2022 12:56	11.34	99.50	6/22/2022 14:13	6.15
6/22/2022 13:10	11.76	238.72	6/23/2022 14:54	11.27	108.13	6/22/2022 12:57	11.35	99.39	6/22/2022 14:14	6.16
6/22/2022 13:11	11.71	238.94	6/23/2022 14:55	11.27	108.09	6/22/2022 12:58	11.37	98.71	6/22/2022 14:15	6.18
6/22/2022 13:12	11.75	238.92	6/23/2022 14:56	11.28	108.34	6/22/2022 12:59	11.36	99.39	6/22/2022 14:16	6.17
6/22/2022 13:13	11.74	238.73	6/23/2022 14:57	11.25	108.15	6/22/2022 13:00	11.36	98.90	6/22/2022 14:17	6.17
6/22/2022 13:14	11.73	238.87	6/23/2022 14:58	11.26	108.24	6/22/2022 13:01	11.34	98.68	6/22/2022 14:18	6.16
6/22/2022 13:15	11.74	238.89	6/23/2022 14:59	11.28	108.46	6/22/2022 13:02	11.36	99.05	6/22/2022 14:19	6.19
6/22/2022 13:16	11.76	238.91	6/23/2022 15:00	11.27	108.56	6/22/2022 13:03	11.32	98.71	6/22/2022 14:20	6.18
6/22/2022 13:17	11.75	238.78	6/23/2022 15:01	11.26	108.29	6/22/2022 13:04	11.32	99.35	6/22/2022 14:21	6.21
6/22/2022 13:18	11.74	238.98	6/23/2022 15:02	11.25	108.21	6/22/2022 13:05	11.38	99.43	6/22/2022 14:22	6.17
6/22/2022 13:19	11.73	238.79	6/23/2022 15:03	11.25	108.30	6/22/2022 13:06	11.32	98.67	6/22/2022 14:23	6.18
6/22/2022 13:20	11.69	239.11	6/23/2022 15:04	11.24	108.20	6/22/2022 13:07	11.30	99.65	6/22/2022 14:24	6.25
6/22/2022 13:21	11.74	238.88	6/23/2022 15:05	11.25	108.49	6/22/2022 13:08	11.34	99.58	6/22/2022 14:25	6.16
6/22/2022 13:22	11.70	238.83	6/23/2022 15:06	11.25	108.11	6/22/2022 13:09	11.35	99.16	6/22/2022 14:26	6.21
6/22/2022 13:23	11.72	238.98	6/23/2022 15:07	11.25	108.30	6/22/2022 13:10	11.32	98.87	6/22/2022 14:27	6.19
6/22/2022 13:24	11.73	239.03	6/23/2022 15:08	11.25	108.36	6/22/2022 13:11	11.35	99.63	6/22/2022 14:28	6.19
6/22/2022 13:25	11.73	238.94	6/23/2022 15:09	11.27	108.43	6/22/2022 13:12	11.35	98.80	6/22/2022 14:29	6.18
6/22/2022 13:26	11.74	239.11	6/23/2022 15:10	11.25	108.27	6/22/2022 13:13	11.35	99.11	6/22/2022 14:30	6.20
6/22/2022 13:27	11.73	238.97	6/23/2022 15:11	11.27	108.38	6/22/2022 13:14	11.36	99.75	6/22/2022 14:31	6.26
6/22/2022 13:28	11.72	238.84	6/23/2022 15:12	11.27	108.17	6/22/2022 13:15	11.30	98.95	6/22/2022 14:32	6.16
6/22/2022 13:29	11.73	238.89	6/23/2022 15:13	11.26	108.37	6/22/2022 13:16	11.32	99.46	6/22/2022 14:33	6.24
6/22/2022 13:30	11.73	239.01	6/23/2022 15:14	11.25	108.30	6/22/2022 13:17	11.31	98.50	6/22/2022 14:34	6.18
6/22/2022 13:31	11.75	238.88	6/23/2022 15:15	11.25	108.40	6/22/2022 13:18	11.37	99.17	6/22/2022 14:35	6.17
6/22/2022 13:32	11.74	238.88	6/23/2022 15:16	11.24	108.27	6/22/2022 13:19	11.33	99.91	6/22/2022 14:36	6.20
6/22/2022 13:33	11.74	239.04	6/23/2022 15:17	11.27	108.31	6/22/2022 13:20	11.31	100.33	6/22/2022 14:37	6.18
6/22/2022 13:34	11.75	239.26	6/23/2022 15:18	11.23	108.20	6/22/2022 13:21	11.35	98.70	6/22/2022 14:38	6.22
6/22/2022 13:35	11.75	238.88	6/23/2022 15:19	11.26	108.18	6/22/2022 13:22	11.37	99.78	6/22/2022 14:39	6.17
6/22/2022 13:36	11.76	238.93	6/23/2022 15:20	11.26	108.13	6/22/2022 13:23	11.34	99.23	6/22/2022 14:40	6.20
6/22/2022 13:37	11.73	239.04	6/23/2022 15:21	11.28	108.33	6/22/2022 13:24	11.36	98.99	6/22/2022 14:41	6.29
6/22/2022 13:38	11.73	238.96	6/23/2022 15:22	11.27	108.29	6/22/2022 13:25	11.29	99.51	6/22/2022 14:42	6.24
6/22/2022 13:39	11.72	238.88	6/23/2022 15:23	11.27	108.36	6/22/2022 13:26	11.34	98.77	6/22/2022 14:43	6.17
6/22/2022 13:40	11.73	239.05	6/23/2022 15:24	11.24	108.43	6/22/2022 13:27	11.33	99.58	6/22/2022 14:44	6.21
6/22/2022 13:41	11.72	238.95	6/23/2022 15:25	11.26	108.32	6/22/2022 13:28	11.34	99.43	6/22/2022 14:45	6.25
6/22/2022 13:42	11.75	238.93	6/23/2022 15:26	11.27	108.28	6/22/2022 13:29	11.36	98.43	6/22/2022 14:46	6.20

6/22/2022 13:43	11.73	238.88	6/23/2022 15:27	11.26	108.40	6/22/2022 13:30	11.37	99.57	6/22/2022 14:47	6.28
6/22/2022 13:44	11.73	238.93	6/23/2022 15:28	11.26	108.21	6/22/2022 13:31	11.37	99.60	6/22/2022 14:48	6.29
6/22/2022 13:45	11.71	238.99	6/23/2022 15:29	11.28	108.44	6/22/2022 13:32	11.33	99.27	6/22/2022 14:49	6.29
6/22/2022 13:46	11.74	239.08	6/23/2022 15:30	11.25	108.34	6/22/2022 13:33	11.36	99.79	6/22/2022 14:50	6.23
6/22/2022 13:47	11.72	238.80	6/23/2022 15:31	11.26	108.22	6/22/2022 13:34	11.33	99.08	6/22/2022 14:51	6.23
6/22/2022 13:48	11.73	238.98	6/23/2022 15:32	11.28	108.47	6/22/2022 13:35	11.37	100.39	6/22/2022 14:52	6.26
6/22/2022 13:49	11.74	238.95	6/23/2022 15:33	11.27	108.52	6/22/2022 13:36	11.36	98.73	6/22/2022 14:53	6.29
6/22/2022 13:50	11.74	238.83	6/23/2022 15:34	11.27	108.53	6/22/2022 13:37	11.33	99.23	6/22/2022 14:54	6.32
6/22/2022 13:51	11.75	238.96	6/23/2022 15:35	11.26	108.37	6/22/2022 13:38	11.35	99.14	6/22/2022 14:55	6.30
6/22/2022 13:52	11.72	238.92	6/23/2022 15:36	11.27	108.45	6/22/2022 13:39	11.37	100.07	6/22/2022 14:56	6.28
6/22/2022 13:53	11.74	239.01	6/23/2022 15:37	11.27	108.59	6/22/2022 13:40	11.34	100.06	6/22/2022 14:57	6.26
6/22/2022 13:54	11.74	238.94	6/23/2022 15:38	11.27	108.33	6/22/2022 13:41	11.35	99.84	6/22/2022 14:58	6.31
6/22/2022 13:55	11.75	239.07	6/23/2022 15:39	11.27	108.57	6/22/2022 13:42	11.36	99.82	6/22/2022 14:59	6.29
6/22/2022 13:56	11.71	238.90	6/23/2022 15:40	11.25	108.52	6/22/2022 13:43	11.35	100.11	6/22/2022 15:00	6.31
6/22/2022 13:57	11.72	238.88	6/23/2022 15:41	11.25	108.40	6/22/2022 13:44	11.39	99.81	6/22/2022 15:01	6.29
6/22/2022 13:58	11.71	238.93	6/23/2022 15:42	11.27	108.57	6/22/2022 13:45	11.36	99.62	6/22/2022 15:02	6.25
6/22/2022 13:59	11.75	239.04	6/23/2022 15:43	11.27	108.32	6/22/2022 13:46	11.39	99.14	6/22/2022 15:03	6.29
6/22/2022 14:00	11.71	239.03	6/23/2022 15:44	11.25	108.49	6/22/2022 13:47	11.32	98.57	6/22/2022 15:04	6.28
6/22/2022 14:01	11.74	239.22	6/23/2022 15:45	11.26	108.35	6/22/2022 13:48	11.37	99.91	6/22/2022 15:05	6.32
6/22/2022 14:02	11.73	239.08	6/23/2022 15:46	11.26	108.57	6/22/2022 13:49	11.34	99.13	6/22/2022 15:06	6.32
6/22/2022 14:03	11.73	239.05	6/23/2022 15:47	11.27	108.38	6/22/2022 13:50	11.37	99.58	6/22/2022 15:07	6.28
6/22/2022 14:04	11.75	238.96	6/23/2022 15:48	11.27	108.27	6/22/2022 13:51	11.36	99.58	6/22/2022 15:08	6.30
6/22/2022 14:05	11.73	238.94	6/23/2022 15:49	11.26	108.32	6/22/2022 13:52	11.35	99.68	6/22/2022 15:09	6.32
6/22/2022 14:06	11.76	238.93	6/23/2022 15:50	11.28	108.50	6/22/2022 13:53	11.35	98.81	6/22/2022 15:10	6.35
6/22/2022 14:07	11.72	238.98	6/23/2022 15:51	11.27	108.25	6/22/2022 13:54	11.31	98.15	6/22/2022 15:11	6.26
6/22/2022 14:08	11.75	238.96	6/23/2022 15:52	11.25	108.28	6/22/2022 13:55	11.35	100.66	6/22/2022 15:12	6.28
6/22/2022 14:09	11.74	238.96	6/23/2022 15:53	11.28	108.37	6/22/2022 13:56	11.38	100.68	6/22/2022 15:13	6.30
6/22/2022 14:10	11.76	239.01	6/23/2022 15:54	11.26	108.60	6/22/2022 13:57	11.35	99.90	6/22/2022 15:14	6.30
6/22/2022 14:11	11.72	238.84	6/23/2022 15:55	11.27	108.49	6/22/2022 13:58	11.36	100.66	6/22/2022 15:15	6.36
6/22/2022 14:12	11.77	239.08	6/23/2022 15:56	11.29	108.23	6/22/2022 13:59	11.38	99.73	6/22/2022 15:16	6.35
6/22/2022 14:13	11.73	239.08	6/23/2022 15:57	11.28	108.39	6/22/2022 14:00	11.33	99.54	6/22/2022 15:17	6.34
6/22/2022 14:14	11.74	238.85	6/23/2022 15:58	11.26	108.48	6/22/2022 14:01	11.33	100.13	6/22/2022 15:18	6.35
6/22/2022 14:15	11.76	239.06	6/23/2022 15:59	11.27	108.23	6/22/2022 14:02	11.30	99.64	6/22/2022 15:19	6.34
6/22/2022 14:16	11.74	238.98	6/23/2022 16:00	11.24	108.61	6/22/2022 14:03	11.35	98.99	6/22/2022 15:20	6.31
6/22/2022 14:17	11.73	239.19	6/23/2022 16:01	11.27	108.22	6/22/2022 14:04	11.38	98.68	6/22/2022 15:21	6.32
6/22/2022 14:18	11.75	239.08	6/23/2022 16:02	11.26	108.43	6/22/2022 14:05	11.35	99.59	6/22/2022 15:22	6.36
6/22/2022 14:19	11.72	239.14	6/23/2022 16:03	11.25	108.38	6/22/2022 14:06	11.33	99.11	6/22/2022 15:23	6.35
6/22/2022 14:20	11.74	239.05	6/23/2022 16:04	11.27	108.34	6/22/2022 14:07	11.35	100.01	6/22/2022 15:24	6.35
6/22/2022 14:21	11.70	239.13	6/23/2022 16:05	11.29	108.45	6/22/2022 14:08	11.33	99.60	6/22/2022 15:25	6.33
6/22/2022 14:22	11.77	239.06	6/23/2022 16:06	11.26	108.60	6/22/2022 14:09	11.31	99.52	6/22/2022 15:26	6.38
6/22/2022 14:23	11.73	239.37	6/23/2022 16:07	11.27	108.33	6/22/2022 14:10	11.31	99.54	6/22/2022 15:27	6.37
6/22/2022 14:24	11.72	239.04	6/23/2022 16:08	11.26	108.45	6/22/2022 14:11	11.32	100.04	6/22/2022 15:28	6.35
6/22/2022 14:25	11.73	239.41	6/23/2022 16:09	11.26	108.40	6/22/2022 14:12	11.36	99.77	6/22/2022 15:29	6.34
6/22/2022 14:26	11.74	239.11	6/23/2022 16:10	11.26	108.62	6/22/2022 14:13	11.31	98.61	6/22/2022 15:30	6.37
6/22/2022 14:27	11.73	239.02	6/23/2022 16:11	11.26	108.68	6/22/2022 14:14	11.32	99.34	6/22/2022 15:31	6.34
6/22/2022 14:28	11.74	239.40	6/23/2022 16:12	11.26	108.68	6/22/2022 14:15	11.36	100.87	6/22/2022 15:32	6.32
6/22/2022 14:29	11.74	239.22	6/23/2022 16:13	11.28	108.47	6/22/2022 14:16	11.37	100.25	6/22/2022 15:33	6.32
6/22/2022 14:30	11.75	239.21	6/23/2022 16:14	11.27	108.57	6/22/2022 14:17	11.32	100.10	6/22/2022 15:34	6.32
6/22/2022 14:31	11.74	239.22	6/23/2022 16:15	11.28	108.36	6/22/2022 14:18	11.34	99.76	6/22/2022 15:35	6.30
6/22/2022 14:32	11.77	239.27	6/23/2022 16:16	11.26	108.62	6/22/2022 14:19	11.36	98.97	6/22/2022 15:36	6.30
6/22/2022 14:33	11.72	239.29	6/23/2022 16:17	11.26	108.75	6/22/2022 14:20	11.31	99.60	6/22/2022 15:37	6.34
6/22/2022 14:34	11.75	239.47	6/23/2022 16:18	11.25	108.47	6/22/2022 14:21	11.36	100.04	6/22/2022 15:38	6.25
6/22/2022 14:35	11.74	239.17	6/23/2022 16:19	11.26	108.43	6/22/2022 14:22	11.32	99.36	6/22/2022 15:39	6.31
6/22/2022 14:36	11.74	239.06	6/23/2022 16:20	11.27	108.62	6/22/2022 14:23	11.36	99.93	6/22/2022 15:40	6.32
6/22/2022 14:37	11.74	239.37	6/23/2022 16:21	11.26	108.68	6/22/2022 14:24	11.31	99.69	6/22/2022 15:41	6.33
6/22/2022 14:38	11.72	239.48	6/23/2022 16:22	11.26	108.57	6/22/2022 14:25	11.33	99.43	6/22/2022 15:42	6.32
6/22/2022 14:39	11.75	239.36	6/23/2022 16:23	11.25	108.45	6/22/2022 14:26	11.33	98.98	6/22/2022 15:43	6.26
6/22/2022 14:40	11.73	239.28	6/23/2022 16:24	11.27	108.59	6/22/2022 14:27	11.36	99.32	6/22/2022 15:44	6.37
6/22/2022 14:41	11.74	239.29	6/23/2022 16:25	11.25	108.40	6/22/2022 14:28	11.32	99.17	6/22/2022 15:45	6.37
6/22/2022 14:42	11.73	239.33	6/23/2022 16:26	11.24	108.49	6/22/2022 14:29	11.35	99.87	6/22/2022 15:46	6.29
6/22/2022 14:43	11.72	239.33	6/23/2022 16:27	11.28	108.58	6/22/2022 14:30	11.34	100.04	6/22/2022 15:47	6.38
6/22/2022 14:44	11.73	239.11	6/23/2022 16:28	11.28	108.49	6/22/2022 14:31	11.34	99.91	6/22/2022 15:48	6.45
6/22/2022 14:45	11.71	239.38	6/23/2022 16:29	11.26	108.44	6/22/2022 14:32	11.37	100.63	6/22/2022 15:49	6.53
6/22/2022 14:46	11.74	239.15	6/23/2022 16:30	11.26	108.58	6/22/2022 14:33	11.37	99.35	6/22/2022 15:50	6.51
6/22/2022 14:47	11.74	239.09	6/23/2022 16:31	11.25	108.46	6/22/2022 14:34	11.33	100.15	6/22/2022 15:51	6.61
6/22/2022 14:48	11.75	239.39	6/23/2022 16:32	11.26	108.54	6/22/2022 14:35	11.35	99.93	6/22/2022 15:52	6.63
6/22/2022 14:49	11.74	239.24	6/23/2022 16:33	11.27	108.69	6/22/2022 14:36	11.32	100.25	6/22/2022 15:53	6.64
6/22/2022 14:50	11.74	239.24	6/23/2022 16:34	11.26	108.58	6/22/2022 14:37	11.33	100.48	6/22/2022 15:54	6.71
6/22/2022 14:51	11.72	239.41	6/23/2022 16:35	11.26	108.69	6/22/2022 14:38	11.32	100.16	6/22/2022 15:55	6.74
6/22/2022 14:52	11.73	239.47	6/23/2022 16:36	11.25	108.54	6/22/2022 14:39	11.34	99.79	6/22/2022 15:56	6.82
6/22/2022 14:53	11.74	239.18	6/23/2022 16:37	11.26	108.54	6/22/2022 14:40	11.36	100.69	6/22/2022 15:57	6.81
6/22/2022 14:54	11.75	239.32	6/23/2022 16:38	11.28	108.55	6/22/2022 14:41	11.35	99.28	6/22/2022 15:58	6.85
6/22/2022 14:55	11.76	239.23	6/23/2022 16:39	11.28	108.44	6/22/2022 14:42	11.36	99.57	6/22/2022 15:59	6.90
6/22/2022 14:56	11.72	239.30	6/23/2022 16:40	11.27	108.55	6/22/2022 14:43	11.34	100.30	6/22/2022 16:00	6.92
6/22/2022 14:57	11.72	239.36	6/23/2022 16:41	11.27	108.54	6/22/2022 14:44	11.33	100.94	6/22/2022 16:01	6.94
6/22/2022 14:58	11.72	239.33	6/23/2022 16:42	11.26	108.53	6/22/2022 14:45	11.36	99.26	6/22/2022 16:02	6.93
6/22/2022 14:59	11.74	239.42	6/23/2022 16:43	11.26	108.54	6/22/2022 14:46	11.38	99.99	6/22/2022 16:03	6.99
6/22/2022 15:00	11.74	239.41	6/23/2022 16:44	11.27	108.47	6/22/2022 14:47	11.38	98.42	6/22/2022 16:04	7.01
6/22/2022 15:01	11.75	239.36	6/23/2022 16:45	11.28	108.58	6/22/2022 14:48	11.36	99.86	6/22/2022 16:05	7.09
6/22/2022 15:02	11.73	239.54	6/23/2022 16:46	11.26	108.66	6/22/2022 14:49	11.32	99.93	6/22/2022 16:06	7.11
6/22/2022 15:03	11.73	239.21	6/23/2022 16:47	11.28	108.66	6/22/2022 14:50	11.35	99.46	6/22/2022 16:07	7.09
6/22/2022 15:04	11.74	239.48	6/23/2022 16:48	11.26	108.52	6/22/2022 14:51	11.32	100.53	6/22/2022 16:08	7.11
6/22/2022 15:05	11.76	239.29	6/23/2022 16:49	11.27	108.64	6/22/2022 14:52	11.37	100.14	6/22/2022 16:09	7.11
6/22/2022 15:06	11.72	239.18	6/23/2022 16:50	11.29	108.49	6/22/2022 14:53	11.36	100.43	6/22/2022 16:10	7.14
6/22/2022 15:07	11.73	239.43	6/23/2022 16:51	11.27	108.68	6/22/2022 14:54	11.35	100.05	6/22/2022 16:11	7.19
6/22/2022 15:08	11.74	239.31	6/23/2022 16:52	11.29	108.55	6/22/2022 14:55	11.38	100.21	6/22/2022 16:12	7.17
6/22/2022 15:09	11.75	239.27	6/23/2022 16:53	11.29	108.55	6/22/2022 14:56	11.35	100.20	6/22/2022 16:13	7.17
6/22/2022 15:10	11.73	239.41	6/23/2022 16:54	11.27	108.85	6/22/2022 14:57	11.34	100.61	6/22/2022 16:14	7.16

6/22/2022 15:11	11.74	239.51	6/23/2022 16:55	11.25	108.57	6/22/2022 14:58	11.33	100.26	6/22/2022 16:15	7.23
6/22/2022 15:12	11.70	239.30	6/23/2022 16:56	11.26	108.73	6/22/2022 14:59	11.40	100.32	6/22/2022 16:16	7.31
6/22/2022 15:13	11.74	239.33	6/23/2022 16:57	11.25	108.73	6/22/2022 15:00	11.34	100.23	6/22/2022 16:17	7.30
6/22/2022 15:14	11.74	239.61	6/23/2022 16:58	11.24	108.55	6/22/2022 15:01	11.35	99.75	6/22/2022 16:18	7.32
6/22/2022 15:15	11.71	239.51	6/23/2022 16:59	11.25	108.72	6/22/2022 15:02	11.36	99.52	6/22/2022 16:19	7.29
6/22/2022 15:16	11.73	239.44	6/23/2022 17:00	11.31	91.23	6/22/2022 15:03	11.33	100.19	6/22/2022 16:20	7.31
6/22/2022 15:17	11.73	239.50	6/23/2022 17:01	11.29	84.66	6/22/2022 15:04	11.36	100.01	6/22/2022 16:21	7.32
6/22/2022 15:18	11.72	239.36	6/23/2022 17:02	11.28	82.34	6/22/2022 15:05	11.37	99.44	6/22/2022 16:22	7.35
6/22/2022 15:19	11.73	239.31	6/23/2022 17:03	11.42	81.20	6/22/2022 15:06	11.37	99.91	6/22/2022 16:23	7.41
6/22/2022 15:20	11.73	239.41	6/23/2022 17:04	11.55	80.53	6/22/2022 15:07	11.40	99.70	6/22/2022 16:24	7.39
6/22/2022 15:21	11.75	239.31	6/23/2022 17:05	11.68	79.84	6/22/2022 15:08	11.36	100.26	6/22/2022 16:25	7.42
6/22/2022 15:22	11.73	239.28	6/23/2022 17:06	11.75	79.16	6/22/2022 15:09	11.35	100.16	6/22/2022 16:26	7.37
6/22/2022 15:23	11.73	239.56	6/23/2022 17:07	11.78	78.71	6/22/2022 15:10	11.36	100.06	6/22/2022 16:27	7.40
6/22/2022 15:24	11.72	239.54	6/23/2022 17:08	11.81	78.24	6/22/2022 15:11	11.33	99.52	6/22/2022 16:28	7.44
6/22/2022 15:25	11.74	239.67	6/23/2022 17:09	11.84	77.67	6/22/2022 15:12	11.36	99.63	6/22/2022 16:29	7.43
6/22/2022 15:26	11.72	239.34	6/23/2022 17:10	11.84	77.23	6/22/2022 15:13	11.37	100.08	6/22/2022 16:30	7.47
6/22/2022 15:27	11.75	239.33	6/23/2022 17:11	11.79	76.78	6/22/2022 15:14	11.31	100.82	6/22/2022 16:31	7.43
6/22/2022 15:28	11.75	239.39	6/23/2022 17:12	11.77	76.44	6/22/2022 15:15	11.32	100.17	6/22/2022 16:32	7.50
6/22/2022 15:29	11.74	239.25	6/23/2022 17:13	11.73	76.06	6/22/2022 15:16	11.37	100.07	6/22/2022 16:33	7.44
6/22/2022 15:30	11.75	239.40	6/23/2022 17:14	11.75	75.67	6/22/2022 15:17	11.35	100.48	6/22/2022 16:34	7.45
6/22/2022 15:31	11.75	239.40	6/23/2022 17:15	11.72	75.27	6/22/2022 15:18	11.34	100.53	6/22/2022 16:35	7.46
6/22/2022 15:32	11.72	239.26	6/23/2022 17:16	11.69	74.88	6/22/2022 15:19	11.34	99.83	6/22/2022 16:36	7.44
6/22/2022 15:33	11.72	239.50	6/23/2022 17:17	11.63	74.52	6/22/2022 15:20	11.35	100.53	6/22/2022 16:37	7.47
6/22/2022 15:34	11.75	239.58	6/23/2022 17:18	11.64	74.16	6/22/2022 15:21	11.33	100.24	6/22/2022 16:38	7.49
6/22/2022 15:35	11.71	239.49	6/23/2022 17:19	11.62	73.76	6/22/2022 15:22	11.32	99.83	6/22/2022 16:39	7.45
6/22/2022 15:36	11.74	239.44	6/23/2022 17:20	11.62	73.54	6/22/2022 15:23	11.35	99.38	6/22/2022 16:40	7.45
6/22/2022 15:37	11.74	239.36	6/23/2022 17:21	11.58	73.01	6/22/2022 15:24	11.38	99.96	6/22/2022 16:41	7.48
6/22/2022 15:38	11.76	239.48	6/23/2022 17:22	11.56	72.69	6/22/2022 15:25	11.33	100.21	6/22/2022 16:42	7.48
6/22/2022 15:39	11.75	239.52	6/23/2022 17:23	11.52	72.42	6/22/2022 15:26	11.34	100.13	6/22/2022 16:43	7.50
6/22/2022 15:40	11.74	239.33	6/23/2022 17:24	11.49	72.12	6/22/2022 15:27	11.36	99.30	6/22/2022 16:44	7.49
6/22/2022 15:41	11.74	239.49	6/23/2022 17:25	11.49	71.64	6/22/2022 15:28	11.31	101.34	6/22/2022 16:45	7.51
6/22/2022 15:42	11.75	239.60	6/23/2022 17:26	11.47	71.26	6/22/2022 15:29	11.32	101.55	6/22/2022 16:46	7.47
6/22/2022 15:43	11.75	239.41	6/23/2022 17:27	11.46	70.93	6/22/2022 15:30	11.34	101.27	6/22/2022 16:47	7.52
6/22/2022 15:44	11.71	239.43	6/23/2022 17:28	11.41	70.47	6/22/2022 15:31	11.33	100.29	6/22/2022 16:48	7.47
6/22/2022 15:45	11.73	239.51	6/23/2022 17:29	11.42	70.15	6/22/2022 15:32	11.35	100.30	6/22/2022 16:49	7.44
6/22/2022 15:46	11.73	239.56	6/23/2022 17:30	11.41	69.94	6/22/2022 15:33	11.33	99.74	6/22/2022 16:50	7.47
6/22/2022 15:47	11.72	239.73	6/23/2022 17:31	11.40	69.56	6/22/2022 15:34	11.37	99.32	6/22/2022 16:51	7.54
6/22/2022 15:48	11.73	239.48	6/23/2022 17:32	11.39	69.21	6/22/2022 15:35	11.36	100.45	6/22/2022 16:52	7.48
6/22/2022 15:49	11.72	239.52	6/23/2022 17:33	11.37	68.86	6/22/2022 15:36	11.35	99.54	6/22/2022 16:53	7.45
6/22/2022 15:50	11.74	239.56	6/23/2022 17:34	11.35	68.52	6/22/2022 15:37	11.38	100.91	6/22/2022 16:54	7.44
6/22/2022 15:51	11.74	239.50	6/23/2022 17:35	11.35	68.28	6/22/2022 15:38	11.36	100.10	6/22/2022 16:55	7.44
6/22/2022 15:52	11.73	239.35	6/23/2022 17:36	11.36	67.94	6/22/2022 15:39	11.38	100.10	6/22/2022 16:56	7.43
6/22/2022 15:53	11.74	239.41	6/23/2022 17:37	11.36	67.53	6/22/2022 15:40	11.36	100.73	6/22/2022 16:57	7.44
6/22/2022 15:54	11.74	239.36	6/23/2022 17:38	11.35	67.33	6/22/2022 15:41	11.36	100.21	6/22/2022 16:58	7.46
6/22/2022 15:55	11.75	239.39	6/23/2022 17:39	11.34	67.03	6/22/2022 15:42	11.36	100.05	6/22/2022 16:59	7.45
6/22/2022 15:56	11.74	239.53	6/23/2022 17:40	11.34	66.69	6/22/2022 15:43	11.34	99.81	6/22/2022 17:00	7.42
6/22/2022 15:57	11.73	239.36	6/23/2022 17:41	11.34	66.41	6/22/2022 15:44	11.34	101.32	6/22/2022 17:01	7.46
6/22/2022 15:58	11.73	239.67	6/23/2022 17:42	11.36	66.11	6/22/2022 15:45	11.35	100.90	6/22/2022 17:02	7.46
6/22/2022 15:59	11.70	239.68	6/23/2022 17:43	11.35	65.90	6/22/2022 15:46	11.36	100.12	6/22/2022 17:03	7.37
6/22/2022 16:00	11.73	239.64	6/23/2022 17:44	11.33	65.46	6/22/2022 15:47	11.34	100.15	6/22/2022 17:04	7.48
6/22/2022 16:01	11.74	239.51	6/23/2022 17:45	11.34	65.24	6/22/2022 15:48	11.33	100.77	6/22/2022 17:05	7.44
6/22/2022 16:02	11.73	239.69	6/23/2022 17:46	11.35	65.00	6/22/2022 15:49	11.36	100.29	6/22/2022 17:06	7.42
6/22/2022 16:03	11.74	239.59	6/23/2022 17:47	11.31	64.70	6/22/2022 15:50	11.36	100.09	6/22/2022 17:07	7.45
6/22/2022 16:04	11.75	239.71	6/23/2022 17:48	11.33	64.45	6/22/2022 15:51	11.35	100.25	6/22/2022 17:08	7.48
6/22/2022 16:05	11.73	239.65	6/23/2022 17:49	11.36	64.22	6/22/2022 15:52	11.35	100.78	6/22/2022 17:09	7.40
6/22/2022 16:06	11.73	239.33	6/23/2022 17:50	11.33	63.82	6/22/2022 15:53	11.38	100.46	6/22/2022 17:10	7.47
6/22/2022 16:07	11.74	239.60	6/23/2022 17:51	11.31	63.60	6/22/2022 15:54	11.31	100.56	6/22/2022 17:11	7.50
6/22/2022 16:08	11.73	239.73	6/23/2022 17:52	11.33	63.39	6/22/2022 15:55	11.30	100.41	6/22/2022 17:12	7.46
6/22/2022 16:09	11.72	239.74	6/23/2022 17:53	11.32	63.02	6/22/2022 15:56	11.32	101.63	6/22/2022 17:13	7.43
6/22/2022 16:10	11.72	239.75	6/23/2022 17:54	11.34	62.82	6/22/2022 15:57	11.32	99.95	6/22/2022 17:14	7.47
6/22/2022 16:11	11.76	239.70	6/23/2022 17:55	11.34	62.42	6/22/2022 15:58	11.33	100.27	6/22/2022 17:15	7.40
6/22/2022 16:12	11.72	239.62	6/23/2022 17:56	11.33	62.25	6/22/2022 15:59	11.33	99.94	6/22/2022 17:16	7.49
6/22/2022 16:13	11.72	239.74	6/23/2022 17:57	11.34	62.07	6/22/2022 16:00	11.32	100.61	6/22/2022 17:17	7.43
6/22/2022 16:14	11.76	239.56	6/23/2022 17:58	11.35	61.75	6/22/2022 16:01	11.36	100.35	6/22/2022 17:18	7.46
6/22/2022 16:15	11.73	239.61	6/23/2022 17:59	11.34	61.60	6/22/2022 16:02	11.33	100.34	6/22/2022 17:19	7.44
6/22/2022 16:16	11.73	239.66	6/23/2022 18:00	11.34	61.26	6/22/2022 16:03	11.32	99.64	6/22/2022 17:20	7.46
6/22/2022 16:17	11.74	239.55	6/23/2022 18:01	11.33	61.12	6/22/2022 16:04	11.31	100.58	6/22/2022 17:21	7.40
6/22/2022 16:18	11.71	239.62	6/23/2022 18:02	11.34	60.70	6/22/2022 16:05	11.33	101.28	6/22/2022 17:22	7.47
6/22/2022 16:19	11.71	239.77	6/23/2022 18:03	11.35	60.49	6/22/2022 16:06	11.35	100.02	6/22/2022 17:23	7.45
6/22/2022 16:20	11.74	239.80	6/23/2022 18:04	11.33	60.23	6/22/2022 16:07	11.36	100.49	6/22/2022 17:24	7.41
6/22/2022 16:21	11.74	239.76	6/23/2022 18:05	11.33	59.95	6/22/2022 16:08	11.35	100.16	6/22/2022 17:25	7.41
6/22/2022 16:22	11.74	239.73	6/23/2022 18:06	11.34	59.77	6/22/2022 16:09	11.34	100.04	6/22/2022 17:26	7.42
6/22/2022 16:23	11.74	239.62	6/23/2022 18:07	11.35	59.55	6/22/2022 16:10	11.32	99.77	6/22/2022 17:27	7.40
6/22/2022 16:24	11.73	239.63	6/23/2022 18:08	11.32	59.32	6/22/2022 16:11	11.38	99.53	6/22/2022 17:28	7.41
6/22/2022 16:25	11.76	239.68	6/23/2022 18:09	11.34	58.98	6/22/2022 16:12	11.33	100.49	6/22/2022 17:29	7.38
6/22/2022 16:26	11.76	239.76	6/23/2022 18:10	11.34	58.93	6/22/2022 16:13	11.34	99.87	6/22/2022 17:30	7.35
6/22/2022 16:27	11.72	239.80	6/23/2022 18:11	11.33	58.68	6/22/2022 16:14	11.31	100.61	6/22/2022 17:31	7.39
6/22/2022 16:28	11.73	239.49	6/23/2022 18:12	11.34	58.42	6/22/2022 16:15	11.33	100.02	6/22/2022 17:32	7.39
6/22/2022 16:29	11.74	239.48	6/23/2022 18:13	11.34	58.16	6/22/2022 16:16	11.33	99.70	6/22/2022 17:33	7.39
6/22/2022 16:30	11.70	239.74	6/23/2022 18:14	11.34	57.85	6/22/2022 16:17	11.35	100.06	6/22/2022 17:34	7.44
6/22/2022 16:31	11.74	239.52	6/23/2022 18:15	11.33	57.58	6/22/2022 16:18	11.32	100.69	6/22/2022 17:35	7.36
6/22/2022 16:32	11.72	239.80	6/23/2022 18:16	11.33	57.46	6/22/2022 16:19	11.36	99.15	6/22/2022 17:36	7.42
6/22/2022 16:33	11.72	239.45	6/23/2022 18:17	11.34	57.15	6/22/2022 16:20	11.35	99.99	6/22/2022 17:37	7.40
6/22/2022 16:34	11.73	239.65	6/23/2022 18:18	11.36	56.95	6/22/2022 16:21	11.36	99.83	6/22/2022 17:38	7.40
6/22/2022 16:35	11.75	239.70	6/23/2022 18:19	11.34	56.73	6/22/2022 16:22	11.35	100.49	6/22/2022 17:39	7.39
6/22/2022 16:36	11.74	239.75	6/23/2022 18:20	11.34	56.55	6/22/2022 16:23	11.37	100.71	6/22/2022 17:40	7.42
6/22/2022 16:37	11.74	239.80	6/23/2022 18:21	11.33	56.29	6/22/2022 16:24	11.35	99.70	6/22/2022 17:41	7.43
6/22/2022 16:38	11.74	239.51	6/23/2022 18:22	11.33	56.16	6/22/2022 16:25	11.36	100.78	6/22/2022 17:42	7.43

6/22/2022 16:39	11.73	239.70	6/23/2022 18:23	11.35	56.05	6/22/2022 16:26	11.36	100.51	6/22/2022 17:43	7.46
6/22/2022 16:40	11.71	239.64	6/23/2022 18:24	11.34	55.68	6/22/2022 16:27	11.34	100.46	6/22/2022 17:44	7.41
6/22/2022 16:41	11.72	239.66	6/23/2022 18:25	11.33	55.46	6/22/2022 16:28	11.35	101.16	6/22/2022 17:45	7.41
6/22/2022 16:42	11.72	239.85	6/23/2022 18:26	11.34	55.30	6/22/2022 16:29	11.35	100.65	6/22/2022 17:46	7.41
6/22/2022 16:43	11.73	239.80	6/23/2022 18:27	11.35	55.06	6/22/2022 16:30	11.32	99.54	6/22/2022 17:47	7.44
6/22/2022 16:44	11.73	239.74	6/23/2022 18:28	11.33	54.85	6/22/2022 16:31	11.34	100.51	6/22/2022 17:48	7.43
6/22/2022 16:45	11.74	239.76	6/23/2022 18:29	11.33	54.60	6/22/2022 16:32	11.34	100.55	6/22/2022 17:49	7.40
6/22/2022 16:46	11.75	239.85	6/23/2022 18:30	11.34	54.54	6/22/2022 16:33	11.36	100.49	6/22/2022 17:50	7.40
6/22/2022 16:47	11.71	239.78	6/23/2022 18:31	11.33	54.23	6/22/2022 16:34	11.37	100.50	6/22/2022 17:51	7.43
6/22/2022 16:48	11.75	239.84	6/23/2022 18:32	11.32	54.02	6/22/2022 16:35	11.33	99.64	6/22/2022 17:52	7.46
6/22/2022 16:49	11.74	239.93	6/23/2022 18:33	11.35	53.88	6/22/2022 16:36	11.36	100.79	6/22/2022 17:53	7.47
6/22/2022 16:50	11.72	239.95	6/23/2022 18:34	11.35	53.61	6/22/2022 16:37	11.35	100.09	6/22/2022 17:54	7.46
6/22/2022 16:51	11.75	240.03	6/23/2022 18:35	11.33	53.42	6/22/2022 16:38	11.33	100.70	6/22/2022 17:55	7.41
6/22/2022 16:52	11.76	239.65	6/23/2022 18:36	11.35	53.25	6/22/2022 16:39	11.33	99.93	6/22/2022 17:56	7.46
6/22/2022 16:53	11.75	239.60	6/23/2022 18:37	11.34	53.05	6/22/2022 16:40	11.35	99.36	6/22/2022 17:57	7.41
6/22/2022 16:54	11.75	239.66	6/23/2022 18:38	11.35	52.81	6/22/2022 16:41	11.33	99.74	6/22/2022 17:58	7.47
6/22/2022 16:55	11.75	239.72	6/23/2022 18:39	11.33	52.60	6/22/2022 16:42	11.33	100.41	6/22/2022 17:59	7.42
6/22/2022 16:56	11.74	239.76	6/23/2022 18:40	11.35	52.37	6/22/2022 16:43	11.33	100.91	6/22/2022 18:00	7.42
6/22/2022 16:57	11.72	239.84	6/23/2022 18:41	11.35	52.21	6/22/2022 16:44	11.37	100.41	6/22/2022 18:01	7.42
6/22/2022 16:58	11.73	239.84	6/23/2022 18:42	11.37	51.96	6/22/2022 16:45	11.35	100.30	6/22/2022 18:02	7.46
6/22/2022 16:59	11.72	239.59	6/23/2022 18:43	11.32	51.76	6/22/2022 16:46	11.33	100.77	6/22/2022 18:03	7.40
6/22/2022 17:00	11.75	239.87	6/23/2022 18:44	11.36	51.59	6/22/2022 16:47	11.36	100.67	6/22/2022 18:04	7.40
6/22/2022 17:01	11.76	239.69	6/23/2022 18:45	11.34	51.43	6/22/2022 16:48	11.38	100.58	6/22/2022 18:05	7.47
6/22/2022 17:02	11.72	239.72	6/23/2022 18:46	11.34	51.15	6/22/2022 16:49	11.35	100.50	6/22/2022 18:06	7.44
6/22/2022 17:03	11.73	239.55	6/23/2022 18:47	11.32	50.97	6/22/2022 16:50	11.34	99.95	6/22/2022 18:07	7.46
6/22/2022 17:04	11.76	239.64	6/23/2022 18:48	11.33	50.88	6/22/2022 16:51	11.35	100.35	6/22/2022 18:08	7.42
6/22/2022 17:05	11.76	239.79	6/23/2022 18:49	11.34	50.61	6/22/2022 16:52	11.35	100.25	6/22/2022 18:09	7.40
6/22/2022 17:06	11.74	239.84	6/23/2022 18:50	11.33	50.39	6/22/2022 16:53	11.34	100.02	6/22/2022 18:10	7.46
6/22/2022 17:07	11.75	239.84	6/23/2022 18:51	11.33	50.25	6/22/2022 16:54	11.34	100.58	6/22/2022 18:11	7.46
6/22/2022 17:08	11.73	239.95	6/23/2022 18:52	11.36	49.96	6/22/2022 16:55	11.33	100.61	6/22/2022 18:12	7.43
6/22/2022 17:09	11.72	239.97	6/23/2022 18:53	11.33	49.87	6/22/2022 16:56	11.32	100.53	6/22/2022 18:13	7.46
6/22/2022 17:10	11.74	239.80	6/23/2022 18:54	11.34	49.72	6/22/2022 16:57	11.35	100.95	6/22/2022 18:14	7.48
6/22/2022 17:11	11.75	239.80	6/23/2022 18:55	11.33	49.52	6/22/2022 16:58	11.32	100.72	6/22/2022 18:15	7.41
6/22/2022 17:12	11.71	239.87	6/23/2022 18:56	11.33	49.25	6/22/2022 16:59	11.35	100.99	6/22/2022 18:16	7.43
6/22/2022 17:13	11.72	239.74	6/23/2022 18:57	11.34	49.09	6/22/2022 17:00	11.34	100.18	6/22/2022 18:17	7.43
6/22/2022 17:14	11.73	239.80	6/23/2022 18:58	11.32	48.95	6/22/2022 17:01	11.36	101.15	6/22/2022 18:18	7.47
6/22/2022 17:15	11.73	239.74	6/23/2022 18:59	11.33	48.76	6/22/2022 17:02	11.35	100.29	6/22/2022 18:19	7.44
6/22/2022 17:16	11.75	239.89	6/23/2022 19:00	11.34	48.72	6/22/2022 17:03	11.33	99.36	6/22/2022 18:20	7.40
6/22/2022 17:17	11.74	239.80	6/23/2022 19:01	11.35	48.52	6/22/2022 17:04	11.40	100.54	6/22/2022 18:21	7.41
6/22/2022 17:18	11.75	239.84	6/23/2022 19:02	11.36	48.38	6/22/2022 17:05	11.33	100.42	6/22/2022 18:22	7.42
6/22/2022 17:19	11.74	239.94	6/23/2022 19:03	11.32	48.03	6/22/2022 17:06	11.35	101.28	6/22/2022 18:23	7.45
6/22/2022 17:20	11.73	239.94	6/23/2022 19:04	11.34	48.06	6/22/2022 17:07	11.33	100.96	6/22/2022 18:24	7.44
6/22/2022 17:21	11.71	239.84	6/23/2022 19:05	11.36	47.80	6/22/2022 17:08	11.34	100.62	6/22/2022 18:25	7.40
6/22/2022 17:22	11.72	239.69	6/23/2022 19:06	11.35	47.66	6/22/2022 17:09	11.32	100.25	6/22/2022 18:26	7.40
6/22/2022 17:23	11.75	239.89	6/23/2022 19:07	11.35	47.54	6/22/2022 17:10	11.34	100.44	6/22/2022 18:27	7.39
6/22/2022 17:24	11.75	240.04	6/23/2022 19:08	11.34	47.30	6/22/2022 17:11	11.33	99.32	6/22/2022 18:28	7.41
6/22/2022 17:25	11.71	239.91	6/23/2022 19:09	11.35	47.19	6/22/2022 17:12	11.34	100.66	6/22/2022 18:29	7.42
6/22/2022 17:26	11.75	239.90	6/23/2022 19:10	11.34	47.06	6/22/2022 17:13	11.35	100.65	6/22/2022 18:30	7.42
6/22/2022 17:27	11.72	239.72	6/23/2022 19:11	11.34	46.85	6/22/2022 17:14	11.34	100.27	6/22/2022 18:31	7.41
6/22/2022 17:28	11.73	239.92	6/23/2022 19:12	11.33	46.64	6/22/2022 17:15	11.33	100.57	6/22/2022 18:32	7.45
6/22/2022 17:29	11.74	239.87	6/23/2022 19:13	11.34	46.52	6/22/2022 17:16	11.34	100.36	6/22/2022 18:33	7.44
6/22/2022 17:30	11.71	239.82	6/23/2022 19:14	11.35	46.27	6/22/2022 17:17	11.36	100.62	6/22/2022 18:34	7.37
6/22/2022 17:31	11.75	239.95	6/23/2022 19:15	11.35	46.10	6/22/2022 17:18	11.34	100.04	6/22/2022 18:35	7.42
6/22/2022 17:32	11.72	240.09	6/23/2022 19:16	11.32	45.87	6/22/2022 17:19	11.36	99.92	6/22/2022 18:36	7.41
6/22/2022 17:33	11.76	239.92	6/23/2022 19:17	11.35	45.67	6/22/2022 17:20	11.33	100.33	6/22/2022 18:37	7.41
6/22/2022 17:34	11.75	239.85	6/23/2022 19:18	11.35	45.55	6/22/2022 17:21	11.34	101.23	6/22/2022 18:38	7.42
6/22/2022 17:35	11.74	239.99	6/23/2022 19:19	11.34	45.33	6/22/2022 17:22	11.31	99.93	6/22/2022 18:39	7.38
6/22/2022 17:36	11.76	239.79	6/23/2022 19:20	11.35	45.06	6/22/2022 17:23	11.33	100.03	6/22/2022 18:40	7.43
6/22/2022 17:37	11.74	239.97	6/23/2022 19:21	11.34	44.97	6/22/2022 17:24	11.33	101.17	6/22/2022 18:41	7.37
6/22/2022 17:38	11.75	239.89	6/23/2022 19:22	11.35	44.74	6/22/2022 17:25	11.36	100.96	6/22/2022 18:42	7.40
6/22/2022 17:39	11.73	239.90	6/23/2022 19:23	11.37	44.62	6/22/2022 17:26	11.34	100.58	6/22/2022 18:43	7.39
6/22/2022 17:40	11.76	239.97	6/23/2022 19:24	11.37	44.38	6/22/2022 17:27	11.37	100.65	6/22/2022 18:44	7.41
6/22/2022 17:41	11.72	239.89	6/23/2022 19:25	11.33	44.25	6/22/2022 17:28	11.34	100.75	6/22/2022 18:45	7.40
6/22/2022 17:42	11.74	239.95	6/23/2022 19:26	11.34	44.03	6/22/2022 17:29	11.36	100.59	6/22/2022 18:46	7.41
6/22/2022 17:43	11.72	239.95	6/23/2022 19:27	11.36	43.86	6/22/2022 17:30	11.36	100.77	6/22/2022 18:47	7.42
6/22/2022 17:44	11.72	240.03	6/23/2022 19:28	11.36	43.68	6/22/2022 17:31	11.32	100.00	6/22/2022 18:48	7.45
6/22/2022 17:45	11.71	240.01	6/23/2022 19:29	11.34	43.54	6/22/2022 17:32	11.35	100.21	6/22/2022 18:49	7.44
6/22/2022 17:46	11.77	239.99	6/23/2022 19:30	11.37	43.29	6/22/2022 17:33	11.36	99.95	6/22/2022 18:50	7.43
6/22/2022 17:47	11.75	239.94	6/23/2022 19:31	11.36	43.15	6/22/2022 17:34	11.33	100.66	6/22/2022 18:51	7.45
6/22/2022 17:48	11.70	239.91	6/23/2022 19:32	11.36	42.96	6/22/2022 17:35	11.32	100.12	6/22/2022 18:52	7.39
6/22/2022 17:49	11.76	240.05	6/23/2022 19:33	11.34	42.77	6/22/2022 17:36	11.33	99.98	6/22/2022 18:53	7.43
6/22/2022 17:50	11.75	240.11	6/23/2022 19:34	11.36	42.66	6/22/2022 17:37	11.32	100.84	6/22/2022 18:54	7.44
6/22/2022 17:51	11.74	239.98	6/23/2022 19:35	11.36	42.51	6/22/2022 17:38	11.36	100.82	6/22/2022 18:55	7.42
6/22/2022 17:52	11.74	240.08	6/23/2022 19:36	11.35	42.26	6/22/2022 17:39	11.36	100.63	6/22/2022 18:56	7.46
6/22/2022 17:53	11.73	239.85	6/23/2022 19:37	11.34	42.05	6/22/2022 17:40	11.36	100.59	6/22/2022 18:57	7.41
6/22/2022 17:54	11.72	240.04	6/23/2022 19:38	11.33	41.89	6/22/2022 17:41	11.33	100.87	6/22/2022 18:58	7.46
6/22/2022 17:55	11.74	239.92	6/23/2022 19:39	11.35	41.80	6/22/2022 17:42	11.34	100.75	6/22/2022 18:59	7.46
6/22/2022 17:56	11.74	240.07	6/23/2022 19:40	11.38	41.54	6/22/2022 17:43	11.36	100.67	6/22/2022 19:00	7.38
6/22/2022 17:57	11.75	239.92	6/23/2022 19:41	11.35	41.44	6/22/2022 17:44	11.34	100.11	6/22/2022 19:01	7.41
6/22/2022 17:58	11.74	240.07	6/23/2022 19:42	11.36	41.27	6/22/2022 17:45	11.35	100.54	6/22/2022 19:02	7.41
6/22/2022 17:59	11.73	239.99	6/23/2022 19:43	11.34	41.14	6/22/2022 17:46	11.37	100.87	6/22/2022 19:03	7.46
6/22/2022 18:00	11.74	240.14	6/23/2022 19:44	11.36	40.93	6/22/2022 17:47	11.34	100.55	6/22/2022 19:04	7.48
6/22/2022 18:01	11.73	240.13	6/23/2022 19:45	11.38	40.78	6/22/2022 17:48	11.33	100.17	6/22/2022 19:05	7.44
6/22/2022 18:02	11.72	240.00	6/23/2022 19:46	11.33	40.64	6/22/2022 17:49	11.36	100.80	6/22/2022 19:06	7.49
6/22/2022 18:03	11.77	240.12	6/23/2022 19:47	11.37	40.47	6/22/2022 17:50	11.32	100.80	6/22/2022 19:07	7.48
6/22/2022 18:04	11.74	240.04	6/23/2022 19:48	11.33	40.26	6/22/2022 17:51	11.33	100.16	6/22/2022 19:08	7.45
6/22/2022 18:05	11.73	239.84	6/23/2022 19:49	11.35	40.20	6/22/2022 17:52	11.34	100.69	6/22/2022 19:09	7.42
6/22/2022 18:06	11.74	240.12	6/23/2022 19:50	11.34	39.93	6/22/2022 17:53	11.32	100.43	6/22/2022 19:10	7.43

6/22/2022 18:07	11.73	240.14	6/23/2022 19:51	11.36	39.78	6/22/2022 17:54	11.34	99.89	6/22/2022 19:11	7.45
6/22/2022 18:08	11.74	239.93	6/23/2022 19:52	11.36	39.67	6/22/2022 17:55	11.32	100.90	6/22/2022 19:12	7.47
6/22/2022 18:09	11.73	239.92	6/23/2022 19:53	11.35	39.60	6/22/2022 17:56	11.36	101.10	6/22/2022 19:13	7.41
6/22/2022 18:10	11.72	240.11	6/23/2022 19:54	11.37	39.37	6/22/2022 17:57	11.36	100.62	6/22/2022 19:14	7.44
6/22/2022 18:11	11.77	239.88	6/23/2022 19:55	11.35	39.27	6/22/2022 17:58	11.33	100.43	6/22/2022 19:15	7.41
6/22/2022 18:12	11.74	240.10	6/23/2022 19:56	11.34	39.07	6/22/2022 17:59	11.34	100.15	6/22/2022 19:16	7.47
6/22/2022 18:13	11.73	240.12	6/23/2022 19:57	11.36	38.88	6/22/2022 18:00	11.36	100.00	6/22/2022 19:17	7.41
6/22/2022 18:14	11.75	240.07	6/23/2022 19:58	11.36	38.72	6/22/2022 18:01	11.34	100.54	6/22/2022 19:18	7.45
6/22/2022 18:15	11.74	239.98	6/23/2022 19:59	11.35	38.59	6/22/2022 18:02	11.31	100.61	6/22/2022 19:19	7.49
6/22/2022 18:16	11.73	240.23	6/23/2022 20:00	11.33	38.46	6/22/2022 18:03	11.36	100.62	6/22/2022 19:20	7.42
6/22/2022 18:17	11.72	240.25	6/23/2022 20:01	11.36	38.25	6/22/2022 18:04	11.33	100.64	6/22/2022 19:21	7.46
6/22/2022 18:18	11.74	240.03	6/23/2022 20:02	11.38	38.15	6/22/2022 18:05	11.34	100.47	6/22/2022 19:22	7.48
6/22/2022 18:19	11.72	240.38	6/23/2022 20:03	11.35	38.05	6/22/2022 18:06	11.37	101.08	6/22/2022 19:23	7.44
6/22/2022 18:20	11.73	240.14	6/23/2022 20:04	11.35	37.93	6/22/2022 18:07	11.35	101.21	6/22/2022 19:24	7.42
6/22/2022 18:21	11.72	240.20	6/23/2022 20:05	11.37	37.77	6/22/2022 18:08	11.36	101.36	6/22/2022 19:25	7.45
6/22/2022 18:22	11.75	240.13	6/23/2022 20:06	11.36	37.55	6/22/2022 18:09	11.35	101.00	6/22/2022 19:26	7.47
6/22/2022 18:23	11.74	239.95	6/23/2022 20:07	11.37	37.45	6/22/2022 18:10	11.34	99.88	6/22/2022 19:27	7.43
6/22/2022 18:24	11.73	240.24	6/23/2022 20:08	11.35	37.24	6/22/2022 18:11	11.36	101.05	6/22/2022 19:28	7.45
6/22/2022 18:25	11.73	240.42	6/23/2022 20:09	11.36	37.17	6/22/2022 18:12	11.36	101.16	6/22/2022 19:29	7.46
6/22/2022 18:26	11.73	240.17	6/23/2022 20:10	11.39	37.01	6/22/2022 18:13	11.34	101.00	6/22/2022 19:30	7.47
6/22/2022 18:27	11.74	239.91	6/23/2022 20:11	11.36	36.75	6/22/2022 18:14	11.37	100.64	6/22/2022 19:31	7.45
6/22/2022 18:28	11.73	240.19	6/23/2022 20:12	11.35	36.73	6/22/2022 18:15	11.37	101.12	6/22/2022 19:32	7.54
6/22/2022 18:29	11.71	240.00	6/23/2022 20:13	11.37	36.55	6/22/2022 18:16	11.35	101.69	6/22/2022 19:33	7.48
6/22/2022 18:30	11.74	240.02	6/23/2022 20:14	11.35	36.41	6/22/2022 18:17	11.37	100.82	6/22/2022 19:34	7.47
6/22/2022 18:31	11.74	240.00	6/23/2022 20:15	11.35	36.40	6/22/2022 18:18	11.34	101.39	6/22/2022 19:35	7.49
6/22/2022 18:32	11.73	240.15	6/23/2022 20:16	11.37	36.09	6/22/2022 18:19	11.35	99.71	6/22/2022 19:36	7.51
6/22/2022 18:33	11.73	240.33	6/23/2022 20:17	11.36	36.07	6/22/2022 18:20	11.35	100.97	6/22/2022 19:37	7.43
6/22/2022 18:34	11.72	240.20	6/23/2022 20:18	11.35	35.98	6/22/2022 18:21	11.35	102.10	6/22/2022 19:38	7.47
6/22/2022 18:35	11.73	240.37	6/23/2022 20:19	11.35	35.74	6/22/2022 18:22	11.35	101.23	6/22/2022 19:39	7.49
6/22/2022 18:36	11.74	240.16	6/23/2022 20:20	11.35	35.70	6/22/2022 18:23	11.36	100.29	6/22/2022 19:40	7.53
6/22/2022 18:37	11.72	240.12	6/23/2022 20:21	11.37	35.54	6/22/2022 18:24	11.35	101.47	6/22/2022 19:41	7.50
6/22/2022 18:38	11.73	240.08	6/23/2022 20:22	11.37	35.41	6/22/2022 18:25	11.35	101.52	6/22/2022 19:42	7.49
6/22/2022 18:39	11.71	239.98	6/23/2022 20:23	11.36	35.37	6/22/2022 18:26	11.33	100.69	6/22/2022 19:43	7.50
6/22/2022 18:40	11.75	240.43	6/23/2022 20:24	11.34	35.26	6/22/2022 18:27	11.36	100.97	6/22/2022 19:44	7.52
6/22/2022 18:41	11.71	240.08	6/23/2022 20:25	11.37	35.09	6/22/2022 18:28	11.35	101.47	6/22/2022 19:45	7.50
6/22/2022 18:42	11.74	240.20	6/23/2022 20:26	11.39	34.87	6/22/2022 18:29	11.32	101.29	6/22/2022 19:46	7.50
6/22/2022 18:43	11.75	240.07	6/23/2022 20:27	11.36	34.75	6/22/2022 18:30	11.34	101.16	6/22/2022 19:47	7.46
6/22/2022 18:44	11.75	239.99	6/23/2022 20:28	11.37	34.78	6/22/2022 18:31	11.36	100.43	6/22/2022 19:48	7.49
6/22/2022 18:45	11.75	240.11	6/23/2022 20:29	11.35	34.61	6/22/2022 18:32	11.35	100.60	6/22/2022 19:49	7.45
6/22/2022 18:46	11.74	240.28	6/23/2022 20:30	11.35	34.49	6/22/2022 18:33	11.34	101.25	6/22/2022 19:50	7.46
6/22/2022 18:47	11.73	240.01	6/23/2022 20:31	11.36	34.30	6/22/2022 18:34	11.33	100.76	6/22/2022 19:51	7.48
6/22/2022 18:48	11.76	240.30	6/23/2022 20:32	11.37	34.26	6/22/2022 18:35	11.35	100.91	6/22/2022 19:52	7.50
6/22/2022 18:49	11.74	240.13	6/23/2022 20:33	11.38	34.03	6/22/2022 18:36	11.34	100.50	6/22/2022 19:53	7.49
6/22/2022 18:50	11.75	240.19	6/23/2022 20:34	11.38	34.02	6/22/2022 18:37	11.31	101.74	6/22/2022 19:54	7.48
6/22/2022 18:51	11.73	240.15	6/23/2022 20:35	11.34	33.79	6/22/2022 18:38	11.37	101.72	6/22/2022 19:55	7.51
6/22/2022 18:52	11.73	240.23	6/23/2022 20:36	11.35	33.65	6/22/2022 18:39	11.32	102.00	6/22/2022 19:56	7.47
6/22/2022 18:53	11.76	240.22	6/23/2022 20:37	11.36	33.56	6/22/2022 18:40	11.35	101.63	6/22/2022 19:57	7.45
6/22/2022 18:54	11.75	240.18	6/23/2022 20:38	11.37	33.44	6/22/2022 18:41	11.34	100.96	6/22/2022 19:58	7.48
6/22/2022 18:55	11.76	240.32	6/23/2022 20:39	11.37	33.28	6/22/2022 18:42	11.35	102.84	6/22/2022 19:59	7.51
6/22/2022 18:56	11.71	240.28	6/23/2022 20:40	11.35	33.19	6/22/2022 18:43	11.37	101.72	6/22/2022 20:00	7.47
6/22/2022 18:57	11.73	240.10	6/23/2022 20:41	11.37	33.06	6/22/2022 18:44	11.37	102.11	6/22/2022 20:01	7.50
6/22/2022 18:58	11.73	240.14	6/23/2022 20:42	11.38	32.99	6/22/2022 18:45	11.36	102.24	6/22/2022 20:02	7.54
6/22/2022 18:59	11.71	240.09	6/23/2022 20:43	11.37	32.78	6/22/2022 18:46	11.32	101.12	6/22/2022 20:03	7.50
6/22/2022 19:00	11.73	240.10	6/23/2022 20:44	11.38	32.74	6/22/2022 18:47	11.33	101.40	6/22/2022 20:04	7.49
6/22/2022 19:01	11.75	240.32	6/23/2022 20:45	11.37	32.59	6/22/2022 18:48	11.35	101.89	6/22/2022 20:05	7.51
6/22/2022 19:02	11.75	240.05	6/23/2022 20:46	11.35	32.55	6/22/2022 18:49	11.36	100.67	6/22/2022 20:06	7.47
6/22/2022 19:03	11.74	240.19	6/23/2022 20:47	11.38	32.30	6/22/2022 18:50	11.35	101.54	6/22/2022 20:07	7.46
6/22/2022 19:04	11.73	240.33	6/23/2022 20:48	11.36	32.27	6/22/2022 18:51	11.37	101.24	6/22/2022 20:08	7.46
6/22/2022 19:05	11.75	240.10	6/23/2022 20:49	11.38	32.26	6/22/2022 18:52	11.36	101.23	6/22/2022 20:09	7.49
6/22/2022 19:06	11.76	240.13	6/23/2022 20:50	11.35	31.97	6/22/2022 18:53	11.32	102.38	6/22/2022 20:10	7.53
6/22/2022 19:07	11.74	240.19	6/23/2022 20:51	11.40	31.87	6/22/2022 18:54	11.34	101.62	6/22/2022 20:11	7.52
6/22/2022 19:08	11.73	240.24	6/23/2022 20:52	11.36	31.77	6/22/2022 18:55	11.35	100.46	6/22/2022 20:12	7.52
6/22/2022 19:09	11.74	240.28	6/23/2022 20:53	11.37	31.67	6/22/2022 18:56	11.37	102.18	6/22/2022 20:13	7.51
6/22/2022 19:10	11.72	240.28	6/23/2022 20:54	11.36	31.54	6/22/2022 18:57	11.38	101.40	6/22/2022 20:14	7.51
6/22/2022 19:11	11.72	240.37	6/23/2022 20:55	11.38	31.54	6/22/2022 18:58	11.37	101.45	6/22/2022 20:15	7.56
6/22/2022 19:12	11.74	240.34	6/23/2022 20:56	11.38	31.33	6/22/2022 18:59	11.34	101.26	6/22/2022 20:16	7.52
6/22/2022 19:13	11.71	240.14	6/23/2022 20:57	11.40	31.25	6/22/2022 19:00	11.34	102.31	6/22/2022 20:17	7.51
6/22/2022 19:14	11.73	240.36	6/23/2022 20:58	11.37	30.98	6/22/2022 19:01	11.35	101.32	6/22/2022 20:18	7.56
6/22/2022 19:15	11.74	240.21	6/23/2022 20:59	11.35	31.08	6/22/2022 19:02	11.35	101.52	6/22/2022 20:19	7.55
6/22/2022 19:16	11.74	240.30	6/23/2022 21:00	11.37	30.81	6/22/2022 19:03	11.33	102.35	6/22/2022 20:20	7.51
6/22/2022 19:17	11.72	240.45	6/23/2022 21:01	11.38	30.84	6/22/2022 19:04	11.34	101.39	6/22/2022 20:21	7.52
6/22/2022 19:18	11.75	240.32	6/23/2022 21:02	11.38	30.60	6/22/2022 19:05	11.35	101.64	6/22/2022 20:22	7.49
6/22/2022 19:19	11.75	240.23	6/23/2022 21:03	11.38	30.51	6/22/2022 19:06	11.36	101.25	6/22/2022 20:23	7.50
6/22/2022 19:20	11.73	240.33	6/23/2022 21:04	11.38	30.43	6/22/2022 19:07	11.33	101.58	6/22/2022 20:24	7.53
6/22/2022 19:21	11.76	240.52	6/23/2022 21:05	11.38	30.31	6/22/2022 19:08	11.35	102.20	6/22/2022 20:25	7.53
6/22/2022 19:22	11.76	240.41	6/23/2022 21:06	11.36	30.12	6/22/2022 19:09	11.35	100.98	6/22/2022 20:26	7.55
6/22/2022 19:23	11.74	240.48	6/23/2022 21:07	11.37	30.03	6/22/2022 19:10	11.35	100.99	6/22/2022 20:27	7.55
6/22/2022 19:24	11.76	240.28	6/23/2022 21:08	11.39	29.97	6/22/2022 19:11	11.34	101.87	6/22/2022 20:28	7.52
6/22/2022 19:25	11.71	240.18	6/23/2022 21:09	11.37	29.84	6/22/2022 19:12	11.34	101.28	6/22/2022 20:29	7.52
6/22/2022 19:26	11.75	240.38	6/23/2022 21:10	11.36	29.75	6/22/2022 19:13	11.36	101.79	6/22/2022 20:30	7.50
6/22/2022 19:27	11.74	240.40	6/23/2022 21:11	11.38	29.68	6/22/2022 19:14	11.36	101.26	6/22/2022 20:31	7.56
6/22/2022 19:28	11.74	240.29	6/23/2022 21:12	11.37	29.54	6/22/2022 19:15	11.35	101.68	6/22/2022 20:32	7.55
6/22/2022 19:29	11.73	240.13	6/23/2022 21:13	11.38	29.40	6/22/2022 19:16	11.33	100.86	6/22/2022 20:33	7.54
6/22/2022 19:30	11.75	240.22	6/23/2022 21:14	11.36	29.34	6/22/2022 19:17	11.32	101.22	6/22/2022 20:34	7.52
6/22/2022 19:31	11.74	240.26	6/23/2022 21:15	11.36	29.21	6/22/2022 19:18	11.35	100.96	6/22/2022 20:35	7.60
6/22/2022 19:32	11.71	240.34	6/23/2022 21:16	11.38	29.08	6/22/2022 19:19	11.34	101.64	6/22/2022 20:36	7.59
6/22/2022 19:33	11.73	240.36	6/23/2022 21:17	11.36	28.94	6/22/2022 19:20	11.33	101.90	6/22/2022 20:37	7.56
6/22/2022 19:34	11.75	240.36	6/23/2022 21:18	11.39	28.92	6/22/2022 19:21	11.35	101.82	6/22/2022 20:38	7.60

6/22/2022 19:35	11.71	240.42	6/23/2022 21:19	11.37	28.88	6/22/2022 19:22	11.35	100.80	6/22/2022 20:39	7.54
6/22/2022 19:36	11.73	240.31	6/23/2022 21:20	11.37	28.69	6/22/2022 19:23	11.32	101.74	6/22/2022 20:40	7.55
6/22/2022 19:37	11.74	240.42	6/23/2022 21:21	11.37	28.59	6/22/2022 19:24	11.35	101.63	6/22/2022 20:41	7.54
6/22/2022 19:38	11.73	240.33	6/23/2022 21:22	11.37	28.47	6/22/2022 19:25	11.37	101.39	6/22/2022 20:42	7.65
6/22/2022 19:39	11.75	240.29	6/23/2022 21:23	11.38	28.40	6/22/2022 19:26	11.37	102.76	6/22/2022 20:43	7.53
6/22/2022 19:40	11.72	240.40	6/23/2022 21:24	11.36	28.30	6/22/2022 19:27	11.35	101.56	6/22/2022 20:44	7.54
6/22/2022 19:41	11.73	240.57	6/23/2022 21:25	11.35	28.10	6/22/2022 19:28	11.31	101.55	6/22/2022 20:45	7.59
6/22/2022 19:42	11.74	240.39	6/23/2022 21:26	11.38	27.96	6/22/2022 19:29	11.35	101.44	6/22/2022 20:46	7.58
6/22/2022 19:43	11.71	240.34	6/23/2022 21:27	11.38	27.93	6/22/2022 19:30	11.33	101.59	6/22/2022 20:47	7.54
6/22/2022 19:44	11.74	240.34	6/23/2022 21:28	11.39	27.95	6/22/2022 19:31	11.35	102.36	6/22/2022 20:48	7.54
6/22/2022 19:45	11.73	240.24	6/23/2022 21:29	11.34	27.76	6/22/2022 19:32	11.34	101.15	6/22/2022 20:49	7.61
6/22/2022 19:46	11.72	240.44	6/23/2022 21:30	11.38	27.58	6/22/2022 19:33	11.35	101.83	6/22/2022 20:50	7.55
6/22/2022 19:47	11.75	240.47	6/23/2022 21:31	11.37	27.55	6/22/2022 19:34	11.35	101.15	6/22/2022 20:51	7.58
6/22/2022 19:48	11.72	240.62	6/23/2022 21:32	11.38	27.52	6/22/2022 19:35	11.34	101.33	6/22/2022 20:52	7.60
6/22/2022 19:49	11.75	240.60	6/23/2022 21:33	11.38	27.34	6/22/2022 19:36	11.35	102.01	6/22/2022 20:53	7.62
6/22/2022 19:50	11.74	240.31	6/23/2022 21:34	11.38	27.23	6/22/2022 19:37	11.32	102.57	6/22/2022 20:54	7.56
6/22/2022 19:51	11.75	240.60	6/23/2022 21:35	11.36	27.23	6/22/2022 19:38	11.36	101.08	6/22/2022 20:55	7.56
6/22/2022 19:52	11.71	240.55	6/23/2022 21:36	11.36	27.09	6/22/2022 19:39	11.36	102.14	6/22/2022 20:56	7.59
6/22/2022 19:53	11.74	240.46	6/23/2022 21:37	11.39	26.92	6/22/2022 19:40	11.35	101.98	6/22/2022 20:57	7.59
6/22/2022 19:54	11.74	240.54	6/23/2022 21:38	11.36	26.82	6/22/2022 19:41	11.33	101.67	6/22/2022 20:58	7.62
6/22/2022 19:55	11.74	240.49	6/23/2022 21:39	11.37	26.69	6/22/2022 19:42	11.34	103.26	6/22/2022 20:59	7.57
6/22/2022 19:56	11.75	240.39	6/23/2022 21:40	11.39	26.65	6/22/2022 19:43	11.33	102.89	6/22/2022 21:00	7.57
6/22/2022 19:57	11.72	240.38	6/23/2022 21:41	11.36	26.61	6/22/2022 19:44	11.34	101.76	6/22/2022 21:01	7.58
6/22/2022 19:58	11.73	240.58	6/23/2022 21:42	11.37	26.58	6/22/2022 19:45	11.34	102.41	6/22/2022 21:02	7.58
6/22/2022 19:59	11.71	240.37	6/23/2022 21:43	11.36	26.38	6/22/2022 19:46	11.32	100.66	6/22/2022 21:03	7.62
6/22/2022 20:00	11.73	240.47	6/23/2022 21:44	11.38	26.34	6/22/2022 19:47	11.35	101.77	6/22/2022 21:04	7.56
6/22/2022 20:01	11.76	240.38	6/23/2022 21:45	11.36	26.22	6/22/2022 19:48	11.37	101.09	6/22/2022 21:05	7.60
6/22/2022 20:02	11.74	240.58	6/23/2022 21:46	11.38	26.14	6/22/2022 19:49	11.37	101.46	6/22/2022 21:06	7.60
6/22/2022 20:03	11.73	240.43	6/23/2022 21:47	11.35	25.99	6/22/2022 19:50	11.37	102.48	6/22/2022 21:07	7.60
6/22/2022 20:04	11.72	240.43	6/23/2022 21:48	11.37	26.00	6/22/2022 19:51	11.36	101.18	6/22/2022 21:08	7.60
6/22/2022 20:05	11.76	240.39	6/23/2022 21:49	11.38	25.88	6/22/2022 19:52	11.34	101.37	6/22/2022 21:09	7.63
6/22/2022 20:06	11.76	240.57	6/23/2022 21:50	11.36	25.74	6/22/2022 19:53	11.36	101.99	6/22/2022 21:10	7.57
6/22/2022 20:07	11.75	240.60	6/23/2022 21:51	11.38	25.67	6/22/2022 19:54	11.32	101.89	6/22/2022 21:11	7.59
6/22/2022 20:08	11.74	240.36	6/23/2022 21:52	11.36	25.59	6/22/2022 19:55	11.32	101.16	6/22/2022 21:12	7.63
6/22/2022 20:09	11.70	240.41	6/23/2022 21:53	11.39	25.58	6/22/2022 19:56	11.36	101.83	6/22/2022 21:13	7.59
6/22/2022 20:10	11.75	240.48	6/23/2022 21:54	11.37	25.53	6/22/2022 19:57	11.34	102.37	6/22/2022 21:14	7.60
6/22/2022 20:11	11.76	240.58	6/23/2022 21:55	11.39	25.44	6/22/2022 19:58	11.34	101.97	6/22/2022 21:15	7.54
6/22/2022 20:12	11.72	240.67	6/23/2022 21:56	11.38	25.31	6/22/2022 19:59	11.33	101.87	6/22/2022 21:16	7.68
6/22/2022 20:13	11.70	240.39	6/23/2022 21:57	11.38	25.16	6/22/2022 20:00	11.35	102.26	6/22/2022 21:17	7.58
6/22/2022 20:14	11.72	240.41	6/23/2022 21:58	11.39	25.13	6/22/2022 20:01	11.37	102.20	6/22/2022 21:18	7.59
6/22/2022 20:15	11.74	240.49	6/23/2022 21:59	11.38	25.08	6/22/2022 20:02	11.37	102.14	6/22/2022 21:19	7.62
6/22/2022 20:16	11.74	240.48	6/23/2022 22:00	11.38	25.11	6/22/2022 20:03	11.33	102.13	6/22/2022 21:20	7.62
6/22/2022 20:17	11.73	240.71	6/23/2022 22:01	11.40	24.89	6/22/2022 20:04	11.34	101.58	6/22/2022 21:21	7.64
6/22/2022 20:18	11.73	240.43	6/23/2022 22:02	11.39	24.85	6/22/2022 20:05	11.36	102.39	6/22/2022 21:22	7.67
6/22/2022 20:19	11.71	240.51	6/23/2022 22:03	11.38	24.69	6/22/2022 20:06	11.36	102.07	6/22/2022 21:23	7.62
6/22/2022 20:20	11.74	240.47	6/23/2022 22:04	11.38	24.73	6/22/2022 20:07	11.34	102.13	6/22/2022 21:24	7.63
6/22/2022 20:21	11.73	240.48	6/23/2022 22:05	11.35	24.58	6/22/2022 20:08	11.35	102.73	6/22/2022 21:25	7.65
6/22/2022 20:22	11.72	240.43	6/23/2022 22:06	11.39	24.45	6/22/2022 20:09	11.36	101.53	6/22/2022 21:26	7.66
6/22/2022 20:23	11.73	240.45	6/23/2022 22:07	11.39	24.29	6/22/2022 20:10	11.36	102.47	6/22/2022 21:27	7.62
6/22/2022 20:24	11.71	240.34	6/23/2022 22:08	11.37	24.29	6/22/2022 20:11	11.34	102.03	6/22/2022 21:28	7.56
6/22/2022 20:25	11.75	240.37	6/23/2022 22:09	11.39	24.25	6/22/2022 20:12	11.36	101.16	6/22/2022 21:29	7.66
6/22/2022 20:26	11.76	240.61	6/23/2022 22:10	11.38	24.07	6/22/2022 20:13	11.34	102.42	6/22/2022 21:30	7.64
6/22/2022 20:27	11.72	240.28	6/23/2022 22:11	11.39	24.04	6/22/2022 20:14	11.35	101.57	6/22/2022 21:31	7.63
6/22/2022 20:28	11.74	240.62	6/23/2022 22:12	11.38	23.95	6/22/2022 20:15	11.35	102.20	6/22/2022 21:32	7.64
6/22/2022 20:29	11.75	240.53	6/23/2022 22:13	11.41	23.90	6/22/2022 20:16	11.32	102.12	6/22/2022 21:33	7.64
6/22/2022 20:30	11.73	240.53	6/23/2022 22:14	11.36	23.82	6/22/2022 20:17	11.34	102.68	6/22/2022 21:34	7.66
6/22/2022 20:31	11.73	240.48	6/23/2022 22:15	11.42	23.78	6/22/2022 20:18	11.35	102.19	6/22/2022 21:35	7.60
6/22/2022 20:32	11.73	240.60	6/23/2022 22:16	11.39	23.55	6/22/2022 20:19	11.32	101.79	6/22/2022 21:36	7.63
6/22/2022 20:33	11.70	240.62	6/23/2022 22:17	11.40	23.59	6/22/2022 20:20	11.33	102.16	6/22/2022 21:37	7.64
6/22/2022 20:34	11.72	240.76	6/23/2022 22:18	11.37	23.46	6/22/2022 20:21	11.34	100.98	6/22/2022 21:38	7.65
6/22/2022 20:35	11.75	240.60	6/23/2022 22:19	11.36	23.29	6/22/2022 20:22	11.35	102.18	6/22/2022 21:39	7.59
6/22/2022 20:36	11.74	240.63	6/23/2022 22:20	11.39	23.38	6/22/2022 20:23	11.37	100.57	6/22/2022 21:40	7.61
6/22/2022 20:37	11.73	240.69	6/23/2022 22:21	11.40	23.24	6/22/2022 20:24	11.33	101.72	6/22/2022 21:41	7.64
6/22/2022 20:38	11.74	240.56	6/23/2022 22:22	11.40	23.23	6/22/2022 20:25	11.35	102.15	6/22/2022 21:42	7.68
6/22/2022 20:39	11.74	240.49	6/23/2022 22:23	11.39	23.17	6/22/2022 20:26	11.34	101.93	6/22/2022 21:43	7.67
6/22/2022 20:40	11.73	240.70	6/23/2022 22:24	11.39	22.97	6/22/2022 20:27	11.36	102.06	6/22/2022 21:44	7.65
6/22/2022 20:41	11.74	240.68	6/23/2022 22:25	11.39	22.92	6/22/2022 20:28	11.37	101.21	6/22/2022 21:45	7.61
6/22/2022 20:42	11.73	240.76	6/23/2022 22:26	11.39	22.86	6/22/2022 20:29	11.37	102.96	6/22/2022 21:46	7.66
6/22/2022 20:43	11.75	240.82	6/23/2022 22:27	11.37	22.76	6/22/2022 20:30	11.35	102.53	6/22/2022 21:47	7.68
6/22/2022 20:44	11.74	240.83	6/23/2022 22:28	11.42	22.70	6/22/2022 20:31	11.37	101.76	6/22/2022 21:48	7.62
6/22/2022 20:45	11.76	240.73	6/23/2022 22:29	11.38	22.60	6/22/2022 20:32	11.37	102.14	6/22/2022 21:49	7.66
6/22/2022 20:46	11.76	240.93	6/23/2022 22:30	11.39	22.56	6/22/2022 20:33	11.36	101.90	6/22/2022 21:50	7.64
6/22/2022 20:47	11.74	240.77	6/23/2022 22:31	11.36	22.52	6/22/2022 20:34	11.34	101.76	6/22/2022 21:51	7.69
6/22/2022 20:48	11.73	240.87	6/23/2022 22:32	11.39	22.42	6/22/2022 20:35	11.37	102.13	6/22/2022 21:52	7.70
6/22/2022 20:49	11.74	240.83	6/23/2022 22:33	11.41	22.24	6/22/2022 20:36	11.33	101.69	6/22/2022 21:53	7.67
6/22/2022 20:50	11.72	240.68	6/23/2022 22:34	11.40	22.21	6/22/2022 20:37	11.32	102.12	6/22/2022 21:54	7.66
6/22/2022 20:51	11.74	240.71	6/23/2022 22:35	11.35	22.18	6/22/2022 20:38	11.32	102.21	6/22/2022 21:55	7.69
6/22/2022 20:52	11.72	240.84	6/23/2022 22:36	11.40	22.16	6/22/2022 20:39	11.34	102.14	6/22/2022 21:56	7.62
6/22/2022 20:53	11.76	240.75	6/23/2022 22:37	11.38	21.96	6/22/2022 20:40	11.34	101.55	6/22/2022 21:57	7.67
6/22/2022 20:54	11.74	240.91	6/23/2022 22:38	11.41	21.97	6/22/2022 20:41	11.36	101.84	6/22/2022 21:58	7.69
6/22/2022 20:55	11.74	241.08	6/23/2022 22:39	11.39	21.91	6/22/2022 20:42	11.36	101.73	6/22/2022 21:59	7.65
6/22/2022 20:56	11.71	240.68	6/23/2022 22:40	11.38	21.77	6/22/2022 20:43	11.34	102.38	6/22/2022 22:00	7.65
6/22/2022 20:57	11.71	240.62	6/23/2022 22:41	11.40	21.63	6/22/2022 20:44	11.33	101.91	6/22/2022 22:01	7.62
6/22/2022 20:58	11.74	240.77	6/23/2022 22:42	11.39	21.62	6/22/2022 20:45	11.37	101.91	6/22/2022 22:02	7.69
6/22/2022 20:59	11.75	240.79	6/23/2022 22:43	11.39	21.47	6/22/2022 20:46	11.35	102.42	6/22/2022 22:03	7.70
6/22/2022 21:00	11.72	240.98	6/23/2022 22:44	11.39	21.52	6/22/2022 20:47	11.33	102.90	6/22/2022 22:04	7.67
6/22/2022 21:01	11.73	240.94	6/23/2022 22:45	11.37	21.39	6/22/2022 20:48	11.37	102.41	6/22/2022 22:05	7.73
6/22/2022 21:02	11.74	240.83	6/23/2022 22:46	11.42	21.35	6/22/2022 20:49	11.37	102.32	6/22/2022 22:06	7.67

6/22/2022 21:03	11.73	240.69	6/23/2022 22:47	11.37	21.22	6/22/2022 20:50	11.35	101.52	6/22/2022 22:07	7.66
6/22/2022 21:04	11.73	240.86	6/23/2022 22:48	11.40	21.29	6/22/2022 20:51	11.33	102.00	6/22/2022 22:08	7.70
6/22/2022 21:05	11.74	240.91	6/23/2022 22:49	11.37	21.10	6/22/2022 20:52	11.36	102.57	6/22/2022 22:09	7.71
6/22/2022 21:06	11.72	240.80	6/23/2022 22:50	11.40	21.07	6/22/2022 20:53	11.33	101.85	6/22/2022 22:10	7.76
6/22/2022 21:07	11.73	240.97	6/23/2022 22:51	11.39	20.86	6/22/2022 20:54	11.37	102.46	6/22/2022 22:11	7.70
6/22/2022 21:08	11.73	240.86	6/23/2022 22:52	11.38	20.94	6/22/2022 20:55	11.34	102.22	6/22/2022 22:12	7.75
6/22/2022 21:09	11.73	240.94	6/23/2022 22:53	11.37	20.85	6/22/2022 20:56	11.37	101.79	6/22/2022 22:13	7.75
6/22/2022 21:10	11.71	241.00	6/23/2022 22:54	11.37	20.67	6/22/2022 20:57	11.34	101.21	6/22/2022 22:14	7.74
6/22/2022 21:11	11.73	240.92	6/23/2022 22:55	11.40	20.76	6/22/2022 20:58	11.36	102.61	6/22/2022 22:15	7.78
6/22/2022 21:12	11.74	240.93	6/23/2022 22:56	11.42	20.66	6/22/2022 20:59	11.37	102.07	6/22/2022 22:16	7.77
6/22/2022 21:13	11.72	240.87	6/23/2022 22:57	11.39	20.53	6/22/2022 21:00	11.35	101.98	6/22/2022 22:17	7.77
6/22/2022 21:14	11.75	241.01	6/23/2022 22:58	11.41	20.40	6/22/2022 21:01	11.34	102.36	6/22/2022 22:18	7.81
6/22/2022 21:15	11.75	241.07	6/23/2022 22:59	11.40	20.44	6/22/2022 21:02	11.33	102.51	6/22/2022 22:19	7.82
6/22/2022 21:16	11.74	240.67	6/23/2022 23:00	11.41	20.30	6/22/2022 21:03	11.34	101.94	6/22/2022 22:20	7.77
6/22/2022 21:17	11.74	241.18	6/23/2022 23:01	11.41	20.20	6/22/2022 21:04	11.32	100.96	6/22/2022 22:21	7.78
6/22/2022 21:18	11.72	240.96	6/23/2022 23:02	11.38	20.12	6/22/2022 21:05	11.33	101.55	6/22/2022 22:22	7.83
6/22/2022 21:19	11.74	240.94	6/23/2022 23:03	11.39	20.15	6/22/2022 21:06	11.31	101.65	6/22/2022 22:23	7.84
6/22/2022 21:20	11.74	241.05	6/23/2022 23:04	11.37	19.94	6/22/2022 21:07	11.36	101.56	6/22/2022 22:24	7.81
6/22/2022 21:21	11.73	240.96	6/23/2022 23:05	11.40	19.92	6/22/2022 21:08	11.36	101.78	6/22/2022 22:25	7.81
6/22/2022 21:22	11.74	241.12	6/23/2022 23:06	11.41	19.83	6/22/2022 21:09	11.34	102.98	6/22/2022 22:26	7.84
6/22/2022 21:23	11.72	240.89	6/23/2022 23:07	11.40	19.87	6/22/2022 21:10	11.34	101.62	6/22/2022 22:27	7.84
6/22/2022 21:24	11.75	241.10	6/23/2022 23:08	11.39	19.72	6/22/2022 21:11	11.36	101.61	6/22/2022 22:28	7.82
6/22/2022 21:25	11.73	240.92	6/23/2022 23:09	11.40	19.61	6/22/2022 21:12	11.36	102.60	6/22/2022 22:29	7.82
6/22/2022 21:26	11.74	240.95	6/23/2022 23:10	11.42	19.58	6/22/2022 21:13	11.32	102.28	6/22/2022 22:30	7.84
6/22/2022 21:27	11.74	241.08	6/23/2022 23:11	11.38	19.43	6/22/2022 21:14	11.37	101.95	6/22/2022 22:31	7.88
6/22/2022 21:28	11.73	240.95	6/23/2022 23:12	11.42	19.31	6/22/2022 21:15	11.33	102.42	6/22/2022 22:32	7.85
6/22/2022 21:29	11.74	241.04	6/23/2022 23:13	11.39	19.35	6/22/2022 21:16	11.34	102.14	6/22/2022 22:33	7.85
6/22/2022 21:30	11.74	241.07	6/23/2022 23:14	11.41	19.29	6/22/2022 21:17	11.38	102.13	6/22/2022 22:34	7.87
6/22/2022 21:31	11.74	241.10	6/23/2022 23:15	11.39	19.27	6/22/2022 21:18	11.37	102.86	6/22/2022 22:35	7.92
6/22/2022 21:32	11.73	241.04	6/23/2022 23:16	11.40	19.05	6/22/2022 21:19	11.36	102.10	6/22/2022 22:36	7.84
6/22/2022 21:33	11.70	241.12	6/23/2022 23:17	11.37	19.03	6/22/2022 21:20	11.35	101.88	6/22/2022 22:37	7.90
6/22/2022 21:34	11.73	240.90	6/23/2022 23:18	11.38	18.97	6/22/2022 21:21	11.34	102.61	6/22/2022 22:38	7.91
6/22/2022 21:35	11.74	241.27	6/23/2022 23:19	11.40	18.95	6/22/2022 21:22	11.34	102.12	6/22/2022 22:39	7.93
6/22/2022 21:36	11.72	240.88	6/23/2022 23:20	11.40	18.82	6/22/2022 21:23	11.32	102.40	6/22/2022 22:40	7.88
6/22/2022 21:37	11.72	240.97	6/23/2022 23:21	11.41	18.78	6/22/2022 21:24	11.35	100.80	6/22/2022 22:41	7.90
6/22/2022 21:38	11.73	241.06	6/23/2022 23:22	11.40	18.78	6/22/2022 21:25	11.35	101.80	6/22/2022 22:42	7.86
6/22/2022 21:39	11.75	241.04	6/23/2022 23:23	11.40	18.66	6/22/2022 21:26	11.35	101.78	6/22/2022 22:43	7.89
6/22/2022 21:40	11.75	241.31	6/23/2022 23:24	11.39	18.49	6/22/2022 21:27	11.35	102.16	6/22/2022 22:44	7.87
6/22/2022 21:41	11.72	241.13	6/23/2022 23:25	11.41	18.46	6/22/2022 21:28	11.35	100.42	6/22/2022 22:45	7.88
6/22/2022 21:42	11.73	241.10	6/23/2022 23:26	11.41	18.42	6/22/2022 21:29	11.36	101.36	6/22/2022 22:46	7.90
6/22/2022 21:43	11.75	241.06	6/23/2022 23:27	11.37	18.31	6/22/2022 21:30	11.33	101.94	6/22/2022 22:47	7.90
6/22/2022 21:44	11.75	241.25	6/23/2022 23:28	11.41	18.30	6/22/2022 21:31	11.35	101.88	6/22/2022 22:48	7.89
6/22/2022 21:45	11.73	241.02	6/23/2022 23:29	11.40	18.21	6/22/2022 21:32	11.37	102.22	6/22/2022 22:49	7.94
6/22/2022 21:46	11.74	241.13	6/23/2022 23:30	11.40	18.17	6/22/2022 21:33	11.34	102.46	6/22/2022 22:50	7.98
6/22/2022 21:47	11.75	241.24	6/23/2022 23:31	11.41	17.99	6/22/2022 21:34	11.31	102.63	6/22/2022 22:51	7.92
6/22/2022 21:48	11.75	241.01	6/23/2022 23:32	11.41	18.02	6/22/2022 21:35	11.32	102.34	6/22/2022 22:52	7.90
6/22/2022 21:49	11.78	241.11	6/23/2022 23:33	11.42	17.97	6/22/2022 21:36	11.34	102.47	6/22/2022 22:53	7.92
6/22/2022 21:50	11.73	240.94	6/23/2022 23:34	11.42	17.85	6/22/2022 21:37	11.33	102.75	6/22/2022 22:54	7.95
6/22/2022 21:51	11.71	241.16	6/23/2022 23:35	11.40	17.80	6/22/2022 21:38	11.32	102.32	6/22/2022 22:55	7.93
6/22/2022 21:52	11.73	241.25	6/23/2022 23:36	11.41	17.72	6/22/2022 21:39	11.37	102.10	6/22/2022 22:56	7.95
6/22/2022 21:53	11.71	241.10	6/23/2022 23:37	11.42	17.63	6/22/2022 21:40	11.36	102.33	6/22/2022 22:57	7.92
6/22/2022 21:54	11.73	241.20	6/23/2022 23:38	11.42	17.56	6/22/2022 21:41	11.37	101.48	6/22/2022 22:58	7.96
6/22/2022 21:55	11.73	241.15	6/23/2022 23:39	11.41	17.48	6/22/2022 21:42	11.32	102.39	6/22/2022 22:59	7.91
6/22/2022 21:56	11.74	241.01	6/23/2022 23:40	11.42	17.56	6/22/2022 21:43	11.35	102.38	6/22/2022 23:00	7.86
6/22/2022 21:57	11.71	241.24	6/23/2022 23:41	11.40	17.39	6/22/2022 21:44	11.33	101.90	6/22/2022 23:01	7.95
6/22/2022 21:58	11.74	241.18	6/23/2022 23:42	11.41	17.28	6/22/2022 21:45	11.36	102.21	6/22/2022 23:02	7.94
6/22/2022 21:59	11.73	241.03	6/23/2022 23:43	11.43	17.29	6/22/2022 21:46	11.33	102.34	6/22/2022 23:03	7.98
6/22/2022 22:00	11.75	241.17	6/23/2022 23:44	11.42	17.19	6/22/2022 21:47	11.37	102.76	6/22/2022 23:04	7.89
6/22/2022 22:01	11.73	241.24	6/23/2022 23:45	11.41	17.10	6/22/2022 21:48	11.34	102.92	6/22/2022 23:05	7.95
6/22/2022 22:02	11.74	241.06	6/23/2022 23:46	11.40	16.90	6/22/2022 21:49	11.37	103.31	6/22/2022 23:06	7.93
6/22/2022 22:03	11.72	241.34	6/23/2022 23:47	11.42	16.93	6/22/2022 21:50	11.35	102.40	6/22/2022 23:07	7.93
6/22/2022 22:04	11.71	241.17	6/23/2022 23:48	11.41	16.92	6/22/2022 21:51	11.34	101.04	6/22/2022 23:08	7.91
6/22/2022 22:05	11.74	241.01	6/23/2022 23:49	11.42	16.85	6/22/2022 21:52	11.35	102.18	6/22/2022 23:09	7.93
6/22/2022 22:06	11.71	241.29	6/23/2022 23:50	11.40	16.77	6/22/2022 21:53	11.36	102.56	6/22/2022 23:10	8.03
6/22/2022 22:07	11.75	241.00	6/23/2022 23:51	11.40	16.62	6/22/2022 21:54	11.33	102.63	6/22/2022 23:11	8.02
6/22/2022 22:08	11.73	241.26	6/23/2022 23:52	11.42	16.66	6/22/2022 21:55	11.33	102.34	6/22/2022 23:12	8.00
6/22/2022 22:09	11.74	241.22	6/23/2022 23:53	11.40	16.60	6/22/2022 21:56	11.32	102.49	6/22/2022 23:13	8.02
6/22/2022 22:10	11.75	241.18	6/23/2022 23:54	11.39	16.49	6/22/2022 21:57	11.32	102.45	6/22/2022 23:14	8.00
6/22/2022 22:11	11.73	241.29	6/23/2022 23:55	11.42	16.45	6/22/2022 21:58	11.32	102.02	6/22/2022 23:15	8.05
6/22/2022 22:12	11.75	241.18	6/23/2022 23:56	11.42	16.39	6/22/2022 21:59	11.36	101.61	6/22/2022 23:16	8.07
6/22/2022 22:13	11.75	241.15	6/23/2022 23:57	11.39	16.32	6/22/2022 22:00	11.36	101.51	6/22/2022 23:17	8.09
6/22/2022 22:14	11.74	241.36	6/23/2022 23:58	11.42	16.23	6/22/2022 22:01	11.35	102.69	6/22/2022 23:18	8.09
6/22/2022 22:15	11.73	241.04	6/23/2022 23:59	11.40	16.26	6/22/2022 22:02	11.34	101.88	6/22/2022 23:19	8.13
6/22/2022 22:16	11.74	241.11	6/24/2022 0:00	11.40	16.11	6/22/2022 22:03	11.34	102.23	6/22/2022 23:20	8.14
6/22/2022 22:17	11.75	241.31	6/24/2022 0:01	11.42	16.12	6/22/2022 22:04	11.36	101.79	6/22/2022 23:21	8.15
6/22/2022 22:18	11.73	241.35	6/24/2022 0:02	11.39	16.02	6/22/2022 22:05	11.33	103.06	6/22/2022 23:22	8.19
6/22/2022 22:19	11.75	241.12	6/24/2022 0:03	11.39	16.02	6/22/2022 22:06	11.36	102.19	6/22/2022 23:23	8.12
6/22/2022 22:20	11.74	241.21	6/24/2022 0:04	11.41	15.86	6/22/2022 22:07	11.35	102.76	6/22/2022 23:24	8.18
6/22/2022 22:21	11.73	241.18	6/24/2022 0:05	11.42	15.78	6/22/2022 22:08	11.35	101.89	6/22/2022 23:25	8.20
6/22/2022 22:22	11.73	241.27	6/24/2022 0:06	11.41	15.67	6/22/2022 22:09	11.34	102.08	6/22/2022 23:26	8.16
6/22/2022 22:23	11.73	241.29	6/24/2022 0:07	11.41	15.70	6/22/2022 22:10	11.34	102.03	6/22/2022 23:27	8.21
6/22/2022 22:24	11.75	241.11	6/24/2022 0:08	11.40	15.66	6/22/2022 22:11	11.36	102.43	6/22/2022 23:28	8.21
6/22/2022 22:25	11.72	241.39	6/24/2022 0:09	11.41	15.54	6/22/2022 22:12	11.33	102.70	6/22/2022 23:29	8.19
6/22/2022 22:26	11.73	241.24	6/24/2022 0:10	11.42	15.54	6/22/2022 22:13	11.33	102.93	6/22/2022 23:30	8.26
6/22/2022 22:27	11.75	241.24	6/24/2022 0:11	11.40	15.35	6/22/2022 22:14	11.32	102.88	6/22/2022 23:31	8.31
6/22/2022 22:28	11.73	241.49	6/24/2022 0:12	11.39	15.34	6/22/2022 22:15	11.31	102.66	6/22/2022 23:32	8.25
6/22/2022 22:29	11.74	241.24	6/24/2022 0:13	11.41	15.31	6/22/2022 22:16	11.38	102.15	6/22/2022 23:33	8.29
6/22/2022 22:30	11.75	241.22	6/24/2022 0:14	11.42	15.23	6/22/2022 22:17	11.33	103.57	6/22/2022 23:34	8.35

6/22/2022 22:31	11.72	241.24	6/24/2022 0:15	11.42	15.23	6/22/2022 22:18	11.33	102.28	6/22/2022 23:35	8.33
6/22/2022 22:32	11.71	241.33	6/24/2022 0:16	11.43	15.14	6/22/2022 22:19	11.38	102.20	6/22/2022 23:36	8.29
6/22/2022 22:33	11.73	241.07	6/24/2022 0:17	11.42	15.17	6/22/2022 22:20	11.34	102.45	6/22/2022 23:37	8.32
6/22/2022 22:34	11.75	241.34	6/24/2022 0:18	11.42	15.09	6/22/2022 22:21	11.34	103.34	6/22/2022 23:38	8.34
6/22/2022 22:35	11.74	241.56	6/24/2022 0:19	11.42	14.90	6/22/2022 22:22	11.35	101.26	6/22/2022 23:39	8.32
6/22/2022 22:36	11.72	241.41	6/24/2022 0:20	11.43	14.84	6/22/2022 22:23	11.36	103.18	6/22/2022 23:40	8.32
6/22/2022 22:37	11.74	241.25	6/24/2022 0:21	11.42	14.76	6/22/2022 22:24	11.35	102.58	6/22/2022 23:41	8.29
6/22/2022 22:38	11.73	241.31	6/24/2022 0:22	11.40	14.81	6/22/2022 22:25	11.34	102.78	6/22/2022 23:42	8.38
6/22/2022 22:39	11.75	241.20	6/24/2022 0:23	11.41	14.65	6/22/2022 22:26	11.34	103.08	6/22/2022 23:43	8.39
6/22/2022 22:40	11.75	241.21	6/24/2022 0:24	11.42	14.65	6/22/2022 22:27	11.36	102.75	6/22/2022 23:44	8.39
6/22/2022 22:41	11.74	241.42	6/24/2022 0:25	11.41	14.61	6/22/2022 22:28	11.33	102.28	6/22/2022 23:45	8.37
6/22/2022 22:42	11.72	241.41	6/24/2022 0:26	11.42	14.52	6/22/2022 22:29	11.31	101.32	6/22/2022 23:46	8.44
6/22/2022 22:43	11.75	241.43	6/24/2022 0:27	11.43	14.55	6/22/2022 22:30	11.34	102.40	6/22/2022 23:47	8.37
6/22/2022 22:44	11.74	241.12	6/24/2022 0:28	11.40	14.37	6/22/2022 22:31	11.34	103.14	6/22/2022 23:48	8.39
6/22/2022 22:45	11.75	241.24	6/24/2022 0:29	11.39	14.37	6/22/2022 22:32	11.31	102.15	6/22/2022 23:49	8.44
6/22/2022 22:46	11.72	241.51	6/24/2022 0:30	11.42	14.30	6/22/2022 22:33	11.33	102.88	6/22/2022 23:50	8.46
6/22/2022 22:47	11.72	241.22	6/24/2022 0:31	11.43	14.17	6/22/2022 22:34	11.34	102.68	6/22/2022 23:51	8.44
6/22/2022 22:48	11.74	241.31	6/24/2022 0:32	11.41	14.13	6/22/2022 22:35	11.37	102.04	6/22/2022 23:52	8.39
6/22/2022 22:49	11.74	241.24	6/24/2022 0:33	11.42	14.10	6/22/2022 22:36	11.34	101.83	6/22/2022 23:53	8.41
6/22/2022 22:50	11.75	241.51	6/24/2022 0:34	11.40	13.97	6/22/2022 22:37	11.32	102.68	6/22/2022 23:54	8.36
6/22/2022 22:51	11.74	241.36	6/24/2022 0:35	11.43	13.82	6/22/2022 22:38	11.36	102.85	6/22/2022 23:55	8.42
6/22/2022 22:52	11.72	241.31	6/24/2022 0:36	11.44	13.96	6/22/2022 22:39	11.32	102.77	6/22/2022 23:56	8.43
6/22/2022 22:53	11.73	241.26	6/24/2022 0:37	11.43	13.86	6/22/2022 22:40	11.33	102.18	6/22/2022 23:57	8.49
6/22/2022 22:54	11.73	241.50	6/24/2022 0:38	11.42	13.74	6/22/2022 22:41	11.36	102.87	6/22/2022 23:58	8.44
6/22/2022 22:55	11.75	241.24	6/24/2022 0:39	11.43	13.66	6/22/2022 22:42	11.38	102.97	6/22/2022 23:59	8.47
6/22/2022 22:56	11.75	241.31	6/24/2022 0:40	11.42	13.62	6/22/2022 22:43	11.31	103.29	6/23/2022 0:00	8.46
6/22/2022 22:57	11.74	241.34	6/24/2022 0:41	11.43	13.54	6/22/2022 22:44	11.38	102.32	6/23/2022 0:01	8.44
6/22/2022 22:58	11.74	241.45	6/24/2022 0:42	11.42	13.42	6/22/2022 22:45	11.39	102.47	6/23/2022 0:02	8.44
6/22/2022 22:59	11.75	241.18	6/24/2022 0:43	11.40	13.50	6/22/2022 22:46	11.31	102.46	6/23/2022 0:03	8.42
6/22/2022 23:00	11.74	241.32	6/24/2022 0:44	11.43	13.42	6/22/2022 22:47	11.33	102.81	6/23/2022 0:04	8.52
6/22/2022 23:01	11.76	241.36	6/24/2022 0:45	11.42	13.32	6/22/2022 22:48	11.38	102.61	6/23/2022 0:05	8.49
6/22/2022 23:02	11.74	241.41	6/24/2022 0:46	11.41	13.20	6/22/2022 22:49	11.36	102.58	6/23/2022 0:06	8.44
6/22/2022 23:03	11.75	241.14	6/24/2022 0:47	11.41	13.28	6/22/2022 22:50	11.34	102.70	6/23/2022 0:07	8.50
6/22/2022 23:04	11.73	241.25	6/24/2022 0:48	11.42	13.16	6/22/2022 22:51	11.38	102.62	6/23/2022 0:08	8.50
6/22/2022 23:05	11.73	241.51	6/24/2022 0:49	11.43	13.11	6/22/2022 22:52	11.32	102.61	6/23/2022 0:09	8.47
6/22/2022 23:06	11.74	241.30	6/24/2022 0:50	11.42	13.10	6/22/2022 22:53	11.35	102.90	6/23/2022 0:10	8.49
6/22/2022 23:07	11.75	241.50	6/24/2022 0:51	11.42	12.93	6/22/2022 22:54	11.34	103.27	6/23/2022 0:11	8.49
6/22/2022 23:08	11.73	241.31	6/24/2022 0:52	11.42	12.93	6/22/2022 22:55	11.40	102.00	6/23/2022 0:12	8.52
6/22/2022 23:09	11.73	241.26	6/24/2022 0:53	11.41	12.82	6/22/2022 22:56	11.33	102.78	6/23/2022 0:13	8.46
6/22/2022 23:10	11.77	241.54	6/24/2022 0:54	11.43	12.78	6/22/2022 22:57	11.35	102.38	6/23/2022 0:14	8.51
6/22/2022 23:11	11.72	241.24	6/24/2022 0:55	11.45	12.68	6/22/2022 22:58	11.37	103.15	6/23/2022 0:15	8.48
6/22/2022 23:12	11.75	241.29	6/24/2022 0:56	11.41	12.60	6/22/2022 22:59	11.36	102.75	6/23/2022 0:16	8.53
6/22/2022 23:13	11.75	241.48	6/24/2022 0:57	11.43	12.68	6/22/2022 23:00	11.34	102.16	6/23/2022 0:17	8.50
6/22/2022 23:14	11.74	241.43	6/24/2022 0:58	11.43	12.55	6/22/2022 23:01	11.37	103.16	6/23/2022 0:18	8.46
6/22/2022 23:15	11.74	241.45	6/24/2022 0:59	11.41	12.46	6/22/2022 23:02	11.38	102.21	6/23/2022 0:19	8.51
6/22/2022 23:16	11.74	241.41	6/24/2022 1:00	11.41	12.58	6/22/2022 23:03	11.31	102.62	6/23/2022 0:20	8.51
6/22/2022 23:17	11.74	241.45	6/24/2022 1:01	11.42	12.40	6/22/2022 23:04	11.35	102.36	6/23/2022 0:21	8.43
6/22/2022 23:18	11.71	241.38	6/24/2022 1:02	11.43	12.28	6/22/2022 23:05	11.35	102.70	6/23/2022 0:22	8.50
6/22/2022 23:19	11.74	241.40	6/24/2022 1:03	11.38	12.38	6/22/2022 23:06	11.35	102.46	6/23/2022 0:23	8.45
6/22/2022 23:20	11.74	241.46	6/24/2022 1:04	11.41	12.32	6/22/2022 23:07	11.35	102.37	6/23/2022 0:24	8.53
6/22/2022 23:21	11.74	241.35	6/24/2022 1:05	11.41	12.26	6/22/2022 23:08	11.32	102.47	6/23/2022 0:25	8.48
6/22/2022 23:22	11.72	241.33	6/24/2022 1:06	11.40	12.19	6/22/2022 23:09	11.31	102.52	6/23/2022 0:26	8.49
6/22/2022 23:23	11.73	241.54	6/24/2022 1:07	11.44	12.09	6/22/2022 23:10	11.35	102.11	6/23/2022 0:27	8.51
6/22/2022 23:24	11.69	241.26	6/24/2022 1:08	11.41	11.95	6/22/2022 23:11	11.38	102.82	6/23/2022 0:28	8.45
6/22/2022 23:25	11.72	241.38	6/24/2022 1:09	11.43	12.06	6/22/2022 23:12	11.33	103.10	6/23/2022 0:29	8.51
6/22/2022 23:26	11.73	241.41	6/24/2022 1:10	11.45	11.85	6/22/2022 23:13	11.36	102.44	6/23/2022 0:30	8.42
6/22/2022 23:27	11.76	241.58	6/24/2022 1:11	11.43	11.93	6/22/2022 23:14	11.36	102.29	6/23/2022 0:31	8.45
6/22/2022 23:28	11.75	241.37	6/24/2022 1:12	11.40	11.87	6/22/2022 23:15	11.38	102.63	6/23/2022 0:32	8.48
6/22/2022 23:29	11.71	241.35	6/24/2022 1:13	11.41	11.67	6/22/2022 23:16	11.39	103.26	6/23/2022 0:33	8.47
6/22/2022 23:30	11.73	241.48	6/24/2022 1:14	11.43	11.69	6/22/2022 23:17	11.32	102.35	6/23/2022 0:34	8.49
6/22/2022 23:31	11.73	241.39	6/24/2022 1:15	11.45	11.65	6/22/2022 23:18	11.35	102.52	6/23/2022 0:35	8.39
6/22/2022 23:32	11.73	241.47	6/24/2022 1:16	11.42	11.57	6/22/2022 23:19	11.31	102.45	6/23/2022 0:36	8.45
6/22/2022 23:33	11.74	241.31	6/24/2022 1:17	11.43	11.53	6/22/2022 23:20	11.37	102.46	6/23/2022 0:37	8.42
6/22/2022 23:34	11.71	241.45	6/24/2022 1:18	11.40	11.54	6/22/2022 23:21	11.31	102.45	6/23/2022 0:38	8.43
6/22/2022 23:35	11.71	241.43	6/24/2022 1:19	11.42	11.41	6/22/2022 23:22	11.35	102.21	6/23/2022 0:39	8.46
6/22/2022 23:36	11.73	241.64	6/24/2022 1:20	11.42	11.39	6/22/2022 23:23	11.33	102.38	6/23/2022 0:40	8.42
6/22/2022 23:37	11.72	241.61	6/24/2022 1:21	11.42	11.30	6/22/2022 23:24	11.33	101.91	6/23/2022 0:41	8.45
6/22/2022 23:38	11.73	241.58	6/24/2022 1:22	11.43	11.28	6/22/2022 23:25	11.31	103.46	6/23/2022 0:42	8.47
6/22/2022 23:39	11.74	241.45	6/24/2022 1:23	11.42	11.20	6/22/2022 23:26	11.33	102.80	6/23/2022 0:43	8.41
6/22/2022 23:40	11.74	241.48	6/24/2022 1:24	11.42	11.20	6/22/2022 23:27	11.36	102.31	6/23/2022 0:44	8.37
6/22/2022 23:41	11.74	241.42	6/24/2022 1:25	11.43	11.09	6/22/2022 23:28	11.34	101.57	6/23/2022 0:45	8.41
6/22/2022 23:42	11.71	241.35	6/24/2022 1:26	11.42	11.06	6/22/2022 23:29	11.32	102.70	6/23/2022 0:46	8.40
6/22/2022 23:43	11.72	241.46	6/24/2022 1:27	11.43	10.94	6/22/2022 23:30	11.32	102.57	6/23/2022 0:47	8.44
6/22/2022 23:44	11.71	241.50	6/24/2022 1:28	11.41	10.94	6/22/2022 23:31	11.35	102.76	6/23/2022 0:48	8.39
6/22/2022 23:45	11.72	241.49	6/24/2022 1:29	11.43	10.74	6/22/2022 23:32	11.37	102.73	6/23/2022 0:49	8.38
6/22/2022 23:46	11.73	241.47	6/24/2022 1:30	11.45	10.85	6/22/2022 23:33	11.31	102.86	6/23/2022 0:50	8.45
6/22/2022 23:47	11.75	241.46	6/24/2022 1:31	11.44	10.72	6/22/2022 23:34	11.35	103.45	6/23/2022 0:51	8.36
6/22/2022 23:48	11.72	241.40	6/24/2022 1:32	11.42	10.83	6/22/2022 23:35	11.38	102.84	6/23/2022 0:52	8.38
6/22/2022 23:49	11.73	241.41	6/24/2022 1:33	11.40	10.76	6/22/2022 23:36	11.36	103.13	6/23/2022 0:53	8.41
6/22/2022 23:50	11.72	241.58	6/24/2022 1:34	11.44	10.76	6/22/2022 23:37	11.32	102.59	6/23/2022 0:54	8.36
6/22/2022 23:51	11.72	241.76	6/24/2022 1:35	11.44	10.66	6/22/2022 23:38	11.32	102.38	6/23/2022 0:55	8.33
6/22/2022 23:52	11.73	241.61	6/24/2022 1:36	11.43	10.58	6/22/2022 23:39	11.32	102.82	6/23/2022 0:56	8.30
6/22/2022 23:53	11.73	241.44	6/24/2022 1:37	11.44	10.43	6/22/2022 23:40	11.36	103.78	6/23/2022 0:57	8.37
6/22/2022 23:54	11.73	241.66	6/24/2022 1:38	11.44	10.42	6/22/2022 23:41	11.37	101.92	6/23/2022 0:58	8.30
6/22/2022 23:55	11.73	241.40	6/24/2022 1:39	11.44	10.35	6/22/2022 23:42	11.33	102.46	6/23/2022 0:59	8.33
6/22/2022 23:56	11.74	241.55	6/24/2022 1:40	11.46	10.34	6/22/2022 23:43	11.34	102.63	6/23/2022 1:00	8.34
6/22/2022 23:57	11.71	241.62	6/24/2022 1:41	11.44	10.26	6/22/2022 23:44	11.37	103.18	6/23/2022 1:01	8.39
6/22/2022 23:58	11.74	241.45	6/24/2022 1:42	11.44	10.35	6/22/2022 23:45	11.37	102.83	6/23/2022 1:02	8.33

6/22/2022 23:59	11.71	241.62	6/24/2022 1:43	11.44	10.16	6/22/2022 23:46	11.40	102.52	6/23/2022 1:03	8.31
6/23/2022 0:00	11.71	241.49	6/24/2022 1:44	11.40	10.20	6/22/2022 23:47	11.37	102.74	6/23/2022 1:04	8.32
6/23/2022 0:01	11.74	241.38	6/24/2022 1:45	11.42	10.13	6/22/2022 23:48	11.34	103.13	6/23/2022 1:05	8.33
6/23/2022 0:02	11.73	241.62	6/24/2022 1:46	11.43	10.08	6/22/2022 23:49	11.36	102.08	6/23/2022 1:06	8.34
6/23/2022 0:03	11.72	241.55	6/24/2022 1:47	11.42	10.01	6/22/2022 23:50	11.31	102.48	6/23/2022 1:07	8.24
6/23/2022 0:04	11.75	241.53	6/24/2022 1:48	11.45	9.93	6/22/2022 23:51	11.36	102.87	6/23/2022 1:08	8.29
6/23/2022 0:05	11.72	241.58	6/24/2022 1:49	11.41	9.94	6/22/2022 23:52	11.38	102.16	6/23/2022 1:09	8.31
6/23/2022 0:06	11.72	241.61	6/24/2022 1:50	11.43	9.71	6/22/2022 23:53	11.38	103.21	6/23/2022 1:10	8.29
6/23/2022 0:07	11.72	241.49	6/24/2022 1:51	11.43	9.72	6/22/2022 23:54	11.38	103.64	6/23/2022 1:11	8.25
6/23/2022 0:08	11.75	241.47	6/24/2022 1:52	11.44	9.82	6/22/2022 23:55	11.37	102.83	6/23/2022 1:12	8.37
6/23/2022 0:09	11.72	241.53	6/24/2022 1:53	11.43	9.71	6/22/2022 23:56	11.32	102.74	6/23/2022 1:13	8.24
6/23/2022 0:10	11.73	241.54	6/24/2022 1:54	11.43	9.56	6/22/2022 23:57	11.39	102.97	6/23/2022 1:14	8.25
6/23/2022 0:11	11.73	241.85	6/24/2022 1:55	11.46	9.57	6/22/2022 23:58	11.36	103.40	6/23/2022 1:15	8.29
6/23/2022 0:12	11.73	241.44	6/24/2022 1:56	11.42	9.50	6/22/2022 23:59	11.30	104.20	6/23/2022 1:16	8.29
6/23/2022 0:13	11.76	241.55	6/24/2022 1:57	11.43	9.44	6/23/2022 0:00	11.35	103.74	6/23/2022 1:17	8.31
6/23/2022 0:14	11.73	241.41	6/24/2022 1:58	11.47	9.51	6/23/2022 0:01	11.32	103.48	6/23/2022 1:18	8.27
6/23/2022 0:15	11.73	241.58	6/24/2022 1:59	11.43	9.45	6/23/2022 0:02	11.31	103.32	6/23/2022 1:19	8.27
6/23/2022 0:16	11.75	241.51	6/24/2022 2:00	11.45	9.31	6/23/2022 0:03	11.34	103.68	6/23/2022 1:20	8.25
6/23/2022 0:17	11.73	241.68	6/24/2022 2:01	11.43	9.31	6/23/2022 0:04	11.38	103.67	6/23/2022 1:21	8.27
6/23/2022 0:18	11.74	241.74	6/24/2022 2:02	11.43	9.31	6/23/2022 0:05	11.29	102.93	6/23/2022 1:22	8.21
6/23/2022 0:19	11.73	241.78	6/24/2022 2:03	11.45	9.30	6/23/2022 0:06	11.32	103.58	6/23/2022 1:23	8.28
6/23/2022 0:20	11.73	241.72	6/24/2022 2:04	11.44	9.30	6/23/2022 0:07	11.33	103.00	6/23/2022 1:24	8.19
6/23/2022 0:21	11.73	241.68	6/24/2022 2:05	11.42	9.11	6/23/2022 0:08	11.36	103.21	6/23/2022 1:25	8.23
6/23/2022 0:22	11.71	241.67	6/24/2022 2:06	11.46	9.12	6/23/2022 0:09	11.36	102.78	6/23/2022 1:26	8.28
6/23/2022 0:23	11.72	241.54	6/24/2022 2:07	11.44	9.09	6/23/2022 0:10	11.38	102.67	6/23/2022 1:27	8.24
6/23/2022 0:24	11.74	241.73	6/24/2022 2:08	11.42	9.06	6/23/2022 0:11	11.33	102.90	6/23/2022 1:28	8.20
6/23/2022 0:25	11.75	241.70	6/24/2022 2:09	11.45	9.02	6/23/2022 0:12	11.38	102.81	6/23/2022 1:29	8.29
6/23/2022 0:26	11.72	241.64	6/24/2022 2:10	11.45	8.92	6/23/2022 0:13	11.38	103.13	6/23/2022 1:30	8.24
6/23/2022 0:27	11.74	241.59	6/24/2022 2:11	11.45	8.81	6/23/2022 0:14	11.35	103.45	6/23/2022 1:31	8.26
6/23/2022 0:28	11.76	241.62	6/24/2022 2:12	11.47	8.79	6/23/2022 0:15	11.32	102.57	6/23/2022 1:32	8.26
6/23/2022 0:29	11.75	241.41	6/24/2022 2:13	11.46	8.86	6/23/2022 0:16	11.35	103.04	6/23/2022 1:33	8.25
6/23/2022 0:30	11.72	241.61	6/24/2022 2:14	11.46	8.72	6/23/2022 0:17	11.34	102.45	6/23/2022 1:34	8.20
6/23/2022 0:31	11.72	241.66	6/24/2022 2:15	11.45	8.80	6/23/2022 0:18	11.34	102.47	6/23/2022 1:35	8.21
6/23/2022 0:32	11.72	241.41	6/24/2022 2:16	11.44	8.70	6/23/2022 0:19	11.38	102.16	6/23/2022 1:36	8.21
6/23/2022 0:33	11.73	241.69	6/24/2022 2:17	11.45	8.47	6/23/2022 0:20	11.30	101.91	6/23/2022 1:37	8.24
6/23/2022 0:34	11.76	241.66	6/24/2022 2:18	11.43	8.61	6/23/2022 0:21	11.35	103.21	6/23/2022 1:38	8.21
6/23/2022 0:35	11.73	241.88	6/24/2022 2:19	11.43	8.50	6/23/2022 0:22	11.37	102.99	6/23/2022 1:39	8.19
6/23/2022 0:36	11.70	241.63	6/24/2022 2:20	11.44	8.41	6/23/2022 0:23	11.33	103.13	6/23/2022 1:40	8.25
6/23/2022 0:37	11.74	241.59	6/24/2022 2:21	11.44	8.44	6/23/2022 0:24	11.38	104.36	6/23/2022 1:41	8.24
6/23/2022 0:38	11.72	241.54	6/24/2022 2:22	11.45	8.39	6/23/2022 0:25	11.30	103.03	6/23/2022 1:42	8.22
6/23/2022 0:39	11.73	241.68	6/24/2022 2:23	11.46	8.38	6/23/2022 0:26	11.36	103.48	6/23/2022 1:43	8.16
6/23/2022 0:40	11.74	241.72	6/24/2022 2:24	11.46	8.35	6/23/2022 0:27	11.41	102.84	6/23/2022 1:44	8.29
6/23/2022 0:41	11.74	241.43	6/24/2022 2:25	11.44	8.34	6/23/2022 0:28	11.33	102.22	6/23/2022 1:45	8.23
6/23/2022 0:42	11.72	241.49	6/24/2022 2:26	11.43	8.32	6/23/2022 0:29	11.38	102.50	6/23/2022 1:46	8.19
6/23/2022 0:43	11.71	241.71	6/24/2022 2:27	11.45	8.20	6/23/2022 0:30	11.36	102.92	6/23/2022 1:47	8.24
6/23/2022 0:44	11.75	241.79	6/24/2022 2:28	11.45	8.26	6/23/2022 0:31	11.32	102.90	6/23/2022 1:48	8.21
6/23/2022 0:45	11.71	241.90	6/24/2022 2:29	11.45	8.22	6/23/2022 0:32	11.37	102.87	6/23/2022 1:49	8.21
6/23/2022 0:46	11.75	241.62	6/24/2022 2:30	11.46	8.10	6/23/2022 0:33	11.35	103.79	6/23/2022 1:50	8.21
6/23/2022 0:47	11.72	241.62	6/24/2022 2:31	11.43	7.99	6/23/2022 0:34	11.34	103.43	6/23/2022 1:51	8.14
6/23/2022 0:48	11.73	241.78	6/24/2022 2:32	11.46	8.03	6/23/2022 0:35	11.31	103.06	6/23/2022 1:52	8.15
6/23/2022 0:49	11.74	241.81	6/24/2022 2:33	11.47	7.96	6/23/2022 0:36	11.35	102.86	6/23/2022 1:53	8.20
6/23/2022 0:50	11.74	241.79	6/24/2022 2:34	11.45	7.89	6/23/2022 0:37	11.33	103.19	6/23/2022 1:54	8.18
6/23/2022 0:51	11.72	241.55	6/24/2022 2:35	11.42	7.88	6/23/2022 0:38	11.38	102.96	6/23/2022 1:55	8.26
6/23/2022 0:52	11.76	241.66	6/24/2022 2:36	11.45	7.79	6/23/2022 0:39	11.33	103.46	6/23/2022 1:56	8.23
6/23/2022 0:53	11.70	241.61	6/24/2022 2:37	11.48	7.76	6/23/2022 0:40	11.36	103.71	6/23/2022 1:57	8.22
6/23/2022 0:54	11.73	241.71	6/24/2022 2:38	11.43	7.77	6/23/2022 0:41	11.34	103.27	6/23/2022 1:58	8.15
6/23/2022 0:55	11.73	241.75	6/24/2022 2:39	11.45	7.74	6/23/2022 0:42	11.31	103.27	6/23/2022 1:59	8.22
6/23/2022 0:56	11.75	241.41	6/24/2022 2:40	11.45	7.61	6/23/2022 0:43	11.32	103.44	6/23/2022 2:00	8.21
6/23/2022 0:57	11.72	241.64	6/24/2022 2:41	11.46	7.69	6/23/2022 0:44	11.38	102.68	6/23/2022 2:01	8.22
6/23/2022 0:58	11.72	241.78	6/24/2022 2:42	11.46	7.66	6/23/2022 0:45	11.37	103.76	6/23/2022 2:02	8.19
6/23/2022 0:59	11.71	241.78	6/24/2022 2:43	11.44	7.62	6/23/2022 0:46	11.35	104.39	6/23/2022 2:03	8.29
6/23/2022 1:00	11.73	241.63	6/24/2022 2:44	11.44	7.47	6/23/2022 0:47	11.32	103.02	6/23/2022 2:04	8.19
6/23/2022 1:01	11.73	241.59	6/24/2022 2:45	11.46	7.49	6/23/2022 0:48	11.36	103.39	6/23/2022 2:05	8.19
6/23/2022 1:02	11.75	241.80	6/24/2022 2:46	11.46	7.40	6/23/2022 0:49	11.36	103.13	6/23/2022 2:06	8.22
6/23/2022 1:03	11.72	241.79	6/24/2022 2:47	11.44	7.36	6/23/2022 0:50	11.38	102.71	6/23/2022 2:07	8.21
6/23/2022 1:04	11.73	241.66	6/24/2022 2:48	11.43	7.40	6/23/2022 0:51	11.33	103.15	6/23/2022 2:08	8.24
6/23/2022 1:05	11.72	241.59	6/24/2022 2:49	11.46	7.35	6/23/2022 0:52	11.31	103.08	6/23/2022 2:09	8.17
6/23/2022 1:06	11.74	241.67	6/24/2022 2:50	11.45	7.27	6/23/2022 0:53	11.31	102.68	6/23/2022 2:10	8.24
6/23/2022 1:07	11.71	241.79	6/24/2022 2:51	11.46	7.21	6/23/2022 0:54	11.32	103.23	6/23/2022 2:11	8.20
6/23/2022 1:08	11.72	241.66	6/24/2022 2:52	11.46	7.18	6/23/2022 0:55	11.37	103.67	6/23/2022 2:12	8.18
6/23/2022 1:09	11.73	241.68	6/24/2022 2:53	11.45	7.10	6/23/2022 0:56	11.35	103.29	6/23/2022 2:13	8.19
6/23/2022 1:10	11.71	241.66	6/24/2022 2:54	11.46	7.18	6/23/2022 0:57	11.34	103.82	6/23/2022 2:14	8.27
6/23/2022 1:11	11.74	241.56	6/24/2022 2:55	11.47	7.04	6/23/2022 0:58	11.38	102.87	6/23/2022 2:15	8.22
6/23/2022 1:12	11.73	241.78	6/24/2022 2:56	11.45	6.97	6/23/2022 0:59	11.37	102.96	6/23/2022 2:16	8.23
6/23/2022 1:13	11.76	241.89	6/24/2022 2:57	11.45	6.97	6/23/2022 1:00	11.36	102.56	6/23/2022 2:17	8.20
6/23/2022 1:14	11.73	241.79	6/24/2022 2:58	11.45	6.92	6/23/2022 1:01	11.36	104.20	6/23/2022 2:18	8.21
6/23/2022 1:15	11.75	241.72	6/24/2022 2:59	11.47	6.93	6/23/2022 1:02	11.32	103.37	6/23/2022 2:19	8.21
6/23/2022 1:16	11.74	241.68	6/24/2022 3:00	11.46	6.83	6/23/2022 1:03	11.36	103.10	6/23/2022 2:20	8.31
6/23/2022 1:17	11.74	241.93	6/24/2022 3:01	11.47	6.89	6/23/2022 1:04	11.35	103.40	6/23/2022 2:21	8.18
6/23/2022 1:18	11.73	241.86	6/24/2022 3:02	11.46	6.83	6/23/2022 1:05	11.33	103.61	6/23/2022 2:22	8.23
6/23/2022 1:19	11.73	241.90	6/24/2022 3:03	11.45	6.80	6/23/2022 1:06	11.33	103.29	6/23/2022 2:23	8.25
6/23/2022 1:20	11.72	241.79	6/24/2022 3:04	11.47	6.76	6/23/2022 1:07	11.35	103.64	6/23/2022 2:24	8.23
6/23/2022 1:21	11.71	241.94	6/24/2022 3:05	11.47	6.74	6/23/2022 1:08	11.29	103.33	6/23/2022 2:25	8.26
6/23/2022 1:22	11.71	241.81	6/24/2022 3:06	11.46	6.66	6/23/2022 1:09	11.34	102.89	6/23/2022 2:26	8.27
6/23/2022 1:23	11.74	241.84	6/24/2022 3:07	11.48	6.56	6/23/2022 1:10	11.32	102.78	6/23/2022 2:27	8.23
6/23/2022 1:24	11.73	241.69	6/24/2022 3:08	11.46	6.65	6/23/2022 1:11	11.33	102.51	6/23/2022 2:28	8.23
6/23/2022 1:25	11.73	241.84	6/24/2022 3:09	11.45	6.57	6/23/2022 1:12	11.33	103.24	6/23/2022 2:29	8.22
6/23/2022 1:26	11.75	241.60	6/24/2022 3:10	11.47	6.59	6/23/2022 1:13	11.33	103.31	6/23/2022 2:30	8.24

6/23/2022 1:27	11.74	241.67	6/24/2022 3:11	11.46	6.57	6/23/2022 1:14	11.37	103.42	6/23/2022 2:31	8.26
6/23/2022 1:28	11.72	241.89	6/24/2022 3:12	11.46	6.45	6/23/2022 1:15	11.33	103.85	6/23/2022 2:32	8.23
6/23/2022 1:29	11.72	241.78	6/24/2022 3:13	11.47	6.44	6/23/2022 1:16	11.32	103.60	6/23/2022 2:33	8.19
6/23/2022 1:30	11.75	241.75	6/24/2022 3:14	11.45	6.43	6/23/2022 1:17	11.32	102.86	6/23/2022 2:34	8.24
6/23/2022 1:31	11.73	241.89	6/24/2022 3:15	11.48	6.37	6/23/2022 1:18	11.33	103.54	6/23/2022 2:35	8.24
6/23/2022 1:32	11.77	241.91	6/24/2022 3:16	11.45	6.28	6/23/2022 1:19	11.38	103.04	6/23/2022 2:36	8.23
6/23/2022 1:33	11.71	241.69	6/24/2022 3:17	11.46	6.30	6/23/2022 1:20	11.34	103.36	6/23/2022 2:37	8.16
6/23/2022 1:34	11.71	241.84	6/24/2022 3:18	11.48	6.29	6/23/2022 1:21	11.37	103.15	6/23/2022 2:38	8.26
6/23/2022 1:35	11.75	241.99	6/24/2022 3:19	11.47	6.24	6/23/2022 1:22	11.36	104.18	6/23/2022 2:39	8.19
6/23/2022 1:36	11.73	241.84	6/24/2022 3:20	11.46	6.26	6/23/2022 1:23	11.33	103.25	6/23/2022 2:40	8.19
6/23/2022 1:37	11.74	241.94	6/24/2022 3:21	11.46	6.10	6/23/2022 1:24	11.34	102.52	6/23/2022 2:41	8.27
6/23/2022 1:38	11.72	241.99	6/24/2022 3:22	11.48	6.15	6/23/2022 1:25	11.34	102.67	6/23/2022 2:42	8.26
6/23/2022 1:39	11.76	242.16	6/24/2022 3:23	11.45	6.19	6/23/2022 1:26	11.32	103.82	6/23/2022 2:43	8.28
6/23/2022 1:40	11.73	241.83	6/24/2022 3:24	11.51	6.02	6/23/2022 1:27	11.31	103.17	6/23/2022 2:44	8.22
6/23/2022 1:41	11.73	241.87	6/24/2022 3:25	11.46	6.05	6/23/2022 1:28	11.36	103.15	6/23/2022 2:45	8.25
6/23/2022 1:42	11.73	241.56	6/24/2022 3:26	11.48	6.04	6/23/2022 1:29	11.35	102.67	6/23/2022 2:46	8.27
6/23/2022 1:43	11.73	241.97	6/24/2022 3:27	11.47	6.03	6/23/2022 1:30	11.36	103.25	6/23/2022 2:47	8.25
6/23/2022 1:44	11.71	241.86	6/24/2022 3:28	11.45	5.83	6/23/2022 1:31	11.35	104.09	6/23/2022 2:48	8.24
6/23/2022 1:45	11.75	241.88	6/24/2022 3:29	11.47	5.90	6/23/2022 1:32	11.33	103.48	6/23/2022 2:49	8.31
6/23/2022 1:46	11.73	241.90	6/24/2022 3:30	11.46	5.86	6/23/2022 1:33	11.38	103.27	6/23/2022 2:50	8.25
6/23/2022 1:47	11.73	241.98	6/24/2022 3:31	11.47	5.69	6/23/2022 1:34	11.30	103.81	6/23/2022 2:51	8.27
6/23/2022 1:48	11.72	242.14	6/24/2022 3:32	11.47	5.71	6/23/2022 1:35	11.33	104.39	6/23/2022 2:52	8.23
6/23/2022 1:49	11.73	241.91	6/24/2022 3:33	11.48	5.87	6/23/2022 1:36	11.38	103.50	6/23/2022 2:53	8.30
6/23/2022 1:50	11.74	241.78	6/24/2022 3:34	11.50	5.76	6/23/2022 1:37	11.37	103.21	6/23/2022 2:54	8.22
6/23/2022 1:51	11.74	241.93	6/24/2022 3:35	11.50	5.78	6/23/2022 1:38	11.31	103.78	6/23/2022 2:55	8.25
6/23/2022 1:52	11.72	241.87	6/24/2022 3:36	11.46	5.79	6/23/2022 1:39	11.31	104.00	6/23/2022 2:56	8.31
6/23/2022 1:53	11.76	242.01	6/24/2022 3:37	11.48	5.67	6/23/2022 1:40	11.39	103.56	6/23/2022 2:57	8.24
6/23/2022 1:54	11.74	241.76	6/24/2022 3:38	11.47	5.62	6/23/2022 1:41	11.33	102.72	6/23/2022 2:58	8.26
6/23/2022 1:55	11.71	241.94	6/24/2022 3:39	11.48	5.59	6/23/2022 1:42	11.31	103.65	6/23/2022 2:59	8.24
6/23/2022 1:56	11.74	241.79	6/24/2022 3:40	11.50	5.56	6/23/2022 1:43	11.38	103.97	6/23/2022 3:00	8.28
6/23/2022 1:57	11.73	242.06	6/24/2022 3:41	11.46	5.51	6/23/2022 1:44	11.30	102.98	6/23/2022 3:01	8.29
6/23/2022 1:58	11.73	242.01	6/24/2022 3:42	11.49	5.55	6/23/2022 1:45	11.33	103.20	6/23/2022 3:02	8.23
6/23/2022 1:59	11.74	241.86	6/24/2022 3:43	11.50	5.47	6/23/2022 1:46	11.32	104.47	6/23/2022 3:03	8.24
6/23/2022 2:00	11.73	241.83	6/24/2022 3:44	11.46	5.47	6/23/2022 1:47	11.33	102.25	6/23/2022 3:04	8.29
6/23/2022 2:01	11.71	241.94	6/24/2022 3:45	11.49	5.35	6/23/2022 1:48	11.33	103.03	6/23/2022 3:05	8.30
6/23/2022 2:02	11.72	241.97	6/24/2022 3:46	11.46	5.38	6/23/2022 1:49	11.36	102.13	6/23/2022 3:06	8.26
6/23/2022 2:03	11.72	241.91	6/24/2022 3:47	11.49	5.37	6/23/2022 1:50	11.36	102.33	6/23/2022 3:07	8.23
6/23/2022 2:04	11.70	242.03	6/24/2022 3:48	11.48	5.34	6/23/2022 1:51	11.33	103.86	6/23/2022 3:08	8.30
6/23/2022 2:05	11.73	241.88	6/24/2022 3:49	11.50	5.28	6/23/2022 1:52	11.37	103.61	6/23/2022 3:09	8.25
6/23/2022 2:06	11.75	241.86	6/24/2022 3:50	11.48	5.29	6/23/2022 1:53	11.36	102.98	6/23/2022 3:10	8.29
6/23/2022 2:07	11.71	241.93	6/24/2022 3:51	11.48	5.24	6/23/2022 1:54	11.34	103.18	6/23/2022 3:11	8.30
6/23/2022 2:08	11.74	241.98	6/24/2022 3:52	11.50	5.25	6/23/2022 1:55	11.34	103.83	6/23/2022 3:12	8.28
6/23/2022 2:09	11.75	241.79	6/24/2022 3:53	11.51	5.24	6/23/2022 1:56	11.35	102.84	6/23/2022 3:13	8.23
6/23/2022 2:10	11.74	241.91	6/24/2022 3:54	11.49	5.19	6/23/2022 1:57	11.36	103.46	6/23/2022 3:14	8.27
6/23/2022 2:11	11.74	241.98	6/24/2022 3:55	11.46	5.24	6/23/2022 1:58	11.35	104.48	6/23/2022 3:15	8.26
6/23/2022 2:12	11.71	241.98	6/24/2022 3:56	11.46	5.05	6/23/2022 1:59	11.36	103.01	6/23/2022 3:16	8.27
6/23/2022 2:13	11.74	241.97	6/24/2022 3:57	11.46	5.06	6/23/2022 2:00	11.36	103.51	6/23/2022 3:17	8.27
6/23/2022 2:14	11.73	241.85	6/24/2022 3:58	11.49	5.06	6/23/2022 2:01	11.35	103.54	6/23/2022 3:18	8.27
6/23/2022 2:15	11.71	241.99	6/24/2022 3:59	11.48	5.03	6/23/2022 2:02	11.34	104.05	6/23/2022 3:19	8.29
6/23/2022 2:16	11.73	241.76	6/24/2022 4:00	11.49	5.00	6/23/2022 2:03	11.31	101.69	6/23/2022 3:20	8.27
6/23/2022 2:17	11.72	241.85	6/24/2022 4:01	11.47	4.88	6/23/2022 2:04	11.35	103.73	6/23/2022 3:21	8.27
6/23/2022 2:18	11.75	241.92	6/24/2022 4:02	11.48	4.99	6/23/2022 2:05	11.38	104.49	6/23/2022 3:22	8.24
6/23/2022 2:19	11.71	241.83	6/24/2022 4:03	11.48	4.89	6/23/2022 2:06	11.38	103.62	6/23/2022 3:23	8.28
6/23/2022 2:20	11.73	241.79	6/24/2022 4:04	11.48	4.91	6/23/2022 2:07	11.32	103.12	6/23/2022 3:24	8.27
6/23/2022 2:21	11.75	242.08	6/24/2022 4:05	11.45	4.89	6/23/2022 2:08	11.32	103.41	6/23/2022 3:25	8.35
6/23/2022 2:22	11.71	241.98	6/24/2022 4:06	11.46	4.77	6/23/2022 2:09	11.37	103.97	6/23/2022 3:26	8.27
6/23/2022 2:23	11.71	242.08	6/24/2022 4:07	11.46	4.74	6/23/2022 2:10	11.35	103.76	6/23/2022 3:27	8.30
6/23/2022 2:24	11.74	242.09	6/24/2022 4:08	11.49	4.78	6/23/2022 2:11	11.39	102.86	6/23/2022 3:28	8.29
6/23/2022 2:25	11.71	242.07	6/24/2022 4:09	11.47	4.68	6/23/2022 2:12	11.36	104.33	6/23/2022 3:29	8.27
6/23/2022 2:26	11.74	242.24	6/24/2022 4:10	11.47	4.61	6/23/2022 2:13	11.35	103.49	6/23/2022 3:30	8.22
6/23/2022 2:27	11.77	242.09	6/24/2022 4:11	11.47	4.64	6/23/2022 2:14	11.33	102.96	6/23/2022 3:31	8.27
6/23/2022 2:28	11.72	241.88	6/24/2022 4:12	11.48	4.80	6/23/2022 2:15	11.32	104.03	6/23/2022 3:32	8.30
6/23/2022 2:29	11.72	242.09	6/24/2022 4:13	11.48	4.61	6/23/2022 2:16	11.30	103.84	6/23/2022 3:33	8.31
6/23/2022 2:30	11.74	241.93	6/24/2022 4:14	11.47	4.65	6/23/2022 2:17	11.34	103.69	6/23/2022 3:34	8.24
6/23/2022 2:31	11.75	242.23	6/24/2022 4:15	11.48	4.47	6/23/2022 2:18	11.36	104.03	6/23/2022 3:35	8.25
6/23/2022 2:32	11.74	242.01	6/24/2022 4:16	11.48	4.65	6/23/2022 2:19	11.36	104.14	6/23/2022 3:36	8.29
6/23/2022 2:33	11.75	241.98	6/24/2022 4:17	11.47	4.52	6/23/2022 2:20	11.37	103.78	6/23/2022 3:37	8.24
6/23/2022 2:34	11.71	242.16	6/24/2022 4:18	11.46	4.43	6/23/2022 2:21	11.29	103.33	6/23/2022 3:38	8.30
6/23/2022 2:35	11.74	241.99	6/24/2022 4:19	11.47	4.43	6/23/2022 2:22	11.34	104.04	6/23/2022 3:39	8.26
6/23/2022 2:36	11.75	242.09	6/24/2022 4:20	11.47	4.40	6/23/2022 2:23	11.34	103.27	6/23/2022 3:40	8.26
6/23/2022 2:37	11.75	242.06	6/24/2022 4:21	11.47	4.28	6/23/2022 2:24	11.36	103.54	6/23/2022 3:41	8.26
6/23/2022 2:38	11.73	241.94	6/24/2022 4:22	11.49	4.40	6/23/2022 2:25	11.34	103.25	6/23/2022 3:42	8.25
6/23/2022 2:39	11.73	242.04	6/24/2022 4:23	11.46	4.35	6/23/2022 2:26	11.37	103.67	6/23/2022 3:43	8.22
6/23/2022 2:40	11.73	242.03	6/24/2022 4:24	11.48	4.25	6/23/2022 2:27	11.34	104.11	6/23/2022 3:44	8.27
6/23/2022 2:41	11.75	242.21	6/24/2022 4:25	11.48	4.23	6/23/2022 2:28	11.36	104.15	6/23/2022 3:45	8.28
6/23/2022 2:42	11.74	242.04	6/24/2022 4:26	11.50	4.21	6/23/2022 2:29	11.37	103.00	6/23/2022 3:46	8.27
6/23/2022 2:43	11.72	241.96	6/24/2022 4:27	11.46	4.26	6/23/2022 2:30	11.34	103.93	6/23/2022 3:47	8.31
6/23/2022 2:44	11.75	242.10	6/24/2022 4:28	11.45	4.15	6/23/2022 2:31	11.34	104.15	6/23/2022 3:48	8.31
6/23/2022 2:45	11.73	242.16	6/24/2022 4:29	11.46	4.25	6/23/2022 2:32	11.34	103.76	6/23/2022 3:49	8.30
6/23/2022 2:46	11.73	241.91	6/24/2022 4:30	11.47	4.03	6/23/2022 2:33	11.37	103.68	6/23/2022 3:50	8.29
6/23/2022 2:47	11.76	241.94	6/24/2022 4:31	11.45	4.16	6/23/2022 2:34	11.38	102.81	6/23/2022 3:51	8.32
6/23/2022 2:48	11.72	242.08	6/24/2022 4:32	11.49	4.02	6/23/2022 2:35	11.37	103.51	6/23/2022 3:52	8.29
6/23/2022 2:49	11.74	242.01	6/24/2022 4:33	11.47	4.04	6/23/2022 2:36	11.34	103.80	6/23/2022 3:53	8.28
6/23/2022 2:50	11.76	241.90	6/24/2022 4:34	11.50	4.10	6/23/2022 2:37	11.36	103.96	6/23/2022 3:54	8.24
6/23/2022 2:51	11.73	241.92	6/24/2022 4:35	11.48	4.10	6/23/2022 2:38	11.34	103.44	6/23/2022 3:55	8.26
6/23/2022 2:52	11.72	242.07	6/24/2022 4:36	11.48	4.04	6/23/2022 2:39	11.37	103.67	6/23/2022 3:56	8.24
6/23/2022 2:53	11.72	242.15	6/24/2022 4:37	11.48	3.87	6/23/2022 2:40	11.35	103.73	6/23/2022 3:57	8.29
6/23/2022 2:54	11.72	242.19	6/24/2022 4:38	11.47	3.98	6/23/2022 2:41	11.35	102.80	6/23/2022 3:58	8.30

6/23/2022 2:55	11.76	241.90	6/24/2022 4:39	11.48	3.97	6/23/2022 2:42	11.38	103.27	6/23/2022 3:59	8.37
6/23/2022 2:56	11.72	242.10	6/24/2022 4:40	11.48	3.87	6/23/2022 2:43	11.39	103.82	6/23/2022 4:00	8.33
6/23/2022 2:57	11.74	242.35	6/24/2022 4:41	11.48	3.84	6/23/2022 2:44	11.33	102.68	6/23/2022 4:01	8.33
6/23/2022 2:58	11.74	241.98	6/24/2022 4:42	11.49	3.82	6/23/2022 2:45	11.34	104.07	6/23/2022 4:02	8.28
6/23/2022 2:59	11.73	242.00	6/24/2022 4:43	11.47	3.76	6/23/2022 2:46	11.35	104.08	6/23/2022 4:03	8.31
6/23/2022 3:00	11.74	242.16	6/24/2022 4:44	11.48	3.79	6/23/2022 2:47	11.33	103.47	6/23/2022 4:04	8.31
6/23/2022 3:01	11.72	242.25	6/24/2022 4:45	11.49	3.80	6/23/2022 2:48	11.33	103.29	6/23/2022 4:05	8.30
6/23/2022 3:02	11.73	242.04	6/24/2022 4:46	11.47	3.81	6/23/2022 2:49	11.35	103.73	6/23/2022 4:06	8.27
6/23/2022 3:03	11.71	242.04	6/24/2022 4:47	11.52	3.77	6/23/2022 2:50	11.33	104.05	6/23/2022 4:07	8.33
6/23/2022 3:04	11.75	242.10	6/24/2022 4:48	11.50	3.60	6/23/2022 2:51	11.38	103.53	6/23/2022 4:08	8.34
6/23/2022 3:05	11.68	242.33	6/24/2022 4:49	11.49	3.74	6/23/2022 2:52	11.40	103.55	6/23/2022 4:09	8.27
6/23/2022 3:06	11.73	242.21	6/24/2022 4:50	11.51	3.72	6/23/2022 2:53	11.35	103.91	6/23/2022 4:10	8.29
6/23/2022 3:07	11.74	242.09	6/24/2022 4:51	11.53	3.63	6/23/2022 2:54	11.31	104.31	6/23/2022 4:11	8.31
6/23/2022 3:08	11.76	242.16	6/24/2022 4:52	11.49	3.57	6/23/2022 2:55	11.37	104.60	6/23/2022 4:12	8.34
6/23/2022 3:09	11.73	242.29	6/24/2022 4:53	11.51	3.60	6/23/2022 2:56	11.35	103.72	6/23/2022 4:13	8.40
6/23/2022 3:10	11.75	242.19	6/24/2022 4:54	11.51	3.63	6/23/2022 2:57	11.31	104.17	6/23/2022 4:14	8.32
6/23/2022 3:11	11.74	242.09	6/24/2022 4:55	11.53	3.48	6/23/2022 2:58	11.35	103.69	6/23/2022 4:15	8.27
6/23/2022 3:12	11.74	242.33	6/24/2022 4:56	11.53	3.54	6/23/2022 2:59	11.33	104.13	6/23/2022 4:16	8.27
6/23/2022 3:13	11.75	242.28	6/24/2022 4:57	11.54	3.44	6/23/2022 3:00	11.35	104.05	6/23/2022 4:17	8.34
6/23/2022 3:14	11.74	242.17	6/24/2022 4:58	11.51	3.41	6/23/2022 3:01	11.37	103.79	6/23/2022 4:18	8.29
6/23/2022 3:15	11.73	242.18	6/24/2022 4:59	11.51	3.47	6/23/2022 3:02	11.34	104.81	6/23/2022 4:19	8.31
6/23/2022 3:16	11.73	242.43	6/24/2022 5:00	11.50	3.42	6/23/2022 3:03	11.36	103.70	6/23/2022 4:20	8.33
6/23/2022 3:17	11.72	242.19	6/24/2022 5:01	11.52	3.39	6/23/2022 3:04	11.31	103.83	6/23/2022 4:21	8.30
6/23/2022 3:18	11.74	242.19	6/24/2022 5:02	11.51	3.36	6/23/2022 3:05	11.33	103.35	6/23/2022 4:22	8.27
6/23/2022 3:19	11.71	242.15	6/24/2022 5:03	11.52	3.30	6/23/2022 3:06	11.33	103.62	6/23/2022 4:23	8.34
6/23/2022 3:20	11.76	242.03	6/24/2022 5:04	11.51	3.36	6/23/2022 3:07	11.29	103.50	6/23/2022 4:24	8.33
6/23/2022 3:21	11.69	242.34	6/24/2022 5:05	11.53	3.31	6/23/2022 3:08	11.37	103.32	6/23/2022 4:25	8.30
6/23/2022 3:22	11.74	242.23	6/24/2022 5:06	11.50	3.19	6/23/2022 3:09	11.36	103.96	6/23/2022 4:26	8.30
6/23/2022 3:23	11.73	242.22	6/24/2022 5:07	11.53	3.22	6/23/2022 3:10	11.34	104.08	6/23/2022 4:27	8.28
6/23/2022 3:24	11.73	242.70	6/24/2022 5:08	11.49	3.23	6/23/2022 3:11	11.38	103.80	6/23/2022 4:28	8.29
6/23/2022 3:25	11.72	242.18	6/24/2022 5:09	11.49	3.23	6/23/2022 3:12	11.38	104.10	6/23/2022 4:29	8.32
6/23/2022 3:26	11.74	242.26	6/24/2022 5:10	11.50	3.21	6/23/2022 3:13	11.35	103.74	6/23/2022 4:30	8.33
6/23/2022 3:27	11.72	242.10	6/24/2022 5:11	11.53	3.12	6/23/2022 3:14	11.32	103.48	6/23/2022 4:31	8.36
6/23/2022 3:28	11.69	242.31	6/24/2022 5:12	11.55	3.14	6/23/2022 3:15	11.33	103.99	6/23/2022 4:32	8.33
6/23/2022 3:29	11.73	242.20	6/24/2022 5:13	11.50	3.13	6/23/2022 3:16	11.37	104.57	6/23/2022 4:33	8.28
6/23/2022 3:30	11.71	242.22	6/24/2022 5:14	11.53	3.08	6/23/2022 3:17	11.34	103.62	6/23/2022 4:34	8.33
6/23/2022 3:31	11.75	242.03	6/24/2022 5:15	11.51	3.02	6/23/2022 3:18	11.33	103.44	6/23/2022 4:35	8.34
6/23/2022 3:32	11.72	242.24	6/24/2022 5:16	11.51	3.05	6/23/2022 3:19	11.38	102.84	6/23/2022 4:36	8.34
6/23/2022 3:33	11.74	242.28	6/24/2022 5:17	11.53	3.08	6/23/2022 3:20	11.30	104.65	6/23/2022 4:37	8.33
6/23/2022 3:34	11.74	242.18	6/24/2022 5:18	11.52	2.97	6/23/2022 3:21	11.32	104.59	6/23/2022 4:38	8.31
6/23/2022 3:35	11.74	242.15	6/24/2022 5:19	11.52	3.04	6/23/2022 3:22	11.33	103.64	6/23/2022 4:39	8.27
6/23/2022 3:36	11.71	241.98	6/24/2022 5:20	11.49	3.04	6/23/2022 3:23	11.30	104.20	6/23/2022 4:40	8.33
6/23/2022 3:37	11.72	242.24	6/24/2022 5:21	11.52	2.90	6/23/2022 3:24	11.29	103.66	6/23/2022 4:41	8.30
6/23/2022 3:38	11.74	242.40	6/24/2022 5:22	11.55	2.82	6/23/2022 3:25	11.35	104.15	6/23/2022 4:42	8.29
6/23/2022 3:39	11.73	242.36	6/24/2022 5:23	11.52	2.96	6/23/2022 3:26	11.33	103.22	6/23/2022 4:43	8.34
6/23/2022 3:40	11.70	242.25	6/24/2022 5:24	11.52	2.84	6/23/2022 3:27	11.34	103.49	6/23/2022 4:44	8.41
6/23/2022 3:41	11.75	242.28	6/24/2022 5:25	11.53	2.86	6/23/2022 3:28	11.29	104.16	6/23/2022 4:45	8.29
6/23/2022 3:42	11.73	242.32	6/24/2022 5:26	11.52	2.81	6/23/2022 3:29	11.36	104.51	6/23/2022 4:46	8.32
6/23/2022 3:43	11.76	242.22	6/24/2022 5:27	11.53	2.72	6/23/2022 3:30	11.42	104.20	6/23/2022 4:47	8.35
6/23/2022 3:44	11.74	242.29	6/24/2022 5:28	11.51	2.78	6/23/2022 3:31	11.38	103.61	6/23/2022 4:48	8.31
6/23/2022 3:45	11.72	242.22	6/24/2022 5:29	11.52	2.83	6/23/2022 3:32	11.40	104.66	6/23/2022 4:49	8.36
6/23/2022 3:46	11.74	242.04	6/24/2022 5:30	11.53	2.66	6/23/2022 3:33	11.36	103.22	6/23/2022 4:50	8.28
6/23/2022 3:47	11.72	242.33	6/24/2022 5:31	11.49	2.65	6/23/2022 3:34	11.35	104.03	6/23/2022 4:51	8.31
6/23/2022 3:48	11.72	242.07	6/24/2022 5:32	11.51	2.73	6/23/2022 3:35	11.34	103.50	6/23/2022 4:52	8.28
6/23/2022 3:49	11.74	242.28	6/24/2022 5:33	11.53	2.68	6/23/2022 3:36	11.39	104.05	6/23/2022 4:53	8.32
6/23/2022 3:50	11.76	242.43	6/24/2022 5:34	11.54	2.59	6/23/2022 3:37	11.38	104.06	6/23/2022 4:54	8.32
6/23/2022 3:51	11.75	242.31	6/24/2022 5:35	11.53	2.74	6/23/2022 3:38	11.37	103.21	6/23/2022 4:55	8.34
6/23/2022 3:52	11.73	242.43	6/24/2022 5:36	11.51	2.67	6/23/2022 3:39	11.34	104.37	6/23/2022 4:56	8.41
6/23/2022 3:53	11.72	242.39	6/24/2022 5:37	11.50	2.62	6/23/2022 3:40	11.37	104.69	6/23/2022 4:57	8.38
6/23/2022 3:54	11.75	242.30	6/24/2022 5:38	11.55	2.66	6/23/2022 3:41	11.36	103.26	6/23/2022 4:58	8.31
6/23/2022 3:55	11.75	242.29	6/24/2022 5:39	11.53	2.56	6/23/2022 3:42	11.37	103.40	6/23/2022 4:59	8.30
6/23/2022 3:56	11.74	242.45	6/24/2022 5:40	11.53	2.63	6/23/2022 3:43	11.40	102.85	6/23/2022 5:00	8.35
6/23/2022 3:57	11.74	242.18	6/24/2022 5:41	11.53	2.52	6/23/2022 3:44	11.37	104.13	6/23/2022 5:01	8.33
6/23/2022 3:58	11.75	242.20	6/24/2022 5:42	11.50	2.47	6/23/2022 3:45	11.36	103.79	6/23/2022 5:02	8.36
6/23/2022 3:59	11.72	242.23	6/24/2022 5:43	11.55	2.48	6/23/2022 3:46	11.33	103.34	6/23/2022 5:03	8.38
6/23/2022 4:00	11.75	242.49	6/24/2022 5:44	11.50	2.45	6/23/2022 3:47	11.32	103.15	6/23/2022 5:04	8.39
6/23/2022 4:01	11.74	242.56	6/24/2022 5:45	11.53	2.46	6/23/2022 3:48	11.39	103.84	6/23/2022 5:05	8.39
6/23/2022 4:02	11.73	242.36	6/24/2022 5:46	11.51	2.48	6/23/2022 3:49	11.36	104.87	6/23/2022 5:06	8.36
6/23/2022 4:03	11.69	242.43	6/24/2022 5:47	11.52	2.34	6/23/2022 3:50	11.35	104.15	6/23/2022 5:07	8.35
6/23/2022 4:04	11.73	242.23	6/24/2022 5:48	11.53	2.53	6/23/2022 3:51	11.37	104.06	6/23/2022 5:08	8.31
6/23/2022 4:05	11.75	242.38	6/24/2022 5:49	11.52	2.38	6/23/2022 3:52	11.35	104.52	6/23/2022 5:09	8.34
6/23/2022 4:06	11.72	242.47	6/24/2022 5:50	11.51	2.31	6/23/2022 3:53	11.35	104.92	6/23/2022 5:10	8.35
6/23/2022 4:07	11.74	242.32	6/24/2022 5:51	11.57	2.30	6/23/2022 3:54	11.36	104.35	6/23/2022 5:11	8.34
6/23/2022 4:08	11.73	242.37	6/24/2022 5:52	11.52	2.44	6/23/2022 3:55	11.39	104.31	6/23/2022 5:12	8.35
6/23/2022 4:09	11.74	242.44	6/24/2022 5:53	11.51	2.38	6/23/2022 3:56	11.35	104.79	6/23/2022 5:13	8.34
6/23/2022 4:10	11.74	242.29	6/24/2022 5:54	11.52	2.28	6/23/2022 3:57	11.36	104.30	6/23/2022 5:14	8.37
6/23/2022 4:11	11.74	242.37	6/24/2022 5:55	11.55	2.16	6/23/2022 3:58	11.31	103.03	6/23/2022 5:15	8.34
6/23/2022 4:12	11.73	242.47	6/24/2022 5:56	11.53	2.25	6/23/2022 3:59	11.35	104.56	6/23/2022 5:16	8.34
6/23/2022 4:13	11.73	242.48	6/24/2022 5:57	11.52	2.23	6/23/2022 4:00	11.34	104.30	6/23/2022 5:17	8.40
6/23/2022 4:14	11.74	242.60	6/24/2022 5:58	11.51	2.21	6/23/2022 4:01	11.37	103.70	6/23/2022 5:18	8.37
6/23/2022 4:15	11.74	242.53	6/24/2022 5:59	11.51	2.19	6/23/2022 4:02	11.35	104.00	6/23/2022 5:19	8.32
6/23/2022 4:16	11.74	242.53	6/24/2022 6:00	11.50	2.25	6/23/2022 4:03	11.35	104.32	6/23/2022 5:20	8.33
6/23/2022 4:17	11.74	242.35	6/24/2022 6:01	11.53	2.08	6/23/2022 4:04	11.34	104.07	6/23/2022 5:21	8.34
6/23/2022 4:18	11.74	242.48	6/24/2022 6:02	11.52	2.11	6/23/2022 4:05	11.32	104.22	6/23/2022 5:22	8.38
6/23/2022 4:19	11.73	242.41	6/24/2022 6:03	11.53	2.10	6/23/2022 4:06	11.38	103.90	6/23/2022 5:23	8.32
6/23/2022 4:20	11.73	242.43	6/24/2022 6:04	11.52	2.21	6/23/2022 4:07	11.35	103.72	6/23/2022 5:24	8.31
6/23/2022 4:21	11.75	242.57	6/24/2022 6:05	11.54	2.06	6/23/2022 4:08	11.36	104.53	6/23/2022 5:25	8.36
6/23/2022 4:22	11.71	242.43	6/24/2022 6:06	11.53	2.00	6/23/2022 4:09	11.40	103.88	6/23/2022 5:26	8.34

6/23/2022 4:23	11.75	242.61	6/24/2022 6:07	11.54	2.05	6/23/2022 4:10	11.35	103.18	6/23/2022 5:27	8.31
6/23/2022 4:24	11.74	242.45	6/24/2022 6:08	11.55	2.01	6/23/2022 4:11	11.32	105.04	6/23/2022 5:28	8.39
6/23/2022 4:25	11.72	242.59	6/24/2022 6:09	11.52	2.09	6/23/2022 4:12	11.32	104.61	6/23/2022 5:29	8.34
6/23/2022 4:26	11.74	242.43	6/24/2022 6:10	11.52	1.97	6/23/2022 4:13	11.27	104.62	6/23/2022 5:30	8.36
6/23/2022 4:27	11.75	242.41	6/24/2022 6:11	11.53	1.98	6/23/2022 4:14	11.29	103.91	6/23/2022 5:31	8.35
6/23/2022 4:28	11.75	242.42	6/24/2022 6:12	11.52	1.91	6/23/2022 4:15	11.36	103.97	6/23/2022 5:32	8.37
6/23/2022 4:29	11.74	242.53	6/24/2022 6:13	11.56	2.07	6/23/2022 4:16	11.32	104.95	6/23/2022 5:33	8.37
6/23/2022 4:30	11.75	242.50	6/24/2022 6:14	11.53	1.95	6/23/2022 4:17	11.32	104.25	6/23/2022 5:34	8.33
6/23/2022 4:31	11.74	242.39	6/24/2022 6:15	11.53	1.97	6/23/2022 4:18	11.30	104.33	6/23/2022 5:35	8.32
6/23/2022 4:32	11.70	242.50	6/24/2022 6:16	11.55	1.94	6/23/2022 4:19	11.38	104.43	6/23/2022 5:36	8.37
6/23/2022 4:33	11.74	242.68	6/24/2022 6:17	11.51	1.91	6/23/2022 4:20	11.31	105.34	6/23/2022 5:37	8.37
6/23/2022 4:34	11.72	242.40	6/24/2022 6:18	11.51	1.78	6/23/2022 4:21	11.34	105.16	6/23/2022 5:38	8.40
6/23/2022 4:35	11.71	242.41	6/24/2022 6:19	11.50	1.85	6/23/2022 4:22	11.32	104.21	6/23/2022 5:39	8.39
6/23/2022 4:36	11.74	242.53	6/24/2022 6:20	11.53	1.91	6/23/2022 4:23	11.34	104.85	6/23/2022 5:40	8.40
6/23/2022 4:37	11.74	242.67	6/24/2022 6:21	11.52	1.85	6/23/2022 4:24	11.31	104.34	6/23/2022 5:41	8.38
6/23/2022 4:38	11.75	242.53	6/24/2022 6:22	11.52	1.85	6/23/2022 4:25	11.37	104.26	6/23/2022 5:42	8.42
6/23/2022 4:39	11.73	242.61	6/24/2022 6:23	11.49	1.85	6/23/2022 4:26	11.38	104.01	6/23/2022 5:43	8.40
6/23/2022 4:40	11.72	242.43	6/24/2022 6:24	11.56	1.82	6/23/2022 4:27	11.36	103.60	6/23/2022 5:44	8.40
6/23/2022 4:41	11.74	242.72	6/24/2022 6:25	11.52	1.69	6/23/2022 4:28	11.38	104.42	6/23/2022 5:45	8.40
6/23/2022 4:42	11.71	242.71	6/24/2022 6:26	11.52	1.84	6/23/2022 4:29	11.37	104.19	6/23/2022 5:46	8.37
6/23/2022 4:43	11.74	242.44	6/24/2022 6:27	11.52	1.80	6/23/2022 4:30	11.35	104.69	6/23/2022 5:47	8.37
6/23/2022 4:44	11.73	242.50	6/24/2022 6:28	11.53	1.71	6/23/2022 4:31	11.37	103.58	6/23/2022 5:48	8.37
6/23/2022 4:45	11.73	242.38	6/24/2022 6:29	11.54	1.70	6/23/2022 4:32	11.33	104.40	6/23/2022 5:49	8.43
6/23/2022 4:46	11.71	242.50	6/24/2022 6:30	11.52	1.73	6/23/2022 4:33	11.39	104.46	6/23/2022 5:50	8.42
6/23/2022 4:47	11.76	242.53	6/24/2022 6:31	11.53	1.63	6/23/2022 4:34	11.37	104.98	6/23/2022 5:51	8.40
6/23/2022 4:48	11.75	242.68	6/24/2022 6:32	11.52	1.64	6/23/2022 4:35	11.39	103.25	6/23/2022 5:52	8.39
6/23/2022 4:49	11.71	242.47	6/24/2022 6:33	11.54	1.55	6/23/2022 4:36	11.29	104.68	6/23/2022 5:53	8.42
6/23/2022 4:50	11.73	242.53	6/24/2022 6:34	11.53	1.57	6/23/2022 4:37	11.34	104.37	6/23/2022 5:54	8.37
6/23/2022 4:51	11.73	242.52	6/24/2022 6:35	11.55	1.59	6/23/2022 4:38	11.38	105.43	6/23/2022 5:55	8.40
6/23/2022 4:52	11.75	242.50	6/24/2022 6:36	11.52	1.60	6/23/2022 4:39	11.35	103.67	6/23/2022 5:56	8.47
6/23/2022 4:53	11.73	242.58	6/24/2022 6:37	11.53	1.49	6/23/2022 4:40	11.34	104.71	6/23/2022 5:57	8.39
6/23/2022 4:54	11.74	242.36	6/24/2022 6:38	11.55	1.42	6/23/2022 4:41	11.35	104.90	6/23/2022 5:58	8.40
6/23/2022 4:55	11.73	242.61	6/24/2022 6:39	11.53	1.52	6/23/2022 4:42	11.31	104.10	6/23/2022 5:59	8.41
6/23/2022 4:56	11.72	242.53	6/24/2022 6:40	11.54	1.53	6/23/2022 4:43	11.34	105.53	6/23/2022 6:00	8.42
6/23/2022 4:57	11.72	242.61	6/24/2022 6:41	11.51	1.44	6/23/2022 4:44	11.35	104.28	6/23/2022 6:01	8.45
6/23/2022 4:58	11.74	242.47	6/24/2022 6:42	11.52	1.45	6/23/2022 4:45	11.31	104.79	6/23/2022 6:02	8.45
6/23/2022 4:59	11.75	242.67	6/24/2022 6:43	11.52	1.39	6/23/2022 4:46	11.37	104.16	6/23/2022 6:03	8.38
6/23/2022 5:00	11.73	242.75	6/24/2022 6:44	11.49	1.36	6/23/2022 4:47	11.32	105.39	6/23/2022 6:04	8.42
6/23/2022 5:01	11.75	242.80	6/24/2022 6:45	11.49	1.37	6/23/2022 4:48	11.35	104.82	6/23/2022 6:05	8.47
6/23/2022 5:02	11.71	242.56	6/24/2022 6:46	11.55	1.41	6/23/2022 4:49	11.39	104.62	6/23/2022 6:06	8.42
6/23/2022 5:03	11.74	242.69	6/24/2022 6:47	11.54	1.42	6/23/2022 4:50	11.34	104.54	6/23/2022 6:07	8.47
6/23/2022 5:04	11.70	242.41	6/24/2022 6:48	11.51	1.25	6/23/2022 4:51	11.34	104.91	6/23/2022 6:08	8.39
6/23/2022 5:05	11.74	242.76	6/24/2022 6:49	11.52	1.39	6/23/2022 4:52	11.32	104.28	6/23/2022 6:09	8.43
6/23/2022 5:06	11.73	242.53	6/24/2022 6:50	11.56	1.31	6/23/2022 4:53	11.37	104.32	6/23/2022 6:10	8.39
6/23/2022 5:07	11.74	242.56	6/24/2022 6:51	11.55	1.30	6/23/2022 4:54	11.38	104.42	6/23/2022 6:11	8.44
6/23/2022 5:08	11.75	242.65	6/24/2022 6:52	11.49	1.30	6/23/2022 4:55	11.39	104.57	6/23/2022 6:12	8.42
6/23/2022 5:09	11.72	242.56	6/24/2022 6:53	11.52	1.30	6/23/2022 4:56	11.34	103.97	6/23/2022 6:13	8.44
6/23/2022 5:10	11.76	242.81	6/24/2022 6:54	11.53	1.36	6/23/2022 4:57	11.31	104.89	6/23/2022 6:14	8.46
6/23/2022 5:11	11.75	242.47	6/24/2022 6:55	11.51	1.36	6/23/2022 4:58	11.41	104.61	6/23/2022 6:15	8.48
6/23/2022 5:12	11.74	242.52	6/24/2022 6:56	11.55	1.28	6/23/2022 4:59	11.39	105.33	6/23/2022 6:16	8.49
6/23/2022 5:13	11.74	242.71	6/24/2022 6:57	11.54	1.23	6/23/2022 5:00	11.32	104.44	6/23/2022 6:17	8.43
6/23/2022 5:14	11.75	242.52	6/24/2022 6:58	11.52	1.27	6/23/2022 5:01	11.36	104.56	6/23/2022 6:18	8.45
6/23/2022 5:15	11.73	242.59	6/24/2022 6:59	11.53	1.16	6/23/2022 5:02	11.32	104.66	6/23/2022 6:19	8.41
6/23/2022 5:16	11.71	242.53	6/24/2022 7:00	11.52	1.15	6/23/2022 5:03	11.32	104.96	6/23/2022 6:20	8.48
6/23/2022 5:17	11.74	242.42	6/24/2022 7:01	11.55	1.20	6/23/2022 5:04	11.31	105.38	6/23/2022 6:21	8.48
6/23/2022 5:18	11.74	242.50	6/24/2022 7:02	11.52	1.17	6/23/2022 5:05	11.36	104.84	6/23/2022 6:22	8.49
6/23/2022 5:19	11.72	242.58	6/24/2022 7:03	11.54	1.14	6/23/2022 5:06	11.35	105.33	6/23/2022 6:23	8.46
6/23/2022 5:20	11.75	242.70	6/24/2022 7:04	11.53	1.09	6/23/2022 5:07	11.35	104.85	6/23/2022 6:24	8.41
6/23/2022 5:21	11.75	242.78	6/24/2022 7:05	11.50	0.95	6/23/2022 5:08	11.35	104.38	6/23/2022 6:25	8.38
6/23/2022 5:22	11.72	242.60	6/24/2022 7:06	11.53	1.00	6/23/2022 5:09	11.36	105.01	6/23/2022 6:26	8.43
6/23/2022 5:23	11.76	242.49	6/24/2022 7:07	11.51	1.11	6/23/2022 5:10	11.36	104.53	6/23/2022 6:27	8.39
6/23/2022 5:24	11.74	242.61	6/24/2022 7:08	11.54	1.08	6/23/2022 5:11	11.37	104.75	6/23/2022 6:28	8.39
6/23/2022 5:25	11.72	242.62	6/24/2022 7:09	11.54	0.92	6/23/2022 5:12	11.33	105.48	6/23/2022 6:29	8.39
6/23/2022 5:26	11.76	242.59	6/24/2022 7:10	11.51	0.99	6/23/2022 5:13	11.39	104.05	6/23/2022 6:30	8.43
6/23/2022 5:27	11.73	242.72	6/24/2022 7:11	11.52	0.97	6/23/2022 5:14	11.29	104.47	6/23/2022 6:31	8.44
6/23/2022 5:28	11.75	242.71	6/24/2022 7:12	11.53	1.07	6/23/2022 5:15	11.39	104.35	6/23/2022 6:32	8.41
6/23/2022 5:29	11.75	242.71	6/24/2022 7:13	11.52	1.02	6/23/2022 5:16	11.36	104.69	6/23/2022 6:33	8.38
6/23/2022 5:30	11.74	242.59	6/24/2022 7:14	11.53	0.97	6/23/2022 5:17	11.35	104.99	6/23/2022 6:34	8.49
6/23/2022 5:31	11.71	242.64	6/24/2022 7:15	11.56	0.95	6/23/2022 5:18	11.30	104.19	6/23/2022 6:35	8.42
6/23/2022 5:32	11.73	242.63	6/24/2022 7:16	11.56	1.03	6/23/2022 5:19	11.32	104.45	6/23/2022 6:36	8.42
6/23/2022 5:33	11.76	242.72	6/24/2022 7:17	11.55	0.92	6/23/2022 5:20	11.36	104.61	6/23/2022 6:37	8.43
6/23/2022 5:34	11.73	242.42	6/24/2022 7:18	11.52	0.86	6/23/2022 5:21	11.29	103.76	6/23/2022 6:38	8.44
6/23/2022 5:35	11.75	242.71	6/24/2022 7:19	11.54	0.90	6/23/2022 5:22	11.30	104.79	6/23/2022 6:39	8.38
6/23/2022 5:36	11.74	242.72	6/24/2022 7:20	11.53	0.77	6/23/2022 5:23	11.35	104.09	6/23/2022 6:40	8.45
6/23/2022 5:37	11.73	242.42	6/24/2022 7:21	11.54	0.89	6/23/2022 5:24	11.32	104.30	6/23/2022 6:41	8.50
6/23/2022 5:38	11.75	242.86	6/24/2022 7:22	11.53	0.92	6/23/2022 5:25	11.36	104.72	6/23/2022 6:42	8.48
6/23/2022 5:39	11.74	242.77	6/24/2022 7:23	11.52	0.91	6/23/2022 5:26	11.33	105.06	6/23/2022 6:43	8.47
6/23/2022 5:40	11.71	242.85	6/24/2022 7:24	11.53	0.75	6/23/2022 5:27	11.34	104.38	6/23/2022 6:44	8.41
6/23/2022 5:41	11.73	242.62	6/24/2022 7:25	11.55	0.78	6/23/2022 5:28	11.35	105.43	6/23/2022 6:45	8.49
6/23/2022 5:42	11.74	242.71	6/24/2022 7:26	11.53	0.77	6/23/2022 5:29	11.34	105.08	6/23/2022 6:46	8.51
6/23/2022 5:43	11.75	242.61	6/24/2022 7:27	11.51	0.83	6/23/2022 5:30	11.37	103.94	6/23/2022 6:47	8.42
6/23/2022 5:44	11.72	242.91	6/24/2022 7:28	11.53	0.66	6/23/2022 5:31	11.31	104.63	6/23/2022 6:48	8.43
6/23/2022 5:45	11.74	242.72	6/24/2022 7:29	11.53	0.77	6/23/2022 5:32	11.36	104.59	6/23/2022 6:49	8.43
6/23/2022 5:46	11.74	242.82	6/24/2022 7:30	11.54	0.71	6/23/2022 5:33	11.39	104.70	6/23/2022 6:50	8.46
6/23/2022 5:47	11.75	242.68	6/24/2022 7:31	11.54	0.81	6/23/2022 5:34	11.36	104.33	6/23/2022 6:51	8.38
6/23/2022 5:48	11.74	242.67	6/24/2022 7:32	11.53	0.60	6/23/2022 5:35	11.33	103.69	6/23/2022 6:52	8.43
6/23/2022 5:49	11.72	242.67	6/24/2022 7:33	11.52	0.74	6/23/2022 5:36	11.33	104.92	6/23/2022 6:53	8.37
6/23/2022 5:50	11.74	242.96	6/24/2022 7:34	11.52	0.70	6/23/2022 5:37	11.29	104.67	6/23/2022 6:54	8.45

6/23/2022 5:51	11.74	242.76	6/24/2022 7:35	11.52	0.59	6/23/2022 5:38	11.32	104.53	6/23/2022 6:55	8.46
6/23/2022 5:52	11.74	242.79	6/24/2022 7:36	11.55	0.53	6/23/2022 5:39	11.31	104.18	6/23/2022 6:56	8.41
6/23/2022 5:53	11.75	242.84	6/24/2022 7:37	11.51	0.65	6/23/2022 5:40	11.30	104.90	6/23/2022 6:57	8.43
6/23/2022 5:54	11.75	242.76	6/24/2022 7:38	11.53	0.55	6/23/2022 5:41	11.31	104.54	6/23/2022 6:58	8.40
6/23/2022 5:55	11.74	242.91	6/24/2022 7:39	11.54	0.55	6/23/2022 5:42	11.33	104.27	6/23/2022 6:59	8.45
6/23/2022 5:56	11.75	242.68	6/24/2022 7:40	11.53	0.60	6/23/2022 5:43	11.34	104.54	6/23/2022 7:00	8.42
6/23/2022 5:57	11.74	242.71	6/24/2022 7:41	11.56	0.49	6/23/2022 5:44	11.37	104.28	6/23/2022 7:01	8.47
6/23/2022 5:58	11.74	242.70	6/24/2022 7:42	11.52	0.56	6/23/2022 5:45	11.38	104.33	6/23/2022 7:02	8.37
6/23/2022 5:59	11.74	242.82	6/24/2022 7:43	11.53	0.48	6/23/2022 5:46	11.31	105.29	6/23/2022 7:03	8.43
6/23/2022 6:00	11.75	242.65	6/24/2022 7:44	11.51	0.54	6/23/2022 5:47	11.38	104.00	6/23/2022 7:04	8.44
6/23/2022 6:01	11.73	242.88	6/24/2022 7:45	11.52	0.54	6/23/2022 5:48	11.31	104.44	6/23/2022 7:05	8.49
6/23/2022 6:02	11.72	242.76	6/24/2022 7:46	11.54	0.40	6/23/2022 5:49	11.31	104.61	6/23/2022 7:06	8.45
6/23/2022 6:03	11.75	242.91	6/24/2022 7:47	11.54	0.51	6/23/2022 5:50	11.37	104.82	6/23/2022 7:07	8.45
6/23/2022 6:04	11.75	242.66	6/24/2022 7:48	11.52	0.49	6/23/2022 5:51	11.33	105.44	6/23/2022 7:08	8.45
6/23/2022 6:05	11.75	242.77	6/24/2022 7:49	11.53	0.54	6/23/2022 5:52	11.34	105.29	6/23/2022 7:09	8.48
6/23/2022 6:06	11.70	242.84	6/24/2022 7:50	11.51	0.42	6/23/2022 5:53	11.37	104.27	6/23/2022 7:10	8.44
6/23/2022 6:07	11.75	242.62	6/24/2022 7:51	11.54	0.42	6/23/2022 5:54	11.38	104.42	6/23/2022 7:11	8.46
6/23/2022 6:08	11.71	242.89	6/24/2022 7:52	11.55	0.54	6/23/2022 5:55	11.37	105.17	6/23/2022 7:12	8.43
6/23/2022 6:09	11.74	242.92	6/24/2022 7:53	11.55	0.28	6/23/2022 5:56	11.31	104.85	6/23/2022 7:13	8.43
6/23/2022 6:10	11.73	242.81	6/24/2022 7:54	11.53	0.43	6/23/2022 5:57	11.31	104.85	6/23/2022 7:14	8.42
6/23/2022 6:11	11.71	242.68	6/24/2022 7:55	11.54	0.38	6/23/2022 5:58	11.31	104.45	6/23/2022 7:15	8.43
6/23/2022 6:12	11.74	243.01	6/24/2022 7:56	11.52	0.38	6/23/2022 5:59	11.34	104.72	6/23/2022 7:16	8.50
6/23/2022 6:13	11.74	242.85	6/24/2022 7:57	11.54	0.35	6/23/2022 6:00	11.32	104.27	6/23/2022 7:17	8.44
6/23/2022 6:14	11.72	242.71	6/24/2022 7:58	11.51	0.31	6/23/2022 6:01	11.30	104.64	6/23/2022 7:18	8.43
6/23/2022 6:15	11.76	242.81	6/24/2022 7:59	11.53	0.27	6/23/2022 6:02	11.36	103.94	6/23/2022 7:19	8.51
6/23/2022 6:16	11.72	242.85	6/24/2022 8:00	11.54	0.30	6/23/2022 6:03	11.34	105.30	6/23/2022 7:20	8.43
6/23/2022 6:17	11.75	242.93	6/24/2022 8:01	11.52	0.14	6/23/2022 6:04	11.39	104.56	6/23/2022 7:21	8.47
6/23/2022 6:18	11.72	243.08	6/24/2022 8:02	11.51	0.26	6/23/2022 6:05	11.32	105.31	6/23/2022 7:22	8.38
6/23/2022 6:19	11.73	242.73	6/24/2022 8:03	11.52	0.29	6/23/2022 6:06	11.35	103.53	6/23/2022 7:23	8.44
6/23/2022 6:20	11.75	242.77	6/24/2022 8:04	11.53	0.27	6/23/2022 6:07	11.34	105.60	6/23/2022 7:24	8.46
6/23/2022 6:21	11.70	242.88	6/24/2022 8:05	11.57	0.20	6/23/2022 6:08	11.30	105.10	6/23/2022 7:25	8.40
6/23/2022 6:22	11.74	242.70	6/24/2022 8:06	11.55	0.19	6/23/2022 6:09	11.32	104.16	6/23/2022 7:26	8.39
6/23/2022 6:23	11.74	243.12	6/24/2022 8:07	11.52	0.24	6/23/2022 6:10	11.31	105.17	6/23/2022 7:27	8.45
6/23/2022 6:24	11.75	242.84	6/24/2022 8:08	11.51	0.26	6/23/2022 6:11	11.38	105.15	6/23/2022 7:28	8.43
6/23/2022 6:25	11.74	242.99	6/24/2022 8:09	11.53	0.14	6/23/2022 6:12	11.32	105.01	6/23/2022 7:29	8.44
6/23/2022 6:26	11.74	242.95	6/24/2022 8:10	11.53	0.26	6/23/2022 6:13	11.33	104.68	6/23/2022 7:30	8.42
6/23/2022 6:27	11.74	242.98	6/24/2022 8:11	11.53	0.16	6/23/2022 6:14	11.32	104.58	6/23/2022 7:31	8.39
6/23/2022 6:28	11.74	242.99	6/24/2022 8:12	11.51	0.08	6/23/2022 6:15	11.37	104.97	6/23/2022 7:32	8.45
6/23/2022 6:29	11.74	242.98	6/24/2022 8:13	11.52	0.16	6/23/2022 6:16	11.37	104.24	6/23/2022 7:33	8.52
6/23/2022 6:30	11.73	242.84	6/24/2022 8:14	11.54	0.15	6/23/2022 6:17	11.35	104.68	6/23/2022 7:34	8.37
6/23/2022 6:31	11.73	243.01	6/24/2022 8:15	11.54	0.18	6/23/2022 6:18	11.37	104.70	6/23/2022 7:35	8.45
6/23/2022 6:32	11.76	242.84	6/24/2022 8:16	11.53	0.17	6/23/2022 6:19	11.40	104.97	6/23/2022 7:36	8.44
6/23/2022 6:33	11.77	242.86	6/24/2022 8:17	11.54	0.08	6/23/2022 6:20	11.33	104.71	6/23/2022 7:37	8.46
6/23/2022 6:34	11.72	242.90	6/24/2022 8:18	11.53	-0.01	6/23/2022 6:21	11.32	104.74	6/23/2022 7:38	8.44
6/23/2022 6:35	11.75	242.86	6/24/2022 8:19	11.53	0.02	6/23/2022 6:22	11.36	104.97	6/23/2022 7:39	8.49
6/23/2022 6:36	11.72	242.93	6/24/2022 8:20	11.51	0.04	6/23/2022 6:23	11.29	105.86	6/23/2022 7:40	8.44
6/23/2022 6:37	11.74	242.97	6/24/2022 8:21	11.54	0.02	6/23/2022 6:24	11.34	104.81	6/23/2022 7:41	8.43
6/23/2022 6:38	11.73	242.97	6/24/2022 8:22	11.51	-0.12	6/23/2022 6:25	11.34	104.44	6/23/2022 7:42	8.41
6/23/2022 6:39	11.73	242.84	6/24/2022 8:23	11.52	0.04	6/23/2022 6:26	11.36	104.72	6/23/2022 7:43	8.43
6/23/2022 6:40	11.74	242.94	6/24/2022 8:24	11.52	-0.02	6/23/2022 6:27	11.36	105.30	6/23/2022 7:44	8.48
6/23/2022 6:41	11.75	242.89	6/24/2022 8:25	11.54	-0.07	6/23/2022 6:28	11.31	105.33	6/23/2022 7:45	8.43
6/23/2022 6:42	11.72	242.86	6/24/2022 8:26	11.53	-0.04	6/23/2022 6:29	11.34	105.04	6/23/2022 7:46	8.44
6/23/2022 6:43	11.73	243.00	6/24/2022 8:27	11.53	0.02	6/23/2022 6:30	11.35	104.60	6/23/2022 7:47	8.50
6/23/2022 6:44	11.71	243.05	6/24/2022 8:28	11.53	-0.08	6/23/2022 6:31	11.36	104.61	6/23/2022 7:48	8.43
6/23/2022 6:45	11.71	243.06	6/24/2022 8:29	11.53	-0.11	6/23/2022 6:32	11.33	105.00	6/23/2022 7:49	8.46
6/23/2022 6:46	11.74	242.92	6/24/2022 8:30	11.53	-0.07	6/23/2022 6:33	11.34	105.17	6/23/2022 7:50	8.45
6/23/2022 6:47	11.73	242.99	6/24/2022 8:31	11.53	-0.22	6/23/2022 6:34	11.33	105.20	6/23/2022 7:51	8.41
6/23/2022 6:48	11.70	243.12	6/24/2022 8:32	11.53	-0.04	6/23/2022 6:35	11.34	105.35	6/23/2022 7:52	8.44
6/23/2022 6:49	11.72	242.79	6/24/2022 8:33	11.52	-0.24	6/23/2022 6:36	11.34	105.67	6/23/2022 7:53	8.45
6/23/2022 6:50	11.72	243.04	6/24/2022 8:34	11.54	-0.17	6/23/2022 6:37	11.31	105.03	6/23/2022 7:54	8.47
6/23/2022 6:51	11.74	243.21	6/24/2022 8:35	11.50	-0.07	6/23/2022 6:38	11.36	104.98	6/23/2022 7:55	8.44
6/23/2022 6:52	11.74	243.22	6/24/2022 8:36	11.53	-0.21	6/23/2022 6:39	11.38	104.72	6/23/2022 7:56	8.36
6/23/2022 6:53	11.72	242.87	6/24/2022 8:37	11.53	-0.12	6/23/2022 6:40	11.33	104.57	6/23/2022 7:57	8.48
6/23/2022 6:54	11.73	243.16	6/24/2022 8:38	11.53	-0.20	6/23/2022 6:41	11.37	104.09	6/23/2022 7:58	8.44
6/23/2022 6:55	11.74	242.87	6/24/2022 8:39	11.53	-0.15	6/23/2022 6:42	11.34	104.69	6/23/2022 7:59	8.43
6/23/2022 6:56	11.74	243.06	6/24/2022 8:40	11.51	-0.15	6/23/2022 6:43	11.41	104.74	6/23/2022 8:00	8.48
6/23/2022 6:57	11.71	242.93	6/24/2022 8:41	11.53	-0.24	6/23/2022 6:44	11.36	105.26	6/23/2022 8:01	8.47
6/23/2022 6:58	11.76	243.14	6/24/2022 8:42	11.54	-0.27	6/23/2022 6:45	11.36	105.05	6/23/2022 8:02	8.47
6/23/2022 6:59	11.77	243.10	6/24/2022 8:43	11.54	-0.30	6/23/2022 6:46	11.37	105.01	6/23/2022 8:03	8.53
6/23/2022 7:00	11.75	243.01	6/24/2022 8:44	11.53	-0.21	6/23/2022 6:47	11.39	105.63	6/23/2022 8:04	8.44
6/23/2022 7:01	11.73	242.94	6/24/2022 8:45	11.52	-0.25	6/23/2022 6:48	11.31	104.77	6/23/2022 8:05	8.49
6/23/2022 7:02	11.75	243.10	6/24/2022 8:46	11.54	-0.24	6/23/2022 6:49	11.35	105.22	6/23/2022 8:06	8.52
6/23/2022 7:03	11.71	243.03	6/24/2022 8:47	11.55	-0.25	6/23/2022 6:50	11.36	105.34	6/23/2022 8:07	8.48
6/23/2022 7:04	11.75	243.05	6/24/2022 8:48	11.51	-0.30	6/23/2022 6:51	11.37	104.27	6/23/2022 8:08	8.48
6/23/2022 7:05	11.74	243.25	6/24/2022 8:49	11.55	-0.29	6/23/2022 6:52	11.34	105.73	6/23/2022 8:09	8.47
6/23/2022 7:06	11.72	243.07	6/24/2022 8:50	11.54	-0.32	6/23/2022 6:53	11.36	105.93	6/23/2022 8:10	8.50
6/23/2022 7:07	11.74	242.92	6/24/2022 8:51	11.56	-0.38	6/23/2022 6:54	11.33	104.46	6/23/2022 8:11	8.49
6/23/2022 7:08	11.73	243.06	6/24/2022 8:52	11.49	-0.49	6/23/2022 6:55	11.34	106.06	6/23/2022 8:12	8.48
6/23/2022 7:09	11.74	242.89	6/24/2022 8:53	11.53	-0.48	6/23/2022 6:56	11.30	105.98	6/23/2022 8:13	8.49
6/23/2022 7:10	11.74	243.08	6/24/2022 8:54	11.55	-0.36	6/23/2022 6:57	11.39	104.15	6/23/2022 8:14	8.51
6/23/2022 7:11	11.77	243.08	6/24/2022 8:55	11.53	-0.39	6/23/2022 6:58	11.35	105.43	6/23/2022 8:15	8.53
6/23/2022 7:12	11.73	243.04	6/24/2022 8:56	11.52	-0.51	6/23/2022 6:59	11.34	104.99	6/23/2022 8:16	8.49
6/23/2022 7:13	11.75	242.81	6/24/2022 8:57	11.51	-0.55	6/23/2022 7:00	11.39	105.22	6/23/2022 8:17	8.49
6/23/2022 7:14	11.76	243.02	6/24/2022 8:58	11.52	-0.37	6/23/2022 7:01	11.36	104.54	6/23/2022 8:18	8.51
6/23/2022 7:15	11.75	243.09	6/24/2022 8:59	11.57	-0.45	6/23/2022 7:02	11.35	105.16	6/23/2022 8:19	8.50
6/23/2022 7:16	11.76	243.20	6/24/2022 9:00	11.56	-0.38	6/23/2022 7:03	11.37	105.23	6/23/2022 8:20	8.56
6/23/2022 7:17	11.74	243.09	6/24/2022 9:01	11.54	-0.37	6/23/2022 7:04	11.35	104.86	6/23/2022 8:21	8.50
6/23/2022 7:18	11.72	243.04	6/24/2022 9:02	11.53	-0.39	6/23/2022 7:05	11.34	105.97	6/23/2022 8:22	8.49

6/23/2022 7:19	11.74	243.30	6/24/2022 9:03	11.55	-0.46	6/23/2022 7:06	11.35	104.85	6/23/2022 8:23	8.50
6/23/2022 7:20	11.71	243.15	6/24/2022 9:04	11.55	-0.41	6/23/2022 7:07	11.38	104.96	6/23/2022 8:24	8.51
6/23/2022 7:21	11.74	243.18	6/24/2022 9:05	11.52	-0.39	6/23/2022 7:08	11.34	105.05	6/23/2022 8:25	8.50
6/23/2022 7:22	11.73	243.04	6/24/2022 9:06	11.53	-0.54	6/23/2022 7:09	11.30	105.01	6/23/2022 8:26	8.53
6/23/2022 7:23	11.72	243.07	6/24/2022 9:07	11.51	-0.46	6/23/2022 7:10	11.37	104.86	6/23/2022 8:27	8.54
6/23/2022 7:24	11.73	243.04	6/24/2022 9:08	11.55	-0.45	6/23/2022 7:11	11.35	105.29	6/23/2022 8:28	8.53
6/23/2022 7:25	11.73	243.31	6/24/2022 9:09	11.52	-0.40	6/23/2022 7:12	11.36	105.87	6/23/2022 8:29	8.49
6/23/2022 7:26	11.73	242.97	6/24/2022 9:10	11.55	-0.38	6/23/2022 7:13	11.38	105.12	6/23/2022 8:30	8.53
6/23/2022 7:27	11.72	242.98	6/24/2022 9:11	11.53	-0.41	6/23/2022 7:14	11.37	105.26	6/23/2022 8:31	8.60
6/23/2022 7:28	11.73	243.06	6/24/2022 9:12	11.52	-0.45	6/23/2022 7:15	11.37	105.49	6/23/2022 8:32	8.54
6/23/2022 7:29	11.74	243.00	6/24/2022 9:13	11.54	-0.35	6/23/2022 7:16	11.36	104.72	6/23/2022 8:33	8.54
6/23/2022 7:30	11.71	242.98	6/24/2022 9:14	11.54	-0.45	6/23/2022 7:17	11.38	104.28	6/23/2022 8:34	8.52
6/23/2022 7:31	11.73	243.12	6/24/2022 9:15	11.52	-0.55	6/23/2022 7:18	11.33	105.33	6/23/2022 8:35	8.52
6/23/2022 7:32	11.74	243.04	6/24/2022 9:16	11.53	-0.45	6/23/2022 7:19	11.38	104.69	6/23/2022 8:36	8.51
6/23/2022 7:33	11.73	243.22	6/24/2022 9:17	11.53	-0.36	6/23/2022 7:20	11.36	105.72	6/23/2022 8:37	8.51
6/23/2022 7:34	11.73	243.05	6/24/2022 9:18	11.54	-0.35	6/23/2022 7:21	11.33	104.98	6/23/2022 8:38	8.54
6/23/2022 7:35	11.75	243.11	6/24/2022 9:19	11.54	-0.50	6/23/2022 7:22	11.38	104.83	6/23/2022 8:39	8.51
6/23/2022 7:36	11.73	243.16	6/24/2022 9:20	11.51	-0.39	6/23/2022 7:23	11.32	105.63	6/23/2022 8:40	8.55
6/23/2022 7:37	11.75	243.18	6/24/2022 9:21	11.53	-0.46	6/23/2022 7:24	11.32	105.53	6/23/2022 8:41	8.56
6/23/2022 7:38	11.73	243.02	6/24/2022 9:22	11.53	-0.39	6/23/2022 7:25	11.34	105.88	6/23/2022 8:42	8.53
6/23/2022 7:39	11.73	243.34	6/24/2022 9:23	11.52	-0.43	6/23/2022 7:26	11.39	105.90	6/23/2022 8:43	8.52
6/23/2022 7:40	11.73	243.24	6/24/2022 9:24	11.53	-0.42	6/23/2022 7:27	11.37	105.73	6/23/2022 8:44	8.52
6/23/2022 7:41	11.73	243.28	6/24/2022 9:25	11.52	-0.39	6/23/2022 7:28	11.30	105.92	6/23/2022 8:45	8.55
6/23/2022 7:42	11.74	243.31	6/24/2022 9:26	11.53	-0.53	6/23/2022 7:29	11.38	104.99	6/23/2022 8:46	8.58
6/23/2022 7:43	11.74	243.02	6/24/2022 9:27	11.51	-0.45	6/23/2022 7:30	11.36	105.25	6/23/2022 8:47	8.55
6/23/2022 7:44	11.75	243.29	6/24/2022 9:28	11.54	-0.48	6/23/2022 7:31	11.31	105.46	6/23/2022 8:48	8.50
6/23/2022 7:45	11.72	243.29	6/24/2022 9:29	11.52	-0.42	6/23/2022 7:32	11.33	105.34	6/23/2022 8:49	8.53
6/23/2022 7:46	11.74	243.16	6/24/2022 9:30	11.54	-0.37	6/23/2022 7:33	11.35	106.63	6/23/2022 8:50	8.50
6/23/2022 7:47	11.74	243.09	6/24/2022 9:31	11.53	-0.33	6/23/2022 7:34	11.33	106.26	6/23/2022 8:51	8.51
6/23/2022 7:48	11.71	242.90	6/24/2022 9:32	11.52	-0.44	6/23/2022 7:35	11.37	105.66	6/23/2022 8:52	8.51
6/23/2022 7:49	11.75	243.21	6/24/2022 9:33	11.54	-0.47	6/23/2022 7:36	11.38	105.53	6/23/2022 8:53	8.59
6/23/2022 7:50	11.74	243.01	6/24/2022 9:34	11.54	-0.43	6/23/2022 7:37	11.33	105.26	6/23/2022 8:54	8.50
6/23/2022 7:51	11.73	243.12	6/24/2022 9:35	11.53	-0.35	6/23/2022 7:38	11.38	105.63	6/23/2022 8:55	8.52
6/23/2022 7:52	11.73	243.11	6/24/2022 9:36	11.53	-0.46	6/23/2022 7:39	11.37	106.32	6/23/2022 8:56	8.53
6/23/2022 7:53	11.74	243.09	6/24/2022 9:37	11.56	-0.48	6/23/2022 7:40	11.30	105.05	6/23/2022 8:57	8.52
6/23/2022 7:54	11.74	243.24	6/24/2022 9:38	11.56	-0.40	6/23/2022 7:41	11.33	105.43	6/23/2022 8:58	8.51
6/23/2022 7:55	11.71	243.20	6/24/2022 9:39	11.51	-0.40	6/23/2022 7:42	11.37	105.58	6/23/2022 8:59	8.52
6/23/2022 7:56	11.75	243.26	6/24/2022 9:40	11.52	-0.39	6/23/2022 7:43	11.35	105.90	6/23/2022 9:00	8.57
6/23/2022 7:57	11.76	243.18	6/24/2022 9:41	11.54	-0.48	6/23/2022 7:44	11.33	104.71	6/23/2022 9:01	8.54
6/23/2022 7:58	11.73	243.46	6/24/2022 9:42	11.53	-0.36	6/23/2022 7:45	11.36	105.51	6/23/2022 9:02	8.55
6/23/2022 7:59	11.75	243.18	6/24/2022 9:43	11.53	-0.46	6/23/2022 7:46	11.39	105.54	6/23/2022 9:03	8.60
6/23/2022 8:00	11.74	243.04	6/24/2022 9:44	11.54	-0.50	6/23/2022 7:47	11.32	105.09	6/23/2022 9:04	8.54
6/23/2022 8:01	11.72	243.20	6/24/2022 9:45	11.52	-0.43	6/23/2022 7:48	11.40	105.84	6/23/2022 9:05	8.54
6/23/2022 8:02	11.75	243.35	6/24/2022 9:46	11.54	-0.41	6/23/2022 7:49	11.37	105.56	6/23/2022 9:06	8.56
6/23/2022 8:03	11.76	243.21	6/24/2022 9:47	11.54	-0.39	6/23/2022 7:50	11.33	105.30	6/23/2022 9:07	8.53
6/23/2022 8:04	11.76	243.04	6/24/2022 9:48	11.51	-0.42	6/23/2022 7:51	11.33	105.51	6/23/2022 9:08	8.56
6/23/2022 8:05	11.72	243.20	6/24/2022 9:49	11.54	-0.52	6/23/2022 7:52	11.34	105.97	6/23/2022 9:09	8.49
6/23/2022 8:06	11.73	243.15	6/24/2022 9:50	11.53	-0.43	6/23/2022 7:53	11.33	106.38	6/23/2022 9:10	8.52
6/23/2022 8:07	11.74	243.24	6/24/2022 9:51	11.51	-0.32	6/23/2022 7:54	11.32	105.11	6/23/2022 9:11	8.53
6/23/2022 8:08	11.73	243.13	6/24/2022 9:52	11.53	-0.38	6/23/2022 7:55	11.38	105.55	6/23/2022 9:12	8.54
6/23/2022 8:09	11.72	243.16	6/24/2022 9:53	11.51	-0.53	6/23/2022 7:56	11.34	106.06	6/23/2022 9:13	8.55
6/23/2022 8:10	11.74	243.13	6/24/2022 9:54	11.56	-0.42	6/23/2022 7:57	11.38	105.43	6/23/2022 9:14	8.51
6/23/2022 8:11	11.73	243.31	6/24/2022 9:55	11.55	-0.44	6/23/2022 7:58	11.39	105.39	6/23/2022 9:15	8.61
6/23/2022 8:12	11.74	243.19	6/24/2022 9:56	11.55	-0.34	6/23/2022 7:59	11.36	105.48	6/23/2022 9:16	8.52
6/23/2022 8:13	11.73	243.16	6/24/2022 9:57	11.55	-0.35	6/23/2022 8:00	11.37	106.37	6/23/2022 9:17	8.56
6/23/2022 8:14	11.74	243.34	6/24/2022 9:58	11.53	-0.36	6/23/2022 8:01	11.36	105.29	6/23/2022 9:18	8.54
6/23/2022 8:15	11.75	243.27	6/24/2022 9:59	11.54	-0.44	6/23/2022 8:02	11.31	106.55	6/23/2022 9:19	8.53
6/23/2022 8:16	11.73	243.25	6/24/2022 10:00	11.52	-0.49	6/23/2022 8:03	11.30	105.97	6/23/2022 9:20	8.52
6/23/2022 8:17	11.75	243.31	6/24/2022 10:01	11.55	-0.41	6/23/2022 8:04	11.38	105.33	6/23/2022 9:21	8.52
6/23/2022 8:18	11.76	243.34	6/24/2022 10:02	11.51	-0.55	6/23/2022 8:05	11.38	105.16	6/23/2022 9:22	8.56
6/23/2022 8:19	11.76	243.21	6/24/2022 10:03	11.54	-0.52	6/23/2022 8:06	11.36	106.50	6/23/2022 9:23	8.59
6/23/2022 8:20	11.74	243.30	6/24/2022 10:04	11.52	-0.48	6/23/2022 8:07	11.32	105.28	6/23/2022 9:24	8.53
6/23/2022 8:21	11.72	243.41	6/24/2022 10:05	11.53	-0.43	6/23/2022 8:08	11.36	105.48	6/23/2022 9:25	8.56
6/23/2022 8:22	11.74	243.35	6/24/2022 10:06	11.51	-0.42	6/23/2022 8:09	11.34	105.58	6/23/2022 9:26	8.60
6/23/2022 8:23	11.71	243.33	6/24/2022 10:07	11.54	-0.43	6/23/2022 8:10	11.36	105.31	6/23/2022 9:27	8.58
6/23/2022 8:24	11.75	243.44	6/24/2022 10:08	11.54	-0.46	6/23/2022 8:11	11.34	105.64	6/23/2022 9:28	8.62
6/23/2022 8:25	11.75	243.13	6/24/2022 10:09	11.53	-0.38	6/23/2022 8:12	11.33	105.63	6/23/2022 9:29	8.53
6/23/2022 8:26	11.71	243.23	6/24/2022 10:10	11.53	-0.47	6/23/2022 8:13	11.32	105.20	6/23/2022 9:30	8.57
6/23/2022 8:27	11.73	243.25	6/24/2022 10:11	11.55	-0.40	6/23/2022 8:14	11.33	105.65	6/23/2022 9:31	8.54
6/23/2022 8:28	11.76	243.32	6/24/2022 10:12	11.54	-0.46	6/23/2022 8:15	11.35	106.19	6/23/2022 9:32	8.63
6/23/2022 8:29	11.75	243.21	6/24/2022 10:13	11.51	-0.49	6/23/2022 8:16	11.35	105.40	6/23/2022 9:33	8.58
6/23/2022 8:30	11.76	243.37	6/24/2022 10:14	11.56	-0.39	6/23/2022 8:17	11.38	106.23	6/23/2022 9:34	8.58
6/23/2022 8:31	11.74	243.09	6/24/2022 10:15	11.51	-0.61	6/23/2022 8:18	11.36	105.40	6/23/2022 9:35	8.56
6/23/2022 8:32	11.75	243.40	6/24/2022 10:16	11.54	-0.41	6/23/2022 8:19	11.34	107.32	6/23/2022 9:36	8.58
6/23/2022 8:33	11.73	243.35	6/24/2022 10:17	11.53	-0.45	6/23/2022 8:20	11.36	105.84	6/23/2022 9:37	8.61
6/23/2022 8:34	11.75	243.35	6/24/2022 10:18	11.52	-0.37	6/23/2022 8:21	11.31	106.37	6/23/2022 9:38	8.57
6/23/2022 8:35	11.76	243.27	6/24/2022 10:19	11.53	-0.53	6/23/2022 8:22	11.30	105.30	6/23/2022 9:39	8.54
6/23/2022 8:36	11.75	243.16	6/24/2022 10:20	11.54	-0.43	6/23/2022 8:23	11.31	106.02	6/23/2022 9:40	8.57
6/23/2022 8:37	11.73	243.69	6/24/2022 10:21	11.52	-0.40	6/23/2022 8:24	11.35	105.84	6/23/2022 9:41	8.55
6/23/2022 8:38	11.74	243.43	6/24/2022 10:22	11.54	-0.51	6/23/2022 8:25	11.36	106.25	6/23/2022 9:42	8.54
6/23/2022 8:39	11.76	243.38	6/24/2022 10:23	11.52	-0.37	6/23/2022 8:26	11.38	105.30	6/23/2022 9:43	8.57
6/23/2022 8:40	11.76	243.30	6/24/2022 10:24	11.53	-0.42	6/23/2022 8:27	11.32	106.22	6/23/2022 9:44	8.58
6/23/2022 8:41	11.73	243.33	6/24/2022 10:25	11.52	-0.48	6/23/2022 8:28	11.34	106.72	6/23/2022 9:45	8.55
6/23/2022 8:42	11.75	243.21	6/24/2022 10:26	11.53	-0.37	6/23/2022 8:29	11.36	106.65	6/23/2022 9:46	8.52
6/23/2022 8:43	11.74	243.36	6/24/2022 10:27	11.52	-0.42	6/23/2022 8:30	11.38	105.04	6/23/2022 9:47	8.57
6/23/2022 8:44	11.76	243.32	6/24/2022 10:28	11.52	-0.37	6/23/2022 8:31	11.38	106.25	6/23/2022 9:48	8.58
6/23/2022 8:45	11.75	243.43	6/24/2022 10:29	11.54	-0.42	6/23/2022 8:32	11.39	105.90	6/23/2022 9:49	8.59
6/23/2022 8:46	11.75	243.38	6/24/2022 10:30	11.52	-0.43	6/23/2022 8:33	11.33	106.07	6/23/2022 9:50	8.60

6/23/2022 8:47	11.74	243.43	6/24/2022 10:31	11.53	-0.39	6/23/2022 8:34	11.36	106.10	6/23/2022 9:51	8.58
6/23/2022 8:48	11.73	243.39	6/24/2022 10:32	11.56	-0.38	6/23/2022 8:35	11.35	105.61	6/23/2022 9:52	8.53
6/23/2022 8:49	11.72	243.49	6/24/2022 10:33	11.50	-0.36	6/23/2022 8:36	11.35	105.63	6/23/2022 9:53	8.59
6/23/2022 8:50	11.74	243.29	6/24/2022 10:34	11.52	-0.52	6/23/2022 8:37	11.33	105.52	6/23/2022 9:54	8.56
6/23/2022 8:51	11.74	243.59	6/24/2022 10:35	11.55	-0.45	6/23/2022 8:38	11.37	106.41	6/23/2022 9:55	8.54
6/23/2022 8:52	11.72	242.97	6/24/2022 10:36	11.54	-0.49	6/23/2022 8:39	11.34	105.63	6/23/2022 9:56	8.54
6/23/2022 8:53	11.73	243.40	6/24/2022 10:37	11.54	-0.39	6/23/2022 8:40	11.39	105.61	6/23/2022 9:57	8.62
6/23/2022 8:54	11.73	243.25	6/24/2022 10:38	11.53	-0.50	6/23/2022 8:41	11.37	106.12	6/23/2022 9:58	8.54
6/23/2022 8:55	11.76	243.32	6/24/2022 10:39	11.53	-0.41	6/23/2022 8:42	11.35	105.58	6/23/2022 9:59	8.59
6/23/2022 8:56	11.74	243.36	6/24/2022 10:40	11.53	-0.49	6/23/2022 8:43	11.32	105.90	6/23/2022 10:00	8.61
6/23/2022 8:57	11.73	243.51	6/24/2022 10:41	11.54	-0.52	6/23/2022 8:44	11.33	106.38	6/23/2022 10:01	8.62
6/23/2022 8:58	11.74	243.36	6/24/2022 10:42	11.53	-0.43	6/23/2022 8:45	11.35	105.44	6/23/2022 10:02	8.53
6/23/2022 8:59	11.73	243.13	6/24/2022 10:43	11.53	-0.50	6/23/2022 8:46	11.37	105.78	6/23/2022 10:03	8.59
6/23/2022 9:00	11.74	243.45	6/24/2022 10:44	11.51	-0.42	6/23/2022 8:47	11.33	106.17	6/23/2022 10:04	8.57
6/23/2022 9:01	11.75	243.49	6/24/2022 10:45	11.53	-0.49	6/23/2022 8:48	11.37	106.20	6/23/2022 10:05	8.59
6/23/2022 9:02	11.73	243.38	6/24/2022 10:46	11.53	-0.40	6/23/2022 8:49	11.34	105.11	6/23/2022 10:06	8.51
6/23/2022 9:03	11.71	243.40	6/24/2022 10:47	11.55	-0.54	6/23/2022 8:50	11.33	105.75	6/23/2022 10:07	8.54
6/23/2022 9:04	11.73	243.35	6/24/2022 10:48	11.55	-0.39	6/23/2022 8:51	11.33	105.80	6/23/2022 10:08	8.59
6/23/2022 9:05	11.72	243.43	6/24/2022 10:49	11.55	-0.56	6/23/2022 8:52	11.32	105.91	6/23/2022 10:09	8.61
6/23/2022 9:06	11.74	243.44	6/24/2022 10:50	11.54	-0.54	6/23/2022 8:53	11.32	105.99	6/23/2022 10:10	8.56
6/23/2022 9:07	11.72	243.32	6/24/2022 10:51	11.54	-0.49	6/23/2022 8:54	11.31	106.16	6/23/2022 10:11	8.61
6/23/2022 9:08	11.75	243.72	6/24/2022 10:52	11.55	-0.35	6/23/2022 8:55	11.34	106.18	6/23/2022 10:12	8.57
6/23/2022 9:09	11.75	243.44	6/24/2022 10:53	11.54	-0.54	6/23/2022 8:56	11.32	107.38	6/23/2022 10:13	8.64
6/23/2022 9:10	11.75	243.31	6/24/2022 10:54	11.54	-0.44	6/23/2022 8:57	11.34	106.82	6/23/2022 10:14	8.57
6/23/2022 9:11	11.76	243.52	6/24/2022 10:55	11.54	-0.47	6/23/2022 8:58	11.32	105.93	6/23/2022 10:15	8.60
6/23/2022 9:12	11.74	243.47	6/24/2022 10:56	11.52	-0.46	6/23/2022 8:59	11.37	106.75	6/23/2022 10:16	8.58
6/23/2022 9:13	11.72	243.30	6/24/2022 10:57	11.52	-0.39	6/23/2022 9:00	11.34	105.78	6/23/2022 10:17	8.56
6/23/2022 9:14	11.74	243.49	6/24/2022 10:58	11.55	-0.43	6/23/2022 9:01	11.34	105.98	6/23/2022 10:18	8.60
6/23/2022 9:15	11.75	243.54	6/24/2022 10:59	11.53	-0.53	6/23/2022 9:02	11.31	105.34	6/23/2022 10:19	8.65
6/23/2022 9:16	11.74	243.38	6/24/2022 11:00	11.51	-0.51	6/23/2022 9:03	11.39	105.99	6/23/2022 10:20	8.61
6/23/2022 9:17	11.75	243.53	6/24/2022 11:01	11.52	-0.44	6/23/2022 9:04	11.32	106.07	6/23/2022 10:21	8.60
6/23/2022 9:18	11.76	243.59	6/24/2022 11:02	11.54	-0.40	6/23/2022 9:05	11.40	106.59	6/23/2022 10:22	8.56
6/23/2022 9:19	11.74	243.38	6/24/2022 11:03	11.51	-0.37	6/23/2022 9:06	11.37	105.50	6/23/2022 10:23	8.65
6/23/2022 9:20	11.71	243.54	6/24/2022 11:04	11.53	-0.44	6/23/2022 9:07	11.35	105.83	6/23/2022 10:24	8.61
6/23/2022 9:21	11.72	243.65	6/24/2022 11:05	11.52	-0.53	6/23/2022 9:08	11.36	105.67	6/23/2022 10:25	8.62
6/23/2022 9:22	11.74	243.64	6/24/2022 11:06	11.53	-0.41	6/23/2022 9:09	11.37	105.59	6/23/2022 10:26	8.63
6/23/2022 9:23	11.73	243.62	6/24/2022 11:07	11.55	-0.51	6/23/2022 9:10	11.36	105.67	6/23/2022 10:27	8.57
6/23/2022 9:24	11.74	244.02	6/24/2022 11:08	11.54	-0.50	6/23/2022 9:11	11.35	105.76	6/23/2022 10:28	8.60
6/23/2022 9:25	11.74	243.65	6/24/2022 11:09	11.52	-0.36	6/23/2022 9:12	11.37	105.42	6/23/2022 10:29	8.63
6/23/2022 9:26	11.74	243.83	6/24/2022 11:10	11.52	-0.48	6/23/2022 9:13	11.39	105.39	6/23/2022 10:30	8.58
6/23/2022 9:27	11.73	243.91	6/24/2022 11:11	11.53	-0.45	6/23/2022 9:14	11.35	105.70	6/23/2022 10:31	8.59
6/23/2022 9:28	11.75	244.05	6/24/2022 11:12	11.54	-0.49	6/23/2022 9:15	11.36	105.53	6/23/2022 10:32	8.59
6/23/2022 9:29	11.74	244.14	6/24/2022 11:13	11.54	-0.48	6/23/2022 9:16	11.37	105.98	6/23/2022 10:33	8.58
6/23/2022 9:30	11.75	244.13	6/24/2022 11:14	11.54	-0.39	6/23/2022 9:17	11.33	106.10	6/23/2022 10:34	8.62
6/23/2022 9:31	11.75	244.03	6/24/2022 11:15	11.52	-0.34	6/23/2022 9:18	11.32	105.34	6/23/2022 10:35	8.61
6/23/2022 9:32	11.75	244.13	6/24/2022 11:16	11.54	-0.49	6/23/2022 9:19	11.39	106.99	6/23/2022 10:36	8.60
6/23/2022 9:33	11.73	244.05	6/24/2022 11:17	11.53	-0.38	6/23/2022 9:20	11.30	106.11	6/23/2022 10:37	8.64
6/23/2022 9:34	11.76	244.17	6/24/2022 11:18	11.55	-0.42	6/23/2022 9:21	11.37	106.15	6/23/2022 10:38	8.64
6/23/2022 9:35	11.71	244.09	6/24/2022 11:19	11.54	-0.34	6/23/2022 9:22	11.37	106.26	6/23/2022 10:39	8.64
6/23/2022 9:36	11.77	244.00	6/24/2022 11:20	11.53	-0.42	6/23/2022 9:23	11.35	106.32	6/23/2022 10:40	8.63
6/23/2022 9:37	11.74	243.83	6/24/2022 11:21	11.54	-0.46	6/23/2022 9:24	11.35	105.95	6/23/2022 10:41	8.62
6/23/2022 9:38	11.76	244.03	6/24/2022 11:22	11.53	-0.36	6/23/2022 9:25	11.32	106.36	6/23/2022 10:42	8.58
6/23/2022 9:39	11.77	244.08	6/24/2022 11:23	11.53	-0.43	6/23/2022 9:26	11.33	106.04	6/23/2022 10:43	8.61
6/23/2022 9:40	11.77	243.87	6/24/2022 11:24	11.54	-0.48	6/23/2022 9:27	11.38	106.58	6/23/2022 10:44	8.61
6/23/2022 9:41	11.74	243.87	6/24/2022 11:25	11.55	-0.38	6/23/2022 9:28	11.32	106.62	6/23/2022 10:45	8.62
6/23/2022 9:42	11.74	243.91	6/24/2022 11:26	11.52	-0.52	6/23/2022 9:29	11.37	106.49	6/23/2022 10:46	8.60
6/23/2022 9:43	11.76	243.85	6/24/2022 11:27	11.54	-0.49	6/23/2022 9:30	11.36	106.07	6/23/2022 10:47	8.62
6/23/2022 9:44	11.76	243.97	6/24/2022 11:28	11.52	-0.45	6/23/2022 9:31	11.38	105.98	6/23/2022 10:48	8.61
6/23/2022 9:45	11.76	243.93	6/24/2022 11:29	11.50	-0.41	6/23/2022 9:32	11.33	106.37	6/23/2022 10:49	8.49
6/23/2022 9:46	11.75	243.87	6/24/2022 11:30	11.53	-0.43	6/23/2022 9:33	11.38	106.06	6/23/2022 10:50	8.62
6/23/2022 9:47	11.76	244.07	6/24/2022 11:31	11.53	-0.49	6/23/2022 9:34	11.39	105.33	6/23/2022 10:51	8.61
6/23/2022 9:48	11.75	243.87	6/24/2022 11:32	11.54	-0.54	6/23/2022 9:35	11.38	106.39	6/23/2022 10:52	8.66
6/23/2022 9:49	11.75	243.98	6/24/2022 11:33	11.53	-0.26	6/23/2022 9:36	11.37	106.47	6/23/2022 10:53	8.60
6/23/2022 9:50	11.75	243.85	6/24/2022 11:34	11.54	-0.47	6/23/2022 9:37	11.37	105.90	6/23/2022 10:54	8.55
6/23/2022 9:51	11.74	244.09	6/24/2022 11:35	11.56	-0.49	6/23/2022 9:38	11.33	106.86	6/23/2022 10:55	8.56
6/23/2022 9:52	11.75	243.79	6/24/2022 11:36	11.53	-0.44	6/23/2022 9:39	11.34	106.47	6/23/2022 10:56	8.62
6/23/2022 9:53	11.77	244.03	6/24/2022 11:37	11.54	-0.42	6/23/2022 9:40	11.36	106.12	6/23/2022 10:57	8.58
6/23/2022 9:54	11.76	244.05	6/24/2022 11:38	11.53	-0.60	6/23/2022 9:41	11.30	106.09	6/23/2022 10:58	8.59
6/23/2022 9:55	11.78	244.13	6/24/2022 11:39	11.55	-0.48	6/23/2022 9:42	11.33	105.70	6/23/2022 10:59	8.57
6/23/2022 9:56	11.74	243.98	6/24/2022 11:40	11.52	-0.38	6/23/2022 9:43	11.36	105.97	6/23/2022 11:00	8.63
6/23/2022 9:57	11.75	243.87	6/24/2022 11:41	11.54	-0.35	6/23/2022 9:44	11.34	106.01	6/23/2022 11:01	8.59
6/23/2022 9:58	11.75	244.00	6/24/2022 11:42	11.55	-0.38	6/23/2022 9:45	11.35	106.51	6/23/2022 11:02	8.65
6/23/2022 9:59	11.75	243.84	6/24/2022 11:43	11.53	-0.39	6/23/2022 9:46	11.34	106.51	6/23/2022 11:03	8.60
6/23/2022 10:00	11.75	244.31	6/24/2022 11:44	11.55	-0.45	6/23/2022 9:47	11.37	106.02	6/23/2022 11:04	8.60
6/23/2022 10:01	11.75	243.91	6/24/2022 11:45	11.55	-0.48	6/23/2022 9:48	11.33	105.89	6/23/2022 11:05	8.67
6/23/2022 10:02	11.75	244.03	6/24/2022 11:46	11.54	-0.47	6/23/2022 9:49	11.31	106.05	6/23/2022 11:06	8.63
6/23/2022 10:03	11.76	243.83	6/24/2022 11:47	11.54	-0.47	6/23/2022 9:50	11.33	105.71	6/23/2022 11:07	8.56
6/23/2022 10:04	11.73	244.02	6/24/2022 11:48	11.54	-0.44	6/23/2022 9:51	11.38	105.27	6/23/2022 11:08	8.63
6/23/2022 10:05	11.73	243.99	6/24/2022 11:49	11.52	-0.58	6/23/2022 9:52	11.34	105.87	6/23/2022 11:09	8.65
6/23/2022 10:06	11.74	243.99	6/24/2022 11:50	11.53	-0.37	6/23/2022 9:53	11.31	105.94	6/23/2022 11:10	8.66
6/23/2022 10:07	11.75	243.64	6/24/2022 11:51	11.53	-0.38	6/23/2022 9:54	11.38	105.95	6/23/2022 11:11	8.60
6/23/2022 10:08	11.75	243.84	6/24/2022 11:52	11.53	-0.40	6/23/2022 9:55	11.36	105.34	6/23/2022 11:12	8.69
6/23/2022 10:09	11.76	243.97	6/24/2022 11:53	11.51	-0.40	6/23/2022 9:56	11.32	105.84	6/23/2022 11:13	8.59
6/23/2022 10:10	11.75	244.03	6/24/2022 11:54	11.52	-0.41	6/23/2022 9:57	11.33	106.33	6/23/2022 11:14	8.59
6/23/2022 10:11	11.75	243.81	6/24/2022 11:55	11.54	-0.34	6/23/2022 9:58	11.33	105.59	6/23/2022 11:15	8.68
6/23/2022 10:12	11.74	243.79	6/24/2022 11:56	11.54	-0.48	6/23/2022 9:59	11.36	105.76	6/23/2022 11:16	8.59
6/23/2022 10:13	11.73	243.90	6/24/2022 11:57	11.54	-0.44	6/23/2022 10:00	11.38	106.45	6/23/2022 11:17	8.65
6/23/2022 10:14	11.73	243.80	6/24/2022 11:58	11.54	-0.49	6/23/2022 10:01	11.33	105.67	6/23/2022 11:18	8.69

6/23/2022 10:15	11.73	243.86	6/24/2022 11:59	11.52	-0.58	6/23/2022 10:02	11.36	105.58	6/23/2022 11:19	8.65
6/23/2022 10:16	11.74	243.83	6/24/2022 12:00	11.53	-0.37	6/23/2022 10:03	11.33	105.27	6/23/2022 11:20	8.62
6/23/2022 10:17	11.76	243.68	6/24/2022 12:01	11.56	-0.38	6/23/2022 10:04	11.37	106.17	6/23/2022 11:21	8.63
6/23/2022 10:18	11.74	243.75	6/24/2022 12:02	11.52	-0.43	6/23/2022 10:05	11.39	105.93	6/23/2022 11:22	8.61
6/23/2022 10:19	11.73	243.75	6/24/2022 12:03	11.54	-0.38	6/23/2022 10:06	11.36	105.54	6/23/2022 11:23	8.68
6/23/2022 10:20	11.77	243.67	6/24/2022 12:04	11.54	-0.41	6/23/2022 10:07	11.38	105.84	6/23/2022 11:24	8.70
6/23/2022 10:21	11.73	243.64	6/24/2022 12:05	11.54	-0.52	6/23/2022 10:08	11.34	105.83	6/23/2022 11:25	8.62
6/23/2022 10:22	11.76	243.87	6/24/2022 12:06	11.52	-0.37	6/23/2022 10:09	11.36	105.98	6/23/2022 11:26	8.62
6/23/2022 10:23	11.76	243.85	6/24/2022 12:07	11.54	-0.46	6/23/2022 10:10	11.36	105.88	6/23/2022 11:27	8.64
6/23/2022 10:24	11.74	243.82	6/24/2022 12:08	11.54	-0.40	6/23/2022 10:11	11.35	105.21	6/23/2022 11:28	8.63
6/23/2022 10:25	11.76	243.80	6/24/2022 12:09	11.54	-0.43	6/23/2022 10:12	11.34	105.55	6/23/2022 11:29	8.66
6/23/2022 10:26	11.76	243.76	6/24/2022 12:10	11.51	-0.45	6/23/2022 10:13	11.35	105.96	6/23/2022 11:30	8.64
6/23/2022 10:27	11.74	243.88	6/24/2022 12:11	11.53	-0.46	6/23/2022 10:14	11.36	105.78	6/23/2022 11:31	8.64
6/23/2022 10:28	11.76	243.80	6/24/2022 12:12	11.55	-0.51	6/23/2022 10:15	11.32	105.55	6/23/2022 11:32	8.60
6/23/2022 10:29	11.75	243.62	6/24/2022 12:13	11.55	-0.51	6/23/2022 10:16	11.32	105.68	6/23/2022 11:33	8.62
6/23/2022 10:30	11.74	243.73	6/24/2022 12:14	11.54	-0.52	6/23/2022 10:17	11.35	105.97	6/23/2022 11:34	8.62
6/23/2022 10:31	11.75	243.81	6/24/2022 12:15	11.54	-0.47	6/23/2022 10:18	11.33	105.67	6/23/2022 11:35	8.64
6/23/2022 10:32	11.71	243.62	6/24/2022 12:16	11.55	-0.39	6/23/2022 10:19	11.33	106.42	6/23/2022 11:36	8.67
6/23/2022 10:33	11.73	243.72	6/24/2022 12:17	11.52	-0.47	6/23/2022 10:20	11.33	106.07	6/23/2022 11:37	8.58
6/23/2022 10:34	11.75	243.65	6/24/2022 12:18	11.55	-0.38	6/23/2022 10:21	11.34	106.02	6/23/2022 11:38	8.66
6/23/2022 10:35	11.76	243.62	6/24/2022 12:19	11.53	-0.50	6/23/2022 10:22	11.38	106.44	6/23/2022 11:39	8.65
6/23/2022 10:36	11.77	243.72	6/24/2022 12:20	11.52	-0.52	6/23/2022 10:23	11.36	105.44	6/23/2022 11:40	8.67
6/23/2022 10:37	11.76	243.70	6/24/2022 12:21	11.53	-0.48	6/23/2022 10:24	11.34	105.47	6/23/2022 11:41	8.65
6/23/2022 10:38	11.75	243.62	6/24/2022 12:22	11.52	-0.41	6/23/2022 10:25	11.35	105.55	6/23/2022 11:42	8.63
6/23/2022 10:39	11.75	243.68	6/24/2022 12:23	11.54	-0.41	6/23/2022 10:26	11.34	106.67	6/23/2022 11:43	8.62
6/23/2022 10:40	11.77	243.79	6/24/2022 12:24	11.54	-0.50	6/23/2022 10:27	11.36	105.92	6/23/2022 11:44	8.63
6/23/2022 10:41	11.75	243.52	6/24/2022 12:25	11.53	-0.35	6/23/2022 10:28	11.38	105.03	6/23/2022 11:45	8.68
6/23/2022 10:42	11.73	243.81	6/24/2022 12:26	11.54	-0.43	6/23/2022 10:29	11.37	104.57	6/23/2022 11:46	8.71
6/23/2022 10:43	11.75	243.76	6/24/2022 12:27	11.53	-0.48	6/23/2022 10:30	11.33	105.84	6/23/2022 11:47	8.60
6/23/2022 10:44	11.73	243.43	6/24/2022 12:28	11.54	-0.46	6/23/2022 10:31	11.34	105.97	6/23/2022 11:48	8.65
6/23/2022 10:45	11.74	243.73	6/24/2022 12:29	11.56	-0.47	6/23/2022 10:32	11.31	105.70	6/23/2022 11:49	8.61
6/23/2022 10:46	11.76	243.43	6/24/2022 12:30	11.55	-0.38	6/23/2022 10:33	11.33	105.47	6/23/2022 11:50	8.64
6/23/2022 10:47	11.75	243.59	6/24/2022 12:31	11.54	-0.49	6/23/2022 10:34	11.36	106.10	6/23/2022 11:51	8.66
6/23/2022 10:48	11.72	243.61	6/24/2022 12:32	11.56	-0.43	6/23/2022 10:35	11.34	106.11	6/23/2022 11:52	8.60
6/23/2022 10:49	11.71	243.72	6/24/2022 12:33	11.52	-0.44	6/23/2022 10:36	11.34	106.63	6/23/2022 11:53	8.64
6/23/2022 10:50	11.74	243.50	6/24/2022 12:34	11.52	-0.51	6/23/2022 10:37	11.36	106.27	6/23/2022 11:54	8.64
6/23/2022 10:51	11.74	243.64	6/24/2022 12:35	11.55	-0.50	6/23/2022 10:38	11.34	105.42	6/23/2022 11:55	8.65
6/23/2022 10:52	11.73	243.48	6/24/2022 12:36	11.53	-0.44	6/23/2022 10:39	11.36	105.99	6/23/2022 11:56	8.63
6/23/2022 10:53	11.77	243.64	6/24/2022 12:37	11.55	-0.47	6/23/2022 10:40	11.31	106.57	6/23/2022 11:57	8.65
6/23/2022 10:54	11.76	243.41	6/24/2022 12:38	11.52	-0.40	6/23/2022 10:41	11.36	104.79	6/23/2022 11:58	8.66
6/23/2022 10:55	11.77	243.74	6/24/2022 12:39	11.53	-0.39	6/23/2022 10:42	11.36	104.75	6/23/2022 11:59	8.60
6/23/2022 10:56	11.74	243.68	6/24/2022 12:40	11.51	-0.45	6/23/2022 10:43	11.35	105.62	6/23/2022 12:00	8.67
6/23/2022 10:57	11.78	243.73	6/24/2022 12:41	11.54	-0.48	6/23/2022 10:44	11.36	105.36	6/23/2022 12:01	8.69
6/23/2022 10:58	11.74	243.60	6/24/2022 12:42	11.53	-0.39	6/23/2022 10:45	11.31	105.47	6/23/2022 12:02	8.63
6/23/2022 10:59	11.73	243.65	6/24/2022 12:43	11.56	-0.38	6/23/2022 10:46	11.35	105.77	6/23/2022 12:03	8.65
6/23/2022 11:00	11.75	243.79	6/24/2022 12:44	11.53	-0.37	6/23/2022 10:47	11.32	105.85	6/23/2022 12:04	8.61
6/23/2022 11:01	11.73	243.59	6/24/2022 12:45	11.54	-0.52	6/23/2022 10:48	11.37	106.61	6/23/2022 12:05	8.66
6/23/2022 11:02	11.76	243.58	6/24/2022 12:46	11.55	-0.42	6/23/2022 10:49	11.34	106.04	6/23/2022 12:06	8.65
6/23/2022 11:03	11.74	243.60	6/24/2022 12:47	11.55	-0.53	6/23/2022 10:50	11.38	106.62	6/23/2022 12:07	8.60
6/23/2022 11:04	11.73	243.74	6/24/2022 12:48	11.54	-0.43	6/23/2022 10:51	11.37	106.42	6/23/2022 12:08	8.64
6/23/2022 11:05	11.77	243.53	6/24/2022 12:49	11.51	-0.43	6/23/2022 10:52	11.38	105.86	6/23/2022 12:09	8.68
6/23/2022 11:06	11.76	243.60	6/24/2022 12:50	11.52	-0.52	6/23/2022 10:53	11.33	105.21	6/23/2022 12:10	8.59
6/23/2022 11:07	11.74	243.66	6/24/2022 12:51	11.54	-0.51	6/23/2022 10:54	11.34	105.65	6/23/2022 12:11	8.65
6/23/2022 11:08	11.76	243.65	6/24/2022 12:52	11.54	-0.37	6/23/2022 10:55	11.33	106.69	6/23/2022 12:12	8.65
6/23/2022 11:09	11.76	243.68	6/24/2022 12:53	11.52	-0.41	6/23/2022 10:56	11.37	105.70	6/23/2022 12:13	8.64
6/23/2022 11:10	11.76	243.81	6/24/2022 12:54	11.54	-0.41	6/23/2022 10:57	11.37	107.06	6/23/2022 12:14	8.63
6/23/2022 11:11	11.73	243.82	6/24/2022 12:55	11.52	-0.45	6/23/2022 10:58	11.34	105.72	6/23/2022 12:15	8.59
6/23/2022 11:12	11.76	243.69	6/24/2022 12:56	11.54	-0.38	6/23/2022 10:59	11.36	106.68	6/23/2022 12:16	8.67
6/23/2022 11:13	11.75	243.69	6/24/2022 12:57	11.55	-0.41	6/23/2022 11:00	11.36	105.86	6/23/2022 12:17	8.62
6/23/2022 11:14	11.74	243.62	6/24/2022 12:58	11.51	-0.44	6/23/2022 11:01	11.35	106.04	6/23/2022 12:18	8.62
6/23/2022 11:15	11.73	243.55	6/24/2022 12:59	11.55	-0.38	6/23/2022 11:02	11.32	106.60	6/23/2022 12:19	8.61
6/23/2022 11:16	11.75	243.53	6/24/2022 13:00	11.51	-0.44	6/23/2022 11:03	11.33	106.18	6/23/2022 12:20	8.56
6/23/2022 11:17	11.75	243.60	6/24/2022 13:01	11.52	-0.46	6/23/2022 11:04	11.33	105.48	6/23/2022 12:21	8.60
6/23/2022 11:18	11.77	243.65	6/24/2022 13:02	11.55	-0.47	6/23/2022 11:05	11.32	106.01	6/23/2022 12:22	8.59
6/23/2022 11:19	11.75	243.51	6/24/2022 13:03	11.51	-0.38	6/23/2022 11:06	11.37	106.26	6/23/2022 12:23	8.61
6/23/2022 11:20	11.73	243.53	6/24/2022 13:04	11.56	-0.43	6/23/2022 11:07	11.36	106.12	6/23/2022 12:24	8.59
6/23/2022 11:21	11.77	243.68	6/24/2022 13:05	11.51	-0.46	6/23/2022 11:08	11.33	106.15	6/23/2022 12:25	8.55
6/23/2022 11:22	11.75	243.57	6/24/2022 13:06	11.52	-0.50	6/23/2022 11:09	11.34	105.98	6/23/2022 12:26	8.51
6/23/2022 11:23	11.75	243.51	6/24/2022 13:07	11.57	-0.41	6/23/2022 11:10	11.32	106.01	6/23/2022 12:27	8.51
6/23/2022 11:24	11.76	243.80	6/24/2022 13:08	11.53	-0.47	6/23/2022 11:11	11.33	105.81	6/23/2022 12:28	8.47
6/23/2022 11:25	11.72	243.60	6/24/2022 13:09	11.51	-0.48	6/23/2022 11:12	11.29	106.45	6/23/2022 12:29	8.42
6/23/2022 11:26	11.76	243.80	6/24/2022 13:10	11.53	-0.48	6/23/2022 11:13	11.34	106.17	6/23/2022 12:30	8.46
6/23/2022 11:27	11.73	243.43	6/24/2022 13:11	11.54	-0.52	6/23/2022 11:14	11.35	105.48	6/23/2022 12:31	8.47
6/23/2022 11:28	11.74	243.43	6/24/2022 13:12	11.51	-0.37	6/23/2022 11:15	11.37	106.31	6/23/2022 12:32	8.53
6/23/2022 11:29	11.75	243.59	6/24/2022 13:13	11.53	-0.48	6/23/2022 11:16	11.33	105.84	6/23/2022 12:33	8.46
6/23/2022 11:30	11.75	243.64	6/24/2022 13:14	11.54	-0.48	6/23/2022 11:17	11.35	106.93	6/23/2022 12:34	8.52
6/23/2022 11:31	11.73	243.66	6/24/2022 13:15	11.53	-0.44	6/23/2022 11:18	11.32	106.76	6/23/2022 12:35	8.47
6/23/2022 11:32	11.74	243.49	6/24/2022 13:16	11.53	-0.49	6/23/2022 11:19	11.33	106.09	6/23/2022 12:36	8.47
6/23/2022 11:33	11.75	243.59	6/24/2022 13:17	11.55	-0.40	6/23/2022 11:20	11.34	105.48	6/23/2022 12:37	8.49
6/23/2022 11:34	11.75	243.41	6/24/2022 13:18	11.54	-0.39	6/23/2022 11:21	11.35	106.63	6/23/2022 12:38	8.41
6/23/2022 11:35	11.76	243.50	6/24/2022 13:19	11.51	-0.50	6/23/2022 11:22	11.37	106.08	6/23/2022 12:39	8.48
6/23/2022 11:36	11.78	243.51	6/24/2022 13:20	11.53	-0.53	6/23/2022 11:23	11.34	106.54	6/23/2022 12:40	8.45
6/23/2022 11:37	11.75	243.27	6/24/2022 13:21	11.53	-0.46	6/23/2022 11:24	11.34	106.03	6/23/2022 12:41	8.41
6/23/2022 11:38	11.77	243.61	6/24/2022 13:22	11.53	-0.46	6/23/2022 11:25	11.34	106.12	6/23/2022 12:42	8.42
6/23/2022 11:39	11.77	243.67	6/24/2022 13:23	11.53	-0.44	6/23/2022 11:26	11.35	105.83	6/23/2022 12:43	8.41
6/23/2022 11:40	11.76	243.43	6/24/2022 13:24	11.54	-0.51	6/23/2022 11:27	11.39	105.52	6/23/2022 12:44	8.42
6/23/2022 11:41	11.74	243.74	6/24/2022 13:25	11.53	-0.45	6/23/2022 11:28	11.36	106.33	6/23/2022 12:45	8.40
6/23/2022 11:42	11.74	243.54	6/24/2022 13:26	11.53	-0.41	6/23/2022 11:29	11.36	106.87	6/23/2022 12:46	8.38

6/23/2022 11:43	11.74	243.62	6/24/2022 13:27	11.55	-0.39	6/23/2022 11:30	11.33	106.50	6/23/2022 12:47	8.50
6/23/2022 11:44	11.76	243.64	6/24/2022 13:28	11.52	-0.44	6/23/2022 11:31	11.34	105.81	6/23/2022 12:48	8.42
6/23/2022 11:45	11.74	243.58	6/24/2022 13:29	11.53	-0.41	6/23/2022 11:32	11.34	105.47	6/23/2022 12:49	8.41
6/23/2022 11:46	11.74	243.60	6/24/2022 13:30	11.54	-0.46	6/23/2022 11:33	11.35	106.31	6/23/2022 12:50	8.40
6/23/2022 11:47	11.74	243.56	6/24/2022 13:31	11.53	-0.34	6/23/2022 11:34	11.36	105.02	6/23/2022 12:51	8.42
6/23/2022 11:48	11.77	243.38	6/24/2022 13:32	11.52	-0.37	6/23/2022 11:35	11.35	106.75	6/23/2022 12:52	8.41
6/23/2022 11:49	11.75	243.49	6/24/2022 13:33	11.52	-0.57	6/23/2022 11:36	11.36	106.23	6/23/2022 12:53	8.41
6/23/2022 11:50	11.75	243.56	6/24/2022 13:34	11.55	-0.41	6/23/2022 11:37	11.35	106.38	6/23/2022 12:54	8.43
6/23/2022 11:51	11.75	243.59	6/24/2022 13:35	11.50	-0.48	6/23/2022 11:38	11.37	105.94	6/23/2022 12:55	8.47
6/23/2022 11:52	11.75	243.46	6/24/2022 13:36	11.55	-0.49	6/23/2022 11:39	11.35	105.94	6/23/2022 12:56	8.48
6/23/2022 11:53	11.74	243.83	6/24/2022 13:37	11.53	-0.43	6/23/2022 11:40	11.33	106.38	6/23/2022 12:57	8.46
6/23/2022 11:54	11.76	243.73	6/24/2022 13:38	11.52	-0.36	6/23/2022 11:41	11.35	107.02	6/23/2022 12:58	8.48
6/23/2022 11:55	11.74	243.75	6/24/2022 13:39	11.51	-0.41	6/23/2022 11:42	11.35	106.81	6/23/2022 12:59	8.49
6/23/2022 11:56	11.77	243.28	6/24/2022 13:40	11.55	-0.43	6/23/2022 11:43	11.35	106.34	6/23/2022 13:00	8.54
6/23/2022 11:57	11.72	243.69	6/24/2022 13:41	11.55	-0.41	6/23/2022 11:44	11.34	106.52	6/23/2022 13:01	8.60
6/23/2022 11:58	11.75	243.61	6/24/2022 13:42	11.53	-0.47	6/23/2022 11:45	11.37	106.16	6/23/2022 13:02	8.53
6/23/2022 11:59	11.75	243.55	6/24/2022 13:43	11.53	-0.49	6/23/2022 11:46	11.35	107.13	6/23/2022 13:03	8.58
6/23/2022 12:00	11.76	243.28	6/24/2022 13:44	11.55	-0.52	6/23/2022 11:47	11.33	106.03	6/23/2022 13:04	8.63
6/23/2022 12:01	11.75	243.49	6/24/2022 13:45	11.53	-0.47	6/23/2022 11:48	11.36	105.97	6/23/2022 13:05	8.63
6/23/2022 12:02	11.77	243.63	6/24/2022 13:46	11.54	-0.49	6/23/2022 11:49	11.33	106.81	6/23/2022 13:06	8.65
6/23/2022 12:03	11.75	243.59	6/24/2022 13:47	11.54	-0.46	6/23/2022 11:50	11.32	106.26	6/23/2022 13:07	8.63
6/23/2022 12:04	11.74	243.53	6/24/2022 13:48	11.54	-0.56	6/23/2022 11:51	11.37	106.11	6/23/2022 13:08	8.64
6/23/2022 12:05	11.75	243.72	6/24/2022 13:49	11.53	-0.53	6/23/2022 11:52	11.38	105.73	6/23/2022 13:09	8.64
6/23/2022 12:06	11.76	243.50	6/24/2022 13:50	11.53	-0.50	6/23/2022 11:53	11.33	107.20	6/23/2022 13:10	8.62
6/23/2022 12:07	11.76	243.38	6/24/2022 13:51	11.54	-0.55	6/23/2022 11:54	11.33	106.12	6/23/2022 13:11	8.67
6/23/2022 12:08	11.73	243.55	6/24/2022 13:52	11.52	-0.38	6/23/2022 11:55	11.37	106.39	6/23/2022 13:12	8.73
6/23/2022 12:09	11.72	243.80	6/24/2022 13:53	11.55	-0.43	6/23/2022 11:56	11.34	106.77	6/23/2022 13:13	8.73
6/23/2022 12:10	11.75	243.70	6/24/2022 13:54	11.51	-0.38	6/23/2022 11:57	11.37	107.25	6/23/2022 13:14	8.74
6/23/2022 12:11	11.76	243.56	6/24/2022 13:55	11.54	-0.48	6/23/2022 11:58	11.34	106.42	6/23/2022 13:15	8.73
6/23/2022 12:12	11.76	243.70	6/24/2022 13:56	11.54	-0.46	6/23/2022 11:59	11.37	106.97	6/23/2022 13:16	8.79
6/23/2022 12:13	11.75	243.66	6/24/2022 13:57	11.52	-0.41	6/23/2022 12:00	11.37	105.39	6/23/2022 13:17	8.79
6/23/2022 12:14	11.78	243.71	6/24/2022 13:58	11.51	-0.47	6/23/2022 12:01	11.33	105.67	6/23/2022 13:18	8.77
6/23/2022 12:15	11.75	243.41	6/24/2022 13:59	11.53	-0.42	6/23/2022 12:02	11.34	106.20	6/23/2022 13:19	8.74
6/23/2022 12:16	11.77	243.67	6/24/2022 14:00	11.54	-0.42	6/23/2022 12:03	11.36	105.31	6/23/2022 13:20	8.77
6/23/2022 12:17	11.74	243.51	6/24/2022 14:01	11.56	-0.40	6/23/2022 12:04	11.35	105.90	6/23/2022 13:21	8.82
6/23/2022 12:18	11.76	243.74	6/24/2022 14:02	11.53	-0.50	6/23/2022 12:05	11.35	106.17	6/23/2022 13:22	8.81
6/23/2022 12:19	11.75	243.43	6/24/2022 14:03	11.54	-0.51	6/23/2022 12:06	11.33	106.56	6/23/2022 13:23	8.80
6/23/2022 12:20	11.74	243.45	6/24/2022 14:04	11.53	-0.33	6/23/2022 12:07	11.34	105.66	6/23/2022 13:24	8.82
6/23/2022 12:21	11.75	243.30	6/24/2022 14:05	11.54	-0.44	6/23/2022 12:08	11.36	106.52	6/23/2022 13:25	8.83
6/23/2022 12:22	11.74	243.58	6/24/2022 14:06	11.53	-0.50	6/23/2022 12:09	11.36	107.05	6/23/2022 13:26	8.79
6/23/2022 12:23	11.74	243.49	6/24/2022 14:07	11.55	-0.47	6/23/2022 12:10	11.35	105.83	6/23/2022 13:27	8.82
6/23/2022 12:24	11.75	243.51	6/24/2022 14:08	11.52	-0.47	6/23/2022 12:11	11.33	106.08	6/23/2022 13:28	8.78
6/23/2022 12:25	11.75	243.63	6/24/2022 14:09	11.54	-0.51	6/23/2022 12:12	11.36	106.09	6/23/2022 13:29	8.79
6/23/2022 12:26	11.77	243.67	6/24/2022 14:10	11.55	-0.47	6/23/2022 12:13	11.34	106.02	6/23/2022 13:30	8.85
6/23/2022 12:27	11.78	243.79	6/24/2022 14:11	11.53	-0.43	6/23/2022 12:14	11.33	106.74	6/23/2022 13:31	8.81
6/23/2022 12:28	11.74	243.45	6/24/2022 14:12	11.53	-0.43	6/23/2022 12:15	11.36	106.36	6/23/2022 13:32	8.82
6/23/2022 12:29	11.73	243.54	6/24/2022 14:13	11.53	-0.40	6/23/2022 12:16	11.34	105.89	6/23/2022 13:33	8.83
6/23/2022 12:30	11.78	243.42	6/24/2022 14:14	11.51	-0.40	6/23/2022 12:17	11.36	107.13	6/23/2022 13:34	8.88
6/23/2022 12:31	11.75	243.65	6/24/2022 14:15	11.53	-0.41	6/23/2022 12:18	11.36	106.80	6/23/2022 13:35	8.92
6/23/2022 12:32	11.77	243.45	6/24/2022 14:16	11.55	-0.36	6/23/2022 12:19	11.32	106.63	6/23/2022 13:36	8.89
6/23/2022 12:33	11.74	243.67	6/24/2022 14:17	11.54	-0.42	6/23/2022 12:20	11.38	106.51	6/23/2022 13:37	8.89
6/23/2022 12:34	11.75	243.74	6/24/2022 14:18	11.54	-0.48	6/23/2022 12:21	11.36	106.64	6/23/2022 13:38	8.90
6/23/2022 12:35	11.74	243.76	6/24/2022 14:19	11.55	-0.50	6/23/2022 12:22	11.33	106.00	6/23/2022 13:39	8.84
6/23/2022 12:36	11.76	243.57	6/24/2022 14:20	11.55	-0.54	6/23/2022 12:23	11.36	105.78	6/23/2022 13:40	8.90
6/23/2022 12:37	11.77	243.63	6/24/2022 14:21	11.55	-0.56	6/23/2022 12:24	11.35	106.62	6/23/2022 13:41	8.88
6/23/2022 12:38	11.75	243.65	6/24/2022 14:22	11.53	-0.47	6/23/2022 12:25	11.37	106.75	6/23/2022 13:42	8.82
6/23/2022 12:39	11.74	243.61	6/24/2022 14:23	11.55	-0.49	6/23/2022 12:26	11.35	106.74	6/23/2022 13:43	8.88
6/23/2022 12:40	11.77	243.55	6/24/2022 14:24	11.55	-0.45	6/23/2022 12:27	11.35	106.59	6/23/2022 13:44	8.86
6/23/2022 12:41	11.72	243.63	6/24/2022 14:25	11.53	-0.37	6/23/2022 12:28	11.34	106.22	6/23/2022 13:45	8.90
6/23/2022 12:42	11.74	243.68	6/24/2022 14:26	11.53	-0.48	6/23/2022 12:29	11.36	105.41	6/23/2022 13:46	8.90
6/23/2022 12:43	11.76	243.69	6/24/2022 14:27	11.53	-0.47	6/23/2022 12:30	11.32	106.44	6/23/2022 13:47	8.89
6/23/2022 12:44	11.74	243.53	6/24/2022 14:28	11.53	-0.39	6/23/2022 12:31	11.37	106.32	6/23/2022 13:48	8.87
6/23/2022 12:45	11.78	243.54	6/24/2022 14:29	11.54	-0.45	6/23/2022 12:32	11.34	106.39	6/23/2022 13:49	8.93
6/23/2022 12:46	11.75	243.57	6/24/2022 14:30	11.50	-0.45	6/23/2022 12:33	11.37	106.35	6/23/2022 13:50	8.93
6/23/2022 12:47	11.74	243.66	6/24/2022 14:31	11.55	-0.47	6/23/2022 12:34	11.31	105.66	6/23/2022 13:51	8.92
6/23/2022 12:48	11.75	243.58	6/24/2022 14:32	11.54	-0.48	6/23/2022 12:35	11.34	106.53	6/23/2022 13:52	8.89
6/23/2022 12:49	11.75	243.59	6/24/2022 14:33	11.57	-0.45	6/23/2022 12:36	11.36	106.97	6/23/2022 13:53	8.94
6/23/2022 12:50	11.75	243.63	6/24/2022 14:34	11.53	-0.37	6/23/2022 12:37	11.34	106.55	6/23/2022 13:54	8.98
6/23/2022 12:51	11.75	243.65	6/24/2022 14:35	11.54	-0.41	6/23/2022 12:38	11.35	106.79	6/23/2022 13:55	8.92
6/23/2022 12:52	11.75	243.43	6/24/2022 14:36	11.54	-0.43	6/23/2022 12:39	11.36	106.18	6/23/2022 13:56	8.93
6/23/2022 12:53	11.77	243.68	6/24/2022 14:37	11.53	-0.48	6/23/2022 12:40	11.35	106.11	6/23/2022 13:57	8.93
6/23/2022 12:54	11.77	243.76	6/24/2022 14:38	11.52	-0.48	6/23/2022 12:41	11.32	105.82	6/23/2022 13:58	8.93
6/23/2022 12:55	11.74	243.75	6/24/2022 14:39	11.53	-0.42	6/23/2022 12:42	11.36	106.22	6/23/2022 13:59	8.94
6/23/2022 12:56	11.77	243.68	6/24/2022 14:40	11.55	-0.46	6/23/2022 12:43	11.34	106.89	6/23/2022 14:00	8.94
6/23/2022 12:57	11.80	243.75	6/24/2022 14:41	11.57	-0.47	6/23/2022 12:44	11.37	106.59	6/23/2022 14:01	8.99
6/23/2022 12:58	11.74	243.43	6/24/2022 14:42	11.53	-0.46	6/23/2022 12:45	11.34	106.35	6/23/2022 14:02	8.90
6/23/2022 12:59	11.76	243.65	6/24/2022 14:43	11.56	-0.50	6/23/2022 12:46	11.34	106.90	6/23/2022 14:03	8.95
6/23/2022 13:00	11.76	243.55	6/24/2022 14:44	11.56	-0.43	6/23/2022 12:47	11.37	106.61	6/23/2022 14:04	8.92
6/23/2022 13:01	11.72	243.88	6/24/2022 14:45	11.53	-0.42	6/23/2022 12:48	11.35	106.71	6/23/2022 14:05	8.95
6/23/2022 13:02	11.77	243.57	6/24/2022 14:46	11.55	-0.46	6/23/2022 12:49	11.37	106.96	6/23/2022 14:06	8.97
6/23/2022 13:03	11.79	243.82	6/24/2022 14:47	11.53	-0.46	6/23/2022 12:50	11.34	106.07	6/23/2022 14:07	9.03
6/23/2022 13:04	11.76	243.59	6/24/2022 14:48	11.55	-0.42	6/23/2022 12:51	11.37	106.40	6/23/2022 14:08	8.95
6/23/2022 13:05	11.75	243.64	6/24/2022 14:49	11.54	-0.49	6/23/2022 12:52	11.33	106.50	6/23/2022 14:09	8.99
6/23/2022 13:06	11.75	243.62	6/24/2022 14:50	11.53	-0.45	6/23/2022 12:53	11.39	106.94	6/23/2022 14:10	8.94
6/23/2022 13:07	11.77	243.74	6/24/2022 14:51	11.57	-0.44	6/23/2022 12:54	11.35	105.79	6/23/2022 14:11	9.04
6/23/2022 13:08	11.77	243.78	6/24/2022 14:52	11.52	-0.37	6/23/2022 12:55	11.33	107.13	6/23/2022 14:12	8.94
6/23/2022 13:09	11.76	243.61	6/24/2022 14:53	11.54	-0.39	6/23/2022 12:56	11.34	107.34	6/23/2022 14:13	8.99
6/23/2022 13:10	11.73	243.73	6/24/2022 14:54	11.54	-0.45	6/23/2022 12:57	11.36	106.59	6/23/2022 14:14	8.99

6/23/2022 13:11	11.77	243.85	6/24/2022 14:55	11.54	-0.40	6/23/2022 12:58	11.31	106.47	6/23/2022 14:15	8.99
6/23/2022 13:12	11.74	243.59	6/24/2022 14:56	11.52	-0.40	6/23/2022 12:59	11.35	106.69	6/23/2022 14:16	9.01
6/23/2022 13:13	11.74	243.79	6/24/2022 14:57	11.54	-0.42	6/23/2022 13:00	11.31	105.88	6/23/2022 14:17	8.96
6/23/2022 13:14	11.74	243.64	6/24/2022 14:58	11.54	-0.39	6/23/2022 13:01	11.34	106.79	6/23/2022 14:18	9.03
6/23/2022 13:15	11.77	243.45	6/24/2022 14:59	11.53	-0.50	6/23/2022 13:02	11.35	105.99	6/23/2022 14:19	9.03
6/23/2022 13:16	11.75	243.63	6/24/2022 15:00	11.55	-0.44	6/23/2022 13:03	11.34	106.04	6/23/2022 14:20	8.95
6/23/2022 13:17	11.75	243.67	6/24/2022 15:01	11.56	-0.43	6/23/2022 13:04	11.37	106.77	6/23/2022 14:21	9.03
6/23/2022 13:18	11.74	243.63	6/24/2022 15:02	11.51	-0.43	6/23/2022 13:05	11.34	107.24	6/23/2022 14:22	9.04
6/23/2022 13:19	11.75	243.72	6/24/2022 15:03	11.53	-0.46	6/23/2022 13:06	11.35	106.42	6/23/2022 14:23	9.01
6/23/2022 13:20	11.75	243.78	6/24/2022 15:04	11.53	-0.47	6/23/2022 13:07	11.33	107.13	6/23/2022 14:24	9.00
6/23/2022 13:21	11.74	243.68	6/24/2022 15:05	11.53	-0.43	6/23/2022 13:08	11.33	105.65	6/23/2022 14:25	9.05
6/23/2022 13:22	11.77	243.70	6/24/2022 15:06	11.53	-0.54	6/23/2022 13:09	11.35	106.15	6/23/2022 14:26	9.04
6/23/2022 13:23	11.74	243.80	6/24/2022 15:07	11.53	-0.41	6/23/2022 13:10	11.34	106.45	6/23/2022 14:27	9.03
6/23/2022 13:24	11.76	243.62	6/24/2022 15:08	11.54	-0.51	6/23/2022 13:11	11.33	107.22	6/23/2022 14:28	9.04
6/23/2022 13:25	11.75	243.87	6/24/2022 15:09	11.53	-0.43	6/23/2022 13:12	11.31	106.58	6/23/2022 14:29	9.05
6/23/2022 13:26	11.75	243.93	6/24/2022 15:10	11.53	-0.49	6/23/2022 13:13	11.37	106.93	6/23/2022 14:30	9.01
6/23/2022 13:27	11.76	243.68	6/24/2022 15:11	11.54	-0.48	6/23/2022 13:14	11.34	106.72	6/23/2022 14:31	8.98
6/23/2022 13:28	11.77	243.76	6/24/2022 15:12	11.53	-0.50	6/23/2022 13:15	11.34	106.91	6/23/2022 14:32	9.00
6/23/2022 13:29	11.77	243.75	6/24/2022 15:13	11.53	-0.48	6/23/2022 13:16	11.35	106.25	6/23/2022 14:33	9.02
6/23/2022 13:30	11.77	243.84	6/24/2022 15:14	11.54	-0.43	6/23/2022 13:17	11.34	105.88	6/23/2022 14:34	9.01
6/23/2022 13:31	11.78	243.78	6/24/2022 15:15	11.53	-0.40	6/23/2022 13:18	11.32	106.41	6/23/2022 14:35	8.99
6/23/2022 13:32	11.74	243.66	6/24/2022 15:16	11.55	-0.41	6/23/2022 13:19	11.33	106.91	6/23/2022 14:36	8.99
6/23/2022 13:33	11.77	243.65	6/24/2022 15:17	11.54	-0.49	6/23/2022 13:20	11.34	107.09	6/23/2022 14:37	8.97
6/23/2022 13:34	11.75	243.92	6/24/2022 15:18	11.52	-0.44	6/23/2022 13:21	11.33	107.07	6/23/2022 14:38	8.96
6/23/2022 13:35	11.74	243.88	6/24/2022 15:19	11.55	-0.45	6/23/2022 13:22	11.32	107.48	6/23/2022 14:39	9.02
6/23/2022 13:36	11.76	243.87	6/24/2022 15:20	11.52	-0.44	6/23/2022 13:23	11.36	107.32	6/23/2022 14:40	9.03
6/23/2022 13:37	11.73	243.74	6/24/2022 15:21	11.51	-0.45	6/23/2022 13:24	11.35	106.39	6/23/2022 14:41	8.96
6/23/2022 13:38	11.79	243.64	6/24/2022 15:22	11.52	-0.45	6/23/2022 13:25	11.36	106.93	6/23/2022 14:42	9.02
6/23/2022 13:39	11.74	243.91	6/24/2022 15:23	11.56	-0.51	6/23/2022 13:26	11.35	106.38	6/23/2022 14:43	8.92
6/23/2022 13:40	11.73	243.81	6/24/2022 15:24	11.56	-0.44	6/23/2022 13:27	11.36	107.59	6/23/2022 14:44	8.96
6/23/2022 13:41	11.77	243.62	6/24/2022 15:25	11.54	-0.49	6/23/2022 13:28	11.35	106.17	6/23/2022 14:45	8.97
6/23/2022 13:42	11.75	243.71	6/24/2022 15:26	11.54	-0.47	6/23/2022 13:29	11.35	107.11	6/23/2022 14:46	8.99
6/23/2022 13:43	11.75	243.76	6/24/2022 15:27	11.53	-0.44	6/23/2022 13:30	11.35	107.29	6/23/2022 14:47	8.96
6/23/2022 13:44	11.74	243.72	6/24/2022 15:28	11.53	-0.51	6/23/2022 13:31	11.33	106.51	6/23/2022 14:48	9.00
6/23/2022 13:45	11.75	243.80	6/24/2022 15:29	11.53	-0.46	6/23/2022 13:32	11.34	106.65	6/23/2022 14:49	8.96
6/23/2022 13:46	11.74	243.78	6/24/2022 15:30	11.52	-0.37	6/23/2022 13:33	11.34	106.54	6/23/2022 14:50	8.98
6/23/2022 13:47	11.76	243.83	6/24/2022 15:31	11.51	-0.43	6/23/2022 13:34	11.39	106.67	6/23/2022 14:51	8.93
6/23/2022 13:48	11.77	243.80	6/24/2022 15:32	11.55	-0.52	6/23/2022 13:35	11.34	106.41	6/23/2022 14:52	8.95
6/23/2022 13:49	11.75	243.80	6/24/2022 15:33	11.53	-0.41	6/23/2022 13:36	11.35	106.22	6/23/2022 14:53	8.93
6/23/2022 13:50	11.75	243.81	6/24/2022 15:34	11.53	-0.40	6/23/2022 13:37	11.35	107.41	6/23/2022 14:54	8.96
6/23/2022 13:51	11.76	244.00	6/24/2022 15:35	11.55	-0.49	6/23/2022 13:38	11.35	106.30	6/23/2022 14:55	9.00
6/23/2022 13:52	11.76	243.90	6/24/2022 15:36	11.53	-0.38	6/23/2022 13:39	11.33	107.32	6/23/2022 14:56	8.99
6/23/2022 13:53	11.76	243.59	6/24/2022 15:37	11.54	-0.46	6/23/2022 13:40	11.35	106.79	6/23/2022 14:57	8.95
6/23/2022 13:54	11.77	243.77	6/24/2022 15:38	11.52	-0.51	6/23/2022 13:41	11.35	106.38	6/23/2022 14:58	8.96
6/23/2022 13:55	11.76	244.06	6/24/2022 15:39	11.56	-0.36	6/23/2022 13:42	11.36	107.22	6/23/2022 14:59	8.94
6/23/2022 13:56	11.75	243.91	6/24/2022 15:40	11.52	-0.47	6/23/2022 13:43	11.35	106.11	6/23/2022 15:00	8.94
6/23/2022 13:57	11.77	243.90	6/24/2022 15:41	11.53	-0.37	6/23/2022 13:44	11.35	107.11	6/23/2022 15:01	8.98
6/23/2022 13:58	11.76	243.82	6/24/2022 15:42	11.56	-0.48	6/23/2022 13:45	11.35	106.91	6/23/2022 15:02	8.96
6/23/2022 13:59	11.75	243.87	6/24/2022 15:43	11.55	-0.48	6/23/2022 13:46	11.32	106.55	6/23/2022 15:03	9.01
6/23/2022 14:00	11.75	244.07	6/24/2022 15:44	11.53	-0.40	6/23/2022 13:47	11.35	106.94	6/23/2022 15:04	8.98
6/23/2022 14:01	11.76	244.00	6/24/2022 15:45	11.56	-0.50	6/23/2022 13:48	11.33	107.56	6/23/2022 15:05	8.99
6/23/2022 14:02	11.76	244.00	6/24/2022 15:46	11.53	-0.45	6/23/2022 13:49	11.36	106.75	6/23/2022 15:06	8.93
6/23/2022 14:03	11.78	244.14	6/24/2022 15:47	11.54	-0.44	6/23/2022 13:50	11.36	106.41	6/23/2022 15:07	8.92
6/23/2022 14:04	11.74	243.79	6/24/2022 15:48	11.56	-0.38	6/23/2022 13:51	11.35	106.71	6/23/2022 15:08	8.94
6/23/2022 14:05	11.72	243.81	6/24/2022 15:49	11.53	-0.44	6/23/2022 13:52	11.36	106.37	6/23/2022 15:09	8.96
6/23/2022 14:06	11.75	243.87	6/24/2022 15:50	11.54	-0.46	6/23/2022 13:53	11.34	107.95	6/23/2022 15:10	8.94
6/23/2022 14:07	11.72	243.59	6/24/2022 15:51	11.53	-0.41	6/23/2022 13:54	11.34	106.32	6/23/2022 15:11	9.00
6/23/2022 14:08	11.73	243.80	6/24/2022 15:52	11.52	-0.46	6/23/2022 13:55	11.35	106.40	6/23/2022 15:12	8.94
6/23/2022 14:09	11.75	244.05	6/24/2022 15:53	11.54	-0.48	6/23/2022 13:56	11.34	106.89	6/23/2022 15:13	8.96
6/23/2022 14:10	11.77	243.98	6/24/2022 15:54	11.54	-0.45	6/23/2022 13:57	11.36	107.25	6/23/2022 15:14	8.92
6/23/2022 14:11	11.76	243.96	6/24/2022 15:55	11.54	-0.47	6/23/2022 13:58	11.35	106.17	6/23/2022 15:15	8.96
6/23/2022 14:12	11.72	243.98	6/24/2022 15:56	11.55	-0.38	6/23/2022 13:59	11.35	107.24	6/23/2022 15:16	8.92
6/23/2022 14:13	11.74	244.04	6/24/2022 15:57	11.51	-0.34	6/23/2022 14:00	11.36	106.74	6/23/2022 15:17	8.99
6/23/2022 14:14	11.76	243.85	6/24/2022 15:58	11.52	-0.39	6/23/2022 14:01	11.33	106.85	6/23/2022 15:18	8.98
6/23/2022 14:15	11.75	244.06	6/24/2022 15:59	11.52	-0.43	6/23/2022 14:02	11.33	106.68	6/23/2022 15:19	8.99
6/23/2022 14:16	11.75	244.09	6/24/2022 16:00	11.54	-0.46	6/23/2022 14:03	11.38	106.55	6/23/2022 15:20	8.96
6/23/2022 14:17	11.77	243.97	6/24/2022 16:01	11.55	-0.45	6/23/2022 14:04	11.33	107.36	6/23/2022 15:21	8.98
6/23/2022 14:18	11.74	243.91	6/24/2022 16:02	11.53	-0.44	6/23/2022 14:05	11.33	107.29	6/23/2022 15:22	8.93
6/23/2022 14:19	11.74	243.98	6/24/2022 16:03	11.54	-0.42	6/23/2022 14:06	11.35	107.56	6/23/2022 15:23	8.95
6/23/2022 14:20	11.75	243.97	6/24/2022 16:04	11.52	-0.49	6/23/2022 14:07	11.34	107.13	6/23/2022 15:24	8.94
6/23/2022 14:21	11.75	244.16	6/24/2022 16:05	11.52	-0.48	6/23/2022 14:08	11.35	107.19	6/23/2022 15:25	8.96
6/23/2022 14:22	11.75	244.01	6/24/2022 16:06	11.54	-0.34	6/23/2022 14:09	11.37	107.32	6/23/2022 15:26	8.92
6/23/2022 14:23	11.76	243.99	6/24/2022 16:07	11.52	-0.41	6/23/2022 14:10	11.34	106.57	6/23/2022 15:27	8.96
6/23/2022 14:24	11.77	243.90	6/24/2022 16:08	11.54	-0.42	6/23/2022 14:11	11.34	107.30	6/23/2022 15:28	8.90
6/23/2022 14:25	11.76	243.93	6/24/2022 16:09	11.52	-0.42	6/23/2022 14:12	11.35	106.41	6/23/2022 15:29	8.95
6/23/2022 14:26	11.75	243.74	6/24/2022 16:10	11.55	-0.45	6/23/2022 14:13	11.38	107.15	6/23/2022 15:30	8.89
6/23/2022 14:27	11.76	244.10	6/24/2022 16:11	11.52	-0.56	6/23/2022 14:14	11.35	106.44	6/23/2022 15:31	8.92
6/23/2022 14:28	11.77	244.28	6/24/2022 16:12	11.52	-0.56	6/23/2022 14:15	11.35	105.79	6/23/2022 15:32	8.91
6/23/2022 14:29	11.75	244.05	6/24/2022 16:13	11.53	-0.43	6/23/2022 14:16	11.36	107.02	6/23/2022 15:33	8.96
6/23/2022 14:30	11.77	244.04	6/24/2022 16:14	11.54	-0.47	6/23/2022 14:17	11.36	106.84	6/23/2022 15:34	8.99
6/23/2022 14:31	11.76	243.88	6/24/2022 16:15	11.54	-0.41	6/23/2022 14:18	11.33	106.71	6/23/2022 15:35	8.92
6/23/2022 14:32	11.74	244.00	6/24/2022 16:16	11.54	-0.45	6/23/2022 14:19	11.34	107.20	6/23/2022 15:36	8.94
6/23/2022 14:33	11.79	243.91	6/24/2022 16:17	11.51	-0.49	6/23/2022 14:20	11.36	106.65	6/23/2022 15:37	8.96
6/23/2022 14:34	11.77	244.06	6/24/2022 16:18	11.54	-0.46	6/23/2022 14:21	11.33	107.44	6/23/2022 15:38	8.97
6/23/2022 14:35	11.73	244.03	6/24/2022 16:19	11.55	-0.41	6/23/2022 14:22	11.33	106.56	6/23/2022 15:39	8.91
6/23/2022 14:36	11.74	244.03	6/24/2022 16:20	11.54	-0.56	6/23/2022 14:23	11.34	106.00	6/23/2022 15:40	8.97
6/23/2022 14:37	11.74	244.10	6/24/2022 16:21	11.54	-0.40	6/23/2022 14:24	11.36	106.39	6/23/2022 15:41	8.93
6/23/2022 14:38	11.74	244.17	6/24/2022 16:22	11.55	-0.44	6/23/2022 14:25	11.35	107.00	6/23/2022 15:42	8.96

6/23/2022 14:39	11.75	243.95	6/24/2022 16:23	11.53	-0.40	6/23/2022 14:26	11.35	107.53	6/23/2022 15:43	8.96
6/23/2022 14:40	11.76	244.11	6/24/2022 16:24	11.55	-0.47	6/23/2022 14:27	11.36	106.97	6/23/2022 15:44	8.90
6/23/2022 14:41	11.74	244.05	6/24/2022 16:25	11.54	-0.40	6/23/2022 14:28	11.34	106.73	6/23/2022 15:45	8.95
6/23/2022 14:42	11.74	243.97	6/24/2022 16:26	11.50	-0.51	6/23/2022 14:29	11.32	106.27	6/23/2022 15:46	8.94
6/23/2022 14:43	11.77	243.93	6/24/2022 16:27	11.54	-0.46	6/23/2022 14:30	11.36	107.18	6/23/2022 15:47	8.94
6/23/2022 14:44	11.76	244.03	6/24/2022 16:28	11.53	-0.40	6/23/2022 14:31	11.36	106.33	6/23/2022 15:48	8.96
6/23/2022 14:45	11.73	244.02	6/24/2022 16:29	11.53	-0.50	6/23/2022 14:32	11.37	107.31	6/23/2022 15:49	8.96
6/23/2022 14:46	11.73	244.06	6/24/2022 16:30	11.55	-0.38	6/23/2022 14:33	11.34	107.17	6/23/2022 15:50	8.96
6/23/2022 14:47	11.73	244.00	6/24/2022 16:31	11.55	-0.47	6/23/2022 14:34	11.37	106.86	6/23/2022 15:51	8.96
6/23/2022 14:48	11.76	243.84	6/24/2022 16:32	11.55	-0.39	6/23/2022 14:35	11.37	106.52	6/23/2022 15:52	8.97
6/23/2022 14:49	11.77	244.06	6/24/2022 16:33	11.55	-0.40	6/23/2022 14:36	11.33	106.89	6/23/2022 15:53	8.96
6/23/2022 14:50	11.76	244.14	6/24/2022 16:34	11.54	-0.47	6/23/2022 14:37	11.35	107.43	6/23/2022 15:54	8.96
6/23/2022 14:51	11.75	244.03	6/24/2022 16:35	11.55	-0.53	6/23/2022 14:38	11.35	106.97	6/23/2022 15:55	9.00
6/23/2022 14:52	11.75	243.87	6/24/2022 16:36	11.52	-0.46	6/23/2022 14:39	11.35	107.74	6/23/2022 15:56	8.96
6/23/2022 14:53	11.76	244.15	6/24/2022 16:37	11.53	-0.51	6/23/2022 14:40	11.36	107.67	6/23/2022 15:57	8.87
6/23/2022 14:54	11.73	244.22	6/24/2022 16:38	11.51	-0.42	6/23/2022 14:41	11.32	107.24	6/23/2022 15:58	8.96
6/23/2022 14:55	11.76	243.75	6/24/2022 16:39	11.53	-0.42	6/23/2022 14:42	11.32	106.37	6/23/2022 15:59	8.91
6/23/2022 14:56	11.76	244.10	6/24/2022 16:40	11.53	-0.44	6/23/2022 14:43	11.34	107.75	6/23/2022 16:00	8.96
6/23/2022 14:57	11.77	244.00	6/24/2022 16:41	11.55	-0.42	6/23/2022 14:44	11.33	106.66	6/23/2022 16:01	8.94
6/23/2022 14:58	11.73	244.08	6/24/2022 16:42	11.51	-0.48	6/23/2022 14:45	11.35	107.22	6/23/2022 16:02	8.95
6/23/2022 14:59	11.73	243.99	6/24/2022 16:43	11.54	-0.57	6/23/2022 14:46	11.35	107.43	6/23/2022 16:03	8.96
6/23/2022 15:00	11.73	244.03	6/24/2022 16:44	11.54	-0.41	6/23/2022 14:47	11.34	106.73	6/23/2022 16:04	8.92
6/23/2022 15:01	11.74	243.89	6/24/2022 16:45	11.53	-0.47	6/23/2022 14:48	11.33	106.68	6/23/2022 16:05	8.96
6/23/2022 15:02	11.79	244.07	6/24/2022 16:46	11.54	-0.49	6/23/2022 14:49	11.33	106.73	6/23/2022 16:06	8.99
6/23/2022 15:03	11.75	244.17	6/24/2022 16:47	11.56	-0.35	6/23/2022 14:50	11.33	106.75	6/23/2022 16:07	8.96
6/23/2022 15:04	11.74	244.24	6/24/2022 16:48	11.54	-0.45	6/23/2022 14:51	11.34	106.82	6/23/2022 16:08	8.93
6/23/2022 15:05	11.75	244.25	6/24/2022 16:49	11.52	-0.48	6/23/2022 14:52	11.33	106.56	6/23/2022 16:09	8.92
6/23/2022 15:06	11.77	244.10	6/24/2022 16:50	11.53	-0.45	6/23/2022 14:53	11.36	107.06	6/23/2022 16:10	8.95
6/23/2022 15:07	11.74	244.08	6/24/2022 16:51	11.52	-0.46	6/23/2022 14:54	11.36	107.83	6/23/2022 16:11	8.91
6/23/2022 15:08	11.76	244.05	6/24/2022 16:52	11.53	-0.47	6/23/2022 14:55	11.36	106.96	6/23/2022 16:12	8.92
6/23/2022 15:09	11.74	244.24	6/24/2022 16:53	11.56	-0.42	6/23/2022 14:56	11.37	106.11	6/23/2022 16:13	8.92
6/23/2022 15:10	11.77	244.29	6/24/2022 16:54	11.54	-0.43	6/23/2022 14:57	11.38	106.65	6/23/2022 16:14	8.88
6/23/2022 15:11	11.74	244.09	6/24/2022 16:55	11.55	-0.45	6/23/2022 14:58	11.37	106.90	6/23/2022 16:15	8.90
6/23/2022 15:12	11.76	244.08	6/24/2022 16:56	11.52	-0.44	6/23/2022 14:59	11.35	107.57	6/23/2022 16:16	8.88
6/23/2022 15:13	11.74	244.13	6/24/2022 16:57	11.52	-0.49	6/23/2022 15:00	11.37	107.77	6/23/2022 16:17	8.92
6/23/2022 15:14	11.74	244.08	6/24/2022 16:58	11.53	-0.43	6/23/2022 15:01	11.33	107.09	6/23/2022 16:18	8.91
6/23/2022 15:15	11.75	244.21	6/24/2022 16:59	11.54	-0.52	6/23/2022 15:02	11.35	107.55	6/23/2022 16:19	8.95
6/23/2022 15:16	11.73	244.06	6/24/2022 17:00	11.52	-0.47	6/23/2022 15:03	11.34	108.12	6/23/2022 16:20	8.98
6/23/2022 15:17	11.76	244.12	6/24/2022 17:01	11.53	-0.45	6/23/2022 15:04	11.33	107.51	6/23/2022 16:21	8.97
6/23/2022 15:18	11.78	244.31	6/24/2022 17:02	11.53	-0.43	6/23/2022 15:05	11.35	107.01	6/23/2022 16:22	8.92
6/23/2022 15:19	11.75	244.01	6/24/2022 17:03	11.53	-0.45	6/23/2022 15:06	11.36	107.19	6/23/2022 16:23	8.90
6/23/2022 15:20	11.75	244.17	6/24/2022 17:04	11.52	-0.40	6/23/2022 15:07	11.36	106.65	6/23/2022 16:24	8.96
6/23/2022 15:21	11.75	244.06	6/24/2022 17:05	11.55	-0.40	6/23/2022 15:08	11.35	107.00	6/23/2022 16:25	8.95
6/23/2022 15:22	11.75	244.00	6/24/2022 17:06	11.54	-0.39	6/23/2022 15:09	11.35	107.16	6/23/2022 16:26	8.95
6/23/2022 15:23	11.75	244.34	6/24/2022 17:07	11.56	-0.42	6/23/2022 15:10	11.33	107.96	6/23/2022 16:27	8.89
6/23/2022 15:24	11.74	243.86	6/24/2022 17:08	11.51	-0.43	6/23/2022 15:11	11.36	107.78	6/23/2022 16:28	8.93
6/23/2022 15:25	11.75	244.28	6/24/2022 17:09	11.52	-0.46	6/23/2022 15:12	11.34	107.36	6/23/2022 16:29	8.98
6/23/2022 15:26	11.77	244.03	6/24/2022 17:10	11.51	-0.45	6/23/2022 15:13	11.34	107.09	6/23/2022 16:30	9.00
6/23/2022 15:27	11.76	244.16	6/24/2022 17:11	11.54	-0.44	6/23/2022 15:14	11.34	107.21	6/23/2022 16:31	8.99
6/23/2022 15:28	11.77	244.23	6/24/2022 17:12	11.52	-0.41	6/23/2022 15:15	11.37	106.89	6/23/2022 16:32	8.93
6/23/2022 15:29	11.76	244.13	6/24/2022 17:13	11.55	-0.52	6/23/2022 15:16	11.34	106.77	6/23/2022 16:33	8.93
6/23/2022 15:30	11.73	244.03	6/24/2022 17:14	11.52	-0.50	6/23/2022 15:17	11.33	106.64	6/23/2022 16:34	9.04
6/23/2022 15:31	11.76	244.00	6/24/2022 17:15	11.55	-0.54	6/23/2022 15:18	11.39	107.79	6/23/2022 16:35	8.92
6/23/2022 15:32	11.76	244.13	6/24/2022 17:16	11.52	-0.39	6/23/2022 15:19	11.36	107.01	6/23/2022 16:36	8.94
6/23/2022 15:33	11.76	244.09	6/24/2022 17:17	11.52	-0.48	6/23/2022 15:20	11.34	106.12	6/23/2022 16:37	8.97
6/23/2022 15:34	11.76	244.26	6/24/2022 17:18	11.54	-0.44	6/23/2022 15:21	11.37	107.77	6/23/2022 16:38	8.94
6/23/2022 15:35	11.73	244.14	6/24/2022 17:19	11.54	-0.47	6/23/2022 15:22	11.34	106.99	6/23/2022 16:39	8.94
6/23/2022 15:36	11.76	244.25	6/24/2022 17:20	11.56	-0.43	6/23/2022 15:23	11.31	106.96	6/23/2022 16:40	8.95
6/23/2022 15:37	11.72	244.11	6/24/2022 17:21	11.53	-0.39	6/23/2022 15:24	11.35	107.12	6/23/2022 16:41	8.96
6/23/2022 15:38	11.75	244.10	6/24/2022 17:22	11.54	-0.41	6/23/2022 15:25	11.36	106.44	6/23/2022 16:42	8.94
6/23/2022 15:39	11.76	244.16	6/24/2022 17:23	11.54	-0.48	6/23/2022 15:26	11.35	106.83	6/23/2022 16:43	8.98
6/23/2022 15:40	11.76	244.26	6/24/2022 17:24	11.54	-0.43	6/23/2022 15:27	11.34	108.14	6/23/2022 16:44	9.00
6/23/2022 15:41	11.77	244.20	6/24/2022 17:25	11.50	-0.47	6/23/2022 15:28	11.34	106.49	6/23/2022 16:45	8.96
6/23/2022 15:42	11.75	244.32	6/24/2022 17:26	11.54	-0.41	6/23/2022 15:29	11.36	106.94	6/23/2022 16:46	8.94
6/23/2022 15:43	11.72	244.29	6/24/2022 17:27	11.54	-0.48	6/23/2022 15:30	11.34	107.77	6/23/2022 16:47	8.91
6/23/2022 15:44	11.77	244.03	6/24/2022 17:28	11.55	-0.49	6/23/2022 15:31	11.32	107.50	6/23/2022 16:48	8.92
6/23/2022 15:45	11.75	244.22	6/24/2022 17:29	11.51	-0.51	6/23/2022 15:32	11.33	107.23	6/23/2022 16:49	8.92
6/23/2022 15:46	11.75	244.24	6/24/2022 17:30	11.54	-0.41	6/23/2022 15:33	11.35	106.99	6/23/2022 16:50	9.01
6/23/2022 15:47	11.77	244.32	6/24/2022 17:31	11.55	-0.40	6/23/2022 15:34	11.35	107.49	6/23/2022 16:51	8.95
6/23/2022 15:48	11.76	244.19	6/24/2022 17:32	11.54	-0.36	6/23/2022 15:35	11.36	107.05	6/23/2022 16:52	8.95
6/23/2022 15:49	11.72	244.31	6/24/2022 17:33	11.53	-0.47	6/23/2022 15:36	11.34	108.01	6/23/2022 16:53	8.98
6/23/2022 15:50	11.74	244.07	6/24/2022 17:34	11.53	-0.38	6/23/2022 15:37	11.35	107.70	6/23/2022 16:54	8.97
6/23/2022 15:51	11.76	244.32	6/24/2022 17:35	11.51	-0.43	6/23/2022 15:38	11.34	107.95	6/23/2022 16:55	8.97
6/23/2022 15:52	11.74	244.26	6/24/2022 17:36	11.53	-0.49	6/23/2022 15:39	11.35	106.95	6/23/2022 16:56	8.95
6/23/2022 15:53	11.75	244.11	6/24/2022 17:37	11.53	-0.42	6/23/2022 15:40	11.36	107.79	6/23/2022 16:57	8.98
6/23/2022 15:54	11.73	244.40	6/24/2022 17:38	11.55	-0.46	6/23/2022 15:41	11.33	107.10	6/23/2022 16:58	9.01
6/23/2022 15:55	11.75	244.36	6/24/2022 17:39	11.55	-0.37	6/23/2022 15:42	11.34	107.94	6/23/2022 16:59	9.00
6/23/2022 15:56	11.76	244.16	6/24/2022 17:40	11.54	-0.49	6/23/2022 15:43	11.32	106.93	6/23/2022 17:00	8.93
6/23/2022 15:57	11.75	244.39	6/24/2022 17:41	11.54	-0.48	6/23/2022 15:44	11.36	106.41	6/23/2022 17:01	8.94
6/23/2022 15:58	11.75	244.19	6/24/2022 17:42	11.52	-0.40	6/23/2022 15:45	11.39	107.39	6/23/2022 17:02	8.97
6/23/2022 15:59	11.76	244.22	6/24/2022 17:43	11.56	-0.37	6/23/2022 15:46	11.34	107.41	6/23/2022 17:03	8.94
6/23/2022 16:00	11.77	244.42	6/24/2022 17:44	11.50	-0.47	6/23/2022 15:47	11.37	107.27	6/23/2022 17:04	9.01
6/23/2022 16:01	11.75	244.54	6/24/2022 17:45	11.55	-0.49	6/23/2022 15:48	11.35	107.03	6/23/2022 17:05	8.98
6/23/2022 16:02	11.73	244.24	6/24/2022 17:46	11.53	-0.46	6/23/2022 15:49	11.35	107.35	6/23/2022 17:06	8.93
6/23/2022 16:03	11.78	244.30	6/24/2022 17:47	11.53	-0.49	6/23/2022 15:50	11.34	106.72	6/23/2022 17:07	8.96
6/23/2022 16:04	11.79	244.28	6/24/2022 17:48	11.56	-0.50	6/23/2022 15:51	11.34	106.01	6/23/2022 17:08	8.93
6/23/2022 16:05	11.77	244.43	6/24/2022 17:49	11.54	-0.47	6/23/2022 15:52	11.35	108.01	6/23/2022 17:09	8.96
6/23/2022 16:06	11.76	244.24	6/24/2022 17:50	11.54	-0.46	6/23/2022 15:53	11.32	107.33	6/23/2022 17:10	8.99

6/23/2022 16:07	11.74	244.31	6/24/2022 17:51	11.55	-0.44	6/23/2022 15:54	11.37	107.16	6/23/2022 17:11	9.05
6/23/2022 16:08	11.76	244.28	6/24/2022 17:52	11.52	-0.39	6/23/2022 15:55	11.34	107.46	6/23/2022 17:12	8.97
6/23/2022 16:09	11.72	244.23	6/24/2022 17:53	11.54	-0.47	6/23/2022 15:56	11.37	106.85	6/23/2022 17:13	8.96
6/23/2022 16:10	11.74	244.24	6/24/2022 17:54	11.52	-0.44	6/23/2022 15:57	11.36	107.90	6/23/2022 17:14	8.94
6/23/2022 16:11	11.77	244.26	6/24/2022 17:55	11.52	-0.45	6/23/2022 15:58	11.37	107.30	6/23/2022 17:15	8.97
6/23/2022 16:12	11.77	244.27	6/24/2022 17:56	11.53	-0.45	6/23/2022 15:59	11.37	107.00	6/23/2022 17:16	8.99
6/23/2022 16:13	11.75	244.24	6/24/2022 17:57	11.56	-0.47	6/23/2022 16:00	11.39	106.94	6/23/2022 17:17	8.96
6/23/2022 16:14	11.76	244.48	6/24/2022 17:58	11.54	-0.40	6/23/2022 16:01	11.36	106.51	6/23/2022 17:18	8.92
6/23/2022 16:15	11.76	244.70	6/24/2022 17:59	11.52	-0.51	6/23/2022 16:02	11.33	107.19	6/23/2022 17:19	9.03
6/23/2022 16:16	11.71	244.72	6/24/2022 18:00	11.55	-0.42	6/23/2022 16:03	11.36	107.60	6/23/2022 17:20	8.95
6/23/2022 16:17	11.77	244.26	6/24/2022 18:01	11.52	-0.41	6/23/2022 16:04	11.37	107.34	6/23/2022 17:21	8.94
6/23/2022 16:18	11.76	244.41	6/24/2022 18:02	11.54	-0.53	6/23/2022 16:05	11.33	106.81	6/23/2022 17:22	8.96
6/23/2022 16:19	11.75	244.47	6/24/2022 18:03	11.55	-0.36	6/23/2022 16:06	11.36	106.95	6/23/2022 17:23	9.04
6/23/2022 16:20	11.74	244.31	6/24/2022 18:04	11.53	-0.45	6/23/2022 16:07	11.35	107.13	6/23/2022 17:24	8.93
6/23/2022 16:21	11.75	244.47	6/24/2022 18:05	11.53	-0.45	6/23/2022 16:08	11.37	106.87	6/23/2022 17:25	8.99
6/23/2022 16:22	11.74	244.50	6/24/2022 18:06	11.52	-0.46	6/23/2022 16:09	11.33	107.71	6/23/2022 17:26	8.97
6/23/2022 16:23	11.75	244.25	6/24/2022 18:07	11.54	-0.34	6/23/2022 16:10	11.39	107.57	6/23/2022 17:27	9.00
6/23/2022 16:24	11.76	244.56	6/24/2022 18:08	11.52	-0.43	6/23/2022 16:11	11.35	107.46	6/23/2022 17:28	8.99
6/23/2022 16:25	11.76	244.43	6/24/2022 18:09	11.54	-0.47	6/23/2022 16:12	11.36	107.38	6/23/2022 17:29	8.97
6/23/2022 16:26	11.74	244.20	6/24/2022 18:10	11.53	-0.45	6/23/2022 16:13	11.32	106.89	6/23/2022 17:30	9.04
6/23/2022 16:27	11.77	244.40	6/24/2022 18:11	11.52	-0.48	6/23/2022 16:14	11.35	107.49	6/23/2022 17:31	8.99
6/23/2022 16:28	11.75	244.35	6/24/2022 18:12	11.54	-0.39	6/23/2022 16:15	11.35	107.37	6/23/2022 17:32	8.94
6/23/2022 16:29	11.74	244.48	6/24/2022 18:13	11.53	-0.38	6/23/2022 16:16	11.36	107.61	6/23/2022 17:33	8.97
6/23/2022 16:30	11.75	244.40	6/24/2022 18:14	11.52	-0.44	6/23/2022 16:17	11.35	107.43	6/23/2022 17:34	8.99
6/23/2022 16:31	11.74	244.52	6/24/2022 18:15	11.54	-0.43	6/23/2022 16:18	11.35	107.40	6/23/2022 17:35	9.00
6/23/2022 16:32	11.73	244.55	6/24/2022 18:16	11.52	-0.52	6/23/2022 16:19	11.36	107.91	6/23/2022 17:36	8.99
6/23/2022 16:33	11.75	244.58	6/24/2022 18:17	11.54	-0.47	6/23/2022 16:20	11.35	107.33	6/23/2022 17:37	8.95
6/23/2022 16:34	11.76	244.37	6/24/2022 18:18	11.54	-0.52	6/23/2022 16:21	11.35	108.52	6/23/2022 17:38	8.93
6/23/2022 16:35	11.75	244.52	6/24/2022 18:19	11.54	-0.47	6/23/2022 16:22	11.35	106.74	6/23/2022 17:39	8.99
6/23/2022 16:36	11.77	244.41	6/24/2022 18:20	11.53	-0.53	6/23/2022 16:23	11.30	108.22	6/23/2022 17:40	9.01
6/23/2022 16:37	11.75	244.46	6/24/2022 18:21	11.54	-0.43	6/23/2022 16:24	11.33	107.05	6/23/2022 17:41	9.01
6/23/2022 16:38	11.74	244.56	6/24/2022 18:22	11.54	-0.40	6/23/2022 16:25	11.35	107.44	6/23/2022 17:42	8.94
6/23/2022 16:39	11.75	244.54	6/24/2022 18:23	11.53	-0.40	6/23/2022 16:26	11.38	107.39	6/23/2022 17:43	9.01
6/23/2022 16:40	11.75	244.47	6/24/2022 18:24	11.53	-0.42	6/23/2022 16:27	11.36	107.52	6/23/2022 17:44	8.97
6/23/2022 16:41	11.77	244.50	6/24/2022 18:25	11.54	-0.53	6/23/2022 16:28	11.36	107.70	6/23/2022 17:45	9.01
6/23/2022 16:42	11.74	244.71	6/24/2022 18:26	11.57	-0.50	6/23/2022 16:29	11.36	107.50	6/23/2022 17:46	8.97
6/23/2022 16:43	11.75	244.46	6/24/2022 18:27	11.55	-0.44	6/23/2022 16:30	11.35	107.57	6/23/2022 17:47	9.04
6/23/2022 16:44	11.76	244.46	6/24/2022 18:28	11.54	-0.47	6/23/2022 16:31	11.32	106.94	6/23/2022 17:48	9.00
6/23/2022 16:45	11.73	244.61	6/24/2022 18:29	11.54	-0.44	6/23/2022 16:32	11.36	107.00	6/23/2022 17:49	9.00
6/23/2022 16:46	11.74	244.43	6/24/2022 18:30	11.51	-0.41	6/23/2022 16:33	11.32	107.65	6/23/2022 17:50	8.94
6/23/2022 16:47	11.76	244.45	6/24/2022 18:31	11.50	-0.47	6/23/2022 16:34	11.32	107.83	6/23/2022 17:51	9.02
6/23/2022 16:48	11.75	244.50	6/24/2022 18:32	11.54	-0.45	6/23/2022 16:35	11.31	107.17	6/23/2022 17:52	8.95
6/23/2022 16:49	11.75	244.41	6/24/2022 18:33	11.54	-0.43	6/23/2022 16:36	11.35	107.29	6/23/2022 17:53	8.99
6/23/2022 16:50	11.77	244.75	6/24/2022 18:34	11.53	-0.51	6/23/2022 16:37	11.38	107.83	6/23/2022 17:54	8.98
6/23/2022 16:51	11.75	244.46	6/24/2022 18:35	11.53	-0.45	6/23/2022 16:38	11.37	107.15	6/23/2022 17:55	9.02
6/23/2022 16:52	11.77	244.41	6/24/2022 18:36	11.52	-0.44	6/23/2022 16:39	11.36	107.64	6/23/2022 17:56	8.96
6/23/2022 16:53	11.74	244.59	6/24/2022 18:37	11.54	-0.40	6/23/2022 16:40	11.37	107.24	6/23/2022 17:57	9.03
6/23/2022 16:54	11.76	244.45	6/24/2022 18:38	11.55	-0.44	6/23/2022 16:41	11.35	107.19	6/23/2022 17:58	8.93
6/23/2022 16:55	11.78	244.54	6/24/2022 18:39	11.56	-0.45	6/23/2022 16:42	11.33	107.33	6/23/2022 17:59	9.06
6/23/2022 16:56	11.77	244.46	6/24/2022 18:40	11.53	-0.46	6/23/2022 16:43	11.38	107.13	6/23/2022 18:00	8.94
6/23/2022 16:57	11.74	244.45	6/24/2022 18:41	11.52	-0.46	6/23/2022 16:44	11.34	107.65	6/23/2022 18:01	9.00
6/23/2022 16:58	11.73	244.58	6/24/2022 18:42	11.52	-0.48	6/23/2022 16:45	11.33	107.00	6/23/2022 18:02	8.98
6/23/2022 16:59	11.74	244.65	6/24/2022 18:43	11.52	-0.37	6/23/2022 16:46	11.36	107.75	6/23/2022 18:03	8.98
6/23/2022 17:00	11.90	232.27	6/24/2022 18:44	11.54	-0.46	6/23/2022 16:47	11.33	107.31	6/23/2022 18:04	9.00
6/23/2022 17:01	12.03	222.12	6/24/2022 18:45	11.54	-0.47	6/23/2022 16:48	11.37	107.21	6/23/2022 18:05	8.97
6/23/2022 17:02	12.07	213.61	6/24/2022 18:46	11.55	-0.45	6/23/2022 16:49	11.36	107.98	6/23/2022 18:06	8.95
6/23/2022 17:03	12.13	206.52	6/24/2022 18:47	11.53	-0.43	6/23/2022 16:50	11.35	106.78	6/23/2022 18:07	9.00
6/23/2022 17:04	12.10	200.18	6/24/2022 18:48	11.55	-0.44	6/23/2022 16:51	11.39	108.08	6/23/2022 18:08	8.98
6/23/2022 17:05	12.10	194.46	6/24/2022 18:49	11.53	-0.48	6/23/2022 16:52	11.37	107.07	6/23/2022 18:09	8.99
6/23/2022 17:06	12.08	189.36	6/24/2022 18:50	11.57	-0.44	6/23/2022 16:53	11.35	107.98	6/23/2022 18:10	9.01
6/23/2022 17:07	12.10	184.62	6/24/2022 18:51	11.51	-0.44	6/23/2022 16:54	11.34	107.67	6/23/2022 18:11	8.98
6/23/2022 17:08	12.17	180.40	6/24/2022 18:52	11.53	-0.49	6/23/2022 16:55	11.35	107.21	6/23/2022 18:12	8.98
6/23/2022 17:09	12.20	176.48	6/24/2022 18:53	11.53	-0.50	6/23/2022 16:56	11.34	107.13	6/23/2022 18:13	8.96
6/23/2022 17:10	12.19	172.75	6/24/2022 18:54	11.55	-0.45	6/23/2022 16:57	11.32	107.22	6/23/2022 18:14	9.00
6/23/2022 17:11	12.11	169.40	6/24/2022 18:55	11.54	-0.42	6/23/2022 16:58	11.36	107.15	6/23/2022 18:15	9.04
6/23/2022 17:12	11.98	166.08	6/24/2022 18:56	11.53	-0.50	6/23/2022 16:59	11.37	107.77	6/23/2022 18:16	9.02
6/23/2022 17:13	11.87	163.19	6/24/2022 18:57	11.52	-0.50	6/23/2022 17:00	11.35	100.17	6/23/2022 18:17	8.95
6/23/2022 17:14	11.81	160.40	6/24/2022 18:58	11.53	-0.49	6/23/2022 17:01	11.34	87.02	6/23/2022 18:18	8.96
6/23/2022 17:15	11.75	157.60	6/24/2022 18:59	11.55	-0.43	6/23/2022 17:02	11.38	79.84	6/23/2022 18:19	8.98
6/23/2022 17:16	11.69	155.02	6/24/2022 19:00	11.52	-0.44	6/23/2022 17:03	11.39	76.14	6/23/2022 18:20	9.00
6/23/2022 17:17	11.68	152.78	6/24/2022 19:01	11.51	-0.41	6/23/2022 17:04	11.33	74.40	6/23/2022 18:21	8.94
6/23/2022 17:18	11.66	150.36	6/24/2022 19:02	11.54	-0.41	6/23/2022 17:05	11.37	73.49	6/23/2022 18:22	9.02
6/23/2022 17:19	11.66	148.25	6/24/2022 19:03	11.54	-0.49	6/23/2022 17:06	11.35	72.95	6/23/2022 18:23	8.99
6/23/2022 17:20	11.62	146.09	6/24/2022 19:04	11.52	-0.47	6/23/2022 17:07	11.39	72.51	6/23/2022 18:24	8.97
6/23/2022 17:21	11.60	144.02	6/24/2022 19:05	11.51	-0.38	6/23/2022 17:08	11.38	72.17	6/23/2022 18:25	9.01
6/23/2022 17:22	11.60	142.13	6/24/2022 19:06	11.53	-0.47	6/23/2022 17:09	11.40	71.90	6/23/2022 18:26	9.00
6/23/2022 17:23	11.59	140.19	6/24/2022 19:07	11.49	-0.50	6/23/2022 17:10	11.42	71.62	6/23/2022 18:27	9.00
6/23/2022 17:24	11.60	138.39	6/24/2022 19:08	11.53	-0.49	6/23/2022 17:11	11.45	71.40	6/23/2022 18:28	8.96
6/23/2022 17:25	11.60	136.64	6/24/2022 19:09	11.55	-0.40	6/23/2022 17:12	11.43	71.31	6/23/2022 18:29	9.02
6/23/2022 17:26	11.61	134.95	6/24/2022 19:10	11.54	-0.40	6/23/2022 17:13	11.42	71.01	6/23/2022 18:30	8.99
6/23/2022 17:27	11.61	133.30	6/24/2022 19:11	11.54	-0.40	6/23/2022 17:14	11.46	70.86	6/23/2022 18:31	8.98
6/23/2022 17:28	11.60	131.69	6/24/2022 19:12	11.55	-0.51	6/23/2022 17:15	11.46	70.73	6/23/2022 18:32	8.96
6/23/2022 17:29	11.60	130.18	6/24/2022 19:13	11.51	-0.50	6/23/2022 17:16	11.46	70.56	6/23/2022 18:33	8.98
6/23/2022 17:30	11.63	128.75	6/24/2022 19:14	11.55	-0.48	6/23/2022 17:17	11.49	70.35	6/23/2022 18:34	8.95
6/23/2022 17:31	11.61	127.30	6/24/2022 19:15	11.54	-0.41	6/23/2022 17:18	11.49	70.24	6/23/2022 18:35	8.95
6/23/2022 17:32	11.61	125.89	6/24/2022 19:16	11.53	-0.39	6/23/2022 17:19	11.52	70.10	6/23/2022 18:36	8.91
6/23/2022 17:33	11.59	124.55	6/24/2022 19:17	11.53	-0.43	6/23/2022 17:20	11.53	69.92	6/23/2022 18:37	8.94
6/23/2022 17:34	11.60	123.23	6/24/2022 19:18	11.52	-0.46	6/23/2022 17:21	11.57	69.86	6/23/2022 18:38	8.96

6/23/2022 17:35	11.62	121.91	6/24/2022 19:19	11.53	-0.41	6/23/2022 17:22	11.58	69.70	6/23/2022 18:39	8.98
6/23/2022 17:36	11.60	120.64	6/24/2022 19:20	11.51	-0.44	6/23/2022 17:23	11.56	69.58	6/23/2022 18:40	8.96
6/23/2022 17:37	11.59	119.41	6/24/2022 19:21	11.56	-0.37	6/23/2022 17:24	11.60	69.48	6/23/2022 18:41	8.96
6/23/2022 17:38	11.58	118.18	6/24/2022 19:22	11.53	-0.41	6/23/2022 17:25	11.66	69.39	6/23/2022 18:42	8.99
6/23/2022 17:39	11.60	116.99	6/24/2022 19:23	11.55	-0.39	6/23/2022 17:26	11.70	69.18	6/23/2022 18:43	8.91
6/23/2022 17:40	11.60	115.78	6/24/2022 19:24	11.53	-0.42	6/23/2022 17:27	11.72	69.11	6/23/2022 18:44	8.92
6/23/2022 17:41	11.61	114.69	6/24/2022 19:25	11.56	-0.49	6/23/2022 17:28	11.73	68.94	6/23/2022 18:45	8.96
6/23/2022 17:42	11.60	113.67	6/24/2022 19:26	11.55	-0.53	6/23/2022 17:29	11.72	68.90	6/23/2022 18:46	8.92
6/23/2022 17:43	11.58	112.46	6/24/2022 19:27	11.53	-0.51	6/23/2022 17:30	11.78	68.80	6/23/2022 18:47	8.93
6/23/2022 17:44	11.61	111.50	6/24/2022 19:28	11.53	-0.44	6/23/2022 17:31	11.69	68.71	6/23/2022 18:48	8.90
6/23/2022 17:45	11.59	110.55	6/24/2022 19:29	11.51	-0.39	6/23/2022 17:32	11.80	68.56	6/23/2022 18:49	8.86
6/23/2022 17:46	11.60	109.52	6/24/2022 19:30	11.51	-0.38	6/23/2022 17:33	11.76	68.48	6/23/2022 18:50	9.01
6/23/2022 17:47	11.60	108.45	6/24/2022 19:31	11.54	-0.51	6/23/2022 17:34	11.76	68.45	6/23/2022 18:51	8.94
6/23/2022 17:48	11.58	107.46	6/24/2022 19:32	11.53	-0.45	6/23/2022 17:35	11.81	68.27	6/23/2022 18:52	8.94
6/23/2022 17:49	11.61	106.48	6/24/2022 19:33	11.53	-0.49	6/23/2022 17:36	11.85	68.14	6/23/2022 18:53	8.91
6/23/2022 17:50	11.61	105.63	6/24/2022 19:34	11.53	-0.48	6/23/2022 17:37	11.84	68.06	6/23/2022 18:54	8.89
6/23/2022 17:51	11.59	104.73	6/24/2022 19:35	11.55	-0.37	6/23/2022 17:38	11.85	67.98	6/23/2022 18:55	8.90
6/23/2022 17:52	11.60	103.85	6/24/2022 19:36	11.57	-0.56	6/23/2022 17:39	11.83	67.91	6/23/2022 18:56	8.91
6/23/2022 17:53	11.60	103.02	6/24/2022 19:37	11.54	-0.50	6/23/2022 17:40	11.81	67.83	6/23/2022 18:57	8.88
6/23/2022 17:54	11.58	102.01	6/24/2022 19:38	11.52	-0.45	6/23/2022 17:41	11.84	67.71	6/23/2022 18:58	8.90
6/23/2022 17:55	11.59	101.24	6/24/2022 19:39	11.50	-0.42	6/23/2022 17:42	11.82	67.65	6/23/2022 18:59	8.91
6/23/2022 17:56	11.60	100.35	6/24/2022 19:40	11.55	-0.35	6/23/2022 17:43	11.86	67.48	6/23/2022 19:00	8.90
6/23/2022 17:57	11.60	99.49	6/24/2022 19:41	11.54	-0.43	6/23/2022 17:44	11.86	67.38	6/23/2022 19:01	8.87
6/23/2022 17:58	11.61	98.69	6/24/2022 19:42	11.55	-0.39	6/23/2022 17:45	11.86	67.33	6/23/2022 19:02	8.93
6/23/2022 17:59	11.59	97.84	6/24/2022 19:43	11.54	-0.40	6/23/2022 17:46	11.82	67.26	6/23/2022 19:03	8.84
6/23/2022 18:00	11.61	97.15	6/24/2022 19:44	11.53	-0.49	6/23/2022 17:47	11.84	67.11	6/23/2022 19:04	8.87
6/23/2022 18:01	11.62	96.29	6/24/2022 19:45	11.54	-0.49	6/23/2022 17:48	11.82	67.08	6/23/2022 19:05	8.86
6/23/2022 18:02	11.58	95.62	6/24/2022 19:46	11.54	-0.49	6/23/2022 17:49	11.87	66.94	6/23/2022 19:06	8.86
6/23/2022 18:03	11.61	94.86	6/24/2022 19:47	11.55	-0.38	6/23/2022 17:50	11.87	66.88	6/23/2022 19:07	8.86
6/23/2022 18:04	11.55	94.08	6/24/2022 19:48	11.54	-0.48	6/23/2022 17:51	11.86	66.78	6/23/2022 19:08	8.87
6/23/2022 18:05	11.59	93.45	6/24/2022 19:49	11.52	-0.52	6/23/2022 17:52	11.87	66.68	6/23/2022 19:09	8.91
6/23/2022 18:06	11.57	92.62	6/24/2022 19:50	11.55	-0.45	6/23/2022 17:53	11.83	66.64	6/23/2022 19:10	8.87
6/23/2022 18:07	11.59	91.88	6/24/2022 19:51	11.53	-0.44	6/23/2022 17:54	11.89	66.54	6/23/2022 19:11	8.85
6/23/2022 18:08	11.61	91.20	6/24/2022 19:52	11.53	-0.54	6/23/2022 17:55	11.84	66.47	6/23/2022 19:12	8.78
6/23/2022 18:09	11.60	90.64	6/24/2022 19:53	11.54	-0.41	6/23/2022 17:56	11.88	66.33	6/23/2022 19:13	8.82
6/23/2022 18:10	11.60	90.08	6/24/2022 19:54	11.53	-0.42	6/23/2022 17:57	11.88	66.23	6/23/2022 19:14	8.84
6/23/2022 18:11	11.58	89.26	6/24/2022 19:55	11.53	-0.46	6/23/2022 17:58	11.87	66.16	6/23/2022 19:15	8.82
6/23/2022 18:12	11.60	88.57	6/24/2022 19:56	11.55	-0.40	6/23/2022 17:59	11.85	66.06	6/23/2022 19:16	8.80
6/23/2022 18:13	11.61	87.97	6/24/2022 19:57	11.54	-0.41	6/23/2022 18:00	11.82	66.00	6/23/2022 19:17	8.80
6/23/2022 18:14	11.60	87.41	6/24/2022 19:58	11.54	-0.37	6/23/2022 18:01	11.84	65.90	6/23/2022 19:18	8.82
6/23/2022 18:15	11.58	86.85	6/24/2022 19:59	11.54	-0.49	6/23/2022 18:02	11.82	65.80	6/23/2022 19:19	8.81
6/23/2022 18:16	11.61	86.18	6/24/2022 20:00	11.53	-0.40	6/23/2022 18:03	11.88	65.69	6/23/2022 19:20	8.89
6/23/2022 18:17	11.60	85.61	6/24/2022 20:01	11.54	-0.45	6/23/2022 18:04	11.85	65.66	6/23/2022 19:21	8.85
6/23/2022 18:18	11.58	85.03	6/24/2022 20:02	11.52	-0.52	6/23/2022 18:05	11.86	65.61	6/23/2022 19:22	8.81
6/23/2022 18:19	11.61	84.58	6/24/2022 20:03	11.50	-0.40	6/23/2022 18:06	11.84	65.45	6/23/2022 19:23	8.82
6/23/2022 18:20	11.61	83.92	6/24/2022 20:04	11.51	-0.35	6/23/2022 18:07	11.83	65.42	6/23/2022 19:24	8.80
6/23/2022 18:21	11.60	83.33	6/24/2022 20:05	11.53	-0.45	6/23/2022 18:08	11.82	65.28	6/23/2022 19:25	8.79
6/23/2022 18:22	11.62	82.86	6/24/2022 20:06	11.53	-0.37	6/23/2022 18:09	11.83	65.23	6/23/2022 19:26	8.75
6/23/2022 18:23	11.62	82.35	6/24/2022 20:07	11.56	-0.53	6/23/2022 18:10	11.84	65.15	6/23/2022 19:27	8.78
6/23/2022 18:24	11.62	81.82	6/24/2022 20:08	11.52	-0.47	6/23/2022 18:11	11.86	65.04	6/23/2022 19:28	8.78
6/23/2022 18:25	11.61	81.32	6/24/2022 20:09	11.55	-0.52	6/23/2022 18:12	11.86	64.99	6/23/2022 19:29	8.80
6/23/2022 18:26	11.61	80.91	6/24/2022 20:10	11.52	-0.51	6/23/2022 18:13	11.82	64.90	6/23/2022 19:30	8.76
6/23/2022 18:27	11.61	80.29	6/24/2022 20:11	11.53	-0.38	6/23/2022 18:14	11.86	64.84	6/23/2022 19:31	8.78
6/23/2022 18:28	11.58	79.80	6/24/2022 20:12	11.53	-0.40	6/23/2022 18:15	11.86	64.74	6/23/2022 19:32	8.76
6/23/2022 18:29	11.62	79.22	6/24/2022 20:13	11.54	-0.51	6/23/2022 18:16	11.84	64.66	6/23/2022 19:33	8.75
6/23/2022 18:30	11.57	78.77	6/24/2022 20:14	11.54	-0.45	6/23/2022 18:17	11.85	64.56	6/23/2022 19:34	8.75
6/23/2022 18:31	11.60	78.34	6/24/2022 20:15	11.54	-0.47	6/23/2022 18:18	11.83	64.49	6/23/2022 19:35	8.74
6/23/2022 18:32	11.59	77.87	6/24/2022 20:16	11.54	-0.44	6/23/2022 18:19	11.81	64.44	6/23/2022 19:36	8.75
6/23/2022 18:33	11.60	77.40	6/24/2022 20:17	11.54	-0.48	6/23/2022 18:20	11.85	64.36	6/23/2022 19:37	8.70
6/23/2022 18:34	11.58	76.89	6/24/2022 20:18	11.51	-0.41	6/23/2022 18:21	11.83	64.29	6/23/2022 19:38	8.74
6/23/2022 18:35	11.57	76.41	6/24/2022 20:19	11.57	-0.41	6/23/2022 18:22	11.81	64.21	6/23/2022 19:39	8.70
6/23/2022 18:36	11.61	76.02	6/24/2022 20:20	11.53	-0.50	6/23/2022 18:23	11.84	64.14	6/23/2022 19:40	8.74
6/23/2022 18:37	11.59	75.57	6/24/2022 20:21	11.54	-0.50	6/23/2022 18:24	11.84	64.03	6/23/2022 19:41	8.69
6/23/2022 18:38	11.58	75.16	6/24/2022 20:22	11.51	-0.52	6/23/2022 18:25	11.82	63.99	6/23/2022 19:42	8.68
6/23/2022 18:39	11.60	74.74	6/24/2022 20:23	11.53	-0.50	6/23/2022 18:26	11.82	63.84	6/23/2022 19:43	8.74
6/23/2022 18:40	11.58	74.20	6/24/2022 20:24	11.57	-0.43	6/23/2022 18:27	11.82	63.81	6/23/2022 19:44	8.75
6/23/2022 18:41	11.60	73.81	6/24/2022 20:25	11.54	-0.44	6/23/2022 18:28	11.82	63.72	6/23/2022 19:45	8.68
6/23/2022 18:42	11.61	73.30	6/24/2022 20:26	11.54	-0.43	6/23/2022 18:29	11.84	63.68	6/23/2022 19:46	8.69
6/23/2022 18:43	11.60	72.89	6/24/2022 20:27	11.56	-0.49	6/23/2022 18:30	11.79	63.61	6/23/2022 19:47	8.68
6/23/2022 18:44	11.60	72.52	6/24/2022 20:28	11.54	-0.50	6/23/2022 18:31	11.81	63.55	6/23/2022 19:48	8.67
6/23/2022 18:45	11.58	72.12	6/24/2022 20:29	11.55	-0.38	6/23/2022 18:32	11.82	63.44	6/23/2022 19:49	8.64
6/23/2022 18:46	11.59	71.63	6/24/2022 20:30	11.52	-0.46	6/23/2022 18:33	11.81	63.40	6/23/2022 19:50	8.68
6/23/2022 18:47	11.59	71.18	6/24/2022 20:31	11.53	-0.46	6/23/2022 18:34	11.83	63.32	6/23/2022 19:51	8.64
6/23/2022 18:48	11.58	70.80	6/24/2022 20:32	11.54	-0.46	6/23/2022 18:35	11.81	63.23	6/23/2022 19:52	8.64
6/23/2022 18:49	11.61	70.45	6/24/2022 20:33	11.51	-0.47	6/23/2022 18:36	11.86	63.17	6/23/2022 19:53	8.66
6/23/2022 18:50	11.59	69.95	6/24/2022 20:34	11.54	-0.46	6/23/2022 18:37	11.82	63.08	6/23/2022 19:54	8.65
6/23/2022 18:51	11.62	69.66	6/24/2022 20:35	11.52	-0.52	6/23/2022 18:38	11.83	63.04	6/23/2022 19:55	8.63
6/23/2022 18:52	11.60	69.19	6/24/2022 20:36	11.52	-0.52	6/23/2022 18:39	11.82	62.93	6/23/2022 19:56	8.68
6/23/2022 18:53	11.61	68.77	6/24/2022 20:37	11.56	-0.47	6/23/2022 18:40	11.79	62.91	6/23/2022 19:57	8.68
6/23/2022 18:54	11.60	68.46	6/24/2022 20:38	11.55	-0.41	6/23/2022 18:41	11.78	62.82	6/23/2022 19:58	8.64
6/23/2022 18:55	11.60	68.10	6/24/2022 20:39	11.54	-0.37	6/23/2022 18:42	11.80	62.72	6/23/2022 19:59	8.63
6/23/2022 18:56	11.60	67.60	6/24/2022 20:40	11.50	-0.38	6/23/2022 18:43	11.82	62.62	6/23/2022 20:00	8.64
6/23/2022 18:57	11.61	67.30	6/24/2022 20:41	11.55	-0.44	6/23/2022 18:44	11.80	62.59	6/23/2022 20:01	8.55
6/23/2022 18:58	11.62	66.81	6/24/2022 20:42	11.56	-0.54	6/23/2022 18:45	11.79	62.51	6/23/2022 20:02	8.61
6/23/2022 18:59	11.57	66.53	6/24/2022 20:43	11.58	-0.46	6/23/2022 18:46	11.82	62.44	6/23/2022 20:03	8.55
6/23/2022 19:00	11.60	66.17	6/24/2022 20:44	11.54	-0.43	6/23/2022 18:47	11.82	62.35	6/23/2022 20:04	8.60
6/23/2022 19:01	11.62	65.69	6/24/2022 20:45	11.52	-0.45	6/23/2022 18:48	11.80	62.25	6/23/2022 20:05	8.63
6/23/2022 19:02	11.60	65.44	6/24/2022 20:46	11.54	-0.33	6/23/2022 18:49	11.78	62.22	6/23/2022 20:06	8.62

6/23/2022 19:03	11.58	65.04	6/24/2022 20:47	11.53	-0.46	6/23/2022 18:50	11.81	62.17	6/23/2022 20:07	8.59
6/23/2022 19:04	11.59	64.66	6/24/2022 20:48	11.52	-0.41	6/23/2022 18:51	11.82	62.10	6/23/2022 20:08	8.65
6/23/2022 19:05	11.58	64.41	6/24/2022 20:49	11.51	-0.52	6/23/2022 18:52	11.82	62.00	6/23/2022 20:09	8.58
6/23/2022 19:06	11.59	63.94	6/24/2022 20:50	11.54	-0.51	6/23/2022 18:53	11.82	61.90	6/23/2022 20:10	8.58
6/23/2022 19:07	11.60	63.53	6/24/2022 20:51	11.54	-0.39	6/23/2022 18:54	11.81	61.85	6/23/2022 20:11	8.60
6/23/2022 19:08	11.61	63.37	6/24/2022 20:52	11.52	-0.49	6/23/2022 18:55	11.79	61.78	6/23/2022 20:12	8.63
6/23/2022 19:09	11.62	63.01	6/24/2022 20:53	11.52	-0.38	6/23/2022 18:56	11.78	61.69	6/23/2022 20:13	8.52
6/23/2022 19:10	11.63	62.62	6/24/2022 20:54	11.53	-0.43	6/23/2022 18:57	11.77	61.61	6/23/2022 20:14	8.57
6/23/2022 19:11	11.59	62.37	6/24/2022 20:55	11.52	-0.46	6/23/2022 18:58	11.79	61.61	6/23/2022 20:15	8.58
6/23/2022 19:12	11.62	61.86	6/24/2022 20:56	11.53	-0.52	6/23/2022 18:59	11.78	61.49	6/23/2022 20:16	8.51
6/23/2022 19:13	11.60	61.71	6/24/2022 20:57	11.51	-0.39	6/23/2022 19:00	11.82	61.45	6/23/2022 20:17	8.52
6/23/2022 19:14	11.59	61.32	6/24/2022 20:58	11.55	-0.38	6/23/2022 19:01	11.79	61.33	6/23/2022 20:18	8.56
6/23/2022 19:15	11.58	60.99	6/24/2022 20:59	11.53	-0.38	6/23/2022 19:02	11.79	61.28	6/23/2022 20:19	8.54
6/23/2022 19:16	11.64	60.65	6/24/2022 21:00	11.54	-0.43	6/23/2022 19:03	11.80	61.22	6/23/2022 20:20	8.50
6/23/2022 19:17	11.58	60.30	6/24/2022 21:01	11.53	-0.33	6/23/2022 19:04	11.80	61.16	6/23/2022 20:21	8.54
6/23/2022 19:18	11.59	60.02	6/24/2022 21:02	11.52	-0.45	6/23/2022 19:05	11.80	61.10	6/23/2022 20:22	8.51
6/23/2022 19:19	11.59	59.65	6/24/2022 21:03	11.54	-0.49	6/23/2022 19:06	11.79	61.01	6/23/2022 20:23	8.52
6/23/2022 19:20	11.58	59.43	6/24/2022 21:04	11.52	-0.41	6/23/2022 19:07	11.78	60.95	6/23/2022 20:24	8.43
6/23/2022 19:21	11.60	59.01	6/24/2022 21:05	11.54	-0.42	6/23/2022 19:08	11.77	60.92	6/23/2022 20:25	8.47
6/23/2022 19:22	11.59	58.74	6/24/2022 21:06	11.57	-0.42	6/23/2022 19:09	11.79	60.81	6/23/2022 20:26	8.50
6/23/2022 19:23	11.60	58.46	6/24/2022 21:07	11.56	-0.50	6/23/2022 19:10	11.80	60.77	6/23/2022 20:27	8.50
6/23/2022 19:24	11.59	58.16	6/24/2022 21:08	11.52	-0.49	6/23/2022 19:11	11.79	60.70	6/23/2022 20:28	8.49
6/23/2022 19:25	11.60	57.79	6/24/2022 21:09	11.54	-0.50	6/23/2022 19:12	11.80	60.65	6/23/2022 20:29	8.46
6/23/2022 19:26	11.61	57.53	6/24/2022 21:10	11.54	-0.42	6/23/2022 19:13	11.80	60.57	6/23/2022 20:30	8.48
6/23/2022 19:27	11.60	57.31	6/24/2022 21:11	11.55	-0.57	6/23/2022 19:14	11.77	60.51	6/23/2022 20:31	8.51
6/23/2022 19:28	11.59	56.96	6/24/2022 21:12	11.51	-0.44	6/23/2022 19:15	11.77	60.41	6/23/2022 20:32	8.45
6/23/2022 19:29	11.59	56.68	6/24/2022 21:13	11.54	-0.51	6/23/2022 19:16	11.78	60.36	6/23/2022 20:33	8.41
6/23/2022 19:30	11.58	56.48	6/24/2022 21:14	11.51	-0.50	6/23/2022 19:17	11.80	60.29	6/23/2022 20:34	8.45
6/23/2022 19:31	11.59	56.08	6/24/2022 21:15	11.55	-0.49	6/23/2022 19:18	11.78	60.26	6/23/2022 20:35	8.42
6/23/2022 19:32	11.55	55.83	6/24/2022 21:16	11.51	-0.47	6/23/2022 19:19	11.78	60.14	6/23/2022 20:36	8.47
6/23/2022 19:33	11.61	55.58	6/24/2022 21:17	11.52	-0.38	6/23/2022 19:20	11.77	60.10	6/23/2022 20:37	8.43
6/23/2022 19:34	11.59	55.26	6/24/2022 21:18	11.56	-0.53	6/23/2022 19:21	11.79	60.06	6/23/2022 20:38	8.45
6/23/2022 19:35	11.59	54.98	6/24/2022 21:19	11.55	-0.47	6/23/2022 19:22	11.80	60.01	6/23/2022 20:39	8.44
6/23/2022 19:36	11.61	54.74	6/24/2022 21:20	11.55	-0.42	6/23/2022 19:23	11.77	59.93	6/23/2022 20:40	8.39
6/23/2022 19:37	11.53	54.48	6/24/2022 21:21	11.52	-0.49	6/23/2022 19:24	11.79	59.89	6/23/2022 20:41	8.45
6/23/2022 19:38	11.59	54.24	6/24/2022 21:22	11.55	-0.37	6/23/2022 19:25	11.82	59.80	6/23/2022 20:42	8.43
6/23/2022 19:39	11.58	53.93	6/24/2022 21:23	11.53	-0.48	6/23/2022 19:26	11.79	59.74	6/23/2022 20:43	8.44
6/23/2022 19:40	11.59	53.63	6/24/2022 21:24	11.51	-0.48	6/23/2022 19:27	11.81	59.68	6/23/2022 20:44	8.39
6/23/2022 19:41	11.60	53.41	6/24/2022 21:25	11.54	-0.45	6/23/2022 19:28	11.80	59.58	6/23/2022 20:45	8.37
6/23/2022 19:42	11.57	53.04	6/24/2022 21:26	11.54	-0.48	6/23/2022 19:29	11.79	59.50	6/23/2022 20:46	8.48
6/23/2022 19:43	11.58	52.87	6/24/2022 21:27	11.53	-0.51	6/23/2022 19:30	11.79	59.49	6/23/2022 20:47	8.42
6/23/2022 19:44	11.60	52.53	6/24/2022 21:28	11.54	-0.40	6/23/2022 19:31	11.77	59.40	6/23/2022 20:48	8.36
6/23/2022 19:45	11.58	52.28	6/24/2022 21:29	11.56	-0.37	6/23/2022 19:32	11.80	59.35	6/23/2022 20:49	8.42
6/23/2022 19:46	11.60	52.03	6/24/2022 21:30	11.55	-0.45	6/23/2022 19:33	11.81	59.30	6/23/2022 20:50	8.38
6/23/2022 19:47	11.60	51.79	6/24/2022 21:31	11.54	-0.47	6/23/2022 19:34	11.79	59.24	6/23/2022 20:51	8.37
6/23/2022 19:48	11.61	51.64	6/24/2022 21:32	11.55	-0.36	6/23/2022 19:35	11.80	59.19	6/23/2022 20:52	8.35
6/23/2022 19:49	11.58	51.35	6/24/2022 21:33	11.52	-0.44	6/23/2022 19:36	11.81	59.13	6/23/2022 20:53	8.38
6/23/2022 19:50	11.59	51.04	6/24/2022 21:34	11.53	-0.39	6/23/2022 19:37	11.78	59.09	6/23/2022 20:54	8.34
6/23/2022 19:51	11.55	50.77	6/24/2022 21:35	11.53	-0.52	6/23/2022 19:38	11.79	58.99	6/23/2022 20:55	8.39
6/23/2022 19:52	11.61	50.60	6/24/2022 21:36	11.54	-0.52	6/23/2022 19:39	11.80	58.93	6/23/2022 20:56	8.36
6/23/2022 19:53	11.61	50.35	6/24/2022 21:37	11.53	-0.35	6/23/2022 19:40	11.77	58.84	6/23/2022 20:57	8.31
6/23/2022 19:54	11.58	50.19	6/24/2022 21:38	11.53	-0.45	6/23/2022 19:41	11.80	58.80	6/23/2022 20:58	8.33
6/23/2022 19:55	11.57	49.82	6/24/2022 21:39	11.55	-0.49	6/23/2022 19:42	11.78	58.73	6/23/2022 20:59	8.24
6/23/2022 19:56	11.58	49.59	6/24/2022 21:40	11.54	-0.43	6/23/2022 19:43	11.81	58.62	6/23/2022 21:00	8.27
6/23/2022 19:57	11.60	49.47	6/24/2022 21:41	11.53	-0.43	6/23/2022 19:44	11.78	58.60	6/23/2022 21:01	8.25
6/23/2022 19:58	11.59	49.16	6/24/2022 21:42	11.54	-0.43	6/23/2022 19:45	11.79	58.53	6/23/2022 21:02	8.23
6/23/2022 19:59	11.59	49.01	6/24/2022 21:43	11.53	-0.44	6/23/2022 19:46	11.80	58.49	6/23/2022 21:03	8.32
6/23/2022 20:00	11.61	48.70	6/24/2022 21:44	11.54	-0.32	6/23/2022 19:47	11.78	58.40	6/23/2022 21:04	8.28
6/23/2022 20:01	11.60	48.45	6/24/2022 21:45	11.53	-0.46	6/23/2022 19:48	11.79	58.31	6/23/2022 21:05	8.27
6/23/2022 20:02	11.59	48.13	6/24/2022 21:46	11.51	-0.47	6/23/2022 19:49	11.80	58.32	6/23/2022 21:06	8.25
6/23/2022 20:03	11.59	47.94	6/24/2022 21:47	11.55	-0.52	6/23/2022 19:50	11.80	58.20	6/23/2022 21:07	8.29
6/23/2022 20:04	11.60	47.80	6/24/2022 21:48	11.53	-0.40	6/23/2022 19:51	11.79	58.16	6/23/2022 21:08	8.26
6/23/2022 20:05	11.58	47.58	6/24/2022 21:49	11.53	-0.44	6/23/2022 19:52	11.79	58.10	6/23/2022 21:09	8.28
6/23/2022 20:06	11.59	47.36	6/24/2022 21:50	11.55	-0.51	6/23/2022 19:53	11.80	58.04	6/23/2022 21:10	8.27
6/23/2022 20:07	11.56	47.11	6/24/2022 21:51	11.55	-0.48	6/23/2022 19:54	11.78	57.98	6/23/2022 21:11	8.23
6/23/2022 20:08	11.59	46.88	6/24/2022 21:52	11.55	-0.43	6/23/2022 19:55	11.79	57.92	6/23/2022 21:12	8.24
6/23/2022 20:09	11.58	46.63	6/24/2022 21:53	11.55	-0.51	6/23/2022 19:56	11.80	57.87	6/23/2022 21:13	8.25
6/23/2022 20:10	11.61	46.58	6/24/2022 21:54	11.53	-0.42	6/23/2022 19:57	11.78	57.78	6/23/2022 21:14	8.22
6/23/2022 20:11	11.58	46.21	6/24/2022 21:55	11.53	-0.40	6/23/2022 19:58	11.80	57.75	6/23/2022 21:15	8.25
6/23/2022 20:12	11.60	45.99	6/24/2022 21:56	11.54	-0.46	6/23/2022 19:59	11.81	57.64	6/23/2022 21:16	8.23
6/23/2022 20:13	11.59	45.82	6/24/2022 21:57	11.52	-0.49	6/23/2022 20:00	11.79	57.61	6/23/2022 21:17	8.19
6/23/2022 20:14	11.60	45.59	6/24/2022 21:58	11.56	-0.48	6/23/2022 20:01	11.79	57.56	6/23/2022 21:18	8.22
6/23/2022 20:15	11.58	45.33	6/24/2022 21:59	11.53	-0.50	6/23/2022 20:02	11.79	57.44	6/23/2022 21:19	8.22
6/23/2022 20:16	11.58	45.20	6/24/2022 22:00	11.54	-0.51	6/23/2022 20:03	11.77	57.38	6/23/2022 21:20	8.20
6/23/2022 20:17	11.55	45.03	6/24/2022 22:01	11.53	-0.45	6/23/2022 20:04	11.79	57.29	6/23/2022 21:21	8.19
6/23/2022 20:18	11.55	44.75	6/24/2022 22:02	11.54	-0.56	6/23/2022 20:05	11.80	57.32	6/23/2022 21:22	8.22
6/23/2022 20:19	11.58	44.49	6/24/2022 22:03	11.54	-0.41	6/23/2022 20:06	11.80	57.18	6/23/2022 21:23	8.13
6/23/2022 20:20	11.58	44.36	6/24/2022 22:04	11.49	-0.44	6/23/2022 20:07	11.77	57.14	6/23/2022 21:24	8.18
6/23/2022 20:21	11.57	44.19	6/24/2022 22:05	11.53	-0.48	6/23/2022 20:08	11.80	57.07	6/23/2022 21:25	8.15
6/23/2022 20:22	11.59	43.94	6/24/2022 22:06	11.54	-0.41	6/23/2022 20:09	11.79	56.96	6/23/2022 21:26	8.14
6/23/2022 20:23	11.57	43.75	6/24/2022 22:07	11.54	-0.48	6/23/2022 20:10	11.81	56.95	6/23/2022 21:27	8.19
6/23/2022 20:24	11.59	43.59	6/24/2022 22:08	11.53	-0.48	6/23/2022 20:11	11.80	56.87	6/23/2022 21:28	8.13
6/23/2022 20:25	11.59	43.37	6/24/2022 22:09	11.54	-0.36	6/23/2022 20:12	11.77	56.83	6/23/2022 21:29	8.16
6/23/2022 20:26	11.57	43.20	6/24/2022 22:10	11.55	-0.51	6/23/2022 20:13	11.80	56.74	6/23/2022 21:30	8.15
6/23/2022 20:27	11.55	43.02	6/24/2022 22:11	11.55	-0.43	6/23/2022 20:14	11.79	56.73	6/23/2022 21:31	8.14
6/23/2022 20:28	11.58	42.76	6/24/2022 22:12	11.53	-0.39	6/23/2022 20:15	11.80	56.60	6/23/2022 21:32	8.13
6/23/2022 20:29	11.59	42.63	6/24/2022 22:13	11.54	-0.46	6/23/2022 20:16	11.78	56.59	6/23/2022 21:33	8.11
6/23/2022 20:30	11.60	42.34	6/24/2022 22:14	11.51	-0.57	6/23/2022 20:17	11.78	56.46	6/23/2022 21:34	8.11

6/23/2022 20:31	11.57	42.20	6/24/2022 22:15	11.53	-0.43	6/23/2022 20:18	11.79	56.41	6/23/2022 21:35	8.18
6/23/2022 20:32	11.57	42.06	6/24/2022 22:16	11.54	-0.52	6/23/2022 20:19	11.77	56.33	6/23/2022 21:36	8.15
6/23/2022 20:33	11.59	41.86	6/24/2022 22:17	11.52	-0.46	6/23/2022 20:20	11.79	56.27	6/23/2022 21:37	8.13
6/23/2022 20:34	11.58	41.67	6/24/2022 22:18	11.53	-0.35	6/23/2022 20:21	11.81	56.22	6/23/2022 21:38	8.12
6/23/2022 20:35	11.58	41.46	6/24/2022 22:19	11.53	-0.41	6/23/2022 20:22	11.78	56.17	6/23/2022 21:39	8.09
6/23/2022 20:36	11.59	41.25	6/24/2022 22:20	11.55	-0.55	6/23/2022 20:23	11.77	56.09	6/23/2022 21:40	8.03
6/23/2022 20:37	11.58	40.98	6/24/2022 22:21	11.55	-0.45	6/23/2022 20:24	11.79	56.02	6/23/2022 21:41	8.08
6/23/2022 20:38	11.58	40.83	6/24/2022 22:22	11.53	-0.51	6/23/2022 20:25	11.79	55.95	6/23/2022 21:42	8.10
6/23/2022 20:39	11.58	40.73	6/24/2022 22:23	11.51	-0.49	6/23/2022 20:26	11.79	55.88	6/23/2022 21:43	8.08
6/23/2022 20:40	11.56	40.61	6/24/2022 22:24	11.57	-0.51	6/23/2022 20:27	11.76	55.83	6/23/2022 21:44	8.07
6/23/2022 20:41	11.58	40.28	6/24/2022 22:25	11.54	-0.43	6/23/2022 20:28	11.77	55.76	6/23/2022 21:45	8.10
6/23/2022 20:42	11.57	40.21	6/24/2022 22:26	11.55	-0.58	6/23/2022 20:29	11.79	55.69	6/23/2022 21:46	8.01
6/23/2022 20:43	11.57	40.01	6/24/2022 22:27	11.54	-0.51	6/23/2022 20:30	11.76	55.61	6/23/2022 21:47	8.02
6/23/2022 20:44	11.58	39.82	6/24/2022 22:28	11.52	-0.40	6/23/2022 20:31	11.81	55.55	6/23/2022 21:48	8.04
6/23/2022 20:45	11.57	39.64	6/24/2022 22:29	11.55	-0.41	6/23/2022 20:32	11.77	55.49	6/23/2022 21:49	8.03
6/23/2022 20:46	11.59	39.48	6/24/2022 22:30	11.55	-0.37	6/23/2022 20:33	11.79	55.44	6/23/2022 21:50	8.04
6/23/2022 20:47	11.59	39.33	6/24/2022 22:31	11.53	-0.46	6/23/2022 20:34	11.79	55.37	6/23/2022 21:51	8.01
6/23/2022 20:48	11.60	39.26	6/24/2022 22:32	11.55	-0.50	6/23/2022 20:35	11.79	55.28	6/23/2022 21:52	8.02
6/23/2022 20:49	11.59	39.07	6/24/2022 22:33	11.53	-0.37	6/23/2022 20:36	11.79	55.24	6/23/2022 21:53	7.95
6/23/2022 20:50	11.57	38.87	6/24/2022 22:34	11.54	-0.42	6/23/2022 20:37	11.81	55.17	6/23/2022 21:54	7.97
6/23/2022 20:51	11.59	38.64	6/24/2022 22:35	11.55	-0.48	6/23/2022 20:38	11.80	55.10	6/23/2022 21:55	7.96
6/23/2022 20:52	11.58	38.50	6/24/2022 22:36	11.55	-0.48	6/23/2022 20:39	11.80	55.07	6/23/2022 21:56	7.99
6/23/2022 20:53	11.58	38.36	6/24/2022 22:37	11.54	-0.40	6/23/2022 20:40	11.79	55.01	6/23/2022 21:57	7.96
6/23/2022 20:54	11.56	38.21	6/24/2022 22:38	11.55	-0.46	6/23/2022 20:41	11.77	54.87	6/23/2022 21:58	7.98
6/23/2022 20:55	11.59	38.07	6/24/2022 22:39	11.54	-0.52	6/23/2022 20:42	11.78	54.92	6/23/2022 21:59	7.98
6/23/2022 20:56	11.57	37.77	6/24/2022 22:40	11.56	-0.52	6/23/2022 20:43	11.79	54.83	6/23/2022 22:00	7.94
6/23/2022 20:57	11.57	37.62	6/24/2022 22:41	11.56	-0.40	6/23/2022 20:44	11.76	54.78	6/23/2022 22:01	7.96
6/23/2022 20:58	11.59	37.51	6/24/2022 22:42	11.53	-0.38	6/23/2022 20:45	11.78	54.67	6/23/2022 22:02	8.04
6/23/2022 20:59	11.59	37.39	6/24/2022 22:43	11.57	-0.43	6/23/2022 20:46	11.78	54.65	6/23/2022 22:03	7.94
6/23/2022 21:00	11.58	37.14	6/24/2022 22:44	11.56	-0.57	6/23/2022 20:47	11.79	54.57	6/23/2022 22:04	7.92
6/23/2022 21:01	11.56	37.03	6/24/2022 22:45	11.52	-0.44	6/23/2022 20:48	11.80	54.50	6/23/2022 22:05	7.95
6/23/2022 21:02	11.57	36.83	6/24/2022 22:46	11.54	-0.40	6/23/2022 20:49	11.78	54.40	6/23/2022 22:06	7.94
6/23/2022 21:03	11.59	36.64	6/24/2022 22:47	11.53	-0.40	6/23/2022 20:50	11.78	54.40	6/23/2022 22:07	7.91
6/23/2022 21:04	11.58	36.44	6/24/2022 22:48	11.56	-0.47	6/23/2022 20:51	11.80	54.34	6/23/2022 22:08	7.85
6/23/2022 21:05	11.60	36.42	6/24/2022 22:49	11.52	-0.57	6/23/2022 20:52	11.79	54.28	6/23/2022 22:09	7.85
6/23/2022 21:06	11.60	36.20	6/24/2022 22:50	11.50	-0.47	6/23/2022 20:53	11.79	54.25	6/23/2022 22:10	7.88
6/23/2022 21:07	11.58	36.12	6/24/2022 22:51	11.54	-0.44	6/23/2022 20:54	11.77	54.18	6/23/2022 22:11	7.89
6/23/2022 21:08	11.57	35.94	6/24/2022 22:52	11.53	-0.39	6/23/2022 20:55	11.81	54.14	6/23/2022 22:12	7.96
6/23/2022 21:09	11.59	35.75	6/24/2022 22:53	11.54	-0.43	6/23/2022 20:56	11.78	54.03	6/23/2022 22:13	7.88
6/23/2022 21:10	11.58	35.62	6/24/2022 22:54	11.54	-0.48	6/23/2022 20:57	11.78	54.01	6/23/2022 22:14	7.83
6/23/2022 21:11	11.60	35.45	6/24/2022 22:55	11.55	-0.50	6/23/2022 20:58	11.79	53.90	6/23/2022 22:15	7.84
6/23/2022 21:12	11.54	35.28	6/24/2022 22:56	11.51	-0.48	6/23/2022 20:59	11.80	53.85	6/23/2022 22:16	7.83
6/23/2022 21:13	11.59	35.19	6/24/2022 22:57	11.54	-0.47	6/23/2022 21:00	11.75	53.80	6/23/2022 22:17	7.84
6/23/2022 21:14	11.55	34.98	6/24/2022 22:58	11.51	-0.38	6/23/2022 21:01	11.79	53.74	6/23/2022 22:18	7.81
6/23/2022 21:15	11.59	34.87	6/24/2022 22:59	11.51	-0.36	6/23/2022 21:02	11.77	53.68	6/23/2022 22:19	7.79
6/23/2022 21:16	11.58	34.64	6/24/2022 23:00	11.54	-0.50	6/23/2022 21:03	11.78	53.59	6/23/2022 22:20	7.82
6/23/2022 21:17	11.56	34.55	6/24/2022 23:01	11.51	-0.45	6/23/2022 21:04	11.78	53.57	6/23/2022 22:21	7.83
6/23/2022 21:18	11.56	34.45	6/24/2022 23:02	11.54	-0.44	6/23/2022 21:05	11.80	53.55	6/23/2022 22:22	7.85
6/23/2022 21:19	11.57	34.28	6/24/2022 23:03	11.55	-0.51	6/23/2022 21:06	11.78	53.47	6/23/2022 22:23	7.85
6/23/2022 21:20	11.54	34.13	6/24/2022 23:04	11.52	-0.48	6/23/2022 21:07	11.79	53.40	6/23/2022 22:24	7.78
6/23/2022 21:21	11.58	33.99	6/24/2022 23:05	11.54	-0.45	6/23/2022 21:08	11.78	53.35	6/23/2022 22:25	7.76
6/23/2022 21:22	11.58	33.85	6/24/2022 23:06	11.54	-0.44	6/23/2022 21:09	11.78	53.25	6/23/2022 22:26	7.77
6/23/2022 21:23	11.56	33.71	6/24/2022 23:07	11.52	-0.49	6/23/2022 21:10	11.77	53.22	6/23/2022 22:27	7.80
6/23/2022 21:24	11.56	33.58	6/24/2022 23:08	11.55	-0.42	6/23/2022 21:11	11.76	53.16	6/23/2022 22:28	7.81
6/23/2022 21:25	11.57	33.45	6/24/2022 23:09	11.52	-0.48	6/23/2022 21:12	11.80	53.14	6/23/2022 22:29	7.80
6/23/2022 21:26	11.59	33.33	6/24/2022 23:10	11.54	-0.38	6/23/2022 21:13	11.79	53.09	6/23/2022 22:30	7.77
6/23/2022 21:27	11.60	33.18	6/24/2022 23:11	11.56	-0.38	6/23/2022 21:14	11.80	52.96	6/23/2022 22:31	7.73
6/23/2022 21:28	11.58	32.98	6/24/2022 23:12	11.55	-0.42	6/23/2022 21:15	11.80	52.92	6/23/2022 22:32	7.74
6/23/2022 21:29	11.55	32.89	6/24/2022 23:13	11.54	-0.40	6/23/2022 21:16	11.77	52.93	6/23/2022 22:33	7.74
6/23/2022 21:30	11.58	32.77	6/24/2022 23:14	11.53	-0.51	6/23/2022 21:17	11.77	52.86	6/23/2022 22:34	7.76
6/23/2022 21:31	11.58	32.56	6/24/2022 23:15	11.54	-0.46	6/23/2022 21:18	11.78	52.77	6/23/2022 22:35	7.68
6/23/2022 21:32	11.56	32.42	6/24/2022 23:16	11.55	-0.32	6/23/2022 21:19	11.78	52.74	6/23/2022 22:36	7.66
6/23/2022 21:33	11.55	32.34	6/24/2022 23:17	11.52	-0.43	6/23/2022 21:20	11.76	52.63	6/23/2022 22:37	7.69
6/23/2022 21:34	11.55	32.14	6/24/2022 23:18	11.52	-0.37	6/23/2022 21:21	11.76	52.65	6/23/2022 22:38	7.74
6/23/2022 21:35	11.56	31.95	6/24/2022 23:19	11.52	-0.47	6/23/2022 21:22	11.78	52.59	6/23/2022 22:39	7.67
6/23/2022 21:36	11.60	31.88	6/24/2022 23:20	11.52	-0.42	6/23/2022 21:23	11.78	52.51	6/23/2022 22:40	7.70
6/23/2022 21:37	11.58	31.81	6/24/2022 23:21	11.53	-0.43	6/23/2022 21:24	11.81	52.45	6/23/2022 22:41	7.66
6/23/2022 21:38	11.55	31.62	6/24/2022 23:22	11.55	-0.42	6/23/2022 21:25	11.79	52.41	6/23/2022 22:42	7.72
6/23/2022 21:39	11.59	31.53	6/24/2022 23:23	11.54	-0.50	6/23/2022 21:26	11.78	52.35	6/23/2022 22:43	7.70
6/23/2022 21:40	11.56	31.37	6/24/2022 23:24	11.56	-0.46	6/23/2022 21:27	11.77	52.25	6/23/2022 22:44	7.61
6/23/2022 21:41	11.53	31.19	6/24/2022 23:25	11.53	-0.47	6/23/2022 21:28	11.76	52.20	6/23/2022 22:45	7.65
6/23/2022 21:42	11.58	31.13	6/24/2022 23:26	11.55	-0.42	6/23/2022 21:29	11.78	52.16	6/23/2022 22:46	7.70
6/23/2022 21:43	11.58	31.01	6/24/2022 23:27	11.54	-0.47	6/23/2022 21:30	11.80	52.10	6/23/2022 22:47	7.63
6/23/2022 21:44	11.54	30.92	6/24/2022 23:28	11.52	-0.43	6/23/2022 21:31	11.76	52.06	6/23/2022 22:48	7.69
6/23/2022 21:45	11.55	30.73	6/24/2022 23:29	11.54	-0.46	6/23/2022 21:32	11.80	51.96	6/23/2022 22:49	7.66
6/23/2022 21:46	11.57	30.67	6/24/2022 23:30	11.54	-0.51	6/23/2022 21:33	11.79	51.93	6/23/2022 22:50	7.64
6/23/2022 21:47	11.58	30.47	6/24/2022 23:31	11.53	-0.46	6/23/2022 21:34	11.77	51.91	6/23/2022 22:51	7.65
6/23/2022 21:48	11.57	30.33	6/24/2022 23:32	11.57	-0.45	6/23/2022 21:35	11.79	51.80	6/23/2022 22:52	7.68
6/23/2022 21:49	11.57	30.20	6/24/2022 23:33	11.55	-0.54	6/23/2022 21:36	11.76	51.76	6/23/2022 22:53	7.58
6/23/2022 21:50	11.55	30.01	6/24/2022 23:34	11.53	-0.37	6/23/2022 21:37	11.78	51.71	6/23/2022 22:54	7.61
6/23/2022 21:51	11.57	29.97	6/24/2022 23:35	11.53	-0.54	6/23/2022 21:38	11.78	51.65	6/23/2022 22:55	7.64
6/23/2022 21:52	11.59	29.82	6/24/2022 23:36	11.55	-0.33	6/23/2022 21:39	11.79	51.59	6/23/2022 22:56	7.60
6/23/2022 21:53	11.58	29.75	6/24/2022 23:37	11.52	-0.42	6/23/2022 21:40	11.81	51.53	6/23/2022 22:57	7.57
6/23/2022 21:54	11.57	29.56	6/24/2022 23:38	11.54	-0.45	6/23/2022 21:41	11.78	51.46	6/23/2022 22:58	7.59
6/23/2022 21:55	11.56	29.55	6/24/2022 23:39	11.54	-0.38	6/23/2022 21:42	11.79	51.40	6/23/2022 22:59	7.59
6/23/2022 21:56	11.53	29.37	6/24/2022 23:40	11.54	-0.40	6/23/2022 21:43	11.76	51.38	6/23/2022 23:00	7.53
6/23/2022 21:57	11.57	29.23	6/24/2022 23:41	11.53	-0.44	6/23/2022 21:44	11.77	51.28	6/23/2022 23:01	7.59
6/23/2022 21:58	11.58	29.03	6/24/2022 23:42	11.53	-0.40	6/23/2022 21:45	11.75	51.21	6/23/2022 23:02	7.50

6/23/2022 21:59	11.60	28.97	6/24/2022 23:43	11.54	-0.42	6/23/2022 21:46	11.78	51.15	6/23/2022 23:03	7.59
6/23/2022 22:00	11.58	28.87	6/24/2022 23:44	11.54	-0.47	6/23/2022 21:47	11.77	51.13	6/23/2022 23:04	7.52
6/23/2022 22:01	11.57	28.73	6/24/2022 23:45	11.54	-0.56	6/23/2022 21:48	11.78	51.08	6/23/2022 23:05	7.54
6/23/2022 22:02	11.56	28.60	6/24/2022 23:46	11.55	-0.39	6/23/2022 21:49	11.78	51.03	6/23/2022 23:06	7.56
6/23/2022 22:03	11.55	28.48	6/24/2022 23:47	11.55	-0.52	6/23/2022 21:50	11.79	50.96	6/23/2022 23:07	7.59
6/23/2022 22:04	11.55	28.34	6/24/2022 23:48	11.55	-0.40	6/23/2022 21:51	11.79	50.86	6/23/2022 23:08	7.57
6/23/2022 22:05	11.55	28.22	6/24/2022 23:49	11.54	-0.42	6/23/2022 21:52	11.81	50.79	6/23/2022 23:09	7.53
6/23/2022 22:06	11.57	28.17	6/24/2022 23:50	11.53	-0.47	6/23/2022 21:53	11.77	50.76	6/23/2022 23:10	7.50
6/23/2022 22:07	11.57	28.01	6/24/2022 23:51	11.52	-0.45	6/23/2022 21:54	11.83	50.69	6/23/2022 23:11	7.47
6/23/2022 22:08	11.54	27.89	6/24/2022 23:52	11.53	-0.50	6/23/2022 21:55	11.79	50.62	6/23/2022 23:12	7.54
6/23/2022 22:09	11.57	27.83	6/24/2022 23:53	11.52	-0.43	6/23/2022 21:56	11.78	50.60	6/23/2022 23:13	7.52
6/23/2022 22:10	11.55	27.63	6/24/2022 23:54	11.51	-0.56	6/23/2022 21:57	11.79	50.54	6/23/2022 23:14	7.52
6/23/2022 22:11	11.56	27.45	6/24/2022 23:55	11.54	-0.40	6/23/2022 21:58	11.76	50.49	6/23/2022 23:15	7.45
6/23/2022 22:12	11.57	27.48	6/24/2022 23:56	11.56	-0.48	6/23/2022 21:59	11.79	50.41	6/23/2022 23:16	7.46
6/23/2022 22:13	11.57	27.24	6/24/2022 23:57	11.54	-0.49	6/23/2022 22:00	11.78	50.37	6/23/2022 23:17	7.46
6/23/2022 22:14	11.56	27.16	6/24/2022 23:58	11.54	-0.48	6/23/2022 22:01	11.79	50.29	6/23/2022 23:18	7.46
6/23/2022 22:15	11.57	27.07	6/24/2022 23:59	11.52	-0.49	6/23/2022 22:02	11.80	50.24	6/23/2022 23:19	7.38
6/23/2022 22:16	11.59	26.92	6/25/2022 0:00	11.54	-0.42	6/23/2022 22:03	11.77	50.15	6/23/2022 23:20	7.50
6/23/2022 22:17	11.57	26.89	6/25/2022 0:01	11.53	-0.48	6/23/2022 22:04	11.79	50.11	6/23/2022 23:21	7.43
6/23/2022 22:18	11.54	26.75	6/25/2022 0:02	11.54	-0.43	6/23/2022 22:05	11.75	50.06	6/23/2022 23:22	7.48
6/23/2022 22:19	11.58	26.62	6/25/2022 0:03	11.53	-0.44	6/23/2022 22:06	11.77	49.99	6/23/2022 23:23	7.43
6/23/2022 22:20	11.56	26.57	6/25/2022 0:04	11.51	-0.46	6/23/2022 22:07	11.78	49.89	6/23/2022 23:24	7.45
6/23/2022 22:21	11.59	26.38	6/25/2022 0:05	11.54	-0.52	6/23/2022 22:08	11.79	49.87	6/23/2022 23:25	7.44
6/23/2022 22:22	11.55	26.30	6/25/2022 0:06	11.53	-0.55	6/23/2022 22:09	11.80	49.78	6/23/2022 23:26	7.41
6/23/2022 22:23	11.60	26.20	6/25/2022 0:07	11.53	-0.45	6/23/2022 22:10	11.76	49.74	6/23/2022 23:27	7.42
6/23/2022 22:24	11.57	26.08	6/25/2022 0:08	11.52	-0.49	6/23/2022 22:11	11.77	49.64	6/23/2022 23:28	7.46
6/23/2022 22:25	11.56	25.96	6/25/2022 0:09	11.54	-0.47	6/23/2022 22:12	11.79	49.60	6/23/2022 23:29	7.45
6/23/2022 22:26	11.56	25.77	6/25/2022 0:10	11.53	-0.47	6/23/2022 22:13	11.78	49.54	6/23/2022 23:30	7.39
6/23/2022 22:27	11.58	25.77	6/25/2022 0:11	11.51	-0.41	6/23/2022 22:14	11.80	49.49	6/23/2022 23:31	7.37
6/23/2022 22:28	11.53	25.58	6/25/2022 0:12	11.52	-0.47	6/23/2022 22:15	11.79	49.43	6/23/2022 23:32	7.39
6/23/2022 22:29	11.56	25.46	6/25/2022 0:13	11.56	-0.36	6/23/2022 22:16	11.76	49.35	6/23/2022 23:33	7.38
6/23/2022 22:30	11.57	25.37	6/25/2022 0:14	11.52	-0.56	6/23/2022 22:17	11.77	49.30	6/23/2022 23:34	7.42
6/23/2022 22:31	11.54	25.31	6/25/2022 0:15	11.55	-0.44	6/23/2022 22:18	11.79	49.25	6/23/2022 23:35	7.39
6/23/2022 22:32	11.55	25.24	6/25/2022 0:16	11.55	-0.54	6/23/2022 22:19	11.77	49.17	6/23/2022 23:36	7.40
6/23/2022 22:33	11.55	25.10	6/25/2022 0:17	11.55	-0.39	6/23/2022 22:20	11.78	49.11	6/23/2022 23:37	7.39
6/23/2022 22:34	11.56	24.93	6/25/2022 0:18	11.54	-0.54	6/23/2022 22:21	11.76	49.06	6/23/2022 23:38	7.33
6/23/2022 22:35	11.56	24.86	6/25/2022 0:19	11.55	-0.46	6/23/2022 22:22	11.77	48.99	6/23/2022 23:39	7.36
6/23/2022 22:36	11.57	24.80	6/25/2022 0:20	11.54	-0.51	6/23/2022 22:23	11.78	48.92	6/23/2022 23:40	7.38
6/23/2022 22:37	11.53	24.65	6/25/2022 0:21	11.54	-0.45	6/23/2022 22:24	11.77	48.86	6/23/2022 23:41	7.34
6/23/2022 22:38	11.56	24.46	6/25/2022 0:22	11.53	-0.42	6/23/2022 22:25	11.77	48.79	6/23/2022 23:42	7.38
6/23/2022 22:39	11.53	24.46	6/25/2022 0:23	11.54	-0.33	6/23/2022 22:26	11.76	48.72	6/23/2022 23:43	7.33
6/23/2022 22:40	11.52	24.37	6/25/2022 0:24	11.51	-0.40	6/23/2022 22:27	11.80	48.69	6/23/2022 23:44	7.28
6/23/2022 22:41	11.56	24.19	6/25/2022 0:25	11.52	-0.48	6/23/2022 22:28	11.79	48.62	6/23/2022 23:45	7.34
6/23/2022 22:42	11.57	24.07	6/25/2022 0:26	11.53	-0.42	6/23/2022 22:29	11.77	48.55	6/23/2022 23:46	7.34
6/23/2022 22:43	11.57	24.00	6/25/2022 0:27	11.53	-0.52	6/23/2022 22:30	11.78	48.49	6/23/2022 23:47	7.31
6/23/2022 22:44	11.56	23.92	6/25/2022 0:28	11.54	-0.48	6/23/2022 22:31	11.75	48.42	6/23/2022 23:48	7.30
6/23/2022 22:45	11.53	23.77	6/25/2022 0:29	11.54	-0.44	6/23/2022 22:32	11.79	48.37	6/23/2022 23:49	7.33
6/23/2022 22:46	11.56	23.69	6/25/2022 0:30	11.52	-0.53	6/23/2022 22:33	11.77	48.31	6/23/2022 23:50	7.26
6/23/2022 22:47	11.57	23.57	6/25/2022 0:31	11.52	-0.49	6/23/2022 22:34	11.78	48.23	6/23/2022 23:51	7.24
6/23/2022 22:48	11.54	23.57	6/25/2022 0:32	11.54	-0.40	6/23/2022 22:35	11.79	48.22	6/23/2022 23:52	7.27
6/23/2022 22:49	11.55	23.44	6/25/2022 0:33	11.54	-0.48	6/23/2022 22:36	11.77	48.16	6/23/2022 23:53	7.32
6/23/2022 22:50	11.57	23.22	6/25/2022 0:34	11.52	-0.43	6/23/2022 22:37	11.80	48.08	6/23/2022 23:54	7.24
6/23/2022 22:51	11.56	23.18	6/25/2022 0:35	11.54	-0.47	6/23/2022 22:38	11.78	48.02	6/23/2022 23:55	7.27
6/23/2022 22:52	11.54	23.12	6/25/2022 0:36	11.55	-0.45	6/23/2022 22:39	11.76	47.96	6/23/2022 23:56	7.25
6/23/2022 22:53	11.55	23.10	6/25/2022 0:37	11.52	-0.40	6/23/2022 22:40	11.77	47.89	6/23/2022 23:57	7.28
6/23/2022 22:54	11.58	22.94	6/25/2022 0:38	11.53	-0.58	6/23/2022 22:41	11.79	47.86	6/23/2022 23:58	7.23
6/23/2022 22:55	11.55	22.85	6/25/2022 0:39	11.54	-0.46	6/23/2022 22:42	11.76	47.82	6/23/2022 23:59	7.22
6/23/2022 22:56	11.57	22.67	6/25/2022 0:40	11.54	-0.53	6/23/2022 22:43	11.76	47.73	6/24/2022 0:00	7.28
6/23/2022 22:57	11.57	22.56	6/25/2022 0:41	11.55	-0.36	6/23/2022 22:44	11.80	47.64	6/24/2022 0:01	7.22
6/23/2022 22:58	11.54	22.56	6/25/2022 0:42	11.53	-0.38	6/23/2022 22:45	11.78	47.60	6/24/2022 0:02	7.26
6/23/2022 22:59	11.56	22.49	6/25/2022 0:43	11.52	-0.46	6/23/2022 22:46	11.78	47.58	6/24/2022 0:03	7.20
6/23/2022 23:00	11.56	22.38	6/25/2022 0:44	11.51	-0.44	6/23/2022 22:47	11.79	47.52	6/24/2022 0:04	7.22
6/23/2022 23:01	11.55	22.31	6/25/2022 0:45	11.53	-0.44	6/23/2022 22:48	11.77	47.46	6/24/2022 0:05	7.20
6/23/2022 23:02	11.56	22.10	6/25/2022 0:46	11.54	-0.55	6/23/2022 22:49	11.78	47.40	6/24/2022 0:06	7.28
6/23/2022 23:03	11.55	22.01	6/25/2022 0:47	11.54	-0.48	6/23/2022 22:50	11.77	47.36	6/24/2022 0:07	7.23
6/23/2022 23:04	11.60	21.87	6/25/2022 0:48	11.53	-0.55	6/23/2022 22:51	11.79	47.28	6/24/2022 0:08	7.20
6/23/2022 23:05	11.54	21.89	6/25/2022 0:49	11.50	-0.46	6/23/2022 22:52	11.77	47.24	6/24/2022 0:09	7.16
6/23/2022 23:06	11.55	21.82	6/25/2022 0:50	11.53	-0.54	6/23/2022 22:53	11.77	47.16	6/24/2022 0:10	7.16
6/23/2022 23:07	11.58	21.68	6/25/2022 0:51	11.54	-0.40	6/23/2022 22:54	11.78	47.18	6/24/2022 0:11	7.15
6/23/2022 23:08	11.55	21.53	6/25/2022 0:52	11.54	-0.47	6/23/2022 22:55	11.76	47.07	6/24/2022 0:12	7.18
6/23/2022 23:09	11.58	21.43	6/25/2022 0:53	11.54	-0.42	6/23/2022 22:56	11.79	47.03	6/24/2022 0:13	7.15
6/23/2022 23:10	11.55	21.37	6/25/2022 0:54	11.56	-0.43	6/23/2022 22:57	11.77	46.95	6/24/2022 0:14	7.19
6/23/2022 23:11	11.54	21.32	6/25/2022 0:55	11.56	-0.47	6/23/2022 22:58	11.79	46.90	6/24/2022 0:15	7.15
6/23/2022 23:12	11.55	21.17	6/25/2022 0:56	11.54	-0.46	6/23/2022 22:59	11.76	46.86	6/24/2022 0:16	7.13
6/23/2022 23:13	11.54	21.06	6/25/2022 0:57	11.53	-0.40	6/23/2022 23:00	11.77	46.79	6/24/2022 0:17	7.13
6/23/2022 23:14	11.57	21.09	6/25/2022 0:58	11.51	-0.41	6/23/2022 23:01	11.76	46.78	6/24/2022 0:18	7.13
6/23/2022 23:15	11.56	20.94	6/25/2022 0:59	11.56	-0.38	6/23/2022 23:02	11.77	46.72	6/24/2022 0:19	7.16
6/23/2022 23:16	11.54	20.82	6/25/2022 1:00	11.54	-0.49	6/23/2022 23:03	11.77	46.70	6/24/2022 0:20	7.14
6/23/2022 23:17	11.56	20.80	6/25/2022 1:01	11.52	-0.40	6/23/2022 23:04	11.78	46.56	6/24/2022 0:21	7.16
6/23/2022 23:18	11.56	20.63	6/25/2022 1:02	11.52	-0.47	6/23/2022 23:05	11.76	46.52	6/24/2022 0:22	7.16
6/23/2022 23:19	11.53	20.62	6/25/2022 1:03	11.53	-0.44	6/23/2022 23:06	11.76	46.50	6/24/2022 0:23	7.12
6/23/2022 23:20	11.54	20.46	6/25/2022 1:04	11.51	-0.39	6/23/2022 23:07	11.78	46.41	6/24/2022 0:24	7.14
6/23/2022 23:21	11.56	20.38	6/25/2022 1:05	11.55	-0.60	6/23/2022 23:08	11.77	46.38	6/24/2022 0:25	7.12
6/23/2022 23:22	11.56	20.31	6/25/2022 1:06	11.56	-0.47	6/23/2022 23:09	11.77	46.31	6/24/2022 0:26	7.10
6/23/2022 23:23	11.56	20.21	6/25/2022 1:07	11.55	-0.37	6/23/2022 23:10	11.79	46.24	6/24/2022 0:27	7.10
6/23/2022 23:24	11.52	20.11	6/25/2022 1:08	11.55	-0.43	6/23/2022 23:11	11.77	46.21	6/24/2022 0:28	7.11
6/23/2022 23:25	11.58	20.00	6/25/2022 1:09	11.53	-0.42	6/23/2022 23:12	11.75	46.14	6/24/2022 0:29	7.11
6/23/2022 23:26	11.51	19.91	6/25/2022 1:10	11.53	-0.42	6/23/2022 23:13	11.75	46.14	6/24/2022 0:30	7.09

6/23/2022 23:27	11.57	19.86	6/25/2022 1:11	11.55	-0.42	6/23/2022 23:14	11.78	46.04	6/24/2022 0:31	7.08
6/23/2022 23:28	11.54	19.69	6/25/2022 1:12	11.51	-0.46	6/23/2022 23:15	11.74	45.98	6/24/2022 0:32	7.06
6/23/2022 23:29	11.55	19.62	6/25/2022 1:13	11.53	-0.50	6/23/2022 23:16	11.76	45.96	6/24/2022 0:33	7.12
6/23/2022 23:30	11.54	19.59	6/25/2022 1:14	11.57	-0.45	6/23/2022 23:17	11.79	45.90	6/24/2022 0:34	7.08
6/23/2022 23:31	11.55	19.42	6/25/2022 1:15	11.54	-0.54	6/23/2022 23:18	11.76	45.86	6/24/2022 0:35	7.05
6/23/2022 23:32	11.58	19.33	6/25/2022 1:16	11.52	-0.45	6/23/2022 23:19	11.77	45.80	6/24/2022 0:36	7.03
6/23/2022 23:33	11.53	19.28	6/25/2022 1:17	11.54	-0.44	6/23/2022 23:20	11.77	45.77	6/24/2022 0:37	7.06
6/23/2022 23:34	11.56	19.16	6/25/2022 1:18	11.50	-0.41	6/23/2022 23:21	11.77	45.70	6/24/2022 0:38	7.07
6/23/2022 23:35	11.55	19.14	6/25/2022 1:19	11.55	-0.43	6/23/2022 23:22	11.77	45.61	6/24/2022 0:39	7.05
6/23/2022 23:36	11.56	19.04	6/25/2022 1:20	11.56	-0.43	6/23/2022 23:23	11.76	45.59	6/24/2022 0:40	7.05
6/23/2022 23:37	11.56	18.94	6/25/2022 1:21	11.54	-0.42	6/23/2022 23:24	11.77	45.55	6/24/2022 0:41	7.07
6/23/2022 23:38	11.54	18.83	6/25/2022 1:22	11.54	-0.46	6/23/2022 23:25	11.78	45.49	6/24/2022 0:42	7.04
6/23/2022 23:39	11.54	18.80	6/25/2022 1:23	11.54	-0.50	6/23/2022 23:26	11.79	45.43	6/24/2022 0:43	7.00
6/23/2022 23:40	11.52	18.65	6/25/2022 1:24	11.55	-0.43	6/23/2022 23:27	11.77	45.39	6/24/2022 0:44	7.04
6/23/2022 23:41	11.56	18.64	6/25/2022 1:25	11.51	-0.44	6/23/2022 23:28	11.76	45.35	6/24/2022 0:45	6.96
6/23/2022 23:42	11.55	18.47	6/25/2022 1:26	11.54	-0.43	6/23/2022 23:29	11.77	45.24	6/24/2022 0:46	7.04
6/23/2022 23:43	11.53	18.40	6/25/2022 1:27	11.53	-0.39	6/23/2022 23:30	11.77	45.20	6/24/2022 0:47	7.00
6/23/2022 23:44	11.55	18.34	6/25/2022 1:28	11.54	-0.40	6/23/2022 23:31	11.79	45.14	6/24/2022 0:48	6.99
6/23/2022 23:45	11.55	18.25	6/25/2022 1:29	11.55	-0.42	6/23/2022 23:32	11.78	45.09	6/24/2022 0:49	6.99
6/23/2022 23:46	11.56	18.19	6/25/2022 1:30	11.53	-0.40	6/23/2022 23:33	11.76	45.02	6/24/2022 0:50	6.97
6/23/2022 23:47	11.53	18.09	6/25/2022 1:31	11.54	-0.37	6/23/2022 23:34	11.76	45.00	6/24/2022 0:51	6.95
6/23/2022 23:48	11.56	17.94	6/25/2022 1:32	11.55	-0.38	6/23/2022 23:35	11.80	44.95	6/24/2022 0:52	6.98
6/23/2022 23:49	11.57	17.96	6/25/2022 1:33	11.53	-0.37	6/23/2022 23:36	11.77	44.85	6/24/2022 0:53	6.99
6/23/2022 23:50	11.55	17.83	6/25/2022 1:34	11.53	-0.46	6/23/2022 23:37	11.77	44.82	6/24/2022 0:54	6.96
6/23/2022 23:51	11.56	17.79	6/25/2022 1:35	11.52	-0.42	6/23/2022 23:38	11.74	44.81	6/24/2022 0:55	6.98
6/23/2022 23:52	11.57	17.66	6/25/2022 1:36	11.53	-0.48	6/23/2022 23:39	11.78	44.78	6/24/2022 0:56	6.98
6/23/2022 23:53	11.53	17.58	6/25/2022 1:37	11.53	-0.49	6/23/2022 23:40	11.77	44.63	6/24/2022 0:57	6.91
6/23/2022 23:54	11.55	17.49	6/25/2022 1:38	11.52	-0.47	6/23/2022 23:41	11.73	44.57	6/24/2022 0:58	7.01
6/23/2022 23:55	11.57	17.48	6/25/2022 1:39	11.53	-0.46	6/23/2022 23:42	11.77	44.56	6/24/2022 0:59	6.98
6/23/2022 23:56	11.54	17.37	6/25/2022 1:40	11.53	-0.34	6/23/2022 23:43	11.73	44.51	6/24/2022 1:00	6.93
6/23/2022 23:57	11.54	17.29	6/25/2022 1:41	11.53	-0.40	6/23/2022 23:44	11.76	44.46	6/24/2022 1:01	6.93
6/23/2022 23:58	11.56	17.15	6/25/2022 1:42	11.56	-0.40	6/23/2022 23:45	11.76	44.41	6/24/2022 1:02	6.98
6/23/2022 23:59	11.56	17.09	6/25/2022 1:43	11.55	-0.49	6/23/2022 23:46	11.78	44.33	6/24/2022 1:03	6.93
6/24/2022 0:00	11.57	16.98	6/25/2022 1:44	11.55	-0.37	6/23/2022 23:47	11.77	44.29	6/24/2022 1:04	6.93
6/24/2022 0:01	11.55	16.91	6/25/2022 1:45	11.52	-0.43	6/23/2022 23:48	11.76	44.22	6/24/2022 1:05	6.91
6/24/2022 0:02	11.55	16.82	6/25/2022 1:46	11.54	-0.45	6/23/2022 23:49	11.78	44.21	6/24/2022 1:06	6.91
6/24/2022 0:03	11.54	16.84	6/25/2022 1:47	11.55	-0.47	6/23/2022 23:50	11.76	44.18	6/24/2022 1:07	6.87
6/24/2022 0:04	11.55	16.73	6/25/2022 1:48	11.53	-0.49	6/23/2022 23:51	11.76	44.10	6/24/2022 1:08	6.86
6/24/2022 0:05	11.54	16.56	6/25/2022 1:49	11.53	-0.54	6/23/2022 23:52	11.76	44.10	6/24/2022 1:09	6.85
6/24/2022 0:06	11.57	16.48	6/25/2022 1:50	11.55	-0.37	6/23/2022 23:53	11.76	44.00	6/24/2022 1:10	6.88
6/24/2022 0:07	11.52	16.36	6/25/2022 1:51	11.54	-0.41	6/23/2022 23:54	11.76	43.98	6/24/2022 1:11	6.94
6/24/2022 0:08	11.56	16.36	6/25/2022 1:52	11.53	-0.39	6/23/2022 23:55	11.77	43.89	6/24/2022 1:12	6.88
6/24/2022 0:09	11.56	16.31	6/25/2022 1:53	11.53	-0.47	6/23/2022 23:56	11.76	43.85	6/24/2022 1:13	6.88
6/24/2022 0:10	11.54	16.28	6/25/2022 1:54	11.54	-0.55	6/23/2022 23:57	11.76	43.84	6/24/2022 1:14	6.89
6/24/2022 0:11	11.54	16.19	6/25/2022 1:55	11.55	-0.42	6/23/2022 23:58	11.76	43.78	6/24/2022 1:15	6.86
6/24/2022 0:12	11.55	16.03	6/25/2022 1:56	11.52	-0.50	6/23/2022 23:59	11.75	43.70	6/24/2022 1:16	6.86
6/24/2022 0:13	11.56	16.02	6/25/2022 1:57	11.52	-0.40	6/24/2022 0:00	11.77	43.66	6/24/2022 1:17	6.79
6/24/2022 0:14	11.53	15.85	6/25/2022 1:58	11.56	-0.46	6/24/2022 0:01	11.75	43.63	6/24/2022 1:18	6.87
6/24/2022 0:15	11.56	15.78	6/25/2022 1:59	11.53	-0.49	6/24/2022 0:02	11.75	43.56	6/24/2022 1:19	6.82
6/24/2022 0:16	11.57	15.81	6/25/2022 2:00	11.52	-0.46	6/24/2022 0:03	11.76	43.50	6/24/2022 1:20	6.87
6/24/2022 0:17	11.52	15.64	6/25/2022 2:01	11.53	-0.46	6/24/2022 0:04	11.77	43.43	6/24/2022 1:21	6.87
6/24/2022 0:18	11.54	15.58	6/25/2022 2:02	11.51	-0.40	6/24/2022 0:05	11.76	43.41	6/24/2022 1:22	6.84
6/24/2022 0:19	11.55	15.49	6/25/2022 2:03	11.53	-0.51	6/24/2022 0:06	11.75	43.36	6/24/2022 1:23	6.85
6/24/2022 0:20	11.55	15.44	6/25/2022 2:04	11.55	-0.46	6/24/2022 0:07	11.74	43.32	6/24/2022 1:24	6.81
6/24/2022 0:21	11.54	15.34	6/25/2022 2:05	11.53	-0.46	6/24/2022 0:08	11.77	43.29	6/24/2022 1:25	6.79
6/24/2022 0:22	11.56	15.30	6/25/2022 2:06	11.53	-0.52	6/24/2022 0:09	11.76	43.24	6/24/2022 1:26	6.82
6/24/2022 0:23	11.53	15.19	6/25/2022 2:07	11.53	-0.46	6/24/2022 0:10	11.77	43.15	6/24/2022 1:27	6.78
6/24/2022 0:24	11.56	15.10	6/25/2022 2:08	11.52	-0.48	6/24/2022 0:11	11.75	43.10	6/24/2022 1:28	6.80
6/24/2022 0:25	11.54	15.06	6/25/2022 2:09	11.55	-0.41	6/24/2022 0:12	11.77	43.08	6/24/2022 1:29	6.81
6/24/2022 0:26	11.55	14.96	6/25/2022 2:10	11.51	-0.46	6/24/2022 0:13	11.79	43.04	6/24/2022 1:30	6.80
6/24/2022 0:27	11.58	14.88	6/25/2022 2:11	11.52	-0.49	6/24/2022 0:14	11.77	42.99	6/24/2022 1:31	6.75
6/24/2022 0:28	11.57	14.86	6/25/2022 2:12	11.54	-0.40	6/24/2022 0:15	11.75	42.90	6/24/2022 1:32	6.82
6/24/2022 0:29	11.55	14.76	6/25/2022 2:13	11.52	-0.33	6/24/2022 0:16	11.77	42.87	6/24/2022 1:33	6.80
6/24/2022 0:30	11.56	14.71	6/25/2022 2:14	11.55	-0.49	6/24/2022 0:17	11.76	42.87	6/24/2022 1:34	6.78
6/24/2022 0:31	11.53	14.59	6/25/2022 2:15	11.51	-0.58	6/24/2022 0:18	11.77	42.76	6/24/2022 1:35	6.80
6/24/2022 0:32	11.51	14.50	6/25/2022 2:16	11.54	-0.36	6/24/2022 0:19	11.76	42.75	6/24/2022 1:36	6.76
6/24/2022 0:33	11.53	14.46	6/25/2022 2:17	11.52	-0.36	6/24/2022 0:20	11.76	42.67	6/24/2022 1:37	6.72
6/24/2022 0:34	11.54	14.42	6/25/2022 2:18	11.56	-0.52	6/24/2022 0:21	11.80	42.66	6/24/2022 1:38	6.80
6/24/2022 0:35	11.56	14.29	6/25/2022 2:19	11.53	-0.47	6/24/2022 0:22	11.77	42.59	6/24/2022 1:39	6.68
6/24/2022 0:36	11.55	14.22	6/25/2022 2:20	11.56	-0.51	6/24/2022 0:23	11.76	42.55	6/24/2022 1:40	6.73
6/24/2022 0:37	11.54	14.12	6/25/2022 2:21	11.54	-0.46	6/24/2022 0:24	11.77	42.48	6/24/2022 1:41	6.79
6/24/2022 0:38	11.56	14.15	6/25/2022 2:22	11.55	-0.41	6/24/2022 0:25	11.78	42.44	6/24/2022 1:42	6.72
6/24/2022 0:39	11.53	14.04	6/25/2022 2:23	11.53	-0.44	6/24/2022 0:26	11.79	42.38	6/24/2022 1:43	6.73
6/24/2022 0:40	11.54	13.99	6/25/2022 2:24	11.54	-0.46	6/24/2022 0:27	11.77	42.36	6/24/2022 1:44	6.75
6/24/2022 0:41	11.54	13.87	6/25/2022 2:25	11.52	-0.37	6/24/2022 0:28	11.76	42.31	6/24/2022 1:45	6.69
6/24/2022 0:42	11.54	13.70	6/25/2022 2:26	11.55	-0.42	6/24/2022 0:29	11.78	42.29	6/24/2022 1:46	6.70
6/24/2022 0:43	11.54	13.68	6/25/2022 2:27	11.53	-0.56	6/24/2022 0:30	11.78	42.18	6/24/2022 1:47	6.73
6/24/2022 0:44	11.56	13.65	6/25/2022 2:28	11.56	-0.44	6/24/2022 0:31	11.77	42.15	6/24/2022 1:48	6.68
6/24/2022 0:45	11.55	13.55	6/25/2022 2:29	11.52	-0.39	6/24/2022 0:32	11.78	42.12	6/24/2022 1:49	6.74
6/24/2022 0:46	11.54	13.48	6/25/2022 2:30	11.54	-0.45	6/24/2022 0:33	11.76	42.04	6/24/2022 1:50	6.69
6/24/2022 0:47	11.55	13.46	6/25/2022 2:31	11.55	-0.36	6/24/2022 0:34	11.79	42.01	6/24/2022 1:51	6.67
6/24/2022 0:48	11.52	13.33	6/25/2022 2:32	11.54	-0.45	6/24/2022 0:35	11.77	41.95	6/24/2022 1:52	6.70
6/24/2022 0:49	11.55	13.24	6/25/2022 2:33	11.56	-0.41	6/24/2022 0:36	11.75	41.93	6/24/2022 1:53	6.69
6/24/2022 0:50	11.55	13.26	6/25/2022 2:34	11.55	-0.44	6/24/2022 0:37	11.76	41.87	6/24/2022 1:54	6.68
6/24/2022 0:51	11.57	13.17	6/25/2022 2:35	11.54	-0.42	6/24/2022 0:38	11.75	41.84	6/24/2022 1:55	6.70
6/24/2022 0:52	11.51	13.09	6/25/2022 2:36	11.54	-0.53	6/24/2022 0:39	11.77	41.80	6/24/2022 1:56	6.68
6/24/2022 0:53	11.54	12.98	6/25/2022 2:37	11.55	-0.30	6/24/2022 0:40	11.78	41.73	6/24/2022 1:57	6.69
6/24/2022 0:54	11.55	12.96	6/25/2022 2:38	11.54	-0.52	6/24/2022 0:41	11.73	41.69	6/24/2022 1:58	6.68

6/24/2022 0:55	11.54	12.87	6/25/2022 2:39	11.55	-0.43	6/24/2022 0:42	11.76	41.64	6/24/2022 1:59	6.68
6/24/2022 0:56	11.56	12.82	6/25/2022 2:40	11.53	-0.47	6/24/2022 0:43	11.75	41.62	6/24/2022 2:00	6.70
6/24/2022 0:57	11.55	12.69	6/25/2022 2:41	11.54	-0.40	6/24/2022 0:44	11.75	41.52	6/24/2022 2:01	6.65
6/24/2022 0:58	11.54	12.66	6/25/2022 2:42	11.56	-0.48	6/24/2022 0:45	11.77	41.53	6/24/2022 2:02	6.68
6/24/2022 0:59	11.55	12.56	6/25/2022 2:43	11.55	-0.43	6/24/2022 0:46	11.75	41.50	6/24/2022 2:03	6.66
6/24/2022 1:00	11.55	12.60	6/25/2022 2:44	11.52	-0.52	6/24/2022 0:47	11.78	41.42	6/24/2022 2:04	6.66
6/24/2022 1:01	11.55	12.45	6/25/2022 2:45	11.54	-0.42	6/24/2022 0:48	11.77	41.36	6/24/2022 2:05	6.65
6/24/2022 1:02	11.55	12.33	6/25/2022 2:46	11.54	-0.48	6/24/2022 0:49	11.76	41.33	6/24/2022 2:06	6.66
6/24/2022 1:03	11.54	12.26	6/25/2022 2:47	11.52	-0.46	6/24/2022 0:50	11.76	41.28	6/24/2022 2:07	6.64
6/24/2022 1:04	11.54	12.21	6/25/2022 2:48	11.53	-0.49	6/24/2022 0:51	11.76	41.23	6/24/2022 2:08	6.60
6/24/2022 1:05	11.56	12.21	6/25/2022 2:49	11.52	-0.40	6/24/2022 0:52	11.78	41.14	6/24/2022 2:09	6.60
6/24/2022 1:06	11.57	12.13	6/25/2022 2:50	11.53	-0.55	6/24/2022 0:53	11.77	41.16	6/24/2022 2:10	6.56
6/24/2022 1:07	11.54	11.99	6/25/2022 2:51	11.54	-0.47	6/24/2022 0:54	11.77	41.09	6/24/2022 2:11	6.64
6/24/2022 1:08	11.54	12.06	6/25/2022 2:52	11.53	-0.48	6/24/2022 0:55	11.77	41.03	6/24/2022 2:12	6.62
6/24/2022 1:09	11.54	11.92	6/25/2022 2:53	11.54	-0.38	6/24/2022 0:56	11.78	40.99	6/24/2022 2:13	6.59
6/24/2022 1:10	11.55	11.81	6/25/2022 2:54	11.56	-0.45	6/24/2022 0:57	11.77	40.94	6/24/2022 2:14	6.56
6/24/2022 1:11	11.56	11.71	6/25/2022 2:55	11.56	-0.46	6/24/2022 0:58	11.74	40.89	6/24/2022 2:15	6.60
6/24/2022 1:12	11.55	11.69	6/25/2022 2:56	11.55	-0.44	6/24/2022 0:59	11.76	40.83	6/24/2022 2:16	6.62
6/24/2022 1:13	11.56	11.64	6/25/2022 2:57	11.55	-0.47	6/24/2022 1:00	11.77	40.78	6/24/2022 2:17	6.60
6/24/2022 1:14	11.54	11.53	6/25/2022 2:58	11.54	-0.47	6/24/2022 1:01	11.74	40.75	6/24/2022 2:18	6.57
6/24/2022 1:15	11.54	11.53	6/25/2022 2:59	11.52	-0.40	6/24/2022 1:02	11.78	40.75	6/24/2022 2:19	6.58
6/24/2022 1:16	11.52	11.38	6/25/2022 3:00	11.53	-0.48	6/24/2022 1:03	11.79	40.65	6/24/2022 2:20	6.54
6/24/2022 1:17	11.53	11.37	6/25/2022 3:01	11.55	-0.43	6/24/2022 1:04	11.74	40.65	6/24/2022 2:21	6.54
6/24/2022 1:18	11.54	11.20	6/25/2022 3:02	11.52	-0.48	6/24/2022 1:05	11.78	40.57	6/24/2022 2:22	6.59
6/24/2022 1:19	11.57	11.20	6/25/2022 3:03	11.55	-0.37	6/24/2022 1:06	11.76	40.53	6/24/2022 2:23	6.55
6/24/2022 1:20	11.55	11.22	6/25/2022 3:04	11.55	-0.51	6/24/2022 1:07	11.77	40.49	6/24/2022 2:24	6.56
6/24/2022 1:21	11.54	11.09	6/25/2022 3:05	11.52	-0.49	6/24/2022 1:08	11.76	40.48	6/24/2022 2:25	6.55
6/24/2022 1:22	11.54	11.13	6/25/2022 3:06	11.54	-0.39	6/24/2022 1:09	11.77	40.38	6/24/2022 2:26	6.54
6/24/2022 1:23	11.53	10.98	6/25/2022 3:07	11.55	-0.47	6/24/2022 1:10	11.78	40.33	6/24/2022 2:27	6.49
6/24/2022 1:24	11.51	10.84	6/25/2022 3:08	11.51	-0.55	6/24/2022 1:11	11.77	40.29	6/24/2022 2:28	6.48
6/24/2022 1:25	11.54	10.82	6/25/2022 3:09	11.54	-0.53	6/24/2022 1:12	11.76	40.25	6/24/2022 2:29	6.52
6/24/2022 1:26	11.57	10.85	6/25/2022 3:10	11.51	-0.38	6/24/2022 1:13	11.76	40.21	6/24/2022 2:30	6.51
6/24/2022 1:27	11.56	10.69	6/25/2022 3:11	11.54	-0.54	6/24/2022 1:14	11.74	40.19	6/24/2022 2:31	6.52
6/24/2022 1:28	11.54	10.62	6/25/2022 3:12	11.52	-0.42	6/24/2022 1:15	11.75	40.15	6/24/2022 2:32	6.48
6/24/2022 1:29	11.55	10.70	6/25/2022 3:13	11.55	-0.37	6/24/2022 1:16	11.78	40.10	6/24/2022 2:33	6.50
6/24/2022 1:30	11.53	10.44	6/25/2022 3:14	11.55	-0.38	6/24/2022 1:17	11.74	40.03	6/24/2022 2:34	6.51
6/24/2022 1:31	11.54	10.49	6/25/2022 3:15	11.55	-0.45	6/24/2022 1:18	11.75	40.00	6/24/2022 2:35	6.52
6/24/2022 1:32	11.54	10.46	6/25/2022 3:16	11.55	-0.44	6/24/2022 1:19	11.76	39.91	6/24/2022 2:36	6.49
6/24/2022 1:33	11.57	10.27	6/25/2022 3:17	11.55	-0.50	6/24/2022 1:20	11.77	39.89	6/24/2022 2:37	6.44
6/24/2022 1:34	11.59	10.27	6/25/2022 3:18	11.57	-0.51	6/24/2022 1:21	11.74	39.86	6/24/2022 2:38	6.51
6/24/2022 1:35	11.55	10.17	6/25/2022 3:19	11.53	-0.41	6/24/2022 1:22	11.75	39.79	6/24/2022 2:39	6.46
6/24/2022 1:36	11.54	10.13	6/25/2022 3:20	11.54	-0.40	6/24/2022 1:23	11.77	39.77	6/24/2022 2:40	6.46
6/24/2022 1:37	11.55	10.16	6/25/2022 3:21	11.54	-0.46	6/24/2022 1:24	11.77	39.71	6/24/2022 2:41	6.45
6/24/2022 1:38	11.54	9.95	6/25/2022 3:22	11.56	-0.51	6/24/2022 1:25	11.74	39.66	6/24/2022 2:42	6.47
6/24/2022 1:39	11.54	9.96	6/25/2022 3:23	11.52	-0.47	6/24/2022 1:26	11.76	39.61	6/24/2022 2:43	6.46
6/24/2022 1:40	11.52	9.94	6/25/2022 3:24	11.54	-0.44	6/24/2022 1:27	11.75	39.57	6/24/2022 2:44	6.50
6/24/2022 1:41	11.55	9.86	6/25/2022 3:25	11.54	-0.44	6/24/2022 1:28	11.74	39.50	6/24/2022 2:45	6.51
6/24/2022 1:42	11.56	9.80	6/25/2022 3:26	11.55	-0.48	6/24/2022 1:29	11.74	39.48	6/24/2022 2:46	6.42
6/24/2022 1:43	11.56	9.73	6/25/2022 3:27	11.54	-0.48	6/24/2022 1:30	11.77	39.39	6/24/2022 2:47	6.49
6/24/2022 1:44	11.54	9.56	6/25/2022 3:28	11.54	-0.49	6/24/2022 1:31	11.74	39.37	6/24/2022 2:48	6.40
6/24/2022 1:45	11.55	9.52	6/25/2022 3:29	11.54	-0.44	6/24/2022 1:32	11.75	39.33	6/24/2022 2:49	6.43
6/24/2022 1:46	11.55	9.61	6/25/2022 3:30	11.54	-0.37	6/24/2022 1:33	11.75	39.28	6/24/2022 2:50	6.41
6/24/2022 1:47	11.52	9.49	6/25/2022 3:31	11.53	-0.46	6/24/2022 1:34	11.75	39.24	6/24/2022 2:51	6.48
6/24/2022 1:48	11.55	9.37	6/25/2022 3:32	11.53	-0.47	6/24/2022 1:35	11.77	39.21	6/24/2022 2:52	6.40
6/24/2022 1:49	11.56	9.31	6/25/2022 3:33	11.53	-0.53	6/24/2022 1:36	11.75	39.16	6/24/2022 2:53	6.42
6/24/2022 1:50	11.53	9.31	6/25/2022 3:34	11.54	-0.40	6/24/2022 1:37	11.77	39.13	6/24/2022 2:54	6.43
6/24/2022 1:51	11.53	9.19	6/25/2022 3:35	11.53	-0.35	6/24/2022 1:38	11.77	39.08	6/24/2022 2:55	6.40
6/24/2022 1:52	11.51	9.19	6/25/2022 3:36	11.54	-0.38	6/24/2022 1:39	11.76	39.02	6/24/2022 2:56	6.41
6/24/2022 1:53	11.52	9.08	6/25/2022 3:37	11.55	-0.51	6/24/2022 1:40	11.75	38.95	6/24/2022 2:57	6.42
6/24/2022 1:54	11.53	9.15	6/25/2022 3:38	11.53	-0.42	6/24/2022 1:41	11.76	38.91	6/24/2022 2:58	6.39
6/24/2022 1:55	11.52	8.98	6/25/2022 3:39	11.53	-0.48	6/24/2022 1:42	11.78	38.86	6/24/2022 2:59	6.40
6/24/2022 1:56	11.55	8.90	6/25/2022 3:40	11.54	-0.41	6/24/2022 1:43	11.76	38.84	6/24/2022 3:00	6.40
6/24/2022 1:57	11.54	8.90	6/25/2022 3:41	11.53	-0.42	6/24/2022 1:44	11.76	38.76	6/24/2022 3:01	6.36
6/24/2022 1:58	11.54	8.79	6/25/2022 3:42	11.53	-0.49	6/24/2022 1:45	11.75	38.71	6/24/2022 3:02	6.38
6/24/2022 1:59	11.54	8.75	6/25/2022 3:43	11.55	-0.46	6/24/2022 1:46	11.74	38.73	6/24/2022 3:03	6.38
6/24/2022 2:00	11.54	8.62	6/25/2022 3:44	11.54	-0.43	6/24/2022 1:47	11.75	38.69	6/24/2022 3:04	6.34
6/24/2022 2:01	11.54	8.60	6/25/2022 3:45	11.53	-0.51	6/24/2022 1:48	11.76	38.62	6/24/2022 3:05	6.34
6/24/2022 2:02	11.54	8.52	6/25/2022 3:46	11.54	-0.41	6/24/2022 1:49	11.75	38.55	6/24/2022 3:06	6.32
6/24/2022 2:03	11.52	8.61	6/25/2022 3:47	11.54	-0.55	6/24/2022 1:50	11.75	38.56	6/24/2022 3:07	6.37
6/24/2022 2:04	11.52	8.45	6/25/2022 3:48	11.53	-0.43	6/24/2022 1:51	11.74	38.47	6/24/2022 3:08	6.34
6/24/2022 2:05	11.55	8.36	6/25/2022 3:49	11.55	-0.49	6/24/2022 1:52	11.75	38.41	6/24/2022 3:09	6.29
6/24/2022 2:06	11.56	8.33	6/25/2022 3:50	11.52	-0.37	6/24/2022 1:53	11.77	38.32	6/24/2022 3:10	6.36
6/24/2022 2:07	11.58	8.26	6/25/2022 3:51	11.54	-0.38	6/24/2022 1:54	11.76	38.32	6/24/2022 3:11	6.33
6/24/2022 2:08	11.56	8.13	6/25/2022 3:52	11.54	-0.39	6/24/2022 1:55	11.73	38.34	6/24/2022 3:12	6.38
6/24/2022 2:09	11.56	8.22	6/25/2022 3:53	11.54	-0.43	6/24/2022 1:56	11.77	38.25	6/24/2022 3:13	6.36
6/24/2022 2:10	11.55	8.11	6/25/2022 3:54	11.56	-0.39	6/24/2022 1:57	11.72	38.23	6/24/2022 3:14	6.28
6/24/2022 2:11	11.53	8.09	6/25/2022 3:55	11.54	-0.45	6/24/2022 1:58	11.74	38.17	6/24/2022 3:15	6.31
6/24/2022 2:12	11.55	7.99	6/25/2022 3:56	11.51	-0.41	6/24/2022 1:59	11.77	38.10	6/24/2022 3:16	6.30
6/24/2022 2:13	11.56	7.87	6/25/2022 3:57	11.55	-0.51	6/24/2022 2:00	11.74	38.08	6/24/2022 3:17	6.32
6/24/2022 2:14	11.56	7.91	6/25/2022 3:58	11.54	-0.49	6/24/2022 2:01	11.76	38.01	6/24/2022 3:18	6.30
6/24/2022 2:15	11.57	7.88	6/25/2022 3:59	11.53	-0.47	6/24/2022 2:02	11.77	37.99	6/24/2022 3:19	6.28
6/24/2022 2:16	11.55	7.80	6/25/2022 4:00	11.54	-0.36	6/24/2022 2:03	11.75	37.97	6/24/2022 3:20	6.30
6/24/2022 2:17	11.54	7.72	6/25/2022 4:01	11.56	-0.37	6/24/2022 2:04	11.73	37.91	6/24/2022 3:21	6.27
6/24/2022 2:18	11.52	7.71	6/25/2022 4:02	11.51	-0.40	6/24/2022 2:05	11.75	37.88	6/24/2022 3:22	6.28
6/24/2022 2:19	11.53	7.69	6/25/2022 4:03	11.55	-0.43	6/24/2022 2:06	11.74	37.86	6/24/2022 3:23	6.30
6/24/2022 2:20	11.53	7.58	6/25/2022 4:04	11.55	-0.38	6/24/2022 2:07	11.74	37.79	6/24/2022 3:24	6.22
6/24/2022 2:21	11.54	7.47	6/25/2022 4:05	11.54	-0.50	6/24/2022 2:08	11.75	37.77	6/24/2022 3:25	6.25
6/24/2022 2:22	11.57	7.41	6/25/2022 4:06	11.54	-0.41	6/24/2022 2:09	11.76	37.71	6/24/2022 3:26	6.29

6/24/2022 2:23	11.54	7.39	6/25/2022 4:07	11.53	-0.40	6/24/2022 2:10	11.75	37.64	6/24/2022 3:27	6.26
6/24/2022 2:24	11.55	7.23	6/25/2022 4:08	11.53	-0.56	6/24/2022 2:11	11.78	37.64	6/24/2022 3:28	6.27
6/24/2022 2:25	11.55	7.30	6/25/2022 4:09	11.55	-0.54	6/24/2022 2:12	11.75	37.55	6/24/2022 3:29	6.24
6/24/2022 2:26	11.53	7.21	6/25/2022 4:10	11.51	-0.40	6/24/2022 2:13	11.74	37.53	6/24/2022 3:30	6.21
6/24/2022 2:27	11.54	7.23	6/25/2022 4:11	11.53	-0.46	6/24/2022 2:14	11.75	37.47	6/24/2022 3:31	6.26
6/24/2022 2:28	11.54	7.09	6/25/2022 4:12	11.55	-0.52	6/24/2022 2:15	11.76	37.43	6/24/2022 3:32	6.24
6/24/2022 2:29	11.55	7.01	6/25/2022 4:13	11.54	-0.53	6/24/2022 2:16	11.77	37.38	6/24/2022 3:33	6.29
6/24/2022 2:30	11.56	7.07	6/25/2022 4:14	11.53	-0.45	6/24/2022 2:17	11.75	37.38	6/24/2022 3:34	6.17
6/24/2022 2:31	11.54	6.97	6/25/2022 4:15	11.52	-0.52	6/24/2022 2:18	11.74	37.30	6/24/2022 3:35	6.27
6/24/2022 2:32	11.54	6.90	6/25/2022 4:16	11.53	-0.51	6/24/2022 2:19	11.76	37.30	6/24/2022 3:36	6.20
6/24/2022 2:33	11.54	6.79	6/25/2022 4:17	11.54	-0.44	6/24/2022 2:20	11.76	37.25	6/24/2022 3:37	6.21
6/24/2022 2:34	11.55	6.81	6/25/2022 4:18	11.53	-0.47	6/24/2022 2:21	11.74	37.17	6/24/2022 3:38	6.20
6/24/2022 2:35	11.57	6.72	6/25/2022 4:19	11.51	-0.47	6/24/2022 2:22	11.77	37.14	6/24/2022 3:39	6.20
6/24/2022 2:36	11.53	6.72	6/25/2022 4:20	11.54	-0.47	6/24/2022 2:23	11.76	37.13	6/24/2022 3:40	6.19
6/24/2022 2:37	11.52	6.56	6/25/2022 4:21	11.53	-0.40	6/24/2022 2:24	11.77	37.03	6/24/2022 3:41	6.17
6/24/2022 2:38	11.53	6.50	6/25/2022 4:22	11.53	-0.50	6/24/2022 2:25	11.76	37.00	6/24/2022 3:42	6.22
6/24/2022 2:39	11.53	6.55	6/25/2022 4:23	11.56	-0.48	6/24/2022 2:26	11.75	37.00	6/24/2022 3:43	6.14
6/24/2022 2:40	11.52	6.51	6/25/2022 4:24	11.55	-0.50	6/24/2022 2:27	11.74	36.95	6/24/2022 3:44	6.20
6/24/2022 2:41	11.54	6.44	6/25/2022 4:25	11.53	-0.56	6/24/2022 2:28	11.77	36.89	6/24/2022 3:45	6.12
6/24/2022 2:42	11.55	6.42	6/25/2022 4:26	11.54	-0.45	6/24/2022 2:29	11.75	36.86	6/24/2022 3:46	6.16
6/24/2022 2:43	11.56	6.32	6/25/2022 4:27	11.54	-0.41	6/24/2022 2:30	11.74	36.80	6/24/2022 3:47	6.12
6/24/2022 2:44	11.57	6.20	6/25/2022 4:28	11.55	-0.53	6/24/2022 2:31	11.77	36.80	6/24/2022 3:48	6.16
6/24/2022 2:45	11.55	6.17	6/25/2022 4:29	11.55	-0.48	6/24/2022 2:32	11.78	36.72	6/24/2022 3:49	6.16
6/24/2022 2:46	11.56	6.14	6/25/2022 4:30	11.53	-0.57	6/24/2022 2:33	11.75	36.73	6/24/2022 3:50	6.16
6/24/2022 2:47	11.55	6.15	6/25/2022 4:31	11.53	-0.46	6/24/2022 2:34	11.76	36.67	6/24/2022 3:51	6.12
6/24/2022 2:48	11.57	6.07	6/25/2022 4:32	11.54	-0.50	6/24/2022 2:35	11.73	36.66	6/24/2022 3:52	6.09
6/24/2022 2:49	11.54	5.99	6/25/2022 4:33	11.55	-0.51	6/24/2022 2:36	11.77	36.61	6/24/2022 3:53	6.17
6/24/2022 2:50	11.54	5.96	6/25/2022 4:34	11.56	-0.39	6/24/2022 2:37	11.73	36.55	6/24/2022 3:54	6.14
6/24/2022 2:51	11.55	5.94	6/25/2022 4:35	11.55	-0.41	6/24/2022 2:38	11.77	36.50	6/24/2022 3:55	6.13
6/24/2022 2:52	11.52	5.90	6/25/2022 4:36	11.53	-0.38	6/24/2022 2:39	11.78	36.47	6/24/2022 3:56	6.16
6/24/2022 2:53	11.54	5.75	6/25/2022 4:37	11.56	-0.34	6/24/2022 2:40	11.74	36.42	6/24/2022 3:57	6.08
6/24/2022 2:54	11.55	5.68	6/25/2022 4:38	11.53	-0.46	6/24/2022 2:41	11.78	36.41	6/24/2022 3:58	6.11
6/24/2022 2:55	11.53	5.69	6/25/2022 4:39	11.55	-0.48	6/24/2022 2:42	11.73	36.35	6/24/2022 3:59	6.13
6/24/2022 2:56	11.53	5.63	6/25/2022 4:40	11.53	-0.36	6/24/2022 2:43	11.73	36.35	6/24/2022 4:00	6.14
6/24/2022 2:57	11.57	5.55	6/25/2022 4:41	11.56	-0.54	6/24/2022 2:44	11.76	36.31	6/24/2022 4:01	6.15
6/24/2022 2:58	11.54	5.45	6/25/2022 4:42	11.54	-0.34	6/24/2022 2:45	11.77	36.22	6/24/2022 4:02	6.12
6/24/2022 2:59	11.53	5.46	6/25/2022 4:43	11.54	-0.32	6/24/2022 2:46	11.75	36.24	6/24/2022 4:03	6.05
6/24/2022 3:00	11.54	5.39	6/25/2022 4:44	11.53	-0.48	6/24/2022 2:47	11.77	36.19	6/24/2022 4:04	6.05
6/24/2022 3:01	11.51	5.29	6/25/2022 4:45	11.51	-0.42	6/24/2022 2:48	11.76	36.11	6/24/2022 4:05	6.01
6/24/2022 3:02	11.55	5.35	6/25/2022 4:46	11.56	-0.48	6/24/2022 2:49	11.74	36.08	6/24/2022 4:06	6.05
6/24/2022 3:03	11.53	5.29	6/25/2022 4:47	11.56	-0.42	6/24/2022 2:50	11.75	36.02	6/24/2022 4:07	6.07
6/24/2022 3:04	11.57	5.20	6/25/2022 4:48	11.51	-0.53	6/24/2022 2:51	11.76	36.02	6/24/2022 4:08	6.08
6/24/2022 3:05	11.54	5.23	6/25/2022 4:49	11.55	-0.42	6/24/2022 2:52	11.73	35.96	6/24/2022 4:09	6.05
6/24/2022 3:06	11.54	5.11	6/25/2022 4:50	11.53	-0.39	6/24/2022 2:53	11.75	35.89	6/24/2022 4:10	6.07
6/24/2022 3:07	11.56	5.13	6/25/2022 4:51	11.54	-0.40	6/24/2022 2:54	11.75	35.89	6/24/2022 4:11	6.05
6/24/2022 3:08	11.52	5.06	6/25/2022 4:52	11.53	-0.42	6/24/2022 2:55	11.73	35.86	6/24/2022 4:12	6.00
6/24/2022 3:09	11.55	4.96	6/25/2022 4:53	11.51	-0.48	6/24/2022 2:56	11.78	35.82	6/24/2022 4:13	6.01
6/24/2022 3:10	11.54	4.84	6/25/2022 4:54	11.54	-0.37	6/24/2022 2:57	11.73	35.77	6/24/2022 4:14	6.00
6/24/2022 3:11	11.55	4.85	6/25/2022 4:55	11.52	-0.54	6/24/2022 2:58	11.75	35.78	6/24/2022 4:15	6.03
6/24/2022 3:12	11.52	4.91	6/25/2022 4:56	11.54	-0.35	6/24/2022 2:59	11.76	35.69	6/24/2022 4:16	6.03
6/24/2022 3:13	11.54	4.77	6/25/2022 4:57	11.56	-0.44	6/24/2022 3:00	11.76	35.67	6/24/2022 4:17	5.98
6/24/2022 3:14	11.51	4.74	6/25/2022 4:58	11.52	-0.52	6/24/2022 3:01	11.74	35.62	6/24/2022 4:18	6.02
6/24/2022 3:15	11.51	4.74	6/25/2022 4:59	11.54	-0.38	6/24/2022 3:02	11.74	35.60	6/24/2022 4:19	6.00
6/24/2022 3:16	11.52	4.62	6/25/2022 5:00	11.55	-0.47	6/24/2022 3:03	11.75	35.55	6/24/2022 4:20	5.91
6/24/2022 3:17	11.52	4.63	6/25/2022 5:01	11.52	-0.41	6/24/2022 3:04	11.77	35.52	6/24/2022 4:21	6.00
6/24/2022 3:18	11.49	4.51	6/25/2022 5:02	11.55	-0.49	6/24/2022 3:05	11.77	35.45	6/24/2022 4:22	5.97
6/24/2022 3:19	11.52	4.54	6/25/2022 5:03	11.53	-0.43	6/24/2022 3:06	11.77	35.46	6/24/2022 4:23	5.95
6/24/2022 3:20	11.54	4.40	6/25/2022 5:04	11.52	-0.37	6/24/2022 3:07	11.75	35.41	6/24/2022 4:24	6.02
6/24/2022 3:21	11.52	4.45	6/25/2022 5:05	11.53	-0.45	6/24/2022 3:08	11.77	35.41	6/24/2022 4:25	5.99
6/24/2022 3:22	11.54	4.38	6/25/2022 5:06	11.55	-0.53	6/24/2022 3:09	11.79	35.28	6/24/2022 4:26	5.94
6/24/2022 3:23	11.52	4.41	6/25/2022 5:07	11.54	-0.45	6/24/2022 3:10	11.77	35.27	6/24/2022 4:27	5.96
6/24/2022 3:24	11.52	4.41	6/25/2022 5:08	11.55	-0.38	6/24/2022 3:11	11.76	35.24	6/24/2022 4:28	5.91
6/24/2022 3:25	11.51	4.29	6/25/2022 5:09	11.56	-0.49	6/24/2022 3:12	11.76	35.21	6/24/2022 4:29	5.99
6/24/2022 3:26	11.56	4.19	6/25/2022 5:10	11.51	-0.44	6/24/2022 3:13	11.77	35.18	6/24/2022 4:30	5.96
6/24/2022 3:27	11.54	4.24	6/25/2022 5:11	11.55	-0.43	6/24/2022 3:14	11.75	35.14	6/24/2022 4:31	6.02
6/24/2022 3:28	11.54	4.04	6/25/2022 5:12	11.54	-0.49	6/24/2022 3:15	11.74	35.15	6/24/2022 4:32	5.95
6/24/2022 3:29	11.56	4.10	6/25/2022 5:13	11.53	-0.49	6/24/2022 3:16	11.77	35.10	6/24/2022 4:33	5.96
6/24/2022 3:30	11.54	3.98	6/25/2022 5:14	11.52	-0.53	6/24/2022 3:17	11.75	35.02	6/24/2022 4:34	5.94
6/24/2022 3:31	11.55	3.98	6/25/2022 5:15	11.53	-0.34	6/24/2022 3:18	11.75	34.98	6/24/2022 4:35	5.92
6/24/2022 3:32	11.55	3.95	6/25/2022 5:16	11.58	-0.49	6/24/2022 3:19	11.74	34.97	6/24/2022 4:36	5.92
6/24/2022 3:33	11.55	3.85	6/25/2022 5:17	11.54	-0.43	6/24/2022 3:20	11.76	34.90	6/24/2022 4:37	5.92
6/24/2022 3:34	11.53	3.88	6/25/2022 5:18	11.53	-0.48	6/24/2022 3:21	11.76	34.88	6/24/2022 4:38	5.88
6/24/2022 3:35	11.54	3.83	6/25/2022 5:19	11.54	-0.46	6/24/2022 3:22	11.74	34.85	6/24/2022 4:39	5.94
6/24/2022 3:36	11.52	3.74	6/25/2022 5:20	11.55	-0.38	6/24/2022 3:23	11.76	34.83	6/24/2022 4:40	5.90
6/24/2022 3:37	11.53	3.66	6/25/2022 5:21	11.55	-0.44	6/24/2022 3:24	11.76	34.77	6/24/2022 4:41	5.92
6/24/2022 3:38	11.56	3.69	6/25/2022 5:22	11.52	-0.41	6/24/2022 3:25	11.78	34.78	6/24/2022 4:42	5.90
6/24/2022 3:39	11.54	3.67	6/25/2022 5:23	11.54	-0.39	6/24/2022 3:26	11.72	34.69	6/24/2022 4:43	5.90
6/24/2022 3:40	11.55	3.62	6/25/2022 5:24	11.53	-0.49	6/24/2022 3:27	11.75	34.67	6/24/2022 4:44	5.87
6/24/2022 3:41	11.53	3.44	6/25/2022 5:25	11.55	-0.43	6/24/2022 3:28	11.75	34.67	6/24/2022 4:45	5.85
6/24/2022 3:42	11.56	3.57	6/25/2022 5:26	11.52	-0.46	6/24/2022 3:29	11.73	34.59	6/24/2022 4:46	5.84
6/24/2022 3:43	11.53	3.49	6/25/2022 5:27	11.52	-0.43	6/24/2022 3:30	11.77	34.56	6/24/2022 4:47	5.90
6/24/2022 3:44	11.55	3.50	6/25/2022 5:28	11.55	-0.41	6/24/2022 3:31	11.79	34.51	6/24/2022 4:48	5.89
6/24/2022 3:45	11.54	3.33	6/25/2022 5:29	11.53	-0.41	6/24/2022 3:32	11.75	34.48	6/24/2022 4:49	5.89
6/24/2022 3:46	11.55	3.24	6/25/2022 5:30	11.55	-0.49	6/24/2022 3:33	11.76	34.44	6/24/2022 4:50	5.90
6/24/2022 3:47	11.52	3.29	6/25/2022 5:31	11.55	-0.37	6/24/2022 3:34	11.76	34.41	6/24/2022 4:51	5.82
6/24/2022 3:48	11.54	3.21	6/25/2022 5:32	11.54	-0.48	6/24/2022 3:35	11.76	34.40	6/24/2022 4:52	5.83
6/24/2022 3:49	11.55	3.21	6/25/2022 5:33	11.55	-0.43	6/24/2022 3:36	11.76	34.37	6/24/2022 4:53	5.89
6/24/2022 3:50	11.54	3.17	6/25/2022 5:34	11.55	-0.31	6/24/2022 3:37	11.75	34.33	6/24/2022 4:54	5.86

6/24/2022 3:51	11.54	3.07	6/25/2022 5:35	11.55	-0.45	6/24/2022 3:38	11.75	34.33	6/24/2022 4:55	5.87
6/24/2022 3:52	11.52	3.08	6/25/2022 5:36	11.55	-0.52	6/24/2022 3:39	11.77	34.24	6/24/2022 4:56	5.82
6/24/2022 3:53	11.54	3.05	6/25/2022 5:37	11.55	-0.42	6/24/2022 3:40	11.75	34.25	6/24/2022 4:57	5.84
6/24/2022 3:54	11.51	3.06	6/25/2022 5:38	11.52	-0.59	6/24/2022 3:41	11.74	34.20	6/24/2022 4:58	5.75
6/24/2022 3:55	11.52	2.96	6/25/2022 5:39	11.55	-0.46	6/24/2022 3:42	11.74	34.17	6/24/2022 4:59	5.83
6/24/2022 3:56	11.52	2.82	6/25/2022 5:40	11.54	-0.53	6/24/2022 3:43	11.78	34.06	6/24/2022 5:00	5.82
6/24/2022 3:57	11.51	2.77	6/25/2022 5:41	11.56	-0.41	6/24/2022 3:44	11.75	34.08	6/24/2022 5:01	5.85
6/24/2022 3:58	11.52	2.81	6/25/2022 5:42	11.53	-0.56	6/24/2022 3:45	11.75	34.04	6/24/2022 5:02	5.78
6/24/2022 3:59	11.54	2.74	6/25/2022 5:43	11.55	-0.40	6/24/2022 3:46	11.74	34.03	6/24/2022 5:03	5.82
6/24/2022 4:00	11.51	2.73	6/25/2022 5:44	11.54	-0.39	6/24/2022 3:47	11.78	34.00	6/24/2022 5:04	5.77
6/24/2022 4:01	11.51	2.66	6/25/2022 5:45	11.57	-0.42	6/24/2022 3:48	11.76	33.99	6/24/2022 5:05	5.80
6/24/2022 4:02	11.53	2.64	6/25/2022 5:46	11.55	-0.38	6/24/2022 3:49	11.77	33.91	6/24/2022 5:06	5.79
6/24/2022 4:03	11.54	2.64	6/25/2022 5:47	11.54	-0.40	6/24/2022 3:50	11.75	33.92	6/24/2022 5:07	5.79
6/24/2022 4:04	11.56	2.56	6/25/2022 5:48	11.54	-0.47	6/24/2022 3:51	11.75	33.90	6/24/2022 5:08	5.73
6/24/2022 4:05	11.53	2.44	6/25/2022 5:49	11.54	-0.53	6/24/2022 3:52	11.75	33.82	6/24/2022 5:09	5.78
6/24/2022 4:06	11.52	2.42	6/25/2022 5:50	11.55	-0.39	6/24/2022 3:53	11.74	33.77	6/24/2022 5:10	5.81
6/24/2022 4:07	11.53	2.38	6/25/2022 5:51	11.55	-0.46	6/24/2022 3:54	11.77	33.74	6/24/2022 5:11	5.82
6/24/2022 4:08	11.54	2.41	6/25/2022 5:52	11.54	-0.37	6/24/2022 3:55	11.76	33.76	6/24/2022 5:12	5.77
6/24/2022 4:09	11.54	2.33	6/25/2022 5:53	11.52	-0.38	6/24/2022 3:56	11.76	33.69	6/24/2022 5:13	5.78
6/24/2022 4:10	11.54	2.33	6/25/2022 5:54	11.53	-0.60	6/24/2022 3:57	11.74	33.68	6/24/2022 5:14	5.82
6/24/2022 4:11	11.52	2.26	6/25/2022 5:55	11.54	-0.48	6/24/2022 3:58	11.74	33.63	6/24/2022 5:15	5.70
6/24/2022 4:12	11.54	2.21	6/25/2022 5:56	11.52	-0.55	6/24/2022 3:59	11.73	33.64	6/24/2022 5:16	5.74
6/24/2022 4:13	11.54	2.32	6/25/2022 5:57	11.55	-0.38	6/24/2022 4:00	11.76	33.57	6/24/2022 5:17	5.70
6/24/2022 4:14	11.54	2.22	6/25/2022 5:58	11.54	-0.46	6/24/2022 4:01	11.79	33.52	6/24/2022 5:18	5.73
6/24/2022 4:15	11.55	2.07	6/25/2022 5:59	11.54	-0.46	6/24/2022 4:02	11.73	33.51	6/24/2022 5:19	5.69
6/24/2022 4:16	11.53	2.07	6/25/2022 6:00	11.56	-0.38	6/24/2022 4:03	11.76	33.49	6/24/2022 5:20	5.73
6/24/2022 4:17	11.56	2.00	6/25/2022 6:01	11.53	-0.48	6/24/2022 4:04	11.76	33.46	6/24/2022 5:21	5.76
6/24/2022 4:18	11.54	1.95	6/25/2022 6:02	11.55	-0.41	6/24/2022 4:05	11.73	33.44	6/24/2022 5:22	5.74
6/24/2022 4:19	11.53	1.94	6/25/2022 6:03	11.55	-0.51	6/24/2022 4:06	11.72	33.37	6/24/2022 5:23	5.72
6/24/2022 4:20	11.55	1.99	6/25/2022 6:04	11.55	-0.54	6/24/2022 4:07	11.73	33.34	6/24/2022 5:24	5.71
6/24/2022 4:21	11.51	1.89	6/25/2022 6:05	11.56	-0.41	6/24/2022 4:08	11.72	33.30	6/24/2022 5:25	5.73
6/24/2022 4:22	11.55	1.81	6/25/2022 6:06	11.55	-0.42	6/24/2022 4:09	11.73	33.30	6/24/2022 5:26	5.66
6/24/2022 4:23	11.55	1.81	6/25/2022 6:07	11.54	-0.48	6/24/2022 4:10	11.73	33.25	6/24/2022 5:27	5.72
6/24/2022 4:24	11.52	1.79	6/25/2022 6:08	11.53	-0.40	6/24/2022 4:11	11.75	33.21	6/24/2022 5:28	5.68
6/24/2022 4:25	11.53	1.83	6/25/2022 6:09	11.55	-0.43	6/24/2022 4:12	11.72	33.18	6/24/2022 5:29	5.67
6/24/2022 4:26	11.50	1.68	6/25/2022 6:10	11.53	-0.51	6/24/2022 4:13	11.73	33.19	6/24/2022 5:30	5.71
6/24/2022 4:27	11.56	1.69	6/25/2022 6:11	11.53	-0.41	6/24/2022 4:14	11.73	33.14	6/24/2022 5:31	5.66
6/24/2022 4:28	11.52	1.63	6/25/2022 6:12	11.53	-0.45	6/24/2022 4:15	11.71	33.09	6/24/2022 5:32	5.63
6/24/2022 4:29	11.53	1.55	6/25/2022 6:13	11.54	-0.51	6/24/2022 4:16	11.74	33.07	6/24/2022 5:33	5.64
6/24/2022 4:30	11.52	1.54	6/25/2022 6:14	11.53	-0.35	6/24/2022 4:17	11.73	33.05	6/24/2022 5:34	5.68
6/24/2022 4:31	11.55	1.48	6/25/2022 6:15	11.55	-0.38	6/24/2022 4:18	11.74	33.05	6/24/2022 5:35	5.63
6/24/2022 4:32	11.55	1.43	6/25/2022 6:16	11.55	-0.45	6/24/2022 4:19	11.76	32.95	6/24/2022 5:36	5.65
6/24/2022 4:33	11.55	1.44	6/25/2022 6:17	11.54	-0.46	6/24/2022 4:20	11.75	32.89	6/24/2022 5:37	5.66
6/24/2022 4:34	11.52	1.50	6/25/2022 6:18	11.54	-0.49	6/24/2022 4:21	11.75	32.93	6/24/2022 5:38	5.69
6/24/2022 4:35	11.53	1.34	6/25/2022 6:19	11.51	-0.34	6/24/2022 4:22	11.75	32.86	6/24/2022 5:39	5.68
6/24/2022 4:36	11.53	1.38	6/25/2022 6:20	11.54	-0.42	6/24/2022 4:23	11.73	32.85	6/24/2022 5:40	5.66
6/24/2022 4:37	11.53	1.29	6/25/2022 6:21	11.54	-0.50	6/24/2022 4:24	11.76	32.83	6/24/2022 5:41	5.64
6/24/2022 4:38	11.55	1.30	6/25/2022 6:22	11.52	-0.42	6/24/2022 4:25	11.72	32.75	6/24/2022 5:42	5.68
6/24/2022 4:39	11.54	1.26	6/25/2022 6:23	11.54	-0.43	6/24/2022 4:26	11.74	32.73	6/24/2022 5:43	5.57
6/24/2022 4:40	11.54	1.17	6/25/2022 6:24	11.55	-0.44	6/24/2022 4:27	11.74	32.71	6/24/2022 5:44	5.64
6/24/2022 4:41	11.56	1.16	6/25/2022 6:25	11.54	-0.47	6/24/2022 4:28	11.72	32.67	6/24/2022 5:45	5.60
6/24/2022 4:42	11.54	1.11	6/25/2022 6:26	11.53	-0.57	6/24/2022 4:29	11.74	32.69	6/24/2022 5:46	5.64
6/24/2022 4:43	11.55	1.08	6/25/2022 6:27	11.54	-0.51	6/24/2022 4:30	11.75	32.62	6/24/2022 5:47	5.63
6/24/2022 4:44	11.51	1.10	6/25/2022 6:28	11.54	-0.39	6/24/2022 4:31	11.72	32.64	6/24/2022 5:48	5.60
6/24/2022 4:45	11.54	1.00	6/25/2022 6:29	11.52	-0.39	6/24/2022 4:32	11.72	32.53	6/24/2022 5:49	5.64
6/24/2022 4:46	11.49	0.96	6/25/2022 6:30	11.55	-0.39	6/24/2022 4:33	11.72	32.54	6/24/2022 5:50	5.64
6/24/2022 4:47	11.52	0.92	6/25/2022 6:31	11.52	-0.41	6/24/2022 4:34	11.75	32.50	6/24/2022 5:51	5.64
6/24/2022 4:48	11.54	0.94	6/25/2022 6:32	11.52	-0.41	6/24/2022 4:35	11.75	32.49	6/24/2022 5:52	5.57
6/24/2022 4:49	11.54	0.91	6/25/2022 6:33	11.51	-0.44	6/24/2022 4:36	11.75	32.42	6/24/2022 5:53	5.59
6/24/2022 4:50	11.56	0.80	6/25/2022 6:34	11.55	-0.53	6/24/2022 4:37	11.75	32.44	6/24/2022 5:54	5.56
6/24/2022 4:51	11.51	0.86	6/25/2022 6:35	11.54	-0.47	6/24/2022 4:38	11.74	32.39	6/24/2022 5:55	5.59
6/24/2022 4:52	11.52	0.89	6/25/2022 6:36	11.54	-0.47	6/24/2022 4:39	11.75	32.35	6/24/2022 5:56	5.56
6/24/2022 4:53	11.51	0.73	6/25/2022 6:37	11.54	-0.45	6/24/2022 4:40	11.75	32.33	6/24/2022 5:57	5.57
6/24/2022 4:54	11.54	0.75	6/25/2022 6:38	11.54	-0.47	6/24/2022 4:41	11.75	32.28	6/24/2022 5:58	5.60
6/24/2022 4:55	11.51	0.51	6/25/2022 6:39	11.54	-0.45	6/24/2022 4:42	11.75	32.21	6/24/2022 5:59	5.50
6/24/2022 4:56	11.52	0.71	6/25/2022 6:40	11.54	-0.52	6/24/2022 4:43	11.76	32.20	6/24/2022 6:00	5.56
6/24/2022 4:57	11.55	0.65	6/25/2022 6:41	11.54	-0.46	6/24/2022 4:44	11.77	32.20	6/24/2022 6:01	5.59
6/24/2022 4:58	11.54	0.52	6/25/2022 6:42	11.55	-0.48	6/24/2022 4:45	11.75	32.18	6/24/2022 6:02	5.56
6/24/2022 4:59	11.53	0.50	6/25/2022 6:43	11.54	-0.34	6/24/2022 4:46	11.75	32.18	6/24/2022 6:03	5.55
6/24/2022 5:00	11.54	0.50	6/25/2022 6:44	11.54	-0.37	6/24/2022 4:47	11.75	32.09	6/24/2022 6:04	5.52
6/24/2022 5:01	11.54	0.40	6/25/2022 6:45	11.52	-0.49	6/24/2022 4:48	11.77	32.08	6/24/2022 6:05	5.54
6/24/2022 5:02	11.55	0.40	6/25/2022 6:46	11.51	-0.46	6/24/2022 4:49	11.73	31.99	6/24/2022 6:06	5.53
6/24/2022 5:03	11.54	0.42	6/25/2022 6:47	11.54	-0.48	6/24/2022 4:50	11.74	32.01	6/24/2022 6:07	5.53
6/24/2022 5:04	11.54	0.36	6/25/2022 6:48	11.55	-0.40	6/24/2022 4:51	11.78	32.01	6/24/2022 6:08	5.47
6/24/2022 5:05	11.56	0.37	6/25/2022 6:49	11.54	-0.44	6/24/2022 4:52	11.77	31.95	6/24/2022 6:09	5.55
6/24/2022 5:06	11.52	0.30	6/25/2022 6:50	11.53	-0.38	6/24/2022 4:53	11.74	31.92	6/24/2022 6:10	5.52
6/24/2022 5:07	11.50	0.31	6/25/2022 6:51	11.54	-0.53	6/24/2022 4:54	11.73	31.86	6/24/2022 6:11	5.51
6/24/2022 5:08	11.53	0.23	6/25/2022 6:52	11.54	-0.44	6/24/2022 4:55	11.73	31.84	6/24/2022 6:12	5.50
6/24/2022 5:09	11.55	0.16	6/25/2022 6:53	11.55	-0.46	6/24/2022 4:56	11.74	31.83	6/24/2022 6:13	5.48
6/24/2022 5:10	11.54	0.18	6/25/2022 6:54	11.53	-0.50	6/24/2022 4:57	11.76	31.80	6/24/2022 6:14	5.55
6/24/2022 5:11	11.53	0.17	6/25/2022 6:55	11.53	-0.42	6/24/2022 4:58	11.77	31.76	6/24/2022 6:15	5.50
6/24/2022 5:12	11.53	0.14	6/25/2022 6:56	11.52	-0.37	6/24/2022 4:59	11.75	31.75	6/24/2022 6:16	5.48
6/24/2022 5:13	11.50	0.22	6/25/2022 6:57	11.54	-0.45	6/24/2022 5:00	11.75	31.68	6/24/2022 6:17	5.48
6/24/2022 5:14	11.51	0.10	6/25/2022 6:58	11.55	-0.44	6/24/2022 5:01	11.74	31.71	6/24/2022 6:18	5.50
6/24/2022 5:15	11.55	0.15	6/25/2022 6:59	11.53	-0.46	6/24/2022 5:02	11.73	31.63	6/24/2022 6:19	5.50
6/24/2022 5:16	11.55	0.12	6/25/2022 7:00	11.54	-0.45	6/24/2022 5:03	11.76	31.64	6/24/2022 6:20	5.54
6/24/2022 5:17	11.54	0.03	6/25/2022 7:01	11.52	-0.56	6/24/2022 5:04	11.74	31.62	6/24/2022 6:21	5.46
6/24/2022 5:18	11.55	0.18	6/25/2022 7:02	11.54	-0.47	6/24/2022 5:05	11.76	31.57	6/24/2022 6:22	5.53

6/24/2022 5:19	11.54	0.13	6/25/2022 7:03	11.55	-0.39	6/24/2022 5:06	11.75	31.50	6/24/2022 6:23	5.47
6/24/2022 5:20	11.53	0.14	6/25/2022 7:04	11.54	-0.37	6/24/2022 5:07	11.74	31.50	6/24/2022 6:24	5.46
6/24/2022 5:21	11.53	0.15	6/25/2022 7:05	11.54	-0.41	6/24/2022 5:08	11.77	31.44	6/24/2022 6:25	5.43
6/24/2022 5:22	11.54	0.18	6/25/2022 7:06	11.55	-0.41	6/24/2022 5:09	11.73	31.45	6/24/2022 6:26	5.43
6/24/2022 5:23	11.54	0.06	6/25/2022 7:07	11.52	-0.53	6/24/2022 5:10	11.75	31.41	6/24/2022 6:27	5.51
6/24/2022 5:24	11.50	0.12	6/25/2022 7:08	11.55	-0.41	6/24/2022 5:11	11.74	31.39	6/24/2022 6:28	5.47
6/24/2022 5:25	11.50	0.10	6/25/2022 7:09	11.51	-0.38	6/24/2022 5:12	11.72	31.32	6/24/2022 6:29	5.42
6/24/2022 5:26	11.51	0.05	6/25/2022 7:10	11.53	-0.44	6/24/2022 5:13	11.76	31.27	6/24/2022 6:30	5.47
6/24/2022 5:27	11.54	0.10	6/25/2022 7:11	11.56	-0.43	6/24/2022 5:14	11.73	31.27	6/24/2022 6:31	5.50
6/24/2022 5:28	11.55	0.08	6/25/2022 7:12	11.54	-0.49	6/24/2022 5:15	11.77	31.20	6/24/2022 6:32	5.46
6/24/2022 5:29	11.53	0.07	6/25/2022 7:13	11.54	-0.48	6/24/2022 5:16	11.72	31.24	6/24/2022 6:33	5.44
6/24/2022 5:30	11.51	0.14	6/25/2022 7:14	11.54	-0.44	6/24/2022 5:17	11.74	31.19	6/24/2022 6:34	5.40
6/24/2022 5:31	11.52	0.11	6/25/2022 7:15	11.54	-0.36	6/24/2022 5:18	11.74	31.16	6/24/2022 6:35	5.44
6/24/2022 5:32	11.51	0.09	6/25/2022 7:16	11.54	-0.48	6/24/2022 5:19	11.72	31.12	6/24/2022 6:36	5.45
6/24/2022 5:33	11.55	0.19	6/25/2022 7:17	11.54	-0.53	6/24/2022 5:20	11.76	31.08	6/24/2022 6:37	5.43
6/24/2022 5:34	11.51	0.17	6/25/2022 7:18	11.51	-0.48	6/24/2022 5:21	11.70	31.02	6/24/2022 6:38	5.40
6/24/2022 5:35	11.50	0.23	6/25/2022 7:19	11.53	-0.43	6/24/2022 5:22	11.74	31.00	6/24/2022 6:39	5.41
6/24/2022 5:36	11.51	0.12	6/25/2022 7:20	11.57	-0.43	6/24/2022 5:23	11.75	30.89	6/24/2022 6:40	5.44
6/24/2022 5:37	11.52	0.13	6/25/2022 7:21	11.55	-0.46	6/24/2022 5:24	11.74	30.95	6/24/2022 6:41	5.37
6/24/2022 5:38	11.52	0.17	6/25/2022 7:22	11.56	-0.37	6/24/2022 5:25	11.77	30.89	6/24/2022 6:42	5.39
6/24/2022 5:39	11.52	0.14	6/25/2022 7:23	11.54	-0.35	6/24/2022 5:26	11.77	30.88	6/24/2022 6:43	5.40
6/24/2022 5:40	11.52	0.15	6/25/2022 7:24	11.56	-0.53	6/24/2022 5:27	11.77	30.88	6/24/2022 6:44	5.35
6/24/2022 5:41	11.51	0.10	6/25/2022 7:25	11.54	-0.32	6/24/2022 5:28	11.72	30.80	6/24/2022 6:45	5.34
6/24/2022 5:42	11.54	0.12	6/25/2022 7:26	11.51	-0.36	6/24/2022 5:29	11.77	30.76	6/24/2022 6:46	5.40
6/24/2022 5:43	11.51	0.11	6/25/2022 7:27	11.55	-0.38	6/24/2022 5:30	11.75	30.72	6/24/2022 6:47	5.36
6/24/2022 5:44	11.51	0.06	6/25/2022 7:28	11.55	-0.44	6/24/2022 5:31	11.76	30.69	6/24/2022 6:48	5.36
6/24/2022 5:45	11.52	0.10	6/25/2022 7:29	11.53	-0.48	6/24/2022 5:32	11.69	30.67	6/24/2022 6:49	5.34
6/24/2022 5:46	11.51	0.10	6/25/2022 7:30	11.51	-0.51	6/24/2022 5:33	11.72	30.63	6/24/2022 6:50	5.37
6/24/2022 5:47	11.51	0.16	6/25/2022 7:31	11.53	-0.41	6/24/2022 5:34	11.76	30.62	6/24/2022 6:51	5.32
6/24/2022 5:48	11.53	0.20	6/25/2022 7:32	11.53	-0.40	6/24/2022 5:35	11.76	30.57	6/24/2022 6:52	5.36
6/24/2022 5:49	11.50	0.10	6/25/2022 7:33	11.55	-0.45	6/24/2022 5:36	11.76	30.53	6/24/2022 6:53	5.33
6/24/2022 5:50	11.52	0.20	6/25/2022 7:34	11.57	-0.49	6/24/2022 5:37	11.75	30.46	6/24/2022 6:54	5.29
6/24/2022 5:51	11.51	0.06	6/25/2022 7:35	11.52	-0.54	6/24/2022 5:38	11.74	30.47	6/24/2022 6:55	5.34
6/24/2022 5:52	11.50	0.19	6/25/2022 7:36	11.53	-0.37	6/24/2022 5:39	11.78	30.41	6/24/2022 6:56	5.34
6/24/2022 5:53	11.53	0.14	6/25/2022 7:37	11.53	-0.52	6/24/2022 5:40	11.76	30.35	6/24/2022 6:57	5.33
6/24/2022 5:54	11.50	0.17	6/25/2022 7:38	11.53	-0.57	6/24/2022 5:41	11.72	30.36	6/24/2022 6:58	5.32
6/24/2022 5:55	11.52	0.05	6/25/2022 7:39	11.56	-0.41	6/24/2022 5:42	11.78	30.33	6/24/2022 6:59	5.33
6/24/2022 5:56	11.51	0.07	6/25/2022 7:40	11.55	-0.44	6/24/2022 5:43	11.73	30.34	6/24/2022 7:00	5.33
6/24/2022 5:57	11.52	0.13	6/25/2022 7:41	11.54	-0.41	6/24/2022 5:44	11.72	30.24	6/24/2022 7:01	5.33
6/24/2022 5:58	11.51	0.13	6/25/2022 7:42	11.50	-0.43	6/24/2022 5:45	11.77	30.17	6/24/2022 7:02	5.30
6/24/2022 5:59	11.53	0.09	6/25/2022 7:43	11.56	-0.48	6/24/2022 5:46	11.74	30.18	6/24/2022 7:03	5.30
6/24/2022 6:00	11.53	0.01	6/25/2022 7:44	11.54	-0.41	6/24/2022 5:47	11.72	30.13	6/24/2022 7:04	5.30
6/24/2022 6:01	11.53	0.19	6/25/2022 7:45	11.56	-0.53	6/24/2022 5:48	11.74	30.09	6/24/2022 7:05	5.30
6/24/2022 6:02	11.51	0.18	6/25/2022 7:46	11.51	-0.42	6/24/2022 5:49	11.73	30.08	6/24/2022 7:06	5.27
6/24/2022 6:03	11.50	0.02	6/25/2022 7:47	11.55	-0.44	6/24/2022 5:50	11.72	30.03	6/24/2022 7:07	5.28
6/24/2022 6:04	11.52	0.02	6/25/2022 7:48	11.55	-0.36	6/24/2022 5:51	11.71	30.03	6/24/2022 7:08	5.25
6/24/2022 6:05	11.55	0.17	6/25/2022 7:49	11.53	-0.49	6/24/2022 5:52	11.74	29.95	6/24/2022 7:09	5.28
6/24/2022 6:06	11.54	0.03	6/25/2022 7:50	11.56	-0.48	6/24/2022 5:53	11.76	29.93	6/24/2022 7:10	5.32
6/24/2022 6:07	11.54	0.12	6/25/2022 7:51	11.55	-0.50	6/24/2022 5:54	11.74	29.86	6/24/2022 7:11	5.25
6/24/2022 6:08	11.54	0.15	6/25/2022 7:52	11.53	-0.39	6/24/2022 5:55	11.74	29.83	6/24/2022 7:12	5.26
6/24/2022 6:09	11.54	0.13	6/25/2022 7:53	11.54	-0.38	6/24/2022 5:56	11.78	29.79	6/24/2022 7:13	5.19
6/24/2022 6:10	11.56	0.13	6/25/2022 7:54	11.53	-0.31	6/24/2022 5:57	11.71	29.75	6/24/2022 7:14	5.26
6/24/2022 6:11	11.51	0.09	6/25/2022 7:55	11.54	-0.35	6/24/2022 5:58	11.72	29.73	6/24/2022 7:15	5.24
6/24/2022 6:12	11.51	0.08	6/25/2022 7:56	11.52	-0.35	6/24/2022 5:59	11.78	29.68	6/24/2022 7:16	5.22
6/24/2022 6:13	11.51	0.10	6/25/2022 7:57	11.55	-0.43	6/24/2022 6:00	11.75	29.60	6/24/2022 7:17	5.21
6/24/2022 6:14	11.55	0.14	6/25/2022 7:58	11.53	-0.43	6/24/2022 6:01	11.76	29.59	6/24/2022 7:18	5.26
6/24/2022 6:15	11.53	0.16	6/25/2022 7:59	11.54	-0.39	6/24/2022 6:02	11.71	29.55	6/24/2022 7:19	5.25
6/24/2022 6:16	11.52	0.08	6/25/2022 8:00	11.53	-0.47	6/24/2022 6:03	11.75	29.49	6/24/2022 7:20	5.20
6/24/2022 6:17	11.52	0.13	6/25/2022 8:01	11.54	-0.47	6/24/2022 6:04	11.75	29.47	6/24/2022 7:21	5.22
6/24/2022 6:18	11.54	0.13	6/25/2022 8:02	11.56	-0.47	6/24/2022 6:05	11.75	29.38	6/24/2022 7:22	5.24
6/24/2022 6:19	11.54	0.14	6/25/2022 8:03	11.57	-0.48	6/24/2022 6:06	11.72	29.38	6/24/2022 7:23	5.19
6/24/2022 6:20	11.56	0.13	6/25/2022 8:04	11.53	-0.41	6/24/2022 6:07	11.72	29.28	6/24/2022 7:24	5.20
6/24/2022 6:21	11.55	0.16	6/25/2022 8:05	11.55	-0.42	6/24/2022 6:08	11.74	29.32	6/24/2022 7:25	5.21
6/24/2022 6:22	11.51	0.19	6/25/2022 8:06	11.54	-0.54	6/24/2022 6:09	11.78	29.22	6/24/2022 7:26	5.18
6/24/2022 6:23	11.52	0.12	6/25/2022 8:07	11.55	-0.46	6/24/2022 6:10	11.74	29.17	6/24/2022 7:27	5.22
6/24/2022 6:24	11.53	0.12	6/25/2022 8:08	11.54	-0.34	6/24/2022 6:11	11.75	29.15	6/24/2022 7:28	5.18
6/24/2022 6:25	11.55	0.18	6/25/2022 8:09	11.55	-0.45	6/24/2022 6:12	11.75	29.15	6/24/2022 7:29	5.21
6/24/2022 6:26	11.53	0.12	6/25/2022 8:10	11.54	-0.44	6/24/2022 6:13	11.71	29.11	6/24/2022 7:30	5.23
6/24/2022 6:27	11.54	0.10	6/25/2022 8:11	11.54	-0.44	6/24/2022 6:14	11.75	29.01	6/24/2022 7:31	5.14
6/24/2022 6:28	11.52	0.12	6/25/2022 8:12	11.54	-0.43	6/24/2022 6:15	11.74	28.98	6/24/2022 7:32	5.12
6/24/2022 6:29	11.53	0.14	6/25/2022 8:13	11.55	-0.43	6/24/2022 6:16	11.74	28.95	6/24/2022 7:33	5.13
6/24/2022 6:30	11.53	0.09	6/25/2022 8:14	11.55	-0.40	6/24/2022 6:17	11.71	28.97	6/24/2022 7:34	5.16
6/24/2022 6:31	11.53	0.16	6/25/2022 8:15	11.55	-0.47	6/24/2022 6:18	11.71	28.91	6/24/2022 7:35	5.12
6/24/2022 6:32	11.54	0.16	6/25/2022 8:16	11.57	-0.42	6/24/2022 6:19	11.76	28.83	6/24/2022 7:36	5.10
6/24/2022 6:33	11.54	0.17	6/25/2022 8:17	11.55	-0.33	6/24/2022 6:20	11.75	28.80	6/24/2022 7:37	5.15
6/24/2022 6:34	11.54	0.12	6/25/2022 8:18	11.53	-0.43	6/24/2022 6:21	11.75	28.74	6/24/2022 7:38	5.13
6/24/2022 6:35	11.52	0.11	6/25/2022 8:19	11.55	-0.40	6/24/2022 6:22	11.77	28.70	6/24/2022 7:39	5.14
6/24/2022 6:36	11.54	0.20	6/25/2022 8:20	11.53	-0.46	6/24/2022 6:23	11.75	28.69	6/24/2022 7:40	5.07
6/24/2022 6:37	11.53	0.21	6/25/2022 8:21	11.53	-0.46	6/24/2022 6:24	11.76	28.65	6/24/2022 7:41	5.08
6/24/2022 6:38	11.50	0.18	6/25/2022 8:22	11.57	-0.47	6/24/2022 6:25	11.76	28.62	6/24/2022 7:42	5.04
6/24/2022 6:39	11.57	0.08	6/25/2022 8:23	11.54	-0.49	6/24/2022 6:26	11.74	28.56	6/24/2022 7:43	5.15
6/24/2022 6:40	11.56	0.09	6/25/2022 8:24	11.56	-0.53	6/24/2022 6:27	11.77	28.57	6/24/2022 7:44	5.10
6/24/2022 6:41	11.55	0.12	6/25/2022 8:25	11.54	-0.34	6/24/2022 6:28	11.73	28.49	6/24/2022 7:45	5.05
6/24/2022 6:42	11.53	0.16	6/25/2022 8:26	11.52	-0.53	6/24/2022 6:29	11.76	28.45	6/24/2022 7:46	5.08
6/24/2022 6:43	11.51	0.03	6/25/2022 8:27	11.53	-0.46	6/24/2022 6:30	11.73	28.45	6/24/2022 7:47	5.06
6/24/2022 6:44	11.54	0.03	6/25/2022 8:28	11.54	-0.55	6/24/2022 6:31	11.74	28.37	6/24/2022 7:48	5.04
6/24/2022 6:45	11.55	0.14	6/25/2022 8:29	11.55	-0.41	6/24/2022 6:32	11.77	28.35	6/24/2022 7:49	5.05
6/24/2022 6:46	11.52	0.11	6/25/2022 8:30	11.56	-0.44	6/24/2022 6:33	11.73	28.30	6/24/2022 7:50	5.07

6/24/2022 6:47	11.53	0.02	6/25/2022 8:31	11.54	-0.39	6/24/2022 6:34	11.78	28.29	6/24/2022 7:51	5.05
6/24/2022 6:48	11.56	0.05	6/25/2022 8:32	11.51	-0.43	6/24/2022 6:35	11.75	28.23	6/24/2022 7:52	5.08
6/24/2022 6:49	11.54	0.21	6/25/2022 8:33	11.53	-0.47	6/24/2022 6:36	11.74	28.24	6/24/2022 7:53	5.00
6/24/2022 6:50	11.54	0.05	6/25/2022 8:34	11.54	-0.43	6/24/2022 6:37	11.73	28.11	6/24/2022 7:54	5.00
6/24/2022 6:51	11.56	0.11	6/25/2022 8:35	11.55	-0.44	6/24/2022 6:38	11.72	28.10	6/24/2022 7:55	5.04
6/24/2022 6:52	11.53	0.10	6/25/2022 8:36	11.55	-0.54	6/24/2022 6:39	11.74	28.12	6/24/2022 7:56	5.06
6/24/2022 6:53	11.57	0.18	6/25/2022 8:37	11.57	-0.43	6/24/2022 6:40	11.77	28.07	6/24/2022 7:57	5.05
6/24/2022 6:54	11.55	0.12	6/25/2022 8:38	11.56	-0.38	6/24/2022 6:41	11.69	28.06	6/24/2022 7:58	4.99
6/24/2022 6:55	11.53	0.13	6/25/2022 8:39	11.55	-0.42	6/24/2022 6:42	11.72	28.02	6/24/2022 7:59	5.00
6/24/2022 6:56	11.55	0.18	6/25/2022 8:40	11.53	-0.56	6/24/2022 6:43	11.73	27.95	6/24/2022 8:00	5.02
6/24/2022 6:57	11.51	0.12	6/25/2022 8:41	11.54	-0.40	6/24/2022 6:44	11.75	27.95	6/24/2022 8:01	5.04
6/24/2022 6:58	11.54	0.08	6/25/2022 8:42	11.54	-0.53	6/24/2022 6:45	11.74	27.90	6/24/2022 8:02	4.98
6/24/2022 6:59	11.56	0.16	6/25/2022 8:43	11.52	-0.43	6/24/2022 6:46	11.73	27.89	6/24/2022 8:03	4.98
6/24/2022 7:00	11.55	0.10	6/25/2022 8:44	11.55	-0.44	6/24/2022 6:47	11.74	27.82	6/24/2022 8:04	4.98
6/24/2022 7:01	11.55	0.11	6/25/2022 8:45	11.55	-0.42	6/24/2022 6:48	11.75	27.79	6/24/2022 8:05	5.01
6/24/2022 7:02	11.56	0.06	6/25/2022 8:46	11.55	-0.35	6/24/2022 6:49	11.75	27.78	6/24/2022 8:06	4.96
6/24/2022 7:03	11.55	0.12	6/25/2022 8:47	11.53	-0.38	6/24/2022 6:50	11.71	27.73	6/24/2022 8:07	4.96
6/24/2022 7:04	11.55	0.21	6/25/2022 8:48	11.54	-0.50	6/24/2022 6:51	11.75	27.68	6/24/2022 8:08	4.96
6/24/2022 7:05	11.56	0.19	6/25/2022 8:49	11.55	-0.41	6/24/2022 6:52	11.74	27.67	6/24/2022 8:09	4.97
6/24/2022 7:06	11.56	0.10	6/25/2022 8:50	11.54	-0.36	6/24/2022 6:53	11.75	27.61	6/24/2022 8:10	4.95
6/24/2022 7:07	11.56	0.13	6/25/2022 8:51	11.52	-0.38	6/24/2022 6:54	11.75	27.64	6/24/2022 8:11	4.99
6/24/2022 7:08	11.55	0.05	6/25/2022 8:52	11.56	-0.45	6/24/2022 6:55	11.74	27.60	6/24/2022 8:12	4.90
6/24/2022 7:09	11.54	0.14	6/25/2022 8:53	11.54	-0.43	6/24/2022 6:56	11.72	27.53	6/24/2022 8:13	4.88
6/24/2022 7:10	11.54	0.15	6/25/2022 8:54	11.52	-0.53	6/24/2022 6:57	11.75	27.48	6/24/2022 8:14	4.90
6/24/2022 7:11	11.54	0.09	6/25/2022 8:55	11.52	-0.59	6/24/2022 6:58	11.73	27.46	6/24/2022 8:15	4.97
6/24/2022 7:12	11.55	0.05	6/25/2022 8:56	11.54	-0.58	6/24/2022 6:59	11.72	27.45	6/24/2022 8:16	4.94
6/24/2022 7:13	11.54	0.11	6/25/2022 8:57	11.55	-0.46	6/24/2022 7:00	11.75	27.41	6/24/2022 8:17	4.92
6/24/2022 7:14	11.55	0.11	6/25/2022 8:58	11.53	-0.44	6/24/2022 7:01	11.72	27.39	6/24/2022 8:18	4.92
6/24/2022 7:15	11.54	0.01	6/25/2022 8:59	11.55	-0.47	6/24/2022 7:02	11.72	27.35	6/24/2022 8:19	4.81
6/24/2022 7:16	11.55	0.09	6/25/2022 9:00	11.54	-0.47	6/24/2022 7:03	11.71	27.33	6/24/2022 8:20	4.85
6/24/2022 7:17	11.59	0.07	6/25/2022 9:01	11.55	-0.47	6/24/2022 7:04	11.74	27.31	6/24/2022 8:21	4.92
6/24/2022 7:18	11.55	0.15	6/25/2022 9:02	11.55	-0.52	6/24/2022 7:05	11.75	27.25	6/24/2022 8:22	4.92
6/24/2022 7:19	11.56	0.15	6/25/2022 9:03	11.54	-0.38	6/24/2022 7:06	11.73	27.22	6/24/2022 8:23	4.86
6/24/2022 7:20	11.56	0.04	6/25/2022 9:04	11.54	-0.53	6/24/2022 7:07	11.73	27.22	6/24/2022 8:24	4.85
6/24/2022 7:21	11.54	0.13	6/25/2022 9:05	11.53	-0.43	6/24/2022 7:08	11.73	27.15	6/24/2022 8:25	4.83
6/24/2022 7:22	11.57	0.06	6/25/2022 9:06	11.54	-0.50	6/24/2022 7:09	11.73	27.16	6/24/2022 8:26	4.81
6/24/2022 7:23	11.57	0.07	6/25/2022 9:07	11.55	-0.50	6/24/2022 7:10	11.73	27.12	6/24/2022 8:27	4.86
6/24/2022 7:24	11.55	0.19	6/25/2022 9:08	11.54	-0.31	6/24/2022 7:11	11.73	27.06	6/24/2022 8:28	4.82
6/24/2022 7:25	11.54	0.10	6/25/2022 9:09	11.54	-0.38	6/24/2022 7:12	11.71	27.08	6/24/2022 8:29	4.85
6/24/2022 7:26	11.54	0.15	6/25/2022 9:10	11.53	-0.43	6/24/2022 7:13	11.74	27.05	6/24/2022 8:30	4.84
6/24/2022 7:27	11.57	0.12	6/25/2022 9:11	11.53	-0.47	6/24/2022 7:14	11.71	26.99	6/24/2022 8:31	4.89
6/24/2022 7:28	11.54	0.11	6/25/2022 9:12	11.53	-0.42	6/24/2022 7:15	11.74	26.92	6/24/2022 8:32	4.83
6/24/2022 7:29	11.55	0.09	6/25/2022 9:13	11.52	-0.42	6/24/2022 7:16	11.74	26.90	6/24/2022 8:33	4.88
6/24/2022 7:30	11.58	0.08	6/25/2022 9:14	11.53	-0.39	6/24/2022 7:17	11.71	26.91	6/24/2022 8:34	4.75
6/24/2022 7:31	11.53	0.18	6/25/2022 9:15	11.52	-0.60	6/24/2022 7:18	11.73	26.91	6/24/2022 8:35	4.81
6/24/2022 7:32	11.57	0.10	6/25/2022 9:16	11.56	-0.50	6/24/2022 7:19	11.75	26.81	6/24/2022 8:36	4.78
6/24/2022 7:33	11.54	0.07	6/25/2022 9:17	11.53	-0.53	6/24/2022 7:20	11.72	26.80	6/24/2022 8:37	4.79
6/24/2022 7:34	11.58	0.09	6/25/2022 9:18	11.56	-0.50	6/24/2022 7:21	11.76	26.74	6/24/2022 8:38	4.80
6/24/2022 7:35	11.56	0.13	6/25/2022 9:19	11.54	-0.40	6/24/2022 7:22	11.73	26.71	6/24/2022 8:39	4.75
6/24/2022 7:36	11.54	0.11	6/25/2022 9:20	11.54	-0.45	6/24/2022 7:23	11.76	26.75	6/24/2022 8:40	4.75
6/24/2022 7:37	11.55	0.07	6/25/2022 9:21	11.51	-0.49	6/24/2022 7:24	11.75	26.69	6/24/2022 8:41	4.77
6/24/2022 7:38	11.56	0.12	6/25/2022 9:22	11.56	-0.38	6/24/2022 7:25	11.70	26.70	6/24/2022 8:42	4.82
6/24/2022 7:39	11.55	0.15	6/25/2022 9:23	11.54	-0.48	6/24/2022 7:26	11.71	26.61	6/24/2022 8:43	4.78
6/24/2022 7:40	11.53	0.07	6/25/2022 9:24	11.55	-0.55	6/24/2022 7:27	11.72	26.55	6/24/2022 8:44	4.73
6/24/2022 7:41	11.55	0.13	6/25/2022 9:25	11.53	-0.38	6/24/2022 7:28	11.70	26.54	6/24/2022 8:45	4.78
6/24/2022 7:42	11.57	0.12	6/25/2022 9:26	11.53	-0.48	6/24/2022 7:29	11.75	26.54	6/24/2022 8:51	4.71
6/24/2022 7:43	11.55	0.04	6/25/2022 9:27	11.54	-0.54	6/24/2022 7:30	11.74	26.50	6/24/2022 8:52	4.71
6/24/2022 7:44	11.54	0.05	6/25/2022 9:28	11.53	-0.48	6/24/2022 7:31	11.75	26.48	6/24/2022 8:53	4.76
6/24/2022 7:45	11.54	0.07	6/25/2022 9:29	11.53	-0.44	6/24/2022 7:32	11.76	26.39	6/24/2022 8:54	4.69
6/24/2022 7:46	11.57	0.05	6/25/2022 9:30	11.54	-0.57	6/24/2022 7:33	11.76	26.42	6/24/2022 8:55	4.68
6/24/2022 7:47	11.55	0.16	6/25/2022 9:31	11.55	-0.51	6/24/2022 7:34	11.74	26.31	6/24/2022 8:56	4.66
6/24/2022 7:48	11.55	0.12	6/25/2022 9:32	11.53	-0.42	6/24/2022 7:35	11.75	26.34	6/24/2022 8:57	4.70
6/24/2022 7:49	11.56	0.11	6/25/2022 9:33	11.52	-0.51	6/24/2022 7:36	11.76	26.28	6/24/2022 8:58	4.65
6/24/2022 7:50	11.57	0.12	6/25/2022 9:34	11.53	-0.53	6/24/2022 7:37	11.72	26.29	6/24/2022 8:59	4.70
6/24/2022 7:51	11.53	0.15	6/25/2022 9:35	11.54	-0.46	6/24/2022 7:38	11.73	26.29	6/24/2022 9:00	4.65
6/24/2022 7:52	11.56	0.11	6/25/2022 9:36	11.52	-0.48	6/24/2022 7:39	11.73	26.25	6/24/2022 9:01	4.64
6/24/2022 7:53	11.54	0.15	6/25/2022 9:37	11.57	-0.45	6/24/2022 7:40	11.75	26.14	6/24/2022 9:02	4.70
6/24/2022 7:54	11.56	0.15	6/25/2022 9:38	11.53	-0.50	6/24/2022 7:41	11.71	26.17	6/24/2022 9:03	4.63
6/24/2022 7:55	11.55	0.11	6/25/2022 9:39	11.53	-0.48	6/24/2022 7:42	11.73	26.12	6/24/2022 9:04	4.66
6/24/2022 7:56	11.54	0.06	6/25/2022 9:40	11.54	-0.50	6/24/2022 7:43	11.75	26.04	6/24/2022 9:05	4.60
6/24/2022 7:57	11.56	0.07	6/25/2022 9:41	11.55	-0.42	6/24/2022 7:44	11.77	26.03	6/24/2022 9:06	4.65
6/24/2022 7:58	11.55	0.11	6/25/2022 9:42	11.55	-0.54	6/24/2022 7:45	11.72	26.02	6/24/2022 9:07	4.63
6/24/2022 7:59	11.54	0.11	6/25/2022 9:43	11.56	-0.48	6/24/2022 7:46	11.76	25.94	6/24/2022 9:08	4.60
6/24/2022 8:00	11.57	0.11	6/25/2022 9:44	11.51	-0.38	6/24/2022 7:47	11.74	25.94	6/24/2022 9:09	4.60
6/24/2022 8:01	11.53	0.14	6/25/2022 9:45	11.52	-0.49	6/24/2022 7:48	11.75	25.90	6/24/2022 9:10	4.64
6/24/2022 8:02	11.54	0.18	6/25/2022 9:46	11.55	-0.38	6/24/2022 7:49	11.75	25.84	6/24/2022 9:11	4.55
6/24/2022 8:03	11.56	0.11	6/25/2022 9:47	11.55	-0.53	6/24/2022 7:50	11.72	25.84	6/24/2022 9:12	4.61
6/24/2022 8:04	11.56	0.07	6/25/2022 9:48	11.54	-0.46	6/24/2022 7:51	11.73	25.83	6/24/2022 9:13	4.58
6/24/2022 8:05	11.54	0.03	6/25/2022 9:49	11.55	-0.44	6/24/2022 7:52	11.74	25.77	6/24/2022 9:14	4.51
6/24/2022 8:06	11.56	0.06	6/25/2022 9:50	11.57	-0.49	6/24/2022 7:53	11.73	25.83	6/24/2022 9:15	4.52
6/24/2022 8:07	11.56	0.12	6/25/2022 9:51	11.55	-0.52	6/24/2022 7:54	11.76	25.70	6/24/2022 9:16	4.50
6/24/2022 8:08	11.58	0.07	6/25/2022 9:52	11.54	-0.35	6/24/2022 7:55	11.70	25.68	6/24/2022 9:17	4.52
6/24/2022 8:09	11.55	0.14	6/25/2022 9:53	11.54	-0.49	6/24/2022 7:56	11.73	25.64	6/24/2022 9:18	4.52
6/24/2022 8:10	11.53	0.12	6/25/2022 9:54	11.54	-0.50	6/24/2022 7:57	11.74	25.65	6/24/2022 9:19	4.44
6/24/2022 8:11	11.56	0.07	6/25/2022 9:55	11.54	-0.49	6/24/2022 7:58	11.73	25.59	6/24/2022 9:20	4.52
6/24/2022 8:12	11.55	0.11	6/25/2022 9:56	11.54	-0.34	6/24/2022 7:59	11.71	25.59	6/24/2022 9:21	4.46
6/24/2022 8:13	11.57	0.10	6/25/2022 9:57	11.52	-0.51	6/24/2022 8:00	11.73	25.49	6/24/2022 9:22	4.48
6/24/2022 8:14	11.59	0.12	6/25/2022 9:58	11.53	-0.47	6/24/2022 8:01	11.70	25.51	6/24/2022 9:23	4.41

6/24/2022 8:15	11.54	0.21	6/25/2022 9:59	11.55	-0.53	6/24/2022 8:02	11.75	25.45	6/24/2022 9:24	4.41
6/24/2022 8:16	11.56	0.11	6/25/2022 10:00	11.55	-0.48	6/24/2022 8:03	11.73	25.47	6/24/2022 9:25	4.35
6/24/2022 8:17	11.55	0.00	6/25/2022 10:01	11.54	-0.48	6/24/2022 8:04	11.74	25.42	6/24/2022 9:26	4.36
6/24/2022 8:18	11.55	0.10	6/25/2022 10:02	11.53	-0.38	6/24/2022 8:05	11.76	25.35	6/24/2022 9:27	4.32
6/24/2022 8:19	11.56	0.09	6/25/2022 10:03	11.54	-0.48	6/24/2022 8:06	11.72	25.38	6/24/2022 9:28	4.33
6/24/2022 8:20	11.56	0.05	6/25/2022 10:04	11.56	-0.43	6/24/2022 8:07	11.73	25.35	6/24/2022 9:29	4.27
6/24/2022 8:21	11.58	0.11	6/25/2022 10:05	11.53	-0.43	6/24/2022 8:08	11.73	25.31	6/24/2022 9:30	4.30
6/24/2022 8:22	11.56	0.11	6/25/2022 10:06	11.54	-0.49	6/24/2022 8:09	11.74	25.26	6/24/2022 9:31	4.26
6/24/2022 8:23	11.56	0.10	6/25/2022 10:07	11.53	-0.37	6/24/2022 8:10	11.70	25.24	6/24/2022 9:32	4.25
6/24/2022 8:24	11.57	0.05	6/25/2022 10:08	11.54	-0.47	6/24/2022 8:11	11.72	25.21	6/24/2022 9:33	4.23
6/24/2022 8:25	11.55	0.02	6/25/2022 10:09	11.53	-0.41	6/24/2022 8:12	11.73	25.09	6/24/2022 9:34	4.14
6/24/2022 8:26	11.56	0.12	6/25/2022 10:10	11.56	-0.45	6/24/2022 8:13	11.71	25.14	6/24/2022 9:35	4.17
6/24/2022 8:27	11.56	0.14	6/25/2022 10:11	11.56	-0.57	6/24/2022 8:14	11.76	25.10	6/24/2022 9:36	4.12
6/24/2022 8:28	11.56	0.12	6/25/2022 10:12	11.56	-0.35	6/24/2022 8:15	11.73	25.05	6/24/2022 9:37	4.17
6/24/2022 8:29	11.57	0.08	6/25/2022 10:13	11.53	-0.44	6/24/2022 8:16	11.72	25.10	6/24/2022 9:38	4.09
6/24/2022 8:30	11.57	0.06	6/25/2022 10:14	11.55	-0.35	6/24/2022 8:17	11.72	24.99	6/24/2022 9:39	4.13
6/24/2022 8:31	11.56	0.06	6/25/2022 10:15	11.52	-0.47	6/24/2022 8:18	11.72	25.01	6/24/2022 9:40	4.07
6/24/2022 8:32	11.57	0.06	6/25/2022 10:16	11.54	-0.49	6/24/2022 8:19	11.70	24.99	6/24/2022 9:41	4.06
6/24/2022 8:33	11.54	0.07	6/25/2022 10:17	11.54	-0.41	6/24/2022 8:20	11.75	24.86	6/24/2022 9:42	4.03
6/24/2022 8:34	11.59	0.13	6/25/2022 10:18	11.54	-0.39	6/24/2022 8:21	11.75	24.89	6/24/2022 9:43	4.04
6/24/2022 8:35	11.56	0.08	6/25/2022 10:19	11.56	-0.40	6/24/2022 8:22	11.72	24.86	6/24/2022 9:44	4.02
6/24/2022 8:36	11.58	0.06	6/25/2022 10:20	11.53	-0.53	6/24/2022 8:23	11.71	24.81	6/24/2022 9:45	3.99
6/24/2022 8:37	11.58	0.10	6/25/2022 10:21	11.56	-0.37	6/24/2022 8:24	11.77	24.80	6/24/2022 9:46	4.01
6/24/2022 8:38	11.55	0.08	6/25/2022 10:22	11.55	-0.43	6/24/2022 8:25	11.76	24.78	6/24/2022 9:47	4.03
6/24/2022 8:39	11.59	0.17	6/25/2022 10:23	11.54	-0.40	6/24/2022 8:26	11.76	24.73	6/24/2022 9:48	4.07
6/24/2022 8:40	11.60	-0.04	6/25/2022 10:24	11.58	-0.57	6/24/2022 8:27	11.72	24.72	6/24/2022 9:49	3.96
6/24/2022 8:41	11.58	0.18	6/25/2022 10:25	11.53	-0.52	6/24/2022 8:28	11.74	24.67	6/24/2022 9:50	4.02
6/24/2022 8:42	11.57	0.13	6/25/2022 10:26	11.55	-0.42	6/24/2022 8:29	11.72	24.65	6/24/2022 9:51	4.01
6/24/2022 8:43	11.58	0.15	6/25/2022 10:27	11.54	-0.50	6/24/2022 8:30	11.74	24.63	6/24/2022 9:52	4.00
6/24/2022 8:44	11.57	0.02	6/25/2022 10:28	11.54	-0.38	6/24/2022 8:31	11.73	24.59	6/24/2022 9:53	4.00
6/24/2022 8:45	11.57	0.07	6/25/2022 10:29	11.52	-0.36	6/24/2022 8:32	11.72	24.55	6/24/2022 9:54	4.05
6/24/2022 8:46	11.59	0.08	6/25/2022 10:30	11.56	-0.53	6/24/2022 8:33	11.73	24.53	6/24/2022 9:55	4.04
6/24/2022 8:47	11.55	0.00	6/25/2022 10:31	11.54	-0.41	6/24/2022 8:34	11.71	24.48	6/24/2022 9:56	4.01
6/24/2022 8:48	11.58	0.04	6/25/2022 10:32	11.55	-0.50	6/24/2022 8:35	11.73	24.46	6/24/2022 9:57	4.01
6/24/2022 8:49	11.58	0.01	6/25/2022 10:33	11.52	-0.42	6/24/2022 8:36	11.75	24.43	6/24/2022 9:58	4.01
6/24/2022 8:50	11.56	0.14	6/25/2022 10:34	11.53	-0.44	6/24/2022 8:37	11.68	24.45	6/24/2022 9:59	4.02
6/24/2022 8:51	11.56	0.17	6/25/2022 10:35	11.52	-0.40	6/24/2022 8:38	11.73	24.31	6/24/2022 10:00	4.07
6/24/2022 8:52	11.61	0.14	6/25/2022 10:36	11.55	-0.53	6/24/2022 8:39	11.75	24.27	6/24/2022 10:01	3.99
6/24/2022 8:53	11.59	0.09	6/25/2022 10:37	11.53	-0.41	6/24/2022 8:40	11.73	24.26	6/24/2022 10:02	4.02
6/24/2022 8:54	11.54	0.08	6/25/2022 10:38	11.54	-0.51	6/24/2022 8:41	11.75	24.27	6/24/2022 10:03	4.02
6/24/2022 8:55	11.57	0.06	6/25/2022 10:39	11.54	-0.48	6/24/2022 8:42	11.70	24.24	6/24/2022 10:04	3.98
6/24/2022 8:56	11.57	0.09	6/25/2022 10:40	11.53	-0.45	6/24/2022 8:43	11.68	24.22	6/24/2022 10:05	3.97
6/24/2022 8:57	11.56	0.14	6/25/2022 10:41	11.56	-0.49	6/24/2022 8:44	11.75	24.09	6/24/2022 10:06	4.04
6/24/2022 8:58	11.59	0.10	6/25/2022 10:42	11.53	-0.41	6/24/2022 8:45	11.71	24.11	6/24/2022 10:07	4.01
6/24/2022 8:59	11.57	0.19	6/25/2022 10:43	11.55	-0.43	6/24/2022 8:46	11.72	24.12	6/24/2022 10:08	3.99
6/24/2022 9:00	11.53	0.10	6/25/2022 10:44	11.55	-0.47	6/24/2022 8:47	11.72	24.06	6/24/2022 10:09	3.97
6/24/2022 9:01	11.57	0.14	6/25/2022 10:45	11.55	-0.49	6/24/2022 8:48	11.73	24.01	6/24/2022 10:10	4.00
6/24/2022 9:02	11.59	0.09	6/25/2022 10:46	11.53	-0.50	6/24/2022 8:49	11.74	23.96	6/24/2022 10:11	3.97
6/24/2022 9:03	11.58	0.09	6/25/2022 10:47	11.56	-0.45	6/24/2022 8:50	11.72	23.99	6/24/2022 10:12	3.96
6/24/2022 9:04	11.59	0.17	6/25/2022 10:48	11.55	-0.44	6/24/2022 8:51	11.75	23.90	6/24/2022 10:13	3.91
6/24/2022 9:05	11.56	0.01	6/25/2022 10:49	11.56	-0.43	6/24/2022 8:52	11.72	23.86	6/24/2022 10:14	3.95
6/24/2022 9:06	11.60	0.15	6/25/2022 10:50	11.53	-0.48	6/24/2022 8:53	11.69	23.90	6/24/2022 10:15	3.88
6/24/2022 9:07	11.56	0.12	6/25/2022 10:51	11.54	-0.40	6/24/2022 8:54	11.75	23.86	6/24/2022 10:16	3.89
6/24/2022 9:08	11.59	0.06	6/25/2022 10:52	11.53	-0.31	6/24/2022 8:55	11.74	23.79	6/24/2022 10:17	3.85
6/24/2022 9:09	11.57	0.09	6/25/2022 10:53	11.54	-0.49	6/24/2022 8:56	11.71	23.76	6/24/2022 10:18	3.87
6/24/2022 9:10	11.60	0.11	6/25/2022 10:54	11.52	-0.42	6/24/2022 8:57	11.74	23.69	6/24/2022 10:19	3.83
6/24/2022 9:11	11.57	0.09	6/25/2022 10:55	11.54	-0.37	6/24/2022 8:58	11.75	23.68	6/24/2022 10:20	3.86
6/24/2022 9:12	11.56	0.07	6/25/2022 10:56	11.56	-0.43	6/24/2022 8:59	11.73	23.67	6/24/2022 10:21	3.79
6/24/2022 9:13	11.57	0.13	6/25/2022 10:57	11.54	-0.43	6/24/2022 9:00	11.70	23.66	6/24/2022 10:22	3.77
6/24/2022 9:14	11.59	0.10	6/25/2022 10:58	11.56	-0.40	6/24/2022 9:01	11.75	23.57	6/24/2022 10:23	3.79
6/24/2022 9:15	11.57	0.16	6/25/2022 10:59	11.53	-0.35	6/24/2022 9:02	11.75	23.54	6/24/2022 10:24	3.75
6/24/2022 9:16	11.60	0.10	6/25/2022 11:00	11.55	-0.52	6/24/2022 9:03	11.76	23.61	6/24/2022 10:25	3.77
6/24/2022 9:17	11.61	0.14	6/25/2022 11:01	11.55	-0.53	6/24/2022 9:04	11.73	23.46	6/24/2022 10:26	3.70
6/24/2022 9:18	11.57	0.15	6/25/2022 11:02	11.55	-0.50	6/24/2022 9:05	11.71	23.51	6/24/2022 10:27	3.66
6/24/2022 9:19	11.60	0.07	6/25/2022 11:03	11.54	-0.41	6/24/2022 9:06	11.76	23.39	6/24/2022 10:28	3.66
6/24/2022 9:20	11.58	0.09	6/25/2022 11:04	11.54	-0.51	6/24/2022 9:07	11.75	23.40	6/24/2022 10:29	3.62
6/24/2022 9:21	11.57	0.06	6/25/2022 11:05	11.52	-0.42	6/24/2022 9:08	11.72	23.44	6/24/2022 10:30	3.62
6/24/2022 9:22	11.58	0.03	6/25/2022 11:06	11.54	-0.52	6/24/2022 9:09	11.77	23.34	6/24/2022 10:31	3.59
6/24/2022 9:23	11.61	0.09	6/25/2022 11:07	11.54	-0.48	6/24/2022 9:10	11.76	23.34	6/24/2022 10:32	3.61
6/24/2022 9:24	11.58	0.08	6/25/2022 11:08	11.56	-0.43	6/24/2022 9:11	11.74	23.30	6/24/2022 10:33	3.59
6/24/2022 9:25	11.57	0.10	6/25/2022 11:09	11.52	-0.43	6/24/2022 9:12	11.71	23.29	6/24/2022 10:34	3.56
6/24/2022 9:26	11.60	0.10	6/25/2022 11:10	11.55	-0.49	6/24/2022 9:13	11.78	23.26	6/24/2022 10:35	3.57
6/24/2022 9:27	11.62	0.11	6/25/2022 11:11	11.51	-0.55	6/24/2022 9:14	11.71	23.24	6/24/2022 10:36	3.51
6/24/2022 9:28	11.62	0.16	6/25/2022 11:12	11.55	-0.39	6/24/2022 9:15	11.74	23.16	6/24/2022 10:37	3.55
6/24/2022 9:29	11.59	0.09	6/25/2022 11:13	11.58	-0.49	6/24/2022 9:16	11.75	23.17	6/24/2022 10:38	3.50
6/24/2022 9:30	11.63	0.03	6/25/2022 11:14	11.53	-0.44	6/24/2022 9:17	11.75	23.14	6/24/2022 10:39	3.54
6/24/2022 9:31	11.62	0.12	6/25/2022 11:15	11.53	-0.53	6/24/2022 9:18	11.71	23.16	6/24/2022 10:40	3.53
6/24/2022 9:32	11.63	0.08	6/25/2022 11:16	11.53	-0.42	6/24/2022 9:19	11.74	23.12	6/24/2022 10:41	3.51
6/24/2022 9:33	11.61	0.16	6/25/2022 11:17	11.54	-0.43	6/24/2022 9:20	11.76	23.04	6/24/2022 10:42	3.52
6/24/2022 9:34	11.60	0.11	6/25/2022 11:18	11.53	-0.39	6/24/2022 9:21	11.76	23.02	6/24/2022 10:43	3.51
6/24/2022 9:35	11.63	0.07	6/25/2022 11:19	11.54	-0.43	6/24/2022 9:22	11.73	22.95	6/24/2022 10:44	3.55
6/24/2022 9:36	11.62	0.14	6/25/2022 11:20	11.54	-0.44	6/24/2022 9:23	11.71	22.98	6/24/2022 10:45	3.50
6/24/2022 9:37	11.60	0.08	6/25/2022 11:21	11.54	-0.43	6/24/2022 9:24	11.72	22.93	6/24/2022 10:46	3.54
6/24/2022 9:38	11.61	0.03	6/25/2022 11:22	11.54	-0.49	6/24/2022 9:25	11.75	22.90	6/24/2022 10:47	3.53
6/24/2022 9:39	11.63	0.10	6/25/2022 11:23	11.55	-0.46	6/24/2022 9:26	11.71	22.92	6/24/2022 10:48	3.48
6/24/2022 9:40	11.62	0.11	6/25/2022 11:24	11.55	-0.46	6/24/2022 9:27	11.76	22.85	6/24/2022 10:49	3.54
6/24/2022 9:41	11.61	0.13	6/25/2022 11:25	11.53	-0.56	6/24/2022 9:28	11.75	22.88	6/24/2022 10:50	3.51
6/24/2022 9:42	11.59	0.14	6/25/2022 11:26	11.54	-0.56	6/24/2022 9:29	11.72	22.79	6/24/2022 10:51	3.53

6/24/2022 9:43	11.61	0.13	6/25/2022 11:27	11.58	-0.52	6/24/2022 9:30	11.74	22.73	6/24/2022 10:52	3.47
6/24/2022 9:44	11.61	0.11	6/25/2022 11:28	11.55	-0.34	6/24/2022 9:31	11.69	22.70	6/24/2022 10:53	3.54
6/24/2022 9:45	11.59	0.05	6/25/2022 11:29	11.53	-0.42	6/24/2022 9:32	11.67	22.73	6/24/2022 10:54	3.54
6/24/2022 9:46	11.58	0.12	6/25/2022 11:30	11.54	-0.36	6/24/2022 9:33	11.78	22.69	6/24/2022 10:55	3.46
6/24/2022 9:47	11.61	0.10	6/25/2022 11:31	11.55	-0.48	6/24/2022 9:34	11.75	22.58	6/24/2022 10:56	3.49
6/24/2022 9:48	11.61	0.11	6/25/2022 11:32	11.55	-0.41	6/24/2022 9:35	11.75	22.55	6/24/2022 10:57	3.50
6/24/2022 9:49	11.59	0.01	6/25/2022 11:33	11.54	-0.40	6/24/2022 9:36	11.72	22.62	6/24/2022 10:58	3.50
6/24/2022 9:50	11.60	0.09	6/25/2022 11:34	11.55	-0.42	6/24/2022 9:37	11.71	22.56	6/24/2022 10:59	3.46
6/24/2022 9:51	11.60	0.14	6/25/2022 11:35	11.54	-0.34	6/24/2022 9:38	11.75	22.54	6/24/2022 11:00	3.50
6/24/2022 9:52	11.59	0.07	6/25/2022 11:36	11.53	-0.39	6/24/2022 9:39	11.74	22.50	6/24/2022 11:01	3.54
6/24/2022 9:53	11.60	0.05	6/25/2022 11:37	11.52	-0.41	6/24/2022 9:40	11.77	22.42	6/24/2022 11:02	3.52
6/24/2022 9:54	11.61	0.11	6/25/2022 11:38	11.56	-0.44	6/24/2022 9:41	11.69	22.51	6/24/2022 11:03	3.50
6/24/2022 9:55	11.61	0.19	6/25/2022 11:39	11.55	-0.41	6/24/2022 9:42	11.77	22.41	6/24/2022 11:04	3.50
6/24/2022 9:56	11.62	0.13	6/25/2022 11:40	11.52	-0.53	6/24/2022 9:43	11.72	22.43	6/24/2022 11:05	3.51
6/24/2022 9:57	11.61	0.15	6/25/2022 11:41	11.54	-0.43	6/24/2022 9:44	11.70	22.39	6/24/2022 11:06	3.47
6/24/2022 9:58	11.60	0.07	6/25/2022 11:42	11.54	-0.41	6/24/2022 9:45	11.75	22.34	6/24/2022 11:07	3.52
6/24/2022 9:59	11.64	0.13	6/25/2022 11:43	11.53	-0.52	6/24/2022 9:46	11.69	22.34	6/24/2022 11:08	3.45
6/24/2022 10:00	11.60	0.11	6/25/2022 11:44	11.55	-0.46	6/24/2022 9:47	11.70	22.31	6/24/2022 11:09	3.46
6/24/2022 10:01	11.60	0.12	6/25/2022 11:45	11.57	-0.48	6/24/2022 9:48	11.69	22.26	6/24/2022 11:10	3.49
6/24/2022 10:02	11.60	0.14	6/25/2022 11:46	11.54	-0.43	6/24/2022 9:49	11.72	22.23	6/24/2022 11:11	3.45
6/24/2022 10:03	11.61	0.05	6/25/2022 11:47	11.56	-0.52	6/24/2022 9:50	11.71	22.25	6/24/2022 11:12	3.41
6/24/2022 10:04	11.60	0.14	6/25/2022 11:48	11.52	-0.46	6/24/2022 9:51	11.75	22.14	6/24/2022 11:13	3.47
6/24/2022 10:05	11.62	0.00	6/25/2022 11:49	11.55	-0.41	6/24/2022 9:52	11.75	22.09	6/24/2022 11:14	3.44
6/24/2022 10:06	11.61	0.13	6/25/2022 11:50	11.54	-0.50	6/24/2022 9:53	11.71	22.04	6/24/2022 11:15	3.40
6/24/2022 10:07	11.58	0.10	6/25/2022 11:51	11.55	-0.48	6/24/2022 9:54	11.75	22.04	6/24/2022 11:16	3.43
6/24/2022 10:08	11.59	0.04	6/25/2022 11:52	11.57	-0.43	6/24/2022 9:55	11.77	22.02	6/24/2022 11:17	3.40
6/24/2022 10:09	11.62	0.12	6/25/2022 11:53	11.53	-0.45	6/24/2022 9:56	11.76	22.00	6/24/2022 11:18	3.42
6/24/2022 10:10	11.60	0.02	6/25/2022 11:54	11.56	-0.41	6/24/2022 9:57	11.69	21.98	6/24/2022 11:19	3.40
6/24/2022 10:11	11.62	0.20	6/25/2022 11:55	11.54	-0.34	6/24/2022 9:58	11.71	21.96	6/24/2022 11:20	3.40
6/24/2022 10:12	11.60	0.02	6/25/2022 11:56	11.56	-0.46	6/24/2022 9:59	11.69	21.91	6/24/2022 11:21	3.38
6/24/2022 10:13	11.59	0.08	6/25/2022 11:57	11.54	-0.45	6/24/2022 10:00	11.71	21.91	6/24/2022 11:22	3.42
6/24/2022 10:14	11.64	0.11	6/25/2022 11:58	11.53	-0.35	6/24/2022 10:01	11.72	21.89	6/24/2022 11:23	3.33
6/24/2022 10:15	11.63	0.10	6/25/2022 11:59	11.53	-0.44	6/24/2022 10:02	11.70	21.82	6/24/2022 11:24	3.33
6/24/2022 10:16	11.58	0.04	6/25/2022 12:00	11.53	-0.44	6/24/2022 10:03	11.76	21.79	6/24/2022 11:25	3.34
6/24/2022 10:17	11.60	0.12	6/25/2022 12:01	11.53	-0.44	6/24/2022 10:04	11.73	21.83	6/24/2022 11:26	3.34
6/24/2022 10:18	11.63	0.11	6/25/2022 12:02	11.57	-0.55	6/24/2022 10:05	11.70	21.75	6/24/2022 11:27	3.32
6/24/2022 10:19	11.61	0.16	6/25/2022 12:03	11.53	-0.47	6/24/2022 10:06	11.69	21.71	6/24/2022 11:28	3.40
6/24/2022 10:20	11.61	0.12	6/25/2022 12:04	11.55	-0.40	6/24/2022 10:07	11.74	21.64	6/24/2022 11:29	3.36
6/24/2022 10:21	11.62	0.06	6/25/2022 12:05	11.56	-0.41	6/24/2022 10:08	11.70	21.69	6/24/2022 11:30	3.37
6/24/2022 10:22	11.59	0.07	6/25/2022 12:06	11.52	-0.40	6/24/2022 10:09	11.68	21.63	6/24/2022 11:31	3.39
6/24/2022 10:23	11.61	0.15	6/25/2022 12:07	11.53	-0.42	6/24/2022 10:10	11.70	21.62	6/24/2022 11:32	3.33
6/24/2022 10:24	11.62	0.04	6/25/2022 12:08	11.54	-0.42	6/24/2022 10:11	11.73	21.58	6/24/2022 11:33	3.39
6/24/2022 10:25	11.61	0.18	6/25/2022 12:09	11.53	-0.40	6/24/2022 10:12	11.73	21.51	6/24/2022 11:34	3.32
6/24/2022 10:26	11.62	0.05	6/25/2022 12:10	11.56	-0.44	6/24/2022 10:13	11.71	21.50	6/24/2022 11:35	3.30
6/24/2022 10:27	11.65	0.14	6/25/2022 12:11	11.54	-0.60	6/24/2022 10:14	11.75	21.43	6/24/2022 11:36	3.37
6/24/2022 10:28	11.64	0.12	6/25/2022 12:12	11.53	-0.55	6/24/2022 10:15	11.69	21.48	6/24/2022 11:37	3.27
6/24/2022 10:29	11.63	0.08	6/25/2022 12:13	11.54	-0.51	6/24/2022 10:16	11.72	21.44	6/24/2022 11:38	3.33
6/24/2022 10:30	11.65	0.17	6/25/2022 12:14	11.54	-0.50	6/24/2022 10:17	11.76	21.42	6/24/2022 11:39	3.33
6/24/2022 10:31	11.64	0.08	6/25/2022 12:15	11.55	-0.46	6/24/2022 10:18	11.73	21.37	6/24/2022 11:40	3.24
6/24/2022 10:32	11.64	0.17	6/25/2022 12:16	11.54	-0.31	6/24/2022 10:19	11.73	21.34	6/24/2022 11:41	3.33
6/24/2022 10:33	11.62	0.10	6/25/2022 12:17	11.56	-0.50	6/24/2022 10:20	11.75	21.33	6/24/2022 11:42	3.29
6/24/2022 10:34	11.59	0.12	6/25/2022 12:18	11.54	-0.43	6/24/2022 10:21	11.69	21.31	6/24/2022 11:43	3.30
6/24/2022 10:35	11.61	0.11	6/25/2022 12:19	11.51	-0.32	6/24/2022 10:22	11.72	21.25	6/24/2022 11:44	3.31
6/24/2022 10:36	11.63	0.08	6/25/2022 12:20	11.54	-0.35	6/24/2022 10:23	11.73	21.24	6/24/2022 11:45	3.28
6/24/2022 10:37	11.66	0.08	6/25/2022 12:21	11.55	-0.45	6/24/2022 10:24	11.71	21.18	6/24/2022 11:46	3.36
6/24/2022 10:38	11.64	0.02	6/25/2022 12:22	11.53	-0.47	6/24/2022 10:25	11.77	21.16	6/24/2022 11:47	3.28
6/24/2022 10:39	11.62	0.06	6/25/2022 12:23	11.54	-0.41	6/24/2022 10:26	11.71	21.16	6/24/2022 11:48	3.32
6/24/2022 10:40	11.66	0.05	6/25/2022 12:24	11.55	-0.35	6/24/2022 10:27	11.78	21.06	6/24/2022 11:49	3.24
6/24/2022 10:41	11.65	0.05	6/25/2022 12:25	11.54	-0.43	6/24/2022 10:28	11.72	21.05	6/24/2022 11:50	3.24
6/24/2022 10:42	11.60	0.06	6/25/2022 12:26	11.55	-0.43	6/24/2022 10:29	11.73	20.98	6/24/2022 11:51	3.27
6/24/2022 10:43	11.64	0.08	6/25/2022 12:27	11.56	-0.35	6/24/2022 10:30	11.75	21.02	6/24/2022 11:52	3.31
6/24/2022 10:44	11.64	0.06	6/25/2022 12:28	11.54	-0.51	6/24/2022 10:31	11.70	21.03	6/24/2022 11:53	3.30
6/24/2022 10:45	11.61	0.09	6/25/2022 12:29	11.52	-0.51	6/24/2022 10:32	11.76	20.95	6/24/2022 11:54	3.28
6/24/2022 10:46	11.63	0.11	6/25/2022 12:30	11.55	-0.37	6/24/2022 10:33	11.69	20.96	6/24/2022 11:55	3.32
6/24/2022 10:47	11.61	0.10	6/25/2022 12:31	11.54	-0.44	6/24/2022 10:34	11.69	20.90	6/24/2022 11:56	3.26
6/24/2022 10:48	11.63	0.13	6/25/2022 12:32	11.54	-0.37	6/24/2022 10:35	11.70	20.91	6/24/2022 11:57	3.29
6/24/2022 10:49	11.65	0.03	6/25/2022 12:33	11.56	-0.46	6/24/2022 10:36	11.78	20.83	6/24/2022 11:58	3.32
6/24/2022 10:50	11.62	0.11	6/25/2022 12:34	11.53	-0.41	6/24/2022 10:37	11.71	20.85	6/24/2022 11:59	3.29
6/24/2022 10:51	11.66	0.02	6/25/2022 12:35	11.55	-0.41	6/24/2022 10:38	11.77	20.77	6/24/2022 12:00	3.28
6/24/2022 10:52	11.66	0.10	6/25/2022 12:36	11.52	-0.36	6/24/2022 10:39	11.72	20.72	6/24/2022 12:01	3.27
6/24/2022 10:53	11.65	0.11	6/25/2022 12:37	11.53	-0.40	6/24/2022 10:40	11.72	20.72	6/24/2022 12:02	3.26
6/24/2022 10:54	11.64	0.04	6/25/2022 12:38	11.54	-0.41	6/24/2022 10:41	11.73	20.73	6/24/2022 12:03	3.27
6/24/2022 10:55	11.64	0.13	6/25/2022 12:39	11.54	-0.32	6/24/2022 10:42	11.69	20.71	6/24/2022 12:04	3.23
6/24/2022 10:56	11.63	0.07	6/25/2022 12:40	11.53	-0.41	6/24/2022 10:43	11.69	20.65	6/24/2022 12:05	3.26
6/24/2022 10:57	11.63	0.07	6/25/2022 12:41	11.57	-0.50	6/24/2022 10:44	11.75	20.55	6/24/2022 12:06	3.23
6/24/2022 10:58	11.65	0.08	6/25/2022 12:42	11.52	-0.42	6/24/2022 10:45	11.75	20.57	6/24/2022 12:07	3.24
6/24/2022 10:59	11.62	0.15	6/25/2022 12:43	11.53	-0.55	6/24/2022 10:46	11.76	20.53	6/24/2022 12:08	3.24
6/24/2022 11:00	11.63	0.09	6/25/2022 12:44	11.55	-0.53	6/24/2022 10:47	11.69	20.54	6/24/2022 12:09	3.25
6/24/2022 11:01	11.61	0.05	6/25/2022 12:45	11.57	-0.52	6/24/2022 10:48	11.73	20.51	6/24/2022 12:10	3.23
6/24/2022 11:02	11.63	0.17	6/25/2022 12:46	11.52	-0.53	6/24/2022 10:49	11.71	20.51	6/24/2022 12:11	3.28
6/24/2022 11:03	11.63	0.10	6/25/2022 12:47	11.56	-0.51	6/24/2022 10:50	11.69	20.46	6/24/2022 12:12	3.24
6/24/2022 11:04	11.63	0.07	6/25/2022 12:48	11.53	-0.54	6/24/2022 10:51	11.70	20.45	6/24/2022 12:13	3.18
6/24/2022 11:05	11.66	0.11	6/25/2022 12:49	11.51	-0.55	6/24/2022 10:52	11.77	20.35	6/24/2022 12:14	3.20
6/24/2022 11:06	11.63	0.11	6/25/2022 12:50	11.55	-0.45	6/24/2022 10:53	11.71	20.37	6/24/2022 12:15	3.25
6/24/2022 11:07	11.63	0.10	6/25/2022 12:51	11.54	-0.46	6/24/2022 10:54	11.69	20.32	6/24/2022 12:16	3.20
6/24/2022 11:08	11.66	0.12	6/25/2022 12:52	11.55	-0.42	6/24/2022 10:55	11.75	20.27	6/24/2022 12:17	3.20
6/24/2022 11:09	11.67	0.07	6/25/2022 12:53	11.53	-0.40	6/24/2022 10:56	11.75	20.22	6/24/2022 12:18	3.17
6/24/2022 11:10	11.64	0.05	6/25/2022 12:54	11.54	-0.51	6/24/2022 10:57	11.70	20.26	6/24/2022 12:19	3.22

6/24/2022 11:11	11.65	0.16	6/25/2022 12:55	11.54	-0.46	6/24/2022 10:58	11.72	20.24	6/24/2022 12:20	3.17
6/24/2022 11:12	11.64	0.08	6/25/2022 12:56	11.54	-0.50	6/24/2022 10:59	11.69	20.17	6/24/2022 12:21	3.20
6/24/2022 11:13	11.65	0.16	6/25/2022 12:57	11.54	-0.35	6/24/2022 11:00	11.72	20.15	6/24/2022 12:22	3.17
6/24/2022 11:14	11.68	0.09	6/25/2022 12:58	11.54	-0.41	6/24/2022 11:01	11.73	20.10	6/24/2022 12:23	3.17
6/24/2022 11:15	11.69	0.08	6/25/2022 12:59	11.53	-0.40	6/24/2022 11:02	11.69	20.16	6/24/2022 12:24	3.09
6/24/2022 11:16	11.66	0.14	6/25/2022 13:00	11.52	-0.55	6/24/2022 11:03	11.73	20.12	6/24/2022 12:25	3.11
6/24/2022 11:17	11.67	0.08	6/25/2022 13:01	11.55	-0.49	6/24/2022 11:04	11.73	20.01	6/24/2022 12:26	3.14
6/24/2022 11:18	11.66	0.14	6/25/2022 13:02	11.53	-0.39	6/24/2022 11:05	11.70	20.03	6/24/2022 12:27	3.10
6/24/2022 11:19	11.64	0.11	6/25/2022 13:03	11.57	-0.42	6/24/2022 11:06	11.76	19.94	6/24/2022 12:28	3.10
6/24/2022 11:20	11.65	0.13	6/25/2022 13:04	11.56	-0.40	6/24/2022 11:07	11.73	19.93	6/24/2022 12:29	3.11
6/24/2022 11:21	11.67	0.06	6/25/2022 13:05	11.53	-0.35	6/24/2022 11:08	11.74	19.96	6/24/2022 12:30	3.08
6/24/2022 11:22	11.64	0.07	6/25/2022 13:06	11.52	-0.47	6/24/2022 11:09	11.73	19.91	6/24/2022 12:31	3.11
6/24/2022 11:23	11.65	0.06	6/25/2022 13:07	11.54	-0.51	6/24/2022 11:10	11.72	19.91	6/24/2022 12:32	3.07
6/24/2022 11:24	11.67	0.07	6/25/2022 13:08	11.55	-0.54	6/24/2022 11:11	11.75	19.85	6/24/2022 12:33	3.04
6/24/2022 11:25	11.67	0.09	6/25/2022 13:09	11.54	-0.44	6/24/2022 11:12	11.71	19.84	6/24/2022 12:34	3.12
6/24/2022 11:26	11.64	0.01	6/25/2022 13:10	11.53	-0.42	6/24/2022 11:13	11.74	19.79	6/24/2022 12:35	3.04
6/24/2022 11:27	11.60	0.12	6/25/2022 13:11	11.54	-0.40	6/24/2022 11:14	11.75	19.74	6/24/2022 12:36	3.07
6/24/2022 11:28	11.63	0.11	6/25/2022 13:12	11.55	-0.50	6/24/2022 11:15	11.71	19.79	6/24/2022 12:37	3.04
6/24/2022 11:29	11.67	0.14	6/25/2022 13:13	11.56	-0.50	6/24/2022 11:16	11.71	19.79	6/24/2022 12:38	3.06
6/24/2022 11:30	11.66	0.08	6/25/2022 13:14	11.54	-0.35	6/24/2022 11:17	11.73	19.69	6/24/2022 12:39	3.01
6/24/2022 11:31	11.65	0.06	6/25/2022 13:15	11.56	-0.43	6/24/2022 11:18	11.71	19.67	6/24/2022 12:40	3.03
6/24/2022 11:32	11.65	0.06	6/25/2022 13:16	11.56	-0.55	6/24/2022 11:19	11.70	19.65	6/24/2022 12:41	3.02
6/24/2022 11:33	11.67	0.10	6/25/2022 13:17	11.55	-0.50	6/24/2022 11:20	11.72	19.61	6/24/2022 12:42	3.04
6/24/2022 11:34	11.67	0.10	6/25/2022 13:18	11.54	-0.45	6/24/2022 11:21	11.72	19.60	6/24/2022 12:43	3.03
6/24/2022 11:35	11.64	0.06	6/25/2022 13:19	11.55	-0.51	6/24/2022 11:22	11.76	19.57	6/24/2022 12:44	3.03
6/24/2022 11:36	11.63	0.17	6/25/2022 13:20	11.54	-0.43	6/24/2022 11:23	11.68	19.56	6/24/2022 12:45	3.02
6/24/2022 11:37	11.64	0.10	6/25/2022 13:21	11.54	-0.42	6/24/2022 11:24	11.75	19.48	6/24/2022 12:46	2.98
6/24/2022 11:38	11.62	0.01	6/25/2022 13:22	11.53	-0.41	6/24/2022 11:25	11.76	19.45	6/24/2022 12:47	3.01
6/24/2022 11:39	11.64	0.12	6/25/2022 13:23	11.54	-0.39	6/24/2022 11:26	11.76	19.41	6/24/2022 12:48	3.01
6/24/2022 11:40	11.65	0.03	6/25/2022 13:24	11.52	-0.46	6/24/2022 11:27	11.69	19.44	6/24/2022 12:49	3.09
6/24/2022 11:41	11.65	0.13	6/25/2022 13:25	11.53	-0.54	6/24/2022 11:28	11.74	19.36	6/24/2022 12:50	3.06
6/24/2022 11:42	11.64	0.12	6/25/2022 13:26	11.52	-0.53	6/24/2022 11:29	11.75	19.34	6/24/2022 12:51	3.08
6/24/2022 11:43	11.64	0.13	6/25/2022 13:27	11.52	-0.50	6/24/2022 11:30	11.73	19.37	6/24/2022 12:52	3.04
6/24/2022 11:44	11.65	0.12	6/25/2022 13:28	11.54	-0.44	6/24/2022 11:31	11.69	19.35	6/24/2022 12:53	3.03
6/24/2022 11:45	11.69	0.07	6/25/2022 13:29	11.55	-0.50	6/24/2022 11:32	11.71	19.27	6/24/2022 12:54	3.02
6/24/2022 11:46	11.68	0.14	6/25/2022 13:30	11.58	-0.38	6/24/2022 11:33	11.76	19.24	6/24/2022 12:55	3.04
6/24/2022 11:47	11.66	0.15	6/25/2022 13:31	11.55	-0.37	6/24/2022 11:34	11.73	19.21	6/24/2022 12:56	3.04
6/24/2022 11:48	11.65	0.00	6/25/2022 13:32	11.55	-0.40	6/24/2022 11:35	11.74	19.21	6/24/2022 12:57	3.01
6/24/2022 11:49	11.68	0.11	6/25/2022 13:33	11.54	-0.56	6/24/2022 11:36	11.72	19.20	6/24/2022 12:58	3.00
6/24/2022 11:50	11.68	0.07	6/25/2022 13:34	11.56	-0.57	6/24/2022 11:37	11.74	19.18	6/24/2022 12:59	3.02
6/24/2022 11:51	11.67	0.09	6/25/2022 13:35	11.53	-0.38	6/24/2022 11:38	11.75	19.09	6/24/2022 13:00	2.97
6/24/2022 11:52	11.66	0.06	6/25/2022 13:36	11.52	-0.46	6/24/2022 11:39	11.73	19.12	6/24/2022 13:01	3.00
6/24/2022 11:53	11.67	0.10	6/25/2022 13:37	11.54	-0.38	6/24/2022 11:40	11.78	19.07	6/24/2022 13:02	3.00
6/24/2022 11:54	11.64	0.10	6/25/2022 13:38	11.54	-0.45	6/24/2022 11:41	11.69	19.07	6/24/2022 13:03	2.97
6/24/2022 11:55	11.63	0.11	6/25/2022 13:39	11.52	-0.47	6/24/2022 11:42	11.70	19.05	6/24/2022 13:04	2.96
6/24/2022 11:56	11.63	0.11	6/25/2022 13:40	11.55	-0.56	6/24/2022 11:43	11.77	19.00	6/24/2022 13:05	2.98
6/24/2022 11:57	11.67	0.08	6/25/2022 13:41	11.55	-0.50	6/24/2022 11:44	11.76	18.99	6/24/2022 13:06	3.02
6/24/2022 11:58	11.66	0.11	6/25/2022 13:42	11.56	-0.41	6/24/2022 11:45	11.75	18.97	6/24/2022 13:07	2.98
6/24/2022 11:59	11.66	0.15	6/25/2022 13:43	11.51	-0.37	6/24/2022 11:46	11.65	18.98	6/24/2022 13:08	2.97
6/24/2022 12:00	11.65	0.00	6/25/2022 13:44	11.52	-0.46	6/24/2022 11:47	11.73	18.93	6/24/2022 13:09	3.03
6/24/2022 12:01	11.68	0.14	6/25/2022 13:45	11.57	-0.50	6/24/2022 11:48	11.71	18.90	6/24/2022 13:10	3.03
6/24/2022 12:02	11.67	0.06	6/25/2022 13:46	11.54	-0.46	6/24/2022 11:49	11.74	18.75	6/24/2022 13:11	3.01
6/24/2022 12:03	11.70	0.09	6/25/2022 13:47	11.55	-0.46	6/24/2022 11:50	11.70	18.79	6/24/2022 13:12	3.02
6/24/2022 12:04	11.66	0.05	6/25/2022 13:48	11.57	-0.37	6/24/2022 11:51	11.69	18.81	6/24/2022 13:13	3.01
6/24/2022 12:05	11.65	0.05	6/25/2022 13:49	11.56	-0.42	6/24/2022 11:52	11.67	18.82	6/24/2022 13:14	2.98
6/24/2022 12:06	11.66	0.13	6/25/2022 13:50	11.55	-0.59	6/24/2022 11:53	11.75	18.72	6/24/2022 13:15	2.94
6/24/2022 12:07	11.65	0.02	6/25/2022 13:51	11.55	-0.47	6/24/2022 11:54	11.72	18.68	6/24/2022 13:16	3.00
6/24/2022 12:08	11.66	0.20	6/25/2022 13:52	11.55	-0.39	6/24/2022 11:55	11.70	18.64	6/24/2022 13:17	3.04
6/24/2022 12:09	11.67	0.21	6/25/2022 13:53	11.56	-0.52	6/24/2022 11:56	11.69	18.72	6/24/2022 13:18	3.02
6/24/2022 12:10	11.66	0.17	6/25/2022 13:54	11.55	-0.49	6/24/2022 11:57	11.72	18.65	6/24/2022 13:19	2.95
6/24/2022 12:11	11.67	0.04	6/25/2022 13:55	11.56	-0.45	6/24/2022 11:58	11.72	18.62	6/24/2022 13:20	2.98
6/24/2022 12:12	11.68	0.16	6/25/2022 13:56	11.56	-0.42	6/24/2022 11:59	11.71	18.61	6/24/2022 13:21	2.98
6/24/2022 12:13	11.66	0.11	6/25/2022 13:57	11.55	-0.49	6/24/2022 12:00	11.71	18.53	6/24/2022 13:22	2.96
6/24/2022 12:14	11.69	0.10	6/25/2022 13:58	11.55	-0.47	6/24/2022 12:01	11.74	18.54	6/24/2022 13:23	3.02
6/24/2022 12:15	11.69	0.19	6/25/2022 13:59	11.58	-0.45	6/24/2022 12:02	11.72	18.52	6/24/2022 13:24	2.99
6/24/2022 12:16	11.68	0.09	6/25/2022 14:00	11.54	-0.50	6/24/2022 12:03	11.68	18.51	6/24/2022 13:25	2.97
6/24/2022 12:17	11.67	0.09	6/25/2022 14:01	11.54	-0.51	6/24/2022 12:04	11.73	18.42	6/24/2022 13:26	2.95
6/24/2022 12:18	11.69	0.06	6/25/2022 14:02	11.54	-0.42	6/24/2022 12:05	11.71	18.41	6/24/2022 13:27	3.00
6/24/2022 12:19	11.72	0.15	6/25/2022 14:03	11.54	-0.53	6/24/2022 12:06	11.77	18.34	6/24/2022 13:28	2.94
6/24/2022 12:20	11.69	0.10	6/25/2022 14:04	11.54	-0.53	6/24/2022 12:07	11.75	18.36	6/24/2022 13:29	2.91
6/24/2022 12:21	11.67	0.09	6/25/2022 14:05	11.54	-0.52	6/24/2022 12:08	11.75	18.33	6/24/2022 13:30	2.96
6/24/2022 12:22	11.66	0.10	6/25/2022 14:06	11.55	-0.46	6/24/2022 12:09	11.74	18.29	6/24/2022 13:31	2.96
6/24/2022 12:23	11.68	0.05	6/25/2022 14:07	11.56	-0.52	6/24/2022 12:10	11.72	18.33	6/24/2022 13:32	2.95
6/24/2022 12:24	11.66	0.15	6/25/2022 14:08	11.55	-0.36	6/24/2022 12:11	11.68	18.30	6/24/2022 13:33	2.92
6/24/2022 12:25	11.69	0.09	6/25/2022 14:09	11.54	-0.35	6/24/2022 12:12	11.76	18.20	6/24/2022 13:34	2.88
6/24/2022 12:26	11.69	0.18	6/25/2022 14:10	11.55	-0.52	6/24/2022 12:13	11.75	18.17	6/24/2022 13:35	2.93
6/24/2022 12:27	11.67	0.09	6/25/2022 14:11	11.54	-0.37	6/24/2022 12:14	11.73	18.17	6/24/2022 13:36	2.89
6/24/2022 12:28	11.67	0.17	6/25/2022 14:12	11.55	-0.44	6/24/2022 12:15	11.72	18.14	6/24/2022 13:37	2.90
6/24/2022 12:29	11.68	0.11	6/25/2022 14:13	11.56	-0.44	6/24/2022 12:16	11.74	18.11	6/24/2022 13:38	2.87
6/24/2022 12:30	11.68	0.11	6/25/2022 14:14	11.55	-0.41	6/24/2022 12:17	11.68	18.06	6/24/2022 13:39	2.90
6/24/2022 12:31	11.68	0.10	6/25/2022 14:15	11.57	-0.41	6/24/2022 12:18	11.69	18.05	6/24/2022 13:40	2.86
6/24/2022 12:32	11.69	0.08	6/25/2022 14:16	11.55	-0.53	6/24/2022 12:19	11.73	18.00	6/24/2022 13:41	2.90
6/24/2022 12:33	11.67	0.09	6/25/2022 14:17	11.56	-0.43	6/24/2022 12:20	11.73	17.99	6/24/2022 13:42	2.88
6/24/2022 12:34	11.67	0.09	6/25/2022 14:18	11.56	-0.51	6/24/2022 12:21	11.73	17.99	6/24/2022 13:43	2.83
6/24/2022 12:35	11.68	0.07	6/25/2022 14:19	11.52	-0.43	6/24/2022 12:22	11.74	17.98	6/24/2022 13:44	2.87
6/24/2022 12:36	11.65	0.13	6/25/2022 14:20	11.53	-0.50	6/24/2022 12:23	11.71	17.93	6/24/2022 13:45	2.82
6/24/2022 12:37	11.65	0.09	6/25/2022 14:21	11.53	-0.42	6/24/2022 12:24	11.74	17.90	6/24/2022 13:46	2.82
6/24/2022 12:38	11.65	0.19	6/25/2022 14:22	11.55	-0.45	6/24/2022 12:25	11.74	17.87	6/24/2022 13:47	2.84

6/24/2022 12:39	11.64	0.11	6/25/2022 14:23	11.56	-0.43	6/24/2022 12:26	11.70	17.87	6/24/2022 13:48	2.83
6/24/2022 12:40	11.64	0.06	6/25/2022 14:24	11.55	-0.46	6/24/2022 12:27	11.71	17.87	6/24/2022 13:49	2.88
6/24/2022 12:41	11.64	0.05	6/25/2022 14:25	11.55	-0.47	6/24/2022 12:28	11.71	17.82	6/24/2022 13:50	2.82
6/24/2022 12:42	11.67	0.15	6/25/2022 14:26	11.54	-0.44	6/24/2022 12:29	11.73	17.77	6/24/2022 13:51	2.82
6/24/2022 12:43	11.64	0.13	6/25/2022 14:27	11.54	-0.48	6/24/2022 12:30	11.73	17.81	6/24/2022 13:52	2.79
6/24/2022 12:44	11.65	0.11	6/25/2022 14:28	11.55	-0.36	6/24/2022 12:31	11.71	17.70	6/24/2022 13:53	2.80
6/24/2022 12:45	11.66	0.09	6/25/2022 14:29	11.51	-0.47	6/24/2022 12:32	11.67	17.70	6/24/2022 13:54	2.83
6/24/2022 12:46	11.64	0.10	6/25/2022 14:30	11.54	-0.51	6/24/2022 12:33	11.71	17.66	6/24/2022 13:55	2.78
6/24/2022 12:47	11.65	0.12	6/25/2022 14:31	11.55	-0.40	6/24/2022 12:34	11.74	17.64	6/24/2022 13:56	2.75
6/24/2022 12:48	11.66	0.06	6/25/2022 14:32	11.56	-0.44	6/24/2022 12:35	11.72	17.60	6/24/2022 13:57	2.81
6/24/2022 12:49	11.65	0.05	6/25/2022 14:33	11.56	-0.36	6/24/2022 12:36	11.71	17.62	6/24/2022 13:58	2.79
6/24/2022 12:50	11.66	0.10	6/25/2022 14:34	11.56	-0.42	6/24/2022 12:37	11.73	17.55	6/24/2022 13:59	2.77
6/24/2022 12:51	11.64	0.11	6/25/2022 14:35	11.54	-0.51	6/24/2022 12:38	11.72	17.52	6/24/2022 14:00	2.77
6/24/2022 12:52	11.67	0.07	6/25/2022 14:36	11.55	-0.40	6/24/2022 12:39	11.71	17.48	6/24/2022 14:01	2.77
6/24/2022 12:53	11.66	0.03	6/25/2022 14:37	11.55	-0.41	6/24/2022 12:40	11.70	17.49	6/24/2022 14:02	2.71
6/24/2022 12:54	11.68	0.11	6/25/2022 14:38	11.55	-0.51	6/24/2022 12:41	11.72	17.43	6/24/2022 14:03	2.72
6/24/2022 12:55	11.65	0.11	6/25/2022 14:39	11.54	-0.41	6/24/2022 12:42	11.69	17.44	6/24/2022 14:04	2.71
6/24/2022 12:56	11.67	0.09	6/25/2022 14:40	11.58	-0.57	6/24/2022 12:43	11.69	17.40	6/24/2022 14:05	2.67
6/24/2022 12:57	11.70	0.14	6/25/2022 14:41	11.53	-0.51	6/24/2022 12:44	11.73	17.36	6/24/2022 14:06	2.71
6/24/2022 12:58	11.70	0.14	6/25/2022 14:42	11.53	-0.46	6/24/2022 12:45	11.73	17.36	6/24/2022 14:07	2.68
6/24/2022 12:59	11.67	0.11	6/25/2022 14:43	11.53	-0.45	6/24/2022 12:46	11.70	17.28	6/24/2022 14:08	2.71
6/24/2022 13:00	11.68	0.07	6/25/2022 14:44	11.55	-0.55	6/24/2022 12:47	11.73	17.31	6/24/2022 14:09	2.64
6/24/2022 13:01	11.65	0.09	6/25/2022 14:45	11.54	-0.53	6/24/2022 12:48	11.70	17.30	6/24/2022 14:10	2.60
6/24/2022 13:02	11.68	0.09	6/25/2022 14:46	11.51	-0.42	6/24/2022 12:49	11.70	17.25	6/24/2022 14:11	2.61
6/24/2022 13:03	11.66	0.15	6/25/2022 14:47	11.54	-0.53	6/24/2022 12:50	11.70	17.25	6/24/2022 14:12	2.61
6/24/2022 13:04	11.64	0.14	6/25/2022 14:48	11.57	-0.44	6/24/2022 12:51	11.69	17.18	6/24/2022 14:13	2.65
6/24/2022 13:05	11.66	0.12	6/25/2022 14:49	11.53	-0.51	6/24/2022 12:52	11.68	17.14	6/24/2022 14:14	2.59
6/24/2022 13:06	11.64	0.06	6/25/2022 14:50	11.55	-0.41	6/24/2022 12:53	11.74	17.11	6/24/2022 14:15	2.61
6/24/2022 13:07	11.67	0.10	6/25/2022 14:51	11.57	-0.44	6/24/2022 12:54	11.71	17.10	6/24/2022 14:16	2.53
6/24/2022 13:08	11.65	0.13	6/25/2022 14:52	11.52	-0.49	6/24/2022 12:55	11.71	17.09	6/24/2022 14:17	2.57
6/24/2022 13:09	11.67	0.08	6/25/2022 14:53	11.53	-0.43	6/24/2022 12:56	11.69	17.04	6/24/2022 14:18	2.57
6/24/2022 13:10	11.68	0.09	6/25/2022 14:54	11.57	-0.45	6/24/2022 12:57	11.72	16.98	6/24/2022 14:19	2.55
6/24/2022 13:11	11.66	0.03	6/25/2022 14:55	11.54	-0.38	6/24/2022 12:58	11.71	17.00	6/24/2022 14:20	2.56
6/24/2022 13:12	11.66	0.13	6/25/2022 14:56	11.54	-0.50	6/24/2022 12:59	11.73	16.93	6/24/2022 14:21	2.56
6/24/2022 13:13	11.68	0.10	6/25/2022 14:57	11.54	-0.54	6/24/2022 13:00	11.74	16.91	6/24/2022 14:22	2.55
6/24/2022 13:14	11.68	0.09	6/25/2022 14:58	11.56	-0.41	6/24/2022 13:01	11.71	16.88	6/24/2022 14:23	2.58
6/24/2022 13:15	11.69	0.09	6/25/2022 14:59	11.55	-0.49	6/24/2022 13:02	11.71	16.90	6/24/2022 14:24	2.55
6/24/2022 13:16	11.69	0.08	6/25/2022 15:00	11.54	-0.45	6/24/2022 13:03	11.71	16.84	6/24/2022 14:25	2.55
6/24/2022 13:17	11.65	0.03	6/25/2022 15:01	11.53	-0.47	6/24/2022 13:04	11.73	16.80	6/24/2022 14:26	2.55
6/24/2022 13:18	11.70	0.18	6/25/2022 15:02	11.56	-0.41	6/24/2022 13:05	11.70	16.83	6/24/2022 14:27	2.54
6/24/2022 13:19	11.67	0.00	6/25/2022 15:03	11.53	-0.48	6/24/2022 13:06	11.75	16.75	6/24/2022 14:28	2.56
6/24/2022 13:20	11.68	0.06	6/25/2022 15:04	11.54	-0.44	6/24/2022 13:07	11.69	16.75	6/24/2022 14:29	2.52
6/24/2022 13:21	11.66	0.12	6/25/2022 15:05	11.54	-0.47	6/24/2022 13:08	11.69	16.72	6/24/2022 14:30	2.51
6/24/2022 13:22	11.68	0.05	6/25/2022 15:06	11.54	-0.54	6/24/2022 13:09	11.73	16.71	6/24/2022 14:31	2.51
6/24/2022 13:23	11.70	0.12	6/25/2022 15:07	11.55	-0.49	6/24/2022 13:10	11.72	16.67	6/24/2022 14:32	2.51
6/24/2022 13:24	11.67	0.08	6/25/2022 15:08	11.56	-0.44	6/24/2022 13:11	11.74	16.61	6/24/2022 14:33	2.52
6/24/2022 13:25	11.65	0.06	6/25/2022 15:09	11.56	-0.38	6/24/2022 13:12	11.72	16.57	6/24/2022 14:34	2.48
6/24/2022 13:26	11.62	0.13	6/25/2022 15:10	11.55	-0.47	6/24/2022 13:13	11.71	16.60	6/24/2022 14:35	2.48
6/24/2022 13:27	11.66	0.13	6/25/2022 15:11	11.55	-0.39	6/24/2022 13:14	11.73	16.50	6/24/2022 14:36	2.45
6/24/2022 13:28	11.67	0.13	6/25/2022 15:12	11.54	-0.47	6/24/2022 13:15	11.73	16.57	6/24/2022 14:37	2.48
6/24/2022 13:29	11.67	0.16	6/25/2022 15:13	11.52	-0.50	6/24/2022 13:16	11.72	16.49	6/24/2022 14:38	2.47
6/24/2022 13:30	11.66	0.04	6/25/2022 15:14	11.53	-0.45	6/24/2022 13:17	11.75	16.42	6/24/2022 14:39	2.42
6/24/2022 13:31	11.68	0.17	6/25/2022 15:15	11.54	-0.54	6/24/2022 13:18	11.72	16.42	6/24/2022 14:40	2.46
6/24/2022 13:32	11.65	0.13	6/25/2022 15:16	11.53	-0.52	6/24/2022 13:19	11.69	16.38	6/24/2022 14:41	2.43
6/24/2022 13:33	11.68	0.17	6/25/2022 15:17	11.55	-0.38	6/24/2022 13:20	11.74	16.36	6/24/2022 14:42	2.42
6/24/2022 13:34	11.68	0.05	6/25/2022 15:18	11.54	-0.60	6/24/2022 13:21	11.72	16.35	6/24/2022 14:43	2.46
6/24/2022 13:35	11.67	0.15	6/25/2022 15:19	11.52	-0.48	6/24/2022 13:22	11.70	16.32	6/24/2022 14:44	2.41
6/24/2022 13:36	11.67	0.15	6/25/2022 15:20	11.54	-0.40	6/24/2022 13:23	11.72	16.27	6/24/2022 14:45	2.47
6/24/2022 13:37	11.67	0.09	6/25/2022 15:21	11.55	-0.46	6/24/2022 13:24	11.72	16.26	6/24/2022 14:46	2.41
6/24/2022 13:38	11.67	0.07	6/25/2022 15:22	11.53	-0.45	6/24/2022 13:25	11.69	16.23	6/24/2022 14:47	2.37
6/24/2022 13:39	11.68	0.03	6/25/2022 15:23	11.57	-0.37	6/24/2022 13:26	11.73	16.13	6/24/2022 14:48	2.31
6/24/2022 13:40	11.67	0.13	6/25/2022 15:24	11.54	-0.43	6/24/2022 13:27	11.72	16.18	6/24/2022 14:49	2.43
6/24/2022 13:41	11.68	0.03	6/25/2022 15:25	11.54	-0.54	6/24/2022 13:28	11.74	16.13	6/24/2022 14:50	2.33
6/24/2022 13:42	11.68	0.14	6/25/2022 15:26	11.58	-0.50	6/24/2022 13:29	11.72	16.13	6/24/2022 14:51	2.37
6/24/2022 13:43	11.70	0.04	6/25/2022 15:27	11.56	-0.41	6/24/2022 13:30	11.70	16.08	6/24/2022 14:52	2.33
6/24/2022 13:44	11.68	0.13	6/25/2022 15:28	11.56	-0.34	6/24/2022 13:31	11.70	16.13	6/24/2022 14:53	2.32
6/24/2022 13:45	11.68	0.09	6/25/2022 15:29	11.55	-0.45	6/24/2022 13:32	11.71	15.99	6/24/2022 14:54	2.27
6/24/2022 13:46	11.68	0.15	6/25/2022 15:30	11.55	-0.52	6/24/2022 13:33	11.73	16.04	6/24/2022 14:55	2.27
6/24/2022 13:47	11.66	0.11	6/25/2022 15:31	11.54	-0.41	6/24/2022 13:34	11.71	16.01	6/24/2022 14:56	2.27
6/24/2022 13:48	11.69	0.14	6/25/2022 15:32	11.54	-0.40	6/24/2022 13:35	11.72	15.99	6/24/2022 14:57	2.27
6/24/2022 13:49	11.68	0.09	6/25/2022 15:33	11.54	-0.47	6/24/2022 13:36	11.75	15.97	6/24/2022 14:58	2.31
6/24/2022 13:50	11.67	0.05	6/25/2022 15:34	11.52	-0.48	6/24/2022 13:37	11.70	15.91	6/24/2022 14:59	2.32
6/24/2022 13:51	11.66	0.09	6/25/2022 15:35	11.53	-0.56	6/24/2022 13:38	11.74	15.87	6/24/2022 15:00	2.26
6/24/2022 13:52	11.66	0.06	6/25/2022 15:36	11.55	-0.53	6/24/2022 13:39	11.71	15.87	6/24/2022 15:01	2.21
6/24/2022 13:53	11.67	0.09	6/25/2022 15:37	11.57	-0.37	6/24/2022 13:40	11.70	15.81	6/24/2022 15:02	2.24
6/24/2022 13:54	11.67	0.04	6/25/2022 15:38	11.54	-0.42	6/24/2022 13:41	11.71	15.80	6/24/2022 15:03	2.20
6/24/2022 13:55	11.66	0.05	6/25/2022 15:39	11.56	-0.42	6/24/2022 13:42	11.69	15.75	6/24/2022 15:04	2.27
6/24/2022 13:56	11.69	0.15	6/25/2022 15:40	11.55	-0.47	6/24/2022 13:43	11.70	15.77	6/24/2022 15:05	2.22
6/24/2022 13:57	11.71	0.08	6/25/2022 15:41	11.55	-0.49	6/24/2022 13:44	11.74	15.71	6/24/2022 15:06	2.26
6/24/2022 13:58	11.69	0.10	6/25/2022 15:42	11.54	-0.46	6/24/2022 13:45	11.74	15.72	6/24/2022 15:07	2.16
6/24/2022 13:59	11.64	0.09	6/25/2022 15:43	11.57	-0.38	6/24/2022 13:46	11.72	15.65	6/24/2022 15:08	2.18
6/24/2022 14:00	11.68	0.08	6/25/2022 15:44	11.55	-0.45	6/24/2022 13:47	11.72	15.64	6/24/2022 15:09	2.20
6/24/2022 14:01	11.67	0.05	6/25/2022 15:45	11.56	-0.42	6/24/2022 13:48	11.71	15.58	6/24/2022 15:10	2.20
6/24/2022 14:02	11.63	0.05	6/25/2022 15:46	11.54	-0.38	6/24/2022 13:49	11.73	15.56	6/24/2022 15:11	2.19
6/24/2022 14:03	11.65	0.05	6/25/2022 15:47	11.55	-0.39	6/24/2022 13:50	11.73	15.59	6/24/2022 15:12	2.20
6/24/2022 14:04	11.69	0.15	6/25/2022 15:48	11.56	-0.45	6/24/2022 13:51	11.71	15.57	6/24/2022 15:13	2.16
6/24/2022 14:05	11.68	0.03	6/25/2022 15:49	11.54	-0.51	6/24/2022 13:52	11.72	15.48	6/24/2022 15:14	2.14
6/24/2022 14:06	11.68	0.05	6/25/2022 15:50	11.55	-0.52	6/24/2022 13:53	11.74	15.48	6/24/2022 15:15	2.18

6/24/2022 14:07	11.67	0.10	6/25/2022 15:51	11.56	-0.47	6/24/2022 13:54	11.72	15.45	6/24/2022 15:16	2.14
6/24/2022 14:08	11.66	0.14	6/25/2022 15:52	11.52	-0.54	6/24/2022 13:55	11.73	15.41	6/24/2022 15:17	2.18
6/24/2022 14:09	11.65	0.11	6/25/2022 15:53	11.55	-0.46	6/24/2022 13:56	11.71	15.40	6/24/2022 15:18	2.17
6/24/2022 14:10	11.66	0.18	6/25/2022 15:54	11.56	-0.41	6/24/2022 13:57	11.69	15.38	6/24/2022 15:19	2.18
6/24/2022 14:11	11.66	0.08	6/25/2022 15:55	11.54	-0.45	6/24/2022 13:58	11.70	15.37	6/24/2022 15:20	2.17
6/24/2022 14:12	11.70	0.07	6/25/2022 15:56	11.55	-0.46	6/24/2022 13:59	11.70	15.34	6/24/2022 15:21	2.11
6/24/2022 14:13	11.67	0.13	6/25/2022 15:57	11.54	-0.41	6/24/2022 14:00	11.70	15.25	6/24/2022 15:22	2.11
6/24/2022 14:14	11.71	0.09	6/25/2022 15:58	11.55	-0.37	6/24/2022 14:01	11.70	15.29	6/24/2022 15:23	2.14
6/24/2022 14:15	11.68	0.05	6/25/2022 15:59	11.55	-0.46	6/24/2022 14:02	11.71	15.27	6/24/2022 15:24	2.17
6/24/2022 14:16	11.71	0.05	6/25/2022 16:00	11.55	-0.52	6/24/2022 14:03	11.72	15.22	6/24/2022 15:25	2.14
6/24/2022 14:17	11.70	0.11	6/25/2022 16:01	11.56	-0.56	6/24/2022 14:04	11.72	15.21	6/24/2022 15:26	2.16
6/24/2022 14:18	11.72	0.13	6/25/2022 16:02	11.54	-0.42	6/24/2022 14:05	11.74	15.17	6/24/2022 15:27	2.12
6/24/2022 14:19	11.71	0.07	6/25/2022 16:03	11.55	-0.48	6/24/2022 14:06	11.69	15.17	6/24/2022 15:28	2.19
6/24/2022 14:20	11.69	0.16	6/25/2022 16:04	11.56	-0.36	6/24/2022 14:07	11.73	15.15	6/24/2022 15:29	2.17
6/24/2022 14:21	11.68	0.05	6/25/2022 16:05	11.54	-0.46	6/24/2022 14:08	11.69	15.12	6/24/2022 15:30	2.18
6/24/2022 14:22	11.70	0.15	6/25/2022 16:06	11.58	-0.42	6/24/2022 14:09	11.70	15.08	6/24/2022 15:31	2.20
6/24/2022 14:23	11.66	0.10	6/25/2022 16:07	11.55	-0.47	6/24/2022 14:10	11.71	15.03	6/24/2022 15:32	2.19
6/24/2022 14:24	11.70	0.12	6/25/2022 16:08	11.55	-0.39	6/24/2022 14:11	11.71	15.05	6/24/2022 15:33	2.16
6/24/2022 14:25	11.67	0.06	6/25/2022 16:09	11.53	-0.55	6/24/2022 14:12	11.72	15.02	6/24/2022 15:34	2.20
6/24/2022 14:26	11.68	0.09	6/25/2022 16:10	11.54	-0.49	6/24/2022 14:13	11.70	14.97	6/24/2022 15:35	2.23
6/24/2022 14:27	11.65	0.10	6/25/2022 16:11	11.54	-0.46	6/24/2022 14:14	11.71	14.94	6/24/2022 15:36	2.20
6/24/2022 14:28	11.65	0.10	6/25/2022 16:12	11.56	-0.48	6/24/2022 14:15	11.70	14.94	6/24/2022 15:37	2.24
6/24/2022 14:29	11.67	0.12	6/25/2022 16:13	11.54	-0.54	6/24/2022 14:16	11.72	14.89	6/24/2022 15:38	2.19
6/24/2022 14:30	11.66	0.12	6/25/2022 16:14	11.54	-0.43	6/24/2022 14:17	11.72	14.87	6/24/2022 15:39	2.22
6/24/2022 14:31	11.70	0.08	6/25/2022 16:15	11.57	-0.52	6/24/2022 14:18	11.71	14.87	6/24/2022 15:40	2.24
6/24/2022 14:32	11.68	0.05	6/25/2022 16:16	11.55	-0.46	6/24/2022 14:19	11.73	14.83	6/24/2022 15:41	2.26
6/24/2022 14:33	11.68	0.08	6/25/2022 16:17	11.54	-0.46	6/24/2022 14:20	11.71	14.82	6/24/2022 15:42	2.20
6/24/2022 14:34	11.71	0.09	6/25/2022 16:18	11.56	-0.50	6/24/2022 14:21	11.70	14.82	6/24/2022 15:43	2.24
6/24/2022 14:35	11.69	0.10	6/25/2022 16:19	11.55	-0.54	6/24/2022 14:22	11.71	14.71	6/24/2022 15:44	2.23
6/24/2022 14:36	11.68	0.11	6/25/2022 16:20	11.53	-0.44	6/24/2022 14:23	11.72	14.79	6/24/2022 15:45	2.27
6/24/2022 14:37	11.70	0.12	6/25/2022 16:21	11.54	-0.46	6/24/2022 14:24	11.68	14.70	6/24/2022 15:46	2.24
6/24/2022 14:38	11.70	0.03	6/25/2022 16:22	11.56	-0.56	6/24/2022 14:25	11.72	14.65	6/24/2022 15:47	2.26
6/24/2022 14:39	11.71	0.15	6/25/2022 16:23	11.52	-0.44	6/24/2022 14:26	11.70	14.65	6/24/2022 15:48	2.26
6/24/2022 14:40	11.71	0.05	6/25/2022 16:24	11.57	-0.50	6/24/2022 14:27	11.70	14.60	6/24/2022 15:49	2.29
6/24/2022 14:41	11.71	0.08	6/25/2022 16:25	11.55	-0.47	6/24/2022 14:28	11.69	14.60	6/24/2022 15:50	2.27
6/24/2022 14:42	11.67	0.13	6/25/2022 16:26	11.56	-0.50	6/24/2022 14:29	11.69	14.62	6/24/2022 15:51	2.26
6/24/2022 14:43	11.70	0.08	6/25/2022 16:27	11.56	-0.50	6/24/2022 14:30	11.68	14.57	6/24/2022 15:52	2.25
6/24/2022 14:44	11.71	0.11	6/25/2022 16:28	11.55	-0.43	6/24/2022 14:31	11.70	14.52	6/24/2022 15:53	2.28
6/24/2022 14:45	11.68	0.11	6/25/2022 16:29	11.56	-0.44	6/24/2022 14:32	11.72	14.51	6/24/2022 15:54	2.26
6/24/2022 14:46	11.70	0.06	6/25/2022 16:30	11.56	-0.53	6/24/2022 14:33	11.72	14.47	6/24/2022 15:55	2.32
6/24/2022 14:47	11.68	0.05	6/25/2022 16:31	11.57	-0.44	6/24/2022 14:34	11.74	14.48	6/24/2022 15:56	2.26
6/24/2022 14:48	11.69	0.09	6/25/2022 16:32	11.55	-0.52	6/24/2022 14:35	11.72	14.40	6/24/2022 15:57	2.28
6/24/2022 14:49	11.70	0.06	6/25/2022 16:33	11.54	-0.39	6/24/2022 14:36	11.68	14.41	6/24/2022 15:58	2.25
6/24/2022 14:50	11.68	0.08	6/25/2022 16:34	11.55	-0.44	6/24/2022 14:37	11.71	14.41	6/24/2022 15:59	2.31
6/24/2022 14:51	11.68	0.14	6/25/2022 16:35	11.56	-0.56	6/24/2022 14:38	11.71	14.38	6/24/2022 16:00	2.27
6/24/2022 14:52	11.69	0.10	6/25/2022 16:36	11.55	-0.42	6/24/2022 14:39	11.71	14.38	6/24/2022 16:01	2.24
6/24/2022 14:53	11.67	0.05	6/25/2022 16:37	11.57	-0.44	6/24/2022 14:40	11.70	14.34	6/24/2022 16:02	2.26
6/24/2022 14:54	11.68	0.10	6/25/2022 16:38	11.55	-0.51	6/24/2022 14:41	11.71	14.28	6/24/2022 16:03	2.26
6/24/2022 14:55	11.68	0.07	6/25/2022 16:39	11.56	-0.43	6/24/2022 14:42	11.71	14.26	6/24/2022 16:04	2.23
6/24/2022 14:56	11.67	0.07	6/25/2022 16:40	11.53	-0.54	6/24/2022 14:43	11.72	14.23	6/24/2022 16:05	2.23
6/24/2022 14:57	11.68	0.15	6/25/2022 16:41	11.55	-0.39	6/24/2022 14:44	11.71	14.24	6/24/2022 16:06	2.22
6/24/2022 14:58	11.67	0.06	6/25/2022 16:42	11.54	-0.49	6/24/2022 14:45	11.71	14.18	6/24/2022 16:07	2.26
6/24/2022 14:59	11.68	0.17	6/25/2022 16:43	11.51	-0.45	6/24/2022 14:46	11.68	14.18	6/24/2022 16:08	2.26
6/24/2022 15:00	11.68	0.00	6/25/2022 16:44	11.54	-0.39	6/24/2022 14:47	11.72	14.19	6/24/2022 16:09	2.26
6/24/2022 15:01	11.71	0.10	6/25/2022 16:45	11.55	-0.41	6/24/2022 14:48	11.69	14.13	6/24/2022 16:10	2.28
6/24/2022 15:02	11.67	0.04	6/25/2022 16:46	11.57	-0.42	6/24/2022 14:49	11.72	14.11	6/24/2022 16:11	2.22
6/24/2022 15:03	11.67	0.11	6/25/2022 16:47	11.56	-0.36	6/24/2022 14:50	11.68	14.11	6/24/2022 16:12	2.27
6/24/2022 15:04	11.68	0.12	6/25/2022 16:48	11.56	-0.55	6/24/2022 14:51	11.72	14.05	6/24/2022 16:13	2.24
6/24/2022 15:05	11.71	0.04	6/25/2022 16:49	11.55	-0.43	6/24/2022 14:52	11.72	14.03	6/24/2022 16:14	2.25
6/24/2022 15:06	11.68	0.13	6/25/2022 16:50	11.55	-0.40	6/24/2022 14:53	11.73	14.00	6/24/2022 16:15	2.26
6/24/2022 15:07	11.73	0.08	6/25/2022 16:51	11.52	-0.40	6/24/2022 14:54	11.70	14.01	6/24/2022 16:16	2.23
6/24/2022 15:08	11.68	-0.01	6/25/2022 16:52	11.52	-0.44	6/24/2022 14:55	11.73	13.95	6/24/2022 16:17	2.24
6/24/2022 15:09	11.69	0.08	6/25/2022 16:53	11.55	-0.39	6/24/2022 14:56	11.73	13.94	6/24/2022 16:18	2.25
6/24/2022 15:10	11.71	0.07	6/25/2022 16:54	11.57	-0.44	6/24/2022 14:57	11.71	13.94	6/24/2022 16:19	2.24
6/24/2022 15:11	11.71	0.09	6/25/2022 16:55	11.55	-0.53	6/24/2022 14:58	11.70	13.93	6/24/2022 16:20	2.28
6/24/2022 15:12	11.69	0.12	6/25/2022 16:56	11.55	-0.35	6/24/2022 14:59	11.69	13.87	6/24/2022 16:21	2.26
6/24/2022 15:13	11.70	0.05	6/25/2022 16:57	11.54	-0.41	6/24/2022 15:00	11.72	13.84	6/24/2022 16:22	2.20
6/24/2022 15:14	11.69	0.12	6/25/2022 16:58	11.55	-0.55	6/24/2022 15:01	11.69	13.87	6/24/2022 16:23	2.18
6/24/2022 15:15	11.69	0.06	6/25/2022 16:59	11.53	-0.39	6/24/2022 15:02	11.71	13.80	6/24/2022 16:24	2.22
6/24/2022 15:16	11.70	0.04	6/25/2022 17:00	11.55	-0.50	6/24/2022 15:03	11.74	13.75	6/24/2022 16:25	2.17
6/24/2022 15:17	11.67	0.09	6/25/2022 17:01	11.55	-0.39	6/24/2022 15:04	11.71	13.77	6/24/2022 16:26	2.18
6/24/2022 15:18	11.70	0.00	6/25/2022 17:02	11.56	-0.53	6/24/2022 15:05	11.69	13.72	6/24/2022 16:27	2.21
6/24/2022 15:19	11.69	0.16	6/25/2022 17:03	11.55	-0.40	6/24/2022 15:06	11.71	13.72	6/24/2022 16:28	2.23
6/24/2022 15:20	11.67	0.09	6/25/2022 17:04	11.55	-0.43	6/24/2022 15:07	11.72	13.70	6/24/2022 16:29	2.14
6/24/2022 15:21	11.69	0.03	6/25/2022 17:05	11.55	-0.49	6/24/2022 15:08	11.69	13.72	6/24/2022 16:30	2.17
6/24/2022 15:22	11.69	0.03	6/25/2022 17:06	11.55	-0.47	6/24/2022 15:09	11.71	13.64	6/24/2022 16:31	2.21
6/24/2022 15:23	11.69	0.11	6/25/2022 17:07	11.55	-0.49	6/24/2022 15:10	11.69	13.66	6/24/2022 16:32	2.18
6/24/2022 15:24	11.68	0.12	6/25/2022 17:08	11.55	-0.51	6/24/2022 15:11	11.70	13.60	6/24/2022 16:33	2.19
6/24/2022 15:25	11.69	0.08	6/25/2022 17:09	11.53	-0.54	6/24/2022 15:12	11.68	13.58	6/24/2022 16:34	2.11
6/24/2022 15:26	11.68	0.00	6/25/2022 17:10	11.55	-0.49	6/24/2022 15:13	11.71	13.57	6/24/2022 16:35	2.18
6/24/2022 15:27	11.69	0.02	6/25/2022 17:11	11.55	-0.36	6/24/2022 15:14	11.74	13.51	6/24/2022 16:36	2.09
6/24/2022 15:28	11.71	0.03	6/25/2022 17:12	11.55	-0.46	6/24/2022 15:15	11.69	13.46	6/24/2022 16:37	2.16
6/24/2022 15:29	11.69	0.04	6/25/2022 17:13	11.51	-0.41	6/24/2022 15:16	11.72	13.50	6/24/2022 16:38	2.18
6/24/2022 15:30	11.69	0.08	6/25/2022 17:14	11.56	-0.57	6/24/2022 15:17	11.71	13.46	6/24/2022 16:39	2.11
6/24/2022 15:31	11.69	0.07	6/25/2022 17:15	11.55	-0.53	6/24/2022 15:18	11.69	13.45	6/24/2022 16:40	2.15
6/24/2022 15:32	11.65	0.13	6/25/2022 17:16	11.55	-0.47	6/24/2022 15:19	11.68	13.43	6/24/2022 16:41	2.09
6/24/2022 15:33	11.68	0.12	6/25/2022 17:17	11.52	-0.49	6/24/2022 15:20	11.70	13.41	6/24/2022 16:42	2.14
6/24/2022 15:34	11.67	0.02	6/25/2022 17:18	11.56	-0.38	6/24/2022 15:21	11.70	13.39	6/24/2022 16:43	2.14

6/24/2022 15:35	11.68	0.13	6/25/2022 17:19	11.55	-0.49	6/24/2022 15:22	11.70	13.37	6/24/2022 16:44	2.14
6/24/2022 15:36	11.65	0.07	6/25/2022 17:20	11.55	-0.44	6/24/2022 15:23	11.72	13.30	6/24/2022 16:45	2.16
6/24/2022 15:37	11.68	0.03	6/25/2022 17:21	11.54	-0.53	6/24/2022 15:24	11.72	13.32	6/24/2022 16:46	2.16
6/24/2022 15:38	11.67	0.09	6/25/2022 17:22	11.55	-0.41	6/24/2022 15:25	11.71	13.29	6/24/2022 16:47	2.18
6/24/2022 15:39	11.67	0.13	6/25/2022 17:23	11.57	-0.35	6/24/2022 15:26	11.70	13.28	6/24/2022 16:48	2.09
6/24/2022 15:40	11.68	0.07	6/25/2022 17:24	11.56	-0.36	6/24/2022 15:27	11.67	13.26	6/24/2022 16:49	2.12
6/24/2022 15:41	11.69	0.15	6/25/2022 17:25	11.54	-0.54	6/24/2022 15:28	11.72	13.26	6/24/2022 16:50	2.13
6/24/2022 15:42	11.71	0.13	6/25/2022 17:26	11.56	-0.36	6/24/2022 15:29	11.71	13.20	6/24/2022 16:51	2.15
6/24/2022 15:43	11.71	0.07	6/25/2022 17:27	11.55	-0.39	6/24/2022 15:30	11.71	13.14	6/24/2022 16:52	2.14
6/24/2022 15:44	11.71	0.13	6/25/2022 17:28	11.54	-0.48	6/24/2022 15:31	11.69	13.13	6/24/2022 16:53	2.11
6/24/2022 15:45	11.72	0.15	6/25/2022 17:29	11.56	-0.51	6/24/2022 15:32	11.71	13.14	6/24/2022 16:54	2.11
6/24/2022 15:46	11.71	0.12	6/25/2022 17:30	11.55	-0.44	6/24/2022 15:33	11.69	13.11	6/24/2022 16:55	2.15
6/24/2022 15:47	11.71	0.06	6/25/2022 17:31	11.54	-0.40	6/24/2022 15:34	11.69	13.11	6/24/2022 16:56	2.09
6/24/2022 15:48	11.69	0.08	6/25/2022 17:32	11.55	-0.32	6/24/2022 15:35	11.69	13.03	6/24/2022 16:57	2.06
6/24/2022 15:49	11.71	0.03	6/25/2022 17:33	11.54	-0.57	6/24/2022 15:36	11.72	13.03	6/24/2022 16:58	2.10
6/24/2022 15:50	11.67	0.10	6/25/2022 17:34	11.57	-0.51	6/24/2022 15:37	11.74	13.03	6/24/2022 16:59	2.07
6/24/2022 15:51	11.68	0.00	6/25/2022 17:35	11.57	-0.44	6/24/2022 15:38	11.73	12.96	6/24/2022 17:00	2.04
6/24/2022 15:52	11.67	0.07	6/25/2022 17:36	11.53	-0.47	6/24/2022 15:39	11.71	12.95	6/24/2022 17:01	2.02
6/24/2022 15:53	11.69	0.07	6/25/2022 17:37	11.56	-0.30	6/24/2022 15:40	11.70	12.94	6/24/2022 17:02	2.08
6/24/2022 15:54	11.69	0.12	6/25/2022 17:38	11.51	-0.46	6/24/2022 15:41	11.72	12.92	6/24/2022 17:03	2.03
6/24/2022 15:55	11.66	0.09	6/25/2022 17:39	11.54	-0.50	6/24/2022 15:42	11.70	12.90	6/24/2022 17:04	2.07
6/24/2022 15:56	11.65	0.08	6/25/2022 17:40	11.55	-0.38	6/24/2022 15:43	11.70	12.87	6/24/2022 17:05	2.06
6/24/2022 15:57	11.67	0.03	6/25/2022 17:41	11.56	-0.42	6/24/2022 15:44	11.70	12.86	6/24/2022 17:06	2.03
6/24/2022 15:58	11.68	0.04	6/25/2022 17:42	11.57	-0.52	6/24/2022 15:45	11.68	12.82	6/24/2022 17:07	2.11
6/24/2022 15:59	11.68	0.09	6/25/2022 17:43	11.55	-0.35	6/24/2022 15:46	11.68	12.77	6/24/2022 17:08	2.05
6/24/2022 16:00	11.69	0.13	6/25/2022 17:44	11.57	-0.35	6/24/2022 15:47	11.70	12.75	6/24/2022 17:09	2.07
6/24/2022 16:01	11.70	0.09	6/25/2022 17:45	11.53	-0.49	6/24/2022 15:48	11.72	12.77	6/24/2022 17:10	2.01
6/24/2022 16:02	11.69	0.09	6/25/2022 17:46	11.55	-0.47	6/24/2022 15:49	11.71	12.75	6/24/2022 17:11	2.09
6/24/2022 16:03	11.66	0.03	6/25/2022 17:47	11.54	-0.37	6/24/2022 15:50	11.71	12.70	6/24/2022 17:12	2.05
6/24/2022 16:04	11.69	0.11	6/25/2022 17:48	11.56	-0.47	6/24/2022 15:51	11.74	12.70	6/24/2022 17:13	2.08
6/24/2022 16:05	11.67	0.14	6/25/2022 17:49	11.53	-0.45	6/24/2022 15:52	11.74	12.70	6/24/2022 17:14	2.05
6/24/2022 16:06	11.67	0.17	6/25/2022 17:50	11.55	-0.50	6/24/2022 15:53	11.71	12.64	6/24/2022 17:15	2.06
6/24/2022 16:07	11.70	0.04	6/25/2022 17:51	11.56	-0.50	6/24/2022 15:54	11.69	12.65	6/24/2022 17:16	2.12
6/24/2022 16:08	11.68	0.08	6/25/2022 17:52	11.57	-0.53	6/24/2022 15:55	11.72	12.60	6/24/2022 17:17	2.08
6/24/2022 16:09	11.69	0.08	6/25/2022 17:53	11.55	-0.42	6/24/2022 15:56	11.70	12.64	6/24/2022 17:18	2.02
6/24/2022 16:10	11.67	0.13	6/25/2022 17:54	11.55	-0.51	6/24/2022 15:57	11.71	12.57	6/24/2022 17:19	2.05
6/24/2022 16:11	11.68	0.13	6/25/2022 17:55	11.55	-0.44	6/24/2022 15:58	11.70	12.59	6/24/2022 17:20	2.03
6/24/2022 16:12	11.69	0.09	6/25/2022 17:56	11.56	-0.49	6/24/2022 15:59	11.69	12.53	6/24/2022 17:21	2.05
6/24/2022 16:13	11.69	0.05	6/25/2022 17:57	11.54	-0.50	6/24/2022 16:00	11.70	12.50	6/24/2022 17:22	2.06
6/24/2022 16:14	11.66	0.12	6/25/2022 17:58	11.55	-0.59	6/24/2022 16:01	11.70	12.48	6/24/2022 17:23	2.02
6/24/2022 16:15	11.71	0.04	6/25/2022 17:59	11.55	-0.39	6/24/2022 16:02	11.70	12.46	6/24/2022 17:24	2.02
6/24/2022 16:16	11.69	-0.01	6/25/2022 18:00	11.55	-0.41	6/24/2022 16:03	11.68	12.43	6/24/2022 17:25	2.03
6/24/2022 16:17	11.69	-0.02	6/25/2022 18:01	11.57	-0.60	6/24/2022 16:04	11.72	12.41	6/24/2022 17:26	1.98
6/24/2022 16:18	11.68	0.12	6/25/2022 18:02	11.54	-0.39	6/24/2022 16:05	11.70	12.35	6/24/2022 17:27	2.03
6/24/2022 16:19	11.67	0.08	6/25/2022 18:03	11.55	-0.40	6/24/2022 16:06	11.71	12.39	6/24/2022 17:28	2.04
6/24/2022 16:20	11.70	0.07	6/25/2022 18:04	11.55	-0.45	6/24/2022 16:07	11.69	12.30	6/24/2022 17:29	2.04
6/24/2022 16:21	11.72	0.12	6/25/2022 18:05	11.55	-0.50	6/24/2022 16:08	11.68	12.37	6/24/2022 17:30	2.03
6/24/2022 16:22	11.71	0.13	6/25/2022 18:06	11.55	-0.44	6/24/2022 16:09	11.72	12.26	6/24/2022 17:31	2.04
6/24/2022 16:23	11.72	0.18	6/25/2022 18:07	11.54	-0.42	6/24/2022 16:10	11.72	12.32	6/24/2022 17:32	2.07
6/24/2022 16:24	11.70	0.11	6/25/2022 18:08	11.55	-0.50	6/24/2022 16:11	11.71	12.20	6/24/2022 17:33	2.04
6/24/2022 16:25	11.68	0.10	6/25/2022 18:09	11.56	-0.54	6/24/2022 16:12	11.72	12.25	6/24/2022 17:34	2.12
6/24/2022 16:26	11.70	0.06	6/25/2022 18:10	11.54	-0.30	6/24/2022 16:13	11.69	12.22	6/24/2022 17:35	2.04
6/24/2022 16:27	11.72	0.10	6/25/2022 18:11	11.57	-0.49	6/24/2022 16:14	11.72	12.16	6/24/2022 17:36	2.10
6/24/2022 16:28	11.72	0.09	6/25/2022 18:12	11.56	-0.46	6/24/2022 16:15	11.71	12.13	6/24/2022 17:37	2.07
6/24/2022 16:29	11.70	0.04	6/25/2022 18:13	11.58	-0.48	6/24/2022 16:16	11.68	12.11	6/24/2022 17:38	2.09
6/24/2022 16:30	11.71	0.17	6/25/2022 18:14	11.55	-0.42	6/24/2022 16:17	11.69	12.13	6/24/2022 17:39	2.11
6/24/2022 16:31	11.71	0.07	6/25/2022 18:15	11.55	-0.46	6/24/2022 16:18	11.73	12.09	6/24/2022 17:40	2.10
6/24/2022 16:32	11.72	0.13	6/25/2022 18:16	11.54	-0.52	6/24/2022 16:19	11.70	12.06	6/24/2022 17:41	2.08
6/24/2022 16:33	11.69	0.04	6/25/2022 18:17	11.53	-0.42	6/24/2022 16:20	11.70	12.00	6/24/2022 17:42	2.09
6/24/2022 16:34	11.71	0.05	6/25/2022 18:18	11.56	-0.52	6/24/2022 16:21	11.69	11.99	6/24/2022 17:43	2.11
6/24/2022 16:35	11.70	0.07	6/25/2022 18:19	11.55	-0.43	6/24/2022 16:22	11.69	12.02	6/24/2022 17:44	2.10
6/24/2022 16:36	11.70	0.08	6/25/2022 18:20	11.54	-0.42	6/24/2022 16:23	11.72	11.92	6/24/2022 17:45	2.07
6/24/2022 16:37	11.71	0.07	6/25/2022 18:21	11.55	-0.53	6/24/2022 16:24	11.69	11.96	6/24/2022 17:46	2.09
6/24/2022 16:38	11.72	0.08	6/25/2022 18:22	11.52	-0.47	6/24/2022 16:25	11.71	11.90	6/24/2022 17:47	2.11
6/24/2022 16:39	11.67	0.08	6/25/2022 18:23	11.54	-0.41	6/24/2022 16:26	11.71	11.94	6/24/2022 17:48	2.15
6/24/2022 16:40	11.71	0.11	6/25/2022 18:24	11.55	-0.43	6/24/2022 16:27	11.71	11.93	6/24/2022 17:49	2.11
6/24/2022 16:41	11.70	-0.01	6/25/2022 18:25	11.57	-0.44	6/24/2022 16:28	11.73	11.88	6/24/2022 17:50	2.14
6/24/2022 16:42	11.70	0.14	6/25/2022 18:26	11.55	-0.43	6/24/2022 16:29	11.71	11.84	6/24/2022 17:51	2.19
6/24/2022 16:43	11.72	0.13	6/25/2022 18:27	11.53	-0.50	6/24/2022 16:30	11.72	11.80	6/24/2022 17:52	2.11
6/24/2022 16:44	11.74	0.07	6/25/2022 18:28	11.56	-0.38	6/24/2022 16:31	11.67	11.79	6/24/2022 17:53	2.14
6/24/2022 16:45	11.69	0.11	6/25/2022 18:29	11.55	-0.41	6/24/2022 16:32	11.70	11.77	6/24/2022 17:54	2.12
6/24/2022 16:46	11.67	0.13	6/25/2022 18:30	11.56	-0.36	6/24/2022 16:33	11.67	11.74	6/24/2022 17:55	2.11
6/24/2022 16:47	11.70	0.17	6/25/2022 18:31	11.56	-0.53	6/24/2022 16:34	11.72	11.72	6/24/2022 17:56	2.19
6/24/2022 16:48	11.70	0.11	6/25/2022 18:32	11.54	-0.48	6/24/2022 16:35	11.71	11.72	6/24/2022 17:57	2.16
6/24/2022 16:49	11.68	0.18	6/25/2022 18:33	11.56	-0.52	6/24/2022 16:36	11.69	11.71	6/24/2022 17:58	2.14
6/24/2022 16:50	11.69	0.09	6/25/2022 18:34	11.53	-0.42	6/24/2022 16:37	11.73	11.64	6/24/2022 17:59	2.17
6/24/2022 16:51	11.68	0.07	6/25/2022 18:35	11.56	-0.35	6/24/2022 16:38	11.68	11.65	6/24/2022 18:00	2.12
6/24/2022 16:52	11.70	0.10	6/25/2022 18:36	11.55	-0.55	6/24/2022 16:39	11.69	11.61	6/24/2022 18:01	2.16
6/24/2022 16:53	11.70	0.07	6/25/2022 18:37	11.55	-0.44	6/24/2022 16:40	11.71	11.60	6/24/2022 18:02	2.17
6/24/2022 16:54	11.70	0.07	6/25/2022 18:38	11.56	-0.53	6/24/2022 16:41	11.70	11.55	6/24/2022 18:03	2.14
6/24/2022 16:55	11.70	0.09	6/25/2022 18:39	11.54	-0.30	6/24/2022 16:42	11.72	11.55	6/24/2022 18:04	2.21
6/24/2022 16:56	11.67	0.11	6/25/2022 18:40	11.56	-0.46	6/24/2022 16:43	11.73	11.52	6/24/2022 18:05	2.19
6/24/2022 16:57	11.71	-0.02	6/25/2022 18:41	11.54	-0.43	6/24/2022 16:44	11.70	11.50	6/24/2022 18:06	2.17
6/24/2022 16:58	11.69	0.10	6/25/2022 18:42	11.56	-0.41	6/24/2022 16:45	11.69	11.50	6/24/2022 18:07	2.12
6/24/2022 16:59	11.69	0.08	6/25/2022 18:43	11.54	-0.48	6/24/2022 16:46	11.71	11.51	6/24/2022 18:08	2.15
6/24/2022 17:00	11.69	0.13	6/25/2022 18:44	11.53	-0.39	6/24/2022 16:47	11.72	11.45	6/24/2022 18:09	2.17
6/24/2022 17:01	11.69	0.13	6/25/2022 18:45	11.54	-0.51	6/24/2022 16:48	11.70	11.44	6/24/2022 18:10	2.21
6/24/2022 17:02	11.69	0.22	6/25/2022 18:46	11.54	-0.44	6/24/2022 16:49	11.70	11.42	6/24/2022 18:11	2.18

6/24/2022 17:03	11.67	0.07	6/25/2022 18:47	11.55	-0.51	6/24/2022 16:50	11.71	11.33	6/24/2022 18:12	2.20
6/24/2022 17:04	11.73	0.08	6/25/2022 18:48	11.56	-0.49	6/24/2022 16:51	11.72	11.31	6/24/2022 18:13	2.25
6/24/2022 17:05	11.72	0.05	6/25/2022 18:49	11.53	-0.42	6/24/2022 16:52	11.72	11.31	6/24/2022 18:14	2.15
6/24/2022 17:06	11.71	0.03	6/25/2022 18:50	11.56	-0.55	6/24/2022 16:53	11.69	11.28	6/24/2022 18:15	2.17
6/24/2022 17:07	11.68	0.11	6/25/2022 18:51	11.54	-0.51	6/24/2022 16:54	11.68	11.29	6/24/2022 18:16	2.16
6/24/2022 17:08	11.71	-0.02	6/25/2022 18:52	11.55	-0.49	6/24/2022 16:55	11.71	11.25	6/24/2022 18:17	2.22
6/24/2022 17:09	11.71	0.11	6/25/2022 18:53	11.54	-0.35	6/24/2022 16:56	11.70	11.22	6/24/2022 18:18	2.21
6/24/2022 17:10	11.69	0.09	6/25/2022 18:54	11.56	-0.47	6/24/2022 16:57	11.72	11.19	6/24/2022 18:19	2.17
6/24/2022 17:11	11.71	0.08	6/25/2022 18:55	11.55	-0.41	6/24/2022 16:58	11.67	11.17	6/24/2022 18:20	2.20
6/24/2022 17:12	11.69	0.11	6/25/2022 18:56	11.52	-0.62	6/24/2022 16:59	11.72	11.12	6/24/2022 18:21	2.24
6/24/2022 17:13	11.69	0.06	6/25/2022 18:57	11.56	-0.41	6/24/2022 17:00	11.68	11.15	6/24/2022 18:22	2.19
6/24/2022 17:14	11.69	0.01	6/25/2022 18:58	11.56	-0.43	6/24/2022 17:01	11.71	11.13	6/24/2022 18:23	2.16
6/24/2022 17:15	11.70	0.09	6/25/2022 18:59	11.54	-0.47	6/24/2022 17:02	11.72	11.09	6/24/2022 18:24	2.19
6/24/2022 17:16	11.71	0.10	6/25/2022 19:00	11.56	-0.38	6/24/2022 17:03	11.71	11.08	6/24/2022 18:25	2.18
6/24/2022 17:17	11.73	0.09	6/25/2022 19:01	11.55	-0.47	6/24/2022 17:04	11.69	11.08	6/24/2022 18:26	2.19
6/24/2022 17:18	11.72	0.11	6/25/2022 19:02	11.54	-0.47	6/24/2022 17:05	11.73	11.04	6/24/2022 18:27	2.12
6/24/2022 17:19	11.72	0.10	6/25/2022 19:03	11.55	-0.35	6/24/2022 17:06	11.69	10.97	6/24/2022 18:28	2.11
6/24/2022 17:20	11.72	0.02	6/25/2022 19:04	11.56	-0.44	6/24/2022 17:07	11.70	10.98	6/24/2022 18:29	2.22
6/24/2022 17:21	11.72	0.09	6/25/2022 19:05	11.56	-0.44	6/24/2022 17:08	11.68	10.95	6/24/2022 18:30	2.17
6/24/2022 17:22	11.73	0.12	6/25/2022 19:06	11.57	-0.46	6/24/2022 17:09	11.69	10.94	6/24/2022 18:31	2.19
6/24/2022 17:23	11.74	0.11	6/25/2022 19:07	11.55	-0.44	6/24/2022 17:10	11.69	10.89	6/24/2022 18:32	2.15
6/24/2022 17:24	11.71	0.09	6/25/2022 19:08	11.57	-0.40	6/24/2022 17:11	11.71	10.87	6/24/2022 18:33	2.17
6/24/2022 17:25	11.72	0.12	6/25/2022 19:09	11.54	-0.50	6/24/2022 17:12	11.72	10.84	6/24/2022 18:34	2.25
6/24/2022 17:26	11.71	-0.01	6/25/2022 19:10	11.55	-0.48	6/24/2022 17:13	11.73	10.83	6/24/2022 18:35	2.17
6/24/2022 17:27	11.69	0.02	6/25/2022 19:11	11.58	-0.51	6/24/2022 17:14	11.72	10.82	6/24/2022 18:36	2.21
6/24/2022 17:28	11.72	0.13	6/25/2022 19:12	11.54	-0.46	6/24/2022 17:15	11.73	10.79	6/24/2022 18:37	2.13
6/24/2022 17:29	11.73	0.07	6/25/2022 19:13	11.53	-0.42	6/24/2022 17:16	11.70	10.75	6/24/2022 18:38	2.10
6/24/2022 17:30	11.73	-0.02	6/25/2022 19:14	11.51	-0.48	6/24/2022 17:17	11.69	10.69	6/24/2022 18:39	2.16
6/24/2022 17:31	11.70	0.12	6/25/2022 19:15	11.53	-0.38	6/24/2022 17:18	11.73	10.70	6/24/2022 18:40	2.14
6/24/2022 17:32	11.72	0.09	6/25/2022 19:16	11.56	-0.43	6/24/2022 17:19	11.68	10.75	6/24/2022 18:41	2.17
6/24/2022 17:33	11.74	0.06	6/25/2022 19:17	11.54	-0.44	6/24/2022 17:20	11.70	10.68	6/24/2022 18:42	2.20
6/24/2022 17:34	11.75	0.16	6/25/2022 19:18	11.54	-0.49	6/24/2022 17:21	11.71	10.67	6/24/2022 18:43	2.15
6/24/2022 17:35	11.74	0.08	6/25/2022 19:19	11.54	-0.36	6/24/2022 17:22	11.73	10.63	6/24/2022 18:44	2.12
6/24/2022 17:36	11.72	0.06	6/25/2022 19:20	11.55	-0.41	6/24/2022 17:23	11.68	10.65	6/24/2022 18:45	2.15
6/24/2022 17:37	11.73	0.07	6/25/2022 19:21	11.54	-0.48	6/24/2022 17:24	11.69	10.62	6/24/2022 18:46	2.15
6/24/2022 17:38	11.69	0.12	6/25/2022 19:22	11.57	-0.38	6/24/2022 17:25	11.71	10.60	6/24/2022 18:47	2.17
6/24/2022 17:39	11.71	0.04	6/25/2022 19:23	11.55	-0.58	6/24/2022 17:26	11.69	10.60	6/24/2022 18:48	2.14
6/24/2022 17:40	11.72	0.11	6/25/2022 19:24	11.58	-0.39	6/24/2022 17:27	11.72	10.51	6/24/2022 18:49	2.15
6/24/2022 17:41	11.69	0.11	6/25/2022 19:25	11.54	-0.48	6/24/2022 17:28	11.69	10.52	6/24/2022 18:50	2.07
6/24/2022 17:42	11.71	0.12	6/25/2022 19:26	11.55	-0.49	6/24/2022 17:29	11.73	10.47	6/24/2022 18:51	2.11
6/24/2022 17:43	11.75	0.13	6/25/2022 19:27	11.53	-0.59	6/24/2022 17:30	11.67	10.48	6/24/2022 18:52	2.12
6/24/2022 17:44	11.72	0.18	6/25/2022 19:28	11.53	-0.36	6/24/2022 17:31	11.69	10.45	6/24/2022 18:53	2.14
6/24/2022 17:45	11.71	0.09	6/25/2022 19:29	11.58	-0.47	6/24/2022 17:32	11.68	10.45	6/24/2022 18:54	2.11
6/24/2022 17:46	11.69	0.07	6/25/2022 19:30	11.56	-0.42	6/24/2022 17:33	11.69	10.41	6/24/2022 18:55	2.10
6/24/2022 17:47	11.71	0.10	6/25/2022 19:31	11.56	-0.47	6/24/2022 17:34	11.67	10.36	6/24/2022 18:56	2.12
6/24/2022 17:48	11.69	0.06	6/25/2022 19:32	11.55	-0.41	6/24/2022 17:35	11.71	10.34	6/24/2022 18:57	2.10
6/24/2022 17:49	11.67	-0.01	6/25/2022 19:33	11.54	-0.43	6/24/2022 17:36	11.69	10.31	6/24/2022 18:58	2.11
6/24/2022 17:50	11.69	-0.04	6/25/2022 19:34	11.55	-0.49	6/24/2022 17:37	11.71	10.28	6/24/2022 18:59	2.11
6/24/2022 17:51	11.68	0.08	6/25/2022 19:35	11.56	-0.44	6/24/2022 17:38	11.69	10.28	6/24/2022 19:00	2.12
6/24/2022 17:52	11.70	0.08	6/25/2022 19:36	11.54	-0.49	6/24/2022 17:39	11.70	10.29	6/24/2022 19:01	2.14
6/24/2022 17:53	11.69	0.12	6/25/2022 19:37	11.55	-0.52	6/24/2022 17:40	11.69	10.27	6/24/2022 19:02	2.14
6/24/2022 17:54	11.68	0.04	6/25/2022 19:38	11.54	-0.37	6/24/2022 17:41	11.67	10.26	6/24/2022 19:03	2.07
6/24/2022 17:55	11.67	0.02	6/25/2022 19:39	11.56	-0.49	6/24/2022 17:42	11.70	10.19	6/24/2022 19:04	2.10
6/24/2022 17:56	11.71	0.02	6/25/2022 19:40	11.56	-0.40	6/24/2022 17:43	11.71	10.22	6/24/2022 19:05	2.08
6/24/2022 17:57	11.70	0.10	6/25/2022 19:41	11.54	-0.40	6/24/2022 17:44	11.70	10.16	6/24/2022 19:06	2.04
6/24/2022 17:58	11.71	0.00	6/25/2022 19:42	11.56	-0.38	6/24/2022 17:45	11.66	10.11	6/24/2022 19:07	2.08
6/24/2022 17:59	11.70	0.11	6/25/2022 19:43	11.55	-0.51	6/24/2022 17:46	11.70	10.17	6/24/2022 19:08	2.13
6/24/2022 18:00	11.72	0.07	6/25/2022 19:44	11.54	-0.47	6/24/2022 17:47	11.72	10.09	6/24/2022 19:09	2.08
6/24/2022 18:01	11.70	0.06	6/25/2022 19:45	11.57	-0.45	6/24/2022 17:48	11.68	10.08	6/24/2022 19:10	2.07
6/24/2022 18:02	11.71	0.10	6/25/2022 19:46	11.54	-0.60	6/24/2022 17:49	11.71	10.10	6/24/2022 19:11	2.07
6/24/2022 18:03	11.70	0.11	6/25/2022 19:47	11.56	-0.48	6/24/2022 17:50	11.69	10.01	6/24/2022 19:12	2.09
6/24/2022 18:04	11.72	0.06	6/25/2022 19:48	11.57	-0.45	6/24/2022 17:51	11.69	10.03	6/24/2022 19:13	2.06
6/24/2022 18:05	11.72	0.09	6/25/2022 19:49	11.55	-0.41	6/24/2022 17:52	11.71	9.98	6/24/2022 19:14	2.04
6/24/2022 18:06	11.72	0.03	6/25/2022 19:50	11.56	-0.42	6/24/2022 17:53	11.71	9.93	6/24/2022 19:15	2.08
6/24/2022 18:07	11.69	0.07	6/25/2022 19:51	11.56	-0.48	6/24/2022 17:54	11.67	9.93	6/24/2022 19:16	2.01
6/24/2022 18:08	11.69	0.11	6/25/2022 19:52	11.53	-0.52	6/24/2022 17:55	11.70	9.92	6/24/2022 19:17	1.95
6/24/2022 18:09	11.70	0.08	6/25/2022 19:53	11.56	-0.54	6/24/2022 17:56	11.67	9.92	6/24/2022 19:18	2.04
6/24/2022 18:10	11.71	0.15	6/25/2022 19:54	11.55	-0.44	6/24/2022 17:57	11.68	9.94	6/24/2022 19:19	2.02
6/24/2022 18:11	11.72	0.07	6/25/2022 19:55	11.55	-0.46	6/24/2022 17:58	11.73	9.85	6/24/2022 19:20	2.03
6/24/2022 18:12	11.70	0.14	6/25/2022 19:56	11.57	-0.50	6/24/2022 17:59	11.67	9.88	6/24/2022 19:21	2.07
6/24/2022 18:13	11.71	0.06	6/25/2022 19:57	11.56	-0.35	6/24/2022 18:00	11.70	9.83	6/24/2022 19:22	2.03
6/24/2022 18:14	11.73	0.08	6/25/2022 19:58	11.57	-0.42	6/24/2022 18:01	11.69	9.81	6/24/2022 19:23	2.05
6/24/2022 18:15	11.69	0.10	6/25/2022 19:59	11.54	-0.44	6/24/2022 18:02	11.73	9.81	6/24/2022 19:24	2.00
6/24/2022 18:16	11.69	0.06	6/25/2022 20:00	11.53	-0.43	6/24/2022 18:03	11.69	9.73	6/24/2022 19:25	2.02
6/24/2022 18:17	11.70	0.10	6/25/2022 20:01	11.56	-0.47	6/24/2022 18:04	11.70	9.75	6/24/2022 19:26	2.03
6/24/2022 18:18	11.68	0.10	6/25/2022 20:02	11.57	-0.41	6/24/2022 18:05	11.71	9.71	6/24/2022 19:27	2.04
6/24/2022 18:19	11.69	0.06	6/25/2022 20:03	11.57	-0.52	6/24/2022 18:06	11.72	9.71	6/24/2022 19:28	2.03
6/24/2022 18:20	11.69	0.10	6/25/2022 20:04	11.57	-0.49	6/24/2022 18:07	11.70	9.66	6/24/2022 19:29	2.00
6/24/2022 18:21	11.68	0.09	6/25/2022 20:05	11.55	-0.52	6/24/2022 18:08	11.69	9.66	6/24/2022 19:30	2.01
6/24/2022 18:22	11.69	0.08	6/25/2022 20:06	11.56	-0.54	6/24/2022 18:09	11.66	9.67	6/24/2022 19:31	2.02
6/24/2022 18:23	11.71	0.11	6/25/2022 20:07	11.53	-0.52	6/24/2022 18:10	11.69	9.65	6/24/2022 19:32	1.96
6/24/2022 18:24	11.71	0.12	6/25/2022 20:08	11.54	-0.43	6/24/2022 18:11	11.69	9.62	6/24/2022 19:33	1.99
6/24/2022 18:25	11.75	0.06	6/25/2022 20:09	11.54	-0.42	6/24/2022 18:12	11.72	9.59	6/24/2022 19:34	1.94
6/24/2022 18:26	11.74	0.06	6/25/2022 20:10	11.58	-0.46	6/24/2022 18:13	11.71	9.57	6/24/2022 19:35	1.97
6/24/2022 18:27	11.69	0.07	6/25/2022 20:11	11.56	-0.36	6/24/2022 18:14	11.73	9.51	6/24/2022 19:36	2.01
6/24/2022 18:28	11.71	0.10	6/25/2022 20:12	11.58	-0.48	6/24/2022 18:15	11.73	9.56	6/24/2022 19:37	2.01
6/24/2022 18:29	11.71	0.04	6/25/2022 20:13	11.51	-0.41	6/24/2022 18:16	11.72	9.51	6/24/2022 19:38	1.94
6/24/2022 18:30	11.69	0.12	6/25/2022 20:14	11.55	-0.39	6/24/2022 18:17	11.70	9.49	6/24/2022 19:39	1.93

6/24/2022 18:31	11.73	0.07	6/25/2022 20:15	11.55	-0.44	6/24/2022 18:18	11.68	9.46	6/24/2022 19:40	1.95
6/24/2022 18:32	11.70	0.09	6/25/2022 20:16	11.55	-0.39	6/24/2022 18:19	11.74	9.45	6/24/2022 19:41	1.95
6/24/2022 18:33	11.72	0.04	6/25/2022 20:17	11.56	-0.47	6/24/2022 18:20	11.71	9.42	6/24/2022 19:42	1.98
6/24/2022 18:34	11.71	0.03	6/25/2022 20:18	11.53	-0.40	6/24/2022 18:21	11.72	9.40	6/24/2022 19:43	1.94
6/24/2022 18:35	11.71	0.06	6/25/2022 20:19	11.55	-0.33	6/24/2022 18:22	11.69	9.40	6/24/2022 19:44	1.99
6/24/2022 18:36	11.72	0.15	6/25/2022 20:20	11.55	-0.43	6/24/2022 18:23	11.74	9.35	6/24/2022 19:45	1.93
6/24/2022 18:37	11.73	0.12	6/25/2022 20:21	11.56	-0.52	6/24/2022 18:24	11.67	9.37	6/24/2022 19:46	1.94
6/24/2022 18:38	11.74	0.05	6/25/2022 20:22	11.56	-0.52	6/24/2022 18:25	11.68	9.30	6/24/2022 19:47	1.98
6/24/2022 18:39	11.74	0.09	6/25/2022 20:23	11.54	-0.48	6/24/2022 18:26	11.69	9.30	6/24/2022 19:48	1.89
6/24/2022 18:40	11.75	0.00	6/25/2022 20:24	11.58	-0.55	6/24/2022 18:27	11.74	9.28	6/24/2022 19:49	1.91
6/24/2022 18:41	11.70	0.04	6/25/2022 20:25	11.56	-0.41	6/24/2022 18:28	11.72	9.22	6/24/2022 19:50	1.94
6/24/2022 18:42	11.71	0.11	6/25/2022 20:26	11.56	-0.44	6/24/2022 18:29	11.69	9.21	6/24/2022 19:51	1.89
6/24/2022 18:43	11.73	0.14	6/25/2022 20:27	11.56	-0.43	6/24/2022 18:30	11.72	9.23	6/24/2022 19:52	1.95
6/24/2022 18:44	11.72	0.06	6/25/2022 20:28	11.57	-0.44	6/24/2022 18:31	11.71	9.19	6/24/2022 19:53	1.93
6/24/2022 18:45	11.71	0.07	6/25/2022 20:29	11.57	-0.47	6/24/2022 18:32	11.70	9.18	6/24/2022 19:54	1.95
6/24/2022 18:46	11.71	0.11	6/25/2022 20:30	11.56	-0.48	6/24/2022 18:33	11.68	9.15	6/24/2022 19:55	1.90
6/24/2022 18:47	11.69	0.13	6/25/2022 20:31	11.56	-0.58	6/24/2022 18:34	11.66	9.18	6/24/2022 19:56	1.87
6/24/2022 18:48	11.69	0.10	6/25/2022 20:32	11.55	-0.43	6/24/2022 18:35	11.68	9.13	6/24/2022 19:57	1.86
6/24/2022 18:49	11.71	0.06	6/25/2022 20:33	11.54	-0.49	6/24/2022 18:36	11.67	9.11	6/24/2022 19:58	1.86
6/24/2022 18:50	11.69	0.13	6/25/2022 20:34	11.56	-0.47	6/24/2022 18:37	11.70	9.08	6/24/2022 19:59	1.86
6/24/2022 18:51	11.72	0.12	6/25/2022 20:35	11.55	-0.51	6/24/2022 18:38	11.72	9.03	6/24/2022 20:00	1.97
6/24/2022 18:52	11.73	0.19	6/25/2022 20:36	11.54	-0.48	6/24/2022 18:39	11.71	8.99	6/24/2022 20:01	1.93
6/24/2022 18:53	11.71	0.07	6/25/2022 20:37	11.54	-0.40	6/24/2022 18:40	11.67	8.96	6/24/2022 20:02	1.89
6/24/2022 18:54	11.67	0.01	6/25/2022 20:38	11.56	-0.36	6/24/2022 18:41	11.66	9.01	6/24/2022 20:03	1.91
6/24/2022 18:55	11.71	0.13	6/25/2022 20:39	11.55	-0.51	6/24/2022 18:42	11.70	8.97	6/24/2022 20:04	1.91
6/24/2022 18:56	11.71	0.06	6/25/2022 20:40	11.55	-0.48	6/24/2022 18:43	11.69	8.95	6/24/2022 20:05	1.88
6/24/2022 18:57	11.72	0.12	6/25/2022 20:41	11.57	-0.44	6/24/2022 18:44	11.70	8.94	6/24/2022 20:06	1.87
6/24/2022 18:58	11.69	0.08	6/25/2022 20:42	11.55	-0.45	6/24/2022 18:45	11.69	8.88	6/24/2022 20:07	1.86
6/24/2022 18:59	11.73	0.14	6/25/2022 20:43	11.56	-0.33	6/24/2022 18:46	11.66	8.89	6/24/2022 20:08	1.88
6/24/2022 19:00	11.70	0.15	6/25/2022 20:44	11.53	-0.46	6/24/2022 18:47	11.69	8.86	6/24/2022 20:09	1.88
6/24/2022 19:01	11.73	0.06	6/25/2022 20:45	11.56	-0.42	6/24/2022 18:48	11.71	8.84	6/24/2022 20:10	1.83
6/24/2022 19:02	11.72	0.00	6/25/2022 20:46	11.56	-0.48	6/24/2022 18:49	11.73	8.84	6/24/2022 20:11	1.86
6/24/2022 19:03	11.75	0.08	6/25/2022 20:47	11.55	-0.42	6/24/2022 18:50	11.71	8.82	6/24/2022 20:12	1.82
6/24/2022 19:04	11.73	0.09	6/25/2022 20:48	11.57	-0.34	6/24/2022 18:51	11.70	8.78	6/24/2022 20:13	1.80
6/24/2022 19:05	11.73	0.11	6/25/2022 20:49	11.55	-0.45	6/24/2022 18:52	11.69	8.77	6/24/2022 20:14	1.81
6/24/2022 19:06	11.73	0.06	6/25/2022 20:50	11.58	-0.46	6/24/2022 18:53	11.70	8.72	6/24/2022 20:15	1.79
6/24/2022 19:07	11.72	0.12	6/25/2022 20:51	11.57	-0.42	6/24/2022 18:54	11.69	8.78	6/24/2022 20:16	1.82
6/24/2022 19:08	11.71	0.08	6/25/2022 20:52	11.55	-0.50	6/24/2022 18:55	11.71	8.73	6/24/2022 20:17	1.79
6/24/2022 19:09	11.71	0.11	6/25/2022 20:53	11.56	-0.53	6/24/2022 18:56	11.71	8.71	6/24/2022 20:18	1.79
6/24/2022 19:10	11.73	0.04	6/25/2022 20:54	11.55	-0.31	6/24/2022 18:57	11.70	8.67	6/24/2022 20:19	1.78
6/24/2022 19:11	11.72	0.14	6/25/2022 20:55	11.55	-0.39	6/24/2022 18:58	11.72	8.67	6/24/2022 20:20	1.78
6/24/2022 19:12	11.73	-0.08	6/25/2022 20:56	11.57	-0.44	6/24/2022 18:59	11.69	8.63	6/24/2022 20:21	1.81
6/24/2022 19:13	11.73	0.02	6/25/2022 20:57	11.56	-0.40	6/24/2022 19:00	11.68	8.61	6/24/2022 20:22	1.78
6/24/2022 19:14	11.71	0.03	6/25/2022 20:58	11.57	-0.47	6/24/2022 19:01	11.65	8.62	6/24/2022 20:23	1.80
6/24/2022 19:15	11.71	0.04	6/25/2022 20:59	11.58	-0.45	6/24/2022 19:02	11.72	8.59	6/24/2022 20:24	1.74
6/24/2022 19:16	11.72	0.11	6/25/2022 21:00	11.56	-0.48	6/24/2022 19:03	11.70	8.59	6/24/2022 20:25	1.72
6/24/2022 19:17	11.72	0.09	6/25/2022 21:01	11.54	-0.57	6/24/2022 19:04	11.74	8.53	6/24/2022 20:26	1.76
6/24/2022 19:18	11.71	0.06	6/25/2022 21:02	11.55	-0.32	6/24/2022 19:05	11.68	8.50	6/24/2022 20:27	1.79
6/24/2022 19:19	11.70	0.05	6/25/2022 21:03	11.55	-0.46	6/24/2022 19:06	11.70	8.48	6/24/2022 20:28	1.80
6/24/2022 19:20	11.69	0.12	6/25/2022 21:04	11.53	-0.48	6/24/2022 19:07	11.66	8.44	6/24/2022 20:29	1.76
6/24/2022 19:21	11.70	0.11	6/25/2022 21:05	11.56	-0.49	6/24/2022 19:08	11.70	8.45	6/24/2022 20:30	1.75
6/24/2022 19:22	11.70	0.07	6/25/2022 21:06	11.54	-0.42	6/24/2022 19:09	11.71	8.43	6/24/2022 20:31	1.72
6/24/2022 19:23	11.71	0.17	6/25/2022 21:07	11.55	-0.38	6/24/2022 19:10	11.71	8.43	6/24/2022 20:32	1.73
6/24/2022 19:24	11.72	0.09	6/25/2022 21:08	11.55	-0.42	6/24/2022 19:11	11.71	8.37	6/24/2022 20:33	1.71
6/24/2022 19:25	11.71	0.09	6/25/2022 21:09	11.55	-0.50	6/24/2022 19:12	11.70	8.36	6/24/2022 20:34	1.68
6/24/2022 19:26	11.69	0.07	6/25/2022 21:10	11.56	-0.49	6/24/2022 19:13	11.70	8.38	6/24/2022 20:35	1.74
6/24/2022 19:27	11.69	0.09	6/25/2022 21:11	11.56	-0.36	6/24/2022 19:14	11.70	8.31	6/24/2022 20:36	1.76
6/24/2022 19:28	11.70	0.12	6/25/2022 21:12	11.57	-0.48	6/24/2022 19:15	11.70	8.29	6/24/2022 20:37	1.73
6/24/2022 19:29	11.72	0.13	6/25/2022 21:13	11.57	-0.42	6/24/2022 19:16	11.69	8.33	6/24/2022 20:38	1.64
6/24/2022 19:30	11.68	0.16	6/25/2022 21:14	11.56	-0.43	6/24/2022 19:17	11.69	8.29	6/24/2022 20:39	1.66
6/24/2022 19:31	11.70	0.11	6/25/2022 21:15	11.56	-0.48	6/24/2022 19:18	11.71	8.24	6/24/2022 20:40	1.72
6/24/2022 19:32	11.72	-0.06	6/25/2022 21:16	11.55	-0.50	6/24/2022 19:19	11.69	8.24	6/24/2022 20:41	1.66
6/24/2022 19:33	11.71	0.12	6/25/2022 21:17	11.58	-0.50	6/24/2022 19:20	11.72	8.19	6/24/2022 20:42	1.70
6/24/2022 19:34	11.69	0.07	6/25/2022 21:18	11.57	-0.39	6/24/2022 19:21	11.70	8.21	6/24/2022 20:43	1.66
6/24/2022 19:35	11.69	0.11	6/25/2022 21:19	11.56	-0.42	6/24/2022 19:22	11.72	8.16	6/24/2022 20:44	1.69
6/24/2022 19:36	11.69	0.15	6/25/2022 21:20	11.56	-0.47	6/24/2022 19:23	11.68	8.20	6/24/2022 20:45	1.70
6/24/2022 19:37	11.72	0.13	6/25/2022 21:21	11.55	-0.46	6/24/2022 19:24	11.69	8.14	6/24/2022 20:46	1.66
6/24/2022 19:38	11.71	0.09	6/25/2022 21:22	11.56	-0.48	6/24/2022 19:25	11.69	8.14	6/24/2022 20:47	1.65
6/24/2022 19:39	11.69	0.03	6/25/2022 21:23	11.55	-0.52	6/24/2022 19:26	11.73	8.11	6/24/2022 20:48	1.70
6/24/2022 19:40	11.67	0.11	6/25/2022 21:24	11.57	-0.45	6/24/2022 19:27	11.70	8.07	6/24/2022 20:49	1.65
6/24/2022 19:41	11.69	0.06	6/25/2022 21:25	11.55	-0.37	6/24/2022 19:28	11.69	8.10	6/24/2022 20:50	1.58
6/24/2022 19:42	11.70	0.06	6/25/2022 21:26	11.54	-0.47	6/24/2022 19:29	11.72	8.06	6/24/2022 20:51	1.60
6/24/2022 19:43	11.67	0.19	6/25/2022 21:27	11.57	-0.45	6/24/2022 19:30	11.69	8.02	6/24/2022 20:52	1.59
6/24/2022 19:44	11.71	0.05	6/25/2022 21:28	11.55	-0.45	6/24/2022 19:31	11.71	8.01	6/24/2022 20:53	1.59
6/24/2022 19:45	11.68	0.05	6/25/2022 21:29	11.53	-0.38	6/24/2022 19:32	11.71	7.95	6/24/2022 20:54	1.61
6/24/2022 19:46	11.69	0.08	6/25/2022 21:30	11.58	-0.36	6/24/2022 19:33	11.70	8.00	6/24/2022 20:55	1.61
6/24/2022 19:47	11.70	0.01	6/25/2022 21:31	11.56	-0.43	6/24/2022 19:34	11.69	7.99	6/24/2022 20:56	1.57
6/24/2022 19:48	11.69	0.07	6/25/2022 21:32	11.56	-0.35	6/24/2022 19:35	11.68	8.00	6/24/2022 20:57	1.61
6/24/2022 19:49	11.70	0.06	6/25/2022 21:33	11.55	-0.55	6/24/2022 19:36	11.71	7.89	6/24/2022 20:58	1.59
6/24/2022 19:50	11.67	0.02	6/25/2022 21:34	11.58	-0.58	6/24/2022 19:37	11.70	7.93	6/24/2022 20:59	1.65
6/24/2022 19:51	11.69	0.11	6/25/2022 21:35	11.54	-0.50	6/24/2022 19:38	11.67	7.88	6/24/2022 21:00	1.57
6/24/2022 19:52	11.68	0.13	6/25/2022 21:36	11.56	-0.56	6/24/2022 19:39	11.69	7.79	6/24/2022 21:01	1.55
6/24/2022 19:53	11.71	0.07	6/25/2022 21:37	11.54	-0.40	6/24/2022 19:40	11.70	7.81	6/24/2022 21:02	1.54
6/24/2022 19:54	11.72	0.14	6/25/2022 21:38	11.56	-0.37	6/24/2022 19:41	11.69	7.81	6/24/2022 21:03	1.60
6/24/2022 19:55	11.70	0.10	6/25/2022 21:39	11.56	-0.39	6/24/2022 19:42	11.72	7.77	6/24/2022 21:04	1.60
6/24/2022 19:56	11.72	0.02	6/25/2022 21:40	11.56	-0.50	6/24/2022 19:43	11.69	7.80	6/24/2022 21:05	1.59
6/24/2022 19:57	11.70	0.09	6/25/2022 21:41	11.54	-0.42	6/24/2022 19:44	11.71	7.76	6/24/2022 21:06	1.53
6/24/2022 19:58	11.71	0.10	6/25/2022 21:42	11.55	-0.50	6/24/2022 19:45	11.70	7.71	6/24/2022 21:07	1.58

6/24/2022 19:59	11.73	0.11	6/25/2022 21:43	11.54	-0.50	6/24/2022 19:46	11.70	7.75	6/24/2022 21:08	1.56
6/24/2022 20:00	11.73	0.05	6/25/2022 21:44	11.55	-0.43	6/24/2022 19:47	11.71	7.67	6/24/2022 21:09	1.53
6/24/2022 20:01	11.72	0.09	6/25/2022 21:45	11.58	-0.42	6/24/2022 19:48	11.69	7.72	6/24/2022 21:10	1.57
6/24/2022 20:02	11.73	0.10	6/25/2022 21:46	11.56	-0.37	6/24/2022 19:49	11.70	7.64	6/24/2022 21:11	1.55
6/24/2022 20:03	11.71	0.10	6/25/2022 21:47	11.58	-0.42	6/24/2022 19:50	11.71	7.67	6/24/2022 21:12	1.52
6/24/2022 20:04	11.71	0.11	6/25/2022 21:48	11.57	-0.48	6/24/2022 19:51	11.69	7.64	6/24/2022 21:13	1.54
6/24/2022 20:05	11.72	0.04	6/25/2022 21:49	11.56	-0.52	6/24/2022 19:52	11.69	7.61	6/24/2022 21:14	1.54
6/24/2022 20:06	11.71	0.08	6/25/2022 21:50	11.56	-0.45	6/24/2022 19:53	11.70	7.61	6/24/2022 21:15	1.51
6/24/2022 20:07	11.70	0.10	6/25/2022 21:51	11.56	-0.42	6/24/2022 19:54	11.69	7.57	6/24/2022 21:16	1.49
6/24/2022 20:08	11.68	0.16	6/25/2022 21:52	11.57	-0.49	6/24/2022 19:55	11.72	7.56	6/24/2022 21:17	1.55
6/24/2022 20:09	11.71	0.13	6/25/2022 21:53	11.57	-0.51	6/24/2022 19:56	11.69	7.58	6/24/2022 21:18	1.49
6/24/2022 20:10	11.72	0.06	6/25/2022 21:54	11.55	-0.49	6/24/2022 19:57	11.71	7.53	6/24/2022 21:19	1.48
6/24/2022 20:11	11.71	0.10	6/25/2022 21:55	11.56	-0.53	6/24/2022 19:58	11.70	7.53	6/24/2022 21:20	1.45
6/24/2022 20:12	11.71	0.14	6/25/2022 21:56	11.56	-0.50	6/24/2022 19:59	11.69	7.45	6/24/2022 21:21	1.49
6/24/2022 20:13	11.71	0.12	6/25/2022 21:57	11.54	-0.49	6/24/2022 20:00	11.71	7.47	6/24/2022 21:22	1.49
6/24/2022 20:14	11.71	0.12	6/25/2022 21:58	11.55	-0.51	6/24/2022 20:01	11.66	7.44	6/24/2022 21:23	1.52
6/24/2022 20:15	11.71	0.10	6/25/2022 21:59	11.57	-0.53	6/24/2022 20:02	11.67	7.45	6/24/2022 21:24	1.51
6/24/2022 20:16	11.69	0.10	6/25/2022 22:00	11.57	-0.48	6/24/2022 20:03	11.72	7.42	6/24/2022 21:25	1.47
6/24/2022 20:17	11.72	0.15	6/25/2022 22:01	11.55	-0.50	6/24/2022 20:04	11.69	7.37	6/24/2022 21:26	1.50
6/24/2022 20:18	11.71	0.01	6/25/2022 22:02	11.54	-0.46	6/24/2022 20:05	11.70	7.37	6/24/2022 21:27	1.48
6/24/2022 20:19	11.71	0.16	6/25/2022 22:03	11.54	-0.56	6/24/2022 20:06	11.70	7.31	6/24/2022 21:28	1.50
6/24/2022 20:20	11.74	0.00	6/25/2022 22:04	11.55	-0.45	6/24/2022 20:07	11.65	7.34	6/24/2022 21:29	1.48
6/24/2022 20:21	11.73	0.13	6/25/2022 22:05	11.59	-0.53	6/24/2022 20:08	11.69	7.34	6/24/2022 21:30	1.51
6/24/2022 20:22	11.70	0.12	6/25/2022 22:06	11.57	-0.47	6/24/2022 20:09	11.66	7.30	6/24/2022 21:31	1.46
6/24/2022 20:23	11.71	0.04	6/25/2022 22:07	11.58	-0.46	6/24/2022 20:10	11.71	7.28	6/24/2022 21:32	1.48
6/24/2022 20:24	11.71	0.06	6/25/2022 22:08	11.55	-0.49	6/24/2022 20:11	11.66	7.25	6/24/2022 21:33	1.49
6/24/2022 20:25	11.67	0.09	6/25/2022 22:09	11.56	-0.52	6/24/2022 20:12	11.71	7.25	6/24/2022 21:34	1.48
6/24/2022 20:26	11.71	0.09	6/25/2022 22:10	11.60	-0.50	6/24/2022 20:13	11.70	7.23	6/24/2022 21:35	1.50
6/24/2022 20:27	11.70	0.08	6/25/2022 22:11	11.60	-0.49	6/24/2022 20:14	11.68	7.22	6/24/2022 21:36	1.45
6/24/2022 20:28	11.69	0.12	6/25/2022 22:12	11.55	-0.56	6/24/2022 20:15	11.68	7.25	6/24/2022 21:37	1.42
6/24/2022 20:29	11.70	0.05	6/25/2022 22:13	11.54	-0.43	6/24/2022 20:16	11.66	7.19	6/24/2022 21:38	1.43
6/24/2022 20:30	11.72	-0.01	6/25/2022 22:14	11.55	-0.40	6/24/2022 20:17	11.68	7.20	6/24/2022 21:39	1.44
6/24/2022 20:31	11.71	0.13	6/25/2022 22:15	11.58	-0.47	6/24/2022 20:18	11.67	7.14	6/24/2022 21:40	1.39
6/24/2022 20:32	11.71	0.10	6/25/2022 22:16	11.56	-0.54	6/24/2022 20:19	11.65	7.19	6/24/2022 21:41	1.47
6/24/2022 20:33	11.72	0.10	6/25/2022 22:17	11.55	-0.51	6/24/2022 20:20	11.67	7.17	6/24/2022 21:42	1.43
6/24/2022 20:34	11.71	0.20	6/25/2022 22:18	11.55	-0.42	6/24/2022 20:21	11.69	7.16	6/24/2022 21:43	1.51
6/24/2022 20:35	11.70	0.14	6/25/2022 22:19	11.56	-0.44	6/24/2022 20:22	11.69	7.08	6/24/2022 21:44	1.48
6/24/2022 20:36	11.73	0.06	6/25/2022 22:20	11.55	-0.45	6/24/2022 20:23	11.72	7.05	6/24/2022 21:45	1.45
6/24/2022 20:37	11.69	0.05	6/25/2022 22:21	11.53	-0.45	6/24/2022 20:24	11.72	7.06	6/24/2022 21:46	1.47
6/24/2022 20:38	11.71	0.09	6/25/2022 22:22	11.55	-0.47	6/24/2022 20:25	11.68	7.03	6/24/2022 21:47	1.47
6/24/2022 20:39	11.71	0.12	6/25/2022 22:23	11.54	-0.44	6/24/2022 20:26	11.69	6.99	6/24/2022 21:48	1.47
6/24/2022 20:40	11.70	0.04	6/25/2022 22:24	11.54	-0.55	6/24/2022 20:27	11.66	6.98	6/24/2022 21:49	1.51
6/24/2022 20:41	11.73	0.03	6/25/2022 22:25	11.57	-0.48	6/24/2022 20:28	11.67	7.02	6/24/2022 21:50	1.50
6/24/2022 20:42	11.73	0.21	6/25/2022 22:26	11.57	-0.47	6/24/2022 20:29	11.69	6.93	6/24/2022 21:51	1.50
6/24/2022 20:43	11.73	0.06	6/25/2022 22:27	11.54	-0.58	6/24/2022 20:30	11.70	6.94	6/24/2022 21:52	1.49
6/24/2022 20:44	11.72	0.09	6/25/2022 22:28	11.55	-0.45	6/24/2022 20:31	11.70	6.96	6/24/2022 21:53	1.45
6/24/2022 20:45	11.73	0.15	6/25/2022 22:29	11.58	-0.54	6/24/2022 20:32	11.71	6.85	6/24/2022 21:54	1.43
6/24/2022 20:46	11.72	0.10	6/25/2022 22:30	11.58	-0.55	6/24/2022 20:33	11.68	6.90	6/24/2022 21:55	1.46
6/24/2022 20:47	11.72	0.08	6/25/2022 22:31	11.55	-0.43	6/24/2022 20:34	11.70	6.89	6/24/2022 21:56	1.50
6/24/2022 20:48	11.70	0.09	6/25/2022 22:32	11.55	-0.36	6/24/2022 20:35	11.72	6.85	6/24/2022 21:57	1.51
6/24/2022 20:49	11.69	0.04	6/25/2022 22:33	11.54	-0.46	6/24/2022 20:36	11.69	6.88	6/24/2022 21:58	1.44
6/24/2022 20:50	11.70	0.12	6/25/2022 22:34	11.55	-0.38	6/24/2022 20:37	11.70	6.78	6/24/2022 21:59	1.49
6/24/2022 20:51	11.68	0.11	6/25/2022 22:35	11.53	-0.40	6/24/2022 20:38	11.70	6.83	6/24/2022 22:00	1.48
6/24/2022 20:52	11.70	0.11	6/25/2022 22:36	11.56	-0.47	6/24/2022 20:39	11.68	6.80	6/24/2022 22:01	1.47
6/24/2022 20:53	11.72	0.08	6/25/2022 22:37	11.59	-0.52	6/24/2022 20:40	11.68	6.76	6/24/2022 22:02	1.46
6/24/2022 20:54	11.72	0.08	6/25/2022 22:38	11.56	-0.48	6/24/2022 20:41	11.70	6.76	6/24/2022 22:03	1.45
6/24/2022 20:55	11.71	0.06	6/25/2022 22:39	11.57	-0.47	6/24/2022 20:42	11.71	6.71	6/24/2022 22:04	1.44
6/24/2022 20:56	11.70	0.06	6/25/2022 22:40	11.56	-0.43	6/24/2022 20:43	11.69	6.68	6/24/2022 22:05	1.48
6/24/2022 20:57	11.72	0.09	6/25/2022 22:41	11.56	-0.49	6/24/2022 20:44	11.68	6.69	6/24/2022 22:06	1.43
6/24/2022 20:58	11.72	0.09	6/25/2022 22:42	11.56	-0.48	6/24/2022 20:45	11.67	6.66	6/24/2022 22:07	1.49
6/24/2022 20:59	11.70	0.07	6/25/2022 22:43	11.57	-0.44	6/24/2022 20:46	11.69	6.66	6/24/2022 22:08	1.46
6/24/2022 21:00	11.72	0.05	6/25/2022 22:44	11.55	-0.45	6/24/2022 20:47	11.67	6.68	6/24/2022 22:09	1.46
6/24/2022 21:01	11.73	0.09	6/25/2022 22:45	11.58	-0.43	6/24/2022 20:48	11.68	6.63	6/24/2022 22:10	1.44
6/24/2022 21:02	11.69	0.12	6/25/2022 22:46	11.55	-0.52	6/24/2022 20:49	11.69	6.59	6/24/2022 22:11	1.50
6/24/2022 21:03	11.72	0.10	6/25/2022 22:47	11.57	-0.46	6/24/2022 20:50	11.70	6.60	6/24/2022 22:12	1.47
6/24/2022 21:04	11.72	0.05	6/25/2022 22:48	11.57	-0.39	6/24/2022 20:51	11.70	6.57	6/24/2022 22:13	1.41
6/24/2022 21:05	11.71	0.15	6/25/2022 22:49	11.54	-0.49	6/24/2022 20:52	11.70	6.56	6/24/2022 22:14	1.42
6/24/2022 21:06	11.73	0.10	6/25/2022 22:50	11.59	-0.34	6/24/2022 20:53	11.68	6.54	6/24/2022 22:15	1.45
6/24/2022 21:07	11.71	0.10	6/25/2022 22:51	11.57	-0.50	6/24/2022 20:54	11.70	6.50	6/24/2022 22:16	1.44
6/24/2022 21:08	11.74	0.10	6/25/2022 22:52	11.57	-0.54	6/24/2022 20:55	11.67	6.53	6/24/2022 22:17	1.40
6/24/2022 21:09	11.72	0.12	6/25/2022 22:53	11.55	-0.47	6/24/2022 20:56	11.68	6.49	6/24/2022 22:18	1.43
6/24/2022 21:10	11.75	0.02	6/25/2022 22:54	11.55	-0.46	6/24/2022 20:57	11.68	6.53	6/24/2022 22:19	1.46
6/24/2022 21:11	11.73	0.07	6/25/2022 22:55	11.53	-0.54	6/24/2022 20:58	11.72	6.42	6/24/2022 22:20	1.45
6/24/2022 21:12	11.74	0.06	6/25/2022 22:56	11.57	-0.46	6/24/2022 20:59	11.70	6.44	6/24/2022 22:21	1.44
6/24/2022 21:13	11.74	0.11	6/25/2022 22:57	11.58	-0.45	6/24/2022 21:00	11.66	6.41	6/24/2022 22:22	1.46
6/24/2022 21:14	11.72	0.12	6/25/2022 22:58	11.57	-0.53	6/24/2022 21:01	11.64	6.42	6/24/2022 22:23	1.46
6/24/2022 21:15	11.72	0.11	6/25/2022 22:59	11.53	-0.48	6/24/2022 21:02	11.69	6.43	6/24/2022 22:24	1.43
6/24/2022 21:16	11.72	0.05	6/25/2022 23:00	11.55	-0.41	6/24/2022 21:03	11.68	6.37	6/24/2022 22:25	1.37
6/24/2022 21:17	11.74	0.04	6/25/2022 23:01	11.56	-0.36	6/24/2022 21:04	11.69	6.36	6/24/2022 22:26	1.41
6/24/2022 21:18	11.72	0.08	6/25/2022 23:02	11.54	-0.51	6/24/2022 21:05	11.73	6.31	6/24/2022 22:27	1.40
6/24/2022 21:19	11.73	0.12	6/25/2022 23:03	11.54	-0.37	6/24/2022 21:06	11.66	6.34	6/24/2022 22:28	1.45
6/24/2022 21:20	11.71	0.05	6/25/2022 23:04	11.53	-0.56	6/24/2022 21:07	11.66	6.31	6/24/2022 22:29	1.41
6/24/2022 21:21	11.73	0.14	6/25/2022 23:05	11.55	-0.56	6/24/2022 21:08	11.66	6.31	6/24/2022 22:30	1.44
6/24/2022 21:22	11.75	0.11	6/25/2022 23:06	11.57	-0.41	6/24/2022 21:09	11.67	6.26	6/24/2022 22:31	1.36
6/24/2022 21:23	11.75	0.05	6/25/2022 23:07	11.55	-0.48	6/24/2022 21:10	11.66	6.25	6/24/2022 22:32	1.42
6/24/2022 21:24	11.73	0.09	6/25/2022 23:08	11.56	-0.48	6/24/2022 21:11	11.69	6.26	6/24/2022 22:33	1.39
6/24/2022 21:25	11.74	0.10	6/25/2022 23:09	11.56	-0.53	6/24/2022 21:12	11.69	6.22	6/24/2022 22:34	1.43
6/24/2022 21:26	11.72	0.10	6/25/2022 23:10	11.55	-0.44	6/24/2022 21:13	11.69	6.16	6/24/2022 22:35	1.41

6/24/2022 21:27	11.75	0.16	6/25/2022 23:11	11.55	-0.38	6/24/2022 21:14	11.70	6.17	6/24/2022 22:36	1.37
6/24/2022 21:28	11.74	0.01	6/25/2022 23:12	11.55	-0.36	6/24/2022 21:15	11.72	6.16	6/24/2022 22:37	1.37
6/24/2022 21:29	11.75	0.07	6/25/2022 23:13	11.54	-0.47	6/24/2022 21:16	11.70	6.18	6/24/2022 22:38	1.37
6/24/2022 21:30	11.74	0.11	6/25/2022 23:14	11.58	-0.41	6/24/2022 21:17	11.65	6.14	6/24/2022 22:39	1.37
6/24/2022 21:31	11.72	0.11	6/25/2022 23:15	11.56	-0.49	6/24/2022 21:18	11.69	6.15	6/24/2022 22:40	1.39
6/24/2022 21:32	11.73	0.11	6/25/2022 23:16	11.55	-0.41	6/24/2022 21:19	11.67	6.07	6/24/2022 22:41	1.36
6/24/2022 21:33	11.73	-0.04	6/25/2022 23:17	11.56	-0.39	6/24/2022 21:20	11.68	6.13	6/24/2022 22:42	1.37
6/24/2022 21:34	11.74	0.05	6/25/2022 23:18	11.53	-0.38	6/24/2022 21:21	11.70	6.10	6/24/2022 22:43	1.34
6/24/2022 21:35	11.70	0.06	6/25/2022 23:19	11.55	-0.48	6/24/2022 21:22	11.70	6.06	6/24/2022 22:44	1.33
6/24/2022 21:36	11.72	0.07	6/25/2022 23:20	11.56	-0.48	6/24/2022 21:23	11.69	6.06	6/24/2022 22:45	1.34
6/24/2022 21:37	11.74	0.15	6/25/2022 23:21	11.56	-0.57	6/24/2022 21:24	11.71	6.00	6/24/2022 22:46	1.38
6/24/2022 21:38	11.70	-0.02	6/25/2022 23:22	11.54	-0.42	6/24/2022 21:25	11.66	6.04	6/24/2022 22:47	1.36
6/24/2022 21:39	11.72	0.04	6/25/2022 23:23	11.54	-0.51	6/24/2022 21:26	11.66	5.99	6/24/2022 22:48	1.32
6/24/2022 21:40	11.69	0.14	6/25/2022 23:24	11.55	-0.54	6/24/2022 21:27	11.67	5.99	6/24/2022 22:49	1.31
6/24/2022 21:41	11.72	0.08	6/25/2022 23:25	11.57	-0.43	6/24/2022 21:28	11.68	5.97	6/24/2022 22:50	1.33
6/24/2022 21:42	11.73	0.06	6/25/2022 23:26	11.55	-0.48	6/24/2022 21:29	11.69	5.92	6/24/2022 22:51	1.34
6/24/2022 21:43	11.72	0.09	6/25/2022 23:27	11.56	-0.54	6/24/2022 21:30	11.69	5.97	6/24/2022 22:52	1.36
6/24/2022 21:44	11.72	0.15	6/25/2022 23:28	11.54	-0.52	6/24/2022 21:31	11.70	5.92	6/24/2022 22:53	1.31
6/24/2022 21:45	11.73	0.14	6/25/2022 23:29	11.55	-0.28	6/24/2022 21:32	11.67	5.89	6/24/2022 22:54	1.34
6/24/2022 21:46	11.75	0.11	6/25/2022 23:30	11.57	-0.48	6/24/2022 21:33	11.72	5.88	6/24/2022 22:55	1.35
6/24/2022 21:47	11.73	0.09	6/25/2022 23:31	11.52	-0.52	6/24/2022 21:34	11.71	5.86	6/24/2022 22:56	1.33
6/24/2022 21:48	11.72	0.08	6/25/2022 23:32	11.59	-0.42	6/24/2022 21:35	11.69	5.84	6/24/2022 22:57	1.32
6/24/2022 21:49	11.75	0.15	6/25/2022 23:33	11.56	-0.57	6/24/2022 21:36	11.71	5.75	6/24/2022 22:58	1.34
6/24/2022 21:50	11.74	0.13	6/25/2022 23:34	11.57	-0.50	6/24/2022 21:37	11.69	5.83	6/24/2022 22:59	1.38
6/24/2022 21:51	11.75	0.07	6/25/2022 23:35	11.57	-0.49	6/24/2022 21:38	11.70	5.76	6/24/2022 23:00	1.32
6/24/2022 21:52	11.75	0.11	6/25/2022 23:36	11.54	-0.46	6/24/2022 21:39	11.71	5.72	6/24/2022 23:01	1.32
6/24/2022 21:53	11.73	0.06	6/25/2022 23:37	11.55	-0.54	6/24/2022 21:40	11.66	5.74	6/24/2022 23:02	1.32
6/24/2022 21:54	11.73	0.16	6/25/2022 23:38	11.55	-0.41	6/24/2022 21:41	11.67	5.72	6/24/2022 23:03	1.36
6/24/2022 21:55	11.72	0.04	6/25/2022 23:39	11.54	-0.49	6/24/2022 21:42	11.69	5.71	6/24/2022 23:04	1.32
6/24/2022 21:56	11.72	0.04	6/25/2022 23:40	11.58	-0.37	6/24/2022 21:43	11.67	5.75	6/24/2022 23:05	1.34
6/24/2022 21:57	11.74	0.12	6/25/2022 23:41	11.54	-0.42	6/24/2022 21:44	11.70	5.66	6/24/2022 23:06	1.33
6/24/2022 21:58	11.72	0.10	6/25/2022 23:42	11.57	-0.57	6/24/2022 21:45	11.69	5.65	6/24/2022 23:07	1.31
6/24/2022 21:59	11.74	0.12	6/25/2022 23:43	11.55	-0.42	6/24/2022 21:46	11.71	5.62	6/24/2022 23:08	1.33
6/24/2022 22:00	11.72	0.17	6/25/2022 23:44	11.57	-0.47	6/24/2022 21:47	11.69	5.68	6/24/2022 23:09	1.31
6/24/2022 22:01	11.73	0.07	6/25/2022 23:45	11.55	-0.36	6/24/2022 21:48	11.68	5.60	6/24/2022 23:10	1.24
6/24/2022 22:02	11.71	-0.01	6/25/2022 23:46	11.58	-0.44	6/24/2022 21:49	11.68	5.60	6/24/2022 23:11	1.27
6/24/2022 22:03	11.72	0.07	6/25/2022 23:47	11.53	-0.53	6/24/2022 21:50	11.70	5.56	6/24/2022 23:12	1.28
6/24/2022 22:04	11.71	0.08	6/25/2022 23:48	11.53	-0.53	6/24/2022 21:51	11.67	5.59	6/24/2022 23:13	1.31
6/24/2022 22:05	11.68	0.09	6/25/2022 23:49	11.54	-0.41	6/24/2022 21:52	11.69	5.57	6/24/2022 23:14	1.27
6/24/2022 22:06	11.71	0.06	6/25/2022 23:50	11.57	-0.41	6/24/2022 21:53	11.65	5.58	6/24/2022 23:15	1.29
6/24/2022 22:07	11.69	0.07	6/25/2022 23:51	11.56	-0.43	6/24/2022 21:54	11.68	5.54	6/24/2022 23:16	1.28
6/24/2022 22:08	11.70	0.06	6/25/2022 23:52	11.56	-0.40	6/24/2022 21:55	11.69	5.52	6/24/2022 23:17	1.24
6/24/2022 22:09	11.71	0.10	6/25/2022 23:53	11.55	-0.50	6/24/2022 21:56	11.68	5.53	6/24/2022 23:18	1.29
6/24/2022 22:10	11.71	0.04	6/25/2022 23:54	11.56	-0.50	6/24/2022 21:57	11.69	5.44	6/24/2022 23:19	1.25
6/24/2022 22:11	11.72	0.08	6/25/2022 23:55	11.55	-0.54	6/24/2022 21:58	11.70	5.45	6/24/2022 23:20	1.27
6/24/2022 22:12	11.70	0.01	6/25/2022 23:56	11.52	-0.43	6/24/2022 21:59	11.69	5.47	6/24/2022 23:21	1.25
6/24/2022 22:13	11.70	0.09	6/25/2022 23:57	11.56	-0.40	6/24/2022 22:00	11.66	5.42	6/24/2022 23:22	1.30
6/24/2022 22:14	11.68	0.05	6/25/2022 23:58	11.56	-0.46	6/24/2022 22:01	11.70	5.38	6/24/2022 23:23	1.25
6/24/2022 22:15	11.70	-0.03	6/25/2022 23:59	11.56	-0.50	6/24/2022 22:02	11.71	5.47	6/24/2022 23:24	1.25
6/24/2022 22:16	11.71	0.08	6/26/2022 0:00	11.58	-0.44	6/24/2022 22:03	11.72	5.38	6/24/2022 23:25	1.27
6/24/2022 22:17	11.70	0.12	6/26/2022 0:01	11.56	-0.49	6/24/2022 22:04	11.70	5.38	6/24/2022 23:26	1.29
6/24/2022 22:18	11.72	0.08	6/26/2022 0:02	11.57	-0.43	6/24/2022 22:05	11.71	5.35	6/24/2022 23:27	1.24
6/24/2022 22:19	11.69	0.08	6/26/2022 0:03	11.53	-0.41	6/24/2022 22:06	11.68	5.34	6/24/2022 23:28	1.27
6/24/2022 22:20	11.73	0.09	6/26/2022 0:04	11.54	-0.39	6/24/2022 22:07	11.69	5.36	6/24/2022 23:29	1.23
6/24/2022 22:21	11.71	0.12	6/26/2022 0:05	11.54	-0.44	6/24/2022 22:08	11.68	5.36	6/24/2022 23:30	1.25
6/24/2022 22:22	11.71	0.11	6/26/2022 0:06	11.55	-0.44	6/24/2022 22:09	11.65	5.28	6/24/2022 23:31	1.26
6/24/2022 22:23	11.70	0.03	6/26/2022 0:07	11.55	-0.51	6/24/2022 22:10	11.70	5.25	6/24/2022 23:32	1.23
6/24/2022 22:24	11.69	0.09	6/26/2022 0:08	11.57	-0.53	6/24/2022 22:11	11.69	5.26	6/24/2022 23:33	1.21
6/24/2022 22:25	11.68	0.06	6/26/2022 0:09	11.56	-0.36	6/24/2022 22:12	11.65	5.30	6/24/2022 23:34	1.26
6/24/2022 22:26	11.72	0.11	6/26/2022 0:10	11.55	-0.44	6/24/2022 22:13	11.70	5.22	6/24/2022 23:35	1.17
6/24/2022 22:27	11.72	0.06	6/26/2022 0:11	11.53	-0.45	6/24/2022 22:14	11.69	5.23	6/24/2022 23:36	1.19
6/24/2022 22:28	11.72	0.04	6/26/2022 0:12	11.55	-0.52	6/24/2022 22:15	11.64	5.24	6/24/2022 23:37	1.19
6/24/2022 22:29	11.72	0.16	6/26/2022 0:13	11.57	-0.36	6/24/2022 22:16	11.73	5.20	6/24/2022 23:38	1.14
6/24/2022 22:30	11.71	0.01	6/26/2022 0:14	11.55	-0.48	6/24/2022 22:17	11.70	5.15	6/24/2022 23:39	1.19
6/24/2022 22:31	11.70	0.08	6/26/2022 0:15	11.58	-0.38	6/24/2022 22:18	11.65	5.14	6/24/2022 23:40	1.18
6/24/2022 22:32	11.71	0.07	6/26/2022 0:16	11.56	-0.44	6/24/2022 22:19	11.66	5.16	6/24/2022 23:41	1.17
6/24/2022 22:33	11.71	0.15	6/26/2022 0:17	11.54	-0.55	6/24/2022 22:20	11.67	5.13	6/24/2022 23:42	1.26
6/24/2022 22:34	11.74	0.17	6/26/2022 0:18	11.57	-0.40	6/24/2022 22:21	11.69	5.12	6/24/2022 23:43	1.15
6/24/2022 22:35	11.69	0.05	6/26/2022 0:19	11.57	-0.41	6/24/2022 22:22	11.69	5.06	6/24/2022 23:44	1.22
6/24/2022 22:36	11.70	0.08	6/26/2022 0:20	11.55	-0.51	6/24/2022 22:23	11.69	5.10	6/24/2022 23:45	1.22
6/24/2022 22:37	11.71	0.13	6/26/2022 0:21	11.57	-0.48	6/24/2022 22:24	11.69	5.07	6/24/2022 23:46	1.19
6/24/2022 22:38	11.69	0.08	6/26/2022 0:22	11.57	-0.39	6/24/2022 22:25	11.69	5.04	6/24/2022 23:47	1.17
6/24/2022 22:39	11.73	0.03	6/26/2022 0:23	11.57	-0.60	6/24/2022 22:26	11.65	5.01	6/24/2022 23:48	1.21
6/24/2022 22:40	11.70	0.15	6/26/2022 0:24	11.59	-0.45	6/24/2022 22:27	11.67	5.02	6/24/2022 23:49	1.15
6/24/2022 22:41	11.70	0.09	6/26/2022 0:25	11.56	-0.39	6/24/2022 22:28	11.69	4.98	6/24/2022 23:50	1.16
6/24/2022 22:42	11.68	0.07	6/26/2022 0:26	11.55	-0.54	6/24/2022 22:29	11.70	4.98	6/24/2022 23:51	1.16
6/24/2022 22:43	11.71	0.15	6/26/2022 0:27	11.56	-0.42	6/24/2022 22:30	11.66	4.99	6/24/2022 23:52	1.17
6/24/2022 22:44	11.70	0.16	6/26/2022 0:28	11.56	-0.39	6/24/2022 22:31	11.71	4.95	6/24/2022 23:53	1.15
6/24/2022 22:45	11.69	0.06	6/26/2022 0:29	11.56	-0.35	6/24/2022 22:32	11.69	4.93	6/24/2022 23:54	1.15
6/24/2022 22:46	11.70	0.09	6/26/2022 0:30	11.56	-0.44	6/24/2022 22:33	11.67	4.91	6/24/2022 23:55	1.17
6/24/2022 22:47	11.70	0.08	6/26/2022 0:31	11.59	-0.40	6/24/2022 22:34	11.70	4.88	6/24/2022 23:56	1.15
6/24/2022 22:48	11.69	0.10	6/26/2022 0:32	11.56	-0.41	6/24/2022 22:35	11.72	4.86	6/24/2022 23:57	1.18
6/24/2022 22:49	11.69	0.06	6/26/2022 0:33	11.55	-0.49	6/24/2022 22:36	11.64	4.90	6/24/2022 23:58	1.17
6/24/2022 22:50	11.70	0.05	6/26/2022 0:34	11.56	-0.43	6/24/2022 22:37	11.71	4.86	6/24/2022 23:59	1.12
6/24/2022 22:51	11.71	0.09	6/26/2022 0:35	11.55	-0.46	6/24/2022 22:38	11.67	4.87	6/25/2022 0:00	1.17
6/24/2022 22:52	11.69	0.11	6/26/2022 0:36	11.58	-0.58	6/24/2022 22:39	11.67	4.89	6/25/2022 0:01	1.13
6/24/2022 22:53	11.73	0.09	6/26/2022 0:37	11.57	-0.50	6/24/2022 22:40	11.66	4.85	6/25/2022 0:02	1.09
6/24/2022 22:54	11.73	0.12	6/26/2022 0:38	11.54	-0.53	6/24/2022 22:41	11.70	4.82	6/25/2022 0:03	1.17

6/24/2022 22:55	11.71	0.08	6/26/2022 0:39	11.55	-0.47	6/24/2022 22:42	11.69	4.75	6/25/2022 0:04	1.10
6/24/2022 22:56	11.72	0.06	6/26/2022 0:40	11.58	-0.39	6/24/2022 22:43	11.68	4.77	6/25/2022 0:05	1.12
6/24/2022 22:57	11.74	0.06	6/26/2022 0:41	11.54	-0.53	6/24/2022 22:44	11.67	4.76	6/25/2022 0:06	1.12
6/24/2022 22:58	11.72	0.09	6/26/2022 0:42	11.55	-0.42	6/24/2022 22:45	11.69	4.71	6/25/2022 0:07	1.14
6/24/2022 22:59	11.72	0.10	6/26/2022 0:43	11.57	-0.40	6/24/2022 22:46	11.65	4.74	6/25/2022 0:08	1.17
6/24/2022 23:00	11.74	0.09	6/26/2022 0:44	11.57	-0.53	6/24/2022 22:47	11.71	4.65	6/25/2022 0:09	1.08
6/24/2022 23:01	11.74	0.16	6/26/2022 0:45	11.57	-0.50	6/24/2022 22:48	11.69	4.64	6/25/2022 0:10	1.15
6/24/2022 23:02	11.74	0.05	6/26/2022 0:46	11.57	-0.35	6/24/2022 22:49	11.71	4.68	6/25/2022 0:11	1.10
6/24/2022 23:03	11.73	0.05	6/26/2022 0:47	11.56	-0.39	6/24/2022 22:50	11.70	4.60	6/25/2022 0:12	1.06
6/24/2022 23:04	11.71	0.10	6/26/2022 0:48	11.57	-0.47	6/24/2022 22:51	11.67	4.68	6/25/2022 0:13	1.04
6/24/2022 23:05	11.72	0.02	6/26/2022 0:49	11.58	-0.52	6/24/2022 22:52	11.65	4.62	6/25/2022 0:14	1.03
6/24/2022 23:06	11.74	0.09	6/26/2022 0:50	11.56	-0.43	6/24/2022 22:53	11.70	4.61	6/25/2022 0:15	1.09
6/24/2022 23:07	11.73	0.09	6/26/2022 0:51	11.57	-0.49	6/24/2022 22:54	11.66	4.62	6/25/2022 0:16	1.08
6/24/2022 23:08	11.69	0.13	6/26/2022 0:52	11.58	-0.52	6/24/2022 22:55	11.68	4.61	6/25/2022 0:17	1.09
6/24/2022 23:09	11.74	0.13	6/26/2022 0:53	11.54	-0.40	6/24/2022 22:56	11.72	4.56	6/25/2022 0:18	1.06
6/24/2022 23:10	11.73	0.10	6/26/2022 0:54	11.55	-0.42	6/24/2022 22:57	11.70	4.55	6/25/2022 0:19	1.09
6/24/2022 23:11	11.71	0.18	6/26/2022 0:55	11.56	-0.45	6/24/2022 22:58	11.69	4.53	6/25/2022 0:20	1.05
6/24/2022 23:12	11.71	0.05	6/26/2022 0:56	11.56	-0.39	6/24/2022 22:59	11.67	4.47	6/25/2022 0:21	1.04
6/24/2022 23:13	11.70	0.08	6/26/2022 0:57	11.55	-0.50	6/24/2022 23:00	11.65	4.57	6/25/2022 0:22	1.03
6/24/2022 23:14	11.74	0.05	6/26/2022 0:58	11.57	-0.50	6/24/2022 23:01	11.67	4.48	6/25/2022 0:23	1.00
6/24/2022 23:15	11.73	0.10	6/26/2022 0:59	11.53	-0.45	6/24/2022 23:02	11.68	4.42	6/25/2022 0:24	1.01
6/24/2022 23:16	11.71	0.16	6/26/2022 1:00	11.57	-0.35	6/24/2022 23:03	11.67	4.47	6/25/2022 0:25	1.05
6/24/2022 23:17	11.75	0.07	6/26/2022 1:01	11.54	-0.41	6/24/2022 23:04	11.70	4.43	6/25/2022 0:26	1.01
6/24/2022 23:18	11.71	0.09	6/26/2022 1:02	11.56	-0.48	6/24/2022 23:05	11.66	4.45	6/25/2022 0:27	0.96
6/24/2022 23:19	11.71	0.08	6/26/2022 1:03	11.56	-0.49	6/24/2022 23:06	11.69	4.42	6/25/2022 0:28	0.98
6/24/2022 23:20	11.71	0.02	6/26/2022 1:04	11.53	-0.45	6/24/2022 23:07	11.71	4.38	6/25/2022 0:29	0.99
6/24/2022 23:21	11.72	0.05	6/26/2022 1:05	11.54	-0.47	6/24/2022 23:08	11.70	4.38	6/25/2022 0:30	1.00
6/24/2022 23:22	11.72	0.13	6/26/2022 1:06	11.54	-0.51	6/24/2022 23:09	11.66	4.37	6/25/2022 0:31	0.95
6/24/2022 23:23	11.70	0.18	6/26/2022 1:07	11.57	-0.59	6/24/2022 23:10	11.66	4.38	6/25/2022 0:32	1.00
6/24/2022 23:24	11.72	0.06	6/26/2022 1:08	11.57	-0.46	6/24/2022 23:11	11.66	4.33	6/25/2022 0:33	1.01
6/24/2022 23:25	11.72	0.11	6/26/2022 1:09	11.59	-0.46	6/24/2022 23:12	11.65	4.33	6/25/2022 0:34	0.95
6/24/2022 23:26	11.69	0.01	6/26/2022 1:10	11.56	-0.48	6/24/2022 23:13	11.67	4.32	6/25/2022 0:35	0.96
6/24/2022 23:27	11.73	0.08	6/26/2022 1:11	11.55	-0.51	6/24/2022 23:14	11.71	4.29	6/25/2022 0:36	0.96
6/24/2022 23:28	11.71	0.01	6/26/2022 1:12	11.57	-0.46	6/24/2022 23:15	11.72	4.27	6/25/2022 0:37	0.96
6/24/2022 23:29	11.69	0.08	6/26/2022 1:13	11.55	-0.41	6/24/2022 23:16	11.67	4.24	6/25/2022 0:38	0.95
6/24/2022 23:30	11.70	0.13	6/26/2022 1:14	11.58	-0.49	6/24/2022 23:17	11.73	4.23	6/25/2022 0:39	0.93
6/24/2022 23:31	11.71	0.08	6/26/2022 1:15	11.56	-0.48	6/24/2022 23:18	11.67	4.24	6/25/2022 0:40	0.92
6/24/2022 23:32	11.70	0.06	6/26/2022 1:16	11.54	-0.44	6/24/2022 23:19	11.68	4.21	6/25/2022 0:41	0.91
6/24/2022 23:33	11.74	0.08	6/26/2022 1:17	11.56	-0.45	6/24/2022 23:20	11.64	4.22	6/25/2022 0:42	0.93
6/24/2022 23:34	11.71	0.10	6/26/2022 1:18	11.59	-0.53	6/24/2022 23:21	11.66	4.19	6/25/2022 0:43	0.92
6/24/2022 23:35	11.72	0.12	6/26/2022 1:19	11.55	-0.44	6/24/2022 23:22	11.67	4.14	6/25/2022 0:44	0.92
6/24/2022 23:36	11.70	0.11	6/26/2022 1:20	11.56	-0.47	6/24/2022 23:23	11.69	4.16	6/25/2022 0:45	0.95
6/24/2022 23:37	11.72	-0.01	6/26/2022 1:21	11.55	-0.36	6/24/2022 23:24	11.67	4.12	6/25/2022 0:46	0.90
6/24/2022 23:38	11.71	-0.01	6/26/2022 1:22	11.57	-0.47	6/24/2022 23:25	11.67	4.10	6/25/2022 0:47	0.91
6/24/2022 23:39	11.73	0.03	6/26/2022 1:23	11.54	-0.52	6/24/2022 23:26	11.69	4.14	6/25/2022 0:48	0.93
6/24/2022 23:40	11.72	0.05	6/26/2022 1:24	11.57	-0.41	6/24/2022 23:27	11.70	4.06	6/25/2022 0:49	0.90
6/24/2022 23:41	11.70	0.09	6/26/2022 1:25	11.54	-0.43	6/24/2022 23:28	11.71	4.04	6/25/2022 0:50	0.87
6/24/2022 23:42	11.70	0.14	6/26/2022 1:26	11.55	-0.53	6/24/2022 23:29	11.71	4.07	6/25/2022 0:51	0.90
6/24/2022 23:43	11.71	0.03	6/26/2022 1:27	11.58	-0.41	6/24/2022 23:30	11.71	4.03	6/25/2022 0:52	0.90
6/24/2022 23:44	11.72	0.04	6/26/2022 1:28	11.54	-0.40	6/24/2022 23:31	11.72	4.00	6/25/2022 0:53	0.97
6/24/2022 23:45	11.72	0.14	6/26/2022 1:29	11.56	-0.37	6/24/2022 23:32	11.66	4.03	6/25/2022 0:54	0.89
6/24/2022 23:46	11.72	0.04	6/26/2022 1:30	11.57	-0.53	6/24/2022 23:33	11.74	4.00	6/25/2022 0:55	0.93
6/24/2022 23:47	11.72	0.11	6/26/2022 1:31	11.54	-0.47	6/24/2022 23:34	11.71	3.96	6/25/2022 0:56	0.94
6/24/2022 23:48	11.70	0.09	6/26/2022 1:32	11.57	-0.41	6/24/2022 23:35	11.73	3.97	6/25/2022 0:57	0.88
6/24/2022 23:49	11.70	0.10	6/26/2022 1:33	11.58	-0.56	6/24/2022 23:36	11.71	3.99	6/25/2022 0:58	0.92
6/24/2022 23:50	11.71	0.06	6/26/2022 1:34	11.56	-0.39	6/24/2022 23:37	11.69	3.95	6/25/2022 0:59	0.89
6/24/2022 23:51	11.71	0.04	6/26/2022 1:35	11.55	-0.52	6/24/2022 23:38	11.67	3.96	6/25/2022 1:00	0.96
6/24/2022 23:52	11.71	0.04	6/26/2022 1:36	11.55	-0.44	6/24/2022 23:39	11.71	3.87	6/25/2022 1:01	1.02
6/24/2022 23:53	11.71	0.13	6/26/2022 1:37	11.58	-0.44	6/24/2022 23:40	11.70	3.92	6/25/2022 1:02	0.94
6/24/2022 23:54	11.70	0.08	6/26/2022 1:38	11.55	-0.43	6/24/2022 23:41	11.71	3.89	6/25/2022 1:03	0.97
6/24/2022 23:55	11.71	0.05	6/26/2022 1:39	11.56	-0.50	6/24/2022 23:42	11.65	3.89	6/25/2022 1:04	0.95
6/24/2022 23:56	11.71	0.12	6/26/2022 1:40	11.56	-0.35	6/24/2022 23:43	11.68	3.89	6/25/2022 1:05	0.95
6/24/2022 23:57	11.70	0.10	6/26/2022 1:41	11.57	-0.39	6/24/2022 23:44	11.72	3.82	6/25/2022 1:06	0.98
6/24/2022 23:58	11.70	0.11	6/26/2022 1:42	11.55	-0.48	6/24/2022 23:45	11.67	3.82	6/25/2022 1:07	0.92
6/24/2022 23:59	11.70	0.05	6/26/2022 1:43	11.54	-0.41	6/24/2022 23:46	11.71	3.77	6/25/2022 1:08	0.90
6/25/2022 0:00	11.71	0.04	6/26/2022 1:44	11.52	-0.49	6/24/2022 23:47	11.70	3.79	6/25/2022 1:09	0.97
6/25/2022 0:01	11.73	0.09	6/26/2022 1:45	11.56	-0.62	6/24/2022 23:48	11.67	3.81	6/25/2022 1:10	0.98
6/25/2022 0:02	11.72	0.09	6/26/2022 1:46	11.55	-0.36	6/24/2022 23:49	11.71	3.76	6/25/2022 1:11	0.96
6/25/2022 0:03	11.72	0.14	6/26/2022 1:47	11.54	-0.49	6/24/2022 23:50	11.66	3.78	6/25/2022 1:12	0.93
6/25/2022 0:04	11.72	0.12	6/26/2022 1:48	11.57	-0.36	6/24/2022 23:51	11.65	3.78	6/25/2022 1:13	0.94
6/25/2022 0:05	11.70	0.05	6/26/2022 1:49	11.56	-0.34	6/24/2022 23:52	11.66	3.72	6/25/2022 1:14	1.00
6/25/2022 0:06	11.72	0.06	6/26/2022 1:50	11.60	-0.37	6/24/2022 23:53	11.72	3.70	6/25/2022 1:15	0.94
6/25/2022 0:07	11.71	0.05	6/26/2022 1:51	11.54	-0.37	6/24/2022 23:54	11.71	3.66	6/25/2022 1:16	0.96
6/25/2022 0:08	11.71	0.11	6/26/2022 1:52	11.57	-0.41	6/24/2022 23:55	11.65	3.70	6/25/2022 1:17	0.92
6/25/2022 0:09	11.71	0.03	6/26/2022 1:53	11.56	-0.47	6/24/2022 23:56	11.71	3.71	6/25/2022 1:18	0.96
6/25/2022 0:10	11.72	0.04	6/26/2022 1:54	11.57	-0.47	6/24/2022 23:57	11.71	3.62	6/25/2022 1:19	0.92
6/25/2022 0:11	11.75	0.08	6/26/2022 1:55	11.57	-0.33	6/24/2022 23:58	11.68	3.63	6/25/2022 1:20	0.95
6/25/2022 0:12	11.71	0.14	6/26/2022 1:56	11.54	-0.42	6/24/2022 23:59	11.65	3.58	6/25/2022 1:21	0.87
6/25/2022 0:13	11.72	0.03	6/26/2022 1:57	11.52	-0.37	6/25/2022 0:00	11.67	3.63	6/25/2022 1:22	0.90
6/25/2022 0:14	11.74	0.09	6/26/2022 1:58	11.56	-0.40	6/25/2022 0:01	11.69	3.60	6/25/2022 1:23	0.89
6/25/2022 0:15	11.73	0.13	6/26/2022 1:59	11.57	-0.49	6/25/2022 0:02	11.68	3.62	6/25/2022 1:24	0.97
6/25/2022 0:16	11.71	0.09	6/26/2022 2:00	11.55	-0.52	6/25/2022 0:03	11.68	3.54	6/25/2022 1:25	0.92
6/25/2022 0:17	11.72	0.06	6/26/2022 2:01	11.57	-0.45	6/25/2022 0:04	11.67	3.61	6/25/2022 1:26	0.96
6/25/2022 0:18	11.74	0.04	6/26/2022 2:02	11.56	-0.43	6/25/2022 0:05	11.72	3.55	6/25/2022 1:27	0.97
6/25/2022 0:19	11.75	0.01	6/26/2022 2:03	11.56	-0.43	6/25/2022 0:06	11.70	3.47	6/25/2022 1:28	0.94
6/25/2022 0:20	11.71	0.03	6/26/2022 2:04	11.56	-0.43	6/25/2022 0:07	11.64	3.56	6/25/2022 1:29	0.95
6/25/2022 0:21	11.72	0.12	6/26/2022 2:05	11.58	-0.44	6/25/2022 0:08	11.66	3.52	6/25/2022 1:30	0.93
6/25/2022 0:22	11.72	0.04	6/26/2022 2:06	11.56	-0.35	6/25/2022 0:09	11.67	3.46	6/25/2022 1:31	0.97

6/25/2022 0:23	11.69	0.05	6/26/2022 2:07	11.55	-0.29	6/25/2022 0:10	11.72	3.41	6/25/2022 1:32	0.98
6/25/2022 0:24	11.73	0.08	6/26/2022 2:08	11.58	-0.50	6/25/2022 0:11	11.69	3.45	6/25/2022 1:33	1.00
6/25/2022 0:25	11.74	0.20	6/26/2022 2:09	11.56	-0.55	6/25/2022 0:12	11.65	3.44	6/25/2022 1:34	0.89
6/25/2022 0:26	11.72	0.18	6/26/2022 2:10	11.54	-0.50	6/25/2022 0:13	11.66	3.44	6/25/2022 1:35	0.93
6/25/2022 0:27	11.72	0.09	6/26/2022 2:11	11.57	-0.40	6/25/2022 0:14	11.72	3.35	6/25/2022 1:36	0.92
6/25/2022 0:28	11.70	0.00	6/26/2022 2:12	11.56	-0.49	6/25/2022 0:15	11.69	3.38	6/25/2022 1:37	0.96
6/25/2022 0:29	11.69	0.08	6/26/2022 2:13	11.54	-0.44	6/25/2022 0:16	11.72	3.36	6/25/2022 1:38	0.95
6/25/2022 0:30	11.74	0.09	6/26/2022 2:14	11.57	-0.50	6/25/2022 0:17	11.72	3.35	6/25/2022 1:39	0.96
6/25/2022 0:31	11.75	0.14	6/26/2022 2:15	11.56	-0.49	6/25/2022 0:18	11.73	3.29	6/25/2022 1:40	0.96
6/25/2022 0:32	11.70	0.09	6/26/2022 2:16	11.56	-0.50	6/25/2022 0:19	11.69	3.32	6/25/2022 1:41	0.94
6/25/2022 0:33	11.73	0.09	6/26/2022 2:17	11.57	-0.45	6/25/2022 0:20	11.67	3.32	6/25/2022 1:42	0.90
6/25/2022 0:34	11.73	0.03	6/26/2022 2:18	11.54	-0.42	6/25/2022 0:21	11.69	3.27	6/25/2022 1:43	0.88
6/25/2022 0:35	11.69	0.05	6/26/2022 2:19	11.55	-0.37	6/25/2022 0:22	11.72	3.24	6/25/2022 1:44	0.92
6/25/2022 0:36	11.72	0.09	6/26/2022 2:20	11.55	-0.42	6/25/2022 0:23	11.69	3.26	6/25/2022 1:45	0.88
6/25/2022 0:37	11.73	0.15	6/26/2022 2:21	11.54	-0.46	6/25/2022 0:24	11.65	3.24	6/25/2022 1:46	0.93
6/25/2022 0:38	11.70	0.15	6/26/2022 2:22	11.56	-0.39	6/25/2022 0:25	11.67	3.29	6/25/2022 1:47	0.91
6/25/2022 0:39	11.69	0.13	6/26/2022 2:23	11.57	-0.50	6/25/2022 0:26	11.66	3.30	6/25/2022 1:48	0.86
6/25/2022 0:40	11.72	0.14	6/26/2022 2:24	11.57	-0.43	6/25/2022 0:27	11.70	3.18	6/25/2022 1:49	0.88
6/25/2022 0:41	11.71	0.05	6/26/2022 2:25	11.55	-0.44	6/25/2022 0:28	11.70	3.19	6/25/2022 1:50	0.92
6/25/2022 0:42	11.71	0.12	6/26/2022 2:26	11.54	-0.49	6/25/2022 0:29	11.67	3.19	6/25/2022 1:51	0.87
6/25/2022 0:43	11.72	0.09	6/26/2022 2:27	11.57	-0.45	6/25/2022 0:30	11.67	3.21	6/25/2022 1:52	0.89
6/25/2022 0:44	11.71	0.06	6/26/2022 2:28	11.56	-0.48	6/25/2022 0:31	11.71	3.11	6/25/2022 1:53	0.91
6/25/2022 0:45	11.74	0.12	6/26/2022 2:29	11.54	-0.54	6/25/2022 0:32	11.74	3.13	6/25/2022 1:54	0.88
6/25/2022 0:46	11.72	0.09	6/26/2022 2:30	11.56	-0.54	6/25/2022 0:33	11.67	3.10	6/25/2022 1:55	0.86
6/25/2022 0:47	11.72	0.08	6/26/2022 2:31	11.55	-0.47	6/25/2022 0:34	11.66	3.11	6/25/2022 1:56	0.86
6/25/2022 0:48	11.71	-0.01	6/26/2022 2:32	11.52	-0.39	6/25/2022 0:35	11.65	3.17	6/25/2022 1:57	0.86
6/25/2022 0:49	11.74	0.01	6/26/2022 2:33	11.54	-0.43	6/25/2022 0:36	11.68	3.08	6/25/2022 1:58	0.84
6/25/2022 0:50	11.74	0.08	6/26/2022 2:34	11.57	-0.43	6/25/2022 0:37	11.65	3.08	6/25/2022 1:59	0.83
6/25/2022 0:51	11.71	0.05	6/26/2022 2:35	11.56	-0.47	6/25/2022 0:38	11.68	3.02	6/25/2022 2:00	0.85
6/25/2022 0:52	11.69	0.08	6/26/2022 2:36	11.57	-0.48	6/25/2022 0:39	11.64	3.07	6/25/2022 2:01	0.81
6/25/2022 0:53	11.75	0.05	6/26/2022 2:37	11.57	-0.39	6/25/2022 0:40	11.66	3.01	6/25/2022 2:02	0.76
6/25/2022 0:54	11.72	0.06	6/26/2022 2:38	11.56	-0.45	6/25/2022 0:41	11.69	3.01	6/25/2022 2:03	0.78
6/25/2022 0:55	11.74	0.04	6/26/2022 2:39	11.57	-0.40	6/25/2022 0:42	11.69	2.99	6/25/2022 2:04	0.81
6/25/2022 0:56	11.72	0.09	6/26/2022 2:40	11.58	-0.48	6/25/2022 0:43	11.64	2.98	6/25/2022 2:05	0.84
6/25/2022 0:57	11.73	0.13	6/26/2022 2:41	11.56	-0.41	6/25/2022 0:44	11.69	2.92	6/25/2022 2:06	0.84
6/25/2022 0:58	11.75	0.01	6/26/2022 2:42	11.55	-0.37	6/25/2022 0:45	11.70	3.03	6/25/2022 2:07	0.85
6/25/2022 0:59	11.73	0.04	6/26/2022 2:43	11.56	-0.48	6/25/2022 0:46	11.70	2.94	6/25/2022 2:08	0.79
6/25/2022 1:00	11.72	0.08	6/26/2022 2:44	11.54	-0.47	6/25/2022 0:47	11.66	2.97	6/25/2022 2:09	0.76
6/25/2022 1:01	11.74	0.05	6/26/2022 2:45	11.56	-0.40	6/25/2022 0:48	11.66	2.90	6/25/2022 2:10	0.77
6/25/2022 1:02	11.73	0.06	6/26/2022 2:46	11.56	-0.30	6/25/2022 0:49	11.69	2.87	6/25/2022 2:11	0.80
6/25/2022 1:03	11.75	0.10	6/26/2022 2:47	11.56	-0.52	6/25/2022 0:50	11.62	2.93	6/25/2022 2:12	0.79
6/25/2022 1:04	11.74	0.10	6/26/2022 2:48	11.58	-0.45	6/25/2022 0:51	11.70	2.88	6/25/2022 2:13	0.77
6/25/2022 1:05	11.73	0.14	6/26/2022 2:49	11.57	-0.40	6/25/2022 0:52	11.70	2.85	6/25/2022 2:14	0.67
6/25/2022 1:06	11.71	0.05	6/26/2022 2:50	11.58	-0.47	6/25/2022 0:53	11.69	2.86	6/25/2022 2:15	0.64
6/25/2022 1:07	11.73	0.09	6/26/2022 2:51	11.56	-0.46	6/25/2022 0:54	11.69	2.84	6/25/2022 2:16	0.69
6/25/2022 1:08	11.74	0.04	6/26/2022 2:52	11.56	-0.44	6/25/2022 0:55	11.65	2.84	6/25/2022 2:17	0.73
6/25/2022 1:09	11.70	0.05	6/26/2022 2:53	11.56	-0.45	6/25/2022 0:56	11.72	2.74	6/25/2022 2:18	0.74
6/25/2022 1:10	11.73	0.18	6/26/2022 2:54	11.54	-0.48	6/25/2022 0:57	11.70	2.77	6/25/2022 2:19	0.70
6/25/2022 1:11	11.71	0.15	6/26/2022 2:55	11.54	-0.48	6/25/2022 0:58	11.68	2.82	6/25/2022 2:20	0.67
6/25/2022 1:12	11.69	0.14	6/26/2022 2:56	11.56	-0.34	6/25/2022 0:59	11.66	2.74	6/25/2022 2:21	0.71
6/25/2022 1:13	11.71	0.13	6/26/2022 2:57	11.55	-0.48	6/25/2022 1:00	11.69	2.72	6/25/2022 2:22	0.70
6/25/2022 1:14	11.72	0.02	6/26/2022 2:58	11.56	-0.44	6/25/2022 1:01	11.65	2.74	6/25/2022 2:23	0.66
6/25/2022 1:15	11.74	0.04	6/26/2022 2:59	11.55	-0.45	6/25/2022 1:02	11.71	2.67	6/25/2022 2:24	0.67
6/25/2022 1:16	11.74	0.12	6/26/2022 3:00	11.59	-0.36	6/25/2022 1:03	11.67	2.73	6/25/2022 2:25	0.65
6/25/2022 1:17	11.73	0.10	6/26/2022 3:01	11.55	-0.48	6/25/2022 1:04	11.69	2.70	6/25/2022 2:26	0.68
6/25/2022 1:18	11.73	0.15	6/26/2022 3:02	11.56	-0.44	6/25/2022 1:05	11.70	2.64	6/25/2022 2:27	0.64
6/25/2022 1:19	11.73	0.18	6/26/2022 3:03	11.54	-0.40	6/25/2022 1:06	11.70	2.61	6/25/2022 2:28	0.66
6/25/2022 1:20	11.71	0.05	6/26/2022 3:04	11.54	-0.43	6/25/2022 1:07	11.65	2.68	6/25/2022 2:29	0.60
6/25/2022 1:21	11.71	-0.03	6/26/2022 3:05	11.54	-0.49	6/25/2022 1:08	11.73	2.59	6/25/2022 2:30	0.66
6/25/2022 1:22	11.69	0.08	6/26/2022 3:06	11.59	-0.45	6/25/2022 1:09	11.64	2.64	6/25/2022 2:31	0.57
6/25/2022 1:23	11.72	0.11	6/26/2022 3:07	11.55	-0.41	6/25/2022 1:10	11.67	2.60	6/25/2022 2:32	0.63
6/25/2022 1:24	11.70	0.07	6/26/2022 3:08	11.55	-0.41	6/25/2022 1:11	11.63	2.65	6/25/2022 2:33	0.64
6/25/2022 1:25	11.75	-0.01	6/26/2022 3:09	11.54	-0.47	6/25/2022 1:12	11.65	2.66	6/25/2022 2:34	0.71
6/25/2022 1:26	11.72	0.12	6/26/2022 3:10	11.53	-0.55	6/25/2022 1:13	11.70	2.56	6/25/2022 2:35	0.66
6/25/2022 1:27	11.72	0.10	6/26/2022 3:11	11.57	-0.43	6/25/2022 1:14	11.67	2.60	6/25/2022 2:36	0.63
6/25/2022 1:28	11.72	0.06	6/26/2022 3:12	11.55	-0.43	6/25/2022 1:15	11.71	2.55	6/25/2022 2:37	0.65
6/25/2022 1:29	11.72	0.06	6/26/2022 3:13	11.57	-0.39	6/25/2022 1:16	11.71	2.54	6/25/2022 2:38	0.61
6/25/2022 1:30	11.72	0.11	6/26/2022 3:14	11.56	-0.43	6/25/2022 1:17	11.72	2.45	6/25/2022 2:39	0.61
6/25/2022 1:31	11.73	0.15	6/26/2022 3:15	11.54	-0.55	6/25/2022 1:18	11.73	2.45	6/25/2022 2:40	0.59
6/25/2022 1:32	11.73	0.06	6/26/2022 3:16	11.54	-0.47	6/25/2022 1:19	11.70	2.50	6/25/2022 2:41	0.54
6/25/2022 1:33	11.72	0.08	6/26/2022 3:17	11.55	-0.43	6/25/2022 1:20	11.66	2.52	6/25/2022 2:42	0.62
6/25/2022 1:34	11.72	0.08	6/26/2022 3:18	11.54	-0.38	6/25/2022 1:21	11.71	2.44	6/25/2022 2:43	0.58
6/25/2022 1:35	11.74	0.06	6/26/2022 3:19	11.56	-0.44	6/25/2022 1:22	11.72	2.43	6/25/2022 2:44	0.61
6/25/2022 1:36	11.75	0.12	6/26/2022 3:20	11.59	-0.47	6/25/2022 1:23	11.70	2.40	6/25/2022 2:45	0.56
6/25/2022 1:37	11.72	0.04	6/26/2022 3:21	11.57	-0.45	6/25/2022 1:24	11.69	2.38	6/25/2022 2:46	0.58
6/25/2022 1:38	11.74	0.00	6/26/2022 3:22	11.53	-0.47	6/25/2022 1:25	11.73	2.36	6/25/2022 2:47	0.56
6/25/2022 1:39	11.73	0.10	6/26/2022 3:23	11.56	-0.45	6/25/2022 1:26	11.66	2.39	6/25/2022 2:48	0.56
6/25/2022 1:40	11.76	0.14	6/26/2022 3:24	11.57	-0.47	6/25/2022 1:27	11.71	2.34	6/25/2022 2:49	0.62
6/25/2022 1:41	11.73	0.12	6/26/2022 3:25	11.56	-0.45	6/25/2022 1:28	11.70	2.32	6/25/2022 2:50	0.52
6/25/2022 1:42	11.72	0.16	6/26/2022 3:26	11.57	-0.44	6/25/2022 1:29	11.68	2.35	6/25/2022 2:51	0.49
6/25/2022 1:43	11.74	-0.01	6/26/2022 3:27	11.59	-0.36	6/25/2022 1:30	11.69	2.36	6/25/2022 2:52	0.54
6/25/2022 1:44	11.74	0.13	6/26/2022 3:28	11.57	-0.35	6/25/2022 1:31	11.70	2.28	6/25/2022 2:53	0.53
6/25/2022 1:45	11.71	0.09	6/26/2022 3:29	11.57	-0.51	6/25/2022 1:32	11.66	2.24	6/25/2022 2:54	0.57
6/25/2022 1:46	11.74	0.08	6/26/2022 3:30	11.56	-0.58	6/25/2022 1:33	11.69	2.25	6/25/2022 2:55	0.55
6/25/2022 1:47	11.72	0.12	6/26/2022 3:31	11.56	-0.41	6/25/2022 1:34	11.71	2.25	6/25/2022 2:56	0.53
6/25/2022 1:48	11.72	0.04	6/26/2022 3:32	11.55	-0.44	6/25/2022 1:35	11.67	2.31	6/25/2022 2:57	0.54
6/25/2022 1:49	11.72	0.09	6/26/2022 3:33	11.57	-0.50	6/25/2022 1:36	11.72	2.24	6/25/2022 2:58	0.55
6/25/2022 1:50	11.72	0.11	6/26/2022 3:34	11.57	-0.49	6/25/2022 1:37	11.71	2.21	6/25/2022 2:59	0.55

6/25/2022 1:51	11.73	0.09	6/26/2022 3:35	11.57	-0.48	6/25/2022 1:38	11.65	2.25	6/25/2022 3:00	0.52
6/25/2022 1:52	11.73	0.10	6/26/2022 3:36	11.57	-0.44	6/25/2022 1:39	11.71	2.15	6/25/2022 3:01	0.51
6/25/2022 1:53	11.72	0.03	6/26/2022 3:37	11.55	-0.39	6/25/2022 1:40	11.68	2.24	6/25/2022 3:02	0.53
6/25/2022 1:54	11.75	0.07	6/26/2022 3:38	11.56	-0.37	6/25/2022 1:41	11.67	2.19	6/25/2022 3:03	0.50
6/25/2022 1:55	11.72	0.05	6/26/2022 3:39	11.59	-0.42	6/25/2022 1:42	11.71	2.12	6/25/2022 3:04	0.48
6/25/2022 1:56	11.74	0.06	6/26/2022 3:40	11.58	-0.37	6/25/2022 1:43	11.66	2.16	6/25/2022 3:05	0.48
6/25/2022 1:57	11.74	0.07	6/26/2022 3:41	11.55	-0.40	6/25/2022 1:44	11.67	2.14	6/25/2022 3:06	0.51
6/25/2022 1:58	11.72	0.07	6/26/2022 3:42	11.55	-0.43	6/25/2022 1:45	11.69	2.09	6/25/2022 3:07	0.53
6/25/2022 1:59	11.72	0.12	6/26/2022 3:43	11.56	-0.39	6/25/2022 1:46	11.66	2.15	6/25/2022 3:08	0.50
6/25/2022 2:00	11.75	0.03	6/26/2022 3:44	11.57	-0.50	6/25/2022 1:47	11.70	2.09	6/25/2022 3:09	0.51
6/25/2022 2:01	11.72	0.10	6/26/2022 3:45	11.56	-0.53	6/25/2022 1:48	11.68	2.08	6/25/2022 3:10	0.53
6/25/2022 2:02	11.75	0.09	6/26/2022 3:46	11.57	-0.51	6/25/2022 1:49	11.68	2.08	6/25/2022 3:11	0.53
6/25/2022 2:03	11.74	0.10	6/26/2022 3:47	11.54	-0.50	6/25/2022 1:50	11.69	2.00	6/25/2022 3:12	0.54
6/25/2022 2:04	11.71	0.09	6/26/2022 3:48	11.57	-0.47	6/25/2022 1:51	11.66	2.08	6/25/2022 3:13	0.50
6/25/2022 2:05	11.73	0.02	6/26/2022 3:49	11.56	-0.43	6/25/2022 1:52	11.66	2.06	6/25/2022 3:14	0.49
6/25/2022 2:06	11.74	0.07	6/26/2022 3:50	11.58	-0.44	6/25/2022 1:53	11.68	2.08	6/25/2022 3:15	0.51
6/25/2022 2:07	11.73	0.03	6/26/2022 3:51	11.60	-0.41	6/25/2022 1:54	11.64	2.05	6/25/2022 3:16	0.53
6/25/2022 2:08	11.74	0.10	6/26/2022 3:52	11.55	-0.37	6/25/2022 1:55	11.70	1.98	6/25/2022 3:17	0.49
6/25/2022 2:09	11.73	0.13	6/26/2022 3:53	11.54	-0.40	6/25/2022 1:56	11.69	1.97	6/25/2022 3:18	0.52
6/25/2022 2:10	11.70	0.03	6/26/2022 3:54	11.54	-0.43	6/25/2022 1:57	11.69	1.93	6/25/2022 3:19	0.47
6/25/2022 2:11	11.71	0.11	6/26/2022 3:55	11.56	-0.45	6/25/2022 1:58	11.65	1.99	6/25/2022 3:20	0.49
6/25/2022 2:12	11.73	0.16	6/26/2022 3:56	11.56	-0.45	6/25/2022 1:59	11.68	1.95	6/25/2022 3:21	0.53
6/25/2022 2:13	11.73	0.05	6/26/2022 3:57	11.58	-0.49	6/25/2022 2:00	11.71	1.92	6/25/2022 3:22	0.47
6/25/2022 2:14	11.75	0.06	6/26/2022 3:58	11.57	-0.47	6/25/2022 2:01	11.65	1.92	6/25/2022 3:23	0.47
6/25/2022 2:15	11.73	-0.03	6/26/2022 3:59	11.59	-0.51	6/25/2022 2:02	11.72	1.92	6/25/2022 3:24	0.53
6/25/2022 2:16	11.73	0.15	6/26/2022 4:00	11.58	-0.52	6/25/2022 2:03	11.68	1.83	6/25/2022 3:25	0.49
6/25/2022 2:17	11.73	0.09	6/26/2022 4:01	11.56	-0.41	6/25/2022 2:04	11.68	1.89	6/25/2022 3:26	0.54
6/25/2022 2:18	11.71	0.11	6/26/2022 4:02	11.56	-0.55	6/25/2022 2:05	11.71	1.85	6/25/2022 3:27	0.53
6/25/2022 2:19	11.70	0.13	6/26/2022 4:03	11.55	-0.32	6/25/2022 2:06	11.72	1.80	6/25/2022 3:28	0.48
6/25/2022 2:20	11.75	0.18	6/26/2022 4:04	11.56	-0.42	6/25/2022 2:07	11.67	1.85	6/25/2022 3:29	0.47
6/25/2022 2:21	11.72	0.05	6/26/2022 4:05	11.57	-0.43	6/25/2022 2:08	11.68	1.79	6/25/2022 3:30	0.50
6/25/2022 2:22	11.73	0.08	6/26/2022 4:06	11.57	-0.43	6/25/2022 2:09	11.70	1.78	6/25/2022 3:31	0.49
6/25/2022 2:23	11.73	0.05	6/26/2022 4:07	11.59	-0.47	6/25/2022 2:10	11.70	1.88	6/25/2022 3:32	0.50
6/25/2022 2:24	11.75	0.05	6/26/2022 4:08	11.57	-0.48	6/25/2022 2:11	11.68	1.77	6/25/2022 3:33	0.49
6/25/2022 2:25	11.74	0.07	6/26/2022 4:09	11.56	-0.46	6/25/2022 2:12	11.71	1.76	6/25/2022 3:34	0.50
6/25/2022 2:26	11.75	0.10	6/26/2022 4:10	11.54	-0.44	6/25/2022 2:13	11.67	1.82	6/25/2022 3:35	0.47
6/25/2022 2:27	11.73	0.06	6/26/2022 4:11	11.58	-0.50	6/25/2022 2:14	11.67	1.73	6/25/2022 3:36	0.49
6/25/2022 2:28	11.74	0.04	6/26/2022 4:12	11.58	-0.47	6/25/2022 2:15	11.69	1.72	6/25/2022 3:37	0.48
6/25/2022 2:29	11.75	0.00	6/26/2022 4:13	11.59	-0.42	6/25/2022 2:16	11.66	1.73	6/25/2022 3:38	0.51
6/25/2022 2:30	11.74	0.07	6/26/2022 4:14	11.55	-0.47	6/25/2022 2:17	11.71	1.63	6/25/2022 3:39	0.56
6/25/2022 2:31	11.76	0.19	6/26/2022 4:15	11.55	-0.39	6/25/2022 2:18	11.66	1.71	6/25/2022 3:40	0.50
6/25/2022 2:32	11.74	0.10	6/26/2022 4:16	11.57	-0.47	6/25/2022 2:19	11.72	1.67	6/25/2022 3:41	0.55
6/25/2022 2:33	11.74	0.05	6/26/2022 4:17	11.55	-0.44	6/25/2022 2:20	11.68	1.67	6/25/2022 3:42	0.47
6/25/2022 2:34	11.71	0.11	6/26/2022 4:18	11.55	-0.40	6/25/2022 2:21	11.68	1.68	6/25/2022 3:43	0.48
6/25/2022 2:35	11.74	0.12	6/26/2022 4:19	11.58	-0.44	6/25/2022 2:22	11.64	1.68	6/25/2022 3:44	0.52
6/25/2022 2:36	11.74	0.10	6/26/2022 4:20	11.55	-0.42	6/25/2022 2:23	11.69	1.69	6/25/2022 3:45	0.45
6/25/2022 2:37	11.72	0.07	6/26/2022 4:21	11.56	-0.52	6/25/2022 2:24	11.69	1.61	6/25/2022 3:46	0.53
6/25/2022 2:38	11.73	0.09	6/26/2022 4:22	11.56	-0.36	6/25/2022 2:25	11.69	1.60	6/25/2022 3:47	0.44
6/25/2022 2:39	11.73	0.04	6/26/2022 4:23	11.57	-0.46	6/25/2022 2:26	11.69	1.63	6/25/2022 3:48	0.49
6/25/2022 2:40	11.74	0.11	6/26/2022 4:24	11.57	-0.45	6/25/2022 2:27	11.70	1.57	6/25/2022 3:49	0.48
6/25/2022 2:41	11.75	0.05	6/26/2022 4:25	11.54	-0.49	6/25/2022 2:28	11.70	1.53	6/25/2022 3:50	0.49
6/25/2022 2:42	11.76	0.02	6/26/2022 4:26	11.56	-0.40	6/25/2022 2:29	11.69	1.51	6/25/2022 3:51	0.48
6/25/2022 2:43	11.74	0.10	6/26/2022 4:27	11.54	-0.49	6/25/2022 2:30	11.71	1.53	6/25/2022 3:52	0.50
6/25/2022 2:44	11.76	0.10	6/26/2022 4:28	11.58	-0.41	6/25/2022 2:31	11.66	1.60	6/25/2022 3:53	0.49
6/25/2022 2:45	11.74	0.10	6/26/2022 4:29	11.56	-0.54	6/25/2022 2:32	11.67	1.55	6/25/2022 3:54	0.47
6/25/2022 2:46	11.72	-0.02	6/26/2022 4:30	11.56	-0.54	6/25/2022 2:33	11.66	1.52	6/25/2022 3:55	0.45
6/25/2022 2:47	11.73	0.02	6/26/2022 4:31	11.57	-0.38	6/25/2022 2:34	11.73	1.45	6/25/2022 3:56	0.49
6/25/2022 2:48	11.75	0.09	6/26/2022 4:32	11.57	-0.46	6/25/2022 2:35	11.66	1.50	6/25/2022 3:57	0.48
6/25/2022 2:49	11.75	0.06	6/26/2022 4:33	11.55	-0.41	6/25/2022 2:36	11.68	1.52	6/25/2022 3:58	0.54
6/25/2022 2:50	11.73	0.10	6/26/2022 4:34	11.57	-0.38	6/25/2022 2:37	11.65	1.49	6/25/2022 3:59	0.47
6/25/2022 2:51	11.77	0.03	6/26/2022 4:35	11.57	-0.52	6/25/2022 2:38	11.67	1.46	6/25/2022 4:00	0.47
6/25/2022 2:52	11.74	0.09	6/26/2022 4:36	11.59	-0.44	6/25/2022 2:39	11.72	1.44	6/25/2022 4:01	0.44
6/25/2022 2:53	11.71	0.12	6/26/2022 4:37	11.54	-0.49	6/25/2022 2:40	11.65	1.48	6/25/2022 4:02	0.46
6/25/2022 2:54	11.75	0.02	6/26/2022 4:38	11.54	-0.58	6/25/2022 2:41	11.70	1.43	6/25/2022 4:03	0.48
6/25/2022 2:55	11.73	0.09	6/26/2022 4:39	11.55	-0.41	6/25/2022 2:42	11.71	1.37	6/25/2022 4:04	0.52
6/25/2022 2:56	11.74	0.11	6/26/2022 4:40	11.57	-0.37	6/25/2022 2:43	11.62	1.40	6/25/2022 4:05	0.45
6/25/2022 2:57	11.74	0.09	6/26/2022 4:41	11.56	-0.46	6/25/2022 2:44	11.68	1.36	6/25/2022 4:06	0.45
6/25/2022 2:58	11.74	0.06	6/26/2022 4:42	11.56	-0.49	6/25/2022 2:45	11.72	1.35	6/25/2022 4:07	0.45
6/25/2022 2:59	11.75	0.09	6/26/2022 4:43	11.56	-0.42	6/25/2022 2:46	11.65	1.36	6/25/2022 4:08	0.47
6/25/2022 3:00	11.72	0.09	6/26/2022 4:44	11.56	-0.48	6/25/2022 2:47	11.72	1.32	6/25/2022 4:09	0.44
6/25/2022 3:01	11.76	0.14	6/26/2022 4:45	11.55	-0.42	6/25/2022 2:48	11.69	1.32	6/25/2022 4:10	0.43
6/25/2022 3:02	11.76	0.05	6/26/2022 4:46	11.59	-0.37	6/25/2022 2:49	11.66	1.37	6/25/2022 4:11	0.46
6/25/2022 3:03	11.74	0.09	6/26/2022 4:47	11.59	-0.37	6/25/2022 2:50	11.70	1.31	6/25/2022 4:12	0.42
6/25/2022 3:04	11.76	0.10	6/26/2022 4:48	11.56	-0.60	6/25/2022 2:51	11.68	1.26	6/25/2022 4:13	0.47
6/25/2022 3:05	11.74	0.09	6/26/2022 4:49	11.56	-0.51	6/25/2022 2:52	11.70	1.28	6/25/2022 4:14	0.47
6/25/2022 3:06	11.74	0.08	6/26/2022 4:50	11.56	-0.44	6/25/2022 2:53	11.68	1.25	6/25/2022 4:15	0.42
6/25/2022 3:07	11.73	0.10	6/26/2022 4:51	11.57	-0.44	6/25/2022 2:54	11.70	1.20	6/25/2022 4:16	0.41
6/25/2022 3:08	11.74	0.05	6/26/2022 4:52	11.56	-0.44	6/25/2022 2:55	11.70	1.26	6/25/2022 4:17	0.40
6/25/2022 3:09	11.72	0.05	6/26/2022 4:53	11.55	-0.43	6/25/2022 2:56	11.64	1.27	6/25/2022 4:18	0.45
6/25/2022 3:10	11.74	0.08	6/26/2022 4:54	11.57	-0.59	6/25/2022 2:57	11.65	1.26	6/25/2022 4:19	0.36
6/25/2022 3:11	11.72	0.07	6/26/2022 4:55	11.55	-0.47	6/25/2022 2:58	11.68	1.26	6/25/2022 4:20	0.46
6/25/2022 3:12	11.77	0.10	6/26/2022 4:56	11.57	-0.45	6/25/2022 2:59	11.65	1.23	6/25/2022 4:21	0.38
6/25/2022 3:13	11.70	0.07	6/26/2022 4:57	11.55	-0.44	6/25/2022 3:00	11.64	1.21	6/25/2022 4:22	0.40
6/25/2022 3:14	11.73	0.05	6/26/2022 4:58	11.56	-0.59	6/25/2022 3:01	11.70	1.15	6/25/2022 4:23	0.38
6/25/2022 3:15	11.74	0.04	6/26/2022 4:59	11.56	-0.39	6/25/2022 3:02	11.68	1.21	6/25/2022 4:24	0.38
6/25/2022 3:16	11.72	0.10	6/26/2022 5:00	11.56	-0.46	6/25/2022 3:03	11.70	1.17	6/25/2022 4:25	0.41
6/25/2022 3:17	11.76	0.10	6/26/2022 5:01	11.55	-0.45	6/25/2022 3:04	11.69	1.13	6/25/2022 4:26	0.37
6/25/2022 3:18	11.73	0.09	6/26/2022 5:02	11.58	-0.43	6/25/2022 3:05	11.66	1.14	6/25/2022 4:27	0.33

6/25/2022 3:19	11.73	0.09	6/26/2022 5:03	11.57	-0.50	6/25/2022 3:06	11.66	1.20	6/25/2022 4:28	0.43
6/25/2022 3:20	11.73	0.14	6/26/2022 5:04	11.56	-0.49	6/25/2022 3:07	11.70	1.11	6/25/2022 4:29	0.37
6/25/2022 3:21	11.75	0.04	6/26/2022 5:05	11.56	-0.43	6/25/2022 3:08	11.68	1.08	6/25/2022 4:30	0.41
6/25/2022 3:22	11.73	0.17	6/26/2022 5:06	11.57	-0.50	6/25/2022 3:09	11.64	1.15	6/25/2022 4:31	0.35
6/25/2022 3:23	11.74	0.10	6/26/2022 5:07	11.54	-0.54	6/25/2022 3:10	11.72	1.02	6/25/2022 4:32	0.38
6/25/2022 3:24	11.74	0.08	6/26/2022 5:08	11.56	-0.46	6/25/2022 3:11	11.71	0.99	6/25/2022 4:33	0.37
6/25/2022 3:25	11.74	0.13	6/26/2022 5:09	11.54	-0.45	6/25/2022 3:12	11.72	1.01	6/25/2022 4:34	0.31
6/25/2022 3:26	11.74	0.06	6/26/2022 5:10	11.56	-0.45	6/25/2022 3:13	11.65	1.07	6/25/2022 4:35	0.34
6/25/2022 3:27	11.75	0.09	6/26/2022 5:11	11.58	-0.48	6/25/2022 3:14	11.64	1.09	6/25/2022 4:36	0.34
6/25/2022 3:28	11.75	0.13	6/26/2022 5:12	11.56	-0.45	6/25/2022 3:15	11.67	1.05	6/25/2022 4:37	0.35
6/25/2022 3:29	11.72	0.11	6/26/2022 5:13	11.57	-0.40	6/25/2022 3:16	11.69	1.00	6/25/2022 4:38	0.32
6/25/2022 3:30	11.71	0.10	6/26/2022 5:14	11.55	-0.35	6/25/2022 3:17	11.68	1.03	6/25/2022 4:39	0.33
6/25/2022 3:31	11.73	0.14	6/26/2022 5:15	11.56	-0.58	6/25/2022 3:18	11.65	0.99	6/25/2022 4:40	0.30
6/25/2022 3:32	11.74	0.06	6/26/2022 5:16	11.59	-0.40	6/25/2022 3:19	11.69	0.98	6/25/2022 4:41	0.30
6/25/2022 3:33	11.77	0.01	6/26/2022 5:17	11.57	-0.55	6/25/2022 3:20	11.73	0.96	6/25/2022 4:42	0.28
6/25/2022 3:34	11.75	0.15	6/26/2022 5:18	11.56	-0.44	6/25/2022 3:21	11.70	0.90	6/25/2022 4:43	0.32
6/25/2022 3:35	11.76	0.03	6/26/2022 5:19	11.54	-0.46	6/25/2022 3:22	11.70	0.91	6/25/2022 4:44	0.34
6/25/2022 3:36	11.77	0.04	6/26/2022 5:20	11.57	-0.49	6/25/2022 3:23	11.65	0.91	6/25/2022 4:45	0.32
6/25/2022 3:37	11.73	0.00	6/26/2022 5:21	11.56	-0.37	6/25/2022 3:24	11.70	0.85	6/25/2022 4:46	0.30
6/25/2022 3:38	11.73	0.07	6/26/2022 5:22	11.56	-0.45	6/25/2022 3:25	11.66	0.88	6/25/2022 4:47	0.35
6/25/2022 3:39	11.73	0.13	6/26/2022 5:23	11.55	-0.50	6/25/2022 3:26	11.66	0.96	6/25/2022 4:48	0.32
6/25/2022 3:40	11.73	0.09	6/26/2022 5:24	11.55	-0.52	6/25/2022 3:27	11.65	0.88	6/25/2022 4:49	0.29
6/25/2022 3:41	11.72	0.05	6/26/2022 5:25	11.57	-0.52	6/25/2022 3:28	11.71	0.81	6/25/2022 4:50	0.32
6/25/2022 3:42	11.73	0.05	6/26/2022 5:26	11.58	-0.42	6/25/2022 3:29	11.69	0.79	6/25/2022 4:51	0.31
6/25/2022 3:43	11.72	0.01	6/26/2022 5:27	11.55	-0.51	6/25/2022 3:30	11.73	0.80	6/25/2022 4:52	0.23
6/25/2022 3:44	11.74	0.08	6/26/2022 5:28	11.56	-0.45	6/25/2022 3:31	11.66	0.88	6/25/2022 4:53	0.27
6/25/2022 3:45	11.75	0.08	6/26/2022 5:29	11.58	-0.43	6/25/2022 3:32	11.68	0.80	6/25/2022 4:54	0.31
6/25/2022 3:46	11.74	0.07	6/26/2022 5:30	11.54	-0.50	6/25/2022 3:33	11.66	0.84	6/25/2022 4:55	0.24
6/25/2022 3:47	11.72	0.17	6/26/2022 5:31	11.55	-0.49	6/25/2022 3:34	11.67	0.82	6/25/2022 4:56	0.27
6/25/2022 3:48	11.74	0.06	6/26/2022 5:32	11.57	-0.40	6/25/2022 3:35	11.69	0.77	6/25/2022 4:57	0.26
6/25/2022 3:49	11.71	0.10	6/26/2022 5:33	11.54	-0.42	6/25/2022 3:36	11.72	0.72	6/25/2022 4:58	0.24
6/25/2022 3:50	11.77	0.07	6/26/2022 5:34	11.58	-0.43	6/25/2022 3:37	11.67	0.75	6/25/2022 4:59	0.29
6/25/2022 3:51	11.77	0.14	6/26/2022 5:35	11.56	-0.50	6/25/2022 3:38	11.67	0.83	6/25/2022 5:00	0.25
6/25/2022 3:52	11.75	0.05	6/26/2022 5:36	11.54	-0.41	6/25/2022 3:39	11.68	0.71	6/25/2022 5:01	0.24
6/25/2022 3:53	11.75	0.09	6/26/2022 5:37	11.57	-0.52	6/25/2022 3:40	11.65	0.77	6/25/2022 5:02	0.20
6/25/2022 3:54	11.75	0.12	6/26/2022 5:38	11.55	-0.44	6/25/2022 3:41	11.68	0.70	6/25/2022 5:03	0.24
6/25/2022 3:55	11.71	0.04	6/26/2022 5:39	11.54	-0.42	6/25/2022 3:42	11.64	0.76	6/25/2022 5:04	0.25
6/25/2022 3:56	11.75	0.09	6/26/2022 5:40	11.56	-0.54	6/25/2022 3:43	11.65	0.73	6/25/2022 5:05	0.22
6/25/2022 3:57	11.75	0.04	6/26/2022 5:41	11.53	-0.46	6/25/2022 3:44	11.69	0.64	6/25/2022 5:06	0.24
6/25/2022 3:58	11.75	0.09	6/26/2022 5:42	11.55	-0.46	6/25/2022 3:45	11.63	0.71	6/25/2022 5:07	0.26
6/25/2022 3:59	11.75	0.12	6/26/2022 5:43	11.56	-0.53	6/25/2022 3:46	11.71	0.63	6/25/2022 5:08	0.23
6/25/2022 4:00	11.73	0.02	6/26/2022 5:44	11.56	-0.46	6/25/2022 3:47	11.64	0.67	6/25/2022 5:09	0.25
6/25/2022 4:01	11.73	0.09	6/26/2022 5:45	11.57	-0.50	6/25/2022 3:48	11.70	0.60	6/25/2022 5:10	0.25
6/25/2022 4:02	11.75	0.19	6/26/2022 5:46	11.58	-0.44	6/25/2022 3:49	11.63	0.68	6/25/2022 5:11	0.20
6/25/2022 4:03	11.77	0.11	6/26/2022 5:47	11.55	-0.35	6/25/2022 3:50	11.69	0.56	6/25/2022 5:12	0.21
6/25/2022 4:04	11.75	0.15	6/26/2022 5:48	11.55	-0.52	6/25/2022 3:51	11.67	0.59	6/25/2022 5:13	0.22
6/25/2022 4:05	11.78	0.04	6/26/2022 5:49	11.56	-0.42	6/25/2022 3:52	11.69	0.55	6/25/2022 5:14	0.20
6/25/2022 4:06	11.74	0.05	6/26/2022 5:50	11.56	-0.50	6/25/2022 3:53	11.69	0.59	6/25/2022 5:15	0.24
6/25/2022 4:07	11.74	0.05	6/26/2022 5:51	11.57	-0.50	6/25/2022 3:54	11.67	0.56	6/25/2022 5:16	0.25
6/25/2022 4:08	11.75	0.10	6/26/2022 5:52	11.56	-0.45	6/25/2022 3:55	11.68	0.50	6/25/2022 5:17	0.19
6/25/2022 4:09	11.74	0.12	6/26/2022 5:53	11.58	-0.35	6/25/2022 3:56	11.67	0.53	6/25/2022 5:18	0.22
6/25/2022 4:10	11.77	0.04	6/26/2022 5:54	11.55	-0.48	6/25/2022 3:57	11.68	0.55	6/25/2022 5:19	0.19
6/25/2022 4:11	11.78	0.08	6/26/2022 5:55	11.56	-0.37	6/25/2022 3:58	11.65	0.51	6/25/2022 5:20	0.22
6/25/2022 4:12	11.78	0.08	6/26/2022 5:56	11.56	-0.46	6/25/2022 3:59	11.69	0.53	6/25/2022 5:21	0.19
6/25/2022 4:13	11.77	0.09	6/26/2022 5:57	11.58	-0.44	6/25/2022 4:00	11.66	0.53	6/25/2022 5:22	0.16
6/25/2022 4:14	11.74	0.04	6/26/2022 5:58	11.56	-0.48	6/25/2022 4:01	11.64	0.50	6/25/2022 5:23	0.21
6/25/2022 4:15	11.74	0.16	6/26/2022 5:59	11.56	-0.45	6/25/2022 4:02	11.70	0.47	6/25/2022 5:24	0.17
6/25/2022 4:16	11.77	0.15	6/26/2022 6:00	11.56	-0.40	6/25/2022 4:03	11.65	0.46	6/25/2022 5:25	0.22
6/25/2022 4:17	11.76	0.06	6/26/2022 6:01	11.56	-0.35	6/25/2022 4:04	11.65	0.46	6/25/2022 5:26	0.25
6/25/2022 4:18	11.78	0.04	6/26/2022 6:02	11.54	-0.51	6/25/2022 4:05	11.69	0.41	6/25/2022 5:27	0.22
6/25/2022 4:19	11.76	0.11	6/26/2022 6:03	11.56	-0.41	6/25/2022 4:06	11.70	0.42	6/25/2022 5:28	0.26
6/25/2022 4:20	11.74	0.10	6/26/2022 6:04	11.55	-0.36	6/25/2022 4:07	11.70	0.41	6/25/2022 5:29	0.27
6/25/2022 4:21	11.74	0.05	6/26/2022 6:05	11.56	-0.49	6/25/2022 4:08	11.68	0.37	6/25/2022 5:30	0.23
6/25/2022 4:22	11.72	0.15	6/26/2022 6:06	11.58	-0.43	6/25/2022 4:09	11.68	0.37	6/25/2022 5:31	0.24
6/25/2022 4:23	11.73	0.04	6/26/2022 6:07	11.58	-0.48	6/25/2022 4:10	11.64	0.39	6/25/2022 5:32	0.22
6/25/2022 4:24	11.77	0.05	6/26/2022 6:08	11.55	-0.48	6/25/2022 4:11	11.70	0.34	6/25/2022 5:33	0.26
6/25/2022 4:25	11.74	0.07	6/26/2022 6:09	11.56	-0.45	6/25/2022 4:12	11.71	0.35	6/25/2022 5:34	0.24
6/25/2022 4:26	11.75	0.16	6/26/2022 6:10	11.59	-0.44	6/25/2022 4:13	11.63	0.41	6/25/2022 5:35	0.25
6/25/2022 4:27	11.75	0.09	6/26/2022 6:11	11.57	-0.44	6/25/2022 4:14	11.69	0.33	6/25/2022 5:36	0.27
6/25/2022 4:28	11.72	0.12	6/26/2022 6:12	11.58	-0.41	6/25/2022 4:15	11.64	0.34	6/25/2022 5:37	0.27
6/25/2022 4:29	11.73	0.05	6/26/2022 6:13	11.55	-0.49	6/25/2022 4:16	11.70	0.25	6/25/2022 5:38	0.28
6/25/2022 4:30	11.76	0.18	6/26/2022 6:14	11.55	-0.39	6/25/2022 4:17	11.69	0.28	6/25/2022 5:39	0.26
6/25/2022 4:31	11.75	0.09	6/26/2022 6:15	11.56	-0.45	6/25/2022 4:18	11.66	0.30	6/25/2022 5:40	0.30
6/25/2022 4:32	11.73	0.11	6/26/2022 6:16	11.57	-0.40	6/25/2022 4:19	11.70	0.26	6/25/2022 5:41	0.25
6/25/2022 4:33	11.75	0.16	6/26/2022 6:17	11.55	-0.44	6/25/2022 4:20	11.65	0.32	6/25/2022 5:42	0.29
6/25/2022 4:34	11.75	0.12	6/26/2022 6:18	11.56	-0.50	6/25/2022 4:21	11.71	0.20	6/25/2022 5:43	0.28
6/25/2022 4:35	11.78	0.01	6/26/2022 6:19	11.56	-0.44	6/25/2022 4:22	11.71	0.21	6/25/2022 5:44	0.26
6/25/2022 4:36	11.75	0.16	6/26/2022 6:20	11.57	-0.57	6/25/2022 4:23	11.65	0.29	6/25/2022 5:45	0.26
6/25/2022 4:37	11.77	0.07	6/26/2022 6:21	11.56	-0.46	6/25/2022 4:24	11.64	0.28	6/25/2022 5:46	0.28
6/25/2022 4:38	11.78	0.06	6/26/2022 6:22	11.54	-0.49	6/25/2022 4:25	11.65	0.24	6/25/2022 5:47	0.30
6/25/2022 4:39	11.75	0.10	6/26/2022 6:23	11.56	-0.38	6/25/2022 4:26	11.72	0.18	6/25/2022 5:48	0.32
6/25/2022 4:40	11.77	0.09	6/26/2022 6:24	11.57	-0.46	6/25/2022 4:27	11.65	0.17	6/25/2022 5:49	0.26
6/25/2022 4:41	11.76	0.15	6/26/2022 6:25	11.55	-0.50	6/25/2022 4:28	11.66	0.22	6/25/2022 5:50	0.34
6/25/2022 4:42	11.74	0.13	6/26/2022 6:26	11.60	-0.36	6/25/2022 4:29	11.70	0.11	6/25/2022 5:51	0.29
6/25/2022 4:43	11.73	0.14	6/26/2022 6:27	11.58	-0.47	6/25/2022 4:30	11.69	0.14	6/25/2022 5:52	0.39
6/25/2022 4:44	11.73	0.09	6/26/2022 6:28	11.55	-0.49	6/25/2022 4:31	11.71	0.11	6/25/2022 5:53	0.31
6/25/2022 4:45	11.76	0.06	6/26/2022 6:29	11.55	-0.55	6/25/2022 4:32	11.69	0.12	6/25/2022 5:54	0.29
6/25/2022 4:46	11.76	0.10	6/26/2022 6:30	11.55	-0.39	6/25/2022 4:33	11.71	0.10	6/25/2022 5:55	0.31

6/25/2022 4:47	11.77	0.09	6/26/2022 6:31	11.56	-0.50	6/25/2022 4:34	11.69	0.11	6/25/2022 5:56	0.31
6/25/2022 4:48	11.77	0.09	6/26/2022 6:32	11.56	-0.43	6/25/2022 4:35	11.67	0.10	6/25/2022 5:57	0.26
6/25/2022 4:49	11.75	0.04	6/26/2022 6:33	11.57	-0.42	6/25/2022 4:36	11.69	0.04	6/25/2022 5:58	0.28
6/25/2022 4:50	11.74	0.09	6/26/2022 6:34	11.58	-0.50	6/25/2022 4:37	11.67	0.03	6/25/2022 5:59	0.27
6/25/2022 4:51	11.80	0.10	6/26/2022 6:35	11.55	-0.48	6/25/2022 4:38	11.67	0.10	6/25/2022 6:00	0.29
6/25/2022 4:52	11.77	0.21	6/26/2022 6:36	11.56	-0.45	6/25/2022 4:39	11.69	0.02	6/25/2022 6:01	0.29
6/25/2022 4:53	11.74	0.10	6/26/2022 6:37	11.57	-0.44	6/25/2022 4:40	11.66	0.05	6/25/2022 6:02	0.29
6/25/2022 4:54	11.73	0.14	6/26/2022 6:38	11.56	-0.50	6/25/2022 4:41	11.68	0.03	6/25/2022 6:03	0.31
6/25/2022 4:55	11.82	0.06	6/26/2022 6:39	11.56	-0.50	6/25/2022 4:42	11.65	0.05	6/25/2022 6:04	0.28
6/25/2022 4:56	11.77	0.04	6/26/2022 6:40	11.55	-0.47	6/25/2022 4:43	11.66	0.02	6/25/2022 6:05	0.31
6/25/2022 4:57	11.80	0.06	6/26/2022 6:41	11.57	-0.55	6/25/2022 4:44	11.69	-0.04	6/25/2022 6:06	0.28
6/25/2022 4:58	11.77	0.01	6/26/2022 6:42	11.58	-0.49	6/25/2022 4:45	11.69	0.01	6/25/2022 6:07	0.35
6/25/2022 4:59	11.80	0.05	6/26/2022 6:43	11.57	-0.38	6/25/2022 4:46	11.72	-0.08	6/25/2022 6:08	0.33
6/25/2022 5:00	11.77	0.10	6/26/2022 6:44	11.57	-0.34	6/25/2022 4:47	11.65	-0.01	6/25/2022 6:09	0.24
6/25/2022 5:01	11.78	0.15	6/26/2022 6:45	11.59	-0.42	6/25/2022 4:48	11.66	-0.03	6/25/2022 6:10	0.31
6/25/2022 5:02	11.77	0.06	6/26/2022 6:46	11.56	-0.47	6/25/2022 4:49	11.70	-0.06	6/25/2022 6:11	0.31
6/25/2022 5:03	11.78	0.15	6/26/2022 6:47	11.57	-0.42	6/25/2022 4:50	11.72	-0.10	6/25/2022 6:12	0.28
6/25/2022 5:04	11.78	0.08	6/26/2022 6:48	11.55	-0.55	6/25/2022 4:51	11.67	-0.01	6/25/2022 6:13	0.31
6/25/2022 5:05	11.79	0.08	6/26/2022 6:49	11.57	-0.45	6/25/2022 4:52	11.70	-0.10	6/25/2022 6:14	0.34
6/25/2022 5:06	11.78	0.05	6/26/2022 6:50	11.54	-0.45	6/25/2022 4:53	11.68	-0.06	6/25/2022 6:15	0.25
6/25/2022 5:07	11.76	0.09	6/26/2022 6:51	11.56	-0.48	6/25/2022 4:54	11.69	-0.13	6/25/2022 6:16	0.25
6/25/2022 5:08	11.75	0.04	6/26/2022 6:52	11.56	-0.39	6/25/2022 4:55	11.70	-0.11	6/25/2022 6:17	0.28
6/25/2022 5:09	11.79	0.06	6/26/2022 6:53	11.60	-0.53	6/25/2022 4:56	11.69	-0.15	6/25/2022 6:18	0.31
6/25/2022 5:10	11.76	0.10	6/26/2022 6:54	11.55	-0.47	6/25/2022 4:57	11.68	-0.11	6/25/2022 6:19	0.28
6/25/2022 5:11	11.78	0.12	6/26/2022 6:55	11.55	-0.53	6/25/2022 4:58	11.66	-0.12	6/25/2022 6:20	0.33
6/25/2022 5:12	11.76	0.17	6/26/2022 6:56	11.54	-0.50	6/25/2022 4:59	11.70	-0.18	6/25/2022 6:21	0.28
6/25/2022 5:13	11.79	0.13	6/26/2022 6:57	11.56	-0.48	6/25/2022 5:00	11.66	-0.09	6/25/2022 6:22	0.30
6/25/2022 5:14	11.77	0.14	6/26/2022 6:58	11.58	-0.54	6/25/2022 5:01	11.67	-0.15	6/25/2022 6:23	0.30
6/25/2022 5:15	11.75	0.01	6/26/2022 6:59	11.56	-0.40	6/25/2022 5:02	11.69	-0.15	6/25/2022 6:24	0.27
6/25/2022 5:16	11.79	0.04	6/26/2022 7:00	11.57	-0.52	6/25/2022 5:03	11.69	-0.12	6/25/2022 6:25	0.27
6/25/2022 5:17	11.78	0.08	6/26/2022 7:01	11.55	-0.35	6/25/2022 5:04	11.68	-0.11	6/25/2022 6:26	0.29
6/25/2022 5:18	11.81	0.01	6/26/2022 7:02	11.59	-0.39	6/25/2022 5:05	11.66	-0.08	6/25/2022 6:27	0.31
6/25/2022 5:19	11.74	0.04	6/26/2022 7:03	11.58	-0.46	6/25/2022 5:06	11.72	-0.16	6/25/2022 6:28	0.24
6/25/2022 5:20	11.76	0.05	6/26/2022 7:04	11.57	-0.40	6/25/2022 5:07	11.71	-0.21	6/25/2022 6:29	0.26
6/25/2022 5:21	11.78	0.04	6/26/2022 7:05	11.55	-0.39	6/25/2022 5:08	11.69	-0.13	6/25/2022 6:30	0.25
6/25/2022 5:22	11.77	0.10	6/26/2022 7:06	11.57	-0.51	6/25/2022 5:09	11.66	-0.14	6/25/2022 6:31	0.30
6/25/2022 5:23	11.78	0.11	6/26/2022 7:07	11.58	-0.50	6/25/2022 5:10	11.70	-0.21	6/25/2022 6:32	0.27
6/25/2022 5:24	11.78	0.14	6/26/2022 7:08	11.58	-0.38	6/25/2022 5:11	11.64	-0.12	6/25/2022 6:33	0.29
6/25/2022 5:25	11.75	0.11	6/26/2022 7:09	11.56	-0.47	6/25/2022 5:12	11.67	-0.17	6/25/2022 6:34	0.28
6/25/2022 5:26	11.77	0.05	6/26/2022 7:10	11.57	-0.41	6/25/2022 5:13	11.65	-0.08	6/25/2022 6:35	0.22
6/25/2022 5:27	11.75	0.14	6/26/2022 7:11	11.55	-0.43	6/25/2022 5:14	11.65	-0.14	6/25/2022 6:36	0.26
6/25/2022 5:28	11.77	0.01	6/26/2022 7:12	11.58	-0.46	6/25/2022 5:15	11.67	-0.14	6/25/2022 6:37	0.25
6/25/2022 5:29	11.75	0.06	6/26/2022 7:13	11.57	-0.40	6/25/2022 5:16	11.71	-0.17	6/25/2022 6:38	0.26
6/25/2022 5:30	11.76	0.17	6/26/2022 7:14	11.56	-0.45	6/25/2022 5:17	11.66	-0.16	6/25/2022 6:39	0.23
6/25/2022 5:31	11.77	0.17	6/26/2022 7:15	11.54	-0.46	6/25/2022 5:18	11.65	-0.17	6/25/2022 6:40	0.27
6/25/2022 5:32	11.75	0.03	6/26/2022 7:16	11.55	-0.48	6/25/2022 5:19	11.64	-0.10	6/25/2022 6:41	0.27
6/25/2022 5:33	11.76	0.10	6/26/2022 7:17	11.58	-0.45	6/25/2022 5:20	11.68	-0.17	6/25/2022 6:42	0.24
6/25/2022 5:34	11.78	0.02	6/26/2022 7:18	11.55	-0.50	6/25/2022 5:21	11.69	-0.10	6/25/2022 6:43	0.21
6/25/2022 5:35	11.79	0.06	6/26/2022 7:19	11.55	-0.39	6/25/2022 5:22	11.67	-0.15	6/25/2022 6:44	0.24
6/25/2022 5:36	11.75	0.01	6/26/2022 7:20	11.56	-0.49	6/25/2022 5:23	11.68	-0.15	6/25/2022 6:45	0.26
6/25/2022 5:37	11.76	0.10	6/26/2022 7:21	11.56	-0.52	6/25/2022 5:24	11.64	-0.11	6/25/2022 6:46	0.23
6/25/2022 5:38	11.76	0.08	6/26/2022 7:22	11.56	-0.39	6/25/2022 5:25	11.67	-0.17	6/25/2022 6:47	0.18
6/25/2022 5:39	11.81	0.09	6/26/2022 7:23	11.55	-0.43	6/25/2022 5:26	11.65	-0.17	6/25/2022 6:48	0.21
6/25/2022 5:40	11.76	0.04	6/26/2022 7:24	11.56	-0.51	6/25/2022 5:27	11.70	-0.18	6/25/2022 6:49	0.27
6/25/2022 5:41	11.78	0.19	6/26/2022 7:25	11.56	-0.48	6/25/2022 5:28	11.64	-0.11	6/25/2022 6:50	0.22
6/25/2022 5:42	11.77	0.09	6/26/2022 7:26	11.60	-0.47	6/25/2022 5:29	11.69	-0.21	6/25/2022 6:51	0.22
6/25/2022 5:43	11.76	0.05	6/26/2022 7:27	11.58	-0.44	6/25/2022 5:30	11.70	-0.19	6/25/2022 6:52	0.24
6/25/2022 5:44	11.78	0.09	6/26/2022 7:28	11.52	-0.47	6/25/2022 5:31	11.71	-0.20	6/25/2022 6:53	0.24
6/25/2022 5:45	11.75	0.06	6/26/2022 7:29	11.57	-0.39	6/25/2022 5:32	11.64	-0.09	6/25/2022 6:54	0.19
6/25/2022 5:46	11.79	0.03	6/26/2022 7:30	11.56	-0.51	6/25/2022 5:33	11.67	-0.19	6/25/2022 6:55	0.17
6/25/2022 5:47	11.74	0.12	6/26/2022 7:31	11.58	-0.42	6/25/2022 5:34	11.66	-0.15	6/25/2022 6:56	0.25
6/25/2022 5:48	11.74	0.04	6/26/2022 7:32	11.56	-0.44	6/25/2022 5:35	11.63	-0.13	6/25/2022 6:57	0.20
6/25/2022 5:49	11.75	0.09	6/26/2022 7:33	11.58	-0.39	6/25/2022 5:36	11.68	-0.19	6/25/2022 6:58	0.21
6/25/2022 5:50	11.76	0.00	6/26/2022 7:34	11.57	-0.43	6/25/2022 5:37	11.69	-0.13	6/25/2022 6:59	0.18
6/25/2022 5:51	11.76	0.07	6/26/2022 7:35	11.55	-0.35	6/25/2022 5:38	11.65	-0.10	6/25/2022 7:00	0.20
6/25/2022 5:52	11.74	0.15	6/26/2022 7:36	11.55	-0.43	6/25/2022 5:39	11.63	-0.11	6/25/2022 7:01	0.21
6/25/2022 5:53	11.75	-0.02	6/26/2022 7:37	11.56	-0.47	6/25/2022 5:40	11.69	-0.17	6/25/2022 7:02	0.21
6/25/2022 5:54	11.76	0.03	6/26/2022 7:38	11.57	-0.52	6/25/2022 5:41	11.69	-0.16	6/25/2022 7:03	0.21
6/25/2022 5:55	11.72	0.03	6/26/2022 7:39	11.55	-0.44	6/25/2022 5:42	11.73	-0.23	6/25/2022 7:04	0.23
6/25/2022 5:56	11.77	0.04	6/26/2022 7:40	11.56	-0.54	6/25/2022 5:43	11.67	-0.11	6/25/2022 7:05	0.20
6/25/2022 5:57	11.75	0.07	6/26/2022 7:41	11.56	-0.47	6/25/2022 5:44	11.72	-0.20	6/25/2022 7:06	0.24
6/25/2022 5:58	11.76	0.10	6/26/2022 7:42	11.54	-0.52	6/25/2022 5:45	11.69	-0.17	6/25/2022 7:07	0.23
6/25/2022 5:59	11.78	0.05	6/26/2022 7:43	11.53	-0.44	6/25/2022 5:46	11.64	-0.15	6/25/2022 7:08	0.23
6/25/2022 6:00	11.78	0.09	6/26/2022 7:44	11.55	-0.44	6/25/2022 5:47	11.68	-0.22	6/25/2022 7:09	0.19
6/25/2022 6:01	11.78	0.07	6/26/2022 7:45	11.58	-0.52	6/25/2022 5:48	11.71	-0.19	6/25/2022 7:10	0.19
6/25/2022 6:02	11.78	0.05	6/26/2022 7:46	11.59	-0.44	6/25/2022 5:49	11.70	-0.18	6/25/2022 7:11	0.17
6/25/2022 6:03	11.79	0.09	6/26/2022 7:47	11.57	-0.50	6/25/2022 5:50	11.70	-0.21	6/25/2022 7:12	0.16
6/25/2022 6:04	11.76	0.06	6/26/2022 7:48	11.55	-0.49	6/25/2022 5:51	11.72	-0.18	6/25/2022 7:13	0.19
6/25/2022 6:05	11.79	0.05	6/26/2022 7:49	11.54	-0.44	6/25/2022 5:52	11.65	-0.10	6/25/2022 7:14	0.20
6/25/2022 6:06	11.76	0.09	6/26/2022 7:50	11.57	-0.53	6/25/2022 5:53	11.65	-0.10	6/25/2022 7:15	0.20
6/25/2022 6:07	11.79	0.02	6/26/2022 7:51	11.55	-0.50	6/25/2022 5:54	11.69	-0.14	6/25/2022 7:16	0.17
6/25/2022 6:08	11.74	0.05	6/26/2022 7:52	11.58	-0.43	6/25/2022 5:55	11.69	-0.14	6/25/2022 7:17	0.18
6/25/2022 6:09	11.79	0.11	6/26/2022 7:53	11.57	-0.48	6/25/2022 5:56	11.70	-0.18	6/25/2022 7:18	0.18
6/25/2022 6:10	11.76	0.09	6/26/2022 7:54	11.57	-0.43	6/25/2022 5:57	11.67	-0.14	6/25/2022 7:19	0.26
6/25/2022 6:11	11.76	0.05	6/26/2022 7:55	11.59	-0.41	6/25/2022 5:58	11.68	-0.17	6/25/2022 7:20	0.17
6/25/2022 6:12	11.75	0.13	6/26/2022 7:56	11.55	-0.42	6/25/2022 5:59	11.71	-0.22	6/25/2022 7:21	0.18
6/25/2022 6:13	11.78	0.07	6/26/2022 7:57	11.58	-0.48	6/25/2022 6:00	11.71	-0.21	6/25/2022 7:22	0.15
6/25/2022 6:14	11.77	0.10	6/26/2022 7:58	11.57	-0.47	6/25/2022 6:01	11.67	-0.18	6/25/2022 7:23	0.13

6/25/2022 6:15	11.76	0.14	6/26/2022 7:59	11.54	-0.46	6/25/2022 6:02	11.72	-0.19	6/25/2022 7:24	0.21
6/25/2022 6:16	11.76	0.05	6/26/2022 8:00	11.58	-0.47	6/25/2022 6:03	11.70	-0.14	6/25/2022 7:25	0.19
6/25/2022 6:17	11.79	0.11	6/26/2022 8:01	11.57	-0.49	6/25/2022 6:04	11.70	-0.18	6/25/2022 7:26	0.19
6/25/2022 6:18	11.78	0.10	6/26/2022 8:02	11.58	-0.43	6/25/2022 6:05	11.69	-0.13	6/25/2022 7:27	0.13
6/25/2022 6:19	11.79	0.14	6/26/2022 8:03	11.57	-0.50	6/25/2022 6:06	11.66	-0.14	6/25/2022 7:28	0.16
6/25/2022 6:20	11.80	0.11	6/26/2022 8:04	11.57	-0.47	6/25/2022 6:07	11.71	-0.20	6/25/2022 7:29	0.15
6/25/2022 6:21	11.80	0.04	6/26/2022 8:05	11.56	-0.48	6/25/2022 6:08	11.68	-0.17	6/25/2022 7:30	0.13
6/25/2022 6:22	11.79	0.06	6/26/2022 8:06	11.57	-0.41	6/25/2022 6:09	11.68	-0.18	6/25/2022 7:31	0.13
6/25/2022 6:23	11.79	0.04	6/26/2022 8:07	11.57	-0.42	6/25/2022 6:10	11.65	-0.15	6/25/2022 7:32	0.14
6/25/2022 6:24	11.83	0.08	6/26/2022 8:08	11.56	-0.38	6/25/2022 6:11	11.69	-0.13	6/25/2022 7:33	0.21
6/25/2022 6:25	11.81	0.01	6/26/2022 8:09	11.58	-0.34	6/25/2022 6:12	11.68	-0.19	6/25/2022 7:34	0.14
6/25/2022 6:26	11.78	0.12	6/26/2022 8:10	11.56	-0.48	6/25/2022 6:13	11.67	-0.22	6/25/2022 7:35	0.13
6/25/2022 6:27	11.80	0.09	6/26/2022 8:11	11.56	-0.42	6/25/2022 6:14	11.64	-0.13	6/25/2022 7:36	0.14
6/25/2022 6:28	11.77	-0.01	6/26/2022 8:12	11.57	-0.35	6/25/2022 6:15	11.63	-0.13	6/25/2022 7:37	0.11
6/25/2022 6:29	11.80	0.05	6/26/2022 8:13	11.59	-0.37	6/25/2022 6:16	11.67	-0.12	6/25/2022 7:38	0.17
6/25/2022 6:30	11.77	0.09	6/26/2022 8:14	11.57	-0.43	6/25/2022 6:17	11.67	-0.20	6/25/2022 7:39	0.13
6/25/2022 6:31	11.77	0.05	6/26/2022 8:15	11.56	-0.47	6/25/2022 6:18	11.63	-0.15	6/25/2022 7:40	0.17
6/25/2022 6:32	11.79	0.11	6/26/2022 8:16	11.57	-0.40	6/25/2022 6:19	11.69	-0.17	6/25/2022 7:41	0.15
6/25/2022 6:33	11.83	0.06	6/26/2022 8:17	11.56	-0.44	6/25/2022 6:20	11.71	-0.19	6/25/2022 7:42	0.19
6/25/2022 6:34	11.80	0.10	6/26/2022 8:18	11.57	-0.52	6/25/2022 6:21	11.68	-0.20	6/25/2022 7:43	0.12
6/25/2022 6:35	11.76	0.08	6/26/2022 8:19	11.57	-0.41	6/25/2022 6:22	11.69	-0.20	6/25/2022 7:44	0.10
6/25/2022 6:36	11.79	0.08	6/26/2022 8:20	11.57	-0.46	6/25/2022 6:23	11.68	-0.18	6/25/2022 7:45	0.14
6/25/2022 6:37	11.77	0.11	6/26/2022 8:21	11.57	-0.35	6/25/2022 6:24	11.65	-0.12	6/25/2022 7:46	0.05
6/25/2022 6:38	11.80	0.01	6/26/2022 8:22	11.54	-0.49	6/25/2022 6:25	11.67	-0.16	6/25/2022 7:47	0.12
6/25/2022 6:39	11.77	0.15	6/26/2022 8:23	11.58	-0.44	6/25/2022 6:26	11.68	-0.14	6/25/2022 7:48	0.15
6/25/2022 6:40	11.76	0.00	6/26/2022 8:24	11.57	-0.50	6/25/2022 6:27	11.63	-0.19	6/25/2022 7:49	0.07
6/25/2022 6:41	11.79	0.05	6/26/2022 8:25	11.57	-0.41	6/25/2022 6:28	11.70	-0.17	6/25/2022 7:50	0.15
6/25/2022 6:42	11.78	0.09	6/26/2022 8:26	11.58	-0.45	6/25/2022 6:29	11.64	-0.14	6/25/2022 7:51	0.10
6/25/2022 6:43	11.77	0.06	6/26/2022 8:27	11.57	-0.42	6/25/2022 6:30	11.67	-0.17	6/25/2022 7:52	0.10
6/25/2022 6:44	11.81	0.04	6/26/2022 8:28	11.54	-0.41	6/25/2022 6:31	11.69	-0.20	6/25/2022 7:53	0.10
6/25/2022 6:45	11.81	0.13	6/26/2022 8:29	11.57	-0.50	6/25/2022 6:32	11.65	-0.12	6/25/2022 7:54	0.09
6/25/2022 6:46	11.79	0.06	6/26/2022 8:30	11.59	-0.50	6/25/2022 6:33	11.66	-0.19	6/25/2022 7:55	0.15
6/25/2022 6:47	11.77	0.04	6/26/2022 8:31	11.56	-0.38	6/25/2022 6:34	11.69	-0.16	6/25/2022 7:56	0.12
6/25/2022 6:48	11.81	0.10	6/26/2022 8:32	11.57	-0.34	6/25/2022 6:35	11.70	-0.22	6/25/2022 7:57	0.10
6/25/2022 6:49	11.78	0.04	6/26/2022 8:33	11.59	-0.53	6/25/2022 6:36	11.70	-0.20	6/25/2022 7:58	0.08
6/25/2022 6:50	11.80	0.11	6/26/2022 8:34	11.57	-0.45	6/25/2022 6:37	11.70	-0.24	6/25/2022 7:59	0.09
6/25/2022 6:51	11.80	-0.02	6/26/2022 8:35	11.56	-0.37	6/25/2022 6:38	11.69	-0.23	6/25/2022 8:00	0.09
6/25/2022 6:52	11.79	0.09	6/26/2022 8:36	11.57	-0.47	6/25/2022 6:39	11.68	-0.18	6/25/2022 8:01	0.07
6/25/2022 6:53	11.79	0.02	6/26/2022 8:37	11.57	-0.43	6/25/2022 6:40	11.68	-0.13	6/25/2022 8:02	0.07
6/25/2022 6:54	11.76	0.08	6/26/2022 8:38	11.55	-0.49	6/25/2022 6:41	11.68	-0.19	6/25/2022 8:03	0.11
6/25/2022 6:55	11.77	0.05	6/26/2022 8:39	11.55	-0.39	6/25/2022 6:42	11.63	-0.16	6/25/2022 8:04	0.09
6/25/2022 6:56	11.77	0.09	6/26/2022 8:40	11.55	-0.39	6/25/2022 6:43	11.67	-0.16	6/25/2022 8:05	0.12
6/25/2022 6:57	11.77	0.09	6/26/2022 8:41	11.56	-0.40	6/25/2022 6:44	11.67	-0.20	6/25/2022 8:06	0.11
6/25/2022 6:58	11.76	0.06	6/26/2022 8:42	11.57	-0.48	6/25/2022 6:45	11.72	-0.20	6/25/2022 8:07	0.12
6/25/2022 6:59	11.77	0.09	6/26/2022 8:43	11.58	-0.41	6/25/2022 6:46	11.66	-0.14	6/25/2022 8:08	0.10
6/25/2022 7:00	11.79	0.05	6/26/2022 8:44	11.56	-0.54	6/25/2022 6:47	11.70	-0.20	6/25/2022 8:09	0.08
6/25/2022 7:01	11.75	0.01	6/26/2022 8:45	11.56	-0.49	6/25/2022 6:48	11.68	-0.11	6/25/2022 8:10	0.11
6/25/2022 7:02	11.77	0.05	6/26/2022 8:46	11.59	-0.40	6/25/2022 6:49	11.66	-0.13	6/25/2022 8:11	0.03
6/25/2022 7:03	11.74	0.11	6/26/2022 8:47	11.56	-0.39	6/25/2022 6:50	11.63	-0.13	6/25/2022 8:12	0.09
6/25/2022 7:04	11.74	0.14	6/26/2022 8:48	11.57	-0.41	6/25/2022 6:51	11.64	-0.16	6/25/2022 8:13	0.09
6/25/2022 7:05	11.79	0.13	6/26/2022 8:49	11.57	-0.42	6/25/2022 6:52	11.67	-0.12	6/25/2022 8:14	0.06
6/25/2022 7:06	11.79	0.05	6/26/2022 8:50	11.56	-0.43	6/25/2022 6:53	11.66	-0.14	6/25/2022 8:15	0.10
6/25/2022 7:07	11.79	0.18	6/26/2022 8:51	11.57	-0.43	6/25/2022 6:54	11.70	-0.15	6/25/2022 8:16	0.05
6/25/2022 7:08	11.79	0.09	6/26/2022 8:52	11.53	-0.44	6/25/2022 6:55	11.70	-0.16	6/25/2022 8:17	0.11
6/25/2022 7:09	11.82	0.09	6/26/2022 8:53	11.57	-0.41	6/25/2022 6:56	11.71	-0.17	6/25/2022 8:18	0.12
6/25/2022 7:10	11.79	0.02	6/26/2022 8:54	11.57	-0.38	6/25/2022 6:57	11.69	-0.15	6/25/2022 8:19	0.08
6/25/2022 7:11	11.79	0.13	6/26/2022 8:55	11.55	-0.46	6/25/2022 6:58	11.67	-0.17	6/25/2022 8:20	0.09
6/25/2022 7:12	11.79	0.05	6/26/2022 8:56	11.59	-0.48	6/25/2022 6:59	11.70	-0.18	6/25/2022 8:21	0.10
6/25/2022 7:13	11.80	-0.02	6/26/2022 8:57	11.57	-0.40	6/25/2022 7:00	11.68	-0.18	6/25/2022 8:22	0.05
6/25/2022 7:14	11.80	0.14	6/26/2022 8:58	11.58	-0.49	6/25/2022 7:01	11.69	-0.20	6/25/2022 8:23	0.04
6/25/2022 7:15	11.77	0.08	6/26/2022 8:59	11.56	-0.50	6/25/2022 7:02	11.62	-0.16	6/25/2022 8:24	0.10
6/25/2022 7:16	11.77	0.15	6/26/2022 9:00	11.56	-0.41	6/25/2022 7:03	11.64	-0.17	6/25/2022 8:25	0.09
6/25/2022 7:17	11.76	0.15	6/26/2022 9:01	11.57	-0.45	6/25/2022 7:04	11.71	-0.19	6/25/2022 8:26	0.09
6/25/2022 7:18	11.77	0.04	6/26/2022 9:02	11.57	-0.41	6/25/2022 7:05	11.63	-0.10	6/25/2022 8:27	0.03
6/25/2022 7:19	11.79	0.07	6/26/2022 9:03	11.54	-0.43	6/25/2022 7:06	11.69	-0.16	6/25/2022 8:28	0.06
6/25/2022 7:20	11.80	0.07	6/26/2022 9:04	11.56	-0.45	6/25/2022 7:07	11.67	-0.12	6/25/2022 8:29	0.05
6/25/2022 7:21	11.79	0.09	6/26/2022 9:05	11.57	-0.36	6/25/2022 7:08	11.70	-0.20	6/25/2022 8:30	0.08
6/25/2022 7:22	11.77	0.03	6/26/2022 9:06	11.57	-0.46	6/25/2022 7:09	11.67	-0.15	6/25/2022 8:31	0.08
6/25/2022 7:23	11.78	0.12	6/26/2022 9:07	11.56	-0.48	6/25/2022 7:10	11.69	-0.23	6/25/2022 8:32	0.08
6/25/2022 7:24	11.77	0.09	6/26/2022 9:08	11.55	-0.46	6/25/2022 7:11	11.71	-0.21	6/25/2022 8:33	0.07
6/25/2022 7:25	11.77	0.11	6/26/2022 9:09	11.57	-0.41	6/25/2022 7:12	11.66	-0.15	6/25/2022 8:34	0.08
6/25/2022 7:26	11.80	0.06	6/26/2022 9:10	11.57	-0.45	6/25/2022 7:13	11.71	-0.19	6/25/2022 8:35	0.07
6/25/2022 7:27	11.79	0.08	6/26/2022 9:11	11.56	-0.45	6/25/2022 7:14	11.65	-0.14	6/25/2022 8:36	0.07
6/25/2022 7:28	11.79	0.04	6/26/2022 9:12	11.60	-0.44	6/25/2022 7:15	11.68	-0.22	6/25/2022 8:37	0.01
6/25/2022 7:29	11.79	0.13	6/26/2022 9:13	11.58	-0.58	6/25/2022 7:16	11.65	-0.11	6/25/2022 8:38	0.09
6/25/2022 7:30	11.81	0.14	6/26/2022 9:14	11.58	-0.51	6/25/2022 7:17	11.69	-0.09	6/25/2022 8:39	0.06
6/25/2022 7:31	11.77	0.02	6/26/2022 9:15	11.56	-0.34	6/25/2022 7:18	11.68	-0.17	6/25/2022 8:40	0.08
6/25/2022 7:32	11.76	0.04	6/26/2022 9:16	11.56	-0.48	6/25/2022 7:19	11.66	-0.13	6/25/2022 8:41	0.07
6/25/2022 7:33	11.79	0.00	6/26/2022 9:17	11.58	-0.32	6/25/2022 7:20	11.64	-0.12	6/25/2022 8:42	0.05
6/25/2022 7:34	11.79	0.14	6/26/2022 9:18	11.57	-0.46	6/25/2022 7:21	11.66	-0.15	6/25/2022 8:43	0.08
6/25/2022 7:35	11.79	0.11	6/26/2022 9:19	11.59	-0.40	6/25/2022 7:22	11.68	-0.20	6/25/2022 8:44	0.06
6/25/2022 7:36	11.79	0.04	6/26/2022 9:20	11.55	-0.42	6/25/2022 7:23	11.66	-0.16	6/25/2022 8:45	0.04
6/25/2022 7:37	11.80	0.07	6/26/2022 9:21	11.55	-0.43	6/25/2022 7:24	11.65	-0.12	6/25/2022 8:46	0.07
6/25/2022 7:38	11.80	0.09	6/26/2022 9:22	11.57	-0.50	6/25/2022 7:25	11.70	-0.22	6/25/2022 8:47	0.03
6/25/2022 7:39	11.79	0.09	6/26/2022 9:23	11.58	-0.45	6/25/2022 7:26	11.67	-0.13	6/25/2022 8:48	0.01
6/25/2022 7:40	11.79	0.09	6/26/2022 9:24	11.56	-0.45	6/25/2022 7:27	11.64	-0.13	6/25/2022 8:49	0.07
6/25/2022 7:41	11.79	0.05	6/26/2022 9:25	11.58	-0.44	6/25/2022 7:28	11.70	-0.19	6/25/2022 8:50	0.07
6/25/2022 7:42	11.79	0.15	6/26/2022 9:26	11.56	-0.45	6/25/2022 7:29	11.64	-0.13	6/25/2022 8:51	0.03

6/25/2022 7:43	11.82	0.12	6/26/2022 9:27	11.59	-0.33	6/25/2022 7:30	11.72	-0.18	6/25/2022 8:52	0.05
6/25/2022 7:44	11.82	0.14	6/26/2022 9:28	11.56	-0.37	6/25/2022 7:31	11.61	-0.13	6/25/2022 8:53	0.03
6/25/2022 7:45	11.83	0.02	6/26/2022 9:29	11.56	-0.41	6/25/2022 7:32	11.65	-0.17	6/25/2022 8:54	0.05
6/25/2022 7:46	11.81	0.05	6/26/2022 9:30	11.58	-0.43	6/25/2022 7:33	11.65	-0.19	6/25/2022 8:55	0.04
6/25/2022 7:47	11.81	0.07	6/26/2022 9:31	11.56	-0.47	6/25/2022 7:34	11.70	-0.16	6/25/2022 8:56	0.04
6/25/2022 7:48	11.81	0.08	6/26/2022 9:32	11.58	-0.52	6/25/2022 7:35	11.71	-0.19	6/25/2022 8:57	0.00
6/25/2022 7:49	11.78	0.11	6/26/2022 9:33	11.58	-0.45	6/25/2022 7:36	11.67	-0.19	6/25/2022 8:58	0.02
6/25/2022 7:50	11.80	0.00	6/26/2022 9:34	11.57	-0.49	6/25/2022 7:37	11.68	-0.16	6/25/2022 8:59	0.01
6/25/2022 7:51	11.80	0.09	6/26/2022 9:35	11.56	-0.43	6/25/2022 7:38	11.70	-0.21	6/25/2022 9:00	-0.02
6/25/2022 7:52	11.83	0.04	6/26/2022 9:36	11.58	-0.45	6/25/2022 7:39	11.70	-0.20	6/25/2022 9:01	0.00
6/25/2022 7:53	11.80	0.02	6/26/2022 9:37	11.57	-0.34	6/25/2022 7:40	11.71	-0.18	6/25/2022 9:02	-0.02
6/25/2022 7:54	11.80	0.04	6/26/2022 9:38	11.59	-0.44	6/25/2022 7:41	11.65	-0.14	6/25/2022 9:03	0.01
6/25/2022 7:55	11.79	0.05	6/26/2022 9:39	11.57	-0.38	6/25/2022 7:42	11.70	-0.21	6/25/2022 9:04	0.02
6/25/2022 7:56	11.79	-0.01	6/26/2022 9:40	11.58	-0.51	6/25/2022 7:43	11.71	-0.21	6/25/2022 9:05	0.05
6/25/2022 7:57	11.81	0.08	6/26/2022 9:41	11.58	-0.39	6/25/2022 7:44	11.66	-0.18	6/25/2022 9:06	0.02
6/25/2022 7:58	11.80	0.01	6/26/2022 9:42	11.56	-0.56	6/25/2022 7:45	11.69	-0.19	6/25/2022 9:07	0.03
6/25/2022 7:59	11.79	0.11	6/26/2022 9:43	11.57	-0.49	6/25/2022 7:46	11.68	-0.15	6/25/2022 9:08	-0.03
6/25/2022 8:00	11.78	0.13	6/26/2022 9:44	11.57	-0.48	6/25/2022 7:47	11.66	-0.11	6/25/2022 9:09	0.01
6/25/2022 8:01	11.78	0.10	6/26/2022 9:45	11.55	-0.48	6/25/2022 7:48	11.63	-0.14	6/25/2022 9:10	-0.03
6/25/2022 8:02	11.78	0.12	6/26/2022 9:46	11.55	-0.50	6/25/2022 7:49	11.67	-0.16	6/25/2022 9:11	0.02
6/25/2022 8:03	11.79	0.11	6/26/2022 9:47	11.55	-0.43	6/25/2022 7:50	11.64	-0.15	6/25/2022 9:12	0.00
6/25/2022 8:04	11.78	0.06	6/26/2022 9:48	11.57	-0.43	6/25/2022 7:51	11.70	-0.19	6/25/2022 9:13	0.03
6/25/2022 8:05	11.76	0.04	6/26/2022 9:49	11.58	-0.43	6/25/2022 7:52	11.70	-0.20	6/25/2022 9:14	0.01
6/25/2022 8:06	11.78	0.04	6/26/2022 9:50	11.55	-0.48	6/25/2022 7:53	11.67	-0.17	6/25/2022 9:15	0.04
6/25/2022 8:07	11.80	0.05	6/26/2022 9:51	11.57	-0.47	6/25/2022 7:54	11.65	-0.12	6/25/2022 9:16	0.03
6/25/2022 8:08	11.81	0.08	6/26/2022 9:52	11.56	-0.42	6/25/2022 7:55	11.70	-0.17	6/25/2022 9:17	0.06
6/25/2022 8:09	11.81	0.04	6/26/2022 9:53	11.58	-0.42	6/25/2022 7:56	11.65	-0.15	6/25/2022 9:18	0.01
6/25/2022 8:10	11.79	0.07	6/26/2022 9:54	11.57	-0.40	6/25/2022 7:57	11.66	-0.17	6/25/2022 9:19	-0.07
6/25/2022 8:11	11.82	0.12	6/26/2022 9:55	11.54	-0.52	6/25/2022 7:58	11.63	-0.14	6/25/2022 9:20	0.01
6/25/2022 8:12	11.78	0.15	6/26/2022 9:56	11.57	-0.52	6/25/2022 7:59	11.69	-0.22	6/25/2022 9:21	-0.01
6/25/2022 8:13	11.80	0.06	6/26/2022 9:57	11.59	-0.44	6/25/2022 8:00	11.64	-0.20	6/25/2022 9:22	-0.02
6/25/2022 8:14	11.80	0.12	6/26/2022 9:58	11.58	-0.51	6/25/2022 8:01	11.68	-0.22	6/25/2022 9:23	-0.04
6/25/2022 8:15	11.79	0.06	6/26/2022 9:59	11.55	-0.56	6/25/2022 8:02	11.65	-0.17	6/25/2022 9:24	-0.01
6/25/2022 8:16	11.75	0.09	6/26/2022 10:00	11.56	-0.42	6/25/2022 8:03	11.69	-0.19	6/25/2022 9:25	-0.02
6/25/2022 8:17	11.80	0.06	6/26/2022 10:01	11.57	-0.38	6/25/2022 8:04	11.65	-0.14	6/25/2022 9:26	-0.01
6/25/2022 8:18	11.81	0.10	6/26/2022 10:02	11.56	-0.45	6/25/2022 8:05	11.69	-0.17	6/25/2022 9:27	0.00
6/25/2022 8:19	11.80	0.08	6/26/2022 10:03	11.56	-0.51	6/25/2022 8:06	11.70	-0.20	6/25/2022 9:28	-0.03
6/25/2022 8:20	11.83	-0.01	6/26/2022 10:04	11.57	-0.48	6/25/2022 8:07	11.62	-0.14	6/25/2022 9:29	0.01
6/25/2022 8:21	11.82	0.05	6/26/2022 10:05	11.58	-0.35	6/25/2022 8:08	11.63	-0.12	6/25/2022 9:30	-0.07
6/25/2022 8:22	11.82	0.10	6/26/2022 10:06	11.58	-0.50	6/25/2022 8:09	11.71	-0.20	6/25/2022 9:31	-0.07
6/25/2022 8:23	11.83	0.13	6/26/2022 10:07	11.57	-0.40	6/25/2022 8:10	11.70	-0.20	6/25/2022 9:32	-0.03
6/25/2022 8:24	11.81	0.05	6/26/2022 10:08	11.57	-0.37	6/25/2022 8:11	11.68	-0.19	6/25/2022 9:33	0.02
6/25/2022 8:25	11.83	0.07	6/26/2022 10:09	11.56	-0.48	6/25/2022 8:12	11.67	-0.18	6/25/2022 9:34	-0.05
6/25/2022 8:26	11.80	0.04	6/26/2022 10:10	11.58	-0.41	6/25/2022 8:13	11.64	-0.17	6/25/2022 9:35	-0.07
6/25/2022 8:27	11.80	0.06	6/26/2022 10:11	11.57	-0.48	6/25/2022 8:14	11.68	-0.20	6/25/2022 9:36	-0.03
6/25/2022 8:28	11.82	0.16	6/26/2022 10:12	11.56	-0.43	6/25/2022 8:15	11.68	-0.19	6/25/2022 9:37	-0.11
6/25/2022 8:29	11.80	0.03	6/26/2022 10:13	11.57	-0.38	6/25/2022 8:16	11.62	-0.16	6/25/2022 9:38	-0.03
6/25/2022 8:30	11.81	0.09	6/26/2022 10:14	11.55	-0.43	6/25/2022 8:17	11.63	-0.14	6/25/2022 9:39	-0.04
6/25/2022 8:31	11.82	0.07	6/26/2022 10:15	11.59	-0.47	6/25/2022 8:18	11.71	-0.22	6/25/2022 9:40	0.02
6/25/2022 8:32	11.81	0.08	6/26/2022 10:16	11.58	-0.45	6/25/2022 8:19	11.70	-0.20	6/25/2022 9:41	0.01
6/25/2022 8:33	11.81	0.10	6/26/2022 10:17	11.59	-0.54	6/25/2022 8:20	11.63	-0.15	6/25/2022 9:42	-0.07
6/25/2022 8:34	11.83	0.01	6/26/2022 10:18	11.56	-0.54	6/25/2022 8:21	11.70	-0.22	6/25/2022 9:43	-0.04
6/25/2022 8:35	11.80	0.05	6/26/2022 10:19	11.58	-0.43	6/25/2022 8:22	11.71	-0.18	6/25/2022 9:44	-0.03
6/25/2022 8:36	11.82	0.14	6/26/2022 10:20	11.56	-0.48	6/25/2022 8:23	11.67	-0.22	6/25/2022 9:45	-0.02
6/25/2022 8:37	11.78	0.09	6/26/2022 10:21	11.60	-0.37	6/25/2022 8:24	11.66	-0.22	6/25/2022 9:46	-0.03
6/25/2022 8:38	11.79	0.14	6/26/2022 10:22	11.56	-0.33	6/25/2022 8:25	11.65	-0.14	6/25/2022 9:47	-0.04
6/25/2022 8:39	11.78	0.13	6/26/2022 10:23	11.56	-0.49	6/25/2022 8:26	11.70	-0.22	6/25/2022 9:48	-0.04
6/25/2022 8:40	11.78	0.11	6/26/2022 10:24	11.57	-0.39	6/25/2022 8:27	11.69	-0.24	6/25/2022 9:49	-0.05
6/25/2022 8:41	11.79	0.06	6/26/2022 10:25	11.57	-0.36	6/25/2022 8:28	11.68	-0.13	6/25/2022 9:50	-0.04
6/25/2022 8:42	11.81	0.09	6/26/2022 10:26	11.58	-0.46	6/25/2022 8:29	11.70	-0.17	6/25/2022 9:51	-0.09
6/25/2022 8:43	11.81	0.08	6/26/2022 10:27	11.58	-0.51	6/25/2022 8:30	11.66	-0.14	6/25/2022 9:52	-0.07
6/25/2022 8:44	11.83	0.09	6/26/2022 10:28	11.54	-0.42	6/25/2022 8:31	11.62	-0.12	6/25/2022 9:53	-0.02
6/25/2022 8:45	11.81	0.12	6/26/2022 10:29	11.58	-0.47	6/25/2022 8:32	11.64	-0.16	6/25/2022 9:54	-0.06
6/25/2022 8:46	11.82	0.06	6/26/2022 10:30	11.56	-0.39	6/25/2022 8:33	11.70	-0.18	6/25/2022 9:55	-0.04
6/25/2022 8:47	11.83	0.07	6/26/2022 10:31	11.54	-0.42	6/25/2022 8:34	11.66	-0.18	6/25/2022 9:56	-0.07
6/25/2022 8:48	11.82	0.09	6/26/2022 10:32	11.55	-0.55	6/25/2022 8:35	11.66	-0.16	6/25/2022 9:57	-0.03
6/25/2022 8:49	11.81	0.13	6/26/2022 10:33	11.58	-0.44	6/25/2022 8:36	11.71	-0.21	6/25/2022 9:58	-0.10
6/25/2022 8:50	11.81	0.06	6/26/2022 10:34	11.55	-0.45	6/25/2022 8:37	11.70	-0.22	6/25/2022 9:59	-0.07
6/25/2022 8:51	11.78	0.04	6/26/2022 10:35	11.55	-0.43	6/25/2022 8:38	11.68	-0.20	6/25/2022 10:00	-0.10
6/25/2022 8:52	11.81	0.03	6/26/2022 10:36	11.57	-0.48	6/25/2022 8:39	11.66	-0.15	6/25/2022 10:01	-0.12
6/25/2022 8:53	11.81	0.04	6/26/2022 10:37	11.55	-0.49	6/25/2022 8:40	11.67	-0.16	6/25/2022 10:02	-0.04
6/25/2022 8:54	11.84	0.07	6/26/2022 10:38	11.57	-0.38	6/25/2022 8:41	11.64	-0.14	6/25/2022 10:03	-0.04
6/25/2022 8:55	11.80	0.14	6/26/2022 10:39	11.57	-0.44	6/25/2022 8:42	11.66	-0.18	6/25/2022 10:04	-0.06
6/25/2022 8:56	11.83	0.02	6/26/2022 10:40	11.55	-0.43	6/25/2022 8:43	11.65	-0.17	6/25/2022 10:05	-0.11
6/25/2022 8:57	11.81	0.04	6/26/2022 10:41	11.55	-0.39	6/25/2022 8:44	11.68	-0.20	6/25/2022 10:06	-0.10
6/25/2022 8:58	11.83	0.06	6/26/2022 10:42	11.57	-0.41	6/25/2022 8:45	11.67	-0.14	6/25/2022 10:07	-0.12
6/25/2022 8:59	11.81	0.04	6/26/2022 10:43	11.59	-0.50	6/25/2022 8:46	11.70	-0.21	6/25/2022 10:08	-0.09
6/25/2022 9:00	11.81	0.09	6/26/2022 10:44	11.55	-0.43	6/25/2022 8:47	11.64	-0.18	6/25/2022 10:09	-0.06
6/25/2022 9:01	11.82	0.12	6/26/2022 10:45	11.58	-0.44	6/25/2022 8:48	11.69	-0.22	6/25/2022 10:10	-0.14
6/25/2022 9:02	11.81	0.04	6/26/2022 10:46	11.55	-0.40	6/25/2022 8:49	11.70	-0.17	6/25/2022 10:11	-0.08
6/25/2022 9:03	11.80	0.04	6/26/2022 10:47	11.57	-0.45	6/25/2022 8:50	11.68	-0.19	6/25/2022 10:12	-0.09
6/25/2022 9:04	11.78	0.11	6/26/2022 10:48	11.59	-0.50	6/25/2022 8:51	11.64	-0.13	6/25/2022 10:13	-0.10
6/25/2022 9:05	11.81	0.09	6/26/2022 10:49	11.58	-0.52	6/25/2022 8:52	11.64	-0.18	6/25/2022 10:14	-0.06
6/25/2022 9:06	11.82	0.10	6/26/2022 10:50	11.56	-0.43	6/25/2022 8:53	11.66	-0.16	6/25/2022 10:15	-0.14
6/25/2022 9:07	11.81	0.06	6/26/2022 10:51	11.57	-0.48	6/25/2022 8:54	11.68	-0.17	6/25/2022 10:16	-0.06
6/25/2022 9:08	11.83	-0.01	6/26/2022 10:52	11.56	-0.43	6/25/2022 8:55	11.64	-0.15	6/25/2022 10:17	-0.12
6/25/2022 9:09	11.78	0.04	6/26/2022 10:53	11.57	-0.48	6/25/2022 8:56	11.66	-0.15	6/25/2022 10:18	-0.08
6/25/2022 9:10	11.80	0.04	6/26/2022 10:54	11.58	-0.51	6/25/2022 8:57	11.67	-0.21	6/25/2022 10:19	-0.05

6/25/2022 9:11	11.80	0.05	6/26/2022 10:55	11.57	-0.37	6/25/2022 8:58	11.69	-0.20	6/25/2022 10:20	-0.11
6/25/2022 9:12	11.81	0.13	6/26/2022 10:56	11.56	-0.45	6/25/2022 8:59	11.71	-0.18	6/25/2022 10:21	-0.10
6/25/2022 9:13	11.81	0.10	6/26/2022 10:57	11.56	-0.47	6/25/2022 9:00	11.68	-0.21	6/25/2022 10:22	-0.11
6/25/2022 9:14	11.81	0.06	6/26/2022 10:58	11.59	-0.39	6/25/2022 9:01	11.65	-0.11	6/25/2022 10:23	-0.10
6/25/2022 9:15	11.81	0.06	6/26/2022 10:59	11.56	-0.45	6/25/2022 9:02	11.68	-0.13	6/25/2022 10:24	-0.11
6/25/2022 9:16	11.79	0.12	6/26/2022 11:00	11.56	-0.40	6/25/2022 9:03	11.65	-0.16	6/25/2022 10:25	-0.10
6/25/2022 9:17	11.81	0.00	6/26/2022 11:01	11.54	-0.47	6/25/2022 9:04	11.62	-0.20	6/25/2022 10:26	-0.08
6/25/2022 9:18	11.81	0.15	6/26/2022 11:02	11.55	-0.43	6/25/2022 9:05	11.64	-0.18	6/25/2022 10:27	-0.12
6/25/2022 9:19	11.82	0.14	6/26/2022 11:03	11.59	-0.43	6/25/2022 9:06	11.66	-0.18	6/25/2022 10:28	-0.06
6/25/2022 9:20	11.82	0.05	6/26/2022 11:04	11.57	-0.42	6/25/2022 9:07	11.69	-0.18	6/25/2022 10:29	-0.12
6/25/2022 9:21	11.82	0.02	6/26/2022 11:05	11.56	-0.41	6/25/2022 9:08	11.65	-0.17	6/25/2022 10:30	-0.11
6/25/2022 9:22	11.81	0.17	6/26/2022 11:06	11.56	-0.36	6/25/2022 9:09	11.64	-0.15	6/25/2022 10:31	-0.07
6/25/2022 9:23	11.80	0.20	6/26/2022 11:07	11.55	-0.51	6/25/2022 9:10	11.68	-0.21	6/25/2022 10:32	-0.12
6/25/2022 9:24	11.81	0.05	6/26/2022 11:08	11.59	-0.34	6/25/2022 9:11	11.65	-0.17	6/25/2022 10:33	-0.15
6/25/2022 9:25	11.79	0.04	6/26/2022 11:09	11.55	-0.41	6/25/2022 9:12	11.66	-0.17	6/25/2022 10:34	-0.11
6/25/2022 9:26	11.80	0.06	6/26/2022 11:10	11.58	-0.49	6/25/2022 9:13	11.67	-0.17	6/25/2022 10:35	-0.07
6/25/2022 9:27	11.77	0.08	6/26/2022 11:11	11.55	-0.46	6/25/2022 9:14	11.61	-0.17	6/25/2022 10:36	-0.07
6/25/2022 9:28	11.79	0.09	6/26/2022 11:12	11.57	-0.34	6/25/2022 9:15	11.65	-0.13	6/25/2022 10:37	-0.08
6/25/2022 9:29	11.80	-0.05	6/26/2022 11:13	11.60	-0.51	6/25/2022 9:16	11.69	-0.17	6/25/2022 10:38	-0.12
6/25/2022 9:30	11.78	0.05	6/26/2022 11:14	11.56	-0.51	6/25/2022 9:17	11.69	-0.20	6/25/2022 10:39	-0.12
6/25/2022 9:31	11.83	0.11	6/26/2022 11:15	11.58	-0.38	6/25/2022 9:18	11.65	-0.17	6/25/2022 10:40	-0.13
6/25/2022 9:32	11.79	0.10	6/26/2022 11:16	11.57	-0.55	6/25/2022 9:19	11.69	-0.19	6/25/2022 10:41	-0.11
6/25/2022 9:33	11.78	0.04	6/26/2022 11:17	11.56	-0.50	6/25/2022 9:20	11.67	-0.21	6/25/2022 10:42	-0.07
6/25/2022 9:34	11.82	0.01	6/26/2022 11:18	11.57	-0.41	6/25/2022 9:21	11.73	-0.19	6/25/2022 10:43	-0.09
6/25/2022 9:35	11.80	0.04	6/26/2022 11:19	11.58	-0.52	6/25/2022 9:22	11.67	-0.19	6/25/2022 10:44	-0.14
6/25/2022 9:36	11.82	0.06	6/26/2022 11:20	11.56	-0.31	6/25/2022 9:23	11.66	-0.16	6/25/2022 10:45	-0.10
6/25/2022 9:37	11.81	0.04	6/26/2022 11:21	11.56	-0.42	6/25/2022 9:24	11.65	-0.09	6/25/2022 10:46	-0.06
6/25/2022 9:38	11.81	0.10	6/26/2022 11:22	11.58	-0.42	6/25/2022 9:25	11.62	-0.15	6/25/2022 10:47	-0.05
6/25/2022 9:39	11.85	0.04	6/26/2022 11:23	11.57	-0.38	6/25/2022 9:26	11.63	-0.16	6/25/2022 10:48	-0.07
6/25/2022 9:40	11.82	0.12	6/26/2022 11:24	11.56	-0.38	6/25/2022 9:27	11.68	-0.24	6/25/2022 10:49	-0.07
6/25/2022 9:41	11.81	0.03	6/26/2022 11:25	11.55	-0.50	6/25/2022 9:28	11.69	-0.23	6/25/2022 10:50	-0.08
6/25/2022 9:42	11.82	0.08	6/26/2022 11:26	11.55	-0.46	6/25/2022 9:29	11.67	-0.16	6/25/2022 10:51	-0.10
6/25/2022 9:43	11.84	0.06	6/26/2022 11:27	11.59	-0.50	6/25/2022 9:30	11.69	-0.20	6/25/2022 10:52	-0.07
6/25/2022 9:44	11.80	0.09	6/26/2022 11:28	11.56	-0.52	6/25/2022 9:31	11.71	-0.24	6/25/2022 10:53	-0.10
6/25/2022 9:45	11.84	0.06	6/26/2022 11:29	11.55	-0.50	6/25/2022 9:32	11.68	-0.18	6/25/2022 10:54	-0.12
6/25/2022 9:46	11.81	0.04	6/26/2022 11:30	11.57	-0.48	6/25/2022 9:33	11.70	-0.22	6/25/2022 10:55	-0.10
6/25/2022 9:47	11.82	0.11	6/26/2022 11:31	11.56	-0.39	6/25/2022 9:34	11.66	-0.13	6/25/2022 10:56	-0.14
6/25/2022 9:48	11.83	0.07	6/26/2022 11:32	11.56	-0.43	6/25/2022 9:35	11.66	-0.17	6/25/2022 10:57	-0.09
6/25/2022 9:49	11.82	0.14	6/26/2022 11:33	11.55	-0.52	6/25/2022 9:36	11.71	-0.17	6/25/2022 10:58	-0.06
6/25/2022 9:50	11.84	0.14	6/26/2022 11:34	11.57	-0.62	6/25/2022 9:37	11.68	-0.19	6/25/2022 10:59	-0.10
6/25/2022 9:51	11.83	0.06	6/26/2022 11:35	11.58	-0.45	6/25/2022 9:38	11.71	-0.18	6/25/2022 11:00	-0.10
6/25/2022 9:52	11.84	0.11	6/26/2022 11:36	11.58	-0.49	6/25/2022 9:39	11.68	-0.17	6/25/2022 11:01	-0.08
6/25/2022 9:53	11.83	0.05	6/26/2022 11:37	11.56	-0.48	6/25/2022 9:40	11.66	-0.13	6/25/2022 11:02	-0.11
6/25/2022 9:54	11.80	0.03	6/26/2022 11:38	11.57	-0.43	6/25/2022 9:41	11.65	-0.19	6/25/2022 11:03	-0.11
6/25/2022 9:55	11.80	0.04	6/26/2022 11:39	11.59	-0.41	6/25/2022 9:42	11.68	-0.18	6/25/2022 11:04	-0.07
6/25/2022 9:56	11.82	0.14	6/26/2022 11:40	11.57	-0.36	6/25/2022 9:43	11.64	-0.18	6/25/2022 11:05	-0.08
6/25/2022 9:57	11.82	0.04	6/26/2022 11:41	11.57	-0.48	6/25/2022 9:44	11.70	-0.22	6/25/2022 11:06	-0.09
6/25/2022 9:58	11.83	0.04	6/26/2022 11:42	11.56	-0.48	6/25/2022 9:45	11.67	-0.20	6/25/2022 11:07	-0.07
6/25/2022 9:59	11.82	0.06	6/26/2022 11:43	11.54	-0.38	6/25/2022 9:46	11.67	-0.18	6/25/2022 11:08	-0.14
6/25/2022 10:00	11.81	0.10	6/26/2022 11:44	11.57	-0.44	6/25/2022 9:47	11.68	-0.23	6/25/2022 11:09	-0.14
6/25/2022 10:01	11.84	0.08	6/26/2022 11:45	11.57	-0.39	6/25/2022 9:48	11.68	-0.20	6/25/2022 11:10	-0.11
6/25/2022 10:02	11.84	0.04	6/26/2022 11:46	11.58	-0.51	6/25/2022 9:49	11.70	-0.19	6/25/2022 11:11	-0.14
6/25/2022 10:03	11.84	0.06	6/26/2022 11:47	11.58	-0.47	6/25/2022 9:50	11.65	-0.12	6/25/2022 11:12	-0.09
6/25/2022 10:04	11.83	0.15	6/26/2022 11:48	11.54	-0.44	6/25/2022 9:51	11.69	-0.20	6/25/2022 11:13	-0.12
6/25/2022 10:05	11.86	0.13	6/26/2022 11:49	11.55	-0.47	6/25/2022 9:52	11.67	-0.12	6/25/2022 11:14	-0.08
6/25/2022 10:06	11.86	0.08	6/26/2022 11:50	11.56	-0.45	6/25/2022 9:53	11.65	-0.15	6/25/2022 11:15	-0.06
6/25/2022 10:07	11.86	0.02	6/26/2022 11:51	11.56	-0.48	6/25/2022 9:54	11.65	-0.17	6/25/2022 11:16	-0.11
6/25/2022 10:08	11.81	0.11	6/26/2022 11:52	11.59	-0.41	6/25/2022 9:55	11.66	-0.13	6/25/2022 11:17	-0.09
6/25/2022 10:09	11.86	0.08	6/26/2022 11:53	11.59	-0.38	6/25/2022 9:56	11.65	-0.12	6/25/2022 11:18	-0.09
6/25/2022 10:10	11.84	0.10	6/26/2022 11:54	11.56	-0.57	6/25/2022 9:57	11.67	-0.26	6/25/2022 11:19	-0.10
6/25/2022 10:11	11.85	0.00	6/26/2022 11:55	11.55	-0.52	6/25/2022 9:58	11.67	-0.18	6/25/2022 11:20	-0.12
6/25/2022 10:12	11.84	0.07	6/26/2022 11:56	11.59	-0.51	6/25/2022 9:59	11.69	-0.15	6/25/2022 11:21	-0.10
6/25/2022 10:13	11.83	0.02	6/26/2022 11:57	11.56	-0.41	6/25/2022 10:00	11.63	-0.14	6/25/2022 11:22	-0.09
6/25/2022 10:14	11.85	0.05	6/26/2022 11:58	11.58	-0.38	6/25/2022 10:01	11.70	-0.21	6/25/2022 11:23	-0.11
6/25/2022 10:15	11.81	0.09	6/26/2022 11:59	11.60	-0.46	6/25/2022 10:02	11.69	-0.22	6/25/2022 11:24	-0.09
6/25/2022 10:16	11.84	0.14	6/26/2022 12:00	11.56	-0.58	6/25/2022 10:03	11.64	-0.19	6/25/2022 11:25	-0.08
6/25/2022 10:17	11.84	0.07	6/26/2022 12:01	11.54	-0.50	6/25/2022 10:04	11.69	-0.21	6/25/2022 11:26	-0.09
6/25/2022 10:18	11.83	0.13	6/26/2022 12:02	11.54	-0.38	6/25/2022 10:05	11.68	-0.20	6/25/2022 11:27	-0.10
6/25/2022 10:19	11.84	0.08	6/26/2022 12:03	11.56	-0.44	6/25/2022 10:06	11.66	-0.15	6/25/2022 11:28	-0.10
6/25/2022 10:20	11.85	0.01	6/26/2022 12:04	11.59	-0.46	6/25/2022 10:07	11.63	-0.13	6/25/2022 11:29	-0.12
6/25/2022 10:21	11.84	0.08	6/26/2022 12:05	11.57	-0.45	6/25/2022 10:08	11.62	-0.16	6/25/2022 11:30	-0.09
6/25/2022 10:22	11.82	0.03	6/26/2022 12:06	11.58	-0.43	6/25/2022 10:09	11.71	-0.19	6/25/2022 11:31	-0.12
6/25/2022 10:23	11.84	0.06	6/26/2022 12:07	11.58	-0.34	6/25/2022 10:10	11.66	-0.16	6/25/2022 11:32	-0.08
6/25/2022 10:24	11.84	0.11	6/26/2022 12:08	11.57	-0.42	6/25/2022 10:11	11.65	-0.14	6/25/2022 11:33	-0.08
6/25/2022 10:25	11.84	0.06	6/26/2022 12:09	11.57	-0.44	6/25/2022 10:12	11.68	-0.22	6/25/2022 11:34	-0.11
6/25/2022 10:26	11.81	0.10	6/26/2022 12:10	11.57	-0.48	6/25/2022 10:13	11.65	-0.14	6/25/2022 11:35	-0.09
6/25/2022 10:27	11.85	0.02	6/26/2022 12:11	11.57	-0.32	6/25/2022 10:14	11.64	-0.12	6/25/2022 11:36	-0.08
6/25/2022 10:28	11.82	0.09	6/26/2022 12:12	11.58	-0.45	6/25/2022 10:15	11.67	-0.23	6/25/2022 11:37	-0.12
6/25/2022 10:29	11.82	0.09	6/26/2022 12:13	11.57	-0.40	6/25/2022 10:16	11.68	-0.16	6/25/2022 11:38	-0.09
6/25/2022 10:30	11.80	0.11	6/26/2022 12:14	11.56	-0.39	6/25/2022 10:17	11.69	-0.17	6/25/2022 11:39	-0.10
6/25/2022 10:31	11.81	0.07	6/26/2022 12:15	11.58	-0.41	6/25/2022 10:18	11.64	-0.17	6/25/2022 11:40	-0.12
6/25/2022 10:32	11.81	0.16	6/26/2022 12:16	11.58	-0.52	6/25/2022 10:19	11.65	-0.15	6/25/2022 11:41	-0.11
6/25/2022 10:33	11.81	0.05	6/26/2022 12:17	11.55	-0.41	6/25/2022 10:20	11.64	-0.15	6/25/2022 11:42	-0.10
6/25/2022 10:34	11.81	0.08	6/26/2022 12:18	11.57	-0.45	6/25/2022 10:21	11.70	-0.21	6/25/2022 11:43	-0.12
6/25/2022 10:35	11.83	0.13	6/26/2022 12:19	11.54	-0.47	6/25/2022 10:22	11.69	-0.20	6/25/2022 11:44	-0.08
6/25/2022 10:36	11.82	0.06	6/26/2022 12:20	11.56	-0.49	6/25/2022 10:23	11.67	-0.15	6/25/2022 11:45	-0.11
6/25/2022 10:37	11.81	0.08	6/26/2022 12:21	11.56	-0.42	6/25/2022 10:24	11.63	-0.19	6/25/2022 11:46	-0.09
6/25/2022 10:38	11.81	0.13	6/26/2022 12:22	11.57	-0.44	6/25/2022 10:25	11.64	-0.13	6/25/2022 11:47	-0.10

6/25/2022 10:39	11.83	0.04	6/26/2022 12:23	11.56	-0.40	6/25/2022 10:26	11.65	-0.16	6/25/2022 11:48	-0.16
6/25/2022 10:40	11.82	0.00	6/26/2022 12:24	11.57	-0.48	6/25/2022 10:27	11.67	-0.19	6/25/2022 11:49	-0.12
6/25/2022 10:41	11.82	0.09	6/26/2022 12:25	11.60	-0.46	6/25/2022 10:28	11.67	-0.12	6/25/2022 11:50	-0.09
6/25/2022 10:42	11.86	0.08	6/26/2022 12:26	11.57	-0.50	6/25/2022 10:29	11.64	-0.20	6/25/2022 11:51	-0.10
6/25/2022 10:43	11.84	0.02	6/26/2022 12:27	11.56	-0.39	6/25/2022 10:30	11.69	-0.16	6/25/2022 11:52	-0.04
6/25/2022 10:44	11.84	0.08	6/26/2022 12:28	11.56	-0.46	6/25/2022 10:31	11.66	-0.16	6/25/2022 11:53	-0.11
6/25/2022 10:45	11.85	0.10	6/26/2022 12:29	11.56	-0.45	6/25/2022 10:32	11.69	-0.20	6/25/2022 11:54	-0.07
6/25/2022 10:46	11.83	0.03	6/26/2022 12:30	11.57	-0.50	6/25/2022 10:33	11.67	-0.19	6/25/2022 11:55	-0.09
6/25/2022 10:47	11.85	0.09	6/26/2022 12:31	11.56	-0.45	6/25/2022 10:34	11.66	-0.14	6/25/2022 11:56	-0.05
6/25/2022 10:48	11.84	0.06	6/26/2022 12:32	11.56	-0.48	6/25/2022 10:35	11.70	-0.24	6/25/2022 11:57	-0.05
6/25/2022 10:49	11.81	0.05	6/26/2022 12:33	11.55	-0.48	6/25/2022 10:36	11.62	-0.14	6/25/2022 11:58	-0.09
6/25/2022 10:50	11.82	0.05	6/26/2022 12:34	11.57	-0.42	6/25/2022 10:37	11.64	-0.19	6/25/2022 11:59	-0.09
6/25/2022 10:51	11.85	0.10	6/26/2022 12:35	11.56	-0.44	6/25/2022 10:38	11.65	-0.15	6/25/2022 12:00	-0.08
6/25/2022 10:52	11.87	0.12	6/26/2022 12:36	11.54	-0.46	6/25/2022 10:39	11.70	-0.21	6/25/2022 12:01	-0.08
6/25/2022 10:53	11.82	0.01	6/26/2022 12:37	11.58	-0.38	6/25/2022 10:40	11.65	-0.14	6/25/2022 12:02	-0.08
6/25/2022 10:54	11.86	0.13	6/26/2022 12:38	11.55	-0.52	6/25/2022 10:41	11.66	-0.22	6/25/2022 12:03	-0.12
6/25/2022 10:55	11.82	0.07	6/26/2022 12:39	11.56	-0.48	6/25/2022 10:42	11.64	-0.15	6/25/2022 12:04	-0.05
6/25/2022 10:56	11.86	0.09	6/26/2022 12:40	11.57	-0.55	6/25/2022 10:43	11.67	-0.17	6/25/2022 12:05	-0.05
6/25/2022 10:57	11.85	0.06	6/26/2022 12:41	11.56	-0.41	6/25/2022 10:44	11.67	-0.16	6/25/2022 12:06	-0.08
6/25/2022 10:58	11.85	0.08	6/26/2022 12:42	11.54	-0.42	6/25/2022 10:45	11.69	-0.21	6/25/2022 12:07	-0.08
6/25/2022 10:59	11.86	0.15	6/26/2022 12:43	11.56	-0.37	6/25/2022 10:46	11.64	-0.14	6/25/2022 12:08	-0.16
6/25/2022 11:00	11.84	0.08	6/26/2022 12:44	11.59	-0.42	6/25/2022 10:47	11.71	-0.21	6/25/2022 12:09	-0.06
6/25/2022 11:01	11.84	0.08	6/26/2022 12:45	11.56	-0.51	6/25/2022 10:48	11.65	-0.12	6/25/2022 12:10	-0.09
6/25/2022 11:02	11.85	0.05	6/26/2022 12:46	11.56	-0.46	6/25/2022 10:49	11.69	-0.17	6/25/2022 12:11	-0.09
6/25/2022 11:03	11.88	0.05	6/26/2022 12:47	11.58	-0.56	6/25/2022 10:50	11.62	-0.16	6/25/2022 12:12	-0.10
6/25/2022 11:04	11.82	0.10	6/26/2022 12:48	11.56	-0.41	6/25/2022 10:51	11.65	-0.18	6/25/2022 12:13	-0.07
6/25/2022 11:05	11.84	0.09	6/26/2022 12:49	11.57	-0.44	6/25/2022 10:52	11.68	-0.22	6/25/2022 12:14	-0.06
6/25/2022 11:06	11.86	0.09	6/26/2022 12:50	11.55	-0.49	6/25/2022 10:53	11.69	-0.13	6/25/2022 12:15	-0.10
6/25/2022 11:07	11.86	0.01	6/26/2022 12:51	11.56	-0.49	6/25/2022 10:54	11.67	-0.17	6/25/2022 12:16	-0.12
6/25/2022 11:08	11.87	0.15	6/26/2022 12:52	11.56	-0.46	6/25/2022 10:55	11.66	-0.14	6/25/2022 12:17	-0.03
6/25/2022 11:09	11.83	0.08	6/26/2022 12:53	11.57	-0.47	6/25/2022 10:56	11.70	-0.18	6/25/2022 12:18	-0.07
6/25/2022 11:10	11.88	0.14	6/26/2022 12:54	11.58	-0.48	6/25/2022 10:57	11.62	-0.14	6/25/2022 12:19	-0.07
6/25/2022 11:11	11.87	0.03	6/26/2022 12:55	11.58	-0.44	6/25/2022 10:58	11.66	-0.22	6/25/2022 12:20	-0.14
6/25/2022 11:12	11.86	0.18	6/26/2022 12:56	11.57	-0.43	6/25/2022 10:59	11.66	-0.18	6/25/2022 12:21	-0.12
6/25/2022 11:13	11.91	0.08	6/26/2022 12:57	11.57	-0.56	6/25/2022 11:00	11.66	-0.19	6/25/2022 12:22	-0.11
6/25/2022 11:14	11.88	0.04	6/26/2022 12:58	11.57	-0.51	6/25/2022 11:01	11.70	-0.22	6/25/2022 12:23	-0.12
6/25/2022 11:15	11.84	0.17	6/26/2022 12:59	11.58	-0.50	6/25/2022 11:02	11.67	-0.14	6/25/2022 12:24	-0.08
6/25/2022 11:16	11.86	0.14	6/26/2022 13:00	11.59	-0.44	6/25/2022 11:03	11.70	-0.23	6/25/2022 12:25	-0.10
6/25/2022 11:17	11.86	0.12	6/26/2022 13:01	11.55	-0.38	6/25/2022 11:04	11.66	-0.17	6/25/2022 12:26	-0.10
6/25/2022 11:18	11.85	0.15	6/26/2022 13:02	11.57	-0.40	6/25/2022 11:05	11.64	-0.16	6/25/2022 12:27	-0.12
6/25/2022 11:19	11.84	0.04	6/26/2022 13:03	11.57	-0.37	6/25/2022 11:06	11.70	-0.22	6/25/2022 12:28	-0.17
6/25/2022 11:20	11.88	0.03	6/26/2022 13:04	11.57	-0.43	6/25/2022 11:07	11.63	-0.20	6/25/2022 12:29	-0.13
6/25/2022 11:21	11.85	0.03	6/26/2022 13:05	11.57	-0.42	6/25/2022 11:08	11.68	-0.24	6/25/2022 12:30	-0.09
6/25/2022 11:22	11.86	0.03	6/26/2022 13:06	11.55	-0.53	6/25/2022 11:09	11.69	-0.15	6/25/2022 12:31	-0.13
6/25/2022 11:23	11.90	0.04	6/26/2022 13:07	11.58	-0.46	6/25/2022 11:10	11.69	-0.19	6/25/2022 12:32	-0.10
6/25/2022 11:24	11.86	0.15	6/26/2022 13:08	11.56	-0.49	6/25/2022 11:11	11.70	-0.22	6/25/2022 12:33	-0.07
6/25/2022 11:25	11.87	0.04	6/26/2022 13:09	11.55	-0.38	6/25/2022 11:12	11.64	-0.15	6/25/2022 12:34	-0.12
6/25/2022 11:26	11.87	0.03	6/26/2022 13:10	11.56	-0.48	6/25/2022 11:13	11.65	-0.20	6/25/2022 12:35	-0.13
6/25/2022 11:27	11.88	0.18	6/26/2022 13:11	11.55	-0.52	6/25/2022 11:14	11.66	-0.10	6/25/2022 12:36	-0.11
6/25/2022 11:28	11.87	0.13	6/26/2022 13:12	11.61	-0.47	6/25/2022 11:15	11.63	-0.17	6/25/2022 12:37	-0.10
6/25/2022 11:29	11.87	0.07	6/26/2022 13:13	11.56	-0.41	6/25/2022 11:16	11.70	-0.20	6/25/2022 12:38	-0.12
6/25/2022 11:30	11.89	0.17	6/26/2022 13:14	11.57	-0.39	6/25/2022 11:17	11.65	-0.18	6/25/2022 12:39	-0.08
6/25/2022 11:31	11.89	0.06	6/26/2022 13:15	11.56	-0.47	6/25/2022 11:18	11.66	-0.12	6/25/2022 12:40	-0.10
6/25/2022 11:32	11.86	0.04	6/26/2022 13:16	11.56	-0.48	6/25/2022 11:19	11.67	-0.19	6/25/2022 12:41	-0.11
6/25/2022 11:33	11.92	0.08	6/26/2022 13:17	11.57	-0.53	6/25/2022 11:20	11.68	-0.15	6/25/2022 12:42	-0.14
6/25/2022 11:34	11.89	0.12	6/26/2022 13:18	11.54	-0.51	6/25/2022 11:21	11.68	-0.19	6/25/2022 12:43	-0.09
6/25/2022 11:35	11.88	-0.01	6/26/2022 13:19	11.58	-0.50	6/25/2022 11:22	11.64	-0.16	6/25/2022 12:44	-0.14
6/25/2022 11:36	11.89	0.08	6/26/2022 13:20	11.57	-0.53	6/25/2022 11:23	11.66	-0.15	6/25/2022 12:45	-0.12
6/25/2022 11:37	11.90	0.13	6/26/2022 13:21	11.55	-0.42	6/25/2022 11:24	11.64	-0.13	6/25/2022 12:46	-0.09
6/25/2022 11:38	11.87	0.09	6/26/2022 13:22	11.58	-0.53	6/25/2022 11:25	11.66	-0.18	6/25/2022 12:47	-0.04
6/25/2022 11:39	11.87	0.04	6/26/2022 13:23	11.58	-0.52	6/25/2022 11:26	11.68	-0.18	6/25/2022 12:48	-0.08
6/25/2022 11:40	11.88	0.10	6/26/2022 13:24	11.55	-0.52	6/25/2022 11:27	11.68	-0.21	6/25/2022 12:49	-0.14
6/25/2022 11:41	11.89	0.04	6/26/2022 13:25	11.57	-0.41	6/25/2022 11:28	11.65	-0.17	6/25/2022 12:50	-0.10
6/25/2022 11:42	11.87	0.08	6/26/2022 13:26	11.55	-0.41	6/25/2022 11:29	11.68	-0.16	6/25/2022 12:51	-0.09
6/25/2022 11:43	11.86	0.02	6/26/2022 13:27	11.56	-0.40	6/25/2022 11:30	11.64	-0.21	6/25/2022 12:52	-0.06
6/25/2022 11:44	11.87	0.08	6/26/2022 13:28	11.54	-0.46	6/25/2022 11:31	11.66	-0.20	6/25/2022 12:53	-0.06
6/25/2022 11:45	11.88	0.08	6/26/2022 13:29	11.55	-0.47	6/25/2022 11:32	11.69	-0.22	6/25/2022 12:54	-0.10
6/25/2022 11:46	11.86	0.09	6/26/2022 13:30	11.57	-0.52	6/25/2022 11:33	11.67	-0.15	6/25/2022 12:55	-0.08
6/25/2022 11:47	11.89	0.05	6/26/2022 13:31	11.57	-0.39	6/25/2022 11:34	11.65	-0.14	6/25/2022 12:56	-0.10
6/25/2022 11:48	11.88	0.06	6/26/2022 13:32	11.56	-0.56	6/25/2022 11:35	11.68	-0.22	6/25/2022 12:57	-0.10
6/25/2022 11:49	11.89	-0.04	6/26/2022 13:33	11.57	-0.53	6/25/2022 11:36	11.72	-0.20	6/25/2022 12:58	-0.08
6/25/2022 11:50	11.88	0.03	6/26/2022 13:34	11.54	-0.37	6/25/2022 11:37	11.68	-0.17	6/25/2022 12:59	-0.10
6/25/2022 11:51	11.87	0.05	6/26/2022 13:35	11.58	-0.50	6/25/2022 11:38	11.64	-0.16	6/25/2022 13:00	-0.13
6/25/2022 11:52	11.86	0.07	6/26/2022 13:36	11.57	-0.36	6/25/2022 11:39	11.65	-0.17	6/25/2022 13:01	-0.09
6/25/2022 11:53	11.86	0.02	6/26/2022 13:37	11.57	-0.50	6/25/2022 11:40	11.67	-0.21	6/25/2022 13:02	-0.10
6/25/2022 11:54	11.88	0.06	6/26/2022 13:38	11.59	-0.44	6/25/2022 11:41	11.69	-0.18	6/25/2022 13:03	-0.12
6/25/2022 11:55	11.89	0.06	6/26/2022 13:39	11.55	-0.48	6/25/2022 11:42	11.68	-0.21	6/25/2022 13:04	-0.04
6/25/2022 11:56	11.88	0.05	6/26/2022 13:40	11.57	-0.55	6/25/2022 11:43	11.69	-0.19	6/25/2022 13:05	-0.12
6/25/2022 11:57	11.88	0.04	6/26/2022 13:41	11.53	-0.51	6/25/2022 11:44	11.63	-0.15	6/25/2022 13:06	-0.14
6/25/2022 11:58	11.87	0.13	6/26/2022 13:42	11.57	-0.42	6/25/2022 11:45	11.69	-0.18	6/25/2022 13:07	-0.13
6/25/2022 11:59	11.88	0.07	6/26/2022 13:43	11.56	-0.53	6/25/2022 11:46	11.67	-0.18	6/25/2022 13:08	-0.11
6/25/2022 12:00	11.88	0.02	6/26/2022 13:44	11.57	-0.41	6/25/2022 11:47	11.69	-0.16	6/25/2022 13:09	-0.11
6/25/2022 12:01	11.88	0.13	6/26/2022 13:45	11.55	-0.47	6/25/2022 11:48	11.67	-0.12	6/25/2022 13:10	-0.09
6/25/2022 12:02	11.88	0.05	6/26/2022 13:46	11.56	-0.48	6/25/2022 11:49	11.67	-0.15	6/25/2022 13:11	-0.14
6/25/2022 12:03	11.89	0.02	6/26/2022 13:47	11.58	-0.49	6/25/2022 11:50	11.67	-0.21	6/25/2022 13:12	-0.10
6/25/2022 12:04	11.88	0.07	6/26/2022 13:48	11.58	-0.48	6/25/2022 11:51	11.65	-0.21	6/25/2022 13:13	-0.11
6/25/2022 12:05	11.90	0.04	6/26/2022 13:49	11.56	-0.53	6/25/2022 11:52	11.68	-0.17	6/25/2022 13:14	-0.11
6/25/2022 12:06	11.88	-0.02	6/26/2022 13:50	11.56	-0.42	6/25/2022 11:53	11.67	-0.21	6/25/2022 13:15	-0.07

6/25/2022 12:07	11.89	0.04	6/26/2022 13:51	11.57	-0.46	6/25/2022 11:54	11.65	-0.17	6/25/2022 13:16	-0.04
6/25/2022 12:08	11.86	0.07	6/26/2022 13:52	11.57	-0.42	6/25/2022 11:55	11.63	-0.15	6/25/2022 13:17	-0.05
6/25/2022 12:09	11.88	0.08	6/26/2022 13:53	11.56	-0.44	6/25/2022 11:56	11.67	-0.15	6/25/2022 13:18	-0.13
6/25/2022 12:10	11.87	0.13	6/26/2022 13:54	11.58	-0.44	6/25/2022 11:57	11.63	-0.11	6/25/2022 13:19	-0.10
6/25/2022 12:11	11.88	0.06	6/26/2022 13:55	11.56	-0.41	6/25/2022 11:58	11.68	-0.20	6/25/2022 13:20	-0.09
6/25/2022 12:12	11.85	0.07	6/26/2022 13:56	11.57	-0.40	6/25/2022 11:59	11.64	-0.18	6/25/2022 13:21	-0.07
6/25/2022 12:13	11.89	0.03	6/26/2022 13:57	11.57	-0.45	6/25/2022 12:00	11.70	-0.21	6/25/2022 13:22	-0.10
6/25/2022 12:14	11.86	0.10	6/26/2022 13:58	11.55	-0.52	6/25/2022 12:01	11.64	-0.13	6/25/2022 13:23	-0.11
6/25/2022 12:15	11.89	0.07	6/26/2022 13:59	11.57	-0.49	6/25/2022 12:02	11.68	-0.19	6/25/2022 13:24	-0.11
6/25/2022 12:16	11.87	0.08	6/26/2022 14:00	11.56	-0.48	6/25/2022 12:03	11.65	-0.15	6/25/2022 13:25	-0.08
6/25/2022 12:17	11.88	0.11	6/26/2022 14:01	11.58	-0.47	6/25/2022 12:04	11.64	-0.14	6/25/2022 13:26	-0.09
6/25/2022 12:18	11.88	0.06	6/26/2022 14:02	11.56	-0.48	6/25/2022 12:05	11.63	-0.15	6/25/2022 13:27	-0.08
6/25/2022 12:19	11.86	0.09	6/26/2022 14:03	11.59	-0.48	6/25/2022 12:06	11.69	-0.19	6/25/2022 13:28	-0.12
6/25/2022 12:20	11.86	0.07	6/26/2022 14:04	11.59	-0.50	6/25/2022 12:07	11.71	-0.19	6/25/2022 13:29	-0.12
6/25/2022 12:21	11.88	-0.02	6/26/2022 14:05	11.56	-0.44	6/25/2022 12:08	11.67	-0.10	6/25/2022 13:30	-0.10
6/25/2022 12:22	11.85	0.07	6/26/2022 14:06	11.56	-0.51	6/25/2022 12:09	11.63	-0.17	6/25/2022 13:31	-0.09
6/25/2022 12:23	11.86	0.04	6/26/2022 14:07	11.54	-0.44	6/25/2022 12:10	11.66	-0.17	6/25/2022 13:32	-0.05
6/25/2022 12:24	11.86	0.03	6/26/2022 14:08	11.58	-0.45	6/25/2022 12:11	11.68	-0.19	6/25/2022 13:33	-0.14
6/25/2022 12:25	11.84	0.07	6/26/2022 14:09	11.58	-0.41	6/25/2022 12:12	11.63	-0.16	6/25/2022 13:34	-0.10
6/25/2022 12:26	11.84	0.09	6/26/2022 14:10	11.56	-0.38	6/25/2022 12:13	11.69	-0.25	6/25/2022 13:35	-0.10
6/25/2022 12:27	11.88	0.05	6/26/2022 14:11	11.57	-0.52	6/25/2022 12:14	11.69	-0.23	6/25/2022 13:36	-0.18
6/25/2022 12:28	11.90	0.02	6/26/2022 14:12	11.56	-0.52	6/25/2022 12:15	11.70	-0.20	6/25/2022 13:37	-0.11
6/25/2022 12:29	11.86	0.06	6/26/2022 14:13	11.59	-0.42	6/25/2022 12:16	11.66	-0.13	6/25/2022 13:38	-0.08
6/25/2022 12:30	11.89	0.06	6/26/2022 14:14	11.57	-0.43	6/25/2022 12:17	11.71	-0.20	6/25/2022 13:39	-0.12
6/25/2022 12:31	11.88	0.03	6/26/2022 14:15	11.56	-0.50	6/25/2022 12:18	11.65	-0.15	6/25/2022 13:40	-0.14
6/25/2022 12:32	11.87	0.07	6/26/2022 14:16	11.57	-0.48	6/25/2022 12:19	11.67	-0.20	6/25/2022 13:41	-0.07
6/25/2022 12:33	11.88	0.08	6/26/2022 14:17	11.59	-0.50	6/25/2022 12:20	11.68	-0.21	6/25/2022 13:42	-0.09
6/25/2022 12:34	11.90	0.15	6/26/2022 14:18	11.58	-0.50	6/25/2022 12:21	11.67	-0.18	6/25/2022 13:43	-0.11
6/25/2022 12:35	11.89	0.07	6/26/2022 14:19	11.56	-0.45	6/25/2022 12:22	11.67	-0.23	6/25/2022 13:44	-0.08
6/25/2022 12:36	11.91	0.03	6/26/2022 14:20	11.57	-0.43	6/25/2022 12:23	11.65	-0.13	6/25/2022 13:45	-0.08
6/25/2022 12:37	11.89	-0.02	6/26/2022 14:21	11.56	-0.43	6/25/2022 12:24	11.66	-0.12	6/25/2022 13:46	-0.11
6/25/2022 12:38	11.88	0.03	6/26/2022 14:22	11.57	-0.45	6/25/2022 12:25	11.64	-0.15	6/25/2022 13:47	-0.12
6/25/2022 12:39	11.89	0.12	6/26/2022 14:23	11.57	-0.54	6/25/2022 12:26	11.63	-0.20	6/25/2022 13:48	-0.07
6/25/2022 12:40	11.87	0.17	6/26/2022 14:24	11.58	-0.51	6/25/2022 12:27	11.68	-0.19	6/25/2022 13:49	-0.08
6/25/2022 12:41	11.89	0.13	6/26/2022 14:25	11.57	-0.36	6/25/2022 12:28	11.66	-0.18	6/25/2022 13:50	-0.13
6/25/2022 12:42	11.89	0.14	6/26/2022 14:26	11.55	-0.41	6/25/2022 12:29	11.67	-0.24	6/25/2022 13:51	-0.13
6/25/2022 12:43	11.89	0.16	6/26/2022 14:27	11.58	-0.43	6/25/2022 12:30	11.64	-0.13	6/25/2022 13:52	-0.10
6/25/2022 12:44	11.88	0.03	6/26/2022 14:28	11.56	-0.43	6/25/2022 12:31	11.66	-0.14	6/25/2022 13:53	-0.11
6/25/2022 12:45	11.86	0.02	6/26/2022 14:29	11.57	-0.42	6/25/2022 12:32	11.68	-0.21	6/25/2022 13:54	-0.09
6/25/2022 12:46	11.90	0.07	6/26/2022 14:30	11.56	-0.45	6/25/2022 12:33	11.68	-0.21	6/25/2022 13:55	-0.11
6/25/2022 12:47	11.88	0.06	6/26/2022 14:31	11.56	-0.44	6/25/2022 12:34	11.65	-0.14	6/25/2022 13:56	-0.08
6/25/2022 12:48	11.89	0.07	6/26/2022 14:32	11.56	-0.48	6/25/2022 12:35	11.69	-0.22	6/25/2022 13:57	-0.12
6/25/2022 12:49	11.90	0.07	6/26/2022 14:33	11.58	-0.51	6/25/2022 12:36	11.70	-0.19	6/25/2022 13:58	-0.08
6/25/2022 12:50	11.88	0.06	6/26/2022 14:34	11.56	-0.36	6/25/2022 12:37	11.65	-0.17	6/25/2022 13:59	-0.12
6/25/2022 12:51	11.91	0.07	6/26/2022 14:35	11.58	-0.42	6/25/2022 12:38	11.64	-0.17	6/25/2022 14:00	-0.13
6/25/2022 12:52	11.89	0.08	6/26/2022 14:36	11.58	-0.43	6/25/2022 12:39	11.68	-0.22	6/25/2022 14:01	-0.10
6/25/2022 12:53	11.89	0.06	6/26/2022 14:37	11.58	-0.49	6/25/2022 12:40	11.64	-0.17	6/25/2022 14:02	-0.14
6/25/2022 12:54	11.90	0.04	6/26/2022 14:38	11.58	-0.41	6/25/2022 12:41	11.63	-0.16	6/25/2022 14:03	-0.10
6/25/2022 12:55	11.89	0.17	6/26/2022 14:39	11.58	-0.48	6/25/2022 12:42	11.63	-0.18	6/25/2022 14:04	-0.10
6/25/2022 12:56	11.88	0.07	6/26/2022 14:40	11.58	-0.51	6/25/2022 12:43	11.65	-0.13	6/25/2022 14:05	-0.09
6/25/2022 12:57	11.88	0.07	6/26/2022 14:41	11.56	-0.45	6/25/2022 12:44	11.66	-0.17	6/25/2022 14:06	-0.09
6/25/2022 12:58	11.88	0.06	6/26/2022 14:42	11.56	-0.39	6/25/2022 12:45	11.65	-0.18	6/25/2022 14:07	-0.07
6/25/2022 12:59	11.91	0.00	6/26/2022 14:43	11.57	-0.49	6/25/2022 12:46	11.67	-0.18	6/25/2022 14:08	-0.11
6/25/2022 13:00	11.91	0.05	6/26/2022 14:44	11.55	-0.44	6/25/2022 12:47	11.65	-0.12	6/25/2022 14:09	-0.11
6/25/2022 13:01	11.89	0.08	6/26/2022 14:45	11.56	-0.48	6/25/2022 12:48	11.67	-0.15	6/25/2022 14:10	-0.07
6/25/2022 13:02	11.89	0.05	6/26/2022 14:46	11.58	-0.47	6/25/2022 12:49	11.69	-0.19	6/25/2022 14:11	-0.08
6/25/2022 13:03	11.90	0.07	6/26/2022 14:47	11.55	-0.41	6/25/2022 12:50	11.65	-0.20	6/25/2022 14:12	-0.14
6/25/2022 13:04	11.89	0.01	6/26/2022 14:48	11.54	-0.46	6/25/2022 12:51	11.69	-0.19	6/25/2022 14:13	-0.05
6/25/2022 13:05	11.89	0.06	6/26/2022 14:49	11.57	-0.52	6/25/2022 12:52	11.68	-0.16	6/25/2022 14:14	-0.09
6/25/2022 13:06	11.89	0.12	6/26/2022 14:50	11.57	-0.47	6/25/2022 12:53	11.65	-0.18	6/25/2022 14:15	-0.14
6/25/2022 13:07	11.88	0.11	6/26/2022 14:51	11.57	-0.43	6/25/2022 12:54	11.66	-0.14	6/25/2022 14:16	-0.11
6/25/2022 13:08	11.91	0.16	6/26/2022 14:52	11.59	-0.47	6/25/2022 12:55	11.66	-0.16	6/25/2022 14:17	-0.08
6/25/2022 13:09	11.91	0.07	6/26/2022 14:53	11.57	-0.45	6/25/2022 12:56	11.67	-0.17	6/25/2022 14:18	-0.08
6/25/2022 13:10	11.90	0.01	6/26/2022 14:54	11.56	-0.43	6/25/2022 12:57	11.65	-0.18	6/25/2022 14:19	-0.09
6/25/2022 13:11	11.91	0.04	6/26/2022 14:55	11.55	-0.44	6/25/2022 12:58	11.69	-0.18	6/25/2022 14:20	-0.06
6/25/2022 13:12	11.89	0.06	6/26/2022 14:56	11.59	-0.42	6/25/2022 12:59	11.66	-0.21	6/25/2022 14:21	-0.15
6/25/2022 13:13	11.90	0.11	6/26/2022 14:57	11.58	-0.43	6/25/2022 13:00	11.67	-0.17	6/25/2022 14:22	-0.06
6/25/2022 13:14	11.90	0.10	6/26/2022 14:58	11.59	-0.47	6/25/2022 13:01	11.66	-0.19	6/25/2022 14:23	-0.08
6/25/2022 13:15	11.90	0.01	6/26/2022 14:59	11.57	-0.58	6/25/2022 13:02	11.66	-0.16	6/25/2022 14:24	-0.11
6/25/2022 13:16	11.90	0.04	6/26/2022 15:00	11.58	-0.39	6/25/2022 13:03	11.65	-0.19	6/25/2022 14:25	-0.12
6/25/2022 13:17	11.89	0.06	6/26/2022 15:01	11.57	-0.44	6/25/2022 13:04	11.68	-0.19	6/25/2022 14:26	-0.13
6/25/2022 13:18	11.89	0.07	6/26/2022 15:02	11.57	-0.50	6/25/2022 13:05	11.69	-0.15	6/25/2022 14:27	-0.06
6/25/2022 13:19	11.88	0.08	6/26/2022 15:03	11.58	-0.46	6/25/2022 13:06	11.66	-0.21	6/25/2022 14:28	-0.11
6/25/2022 13:20	11.90	-0.03	6/26/2022 15:04	11.56	-0.44	6/25/2022 13:07	11.66	-0.13	6/25/2022 14:29	-0.08
6/25/2022 13:21	11.89	0.14	6/26/2022 15:05	11.56	-0.41	6/25/2022 13:08	11.67	-0.15	6/25/2022 14:30	-0.08
6/25/2022 13:22	11.88	0.07	6/26/2022 15:06	11.58	-0.50	6/25/2022 13:09	11.66	-0.17	6/25/2022 14:31	-0.14
6/25/2022 13:23	11.88	0.12	6/26/2022 15:07	11.56	-0.44	6/25/2022 13:10	11.63	-0.19	6/25/2022 14:32	-0.12
6/25/2022 13:24	11.89	0.06	6/26/2022 15:08	11.56	-0.49	6/25/2022 13:11	11.66	-0.16	6/25/2022 14:33	-0.10
6/25/2022 13:25	11.89	0.08	6/26/2022 15:09	11.58	-0.48	6/25/2022 13:12	11.68	-0.16	6/25/2022 14:34	-0.10
6/25/2022 13:26	11.88	0.11	6/26/2022 15:10	11.56	-0.40	6/25/2022 13:13	11.65	-0.12	6/25/2022 14:35	-0.10
6/25/2022 13:27	11.90	0.08	6/26/2022 15:11	11.58	-0.35	6/25/2022 13:14	11.67	-0.19	6/25/2022 14:36	-0.10
6/25/2022 13:28	11.86	0.09	6/26/2022 15:12	11.54	-0.50	6/25/2022 13:15	11.69	-0.22	6/25/2022 14:37	-0.13
6/25/2022 13:29	11.87	0.07	6/26/2022 15:13	11.54	-0.42	6/25/2022 13:16	11.63	-0.19	6/25/2022 14:38	-0.07
6/25/2022 13:30	11.87	0.08	6/26/2022 15:14	11.56	-0.44	6/25/2022 13:17	11.68	-0.16	6/25/2022 14:39	-0.08
6/25/2022 13:31	11.86	-0.01	6/26/2022 15:15	11.55	-0.41	6/25/2022 13:18	11.70	-0.22	6/25/2022 14:40	-0.12
6/25/2022 13:32	11.86	0.12	6/26/2022 15:16	11.57	-0.55	6/25/2022 13:19	11.62	-0.14	6/25/2022 14:41	-0.09
6/25/2022 13:33	11.85	0.11	6/26/2022 15:17	11.58	-0.36	6/25/2022 13:20	11.64	-0.14	6/25/2022 14:42	-0.06
6/25/2022 13:34	11.85	0.13	6/26/2022 15:18	11.56	-0.41	6/25/2022 13:21	11.69	-0.16	6/25/2022 14:43	-0.09

6/25/2022 13:35	11.85	0.07	6/26/2022 15:19	11.54	-0.50	6/25/2022 13:22	11.65	-0.16	6/25/2022 14:44	-0.11
6/25/2022 13:36	11.86	0.03	6/26/2022 15:20	11.56	-0.45	6/25/2022 13:23	11.68	-0.21	6/25/2022 14:45	-0.09
6/25/2022 13:37	11.86	0.09	6/26/2022 15:21	11.57	-0.42	6/25/2022 13:24	11.65	-0.20	6/25/2022 14:46	-0.11
6/25/2022 13:38	11.84	0.06	6/26/2022 15:22	11.57	-0.44	6/25/2022 13:25	11.69	-0.13	6/25/2022 14:47	-0.10
6/25/2022 13:39	11.84	0.01	6/26/2022 15:23	11.57	-0.45	6/25/2022 13:26	11.69	-0.23	6/25/2022 14:48	-0.05
6/25/2022 13:40	11.82	0.05	6/26/2022 15:24	11.58	-0.48	6/25/2022 13:27	11.64	-0.22	6/25/2022 14:49	-0.13
6/25/2022 13:41	11.83	0.12	6/26/2022 15:25	11.59	-0.43	6/25/2022 13:28	11.67	-0.11	6/25/2022 14:50	-0.15
6/25/2022 13:42	11.83	0.10	6/26/2022 15:26	11.57	-0.43	6/25/2022 13:29	11.66	-0.20	6/25/2022 14:51	-0.08
6/25/2022 13:43	11.82	0.08	6/26/2022 15:27	11.58	-0.45	6/25/2022 13:30	11.70	-0.18	6/25/2022 14:52	-0.12
6/25/2022 13:44	11.84	0.07	6/26/2022 15:28	11.56	-0.52	6/25/2022 13:31	11.64	-0.18	6/25/2022 14:53	-0.06
6/25/2022 13:45	11.82	0.15	6/26/2022 15:29	11.58	-0.43	6/25/2022 13:32	11.67	-0.20	6/25/2022 14:54	-0.09
6/25/2022 13:46	11.85	0.15	6/26/2022 15:30	11.57	-0.49	6/25/2022 13:33	11.65	-0.16	6/25/2022 14:55	-0.08
6/25/2022 13:47	11.83	0.06	6/26/2022 15:31	11.57	-0.48	6/25/2022 13:34	11.68	-0.19	6/25/2022 14:56	-0.06
6/25/2022 13:48	11.83	0.09	6/26/2022 15:32	11.59	-0.43	6/25/2022 13:35	11.68	-0.21	6/25/2022 14:57	-0.14
6/25/2022 13:49	11.82	0.02	6/26/2022 15:33	11.58	-0.54	6/25/2022 13:36	11.64	-0.18	6/25/2022 14:58	-0.07
6/25/2022 13:50	11.85	0.10	6/26/2022 15:34	11.58	-0.46	6/25/2022 13:37	11.68	-0.19	6/25/2022 14:59	-0.09
6/25/2022 13:51	11.82	0.11	6/26/2022 15:35	11.54	-0.49	6/25/2022 13:38	11.65	-0.20	6/25/2022 15:00	-0.09
6/25/2022 13:52	11.82	0.02	6/26/2022 15:36	11.56	-0.42	6/25/2022 13:39	11.62	-0.16	6/25/2022 15:01	-0.05
6/25/2022 13:53	11.80	0.07	6/26/2022 15:37	11.58	-0.50	6/25/2022 13:40	11.68	-0.21	6/25/2022 15:02	-0.09
6/25/2022 13:54	11.83	0.21	6/26/2022 15:38	11.57	-0.54	6/25/2022 13:41	11.64	-0.12	6/25/2022 15:03	-0.12
6/25/2022 13:55	11.83	0.04	6/26/2022 15:39	11.56	-0.45	6/25/2022 13:42	11.67	-0.17	6/25/2022 15:04	-0.10
6/25/2022 13:56	11.81	0.14	6/26/2022 15:40	11.57	-0.45	6/25/2022 13:43	11.66	-0.11	6/25/2022 15:05	-0.06
6/25/2022 13:57	11.81	0.03	6/26/2022 15:41	11.55	-0.46	6/25/2022 13:44	11.69	-0.20	6/25/2022 15:06	-0.09
6/25/2022 13:58	11.83	0.02	6/26/2022 15:42	11.55	-0.47	6/25/2022 13:45	11.66	-0.20	6/25/2022 15:07	-0.09
6/25/2022 13:59	11.82	0.07	6/26/2022 15:43	11.57	-0.40	6/25/2022 13:46	11.70	-0.19	6/25/2022 15:08	-0.12
6/25/2022 14:00	11.82	0.11	6/26/2022 15:44	11.56	-0.42	6/25/2022 13:47	11.66	-0.11	6/25/2022 15:09	-0.09
6/25/2022 14:01	11.82	0.11	6/26/2022 15:45	11.55	-0.49	6/25/2022 13:48	11.67	-0.18	6/25/2022 15:10	-0.12
6/25/2022 14:02	11.85	0.05	6/26/2022 15:46	11.57	-0.44	6/25/2022 13:49	11.67	-0.20	6/25/2022 15:11	-0.09
6/25/2022 14:03	11.78	0.07	6/26/2022 15:47	11.58	-0.58	6/25/2022 13:50	11.67	-0.20	6/25/2022 15:12	-0.12
6/25/2022 14:04	11.81	0.13	6/26/2022 15:48	11.57	-0.46	6/25/2022 13:51	11.66	-0.23	6/25/2022 15:13	-0.15
6/25/2022 14:05	11.81	0.11	6/26/2022 15:49	11.55	-0.45	6/25/2022 13:52	11.70	-0.24	6/25/2022 15:14	-0.09
6/25/2022 14:06	11.83	0.11	6/26/2022 15:50	11.56	-0.44	6/25/2022 13:53	11.66	-0.14	6/25/2022 15:15	-0.08
6/25/2022 14:07	11.81	0.02	6/26/2022 15:51	11.58	-0.53	6/25/2022 13:54	11.66	-0.14	6/25/2022 15:16	-0.08
6/25/2022 14:08	11.81	0.03	6/26/2022 15:52	11.57	-0.44	6/25/2022 13:55	11.67	-0.15	6/25/2022 15:17	-0.09
6/25/2022 14:09	11.78	0.12	6/26/2022 15:53	11.58	-0.41	6/25/2022 13:56	11.66	-0.19	6/25/2022 15:18	-0.07
6/25/2022 14:10	11.86	0.11	6/26/2022 15:54	11.58	-0.40	6/25/2022 13:57	11.65	-0.18	6/25/2022 15:19	-0.10
6/25/2022 14:11	11.83	0.01	6/26/2022 15:55	11.58	-0.52	6/25/2022 13:58	11.68	-0.18	6/25/2022 15:20	-0.08
6/25/2022 14:12	11.82	-0.01	6/26/2022 15:56	11.58	-0.43	6/25/2022 13:59	11.65	-0.12	6/25/2022 15:21	-0.07
6/25/2022 14:13	11.82	0.10	6/26/2022 15:57	11.56	-0.38	6/25/2022 14:00	11.66	-0.15	6/25/2022 15:22	-0.11
6/25/2022 14:14	11.81	0.05	6/26/2022 15:58	11.56	-0.48	6/25/2022 14:01	11.69	-0.18	6/25/2022 15:23	-0.07
6/25/2022 14:15	11.84	0.07	6/26/2022 15:59	11.57	-0.50	6/25/2022 14:02	11.67	-0.21	6/25/2022 15:24	-0.12
6/25/2022 14:16	11.82	0.00	6/26/2022 16:00	11.58	-0.46	6/25/2022 14:03	11.69	-0.18	6/25/2022 15:25	-0.05
6/25/2022 14:17	11.83	0.09	6/26/2022 16:01	11.59	-0.45	6/25/2022 14:04	11.68	-0.18	6/25/2022 15:26	-0.07
6/25/2022 14:18	11.83	0.12	6/26/2022 16:02	11.58	-0.48	6/25/2022 14:05	11.69	-0.22	6/25/2022 15:27	-0.05
6/25/2022 14:19	11.81	-0.01	6/26/2022 16:03	11.58	-0.50	6/25/2022 14:06	11.68	-0.24	6/25/2022 15:28	-0.07
6/25/2022 14:20	11.83	0.11	6/26/2022 16:04	11.57	-0.45	6/25/2022 14:07	11.66	-0.15	6/25/2022 15:29	-0.12
6/25/2022 14:21	11.83	0.02	6/26/2022 16:05	11.54	-0.44	6/25/2022 14:08	11.65	-0.18	6/25/2022 15:30	-0.08
6/25/2022 14:22	11.83	0.12	6/26/2022 16:06	11.58	-0.44	6/25/2022 14:09	11.67	-0.18	6/25/2022 15:31	-0.06
6/25/2022 14:23	11.83	0.05	6/26/2022 16:07	11.58	-0.49	6/25/2022 14:10	11.66	-0.22	6/25/2022 15:32	-0.12
6/25/2022 14:24	11.82	0.01	6/26/2022 16:08	11.55	-0.56	6/25/2022 14:11	11.71	-0.22	6/25/2022 15:33	-0.11
6/25/2022 14:25	11.82	0.04	6/26/2022 16:09	11.57	-0.49	6/25/2022 14:12	11.67	-0.18	6/25/2022 15:34	-0.08
6/25/2022 14:26	11.82	0.08	6/26/2022 16:10	11.58	-0.47	6/25/2022 14:13	11.64	-0.18	6/25/2022 15:35	-0.11
6/25/2022 14:27	11.82	0.11	6/26/2022 16:11	11.55	-0.47	6/25/2022 14:14	11.68	-0.13	6/25/2022 15:36	-0.08
6/25/2022 14:28	11.82	0.05	6/26/2022 16:12	11.58	-0.49	6/25/2022 14:15	11.68	-0.12	6/25/2022 15:37	-0.11
6/25/2022 14:29	11.85	0.12	6/26/2022 16:13	11.58	-0.37	6/25/2022 14:16	11.64	-0.18	6/25/2022 15:38	-0.06
6/25/2022 14:30	11.84	0.07	6/26/2022 16:14	11.58	-0.44	6/25/2022 14:17	11.66	-0.14	6/25/2022 15:39	-0.10
6/25/2022 14:31	11.79	0.03	6/26/2022 16:15	11.57	-0.47	6/25/2022 14:18	11.71	-0.19	6/25/2022 15:40	-0.13
6/25/2022 14:32	11.84	0.15	6/26/2022 16:16	11.58	-0.44	6/25/2022 14:19	11.67	-0.22	6/25/2022 15:41	-0.07
6/25/2022 14:33	11.82	0.05	6/26/2022 16:17	11.59	-0.48	6/25/2022 14:20	11.66	-0.21	6/25/2022 15:42	-0.01
6/25/2022 14:34	11.84	0.08	6/26/2022 16:18	11.59	-0.49	6/25/2022 14:21	11.67	-0.17	6/25/2022 15:43	-0.05
6/25/2022 14:35	11.81	0.05	6/26/2022 16:19	11.55	-0.36	6/25/2022 14:22	11.68	-0.20	6/25/2022 15:44	-0.10
6/25/2022 14:36	11.84	0.02	6/26/2022 16:20	11.54	-0.46	6/25/2022 14:23	11.64	-0.17	6/25/2022 15:45	-0.10
6/25/2022 14:37	11.81	0.06	6/26/2022 16:21	11.56	-0.43	6/25/2022 14:24	11.67	-0.14	6/25/2022 15:46	-0.11
6/25/2022 14:38	11.84	0.09	6/26/2022 16:22	11.57	-0.43	6/25/2022 14:25	11.67	-0.19	6/25/2022 15:47	-0.07
6/25/2022 14:39	11.83	0.08	6/26/2022 16:23	11.56	-0.51	6/25/2022 14:26	11.67	-0.16	6/25/2022 15:48	-0.06
6/25/2022 14:40	11.84	0.06	6/26/2022 16:24	11.58	-0.49	6/25/2022 14:27	11.68	-0.13	6/25/2022 15:49	-0.09
6/25/2022 14:41	11.81	0.05	6/26/2022 16:25	11.56	-0.48	6/25/2022 14:28	11.68	-0.23	6/25/2022 15:50	-0.15
6/25/2022 14:42	11.81	0.10	6/26/2022 16:26	11.57	-0.46	6/25/2022 14:29	11.71	-0.19	6/25/2022 15:51	-0.09
6/25/2022 14:43	11.79	0.05	6/26/2022 16:27	11.59	-0.39	6/25/2022 14:30	11.68	-0.15	6/25/2022 15:52	-0.07
6/25/2022 14:44	11.83	0.10	6/26/2022 16:28	11.57	-0.50	6/25/2022 14:31	11.66	-0.18	6/25/2022 15:53	-0.12
6/25/2022 14:45	11.87	0.18	6/26/2022 16:29	11.58	-0.41	6/25/2022 14:32	11.68	-0.18	6/25/2022 15:54	-0.09
6/25/2022 14:46	11.83	0.12	6/26/2022 16:30	11.57	-0.49	6/25/2022 14:33	11.65	-0.12	6/25/2022 15:55	-0.09
6/25/2022 14:47	11.82	0.07	6/26/2022 16:31	11.57	-0.44	6/25/2022 14:34	11.65	-0.19	6/25/2022 15:56	-0.12
6/25/2022 14:48	11.83	0.06	6/26/2022 16:32	11.60	-0.48	6/25/2022 14:35	11.68	-0.14	6/25/2022 15:57	-0.08
6/25/2022 14:49	11.83	0.07	6/26/2022 16:33	11.58	-0.50	6/25/2022 14:36	11.66	-0.20	6/25/2022 15:58	-0.10
6/25/2022 14:50	11.85	0.03	6/26/2022 16:34	11.58	-0.49	6/25/2022 14:37	11.69	-0.17	6/25/2022 15:59	-0.12
6/25/2022 14:51	11.83	0.08	6/26/2022 16:35	11.56	-0.49	6/25/2022 14:38	11.68	-0.15	6/25/2022 16:00	-0.13
6/25/2022 14:52	11.83	0.13	6/26/2022 16:36	11.59	-0.46	6/25/2022 14:39	11.65	-0.18	6/25/2022 16:01	-0.06
6/25/2022 14:53	11.84	0.09	6/26/2022 16:37	11.57	-0.35	6/25/2022 14:40	11.66	-0.16	6/25/2022 16:02	-0.08
6/25/2022 14:54	11.83	0.11	6/26/2022 16:38	11.58	-0.49	6/25/2022 14:41	11.65	-0.17	6/25/2022 16:03	-0.16
6/25/2022 14:55	11.81	0.04	6/26/2022 16:39	11.56	-0.56	6/25/2022 14:42	11.67	-0.20	6/25/2022 16:04	-0.10
6/25/2022 14:56	11.82	0.12	6/26/2022 16:40	11.60	-0.44	6/25/2022 14:43	11.68	-0.20	6/25/2022 16:05	-0.07
6/25/2022 14:57	11.84	0.05	6/26/2022 16:41	11.58	-0.48	6/25/2022 14:44	11.67	-0.18	6/25/2022 16:06	-0.11
6/25/2022 14:58	11.81	0.02	6/26/2022 16:42	11.57	-0.45	6/25/2022 14:45	11.66	-0.15	6/25/2022 16:07	-0.11
6/25/2022 14:59	11.81	0.02	6/26/2022 16:43	11.59	-0.48	6/25/2022 14:46	11.67	-0.17	6/25/2022 16:08	-0.12
6/25/2022 15:00	11.83	0.05	6/26/2022 16:44	11.55	-0.42	6/25/2022 14:47	11.65	-0.11	6/25/2022 16:09	-0.08
6/25/2022 15:01	11.79	0.00	6/26/2022 16:45	11.58	-0.49	6/25/2022 14:48	11.66	-0.19	6/25/2022 16:10	-0.12
6/25/2022 15:02	11.82	0.05	6/26/2022 16:46	11.55	-0.50	6/25/2022 14:49	11.66	-0.13	6/25/2022 16:11	-0.12

6/25/2022 15:03	11.84	-0.01	6/26/2022 16:47	11.56	-0.44	6/25/2022 14:50	11.69	-0.22	6/25/2022 16:12	-0.09
6/25/2022 15:04	11.81	0.03	6/26/2022 16:48	11.57	-0.36	6/25/2022 14:51	11.69	-0.16	6/25/2022 16:13	-0.09
6/25/2022 15:05	11.84	0.07	6/26/2022 16:49	11.58	-0.42	6/25/2022 14:52	11.70	-0.21	6/25/2022 16:14	-0.09
6/25/2022 15:06	11.83	0.03	6/26/2022 16:50	11.57	-0.41	6/25/2022 14:53	11.71	-0.21	6/25/2022 16:15	-0.14
6/25/2022 15:07	11.84	0.02	6/26/2022 16:51	11.57	-0.42	6/25/2022 14:54	11.71	-0.13	6/25/2022 16:16	-0.15
6/25/2022 15:08	11.82	0.08	6/26/2022 16:52	11.58	-0.48	6/25/2022 14:55	11.67	-0.23	6/25/2022 16:17	-0.13
6/25/2022 15:09	11.82	0.00	6/26/2022 16:53	11.57	-0.47	6/25/2022 14:56	11.67	-0.20	6/25/2022 16:18	-0.10
6/25/2022 15:10	11.82	0.02	6/26/2022 16:54	11.56	-0.44	6/25/2022 14:57	11.67	-0.19	6/25/2022 16:19	-0.10
6/25/2022 15:11	11.81	0.05	6/26/2022 16:55	11.58	-0.46	6/25/2022 14:58	11.69	-0.18	6/25/2022 16:20	-0.08
6/25/2022 15:12	11.82	0.02	6/26/2022 16:56	11.57	-0.39	6/25/2022 14:59	11.65	-0.17	6/25/2022 16:21	-0.10
6/25/2022 15:13	11.81	0.08	6/26/2022 16:57	11.57	-0.41	6/25/2022 15:00	11.66	-0.14	6/25/2022 16:22	-0.14
6/25/2022 15:14	11.81	0.06	6/26/2022 16:58	11.57	-0.47	6/25/2022 15:01	11.68	-0.19	6/25/2022 16:23	-0.09
6/25/2022 15:15	11.81	0.06	6/26/2022 16:59	11.57	-0.52	6/25/2022 15:02	11.64	-0.13	6/25/2022 16:24	-0.07
6/25/2022 15:16	11.83	0.02	6/26/2022 17:00	11.55	-0.50	6/25/2022 15:03	11.68	-0.14	6/25/2022 16:25	-0.09
6/25/2022 15:17	11.82	0.13	6/26/2022 17:01	11.58	-0.42	6/25/2022 15:04	11.66	-0.12	6/25/2022 16:26	-0.08
6/25/2022 15:18	11.79	0.17	6/26/2022 17:02	11.57	-0.35	6/25/2022 15:05	11.70	-0.22	6/25/2022 16:27	-0.07
6/25/2022 15:19	11.80	0.12	6/26/2022 17:03	11.59	-0.46	6/25/2022 15:06	11.67	-0.16	6/25/2022 16:28	-0.11
6/25/2022 15:20	11.81	0.05	6/26/2022 17:04	11.57	-0.46	6/25/2022 15:07	11.69	-0.19	6/25/2022 16:29	-0.11
6/25/2022 15:21	11.82	0.08	6/26/2022 17:05	11.58	-0.47	6/25/2022 15:08	11.66	-0.08	6/25/2022 16:30	-0.06
6/25/2022 15:22	11.81	0.06	6/26/2022 17:06	11.60	-0.44	6/25/2022 15:09	11.67	-0.21	6/25/2022 16:31	-0.08
6/25/2022 15:23	11.82	0.01	6/26/2022 17:07	11.55	-0.51	6/25/2022 15:10	11.68	-0.15	6/25/2022 16:32	-0.07
6/25/2022 15:24	11.83	0.12	6/26/2022 17:08	11.57	-0.50	6/25/2022 15:11	11.65	-0.17	6/25/2022 16:33	-0.09
6/25/2022 15:25	11.81	0.08	6/26/2022 17:09	11.58	-0.44	6/25/2022 15:12	11.70	-0.18	6/25/2022 16:34	-0.07
6/25/2022 15:26	11.81	0.16	6/26/2022 17:10	11.58	-0.46	6/25/2022 15:13	11.68	-0.20	6/25/2022 16:35	-0.09
6/25/2022 15:27	11.80	0.12	6/26/2022 17:11	11.57	-0.43	6/25/2022 15:14	11.70	-0.24	6/25/2022 16:36	-0.10
6/25/2022 15:28	11.83	0.09	6/26/2022 17:12	11.57	-0.54	6/25/2022 15:15	11.67	-0.21	6/25/2022 16:37	-0.11
6/25/2022 15:29	11.85	-0.04	6/26/2022 17:13	11.57	-0.42	6/25/2022 15:16	11.64	-0.17	6/25/2022 16:38	-0.03
6/25/2022 15:30	11.82	0.10	6/26/2022 17:14	11.58	-0.46	6/25/2022 15:17	11.68	-0.17	6/25/2022 16:39	-0.05
6/25/2022 15:31	11.80	0.00	6/26/2022 17:15	11.58	-0.43	6/25/2022 15:18	11.70	-0.20	6/25/2022 16:40	-0.10
6/25/2022 15:32	11.79	0.00	6/26/2022 17:16	11.58	-0.42	6/25/2022 15:19	11.65	-0.08	6/25/2022 16:41	-0.08
6/25/2022 15:33	11.80	0.05	6/26/2022 17:17	11.57	-0.41	6/25/2022 15:20	11.65	-0.22	6/25/2022 16:42	-0.07
6/25/2022 15:34	11.81	0.16	6/26/2022 17:18	11.57	-0.48	6/25/2022 15:21	11.69	-0.12	6/25/2022 16:43	-0.12
6/25/2022 15:35	11.81	0.06	6/26/2022 17:19	11.57	-0.37	6/25/2022 15:22	11.65	-0.18	6/25/2022 16:44	-0.05
6/25/2022 15:36	11.80	0.04	6/26/2022 17:20	11.58	-0.45	6/25/2022 15:23	11.69	-0.23	6/25/2022 16:45	-0.09
6/25/2022 15:37	11.83	0.03	6/26/2022 17:21	11.56	-0.47	6/25/2022 15:24	11.65	-0.14	6/25/2022 16:46	-0.11
6/25/2022 15:38	11.81	0.13	6/26/2022 17:22	11.56	-0.50	6/25/2022 15:25	11.67	-0.21	6/25/2022 16:47	-0.12
6/25/2022 15:39	11.82	0.02	6/26/2022 17:23	11.57	-0.43	6/25/2022 15:26	11.69	-0.22	6/25/2022 16:48	-0.09
6/25/2022 15:40	11.83	0.06	6/26/2022 17:24	11.58	-0.49	6/25/2022 15:27	11.70	-0.21	6/25/2022 16:49	-0.09
6/25/2022 15:41	11.83	0.06	6/26/2022 17:25	11.56	-0.44	6/25/2022 15:28	11.69	-0.20	6/25/2022 16:50	-0.08
6/25/2022 15:42	11.83	0.10	6/26/2022 17:26	11.56	-0.44	6/25/2022 15:29	11.65	-0.20	6/25/2022 16:51	-0.10
6/25/2022 15:43	11.82	0.14	6/26/2022 17:27	11.56	-0.45	6/25/2022 15:30	11.66	-0.16	6/25/2022 16:52	-0.13
6/25/2022 15:44	11.83	0.07	6/26/2022 17:28	11.57	-0.42	6/25/2022 15:31	11.65	-0.13	6/25/2022 16:53	-0.12
6/25/2022 15:45	11.81	0.15	6/26/2022 17:29	11.57	-0.42	6/25/2022 15:32	11.63	-0.16	6/25/2022 16:54	-0.06
6/25/2022 15:46	11.84	-0.01	6/26/2022 17:30	11.57	-0.42	6/25/2022 15:33	11.64	-0.18	6/25/2022 16:55	-0.05
6/25/2022 15:47	11.80	0.01	6/26/2022 17:31	11.59	-0.40	6/25/2022 15:34	11.66	-0.15	6/25/2022 16:56	-0.12
6/25/2022 15:48	11.82	-0.01	6/26/2022 17:32	11.59	-0.40	6/25/2022 15:35	11.68	-0.23	6/25/2022 16:57	-0.16
6/25/2022 15:49	11.80	0.11	6/26/2022 17:33	11.55	-0.48	6/25/2022 15:36	11.68	-0.21	6/25/2022 16:58	-0.15
6/25/2022 15:50	11.82	0.05	6/26/2022 17:34	11.58	-0.48	6/25/2022 15:37	11.65	-0.13	6/25/2022 16:59	-0.07
6/25/2022 15:51	11.81	0.15	6/26/2022 17:35	11.57	-0.50	6/25/2022 15:38	11.64	-0.17	6/25/2022 17:00	-0.09
6/25/2022 15:52	11.81	0.02	6/26/2022 17:36	11.59	-0.50	6/25/2022 15:39	11.64	-0.20	6/25/2022 17:01	-0.09
6/25/2022 15:53	11.81	0.05	6/26/2022 17:37	11.57	-0.49	6/25/2022 15:40	11.68	-0.18	6/25/2022 17:02	-0.07
6/25/2022 15:54	11.82	0.12	6/26/2022 17:38	11.58	-0.51	6/25/2022 15:41	11.65	-0.15	6/25/2022 17:03	-0.11
6/25/2022 15:55	11.81	0.13	6/26/2022 17:39	11.57	-0.48	6/25/2022 15:42	11.66	-0.15	6/25/2022 17:04	-0.08
6/25/2022 15:56	11.86	0.04	6/26/2022 17:40	11.58	-0.52	6/25/2022 15:43	11.66	-0.17	6/25/2022 17:05	-0.09
6/25/2022 15:57	11.82	0.11	6/26/2022 17:41	11.56	-0.48	6/25/2022 15:44	11.67	-0.23	6/25/2022 17:06	-0.14
6/25/2022 15:58	11.80	0.13	6/26/2022 17:42	11.57	-0.45	6/25/2022 15:45	11.71	-0.19	6/25/2022 17:07	-0.10
6/25/2022 15:59	11.84	0.08	6/26/2022 17:43	11.57	-0.39	6/25/2022 15:46	11.69	-0.17	6/25/2022 17:08	-0.10
6/25/2022 16:00	11.81	0.12	6/26/2022 17:44	11.55	-0.55	6/25/2022 15:47	11.66	-0.15	6/25/2022 17:09	-0.07
6/25/2022 16:01	11.81	0.12	6/26/2022 17:45	11.58	-0.38	6/25/2022 15:48	11.66	-0.20	6/25/2022 17:10	-0.10
6/25/2022 16:02	11.81	0.06	6/26/2022 17:46	11.55	-0.50	6/25/2022 15:49	11.69	-0.15	6/25/2022 17:11	-0.13
6/25/2022 16:03	11.82	-0.01	6/26/2022 17:47	11.54	-0.38	6/25/2022 15:50	11.67	-0.24	6/25/2022 17:12	-0.09
6/25/2022 16:04	11.82	0.05	6/26/2022 17:48	11.54	-0.49	6/25/2022 15:51	11.66	-0.18	6/25/2022 17:13	-0.16
6/25/2022 16:05	11.83	0.01	6/26/2022 17:49	11.57	-0.48	6/25/2022 15:52	11.71	-0.19	6/25/2022 17:14	-0.14
6/25/2022 16:06	11.85	0.05	6/26/2022 17:50	11.53	-0.50	6/25/2022 15:53	11.67	-0.21	6/25/2022 17:15	-0.09
6/25/2022 16:07	11.83	0.12	6/26/2022 17:51	11.55	-0.44	6/25/2022 15:54	11.68	-0.21	6/25/2022 17:16	-0.09
6/25/2022 16:08	11.80	0.01	6/26/2022 17:52	11.57	-0.52	6/25/2022 15:55	11.66	-0.17	6/25/2022 17:17	-0.13
6/25/2022 16:09	11.83	-0.01	6/26/2022 17:53	11.57	-0.49	6/25/2022 15:56	11.65	-0.18	6/25/2022 17:18	-0.10
6/25/2022 16:10	11.82	0.07	6/26/2022 17:54	11.57	-0.41	6/25/2022 15:57	11.70	-0.19	6/25/2022 17:19	-0.11
6/25/2022 16:11	11.83	0.08	6/26/2022 17:55	11.58	-0.55	6/25/2022 15:58	11.63	-0.15	6/25/2022 17:20	-0.07
6/25/2022 16:12	11.84	0.11	6/26/2022 17:56	11.56	-0.45	6/25/2022 15:59	11.68	-0.19	6/25/2022 17:21	-0.10
6/25/2022 16:13	11.80	-0.02	6/26/2022 17:57	11.58	-0.46	6/25/2022 16:00	11.67	-0.19	6/25/2022 17:22	-0.09
6/25/2022 16:14	11.80	0.06	6/26/2022 17:58	11.58	-0.51	6/25/2022 16:01	11.68	-0.22	6/25/2022 17:23	-0.09
6/25/2022 16:15	11.84	0.02	6/26/2022 17:59	11.57	-0.41	6/25/2022 16:02	11.68	-0.20	6/25/2022 17:24	-0.08
6/25/2022 16:16	11.82	0.12	6/26/2022 18:00	11.56	-0.47	6/25/2022 16:03	11.67	-0.14	6/25/2022 17:25	-0.12
6/25/2022 16:17	11.80	0.05	6/26/2022 18:01	11.57	-0.42	6/25/2022 16:04	11.64	-0.18	6/25/2022 17:26	-0.11
6/25/2022 16:18	11.81	0.06	6/26/2022 18:02	11.57	-0.44	6/25/2022 16:05	11.67	-0.14	6/25/2022 17:27	-0.09
6/25/2022 16:19	11.79	0.16	6/26/2022 18:03	11.59	-0.39	6/25/2022 16:06	11.63	-0.17	6/25/2022 17:28	-0.08
6/25/2022 16:20	11.81	0.08	6/26/2022 18:04	11.57	-0.53	6/25/2022 16:07	11.65	-0.17	6/25/2022 17:29	-0.12
6/25/2022 16:21	11.80	0.05	6/26/2022 18:05	11.57	-0.45	6/25/2022 16:08	11.66	-0.23	6/25/2022 17:30	-0.04
6/25/2022 16:22	11.81	0.06	6/26/2022 18:06	11.56	-0.52	6/25/2022 16:09	11.65	-0.14	6/25/2022 17:31	-0.13
6/25/2022 16:23	11.81	0.11	6/26/2022 18:07	11.57	-0.51	6/25/2022 16:10	11.67	-0.20	6/25/2022 17:32	-0.12
6/25/2022 16:24	11.83	0.06	6/26/2022 18:08	11.58	-0.41	6/25/2022 16:11	11.62	-0.15	6/25/2022 17:33	-0.10
6/25/2022 16:25	11.83	0.10	6/26/2022 18:09	11.57	-0.44	6/25/2022 16:12	11.65	-0.14	6/25/2022 17:34	-0.11
6/25/2022 16:26	11.84	0.07	6/26/2022 18:10	11.56	-0.47	6/25/2022 16:13	11.66	-0.18	6/25/2022 17:35	-0.08
6/25/2022 16:27	11.81	0.09	6/26/2022 18:11	11.55	-0.42	6/25/2022 16:14	11.65	-0.17	6/25/2022 17:36	-0.04
6/25/2022 16:28	11.79	0.06	6/26/2022 18:12	11.56	-0.44	6/25/2022 16:15	11.67	-0.17	6/25/2022 17:37	-0.04
6/25/2022 16:29	11.81	0.04	6/26/2022 18:13	11.55	-0.52	6/25/2022 16:16	11.70	-0.21	6/25/2022 17:38	-0.10
6/25/2022 16:30	11.79	0.07	6/26/2022 18:14	11.58	-0.50	6/25/2022 16:17	11.67	-0.15	6/25/2022 17:39	-0.10

6/25/2022 16:31	11.82	0.00	6/26/2022 18:15	11.58	-0.52	6/25/2022 16:18	11.69	-0.21	6/25/2022 17:40	-0.05
6/25/2022 16:32	11.79	0.00	6/26/2022 18:16	11.56	-0.48	6/25/2022 16:19	11.65	-0.16	6/25/2022 17:41	-0.09
6/25/2022 16:33	11.82	0.06	6/26/2022 18:17	11.58	-0.42	6/25/2022 16:20	11.65	-0.19	6/25/2022 17:42	-0.07
6/25/2022 16:34	11.81	0.10	6/26/2022 18:18	11.56	-0.46	6/25/2022 16:21	11.68	-0.18	6/25/2022 17:43	-0.11
6/25/2022 16:35	11.82	0.06	6/26/2022 18:19	11.58	-0.44	6/25/2022 16:22	11.66	-0.13	6/25/2022 17:44	-0.10
6/25/2022 16:36	11.80	0.10	6/26/2022 18:20	11.58	-0.42	6/25/2022 16:23	11.67	-0.22	6/25/2022 17:45	-0.13
6/25/2022 16:37	11.82	0.00	6/26/2022 18:21	11.58	-0.44	6/25/2022 16:24	11.67	-0.18	6/25/2022 17:46	-0.11
6/25/2022 16:38	11.83	-0.01	6/26/2022 18:22	11.56	-0.43	6/25/2022 16:25	11.71	-0.14	6/25/2022 17:47	-0.11
6/25/2022 16:39	11.80	0.06	6/26/2022 18:23	11.56	-0.46	6/25/2022 16:26	11.66	-0.19	6/25/2022 17:48	-0.10
6/25/2022 16:40	11.81	0.05	6/26/2022 18:24	11.59	-0.50	6/25/2022 16:27	11.67	-0.20	6/25/2022 17:49	-0.09
6/25/2022 16:41	11.80	0.05	6/26/2022 18:25	11.58	-0.49	6/25/2022 16:28	11.68	-0.16	6/25/2022 17:50	-0.10
6/25/2022 16:42	11.80	0.05	6/26/2022 18:26	11.56	-0.45	6/25/2022 16:29	11.71	-0.21	6/25/2022 17:51	-0.11
6/25/2022 16:43	11.81	0.10	6/26/2022 18:27	11.58	-0.45	6/25/2022 16:30	11.64	-0.19	6/25/2022 17:52	-0.08
6/25/2022 16:44	11.82	0.06	6/26/2022 18:28	11.60	-0.47	6/25/2022 16:31	11.65	-0.17	6/25/2022 17:53	-0.07
6/25/2022 16:45	11.82	0.05	6/26/2022 18:29	11.58	-0.48	6/25/2022 16:32	11.67	-0.21	6/25/2022 17:54	-0.11
6/25/2022 16:46	11.80	0.06	6/26/2022 18:30	11.59	-0.50	6/25/2022 16:33	11.66	-0.14	6/25/2022 17:55	-0.07
6/25/2022 16:47	11.81	0.10	6/26/2022 18:31	11.54	-0.39	6/25/2022 16:34	11.67	-0.22	6/25/2022 17:56	-0.05
6/25/2022 16:48	11.84	0.06	6/26/2022 18:32	11.56	-0.45	6/25/2022 16:35	11.69	-0.15	6/25/2022 17:57	-0.12
6/25/2022 16:49	11.80	0.01	6/26/2022 18:33	11.57	-0.42	6/25/2022 16:36	11.67	-0.16	6/25/2022 17:58	-0.08
6/25/2022 16:50	11.83	0.03	6/26/2022 18:34	11.57	-0.49	6/25/2022 16:37	11.68	-0.20	6/25/2022 17:59	-0.09
6/25/2022 16:51	11.82	0.07	6/26/2022 18:35	11.57	-0.41	6/25/2022 16:38	11.69	-0.19	6/25/2022 18:00	-0.07
6/25/2022 16:52	11.82	0.06	6/26/2022 18:36	11.57	-0.44	6/25/2022 16:39	11.67	-0.16	6/25/2022 18:01	-0.11
6/25/2022 16:53	11.84	0.14	6/26/2022 18:37	11.58	-0.52	6/25/2022 16:40	11.68	-0.14	6/25/2022 18:02	-0.06
6/25/2022 16:54	11.83	0.09	6/26/2022 18:38	11.58	-0.43	6/25/2022 16:41	11.66	-0.24	6/25/2022 18:03	-0.10
6/25/2022 16:55	11.82	0.06	6/26/2022 18:39	11.55	-0.41	6/25/2022 16:42	11.66	-0.17	6/25/2022 18:04	-0.07
6/25/2022 16:56	11.83	0.09	6/26/2022 18:40	11.56	-0.51	6/25/2022 16:43	11.69	-0.14	6/25/2022 18:05	-0.08
6/25/2022 16:57	11.81	0.02	6/26/2022 18:41	11.59	-0.39	6/25/2022 16:44	11.63	-0.14	6/25/2022 18:06	-0.09
6/25/2022 16:58	11.81	0.06	6/26/2022 18:42	11.55	-0.53	6/25/2022 16:45	11.64	-0.15	6/25/2022 18:07	-0.12
6/25/2022 16:59	11.83	0.09	6/26/2022 18:43	11.57	-0.46	6/25/2022 16:46	11.67	-0.16	6/25/2022 18:08	-0.03
6/25/2022 17:00	11.82	0.14	6/26/2022 18:44	11.57	-0.37	6/25/2022 16:47	11.64	-0.20	6/25/2022 18:09	-0.10
6/25/2022 17:01	11.82	0.10	6/26/2022 18:45	11.58	-0.44	6/25/2022 16:48	11.64	-0.15	6/25/2022 18:10	-0.13
6/25/2022 17:02	11.83	0.02	6/26/2022 18:46	11.59	-0.45	6/25/2022 16:49	11.69	-0.21	6/25/2022 18:11	-0.09
6/25/2022 17:03	11.81	0.02	6/26/2022 18:47	11.58	-0.44	6/25/2022 16:50	11.69	-0.21	6/25/2022 18:12	-0.11
6/25/2022 17:04	11.80	0.12	6/26/2022 18:48	11.57	-0.45	6/25/2022 16:51	11.66	-0.22	6/25/2022 18:13	-0.11
6/25/2022 17:05	11.83	0.05	6/26/2022 18:49	11.55	-0.51	6/25/2022 16:52	11.67	-0.17	6/25/2022 18:14	-0.07
6/25/2022 17:06	11.83	0.03	6/26/2022 18:50	11.57	-0.48	6/25/2022 16:53	11.65	-0.16	6/25/2022 18:15	-0.10
6/25/2022 17:07	11.84	0.09	6/26/2022 18:51	11.56	-0.46	6/25/2022 16:54	11.64	-0.19	6/25/2022 18:16	-0.08
6/25/2022 17:08	11.82	0.09	6/26/2022 18:52	11.57	-0.47	6/25/2022 16:55	11.67	-0.19	6/25/2022 18:17	-0.09
6/25/2022 17:09	11.80	0.06	6/26/2022 18:53	11.58	-0.57	6/25/2022 16:56	11.68	-0.16	6/25/2022 18:18	-0.06
6/25/2022 17:10	11.81	0.00	6/26/2022 18:54	11.59	-0.48	6/25/2022 16:57	11.63	-0.17	6/25/2022 18:19	-0.06
6/25/2022 17:11	11.84	0.05	6/26/2022 18:55	11.55	-0.43	6/25/2022 16:58	11.65	-0.14	6/25/2022 18:20	-0.06
6/25/2022 17:12	11.79	0.06	6/26/2022 18:56	11.58	-0.54	6/25/2022 16:59	11.66	-0.16	6/25/2022 18:21	-0.14
6/25/2022 17:13	11.83	0.05	6/26/2022 18:57	11.59	-0.47	6/25/2022 17:00	11.68	-0.18	6/25/2022 18:22	-0.08
6/25/2022 17:14	11.82	0.06	6/26/2022 18:58	11.58	-0.52	6/25/2022 17:01	11.67	-0.24	6/25/2022 18:23	-0.12
6/25/2022 17:15	11.80	0.11	6/26/2022 18:59	11.56	-0.42	6/25/2022 17:02	11.69	-0.20	6/25/2022 18:24	-0.06
6/25/2022 17:16	11.81	-0.01	6/26/2022 19:00	11.57	-0.46	6/25/2022 17:03	11.69	-0.19	6/25/2022 18:25	-0.13
6/25/2022 17:17	11.85	0.09	6/26/2022 19:01	11.55	-0.48	6/25/2022 17:04	11.66	-0.20	6/25/2022 18:26	-0.05
6/25/2022 17:18	11.83	0.04	6/26/2022 19:02	11.58	-0.42	6/25/2022 17:05	11.70	-0.18	6/25/2022 18:27	-0.11
6/25/2022 17:19	11.82	0.00	6/26/2022 19:03	11.58	-0.46	6/25/2022 17:06	11.66	-0.16	6/25/2022 18:28	-0.09
6/25/2022 17:20	11.81	0.04	6/26/2022 19:04	11.58	-0.45	6/25/2022 17:07	11.63	-0.18	6/25/2022 18:29	-0.10
6/25/2022 17:21	11.83	0.09	6/26/2022 19:05	11.58	-0.52	6/25/2022 17:08	11.69	-0.27	6/25/2022 18:30	-0.13
6/25/2022 17:22	11.82	-0.02	6/26/2022 19:06	11.56	-0.47	6/25/2022 17:09	11.67	-0.18	6/25/2022 18:31	-0.08
6/25/2022 17:23	11.79	0.06	6/26/2022 19:07	11.56	-0.46	6/25/2022 17:10	11.65	-0.13	6/25/2022 18:32	-0.10
6/25/2022 17:24	11.83	0.03	6/26/2022 19:08	11.59	-0.42	6/25/2022 17:11	11.65	-0.16	6/25/2022 18:33	-0.10
6/25/2022 17:25	11.84	0.03	6/26/2022 19:09	11.59	-0.57	6/25/2022 17:12	11.68	-0.15	6/25/2022 18:34	-0.14
6/25/2022 17:26	11.81	0.05	6/26/2022 19:10	11.59	-0.53	6/25/2022 17:13	11.70	-0.19	6/25/2022 18:35	-0.11
6/25/2022 17:27	11.82	-0.03	6/26/2022 19:11	11.59	-0.44	6/25/2022 17:14	11.65	-0.16	6/25/2022 18:36	-0.09
6/25/2022 17:28	11.79	0.10	6/26/2022 19:12	11.59	-0.48	6/25/2022 17:15	11.69	-0.20	6/25/2022 18:37	-0.07
6/25/2022 17:29	11.83	0.06	6/26/2022 19:13	11.56	-0.45	6/25/2022 17:16	11.68	-0.21	6/25/2022 18:38	-0.06
6/25/2022 17:30	11.86	0.09	6/26/2022 19:14	11.57	-0.51	6/25/2022 17:17	11.63	-0.19	6/25/2022 18:39	-0.11
6/25/2022 17:31	11.80	0.15	6/26/2022 19:15	11.56	-0.48	6/25/2022 17:18	11.67	-0.20	6/25/2022 18:40	-0.04
6/25/2022 17:32	11.83	0.02	6/26/2022 19:16	11.57	-0.45	6/25/2022 17:19	11.66	-0.20	6/25/2022 18:41	-0.09
6/25/2022 17:33	11.81	0.08	6/26/2022 19:17	11.56	-0.41	6/25/2022 17:20	11.65	-0.15	6/25/2022 18:42	-0.12
6/25/2022 17:34	11.81	-0.02	6/26/2022 19:18	11.59	-0.54	6/25/2022 17:21	11.65	-0.18	6/25/2022 18:43	-0.09
6/25/2022 17:35	11.83	0.06	6/26/2022 19:19	11.58	-0.36	6/25/2022 17:22	11.65	-0.19	6/25/2022 18:44	-0.10
6/25/2022 17:36	11.86	0.05	6/26/2022 19:20	11.60	-0.46	6/25/2022 17:23	11.67	-0.19	6/25/2022 18:45	-0.09
6/25/2022 17:37	11.81	0.10	6/26/2022 19:21	11.54	-0.51	6/25/2022 17:24	11.66	-0.16	6/25/2022 18:46	-0.11
6/25/2022 17:38	11.82	0.10	6/26/2022 19:22	11.58	-0.51	6/25/2022 17:25	11.68	-0.20	6/25/2022 18:47	-0.11
6/25/2022 17:39	11.83	0.10	6/26/2022 19:23	11.57	-0.49	6/25/2022 17:26	11.68	-0.21	6/25/2022 18:48	-0.08
6/25/2022 17:40	11.81	0.09	6/26/2022 19:24	11.56	-0.49	6/25/2022 17:27	11.70	-0.18	6/25/2022 18:49	-0.10
6/25/2022 17:41	11.83	0.04	6/26/2022 19:25	11.55	-0.45	6/25/2022 17:28	11.65	-0.10	6/25/2022 18:50	-0.11
6/25/2022 17:42	11.81	0.04	6/26/2022 19:26	11.57	-0.52	6/25/2022 17:29	11.66	-0.16	6/25/2022 18:51	-0.10
6/25/2022 17:43	11.81	0.06	6/26/2022 19:27	11.57	-0.52	6/25/2022 17:30	11.64	-0.13	6/25/2022 18:52	-0.08
6/25/2022 17:44	11.80	0.02	6/26/2022 19:28	11.53	-0.42	6/25/2022 17:31	11.67	-0.21	6/25/2022 18:53	-0.15
6/25/2022 17:45	11.82	0.09	6/26/2022 19:29	11.57	-0.37	6/25/2022 17:32	11.65	-0.16	6/25/2022 18:54	-0.07
6/25/2022 17:46	11.82	-0.01	6/26/2022 19:30	11.57	-0.44	6/25/2022 17:33	11.68	-0.18	6/25/2022 18:55	-0.12
6/25/2022 17:47	11.81	0.10	6/26/2022 19:31	11.60	-0.45	6/25/2022 17:34	11.66	-0.16	6/25/2022 18:56	-0.10
6/25/2022 17:48	11.82	0.14	6/26/2022 19:32	11.58	-0.50	6/25/2022 17:35	11.70	-0.23	6/25/2022 18:57	-0.15
6/25/2022 17:49	11.84	0.04	6/26/2022 19:33	11.57	-0.48	6/25/2022 17:36	11.66	-0.20	6/25/2022 18:58	-0.11
6/25/2022 17:50	11.82	0.08	6/26/2022 19:34	11.57	-0.42	6/25/2022 17:37	11.65	-0.16	6/25/2022 18:59	-0.08
6/25/2022 17:51	11.81	-0.03	6/26/2022 19:35	11.60	-0.46	6/25/2022 17:38	11.63	-0.18	6/25/2022 19:00	-0.11
6/25/2022 17:52	11.84	0.06	6/26/2022 19:36	11.59	-0.44	6/25/2022 17:39	11.65	-0.17	6/25/2022 19:01	-0.11
6/25/2022 17:53	11.82	0.02	6/26/2022 19:37	11.56	-0.45	6/25/2022 17:40	11.68	-0.21	6/25/2022 19:02	-0.10
6/25/2022 17:54	11.82	0.07	6/26/2022 19:38	11.60	-0.48	6/25/2022 17:41	11.69	-0.18	6/25/2022 19:03	-0.15
6/25/2022 17:55	11.83	0.02	6/26/2022 19:39	11.55	-0.52	6/25/2022 17:42	11.64	-0.18	6/25/2022 19:04	-0.11
6/25/2022 17:56	11.81	0.05	6/26/2022 19:40	11.58	-0.52	6/25/2022 17:43	11.69	-0.19	6/25/2022 19:05	-0.15
6/25/2022 17:57	11.81	0.00	6/26/2022 19:41	11.56	-0.41	6/25/2022 17:44	11.69	-0.21	6/25/2022 19:06	-0.14
6/25/2022 17:58	11.85	0.02	6/26/2022 19:42	11.56	-0.49	6/25/2022 17:45	11.67	-0.20	6/25/2022 19:07	-0.08

6/25/2022 17:59	11.84	0.10	6/26/2022 19:43	11.57	-0.46	6/25/2022 17:46	11.68	-0.18	6/25/2022 19:08	-0.11
6/25/2022 18:00	11.84	0.01	6/26/2022 19:44	11.56	-0.47	6/25/2022 17:47	11.67	-0.16	6/25/2022 19:09	-0.15
6/25/2022 18:01	11.83	0.01	6/26/2022 19:45	11.55	-0.42	6/25/2022 17:48	11.64	-0.19	6/25/2022 19:10	-0.10
6/25/2022 18:02	11.83	0.14	6/26/2022 19:46	11.57	-0.46	6/25/2022 17:49	11.68	-0.25	6/25/2022 19:11	-0.12
6/25/2022 18:03	11.85	0.01	6/26/2022 19:47	11.58	-0.44	6/25/2022 17:50	11.70	-0.21	6/25/2022 19:12	-0.09
6/25/2022 18:04	11.85	0.15	6/26/2022 19:48	11.57	-0.41	6/25/2022 17:51	11.66	-0.17	6/25/2022 19:13	-0.11
6/25/2022 18:05	11.86	0.10	6/26/2022 19:49	11.55	-0.51	6/25/2022 17:52	11.66	-0.22	6/25/2022 19:14	-0.12
6/25/2022 18:06	11.83	0.10	6/26/2022 19:50	11.58	-0.43	6/25/2022 17:53	11.69	-0.18	6/25/2022 19:15	-0.09
6/25/2022 18:07	11.83	0.01	6/26/2022 19:51	11.56	-0.47	6/25/2022 17:54	11.68	-0.20	6/25/2022 19:16	-0.13
6/25/2022 18:08	11.83	0.04	6/26/2022 19:52	11.56	-0.44	6/25/2022 17:55	11.67	-0.20	6/25/2022 19:17	-0.14
6/25/2022 18:09	11.82	0.04	6/26/2022 19:53	11.57	-0.49	6/25/2022 17:56	11.65	-0.19	6/25/2022 19:18	-0.13
6/25/2022 18:10	11.82	0.07	6/26/2022 19:54	11.58	-0.40	6/25/2022 17:57	11.65	-0.15	6/25/2022 19:19	-0.13
6/25/2022 18:11	11.84	0.04	6/26/2022 19:55	11.55	-0.50	6/25/2022 17:58	11.67	-0.22	6/25/2022 19:20	-0.13
6/25/2022 18:12	11.81	-0.02	6/26/2022 19:56	11.57	-0.41	6/25/2022 17:59	11.69	-0.21	6/25/2022 19:21	-0.14
6/25/2022 18:13	11.83	0.04	6/26/2022 19:57	11.57	-0.48	6/25/2022 18:00	11.66	-0.17	6/25/2022 19:22	-0.11
6/25/2022 18:14	11.81	0.07	6/26/2022 19:58	11.58	-0.40	6/25/2022 18:01	11.67	-0.19	6/25/2022 19:23	-0.13
6/25/2022 18:15	11.83	0.06	6/26/2022 19:59	11.56	-0.45	6/25/2022 18:02	11.65	-0.18	6/25/2022 19:24	-0.10
6/25/2022 18:16	11.84	0.14	6/26/2022 20:00	11.58	-0.50	6/25/2022 18:03	11.65	-0.18	6/25/2022 19:25	-0.13
6/25/2022 18:17	11.83	0.01	6/26/2022 20:01	11.58	-0.38	6/25/2022 18:04	11.65	-0.15	6/25/2022 19:26	-0.08
6/25/2022 18:18	11.83	0.09	6/26/2022 20:02	11.54	-0.51	6/25/2022 18:05	11.67	-0.14	6/25/2022 19:27	-0.16
6/25/2022 18:19	11.85	0.05	6/26/2022 20:03	11.60	-0.49	6/25/2022 18:06	11.69	-0.16	6/25/2022 19:28	-0.09
6/25/2022 18:20	11.85	0.03	6/26/2022 20:04	11.59	-0.51	6/25/2022 18:07	11.65	-0.17	6/25/2022 19:29	-0.10
6/25/2022 18:21	11.80	0.11	6/26/2022 20:05	11.60	-0.46	6/25/2022 18:08	11.69	-0.21	6/25/2022 19:30	-0.12
6/25/2022 18:22	11.85	0.07	6/26/2022 20:06	11.58	-0.42	6/25/2022 18:09	11.64	-0.15	6/25/2022 19:31	-0.13
6/25/2022 18:23	11.85	0.05	6/26/2022 20:07	11.57	-0.46	6/25/2022 18:10	11.67	-0.20	6/25/2022 19:32	-0.11
6/25/2022 18:24	11.82	0.11	6/26/2022 20:08	11.57	-0.47	6/25/2022 18:11	11.65	-0.16	6/25/2022 19:33	-0.10
6/25/2022 18:25	11.84	0.04	6/26/2022 20:09	11.59	-0.39	6/25/2022 18:12	11.67	-0.20	6/25/2022 19:34	-0.11
6/25/2022 18:26	11.81	0.13	6/26/2022 20:10	11.58	-0.51	6/25/2022 18:13	11.65	-0.18	6/25/2022 19:35	-0.05
6/25/2022 18:27	11.84	0.09	6/26/2022 20:11	11.55	-0.43	6/25/2022 18:14	11.66	-0.17	6/25/2022 19:36	-0.08
6/25/2022 18:28	11.83	0.06	6/26/2022 20:12	11.55	-0.52	6/25/2022 18:15	11.66	-0.18	6/25/2022 19:37	-0.07
6/25/2022 18:29	11.84	0.09	6/26/2022 20:13	11.58	-0.45	6/25/2022 18:16	11.66	-0.19	6/25/2022 19:38	-0.11
6/25/2022 18:30	11.83	0.15	6/26/2022 20:14	11.58	-0.39	6/25/2022 18:17	11.66	-0.21	6/25/2022 19:39	-0.10
6/25/2022 18:31	11.84	0.12	6/26/2022 20:15	11.58	-0.43	6/25/2022 18:18	11.63	-0.15	6/25/2022 19:40	-0.09
6/25/2022 18:32	11.83	0.01	6/26/2022 20:16	11.57	-0.47	6/25/2022 18:19	11.65	-0.18	6/25/2022 19:41	-0.10
6/25/2022 18:33	11.82	0.04	6/26/2022 20:17	11.55	-0.42	6/25/2022 18:20	11.68	-0.17	6/25/2022 19:42	-0.14
6/25/2022 18:34	11.83	0.14	6/26/2022 20:18	11.56	-0.47	6/25/2022 18:21	11.69	-0.20	6/25/2022 19:43	-0.15
6/25/2022 18:35	11.85	0.10	6/26/2022 20:19	11.56	-0.54	6/25/2022 18:22	11.67	-0.19	6/25/2022 19:44	-0.09
6/25/2022 18:36	11.83	0.13	6/26/2022 20:20	11.59	-0.53	6/25/2022 18:23	11.65	-0.20	6/25/2022 19:45	-0.13
6/25/2022 18:37	11.82	0.15	6/26/2022 20:21	11.57	-0.39	6/25/2022 18:24	11.66	-0.21	6/25/2022 19:46	-0.14
6/25/2022 18:38	11.82	0.05	6/26/2022 20:22	11.58	-0.48	6/25/2022 18:25	11.66	-0.21	6/25/2022 19:47	-0.10
6/25/2022 18:39	11.82	0.06	6/26/2022 20:23	11.54	-0.40	6/25/2022 18:26	11.66	-0.16	6/25/2022 19:48	-0.12
6/25/2022 18:40	11.82	0.05	6/26/2022 20:24	11.58	-0.48	6/25/2022 18:27	11.70	-0.19	6/25/2022 19:49	-0.12
6/25/2022 18:41	11.83	0.10	6/26/2022 20:25	11.56	-0.39	6/25/2022 18:28	11.65	-0.20	6/25/2022 19:50	-0.09
6/25/2022 18:42	11.83	0.09	6/26/2022 20:26	11.58	-0.42	6/25/2022 18:29	11.66	-0.18	6/25/2022 19:51	-0.08
6/25/2022 18:43	11.84	0.15	6/26/2022 20:27	11.57	-0.49	6/25/2022 18:30	11.67	-0.18	6/25/2022 19:52	-0.12
6/25/2022 18:44	11.84	0.09	6/26/2022 20:28	11.58	-0.55	6/25/2022 18:31	11.65	-0.19	6/25/2022 19:53	-0.14
6/25/2022 18:45	11.83	0.09	6/26/2022 20:29	11.57	-0.54	6/25/2022 18:32	11.63	-0.19	6/25/2022 19:54	-0.11
6/25/2022 18:46	11.83	0.14	6/26/2022 20:30	11.58	-0.48	6/25/2022 18:33	11.67	-0.18	6/25/2022 19:55	-0.14
6/25/2022 18:47	11.85	0.08	6/26/2022 20:31	11.55	-0.39	6/25/2022 18:34	11.67	-0.21	6/25/2022 19:56	-0.07
6/25/2022 18:48	11.84	0.09	6/26/2022 20:32	11.58	-0.36	6/25/2022 18:35	11.67	-0.19	6/25/2022 19:57	-0.10
6/25/2022 18:49	11.85	0.03	6/26/2022 20:33	11.59	-0.56	6/25/2022 18:36	11.67	-0.19	6/25/2022 19:58	-0.11
6/25/2022 18:50	11.81	0.03	6/26/2022 20:34	11.57	-0.48	6/25/2022 18:37	11.67	-0.18	6/25/2022 19:59	-0.13
6/25/2022 18:51	11.83	0.03	6/26/2022 20:35	11.57	-0.40	6/25/2022 18:38	11.64	-0.21	6/25/2022 20:00	-0.12
6/25/2022 18:52	11.85	0.08	6/26/2022 20:36	11.59	-0.56	6/25/2022 18:39	11.67	-0.21	6/25/2022 20:01	-0.15
6/25/2022 18:53	11.83	0.10	6/26/2022 20:37	11.60	-0.49	6/25/2022 18:40	11.66	-0.17	6/25/2022 20:02	-0.11
6/25/2022 18:54	11.84	0.07	6/26/2022 20:38	11.56	-0.51	6/25/2022 18:41	11.66	-0.15	6/25/2022 20:03	-0.11
6/25/2022 18:55	11.82	0.08	6/26/2022 20:39	11.58	-0.46	6/25/2022 18:42	11.66	-0.22	6/25/2022 20:04	-0.15
6/25/2022 18:56	11.82	0.06	6/26/2022 20:40	11.58	-0.50	6/25/2022 18:43	11.68	-0.19	6/25/2022 20:05	-0.17
6/25/2022 18:57	11.83	0.09	6/26/2022 20:41	11.57	-0.47	6/25/2022 18:44	11.67	-0.20	6/25/2022 20:06	-0.11
6/25/2022 18:58	11.84	0.09	6/26/2022 20:42	11.57	-0.47	6/25/2022 18:45	11.68	-0.21	6/25/2022 20:07	-0.14
6/25/2022 18:59	11.83	0.07	6/26/2022 20:43	11.57	-0.48	6/25/2022 18:46	11.65	-0.20	6/25/2022 20:08	-0.17
6/25/2022 19:00	11.84	0.13	6/26/2022 20:44	11.57	-0.46	6/25/2022 18:47	11.65	-0.18	6/25/2022 20:09	-0.16
6/25/2022 19:01	11.83	0.11	6/26/2022 20:45	11.57	-0.48	6/25/2022 18:48	11.67	-0.18	6/25/2022 20:10	-0.08
6/25/2022 19:02	11.85	0.08	6/26/2022 20:46	11.58	-0.46	6/25/2022 18:49	11.69	-0.18	6/25/2022 20:11	-0.12
6/25/2022 19:03	11.85	0.11	6/26/2022 20:47	11.57	-0.42	6/25/2022 18:50	11.67	-0.18	6/25/2022 20:12	-0.15
6/25/2022 19:04	11.83	0.15	6/26/2022 20:48	11.55	-0.49	6/25/2022 18:51	11.68	-0.17	6/25/2022 20:13	-0.16
6/25/2022 19:05	11.84	-0.01	6/26/2022 20:49	11.60	-0.40	6/25/2022 18:52	11.66	-0.17	6/25/2022 20:14	-0.12
6/25/2022 19:06	11.83	0.09	6/26/2022 20:50	11.59	-0.48	6/25/2022 18:53	11.67	-0.20	6/25/2022 20:15	-0.13
6/25/2022 19:07	11.83	-0.01	6/26/2022 20:51	11.56	-0.51	6/25/2022 18:54	11.65	-0.18	6/25/2022 20:16	-0.08
6/25/2022 19:08	11.81	0.11	6/26/2022 20:52	11.59	-0.51	6/25/2022 18:55	11.67	-0.20	6/25/2022 20:17	-0.16
6/25/2022 19:09	11.82	0.11	6/26/2022 20:53	11.60	-0.52	6/25/2022 18:56	11.68	-0.18	6/25/2022 20:18	-0.20
6/25/2022 19:10	11.83	0.09	6/26/2022 20:54	11.57	-0.47	6/25/2022 18:57	11.70	-0.21	6/25/2022 20:19	-0.10
6/25/2022 19:11	11.82	0.03	6/26/2022 20:55	11.55	-0.48	6/25/2022 18:58	11.66	-0.16	6/25/2022 20:20	-0.17
6/25/2022 19:12	11.81	0.13	6/26/2022 20:56	11.58	-0.49	6/25/2022 18:59	11.66	-0.12	6/25/2022 20:21	-0.09
6/25/2022 19:13	11.84	0.01	6/26/2022 20:57	11.58	-0.47	6/25/2022 19:00	11.68	-0.22	6/25/2022 20:22	-0.11
6/25/2022 19:14	11.84	0.13	6/26/2022 20:58	11.55	-0.52	6/25/2022 19:01	11.65	-0.19	6/25/2022 20:23	-0.09
6/25/2022 19:15	11.82	0.07	6/26/2022 20:59	11.58	-0.53	6/25/2022 19:02	11.68	-0.18	6/25/2022 20:24	-0.13
6/25/2022 19:16	11.85	0.11	6/26/2022 21:00	11.55	-0.40	6/25/2022 19:03	11.67	-0.21	6/25/2022 20:25	-0.13
6/25/2022 19:17	11.83	0.07	6/26/2022 21:01	11.56	-0.46	6/25/2022 19:04	11.68	-0.21	6/25/2022 20:26	-0.12
6/25/2022 19:18	11.82	0.12	6/26/2022 21:02	11.56	-0.52	6/25/2022 19:05	11.67	-0.17	6/25/2022 20:27	-0.10
6/25/2022 19:19	11.84	0.14	6/26/2022 21:03	11.60	-0.50	6/25/2022 19:06	11.69	-0.24	6/25/2022 20:28	-0.14
6/25/2022 19:20	11.85	0.03	6/26/2022 21:04	11.59	-0.45	6/25/2022 19:07	11.69	-0.21	6/25/2022 20:29	-0.10
6/25/2022 19:21	11.83	0.10	6/26/2022 21:05	11.57	-0.46	6/25/2022 19:08	11.71	-0.16	6/25/2022 20:30	-0.13
6/25/2022 19:22	11.86	-0.04	6/26/2022 21:06	11.56	-0.49	6/25/2022 19:09	11.69	-0.24	6/25/2022 20:31	-0.12
6/25/2022 19:23	11.86	0.09	6/26/2022 21:07	11.57	-0.43	6/25/2022 19:10	11.67	-0.15	6/25/2022 20:32	-0.16
6/25/2022 19:24	11.85	0.09	6/26/2022 21:08	11.58	-0.43	6/25/2022 19:11	11.67	-0.20	6/25/2022 20:33	-0.16
6/25/2022 19:25	11.85	0.05	6/26/2022 21:09	11.57	-0.46	6/25/2022 19:12	11.67	-0.19	6/25/2022 20:34	-0.14
6/25/2022 19:26	11.83	0.08	6/26/2022 21:10	11.58	-0.46	6/25/2022 19:13	11.71	-0.24	6/25/2022 20:35	-0.09

6/25/2022 19:27	11.85	0.04	6/26/2022 21:11	11.57	-0.44	6/25/2022 19:14	11.67	-0.21	6/25/2022 20:36	-0.15
6/25/2022 19:28	11.82	0.05	6/26/2022 21:12	11.59	-0.51	6/25/2022 19:15	11.67	-0.20	6/25/2022 20:37	-0.14
6/25/2022 19:29	11.84	0.08	6/26/2022 21:13	11.59	-0.49	6/25/2022 19:16	11.67	-0.22	6/25/2022 20:38	-0.18
6/25/2022 19:30	11.85	0.04	6/26/2022 21:14	11.56	-0.47	6/25/2022 19:17	11.65	-0.15	6/25/2022 20:39	-0.15
6/25/2022 19:31	11.82	0.08	6/26/2022 21:15	11.59	-0.44	6/25/2022 19:18	11.66	-0.19	6/25/2022 20:40	-0.21
6/25/2022 19:32	11.85	0.09	6/26/2022 21:16	11.56	-0.53	6/25/2022 19:19	11.68	-0.20	6/25/2022 20:41	-0.12
6/25/2022 19:33	11.85	0.07	6/26/2022 21:17	11.58	-0.49	6/25/2022 19:20	11.67	-0.19	6/25/2022 20:42	-0.14
6/25/2022 19:34	11.86	0.03	6/26/2022 21:18	11.55	-0.43	6/25/2022 19:21	11.64	-0.19	6/25/2022 20:43	-0.15
6/25/2022 19:35	11.83	0.08	6/26/2022 21:19	11.58	-0.46	6/25/2022 19:22	11.67	-0.20	6/25/2022 20:44	-0.14
6/25/2022 19:36	11.83	0.11	6/26/2022 21:20	11.58	-0.48	6/25/2022 19:23	11.65	-0.18	6/25/2022 20:45	-0.18
6/25/2022 19:37	11.85	0.08	6/26/2022 21:21	11.56	-0.47	6/25/2022 19:24	11.65	-0.17	6/25/2022 20:46	-0.12
6/25/2022 19:38	11.84	0.06	6/26/2022 21:22	11.60	-0.48	6/25/2022 19:25	11.66	-0.16	6/25/2022 20:47	-0.14
6/25/2022 19:39	11.82	0.14	6/26/2022 21:23	11.57	-0.43	6/25/2022 19:26	11.67	-0.17	6/25/2022 20:48	-0.11
6/25/2022 19:40	11.83	0.02	6/26/2022 21:24	11.60	-0.44	6/25/2022 19:27	11.68	-0.21	6/25/2022 20:49	-0.18
6/25/2022 19:41	11.86	0.03	6/26/2022 21:25	11.56	-0.39	6/25/2022 19:28	11.67	-0.22	6/25/2022 20:50	-0.13
6/25/2022 19:42	11.85	0.04	6/26/2022 21:26	11.56	-0.48	6/25/2022 19:29	11.65	-0.19	6/25/2022 20:51	-0.13
6/25/2022 19:43	11.84	0.03	6/26/2022 21:27	11.58	-0.41	6/25/2022 19:30	11.67	-0.21	6/25/2022 20:52	-0.17
6/25/2022 19:44	11.86	0.10	6/26/2022 21:28	11.56	-0.47	6/25/2022 19:31	11.65	-0.18	6/25/2022 20:53	-0.13
6/25/2022 19:45	11.82	0.01	6/26/2022 21:29	11.56	-0.46	6/25/2022 19:32	11.67	-0.18	6/25/2022 20:54	-0.16
6/25/2022 19:46	11.84	-0.02	6/26/2022 21:30	11.61	-0.43	6/25/2022 19:33	11.67	-0.23	6/25/2022 20:55	-0.15
6/25/2022 19:47	11.85	0.06	6/26/2022 21:31	11.54	-0.41	6/25/2022 19:34	11.67	-0.21	6/25/2022 20:56	-0.21
6/25/2022 19:48	11.84	0.09	6/26/2022 21:32	11.57	-0.44	6/25/2022 19:35	11.67	-0.24	6/25/2022 20:57	-0.12
6/25/2022 19:49	11.84	0.09	6/26/2022 21:33	11.57	-0.44	6/25/2022 19:36	11.66	-0.20	6/25/2022 20:58	-0.08
6/25/2022 19:50	11.84	0.10	6/26/2022 21:34	11.58	-0.47	6/25/2022 19:37	11.66	-0.14	6/25/2022 20:59	-0.15
6/25/2022 19:51	11.85	0.08	6/26/2022 21:35	11.57	-0.51	6/25/2022 19:38	11.65	-0.20	6/25/2022 21:00	-0.12
6/25/2022 19:52	11.84	0.08	6/26/2022 21:36	11.58	-0.47	6/25/2022 19:39	11.67	-0.19	6/25/2022 21:01	-0.13
6/25/2022 19:53	11.83	0.17	6/26/2022 21:37	11.58	-0.51	6/25/2022 19:40	11.66	-0.17	6/25/2022 21:02	-0.12
6/25/2022 19:54	11.82	0.09	6/26/2022 21:38	11.57	-0.41	6/25/2022 19:41	11.68	-0.23	6/25/2022 21:03	-0.10
6/25/2022 19:55	11.84	0.09	6/26/2022 21:39	11.57	-0.45	6/25/2022 19:42	11.66	-0.16	6/25/2022 21:04	-0.09
6/25/2022 19:56	11.85	0.08	6/26/2022 21:40	11.58	-0.50	6/25/2022 19:43	11.63	-0.11	6/25/2022 21:05	-0.12
6/25/2022 19:57	11.84	0.07	6/26/2022 21:41	11.56	-0.42	6/25/2022 19:44	11.64	-0.16	6/25/2022 21:06	-0.09
6/25/2022 19:58	11.86	0.01	6/26/2022 21:42	11.55	-0.44	6/25/2022 19:45	11.68	-0.23	6/25/2022 21:07	-0.09
6/25/2022 19:59	11.85	0.11	6/26/2022 21:43	11.58	-0.48	6/25/2022 19:46	11.68	-0.17	6/25/2022 21:08	-0.17
6/25/2022 20:00	11.86	0.10	6/26/2022 21:44	11.59	-0.41	6/25/2022 19:47	11.66	-0.21	6/25/2022 21:09	-0.13
6/25/2022 20:01	11.84	0.07	6/26/2022 21:45	11.57	-0.50	6/25/2022 19:48	11.64	-0.19	6/25/2022 21:10	-0.04
6/25/2022 20:02	11.87	0.06	6/26/2022 21:46	11.58	-0.48	6/25/2022 19:49	11.66	-0.19	6/25/2022 21:11	-0.15
6/25/2022 20:03	11.87	0.09	6/26/2022 21:47	11.58	-0.44	6/25/2022 19:50	11.66	-0.18	6/25/2022 21:12	-0.14
6/25/2022 20:04	11.86	0.11	6/26/2022 21:48	11.57	-0.47	6/25/2022 19:51	11.65	-0.11	6/25/2022 21:13	-0.13
6/25/2022 20:05	11.84	0.08	6/26/2022 21:49	11.56	-0.41	6/25/2022 19:52	11.65	-0.21	6/25/2022 21:14	-0.12
6/25/2022 20:06	11.84	0.10	6/26/2022 21:50	11.57	-0.51	6/25/2022 19:53	11.65	-0.22	6/25/2022 21:15	-0.15
6/25/2022 20:07	11.85	0.06	6/26/2022 21:51	11.61	-0.41	6/25/2022 19:54	11.64	-0.19	6/25/2022 21:16	-0.09
6/25/2022 20:08	11.87	0.10	6/26/2022 21:52	11.56	-0.44	6/25/2022 19:55	11.66	-0.16	6/25/2022 21:17	-0.10
6/25/2022 20:09	11.86	-0.06	6/26/2022 21:53	11.58	-0.48	6/25/2022 19:56	11.67	-0.18	6/25/2022 21:18	-0.13
6/25/2022 20:10	11.83	0.11	6/26/2022 21:54	11.58	-0.46	6/25/2022 19:57	11.63	-0.22	6/25/2022 21:19	-0.14
6/25/2022 20:11	11.84	0.10	6/26/2022 21:55	11.56	-0.42	6/25/2022 19:58	11.67	-0.13	6/25/2022 21:20	-0.20
6/25/2022 20:12	11.84	0.08	6/26/2022 21:56	11.56	-0.43	6/25/2022 19:59	11.68	-0.17	6/25/2022 21:21	-0.12
6/25/2022 20:13	11.85	0.05	6/26/2022 21:57	11.59	-0.50	6/25/2022 20:00	11.63	-0.15	6/25/2022 21:22	-0.18
6/25/2022 20:14	11.84	0.08	6/26/2022 21:58	11.56	-0.48	6/25/2022 20:01	11.63	-0.13	6/25/2022 21:23	-0.15
6/25/2022 20:15	11.82	0.08	6/26/2022 21:59	11.56	-0.57	6/25/2022 20:02	11.67	-0.12	6/25/2022 21:24	-0.09
6/25/2022 20:16	11.85	0.03	6/26/2022 22:00	11.59	-0.51	6/25/2022 20:03	11.67	-0.24	6/25/2022 21:25	-0.12
6/25/2022 20:17	11.87	0.09	6/26/2022 22:01	11.57	-0.47	6/25/2022 20:04	11.65	-0.22	6/25/2022 21:26	-0.16
6/25/2022 20:18	11.85	0.05	6/26/2022 22:02	11.58	-0.41	6/25/2022 20:05	11.67	-0.24	6/25/2022 21:27	-0.13
6/25/2022 20:19	11.83	-0.01	6/26/2022 22:03	11.57	-0.48	6/25/2022 20:06	11.70	-0.21	6/25/2022 21:28	-0.17
6/25/2022 20:20	11.87	0.06	6/26/2022 22:04	11.57	-0.42	6/25/2022 20:07	11.69	-0.20	6/25/2022 21:29	-0.08
6/25/2022 20:21	11.84	0.07	6/26/2022 22:05	11.57	-0.51	6/25/2022 20:08	11.67	-0.17	6/25/2022 21:30	-0.14
6/25/2022 20:22	11.82	0.08	6/26/2022 22:06	11.56	-0.48	6/25/2022 20:09	11.67	-0.21	6/25/2022 21:31	-0.13
6/25/2022 20:23	11.85	0.03	6/26/2022 22:07	11.56	-0.43	6/25/2022 20:10	11.68	-0.18	6/25/2022 21:32	-0.11
6/25/2022 20:24	11.85	0.07	6/26/2022 22:08	11.56	-0.42	6/25/2022 20:11	11.65	-0.18	6/25/2022 21:33	-0.13
6/25/2022 20:25	11.87	0.04	6/26/2022 22:09	11.55	-0.46	6/25/2022 20:12	11.66	-0.21	6/25/2022 21:34	-0.09
6/25/2022 20:26	11.86	0.08	6/26/2022 22:10	11.57	-0.41	6/25/2022 20:13	11.66	-0.22	6/25/2022 21:35	-0.10
6/25/2022 20:27	11.85	0.04	6/26/2022 22:11	11.57	-0.46	6/25/2022 20:14	11.65	-0.18	6/25/2022 21:36	-0.14
6/25/2022 20:28	11.85	0.10	6/26/2022 22:12	11.57	-0.50	6/25/2022 20:15	11.65	-0.23	6/25/2022 21:37	-0.13
6/25/2022 20:29	11.86	0.05	6/26/2022 22:13	11.60	-0.45	6/25/2022 20:16	11.65	-0.17	6/25/2022 21:38	-0.13
6/25/2022 20:30	11.83	0.07	6/26/2022 22:14	11.58	-0.50	6/25/2022 20:17	11.69	-0.17	6/25/2022 21:39	-0.05
6/25/2022 20:31	11.89	0.03	6/26/2022 22:15	11.57	-0.44	6/25/2022 20:18	11.65	-0.16	6/25/2022 21:40	-0.14
6/25/2022 20:32	11.85	0.11	6/26/2022 22:16	11.60	-0.38	6/25/2022 20:19	11.68	-0.18	6/25/2022 21:41	-0.13
6/25/2022 20:33	11.85	0.02	6/26/2022 22:17	11.58	-0.50	6/25/2022 20:20	11.67	-0.20	6/25/2022 21:42	-0.12
6/25/2022 20:34	11.82	0.09	6/26/2022 22:18	11.58	-0.44	6/25/2022 20:21	11.70	-0.19	6/25/2022 21:43	-0.12
6/25/2022 20:35	11.85	0.12	6/26/2022 22:19	11.57	-0.38	6/25/2022 20:22	11.67	-0.24	6/25/2022 21:44	-0.14
6/25/2022 20:36	11.84	0.03	6/26/2022 22:20	11.59	-0.42	6/25/2022 20:23	11.68	-0.20	6/25/2022 21:45	-0.15
6/25/2022 20:37	11.84	0.06	6/26/2022 22:21	11.56	-0.48	6/25/2022 20:24	11.69	-0.19	6/25/2022 21:46	-0.10
6/25/2022 20:38	11.85	0.13	6/26/2022 22:22	11.58	-0.53	6/25/2022 20:25	11.67	-0.17	6/25/2022 21:47	-0.17
6/25/2022 20:39	11.86	0.01	6/26/2022 22:23	11.57	-0.48	6/25/2022 20:26	11.70	-0.22	6/25/2022 21:48	-0.15
6/25/2022 20:40	11.86	0.11	6/26/2022 22:24	11.58	-0.48	6/25/2022 20:27	11.66	-0.14	6/25/2022 21:49	-0.17
6/25/2022 20:41	11.85	0.09	6/26/2022 22:25	11.56	-0.47	6/25/2022 20:28	11.67	-0.16	6/25/2022 21:50	-0.08
6/25/2022 20:42	11.85	0.06	6/26/2022 22:26	11.55	-0.42	6/25/2022 20:29	11.66	-0.20	6/25/2022 21:51	-0.14
6/25/2022 20:43	11.85	0.11	6/26/2022 22:27	11.55	-0.45	6/25/2022 20:30	11.67	-0.16	6/25/2022 21:52	-0.18
6/25/2022 20:44	11.83	0.06	6/26/2022 22:28	11.57	-0.44	6/25/2022 20:31	11.67	-0.19	6/25/2022 21:53	-0.18
6/25/2022 20:45	11.84	0.08	6/26/2022 22:29	11.56	-0.44	6/25/2022 20:32	11.70	-0.21	6/25/2022 21:54	-0.16
6/25/2022 20:46	11.85	0.12	6/26/2022 22:30	11.59	-0.46	6/25/2022 20:33	11.65	-0.16	6/25/2022 21:55	-0.12
6/25/2022 20:47	11.85	0.02	6/26/2022 22:31	11.56	-0.44	6/25/2022 20:34	11.65	-0.20	6/25/2022 21:56	-0.12
6/25/2022 20:48	11.85	0.11	6/26/2022 22:32	11.58	-0.49	6/25/2022 20:35	11.67	-0.16	6/25/2022 21:57	-0.16
6/25/2022 20:49	11.85	0.08	6/26/2022 22:33	11.57	-0.50	6/25/2022 20:36	11.66	-0.12	6/25/2022 21:58	-0.12
6/25/2022 20:50	11.83	0.00	6/26/2022 22:34	11.58	-0.44	6/25/2022 20:37	11.70	-0.23	6/25/2022 21:59	-0.16
6/25/2022 20:51	11.85	0.13	6/26/2022 22:35	11.58	-0.42	6/25/2022 20:38	11.69	-0.19	6/25/2022 22:00	-0.08
6/25/2022 20:52	11.86	-0.02	6/26/2022 22:36	11.57	-0.46	6/25/2022 20:39	11.67	-0.14	6/25/2022 22:01	-0.12
6/25/2022 20:53	11.85	0.09	6/26/2022 22:37	11.55	-0.52	6/25/2022 20:40	11.66	-0.18	6/25/2022 22:02	-0.17
6/25/2022 20:54	11.85	0.13	6/26/2022 22:38	11.57	-0.45	6/25/2022 20:41	11.69	-0.23	6/25/2022 22:03	-0.10

6/25/2022 20:55	11.84	0.11	6/26/2022 22:39	11.58	-0.40	6/25/2022 20:42	11.67	-0.23	6/25/2022 22:04	-0.11
6/25/2022 20:56	11.84	0.03	6/26/2022 22:40	11.56	-0.38	6/25/2022 20:43	11.68	-0.20	6/25/2022 22:05	-0.10
6/25/2022 20:57	11.84	0.12	6/26/2022 22:41	11.56	-0.38	6/25/2022 20:44	11.68	-0.20	6/25/2022 22:06	-0.21
6/25/2022 20:58	11.85	0.01	6/26/2022 22:42	11.57	-0.33	6/25/2022 20:45	11.68	-0.17	6/25/2022 22:07	-0.16
6/25/2022 20:59	11.87	0.04	6/26/2022 22:43	11.58	-0.43	6/25/2022 20:46	11.65	-0.17	6/25/2022 22:08	-0.13
6/25/2022 21:00	11.85	-0.02	6/26/2022 22:44	11.56	-0.38	6/25/2022 20:47	11.65	-0.13	6/25/2022 22:09	-0.15
6/25/2022 21:01	11.85	0.06	6/26/2022 22:45	11.58	-0.37	6/25/2022 20:48	11.70	-0.22	6/25/2022 22:10	-0.14
6/25/2022 21:02	11.85	0.04	6/26/2022 22:46	11.59	-0.54	6/25/2022 20:49	11.67	-0.18	6/25/2022 22:11	-0.14
6/25/2022 21:03	11.86	0.00	6/26/2022 22:47	11.57	-0.53	6/25/2022 20:50	11.68	-0.23	6/25/2022 22:12	-0.13
6/25/2022 21:04	11.86	-0.01	6/26/2022 22:48	11.59	-0.39	6/25/2022 20:51	11.69	-0.17	6/25/2022 22:13	-0.14
6/25/2022 21:05	11.88	0.11	6/26/2022 22:49	11.58	-0.45	6/25/2022 20:52	11.68	-0.20	6/25/2022 22:14	-0.17
6/25/2022 21:06	11.84	0.07	6/26/2022 22:50	11.58	-0.49	6/25/2022 20:53	11.67	-0.18	6/25/2022 22:15	-0.15
6/25/2022 21:07	11.86	0.01	6/26/2022 22:51	11.57	-0.44	6/25/2022 20:54	11.65	-0.20	6/25/2022 22:16	-0.15
6/25/2022 21:08	11.86	0.03	6/26/2022 22:52	11.59	-0.44	6/25/2022 20:55	11.66	-0.20	6/25/2022 22:17	-0.18
6/25/2022 21:09	11.82	0.03	6/26/2022 22:53	11.56	-0.41	6/25/2022 20:56	11.65	-0.20	6/25/2022 22:18	-0.14
6/25/2022 21:10	11.83	0.02	6/26/2022 22:54	11.59	-0.44	6/25/2022 20:57	11.69	-0.19	6/25/2022 22:19	-0.15
6/25/2022 21:11	11.85	0.08	6/26/2022 22:55	11.58	-0.42	6/25/2022 20:58	11.65	-0.20	6/25/2022 22:20	-0.11
6/25/2022 21:12	11.82	0.02	6/26/2022 22:56	11.58	-0.48	6/25/2022 20:59	11.64	-0.18	6/25/2022 22:21	-0.17
6/25/2022 21:13	11.85	0.12	6/26/2022 22:57	11.58	-0.52	6/25/2022 21:00	11.68	-0.20	6/25/2022 22:22	-0.13
6/25/2022 21:14	11.87	0.14	6/26/2022 22:58	11.56	-0.40	6/25/2022 21:01	11.68	-0.20	6/25/2022 22:23	-0.14
6/25/2022 21:15	11.84	0.04	6/26/2022 22:59	11.57	-0.53	6/25/2022 21:02	11.66	-0.17	6/25/2022 22:24	-0.15
6/25/2022 21:16	11.84	0.05	6/26/2022 23:00	11.57	-0.44	6/25/2022 21:03	11.67	-0.17	6/25/2022 22:25	-0.15
6/25/2022 21:17	11.85	0.07	6/26/2022 23:01	11.58	-0.50	6/25/2022 21:04	11.68	-0.18	6/25/2022 22:26	-0.13
6/25/2022 21:18	11.85	0.04	6/26/2022 23:02	11.60	-0.43	6/25/2022 21:05	11.67	-0.23	6/25/2022 22:27	-0.12
6/25/2022 21:19	11.87	0.13	6/26/2022 23:03	11.57	-0.50	6/25/2022 21:06	11.70	-0.21	6/25/2022 22:28	-0.16
6/25/2022 21:20	11.89	0.10	6/26/2022 23:04	11.58	-0.46	6/25/2022 21:07	11.68	-0.21	6/25/2022 22:29	-0.16
6/25/2022 21:21	11.84	0.00	6/26/2022 23:05	11.58	-0.44	6/25/2022 21:08	11.67	-0.20	6/25/2022 22:30	-0.07
6/25/2022 21:22	11.84	0.02	6/26/2022 23:06	11.54	-0.50	6/25/2022 21:09	11.68	-0.19	6/25/2022 22:31	-0.13
6/25/2022 21:23	11.85	0.07	6/26/2022 23:07	11.57	-0.44	6/25/2022 21:10	11.67	-0.19	6/25/2022 22:32	-0.17
6/25/2022 21:24	11.85	0.10	6/26/2022 23:08	11.56	-0.45	6/25/2022 21:11	11.67	-0.14	6/25/2022 22:33	-0.17
6/25/2022 21:25	11.86	0.13	6/26/2022 23:09	11.57	-0.52	6/25/2022 21:12	11.67	-0.18	6/25/2022 22:34	-0.14
6/25/2022 21:26	11.85	0.05	6/26/2022 23:10	11.58	-0.36	6/25/2022 21:13	11.66	-0.17	6/25/2022 22:35	-0.21
6/25/2022 21:27	11.84	-0.02	6/26/2022 23:11	11.58	-0.37	6/25/2022 21:14	11.69	-0.18	6/25/2022 22:36	-0.17
6/25/2022 21:28	11.86	0.08	6/26/2022 23:12	11.60	-0.42	6/25/2022 21:15	11.70	-0.19	6/25/2022 22:37	-0.15
6/25/2022 21:29	11.86	0.03	6/26/2022 23:13	11.57	-0.48	6/25/2022 21:16	11.67	-0.19	6/25/2022 22:38	-0.17
6/25/2022 21:30	11.87	0.07	6/26/2022 23:14	11.56	-0.44	6/25/2022 21:17	11.71	-0.19	6/25/2022 22:39	-0.12
6/25/2022 21:31	11.86	0.12	6/26/2022 23:15	11.60	-0.47	6/25/2022 21:18	11.68	-0.21	6/25/2022 22:40	-0.15
6/25/2022 21:32	11.86	0.04	6/26/2022 23:16	11.59	-0.45	6/25/2022 21:19	11.67	-0.18	6/25/2022 22:41	-0.11
6/25/2022 21:33	11.85	0.05	6/26/2022 23:17	11.57	-0.45	6/25/2022 21:20	11.66	-0.24	6/25/2022 22:42	-0.19
6/25/2022 21:34	11.88	0.08	6/26/2022 23:18	11.56	-0.52	6/25/2022 21:21	11.70	-0.20	6/25/2022 22:43	-0.11
6/25/2022 21:35	11.89	0.08	6/26/2022 23:19	11.60	-0.47	6/25/2022 21:22	11.67	-0.20	6/25/2022 22:44	-0.15
6/25/2022 21:36	11.87	0.06	6/26/2022 23:20	11.58	-0.47	6/25/2022 21:23	11.65	-0.19	6/25/2022 22:45	-0.08
6/25/2022 21:37	11.87	0.03	6/26/2022 23:21	11.57	-0.44	6/25/2022 21:24	11.68	-0.21	6/25/2022 22:46	-0.09
6/25/2022 21:38	11.86	0.02	6/26/2022 23:22	11.57	-0.41	6/25/2022 21:25	11.69	-0.22	6/25/2022 22:47	-0.12
6/25/2022 21:39	11.85	0.07	6/26/2022 23:23	11.59	-0.47	6/25/2022 21:26	11.67	-0.19	6/25/2022 22:48	-0.13
6/25/2022 21:40	11.87	0.10	6/26/2022 23:24	11.59	-0.44	6/25/2022 21:27	11.68	-0.19	6/25/2022 22:49	-0.11
6/25/2022 21:41	11.85	0.13	6/26/2022 23:25	11.56	-0.43	6/25/2022 21:28	11.69	-0.19	6/25/2022 22:50	-0.17
6/25/2022 21:42	11.87	0.09	6/26/2022 23:26	11.57	-0.43	6/25/2022 21:29	11.68	-0.18	6/25/2022 22:51	-0.13
6/25/2022 21:43	11.88	0.13	6/26/2022 23:27	11.57	-0.43	6/25/2022 21:30	11.65	-0.17	6/25/2022 22:52	-0.12
6/25/2022 21:44	11.87	0.11	6/26/2022 23:28	11.58	-0.41	6/25/2022 21:31	11.68	-0.15	6/25/2022 22:53	-0.12
6/25/2022 21:45	11.87	0.07	6/26/2022 23:29	11.56	-0.45	6/25/2022 21:32	11.66	-0.16	6/25/2022 22:54	-0.11
6/25/2022 21:46	11.86	0.08	6/26/2022 23:30	11.57	-0.39	6/25/2022 21:33	11.66	-0.15	6/25/2022 22:55	-0.15
6/25/2022 21:47	11.83	0.03	6/26/2022 23:31	11.59	-0.42	6/25/2022 21:34	11.67	-0.17	6/25/2022 22:56	-0.19
6/25/2022 21:48	11.88	-0.01	6/26/2022 23:32	11.58	-0.44	6/25/2022 21:35	11.67	-0.20	6/25/2022 22:57	-0.09
6/25/2022 21:49	11.86	0.12	6/26/2022 23:33	11.54	-0.39	6/25/2022 21:36	11.69	-0.18	6/25/2022 22:58	-0.11
6/25/2022 21:50	11.85	0.12	6/26/2022 23:34	11.57	-0.43	6/25/2022 21:37	11.64	-0.18	6/25/2022 22:59	-0.19
6/25/2022 21:51	11.84	0.05	6/26/2022 23:35	11.60	-0.38	6/25/2022 21:38	11.66	-0.18	6/25/2022 23:00	-0.11
6/25/2022 21:52	11.84	0.09	6/26/2022 23:36	11.58	-0.49	6/25/2022 21:39	11.67	-0.16	6/25/2022 23:01	-0.09
6/25/2022 21:53	11.83	0.02	6/26/2022 23:37	11.57	-0.45	6/25/2022 21:40	11.68	-0.20	6/25/2022 23:02	-0.14
6/25/2022 21:54	11.82	0.07	6/26/2022 23:38	11.57	-0.38	6/25/2022 21:41	11.66	-0.20	6/25/2022 23:03	-0.14
6/25/2022 21:55	11.85	0.12	6/26/2022 23:39	11.58	-0.51	6/25/2022 21:42	11.68	-0.19	6/25/2022 23:04	-0.12
6/25/2022 21:56	11.86	0.09	6/26/2022 23:40	11.58	-0.44	6/25/2022 21:43	11.70	-0.20	6/25/2022 23:05	-0.15
6/25/2022 21:57	11.86	0.04	6/26/2022 23:41	11.57	-0.38	6/25/2022 21:44	11.68	-0.19	6/25/2022 23:06	-0.19
6/25/2022 21:58	11.85	0.03	6/26/2022 23:42	11.59	-0.45	6/25/2022 21:45	11.64	-0.16	6/25/2022 23:07	-0.13
6/25/2022 21:59	11.87	0.08	6/26/2022 23:43	11.56	-0.50	6/25/2022 21:46	11.67	-0.21	6/25/2022 23:08	-0.18
6/25/2022 22:00	11.85	0.08	6/26/2022 23:44	11.60	-0.44	6/25/2022 21:47	11.67	-0.20	6/25/2022 23:09	-0.16
6/25/2022 22:01	11.86	0.08	6/26/2022 23:45	11.56	-0.43	6/25/2022 21:48	11.67	-0.19	6/25/2022 23:10	-0.16
6/25/2022 22:02	11.85	0.08	6/26/2022 23:46	11.57	-0.38	6/25/2022 21:49	11.65	-0.15	6/25/2022 23:11	-0.15
6/25/2022 22:03	11.87	0.15	6/26/2022 23:47	11.58	-0.44	6/25/2022 21:50	11.66	-0.21	6/25/2022 23:12	-0.13
6/25/2022 22:04	11.87	0.13	6/26/2022 23:48	11.59	-0.45	6/25/2022 21:51	11.66	-0.18	6/25/2022 23:13	-0.18
6/25/2022 22:05	11.84	0.09	6/26/2022 23:49	11.57	-0.39	6/25/2022 21:52	11.65	-0.21	6/25/2022 23:14	-0.12
6/25/2022 22:06	11.85	0.08	6/26/2022 23:50	11.55	-0.46	6/25/2022 21:53	11.68	-0.20	6/25/2022 23:15	-0.15
6/25/2022 22:07	11.86	0.09	6/26/2022 23:51	11.60	-0.36	6/25/2022 21:54	11.67	-0.23	6/25/2022 23:16	-0.15
6/25/2022 22:08	11.85	0.10	6/26/2022 23:52	11.59	-0.46	6/25/2022 21:55	11.65	-0.21	6/25/2022 23:17	-0.13
6/25/2022 22:09	11.89	0.06	6/26/2022 23:53	11.59	-0.43	6/25/2022 21:56	11.68	-0.18	6/25/2022 23:18	-0.18
6/25/2022 22:10	11.84	-0.01	6/26/2022 23:54	11.57	-0.34	6/25/2022 21:57	11.68	-0.23	6/25/2022 23:19	-0.06
6/25/2022 22:11	11.85	0.02	6/26/2022 23:55	11.57	-0.50	6/25/2022 21:58	11.69	-0.25	6/25/2022 23:20	-0.17
6/25/2022 22:12	11.89	0.02	6/26/2022 23:56	11.59	-0.49	6/25/2022 21:59	11.68	-0.18	6/25/2022 23:21	-0.21
6/25/2022 22:13	11.86	-0.02	6/26/2022 23:57	11.54	-0.48	6/25/2022 22:00	11.67	-0.17	6/25/2022 23:22	-0.14
6/25/2022 22:14	11.84	0.07	6/26/2022 23:58	11.55	-0.45	6/25/2022 22:01	11.66	-0.17	6/25/2022 23:23	-0.15
6/25/2022 22:15	11.84	0.05	6/26/2022 23:59	11.58	-0.42	6/25/2022 22:02	11.67	-0.17	6/25/2022 23:24	-0.18
6/25/2022 22:16	11.87	0.03	6/27/2022 0:00	11.58	-0.46	6/25/2022 22:03	11.67	-0.18	6/25/2022 23:25	-0.16
6/25/2022 22:17	11.88	0.13	6/27/2022 0:01	11.56	-0.41	6/25/2022 22:04	11.66	-0.19	6/25/2022 23:26	-0.10
6/25/2022 22:18	11.85	0.12	6/27/2022 0:02	11.55	-0.44	6/25/2022 22:05	11.65	-0.20	6/25/2022 23:27	-0.16
6/25/2022 22:19	11.84	0.03	6/27/2022 0:03	11.57	-0.43	6/25/2022 22:06	11.69	-0.20	6/25/2022 23:28	-0.15
6/25/2022 22:20	11.86	0.11	6/27/2022 0:04	11.59	-0.48	6/25/2022 22:07	11.67	-0.20	6/25/2022 23:29	-0.14
6/25/2022 22:21	11.85	0.10	6/27/2022 0:05	11.55	-0.40	6/25/2022 22:08	11.69	-0.20	6/25/2022 23:30	-0.10
6/25/2022 22:22	11.83	0.07	6/27/2022 0:06	11.59	-0.43	6/25/2022 22:09	11.68	-0.18	6/25/2022 23:31	-0.11

6/25/2022 22:23	11.86	0.06	6/27/2022 0:07	11.58	-0.47	6/25/2022 22:10	11.68	-0.21	6/25/2022 23:32	-0.14
6/25/2022 22:24	11.86	0.03	6/27/2022 0:08	11.58	-0.48	6/25/2022 22:11	11.69	-0.21	6/25/2022 23:33	-0.10
6/25/2022 22:25	11.88	0.13	6/27/2022 0:09	11.61	-0.45	6/25/2022 22:12	11.68	-0.17	6/25/2022 23:34	-0.14
6/25/2022 22:26	11.85	0.06	6/27/2022 0:10	11.56	-0.44	6/25/2022 22:13	11.69	-0.18	6/25/2022 23:35	-0.16
6/25/2022 22:27	11.83	0.09	6/27/2022 0:11	11.55	-0.39	6/25/2022 22:14	11.68	-0.21	6/25/2022 23:36	-0.16
6/25/2022 22:28	11.89	0.05	6/27/2022 0:12	11.57	-0.42	6/25/2022 22:15	11.68	-0.20	6/25/2022 23:37	-0.13
6/25/2022 22:29	11.87	0.11	6/27/2022 0:13	11.57	-0.40	6/25/2022 22:16	11.68	-0.15	6/25/2022 23:38	-0.16
6/25/2022 22:30	11.87	0.07	6/27/2022 0:14	11.58	-0.49	6/25/2022 22:17	11.68	-0.18	6/25/2022 23:39	-0.11
6/25/2022 22:31	11.87	0.13	6/27/2022 0:15	11.58	-0.42	6/25/2022 22:18	11.66	-0.16	6/25/2022 23:40	-0.11
6/25/2022 22:32	11.89	0.03	6/27/2022 0:16	11.57	-0.38	6/25/2022 22:19	11.68	-0.22	6/25/2022 23:41	-0.19
6/25/2022 22:33	11.89	0.08	6/27/2022 0:17	11.56	-0.51	6/25/2022 22:20	11.65	-0.13	6/25/2022 23:42	-0.16
6/25/2022 22:34	11.88	0.08	6/27/2022 0:18	11.59	-0.48	6/25/2022 22:21	11.69	-0.23	6/25/2022 23:43	-0.16
6/25/2022 22:35	11.86	0.03	6/27/2022 0:19	11.57	-0.33	6/25/2022 22:22	11.70	-0.24	6/25/2022 23:44	-0.18
6/25/2022 22:36	11.88	0.00	6/27/2022 0:20	11.59	-0.45	6/25/2022 22:23	11.69	-0.21	6/25/2022 23:45	-0.19
6/25/2022 22:37	11.85	0.03	6/27/2022 0:21	11.59	-0.44	6/25/2022 22:24	11.68	-0.18	6/25/2022 23:46	-0.11
6/25/2022 22:38	11.86	0.05	6/27/2022 0:22	11.57	-0.50	6/25/2022 22:25	11.67	-0.18	6/25/2022 23:47	-0.12
6/25/2022 22:39	11.85	0.08	6/27/2022 0:23	11.58	-0.40	6/25/2022 22:26	11.69	-0.21	6/25/2022 23:48	-0.17
6/25/2022 22:40	11.87	0.07	6/27/2022 0:24	11.60	-0.45	6/25/2022 22:27	11.69	-0.20	6/25/2022 23:49	-0.14
6/25/2022 22:41	11.86	0.12	6/27/2022 0:25	11.58	-0.54	6/25/2022 22:28	11.66	-0.22	6/25/2022 23:50	-0.13
6/25/2022 22:42	11.87	0.03	6/27/2022 0:26	11.56	-0.49	6/25/2022 22:29	11.69	-0.17	6/25/2022 23:51	-0.14
6/25/2022 22:43	11.87	0.07	6/27/2022 0:27	11.57	-0.50	6/25/2022 22:30	11.70	-0.17	6/25/2022 23:52	-0.16
6/25/2022 22:44	11.83	0.13	6/27/2022 0:28	11.54	-0.42	6/25/2022 22:31	11.67	-0.19	6/25/2022 23:53	-0.10
6/25/2022 22:45	11.86	0.03	6/27/2022 0:29	11.57	-0.46	6/25/2022 22:32	11.65	-0.22	6/25/2022 23:54	-0.12
6/25/2022 22:46	11.87	0.13	6/27/2022 0:30	11.57	-0.48	6/25/2022 22:33	11.68	-0.22	6/25/2022 23:55	-0.14
6/25/2022 22:47	11.87	0.10	6/27/2022 0:31	11.57	-0.46	6/25/2022 22:34	11.66	-0.16	6/25/2022 23:56	-0.13
6/25/2022 22:48	11.87	0.07	6/27/2022 0:32	11.57	-0.50	6/25/2022 22:35	11.68	-0.22	6/25/2022 23:57	-0.12
6/25/2022 22:49	11.84	0.03	6/27/2022 0:33	11.56	-0.52	6/25/2022 22:36	11.67	-0.23	6/25/2022 23:58	-0.13
6/25/2022 22:50	11.87	-0.02	6/27/2022 0:34	11.59	-0.46	6/25/2022 22:37	11.66	-0.19	6/25/2022 23:59	-0.14
6/25/2022 22:51	11.86	0.04	6/27/2022 0:35	11.59	-0.46	6/25/2022 22:38	11.69	-0.20	6/26/2022 0:00	-0.13
6/25/2022 22:52	11.85	0.01	6/27/2022 0:36	11.56	-0.43	6/25/2022 22:39	11.66	-0.17	6/26/2022 0:01	-0.13
6/25/2022 22:53	11.87	0.06	6/27/2022 0:37	11.57	-0.47	6/25/2022 22:40	11.66	-0.19	6/26/2022 0:02	-0.11
6/25/2022 22:54	11.86	0.07	6/27/2022 0:38	11.58	-0.48	6/25/2022 22:41	11.69	-0.17	6/26/2022 0:03	-0.10
6/25/2022 22:55	11.87	0.05	6/27/2022 0:39	11.58	-0.49	6/25/2022 22:42	11.68	-0.20	6/26/2022 0:04	-0.14
6/25/2022 22:56	11.89	0.10	6/27/2022 0:40	11.56	-0.54	6/25/2022 22:43	11.70	-0.21	6/26/2022 0:05	-0.10
6/25/2022 22:57	11.90	0.01	6/27/2022 0:41	11.55	-0.42	6/25/2022 22:44	11.69	-0.22	6/26/2022 0:06	-0.13
6/25/2022 22:58	11.89	0.03	6/27/2022 0:42	11.58	-0.51	6/25/2022 22:45	11.66	-0.18	6/26/2022 0:07	-0.15
6/25/2022 22:59	11.89	0.08	6/27/2022 0:43	11.55	-0.49	6/25/2022 22:46	11.63	-0.17	6/26/2022 0:08	-0.17
6/25/2022 23:00	11.88	0.02	6/27/2022 0:44	11.55	-0.35	6/25/2022 22:47	11.69	-0.20	6/26/2022 0:09	-0.09
6/25/2022 23:01	11.86	-0.04	6/27/2022 0:45	11.58	-0.47	6/25/2022 22:48	11.65	-0.20	6/26/2022 0:10	-0.11
6/25/2022 23:02	11.85	0.07	6/27/2022 0:46	11.58	-0.50	6/25/2022 22:49	11.70	-0.18	6/26/2022 0:11	-0.13
6/25/2022 23:03	11.86	-0.02	6/27/2022 0:47	11.58	-0.52	6/25/2022 22:50	11.70	-0.19	6/26/2022 0:12	-0.18
6/25/2022 23:04	11.91	0.07	6/27/2022 0:48	11.57	-0.42	6/25/2022 22:51	11.67	-0.16	6/26/2022 0:13	-0.14
6/25/2022 23:05	11.86	-0.04	6/27/2022 0:49	11.58	-0.43	6/25/2022 22:52	11.66	-0.17	6/26/2022 0:14	-0.19
6/25/2022 23:06	11.85	0.12	6/27/2022 0:50	11.56	-0.48	6/25/2022 22:53	11.68	-0.18	6/26/2022 0:15	-0.12
6/25/2022 23:07	11.86	0.01	6/27/2022 0:51	11.59	-0.44	6/25/2022 22:54	11.66	-0.17	6/26/2022 0:16	-0.17
6/25/2022 23:08	11.87	0.16	6/27/2022 0:52	11.58	-0.50	6/25/2022 22:55	11.66	-0.22	6/26/2022 0:17	-0.14
6/25/2022 23:09	11.87	0.07	6/27/2022 0:53	11.56	-0.47	6/25/2022 22:56	11.64	-0.19	6/26/2022 0:18	-0.16
6/25/2022 23:10	11.87	0.04	6/27/2022 0:54	11.56	-0.52	6/25/2022 22:57	11.67	-0.22	6/26/2022 0:19	-0.14
6/25/2022 23:11	11.86	0.05	6/27/2022 0:55	11.56	-0.50	6/25/2022 22:58	11.65	-0.15	6/26/2022 0:20	-0.13
6/25/2022 23:12	11.84	0.11	6/27/2022 0:56	11.58	-0.44	6/25/2022 22:59	11.67	-0.20	6/26/2022 0:21	-0.14
6/25/2022 23:13	11.87	0.09	6/27/2022 0:57	11.59	-0.39	6/25/2022 23:00	11.63	-0.19	6/26/2022 0:22	-0.10
6/25/2022 23:14	11.87	0.09	6/27/2022 0:58	11.56	-0.44	6/25/2022 23:01	11.67	-0.22	6/26/2022 0:23	-0.12
6/25/2022 23:15	11.88	0.08	6/27/2022 0:59	11.60	-0.46	6/25/2022 23:02	11.68	-0.22	6/26/2022 0:24	-0.17
6/25/2022 23:16	11.89	0.03	6/27/2022 1:00	11.58	-0.41	6/25/2022 23:03	11.68	-0.21	6/26/2022 0:25	-0.14
6/25/2022 23:17	11.85	0.09	6/27/2022 1:01	11.60	-0.56	6/25/2022 23:04	11.66	-0.19	6/26/2022 0:26	-0.15
6/25/2022 23:18	11.87	0.03	6/27/2022 1:02	11.59	-0.46	6/25/2022 23:05	11.65	-0.19	6/26/2022 0:27	-0.18
6/25/2022 23:19	11.87	0.09	6/27/2022 1:03	11.55	-0.46	6/25/2022 23:06	11.68	-0.21	6/26/2022 0:28	-0.16
6/25/2022 23:20	11.87	0.05	6/27/2022 1:04	11.61	-0.51	6/25/2022 23:07	11.67	-0.15	6/26/2022 0:29	-0.12
6/25/2022 23:21	11.86	-0.01	6/27/2022 1:05	11.56	-0.49	6/25/2022 23:08	11.65	-0.21	6/26/2022 0:30	-0.08
6/25/2022 23:22	11.85	0.05	6/27/2022 1:06	11.56	-0.41	6/25/2022 23:09	11.66	-0.18	6/26/2022 0:31	-0.14
6/25/2022 23:23	11.87	0.08	6/27/2022 1:07	11.54	-0.43	6/25/2022 23:10	11.65	-0.21	6/26/2022 0:32	-0.10
6/25/2022 23:24	11.87	0.09	6/27/2022 1:08	11.59	-0.42	6/25/2022 23:11	11.67	-0.18	6/26/2022 0:33	-0.17
6/25/2022 23:25	11.85	0.07	6/27/2022 1:09	11.58	-0.53	6/25/2022 23:12	11.66	-0.22	6/26/2022 0:34	-0.15
6/25/2022 23:26	11.85	0.05	6/27/2022 1:10	11.56	-0.53	6/25/2022 23:13	11.67	-0.16	6/26/2022 0:35	-0.14
6/25/2022 23:27	11.86	0.07	6/27/2022 1:11	11.58	-0.46	6/25/2022 23:14	11.67	-0.16	6/26/2022 0:36	-0.13
6/25/2022 23:28	11.87	0.07	6/27/2022 1:12	11.57	-0.45	6/25/2022 23:15	11.69	-0.19	6/26/2022 0:37	-0.14
6/25/2022 23:29	11.86	0.02	6/27/2022 1:13	11.57	-0.49	6/25/2022 23:16	11.65	-0.20	6/26/2022 0:38	-0.14
6/25/2022 23:30	11.87	0.09	6/27/2022 1:14	11.60	-0.39	6/25/2022 23:17	11.67	-0.17	6/26/2022 0:39	-0.13
6/25/2022 23:31	11.87	0.06	6/27/2022 1:15	11.57	-0.44	6/25/2022 23:18	11.67	-0.21	6/26/2022 0:40	-0.15
6/25/2022 23:32	11.87	0.07	6/27/2022 1:16	11.57	-0.43	6/25/2022 23:19	11.66	-0.18	6/26/2022 0:41	-0.17
6/25/2022 23:33	11.87	0.09	6/27/2022 1:17	11.58	-0.46	6/25/2022 23:20	11.66	-0.21	6/26/2022 0:42	-0.10
6/25/2022 23:34	11.85	0.12	6/27/2022 1:18	11.58	-0.48	6/25/2022 23:21	11.66	-0.16	6/26/2022 0:43	-0.12
6/25/2022 23:35	11.86	0.11	6/27/2022 1:19	11.59	-0.43	6/25/2022 23:22	11.65	-0.18	6/26/2022 0:44	-0.14
6/25/2022 23:36	11.87	0.03	6/27/2022 1:20	11.58	-0.50	6/25/2022 23:23	11.69	-0.17	6/26/2022 0:45	-0.12
6/25/2022 23:37	11.86	0.09	6/27/2022 1:21	11.60	-0.42	6/25/2022 23:24	11.67	-0.21	6/26/2022 0:46	-0.16
6/25/2022 23:38	11.86	0.04	6/27/2022 1:22	11.58	-0.41	6/25/2022 23:25	11.65	-0.21	6/26/2022 0:47	-0.16
6/25/2022 23:39	11.86	0.01	6/27/2022 1:23	11.58	-0.47	6/25/2022 23:26	11.66	-0.19	6/26/2022 0:48	-0.16
6/25/2022 23:40	11.86	-0.01	6/27/2022 1:24	11.58	-0.53	6/25/2022 23:27	11.69	-0.19	6/26/2022 0:49	-0.19
6/25/2022 23:41	11.88	0.12	6/27/2022 1:25	11.58	-0.41	6/25/2022 23:28	11.65	-0.17	6/26/2022 0:50	-0.10
6/25/2022 23:42	11.85	0.06	6/27/2022 1:26	11.58	-0.47	6/25/2022 23:29	11.68	-0.21	6/26/2022 0:51	-0.16
6/25/2022 23:43	11.88	-0.02	6/27/2022 1:27	11.58	-0.43	6/25/2022 23:30	11.65	-0.16	6/26/2022 0:52	-0.15
6/25/2022 23:44	11.89	0.00	6/27/2022 1:28	11.56	-0.45	6/25/2022 23:31	11.66	-0.20	6/26/2022 0:53	-0.13
6/25/2022 23:45	11.88	0.16	6/27/2022 1:29	11.57	-0.46	6/25/2022 23:32	11.67	-0.17	6/26/2022 0:54	-0.15
6/25/2022 23:46	11.88	0.08	6/27/2022 1:30	11.59	-0.49	6/25/2022 23:33	11.66	-0.18	6/26/2022 0:55	-0.12
6/25/2022 23:47	11.85	0.06	6/27/2022 1:31	11.57	-0.51	6/25/2022 23:34	11.67	-0.19	6/26/2022 0:56	-0.18
6/25/2022 23:48	11.86	0.13	6/27/2022 1:32	11.57	-0.51	6/25/2022 23:35	11.68	-0.20	6/26/2022 0:57	-0.14
6/25/2022 23:49	11.85	0.09	6/27/2022 1:33	11.54	-0.51	6/25/2022 23:36	11.67	-0.17	6/26/2022 0:58	-0.15
6/25/2022 23:50	11.86	0.07	6/27/2022 1:34	11.57	-0.44	6/25/2022 23:37	11.67	-0.16	6/26/2022 0:59	-0.10

6/25/2022 23:51	11.85	0.02	6/27/2022 1:35	11.56	-0.39	6/25/2022 23:38	11.67	-0.19	6/26/2022 1:00	-0.12
6/25/2022 23:52	11.88	0.11	6/27/2022 1:36	11.57	-0.44	6/25/2022 23:39	11.66	-0.23	6/26/2022 1:01	-0.15
6/25/2022 23:53	11.87	0.14	6/27/2022 1:37	11.56	-0.49	6/25/2022 23:40	11.68	-0.21	6/26/2022 1:02	-0.10
6/25/2022 23:54	11.91	0.08	6/27/2022 1:38	11.57	-0.40	6/25/2022 23:41	11.66	-0.19	6/26/2022 1:03	-0.17
6/25/2022 23:55	11.86	0.11	6/27/2022 1:39	11.56	-0.39	6/25/2022 23:42	11.68	-0.23	6/26/2022 1:04	-0.16
6/25/2022 23:56	11.89	0.05	6/27/2022 1:40	11.58	-0.43	6/25/2022 23:43	11.68	-0.16	6/26/2022 1:05	-0.14
6/25/2022 23:57	11.86	0.07	6/27/2022 1:41	11.60	-0.43	6/25/2022 23:44	11.67	-0.13	6/26/2022 1:06	-0.16
6/25/2022 23:58	11.86	-0.03	6/27/2022 1:42	11.57	-0.56	6/25/2022 23:45	11.66	-0.19	6/26/2022 1:07	-0.13
6/25/2022 23:59	11.91	0.07	6/27/2022 1:43	11.59	-0.39	6/25/2022 23:46	11.67	-0.15	6/26/2022 1:08	-0.16
6/26/2022 0:00	11.86	0.03	6/27/2022 1:44	11.57	-0.43	6/25/2022 23:47	11.66	-0.23	6/26/2022 1:09	-0.13
6/26/2022 0:01	11.87	0.07	6/27/2022 1:45	11.60	-0.48	6/25/2022 23:48	11.66	-0.20	6/26/2022 1:10	-0.16
6/26/2022 0:02	11.89	-0.01	6/27/2022 1:46	11.57	-0.43	6/25/2022 23:49	11.68	-0.17	6/26/2022 1:11	-0.11
6/26/2022 0:03	11.88	0.12	6/27/2022 1:47	11.57	-0.43	6/25/2022 23:50	11.69	-0.24	6/26/2022 1:12	-0.16
6/26/2022 0:04	11.89	0.03	6/27/2022 1:48	11.58	-0.52	6/25/2022 23:51	11.67	-0.20	6/26/2022 1:13	-0.11
6/26/2022 0:05	11.86	0.14	6/27/2022 1:49	11.58	-0.43	6/25/2022 23:52	11.67	-0.20	6/26/2022 1:14	-0.13
6/26/2022 0:06	11.88	0.10	6/27/2022 1:50	11.56	-0.44	6/25/2022 23:53	11.65	-0.17	6/26/2022 1:15	-0.13
6/26/2022 0:07	11.86	0.01	6/27/2022 1:51	11.59	-0.45	6/25/2022 23:54	11.67	-0.20	6/26/2022 1:16	-0.10
6/26/2022 0:08	11.88	-0.04	6/27/2022 1:52	11.57	-0.40	6/25/2022 23:55	11.64	-0.19	6/26/2022 1:17	-0.13
6/26/2022 0:09	11.85	0.12	6/27/2022 1:53	11.56	-0.42	6/25/2022 23:56	11.66	-0.21	6/26/2022 1:18	-0.15
6/26/2022 0:10	11.87	0.12	6/27/2022 1:54	11.57	-0.47	6/25/2022 23:57	11.67	-0.18	6/26/2022 1:19	-0.18
6/26/2022 0:11	11.86	0.08	6/27/2022 1:55	11.57	-0.43	6/25/2022 23:58	11.67	-0.21	6/26/2022 1:20	-0.21
6/26/2022 0:12	11.87	0.03	6/27/2022 1:56	11.57	-0.37	6/25/2022 23:59	11.68	-0.21	6/26/2022 1:21	-0.15
6/26/2022 0:13	11.87	0.09	6/27/2022 1:57	11.57	-0.49	6/26/2022 0:00	11.66	-0.17	6/26/2022 1:22	-0.19
6/26/2022 0:14	11.88	0.05	6/27/2022 1:58	11.59	-0.46	6/26/2022 0:01	11.66	-0.17	6/26/2022 1:23	-0.12
6/26/2022 0:15	11.89	0.07	6/27/2022 1:59	11.57	-0.44	6/26/2022 0:02	11.67	-0.23	6/26/2022 1:24	-0.15
6/26/2022 0:16	11.85	0.11	6/27/2022 2:00	11.59	-0.43	6/26/2022 0:03	11.67	-0.20	6/26/2022 1:25	-0.17
6/26/2022 0:17	11.90	0.07	6/27/2022 2:01	11.57	-0.45	6/26/2022 0:04	11.66	-0.22	6/26/2022 1:26	-0.11
6/26/2022 0:18	11.87	0.11	6/27/2022 2:02	11.59	-0.37	6/26/2022 0:05	11.65	-0.18	6/26/2022 1:27	-0.14
6/26/2022 0:19	11.88	0.03	6/27/2022 2:03	11.59	-0.44	6/26/2022 0:06	11.66	-0.18	6/26/2022 1:28	-0.12
6/26/2022 0:20	11.87	0.10	6/27/2022 2:04	11.59	-0.39	6/26/2022 0:07	11.68	-0.21	6/26/2022 1:29	-0.13
6/26/2022 0:21	11.88	0.04	6/27/2022 2:05	11.58	-0.44	6/26/2022 0:08	11.64	-0.22	6/26/2022 1:30	-0.17
6/26/2022 0:22	11.87	0.06	6/27/2022 2:06	11.60	-0.43	6/26/2022 0:09	11.66	-0.15	6/26/2022 1:31	-0.12
6/26/2022 0:23	11.86	0.11	6/27/2022 2:07	11.60	-0.50	6/26/2022 0:10	11.64	-0.20	6/26/2022 1:32	-0.13
6/26/2022 0:24	11.87	0.07	6/27/2022 2:08	11.58	-0.44	6/26/2022 0:11	11.64	-0.14	6/26/2022 1:33	-0.19
6/26/2022 0:25	11.89	-0.01	6/27/2022 2:09	11.58	-0.42	6/26/2022 0:12	11.67	-0.18	6/26/2022 1:34	-0.16
6/26/2022 0:26	11.89	0.09	6/27/2022 2:10	11.58	-0.37	6/26/2022 0:13	11.68	-0.20	6/26/2022 1:35	-0.14
6/26/2022 0:27	11.89	0.07	6/27/2022 2:11	11.57	-0.56	6/26/2022 0:14	11.65	-0.15	6/26/2022 1:36	-0.19
6/26/2022 0:28	11.88	0.06	6/27/2022 2:12	11.57	-0.38	6/26/2022 0:15	11.68	-0.21	6/26/2022 1:37	-0.14
6/26/2022 0:29	11.84	0.08	6/27/2022 2:13	11.59	-0.41	6/26/2022 0:16	11.66	-0.22	6/26/2022 1:38	-0.13
6/26/2022 0:30	11.87	0.05	6/27/2022 2:14	11.56	-0.48	6/26/2022 0:17	11.70	-0.22	6/26/2022 1:39	-0.14
6/26/2022 0:31	11.85	0.11	6/27/2022 2:15	11.59	-0.51	6/26/2022 0:18	11.65	-0.20	6/26/2022 1:40	-0.18
6/26/2022 0:32	11.85	0.12	6/27/2022 2:16	11.60	-0.42	6/26/2022 0:19	11.67	-0.17	6/26/2022 1:41	-0.16
6/26/2022 0:33	11.89	0.08	6/27/2022 2:17	11.58	-0.38	6/26/2022 0:20	11.66	-0.20	6/26/2022 1:42	-0.11
6/26/2022 0:34	11.86	0.07	6/27/2022 2:18	11.57	-0.47	6/26/2022 0:21	11.68	-0.19	6/26/2022 1:43	-0.15
6/26/2022 0:35	11.87	0.11	6/27/2022 2:19	11.58	-0.41	6/26/2022 0:22	11.68	-0.19	6/26/2022 1:44	-0.10
6/26/2022 0:36	11.91	0.11	6/27/2022 2:20	11.57	-0.48	6/26/2022 0:23	11.66	-0.17	6/26/2022 1:45	-0.16
6/26/2022 0:37	11.84	0.08	6/27/2022 2:21	11.58	-0.46	6/26/2022 0:24	11.66	-0.18	6/26/2022 1:46	-0.12
6/26/2022 0:38	11.89	0.05	6/27/2022 2:22	11.58	-0.38	6/26/2022 0:25	11.68	-0.18	6/26/2022 1:47	-0.16
6/26/2022 0:39	11.88	0.06	6/27/2022 2:23	11.57	-0.50	6/26/2022 0:26	11.66	-0.19	6/26/2022 1:48	-0.11
6/26/2022 0:40	11.86	0.11	6/27/2022 2:24	11.59	-0.44	6/26/2022 0:27	11.66	-0.17	6/26/2022 1:49	-0.16
6/26/2022 0:41	11.87	0.20	6/27/2022 2:25	11.58	-0.41	6/26/2022 0:28	11.67	-0.18	6/26/2022 1:50	-0.18
6/26/2022 0:42	11.86	0.05	6/27/2022 2:26	11.59	-0.36	6/26/2022 0:29	11.66	-0.18	6/26/2022 1:51	-0.10
6/26/2022 0:43	11.85	0.02	6/27/2022 2:27	11.59	-0.43	6/26/2022 0:30	11.68	-0.15	6/26/2022 1:52	-0.12
6/26/2022 0:44	11.89	0.10	6/27/2022 2:28	11.58	-0.52	6/26/2022 0:31	11.64	-0.19	6/26/2022 1:53	-0.18
6/26/2022 0:45	11.86	0.03	6/27/2022 2:29	11.59	-0.47	6/26/2022 0:32	11.67	-0.22	6/26/2022 1:54	-0.18
6/26/2022 0:46	11.87	0.07	6/27/2022 2:30	11.59	-0.50	6/26/2022 0:33	11.67	-0.22	6/26/2022 1:55	-0.17
6/26/2022 0:47	11.87	0.07	6/27/2022 2:31	11.61	-0.46	6/26/2022 0:34	11.69	-0.20	6/26/2022 1:56	-0.18
6/26/2022 0:48	11.87	0.07	6/27/2022 2:32	11.59	-0.42	6/26/2022 0:35	11.66	-0.16	6/26/2022 1:57	-0.13
6/26/2022 0:49	11.89	0.07	6/27/2022 2:33	11.59	-0.46	6/26/2022 0:36	11.68	-0.13	6/26/2022 1:58	-0.16
6/26/2022 0:50	11.88	0.08	6/27/2022 2:34	11.59	-0.52	6/26/2022 0:37	11.65	-0.21	6/26/2022 1:59	-0.18
6/26/2022 0:51	11.86	0.15	6/27/2022 2:35	11.56	-0.37	6/26/2022 0:38	11.66	-0.17	6/26/2022 2:00	-0.11
6/26/2022 0:52	11.88	0.07	6/27/2022 2:36	11.57	-0.45	6/26/2022 0:39	11.65	-0.18	6/26/2022 2:01	-0.12
6/26/2022 0:53	11.89	0.10	6/27/2022 2:37	11.60	-0.51	6/26/2022 0:40	11.67	-0.19	6/26/2022 2:02	-0.14
6/26/2022 0:54	11.87	0.12	6/27/2022 2:38	11.58	-0.40	6/26/2022 0:41	11.64	-0.17	6/26/2022 2:03	-0.13
6/26/2022 0:55	11.87	0.07	6/27/2022 2:39	11.60	-0.45	6/26/2022 0:42	11.65	-0.20	6/26/2022 2:04	-0.17
6/26/2022 0:56	11.86	0.06	6/27/2022 2:40	11.58	-0.46	6/26/2022 0:43	11.65	-0.15	6/26/2022 2:05	-0.10
6/26/2022 0:57	11.90	0.05	6/27/2022 2:41	11.57	-0.45	6/26/2022 0:44	11.68	-0.17	6/26/2022 2:06	-0.17
6/26/2022 0:58	11.86	0.03	6/27/2022 2:42	11.57	-0.45	6/26/2022 0:45	11.68	-0.22	6/26/2022 2:07	-0.12
6/26/2022 0:59	11.87	0.05	6/27/2022 2:43	11.55	-0.49	6/26/2022 0:46	11.67	-0.14	6/26/2022 2:08	-0.17
6/26/2022 1:00	11.89	0.02	6/27/2022 2:44	11.57	-0.54	6/26/2022 0:47	11.65	-0.18	6/26/2022 2:09	-0.15
6/26/2022 1:01	11.86	0.07	6/27/2022 2:45	11.56	-0.44	6/26/2022 0:48	11.67	-0.16	6/26/2022 2:10	-0.14
6/26/2022 1:02	11.88	0.10	6/27/2022 2:46	11.58	-0.43	6/26/2022 0:49	11.69	-0.21	6/26/2022 2:11	-0.12
6/26/2022 1:03	11.91	-0.02	6/27/2022 2:47	11.58	-0.48	6/26/2022 0:50	11.66	-0.18	6/26/2022 2:12	-0.16
6/26/2022 1:04	11.87	0.02	6/27/2022 2:48	11.58	-0.52	6/26/2022 0:51	11.67	-0.21	6/26/2022 2:13	-0.12
6/26/2022 1:05	11.88	-0.03	6/27/2022 2:49	11.57	-0.44	6/26/2022 0:52	11.68	-0.20	6/26/2022 2:14	-0.13
6/26/2022 1:06	11.89	0.15	6/27/2022 2:50	11.57	-0.43	6/26/2022 0:53	11.64	-0.20	6/26/2022 2:15	-0.16
6/26/2022 1:07	11.87	0.10	6/27/2022 2:51	11.60	-0.37	6/26/2022 0:54	11.66	-0.18	6/26/2022 2:16	-0.19
6/26/2022 1:08	11.85	0.06	6/27/2022 2:52	11.56	-0.43	6/26/2022 0:55	11.69	-0.17	6/26/2022 2:17	-0.18
6/26/2022 1:09	11.88	0.12	6/27/2022 2:53	11.57	-0.48	6/26/2022 0:56	11.66	-0.16	6/26/2022 2:18	-0.13
6/26/2022 1:10	11.89	0.10	6/27/2022 2:54	11.57	-0.49	6/26/2022 0:57	11.66	-0.21	6/26/2022 2:19	-0.20
6/26/2022 1:11	11.87	0.05	6/27/2022 2:55	11.57	-0.51	6/26/2022 0:58	11.67	-0.25	6/26/2022 2:20	-0.18
6/26/2022 1:12	11.87	0.14	6/27/2022 2:56	11.59	-0.49	6/26/2022 0:59	11.67	-0.19	6/26/2022 2:21	-0.17
6/26/2022 1:13	11.87	0.13	6/27/2022 2:57	11.57	-0.46	6/26/2022 1:00	11.64	-0.18	6/26/2022 2:22	-0.17
6/26/2022 1:14	11.86	0.09	6/27/2022 2:58	11.59	-0.48	6/26/2022 1:01	11.68	-0.22	6/26/2022 2:23	-0.13
6/26/2022 1:15	11.88	0.04	6/27/2022 2:59	11.59	-0.55	6/26/2022 1:02	11.67	-0.19	6/26/2022 2:24	-0.15
6/26/2022 1:16	11.87	0.02	6/27/2022 3:00	11.58	-0.40	6/26/2022 1:03	11.67	-0.16	6/26/2022 2:25	-0.17
6/26/2022 1:17	11.87	0.07	6/27/2022 3:01	11.56	-0.49	6/26/2022 1:04	11.64	-0.21	6/26/2022 2:26	-0.18
6/26/2022 1:18	11.86	0.00	6/27/2022 3:02	11.58	-0.51	6/26/2022 1:05	11.70	-0.18	6/26/2022 2:27	-0.14

6/26/2022 1:19	11.88	0.11	6/27/2022 3:03	11.57	-0.52	6/26/2022 1:06	11.66	-0.18	6/26/2022 2:28	-0.11
6/26/2022 1:20	11.89	0.03	6/27/2022 3:04	11.59	-0.47	6/26/2022 1:07	11.67	-0.20	6/26/2022 2:29	-0.17
6/26/2022 1:21	11.87	0.07	6/27/2022 3:05	11.58	-0.46	6/26/2022 1:08	11.68	-0.19	6/26/2022 2:30	-0.14
6/26/2022 1:22	11.91	0.06	6/27/2022 3:06	11.58	-0.45	6/26/2022 1:09	11.65	-0.17	6/26/2022 2:31	-0.16
6/26/2022 1:23	11.89	0.08	6/27/2022 3:07	11.60	-0.44	6/26/2022 1:10	11.65	-0.21	6/26/2022 2:32	-0.10
6/26/2022 1:24	11.86	0.09	6/27/2022 3:08	11.57	-0.47	6/26/2022 1:11	11.69	-0.20	6/26/2022 2:33	-0.15
6/26/2022 1:25	11.87	0.02	6/27/2022 3:09	11.57	-0.50	6/26/2022 1:12	11.68	-0.22	6/26/2022 2:34	-0.14
6/26/2022 1:26	11.89	0.15	6/27/2022 3:10	11.57	-0.46	6/26/2022 1:13	11.64	-0.21	6/26/2022 2:35	-0.11
6/26/2022 1:27	11.88	-0.04	6/27/2022 3:11	11.57	-0.45	6/26/2022 1:14	11.66	-0.21	6/26/2022 2:36	-0.16
6/26/2022 1:28	11.87	0.15	6/27/2022 3:12	11.59	-0.51	6/26/2022 1:15	11.66	-0.16	6/26/2022 2:37	-0.14
6/26/2022 1:29	11.87	0.11	6/27/2022 3:13	11.61	-0.37	6/26/2022 1:16	11.68	-0.21	6/26/2022 2:38	-0.15
6/26/2022 1:30	11.89	0.02	6/27/2022 3:14	11.56	-0.50	6/26/2022 1:17	11.68	-0.22	6/26/2022 2:39	-0.15
6/26/2022 1:31	11.88	0.09	6/27/2022 3:15	11.55	-0.52	6/26/2022 1:18	11.67	-0.19	6/26/2022 2:40	-0.15
6/26/2022 1:32	11.87	0.07	6/27/2022 3:16	11.58	-0.47	6/26/2022 1:19	11.66	-0.21	6/26/2022 2:41	-0.13
6/26/2022 1:33	11.87	0.02	6/27/2022 3:17	11.55	-0.48	6/26/2022 1:20	11.66	-0.17	6/26/2022 2:42	-0.12
6/26/2022 1:34	11.90	0.07	6/27/2022 3:18	11.57	-0.50	6/26/2022 1:21	11.68	-0.22	6/26/2022 2:43	-0.06
6/26/2022 1:35	11.90	0.07	6/27/2022 3:19	11.58	-0.53	6/26/2022 1:22	11.65	-0.17	6/26/2022 2:44	-0.15
6/26/2022 1:36	11.88	0.05	6/27/2022 3:20	11.59	-0.41	6/26/2022 1:23	11.69	-0.18	6/26/2022 2:45	-0.14
6/26/2022 1:37	11.88	0.08	6/27/2022 3:21	11.57	-0.49	6/26/2022 1:24	11.66	-0.19	6/26/2022 2:46	-0.17
6/26/2022 1:38	11.91	0.12	6/27/2022 3:22	11.60	-0.47	6/26/2022 1:25	11.64	-0.17	6/26/2022 2:47	-0.12
6/26/2022 1:39	11.88	-0.03	6/27/2022 3:23	11.58	-0.42	6/26/2022 1:26	11.65	-0.19	6/26/2022 2:48	-0.16
6/26/2022 1:40	11.89	0.02	6/27/2022 3:24	11.59	-0.43	6/26/2022 1:27	11.66	-0.18	6/26/2022 2:49	-0.15
6/26/2022 1:41	11.86	0.05	6/27/2022 3:25	11.57	-0.51	6/26/2022 1:28	11.68	-0.21	6/26/2022 2:50	-0.17
6/26/2022 1:42	11.91	0.10	6/27/2022 3:26	11.57	-0.46	6/26/2022 1:29	11.66	-0.20	6/26/2022 2:51	-0.16
6/26/2022 1:43	11.89	0.07	6/27/2022 3:27	11.57	-0.49	6/26/2022 1:30	11.68	-0.20	6/26/2022 2:52	-0.11
6/26/2022 1:44	11.88	0.02	6/27/2022 3:28	11.57	-0.43	6/26/2022 1:31	11.67	-0.19	6/26/2022 2:53	-0.13
6/26/2022 1:45	11.88	0.22	6/27/2022 3:29	11.57	-0.52	6/26/2022 1:32	11.67	-0.15	6/26/2022 2:54	-0.16
6/26/2022 1:46	11.88	0.11	6/27/2022 3:30	11.59	-0.47	6/26/2022 1:33	11.66	-0.18	6/26/2022 2:55	-0.14
6/26/2022 1:47	11.89	0.06	6/27/2022 3:31	11.58	-0.38	6/26/2022 1:34	11.66	-0.17	6/26/2022 2:56	-0.10
6/26/2022 1:48	11.91	0.06	6/27/2022 3:32	11.61	-0.46	6/26/2022 1:35	11.68	-0.19	6/26/2022 2:57	-0.11
6/26/2022 1:49	11.89	0.14	6/27/2022 3:33	11.56	-0.47	6/26/2022 1:36	11.67	-0.21	6/26/2022 2:58	-0.17
6/26/2022 1:50	11.90	0.03	6/27/2022 3:34	11.59	-0.44	6/26/2022 1:37	11.68	-0.21	6/26/2022 2:59	-0.15
6/26/2022 1:51	11.90	0.06	6/27/2022 3:35	11.58	-0.45	6/26/2022 1:38	11.66	-0.15	6/26/2022 3:00	-0.16
6/26/2022 1:52	11.89	0.09	6/27/2022 3:36	11.58	-0.47	6/26/2022 1:39	11.69	-0.23	6/26/2022 3:01	-0.18
6/26/2022 1:53	11.92	0.11	6/27/2022 3:37	11.58	-0.46	6/26/2022 1:40	11.65	-0.16	6/26/2022 3:02	-0.09
6/26/2022 1:54	11.90	0.02	6/27/2022 3:38	11.58	-0.39	6/26/2022 1:41	11.68	-0.20	6/26/2022 3:03	-0.16
6/26/2022 1:55	11.92	0.04	6/27/2022 3:39	11.56	-0.38	6/26/2022 1:42	11.68	-0.19	6/26/2022 3:04	-0.16
6/26/2022 1:56	11.87	0.05	6/27/2022 3:40	11.58	-0.37	6/26/2022 1:43	11.68	-0.20	6/26/2022 3:05	-0.14
6/26/2022 1:57	11.89	0.06	6/27/2022 3:41	11.57	-0.41	6/26/2022 1:44	11.66	-0.14	6/26/2022 3:06	-0.10
6/26/2022 1:58	11.88	0.03	6/27/2022 3:42	11.57	-0.41	6/26/2022 1:45	11.69	-0.19	6/26/2022 3:07	-0.17
6/26/2022 1:59	11.88	0.14	6/27/2022 3:43	11.58	-0.54	6/26/2022 1:46	11.65	-0.22	6/26/2022 3:08	-0.12
6/26/2022 2:00	11.86	0.12	6/27/2022 3:44	11.59	-0.51	6/26/2022 1:47	11.69	-0.20	6/26/2022 3:09	-0.10
6/26/2022 2:01	11.89	0.12	6/27/2022 3:45	11.57	-0.46	6/26/2022 1:48	11.67	-0.18	6/26/2022 3:10	-0.12
6/26/2022 2:02	11.88	0.02	6/27/2022 3:46	11.58	-0.45	6/26/2022 1:49	11.64	-0.21	6/26/2022 3:11	-0.11
6/26/2022 2:03	11.89	0.08	6/27/2022 3:47	11.59	-0.50	6/26/2022 1:50	11.68	-0.19	6/26/2022 3:12	-0.13
6/26/2022 2:04	11.89	0.03	6/27/2022 3:48	11.58	-0.43	6/26/2022 1:51	11.68	-0.21	6/26/2022 3:13	-0.08
6/26/2022 2:05	11.89	0.12	6/27/2022 3:49	11.59	-0.45	6/26/2022 1:52	11.65	-0.22	6/26/2022 3:14	-0.15
6/26/2022 2:06	11.90	0.07	6/27/2022 3:50	11.58	-0.46	6/26/2022 1:53	11.68	-0.25	6/26/2022 3:15	-0.12
6/26/2022 2:07	11.91	0.12	6/27/2022 3:51	11.58	-0.49	6/26/2022 1:54	11.66	-0.21	6/26/2022 3:16	-0.13
6/26/2022 2:08	11.89	0.12	6/27/2022 3:52	11.58	-0.52	6/26/2022 1:55	11.68	-0.21	6/26/2022 3:17	-0.15
6/26/2022 2:09	11.88	0.01	6/27/2022 3:53	11.60	-0.49	6/26/2022 1:56	11.67	-0.21	6/26/2022 3:18	-0.12
6/26/2022 2:10	11.89	0.06	6/27/2022 3:54	11.56	-0.48	6/26/2022 1:57	11.68	-0.19	6/26/2022 3:19	-0.12
6/26/2022 2:11	11.89	0.07	6/27/2022 3:55	11.56	-0.38	6/26/2022 1:58	11.68	-0.19	6/26/2022 3:20	-0.14
6/26/2022 2:12	11.90	0.05	6/27/2022 3:56	11.57	-0.51	6/26/2022 1:59	11.67	-0.22	6/26/2022 3:21	-0.16
6/26/2022 2:13	11.90	0.08	6/27/2022 3:57	11.59	-0.44	6/26/2022 2:00	11.65	-0.17	6/26/2022 3:22	-0.13
6/26/2022 2:14	11.90	0.09	6/27/2022 3:58	11.57	-0.40	6/26/2022 2:01	11.67	-0.23	6/26/2022 3:23	-0.15
6/26/2022 2:15	11.91	0.11	6/27/2022 3:59	11.57	-0.47	6/26/2022 2:02	11.66	-0.19	6/26/2022 3:24	-0.13
6/26/2022 2:16	11.89	0.00	6/27/2022 4:00	11.58	-0.38	6/26/2022 2:03	11.68	-0.18	6/26/2022 3:25	-0.13
6/26/2022 2:17	11.90	0.01	6/27/2022 4:01	11.57	-0.39	6/26/2022 2:04	11.67	-0.19	6/26/2022 3:26	-0.12
6/26/2022 2:18	11.89	0.03	6/27/2022 4:02	11.58	-0.42	6/26/2022 2:05	11.67	-0.27	6/26/2022 3:27	-0.14
6/26/2022 2:19	11.88	0.07	6/27/2022 4:03	11.59	-0.46	6/26/2022 2:06	11.68	-0.16	6/26/2022 3:28	-0.10
6/26/2022 2:20	11.89	0.08	6/27/2022 4:04	11.58	-0.45	6/26/2022 2:07	11.66	-0.18	6/26/2022 3:29	-0.16
6/26/2022 2:21	11.87	0.09	6/27/2022 4:05	11.58	-0.44	6/26/2022 2:08	11.68	-0.18	6/26/2022 3:30	-0.16
6/26/2022 2:22	11.88	0.11	6/27/2022 4:06	11.58	-0.52	6/26/2022 2:09	11.69	-0.20	6/26/2022 3:31	-0.12
6/26/2022 2:23	11.89	0.04	6/27/2022 4:07	11.59	-0.53	6/26/2022 2:10	11.67	-0.18	6/26/2022 3:32	-0.16
6/26/2022 2:24	11.88	0.07	6/27/2022 4:08	11.58	-0.46	6/26/2022 2:11	11.64	-0.16	6/26/2022 3:33	-0.15
6/26/2022 2:25	11.90	0.02	6/27/2022 4:09	11.58	-0.44	6/26/2022 2:12	11.66	-0.16	6/26/2022 3:34	-0.16
6/26/2022 2:26	11.87	0.16	6/27/2022 4:10	11.57	-0.47	6/26/2022 2:13	11.68	-0.18	6/26/2022 3:35	-0.11
6/26/2022 2:27	11.88	0.07	6/27/2022 4:11	11.58	-0.52	6/26/2022 2:14	11.63	-0.22	6/26/2022 3:36	-0.15
6/26/2022 2:28	11.92	0.02	6/27/2022 4:12	11.57	-0.52	6/26/2022 2:15	11.69	-0.23	6/26/2022 3:37	-0.11
6/26/2022 2:29	11.90	0.05	6/27/2022 4:13	11.59	-0.37	6/26/2022 2:16	11.68	-0.22	6/26/2022 3:38	-0.14
6/26/2022 2:30	11.89	0.16	6/27/2022 4:14	11.58	-0.44	6/26/2022 2:17	11.70	-0.22	6/26/2022 3:39	-0.11
6/26/2022 2:31	11.91	0.07	6/27/2022 4:15	11.57	-0.46	6/26/2022 2:18	11.67	-0.18	6/26/2022 3:40	-0.17
6/26/2022 2:32	11.89	0.05	6/27/2022 4:16	11.59	-0.42	6/26/2022 2:19	11.66	-0.17	6/26/2022 3:41	-0.12
6/26/2022 2:33	11.89	0.06	6/27/2022 4:17	11.58	-0.39	6/26/2022 2:20	11.66	-0.20	6/26/2022 3:42	-0.19
6/26/2022 2:34	11.88	0.06	6/27/2022 4:18	11.58	-0.48	6/26/2022 2:21	11.67	-0.18	6/26/2022 3:43	-0.13
6/26/2022 2:35	11.89	0.06	6/27/2022 4:19	11.58	-0.55	6/26/2022 2:22	11.66	-0.17	6/26/2022 3:44	-0.17
6/26/2022 2:36	11.89	0.07	6/27/2022 4:20	11.60	-0.55	6/26/2022 2:23	11.67	-0.17	6/26/2022 3:45	-0.14
6/26/2022 2:37	11.90	0.06	6/27/2022 4:21	11.56	-0.47	6/26/2022 2:24	11.69	-0.22	6/26/2022 3:46	-0.17
6/26/2022 2:38	11.89	0.03	6/27/2022 4:22	11.60	-0.48	6/26/2022 2:25	11.64	-0.17	6/26/2022 3:47	-0.15
6/26/2022 2:39	11.91	0.06	6/27/2022 4:23	11.57	-0.47	6/26/2022 2:26	11.67	-0.17	6/26/2022 3:48	-0.13
6/26/2022 2:40	11.87	0.03	6/27/2022 4:24	11.59	-0.47	6/26/2022 2:27	11.68	-0.17	6/26/2022 3:49	-0.15
6/26/2022 2:41	11.88	0.15	6/27/2022 4:25	11.57	-0.53	6/26/2022 2:28	11.68	-0.17	6/26/2022 3:50	-0.14
6/26/2022 2:42	11.88	0.07	6/27/2022 4:26	11.58	-0.49	6/26/2022 2:29	11.69	-0.16	6/26/2022 3:51	-0.18
6/26/2022 2:43	11.87	0.14	6/27/2022 4:27	11.57	-0.49	6/26/2022 2:30	11.66	-0.18	6/26/2022 3:52	-0.14
6/26/2022 2:44	11.90	0.10	6/27/2022 4:28	11.59	-0.39	6/26/2022 2:31	11.67	-0.23	6/26/2022 3:53	-0.16
6/26/2022 2:45	11.89	0.08	6/27/2022 4:29	11.60	-0.59	6/26/2022 2:32	11.67	-0.19	6/26/2022 3:54	-0.13
6/26/2022 2:46	11.88	0.04	6/27/2022 4:30	11.58	-0.46	6/26/2022 2:33	11.67	-0.17	6/26/2022 3:55	-0.16

6/26/2022 2:47	11.88	0.04	6/27/2022 4:31	11.56	-0.40	6/26/2022 2:34	11.65	-0.20	6/26/2022 3:56	-0.11
6/26/2022 2:48	11.89	0.20	6/27/2022 4:32	11.58	-0.45	6/26/2022 2:35	11.67	-0.18	6/26/2022 3:57	-0.13
6/26/2022 2:49	11.89	0.13	6/27/2022 4:33	11.55	-0.49	6/26/2022 2:36	11.68	-0.20	6/26/2022 3:58	-0.15
6/26/2022 2:50	11.93	0.03	6/27/2022 4:34	11.58	-0.56	6/26/2022 2:37	11.67	-0.23	6/26/2022 3:59	-0.18
6/26/2022 2:51	11.88	0.12	6/27/2022 4:35	11.57	-0.50	6/26/2022 2:38	11.66	-0.18	6/26/2022 4:00	-0.11
6/26/2022 2:52	11.90	0.06	6/27/2022 4:36	11.59	-0.51	6/26/2022 2:39	11.65	-0.20	6/26/2022 4:01	-0.18
6/26/2022 2:53	11.87	0.00	6/27/2022 4:37	11.58	-0.48	6/26/2022 2:40	11.68	-0.18	6/26/2022 4:02	-0.13
6/26/2022 2:54	11.88	0.07	6/27/2022 4:38	11.58	-0.44	6/26/2022 2:41	11.69	-0.17	6/26/2022 4:03	-0.16
6/26/2022 2:55	11.90	0.02	6/27/2022 4:39	11.57	-0.44	6/26/2022 2:42	11.67	-0.20	6/26/2022 4:04	-0.12
6/26/2022 2:56	11.89	0.08	6/27/2022 4:40	11.59	-0.47	6/26/2022 2:43	11.67	-0.20	6/26/2022 4:05	-0.16
6/26/2022 2:57	11.88	0.11	6/27/2022 4:41	11.57	-0.46	6/26/2022 2:44	11.67	-0.15	6/26/2022 4:06	-0.14
6/26/2022 2:58	11.86	0.05	6/27/2022 4:42	11.56	-0.48	6/26/2022 2:45	11.66	-0.20	6/26/2022 4:07	-0.14
6/26/2022 2:59	11.87	0.09	6/27/2022 4:43	11.58	-0.42	6/26/2022 2:46	11.66	-0.18	6/26/2022 4:08	-0.06
6/26/2022 3:00	11.89	0.08	6/27/2022 4:44	11.59	-0.50	6/26/2022 2:47	11.65	-0.13	6/26/2022 4:09	-0.12
6/26/2022 3:01	11.88	0.04	6/27/2022 4:45	11.61	-0.44	6/26/2022 2:48	11.69	-0.20	6/26/2022 4:10	-0.16
6/26/2022 3:02	11.86	0.14	6/27/2022 4:46	11.57	-0.41	6/26/2022 2:49	11.67	-0.18	6/26/2022 4:11	-0.14
6/26/2022 3:03	11.87	0.04	6/27/2022 4:47	11.56	-0.44	6/26/2022 2:50	11.65	-0.15	6/26/2022 4:12	-0.18
6/26/2022 3:04	11.86	0.06	6/27/2022 4:48	11.58	-0.39	6/26/2022 2:51	11.64	-0.23	6/26/2022 4:13	-0.15
6/26/2022 3:05	11.89	0.07	6/27/2022 4:49	11.57	-0.42	6/26/2022 2:52	11.65	-0.19	6/26/2022 4:14	-0.10
6/26/2022 3:06	11.89	0.03	6/27/2022 4:50	11.57	-0.43	6/26/2022 2:53	11.67	-0.21	6/26/2022 4:15	-0.15
6/26/2022 3:07	11.91	0.08	6/27/2022 4:51	11.57	-0.46	6/26/2022 2:54	11.65	-0.16	6/26/2022 4:16	-0.14
6/26/2022 3:08	11.89	0.14	6/27/2022 4:52	11.58	-0.53	6/26/2022 2:55	11.66	-0.20	6/26/2022 4:17	-0.11
6/26/2022 3:09	11.89	0.06	6/27/2022 4:53	11.58	-0.47	6/26/2022 2:56	11.69	-0.18	6/26/2022 4:18	-0.13
6/26/2022 3:10	11.88	0.06	6/27/2022 4:54	11.56	-0.50	6/26/2022 2:57	11.65	-0.17	6/26/2022 4:19	-0.22
6/26/2022 3:11	11.91	0.07	6/27/2022 4:55	11.60	-0.51	6/26/2022 2:58	11.67	-0.21	6/26/2022 4:20	-0.13
6/26/2022 3:12	11.88	0.16	6/27/2022 4:56	11.58	-0.45	6/26/2022 2:59	11.67	-0.21	6/26/2022 4:21	-0.15
6/26/2022 3:13	11.88	0.08	6/27/2022 4:57	11.59	-0.40	6/26/2022 3:00	11.68	-0.17	6/26/2022 4:22	-0.18
6/26/2022 3:14	11.93	0.07	6/27/2022 4:58	11.56	-0.50	6/26/2022 3:01	11.67	-0.18	6/26/2022 4:23	-0.17
6/26/2022 3:15	11.89	0.05	6/27/2022 4:59	11.59	-0.47	6/26/2022 3:02	11.69	-0.18	6/26/2022 4:24	-0.14
6/26/2022 3:16	11.91	0.07	6/27/2022 5:00	11.57	-0.46	6/26/2022 3:03	11.68	-0.20	6/26/2022 4:25	-0.18
6/26/2022 3:17	11.90	0.06	6/27/2022 5:01	11.59	-0.42	6/26/2022 3:04	11.68	-0.22	6/26/2022 4:26	-0.13
6/26/2022 3:18	11.90	0.10	6/27/2022 5:02	11.57	-0.46	6/26/2022 3:05	11.68	-0.17	6/26/2022 4:27	-0.17
6/26/2022 3:19	11.92	0.06	6/27/2022 5:03	11.57	-0.46	6/26/2022 3:06	11.69	-0.19	6/26/2022 4:28	-0.19
6/26/2022 3:20	11.90	0.02	6/27/2022 5:04	11.58	-0.39	6/26/2022 3:07	11.68	-0.19	6/26/2022 4:29	-0.12
6/26/2022 3:21	11.89	-0.01	6/27/2022 5:05	11.55	-0.52	6/26/2022 3:08	11.68	-0.19	6/26/2022 4:30	-0.12
6/26/2022 3:22	11.91	0.07	6/27/2022 5:06	11.56	-0.47	6/26/2022 3:09	11.67	-0.20	6/26/2022 4:31	-0.09
6/26/2022 3:23	11.90	0.00	6/27/2022 5:07	11.59	-0.45	6/26/2022 3:10	11.67	-0.23	6/26/2022 4:32	-0.12
6/26/2022 3:24	11.90	0.07	6/27/2022 5:08	11.59	-0.48	6/26/2022 3:11	11.69	-0.20	6/26/2022 4:33	-0.13
6/26/2022 3:25	11.88	0.10	6/27/2022 5:09	11.59	-0.49	6/26/2022 3:12	11.68	-0.14	6/26/2022 4:34	-0.14
6/26/2022 3:26	11.89	0.20	6/27/2022 5:10	11.59	-0.46	6/26/2022 3:13	11.68	-0.21	6/26/2022 4:35	-0.09
6/26/2022 3:27	11.92	0.06	6/27/2022 5:11	11.58	-0.46	6/26/2022 3:14	11.67	-0.21	6/26/2022 4:36	-0.13
6/26/2022 3:28	11.91	0.08	6/27/2022 5:12	11.55	-0.39	6/26/2022 3:15	11.65	-0.21	6/26/2022 4:37	-0.10
6/26/2022 3:29	11.91	0.05	6/27/2022 5:13	11.60	-0.43	6/26/2022 3:16	11.68	-0.17	6/26/2022 4:38	-0.20
6/26/2022 3:30	11.90	0.05	6/27/2022 5:14	11.58	-0.37	6/26/2022 3:17	11.66	-0.16	6/26/2022 4:39	-0.15
6/26/2022 3:31	11.90	0.05	6/27/2022 5:15	11.58	-0.48	6/26/2022 3:18	11.66	-0.17	6/26/2022 4:40	-0.12
6/26/2022 3:32	11.94	0.10	6/27/2022 5:16	11.57	-0.48	6/26/2022 3:19	11.67	-0.23	6/26/2022 4:41	-0.11
6/26/2022 3:33	11.89	0.01	6/27/2022 5:17	11.58	-0.48	6/26/2022 3:20	11.66	-0.18	6/26/2022 4:42	-0.21
6/26/2022 3:34	11.90	0.04	6/27/2022 5:18	11.59	-0.39	6/26/2022 3:21	11.66	-0.18	6/26/2022 4:43	-0.17
6/26/2022 3:35	11.91	0.08	6/27/2022 5:19	11.58	-0.49	6/26/2022 3:22	11.66	-0.21	6/26/2022 4:44	-0.20
6/26/2022 3:36	11.89	0.06	6/27/2022 5:20	11.58	-0.50	6/26/2022 3:23	11.69	-0.14	6/26/2022 4:45	-0.16
6/26/2022 3:37	11.90	0.06	6/27/2022 5:21	11.59	-0.40	6/26/2022 3:24	11.68	-0.24	6/26/2022 4:46	-0.16
6/26/2022 3:38	11.90	0.13	6/27/2022 5:22	11.57	-0.44	6/26/2022 3:25	11.68	-0.24	6/26/2022 4:47	-0.15
6/26/2022 3:39	11.90	0.00	6/27/2022 5:23	11.58	-0.48	6/26/2022 3:26	11.68	-0.19	6/26/2022 4:48	-0.20
6/26/2022 3:40	11.91	0.06	6/27/2022 5:24	11.57	-0.42	6/26/2022 3:27	11.64	-0.17	6/26/2022 4:49	-0.17
6/26/2022 3:41	11.91	0.02	6/27/2022 5:25	11.59	-0.43	6/26/2022 3:28	11.67	-0.22	6/26/2022 4:50	-0.12
6/26/2022 3:42	11.89	0.06	6/27/2022 5:26	11.58	-0.52	6/26/2022 3:29	11.66	-0.18	6/26/2022 4:51	-0.13
6/26/2022 3:43	11.89	0.15	6/27/2022 5:27	11.58	-0.37	6/26/2022 3:30	11.66	-0.20	6/26/2022 4:52	-0.17
6/26/2022 3:44	11.90	0.07	6/27/2022 5:28	11.59	-0.36	6/26/2022 3:31	11.67	-0.18	6/26/2022 4:53	-0.20
6/26/2022 3:45	11.91	0.13	6/27/2022 5:29	11.60	-0.46	6/26/2022 3:32	11.67	-0.20	6/26/2022 4:54	-0.08
6/26/2022 3:46	11.92	0.12	6/27/2022 5:30	11.56	-0.39	6/26/2022 3:33	11.67	-0.18	6/26/2022 4:55	-0.12
6/26/2022 3:47	11.88	0.06	6/27/2022 5:31	11.57	-0.47	6/26/2022 3:34	11.69	-0.20	6/26/2022 4:56	-0.15
6/26/2022 3:48	11.88	0.02	6/27/2022 5:32	11.60	-0.53	6/26/2022 3:35	11.68	-0.22	6/26/2022 4:57	-0.16
6/26/2022 3:49	11.89	0.08	6/27/2022 5:33	11.57	-0.42	6/26/2022 3:36	11.67	-0.18	6/26/2022 4:58	-0.15
6/26/2022 3:50	11.90	0.05	6/27/2022 5:34	11.54	-0.46	6/26/2022 3:37	11.66	-0.18	6/26/2022 4:59	-0.12
6/26/2022 3:51	11.91	0.06	6/27/2022 5:35	11.56	-0.55	6/26/2022 3:38	11.66	-0.17	6/26/2022 5:00	-0.13
6/26/2022 3:52	11.92	0.02	6/27/2022 5:36	11.55	-0.41	6/26/2022 3:39	11.66	-0.18	6/26/2022 5:01	-0.13
6/26/2022 3:53	11.92	0.09	6/27/2022 5:37	11.59	-0.44	6/26/2022 3:40	11.69	-0.19	6/26/2022 5:02	-0.14
6/26/2022 3:54	11.91	0.02	6/27/2022 5:38	11.58	-0.53	6/26/2022 3:41	11.65	-0.16	6/26/2022 5:03	-0.16
6/26/2022 3:55	11.90	0.09	6/27/2022 5:39	11.56	-0.39	6/26/2022 3:42	11.68	-0.18	6/26/2022 5:04	-0.12
6/26/2022 3:56	11.91	0.11	6/27/2022 5:40	11.55	-0.45	6/26/2022 3:43	11.68	-0.24	6/26/2022 5:05	-0.17
6/26/2022 3:57	11.89	0.10	6/27/2022 5:41	11.58	-0.52	6/26/2022 3:44	11.68	-0.16	6/26/2022 5:06	-0.15
6/26/2022 3:58	11.89	0.10	6/27/2022 5:42	11.57	-0.46	6/26/2022 3:45	11.66	-0.15	6/26/2022 5:07	-0.11
6/26/2022 3:59	11.88	0.06	6/27/2022 5:43	11.56	-0.49	6/26/2022 3:46	11.68	-0.20	6/26/2022 5:08	-0.15
6/26/2022 4:00	11.91	0.06	6/27/2022 5:44	11.58	-0.50	6/26/2022 3:47	11.66	-0.21	6/26/2022 5:09	-0.11
6/26/2022 4:01	11.89	0.07	6/27/2022 5:45	11.60	-0.46	6/26/2022 3:48	11.69	-0.18	6/26/2022 5:10	-0.09
6/26/2022 4:02	11.91	0.16	6/27/2022 5:46	11.59	-0.53	6/26/2022 3:49	11.68	-0.18	6/26/2022 5:11	-0.15
6/26/2022 4:03	11.90	0.08	6/27/2022 5:47	11.59	-0.44	6/26/2022 3:50	11.67	-0.19	6/26/2022 5:12	-0.20
6/26/2022 4:04	11.89	0.04	6/27/2022 5:48	11.58	-0.34	6/26/2022 3:51	11.67	-0.23	6/26/2022 5:13	-0.15
6/26/2022 4:05	11.90	0.06	6/27/2022 5:49	11.58	-0.52	6/26/2022 3:52	11.67	-0.17	6/26/2022 5:14	-0.16
6/26/2022 4:06	11.90	0.11	6/27/2022 5:50	11.59	-0.53	6/26/2022 3:53	11.68	-0.18	6/26/2022 5:15	-0.14
6/26/2022 4:07	11.89	0.11	6/27/2022 5:51	11.59	-0.43	6/26/2022 3:54	11.67	-0.19	6/26/2022 5:16	-0.15
6/26/2022 4:08	11.93	0.11	6/27/2022 5:52	11.60	-0.42	6/26/2022 3:55	11.68	-0.17	6/26/2022 5:17	-0.15
6/26/2022 4:09	11.92	0.05	6/27/2022 5:53	11.59	-0.39	6/26/2022 3:56	11.66	-0.22	6/26/2022 5:18	-0.22
6/26/2022 4:10	11.89	0.11	6/27/2022 5:54	11.61	-0.42	6/26/2022 3:57	11.68	-0.20	6/26/2022 5:19	-0.18
6/26/2022 4:11	11.90	0.07	6/27/2022 5:55	11.59	-0.53	6/26/2022 3:58	11.67	-0.15	6/26/2022 5:20	-0.17
6/26/2022 4:12	11.91	0.09	6/27/2022 5:56	11.58	-0.43	6/26/2022 3:59	11.66	-0.20	6/26/2022 5:21	-0.13
6/26/2022 4:13	11.88	0.12	6/27/2022 5:57	11.60	-0.52	6/26/2022 4:00	11.66	-0.21	6/26/2022 5:22	-0.14
6/26/2022 4:14	11.91	0.18	6/27/2022 5:58	11.59	-0.51	6/26/2022 4:01	11.66	-0.15	6/26/2022 5:23	-0.13

6/26/2022 4:15	11.90	0.15	6/27/2022 5:59	11.59	-0.45	6/26/2022 4:02	11.68	-0.20	6/26/2022 5:24	-0.15
6/26/2022 4:16	11.91	0.06	6/27/2022 6:00	11.60	-0.46	6/26/2022 4:03	11.67	-0.19	6/26/2022 5:25	-0.17
6/26/2022 4:17	11.91	0.11	6/27/2022 6:01	11.58	-0.45	6/26/2022 4:04	11.67	-0.17	6/26/2022 5:26	-0.12
6/26/2022 4:18	11.92	0.05	6/27/2022 6:02	11.60	-0.40	6/26/2022 4:05	11.67	-0.19	6/26/2022 5:27	-0.16
6/26/2022 4:19	11.91	0.07	6/27/2022 6:03	11.58	-0.42	6/26/2022 4:06	11.68	-0.21	6/26/2022 5:28	-0.14
6/26/2022 4:20	11.91	0.11	6/27/2022 6:04	11.57	-0.45	6/26/2022 4:07	11.64	-0.17	6/26/2022 5:29	-0.20
6/26/2022 4:21	11.89	0.07	6/27/2022 6:05	11.60	-0.41	6/26/2022 4:08	11.66	-0.18	6/26/2022 5:30	-0.17
6/26/2022 4:22	11.89	0.11	6/27/2022 6:06	11.58	-0.44	6/26/2022 4:09	11.68	-0.20	6/26/2022 5:31	-0.16
6/26/2022 4:23	11.89	0.09	6/27/2022 6:07	11.57	-0.44	6/26/2022 4:10	11.68	-0.19	6/26/2022 5:32	-0.14
6/26/2022 4:24	11.90	0.06	6/27/2022 6:08	11.59	-0.45	6/26/2022 4:11	11.64	-0.19	6/26/2022 5:33	-0.16
6/26/2022 4:25	11.93	0.11	6/27/2022 6:09	11.59	-0.43	6/26/2022 4:12	11.66	-0.17	6/26/2022 5:34	-0.12
6/26/2022 4:26	11.91	0.02	6/27/2022 6:10	11.59	-0.47	6/26/2022 4:13	11.68	-0.17	6/26/2022 5:35	-0.13
6/26/2022 4:27	11.87	0.12	6/27/2022 6:11	11.59	-0.48	6/26/2022 4:14	11.68	-0.21	6/26/2022 5:36	-0.12
6/26/2022 4:28	11.92	0.11	6/27/2022 6:12	11.59	-0.50	6/26/2022 4:15	11.67	-0.22	6/26/2022 5:37	-0.11
6/26/2022 4:29	11.89	0.08	6/27/2022 6:13	11.58	-0.47	6/26/2022 4:16	11.68	-0.21	6/26/2022 5:38	-0.12
6/26/2022 4:30	11.91	0.08	6/27/2022 6:14	11.60	-0.53	6/26/2022 4:17	11.66	-0.19	6/26/2022 5:39	-0.14
6/26/2022 4:31	11.93	-0.02	6/27/2022 6:15	11.56	-0.47	6/26/2022 4:18	11.67	-0.23	6/26/2022 5:40	-0.18
6/26/2022 4:32	11.91	0.02	6/27/2022 6:16	11.58	-0.38	6/26/2022 4:19	11.64	-0.16	6/26/2022 5:41	-0.14
6/26/2022 4:33	11.92	0.11	6/27/2022 6:17	11.60	-0.44	6/26/2022 4:20	11.68	-0.21	6/26/2022 5:42	-0.10
6/26/2022 4:34	11.92	0.06	6/27/2022 6:18	11.59	-0.45	6/26/2022 4:21	11.69	-0.17	6/26/2022 5:43	-0.20
6/26/2022 4:35	11.92	0.02	6/27/2022 6:19	11.58	-0.52	6/26/2022 4:22	11.66	-0.21	6/26/2022 5:44	-0.16
6/26/2022 4:36	11.92	0.13	6/27/2022 6:20	11.58	-0.42	6/26/2022 4:23	11.68	-0.17	6/26/2022 5:45	-0.11
6/26/2022 4:37	11.90	0.10	6/27/2022 6:21	11.59	-0.33	6/26/2022 4:24	11.67	-0.13	6/26/2022 5:46	-0.11
6/26/2022 4:38	11.93	0.10	6/27/2022 6:22	11.60	-0.49	6/26/2022 4:25	11.69	-0.23	6/26/2022 5:47	-0.15
6/26/2022 4:39	11.93	0.15	6/27/2022 6:23	11.58	-0.38	6/26/2022 4:26	11.64	-0.17	6/26/2022 5:48	-0.18
6/26/2022 4:40	11.90	0.07	6/27/2022 6:24	11.56	-0.46	6/26/2022 4:27	11.67	-0.17	6/26/2022 5:49	-0.09
6/26/2022 4:41	11.92	0.01	6/27/2022 6:25	11.60	-0.53	6/26/2022 4:28	11.64	-0.16	6/26/2022 5:50	-0.18
6/26/2022 4:42	11.90	0.14	6/27/2022 6:26	11.59	-0.43	6/26/2022 4:29	11.65	-0.18	6/26/2022 5:51	-0.12
6/26/2022 4:43	11.90	0.04	6/27/2022 6:27	11.59	-0.54	6/26/2022 4:30	11.67	-0.20	6/26/2022 5:52	-0.14
6/26/2022 4:44	11.93	0.10	6/27/2022 6:28	11.57	-0.49	6/26/2022 4:31	11.69	-0.19	6/26/2022 5:53	-0.18
6/26/2022 4:45	11.90	0.01	6/27/2022 6:29	11.57	-0.53	6/26/2022 4:32	11.65	-0.18	6/26/2022 5:54	-0.12
6/26/2022 4:46	11.92	0.09	6/27/2022 6:30	11.56	-0.40	6/26/2022 4:33	11.68	-0.18	6/26/2022 5:55	-0.17
6/26/2022 4:47	11.90	0.11	6/27/2022 6:31	11.58	-0.47	6/26/2022 4:34	11.65	-0.20	6/26/2022 5:56	-0.14
6/26/2022 4:48	11.91	0.06	6/27/2022 6:32	11.56	-0.44	6/26/2022 4:35	11.66	-0.18	6/26/2022 5:57	-0.18
6/26/2022 4:49	11.89	0.05	6/27/2022 6:33	11.61	-0.41	6/26/2022 4:36	11.68	-0.20	6/26/2022 5:58	-0.16
6/26/2022 4:50	11.91	0.06	6/27/2022 6:34	11.56	-0.46	6/26/2022 4:37	11.67	-0.18	6/26/2022 5:59	-0.11
6/26/2022 4:51	11.88	0.12	6/27/2022 6:35	11.59	-0.47	6/26/2022 4:38	11.66	-0.19	6/26/2022 6:00	-0.15
6/26/2022 4:52	11.88	0.06	6/27/2022 6:36	11.57	-0.46	6/26/2022 4:39	11.66	-0.20	6/26/2022 6:01	-0.15
6/26/2022 4:53	11.89	0.00	6/27/2022 6:37	11.60	-0.49	6/26/2022 4:40	11.67	-0.19	6/26/2022 6:02	-0.17
6/26/2022 4:54	11.89	0.12	6/27/2022 6:38	11.57	-0.48	6/26/2022 4:41	11.68	-0.19	6/26/2022 6:03	-0.12
6/26/2022 4:55	11.90	0.04	6/27/2022 6:39	11.59	-0.41	6/26/2022 4:42	11.65	-0.15	6/26/2022 6:04	-0.18
6/26/2022 4:56	11.90	0.05	6/27/2022 6:40	11.58	-0.41	6/26/2022 4:43	11.65	-0.22	6/26/2022 6:05	-0.16
6/26/2022 4:57	11.89	0.02	6/27/2022 6:41	11.59	-0.43	6/26/2022 4:44	11.67	-0.21	6/26/2022 6:06	-0.12
6/26/2022 4:58	11.89	0.02	6/27/2022 6:42	11.59	-0.47	6/26/2022 4:45	11.65	-0.14	6/26/2022 6:07	-0.18
6/26/2022 4:59	11.89	0.03	6/27/2022 6:43	11.59	-0.48	6/26/2022 4:46	11.67	-0.19	6/26/2022 6:08	-0.18
6/26/2022 5:00	11.90	0.02	6/27/2022 6:44	11.59	-0.42	6/26/2022 4:47	11.65	-0.20	6/26/2022 6:09	-0.18
6/26/2022 5:01	11.91	0.03	6/27/2022 6:45	11.59	-0.43	6/26/2022 4:48	11.68	-0.21	6/26/2022 6:10	-0.15
6/26/2022 5:02	11.89	0.14	6/27/2022 6:46	11.59	-0.42	6/26/2022 4:49	11.66	-0.19	6/26/2022 6:11	-0.14
6/26/2022 5:03	11.89	0.06	6/27/2022 6:47	11.58	-0.38	6/26/2022 4:50	11.67	-0.18	6/26/2022 6:12	-0.18
6/26/2022 5:04	11.90	0.04	6/27/2022 6:48	11.59	-0.43	6/26/2022 4:51	11.68	-0.19	6/26/2022 6:13	-0.14
6/26/2022 5:05	11.88	0.11	6/27/2022 6:49	11.59	-0.42	6/26/2022 4:52	11.67	-0.16	6/26/2022 6:14	-0.15
6/26/2022 5:06	11.90	-0.03	6/27/2022 6:50	11.61	-0.58	6/26/2022 4:53	11.65	-0.21	6/26/2022 6:15	-0.18
6/26/2022 5:07	11.91	0.06	6/27/2022 6:51	11.57	-0.47	6/26/2022 4:54	11.66	-0.18	6/26/2022 6:16	-0.16
6/26/2022 5:08	11.92	0.08	6/27/2022 6:52	11.61	-0.40	6/26/2022 4:55	11.65	-0.19	6/26/2022 6:17	-0.17
6/26/2022 5:09	11.88	0.10	6/27/2022 6:53	11.57	-0.54	6/26/2022 4:56	11.66	-0.20	6/26/2022 6:18	-0.15
6/26/2022 5:10	11.90	0.07	6/27/2022 6:54	11.58	-0.49	6/26/2022 4:57	11.68	-0.18	6/26/2022 6:19	-0.10
6/26/2022 5:11	11.90	0.12	6/27/2022 6:55	11.56	-0.43	6/26/2022 4:58	11.66	-0.19	6/26/2022 6:20	-0.15
6/26/2022 5:12	11.91	0.05	6/27/2022 6:56	11.59	-0.45	6/26/2022 4:59	11.67	-0.21	6/26/2022 6:21	-0.14
6/26/2022 5:13	11.90	0.10	6/27/2022 6:57	11.60	-0.47	6/26/2022 5:00	11.68	-0.17	6/26/2022 6:22	-0.13
6/26/2022 5:14	11.89	0.03	6/27/2022 6:58	11.57	-0.42	6/26/2022 5:01	11.67	-0.21	6/26/2022 6:23	-0.22
6/26/2022 5:15	11.92	0.09	6/27/2022 6:59	11.59	-0.48	6/26/2022 5:02	11.66	-0.19	6/26/2022 6:24	-0.18
6/26/2022 5:16	11.92	0.05	6/27/2022 7:00	11.58	-0.40	6/26/2022 5:03	11.64	-0.22	6/26/2022 6:25	-0.16
6/26/2022 5:17	11.90	0.10	6/27/2022 7:01	11.59	-0.39	6/26/2022 5:04	11.67	-0.23	6/26/2022 6:26	-0.16
6/26/2022 5:18	11.91	0.03	6/27/2022 7:02	11.58	-0.52	6/26/2022 5:05	11.65	-0.17	6/26/2022 6:27	-0.11
6/26/2022 5:19	11.92	0.10	6/27/2022 7:03	11.57	-0.47	6/26/2022 5:06	11.65	-0.20	6/26/2022 6:28	-0.15
6/26/2022 5:20	11.91	0.11	6/27/2022 7:04	11.58	-0.35	6/26/2022 5:07	11.65	-0.21	6/26/2022 6:29	-0.13
6/26/2022 5:21	11.90	0.05	6/27/2022 7:05	11.57	-0.51	6/26/2022 5:08	11.65	-0.21	6/26/2022 6:30	-0.16
6/26/2022 5:22	11.91	0.09	6/27/2022 7:06	11.57	-0.45	6/26/2022 5:09	11.64	-0.18	6/26/2022 6:31	-0.19
6/26/2022 5:23	11.89	0.06	6/27/2022 7:07	11.60	-0.44	6/26/2022 5:10	11.67	-0.23	6/26/2022 6:32	-0.10
6/26/2022 5:24	11.90	0.10	6/27/2022 7:08	11.58	-0.46	6/26/2022 5:11	11.68	-0.18	6/26/2022 6:33	-0.14
6/26/2022 5:25	11.88	0.05	6/27/2022 7:09	11.59	-0.49	6/26/2022 5:12	11.65	-0.19	6/26/2022 6:34	-0.11
6/26/2022 5:26	11.92	0.09	6/27/2022 7:10	11.58	-0.42	6/26/2022 5:13	11.70	-0.25	6/26/2022 6:35	-0.15
6/26/2022 5:27	11.90	0.07	6/27/2022 7:11	11.58	-0.46	6/26/2022 5:14	11.68	-0.20	6/26/2022 6:36	-0.11
6/26/2022 5:28	11.90	0.09	6/27/2022 7:12	11.60	-0.53	6/26/2022 5:15	11.66	-0.15	6/26/2022 6:37	-0.11
6/26/2022 5:29	11.89	0.15	6/27/2022 7:13	11.56	-0.46	6/26/2022 5:16	11.67	-0.21	6/26/2022 6:38	-0.18
6/26/2022 5:30	11.89	-0.06	6/27/2022 7:14	11.60	-0.42	6/26/2022 5:17	11.68	-0.19	6/26/2022 6:39	-0.15
6/26/2022 5:31	11.92	0.01	6/27/2022 7:15	11.59	-0.55	6/26/2022 5:18	11.65	-0.21	6/26/2022 6:40	-0.07
6/26/2022 5:32	11.88	0.10	6/27/2022 7:16	11.59	-0.40	6/26/2022 5:19	11.67	-0.15	6/26/2022 6:41	-0.12
6/26/2022 5:33	11.91	0.06	6/27/2022 7:17	11.57	-0.48	6/26/2022 5:20	11.66	-0.18	6/26/2022 6:42	-0.13
6/26/2022 5:34	11.89	0.07	6/27/2022 7:18	11.59	-0.35	6/26/2022 5:21	11.67	-0.20	6/26/2022 6:43	-0.11
6/26/2022 5:35	11.92	0.08	6/27/2022 7:19	11.59	-0.48	6/26/2022 5:22	11.67	-0.21	6/26/2022 6:44	-0.15
6/26/2022 5:36	11.91	0.10	6/27/2022 7:20	11.58	-0.43	6/26/2022 5:23	11.66	-0.21	6/26/2022 6:45	-0.15
6/26/2022 5:37	11.93	0.10	6/27/2022 7:21	11.57	-0.40	6/26/2022 5:24	11.66	-0.13	6/26/2022 6:46	-0.08
6/26/2022 5:38	11.93	0.07	6/27/2022 7:22	11.56	-0.39	6/26/2022 5:25	11.68	-0.19	6/26/2022 6:47	-0.12
6/26/2022 5:39	11.90	0.05	6/27/2022 7:23	11.57	-0.50	6/26/2022 5:26	11.65	-0.21	6/26/2022 6:48	-0.14
6/26/2022 5:40	11.91	0.07	6/27/2022 7:24	11.57	-0.41	6/26/2022 5:27	11.66	-0.19	6/26/2022 6:49	-0.14
6/26/2022 5:41	11.90	-0.01	6/27/2022 7:25	11.57	-0.47	6/26/2022 5:28	11.66	-0.18	6/26/2022 6:50	-0.14
6/26/2022 5:42	11.92	0.11	6/27/2022 7:26	11.55	-0.46	6/26/2022 5:29	11.67	-0.20	6/26/2022 6:51	-0.14

6/26/2022 5:43	11.91	0.03	6/27/2022 7:27	11.58	-0.46	6/26/2022 5:30	11.69	-0.19	6/26/2022 6:52	-0.15
6/26/2022 5:44	11.91	0.06	6/27/2022 7:28	11.60	-0.46	6/26/2022 5:31	11.66	-0.20	6/26/2022 6:53	-0.14
6/26/2022 5:45	11.93	0.02	6/27/2022 7:29	11.59	-0.43	6/26/2022 5:32	11.66	-0.22	6/26/2022 6:54	-0.18
6/26/2022 5:46	11.92	0.09	6/27/2022 7:30	11.57	-0.49	6/26/2022 5:33	11.67	-0.20	6/26/2022 6:55	-0.17
6/26/2022 5:47	11.91	0.11	6/27/2022 7:31	11.60	-0.42	6/26/2022 5:34	11.66	-0.21	6/26/2022 6:56	-0.16
6/26/2022 5:48	11.91	0.06	6/27/2022 7:32	11.58	-0.48	6/26/2022 5:35	11.67	-0.18	6/26/2022 6:57	-0.11
6/26/2022 5:49	11.89	0.05	6/27/2022 7:33	11.56	-0.40	6/26/2022 5:36	11.68	-0.23	6/26/2022 6:58	-0.19
6/26/2022 5:50	11.93	0.03	6/27/2022 7:34	11.58	-0.44	6/26/2022 5:37	11.69	-0.15	6/26/2022 6:59	-0.17
6/26/2022 5:51	11.90	0.10	6/27/2022 7:35	11.59	-0.44	6/26/2022 5:38	11.65	-0.17	6/26/2022 7:00	-0.10
6/26/2022 5:52	11.92	0.03	6/27/2022 7:36	11.60	-0.50	6/26/2022 5:39	11.67	-0.19	6/26/2022 7:01	-0.12
6/26/2022 5:53	11.92	0.18	6/27/2022 7:37	11.57	-0.49	6/26/2022 5:40	11.67	-0.18	6/26/2022 7:02	-0.14
6/26/2022 5:54	11.90	0.07	6/27/2022 7:38	11.59	-0.47	6/26/2022 5:41	11.64	-0.20	6/26/2022 7:03	-0.16
6/26/2022 5:55	11.90	0.04	6/27/2022 7:39	11.58	-0.42	6/26/2022 5:42	11.65	-0.18	6/26/2022 7:04	-0.21
6/26/2022 5:56	11.94	0.11	6/27/2022 7:40	11.55	-0.45	6/26/2022 5:43	11.67	-0.21	6/26/2022 7:05	-0.07
6/26/2022 5:57	11.93	0.14	6/27/2022 7:41	11.59	-0.47	6/26/2022 5:44	11.68	-0.21	6/26/2022 7:06	-0.16
6/26/2022 5:58	11.90	0.14	6/27/2022 7:42	11.57	-0.43	6/26/2022 5:45	11.65	-0.19	6/26/2022 7:07	-0.11
6/26/2022 5:59	11.92	0.10	6/27/2022 7:43	11.59	-0.47	6/26/2022 5:46	11.69	-0.16	6/26/2022 7:08	-0.11
6/26/2022 6:00	11.92	0.04	6/27/2022 7:44	11.58	-0.39	6/26/2022 5:47	11.70	-0.18	6/26/2022 7:09	-0.12
6/26/2022 6:01	11.92	0.12	6/27/2022 7:45	11.58	-0.48	6/26/2022 5:48	11.64	-0.21	6/26/2022 7:10	-0.15
6/26/2022 6:02	11.91	0.14	6/27/2022 7:46	11.57	-0.42	6/26/2022 5:49	11.66	-0.20	6/26/2022 7:11	-0.17
6/26/2022 6:03	11.89	0.08	6/27/2022 7:47	11.59	-0.41	6/26/2022 5:50	11.66	-0.22	6/26/2022 7:12	-0.15
6/26/2022 6:04	11.92	0.13	6/27/2022 7:48	11.58	-0.45	6/26/2022 5:51	11.63	-0.22	6/26/2022 7:13	-0.15
6/26/2022 6:05	11.89	0.06	6/27/2022 7:49	11.57	-0.51	6/26/2022 5:52	11.67	-0.19	6/26/2022 7:14	-0.15
6/26/2022 6:06	11.91	0.05	6/27/2022 7:50	11.58	-0.52	6/26/2022 5:53	11.67	-0.18	6/26/2022 7:15	-0.14
6/26/2022 6:07	11.89	0.11	6/27/2022 7:51	11.60	-0.48	6/26/2022 5:54	11.67	-0.16	6/26/2022 7:16	-0.11
6/26/2022 6:08	11.90	0.05	6/27/2022 7:52	11.58	-0.41	6/26/2022 5:55	11.68	-0.23	6/26/2022 7:17	-0.16
6/26/2022 6:09	11.91	0.05	6/27/2022 7:53	11.60	-0.46	6/26/2022 5:56	11.65	-0.19	6/26/2022 7:18	-0.12
6/26/2022 6:10	11.91	0.09	6/27/2022 7:54	11.57	-0.44	6/26/2022 5:57	11.69	-0.14	6/26/2022 7:19	-0.16
6/26/2022 6:11	11.91	0.06	6/27/2022 7:55	11.58	-0.45	6/26/2022 5:58	11.68	-0.20	6/26/2022 7:20	-0.08
6/26/2022 6:12	11.92	0.08	6/27/2022 7:56	11.58	-0.53	6/26/2022 5:59	11.66	-0.24	6/26/2022 7:21	-0.11
6/26/2022 6:13	11.90	0.01	6/27/2022 7:57	11.58	-0.50	6/26/2022 6:00	11.70	-0.20	6/26/2022 7:22	-0.10
6/26/2022 6:14	11.92	0.06	6/27/2022 7:58	11.58	-0.45	6/26/2022 6:01	11.68	-0.21	6/26/2022 7:23	-0.15
6/26/2022 6:15	11.91	0.05	6/27/2022 7:59	11.59	-0.49	6/26/2022 6:02	11.68	-0.19	6/26/2022 7:24	-0.13
6/26/2022 6:16	11.91	0.06	6/27/2022 8:00	11.60	-0.46	6/26/2022 6:03	11.68	-0.21	6/26/2022 7:25	-0.14
6/26/2022 6:17	11.92	0.10	6/27/2022 8:01	11.58	-0.44	6/26/2022 6:04	11.65	-0.13	6/26/2022 7:26	-0.10
6/26/2022 6:18	11.91	0.09	6/27/2022 8:02	11.60	-0.49	6/26/2022 6:05	11.69	-0.12	6/26/2022 7:27	-0.08
6/26/2022 6:19	11.92	0.13	6/27/2022 8:03	11.56	-0.44	6/26/2022 6:06	11.66	-0.18	6/26/2022 7:28	-0.16
6/26/2022 6:20	11.91	0.02	6/27/2022 8:04	11.59	-0.49	6/26/2022 6:07	11.66	-0.20	6/26/2022 7:29	-0.16
6/26/2022 6:21	11.92	0.12	6/27/2022 8:05	11.58	-0.50	6/26/2022 6:08	11.66	-0.23	6/26/2022 7:30	-0.16
6/26/2022 6:22	11.91	0.10	6/27/2022 8:06	11.58	-0.44	6/26/2022 6:09	11.66	-0.22	6/26/2022 7:31	-0.13
6/26/2022 6:23	11.91	0.06	6/27/2022 8:07	11.56	-0.48	6/26/2022 6:10	11.68	-0.19	6/26/2022 7:32	-0.16
6/26/2022 6:24	11.92	0.06	6/27/2022 8:08	11.57	-0.48	6/26/2022 6:11	11.65	-0.20	6/26/2022 7:33	-0.10
6/26/2022 6:25	11.89	0.08	6/27/2022 8:09	11.60	-0.51	6/26/2022 6:12	11.66	-0.16	6/26/2022 7:34	-0.13
6/26/2022 6:26	11.92	0.10	6/27/2022 8:10	11.55	-0.49	6/26/2022 6:13	11.68	-0.17	6/26/2022 7:35	-0.11
6/26/2022 6:27	11.91	0.07	6/27/2022 8:11	11.61	-0.43	6/26/2022 6:14	11.67	-0.19	6/26/2022 7:36	-0.12
6/26/2022 6:28	11.90	0.13	6/27/2022 8:12	11.58	-0.46	6/26/2022 6:15	11.67	-0.19	6/26/2022 7:37	-0.14
6/26/2022 6:29	11.89	0.03	6/27/2022 8:13	11.55	-0.50	6/26/2022 6:16	11.67	-0.17	6/26/2022 7:38	-0.15
6/26/2022 6:30	11.90	0.13	6/27/2022 8:14	11.58	-0.50	6/26/2022 6:17	11.67	-0.21	6/26/2022 7:39	-0.16
6/26/2022 6:31	11.90	0.08	6/27/2022 8:15	11.58	-0.41	6/26/2022 6:18	11.67	-0.20	6/26/2022 7:40	-0.14
6/26/2022 6:32	11.91	0.12	6/27/2022 8:16	11.59	-0.42	6/26/2022 6:19	11.66	-0.20	6/26/2022 7:41	-0.18
6/26/2022 6:33	11.92	0.07	6/27/2022 8:17	11.56	-0.52	6/26/2022 6:20	11.68	-0.19	6/26/2022 7:42	-0.12
6/26/2022 6:34	11.91	0.00	6/27/2022 8:18	11.58	-0.42	6/26/2022 6:21	11.69	-0.21	6/26/2022 7:43	-0.20
6/26/2022 6:35	11.90	0.01	6/27/2022 8:19	11.59	-0.42	6/26/2022 6:22	11.69	-0.17	6/26/2022 7:44	-0.16
6/26/2022 6:36	11.89	0.06	6/27/2022 8:20	11.59	-0.45	6/26/2022 6:23	11.68	-0.18	6/26/2022 7:45	-0.14
6/26/2022 6:37	11.92	0.20	6/27/2022 8:21	11.57	-0.50	6/26/2022 6:24	11.68	-0.20	6/26/2022 7:46	-0.16
6/26/2022 6:38	11.91	0.07	6/27/2022 8:22	11.56	-0.50	6/26/2022 6:25	11.68	-0.16	6/26/2022 7:47	-0.12
6/26/2022 6:39	11.90	0.01	6/27/2022 8:23	11.58	-0.45	6/26/2022 6:26	11.67	-0.23	6/26/2022 7:48	-0.18
6/26/2022 6:40	11.93	0.14	6/27/2022 8:24	11.59	-0.47	6/26/2022 6:27	11.66	-0.20	6/26/2022 7:49	-0.16
6/26/2022 6:41	11.90	-0.01	6/27/2022 8:25	11.58	-0.51	6/26/2022 6:28	11.66	-0.18	6/26/2022 7:50	-0.11
6/26/2022 6:42	11.90	-0.01	6/27/2022 8:26	11.57	-0.53	6/26/2022 6:29	11.67	-0.16	6/26/2022 7:51	-0.13
6/26/2022 6:43	11.87	0.07	6/27/2022 8:27	11.57	-0.53	6/26/2022 6:30	11.67	-0.18	6/26/2022 7:52	-0.13
6/26/2022 6:44	11.90	0.00	6/27/2022 8:28	11.58	-0.54	6/26/2022 6:31	11.67	-0.17	6/26/2022 7:53	-0.13
6/26/2022 6:45	11.92	0.10	6/27/2022 8:29	11.58	-0.40	6/26/2022 6:32	11.66	-0.24	6/26/2022 7:54	-0.18
6/26/2022 6:46	11.90	0.07	6/27/2022 8:30	11.59	-0.40	6/26/2022 6:33	11.66	-0.15	6/26/2022 7:55	-0.16
6/26/2022 6:47	11.92	0.06	6/27/2022 8:31	11.54	-0.50	6/26/2022 6:34	11.66	-0.22	6/26/2022 7:56	-0.14
6/26/2022 6:48	11.90	-0.05	6/27/2022 8:32	11.57	-0.43	6/26/2022 6:35	11.69	-0.19	6/26/2022 7:57	-0.07
6/26/2022 6:49	11.92	0.09	6/27/2022 8:33	11.57	-0.45	6/26/2022 6:36	11.66	-0.18	6/26/2022 7:58	-0.14
6/26/2022 6:50	11.89	0.12	6/27/2022 8:34	11.58	-0.48	6/26/2022 6:37	11.70	-0.23	6/26/2022 7:59	-0.16
6/26/2022 6:51	11.90	0.16	6/27/2022 8:35	11.59	-0.44	6/26/2022 6:38	11.67	-0.18	6/26/2022 8:00	-0.15
6/26/2022 6:52	11.93	0.05	6/27/2022 8:36	11.60	-0.51	6/26/2022 6:39	11.70	-0.17	6/26/2022 8:01	-0.15
6/26/2022 6:53	11.90	0.05	6/27/2022 8:37	11.57	-0.46	6/26/2022 6:40	11.65	-0.18	6/26/2022 8:02	-0.14
6/26/2022 6:54	11.92	0.03	6/27/2022 8:38	11.58	-0.45	6/26/2022 6:41	11.65	-0.17	6/26/2022 8:03	-0.17
6/26/2022 6:55	11.92	0.06	6/27/2022 8:39	11.60	-0.46	6/26/2022 6:42	11.67	-0.20	6/26/2022 8:04	-0.14
6/26/2022 6:56	11.91	0.12	6/27/2022 8:40	11.57	-0.46	6/26/2022 6:43	11.66	-0.18	6/26/2022 8:05	-0.13
6/26/2022 6:57	11.95	0.00	6/27/2022 8:41	11.57	-0.38	6/26/2022 6:44	11.66	-0.22	6/26/2022 8:06	-0.15
6/26/2022 6:58	11.93	0.10	6/27/2022 8:42	11.56	-0.44	6/26/2022 6:45	11.64	-0.20	6/26/2022 8:07	-0.13
6/26/2022 6:59	11.90	0.13	6/27/2022 8:43	11.58	-0.44	6/26/2022 6:46	11.67	-0.15	6/26/2022 8:08	-0.12
6/26/2022 7:00	11.94	0.10	6/27/2022 8:44	11.58	-0.39	6/26/2022 6:47	11.68	-0.20	6/26/2022 8:09	-0.13
6/26/2022 7:01	11.92	0.01	6/27/2022 8:45	11.59	-0.43	6/26/2022 6:48	11.66	-0.23	6/26/2022 8:10	-0.21
6/26/2022 7:02	11.95	0.11	6/27/2022 8:46	11.57	-0.44	6/26/2022 6:49	11.66	-0.23	6/26/2022 8:11	-0.09
6/26/2022 7:03	11.91	0.06	6/27/2022 8:47	11.61	-0.48	6/26/2022 6:50	11.68	-0.18	6/26/2022 8:12	-0.10
6/26/2022 7:04	11.92	0.08	6/27/2022 8:48	11.57	-0.44	6/26/2022 6:51	11.67	-0.18	6/26/2022 8:13	-0.18
6/26/2022 7:05	11.92	0.13	6/27/2022 8:49	11.57	-0.50	6/26/2022 6:52	11.68	-0.21	6/26/2022 8:14	-0.13
6/26/2022 7:06	11.90	0.11	6/27/2022 8:50	11.59	-0.43	6/26/2022 6:53	11.66	-0.18	6/26/2022 8:15	-0.13
6/26/2022 7:07	11.90	0.05	6/27/2022 8:51	11.60	-0.42	6/26/2022 6:54	11.69	-0.22	6/26/2022 8:16	-0.14
6/26/2022 7:08	11.92	0.00	6/27/2022 8:52	11.60	-0.41	6/26/2022 6:55	11.67	-0.21	6/26/2022 8:17	-0.16
6/26/2022 7:09	11.92	0.05	6/27/2022 8:53	11.60	-0.40	6/26/2022 6:56	11.68	-0.21	6/26/2022 8:18	-0.16
6/26/2022 7:10	11.91	0.19	6/27/2022 8:54	11.56	-0.51	6/26/2022 6:57	11.67	-0.19	6/26/2022 8:19	-0.14

6/26/2022 7:11	11.91	0.08	6/27/2022 8:55	11.59	-0.46	6/26/2022 6:58	11.65	-0.22	6/26/2022 8:20	-0.13
6/26/2022 7:12	11.94	0.10	6/27/2022 8:56	11.58	-0.45	6/26/2022 6:59	11.65	-0.17	6/26/2022 8:21	-0.15
6/26/2022 7:13	11.91	0.05	6/27/2022 8:57	11.57	-0.39	6/26/2022 7:00	11.66	-0.18	6/26/2022 8:22	-0.12
6/26/2022 7:14	11.91	0.01	6/27/2022 8:58	11.58	-0.55	6/26/2022 7:01	11.66	-0.23	6/26/2022 8:23	-0.12
6/26/2022 7:15	11.92	0.07	6/27/2022 8:59	11.60	-0.41	6/26/2022 7:02	11.68	-0.22	6/26/2022 8:24	-0.12
6/26/2022 7:16	11.91	-0.01	6/27/2022 9:00	11.57	-0.46	6/26/2022 7:03	11.66	-0.23	6/26/2022 8:25	-0.11
6/26/2022 7:17	11.91	0.07	6/27/2022 9:01	11.59	-0.36	6/26/2022 7:04	11.66	-0.17	6/26/2022 8:26	-0.13
6/26/2022 7:18	11.90	0.06	6/27/2022 9:02	11.58	-0.50	6/26/2022 7:05	11.66	-0.18	6/26/2022 8:27	-0.09
6/26/2022 7:19	11.91	0.11	6/27/2022 9:03	11.58	-0.47	6/26/2022 7:06	11.70	-0.18	6/26/2022 8:28	-0.10
6/26/2022 7:20	11.91	0.03	6/27/2022 9:04	11.57	-0.42	6/26/2022 7:07	11.68	-0.21	6/26/2022 8:29	-0.11
6/26/2022 7:21	11.92	0.07	6/27/2022 9:05	11.58	-0.44	6/26/2022 7:08	11.65	-0.21	6/26/2022 8:30	-0.09
6/26/2022 7:22	11.90	0.06	6/27/2022 9:06	11.60	-0.34	6/26/2022 7:09	11.66	-0.19	6/26/2022 8:31	-0.14
6/26/2022 7:23	11.91	0.08	6/27/2022 9:07	11.57	-0.46	6/26/2022 7:10	11.65	-0.19	6/26/2022 8:32	-0.15
6/26/2022 7:24	11.91	0.03	6/27/2022 9:08	11.59	-0.45	6/26/2022 7:11	11.66	-0.22	6/26/2022 8:33	-0.10
6/26/2022 7:25	11.91	0.08	6/27/2022 9:09	11.60	-0.42	6/26/2022 7:12	11.66	-0.21	6/26/2022 8:34	-0.14
6/26/2022 7:26	11.92	0.09	6/27/2022 9:10	11.58	-0.47	6/26/2022 7:13	11.67	-0.21	6/26/2022 8:35	-0.10
6/26/2022 7:27	11.89	0.13	6/27/2022 9:11	11.57	-0.37	6/26/2022 7:14	11.67	-0.17	6/26/2022 8:36	-0.15
6/26/2022 7:28	11.89	0.04	6/27/2022 9:12	11.58	-0.39	6/26/2022 7:15	11.67	-0.21	6/26/2022 8:37	-0.11
6/26/2022 7:29	11.91	0.05	6/27/2022 9:13	11.58	-0.48	6/26/2022 7:16	11.67	-0.18	6/26/2022 8:38	-0.10
6/26/2022 7:30	11.92	0.05	6/27/2022 9:14	11.58	-0.47	6/26/2022 7:17	11.65	-0.20	6/26/2022 8:39	-0.12
6/26/2022 7:31	11.90	-0.01	6/27/2022 9:15	11.55	-0.43	6/26/2022 7:18	11.68	-0.21	6/26/2022 8:40	-0.12
6/26/2022 7:32	11.92	0.15	6/27/2022 9:16	11.58	-0.43	6/26/2022 7:19	11.68	-0.17	6/26/2022 8:41	-0.07
6/26/2022 7:33	11.89	0.02	6/27/2022 9:17	11.57	-0.43	6/26/2022 7:20	11.67	-0.23	6/26/2022 8:42	-0.07
6/26/2022 7:34	11.90	0.10	6/27/2022 9:18	11.59	-0.50	6/26/2022 7:21	11.68	-0.22	6/26/2022 8:43	-0.13
6/26/2022 7:35	11.90	0.09	6/27/2022 9:19	11.59	-0.52	6/26/2022 7:22	11.65	-0.14	6/26/2022 8:44	-0.13
6/26/2022 7:36	11.91	0.12	6/27/2022 9:20	11.59	-0.52	6/26/2022 7:23	11.66	-0.21	6/26/2022 8:45	-0.09
6/26/2022 7:37	11.89	0.08	6/27/2022 9:21	11.60	-0.48	6/26/2022 7:24	11.67	-0.17	6/26/2022 8:46	-0.10
6/26/2022 7:38	11.90	0.01	6/27/2022 9:22	11.61	-0.37	6/26/2022 7:25	11.67	-0.18	6/26/2022 8:47	-0.16
6/26/2022 7:39	11.93	0.08	6/27/2022 9:23	11.58	-0.47	6/26/2022 7:26	11.65	-0.22	6/26/2022 8:48	-0.11
6/26/2022 7:40	11.91	0.10	6/27/2022 9:24	11.60	-0.42	6/26/2022 7:27	11.67	-0.20	6/26/2022 8:49	-0.14
6/26/2022 7:41	11.93	0.03	6/27/2022 9:25	11.57	-0.42	6/26/2022 7:28	11.66	-0.18	6/26/2022 8:50	-0.10
6/26/2022 7:42	11.92	0.05	6/27/2022 9:26	11.56	-0.49	6/26/2022 7:29	11.67	-0.19	6/26/2022 8:51	-0.14
6/26/2022 7:43	11.89	0.12	6/27/2022 9:27	11.58	-0.46	6/26/2022 7:30	11.67	-0.19	6/26/2022 8:52	-0.08
6/26/2022 7:44	11.91	0.09	6/27/2022 9:28	11.60	-0.49	6/26/2022 7:31	11.65	-0.16	6/26/2022 8:53	-0.15
6/26/2022 7:45	11.92	0.08	6/27/2022 9:29	11.58	-0.46	6/26/2022 7:32	11.64	-0.21	6/26/2022 8:54	-0.11
6/26/2022 7:46	11.90	0.01	6/27/2022 9:30	11.58	-0.45	6/26/2022 7:33	11.65	-0.19	6/26/2022 8:55	-0.12
6/26/2022 7:47	11.92	0.02	6/27/2022 9:31	11.56	-0.46	6/26/2022 7:34	11.66	-0.19	6/26/2022 8:56	-0.14
6/26/2022 7:48	11.92	0.09	6/27/2022 9:32	11.57	-0.56	6/26/2022 7:35	11.69	-0.19	6/26/2022 8:57	-0.12
6/26/2022 7:49	11.91	0.06	6/27/2022 9:33	11.58	-0.41	6/26/2022 7:36	11.66	-0.19	6/26/2022 8:58	-0.10
6/26/2022 7:50	11.91	0.05	6/27/2022 9:34	11.59	-0.41	6/26/2022 7:37	11.68	-0.18	6/26/2022 8:59	-0.10
6/26/2022 7:51	11.91	0.14	6/27/2022 9:35	11.56	-0.45	6/26/2022 7:38	11.67	-0.21	6/26/2022 9:00	-0.14
6/26/2022 7:52	11.91	0.06	6/27/2022 9:36	11.59	-0.42	6/26/2022 7:39	11.65	-0.19	6/26/2022 9:01	-0.12
6/26/2022 7:53	11.92	0.01	6/27/2022 9:37	11.57	-0.48	6/26/2022 7:40	11.67	-0.17	6/26/2022 9:02	-0.12
6/26/2022 7:54	11.91	0.04	6/27/2022 9:38	11.56	-0.43	6/26/2022 7:41	11.69	-0.19	6/26/2022 9:03	-0.11
6/26/2022 7:55	11.89	0.07	6/27/2022 9:39	11.61	-0.49	6/26/2022 7:42	11.67	-0.18	6/26/2022 9:04	-0.10
6/26/2022 7:56	11.91	0.11	6/27/2022 9:40	11.59	-0.49	6/26/2022 7:43	11.68	-0.16	6/26/2022 9:05	-0.05
6/26/2022 7:57	11.89	0.00	6/27/2022 9:41	11.60	-0.54	6/26/2022 7:44	11.67	-0.21	6/26/2022 9:06	-0.14
6/26/2022 7:58	11.92	0.08	6/27/2022 9:42	11.61	-0.40	6/26/2022 7:45	11.66	-0.22	6/26/2022 9:07	-0.09
6/26/2022 7:59	11.90	0.06	6/27/2022 9:43	11.56	-0.52	6/26/2022 7:46	11.66	-0.19	6/26/2022 9:08	-0.14
6/26/2022 8:00	11.92	0.00	6/27/2022 9:44	11.58	-0.52	6/26/2022 7:47	11.67	-0.18	6/26/2022 9:09	-0.12
6/26/2022 8:01	11.92	0.07	6/27/2022 9:45	11.58	-0.45	6/26/2022 7:48	11.67	-0.20	6/26/2022 9:10	-0.11
6/26/2022 8:02	11.89	0.05	6/27/2022 9:46	11.57	-0.44	6/26/2022 7:49	11.66	-0.19	6/26/2022 9:11	-0.15
6/26/2022 8:03	11.89	0.06	6/27/2022 9:47	11.58	-0.47	6/26/2022 7:50	11.68	-0.22	6/26/2022 9:12	-0.11
6/26/2022 8:04	11.92	0.04	6/27/2022 9:48	11.55	-0.44	6/26/2022 7:51	11.68	-0.17	6/26/2022 9:13	-0.15
6/26/2022 8:05	11.93	0.04	6/27/2022 9:49	11.57	-0.48	6/26/2022 7:52	11.69	-0.21	6/26/2022 9:14	-0.13
6/26/2022 8:06	11.93	0.08	6/27/2022 9:50	11.58	-0.48	6/26/2022 7:53	11.69	-0.17	6/26/2022 9:15	-0.14
6/26/2022 8:07	11.91	0.05	6/27/2022 9:51	11.59	-0.42	6/26/2022 7:54	11.67	-0.22	6/26/2022 9:16	-0.13
6/26/2022 8:08	11.92	0.14	6/27/2022 9:52	11.60	-0.49	6/26/2022 7:55	11.69	-0.19	6/26/2022 9:17	-0.16
6/26/2022 8:09	11.93	0.04	6/27/2022 9:53	11.60	-0.46	6/26/2022 7:56	11.66	-0.16	6/26/2022 9:18	-0.12
6/26/2022 8:10	11.89	0.01	6/27/2022 9:54	11.58	-0.43	6/26/2022 7:57	11.66	-0.15	6/26/2022 9:19	-0.14
6/26/2022 8:11	11.91	0.00	6/27/2022 9:55	11.58	-0.50	6/26/2022 7:58	11.68	-0.20	6/26/2022 9:20	-0.12
6/26/2022 8:12	11.88	0.02	6/27/2022 9:56	11.55	-0.50	6/26/2022 7:59	11.67	-0.18	6/26/2022 9:21	-0.12
6/26/2022 8:13	11.90	-0.01	6/27/2022 9:57	11.56	-0.54	6/26/2022 8:00	11.67	-0.19	6/26/2022 9:22	-0.12
6/26/2022 8:14	11.90	0.10	6/27/2022 9:58	11.61	-0.48	6/26/2022 8:01	11.71	-0.20	6/26/2022 9:23	-0.13
6/26/2022 8:15	11.89	0.07	6/27/2022 9:59	11.58	-0.43	6/26/2022 8:02	11.66	-0.19	6/26/2022 9:24	-0.10
6/26/2022 8:16	11.90	0.08	6/27/2022 10:00	11.59	-0.50	6/26/2022 8:03	11.69	-0.17	6/26/2022 9:25	-0.18
6/26/2022 8:17	11.88	0.08	6/27/2022 10:01	11.58	-0.41	6/26/2022 8:04	11.65	-0.22	6/26/2022 9:26	-0.14
6/26/2022 8:18	11.90	0.12	6/27/2022 10:02	11.59	-0.43	6/26/2022 8:05	11.68	-0.21	6/26/2022 9:27	-0.11
6/26/2022 8:19	11.89	0.06	6/27/2022 10:03	11.59	-0.42	6/26/2022 8:06	11.68	-0.21	6/26/2022 9:28	-0.13
6/26/2022 8:20	11.90	0.14	6/27/2022 10:04	11.59	-0.44	6/26/2022 8:07	11.69	-0.20	6/26/2022 9:29	-0.08
6/26/2022 8:21	11.88	0.10	6/27/2022 10:05	11.57	-0.49	6/26/2022 8:08	11.66	-0.21	6/26/2022 9:30	-0.10
6/26/2022 8:22	11.90	0.10	6/27/2022 10:06	11.59	-0.44	6/26/2022 8:09	11.68	-0.16	6/26/2022 9:31	-0.09
6/26/2022 8:23	11.90	0.03	6/27/2022 10:07	11.58	-0.50	6/26/2022 8:10	11.65	-0.22	6/26/2022 9:32	-0.14
6/26/2022 8:24	11.91	0.10	6/27/2022 10:08	11.59	-0.42	6/26/2022 8:11	11.68	-0.19	6/26/2022 9:33	-0.14
6/26/2022 8:25	11.92	0.01	6/27/2022 10:09	11.60	-0.48	6/26/2022 8:12	11.68	-0.19	6/26/2022 9:34	-0.13
6/26/2022 8:26	11.90	0.08	6/27/2022 10:10	11.61	-0.50	6/26/2022 8:13	11.69	-0.21	6/26/2022 9:35	-0.14
6/26/2022 8:27	11.91	0.02	6/27/2022 10:11	11.58	-0.47	6/26/2022 8:14	11.69	-0.19	6/26/2022 9:36	-0.12
6/26/2022 8:28	11.91	0.09	6/27/2022 10:12	11.59	-0.40	6/26/2022 8:15	11.66	-0.20	6/26/2022 9:37	-0.12
6/26/2022 8:29	11.95	0.06	6/27/2022 10:13	11.57	-0.39	6/26/2022 8:16	11.66	-0.19	6/26/2022 9:38	-0.08
6/26/2022 8:30	11.90	0.10	6/27/2022 10:14	11.58	-0.36	6/26/2022 8:17	11.70	-0.22	6/26/2022 9:39	-0.17
6/26/2022 8:31	11.91	0.00	6/27/2022 10:15	11.61	-0.45	6/26/2022 8:18	11.69	-0.16	6/26/2022 9:40	-0.13
6/26/2022 8:32	11.92	0.05	6/27/2022 10:16	11.58	-0.47	6/26/2022 8:19	11.67	-0.15	6/26/2022 9:41	-0.12
6/26/2022 8:33	11.92	0.06	6/27/2022 10:17	11.58	-0.39	6/26/2022 8:20	11.65	-0.24	6/26/2022 9:42	-0.11
6/26/2022 8:34	11.93	0.02	6/27/2022 10:18	11.59	-0.43	6/26/2022 8:21	11.68	-0.22	6/26/2022 9:43	-0.13
6/26/2022 8:35	11.93	0.10	6/27/2022 10:19	11.57	-0.54	6/26/2022 8:22	11.66	-0.20	6/26/2022 9:44	-0.15
6/26/2022 8:36	11.91	-0.01	6/27/2022 10:20	11.57	-0.38	6/26/2022 8:23	11.67	-0.21	6/26/2022 9:45	-0.15
6/26/2022 8:37	11.94	0.07	6/27/2022 10:21	11.55	-0.56	6/26/2022 8:24	11.68	-0.15	6/26/2022 9:46	-0.13
6/26/2022 8:38	11.94	0.07	6/27/2022 10:22	11.59	-0.43	6/26/2022 8:25	11.69	-0.20	6/26/2022 9:47	-0.11

6/26/2022 8:39	11.94	0.00	6/27/2022 10:23	11.59	-0.48	6/26/2022 8:26	11.68	-0.21	6/26/2022 9:48	-0.14
6/26/2022 8:40	11.92	0.02	6/27/2022 10:24	11.57	-0.44	6/26/2022 8:27	11.67	-0.19	6/26/2022 9:49	-0.11
6/26/2022 8:41	11.94	-0.05	6/27/2022 10:25	11.59	-0.44	6/26/2022 8:28	11.68	-0.22	6/26/2022 9:50	-0.08
6/26/2022 8:42	11.91	0.06	6/27/2022 10:26	11.57	-0.39	6/26/2022 8:29	11.70	-0.19	6/26/2022 9:51	-0.09
6/26/2022 8:43	11.92	0.08	6/27/2022 10:27	11.60	-0.47	6/26/2022 8:30	11.67	-0.18	6/26/2022 9:52	-0.14
6/26/2022 8:44	11.90	0.05	6/27/2022 10:28	11.58	-0.38	6/26/2022 8:31	11.67	-0.19	6/26/2022 9:53	-0.11
6/26/2022 8:45	11.92	0.11	6/27/2022 10:29	11.59	-0.46	6/26/2022 8:32	11.65	-0.19	6/26/2022 9:54	-0.13
6/26/2022 8:46	11.92	0.10	6/27/2022 10:30	11.56	-0.37	6/26/2022 8:33	11.66	-0.17	6/26/2022 9:55	-0.15
6/26/2022 8:47	11.92	0.01	6/27/2022 10:31	11.57	-0.42	6/26/2022 8:34	11.66	-0.18	6/26/2022 9:56	-0.12
6/26/2022 8:48	11.94	0.10	6/27/2022 10:32	11.59	-0.58	6/26/2022 8:35	11.66	-0.19	6/26/2022 9:57	-0.10
6/26/2022 8:49	11.94	0.14	6/27/2022 10:33	11.59	-0.44	6/26/2022 8:36	11.68	-0.17	6/26/2022 9:58	-0.11
6/26/2022 8:50	11.91	0.12	6/27/2022 10:34	11.60	-0.48	6/26/2022 8:37	11.67	-0.17	6/26/2022 9:59	-0.09
6/26/2022 8:51	11.90	0.13	6/27/2022 10:35	11.58	-0.50	6/26/2022 8:38	11.66	-0.23	6/26/2022 10:00	-0.12
6/26/2022 8:52	11.94	0.19	6/27/2022 10:36	11.58	-0.46	6/26/2022 8:39	11.67	-0.21	6/26/2022 10:01	-0.14
6/26/2022 8:53	11.92	0.07	6/27/2022 10:37	11.59	-0.45	6/26/2022 8:40	11.66	-0.17	6/26/2022 10:02	-0.16
6/26/2022 8:54	11.91	0.03	6/27/2022 10:38	11.56	-0.47	6/26/2022 8:41	11.66	-0.20	6/26/2022 10:03	-0.14
6/26/2022 8:55	11.93	0.02	6/27/2022 10:39	11.56	-0.51	6/26/2022 8:42	11.68	-0.18	6/26/2022 10:04	-0.16
6/26/2022 8:56	11.91	0.05	6/27/2022 10:40	11.61	-0.43	6/26/2022 8:43	11.67	-0.22	6/26/2022 10:05	-0.15
6/26/2022 8:57	11.90	0.05	6/27/2022 10:41	11.59	-0.48	6/26/2022 8:44	11.69	-0.18	6/26/2022 10:06	-0.15
6/26/2022 8:58	11.92	0.09	6/27/2022 10:42	11.61	-0.49	6/26/2022 8:45	11.67	-0.19	6/26/2022 10:07	-0.12
6/26/2022 8:59	11.90	0.09	6/27/2022 10:43	11.56	-0.44	6/26/2022 8:46	11.65	-0.20	6/26/2022 10:08	-0.14
6/26/2022 9:00	11.93	0.05	6/27/2022 10:44	11.58	-0.40	6/26/2022 8:47	11.67	-0.22	6/26/2022 10:09	-0.13
6/26/2022 9:01	11.92	0.03	6/27/2022 10:45	11.56	-0.48	6/26/2022 8:48	11.67	-0.21	6/26/2022 10:10	-0.15
6/26/2022 9:02	11.92	0.06	6/27/2022 10:46	11.60	-0.43	6/26/2022 8:49	11.67	-0.17	6/26/2022 10:11	-0.17
6/26/2022 9:03	11.90	0.15	6/27/2022 10:47	11.57	-0.36	6/26/2022 8:50	11.67	-0.21	6/26/2022 10:12	-0.13
6/26/2022 9:04	11.93	0.10	6/27/2022 10:48	11.60	-0.43	6/26/2022 8:51	11.68	-0.20	6/26/2022 10:13	-0.13
6/26/2022 9:05	11.92	0.16	6/27/2022 10:49	11.56	-0.42	6/26/2022 8:52	11.68	-0.18	6/26/2022 10:14	-0.16
6/26/2022 9:06	11.91	0.10	6/27/2022 10:50	11.59	-0.53	6/26/2022 8:53	11.68	-0.19	6/26/2022 10:15	-0.09
6/26/2022 9:07	11.93	0.07	6/27/2022 10:51	11.57	-0.52	6/26/2022 8:54	11.65	-0.17	6/26/2022 10:16	-0.08
6/26/2022 9:08	11.94	0.03	6/27/2022 10:52	11.59	-0.49	6/26/2022 8:55	11.66	-0.20	6/26/2022 10:17	-0.16
6/26/2022 9:09	11.92	0.10	6/27/2022 10:53	11.56	-0.53	6/26/2022 8:56	11.67	-0.19	6/26/2022 10:18	-0.15
6/26/2022 9:10	11.93	0.05	6/27/2022 10:54	11.58	-0.41	6/26/2022 8:57	11.67	-0.22	6/26/2022 10:19	-0.13
6/26/2022 9:11	11.90	-0.01	6/27/2022 10:55	11.58	-0.48	6/26/2022 8:58	11.64	-0.18	6/26/2022 10:20	-0.09
6/26/2022 9:12	11.94	0.04	6/27/2022 10:56	11.60	-0.53	6/26/2022 8:59	11.66	-0.20	6/26/2022 10:21	-0.08
6/26/2022 9:13	11.91	0.09	6/27/2022 10:57	11.58	-0.53	6/26/2022 9:00	11.64	-0.21	6/26/2022 10:22	-0.10
6/26/2022 9:14	11.92	0.06	6/27/2022 10:58	11.57	-0.50	6/26/2022 9:01	11.67	-0.19	6/26/2022 10:23	-0.10
6/26/2022 9:15	11.91	0.04	6/27/2022 10:59	11.60	-0.45	6/26/2022 9:02	11.68	-0.20	6/26/2022 10:24	-0.14
6/26/2022 9:16	11.91	0.07	6/27/2022 11:00	11.59	-0.53	6/26/2022 9:03	11.68	-0.22	6/26/2022 10:25	-0.15
6/26/2022 9:17	11.91	0.01	6/27/2022 11:01	11.57	-0.44	6/26/2022 9:04	11.66	-0.18	6/26/2022 10:26	-0.16
6/26/2022 9:18	11.90	0.08	6/27/2022 11:02	11.57	-0.41	6/26/2022 9:05	11.68	-0.17	6/26/2022 10:27	-0.14
6/26/2022 9:19	11.90	0.11	6/27/2022 11:03	11.57	-0.47	6/26/2022 9:06	11.70	-0.19	6/26/2022 10:28	-0.13
6/26/2022 9:20	11.89	0.05	6/27/2022 11:04	11.60	-0.41	6/26/2022 9:07	11.67	-0.15	6/26/2022 10:29	-0.14
6/26/2022 9:21	11.89	0.07	6/27/2022 11:05	11.57	-0.53	6/26/2022 9:08	11.67	-0.20	6/26/2022 10:30	-0.15
6/26/2022 9:22	11.92	0.09	6/27/2022 11:06	11.59	-0.41	6/26/2022 9:09	11.69	-0.21	6/26/2022 10:31	-0.09
6/26/2022 9:23	11.94	0.14	6/27/2022 11:07	11.56	-0.55	6/26/2022 9:10	11.70	-0.20	6/26/2022 10:32	-0.10
6/26/2022 9:24	11.93	0.10	6/27/2022 11:08	11.57	-0.52	6/26/2022 9:11	11.66	-0.23	6/26/2022 10:33	-0.14
6/26/2022 9:25	11.93	-0.01	6/27/2022 11:09	11.57	-0.46	6/26/2022 9:12	11.69	-0.19	6/26/2022 10:34	-0.13
6/26/2022 9:26	11.95	0.10	6/27/2022 11:10	11.56	-0.44	6/26/2022 9:13	11.67	-0.17	6/26/2022 10:35	-0.17
6/26/2022 9:27	11.95	-0.01	6/27/2022 11:11	11.59	-0.39	6/26/2022 9:14	11.66	-0.21	6/26/2022 10:36	-0.13
6/26/2022 9:28	11.92	0.11	6/27/2022 11:12	11.61	-0.38	6/26/2022 9:15	11.67	-0.19	6/26/2022 10:37	-0.14
6/26/2022 9:29	11.91	0.06	6/27/2022 11:13	11.59	-0.53	6/26/2022 9:16	11.67	-0.21	6/26/2022 10:38	-0.13
6/26/2022 9:30	11.94	0.02	6/27/2022 11:14	11.58	-0.41	6/26/2022 9:17	11.68	-0.22	6/26/2022 10:39	-0.15
6/26/2022 9:31	11.91	-0.02	6/27/2022 11:15	11.57	-0.44	6/26/2022 9:18	11.65	-0.19	6/26/2022 10:40	-0.14
6/26/2022 9:32	11.94	0.06	6/27/2022 11:16	11.59	-0.47	6/26/2022 9:19	11.66	-0.21	6/26/2022 10:41	-0.13
6/26/2022 9:33	11.91	0.08	6/27/2022 11:17	11.59	-0.44	6/26/2022 9:20	11.67	-0.18	6/26/2022 10:42	-0.05
6/26/2022 9:34	11.92	0.06	6/27/2022 11:18	11.56	-0.44	6/26/2022 9:21	11.69	-0.20	6/26/2022 10:43	-0.05
6/26/2022 9:35	11.93	0.07	6/27/2022 11:19	11.57	-0.35	6/26/2022 9:22	11.66	-0.17	6/26/2022 10:44	-0.11
6/26/2022 9:36	11.93	0.01	6/27/2022 11:20	11.59	-0.49	6/26/2022 9:23	11.65	-0.20	6/26/2022 10:45	-0.15
6/26/2022 9:37	11.90	0.07	6/27/2022 11:21	11.60	-0.47	6/26/2022 9:24	11.65	-0.16	6/26/2022 10:46	-0.08
6/26/2022 9:38	11.93	0.01	6/27/2022 11:22	11.60	-0.48	6/26/2022 9:25	11.70	-0.19	6/26/2022 10:47	-0.07
6/26/2022 9:39	11.90	0.06	6/27/2022 11:23	11.61	-0.48	6/26/2022 9:26	11.66	-0.21	6/26/2022 10:48	-0.12
6/26/2022 9:40	11.92	0.04	6/27/2022 11:24	11.59	-0.48	6/26/2022 9:27	11.66	-0.15	6/26/2022 10:49	-0.09
6/26/2022 9:41	11.92	0.08	6/27/2022 11:25	11.58	-0.41	6/26/2022 9:28	11.66	-0.23	6/26/2022 10:50	-0.11
6/26/2022 9:42	11.93	0.06	6/27/2022 11:26	11.57	-0.44	6/26/2022 9:29	11.65	-0.21	6/26/2022 10:51	-0.14
6/26/2022 9:43	11.92	0.06	6/27/2022 11:27	11.59	-0.43	6/26/2022 9:30	11.68	-0.21	6/26/2022 10:52	-0.14
6/26/2022 9:44	11.94	0.05	6/27/2022 11:28	11.55	-0.51	6/26/2022 9:31	11.67	-0.18	6/26/2022 10:53	-0.10
6/26/2022 9:45	11.93	0.07	6/27/2022 11:29	11.60	-0.46	6/26/2022 9:32	11.67	-0.20	6/26/2022 10:54	-0.13
6/26/2022 9:46	11.93	0.09	6/27/2022 11:30	11.56	-0.46	6/26/2022 9:33	11.68	-0.21	6/26/2022 10:55	-0.14
6/26/2022 9:47	11.93	-0.01	6/27/2022 11:31	11.59	-0.44	6/26/2022 9:34	11.66	-0.20	6/26/2022 10:56	-0.13
6/26/2022 9:48	11.93	0.06	6/27/2022 11:32	11.56	-0.48	6/26/2022 9:35	11.68	-0.20	6/26/2022 10:57	-0.11
6/26/2022 9:49	11.92	0.12	6/27/2022 11:33	11.58	-0.41	6/26/2022 9:36	11.69	-0.20	6/26/2022 10:58	-0.17
6/26/2022 9:50	11.92	0.10	6/27/2022 11:34	11.57	-0.41	6/26/2022 9:37	11.67	-0.19	6/26/2022 10:59	-0.09
6/26/2022 9:51	11.88	0.02	6/27/2022 11:35	11.57	-0.49	6/26/2022 9:38	11.67	-0.21	6/26/2022 11:00	-0.08
6/26/2022 9:52	11.91	0.05	6/27/2022 11:36	11.57	-0.45	6/26/2022 9:39	11.67	-0.21	6/26/2022 11:01	-0.13
6/26/2022 9:53	11.91	0.04	6/27/2022 11:37	11.59	-0.46	6/26/2022 9:40	11.66	-0.20	6/26/2022 11:02	-0.12
6/26/2022 9:54	11.93	0.03	6/27/2022 11:38	11.59	-0.51	6/26/2022 9:41	11.66	-0.19	6/26/2022 11:03	-0.11
6/26/2022 9:55	11.91	0.01	6/27/2022 11:39	11.61	-0.47	6/26/2022 9:42	11.67	-0.24	6/26/2022 11:04	-0.11
6/26/2022 9:56	11.91	0.01	6/27/2022 11:40	11.58	-0.50	6/26/2022 9:43	11.66	-0.19	6/26/2022 11:05	-0.12
6/26/2022 9:57	11.91	0.10	6/27/2022 11:41	11.57	-0.49	6/26/2022 9:44	11.67	-0.20	6/26/2022 11:06	-0.15
6/26/2022 9:58	11.90	0.06	6/27/2022 11:42	11.58	-0.51	6/26/2022 9:45	11.68	-0.20	6/26/2022 11:07	-0.14
6/26/2022 9:59	11.93	0.04	6/27/2022 11:43	11.58	-0.45	6/26/2022 9:46	11.67	-0.18	6/26/2022 11:08	-0.10
6/26/2022 10:00	11.95	0.04	6/27/2022 11:44	11.56	-0.50	6/26/2022 9:47	11.66	-0.23	6/26/2022 11:09	-0.15
6/26/2022 10:01	11.92	-0.01	6/27/2022 11:45	11.60	-0.45	6/26/2022 9:48	11.65	-0.23	6/26/2022 11:10	-0.07
6/26/2022 10:02	11.91	0.09	6/27/2022 11:46	11.59	-0.47	6/26/2022 9:49	11.65	-0.21	6/26/2022 11:11	-0.12
6/26/2022 10:03	11.92	0.00	6/27/2022 11:47	11.62	-0.53	6/26/2022 9:50	11.66	-0.20	6/26/2022 11:12	-0.14
6/26/2022 10:04	11.94	0.09	6/27/2022 11:48	11.56	-0.50	6/26/2022 9:51	11.72	-0.19	6/26/2022 11:13	-0.15
6/26/2022 10:05	11.91	0.10	6/27/2022 11:49	11.57	-0.49	6/26/2022 9:52	11.68	-0.19	6/26/2022 11:14	-0.15
6/26/2022 10:06	11.93	0.07	6/27/2022 11:50	11.58	-0.34	6/26/2022 9:53	11.66	-0.20	6/26/2022 11:15	-0.16

6/26/2022 10:07	11.94	0.07	6/27/2022 11:51	11.57	-0.56	6/26/2022 9:54	11.67	-0.20	6/26/2022 11:16	-0.16
6/26/2022 10:08	11.90	0.08	6/27/2022 11:52	11.59	-0.50	6/26/2022 9:55	11.65	-0.21	6/26/2022 11:17	-0.15
6/26/2022 10:09	11.94	0.05	6/27/2022 11:53	11.59	-0.46	6/26/2022 9:56	11.65	-0.17	6/26/2022 11:18	-0.13
6/26/2022 10:10	11.95	0.09	6/27/2022 11:54	11.57	-0.42	6/26/2022 9:57	11.66	-0.21	6/26/2022 11:19	-0.08
6/26/2022 10:11	11.92	0.05	6/27/2022 11:55	11.58	-0.41	6/26/2022 9:58	11.66	-0.19	6/26/2022 11:20	-0.12
6/26/2022 10:12	11.91	0.00	6/27/2022 11:56	11.59	-0.48	6/26/2022 9:59	11.66	-0.22	6/26/2022 11:21	-0.11
6/26/2022 10:13	11.92	0.09	6/27/2022 11:57	11.60	-0.38	6/26/2022 10:00	11.66	-0.18	6/26/2022 11:22	-0.14
6/26/2022 10:14	11.92	0.05	6/27/2022 11:58	11.59	-0.43	6/26/2022 10:01	11.66	-0.18	6/26/2022 11:23	-0.11
6/26/2022 10:15	11.92	0.11	6/27/2022 11:59	11.57	-0.46	6/26/2022 10:02	11.67	-0.18	6/26/2022 11:24	-0.10
6/26/2022 10:16	11.91	0.07	6/27/2022 12:00	11.57	-0.42	6/26/2022 10:03	11.68	-0.20	6/26/2022 11:25	-0.15
6/26/2022 10:17	11.94	0.04	6/27/2022 12:01	11.57	-0.46	6/26/2022 10:04	11.66	-0.22	6/26/2022 11:26	-0.10
6/26/2022 10:18	11.91	-0.03	6/27/2022 12:02	11.57	-0.45	6/26/2022 10:05	11.69	-0.23	6/26/2022 11:27	-0.17
6/26/2022 10:19	11.94	0.12	6/27/2022 12:03	11.61	-0.39	6/26/2022 10:06	11.65	-0.19	6/26/2022 11:28	-0.12
6/26/2022 10:20	11.94	0.15	6/27/2022 12:04	11.57	-0.53	6/26/2022 10:07	11.66	-0.23	6/26/2022 11:29	-0.09
6/26/2022 10:21	11.93	0.05	6/27/2022 12:05	11.58	-0.49	6/26/2022 10:08	11.67	-0.18	6/26/2022 11:30	-0.05
6/26/2022 10:22	11.92	0.02	6/27/2022 12:06	11.60	-0.47	6/26/2022 10:09	11.68	-0.23	6/26/2022 11:31	-0.18
6/26/2022 10:23	11.91	0.06	6/27/2022 12:07	11.57	-0.46	6/26/2022 10:10	11.67	-0.18	6/26/2022 11:32	-0.16
6/26/2022 10:24	11.96	-0.04	6/27/2022 12:08	11.57	-0.50	6/26/2022 10:11	11.68	-0.15	6/26/2022 11:33	-0.09
6/26/2022 10:25	11.94	0.08	6/27/2022 12:09	11.59	-0.42	6/26/2022 10:12	11.68	-0.19	6/26/2022 11:34	-0.08
6/26/2022 10:26	11.92	-0.01	6/27/2022 12:10	11.58	-0.45	6/26/2022 10:13	11.69	-0.18	6/26/2022 11:35	-0.17
6/26/2022 10:27	11.95	0.15	6/27/2022 12:11	11.57	-0.43	6/26/2022 10:14	11.67	-0.17	6/26/2022 11:36	-0.14
6/26/2022 10:28	11.94	0.07	6/27/2022 12:12	11.61	-0.53	6/26/2022 10:15	11.68	-0.21	6/26/2022 11:37	-0.09
6/26/2022 10:29	11.92	0.10	6/27/2022 12:13	11.58	-0.37	6/26/2022 10:16	11.68	-0.19	6/26/2022 11:38	-0.15
6/26/2022 10:30	11.94	0.02	6/27/2022 12:14	11.57	-0.40	6/26/2022 10:17	11.66	-0.20	6/26/2022 11:39	-0.14
6/26/2022 10:31	11.95	0.02	6/27/2022 12:15	11.58	-0.50	6/26/2022 10:18	11.67	-0.21	6/26/2022 11:40	-0.14
6/26/2022 10:32	11.94	0.15	6/27/2022 12:16	11.58	-0.48	6/26/2022 10:19	11.68	-0.23	6/26/2022 11:41	-0.11
6/26/2022 10:33	11.94	0.07	6/27/2022 12:17	11.58	-0.48	6/26/2022 10:20	11.70	-0.21	6/26/2022 11:42	-0.09
6/26/2022 10:34	11.94	0.04	6/27/2022 12:18	11.59	-0.53	6/26/2022 10:21	11.66	-0.18	6/26/2022 11:43	-0.16
6/26/2022 10:35	11.93	0.05	6/27/2022 12:19	11.58	-0.53	6/26/2022 10:22	11.67	-0.19	6/26/2022 11:44	-0.13
6/26/2022 10:36	11.91	-0.03	6/27/2022 12:20	11.59	-0.43	6/26/2022 10:23	11.68	-0.19	6/26/2022 11:45	-0.14
6/26/2022 10:37	11.95	0.08	6/27/2022 12:21	11.57	-0.35	6/26/2022 10:24	11.68	-0.17	6/26/2022 11:46	-0.14
6/26/2022 10:38	11.95	0.11	6/27/2022 12:22	11.58	-0.47	6/26/2022 10:25	11.66	-0.22	6/26/2022 11:47	-0.12
6/26/2022 10:39	11.94	0.06	6/27/2022 12:23	11.57	-0.49	6/26/2022 10:26	11.67	-0.18	6/26/2022 11:48	-0.10
6/26/2022 10:40	11.94	0.01	6/27/2022 12:24	11.58	-0.46	6/26/2022 10:27	11.66	-0.17	6/26/2022 11:49	-0.14
6/26/2022 10:41	11.96	0.10	6/27/2022 12:25	11.60	-0.44	6/26/2022 10:28	11.65	-0.22	6/26/2022 11:50	-0.14
6/26/2022 10:42	11.96	0.11	6/27/2022 12:26	11.58	-0.44	6/26/2022 10:29	11.64	-0.19	6/26/2022 11:51	-0.15
6/26/2022 10:43	11.91	0.05	6/27/2022 12:27	11.59	-0.50	6/26/2022 10:30	11.66	-0.21	6/26/2022 11:52	-0.14
6/26/2022 10:44	11.93	0.12	6/27/2022 12:28	11.60	-0.46	6/26/2022 10:31	11.67	-0.21	6/26/2022 11:53	-0.14
6/26/2022 10:45	11.91	-0.01	6/27/2022 12:29	11.59	-0.47	6/26/2022 10:32	11.66	-0.21	6/26/2022 11:54	-0.10
6/26/2022 10:46	11.92	0.08	6/27/2022 12:30	11.59	-0.45	6/26/2022 10:33	11.68	-0.20	6/26/2022 11:55	-0.13
6/26/2022 10:47	11.92	0.13	6/27/2022 12:31	11.58	-0.44	6/26/2022 10:34	11.66	-0.14	6/26/2022 11:56	-0.13
6/26/2022 10:48	11.92	0.13	6/27/2022 12:32	11.61	-0.51	6/26/2022 10:35	11.68	-0.18	6/26/2022 11:57	-0.10
6/26/2022 10:49	11.93	0.24	6/27/2022 12:33	11.58	-0.41	6/26/2022 10:36	11.65	-0.19	6/26/2022 11:58	-0.12
6/26/2022 10:50	11.91	0.04	6/27/2022 12:34	11.59	-0.48	6/26/2022 10:37	11.70	-0.18	6/26/2022 11:59	-0.09
6/26/2022 10:51	11.91	0.04	6/27/2022 12:35	11.58	-0.49	6/26/2022 10:38	11.66	-0.17	6/26/2022 12:00	-0.17
6/26/2022 10:52	11.92	0.06	6/27/2022 12:36	11.61	-0.52	6/26/2022 10:39	11.65	-0.14	6/26/2022 12:01	-0.10
6/26/2022 10:53	11.92	0.05	6/27/2022 12:37	11.57	-0.38	6/26/2022 10:40	11.70	-0.20	6/26/2022 12:02	-0.10
6/26/2022 10:54	11.92	0.06	6/27/2022 12:38	11.57	-0.45	6/26/2022 10:41	11.67	-0.16	6/26/2022 12:03	-0.14
6/26/2022 10:55	11.92	0.02	6/27/2022 12:39	11.60	-0.47	6/26/2022 10:42	11.68	-0.19	6/26/2022 12:04	-0.13
6/26/2022 10:56	11.93	0.03	6/27/2022 12:40	11.58	-0.42	6/26/2022 10:43	11.66	-0.20	6/26/2022 12:05	-0.14
6/26/2022 10:57	11.92	0.01	6/27/2022 12:41	11.56	-0.47	6/26/2022 10:44	11.66	-0.19	6/26/2022 12:06	-0.12
6/26/2022 10:58	11.94	0.06	6/27/2022 12:42	11.58	-0.51	6/26/2022 10:45	11.67	-0.24	6/26/2022 12:07	-0.14
6/26/2022 10:59	11.94	0.13	6/27/2022 12:43	11.59	-0.48	6/26/2022 10:46	11.67	-0.20	6/26/2022 12:08	-0.15
6/26/2022 11:00	11.91	-0.01	6/27/2022 12:44	11.59	-0.45	6/26/2022 10:47	11.69	-0.20	6/26/2022 12:09	-0.12
6/26/2022 11:01	11.94	0.05	6/27/2022 12:45	11.57	-0.42	6/26/2022 10:48	11.68	-0.19	6/26/2022 12:10	-0.13
6/26/2022 11:02	11.94	0.07	6/27/2022 12:46	11.58	-0.49	6/26/2022 10:49	11.68	-0.17	6/26/2022 12:11	-0.14
6/26/2022 11:03	11.90	0.13	6/27/2022 12:47	11.60	-0.50	6/26/2022 10:50	11.66	-0.18	6/26/2022 12:12	-0.15
6/26/2022 11:04	11.91	0.06	6/27/2022 12:48	11.59	-0.54	6/26/2022 10:51	11.69	-0.23	6/26/2022 12:13	-0.13
6/26/2022 11:05	11.91	-0.04	6/27/2022 12:49	11.60	-0.45	6/26/2022 10:52	11.65	-0.20	6/26/2022 12:14	-0.12
6/26/2022 11:06	11.92	0.01	6/27/2022 12:50	11.58	-0.41	6/26/2022 10:53	11.68	-0.19	6/26/2022 12:15	-0.14
6/26/2022 11:07	11.91	0.04	6/27/2022 12:51	11.56	-0.41	6/26/2022 10:54	11.68	-0.17	6/26/2022 12:16	-0.14
6/26/2022 11:08	11.92	0.06	6/27/2022 12:52	11.59	-0.43	6/26/2022 10:55	11.68	-0.20	6/26/2022 12:17	-0.17
6/26/2022 11:09	11.94	0.07	6/27/2022 12:53	11.58	-0.42	6/26/2022 10:56	11.66	-0.19	6/26/2022 12:18	-0.12
6/26/2022 11:10	11.92	0.04	6/27/2022 12:54	11.58	-0.51	6/26/2022 10:57	11.66	-0.19	6/26/2022 12:19	-0.10
6/26/2022 11:11	11.93	0.08	6/27/2022 12:55	11.59	-0.44	6/26/2022 10:58	11.66	-0.17	6/26/2022 12:20	-0.14
6/26/2022 11:12	11.95	0.00	6/27/2022 12:56	11.59	-0.46	6/26/2022 10:59	11.68	-0.20	6/26/2022 12:21	-0.07
6/26/2022 11:13	11.91	0.04	6/27/2022 12:57	11.58	-0.49	6/26/2022 11:00	11.66	-0.20	6/26/2022 12:22	-0.10
6/26/2022 11:14	11.95	0.10	6/27/2022 12:58	11.58	-0.45	6/26/2022 11:01	11.67	-0.25	6/26/2022 12:23	-0.13
6/26/2022 11:15	11.96	0.06	6/27/2022 12:59	11.58	-0.48	6/26/2022 11:02	11.68	-0.18	6/26/2022 12:24	-0.15
6/26/2022 11:16	11.92	0.04	6/27/2022 13:00	11.58	-0.48	6/26/2022 11:03	11.67	-0.19	6/26/2022 12:25	-0.14
6/26/2022 11:17	11.94	0.08	6/27/2022 13:01	11.59	-0.44	6/26/2022 11:04	11.65	-0.18	6/26/2022 12:26	-0.10
6/26/2022 11:18	11.93	0.10	6/27/2022 13:02	11.59	-0.50	6/26/2022 11:05	11.66	-0.16	6/26/2022 12:27	-0.15
6/26/2022 11:19	11.90	0.03	6/27/2022 13:03	11.59	-0.45	6/26/2022 11:06	11.68	-0.20	6/26/2022 12:28	-0.05
6/26/2022 11:20	11.93	0.05	6/27/2022 13:04	11.58	-0.46	6/26/2022 11:07	11.66	-0.23	6/26/2022 12:29	-0.15
6/26/2022 11:21	11.92	0.14	6/27/2022 13:05	11.60	-0.45	6/26/2022 11:08	11.67	-0.19	6/26/2022 12:30	-0.15
6/26/2022 11:22	11.94	0.08	6/27/2022 13:06	11.56	-0.43	6/26/2022 11:09	11.67	-0.21	6/26/2022 12:31	-0.10
6/26/2022 11:23	11.92	0.11	6/27/2022 13:07	11.57	-0.50	6/26/2022 11:10	11.65	-0.25	6/26/2022 12:32	-0.11
6/26/2022 11:24	11.92	0.05	6/27/2022 13:08	11.55	-0.33	6/26/2022 11:11	11.66	-0.18	6/26/2022 12:33	-0.10
6/26/2022 11:25	11.92	0.11	6/27/2022 13:09	11.58	-0.42	6/26/2022 11:12	11.67	-0.22	6/26/2022 12:34	-0.09
6/26/2022 11:26	11.91	0.05	6/27/2022 13:10	11.56	-0.39	6/26/2022 11:13	11.65	-0.19	6/26/2022 12:35	-0.09
6/26/2022 11:27	11.92	0.05	6/27/2022 13:11	11.59	-0.49	6/26/2022 11:14	11.67	-0.17	6/26/2022 12:36	-0.14
6/26/2022 11:28	11.92	0.02	6/27/2022 13:12	11.60	-0.46	6/26/2022 11:15	11.68	-0.21	6/26/2022 12:37	-0.10
6/26/2022 11:29	11.95	0.01	6/27/2022 13:13	11.62	-0.49	6/26/2022 11:16	11.65	-0.20	6/26/2022 12:38	-0.12
6/26/2022 11:30	11.92	0.00	6/27/2022 13:14	11.60	-0.53	6/26/2022 11:17	11.65	-0.21	6/26/2022 12:39	-0.13
6/26/2022 11:31	11.91	0.03	6/27/2022 13:15	11.58	-0.46	6/26/2022 11:18	11.67	-0.18	6/26/2022 12:40	-0.13
6/26/2022 11:32	11.93	0.00	6/27/2022 13:16	11.57	-0.47	6/26/2022 11:19	11.65	-0.23	6/26/2022 12:41	-0.13
6/26/2022 11:33	11.92	0.05	6/27/2022 13:17	11.60	-0.42	6/26/2022 11:20	11.68	-0.18	6/26/2022 12:42	-0.14
6/26/2022 11:34	11.94	0.02	6/27/2022 13:18	11.59	-0.44	6/26/2022 11:21	11.68	-0.21	6/26/2022 12:43	-0.09

6/26/2022 11:35	11.93	0.10	6/27/2022 13:19	11.57	-0.43	6/26/2022 11:22	11.66	-0.19	6/26/2022 12:44	-0.12
6/26/2022 11:36	11.95	0.10	6/27/2022 13:20	11.58	-0.39	6/26/2022 11:23	11.66	-0.22	6/26/2022 12:45	-0.13
6/26/2022 11:37	11.92	0.09	6/27/2022 13:21	11.58	-0.50	6/26/2022 11:24	11.66	-0.20	6/26/2022 12:46	-0.10
6/26/2022 11:38	11.94	0.03	6/27/2022 13:22	11.58	-0.49	6/26/2022 11:25	11.66	-0.18	6/26/2022 12:47	-0.16
6/26/2022 11:39	11.92	0.07	6/27/2022 13:23	11.59	-0.41	6/26/2022 11:26	11.68	-0.20	6/26/2022 12:48	-0.12
6/26/2022 11:40	11.92	0.06	6/27/2022 13:24	11.58	-0.42	6/26/2022 11:27	11.67	-0.17	6/26/2022 12:49	-0.10
6/26/2022 11:41	11.91	0.03	6/27/2022 13:25	11.58	-0.48	6/26/2022 11:28	11.68	-0.20	6/26/2022 12:50	-0.15
6/26/2022 11:42	11.94	0.10	6/27/2022 13:26	11.60	-0.47	6/26/2022 11:29	11.67	-0.24	6/26/2022 12:51	-0.13
6/26/2022 11:43	11.94	0.04	6/27/2022 13:27	11.59	-0.48	6/26/2022 11:30	11.66	-0.22	6/26/2022 12:52	-0.17
6/26/2022 11:44	11.92	0.06	6/27/2022 13:28	11.60	-0.40	6/26/2022 11:31	11.66	-0.18	6/26/2022 12:53	-0.14
6/26/2022 11:45	11.94	-0.01	6/27/2022 13:29	11.58	-0.48	6/26/2022 11:32	11.66	-0.16	6/26/2022 12:54	-0.09
6/26/2022 11:46	11.92	0.07	6/27/2022 13:30	11.57	-0.47	6/26/2022 11:33	11.67	-0.18	6/26/2022 12:55	-0.08
6/26/2022 11:47	11.93	0.05	6/27/2022 13:31	11.59	-0.48	6/26/2022 11:34	11.69	-0.18	6/26/2022 12:56	-0.15
6/26/2022 11:48	11.92	0.10	6/27/2022 13:32	11.58	-0.46	6/26/2022 11:35	11.66	-0.15	6/26/2022 12:57	-0.12
6/26/2022 11:49	11.94	0.11	6/27/2022 13:33	11.58	-0.31	6/26/2022 11:36	11.66	-0.19	6/26/2022 12:58	-0.10
6/26/2022 11:50	11.94	0.10	6/27/2022 13:34	11.58	-0.45	6/26/2022 11:37	11.66	-0.16	6/26/2022 12:59	-0.10
6/26/2022 11:51	11.96	0.06	6/27/2022 13:35	11.57	-0.48	6/26/2022 11:38	11.66	-0.19	6/26/2022 13:00	-0.12
6/26/2022 11:52	11.93	0.08	6/27/2022 13:36	11.61	-0.50	6/26/2022 11:39	11.66	-0.17	6/26/2022 13:01	-0.09
6/26/2022 11:53	11.91	0.05	6/27/2022 13:37	11.57	-0.36	6/26/2022 11:40	11.66	-0.23	6/26/2022 13:02	-0.13
6/26/2022 11:54	11.93	0.07	6/27/2022 13:38	11.59	-0.54	6/26/2022 11:41	11.67	-0.21	6/26/2022 13:03	-0.11
6/26/2022 11:55	11.92	0.15	6/27/2022 13:39	11.57	-0.46	6/26/2022 11:42	11.66	-0.18	6/26/2022 13:04	-0.10
6/26/2022 11:56	11.92	0.06	6/27/2022 13:40	11.60	-0.47	6/26/2022 11:43	11.65	-0.21	6/26/2022 13:05	-0.07
6/26/2022 11:57	11.92	0.05	6/27/2022 13:41	11.60	-0.49	6/26/2022 11:44	11.70	-0.20	6/26/2022 13:06	-0.08
6/26/2022 11:58	11.96	0.09	6/27/2022 13:42	11.58	-0.43	6/26/2022 11:45	11.68	-0.17	6/26/2022 13:07	-0.08
6/26/2022 11:59	11.96	0.07	6/27/2022 13:43	11.59	-0.46	6/26/2022 11:46	11.68	-0.21	6/26/2022 13:08	-0.13
6/26/2022 12:00	11.96	0.18	6/27/2022 13:44	11.58	-0.46	6/26/2022 11:47	11.67	-0.18	6/26/2022 13:09	-0.14
6/26/2022 12:01	11.93	-0.06	6/27/2022 13:45	11.57	-0.51	6/26/2022 11:48	11.69	-0.15	6/26/2022 13:10	-0.08
6/26/2022 12:02	11.92	0.09	6/27/2022 13:46	11.58	-0.51	6/26/2022 11:49	11.68	-0.18	6/26/2022 13:11	-0.06
6/26/2022 12:03	11.92	-0.01	6/27/2022 13:47	11.60	-0.46	6/26/2022 11:50	11.67	-0.20	6/26/2022 13:12	-0.12
6/26/2022 12:04	11.94	0.06	6/27/2022 13:48	11.58	-0.44	6/26/2022 11:51	11.67	-0.22	6/26/2022 13:13	-0.10
6/26/2022 12:05	11.93	-0.04	6/27/2022 13:49	11.58	-0.44	6/26/2022 11:52	11.67	-0.20	6/26/2022 13:14	-0.10
6/26/2022 12:06	11.92	0.08	6/27/2022 13:50	11.61	-0.43	6/26/2022 11:53	11.70	-0.18	6/26/2022 13:15	-0.12
6/26/2022 12:07	11.91	0.13	6/27/2022 13:51	11.58	-0.39	6/26/2022 11:54	11.68	-0.19	6/26/2022 13:16	-0.13
6/26/2022 12:08	11.91	0.14	6/27/2022 13:52	11.59	-0.46	6/26/2022 11:55	11.67	-0.21	6/26/2022 13:17	-0.09
6/26/2022 12:09	11.93	0.09	6/27/2022 13:53	11.59	-0.39	6/26/2022 11:56	11.65	-0.25	6/26/2022 13:18	-0.07
6/26/2022 12:10	11.95	0.06	6/27/2022 13:54	11.57	-0.40	6/26/2022 11:57	11.68	-0.21	6/26/2022 13:19	-0.13
6/26/2022 12:11	11.96	0.04	6/27/2022 13:55	11.57	-0.45	6/26/2022 11:58	11.65	-0.17	6/26/2022 13:20	-0.14
6/26/2022 12:12	11.94	0.02	6/27/2022 13:56	11.57	-0.49	6/26/2022 11:59	11.67	-0.16	6/26/2022 13:21	-0.11
6/26/2022 12:13	11.94	0.05	6/27/2022 13:57	11.60	-0.44	6/26/2022 12:00	11.66	-0.20	6/26/2022 13:22	-0.15
6/26/2022 12:14	11.93	0.03	6/27/2022 13:58	11.59	-0.45	6/26/2022 12:01	11.64	-0.19	6/26/2022 13:23	-0.12
6/26/2022 12:15	11.94	0.01	6/27/2022 13:59	11.59	-0.39	6/26/2022 12:02	11.67	-0.20	6/26/2022 13:24	-0.13
6/26/2022 12:16	11.92	0.04	6/27/2022 14:00	11.56	-0.44	6/26/2022 12:03	11.68	-0.17	6/26/2022 13:25	-0.10
6/26/2022 12:17	11.92	0.11	6/27/2022 14:01	11.60	-0.44	6/26/2022 12:04	11.65	-0.18	6/26/2022 13:26	-0.09
6/26/2022 12:18	11.92	0.09	6/27/2022 14:02	11.58	-0.50	6/26/2022 12:05	11.68	-0.19	6/26/2022 13:27	-0.12
6/26/2022 12:19	11.94	0.04	6/27/2022 14:03	11.58	-0.47	6/26/2022 12:06	11.66	-0.16	6/26/2022 13:28	-0.12
6/26/2022 12:20	11.91	0.14	6/27/2022 14:04	11.59	-0.51	6/26/2022 12:07	11.69	-0.21	6/26/2022 13:29	-0.12
6/26/2022 12:21	11.93	0.07	6/27/2022 14:05	11.59	-0.50	6/26/2022 12:08	11.66	-0.20	6/26/2022 13:30	-0.16
6/26/2022 12:22	11.94	0.05	6/27/2022 14:06	11.60	-0.42	6/26/2022 12:09	11.68	-0.17	6/26/2022 13:31	-0.15
6/26/2022 12:23	11.92	0.06	6/27/2022 14:07	11.59	-0.49	6/26/2022 12:10	11.68	-0.19	6/26/2022 13:32	-0.09
6/26/2022 12:24	11.94	0.02	6/27/2022 14:08	11.60	-0.44	6/26/2022 12:11	11.69	-0.19	6/26/2022 13:33	-0.14
6/26/2022 12:25	11.94	0.07	6/27/2022 14:09	11.59	-0.46	6/26/2022 12:12	11.69	-0.21	6/26/2022 13:34	-0.14
6/26/2022 12:26	11.95	0.07	6/27/2022 14:10	11.58	-0.49	6/26/2022 12:13	11.66	-0.19	6/26/2022 13:35	-0.11
6/26/2022 12:27	11.93	0.09	6/27/2022 14:11	11.59	-0.48	6/26/2022 12:14	11.66	-0.11	6/26/2022 13:36	-0.08
6/26/2022 12:28	11.92	0.05	6/27/2022 14:12	11.58	-0.47	6/26/2022 12:15	11.68	-0.22	6/26/2022 13:37	-0.16
6/26/2022 12:29	11.93	0.07	6/27/2022 14:13	11.55	-0.51	6/26/2022 12:16	11.65	-0.17	6/26/2022 13:38	-0.07
6/26/2022 12:30	11.96	0.06	6/27/2022 14:14	11.57	-0.43	6/26/2022 12:17	11.67	-0.17	6/26/2022 13:39	-0.13
6/26/2022 12:31	11.90	0.14	6/27/2022 14:15	11.58	-0.42	6/26/2022 12:18	11.65	-0.19	6/26/2022 13:40	-0.13
6/26/2022 12:32	11.95	0.18	6/27/2022 14:16	11.56	-0.48	6/26/2022 12:19	11.68	-0.18	6/26/2022 13:41	-0.16
6/26/2022 12:33	11.91	0.01	6/27/2022 14:17	11.57	-0.48	6/26/2022 12:20	11.68	-0.19	6/26/2022 13:42	-0.13
6/26/2022 12:34	11.95	0.01	6/27/2022 14:18	11.57	-0.46	6/26/2022 12:21	11.66	-0.21	6/26/2022 13:43	-0.12
6/26/2022 12:35	11.92	0.04	6/27/2022 14:19	11.60	-0.41	6/26/2022 12:22	11.66	-0.19	6/26/2022 13:44	-0.13
6/26/2022 12:36	11.94	0.02	6/27/2022 14:20	11.58	-0.43	6/26/2022 12:23	11.65	-0.15	6/26/2022 13:45	-0.12
6/26/2022 12:37	11.92	0.07	6/27/2022 14:21	11.59	-0.45	6/26/2022 12:24	11.67	-0.17	6/26/2022 13:46	-0.08
6/26/2022 12:38	11.95	0.08	6/27/2022 14:22	11.58	-0.47	6/26/2022 12:25	11.66	-0.17	6/26/2022 13:47	-0.12
6/26/2022 12:39	11.95	0.13	6/27/2022 14:23	11.58	-0.39	6/26/2022 12:26	11.67	-0.17	6/26/2022 13:48	-0.13
6/26/2022 12:40	11.94	0.07	6/27/2022 14:24	11.59	-0.47	6/26/2022 12:27	11.67	-0.16	6/26/2022 13:49	-0.13
6/26/2022 12:41	11.92	0.02	6/27/2022 14:25	11.60	-0.42	6/26/2022 12:28	11.67	-0.22	6/26/2022 13:50	-0.12
6/26/2022 12:42	11.93	0.08	6/27/2022 14:26	11.58	-0.47	6/26/2022 12:29	11.68	-0.24	6/26/2022 13:51	-0.19
6/26/2022 12:43	11.95	0.14	6/27/2022 14:27	11.58	-0.46	6/26/2022 12:30	11.66	-0.21	6/26/2022 13:52	-0.15
6/26/2022 12:44	11.96	0.08	6/27/2022 14:28	11.56	-0.53	6/26/2022 12:31	11.65	-0.18	6/26/2022 13:53	-0.13
6/26/2022 12:45	11.93	0.05	6/27/2022 14:29	11.60	-0.43	6/26/2022 12:32	11.66	-0.20	6/26/2022 13:54	-0.12
6/26/2022 12:46	11.93	0.10	6/27/2022 14:30	11.59	-0.41	6/26/2022 12:33	11.67	-0.22	6/26/2022 13:55	-0.12
6/26/2022 12:47	11.96	0.10	6/27/2022 14:31	11.59	-0.45	6/26/2022 12:34	11.67	-0.22	6/26/2022 13:56	-0.09
6/26/2022 12:48	11.92	0.14	6/27/2022 14:32	11.58	-0.41	6/26/2022 12:35	11.68	-0.22	6/26/2022 13:57	-0.11
6/26/2022 12:49	11.96	0.09	6/27/2022 14:33	11.58	-0.53	6/26/2022 12:36	11.68	-0.20	6/26/2022 13:58	-0.18
6/26/2022 12:50	11.95	0.10	6/27/2022 14:34	11.60	-0.41	6/26/2022 12:37	11.68	-0.21	6/26/2022 13:59	-0.12
6/26/2022 12:51	11.97	0.05	6/27/2022 14:35	11.58	-0.44	6/26/2022 12:38	11.68	-0.24	6/26/2022 14:00	-0.11
6/26/2022 12:52	11.96	0.09	6/27/2022 14:36	11.60	-0.38	6/26/2022 12:39	11.66	-0.23	6/26/2022 14:01	-0.12
6/26/2022 12:53	11.96	0.12	6/27/2022 14:37	11.57	-0.40	6/26/2022 12:40	11.67	-0.21	6/26/2022 14:02	-0.09
6/26/2022 12:54	11.98	0.04	6/27/2022 14:38	11.61	-0.50	6/26/2022 12:41	11.67	-0.17	6/26/2022 14:03	-0.12
6/26/2022 12:55	11.95	0.07	6/27/2022 14:39	11.58	-0.43	6/26/2022 12:42	11.65	-0.20	6/26/2022 14:04	-0.07
6/26/2022 12:56	11.93	0.09	6/27/2022 14:40	11.57	-0.50	6/26/2022 12:43	11.68	-0.21	6/26/2022 14:05	-0.10
6/26/2022 12:57	11.95	-0.02	6/27/2022 14:41	11.59	-0.48	6/26/2022 12:44	11.69	-0.19	6/26/2022 14:06	-0.12
6/26/2022 12:58	11.96	-0.01	6/27/2022 14:42	11.60	-0.45	6/26/2022 12:45	11.65	-0.15	6/26/2022 14:07	-0.12
6/26/2022 12:59	11.91	0.09	6/27/2022 14:43	11.59	-0.46	6/26/2022 12:46	11.67	-0.24	6/26/2022 14:08	-0.13
6/26/2022 13:00	11.95	0.08	6/27/2022 14:44	11.58	-0.41	6/26/2022 12:47	11.66	-0.22	6/26/2022 14:09	-0.15
6/26/2022 13:01	11.92	0.06	6/27/2022 14:45	11.60	-0.42	6/26/2022 12:48	11.67	-0.20	6/26/2022 14:10	-0.11
6/26/2022 13:02	11.94	0.09	6/27/2022 14:46	11.58	-0.45	6/26/2022 12:49	11.66	-0.21	6/26/2022 14:11	-0.14

6/26/2022 13:03	11.94	-0.03	6/27/2022 14:47	11.60	-0.45	6/26/2022 12:50	11.67	-0.18	6/26/2022 14:12	-0.12
6/26/2022 13:04	11.94	0.03	6/27/2022 14:48	11.59	-0.48	6/26/2022 12:51	11.64	-0.17	6/26/2022 14:13	-0.12
6/26/2022 13:05	11.94	0.14	6/27/2022 14:49	11.59	-0.41	6/26/2022 12:52	11.67	-0.14	6/26/2022 14:14	-0.12
6/26/2022 13:06	11.97	0.01	6/27/2022 14:50	11.58	-0.39	6/26/2022 12:53	11.67	-0.16	6/26/2022 14:15	-0.13
6/26/2022 13:07	11.95	0.07	6/27/2022 14:51	11.60	-0.46	6/26/2022 12:54	11.67	-0.16	6/26/2022 14:16	-0.11
6/26/2022 13:08	11.94	0.07	6/27/2022 14:52	11.58	-0.51	6/26/2022 12:55	11.66	-0.21	6/26/2022 14:17	-0.15
6/26/2022 13:09	11.93	0.09	6/27/2022 14:53	11.60	-0.46	6/26/2022 12:56	11.66	-0.21	6/26/2022 14:18	-0.17
6/26/2022 13:10	11.94	0.08	6/27/2022 14:54	11.59	-0.46	6/26/2022 12:57	11.67	-0.19	6/26/2022 14:19	-0.10
6/26/2022 13:11	11.92	0.09	6/27/2022 14:55	11.58	-0.50	6/26/2022 12:58	11.66	-0.24	6/26/2022 14:20	-0.12
6/26/2022 13:12	11.94	0.09	6/27/2022 14:56	11.59	-0.48	6/26/2022 12:59	11.66	-0.17	6/26/2022 14:21	-0.16
6/26/2022 13:13	11.93	0.14	6/27/2022 14:57	11.58	-0.50	6/26/2022 13:00	11.67	-0.19	6/26/2022 14:22	-0.14
6/26/2022 13:14	11.97	0.11	6/27/2022 14:58	11.60	-0.48	6/26/2022 13:01	11.64	-0.20	6/26/2022 14:23	-0.16
6/26/2022 13:15	11.94	0.10	6/27/2022 14:59	11.57	-0.45	6/26/2022 13:02	11.65	-0.17	6/26/2022 14:24	-0.10
6/26/2022 13:16	11.94	0.04	6/27/2022 15:00	11.59	-0.44	6/26/2022 13:03	11.67	-0.17	6/26/2022 14:25	-0.16
6/26/2022 13:17	11.96	0.09	6/27/2022 15:01	11.58	-0.47	6/26/2022 13:04	11.66	-0.21	6/26/2022 14:26	-0.13
6/26/2022 13:18	11.93	0.10	6/27/2022 15:02	11.59	-0.53	6/26/2022 13:05	11.65	-0.20	6/26/2022 14:27	-0.08
6/26/2022 13:19	11.92	0.01	6/27/2022 15:03	11.58	-0.50	6/26/2022 13:06	11.67	-0.17	6/26/2022 14:28	-0.08
6/26/2022 13:20	11.91	0.16	6/27/2022 15:04	11.59	-0.51	6/26/2022 13:07	11.67	-0.20	6/26/2022 14:29	-0.10
6/26/2022 13:21	11.96	0.04	6/27/2022 15:05	11.56	-0.45	6/26/2022 13:08	11.66	-0.20	6/26/2022 14:30	-0.10
6/26/2022 13:22	11.95	0.07	6/27/2022 15:06	11.56	-0.38	6/26/2022 13:09	11.66	-0.24	6/26/2022 14:31	-0.09
6/26/2022 13:23	11.94	-0.02	6/27/2022 15:07	11.60	-0.47	6/26/2022 13:10	11.68	-0.16	6/26/2022 14:32	-0.13
6/26/2022 13:24	11.95	0.04	6/27/2022 15:08	11.59	-0.48	6/26/2022 13:11	11.64	-0.21	6/26/2022 14:33	-0.12
6/26/2022 13:25	11.94	0.10	6/27/2022 15:09	11.60	-0.44	6/26/2022 13:12	11.68	-0.15	6/26/2022 14:34	-0.13
6/26/2022 13:26	11.94	0.09	6/27/2022 15:10	11.57	-0.44	6/26/2022 13:13	11.67	-0.21	6/26/2022 14:35	-0.15
6/26/2022 13:27	11.93	-0.01	6/27/2022 15:11	11.59	-0.51	6/26/2022 13:14	11.66	-0.21	6/26/2022 14:36	-0.12
6/26/2022 13:28	11.96	0.01	6/27/2022 15:12	11.59	-0.47	6/26/2022 13:15	11.69	-0.20	6/26/2022 14:37	-0.11
6/26/2022 13:29	11.92	0.09	6/27/2022 15:13	11.61	-0.44	6/26/2022 13:16	11.66	-0.20	6/26/2022 14:38	-0.13
6/26/2022 13:30	11.92	0.05	6/27/2022 15:14	11.57	-0.47	6/26/2022 13:17	11.67	-0.20	6/26/2022 14:39	-0.08
6/26/2022 13:31	11.94	0.08	6/27/2022 15:15	11.58	-0.55	6/26/2022 13:18	11.66	-0.17	6/26/2022 14:40	-0.12
6/26/2022 13:32	11.94	0.03	6/27/2022 15:16	11.59	-0.49	6/26/2022 13:19	11.67	-0.18	6/26/2022 14:41	-0.16
6/26/2022 13:33	11.94	0.14	6/27/2022 15:17	11.58	-0.56	6/26/2022 13:20	11.66	-0.14	6/26/2022 14:42	-0.15
6/26/2022 13:34	11.96	0.14	6/27/2022 15:18	11.61	-0.46	6/26/2022 13:21	11.67	-0.21	6/26/2022 14:43	-0.19
6/26/2022 13:35	11.95	0.10	6/27/2022 15:19	11.59	-0.44	6/26/2022 13:22	11.66	-0.21	6/26/2022 14:44	-0.10
6/26/2022 13:36	11.95	-0.01	6/27/2022 15:20	11.57	-0.55	6/26/2022 13:23	11.68	-0.20	6/26/2022 14:45	-0.16
6/26/2022 13:37	11.96	0.07	6/27/2022 15:21	11.59	-0.52	6/26/2022 13:24	11.65	-0.25	6/26/2022 14:46	-0.15
6/26/2022 13:38	11.96	0.13	6/27/2022 15:22	11.58	-0.46	6/26/2022 13:25	11.67	-0.21	6/26/2022 14:47	-0.09
6/26/2022 13:39	11.94	0.05	6/27/2022 15:23	11.59	-0.51	6/26/2022 13:26	11.67	-0.21	6/26/2022 14:48	-0.12
6/26/2022 13:40	11.94	0.10	6/27/2022 15:24	11.59	-0.48	6/26/2022 13:27	11.68	-0.15	6/26/2022 14:49	-0.10
6/26/2022 13:41	11.93	0.04	6/27/2022 15:25	11.58	-0.51	6/26/2022 13:28	11.67	-0.22	6/26/2022 14:50	-0.09
6/26/2022 13:42	11.93	0.01	6/27/2022 15:26	11.61	-0.44	6/26/2022 13:29	11.65	-0.23	6/26/2022 14:51	-0.20
6/26/2022 13:43	11.96	0.14	6/27/2022 15:27	11.59	-0.41	6/26/2022 13:30	11.66	-0.20	6/26/2022 14:52	-0.10
6/26/2022 13:44	11.95	0.13	6/27/2022 15:28	11.58	-0.44	6/26/2022 13:31	11.67	-0.19	6/26/2022 14:53	-0.19
6/26/2022 13:45	11.96	0.06	6/27/2022 15:29	11.60	-0.48	6/26/2022 13:32	11.66	-0.22	6/26/2022 14:54	-0.12
6/26/2022 13:46	11.96	0.09	6/27/2022 15:30	11.58	-0.46	6/26/2022 13:33	11.63	-0.17	6/26/2022 14:55	-0.10
6/26/2022 13:47	11.94	0.15	6/27/2022 15:31	11.58	-0.39	6/26/2022 13:34	11.67	-0.20	6/26/2022 14:56	-0.17
6/26/2022 13:48	11.91	0.03	6/27/2022 15:32	11.57	-0.45	6/26/2022 13:35	11.69	-0.22	6/26/2022 14:57	-0.08
6/26/2022 13:49	11.95	0.05	6/27/2022 15:33	11.60	-0.44	6/26/2022 13:36	11.68	-0.21	6/26/2022 14:58	-0.10
6/26/2022 13:50	11.93	0.08	6/27/2022 15:34	11.58	-0.47	6/26/2022 13:37	11.66	-0.19	6/26/2022 14:59	-0.12
6/26/2022 13:51	11.94	0.10	6/27/2022 15:35	11.60	-0.44	6/26/2022 13:38	11.68	-0.21	6/26/2022 15:00	-0.11
6/26/2022 13:52	11.93	0.05	6/27/2022 15:36	11.59	-0.45	6/26/2022 13:39	11.66	-0.20	6/26/2022 15:01	-0.15
6/26/2022 13:53	11.92	0.09	6/27/2022 15:37	11.57	-0.49	6/26/2022 13:40	11.64	-0.25	6/26/2022 15:02	-0.16
6/26/2022 13:54	11.93	-0.07	6/27/2022 15:38	11.61	-0.42	6/26/2022 13:41	11.65	-0.22	6/26/2022 15:03	-0.07
6/26/2022 13:55	11.90	0.07	6/27/2022 15:39	11.60	-0.52	6/26/2022 13:42	11.67	-0.18	6/26/2022 15:04	-0.12
6/26/2022 13:56	11.94	0.06	6/27/2022 15:40	11.57	-0.44	6/26/2022 13:43	11.67	-0.22	6/26/2022 15:05	-0.11
6/26/2022 13:57	11.95	0.07	6/27/2022 15:41	11.59	-0.48	6/26/2022 13:44	11.67	-0.21	6/26/2022 15:06	-0.14
6/26/2022 13:58	11.95	0.05	6/27/2022 15:42	11.58	-0.53	6/26/2022 13:45	11.67	-0.18	6/26/2022 15:07	-0.11
6/26/2022 13:59	11.95	0.04	6/27/2022 15:43	11.59	-0.45	6/26/2022 13:46	11.68	-0.20	6/26/2022 15:08	-0.12
6/26/2022 14:00	11.91	0.14	6/27/2022 15:44	11.57	-0.49	6/26/2022 13:47	11.67	-0.20	6/26/2022 15:09	-0.11
6/26/2022 14:01	11.92	-0.01	6/27/2022 15:45	11.60	-0.48	6/26/2022 13:48	11.65	-0.23	6/26/2022 15:10	-0.14
6/26/2022 14:02	11.97	0.06	6/27/2022 15:46	11.62	-0.42	6/26/2022 13:49	11.65	-0.19	6/26/2022 15:11	-0.13
6/26/2022 14:03	11.94	0.04	6/27/2022 15:47	11.61	-0.51	6/26/2022 13:50	11.66	-0.18	6/26/2022 15:12	-0.15
6/26/2022 14:04	11.94	0.09	6/27/2022 15:48	11.59	-0.41	6/26/2022 13:51	11.67	-0.18	6/26/2022 15:13	-0.16
6/26/2022 14:05	11.95	0.07	6/27/2022 15:49	11.58	-0.42	6/26/2022 13:52	11.64	-0.21	6/26/2022 15:14	-0.14
6/26/2022 14:06	11.94	0.09	6/27/2022 15:50	11.60	-0.53	6/26/2022 13:53	11.67	-0.21	6/26/2022 15:15	-0.14
6/26/2022 14:07	11.93	0.08	6/27/2022 15:51	11.58	-0.46	6/26/2022 13:54	11.67	-0.17	6/26/2022 15:16	-0.12
6/26/2022 14:08	11.93	-0.03	6/27/2022 15:52	11.58	-0.46	6/26/2022 13:55	11.66	-0.17	6/26/2022 15:17	-0.12
6/26/2022 14:09	11.95	0.07	6/27/2022 15:53	11.58	-0.44	6/26/2022 13:56	11.65	-0.18	6/26/2022 15:18	-0.11
6/26/2022 14:10	11.94	0.08	6/27/2022 15:54	11.60	-0.49	6/26/2022 13:57	11.67	-0.17	6/26/2022 15:19	-0.15
6/26/2022 14:11	11.96	0.08	6/27/2022 15:55	11.61	-0.49	6/26/2022 13:58	11.65	-0.22	6/26/2022 15:20	-0.14
6/26/2022 14:12	11.94	0.04	6/27/2022 15:56	11.59	-0.40	6/26/2022 13:59	11.66	-0.19	6/26/2022 15:21	-0.17
6/26/2022 14:13	11.94	0.07	6/27/2022 15:57	11.56	-0.54	6/26/2022 14:00	11.67	-0.21	6/26/2022 15:22	-0.17
6/26/2022 14:14	11.94	0.08	6/27/2022 15:58	11.61	-0.44	6/26/2022 14:01	11.65	-0.20	6/26/2022 15:23	-0.13
6/26/2022 14:15	11.95	0.05	6/27/2022 15:59	11.58	-0.54	6/26/2022 14:02	11.68	-0.20	6/26/2022 15:24	-0.14
6/26/2022 14:16	11.97	0.13	6/27/2022 16:00	11.60	-0.39	6/26/2022 14:03	11.66	-0.15	6/26/2022 15:25	-0.17
6/26/2022 14:17	11.94	0.11	6/27/2022 16:01	11.57	-0.44	6/26/2022 14:04	11.65	-0.14	6/26/2022 15:26	-0.16
6/26/2022 14:18	11.96	0.09	6/27/2022 16:02	11.62	-0.48	6/26/2022 14:05	11.67	-0.17	6/26/2022 15:27	-0.10
6/26/2022 14:19	11.95	0.13	6/27/2022 16:03	11.56	-0.46	6/26/2022 14:06	11.66	-0.24	6/26/2022 15:28	-0.15
6/26/2022 14:20	11.98	0.03	6/27/2022 16:04	11.60	-0.49	6/26/2022 14:07	11.65	-0.18	6/26/2022 15:29	-0.11
6/26/2022 14:21	11.97	0.06	6/27/2022 16:05	11.60	-0.44	6/26/2022 14:08	11.68	-0.22	6/26/2022 15:30	-0.13
6/26/2022 14:22	11.94	0.07	6/27/2022 16:06	11.58	-0.42	6/26/2022 14:09	11.67	-0.18	6/26/2022 15:31	-0.11
6/26/2022 14:23	11.92	0.04	6/27/2022 16:07	11.57	-0.38	6/26/2022 14:10	11.66	-0.20	6/26/2022 15:32	-0.14
6/26/2022 14:24	11.93	0.08	6/27/2022 16:08	11.58	-0.47	6/26/2022 14:11	11.66	-0.16	6/26/2022 15:33	-0.14
6/26/2022 14:25	11.93	0.04	6/27/2022 16:09	11.58	-0.43	6/26/2022 14:12	11.67	-0.19	6/26/2022 15:34	-0.15
6/26/2022 14:26	11.93	0.06	6/27/2022 16:10	11.57	-0.49	6/26/2022 14:13	11.65	-0.19	6/26/2022 15:35	-0.15
6/26/2022 14:27	11.95	0.09	6/27/2022 16:11	11.59	-0.39	6/26/2022 14:14	11.65	-0.17	6/26/2022 15:36	-0.08
6/26/2022 14:28	11.95	0.04	6/27/2022 16:12	11.59	-0.45	6/26/2022 14:15	11.67	-0.21	6/26/2022 15:37	-0.13
6/26/2022 14:29	11.97	0.08	6/27/2022 16:13	11.57	-0.44	6/26/2022 14:16	11.66	-0.23	6/26/2022 15:38	-0.11
6/26/2022 14:30	11.95	0.10	6/27/2022 16:14	11.59	-0.42	6/26/2022 14:17	11.66	-0.17	6/26/2022 15:39	-0.14

6/26/2022 14:31	11.94	0.05	6/27/2022 16:15	11.58	-0.47	6/26/2022 14:18	11.68	-0.17	6/26/2022 15:40	-0.12
6/26/2022 14:32	11.98	0.07	6/27/2022 16:16	11.58	-0.53	6/26/2022 14:19	11.65	-0.18	6/26/2022 15:41	-0.12
6/26/2022 14:33	11.93	-0.01	6/27/2022 16:17	11.58	-0.45	6/26/2022 14:20	11.68	-0.15	6/26/2022 15:42	-0.12
6/26/2022 14:34	11.94	-0.05	6/27/2022 16:18	11.59	-0.46	6/26/2022 14:21	11.67	-0.20	6/26/2022 15:43	-0.14
6/26/2022 14:35	11.95	0.07	6/27/2022 16:19	11.59	-0.41	6/26/2022 14:22	11.68	-0.20	6/26/2022 15:44	-0.07
6/26/2022 14:36	11.97	0.05	6/27/2022 16:20	11.58	-0.37	6/26/2022 14:23	11.66	-0.20	6/26/2022 15:45	-0.11
6/26/2022 14:37	11.98	0.04	6/27/2022 16:21	11.57	-0.51	6/26/2022 14:24	11.69	-0.19	6/26/2022 15:46	-0.13
6/26/2022 14:38	11.95	-0.01	6/27/2022 16:22	11.60	-0.39	6/26/2022 14:25	11.64	-0.18	6/26/2022 15:47	-0.13
6/26/2022 14:39	11.95	0.05	6/27/2022 16:23	11.57	-0.34	6/26/2022 14:26	11.70	-0.19	6/26/2022 15:48	-0.09
6/26/2022 14:40	11.91	0.02	6/27/2022 16:24	11.57	-0.42	6/26/2022 14:27	11.66	-0.18	6/26/2022 15:49	-0.11
6/26/2022 14:41	11.95	0.05	6/27/2022 16:25	11.60	-0.45	6/26/2022 14:28	11.68	-0.22	6/26/2022 15:50	-0.15
6/26/2022 14:42	11.95	0.06	6/27/2022 16:26	11.59	-0.47	6/26/2022 14:29	11.67	-0.17	6/26/2022 15:51	-0.13
6/26/2022 14:43	11.92	0.13	6/27/2022 16:27	11.58	-0.52	6/26/2022 14:30	11.66	-0.16	6/26/2022 15:52	-0.14
6/26/2022 14:44	11.94	0.07	6/27/2022 16:28	11.58	-0.48	6/26/2022 14:31	11.67	-0.17	6/26/2022 15:53	-0.17
6/26/2022 14:45	11.95	0.13	6/27/2022 16:29	11.60	-0.42	6/26/2022 14:32	11.69	-0.24	6/26/2022 15:54	-0.13
6/26/2022 14:46	11.94	0.09	6/27/2022 16:30	11.59	-0.47	6/26/2022 14:33	11.66	-0.16	6/26/2022 15:55	-0.14
6/26/2022 14:47	11.97	0.08	6/27/2022 16:31	11.58	-0.45	6/26/2022 14:34	11.66	-0.19	6/26/2022 15:56	-0.10
6/26/2022 14:48	11.93	-0.01	6/27/2022 16:32	11.59	-0.51	6/26/2022 14:35	11.66	-0.18	6/26/2022 15:57	-0.09
6/26/2022 14:49	11.93	-0.01	6/27/2022 16:33	11.58	-0.33	6/26/2022 14:36	11.65	-0.20	6/26/2022 15:58	-0.09
6/26/2022 14:50	11.93	0.09	6/27/2022 16:34	11.58	-0.45	6/26/2022 14:37	11.65	-0.22	6/26/2022 15:59	-0.12
6/26/2022 14:51	11.93	0.14	6/27/2022 16:35	11.60	-0.39	6/26/2022 14:38	11.67	-0.18	6/26/2022 16:00	-0.19
6/26/2022 14:52	11.95	0.03	6/27/2022 16:36	11.57	-0.48	6/26/2022 14:39	11.67	-0.19	6/26/2022 16:01	-0.12
6/26/2022 14:53	11.95	0.06	6/27/2022 16:37	11.59	-0.49	6/26/2022 14:40	11.68	-0.23	6/26/2022 16:02	-0.15
6/26/2022 14:54	11.95	0.12	6/27/2022 16:38	11.59	-0.44	6/26/2022 14:41	11.66	-0.19	6/26/2022 16:03	-0.11
6/26/2022 14:55	11.93	0.05	6/27/2022 16:39	11.61	-0.40	6/26/2022 14:42	11.67	-0.19	6/26/2022 16:04	-0.14
6/26/2022 14:56	11.94	0.01	6/27/2022 16:40	11.58	-0.46	6/26/2022 14:43	11.65	-0.16	6/26/2022 16:05	-0.14
6/26/2022 14:57	11.93	-0.02	6/27/2022 16:41	11.60	-0.52	6/26/2022 14:44	11.68	-0.23	6/26/2022 16:06	-0.13
6/26/2022 14:58	11.97	0.14	6/27/2022 16:42	11.59	-0.48	6/26/2022 14:45	11.67	-0.22	6/26/2022 16:07	-0.09
6/26/2022 14:59	11.93	0.02	6/27/2022 16:43	11.59	-0.48	6/26/2022 14:46	11.67	-0.21	6/26/2022 16:08	-0.14
6/26/2022 15:00	11.97	0.09	6/27/2022 16:44	11.59	-0.44	6/26/2022 14:47	11.69	-0.22	6/26/2022 16:09	-0.14
6/26/2022 15:01	11.93	-0.01	6/27/2022 16:45	11.59	-0.42	6/26/2022 14:48	11.68	-0.19	6/26/2022 16:10	-0.13
6/26/2022 15:02	11.96	0.13	6/27/2022 16:46	11.59	-0.42	6/26/2022 14:49	11.67	-0.22	6/26/2022 16:11	-0.11
6/26/2022 15:03	11.93	0.04	6/27/2022 16:47	11.61	-0.41	6/26/2022 14:50	11.67	-0.17	6/26/2022 16:12	-0.10
6/26/2022 15:04	11.96	-0.03	6/27/2022 16:48	11.57	-0.48	6/26/2022 14:51	11.66	-0.19	6/26/2022 16:13	-0.08
6/26/2022 15:05	11.95	0.04	6/27/2022 16:49	11.60	-0.44	6/26/2022 14:52	11.67	-0.24	6/26/2022 16:14	-0.10
6/26/2022 15:06	11.97	0.04	6/27/2022 16:50	11.61	-0.44	6/26/2022 14:53	11.66	-0.23	6/26/2022 16:15	-0.11
6/26/2022 15:07	11.96	0.00	6/27/2022 16:51	11.57	-0.50	6/26/2022 14:54	11.67	-0.20	6/26/2022 16:16	-0.11
6/26/2022 15:08	11.96	0.12	6/27/2022 16:52	11.58	-0.45	6/26/2022 14:55	11.67	-0.17	6/26/2022 16:17	-0.12
6/26/2022 15:09	11.94	0.06	6/27/2022 16:53	11.58	-0.42	6/26/2022 14:56	11.67	-0.18	6/26/2022 16:18	-0.13
6/26/2022 15:10	11.95	0.13	6/27/2022 16:54	11.58	-0.53	6/26/2022 14:57	11.69	-0.21	6/26/2022 16:19	-0.13
6/26/2022 15:11	11.93	0.03	6/27/2022 16:55	11.55	-0.49	6/26/2022 14:58	11.68	-0.23	6/26/2022 16:20	-0.15
6/26/2022 15:12	11.92	0.11	6/27/2022 16:56	11.58	-0.45	6/26/2022 14:59	11.66	-0.18	6/26/2022 16:21	-0.11
6/26/2022 15:13	11.96	0.11	6/27/2022 16:57	11.54	-0.49	6/26/2022 15:00	11.64	-0.25	6/26/2022 16:22	-0.12
6/26/2022 15:14	11.95	0.03	6/27/2022 16:58	11.56	-0.48	6/26/2022 15:01	11.69	-0.19	6/26/2022 16:23	-0.15
6/26/2022 15:15	11.95	0.04	6/27/2022 16:59	11.56	-0.48	6/26/2022 15:02	11.65	-0.19	6/26/2022 16:24	-0.10
6/26/2022 15:16	11.96	0.01	6/27/2022 17:00	11.58	-0.43	6/26/2022 15:03	11.67	-0.20	6/26/2022 16:25	-0.12
6/26/2022 15:17	11.97	0.04	6/27/2022 17:01	11.58	-0.47	6/26/2022 15:04	11.66	-0.19	6/26/2022 16:26	-0.14
6/26/2022 15:18	11.93	0.05	6/27/2022 17:02	11.60	-0.44	6/26/2022 15:05	11.67	-0.15	6/26/2022 16:27	-0.08
6/26/2022 15:19	11.97	0.07	6/27/2022 17:03	11.60	-0.50	6/26/2022 15:06	11.68	-0.20	6/26/2022 16:28	-0.10
6/26/2022 15:20	11.98	0.10	6/27/2022 17:04	11.58	-0.45	6/26/2022 15:07	11.67	-0.21	6/26/2022 16:29	-0.13
6/26/2022 15:21	11.94	0.09	6/27/2022 17:05	11.58	-0.32	6/26/2022 15:08	11.67	-0.20	6/26/2022 16:30	-0.14
6/26/2022 15:22	11.96	0.09	6/27/2022 17:06	11.60	-0.48	6/26/2022 15:09	11.67	-0.19	6/26/2022 16:31	-0.10
6/26/2022 15:23	11.96	-0.03	6/27/2022 17:07	11.59	-0.49	6/26/2022 15:10	11.66	-0.17	6/26/2022 16:32	-0.13
6/26/2022 15:24	11.96	0.00	6/27/2022 17:08	11.59	-0.36	6/26/2022 15:11	11.67	-0.21	6/26/2022 16:33	-0.14
6/26/2022 15:25	11.93	0.07	6/27/2022 17:09	11.58	-0.48	6/26/2022 15:12	11.69	-0.16	6/26/2022 16:34	-0.12
6/26/2022 15:26	11.95	0.01	6/27/2022 17:10	11.56	-0.47	6/26/2022 15:13	11.65	-0.23	6/26/2022 16:35	-0.12
6/26/2022 15:27	11.95	0.00	6/27/2022 17:11	11.58	-0.47	6/26/2022 15:14	11.67	-0.21	6/26/2022 16:36	-0.12
6/26/2022 15:28	11.96	0.09	6/27/2022 17:12	11.58	-0.51	6/26/2022 15:15	11.68	-0.20	6/26/2022 16:37	-0.15
6/26/2022 15:29	11.96	0.16	6/27/2022 17:13	11.62	-0.48	6/26/2022 15:16	11.65	-0.19	6/26/2022 16:38	-0.13
6/26/2022 15:30	11.98	-0.01	6/27/2022 17:14	11.57	-0.48	6/26/2022 15:17	11.67	-0.20	6/26/2022 16:39	-0.14
6/26/2022 15:31	11.94	0.09	6/27/2022 17:15	11.61	-0.46	6/26/2022 15:18	11.66	-0.21	6/26/2022 16:40	-0.15
6/26/2022 15:32	11.93	0.04	6/27/2022 17:16	11.57	-0.51	6/26/2022 15:19	11.67	-0.19	6/26/2022 16:41	-0.12
6/26/2022 15:33	11.95	0.09	6/27/2022 17:17	11.58	-0.50	6/26/2022 15:20	11.67	-0.22	6/26/2022 16:42	-0.17
6/26/2022 15:34	11.94	0.06	6/27/2022 17:18	11.60	-0.48	6/26/2022 15:21	11.65	-0.17	6/26/2022 16:43	-0.14
6/26/2022 15:35	11.93	0.04	6/27/2022 17:19	11.59	-0.47	6/26/2022 15:22	11.66	-0.23	6/26/2022 16:44	-0.13
6/26/2022 15:36	11.95	-0.01	6/27/2022 17:20	11.58	-0.47	6/26/2022 15:23	11.68	-0.24	6/26/2022 16:45	-0.09
6/26/2022 15:37	11.94	0.03	6/27/2022 17:21	11.57	-0.47	6/26/2022 15:24	11.68	-0.21	6/26/2022 16:46	-0.12
6/26/2022 15:38	11.95	0.07	6/27/2022 17:22	11.57	-0.40	6/26/2022 15:25	11.66	-0.20	6/26/2022 16:47	-0.08
6/26/2022 15:39	11.96	0.04	6/27/2022 17:23	11.58	-0.47	6/26/2022 15:26	11.69	-0.21	6/26/2022 16:48	-0.09
6/26/2022 15:40	11.96	0.10	6/27/2022 17:24	11.61	-0.49	6/26/2022 15:27	11.66	-0.19	6/26/2022 16:49	-0.13
6/26/2022 15:41	11.95	0.05	6/27/2022 17:25	11.59	-0.52	6/26/2022 15:28	11.66	-0.21	6/26/2022 16:50	-0.11
6/26/2022 15:42	11.94	0.14	6/27/2022 17:26	11.57	-0.50	6/26/2022 15:29	11.68	-0.22	6/26/2022 16:51	-0.15
6/26/2022 15:43	11.95	0.08	6/27/2022 17:27	11.60	-0.42	6/26/2022 15:30	11.67	-0.18	6/26/2022 16:52	-0.07
6/26/2022 15:44	11.93	0.03	6/27/2022 17:28	11.59	-0.43	6/26/2022 15:31	11.66	-0.23	6/26/2022 16:53	-0.11
6/26/2022 15:45	11.95	0.09	6/27/2022 17:29	11.60	-0.53	6/26/2022 15:32	11.65	-0.19	6/26/2022 16:54	-0.12
6/26/2022 15:46	11.93	-0.01	6/27/2022 17:30	11.56	-0.44	6/26/2022 15:33	11.64	-0.22	6/26/2022 16:55	-0.10
6/26/2022 15:47	11.94	0.01	6/27/2022 17:31	11.58	-0.35	6/26/2022 15:34	11.69	-0.26	6/26/2022 16:56	-0.10
6/26/2022 15:48	11.94	0.06	6/27/2022 17:32	11.61	-0.41	6/26/2022 15:35	11.65	-0.19	6/26/2022 16:57	-0.09
6/26/2022 15:49	11.96	-0.02	6/27/2022 17:33	11.58	-0.42	6/26/2022 15:36	11.67	-0.17	6/26/2022 16:58	-0.07
6/26/2022 15:50	11.93	0.11	6/27/2022 17:34	11.60	-0.45	6/26/2022 15:37	11.67	-0.17	6/26/2022 16:59	-0.12
6/26/2022 15:51	11.94	-0.02	6/27/2022 17:35	11.60	-0.45	6/26/2022 15:38	11.68	-0.19	6/26/2022 17:00	-0.18
6/26/2022 15:52	11.96	0.09	6/27/2022 17:36	11.58	-0.47	6/26/2022 15:39	11.65	-0.22	6/26/2022 17:01	-0.14
6/26/2022 15:53	11.95	0.08	6/27/2022 17:37	11.61	-0.46	6/26/2022 15:40	11.66	-0.20	6/26/2022 17:02	-0.12
6/26/2022 15:54	11.96	0.04	6/27/2022 17:38	11.60	-0.41	6/26/2022 15:41	11.67	-0.22	6/26/2022 17:03	-0.11
6/26/2022 15:55	11.96	0.04	6/27/2022 17:39	11.56	-0.47	6/26/2022 15:42	11.66	-0.22	6/26/2022 17:04	-0.13
6/26/2022 15:56	11.95	0.04	6/27/2022 17:40	11.58	-0.43	6/26/2022 15:43	11.66	-0.18	6/26/2022 17:05	-0.12
6/26/2022 15:57	11.94	0.06	6/27/2022 17:41	11.57	-0.51	6/26/2022 15:44	11.68	-0.19	6/26/2022 17:06	-0.12
6/26/2022 15:58	11.97	0.06	6/27/2022 17:42	11.58	-0.49	6/26/2022 15:45	11.69	-0.20	6/26/2022 17:07	-0.09

6/26/2022 15:59	11.95	0.09	6/27/2022 17:43	11.59	-0.48	6/26/2022 15:46	11.66	-0.19	6/26/2022 17:08	-0.08
6/26/2022 16:00	11.96	0.02	6/27/2022 17:44	11.60	-0.39	6/26/2022 15:47	11.69	-0.21	6/26/2022 17:09	-0.10
6/26/2022 16:01	11.99	0.02	6/27/2022 17:45	11.57	-0.59	6/26/2022 15:48	11.66	-0.20	6/26/2022 17:10	-0.10
6/26/2022 16:02	11.96	0.01	6/27/2022 17:46	11.59	-0.50	6/26/2022 15:49	11.67	-0.22	6/26/2022 17:11	-0.09
6/26/2022 16:03	11.95	0.04	6/27/2022 17:47	11.57	-0.45	6/26/2022 15:50	11.67	-0.18	6/26/2022 17:12	-0.08
6/26/2022 16:04	11.95	0.04	6/27/2022 17:48	11.60	-0.44	6/26/2022 15:51	11.67	-0.21	6/26/2022 17:13	-0.10
6/26/2022 16:05	11.94	0.13	6/27/2022 17:49	11.56	-0.39	6/26/2022 15:52	11.66	-0.22	6/26/2022 17:14	-0.11
6/26/2022 16:06	11.94	0.07	6/27/2022 17:50	11.59	-0.56	6/26/2022 15:53	11.66	-0.20	6/26/2022 17:15	-0.13
6/26/2022 16:07	11.96	0.07	6/27/2022 17:51	11.57	-0.48	6/26/2022 15:54	11.68	-0.19	6/26/2022 17:16	-0.12
6/26/2022 16:08	11.96	0.04	6/27/2022 17:52	11.58	-0.57	6/26/2022 15:55	11.65	-0.18	6/26/2022 17:17	-0.09
6/26/2022 16:09	11.96	0.05	6/27/2022 17:53	11.58	-0.51	6/26/2022 15:56	11.69	-0.21	6/26/2022 17:18	-0.08
6/26/2022 16:10	11.96	0.11	6/27/2022 17:54	11.62	-0.43	6/26/2022 15:57	11.66	-0.15	6/26/2022 17:19	-0.12
6/26/2022 16:11	11.96	0.09	6/27/2022 17:55	11.61	-0.46	6/26/2022 15:58	11.67	-0.21	6/26/2022 17:20	-0.07
6/26/2022 16:12	11.95	0.05	6/27/2022 17:56	11.57	-0.38	6/26/2022 15:59	11.67	-0.16	6/26/2022 17:21	-0.08
6/26/2022 16:13	11.94	0.02	6/27/2022 17:57	11.59	-0.45	6/26/2022 16:00	11.68	-0.17	6/26/2022 17:22	-0.12
6/26/2022 16:14	11.94	0.07	6/27/2022 17:58	11.59	-0.47	6/26/2022 16:01	11.66	-0.20	6/26/2022 17:23	-0.11
6/26/2022 16:15	11.96	0.06	6/27/2022 17:59	11.59	-0.44	6/26/2022 16:02	11.65	-0.22	6/26/2022 17:24	-0.13
6/26/2022 16:16	11.97	0.06	6/27/2022 18:00	11.61	-0.51	6/26/2022 16:03	11.68	-0.21	6/26/2022 17:25	-0.09
6/26/2022 16:17	11.96	0.16	6/27/2022 18:01	11.59	-0.44	6/26/2022 16:04	11.66	-0.16	6/26/2022 17:26	-0.12
6/26/2022 16:18	11.96	0.03	6/27/2022 18:02	11.59	-0.52	6/26/2022 16:05	11.66	-0.19	6/26/2022 17:27	-0.09
6/26/2022 16:19	11.95	0.06	6/27/2022 18:03	11.57	-0.48	6/26/2022 16:06	11.67	-0.21	6/26/2022 17:28	-0.08
6/26/2022 16:20	11.96	0.14	6/27/2022 18:04	11.56	-0.46	6/26/2022 16:07	11.67	-0.17	6/26/2022 17:29	-0.13
6/26/2022 16:21	11.95	0.06	6/27/2022 18:05	11.58	-0.49	6/26/2022 16:08	11.68	-0.18	6/26/2022 17:30	-0.09
6/26/2022 16:22	11.95	0.11	6/27/2022 18:06	11.57	-0.45	6/26/2022 16:09	11.68	-0.20	6/26/2022 17:31	-0.10
6/26/2022 16:23	11.97	0.08	6/27/2022 18:07	11.59	-0.43	6/26/2022 16:10	11.67	-0.23	6/26/2022 17:32	-0.16
6/26/2022 16:24	11.97	0.08	6/27/2022 18:08	11.59	-0.40	6/26/2022 16:11	11.67	-0.20	6/26/2022 17:33	-0.13
6/26/2022 16:25	11.99	0.14	6/27/2022 18:09	11.60	-0.43	6/26/2022 16:12	11.67	-0.19	6/26/2022 17:34	-0.10
6/26/2022 16:26	11.95	0.03	6/27/2022 18:10	11.57	-0.45	6/26/2022 16:13	11.67	-0.19	6/26/2022 17:35	-0.11
6/26/2022 16:27	11.94	-0.01	6/27/2022 18:11	11.57	-0.48	6/26/2022 16:14	11.67	-0.25	6/26/2022 17:36	-0.11
6/26/2022 16:28	11.97	0.07	6/27/2022 18:12	11.59	-0.42	6/26/2022 16:15	11.67	-0.25	6/26/2022 17:37	-0.11
6/26/2022 16:29	11.98	0.04	6/27/2022 18:13	11.58	-0.43	6/26/2022 16:16	11.67	-0.17	6/26/2022 17:38	-0.10
6/26/2022 16:30	11.95	0.12	6/27/2022 18:14	11.60	-0.42	6/26/2022 16:17	11.65	-0.18	6/26/2022 17:39	-0.11
6/26/2022 16:31	11.99	0.07	6/27/2022 18:15	11.59	-0.47	6/26/2022 16:18	11.69	-0.18	6/26/2022 17:40	-0.16
6/26/2022 16:32	11.99	0.12	6/27/2022 18:16	11.60	-0.50	6/26/2022 16:19	11.67	-0.22	6/26/2022 17:41	-0.12
6/26/2022 16:33	11.97	0.15	6/27/2022 18:17	11.59	-0.44	6/26/2022 16:20	11.66	-0.25	6/26/2022 17:42	-0.15
6/26/2022 16:34	11.98	-0.02	6/27/2022 18:18	11.57	-0.45	6/26/2022 16:21	11.69	-0.22	6/26/2022 17:43	-0.10
6/26/2022 16:35	11.96	0.09	6/27/2022 18:19	11.61	-0.51	6/26/2022 16:22	11.67	-0.19	6/26/2022 17:44	-0.13
6/26/2022 16:36	11.94	0.08	6/27/2022 18:20	11.57	-0.52	6/26/2022 16:23	11.67	-0.21	6/26/2022 17:45	-0.11
6/26/2022 16:37	11.94	0.02	6/27/2022 18:21	11.60	-0.47	6/26/2022 16:24	11.68	-0.16	6/26/2022 17:46	-0.11
6/26/2022 16:38	11.95	0.10	6/27/2022 18:22	11.58	-0.39	6/26/2022 16:25	11.67	-0.24	6/26/2022 17:47	-0.11
6/26/2022 16:39	11.96	0.05	6/27/2022 18:23	11.58	-0.41	6/26/2022 16:26	11.67	-0.20	6/26/2022 17:48	-0.10
6/26/2022 16:40	11.94	0.09	6/27/2022 18:24	11.59	-0.49	6/26/2022 16:27	11.68	-0.16	6/26/2022 17:49	-0.11
6/26/2022 16:41	11.94	0.13	6/27/2022 18:25	11.58	-0.51	6/26/2022 16:28	11.68	-0.19	6/26/2022 17:50	-0.11
6/26/2022 16:42	11.93	0.04	6/27/2022 18:26	11.59	-0.43	6/26/2022 16:29	11.67	-0.19	6/26/2022 17:51	-0.13
6/26/2022 16:43	11.95	0.06	6/27/2022 18:27	11.56	-0.57	6/26/2022 16:30	11.68	-0.19	6/26/2022 17:52	-0.13
6/26/2022 16:44	11.96	0.08	6/27/2022 18:28	11.59	-0.49	6/26/2022 16:31	11.67	-0.20	6/26/2022 17:53	-0.15
6/26/2022 16:45	11.94	-0.01	6/27/2022 18:29	11.59	-0.42	6/26/2022 16:32	11.67	-0.19	6/26/2022 17:54	-0.11
6/26/2022 16:46	11.95	0.07	6/27/2022 18:30	11.58	-0.42	6/26/2022 16:33	11.68	-0.22	6/26/2022 17:55	-0.14
6/26/2022 16:47	11.91	0.08	6/27/2022 18:31	11.61	-0.41	6/26/2022 16:34	11.67	-0.18	6/26/2022 17:56	-0.10
6/26/2022 16:48	11.94	0.05	6/27/2022 18:32	11.58	-0.46	6/26/2022 16:35	11.64	-0.17	6/26/2022 17:57	-0.08
6/26/2022 16:49	11.92	0.02	6/27/2022 18:33	11.59	-0.50	6/26/2022 16:36	11.68	-0.18	6/26/2022 17:58	-0.10
6/26/2022 16:50	11.93	0.07	6/27/2022 18:34	11.57	-0.44	6/26/2022 16:37	11.67	-0.18	6/26/2022 17:59	-0.14
6/26/2022 16:51	11.93	0.04	6/27/2022 18:35	11.58	-0.48	6/26/2022 16:38	11.66	-0.18	6/26/2022 18:00	-0.12
6/26/2022 16:52	11.96	0.16	6/27/2022 18:36	11.59	-0.52	6/26/2022 16:39	11.68	-0.19	6/26/2022 18:01	-0.08
6/26/2022 16:53	11.95	0.10	6/27/2022 18:37	11.57	-0.40	6/26/2022 16:40	11.68	-0.21	6/26/2022 18:02	-0.13
6/26/2022 16:54	11.95	0.02	6/27/2022 18:38	11.57	-0.45	6/26/2022 16:41	11.67	-0.19	6/26/2022 18:03	-0.13
6/26/2022 16:55	11.97	0.04	6/27/2022 18:39	11.59	-0.45	6/26/2022 16:42	11.67	-0.20	6/26/2022 18:04	-0.09
6/26/2022 16:56	11.98	0.01	6/27/2022 18:40	11.60	-0.36	6/26/2022 16:43	11.65	-0.18	6/26/2022 18:05	-0.11
6/26/2022 16:57	11.96	0.07	6/27/2022 18:41	11.59	-0.40	6/26/2022 16:44	11.66	-0.19	6/26/2022 18:06	-0.12
6/26/2022 16:58	11.95	0.04	6/27/2022 18:42	11.59	-0.45	6/26/2022 16:45	11.66	-0.20	6/26/2022 18:07	-0.13
6/26/2022 16:59	11.96	0.06	6/27/2022 18:43	11.59	-0.47	6/26/2022 16:46	11.65	-0.18	6/26/2022 18:08	-0.10
6/26/2022 17:00	11.97	0.03	6/27/2022 18:44	11.59	-0.45	6/26/2022 16:47	11.67	-0.19	6/26/2022 18:09	-0.06
6/26/2022 17:01	11.94	0.03	6/27/2022 18:45	11.56	-0.50	6/26/2022 16:48	11.65	-0.19	6/26/2022 18:10	-0.16
6/26/2022 17:02	11.95	0.03	6/27/2022 18:46	11.58	-0.49	6/26/2022 16:49	11.66	-0.20	6/26/2022 18:11	-0.14
6/26/2022 17:03	11.94	0.04	6/27/2022 18:47	11.59	-0.49	6/26/2022 16:50	11.68	-0.15	6/26/2022 18:12	-0.13
6/26/2022 17:04	11.92	0.11	6/27/2022 18:48	11.59	-0.43	6/26/2022 16:51	11.67	-0.23	6/26/2022 18:13	-0.15
6/26/2022 17:05	11.97	-0.03	6/27/2022 18:49	11.56	-0.39	6/26/2022 16:52	11.66	-0.21	6/26/2022 18:14	-0.17
6/26/2022 17:06	11.96	0.06	6/27/2022 18:50	11.60	-0.42	6/26/2022 16:53	11.66	-0.19	6/26/2022 18:15	-0.09
6/26/2022 17:07	11.97	0.03	6/27/2022 18:51	11.58	-0.41	6/26/2022 16:54	11.69	-0.16	6/26/2022 18:16	-0.06
6/26/2022 17:08	11.92	0.04	6/27/2022 18:52	11.59	-0.44	6/26/2022 16:55	11.69	-0.22	6/26/2022 18:17	-0.09
6/26/2022 17:09	11.94	0.12	6/27/2022 18:53	11.59	-0.48	6/26/2022 16:56	11.68	-0.20	6/26/2022 18:18	-0.11
6/26/2022 17:10	11.95	0.06	6/27/2022 18:54	11.60	-0.47	6/26/2022 16:57	11.68	-0.23	6/26/2022 18:19	-0.12
6/26/2022 17:11	11.93	0.08	6/27/2022 18:55	11.60	-0.52	6/26/2022 16:58	11.66	-0.20	6/26/2022 18:20	-0.16
6/26/2022 17:12	11.94	0.09	6/27/2022 18:56	11.58	-0.42	6/26/2022 16:59	11.66	-0.21	6/26/2022 18:21	-0.13
6/26/2022 17:13	11.97	-0.02	6/27/2022 18:57	11.58	-0.45	6/26/2022 17:00	11.63	-0.20	6/26/2022 18:22	-0.13
6/26/2022 17:14	11.96	0.15	6/27/2022 18:58	11.60	-0.50	6/26/2022 17:01	11.67	-0.18	6/26/2022 18:23	-0.14
6/26/2022 17:15	11.98	0.03	6/27/2022 18:59	11.57	-0.42	6/26/2022 17:02	11.66	-0.20	6/26/2022 18:24	-0.11
6/26/2022 17:16	11.96	0.04	6/27/2022 19:00	11.56	-0.37	6/26/2022 17:03	11.66	-0.22	6/26/2022 18:25	-0.11
6/26/2022 17:17	11.96	0.09	6/27/2022 19:01	11.57	-0.53	6/26/2022 17:04	11.67	-0.17	6/26/2022 18:26	-0.14
6/26/2022 17:18	11.96	0.15	6/27/2022 19:02	11.57	-0.49	6/26/2022 17:05	11.66	-0.16	6/26/2022 18:27	-0.15
6/26/2022 17:19	11.94	0.14	6/27/2022 19:03	11.61	-0.40	6/26/2022 17:06	11.66	-0.20	6/26/2022 18:28	-0.12
6/26/2022 17:20	11.94	0.13	6/27/2022 19:04	11.55	-0.47	6/26/2022 17:07	11.69	-0.21	6/26/2022 18:29	-0.15
6/26/2022 17:21	11.92	0.00	6/27/2022 19:05	11.61	-0.46	6/26/2022 17:08	11.67	-0.19	6/26/2022 18:30	-0.17
6/26/2022 17:22	11.92	0.03	6/27/2022 19:06	11.59	-0.45	6/26/2022 17:09	11.65	-0.22	6/26/2022 18:31	-0.16
6/26/2022 17:23	11.94	0.07	6/27/2022 19:07	11.56	-0.53	6/26/2022 17:10	11.66	-0.21	6/26/2022 18:32	-0.18
6/26/2022 17:24	11.93	0.02	6/27/2022 19:08	11.58	-0.48	6/26/2022 17:11	11.69	-0.21	6/26/2022 18:33	-0.12
6/26/2022 17:25	11.97	0.17	6/27/2022 19:09	11.57	-0.42	6/26/2022 17:12	11.67	-0.23	6/26/2022 18:34	-0.13
6/26/2022 17:26	11.97	0.04	6/27/2022 19:10	11.58	-0.45	6/26/2022 17:13	11.67	-0.20	6/26/2022 18:35	-0.15

6/26/2022 17:27	11.95	0.15	6/27/2022 19:11	11.57	-0.48	6/26/2022 17:14	11.67	-0.18	6/26/2022 18:36	-0.09
6/26/2022 17:28	11.93	0.09	6/27/2022 19:12	11.60	-0.45	6/26/2022 17:15	11.67	-0.18	6/26/2022 18:37	-0.17
6/26/2022 17:29	11.95	0.09	6/27/2022 19:13	11.58	-0.44	6/26/2022 17:16	11.66	-0.18	6/26/2022 18:38	-0.15
6/26/2022 17:30	11.94	0.15	6/27/2022 19:14	11.58	-0.47	6/26/2022 17:17	11.68	-0.17	6/26/2022 18:39	-0.12
6/26/2022 17:31	11.95	0.06	6/27/2022 19:15	11.57	-0.51	6/26/2022 17:18	11.68	-0.19	6/26/2022 18:40	-0.14
6/26/2022 17:32	11.95	0.02	6/27/2022 19:16	11.57	-0.49	6/26/2022 17:19	11.68	-0.18	6/26/2022 18:41	-0.16
6/26/2022 17:33	11.95	0.11	6/27/2022 19:17	11.60	-0.47	6/26/2022 17:20	11.68	-0.19	6/26/2022 18:42	-0.09
6/26/2022 17:34	11.94	-0.03	6/27/2022 19:18	11.60	-0.43	6/26/2022 17:21	11.66	-0.21	6/26/2022 18:43	-0.15
6/26/2022 17:35	11.95	0.10	6/27/2022 19:19	11.58	-0.47	6/26/2022 17:22	11.64	-0.18	6/26/2022 18:44	-0.13
6/26/2022 17:36	11.97	0.01	6/27/2022 19:20	11.55	-0.42	6/26/2022 17:23	11.67	-0.23	6/26/2022 18:45	-0.16
6/26/2022 17:37	11.96	0.07	6/27/2022 19:21	11.58	-0.39	6/26/2022 17:24	11.66	-0.24	6/26/2022 18:46	-0.12
6/26/2022 17:38	11.96	0.02	6/27/2022 19:22	11.59	-0.47	6/26/2022 17:25	11.67	-0.21	6/26/2022 18:47	-0.11
6/26/2022 17:39	11.97	0.04	6/27/2022 19:23	11.59	-0.48	6/26/2022 17:26	11.69	-0.18	6/26/2022 18:48	-0.17
6/26/2022 17:40	11.95	0.09	6/27/2022 19:24	11.59	-0.48	6/26/2022 17:27	11.66	-0.21	6/26/2022 18:49	-0.11
6/26/2022 17:41	11.96	-0.07	6/27/2022 19:25	11.60	-0.39	6/26/2022 17:28	11.65	-0.18	6/26/2022 18:50	-0.16
6/26/2022 17:42	11.96	0.04	6/27/2022 19:26	11.58	-0.47	6/26/2022 17:29	11.68	-0.18	6/26/2022 18:51	-0.16
6/26/2022 17:43	11.95	-0.01	6/27/2022 19:27	11.58	-0.56	6/26/2022 17:30	11.65	-0.21	6/26/2022 18:52	-0.13
6/26/2022 17:44	11.95	0.06	6/27/2022 19:28	11.58	-0.44	6/26/2022 17:31	11.67	-0.21	6/26/2022 18:53	-0.16
6/26/2022 17:45	11.95	0.08	6/27/2022 19:29	11.56	-0.47	6/26/2022 17:32	11.68	-0.19	6/26/2022 18:54	-0.16
6/26/2022 17:46	11.96	0.14	6/27/2022 19:30	11.60	-0.47	6/26/2022 17:33	11.65	-0.23	6/26/2022 18:55	-0.10
6/26/2022 17:47	11.97	0.08	6/27/2022 19:31	11.56	-0.42	6/26/2022 17:34	11.67	-0.20	6/26/2022 18:56	-0.12
6/26/2022 17:48	11.94	0.03	6/27/2022 19:32	11.59	-0.42	6/26/2022 17:35	11.64	-0.18	6/26/2022 18:57	-0.15
6/26/2022 17:49	11.95	0.05	6/27/2022 19:33	11.59	-0.45	6/26/2022 17:36	11.66	-0.19	6/26/2022 18:58	-0.09
6/26/2022 17:50	11.95	0.03	6/27/2022 19:34	11.57	-0.39	6/26/2022 17:37	11.65	-0.20	6/26/2022 18:59	-0.12
6/26/2022 17:51	11.93	0.09	6/27/2022 19:35	11.61	-0.41	6/26/2022 17:38	11.66	-0.19	6/26/2022 19:00	-0.14
6/26/2022 17:52	11.95	0.04	6/27/2022 19:36	11.60	-0.50	6/26/2022 17:39	11.65	-0.21	6/26/2022 19:01	-0.11
6/26/2022 17:53	11.96	0.05	6/27/2022 19:37	11.59	-0.40	6/26/2022 17:40	11.68	-0.21	6/26/2022 19:02	-0.11
6/26/2022 17:54	11.98	0.12	6/27/2022 19:38	11.57	-0.42	6/26/2022 17:41	11.67	-0.18	6/26/2022 19:03	-0.07
6/26/2022 17:55	11.96	0.05	6/27/2022 19:39	11.57	-0.43	6/26/2022 17:42	11.70	-0.21	6/26/2022 19:04	-0.13
6/26/2022 17:56	11.95	-0.02	6/27/2022 19:40	11.59	-0.48	6/26/2022 17:43	11.68	-0.18	6/26/2022 19:05	-0.18
6/26/2022 17:57	11.95	0.12	6/27/2022 19:41	11.61	-0.48	6/26/2022 17:44	11.66	-0.22	6/26/2022 19:06	-0.13
6/26/2022 17:58	11.94	0.12	6/27/2022 19:42	11.59	-0.53	6/26/2022 17:45	11.65	-0.20	6/26/2022 19:07	-0.14
6/26/2022 17:59	11.93	0.09	6/27/2022 19:43	11.59	-0.47	6/26/2022 17:46	11.68	-0.18	6/26/2022 19:08	-0.15
6/26/2022 18:00	11.96	0.06	6/27/2022 19:44	11.59	-0.44	6/26/2022 17:47	11.68	-0.18	6/26/2022 19:09	-0.12
6/26/2022 18:01	11.95	0.12	6/27/2022 19:45	11.60	-0.48	6/26/2022 17:48	11.67	-0.19	6/26/2022 19:10	-0.11
6/26/2022 18:02	11.96	0.09	6/27/2022 19:46	11.59	-0.39	6/26/2022 17:49	11.65	-0.24	6/26/2022 19:11	-0.10
6/26/2022 18:03	11.96	0.09	6/27/2022 19:47	11.60	-0.46	6/26/2022 17:50	11.68	-0.16	6/26/2022 19:12	-0.11
6/26/2022 18:04	11.95	0.06	6/27/2022 19:48	11.58	-0.48	6/26/2022 17:51	11.68	-0.18	6/26/2022 19:13	-0.13
6/26/2022 18:05	11.96	0.05	6/27/2022 19:49	11.59	-0.41	6/26/2022 17:52	11.64	-0.18	6/26/2022 19:14	-0.17
6/26/2022 18:06	11.97	0.01	6/27/2022 19:50	11.58	-0.50	6/26/2022 17:53	11.67	-0.18	6/26/2022 19:15	-0.14
6/26/2022 18:07	11.94	0.09	6/27/2022 19:51	11.56	-0.49	6/26/2022 17:54	11.67	-0.15	6/26/2022 19:16	-0.10
6/26/2022 18:08	11.98	0.07	6/27/2022 19:52	11.57	-0.44	6/26/2022 17:55	11.68	-0.22	6/26/2022 19:17	-0.10
6/26/2022 18:09	11.94	0.08	6/27/2022 19:53	11.58	-0.50	6/26/2022 17:56	11.66	-0.18	6/26/2022 19:18	-0.18
6/26/2022 18:10	11.97	0.10	6/27/2022 19:54	11.57	-0.45	6/26/2022 17:57	11.66	-0.18	6/26/2022 19:19	-0.09
6/26/2022 18:11	11.97	0.12	6/27/2022 19:55	11.59	-0.35	6/26/2022 17:58	11.64	-0.18	6/26/2022 19:20	-0.15
6/26/2022 18:12	11.96	0.12	6/27/2022 19:56	11.61	-0.52	6/26/2022 17:59	11.67	-0.21	6/26/2022 19:21	-0.11
6/26/2022 18:13	11.95	0.09	6/27/2022 19:57	11.61	-0.44	6/26/2022 18:00	11.67	-0.19	6/26/2022 19:22	-0.12
6/26/2022 18:14	11.95	-0.05	6/27/2022 19:58	11.58	-0.50	6/26/2022 18:01	11.68	-0.18	6/26/2022 19:23	-0.13
6/26/2022 18:15	11.94	0.09	6/27/2022 19:59	11.59	-0.52	6/26/2022 18:02	11.69	-0.22	6/26/2022 19:24	-0.11
6/26/2022 18:16	11.96	0.00	6/27/2022 20:00	11.59	-0.48	6/26/2022 18:03	11.68	-0.17	6/26/2022 19:25	-0.15
6/26/2022 18:17	11.96	0.03	6/27/2022 20:01	11.61	-0.42	6/26/2022 18:04	11.66	-0.20	6/26/2022 19:26	-0.13
6/26/2022 18:18	11.96	0.02	6/27/2022 20:02	11.60	-0.45	6/26/2022 18:05	11.69	-0.19	6/26/2022 19:27	-0.17
6/26/2022 18:19	11.95	0.04	6/27/2022 20:03	11.58	-0.54	6/26/2022 18:06	11.66	-0.17	6/26/2022 19:28	-0.14
6/26/2022 18:20	11.98	0.11	6/27/2022 20:04	11.56	-0.40	6/26/2022 18:07	11.67	-0.20	6/26/2022 19:29	-0.10
6/26/2022 18:21	11.97	0.12	6/27/2022 20:05	11.60	-0.44	6/26/2022 18:08	11.69	-0.18	6/26/2022 19:30	-0.15
6/26/2022 18:22	11.95	0.07	6/27/2022 20:06	11.58	-0.43	6/26/2022 18:09	11.65	-0.19	6/26/2022 19:31	-0.12
6/26/2022 18:23	11.95	0.13	6/27/2022 20:07	11.60	-0.47	6/26/2022 18:10	11.65	-0.22	6/26/2022 19:32	-0.15
6/26/2022 18:24	11.96	0.03	6/27/2022 20:08	11.58	-0.44	6/26/2022 18:11	11.67	-0.18	6/26/2022 19:33	-0.11
6/26/2022 18:25	11.95	0.02	6/27/2022 20:09	11.59	-0.38	6/26/2022 18:12	11.67	-0.18	6/26/2022 19:34	-0.12
6/26/2022 18:26	11.95	-0.01	6/27/2022 20:10	11.59	-0.52	6/26/2022 18:13	11.66	-0.20	6/26/2022 19:35	-0.09
6/26/2022 18:27	11.95	0.11	6/27/2022 20:11	11.60	-0.48	6/26/2022 18:14	11.67	-0.21	6/26/2022 19:36	-0.15
6/26/2022 18:28	11.97	0.03	6/27/2022 20:12	11.60	-0.43	6/26/2022 18:15	11.66	-0.24	6/26/2022 19:37	-0.07
6/26/2022 18:29	11.99	0.10	6/27/2022 20:13	11.58	-0.48	6/26/2022 18:16	11.66	-0.24	6/26/2022 19:38	-0.14
6/26/2022 18:30	11.96	-0.08	6/27/2022 20:14	11.56	-0.41	6/26/2022 18:17	11.64	-0.20	6/26/2022 19:39	-0.14
6/26/2022 18:31	11.95	0.03	6/27/2022 20:15	11.58	-0.41	6/26/2022 18:18	11.67	-0.22	6/26/2022 19:40	-0.11
6/26/2022 18:32	11.96	0.11	6/27/2022 20:16	11.55	-0.38	6/26/2022 18:19	11.68	-0.24	6/26/2022 19:41	-0.13
6/26/2022 18:33	11.99	0.02	6/27/2022 20:17	11.60	-0.43	6/26/2022 18:20	11.68	-0.18	6/26/2022 19:42	-0.11
6/26/2022 18:34	11.96	0.05	6/27/2022 20:18	11.59	-0.52	6/26/2022 18:21	11.66	-0.20	6/26/2022 19:43	-0.12
6/26/2022 18:35	11.97	0.08	6/27/2022 20:19	11.60	-0.53	6/26/2022 18:22	11.66	-0.18	6/26/2022 19:44	-0.13
6/26/2022 18:36	11.96	0.16	6/27/2022 20:20	11.59	-0.43	6/26/2022 18:23	11.66	-0.18	6/26/2022 19:45	-0.12
6/26/2022 18:37	11.96	0.03	6/27/2022 20:21	11.61	-0.43	6/26/2022 18:24	11.67	-0.18	6/26/2022 19:46	-0.14
6/26/2022 18:38	11.95	0.12	6/27/2022 20:22	11.60	-0.40	6/26/2022 18:25	11.67	-0.21	6/26/2022 19:47	-0.08
6/26/2022 18:39	11.94	0.06	6/27/2022 20:23	11.59	-0.51	6/26/2022 18:26	11.66	-0.19	6/26/2022 19:48	-0.10
6/26/2022 18:40	11.95	0.04	6/27/2022 20:24	11.61	-0.49	6/26/2022 18:27	11.68	-0.18	6/26/2022 19:49	-0.12
6/26/2022 18:41	11.96	0.10	6/27/2022 20:25	11.58	-0.42	6/26/2022 18:28	11.67	-0.21	6/26/2022 19:50	-0.11
6/26/2022 18:42	11.92	-0.01	6/27/2022 20:26	11.58	-0.49	6/26/2022 18:29	11.67	-0.23	6/26/2022 19:51	-0.12
6/26/2022 18:43	11.96	0.20	6/27/2022 20:27	11.60	-0.48	6/26/2022 18:30	11.65	-0.16	6/26/2022 19:52	-0.16
6/26/2022 18:44	11.95	0.03	6/27/2022 20:28	11.58	-0.35	6/26/2022 18:31	11.66	-0.17	6/26/2022 19:53	-0.14
6/26/2022 18:45	11.95	0.02	6/27/2022 20:29	11.57	-0.47	6/26/2022 18:32	11.66	-0.19	6/26/2022 19:54	-0.10
6/26/2022 18:46	11.94	0.04	6/27/2022 20:30	11.61	-0.44	6/26/2022 18:33	11.68	-0.20	6/26/2022 19:55	-0.14
6/26/2022 18:47	11.94	0.06	6/27/2022 20:31	11.59	-0.38	6/26/2022 18:34	11.68	-0.21	6/26/2022 19:56	-0.17
6/26/2022 18:48	11.93	0.14	6/27/2022 20:32	11.58	-0.49	6/26/2022 18:35	11.67	-0.22	6/26/2022 19:57	-0.09
6/26/2022 18:49	11.93	0.13	6/27/2022 20:33	11.57	-0.44	6/26/2022 18:36	11.67	-0.18	6/26/2022 19:58	-0.16
6/26/2022 18:50	11.94	0.06	6/27/2022 20:34	11.58	-0.52	6/26/2022 18:37	11.68	-0.18	6/26/2022 19:59	-0.12
6/26/2022 18:51	11.92	0.07	6/27/2022 20:35	11.61	-0.50	6/26/2022 18:38	11.65	-0.17	6/26/2022 20:00	-0.16
6/26/2022 18:52	11.94	0.06	6/27/2022 20:36	11.61	-0.50	6/26/2022 18:39	11.67	-0.14	6/26/2022 20:01	-0.12
6/26/2022 18:53	11.91	0.06	6/27/2022 20:37	11.56	-0.44	6/26/2022 18:40	11.68	-0.20	6/26/2022 20:02	-0.14
6/26/2022 18:54	11.93	0.05	6/27/2022 20:38	11.61	-0.45	6/26/2022 18:41	11.68	-0.19	6/26/2022 20:03	-0.12

6/26/2022 18:55	11.93	0.04	6/27/2022 20:39	11.59	-0.44	6/26/2022 18:42	11.64	-0.20	6/26/2022 20:04	-0.18
6/26/2022 18:56	11.94	0.08	6/27/2022 20:40	11.59	-0.47	6/26/2022 18:43	11.66	-0.22	6/26/2022 20:05	-0.12
6/26/2022 18:57	11.98	0.02	6/27/2022 20:41	11.61	-0.49	6/26/2022 18:44	11.67	-0.18	6/26/2022 20:06	-0.15
6/26/2022 18:58	11.95	0.12	6/27/2022 20:42	11.59	-0.45	6/26/2022 18:45	11.66	-0.18	6/26/2022 20:07	-0.16
6/26/2022 18:59	11.96	0.06	6/27/2022 20:43	11.59	-0.51	6/26/2022 18:46	11.64	-0.20	6/26/2022 20:08	-0.11
6/26/2022 19:00	11.96	0.05	6/27/2022 20:44	11.59	-0.48	6/26/2022 18:47	11.66	-0.19	6/26/2022 20:09	-0.16
6/26/2022 19:01	11.93	0.04	6/27/2022 20:45	11.61	-0.46	6/26/2022 18:48	11.67	-0.19	6/26/2022 20:10	-0.15
6/26/2022 19:02	11.92	0.09	6/27/2022 20:46	11.60	-0.45	6/26/2022 18:49	11.65	-0.20	6/26/2022 20:11	-0.09
6/26/2022 19:03	11.94	0.10	6/27/2022 20:47	11.60	-0.47	6/26/2022 18:50	11.66	-0.18	6/26/2022 20:12	-0.13
6/26/2022 19:04	11.96	0.00	6/27/2022 20:48	11.58	-0.43	6/26/2022 18:51	11.66	-0.20	6/26/2022 20:13	-0.13
6/26/2022 19:05	11.98	0.02	6/27/2022 20:49	11.58	-0.42	6/26/2022 18:52	11.67	-0.20	6/26/2022 20:14	-0.14
6/26/2022 19:06	11.94	0.12	6/27/2022 20:50	11.60	-0.43	6/26/2022 18:53	11.68	-0.18	6/26/2022 20:15	-0.12
6/26/2022 19:07	11.96	0.05	6/27/2022 20:51	11.58	-0.43	6/26/2022 18:54	11.66	-0.12	6/26/2022 20:16	-0.15
6/26/2022 19:08	11.93	0.15	6/27/2022 20:52	11.60	-0.41	6/26/2022 18:55	11.68	-0.22	6/26/2022 20:17	-0.16
6/26/2022 19:09	11.97	0.09	6/27/2022 20:53	11.58	-0.37	6/26/2022 18:56	11.69	-0.19	6/26/2022 20:18	-0.17
6/26/2022 19:10	11.95	0.10	6/27/2022 20:54	11.58	-0.51	6/26/2022 18:57	11.67	-0.22	6/26/2022 20:19	-0.11
6/26/2022 19:11	11.97	0.10	6/27/2022 20:55	11.58	-0.47	6/26/2022 18:58	11.68	-0.23	6/26/2022 20:20	-0.09
6/26/2022 19:12	11.97	0.09	6/27/2022 20:56	11.59	-0.48	6/26/2022 18:59	11.66	-0.22	6/26/2022 20:21	-0.11
6/26/2022 19:13	11.95	0.05	6/27/2022 20:57	11.61	-0.43	6/26/2022 19:00	11.67	-0.22	6/26/2022 20:22	-0.13
6/26/2022 19:14	11.96	-0.07	6/27/2022 20:58	11.58	-0.47	6/26/2022 19:01	11.64	-0.21	6/26/2022 20:23	-0.11
6/26/2022 19:15	11.97	0.11	6/27/2022 20:59	11.63	-0.42	6/26/2022 19:02	11.67	-0.23	6/26/2022 20:24	-0.11
6/26/2022 19:16	11.95	0.12	6/27/2022 21:00	11.57	-0.46	6/26/2022 19:03	11.65	-0.19	6/26/2022 20:25	-0.15
6/26/2022 19:17	11.95	0.00	6/27/2022 21:01	11.59	-0.48	6/26/2022 19:04	11.69	-0.22	6/26/2022 20:26	-0.14
6/26/2022 19:18	11.97	0.02	6/27/2022 21:02	11.56	-0.49	6/26/2022 19:05	11.66	-0.24	6/26/2022 20:27	-0.15
6/26/2022 19:19	11.96	0.03	6/27/2022 21:03	11.59	-0.41	6/26/2022 19:06	11.69	-0.21	6/26/2022 20:28	-0.15
6/26/2022 19:20	11.98	0.04	6/27/2022 21:04	11.60	-0.43	6/26/2022 19:07	11.66	-0.21	6/26/2022 20:29	-0.15
6/26/2022 19:21	11.94	-0.02	6/27/2022 21:05	11.61	-0.38	6/26/2022 19:08	11.68	-0.23	6/26/2022 20:30	-0.20
6/26/2022 19:22	11.94	0.08	6/27/2022 21:06	11.59	-0.39	6/26/2022 19:09	11.67	-0.18	6/26/2022 20:31	-0.15
6/26/2022 19:23	11.97	0.11	6/27/2022 21:07	11.59	-0.42	6/26/2022 19:10	11.64	-0.22	6/26/2022 20:32	-0.16
6/26/2022 19:24	11.95	-0.03	6/27/2022 21:08	11.61	-0.42	6/26/2022 19:11	11.64	-0.19	6/26/2022 20:33	-0.19
6/26/2022 19:25	11.95	0.09	6/27/2022 21:09	11.59	-0.45	6/26/2022 19:12	11.66	-0.24	6/26/2022 20:34	-0.18
6/26/2022 19:26	11.95	0.08	6/27/2022 21:10	11.58	-0.47	6/26/2022 19:13	11.64	-0.21	6/26/2022 20:35	-0.12
6/26/2022 19:27	11.99	0.01	6/27/2022 21:11	11.59	-0.45	6/26/2022 19:14	11.68	-0.21	6/26/2022 20:36	-0.16
6/26/2022 19:28	11.97	0.02	6/27/2022 21:12	11.58	-0.54	6/26/2022 19:15	11.69	-0.17	6/26/2022 20:37	-0.12
6/26/2022 19:29	11.96	0.07	6/27/2022 21:13	11.59	-0.52	6/26/2022 19:16	11.65	-0.19	6/26/2022 20:38	-0.12
6/26/2022 19:30	11.97	0.07	6/27/2022 21:14	11.58	-0.52	6/26/2022 19:17	11.67	-0.17	6/26/2022 20:39	-0.14
6/26/2022 19:31	11.97	0.09	6/27/2022 21:15	11.58	-0.49	6/26/2022 19:18	11.67	-0.22	6/26/2022 20:40	-0.17
6/26/2022 19:32	11.96	0.06	6/27/2022 21:16	11.58	-0.54	6/26/2022 19:19	11.66	-0.19	6/26/2022 20:41	-0.10
6/26/2022 19:33	11.97	0.09	6/27/2022 21:17	11.58	-0.43	6/26/2022 19:20	11.68	-0.19	6/26/2022 20:42	-0.12
6/26/2022 19:34	11.96	0.03	6/27/2022 21:18	11.61	-0.49	6/26/2022 19:21	11.67	-0.20	6/26/2022 20:43	-0.18
6/26/2022 19:35	11.97	0.00	6/27/2022 21:19	11.60	-0.48	6/26/2022 19:22	11.66	-0.22	6/26/2022 20:44	-0.13
6/26/2022 19:36	11.97	0.06	6/27/2022 21:20	11.61	-0.48	6/26/2022 19:23	11.66	-0.20	6/26/2022 20:45	-0.09
6/26/2022 19:37	11.99	0.08	6/27/2022 21:21	11.59	-0.46	6/26/2022 19:24	11.68	-0.20	6/26/2022 20:46	-0.08
6/26/2022 19:38	11.99	0.06	6/27/2022 21:22	11.60	-0.45	6/26/2022 19:25	11.66	-0.20	6/26/2022 20:47	-0.11
6/26/2022 19:39	12.01	0.07	6/27/2022 21:23	11.60	-0.37	6/26/2022 19:26	11.67	-0.18	6/26/2022 20:48	-0.14
6/26/2022 19:40	11.98	0.12	6/27/2022 21:24	11.58	-0.41	6/26/2022 19:27	11.70	-0.19	6/26/2022 20:49	-0.10
6/26/2022 19:41	11.97	0.15	6/27/2022 21:25	11.59	-0.44	6/26/2022 19:28	11.66	-0.20	6/26/2022 20:50	-0.15
6/26/2022 19:42	11.95	0.13	6/27/2022 21:26	11.58	-0.44	6/26/2022 19:29	11.70	-0.20	6/26/2022 20:51	-0.16
6/26/2022 19:43	11.96	0.07	6/27/2022 21:27	11.61	-0.42	6/26/2022 19:30	11.66	-0.20	6/26/2022 20:52	-0.13
6/26/2022 19:44	11.95	0.02	6/27/2022 21:28	11.59	-0.51	6/26/2022 19:31	11.67	-0.17	6/26/2022 20:53	-0.10
6/26/2022 19:45	11.95	-0.02	6/27/2022 21:29	11.60	-0.45	6/26/2022 19:32	11.66	-0.25	6/26/2022 20:54	-0.14
6/26/2022 19:46	11.96	0.03	6/27/2022 21:30	11.57	-0.48	6/26/2022 19:33	11.66	-0.15	6/26/2022 20:55	-0.12
6/26/2022 19:47	11.95	0.11	6/27/2022 21:31	11.58	-0.45	6/26/2022 19:34	11.67	-0.22	6/26/2022 20:56	-0.15
6/26/2022 19:48	11.95	0.10	6/27/2022 21:32	11.61	-0.46	6/26/2022 19:35	11.67	-0.19	6/26/2022 20:57	-0.13
6/26/2022 19:49	11.94	0.03	6/27/2022 21:33	11.59	-0.52	6/26/2022 19:36	11.65	-0.24	6/26/2022 20:58	-0.18
6/26/2022 19:50	11.94	0.02	6/27/2022 21:34	11.59	-0.44	6/26/2022 19:37	11.67	-0.20	6/26/2022 20:59	-0.13
6/26/2022 19:51	11.94	0.12	6/27/2022 21:35	11.60	-0.42	6/26/2022 19:38	11.66	-0.21	6/26/2022 21:00	-0.11
6/26/2022 19:52	11.92	0.14	6/27/2022 21:36	11.60	-0.51	6/26/2022 19:39	11.68	-0.20	6/26/2022 21:01	-0.17
6/26/2022 19:53	11.96	0.06	6/27/2022 21:37	11.57	-0.44	6/26/2022 19:40	11.65	-0.18	6/26/2022 21:02	-0.12
6/26/2022 19:54	11.94	0.17	6/27/2022 21:38	11.57	-0.39	6/26/2022 19:41	11.67	-0.19	6/26/2022 21:03	-0.16
6/26/2022 19:55	11.92	-0.02	6/27/2022 21:39	11.59	-0.45	6/26/2022 19:42	11.67	-0.21	6/26/2022 21:04	-0.12
6/26/2022 19:56	11.96	0.12	6/27/2022 21:40	11.61	-0.34	6/26/2022 19:43	11.66	-0.20	6/26/2022 21:05	-0.11
6/26/2022 19:57	11.97	0.03	6/27/2022 21:41	11.57	-0.41	6/26/2022 19:44	11.67	-0.25	6/26/2022 21:06	-0.10
6/26/2022 19:58	11.95	0.03	6/27/2022 21:42	11.59	-0.48	6/26/2022 19:45	11.66	-0.20	6/26/2022 21:07	-0.13
6/26/2022 19:59	11.94	0.05	6/27/2022 21:43	11.59	-0.48	6/26/2022 19:46	11.67	-0.23	6/26/2022 21:08	-0.11
6/26/2022 20:00	11.97	0.11	6/27/2022 21:44	11.60	-0.47	6/26/2022 19:47	11.66	-0.23	6/26/2022 21:09	-0.10
6/26/2022 20:01	11.97	0.01	6/27/2022 21:45	11.59	-0.53	6/26/2022 19:48	11.66	-0.21	6/26/2022 21:10	-0.14
6/26/2022 20:02	11.95	0.13	6/27/2022 21:46	11.59	-0.45	6/26/2022 19:49	11.66	-0.20	6/26/2022 21:11	-0.19
6/26/2022 20:03	11.95	0.07	6/27/2022 21:47	11.57	-0.44	6/26/2022 19:50	11.67	-0.17	6/26/2022 21:12	-0.17
6/26/2022 20:04	11.93	0.09	6/27/2022 21:48	11.59	-0.47	6/26/2022 19:51	11.69	-0.21	6/26/2022 21:13	-0.09
6/26/2022 20:05	11.95	0.03	6/27/2022 21:49	11.58	-0.43	6/26/2022 19:52	11.66	-0.21	6/26/2022 21:14	-0.15
6/26/2022 20:06	11.97	0.13	6/27/2022 21:50	11.59	-0.38	6/26/2022 19:53	11.66	-0.21	6/26/2022 21:15	-0.11
6/26/2022 20:07	11.98	0.18	6/27/2022 21:51	11.55	-0.41	6/26/2022 19:54	11.66	-0.19	6/26/2022 21:16	-0.11
6/26/2022 20:08	11.98	0.09	6/27/2022 21:52	11.60	-0.36	6/26/2022 19:55	11.65	-0.20	6/26/2022 21:17	-0.17
6/26/2022 20:09	11.96	0.02	6/27/2022 21:53	11.57	-0.40	6/26/2022 19:56	11.67	-0.20	6/26/2022 21:18	-0.12
6/26/2022 20:10	11.95	0.09	6/27/2022 21:54	11.58	-0.47	6/26/2022 19:57	11.67	-0.20	6/26/2022 21:19	-0.16
6/26/2022 20:11	11.97	0.02	6/27/2022 21:55	11.57	-0.48	6/26/2022 19:58	11.68	-0.23	6/26/2022 21:20	-0.13
6/26/2022 20:12	11.98	0.17	6/27/2022 21:56	11.59	-0.38	6/26/2022 19:59	11.66	-0.18	6/26/2022 21:21	-0.11
6/26/2022 20:13	11.96	0.11	6/27/2022 21:57	11.58	-0.45	6/26/2022 20:00	11.68	-0.22	6/26/2022 21:22	-0.19
6/26/2022 20:14	11.96	0.05	6/27/2022 21:58	11.58	-0.56	6/26/2022 20:01	11.65	-0.20	6/26/2022 21:23	-0.13
6/26/2022 20:15	11.96	0.13	6/27/2022 21:59	11.60	-0.47	6/26/2022 20:02	11.67	-0.20	6/26/2022 21:24	-0.10
6/26/2022 20:16	11.95	0.04	6/27/2022 22:00	11.59	-0.43	6/26/2022 20:03	11.67	-0.20	6/26/2022 21:25	-0.12
6/26/2022 20:17	11.93	0.09	6/27/2022 22:01	11.58	-0.41	6/26/2022 20:04	11.67	-0.20	6/26/2022 21:26	-0.16
6/26/2022 20:18	11.96	0.05	6/27/2022 22:02	11.60	-0.45	6/26/2022 20:05	11.68	-0.23	6/26/2022 21:27	-0.17
6/26/2022 20:19	11.97	0.09	6/27/2022 22:03	11.60	-0.38	6/26/2022 20:06	11.67	-0.19	6/26/2022 21:28	-0.15
6/26/2022 20:20	11.97	0.08	6/27/2022 22:04	11.58	-0.49	6/26/2022 20:07	11.66	-0.17	6/26/2022 21:29	-0.12
6/26/2022 20:21	11.97	0.17	6/27/2022 22:05	11.58	-0.50	6/26/2022 20:08	11.68	-0.24	6/26/2022 21:30	-0.13
6/26/2022 20:22	11.95	0.07	6/27/2022 22:06	11.59	-0.46	6/26/2022 20:09	11.68	-0.20	6/26/2022 21:31	-0.12

6/26/2022 20:23	11.97	0.01	6/27/2022 22:07	11.61	-0.48	6/26/2022 20:10	11.69	-0.17	6/26/2022 21:32	-0.11
6/26/2022 20:24	11.93	0.08	6/27/2022 22:08	11.57	-0.51	6/26/2022 20:11	11.67	-0.20	6/26/2022 21:33	-0.12
6/26/2022 20:25	11.95	0.01	6/27/2022 22:09	11.59	-0.41	6/26/2022 20:12	11.68	-0.18	6/26/2022 21:34	-0.14
6/26/2022 20:26	11.94	0.02	6/27/2022 22:10	11.59	-0.46	6/26/2022 20:13	11.67	-0.21	6/26/2022 21:35	-0.09
6/26/2022 20:27	11.93	0.08	6/27/2022 22:11	11.59	-0.41	6/26/2022 20:14	11.68	-0.16	6/26/2022 21:36	-0.12
6/26/2022 20:28	11.94	0.00	6/27/2022 22:12	11.59	-0.45	6/26/2022 20:15	11.67	-0.19	6/26/2022 21:37	-0.12
6/26/2022 20:29	11.97	0.00	6/27/2022 22:13	11.58	-0.45	6/26/2022 20:16	11.67	-0.23	6/26/2022 21:38	-0.17
6/26/2022 20:30	11.96	0.12	6/27/2022 22:14	11.57	-0.46	6/26/2022 20:17	11.67	-0.18	6/26/2022 21:39	-0.09
6/26/2022 20:31	11.95	0.04	6/27/2022 22:15	11.60	-0.44	6/26/2022 20:18	11.66	-0.23	6/26/2022 21:40	-0.15
6/26/2022 20:32	11.96	0.03	6/27/2022 22:16	11.57	-0.43	6/26/2022 20:19	11.67	-0.15	6/26/2022 21:41	-0.17
6/26/2022 20:33	11.95	0.04	6/27/2022 22:17	11.59	-0.44	6/26/2022 20:20	11.67	-0.16	6/26/2022 21:42	-0.14
6/26/2022 20:34	11.95	0.03	6/27/2022 22:18	11.60	-0.46	6/26/2022 20:21	11.67	-0.19	6/26/2022 21:43	-0.12
6/26/2022 20:35	11.98	0.15	6/27/2022 22:19	11.59	-0.41	6/26/2022 20:22	11.68	-0.21	6/26/2022 21:44	-0.14
6/26/2022 20:36	11.94	0.08	6/27/2022 22:20	11.61	-0.48	6/26/2022 20:23	11.69	-0.21	6/26/2022 21:45	-0.19
6/26/2022 20:37	11.97	0.15	6/27/2022 22:21	11.57	-0.47	6/26/2022 20:24	11.68	-0.19	6/26/2022 21:46	-0.10
6/26/2022 20:38	11.97	0.03	6/27/2022 22:22	11.60	-0.44	6/26/2022 20:25	11.68	-0.20	6/26/2022 21:47	-0.12
6/26/2022 20:39	11.97	0.08	6/27/2022 22:23	11.61	-0.46	6/26/2022 20:26	11.66	-0.20	6/26/2022 21:48	-0.13
6/26/2022 20:40	11.99	0.05	6/27/2022 22:24	11.58	-0.52	6/26/2022 20:27	11.66	-0.19	6/26/2022 21:49	-0.15
6/26/2022 20:41	11.98	-0.01	6/27/2022 22:25	11.59	-0.46	6/26/2022 20:28	11.67	-0.19	6/26/2022 21:50	-0.14
6/26/2022 20:42	11.96	0.12	6/27/2022 22:26	11.59	-0.47	6/26/2022 20:29	11.65	-0.22	6/26/2022 21:51	-0.13
6/26/2022 20:43	11.94	0.07	6/27/2022 22:27	11.59	-0.46	6/26/2022 20:30	11.68	-0.19	6/26/2022 21:52	-0.16
6/26/2022 20:44	11.96	0.07	6/27/2022 22:28	11.59	-0.47	6/26/2022 20:31	11.65	-0.17	6/26/2022 21:53	-0.11
6/26/2022 20:45	11.95	0.05	6/27/2022 22:29	11.60	-0.44	6/26/2022 20:32	11.65	-0.20	6/26/2022 21:54	-0.14
6/26/2022 20:46	11.98	0.08	6/27/2022 22:30	11.60	-0.43	6/26/2022 20:33	11.66	-0.21	6/26/2022 21:55	-0.18
6/26/2022 20:47	11.97	-0.02	6/27/2022 22:31	11.58	-0.54	6/26/2022 20:34	11.67	-0.15	6/26/2022 21:56	-0.15
6/26/2022 20:48	11.97	0.05	6/27/2022 22:32	11.58	-0.48	6/26/2022 20:35	11.67	-0.20	6/26/2022 21:57	-0.14
6/26/2022 20:49	11.96	0.05	6/27/2022 22:33	11.59	-0.45	6/26/2022 20:36	11.68	-0.23	6/26/2022 21:58	-0.15
6/26/2022 20:50	11.97	0.11	6/27/2022 22:34	11.59	-0.52	6/26/2022 20:37	11.67	-0.19	6/26/2022 21:59	-0.14
6/26/2022 20:51	11.97	0.07	6/27/2022 22:35	11.60	-0.43	6/26/2022 20:38	11.67	-0.21	6/26/2022 22:00	-0.15
6/26/2022 20:52	11.99	0.07	6/27/2022 22:36	11.61	-0.40	6/26/2022 20:39	11.68	-0.20	6/26/2022 22:01	-0.13
6/26/2022 20:53	11.97	0.02	6/27/2022 22:37	11.58	-0.50	6/26/2022 20:40	11.66	-0.18	6/26/2022 22:02	-0.12
6/26/2022 20:54	11.98	0.02	6/27/2022 22:38	11.59	-0.49	6/26/2022 20:41	11.69	-0.23	6/26/2022 22:03	-0.16
6/26/2022 20:55	11.98	0.09	6/27/2022 22:39	11.59	-0.45	6/26/2022 20:42	11.66	-0.18	6/26/2022 22:04	-0.12
6/26/2022 20:56	11.96	0.09	6/27/2022 22:40	11.58	-0.53	6/26/2022 20:43	11.66	-0.22	6/26/2022 22:05	-0.09
6/26/2022 20:57	11.97	0.03	6/27/2022 22:41	11.61	-0.52	6/26/2022 20:44	11.69	-0.17	6/26/2022 22:06	-0.18
6/26/2022 20:58	11.96	0.10	6/27/2022 22:42	11.60	-0.45	6/26/2022 20:45	11.69	-0.17	6/26/2022 22:07	-0.15
6/26/2022 20:59	11.96	0.00	6/27/2022 22:43	11.59	-0.45	6/26/2022 20:46	11.65	-0.16	6/26/2022 22:08	-0.13
6/26/2022 21:00	11.95	0.02	6/27/2022 22:44	11.59	-0.52	6/26/2022 20:47	11.66	-0.18	6/26/2022 22:09	-0.17
6/26/2022 21:01	11.95	0.12	6/27/2022 22:45	11.58	-0.49	6/26/2022 20:48	11.67	-0.19	6/26/2022 22:10	-0.15
6/26/2022 21:02	11.95	0.06	6/27/2022 22:46	11.60	-0.41	6/26/2022 20:49	11.69	-0.24	6/26/2022 22:11	-0.17
6/26/2022 21:03	11.98	0.04	6/27/2022 22:47	11.57	-0.39	6/26/2022 20:50	11.68	-0.21	6/26/2022 22:12	-0.13
6/26/2022 21:04	11.97	0.04	6/27/2022 22:48	11.56	-0.49	6/26/2022 20:51	11.67	-0.18	6/26/2022 22:13	-0.20
6/26/2022 21:05	11.96	0.03	6/27/2022 22:49	11.59	-0.55	6/26/2022 20:52	11.67	-0.19	6/26/2022 22:14	-0.15
6/26/2022 21:06	11.97	0.08	6/27/2022 22:50	11.58	-0.53	6/26/2022 20:53	11.70	-0.19	6/26/2022 22:15	-0.16
6/26/2022 21:07	11.96	0.09	6/27/2022 22:51	11.58	-0.43	6/26/2022 20:54	11.67	-0.22	6/26/2022 22:16	-0.18
6/26/2022 21:08	11.96	0.01	6/27/2022 22:52	11.59	-0.49	6/26/2022 20:55	11.69	-0.18	6/26/2022 22:17	-0.17
6/26/2022 21:09	11.98	0.08	6/27/2022 22:53	11.60	-0.39	6/26/2022 20:56	11.65	-0.22	6/26/2022 22:18	-0.16
6/26/2022 21:10	11.94	0.08	6/27/2022 22:54	11.59	-0.46	6/26/2022 20:57	11.67	-0.21	6/26/2022 22:19	-0.18
6/26/2022 21:11	11.94	0.06	6/27/2022 22:55	11.58	-0.46	6/26/2022 20:58	11.68	-0.23	6/26/2022 22:20	-0.17
6/26/2022 21:12	11.95	0.08	6/27/2022 22:56	11.55	-0.53	6/26/2022 20:59	11.68	-0.19	6/26/2022 22:21	-0.15
6/26/2022 21:13	11.97	0.08	6/27/2022 22:57	11.57	-0.40	6/26/2022 21:00	11.66	-0.22	6/26/2022 22:22	-0.20
6/26/2022 21:14	11.95	0.04	6/27/2022 22:58	11.58	-0.47	6/26/2022 21:01	11.67	-0.17	6/26/2022 22:23	-0.17
6/26/2022 21:15	11.96	-0.01	6/27/2022 22:59	11.60	-0.44	6/26/2022 21:02	11.68	-0.22	6/26/2022 22:24	-0.13
6/26/2022 21:16	11.95	0.09	6/27/2022 23:00	11.57	-0.45	6/26/2022 21:03	11.67	-0.20	6/26/2022 22:25	-0.22
6/26/2022 21:17	11.97	0.03	6/27/2022 23:01	11.58	-0.40	6/26/2022 21:04	11.67	-0.21	6/26/2022 22:26	-0.14
6/26/2022 21:18	11.99	0.04	6/27/2022 23:02	11.57	-0.43	6/26/2022 21:05	11.67	-0.23	6/26/2022 22:27	-0.13
6/26/2022 21:19	11.95	0.04	6/27/2022 23:03	11.57	-0.48	6/26/2022 21:06	11.65	-0.24	6/26/2022 22:28	-0.19
6/26/2022 21:20	11.99	0.03	6/27/2022 23:04	11.59	-0.55	6/26/2022 21:07	11.69	-0.20	6/26/2022 22:29	-0.14
6/26/2022 21:21	11.95	0.09	6/27/2022 23:05	11.60	-0.48	6/26/2022 21:08	11.69	-0.23	6/26/2022 22:30	-0.14
6/26/2022 21:22	11.98	0.10	6/27/2022 23:06	11.60	-0.52	6/26/2022 21:09	11.66	-0.17	6/26/2022 22:31	-0.16
6/26/2022 21:23	11.98	0.08	6/27/2022 23:07	11.55	-0.46	6/26/2022 21:10	11.68	-0.22	6/26/2022 22:32	-0.13
6/26/2022 21:24	11.96	0.14	6/27/2022 23:08	11.57	-0.49	6/26/2022 21:11	11.66	-0.18	6/26/2022 22:33	-0.08
6/26/2022 21:25	11.99	0.08	6/27/2022 23:09	11.57	-0.42	6/26/2022 21:12	11.69	-0.21	6/26/2022 22:34	-0.16
6/26/2022 21:26	11.99	0.09	6/27/2022 23:10	11.57	-0.49	6/26/2022 21:13	11.67	-0.24	6/26/2022 22:35	-0.14
6/26/2022 21:27	11.96	0.08	6/27/2022 23:11	11.58	-0.48	6/26/2022 21:14	11.67	-0.20	6/26/2022 22:36	-0.14
6/26/2022 21:28	11.97	0.08	6/27/2022 23:12	11.60	-0.49	6/26/2022 21:15	11.68	-0.18	6/26/2022 22:37	-0.14
6/26/2022 21:29	11.99	0.09	6/27/2022 23:13	11.58	-0.44	6/26/2022 21:16	11.68	-0.19	6/26/2022 22:38	-0.18
6/26/2022 21:30	11.99	0.13	6/27/2022 23:14	11.61	-0.45	6/26/2022 21:17	11.69	-0.20	6/26/2022 22:39	-0.11
6/26/2022 21:31	11.98	-0.02	6/27/2022 23:15	11.60	-0.45	6/26/2022 21:18	11.66	-0.20	6/26/2022 22:40	-0.16
6/26/2022 21:32	11.96	0.04	6/27/2022 23:16	11.57	-0.41	6/26/2022 21:19	11.66	-0.19	6/26/2022 22:41	-0.16
6/26/2022 21:33	11.98	0.07	6/27/2022 23:17	11.57	-0.42	6/26/2022 21:20	11.66	-0.22	6/26/2022 22:42	-0.18
6/26/2022 21:34	11.97	0.07	6/27/2022 23:18	11.59	-0.48	6/26/2022 21:21	11.65	-0.23	6/26/2022 22:43	-0.14
6/26/2022 21:35	11.97	0.04	6/27/2022 23:19	11.57	-0.53	6/26/2022 21:22	11.69	-0.17	6/26/2022 22:44	-0.13
6/26/2022 21:36	11.96	0.00	6/27/2022 23:20	11.59	-0.51	6/26/2022 21:23	11.66	-0.20	6/26/2022 22:45	-0.15
6/26/2022 21:37	11.96	0.09	6/27/2022 23:21	11.59	-0.39	6/26/2022 21:24	11.64	-0.19	6/26/2022 22:46	-0.15
6/26/2022 21:38	11.94	0.07	6/27/2022 23:22	11.59	-0.47	6/26/2022 21:25	11.67	-0.23	6/26/2022 22:47	-0.13
6/26/2022 21:39	11.96	0.02	6/27/2022 23:23	11.58	-0.43	6/26/2022 21:26	11.67	-0.22	6/26/2022 22:48	-0.20
6/26/2022 21:40	11.98	0.11	6/27/2022 23:24	11.58	-0.44	6/26/2022 21:27	11.69	-0.21	6/26/2022 22:49	-0.14
6/26/2022 21:41	11.95	0.05	6/27/2022 23:25	11.61	-0.43	6/26/2022 21:28	11.67	-0.20	6/26/2022 22:50	-0.15
6/26/2022 21:42	11.95	0.05	6/27/2022 23:26	11.59	-0.53	6/26/2022 21:29	11.67	-0.21	6/26/2022 22:51	-0.10
6/26/2022 21:43	11.94	0.11	6/27/2022 23:27	11.59	-0.44	6/26/2022 21:30	11.69	-0.18	6/26/2022 22:52	-0.11
6/26/2022 21:44	11.94	0.02	6/27/2022 23:28	11.59	-0.46	6/26/2022 21:31	11.66	-0.21	6/26/2022 22:53	-0.16
6/26/2022 21:45	11.94	-0.02	6/27/2022 23:29	11.59	-0.41	6/26/2022 21:32	11.67	-0.19	6/26/2022 22:54	-0.11
6/26/2022 21:46	11.95	0.07	6/27/2022 23:30	11.57	-0.42	6/26/2022 21:33	11.66	-0.21	6/26/2022 22:55	-0.10
6/26/2022 21:47	11.95	0.09	6/27/2022 23:31	11.59	-0.45	6/26/2022 21:34	11.64	-0.20	6/26/2022 22:56	-0.11
6/26/2022 21:48	11.95	0.06	6/27/2022 23:32	11.57	-0.46	6/26/2022 21:35	11.67	-0.19	6/26/2022 22:57	-0.17
6/26/2022 21:49	11.98	0.12	6/27/2022 23:33	11.60	-0.43	6/26/2022 21:36	11.66	-0.21	6/26/2022 22:58	-0.14
6/26/2022 21:50	11.98	0.01	6/27/2022 23:34	11.58	-0.44	6/26/2022 21:37	11.65	-0.21	6/26/2022 22:59	-0.14

6/26/2022 21:51	11.98	0.09	6/27/2022 23:35	11.58	-0.44	6/26/2022 21:38	11.68	-0.20	6/26/2022 23:00	-0.17
6/26/2022 21:52	11.96	-0.01	6/27/2022 23:36	11.58	-0.42	6/26/2022 21:39	11.66	-0.21	6/26/2022 23:01	-0.20
6/26/2022 21:53	11.97	0.06	6/27/2022 23:37	11.60	-0.45	6/26/2022 21:40	11.68	-0.19	6/26/2022 23:02	-0.16
6/26/2022 21:54	11.96	0.01	6/27/2022 23:38	11.58	-0.46	6/26/2022 21:41	11.68	-0.18	6/26/2022 23:03	-0.11
6/26/2022 21:55	11.92	0.04	6/27/2022 23:39	11.58	-0.46	6/26/2022 21:42	11.66	-0.24	6/26/2022 23:04	-0.13
6/26/2022 21:56	11.95	0.10	6/27/2022 23:40	11.59	-0.41	6/26/2022 21:43	11.68	-0.22	6/26/2022 23:05	-0.15
6/26/2022 21:57	11.95	0.04	6/27/2022 23:41	11.59	-0.37	6/26/2022 21:44	11.68	-0.19	6/26/2022 23:06	-0.14
6/26/2022 21:58	11.96	0.13	6/27/2022 23:42	11.62	-0.44	6/26/2022 21:45	11.68	-0.18	6/26/2022 23:07	-0.12
6/26/2022 21:59	11.93	0.08	6/27/2022 23:43	11.58	-0.49	6/26/2022 21:46	11.66	-0.22	6/26/2022 23:08	-0.18
6/26/2022 22:00	11.97	0.03	6/27/2022 23:44	11.57	-0.44	6/26/2022 21:47	11.65	-0.24	6/26/2022 23:09	-0.16
6/26/2022 22:01	11.96	0.10	6/27/2022 23:45	11.60	-0.42	6/26/2022 21:48	11.66	-0.21	6/26/2022 23:10	-0.12
6/26/2022 22:02	11.97	0.07	6/27/2022 23:46	11.57	-0.48	6/26/2022 21:49	11.67	-0.21	6/26/2022 23:11	-0.17
6/26/2022 22:03	11.93	0.13	6/27/2022 23:47	11.60	-0.41	6/26/2022 21:50	11.68	-0.18	6/26/2022 23:12	-0.12
6/26/2022 22:04	11.96	0.01	6/27/2022 23:48	11.59	-0.49	6/26/2022 21:51	11.67	-0.21	6/26/2022 23:13	-0.14
6/26/2022 22:05	11.97	0.05	6/27/2022 23:49	11.61	-0.46	6/26/2022 21:52	11.70	-0.22	6/26/2022 23:14	-0.17
6/26/2022 22:06	11.97	0.06	6/27/2022 23:50	11.57	-0.49	6/26/2022 21:53	11.67	-0.21	6/26/2022 23:15	-0.16
6/26/2022 22:07	11.98	-0.04	6/27/2022 23:51	11.59	-0.44	6/26/2022 21:54	11.67	-0.23	6/26/2022 23:16	-0.13
6/26/2022 22:08	11.96	-0.01	6/27/2022 23:52	11.60	-0.55	6/26/2022 21:55	11.67	-0.21	6/26/2022 23:17	-0.13
6/26/2022 22:09	11.94	0.11	6/27/2022 23:53	11.58	-0.43	6/26/2022 21:56	11.64	-0.21	6/26/2022 23:18	-0.16
6/26/2022 22:10	11.96	0.01	6/27/2022 23:54	11.58	-0.48	6/26/2022 21:57	11.66	-0.17	6/26/2022 23:19	-0.19
6/26/2022 22:11	11.94	0.07	6/27/2022 23:55	11.60	-0.44	6/26/2022 21:58	11.67	-0.20	6/26/2022 23:20	-0.14
6/26/2022 22:12	11.93	0.05	6/27/2022 23:56	11.59	-0.37	6/26/2022 21:59	11.66	-0.17	6/26/2022 23:21	-0.12
6/26/2022 22:13	11.95	0.07	6/27/2022 23:57	11.59	-0.51	6/26/2022 22:00	11.67	-0.20	6/26/2022 23:22	-0.17
6/26/2022 22:14	11.92	0.13	6/27/2022 23:58	11.58	-0.50	6/26/2022 22:01	11.66	-0.20	6/26/2022 23:23	-0.17
6/26/2022 22:15	11.96	0.07	6/27/2022 23:59	11.58	-0.46	6/26/2022 22:02	11.66	-0.21	6/26/2022 23:24	-0.16
6/26/2022 22:16	11.95	0.04	6/28/2022 0:00	11.59	-0.51	6/26/2022 22:03	11.68	-0.24	6/26/2022 23:25	-0.15
6/26/2022 22:17	11.93	0.03	6/28/2022 0:01	11.59	-0.45	6/26/2022 22:04	11.66	-0.20	6/26/2022 23:26	-0.13
6/26/2022 22:18	11.97	0.13	6/28/2022 0:02	11.61	-0.52	6/26/2022 22:05	11.66	-0.20	6/26/2022 23:27	-0.10
6/26/2022 22:19	11.95	0.09	6/28/2022 0:03	11.59	-0.41	6/26/2022 22:06	11.69	-0.20	6/26/2022 23:28	-0.13
6/26/2022 22:20	11.98	0.13	6/28/2022 0:04	11.58	-0.47	6/26/2022 22:07	11.67	-0.19	6/26/2022 23:29	-0.14
6/26/2022 22:21	11.96	0.08	6/28/2022 0:05	11.58	-0.41	6/26/2022 22:08	11.66	-0.16	6/26/2022 23:30	-0.12
6/26/2022 22:22	11.97	0.00	6/28/2022 0:06	11.59	-0.40	6/26/2022 22:09	11.69	-0.18	6/26/2022 23:31	-0.10
6/26/2022 22:23	11.97	0.05	6/28/2022 0:07	11.57	-0.42	6/26/2022 22:10	11.68	-0.18	6/26/2022 23:32	-0.15
6/26/2022 22:24	11.95	0.09	6/28/2022 0:08	11.58	-0.52	6/26/2022 22:11	11.65	-0.20	6/26/2022 23:33	-0.15
6/26/2022 22:25	11.96	0.03	6/28/2022 0:09	11.60	-0.46	6/26/2022 22:12	11.66	-0.19	6/26/2022 23:34	-0.16
6/26/2022 22:26	11.98	0.08	6/28/2022 0:10	11.58	-0.48	6/26/2022 22:13	11.66	-0.20	6/26/2022 23:35	-0.18
6/26/2022 22:27	11.94	0.05	6/28/2022 0:11	11.59	-0.42	6/26/2022 22:14	11.67	-0.21	6/26/2022 23:36	-0.15
6/26/2022 22:28	11.97	0.01	6/28/2022 0:12	11.57	-0.44	6/26/2022 22:15	11.64	-0.21	6/26/2022 23:37	-0.11
6/26/2022 22:29	11.98	0.18	6/28/2022 0:13	11.58	-0.46	6/26/2022 22:16	11.68	-0.17	6/26/2022 23:38	-0.19
6/26/2022 22:30	11.97	0.05	6/28/2022 0:14	11.58	-0.49	6/26/2022 22:17	11.67	-0.22	6/26/2022 23:39	-0.17
6/26/2022 22:31	11.98	0.16	6/28/2022 0:15	11.59	-0.53	6/26/2022 22:18	11.67	-0.17	6/26/2022 23:40	-0.15
6/26/2022 22:32	11.97	0.07	6/28/2022 0:16	11.56	-0.46	6/26/2022 22:19	11.68	-0.22	6/26/2022 23:41	-0.17
6/26/2022 22:33	11.97	0.09	6/28/2022 0:17	11.62	-0.43	6/26/2022 22:20	11.68	-0.20	6/26/2022 23:42	-0.18
6/26/2022 22:34	12.00	0.06	6/28/2022 0:18	11.58	-0.49	6/26/2022 22:21	11.68	-0.18	6/26/2022 23:43	-0.17
6/26/2022 22:35	12.00	0.09	6/28/2022 0:19	11.62	-0.38	6/26/2022 22:22	11.64	-0.17	6/26/2022 23:44	-0.11
6/26/2022 22:36	11.99	0.08	6/28/2022 0:20	11.61	-0.51	6/26/2022 22:23	11.66	-0.23	6/26/2022 23:45	-0.18
6/26/2022 22:37	11.98	0.05	6/28/2022 0:21	11.58	-0.46	6/26/2022 22:24	11.66	-0.19	6/26/2022 23:46	-0.15
6/26/2022 22:38	11.96	0.06	6/28/2022 0:22	11.60	-0.40	6/26/2022 22:25	11.67	-0.17	6/26/2022 23:47	-0.12
6/26/2022 22:39	11.96	0.12	6/28/2022 0:23	11.58	-0.47	6/26/2022 22:26	11.66	-0.24	6/26/2022 23:48	-0.20
6/26/2022 22:40	11.95	0.06	6/28/2022 0:24	11.59	-0.46	6/26/2022 22:27	11.66	-0.19	6/26/2022 23:49	-0.11
6/26/2022 22:41	11.93	0.03	6/28/2022 0:25	11.58	-0.38	6/26/2022 22:28	11.66	-0.20	6/26/2022 23:50	-0.14
6/26/2022 22:42	11.95	0.07	6/28/2022 0:26	11.60	-0.39	6/26/2022 22:29	11.67	-0.24	6/26/2022 23:51	-0.12
6/26/2022 22:43	11.98	0.08	6/28/2022 0:27	11.61	-0.42	6/26/2022 22:30	11.66	-0.20	6/26/2022 23:52	-0.15
6/26/2022 22:44	11.97	0.06	6/28/2022 0:28	11.58	-0.46	6/26/2022 22:31	11.66	-0.19	6/26/2022 23:53	-0.12
6/26/2022 22:45	11.95	0.05	6/28/2022 0:29	11.59	-0.41	6/26/2022 22:32	11.68	-0.20	6/26/2022 23:54	-0.17
6/26/2022 22:46	11.97	0.06	6/28/2022 0:30	11.57	-0.52	6/26/2022 22:33	11.66	-0.21	6/26/2022 23:55	-0.16
6/26/2022 22:47	11.96	0.11	6/28/2022 0:31	11.59	-0.42	6/26/2022 22:34	11.67	-0.19	6/26/2022 23:56	-0.11
6/26/2022 22:48	11.95	0.06	6/28/2022 0:32	11.61	-0.43	6/26/2022 22:35	11.64	-0.21	6/26/2022 23:57	-0.09
6/26/2022 22:49	11.96	0.08	6/28/2022 0:33	11.61	-0.44	6/26/2022 22:36	11.66	-0.22	6/26/2022 23:58	-0.17
6/26/2022 22:50	11.95	0.08	6/28/2022 0:34	11.59	-0.41	6/26/2022 22:37	11.66	-0.18	6/26/2022 23:59	-0.12
6/26/2022 22:51	11.96	0.12	6/28/2022 0:35	11.58	-0.44	6/26/2022 22:38	11.67	-0.19	6/27/2022 0:00	-0.11
6/26/2022 22:52	11.97	0.07	6/28/2022 0:36	11.57	-0.41	6/26/2022 22:39	11.68	-0.17	6/27/2022 0:01	-0.14
6/26/2022 22:53	11.95	0.07	6/28/2022 0:37	11.60	-0.46	6/26/2022 22:40	11.67	-0.22	6/27/2022 0:02	-0.14
6/26/2022 22:54	11.99	0.08	6/28/2022 0:38	11.59	-0.41	6/26/2022 22:41	11.68	-0.18	6/27/2022 0:03	-0.16
6/26/2022 22:55	11.98	0.15	6/28/2022 0:39	11.59	-0.46	6/26/2022 22:42	11.68	-0.20	6/27/2022 0:04	-0.14
6/26/2022 22:56	11.97	0.03	6/28/2022 0:40	11.58	-0.44	6/26/2022 22:43	11.65	-0.18	6/27/2022 0:05	-0.15
6/26/2022 22:57	11.96	0.03	6/28/2022 0:41	11.61	-0.49	6/26/2022 22:44	11.67	-0.24	6/27/2022 0:06	-0.10
6/26/2022 22:58	11.94	0.04	6/28/2022 0:42	11.56	-0.42	6/26/2022 22:45	11.67	-0.17	6/27/2022 0:07	-0.15
6/26/2022 22:59	11.96	0.09	6/28/2022 0:43	11.60	-0.51	6/26/2022 22:46	11.68	-0.21	6/27/2022 0:08	-0.12
6/26/2022 23:00	11.96	0.02	6/28/2022 0:44	11.59	-0.57	6/26/2022 22:47	11.67	-0.19	6/27/2022 0:09	-0.12
6/26/2022 23:01	11.98	0.15	6/28/2022 0:45	11.58	-0.42	6/26/2022 22:48	11.68	-0.23	6/27/2022 0:10	-0.19
6/26/2022 23:02	11.98	0.11	6/28/2022 0:46	11.57	-0.43	6/26/2022 22:49	11.67	-0.17	6/27/2022 0:11	-0.10
6/26/2022 23:03	11.96	0.08	6/28/2022 0:47	11.62	-0.50	6/26/2022 22:50	11.66	-0.20	6/27/2022 0:12	-0.14
6/26/2022 23:04	11.94	-0.02	6/28/2022 0:48	11.57	-0.40	6/26/2022 22:51	11.66	-0.18	6/27/2022 0:13	-0.15
6/26/2022 23:05	11.97	0.03	6/28/2022 0:49	11.61	-0.43	6/26/2022 22:52	11.67	-0.18	6/27/2022 0:14	-0.13
6/26/2022 23:06	11.98	0.04	6/28/2022 0:50	11.61	-0.48	6/26/2022 22:53	11.69	-0.22	6/27/2022 0:15	-0.09
6/26/2022 23:07	11.97	0.03	6/28/2022 0:51	11.59	-0.49	6/26/2022 22:54	11.67	-0.21	6/27/2022 0:16	-0.14
6/26/2022 23:08	11.97	0.01	6/28/2022 0:52	11.59	-0.45	6/26/2022 22:55	11.67	-0.16	6/27/2022 0:17	-0.12
6/26/2022 23:09	11.97	0.08	6/28/2022 0:53	11.59	-0.43	6/26/2022 22:56	11.66	-0.20	6/27/2022 0:18	-0.16
6/26/2022 23:10	11.96	-0.06	6/28/2022 0:54	11.60	-0.44	6/26/2022 22:57	11.68	-0.24	6/27/2022 0:19	-0.13
6/26/2022 23:11	11.99	0.02	6/28/2022 0:55	11.58	-0.48	6/26/2022 22:58	11.65	-0.19	6/27/2022 0:20	-0.12
6/26/2022 23:12	12.00	0.04	6/28/2022 0:56	11.59	-0.44	6/26/2022 22:59	11.66	-0.17	6/27/2022 0:21	-0.11
6/26/2022 23:13	11.96	0.03	6/28/2022 0:57	11.59	-0.54	6/26/2022 23:00	11.68	-0.19	6/27/2022 0:22	-0.16
6/26/2022 23:14	11.98	0.04	6/28/2022 0:58	11.60	-0.44	6/26/2022 23:01	11.68	-0.21	6/27/2022 0:23	-0.14
6/26/2022 23:15	12.01	0.04	6/28/2022 0:59	11.58	-0.44	6/26/2022 23:02	11.67	-0.18	6/27/2022 0:24	-0.11
6/26/2022 23:16	11.97	0.01	6/28/2022 1:00	11.57	-0.42	6/26/2022 23:03	11.70	-0.21	6/27/2022 0:25	-0.14
6/26/2022 23:17	11.99	0.03	6/28/2022 1:01	11.58	-0.45	6/26/2022 23:04	11.68	-0.22	6/27/2022 0:26	-0.13
6/26/2022 23:18	11.99	0.10	6/28/2022 1:02	11.56	-0.49	6/26/2022 23:05	11.64	-0.16	6/27/2022 0:27	-0.14

6/26/2022 23:19	11.98	0.13	6/28/2022 1:03	11.59	-0.42	6/26/2022 23:06	11.69	-0.18	6/27/2022 0:28	-0.16
6/26/2022 23:20	11.97	0.10	6/28/2022 1:04	11.58	-0.47	6/26/2022 23:07	11.68	-0.22	6/27/2022 0:29	-0.14
6/26/2022 23:21	11.95	0.12	6/28/2022 1:05	11.58	-0.55	6/26/2022 23:08	11.68	-0.18	6/27/2022 0:30	-0.14
6/26/2022 23:22	11.97	-0.03	6/28/2022 1:06	11.58	-0.47	6/26/2022 23:09	11.67	-0.16	6/27/2022 0:31	-0.14
6/26/2022 23:23	11.97	0.06	6/28/2022 1:07	11.58	-0.41	6/26/2022 23:10	11.67	-0.18	6/27/2022 0:32	-0.21
6/26/2022 23:24	12.00	0.09	6/28/2022 1:08	11.59	-0.53	6/26/2022 23:11	11.67	-0.22	6/27/2022 0:33	-0.21
6/26/2022 23:25	11.97	0.07	6/28/2022 1:09	11.59	-0.46	6/26/2022 23:12	11.67	-0.24	6/27/2022 0:34	-0.18
6/26/2022 23:26	11.97	0.10	6/28/2022 1:10	11.63	-0.50	6/26/2022 23:13	11.67	-0.18	6/27/2022 0:35	-0.08
6/26/2022 23:27	11.98	0.01	6/28/2022 1:11	11.62	-0.50	6/26/2022 23:14	11.64	-0.22	6/27/2022 0:36	-0.13
6/26/2022 23:28	11.98	0.07	6/28/2022 1:12	11.59	-0.44	6/26/2022 23:15	11.68	-0.16	6/27/2022 0:37	-0.15
6/26/2022 23:29	11.97	0.10	6/28/2022 1:13	11.60	-0.48	6/26/2022 23:16	11.66	-0.19	6/27/2022 0:38	-0.12
6/26/2022 23:30	11.98	0.06	6/28/2022 1:14	11.59	-0.48	6/26/2022 23:17	11.66	-0.17	6/27/2022 0:39	-0.17
6/26/2022 23:31	11.95	0.08	6/28/2022 1:15	11.57	-0.48	6/26/2022 23:18	11.66	-0.19	6/27/2022 0:40	-0.16
6/26/2022 23:32	11.99	0.03	6/28/2022 1:16	11.60	-0.48	6/26/2022 23:19	11.67	-0.24	6/27/2022 0:41	-0.17
6/26/2022 23:33	11.97	0.08	6/28/2022 1:17	11.60	-0.47	6/26/2022 23:20	11.66	-0.14	6/27/2022 0:42	-0.18
6/26/2022 23:34	11.97	0.08	6/28/2022 1:18	11.58	-0.45	6/26/2022 23:21	11.68	-0.22	6/27/2022 0:43	-0.15
6/26/2022 23:35	11.98	0.06	6/28/2022 1:19	11.57	-0.40	6/26/2022 23:22	11.69	-0.18	6/27/2022 0:44	-0.14
6/26/2022 23:36	11.97	0.09	6/28/2022 1:20	11.59	-0.52	6/26/2022 23:23	11.67	-0.24	6/27/2022 0:45	-0.14
6/26/2022 23:37	11.96	0.08	6/28/2022 1:21	11.61	-0.47	6/26/2022 23:24	11.66	-0.15	6/27/2022 0:46	-0.17
6/26/2022 23:38	11.97	0.02	6/28/2022 1:22	11.57	-0.35	6/26/2022 23:25	11.66	-0.20	6/27/2022 0:47	-0.15
6/26/2022 23:39	11.95	0.02	6/28/2022 1:23	11.58	-0.37	6/26/2022 23:26	11.67	-0.19	6/27/2022 0:48	-0.13
6/26/2022 23:40	11.93	0.10	6/28/2022 1:24	11.59	-0.45	6/26/2022 23:27	11.66	-0.22	6/27/2022 0:49	-0.15
6/26/2022 23:41	11.96	0.04	6/28/2022 1:25	11.58	-0.44	6/26/2022 23:28	11.67	-0.16	6/27/2022 0:50	-0.10
6/26/2022 23:42	11.96	0.07	6/28/2022 1:26	11.59	-0.41	6/26/2022 23:29	11.66	-0.19	6/27/2022 0:51	-0.16
6/26/2022 23:43	11.94	0.07	6/28/2022 1:27	11.58	-0.46	6/26/2022 23:30	11.67	-0.18	6/27/2022 0:52	-0.17
6/26/2022 23:44	11.96	0.05	6/28/2022 1:28	11.59	-0.44	6/26/2022 23:31	11.66	-0.22	6/27/2022 0:53	-0.14
6/26/2022 23:45	11.96	0.12	6/28/2022 1:29	11.56	-0.51	6/26/2022 23:32	11.67	-0.21	6/27/2022 0:54	-0.13
6/26/2022 23:46	12.00	0.09	6/28/2022 1:30	11.58	-0.50	6/26/2022 23:33	11.68	-0.22	6/27/2022 0:55	-0.09
6/26/2022 23:47	11.98	0.17	6/28/2022 1:31	11.58	-0.53	6/26/2022 23:34	11.67	-0.20	6/27/2022 0:56	-0.16
6/26/2022 23:48	11.97	0.06	6/28/2022 1:32	11.61	-0.43	6/26/2022 23:35	11.65	-0.17	6/27/2022 0:57	-0.13
6/26/2022 23:49	12.00	0.03	6/28/2022 1:33	11.58	-0.54	6/26/2022 23:36	11.68	-0.22	6/27/2022 0:58	-0.22
6/26/2022 23:50	11.97	0.05	6/28/2022 1:34	11.61	-0.46	6/26/2022 23:37	11.66	-0.20	6/27/2022 0:59	-0.14
6/26/2022 23:51	11.97	0.04	6/28/2022 1:35	11.59	-0.50	6/26/2022 23:38	11.66	-0.23	6/27/2022 1:00	-0.10
6/26/2022 23:52	11.98	0.11	6/28/2022 1:36	11.61	-0.36	6/26/2022 23:39	11.69	-0.17	6/27/2022 1:01	-0.15
6/26/2022 23:53	11.98	0.03	6/28/2022 1:37	11.58	-0.50	6/26/2022 23:40	11.67	-0.19	6/27/2022 1:02	-0.15
6/26/2022 23:54	11.95	0.06	6/28/2022 1:38	11.58	-0.46	6/26/2022 23:41	11.68	-0.21	6/27/2022 1:03	-0.16
6/26/2022 23:55	11.95	0.05	6/28/2022 1:39	11.59	-0.38	6/26/2022 23:42	11.67	-0.22	6/27/2022 1:04	-0.16
6/26/2022 23:56	11.99	0.07	6/28/2022 1:40	11.61	-0.54	6/26/2022 23:43	11.68	-0.24	6/27/2022 1:05	-0.15
6/26/2022 23:57	11.99	0.03	6/28/2022 1:41	11.57	-0.48	6/26/2022 23:44	11.65	-0.20	6/27/2022 1:06	-0.08
6/26/2022 23:58	11.96	0.01	6/28/2022 1:42	11.58	-0.41	6/26/2022 23:45	11.66	-0.20	6/27/2022 1:07	-0.16
6/26/2022 23:59	11.97	-0.02	6/28/2022 1:43	11.59	-0.41	6/26/2022 23:46	11.68	-0.21	6/27/2022 1:08	-0.12
6/27/2022 0:00	11.97	0.07	6/28/2022 1:44	11.58	-0.44	6/26/2022 23:47	11.67	-0.22	6/27/2022 1:09	-0.13
6/27/2022 0:01	11.97	0.11	6/28/2022 1:45	11.59	-0.50	6/26/2022 23:48	11.66	-0.18	6/27/2022 1:10	-0.19
6/27/2022 0:02	11.99	0.11	6/28/2022 1:46	11.58	-0.42	6/26/2022 23:49	11.65	-0.18	6/27/2022 1:11	-0.10
6/27/2022 0:03	11.97	0.13	6/28/2022 1:47	11.57	-0.47	6/26/2022 23:50	11.65	-0.20	6/27/2022 1:12	-0.16
6/27/2022 0:04	12.00	0.12	6/28/2022 1:48	11.62	-0.45	6/26/2022 23:51	11.65	-0.23	6/27/2022 1:13	-0.10
6/27/2022 0:05	11.99	0.07	6/28/2022 1:49	11.60	-0.39	6/26/2022 23:52	11.67	-0.18	6/27/2022 1:14	-0.07
6/27/2022 0:06	11.95	0.02	6/28/2022 1:50	11.60	-0.46	6/26/2022 23:53	11.68	-0.19	6/27/2022 1:15	-0.20
6/27/2022 0:07	11.96	0.01	6/28/2022 1:51	11.58	-0.44	6/26/2022 23:54	11.66	-0.18	6/27/2022 1:16	-0.12
6/27/2022 0:08	11.99	0.00	6/28/2022 1:52	11.56	-0.45	6/26/2022 23:55	11.67	-0.23	6/27/2022 1:17	-0.12
6/27/2022 0:09	11.98	0.08	6/28/2022 1:53	11.57	-0.46	6/26/2022 23:56	11.67	-0.17	6/27/2022 1:18	-0.16
6/27/2022 0:10	11.99	0.14	6/28/2022 1:54	11.60	-0.48	6/26/2022 23:57	11.69	-0.13	6/27/2022 1:19	-0.16
6/27/2022 0:11	11.98	0.11	6/28/2022 1:55	11.60	-0.41	6/26/2022 23:58	11.67	-0.17	6/27/2022 1:20	-0.11
6/27/2022 0:12	11.96	0.15	6/28/2022 1:56	11.59	-0.46	6/26/2022 23:59	11.67	-0.19	6/27/2022 1:21	-0.18
6/27/2022 0:13	11.95	0.15	6/28/2022 1:57	11.58	-0.41	6/27/2022 0:00	11.64	-0.19	6/27/2022 1:22	-0.16
6/27/2022 0:14	12.00	0.07	6/28/2022 1:58	11.60	-0.41	6/27/2022 0:01	11.65	-0.20	6/27/2022 1:23	-0.22
6/27/2022 0:15	11.96	0.04	6/28/2022 1:59	11.58	-0.45	6/27/2022 0:02	11.67	-0.24	6/27/2022 1:24	-0.13
6/27/2022 0:16	11.98	0.03	6/28/2022 2:00	11.60	-0.40	6/27/2022 0:03	11.68	-0.23	6/27/2022 1:25	-0.12
6/27/2022 0:17	12.00	0.07	6/28/2022 2:01	11.58	-0.44	6/27/2022 0:04	11.68	-0.21	6/27/2022 1:26	-0.14
6/27/2022 0:18	11.98	0.12	6/28/2022 2:02	11.61	-0.47	6/27/2022 0:05	11.69	-0.19	6/27/2022 1:27	-0.18
6/27/2022 0:19	11.98	0.04	6/28/2022 2:03	11.58	-0.41	6/27/2022 0:06	11.67	-0.19	6/27/2022 1:28	-0.15
6/27/2022 0:20	11.97	0.15	6/28/2022 2:04	11.60	-0.46	6/27/2022 0:07	11.67	-0.20	6/27/2022 1:29	-0.16
6/27/2022 0:21	11.97	0.00	6/28/2022 2:05	11.56	-0.53	6/27/2022 0:08	11.68	-0.19	6/27/2022 1:30	-0.18
6/27/2022 0:22	11.99	0.02	6/28/2022 2:06	11.59	-0.53	6/27/2022 0:09	11.67	-0.20	6/27/2022 1:31	-0.16
6/27/2022 0:23	11.97	0.04	6/28/2022 2:07	11.62	-0.41	6/27/2022 0:10	11.67	-0.18	6/27/2022 1:32	-0.19
6/27/2022 0:24	11.97	0.08	6/28/2022 2:08	11.59	-0.44	6/27/2022 0:11	11.68	-0.19	6/27/2022 1:33	-0.19
6/27/2022 0:25	11.99	0.07	6/28/2022 2:09	11.58	-0.49	6/27/2022 0:12	11.64	-0.20	6/27/2022 1:34	-0.15
6/27/2022 0:26	11.98	0.11	6/28/2022 2:10	11.59	-0.51	6/27/2022 0:13	11.65	-0.21	6/27/2022 1:35	-0.14
6/27/2022 0:27	11.98	0.08	6/28/2022 2:11	11.59	-0.48	6/27/2022 0:14	11.67	-0.22	6/27/2022 1:36	-0.17
6/27/2022 0:28	12.01	0.13	6/28/2022 2:12	11.57	-0.50	6/27/2022 0:15	11.68	-0.21	6/27/2022 1:37	-0.20
6/27/2022 0:29	11.98	0.07	6/28/2022 2:13	11.59	-0.50	6/27/2022 0:16	11.64	-0.22	6/27/2022 1:38	-0.16
6/27/2022 0:30	11.98	0.03	6/28/2022 2:14	11.59	-0.48	6/27/2022 0:17	11.64	-0.24	6/27/2022 1:39	-0.15
6/27/2022 0:31	11.98	0.07	6/28/2022 2:15	11.59	-0.50	6/27/2022 0:18	11.66	-0.21	6/27/2022 1:40	-0.15
6/27/2022 0:32	12.00	0.03	6/28/2022 2:16	11.59	-0.38	6/27/2022 0:19	11.68	-0.20	6/27/2022 1:41	-0.15
6/27/2022 0:33	11.98	0.06	6/28/2022 2:17	11.58	-0.40	6/27/2022 0:20	11.65	-0.22	6/27/2022 1:42	-0.14
6/27/2022 0:34	11.97	0.14	6/28/2022 2:18	11.60	-0.41	6/27/2022 0:21	11.66	-0.21	6/27/2022 1:43	-0.08
6/27/2022 0:35	11.96	0.01	6/28/2022 2:19	11.60	-0.42	6/27/2022 0:22	11.64	-0.21	6/27/2022 1:44	-0.15
6/27/2022 0:36	11.99	0.05	6/28/2022 2:20	11.58	-0.43	6/27/2022 0:23	11.68	-0.21	6/27/2022 1:45	-0.15
6/27/2022 0:37	11.98	0.05	6/28/2022 2:21	11.58	-0.44	6/27/2022 0:24	11.66	-0.23	6/27/2022 1:46	-0.17
6/27/2022 0:38	11.95	0.04	6/28/2022 2:22	11.60	-0.49	6/27/2022 0:25	11.68	-0.22	6/27/2022 1:47	-0.16
6/27/2022 0:39	11.99	0.07	6/28/2022 2:23	11.58	-0.38	6/27/2022 0:26	11.67	-0.19	6/27/2022 1:48	-0.17
6/27/2022 0:40	11.95	0.08	6/28/2022 2:24	11.59	-0.46	6/27/2022 0:27	11.68	-0.20	6/27/2022 1:49	-0.15
6/27/2022 0:41	11.98	-0.01	6/28/2022 2:25	11.59	-0.48	6/27/2022 0:28	11.65	-0.19	6/27/2022 1:50	-0.17
6/27/2022 0:42	12.01	0.07	6/28/2022 2:26	11.60	-0.44	6/27/2022 0:29	11.66	-0.21	6/27/2022 1:51	-0.14
6/27/2022 0:43	11.97	0.01	6/28/2022 2:27	11.58	-0.47	6/27/2022 0:30	11.67	-0.23	6/27/2022 1:52	-0.11
6/27/2022 0:44	11.99	-0.07	6/28/2022 2:28	11.59	-0.52	6/27/2022 0:31	11.68	-0.18	6/27/2022 1:53	-0.17
6/27/2022 0:45	11.98	0.07	6/28/2022 2:29	11.58	-0.51	6/27/2022 0:32	11.66	-0.23	6/27/2022 1:54	-0.10
6/27/2022 0:46	11.99	0.10	6/28/2022 2:30	11.58	-0.44	6/27/2022 0:33	11.65	-0.19	6/27/2022 1:55	-0.15

6/27/2022 0:47	11.98	0.08	6/28/2022 2:31	11.57	-0.47	6/27/2022 0:34	11.67	-0.22	6/27/2022 1:56	-0.19
6/27/2022 0:48	11.96	0.02	6/28/2022 2:32	11.57	-0.44	6/27/2022 0:35	11.64	-0.19	6/27/2022 1:57	-0.15
6/27/2022 0:49	11.97	0.06	6/28/2022 2:33	11.57	-0.50	6/27/2022 0:36	11.69	-0.25	6/27/2022 1:58	-0.11
6/27/2022 0:50	11.98	0.09	6/28/2022 2:34	11.60	-0.50	6/27/2022 0:37	11.68	-0.21	6/27/2022 1:59	-0.18
6/27/2022 0:51	11.97	0.08	6/28/2022 2:35	11.59	-0.52	6/27/2022 0:38	11.67	-0.17	6/27/2022 2:00	-0.18
6/27/2022 0:52	11.96	0.11	6/28/2022 2:36	11.58	-0.45	6/27/2022 0:39	11.66	-0.21	6/27/2022 2:01	-0.21
6/27/2022 0:53	11.98	0.05	6/28/2022 2:37	11.58	-0.45	6/27/2022 0:40	11.70	-0.21	6/27/2022 2:02	-0.16
6/27/2022 0:54	12.00	-0.01	6/28/2022 2:38	11.56	-0.47	6/27/2022 0:41	11.67	-0.21	6/27/2022 2:03	-0.13
6/27/2022 0:55	11.99	0.04	6/28/2022 2:39	11.62	-0.41	6/27/2022 0:42	11.65	-0.20	6/27/2022 2:04	-0.16
6/27/2022 0:56	11.99	0.12	6/28/2022 2:40	11.60	-0.52	6/27/2022 0:43	11.65	-0.16	6/27/2022 2:05	-0.17
6/27/2022 0:57	11.98	0.12	6/28/2022 2:41	11.57	-0.45	6/27/2022 0:44	11.66	-0.20	6/27/2022 2:06	-0.13
6/27/2022 0:58	11.97	0.03	6/28/2022 2:42	11.59	-0.48	6/27/2022 0:45	11.67	-0.20	6/27/2022 2:07	-0.15
6/27/2022 0:59	11.98	0.13	6/28/2022 2:43	11.58	-0.50	6/27/2022 0:46	11.66	-0.20	6/27/2022 2:08	-0.11
6/27/2022 1:00	11.95	0.06	6/28/2022 2:44	11.59	-0.42	6/27/2022 0:47	11.66	-0.22	6/27/2022 2:09	-0.18
6/27/2022 1:01	11.97	-0.01	6/28/2022 2:45	11.61	-0.43	6/27/2022 0:48	11.67	-0.20	6/27/2022 2:10	-0.10
6/27/2022 1:02	12.00	-0.06	6/28/2022 2:46	11.59	-0.45	6/27/2022 0:49	11.67	-0.16	6/27/2022 2:11	-0.13
6/27/2022 1:03	12.00	-0.02	6/28/2022 2:47	11.61	-0.44	6/27/2022 0:50	11.69	-0.20	6/27/2022 2:12	-0.16
6/27/2022 1:04	11.97	0.09	6/28/2022 2:48	11.59	-0.48	6/27/2022 0:51	11.66	-0.17	6/27/2022 2:13	-0.16
6/27/2022 1:05	11.97	0.04	6/28/2022 2:49	11.60	-0.44	6/27/2022 0:52	11.66	-0.17	6/27/2022 2:14	-0.16
6/27/2022 1:06	11.95	0.11	6/28/2022 2:50	11.58	-0.42	6/27/2022 0:53	11.65	-0.20	6/27/2022 2:15	-0.10
6/27/2022 1:07	11.97	0.06	6/28/2022 2:51	11.58	-0.50	6/27/2022 0:54	11.66	-0.24	6/27/2022 2:16	-0.10
6/27/2022 1:08	11.97	0.02	6/28/2022 2:52	11.57	-0.45	6/27/2022 0:55	11.66	-0.17	6/27/2022 2:17	-0.14
6/27/2022 1:09	11.98	0.09	6/28/2022 2:53	11.61	-0.51	6/27/2022 0:56	11.68	-0.18	6/27/2022 2:18	-0.14
6/27/2022 1:10	11.96	0.06	6/28/2022 2:54	11.58	-0.44	6/27/2022 0:57	11.65	-0.22	6/27/2022 2:19	-0.13
6/27/2022 1:11	11.99	0.07	6/28/2022 2:55	11.60	-0.41	6/27/2022 0:58	11.66	-0.23	6/27/2022 2:20	-0.13
6/27/2022 1:12	11.96	0.06	6/28/2022 2:56	11.57	-0.40	6/27/2022 0:59	11.66	-0.19	6/27/2022 2:21	-0.15
6/27/2022 1:13	11.97	0.03	6/28/2022 2:57	11.59	-0.41	6/27/2022 1:00	11.67	-0.21	6/27/2022 2:22	-0.15
6/27/2022 1:14	11.97	0.05	6/28/2022 2:58	11.61	-0.45	6/27/2022 1:01	11.66	-0.22	6/27/2022 2:23	-0.16
6/27/2022 1:15	11.98	0.09	6/28/2022 2:59	11.56	-0.46	6/27/2022 1:02	11.64	-0.20	6/27/2022 2:24	-0.15
6/27/2022 1:16	11.98	0.12	6/28/2022 3:00	11.59	-0.47	6/27/2022 1:03	11.66	-0.22	6/27/2022 2:25	-0.12
6/27/2022 1:17	11.97	0.06	6/28/2022 3:01	11.58	-0.47	6/27/2022 1:04	11.64	-0.23	6/27/2022 2:26	-0.16
6/27/2022 1:18	11.98	0.13	6/28/2022 3:02	11.61	-0.48	6/27/2022 1:05	11.67	-0.22	6/27/2022 2:27	-0.13
6/27/2022 1:19	11.98	0.06	6/28/2022 3:03	11.59	-0.55	6/27/2022 1:06	11.68	-0.19	6/27/2022 2:28	-0.16
6/27/2022 1:20	11.97	0.03	6/28/2022 3:04	11.60	-0.39	6/27/2022 1:07	11.69	-0.19	6/27/2022 2:29	-0.08
6/27/2022 1:21	11.94	0.11	6/28/2022 3:05	11.57	-0.49	6/27/2022 1:08	11.66	-0.19	6/27/2022 2:30	-0.16
6/27/2022 1:22	11.98	0.06	6/28/2022 3:06	11.61	-0.51	6/27/2022 1:09	11.70	-0.21	6/27/2022 2:31	-0.11
6/27/2022 1:23	11.98	0.08	6/28/2022 3:07	11.61	-0.45	6/27/2022 1:10	11.67	-0.19	6/27/2022 2:32	-0.15
6/27/2022 1:24	12.02	0.03	6/28/2022 3:08	11.58	-0.45	6/27/2022 1:11	11.66	-0.17	6/27/2022 2:33	-0.12
6/27/2022 1:25	11.99	0.08	6/28/2022 3:09	11.58	-0.45	6/27/2022 1:12	11.69	-0.19	6/27/2022 2:34	-0.18
6/27/2022 1:26	11.98	0.09	6/28/2022 3:10	11.59	-0.37	6/27/2022 1:13	11.67	-0.20	6/27/2022 2:35	-0.14
6/27/2022 1:27	11.99	-0.08	6/28/2022 3:11	11.58	-0.48	6/27/2022 1:14	11.66	-0.21	6/27/2022 2:36	-0.14
6/27/2022 1:28	11.94	0.09	6/28/2022 3:12	11.58	-0.44	6/27/2022 1:15	11.64	-0.22	6/27/2022 2:37	-0.17
6/27/2022 1:29	11.95	0.05	6/28/2022 3:13	11.60	-0.45	6/27/2022 1:16	11.67	-0.21	6/27/2022 2:38	-0.14
6/27/2022 1:30	11.96	0.07	6/28/2022 3:14	11.59	-0.45	6/27/2022 1:17	11.66	-0.20	6/27/2022 2:39	-0.14
6/27/2022 1:31	11.97	0.12	6/28/2022 3:15	11.59	-0.44	6/27/2022 1:18	11.65	-0.21	6/27/2022 2:40	-0.10
6/27/2022 1:32	11.97	-0.02	6/28/2022 3:16	11.59	-0.47	6/27/2022 1:19	11.69	-0.23	6/27/2022 2:41	-0.14
6/27/2022 1:33	11.96	0.07	6/28/2022 3:17	11.58	-0.43	6/27/2022 1:20	11.68	-0.23	6/27/2022 2:42	-0.10
6/27/2022 1:34	12.00	0.12	6/28/2022 3:18	11.59	-0.35	6/27/2022 1:21	11.69	-0.21	6/27/2022 2:43	-0.12
6/27/2022 1:35	11.97	0.13	6/28/2022 3:19	11.57	-0.46	6/27/2022 1:22	11.67	-0.22	6/27/2022 2:44	-0.18
6/27/2022 1:36	12.00	0.09	6/28/2022 3:20	11.60	-0.48	6/27/2022 1:23	11.67	-0.21	6/27/2022 2:45	-0.13
6/27/2022 1:37	11.96	0.05	6/28/2022 3:21	11.60	-0.45	6/27/2022 1:24	11.69	-0.18	6/27/2022 2:46	-0.16
6/27/2022 1:38	11.99	0.01	6/28/2022 3:22	11.61	-0.50	6/27/2022 1:25	11.67	-0.21	6/27/2022 2:47	-0.10
6/27/2022 1:39	11.96	0.03	6/28/2022 3:23	11.59	-0.49	6/27/2022 1:26	11.65	-0.19	6/27/2022 2:48	-0.11
6/27/2022 1:40	11.99	0.12	6/28/2022 3:24	11.59	-0.50	6/27/2022 1:27	11.66	-0.18	6/27/2022 2:49	-0.16
6/27/2022 1:41	11.97	0.03	6/28/2022 3:25	11.57	-0.47	6/27/2022 1:28	11.67	-0.20	6/27/2022 2:50	-0.14
6/27/2022 1:42	11.97	0.15	6/28/2022 3:26	11.61	-0.46	6/27/2022 1:29	11.66	-0.22	6/27/2022 2:51	-0.13
6/27/2022 1:43	11.98	0.04	6/28/2022 3:27	11.59	-0.33	6/27/2022 1:30	11.66	-0.19	6/27/2022 2:52	-0.07
6/27/2022 1:44	11.98	0.02	6/28/2022 3:28	11.59	-0.49	6/27/2022 1:31	11.67	-0.18	6/27/2022 2:53	-0.11
6/27/2022 1:45	11.96	-0.01	6/28/2022 3:29	11.60	-0.41	6/27/2022 1:32	11.69	-0.23	6/27/2022 2:54	-0.14
6/27/2022 1:46	11.97	-0.02	6/28/2022 3:30	11.59	-0.41	6/27/2022 1:33	11.67	-0.16	6/27/2022 2:55	-0.12
6/27/2022 1:47	11.95	0.07	6/28/2022 3:31	11.59	-0.49	6/27/2022 1:34	11.67	-0.16	6/27/2022 2:56	-0.11
6/27/2022 1:48	11.97	0.04	6/28/2022 3:32	11.61	-0.50	6/27/2022 1:35	11.71	-0.20	6/27/2022 2:57	-0.21
6/27/2022 1:49	11.98	0.19	6/28/2022 3:33	11.59	-0.44	6/27/2022 1:36	11.66	-0.17	6/27/2022 2:58	-0.13
6/27/2022 1:50	11.92	0.05	6/28/2022 3:34	11.57	-0.51	6/27/2022 1:37	11.66	-0.18	6/27/2022 2:59	-0.20
6/27/2022 1:51	11.96	0.07	6/28/2022 3:35	11.57	-0.50	6/27/2022 1:38	11.68	-0.17	6/27/2022 3:00	-0.15
6/27/2022 1:52	11.97	0.06	6/28/2022 3:36	11.56	-0.48	6/27/2022 1:39	11.67	-0.17	6/27/2022 3:01	-0.12
6/27/2022 1:53	11.98	0.11	6/28/2022 3:37	11.58	-0.54	6/27/2022 1:40	11.68	-0.23	6/27/2022 3:02	-0.15
6/27/2022 1:54	11.96	0.10	6/28/2022 3:38	11.58	-0.51	6/27/2022 1:41	11.66	-0.21	6/27/2022 3:03	-0.09
6/27/2022 1:55	11.98	0.06	6/28/2022 3:39	11.60	-0.50	6/27/2022 1:42	11.65	-0.21	6/27/2022 3:04	-0.15
6/27/2022 1:56	11.98	0.13	6/28/2022 3:40	11.62	-0.47	6/27/2022 1:43	11.68	-0.18	6/27/2022 3:05	-0.15
6/27/2022 1:57	11.99	0.09	6/28/2022 3:41	11.57	-0.54	6/27/2022 1:44	11.66	-0.17	6/27/2022 3:06	-0.15
6/27/2022 1:58	12.00	0.07	6/28/2022 3:42	11.62	-0.41	6/27/2022 1:45	11.65	-0.20	6/27/2022 3:07	-0.14
6/27/2022 1:59	12.00	0.08	6/28/2022 3:43	11.57	-0.39	6/27/2022 1:46	11.65	-0.20	6/27/2022 3:08	-0.14
6/27/2022 2:00	11.98	0.03	6/28/2022 3:44	11.59	-0.35	6/27/2022 1:47	11.65	-0.17	6/27/2022 3:09	-0.17
6/27/2022 2:01	11.97	0.11	6/28/2022 3:45	11.58	-0.44	6/27/2022 1:48	11.66	-0.19	6/27/2022 3:10	-0.15
6/27/2022 2:02	11.96	0.06	6/28/2022 3:46	11.59	-0.43	6/27/2022 1:49	11.67	-0.17	6/27/2022 3:11	-0.18
6/27/2022 2:03	11.95	-0.03	6/28/2022 3:47	11.59	-0.42	6/27/2022 1:50	11.69	-0.19	6/27/2022 3:12	-0.14
6/27/2022 2:04	11.98	0.07	6/28/2022 3:48	11.60	-0.38	6/27/2022 1:51	11.67	-0.17	6/27/2022 3:13	-0.14
6/27/2022 2:05	11.99	0.03	6/28/2022 3:49	11.56	-0.50	6/27/2022 1:52	11.65	-0.21	6/27/2022 3:14	-0.13
6/27/2022 2:06	11.97	0.04	6/28/2022 3:50	11.60	-0.50	6/27/2022 1:53	11.65	-0.22	6/27/2022 3:15	-0.11
6/27/2022 2:07	12.00	0.02	6/28/2022 3:51	11.60	-0.43	6/27/2022 1:54	11.68	-0.21	6/27/2022 3:16	-0.09
6/27/2022 2:08	11.97	0.03	6/28/2022 3:52	11.59	-0.51	6/27/2022 1:55	11.66	-0.23	6/27/2022 3:17	-0.12
6/27/2022 2:09	11.98	0.02	6/28/2022 3:53	11.58	-0.43	6/27/2022 1:56	11.65	-0.18	6/27/2022 3:18	-0.13
6/27/2022 2:10	11.97	0.09	6/28/2022 3:54	11.58	-0.51	6/27/2022 1:57	11.67	-0.22	6/27/2022 3:19	-0.21
6/27/2022 2:11	11.97	0.02	6/28/2022 3:55	11.59	-0.42	6/27/2022 1:58	11.69	-0.20	6/27/2022 3:20	-0.13
6/27/2022 2:12	12.00	0.02	6/28/2022 3:56	11.60	-0.48	6/27/2022 1:59	11.66	-0.22	6/27/2022 3:21	-0.14
6/27/2022 2:13	11.99	0.07	6/28/2022 3:57	11.59	-0.52	6/27/2022 2:00	11.68	-0.18	6/27/2022 3:22	-0.18
6/27/2022 2:14	11.98	0.05	6/28/2022 3:58	11.61	-0.47	6/27/2022 2:01	11.68	-0.24	6/27/2022 3:23	-0.14

6/27/2022 2:15	12.01	0.09	6/28/2022 3:59	11.58	-0.46	6/27/2022 2:02	11.66	-0.23	6/27/2022 3:24	-0.13
6/27/2022 2:16	11.95	-0.03	6/28/2022 4:00	11.58	-0.41	6/27/2022 2:03	11.69	-0.17	6/27/2022 3:25	-0.10
6/27/2022 2:17	11.97	0.08	6/28/2022 4:01	11.57	-0.43	6/27/2022 2:04	11.66	-0.20	6/27/2022 3:26	-0.08
6/27/2022 2:18	11.95	0.06	6/28/2022 4:02	11.60	-0.45	6/27/2022 2:05	11.66	-0.21	6/27/2022 3:27	-0.14
6/27/2022 2:19	11.96	0.08	6/28/2022 4:03	11.59	-0.48	6/27/2022 2:06	11.68	-0.20	6/27/2022 3:28	-0.13
6/27/2022 2:20	11.96	0.09	6/28/2022 4:04	11.60	-0.40	6/27/2022 2:07	11.66	-0.19	6/27/2022 3:29	-0.14
6/27/2022 2:21	11.98	0.07	6/28/2022 4:05	11.61	-0.40	6/27/2022 2:08	11.66	-0.19	6/27/2022 3:30	-0.09
6/27/2022 2:22	11.97	0.15	6/28/2022 4:06	11.58	-0.50	6/27/2022 2:09	11.67	-0.21	6/27/2022 3:31	-0.11
6/27/2022 2:23	11.96	0.01	6/28/2022 4:07	11.60	-0.44	6/27/2022 2:10	11.66	-0.20	6/27/2022 3:32	-0.11
6/27/2022 2:24	11.96	0.02	6/28/2022 4:08	11.58	-0.40	6/27/2022 2:11	11.65	-0.16	6/27/2022 3:33	-0.12
6/27/2022 2:25	11.96	0.03	6/28/2022 4:09	11.60	-0.45	6/27/2022 2:12	11.66	-0.19	6/27/2022 3:34	-0.14
6/27/2022 2:26	11.95	0.09	6/28/2022 4:10	11.59	-0.43	6/27/2022 2:13	11.70	-0.22	6/27/2022 3:35	-0.14
6/27/2022 2:27	11.97	0.12	6/28/2022 4:11	11.57	-0.44	6/27/2022 2:14	11.64	-0.21	6/27/2022 3:36	-0.11
6/27/2022 2:28	11.96	0.09	6/28/2022 4:12	11.56	-0.58	6/27/2022 2:15	11.68	-0.18	6/27/2022 3:37	-0.10
6/27/2022 2:29	11.95	0.02	6/28/2022 4:13	11.62	-0.50	6/27/2022 2:16	11.68	-0.19	6/27/2022 3:38	-0.15
6/27/2022 2:30	11.95	0.07	6/28/2022 4:14	11.60	-0.52	6/27/2022 2:17	11.67	-0.19	6/27/2022 3:39	-0.11
6/27/2022 2:31	11.96	0.02	6/28/2022 4:15	11.61	-0.45	6/27/2022 2:18	11.66	-0.17	6/27/2022 3:40	-0.11
6/27/2022 2:32	11.99	0.00	6/28/2022 4:16	11.57	-0.42	6/27/2022 2:19	11.67	-0.19	6/27/2022 3:41	-0.13
6/27/2022 2:33	11.96	0.08	6/28/2022 4:17	11.63	-0.46	6/27/2022 2:20	11.65	-0.18	6/27/2022 3:42	-0.14
6/27/2022 2:34	11.99	0.04	6/28/2022 4:18	11.62	-0.43	6/27/2022 2:21	11.67	-0.20	6/27/2022 3:43	-0.20
6/27/2022 2:35	12.00	0.02	6/28/2022 4:19	11.60	-0.48	6/27/2022 2:22	11.67	-0.25	6/27/2022 3:44	-0.14
6/27/2022 2:36	11.97	0.03	6/28/2022 4:20	11.58	-0.41	6/27/2022 2:23	11.66	-0.16	6/27/2022 3:45	-0.12
6/27/2022 2:37	11.98	0.03	6/28/2022 4:21	11.58	-0.53	6/27/2022 2:24	11.67	-0.18	6/27/2022 3:46	-0.12
6/27/2022 2:38	11.95	0.01	6/28/2022 4:22	11.59	-0.40	6/27/2022 2:25	11.68	-0.22	6/27/2022 3:47	-0.14
6/27/2022 2:39	11.96	0.08	6/28/2022 4:23	11.60	-0.47	6/27/2022 2:26	11.66	-0.18	6/27/2022 3:48	-0.15
6/27/2022 2:40	11.96	0.05	6/28/2022 4:24	11.61	-0.49	6/27/2022 2:27	11.68	-0.21	6/27/2022 3:49	-0.15
6/27/2022 2:41	11.95	0.10	6/28/2022 4:25	11.58	-0.44	6/27/2022 2:28	11.67	-0.18	6/27/2022 3:50	-0.15
6/27/2022 2:42	11.97	-0.02	6/28/2022 4:26	11.60	-0.45	6/27/2022 2:29	11.67	-0.19	6/27/2022 3:51	-0.16
6/27/2022 2:43	11.98	0.15	6/28/2022 4:27	11.59	-0.51	6/27/2022 2:30	11.66	-0.19	6/27/2022 3:52	-0.14
6/27/2022 2:44	11.95	0.10	6/28/2022 4:28	11.58	-0.41	6/27/2022 2:31	11.67	-0.19	6/27/2022 3:53	-0.15
6/27/2022 2:45	11.94	0.06	6/28/2022 4:29	11.57	-0.42	6/27/2022 2:32	11.68	-0.18	6/27/2022 3:54	-0.10
6/27/2022 2:46	11.96	0.06	6/28/2022 4:30	11.59	-0.44	6/27/2022 2:33	11.66	-0.16	6/27/2022 3:55	-0.16
6/27/2022 2:47	11.97	0.08	6/28/2022 4:31	11.60	-0.46	6/27/2022 2:34	11.69	-0.18	6/27/2022 3:56	-0.12
6/27/2022 2:48	11.96	0.06	6/28/2022 4:32	11.62	-0.50	6/27/2022 2:35	11.68	-0.15	6/27/2022 3:57	-0.10
6/27/2022 2:49	11.96	0.01	6/28/2022 4:33	11.58	-0.47	6/27/2022 2:36	11.67	-0.20	6/27/2022 3:58	-0.15
6/27/2022 2:50	11.98	0.08	6/28/2022 4:34	11.60	-0.44	6/27/2022 2:37	11.68	-0.18	6/27/2022 3:59	-0.15
6/27/2022 2:51	11.97	0.03	6/28/2022 4:35	11.56	-0.46	6/27/2022 2:38	11.67	-0.19	6/27/2022 4:00	-0.14
6/27/2022 2:52	11.96	0.03	6/28/2022 4:36	11.61	-0.44	6/27/2022 2:39	11.67	-0.14	6/27/2022 4:01	-0.14
6/27/2022 2:53	11.97	0.07	6/28/2022 4:37	11.60	-0.43	6/27/2022 2:40	11.66	-0.20	6/27/2022 4:02	-0.16
6/27/2022 2:54	11.96	0.08	6/28/2022 4:38	11.58	-0.45	6/27/2022 2:41	11.67	-0.24	6/27/2022 4:03	-0.15
6/27/2022 2:55	11.98	0.02	6/28/2022 4:39	11.60	-0.41	6/27/2022 2:42	11.69	-0.21	6/27/2022 4:04	-0.16
6/27/2022 2:56	11.96	0.08	6/28/2022 4:40	11.59	-0.50	6/27/2022 2:43	11.68	-0.22	6/27/2022 4:05	-0.12
6/27/2022 2:57	11.96	0.06	6/28/2022 4:41	11.57	-0.47	6/27/2022 2:44	11.67	-0.19	6/27/2022 4:06	-0.17
6/27/2022 2:58	11.97	0.03	6/28/2022 4:42	11.58	-0.39	6/27/2022 2:45	11.67	-0.25	6/27/2022 4:07	-0.16
6/27/2022 2:59	11.95	0.11	6/28/2022 4:43	11.61	-0.44	6/27/2022 2:46	11.68	-0.21	6/27/2022 4:08	-0.17
6/27/2022 3:00	11.95	0.01	6/28/2022 4:44	11.59	-0.46	6/27/2022 2:47	11.67	-0.22	6/27/2022 4:09	-0.12
6/27/2022 3:01	11.97	0.13	6/28/2022 4:45	11.61	-0.45	6/27/2022 2:48	11.67	-0.24	6/27/2022 4:10	-0.13
6/27/2022 3:02	11.93	0.02	6/28/2022 4:46	11.60	-0.48	6/27/2022 2:49	11.67	-0.23	6/27/2022 4:11	-0.13
6/27/2022 3:03	11.94	0.18	6/28/2022 4:47	11.59	-0.54	6/27/2022 2:50	11.68	-0.19	6/27/2022 4:12	-0.14
6/27/2022 3:04	11.95	0.16	6/28/2022 4:48	11.59	-0.42	6/27/2022 2:51	11.66	-0.18	6/27/2022 4:13	-0.09
6/27/2022 3:05	11.94	0.02	6/28/2022 4:49	11.60	-0.53	6/27/2022 2:52	11.69	-0.21	6/27/2022 4:14	-0.08
6/27/2022 3:06	11.97	0.05	6/28/2022 4:50	11.56	-0.49	6/27/2022 2:53	11.67	-0.19	6/27/2022 4:15	-0.19
6/27/2022 3:07	11.97	0.03	6/28/2022 4:51	11.59	-0.46	6/27/2022 2:54	11.65	-0.18	6/27/2022 4:16	-0.16
6/27/2022 3:08	12.00	-0.06	6/28/2022 4:52	11.60	-0.36	6/27/2022 2:55	11.67	-0.16	6/27/2022 4:17	-0.11
6/27/2022 3:09	11.96	0.09	6/28/2022 4:53	11.60	-0.47	6/27/2022 2:56	11.69	-0.21	6/27/2022 4:18	-0.18
6/27/2022 3:10	11.96	0.12	6/28/2022 4:54	11.58	-0.47	6/27/2022 2:57	11.67	-0.22	6/27/2022 4:19	-0.14
6/27/2022 3:11	11.94	0.04	6/28/2022 4:55	11.58	-0.46	6/27/2022 2:58	11.66	-0.21	6/27/2022 4:20	-0.13
6/27/2022 3:12	11.93	0.10	6/28/2022 4:56	11.59	-0.52	6/27/2022 2:59	11.65	-0.20	6/27/2022 4:21	-0.15
6/27/2022 3:13	11.95	0.02	6/28/2022 4:57	11.56	-0.45	6/27/2022 3:00	11.66	-0.16	6/27/2022 4:22	-0.11
6/27/2022 3:14	11.96	0.08	6/28/2022 4:58	11.59	-0.52	6/27/2022 3:01	11.69	-0.21	6/27/2022 4:23	-0.13
6/27/2022 3:15	11.96	0.10	6/28/2022 4:59	11.59	-0.48	6/27/2022 3:02	11.69	-0.18	6/27/2022 4:24	-0.09
6/27/2022 3:16	11.97	-0.03	6/28/2022 5:00	11.61	-0.49	6/27/2022 3:03	11.69	-0.23	6/27/2022 4:25	-0.11
6/27/2022 3:17	11.96	0.12	6/28/2022 5:01	11.57	-0.45	6/27/2022 3:04	11.67	-0.20	6/27/2022 4:26	-0.12
6/27/2022 3:18	11.95	0.07	6/28/2022 5:02	11.60	-0.44	6/27/2022 3:05	11.66	-0.20	6/27/2022 4:27	-0.13
6/27/2022 3:19	11.94	0.14	6/28/2022 5:03	11.59	-0.44	6/27/2022 3:06	11.67	-0.20	6/27/2022 4:28	-0.17
6/27/2022 3:20	11.94	0.14	6/28/2022 5:04	11.61	-0.50	6/27/2022 3:07	11.70	-0.22	6/27/2022 4:29	-0.07
6/27/2022 3:21	11.97	0.06	6/28/2022 5:05	11.62	-0.50	6/27/2022 3:08	11.66	-0.23	6/27/2022 4:30	-0.12
6/27/2022 3:22	11.98	0.13	6/28/2022 5:06	11.59	-0.52	6/27/2022 3:09	11.67	-0.19	6/27/2022 4:31	-0.12
6/27/2022 3:23	11.97	0.05	6/28/2022 5:07	11.57	-0.49	6/27/2022 3:10	11.68	-0.22	6/27/2022 4:32	-0.11
6/27/2022 3:24	11.94	0.09	6/28/2022 5:08	11.59	-0.45	6/27/2022 3:11	11.67	-0.16	6/27/2022 4:33	-0.13
6/27/2022 3:25	11.97	0.08	6/28/2022 5:09	11.60	-0.50	6/27/2022 3:12	11.66	-0.21	6/27/2022 4:34	-0.11
6/27/2022 3:26	11.98	0.07	6/28/2022 5:10	11.60	-0.44	6/27/2022 3:13	11.63	-0.21	6/27/2022 4:35	-0.15
6/27/2022 3:27	11.99	0.07	6/28/2022 5:11	11.58	-0.53	6/27/2022 3:14	11.67	-0.16	6/27/2022 4:36	-0.11
6/27/2022 3:28	11.98	-0.02	6/28/2022 5:12	11.60	-0.38	6/27/2022 3:15	11.66	-0.19	6/27/2022 4:37	-0.15
6/27/2022 3:29	11.98	0.15	6/28/2022 5:13	11.58	-0.50	6/27/2022 3:16	11.66	-0.22	6/27/2022 4:38	-0.10
6/27/2022 3:30	11.98	0.02	6/28/2022 5:14	11.59	-0.40	6/27/2022 3:17	11.67	-0.22	6/27/2022 4:39	-0.13
6/27/2022 3:31	12.01	0.02	6/28/2022 5:15	11.58	-0.35	6/27/2022 3:18	11.67	-0.18	6/27/2022 4:40	-0.15
6/27/2022 3:32	11.99	0.11	6/28/2022 5:16	11.57	-0.52	6/27/2022 3:19	11.66	-0.20	6/27/2022 4:41	-0.09
6/27/2022 3:33	11.97	-0.03	6/28/2022 5:17	11.59	-0.41	6/27/2022 3:20	11.69	-0.18	6/27/2022 4:42	-0.12
6/27/2022 3:34	11.98	0.03	6/28/2022 5:18	11.60	-0.44	6/27/2022 3:21	11.65	-0.21	6/27/2022 4:43	-0.16
6/27/2022 3:35	11.98	0.04	6/28/2022 5:19	11.57	-0.45	6/27/2022 3:22	11.65	-0.20	6/27/2022 4:44	-0.12
6/27/2022 3:36	11.97	-0.01	6/28/2022 5:20	11.59	-0.43	6/27/2022 3:23	11.65	-0.18	6/27/2022 4:45	-0.11
6/27/2022 3:37	11.98	0.07	6/28/2022 5:21	11.60	-0.41	6/27/2022 3:24	11.66	-0.23	6/27/2022 4:46	-0.15
6/27/2022 3:38	11.98	0.02	6/28/2022 5:22	11.59	-0.47	6/27/2022 3:25	11.66	-0.21	6/27/2022 4:47	-0.16
6/27/2022 3:39	11.97	0.09	6/28/2022 5:23	11.61	-0.52	6/27/2022 3:26	11.66	-0.15	6/27/2022 4:48	-0.07
6/27/2022 3:40	11.99	-0.02	6/28/2022 5:24	11.59	-0.53	6/27/2022 3:27	11.68	-0.18	6/27/2022 4:49	-0.08
6/27/2022 3:41	12.00	0.08	6/28/2022 5:25	11.55	-0.48	6/27/2022 3:28	11.67	-0.19	6/27/2022 4:50	-0.13
6/27/2022 3:42	11.98	0.11	6/28/2022 5:26	11.60	-0.46	6/27/2022 3:29	11.67	-0.18	6/27/2022 4:51	-0.10

6/27/2022 3:43	11.99	0.11	6/28/2022 5:27	11.62	-0.49	6/27/2022 3:30	11.65	-0.24	6/27/2022 4:52	-0.15
6/27/2022 3:44	11.98	0.07	6/28/2022 5:28	11.56	-0.48	6/27/2022 3:31	11.66	-0.19	6/27/2022 4:53	-0.12
6/27/2022 3:45	12.02	0.10	6/28/2022 5:29	11.60	-0.44	6/27/2022 3:32	11.68	-0.19	6/27/2022 4:54	-0.12
6/27/2022 3:46	11.99	0.07	6/28/2022 5:30	11.57	-0.48	6/27/2022 3:33	11.69	-0.22	6/27/2022 4:55	-0.14
6/27/2022 3:47	11.97	0.07	6/28/2022 5:31	11.61	-0.49	6/27/2022 3:34	11.68	-0.23	6/27/2022 4:56	-0.08
6/27/2022 3:48	11.95	0.01	6/28/2022 5:32	11.57	-0.33	6/27/2022 3:35	11.65	-0.20	6/27/2022 4:57	-0.14
6/27/2022 3:49	11.97	0.12	6/28/2022 5:33	11.57	-0.46	6/27/2022 3:36	11.65	-0.22	6/27/2022 4:58	-0.09
6/27/2022 3:50	11.96	0.04	6/28/2022 5:34	11.60	-0.49	6/27/2022 3:37	11.67	-0.19	6/27/2022 4:59	-0.13
6/27/2022 3:51	11.98	0.14	6/28/2022 5:35	11.59	-0.43	6/27/2022 3:38	11.67	-0.18	6/27/2022 5:00	-0.15
6/27/2022 3:52	11.97	0.01	6/28/2022 5:36	11.57	-0.44	6/27/2022 3:39	11.65	-0.19	6/27/2022 5:01	-0.16
6/27/2022 3:53	11.97	0.07	6/28/2022 5:37	11.57	-0.44	6/27/2022 3:40	11.69	-0.17	6/27/2022 5:02	-0.11
6/27/2022 3:54	11.97	0.01	6/28/2022 5:38	11.60	-0.42	6/27/2022 3:41	11.67	-0.18	6/27/2022 5:03	-0.16
6/27/2022 3:55	11.96	0.09	6/28/2022 5:39	11.59	-0.41	6/27/2022 3:42	11.68	-0.16	6/27/2022 5:04	-0.10
6/27/2022 3:56	11.98	0.15	6/28/2022 5:40	11.57	-0.37	6/27/2022 3:43	11.69	-0.23	6/27/2022 5:05	-0.16
6/27/2022 3:57	11.96	0.02	6/28/2022 5:41	11.62	-0.40	6/27/2022 3:44	11.67	-0.21	6/27/2022 5:06	-0.13
6/27/2022 3:58	11.97	0.05	6/28/2022 5:42	11.59	-0.40	6/27/2022 3:45	11.66	-0.16	6/27/2022 5:07	-0.14
6/27/2022 3:59	11.96	0.08	6/28/2022 5:43	11.60	-0.56	6/27/2022 3:46	11.67	-0.17	6/27/2022 5:08	-0.14
6/27/2022 4:00	11.96	0.18	6/28/2022 5:44	11.59	-0.49	6/27/2022 3:47	11.67	-0.21	6/27/2022 5:09	-0.10
6/27/2022 4:01	11.98	0.13	6/28/2022 5:45	11.57	-0.41	6/27/2022 3:48	11.69	-0.15	6/27/2022 5:10	-0.15
6/27/2022 4:02	11.99	0.12	6/28/2022 5:46	11.57	-0.48	6/27/2022 3:49	11.65	-0.21	6/27/2022 5:11	-0.13
6/27/2022 4:03	11.95	0.07	6/28/2022 5:47	11.59	-0.35	6/27/2022 3:50	11.67	-0.21	6/27/2022 5:12	-0.15
6/27/2022 4:04	11.96	0.09	6/28/2022 5:48	11.61	-0.41	6/27/2022 3:51	11.66	-0.23	6/27/2022 5:13	-0.12
6/27/2022 4:05	11.97	-0.03	6/28/2022 5:49	11.58	-0.48	6/27/2022 3:52	11.66	-0.20	6/27/2022 5:14	-0.17
6/27/2022 4:06	11.97	0.10	6/28/2022 5:50	11.60	-0.43	6/27/2022 3:53	11.67	-0.21	6/27/2022 5:15	-0.15
6/27/2022 4:07	11.94	0.06	6/28/2022 5:51	11.58	-0.50	6/27/2022 3:54	11.67	-0.21	6/27/2022 5:16	-0.17
6/27/2022 4:08	11.97	0.03	6/28/2022 5:52	11.61	-0.46	6/27/2022 3:55	11.68	-0.20	6/27/2022 5:17	-0.12
6/27/2022 4:09	11.95	0.02	6/28/2022 5:53	11.60	-0.58	6/27/2022 3:56	11.66	-0.25	6/27/2022 5:18	-0.17
6/27/2022 4:10	11.96	0.03	6/28/2022 5:54	11.58	-0.42	6/27/2022 3:57	11.67	-0.21	6/27/2022 5:19	-0.10
6/27/2022 4:11	11.98	-0.05	6/28/2022 5:55	11.59	-0.41	6/27/2022 3:58	11.67	-0.19	6/27/2022 5:20	-0.13
6/27/2022 4:12	11.98	0.08	6/28/2022 5:56	11.57	-0.37	6/27/2022 3:59	11.65	-0.21	6/27/2022 5:21	-0.14
6/27/2022 4:13	11.96	0.03	6/28/2022 5:57	11.58	-0.51	6/27/2022 4:00	11.65	-0.19	6/27/2022 5:22	-0.16
6/27/2022 4:14	11.95	-0.02	6/28/2022 5:58	11.57	-0.50	6/27/2022 4:01	11.69	-0.21	6/27/2022 5:23	-0.16
6/27/2022 4:15	12.00	0.04	6/28/2022 5:59	11.59	-0.45	6/27/2022 4:02	11.68	-0.25	6/27/2022 5:24	-0.13
6/27/2022 4:16	11.98	0.05	6/28/2022 6:00	11.60	-0.47	6/27/2022 4:03	11.68	-0.19	6/27/2022 5:25	-0.13
6/27/2022 4:17	11.99	0.06	6/28/2022 6:01	11.62	-0.46	6/27/2022 4:04	11.69	-0.20	6/27/2022 5:26	-0.12
6/27/2022 4:18	11.99	0.07	6/28/2022 6:02	11.60	-0.42	6/27/2022 4:05	11.66	-0.22	6/27/2022 5:27	-0.16
6/27/2022 4:19	12.01	0.07	6/28/2022 6:03	11.58	-0.45	6/27/2022 4:06	11.67	-0.24	6/27/2022 5:28	-0.14
6/27/2022 4:20	11.98	0.07	6/28/2022 6:04	11.59	-0.44	6/27/2022 4:07	11.66	-0.23	6/27/2022 5:29	-0.15
6/27/2022 4:21	12.00	0.02	6/28/2022 6:05	11.59	-0.47	6/27/2022 4:08	11.66	-0.19	6/27/2022 5:30	-0.16
6/27/2022 4:22	11.99	0.00	6/28/2022 6:06	11.59	-0.46	6/27/2022 4:09	11.66	-0.18	6/27/2022 5:31	-0.09
6/27/2022 4:23	11.99	0.08	6/28/2022 6:07	11.57	-0.48	6/27/2022 4:10	11.64	-0.18	6/27/2022 5:32	-0.12
6/27/2022 4:24	12.00	0.08	6/28/2022 6:08	11.58	-0.51	6/27/2022 4:11	11.67	-0.22	6/27/2022 5:33	-0.16
6/27/2022 4:25	11.97	0.00	6/28/2022 6:09	11.57	-0.36	6/27/2022 4:12	11.68	-0.25	6/27/2022 5:34	-0.19
6/27/2022 4:26	12.00	0.11	6/28/2022 6:10	11.59	-0.52	6/27/2022 4:13	11.66	-0.17	6/27/2022 5:35	-0.15
6/27/2022 4:27	11.98	0.01	6/28/2022 6:11	11.59	-0.49	6/27/2022 4:14	11.69	-0.21	6/27/2022 5:36	-0.09
6/27/2022 4:28	11.99	0.11	6/28/2022 6:12	11.62	-0.50	6/27/2022 4:15	11.67	-0.23	6/27/2022 5:37	-0.15
6/27/2022 4:29	11.99	0.09	6/28/2022 6:13	11.60	-0.45	6/27/2022 4:16	11.65	-0.19	6/27/2022 5:38	-0.15
6/27/2022 4:30	11.98	-0.08	6/28/2022 6:14	11.59	-0.48	6/27/2022 4:17	11.68	-0.22	6/27/2022 5:39	-0.14
6/27/2022 4:31	11.99	0.05	6/28/2022 6:15	11.59	-0.41	6/27/2022 4:18	11.68	-0.18	6/27/2022 5:40	-0.09
6/27/2022 4:32	12.01	0.02	6/28/2022 6:16	11.58	-0.50	6/27/2022 4:19	11.66	-0.16	6/27/2022 5:41	-0.10
6/27/2022 4:33	11.99	0.00	6/28/2022 6:17	11.57	-0.47	6/27/2022 4:20	11.68	-0.23	6/27/2022 5:42	-0.09
6/27/2022 4:34	12.01	0.08	6/28/2022 6:18	11.60	-0.43	6/27/2022 4:21	11.66	-0.19	6/27/2022 5:43	-0.13
6/27/2022 4:35	11.99	-0.06	6/28/2022 6:19	11.58	-0.50	6/27/2022 4:22	11.65	-0.21	6/27/2022 5:44	-0.13
6/27/2022 4:36	12.00	0.08	6/28/2022 6:20	11.62	-0.42	6/27/2022 4:23	11.66	-0.20	6/27/2022 5:45	-0.15
6/27/2022 4:37	11.99	0.11	6/28/2022 6:21	11.56	-0.49	6/27/2022 4:24	11.68	-0.22	6/27/2022 5:46	-0.11
6/27/2022 4:38	11.99	0.05	6/28/2022 6:22	11.60	-0.50	6/27/2022 4:25	11.67	-0.21	6/27/2022 5:47	-0.11
6/27/2022 4:39	12.00	0.08	6/28/2022 6:23	11.57	-0.53	6/27/2022 4:26	11.66	-0.20	6/27/2022 5:48	-0.10
6/27/2022 4:40	11.98	0.02	6/28/2022 6:24	11.62	-0.46	6/27/2022 4:27	11.65	-0.21	6/27/2022 5:49	-0.11
6/27/2022 4:41	11.97	0.08	6/28/2022 6:25	11.61	-0.46	6/27/2022 4:28	11.66	-0.22	6/27/2022 5:50	-0.12
6/27/2022 4:42	11.99	0.05	6/28/2022 6:26	11.60	-0.43	6/27/2022 4:29	11.68	-0.19	6/27/2022 5:51	-0.18
6/27/2022 4:43	11.98	-0.07	6/28/2022 6:27	11.59	-0.44	6/27/2022 4:30	11.67	-0.19	6/27/2022 5:52	-0.14
6/27/2022 4:44	12.00	0.11	6/28/2022 6:28	11.58	-0.42	6/27/2022 4:31	11.65	-0.22	6/27/2022 5:53	-0.15
6/27/2022 4:45	11.98	0.10	6/28/2022 6:29	11.60	-0.50	6/27/2022 4:32	11.66	-0.18	6/27/2022 5:54	-0.13
6/27/2022 4:46	11.99	0.03	6/28/2022 6:30	11.59	-0.45	6/27/2022 4:33	11.68	-0.22	6/27/2022 5:55	-0.21
6/27/2022 4:47	11.99	0.05	6/28/2022 6:31	11.60	-0.46	6/27/2022 4:34	11.67	-0.22	6/27/2022 5:56	-0.16
6/27/2022 4:48	11.97	0.12	6/28/2022 6:32	11.59	-0.43	6/27/2022 4:35	11.65	-0.20	6/27/2022 5:57	-0.13
6/27/2022 4:49	11.97	0.09	6/28/2022 6:33	11.57	-0.41	6/27/2022 4:36	11.70	-0.18	6/27/2022 5:58	-0.15
6/27/2022 4:50	11.97	0.00	6/28/2022 6:34	11.58	-0.50	6/27/2022 4:37	11.68	-0.20	6/27/2022 5:59	-0.09
6/27/2022 4:51	11.97	0.02	6/28/2022 6:35	11.58	-0.48	6/27/2022 4:38	11.65	-0.19	6/27/2022 6:00	-0.14
6/27/2022 4:52	11.98	0.05	6/28/2022 6:36	11.57	-0.50	6/27/2022 4:39	11.68	-0.20	6/27/2022 6:01	-0.11
6/27/2022 4:53	11.98	0.05	6/28/2022 6:37	11.59	-0.50	6/27/2022 4:40	11.68	-0.19	6/27/2022 6:02	-0.13
6/27/2022 4:54	11.97	0.02	6/28/2022 6:38	11.58	-0.51	6/27/2022 4:41	11.64	-0.22	6/27/2022 6:03	-0.12
6/27/2022 4:55	12.00	-0.01	6/28/2022 6:39	11.57	-0.43	6/27/2022 4:42	11.66	-0.19	6/27/2022 6:04	-0.10
6/27/2022 4:56	11.97	0.02	6/28/2022 6:40	11.60	-0.43	6/27/2022 4:43	11.68	-0.18	6/27/2022 6:05	-0.14
6/27/2022 4:57	11.97	0.11	6/28/2022 6:41	11.60	-0.40	6/27/2022 4:44	11.65	-0.20	6/27/2022 6:06	-0.06
6/27/2022 4:58	12.01	0.08	6/28/2022 6:42	11.59	-0.42	6/27/2022 4:45	11.67	-0.19	6/27/2022 6:07	-0.16
6/27/2022 4:59	11.99	0.07	6/28/2022 6:43	11.59	-0.42	6/27/2022 4:46	11.67	-0.22	6/27/2022 6:08	-0.11
6/27/2022 5:00	11.98	0.03	6/28/2022 6:44	11.62	-0.37	6/27/2022 4:47	11.67	-0.17	6/27/2022 6:09	-0.13
6/27/2022 5:01	11.96	0.11	6/28/2022 6:45	11.61	-0.47	6/27/2022 4:48	11.67	-0.20	6/27/2022 6:10	-0.13
6/27/2022 5:02	11.97	0.10	6/28/2022 6:46	11.60	-0.41	6/27/2022 4:49	11.66	-0.20	6/27/2022 6:11	-0.09
6/27/2022 5:03	11.97	0.04	6/28/2022 6:47	11.61	-0.40	6/27/2022 4:50	11.66	-0.21	6/27/2022 6:12	-0.14
6/27/2022 5:04	11.94	0.02	6/28/2022 6:48	11.58	-0.44	6/27/2022 4:51	11.66	-0.18	6/27/2022 6:13	-0.13
6/27/2022 5:05	11.95	0.07	6/28/2022 6:49	11.62	-0.40	6/27/2022 4:52	11.63	-0.19	6/27/2022 6:14	-0.13
6/27/2022 5:06	11.96	0.01	6/28/2022 6:50	11.60	-0.46	6/27/2022 4:53	11.67	-0.20	6/27/2022 6:15	-0.13
6/27/2022 5:07	11.95	0.03	6/28/2022 6:51	11.59	-0.46	6/27/2022 4:54	11.69	-0.18	6/27/2022 6:16	-0.11
6/27/2022 5:08	11.96	0.04	6/28/2022 6:52	11.60	-0.45	6/27/2022 4:55	11.67	-0.25	6/27/2022 6:17	-0.11
6/27/2022 5:09	11.96	0.13	6/28/2022 6:53	11.60	-0.48	6/27/2022 4:56	11.64	-0.20	6/27/2022 6:18	-0.12
6/27/2022 5:10	11.95	0.04	6/28/2022 6:54	11.59	-0.50	6/27/2022 4:57	11.67	-0.21	6/27/2022 6:19	-0.07

6/27/2022 5:11	11.94	0.07	6/28/2022 6:55	11.60	-0.48	6/27/2022 4:58	11.67	-0.21	6/27/2022 6:20	-0.12
6/27/2022 5:12	11.95	-0.04	6/28/2022 6:56	11.63	-0.46	6/27/2022 4:59	11.67	-0.19	6/27/2022 6:21	-0.12
6/27/2022 5:13	11.99	0.08	6/28/2022 6:57	11.62	-0.41	6/27/2022 5:00	11.65	-0.16	6/27/2022 6:22	-0.17
6/27/2022 5:14	11.96	0.08	6/28/2022 6:58	11.61	-0.45	6/27/2022 5:01	11.67	-0.21	6/27/2022 6:23	-0.17
6/27/2022 5:15	11.99	0.01	6/28/2022 6:59	11.59	-0.43	6/27/2022 5:02	11.68	-0.23	6/27/2022 6:24	-0.13
6/27/2022 5:16	11.99	0.09	6/28/2022 7:00	11.60	-0.51	6/27/2022 5:03	11.66	-0.25	6/27/2022 6:25	-0.12
6/27/2022 5:17	11.97	0.01	6/28/2022 7:01	11.58	-0.43	6/27/2022 5:04	11.68	-0.21	6/27/2022 6:26	-0.10
6/27/2022 5:18	11.96	0.06	6/28/2022 7:02	11.58	-0.45	6/27/2022 5:05	11.66	-0.19	6/27/2022 6:27	-0.17
6/27/2022 5:19	11.96	0.06	6/28/2022 7:03	11.60	-0.49	6/27/2022 5:06	11.69	-0.23	6/27/2022 6:28	-0.11
6/27/2022 5:20	11.97	0.02	6/28/2022 7:04	11.60	-0.52	6/27/2022 5:07	11.67	-0.17	6/27/2022 6:29	-0.12
6/27/2022 5:21	11.96	0.09	6/28/2022 7:05	11.58	-0.43	6/27/2022 5:08	11.64	-0.19	6/27/2022 6:30	-0.11
6/27/2022 5:22	11.98	0.05	6/28/2022 7:06	11.58	-0.50	6/27/2022 5:09	11.67	-0.17	6/27/2022 6:31	-0.10
6/27/2022 5:23	11.94	0.09	6/28/2022 7:07	11.58	-0.51	6/27/2022 5:10	11.66	-0.20	6/27/2022 6:32	-0.18
6/27/2022 5:24	11.97	0.03	6/28/2022 7:08	11.60	-0.52	6/27/2022 5:11	11.67	-0.18	6/27/2022 6:33	-0.12
6/27/2022 5:25	11.97	0.08	6/28/2022 7:09	11.58	-0.47	6/27/2022 5:12	11.67	-0.22	6/27/2022 6:34	-0.18
6/27/2022 5:26	11.93	0.01	6/28/2022 7:10	11.60	-0.52	6/27/2022 5:13	11.69	-0.19	6/27/2022 6:35	-0.09
6/27/2022 5:27	11.97	0.09	6/28/2022 7:11	11.57	-0.49	6/27/2022 5:14	11.67	-0.17	6/27/2022 6:36	-0.13
6/27/2022 5:28	11.93	0.00	6/28/2022 7:12	11.60	-0.47	6/27/2022 5:15	11.67	-0.18	6/27/2022 6:37	-0.16
6/27/2022 5:29	11.95	0.12	6/28/2022 7:13	11.58	-0.43	6/27/2022 5:16	11.68	-0.22	6/27/2022 6:38	-0.05
6/27/2022 5:30	11.94	0.06	6/28/2022 7:14	11.58	-0.46	6/27/2022 5:17	11.66	-0.20	6/27/2022 6:39	-0.10
6/27/2022 5:31	11.97	0.03	6/28/2022 7:15	11.60	-0.43	6/27/2022 5:18	11.68	-0.22	6/27/2022 6:40	-0.15
6/27/2022 5:32	11.95	0.07	6/28/2022 7:16	11.56	-0.49	6/27/2022 5:19	11.67	-0.23	6/27/2022 6:41	-0.13
6/27/2022 5:33	11.93	0.12	6/28/2022 7:17	11.59	-0.44	6/27/2022 5:20	11.69	-0.18	6/27/2022 6:42	-0.14
6/27/2022 5:34	11.95	0.08	6/28/2022 7:18	11.59	-0.55	6/27/2022 5:21	11.65	-0.16	6/27/2022 6:43	-0.13
6/27/2022 5:35	12.00	0.02	6/28/2022 7:19	11.61	-0.41	6/27/2022 5:22	11.66	-0.21	6/27/2022 6:44	-0.07
6/27/2022 5:36	11.98	0.09	6/28/2022 7:20	11.58	-0.47	6/27/2022 5:23	11.68	-0.20	6/27/2022 6:45	-0.13
6/27/2022 5:37	11.99	0.01	6/28/2022 7:21	11.58	-0.48	6/27/2022 5:24	11.65	-0.21	6/27/2022 6:46	-0.15
6/27/2022 5:38	11.98	0.11	6/28/2022 7:22	11.59	-0.50	6/27/2022 5:25	11.67	-0.18	6/27/2022 6:47	-0.15
6/27/2022 5:39	11.97	0.02	6/28/2022 7:23	11.58	-0.47	6/27/2022 5:26	11.67	-0.19	6/27/2022 6:48	-0.14
6/27/2022 5:40	11.97	0.09	6/28/2022 7:24	11.61	-0.45	6/27/2022 5:27	11.67	-0.20	6/27/2022 6:49	-0.10
6/27/2022 5:41	11.99	0.03	6/28/2022 7:25	11.59	-0.42	6/27/2022 5:28	11.69	-0.21	6/27/2022 6:50	-0.12
6/27/2022 5:42	11.98	0.03	6/28/2022 7:26	11.57	-0.45	6/27/2022 5:29	11.64	-0.22	6/27/2022 6:51	-0.06
6/27/2022 5:43	12.00	-0.02	6/28/2022 7:27	11.61	-0.47	6/27/2022 5:30	11.65	-0.23	6/27/2022 6:52	-0.13
6/27/2022 5:44	11.99	0.03	6/28/2022 7:28	11.60	-0.50	6/27/2022 5:31	11.66	-0.21	6/27/2022 6:53	-0.10
6/27/2022 5:45	11.99	0.00	6/28/2022 7:29	11.59	-0.45	6/27/2022 5:32	11.67	-0.21	6/27/2022 6:54	-0.08
6/27/2022 5:46	11.99	0.13	6/28/2022 7:30	11.59	-0.43	6/27/2022 5:33	11.66	-0.19	6/27/2022 6:55	-0.14
6/27/2022 5:47	11.97	0.06	6/28/2022 7:31	11.60	-0.47	6/27/2022 5:34	11.66	-0.19	6/27/2022 6:56	-0.15
6/27/2022 5:48	12.01	0.02	6/28/2022 7:32	11.60	-0.48	6/27/2022 5:35	11.67	-0.23	6/27/2022 6:57	-0.11
6/27/2022 5:49	12.01	0.12	6/28/2022 7:33	11.57	-0.44	6/27/2022 5:36	11.68	-0.19	6/27/2022 6:58	-0.14
6/27/2022 5:50	11.98	0.09	6/28/2022 7:34	11.59	-0.32	6/27/2022 5:37	11.68	-0.18	6/27/2022 6:59	-0.12
6/27/2022 5:51	11.99	0.03	6/28/2022 7:35	11.59	-0.48	6/27/2022 5:38	11.66	-0.22	6/27/2022 7:00	-0.10
6/27/2022 5:52	11.98	0.13	6/28/2022 7:36	11.58	-0.39	6/27/2022 5:39	11.69	-0.21	6/27/2022 7:01	-0.12
6/27/2022 5:53	11.97	0.03	6/28/2022 7:37	11.59	-0.44	6/27/2022 5:40	11.67	-0.20	6/27/2022 7:02	-0.15
6/27/2022 5:54	11.96	0.08	6/28/2022 7:38	11.60	-0.46	6/27/2022 5:41	11.68	-0.20	6/27/2022 7:03	-0.14
6/27/2022 5:55	11.97	0.07	6/28/2022 7:39	11.59	-0.41	6/27/2022 5:42	11.67	-0.18	6/27/2022 7:04	-0.12
6/27/2022 5:56	11.97	0.08	6/28/2022 7:40	11.58	-0.55	6/27/2022 5:43	11.66	-0.13	6/27/2022 7:05	-0.14
6/27/2022 5:57	11.96	0.12	6/28/2022 7:41	11.61	-0.51	6/27/2022 5:44	11.64	-0.22	6/27/2022 7:06	-0.13
6/27/2022 5:58	11.96	0.04	6/28/2022 7:42	11.59	-0.50	6/27/2022 5:45	11.65	-0.18	6/27/2022 7:07	-0.09
6/27/2022 5:59	11.96	0.16	6/28/2022 7:43	11.58	-0.36	6/27/2022 5:46	11.67	-0.21	6/27/2022 7:08	-0.10
6/27/2022 6:00	11.94	0.08	6/28/2022 7:44	11.60	-0.49	6/27/2022 5:47	11.66	-0.15	6/27/2022 7:09	-0.13
6/27/2022 6:01	11.95	-0.02	6/28/2022 7:45	11.59	-0.50	6/27/2022 5:48	11.66	-0.21	6/27/2022 7:10	-0.17
6/27/2022 6:02	11.94	0.04	6/28/2022 7:46	11.59	-0.45	6/27/2022 5:49	11.65	-0.20	6/27/2022 7:11	-0.15
6/27/2022 6:03	11.94	-0.03	6/28/2022 7:47	11.60	-0.51	6/27/2022 5:50	11.68	-0.22	6/27/2022 7:12	-0.11
6/27/2022 6:04	11.98	0.11	6/28/2022 7:48	11.58	-0.45	6/27/2022 5:51	11.68	-0.22	6/27/2022 7:13	-0.15
6/27/2022 6:05	11.94	0.08	6/28/2022 7:49	11.59	-0.52	6/27/2022 5:52	11.67	-0.18	6/27/2022 7:14	-0.06
6/27/2022 6:06	11.95	0.06	6/28/2022 7:50	11.60	-0.54	6/27/2022 5:53	11.65	-0.22	6/27/2022 7:15	-0.17
6/27/2022 6:07	11.97	0.13	6/28/2022 7:51	11.59	-0.53	6/27/2022 5:54	11.64	-0.20	6/27/2022 7:16	-0.08
6/27/2022 6:08	11.95	-0.01	6/28/2022 7:52	11.58	-0.41	6/27/2022 5:55	11.66	-0.18	6/27/2022 7:17	-0.07
6/27/2022 6:09	11.96	0.03	6/28/2022 7:53	11.59	-0.41	6/27/2022 5:56	11.67	-0.20	6/27/2022 7:18	-0.09
6/27/2022 6:10	11.96	0.15	6/28/2022 7:54	11.61	-0.48	6/27/2022 5:57	11.67	-0.21	6/27/2022 7:19	-0.13
6/27/2022 6:11	11.98	0.08	6/28/2022 7:55	11.62	-0.44	6/27/2022 5:58	11.65	-0.17	6/27/2022 7:20	-0.10
6/27/2022 6:12	11.96	0.04	6/28/2022 7:56	11.57	-0.44	6/27/2022 5:59	11.64	-0.22	6/27/2022 7:21	-0.10
6/27/2022 6:13	12.00	0.05	6/28/2022 7:57	11.59	-0.48	6/27/2022 6:00	11.70	-0.22	6/27/2022 7:22	-0.16
6/27/2022 6:14	12.00	0.04	6/28/2022 7:58	11.60	-0.48	6/27/2022 6:01	11.65	-0.22	6/27/2022 7:23	-0.07
6/27/2022 6:15	12.00	0.07	6/28/2022 7:59	11.60	-0.45	6/27/2022 6:02	11.66	-0.21	6/27/2022 7:24	-0.16
6/27/2022 6:16	11.99	0.12	6/28/2022 8:00	11.58	-0.46	6/27/2022 6:03	11.63	-0.21	6/27/2022 7:25	-0.12
6/27/2022 6:17	12.00	0.05	6/28/2022 8:01	11.58	-0.49	6/27/2022 6:04	11.67	-0.21	6/27/2022 7:26	-0.13
6/27/2022 6:18	11.99	-0.01	6/28/2022 8:02	11.59	-0.44	6/27/2022 6:05	11.63	-0.19	6/27/2022 7:27	-0.07
6/27/2022 6:19	11.97	-0.01	6/28/2022 8:03	11.59	-0.47	6/27/2022 6:06	11.64	-0.21	6/27/2022 7:28	-0.14
6/27/2022 6:20	11.95	0.10	6/28/2022 8:04	11.60	-0.46	6/27/2022 6:07	11.67	-0.22	6/27/2022 7:29	-0.11
6/27/2022 6:21	11.96	0.13	6/28/2022 8:05	11.59	-0.54	6/27/2022 6:08	11.69	-0.22	6/27/2022 7:30	-0.15
6/27/2022 6:22	11.97	0.06	6/28/2022 8:06	11.61	-0.48	6/27/2022 6:09	11.66	-0.19	6/27/2022 7:31	-0.17
6/27/2022 6:23	11.97	0.02	6/28/2022 8:07	11.58	-0.39	6/27/2022 6:10	11.69	-0.20	6/27/2022 7:32	-0.18
6/27/2022 6:24	11.98	-0.01	6/28/2022 8:08	11.62	-0.45	6/27/2022 6:11	11.69	-0.21	6/27/2022 7:33	-0.14
6/27/2022 6:25	11.98	0.09	6/28/2022 8:09	11.62	-0.42	6/27/2022 6:12	11.64	-0.21	6/27/2022 7:34	-0.16
6/27/2022 6:26	11.99	-0.07	6/28/2022 8:10	11.58	-0.46	6/27/2022 6:13	11.69	-0.19	6/27/2022 7:35	-0.13
6/27/2022 6:27	12.00	0.04	6/28/2022 8:11	11.61	-0.41	6/27/2022 6:14	11.69	-0.18	6/27/2022 7:36	-0.15
6/27/2022 6:28	11.99	0.03	6/28/2022 8:12	11.59	-0.49	6/27/2022 6:15	11.69	-0.19	6/27/2022 7:37	-0.10
6/27/2022 6:29	11.99	0.03	6/28/2022 8:13	11.58	-0.46	6/27/2022 6:16	11.68	-0.16	6/27/2022 7:38	-0.13
6/27/2022 6:30	11.96	0.08	6/28/2022 8:14	11.60	-0.43	6/27/2022 6:17	11.70	-0.23	6/27/2022 7:39	-0.13
6/27/2022 6:31	12.00	0.06	6/28/2022 8:15	11.63	-0.49	6/27/2022 6:18	11.68	-0.23	6/27/2022 7:40	-0.13
6/27/2022 6:32	12.00	0.07	6/28/2022 8:16	11.55	-0.45	6/27/2022 6:19	11.66	-0.26	6/27/2022 7:41	-0.12
6/27/2022 6:33	11.99	0.04	6/28/2022 8:17	11.59	-0.41	6/27/2022 6:20	11.67	-0.17	6/27/2022 7:42	-0.14
6/27/2022 6:34	12.00	0.08	6/28/2022 8:18	11.60	-0.42	6/27/2022 6:21	11.68	-0.23	6/27/2022 7:43	-0.18
6/27/2022 6:35	11.99	0.13	6/28/2022 8:19	11.61	-0.50	6/27/2022 6:22	11.67	-0.25	6/27/2022 7:44	-0.16
6/27/2022 6:36	11.98	0.05	6/28/2022 8:20	11.59	-0.49	6/27/2022 6:23	11.67	-0.17	6/27/2022 7:45	-0.12
6/27/2022 6:37	12.02	0.09	6/28/2022 8:21	11.58	-0.46	6/27/2022 6:24	11.67	-0.21	6/27/2022 7:46	-0.14
6/27/2022 6:38	11.99	0.08	6/28/2022 8:22	11.58	-0.49	6/27/2022 6:25	11.68	-0.24	6/27/2022 7:47	-0.10

6/27/2022 6:39	11.97	0.09	6/28/2022 8:23	11.58	-0.50	6/27/2022 6:26	11.67	-0.20	6/27/2022 7:48	-0.11
6/27/2022 6:40	11.96	0.09	6/28/2022 8:24	11.61	-0.46	6/27/2022 6:27	11.66	-0.16	6/27/2022 7:49	-0.16
6/27/2022 6:41	11.98	0.06	6/28/2022 8:25	11.58	-0.48	6/27/2022 6:28	11.68	-0.20	6/27/2022 7:50	-0.13
6/27/2022 6:42	11.99	0.07	6/28/2022 8:26	11.60	-0.46	6/27/2022 6:29	11.68	-0.20	6/27/2022 7:51	-0.09
6/27/2022 6:43	11.99	0.06	6/28/2022 8:27	11.59	-0.48	6/27/2022 6:30	11.66	-0.19	6/27/2022 7:52	-0.14
6/27/2022 6:44	11.98	0.04	6/28/2022 8:28	11.60	-0.41	6/27/2022 6:31	11.67	-0.18	6/27/2022 7:53	-0.15
6/27/2022 6:45	11.99	0.01	6/28/2022 8:29	11.59	-0.49	6/27/2022 6:32	11.66	-0.18	6/27/2022 7:54	-0.12
6/27/2022 6:46	11.98	0.09	6/28/2022 8:30	11.58	-0.48	6/27/2022 6:33	11.67	-0.18	6/27/2022 7:55	-0.13
6/27/2022 6:47	11.93	0.00	6/28/2022 8:31	11.58	-0.49	6/27/2022 6:34	11.68	-0.19	6/27/2022 7:56	-0.15
6/27/2022 6:48	11.95	0.11	6/28/2022 8:32	11.58	-0.46	6/27/2022 6:35	11.69	-0.22	6/27/2022 7:57	-0.07
6/27/2022 6:49	11.94	0.01	6/28/2022 8:33	11.58	-0.41	6/27/2022 6:36	11.66	-0.20	6/27/2022 7:58	-0.12
6/27/2022 6:50	11.96	0.08	6/28/2022 8:34	11.60	-0.51	6/27/2022 6:37	11.67	-0.23	6/27/2022 7:59	-0.13
6/27/2022 6:51	11.95	0.14	6/28/2022 8:35	11.60	-0.42	6/27/2022 6:38	11.67	-0.21	6/27/2022 8:00	-0.13
6/27/2022 6:52	11.96	0.01	6/28/2022 8:36	11.60	-0.42	6/27/2022 6:39	11.69	-0.21	6/27/2022 8:01	-0.16
6/27/2022 6:53	11.98	0.08	6/28/2022 8:37	11.61	-0.39	6/27/2022 6:40	11.68	-0.19	6/27/2022 8:02	-0.14
6/27/2022 6:54	11.96	0.11	6/28/2022 8:38	11.60	-0.39	6/27/2022 6:41	11.65	-0.22	6/27/2022 8:03	-0.12
6/27/2022 6:55	11.95	0.06	6/28/2022 8:39	11.61	-0.44	6/27/2022 6:42	11.67	-0.24	6/27/2022 8:04	-0.11
6/27/2022 6:56	11.94	0.05	6/28/2022 8:40	11.62	-0.47	6/27/2022 6:43	11.68	-0.20	6/27/2022 8:05	-0.19
6/27/2022 6:57	11.98	0.05	6/28/2022 8:41	11.59	-0.39	6/27/2022 6:44	11.67	-0.19	6/27/2022 8:06	-0.16
6/27/2022 6:58	11.97	0.09	6/28/2022 8:42	11.59	-0.46	6/27/2022 6:45	11.67	-0.19	6/27/2022 8:07	-0.08
6/27/2022 6:59	11.95	0.08	6/28/2022 8:43	11.61	-0.43	6/27/2022 6:46	11.67	-0.17	6/27/2022 8:08	-0.11
6/27/2022 7:00	11.94	0.08	6/28/2022 8:44	11.56	-0.52	6/27/2022 6:47	11.67	-0.20	6/27/2022 8:09	-0.11
6/27/2022 7:01	11.93	0.13	6/28/2022 8:45	11.57	-0.42	6/27/2022 6:48	11.66	-0.22	6/27/2022 8:10	-0.14
6/27/2022 7:02	11.96	0.13	6/28/2022 8:46	11.57	-0.41	6/27/2022 6:49	11.66	-0.19	6/27/2022 8:11	-0.14
6/27/2022 7:03	11.94	0.12	6/28/2022 8:47	11.58	-0.43	6/27/2022 6:50	11.67	-0.24	6/27/2022 8:12	-0.13
6/27/2022 7:04	11.96	0.09	6/28/2022 8:48	11.59	-0.44	6/27/2022 6:51	11.67	-0.23	6/27/2022 8:13	-0.16
6/27/2022 7:05	11.95	0.04	6/28/2022 8:49	11.57	-0.44	6/27/2022 6:52	11.66	-0.23	6/27/2022 8:14	-0.11
6/27/2022 7:06	11.94	0.11	6/28/2022 8:50	11.59	-0.51	6/27/2022 6:53	11.66	-0.22	6/27/2022 8:15	-0.08
6/27/2022 7:07	11.96	0.10	6/28/2022 8:51	11.58	-0.46	6/27/2022 6:54	11.64	-0.23	6/27/2022 8:16	-0.11
6/27/2022 7:08	11.97	0.07	6/28/2022 8:52	11.60	-0.45	6/27/2022 6:55	11.66	-0.18	6/27/2022 8:17	-0.07
6/27/2022 7:09	11.97	0.08	6/28/2022 8:53	11.59	-0.39	6/27/2022 6:56	11.67	-0.16	6/27/2022 8:18	-0.18
6/27/2022 7:10	11.96	0.03	6/28/2022 8:54	11.57	-0.43	6/27/2022 6:57	11.66	-0.21	6/27/2022 8:19	-0.11
6/27/2022 7:11	11.98	0.02	6/28/2022 8:55	11.58	-0.48	6/27/2022 6:58	11.66	-0.19	6/27/2022 8:20	-0.07
6/27/2022 7:12	11.97	0.07	6/28/2022 8:56	11.60	-0.42	6/27/2022 6:59	11.65	-0.20	6/27/2022 8:21	-0.12
6/27/2022 7:13	11.98	-0.01	6/28/2022 8:57	11.57	-0.44	6/27/2022 7:00	11.68	-0.18	6/27/2022 8:22	-0.09
6/27/2022 7:14	12.00	0.07	6/28/2022 8:58	11.60	-0.55	6/27/2022 7:01	11.68	-0.20	6/27/2022 8:23	-0.13
6/27/2022 7:15	11.97	0.01				6/27/2022 7:02	11.68	-0.20	6/27/2022 8:24	-0.14
6/27/2022 7:16	11.98	0.05				6/27/2022 7:03	11.65	-0.22	6/27/2022 8:25	-0.14
6/27/2022 7:17	11.97	0.18				6/27/2022 7:04	11.67	-0.20	6/27/2022 8:26	-0.14
6/27/2022 7:18	12.00	0.04				6/27/2022 7:05	11.67	-0.19	6/27/2022 8:27	-0.13
6/27/2022 7:19	12.01	0.01				6/27/2022 7:06	11.66	-0.19	6/27/2022 8:28	-0.08
6/27/2022 7:20	11.97	0.01				6/27/2022 7:07	11.68	-0.17	6/27/2022 8:29	-0.16
6/27/2022 7:21	11.99	0.08				6/27/2022 7:08	11.66	-0.21	6/27/2022 8:30	-0.13
6/27/2022 7:22	11.95	0.03				6/27/2022 7:09	11.67	-0.22	6/27/2022 8:31	-0.11
6/27/2022 7:23	11.99	0.12				6/27/2022 7:10	11.64	-0.18	6/27/2022 8:32	-0.13
6/27/2022 7:24	11.98	0.05				6/27/2022 7:11	11.67	-0.23	6/27/2022 8:33	-0.14
6/27/2022 7:25	12.03	-0.03				6/27/2022 7:12	11.66	-0.20	6/27/2022 8:34	-0.17
6/27/2022 7:26	11.98	0.08				6/27/2022 7:13	11.65	-0.20	6/27/2022 8:35	-0.15
6/27/2022 7:27	11.97	0.07				6/27/2022 7:14	11.65	-0.22	6/27/2022 8:36	-0.10
6/27/2022 7:28	11.98	0.06				6/27/2022 7:15	11.67	-0.18	6/27/2022 8:37	-0.13
6/27/2022 7:29	11.96	0.00				6/27/2022 7:16	11.68	-0.20	6/27/2022 8:38	-0.09
6/27/2022 7:30	11.95	0.03				6/27/2022 7:17	11.67	-0.21	6/27/2022 8:39	-0.12
6/27/2022 7:31	11.98	0.15				6/27/2022 7:18	11.69	-0.19	6/27/2022 8:40	-0.14
6/27/2022 7:32	11.95	0.06				6/27/2022 7:19	11.67	-0.21	6/27/2022 8:41	-0.09
6/27/2022 7:33	11.97	0.08				6/27/2022 7:20	11.67	-0.19	6/27/2022 8:42	-0.09
6/27/2022 7:34	11.97	-0.01				6/27/2022 7:21	11.67	-0.23	6/27/2022 8:43	-0.15
6/27/2022 7:35	11.98	0.06				6/27/2022 7:22	11.66	-0.26	6/27/2022 8:44	-0.13
6/27/2022 7:36	11.98	0.07				6/27/2022 7:23	11.67	-0.21	6/27/2022 8:45	-0.16
6/27/2022 7:37	11.97	0.02				6/27/2022 7:24	11.68	-0.19	6/27/2022 8:46	-0.11
6/27/2022 7:38	11.97	0.02				6/27/2022 7:25	11.66	-0.17	6/27/2022 8:47	-0.10
6/27/2022 7:39	12.00	0.04				6/27/2022 7:26	11.66	-0.20	6/27/2022 8:48	-0.12
6/27/2022 7:40	11.96	0.12				6/27/2022 7:27	11.67	-0.19	6/27/2022 8:49	-0.13
6/27/2022 7:41	11.97	0.08				6/27/2022 7:28	11.68	-0.16	6/27/2022 8:50	-0.09
6/27/2022 7:42	11.99	0.03				6/27/2022 7:29	11.69	-0.22	6/27/2022 8:51	-0.11
6/27/2022 7:43	11.98	0.08				6/27/2022 7:30	11.65	-0.20	6/27/2022 8:52	-0.12
6/27/2022 7:44	11.97	0.07				6/27/2022 7:31	11.67	-0.19	6/27/2022 8:53	-0.12
6/27/2022 7:45	11.98	0.01				6/27/2022 7:32	11.66	-0.19	6/27/2022 8:54	-0.11
6/27/2022 7:46	12.00	0.05				6/27/2022 7:33	11.66	-0.21	6/27/2022 8:55	-0.14
6/27/2022 7:47	11.97	0.01				6/27/2022 7:34	11.64	-0.24	6/27/2022 8:56	-0.13
6/27/2022 7:48	11.97	-0.02				6/27/2022 7:35	11.67	-0.19	6/27/2022 8:57	-0.14
6/27/2022 7:49	11.98	0.03				6/27/2022 7:36	11.66	-0.16	6/27/2022 8:58	-0.10
6/27/2022 7:50	11.99	0.12				6/27/2022 7:37	11.66	-0.18	6/27/2022 8:59	-0.15
6/27/2022 7:51	11.99	0.05				6/27/2022 7:38	11.67	-0.24	6/27/2022 9:00	-0.12
6/27/2022 7:52	11.97	0.07				6/27/2022 7:39	11.69	-0.21	6/27/2022 9:01	-0.13
6/27/2022 7:53	11.97	0.02				6/27/2022 7:40	11.69	-0.18	6/27/2022 9:02	-0.15
6/27/2022 7:54	11.99	0.07				6/27/2022 7:41	11.66	-0.21	6/27/2022 9:03	-0.12
6/27/2022 7:55	11.97	0.10				6/27/2022 7:42	11.68	-0.18	6/27/2022 9:04	-0.17
6/27/2022 7:56	11.97	-0.02				6/27/2022 7:43	11.66	-0.20	6/27/2022 9:05	-0.11
6/27/2022 7:57	11.97	0.05				6/27/2022 7:44	11.67	-0.17	6/27/2022 9:06	-0.14
6/27/2022 7:58	11.97	0.11				6/27/2022 7:45	11.69	-0.17	6/27/2022 9:07	-0.09
6/27/2022 7:59	11.96	0.12				6/27/2022 7:46	11.68	-0.19	6/27/2022 9:08	-0.13
6/27/2022 8:00	11.98	0.06				6/27/2022 7:47	11.69	-0.19	6/27/2022 9:09	-0.12
6/27/2022 8:01	11.99	0.08				6/27/2022 7:48	11.67	-0.19	6/27/2022 9:10	-0.12
6/27/2022 8:02	11.96	0.02				6/27/2022 7:49	11.69	-0.19	6/27/2022 9:11	-0.10
6/27/2022 8:03	11.99	0.09				6/27/2022 7:50	11.67	-0.24	6/27/2022 9:12	-0.12
6/27/2022 8:04	11.96	0.10				6/27/2022 7:51	11.67	-0.15	6/27/2022 9:13	-0.16
6/27/2022 8:05	11.96	0.12				6/27/2022 7:52	11.69	-0.25	6/27/2022 9:14	-0.15
6/27/2022 8:06	11.95	0.03				6/27/2022 7:53	11.69	-0.24	6/27/2022 9:15	-0.12

6/27/2022 8:07	11.99	0.00
6/27/2022 8:08	11.96	0.04
6/27/2022 8:09	11.96	0.10
6/27/2022 8:10	11.98	-0.02
6/27/2022 8:11	11.98	0.05
6/27/2022 8:12	12.00	0.03
6/27/2022 8:13	11.97	0.07
6/27/2022 8:14	11.97	-0.04
6/27/2022 8:15	11.99	0.05
6/27/2022 8:16	11.97	0.11
6/27/2022 8:17	11.98	0.09
6/27/2022 8:18	11.97	0.08
6/27/2022 8:19	11.98	-0.01
6/27/2022 8:20	11.99	0.08
6/27/2022 8:21	11.96	0.06
6/27/2022 8:22	11.98	0.09
6/27/2022 8:23	11.96	0.07
6/27/2022 8:24	11.97	0.05
6/27/2022 8:25	11.98	0.16
6/27/2022 8:26	11.99	0.00
6/27/2022 8:27	11.97	0.08
6/27/2022 8:28	11.97	0.06
6/27/2022 8:29	11.99	0.08
6/27/2022 8:30	11.98	0.13
6/27/2022 8:31	11.95	0.10
6/27/2022 8:32	11.97	0.02
6/27/2022 8:33	12.00	0.08
6/27/2022 8:34	11.95	0.04
6/27/2022 8:35	11.99	0.07
6/27/2022 8:36	12.00	0.07
6/27/2022 8:37	11.96	0.15
6/27/2022 8:38	11.98	0.09
6/27/2022 8:39	11.98	0.07
6/27/2022 8:40	11.99	0.03
6/27/2022 8:41	11.97	0.12
6/27/2022 8:42	12.01	0.03
6/27/2022 8:43	12.01	0.07
6/27/2022 8:44	12.01	0.11
6/27/2022 8:45	12.01	0.04
6/27/2022 8:46	12.00	-0.02
6/27/2022 8:47	11.99	0.08
6/27/2022 8:48	12.02	0.09
6/27/2022 8:49	11.97	0.09
6/27/2022 8:50	11.98	0.05
6/27/2022 8:51	11.95	0.04
6/27/2022 8:52	11.98	-0.07
6/27/2022 8:53	11.96	0.13
6/27/2022 8:54	11.96	0.03
6/27/2022 8:55	11.95	0.11
6/27/2022 8:56	11.97	-0.03
6/27/2022 8:57	11.96	0.05
6/27/2022 8:58	11.99	0.05
6/27/2022 8:59	11.97	0.11
6/27/2022 9:00	11.98	0.08
6/27/2022 9:01	11.97	0.08
6/27/2022 9:02	11.95	0.03
6/27/2022 9:03	11.99	0.03
6/27/2022 9:04	12.01	0.03
6/27/2022 9:05	12.01	0.07
6/27/2022 9:06	12.01	0.03
6/27/2022 9:07	12.01	0.12
6/27/2022 9:08	12.02	0.12
6/27/2022 9:09	11.97	0.08
6/27/2022 9:10	11.97	-0.02
6/27/2022 9:11	11.98	-0.01
6/27/2022 9:12	11.96	0.06
6/27/2022 9:13	11.97	0.03
6/27/2022 9:14	11.98	0.07
6/27/2022 9:15	11.99	0.10
6/27/2022 9:16	11.97	0.09
6/27/2022 9:17	11.97	0.06
6/27/2022 9:18	11.98	0.06
6/27/2022 9:19	11.99	0.03
6/27/2022 9:20	11.98	0.08
6/27/2022 9:21	11.98	0.12
6/27/2022 9:22	11.97	0.09
6/27/2022 9:23	12.01	0.04
6/27/2022 9:24	11.98	0.07
6/27/2022 9:25	11.97	0.05
6/27/2022 9:26	11.99	0.12
6/27/2022 9:27	11.99	0.08
6/27/2022 9:28	11.97	-0.02
6/27/2022 9:29	11.96	0.13
6/27/2022 9:30	11.98	0.11
6/27/2022 9:31	11.98	0.12
6/27/2022 9:32	11.99	0.01
6/27/2022 9:33	11.97	0.07
6/27/2022 9:34	11.99	0.07
6/27/2022 7:54	11.66	-0.18
6/27/2022 7:55	11.67	-0.14
6/27/2022 7:56	11.66	-0.18
6/27/2022 7:57	11.67	-0.20
6/27/2022 7:58	11.66	-0.20
6/27/2022 7:59	11.65	-0.19
6/27/2022 8:00	11.66	-0.20
6/27/2022 8:01	11.64	-0.19
6/27/2022 8:02	11.67	-0.21
6/27/2022 8:03	11.67	-0.22
6/27/2022 8:04	11.70	-0.16
6/27/2022 8:05	11.68	-0.20
6/27/2022 8:06	11.67	-0.20
6/27/2022 8:07	11.70	-0.18
6/27/2022 8:08	11.65	-0.21
6/27/2022 8:09	11.69	-0.17
6/27/2022 8:10	11.69	-0.19
6/27/2022 8:11	11.64	-0.17
6/27/2022 8:12	11.68	-0.19
6/27/2022 8:13	11.64	-0.18
6/27/2022 8:14	11.67	-0.23
6/27/2022 8:15	11.66	-0.19
6/27/2022 8:16	11.67	-0.19
6/27/2022 8:17	11.68	-0.16
6/27/2022 8:18	11.66	-0.18
6/27/2022 8:19	11.67	-0.19
6/27/2022 8:20	11.66	-0.21
6/27/2022 8:21	11.68	-0.21
6/27/2022 8:22	11.66	-0.18
6/27/2022 8:23	11.68	-0.21
6/27/2022 8:24	11.67	-0.21
6/27/2022 8:25	11.65	-0.20
6/27/2022 8:26	11.67	-0.20
6/27/2022 8:27	11.67	-0.21
6/27/2022 8:28	11.66	-0.18
6/27/2022 8:29	11.68	-0.21
6/27/2022 8:30	11.65	-0.22
6/27/2022 8:31	11.68	-0.18
6/27/2022 8:32	11.67	-0.21
6/27/2022 8:33	11.68	-0.23
6/27/2022 8:34	11.68	-0.23
6/27/2022 8:35	11.68	-0.19
6/27/2022 8:36	11.66	-0.20
6/27/2022 8:37	11.63	-0.22
6/27/2022 8:38	11.68	-0.23
6/27/2022 8:39	11.67	-0.22
6/27/2022 8:40	11.66	-0.22
6/27/2022 8:41	11.68	-0.22
6/27/2022 8:42	11.68	-0.19
6/27/2022 8:43	11.66	-0.18
6/27/2022 8:44	11.67	-0.19
6/27/2022 8:45	11.67	-0.20
6/27/2022 8:46	11.65	-0.17
6/27/2022 8:47	11.66	-0.18
6/27/2022 8:48	11.65	-0.17
6/27/2022 8:49	11.68	-0.18
6/27/2022 8:50	11.67	-0.22
6/27/2022 8:51	11.67	-0.19
6/27/2022 8:52	11.66	-0.18
6/27/2022 8:53	11.69	-0.22
6/27/2022 8:54	11.66	-0.20
6/27/2022 8:55	11.65	-0.20
6/27/2022 8:56	11.66	-0.18
6/27/2022 8:57	11.65	-0.20
6/27/2022 8:58	11.66	-0.25
6/27/2022 8:59	11.65	-0.20
6/27/2022 9:00	11.67	-0.22
6/27/2022 9:01	11.67	-0.21
6/27/2022 9:02	11.68	-0.19
6/27/2022 9:03	11.70	-0.21
6/27/2022 9:04	11.67	-0.19
6/27/2022 9:05	11.66	-0.20
6/27/2022 9:06	11.68	-0.21
6/27/2022 9:07	11.66	-0.21
6/27/2022 9:08	11.65	-0.21
6/27/2022 9:09	11.68	-0.15
6/27/2022 9:10	11.65	-0.18
6/27/2022 9:11	11.67	-0.21
6/27/2022 9:12	11.68	-0.20
6/27/2022 9:13	11.66	-0.19
6/27/2022 9:14	11.66	-0.17
6/27/2022 9:15	11.66	-0.20
6/27/2022 9:16	11.69	-0.23
6/27/2022 9:17	11.66	-0.23
6/27/2022 9:18	11.65	-0.23
6/27/2022 9:19	11.66	-0.20
6/27/2022 9:20	11.66	-0.19
6/27/2022 9:21	11.66	-0.20
6/27/2022 9:16		-0.11
6/27/2022 9:17		-0.16
6/27/2022 9:18		-0.14
6/27/2022 9:19		-0.10
6/27/2022 9:20		-0.10
6/27/2022 9:21		-0.16
6/27/2022 9:22		-0.07
6/27/2022 9:23		-0.15
6/27/2022 9:24		-0.17
6/27/2022 9:25		-0.15
6/27/2022 9:26		-0.15
6/27/2022 9:27		-0.10
6/27/2022 9:28		-0.12
6/27/2022 9:29		-0.08
6/27/2022 9:30		-0.11
6/27/2022 9:31		-0.09
6/27/2022 9:32		-0.10
6/27/2022 9:33		-0.10
6/27/2022 9:34		-0.12
6/27/2022 9:35		-0.11
6/27/2022 9:36		-0.13
6/27/2022 9:37		-0.13
6/27/2022 9:38		-0.12
6/27/2022 9:39		-0.17
6/27/2022 9:40		-0.11
6/27/2022 9:41		-0.14
6/27/2022 9:42		-0.10
6/27/2022 9:43		-0.15
6/27/2022 9:44		-0.14
6/27/2022 9:45		-0.10
6/27/2022 9:46		-0.13
6/27/2022 9:47		-0.14
6/27/2022 9:48		-0.08
6/27/2022 9:49		-0.07
6/27/2022 9:50		-0.11
6/27/2022 9:51		-0.09
6/27/2022 9:52		-0.12
6/27/2022 9:53		-0.10
6/27/2022 9:54		-0.13
6/27/2022 9:55		-0.13
6/27/2022 9:56		-0.14
6/27/2022 9:57		-0.14
6/27/2022 9:58		-0.12
6/27/2022 9:59		-0.12
6/27/2022 10:00		-0.08
6/27/2022 10:01		-0.18
6/27/2022 10:02		-0.14
6/27/2022 10:03		-0.18
6/27/2022 10:04		-0.12
6/27/2022 10:05		-0.14
6/27/2022 10:06		-0.13
6/27/2022 10:07		-0.15
6/27/2022 10:08		-0.10
6/27/2022 10:09		-0.11
6/27/2022 10:10		-0.11
6/27/2022 10:11		-0.12
6/27/2022 10:12		-0.15
6/27/2022 10:13		-0.13
6/27/2022 10:14		-0.11
6/27/2022 10:15		-0.07
6/27/2022 10:16		-0.16
6/27/2022 10:17		-0.10
6/27/2022 10:18		-0.09
6/27/2022 10:19		-0.12
6/27/2022 10:20		-0.13
6/27/2022 10:21		-0.12
6/27/2022 10:22		-0.13
6/27/2022 10:23		-0.13
6/27/2022 10:24		-0.12
6/27/2022 10:25		-0.12
6/27/2022 10:26		-0.14
6/27/2022 10:27		-0.14
6/27/2022 10:28		-0.06
6/27/2022 10:29		-0.05
6/27/2022 10:30		-0.09
6/27/2022 10:31		-0.15
6/27/2022 10:32		-0.15
6/27/2022 10:33		-0.11
6/27/2022 10:34		-0.10
6/27/2022 10:35		-0.13
6/27/2022 10:36		-0.16
6/27/2022 10:37		-0.12
6/27/2022 10:38		-0.12
6/27/2022 10:39		-0.19
6/27/2022 10:40		-0.11
6/27/2022 10:41		-0.10
6/27/2022 10:42		-0.11
6/27/2022 10:43		-0.12

6/27/2022 9:35	12.00	0.06
6/27/2022 9:36	11.98	0.12
6/27/2022 9:37	12.01	0.04
6/27/2022 9:38	11.98	-0.01
6/27/2022 9:39	11.98	0.04
6/27/2022 9:40	12.00	0.04
6/27/2022 9:41	11.97	0.10
6/27/2022 9:42	11.99	0.06
6/27/2022 9:43	11.99	0.08
6/27/2022 9:44	11.97	0.09
6/27/2022 9:45	11.98	0.12
6/27/2022 9:46	12.00	0.12
6/27/2022 9:47	11.99	0.05
6/27/2022 9:48	11.99	0.02
6/27/2022 9:49	11.97	0.00
6/27/2022 9:50	11.96	0.05
6/27/2022 9:51	12.01	0.08
6/27/2022 9:52	12.00	0.09
6/27/2022 9:53	12.00	0.07
6/27/2022 9:54	11.97	0.07
6/27/2022 9:55	11.99	0.18
6/27/2022 9:56	11.98	0.08
6/27/2022 9:57	11.98	0.12
6/27/2022 9:58	11.97	0.06
6/27/2022 9:59	11.99	0.01
6/27/2022 10:00	11.99	0.04
6/27/2022 10:01	11.96	0.00
6/27/2022 10:02	11.98	0.01
6/27/2022 10:03	11.97	-0.03
6/27/2022 10:04	12.00	0.09
6/27/2022 10:05	11.99	-0.04
6/27/2022 10:06	12.00	0.07
6/27/2022 10:07	11.96	0.02
6/27/2022 10:08	11.96	0.06
6/27/2022 10:09	11.97	0.03
6/27/2022 10:10	11.98	0.01
6/27/2022 10:11	11.99	0.12
6/27/2022 10:12	11.97	0.00
6/27/2022 10:13	11.96	0.05
6/27/2022 10:14	11.96	0.08
6/27/2022 10:15	11.97	0.02
6/27/2022 10:16	11.98	0.11
6/27/2022 10:17	11.96	0.03
6/27/2022 10:18	11.97	0.12
6/27/2022 10:19	11.96	0.04
6/27/2022 10:20	11.97	0.11
6/27/2022 10:21	11.97	0.05
6/27/2022 10:22	11.97	-0.02
6/27/2022 10:23	11.97	0.14
6/27/2022 10:24	11.96	0.02
6/27/2022 10:25	11.99	0.02
6/27/2022 10:26	11.99	0.08
6/27/2022 10:27	11.96	0.12
6/27/2022 10:28	11.97	0.11
6/27/2022 10:29	11.95	0.10
6/27/2022 10:30	11.98	0.05
6/27/2022 10:31	11.95	0.08
6/27/2022 10:32	11.97	0.12
6/27/2022 10:33	11.95	0.02
6/27/2022 10:34	11.97	0.03
6/27/2022 10:35	11.96	0.13
6/27/2022 10:36	11.96	0.00
6/27/2022 10:37	11.96	-0.02
6/27/2022 10:38	11.97	0.06
6/27/2022 10:39	11.96	0.12
6/27/2022 10:40	11.97	-0.02
6/27/2022 10:41	11.98	0.13
6/27/2022 10:42	12.00	-0.04
6/27/2022 10:43	11.96	0.09
6/27/2022 10:44	11.98	0.03
6/27/2022 10:45	11.99	-0.01
6/27/2022 10:46	11.96	0.06
6/27/2022 10:47	11.99	0.03
6/27/2022 10:48	12.00	0.02
6/27/2022 10:49	11.99	0.10
6/27/2022 10:50	11.97	0.08
6/27/2022 10:51	12.00	0.07
6/27/2022 10:52	11.99	0.10
6/27/2022 10:53	11.96	0.08
6/27/2022 10:54	11.96	0.03
6/27/2022 10:55	11.97	0.10
6/27/2022 10:56	11.98	0.02
6/27/2022 10:57	11.98	0.10
6/27/2022 10:58	11.97	0.08
6/27/2022 10:59	11.99	0.09
6/27/2022 11:00	11.97	0.04
6/27/2022 11:01	11.98	0.10
6/27/2022 11:02	11.95	0.02
6/27/2022 9:22	11.67	-0.21
6/27/2022 9:23	11.67	-0.20
6/27/2022 9:24	11.69	-0.19
6/27/2022 9:25	11.66	-0.21
6/27/2022 9:26	11.68	-0.22
6/27/2022 9:27	11.67	-0.21
6/27/2022 9:28	11.67	-0.22
6/27/2022 9:29	11.68	-0.20
6/27/2022 9:30	11.66	-0.22
6/27/2022 9:31	11.68	-0.19
6/27/2022 9:32	11.66	-0.16
6/27/2022 9:33	11.66	-0.19
6/27/2022 9:34	11.69	-0.20
6/27/2022 9:35	11.68	-0.21
6/27/2022 9:36	11.67	-0.21
6/27/2022 9:37	11.69	-0.22
6/27/2022 9:38	11.68	-0.18
6/27/2022 9:39	11.67	-0.19
6/27/2022 9:40	11.66	-0.20
6/27/2022 9:41	11.65	-0.20
6/27/2022 9:42	11.66	-0.19
6/27/2022 9:43	11.68	-0.17
6/27/2022 9:44	11.66	-0.21
6/27/2022 9:45	11.69	-0.21
6/27/2022 9:46	11.67	-0.18
6/27/2022 9:47	11.66	-0.23
6/27/2022 9:48	11.66	-0.22
6/27/2022 9:49	11.67	-0.21
6/27/2022 9:50	11.65	-0.24
6/27/2022 9:51	11.66	-0.18
6/27/2022 9:52	11.68	-0.20
6/27/2022 9:53	11.68	-0.18
6/27/2022 9:54	11.68	-0.20
6/27/2022 9:55	11.67	-0.22
6/27/2022 9:56	11.68	-0.20
6/27/2022 9:57	11.67	-0.16
6/27/2022 9:58	11.67	-0.21
6/27/2022 9:59	11.66	-0.18
6/27/2022 10:00	11.67	-0.19
6/27/2022 10:01	11.68	-0.20
6/27/2022 10:02	11.66	-0.16
6/27/2022 10:03	11.67	-0.15
6/27/2022 10:04	11.67	-0.20
6/27/2022 10:05	11.68	-0.18
6/27/2022 10:06	11.67	-0.19
6/27/2022 10:07	11.65	-0.20
6/27/2022 10:08	11.65	-0.21
6/27/2022 10:09	11.68	-0.18
6/27/2022 10:10	11.67	-0.19
6/27/2022 10:11	11.69	-0.20
6/27/2022 10:12	11.66	-0.23
6/27/2022 10:13	11.67	-0.20
6/27/2022 10:14	11.67	-0.20
6/27/2022 10:15	11.67	-0.17
6/27/2022 10:16	11.66	-0.19
6/27/2022 10:17	11.66	-0.20
6/27/2022 10:18	11.67	-0.18
6/27/2022 10:19	11.67	-0.19
6/27/2022 10:20	11.67	-0.18
6/27/2022 10:21	11.66	-0.23
6/27/2022 10:22	11.68	-0.23
6/27/2022 10:23	11.65	-0.17
6/27/2022 10:24	11.69	-0.17
6/27/2022 10:25	11.67	-0.19
6/27/2022 10:26	11.67	-0.21
6/27/2022 10:27	11.66	-0.21
6/27/2022 10:28	11.67	-0.23
6/27/2022 10:29	11.68	-0.16
6/27/2022 10:30	11.67	-0.20
6/27/2022 10:31	11.67	-0.18
6/27/2022 10:32	11.66	-0.19
6/27/2022 10:33	11.68	-0.23
6/27/2022 10:34	11.67	-0.22
6/27/2022 10:35	11.68	-0.19
6/27/2022 10:36	11.67	-0.20
6/27/2022 10:37	11.67	-0.18
6/27/2022 10:38	11.67	-0.23
6/27/2022 10:39	11.68	-0.18
6/27/2022 10:40	11.68	-0.20
6/27/2022 10:41	11.67	-0.19
6/27/2022 10:42	11.65	-0.18
6/27/2022 10:43	11.66	-0.21
6/27/2022 10:44	11.68	-0.18
6/27/2022 10:45	11.67	-0.18
6/27/2022 10:46	11.65	-0.24
6/27/2022 10:47	11.68	-0.23
6/27/2022 10:48	11.67	-0.22
6/27/2022 10:49	11.68	-0.20
6/27/2022 10:44	-0.12	
6/27/2022 10:45	-0.12	
6/27/2022 10:46	-0.15	
6/27/2022 10:47	-0.14	
6/27/2022 10:48	-0.13	
6/27/2022 10:49	-0.12	
6/27/2022 10:50	-0.08	
6/27/2022 10:51	-0.14	
6/27/2022 10:52	-0.19	
6/27/2022 10:53	-0.11	
6/27/2022 10:54	-0.12	
6/27/2022 10:55	-0.13	
6/27/2022 10:56	-0.13	
6/27/2022 10:57	-0.10	
6/27/2022 10:58	-0.14	
6/27/2022 10:59	-0.16	
6/27/2022 11:00	-0.16	
6/27/2022 11:01	-0.12	
6/27/2022 11:02	-0.14	
6/27/2022 11:03	-0.10	
6/27/2022 11:04	-0.14	
6/27/2022 11:05	-0.10	
6/27/2022 11:06	-0.16	
6/27/2022 11:07	-0.16	
6/27/2022 11:08	-0.10	
6/27/2022 11:09	-0.08	
6/27/2022 11:10	-0.13	
6/27/2022 11:11	-0.14	
6/27/2022 11:12	-0.14	
6/27/2022 11:13	-0.11	
6/27/2022 11:14	-0.14	
6/27/2022 11:15	-0.12	
6/27/2022 11:16	-0.16	
6/27/2022 11:17	-0.09	
6/27/2022 11:18	-0.11	
6/27/2022 11:19	-0.10	
6/27/2022 11:20	-0.14	
6/27/2022 11:21	-0.12	
6/27/2022 11:22	-0.09	
6/27/2022 11:23	-0.11	
6/27/2022 11:24	-0.13	
6/27/2022 11:25	-0.09	
6/27/2022 11:26	-0.12	
6/27/2022 11:27	-0.13	
6/27/2022 11:28	-0.15	
6/27/2022 11:29	-0.11	
6/27/2022 11:30	-0.13	
6/27/2022 11:31	-0.16	
6/27/2022 11:32	-0.12	
6/27/2022 11:33	-0.11	
6/27/2022 11:34	-0.13	
6/27/2022 11:35	-0.15	
6/27/2022 11:36	-0.17	
6/27/2022 11:37	-0.09	
6/27/2022 11:38	-0.05	
6/27/2022 11:39	-0.12	
6/27/2022 11:40	-0.07	
6/27/2022 11:41	-0.15	
6/27/2022 11:42	-0.12	
6/27/2022 11:43	-0.13	
6/27/2022 11:44	-0.14	
6/27/2022 11:45	-0.17	
6/27/2022 11:46	-0.11	
6/27/2022 11:47	-0.09	
6/27/2022 11:48	-0.12	
6/27/2022 11:49	-0.14	
6/27/2022 11:50	-0.11	
6/27/2022 11:51	-0.13	
6/27/2022 11:52	-0.12	
6/27/2022 11:53	-0.12	
6/27/2022 11:54	-0.14	
6/27/2022 11:55	-0.16	
6/27/2022 11:56	-0.10	
6/27/2022 11:57	-0.12	
6/27/2022 11:58	-0.13	
6/27/2022 11:59	-0.13	
6/27/2022 12:00	-0.08	
6/27/2022 12:01	-0.13	
6/27/2022 12:02	-0.15	
6/27/2022 12:03	-0.13	
6/27/2022 12:04	-0.06	
6/27/2022 12:05	-0.13	
6/27/2022 12:06	-0.11	
6/27/2022 12:07	-0.19	
6/27/2022 12:08	-0.12	
6/27/2022 12:09	-0.13	
6/27/2022 12:10	-0.14	
6/27/2022 12:11	-0.16	

6/27/2022 11:03	11.97	0.10
6/27/2022 11:04	11.97	0.06
6/27/2022 11:05	11.93	0.13
6/27/2022 11:06	11.97	-0.02
6/27/2022 11:07	11.97	0.13
6/27/2022 11:08	11.97	0.03
6/27/2022 11:09	11.96	0.05
6/27/2022 11:10	11.97	0.06
6/27/2022 11:11	11.95	0.02
6/27/2022 11:12	11.97	-0.07
6/27/2022 11:13	11.95	0.07
6/27/2022 11:14	11.96	0.07
6/27/2022 11:15	11.97	-0.03
6/27/2022 11:16	11.99	0.02
6/27/2022 11:17	11.94	0.08
6/27/2022 11:18	11.98	0.05
6/27/2022 11:19	11.99	0.17
6/27/2022 11:20	11.97	-0.01
6/27/2022 11:21	11.96	-0.02
6/27/2022 11:22	11.94	0.14
6/27/2022 11:23	12.00	0.04
6/27/2022 11:24	11.98	0.15
6/27/2022 11:25	12.00	0.07
6/27/2022 11:26	11.98	0.07
6/27/2022 11:27	11.99	0.14
6/27/2022 11:28	11.99	0.08
6/27/2022 11:29	11.95	0.08
6/27/2022 11:30	11.97	0.16
6/27/2022 11:31	11.97	0.07
6/27/2022 11:32	12.00	-0.02
6/27/2022 11:33	11.99	0.01
6/27/2022 11:34	11.97	0.08
6/27/2022 11:35	11.96	0.12
6/27/2022 11:36	11.97	0.04
6/27/2022 11:37	11.98	0.03
6/27/2022 11:38	11.99	0.08
6/27/2022 11:39	11.99	0.04
6/27/2022 11:40	11.97	0.15
6/27/2022 11:41	11.99	0.03
6/27/2022 11:42	11.97	0.08
6/27/2022 11:43	11.98	0.06
6/27/2022 11:44	12.00	0.09
6/27/2022 11:45	11.99	0.03
6/27/2022 11:46	11.97	0.05
6/27/2022 11:47	11.97	0.05
6/27/2022 11:48	11.95	0.03
6/27/2022 11:49	11.98	0.04
6/27/2022 11:50	11.98	0.03
6/27/2022 11:51	11.97	0.01
6/27/2022 11:52	11.97	0.01
6/27/2022 11:53	11.98	0.02
6/27/2022 11:54	12.00	0.07
6/27/2022 11:55	11.98	0.02
6/27/2022 11:56	11.97	0.03
6/27/2022 11:57	11.96	-0.01
6/27/2022 11:58	11.99	0.09
6/27/2022 11:59	11.98	0.01
6/27/2022 12:00	11.98	0.03
6/27/2022 12:01	11.98	0.11
6/27/2022 12:02	11.98	0.06
6/27/2022 12:03	11.97	0.10
6/27/2022 12:04	11.99	0.07
6/27/2022 12:05	11.98	0.04
6/27/2022 12:06	11.98	0.06
6/27/2022 12:07	12.00	0.18
6/27/2022 12:08	12.01	0.09
6/27/2022 12:09	11.99	0.06
6/27/2022 12:10	11.98	0.07
6/27/2022 12:11	11.99	0.02
6/27/2022 12:12	12.00	0.10
6/27/2022 12:13	11.97	0.12
6/27/2022 12:14	11.98	0.04
6/27/2022 12:15	11.99	0.06
6/27/2022 12:16	11.94	0.12
6/27/2022 12:17	12.00	-0.05
6/27/2022 12:18	11.99	0.07
6/27/2022 12:19	11.98	-0.03
6/27/2022 12:20	11.97	0.08
6/27/2022 12:21	11.96	0.01
6/27/2022 12:22	11.98	0.07
6/27/2022 12:23	11.99	0.18
6/27/2022 12:24	11.97	-0.07
6/27/2022 12:25	11.99	0.11
6/27/2022 12:26	11.97	0.08
6/27/2022 12:27	11.95	0.07
6/27/2022 12:28	11.95	0.03
6/27/2022 12:29	11.96	0.07
6/27/2022 12:30	12.00	0.12
6/27/2022 10:50	11.67	-0.23
6/27/2022 10:51	11.65	-0.21
6/27/2022 10:52	11.66	-0.21
6/27/2022 10:53	11.65	-0.19
6/27/2022 10:54	11.68	-0.19
6/27/2022 10:55	11.68	-0.21
6/27/2022 10:56	11.70	-0.21
6/27/2022 10:57	11.67	-0.19
6/27/2022 10:58	11.66	-0.18
6/27/2022 10:59	11.68	-0.19
6/27/2022 11:00	11.66	-0.17
6/27/2022 11:01	11.67	-0.21
6/27/2022 11:02	11.69	-0.20
6/27/2022 11:03	11.68	-0.20
6/27/2022 11:04	11.67	-0.21
6/27/2022 11:05	11.67	-0.25
6/27/2022 11:06	11.69	-0.18
6/27/2022 11:07	11.66	-0.24
6/27/2022 11:08	11.69	-0.18
6/27/2022 11:09	11.67	-0.22
6/27/2022 11:10	11.65	-0.18
6/27/2022 11:11	11.66	-0.16
6/27/2022 11:12	11.69	-0.21
6/27/2022 11:13	11.65	-0.18
6/27/2022 11:14	11.67	-0.19
6/27/2022 11:15	11.67	-0.16
6/27/2022 11:16	11.67	-0.19
6/27/2022 11:17	11.66	-0.20
6/27/2022 11:18	11.65	-0.21
6/27/2022 11:19	11.68	-0.20
6/27/2022 11:20	11.67	-0.19
6/27/2022 11:21	11.67	-0.20
6/27/2022 11:22	11.66	-0.16
6/27/2022 11:23	11.65	-0.16
6/27/2022 11:24	11.69	-0.18
6/27/2022 11:25	11.66	-0.22
6/27/2022 11:26	11.68	-0.22
6/27/2022 11:27	11.68	-0.22
6/27/2022 11:28	11.68	-0.21
6/27/2022 11:29	11.68	-0.21
6/27/2022 11:30	11.65	-0.25
6/27/2022 11:31	11.67	-0.17
6/27/2022 11:32	11.67	-0.20
6/27/2022 11:33	11.66	-0.21
6/27/2022 11:34	11.67	-0.22
6/27/2022 11:35	11.67	-0.22
6/27/2022 11:36	11.68	-0.21
6/27/2022 11:37	11.66	-0.21
6/27/2022 11:38	11.65	-0.21
6/27/2022 11:39	11.67	-0.23
6/27/2022 11:40	11.69	-0.20
6/27/2022 11:41	11.65	-0.18
6/27/2022 11:42	11.68	-0.19
6/27/2022 11:43	11.67	-0.18
6/27/2022 11:44	11.67	-0.19
6/27/2022 11:45	11.65	-0.18
6/27/2022 11:46	11.69	-0.19
6/27/2022 11:47	11.65	-0.22
6/27/2022 11:48	11.67	-0.19
6/27/2022 11:49	11.68	-0.21
6/27/2022 11:50	11.64	-0.23
6/27/2022 11:51	11.66	-0.19
6/27/2022 11:52	11.66	-0.19
6/27/2022 11:53	11.68	-0.21
6/27/2022 11:54	11.67	-0.20
6/27/2022 11:55	11.68	-0.22
6/27/2022 11:56	11.67	-0.17
6/27/2022 11:57	11.67	-0.20
6/27/2022 11:58	11.69	-0.22
6/27/2022 11:59	11.68	-0.25
6/27/2022 12:00	11.66	-0.21
6/27/2022 12:01	11.66	-0.20
6/27/2022 12:02	11.65	-0.20
6/27/2022 12:03	11.65	-0.22
6/27/2022 12:04	11.65	-0.19
6/27/2022 12:05	11.67	-0.18
6/27/2022 12:06	11.67	-0.22
6/27/2022 12:07	11.67	-0.25
6/27/2022 12:08	11.66	-0.20
6/27/2022 12:09	11.68	-0.20
6/27/2022 12:10	11.68	-0.19
6/27/2022 12:11	11.65	-0.21
6/27/2022 12:12	11.67	-0.20
6/27/2022 12:13	11.64	-0.22
6/27/2022 12:14	11.68	-0.17
6/27/2022 12:15	11.69	-0.22
6/27/2022 12:16	11.67	-0.24
6/27/2022 12:17	11.66	-0.21
6/27/2022 12:12	-0.13	
6/27/2022 12:13	-0.18	
6/27/2022 12:14	-0.12	
6/27/2022 12:15	-0.13	
6/27/2022 12:16	-0.11	
6/27/2022 12:17	-0.18	
6/27/2022 12:18	-0.16	
6/27/2022 12:19	-0.18	
6/27/2022 12:20	-0.16	
6/27/2022 12:21	-0.11	
6/27/2022 12:22	-0.14	
6/27/2022 12:23	-0.17	
6/27/2022 12:24	-0.15	
6/27/2022 12:25	-0.12	
6/27/2022 12:26	-0.13	
6/27/2022 12:27	-0.12	
6/27/2022 12:28	-0.13	
6/27/2022 12:29	-0.12	
6/27/2022 12:30	-0.12	
6/27/2022 12:31	-0.10	
6/27/2022 12:32	-0.11	
6/27/2022 12:33	-0.13	
6/27/2022 12:34	-0.14	
6/27/2022 12:35	-0.14	
6/27/2022 12:36	-0.15	
6/27/2022 12:37	-0.10	
6/27/2022 12:38	-0.13	
6/27/2022 12:39	-0.16	
6/27/2022 12:40	-0.18	
6/27/2022 12:41	-0.11	
6/27/2022 12:42	-0.11	
6/27/2022 12:43	-0.12	
6/27/2022 12:44	-0.12	
6/27/2022 12:45	-0.14	
6/27/2022 12:46	-0.12	
6/27/2022 12:47	-0.08	
6/27/2022 12:48	-0.14	
6/27/2022 12:49	-0.13	
6/27/2022 12:50	-0.13	
6/27/2022 12:51	-0.08	
6/27/2022 12:52	-0.13	
6/27/2022 12:53	-0.15	
6/27/2022 12:54	-0.13	
6/27/2022 12:55	-0.10	
6/27/2022 12:56	-0.14	
6/27/2022 12:57	-0.14	
6/27/2022 12:58	-0.13	
6/27/2022 12:59	-0.12	
6/27/2022 13:00	-0.13	
6/27/2022 13:01	-0.16	
6/27/2022 13:02	-0.08	
6/27/2022 13:03	-0.15	
6/27/2022 13:04	-0.14	
6/27/2022 13:05	-0.12	
6/27/2022 13:06	-0.10	
6/27/2022 13:07	-0.11	
6/27/2022 13:08	-0.14	
6/27/2022 13:09	-0.14	
6/27/2022 13:10	-0.15	
6/27/2022 13:11	-0.11	
6/27/2022 13:12	-0.17	
6/27/2022 13:13	-0.13	
6/27/2022 13:14	-0.18	
6/27/2022 13:15	-0.13	
6/27/2022 13:16	-0.09	
6/27/2022 13:17	-0.09	
6/27/2022 13:18	-0.14	
6/27/2022 13:19	-0.11	
6/27/2022 13:20	-0.14	
6/27/2022 13:21	-0.08	
6/27/2022 13:22	-0.15	
6/27/2022 13:23	-0.12	
6/27/2022 13:24	-0.13	
6/27/2022 13:25	-0.10	
6/27/2022 13:26	-0.11	
6/27/2022 13:27	-0.12	
6/27/2022 13:28	-0.13	
6/27/2022 13:29	-0.09	
6/27/2022 13:30	-0.16	
6/27/2022 13:31	-0.07	
6/27/2022 13:32	-0.15	
6/27/2022 13:33	-0.13	
6/27/2022 13:34	-0.12	
6/27/2022 13:35	-0.10	
6/27/2022 13:36	-0.12	
6/27/2022 13:37	-0.15	
6/27/2022 13:38	-0.11	
6/27/2022 13:39	-0.13	

6/27/2022 12:31	12.00	0.09
6/27/2022 12:32	11.95	-0.01
6/27/2022 12:33	11.95	0.12
6/27/2022 12:34	11.96	-0.01
6/27/2022 12:35	11.95	0.13
6/27/2022 12:36	11.97	0.01
6/27/2022 12:37	11.98	0.12
6/27/2022 12:38	11.98	-0.03
6/27/2022 12:39	12.01	0.05
6/27/2022 12:40	11.99	0.07
6/27/2022 12:41	12.01	0.05
6/27/2022 12:42	11.97	0.07
6/27/2022 12:43	11.99	0.04
6/27/2022 12:44	11.98	0.01
6/27/2022 12:45	11.98	0.01
6/27/2022 12:46	11.99	-0.02
6/27/2022 12:47	11.95	-0.01
6/27/2022 12:48	12.00	0.03
6/27/2022 12:49	11.97	0.02
6/27/2022 12:50	11.97	0.11
6/27/2022 12:51	11.94	0.07
6/27/2022 12:52	11.96	0.11
6/27/2022 12:53	11.97	0.16
6/27/2022 12:54	11.96	0.13
6/27/2022 12:55	11.99	0.20
6/27/2022 12:56	11.97	0.03
6/27/2022 12:57	11.98	0.09
6/27/2022 12:58	11.97	0.07
6/27/2022 12:59	11.98	0.03
6/27/2022 13:00	12.01	-0.02
6/27/2022 13:01	12.00	0.06
6/27/2022 13:02	11.97	0.06
6/27/2022 13:03	11.99	-0.01
6/27/2022 13:04	11.97	0.07
6/27/2022 13:05	11.99	0.05
6/27/2022 13:06	11.97	0.13
6/27/2022 13:07	11.98	-0.01
6/27/2022 13:08	11.94	0.15
6/27/2022 13:09	11.96	0.07
6/27/2022 13:10	11.93	0.11
6/27/2022 13:11	11.93	0.17
6/27/2022 13:12	11.94	0.11
6/27/2022 13:13	11.97	0.01
6/27/2022 13:14	11.97	0.04
6/27/2022 13:15	11.95	0.11
6/27/2022 13:16	11.97	0.06
6/27/2022 13:17	11.98	0.10
6/27/2022 13:18	11.99	0.04
6/27/2022 13:19	12.00	0.02
6/27/2022 13:20	11.99	0.04
6/27/2022 13:21	11.99	0.01
6/27/2022 13:22	11.97	0.08
6/27/2022 13:23	11.96	0.07
6/27/2022 13:24	11.97	0.03
6/27/2022 13:25	11.96	0.09
6/27/2022 13:26	11.97	0.02
6/27/2022 13:27	11.99	0.02
6/27/2022 13:28	11.97	-0.03
6/27/2022 13:29	11.97	0.07
6/27/2022 13:30	11.97	0.11
6/27/2022 13:31	11.98	0.01
6/27/2022 13:32	11.98	0.05
6/27/2022 13:33	11.98	0.01
6/27/2022 13:34	11.98	0.07
6/27/2022 13:35	11.98	0.02
6/27/2022 13:36	12.00	0.12
6/27/2022 13:37	11.97	0.11
6/27/2022 13:38	11.97	0.00
6/27/2022 13:39	11.97	0.08
6/27/2022 13:40	11.98	0.08
6/27/2022 13:41	11.99	0.10
6/27/2022 13:42	11.95	0.09
6/27/2022 13:43	11.93	0.07
6/27/2022 13:44	11.96	0.00
6/27/2022 13:45	11.95	0.06
6/27/2022 13:46	11.95	0.02
6/27/2022 13:47	11.94	0.10
6/27/2022 13:48	11.95	0.13
6/27/2022 13:49	11.97	0.00
6/27/2022 13:50	11.98	0.04
6/27/2022 13:51	11.97	0.09
6/27/2022 13:52	11.98	0.05
6/27/2022 13:53	11.99	0.10
6/27/2022 13:54	11.99	0.07
6/27/2022 13:55	11.97	0.08
6/27/2022 13:56	11.97	0.07
6/27/2022 13:57	11.99	0.03
6/27/2022 13:58	11.99	0.07
6/27/2022 12:18	11.70	-0.22
6/27/2022 12:19	11.65	-0.20
6/27/2022 12:20	11.67	-0.23
6/27/2022 12:21	11.65	-0.21
6/27/2022 12:22	11.67	-0.25
6/27/2022 12:23	11.67	-0.19
6/27/2022 12:24	11.66	-0.23
6/27/2022 12:25	11.66	-0.19
6/27/2022 12:26	11.66	-0.20
6/27/2022 12:27	11.67	-0.22
6/27/2022 12:28	11.68	-0.22
6/27/2022 12:29	11.67	-0.17
6/27/2022 12:30	11.67	-0.20
6/27/2022 12:31	11.67	-0.22
6/27/2022 12:32	11.67	-0.18
6/27/2022 12:33	11.70	-0.23
6/27/2022 12:34	11.67	-0.20
6/27/2022 12:35	11.68	-0.21
6/27/2022 12:36	11.65	-0.21
6/27/2022 12:37	11.65	-0.17
6/27/2022 12:38	11.65	-0.18
6/27/2022 12:39	11.66	-0.15
6/27/2022 12:40	11.66	-0.24
6/27/2022 12:41	11.65	-0.19
6/27/2022 12:42	11.68	-0.22
6/27/2022 12:43	11.69	-0.20
6/27/2022 12:44	11.68	-0.20
6/27/2022 12:45	11.67	-0.18
6/27/2022 12:46	11.68	-0.21
6/27/2022 12:47	11.69	-0.20
6/27/2022 12:48	11.67	-0.20
6/27/2022 12:49	11.65	-0.16
6/27/2022 12:50	11.67	-0.20
6/27/2022 12:51	11.67	-0.21
6/27/2022 12:52	11.68	-0.24
6/27/2022 12:53	11.67	-0.24
6/27/2022 12:54	11.66	-0.20
6/27/2022 12:55	11.68	-0.21
6/27/2022 12:56	11.66	-0.19
6/27/2022 12:57	11.63	-0.25
6/27/2022 12:58	11.64	-0.22
6/27/2022 12:59	11.67	-0.18
6/27/2022 13:00	11.68	-0.20
6/27/2022 13:01	11.68	-0.20
6/27/2022 13:02	11.67	-0.22
6/27/2022 13:03	11.65	-0.22
6/27/2022 13:04	11.68	-0.17
6/27/2022 13:05	11.67	-0.19
6/27/2022 13:06	11.67	-0.19
6/27/2022 13:07	11.67	-0.23
6/27/2022 13:08	11.69	-0.20
6/27/2022 13:09	11.65	-0.22
6/27/2022 13:10	11.64	-0.17
6/27/2022 13:11	11.67	-0.14
6/27/2022 13:12	11.65	-0.23
6/27/2022 13:13	11.65	-0.18
6/27/2022 13:14	11.66	-0.20
6/27/2022 13:15	11.70	-0.17
6/27/2022 13:16	11.67	-0.24
6/27/2022 13:17	11.68	-0.22
6/27/2022 13:18	11.64	-0.17
6/27/2022 13:19	11.66	-0.18
6/27/2022 13:20	11.67	-0.19
6/27/2022 13:21	11.67	-0.22
6/27/2022 13:22	11.67	-0.21
6/27/2022 13:23	11.70	-0.20
6/27/2022 13:24	11.67	-0.19
6/27/2022 13:25	11.67	-0.19
6/27/2022 13:26	11.67	-0.22
6/27/2022 13:27	11.67	-0.18
6/27/2022 13:28	11.65	-0.21
6/27/2022 13:29	11.66	-0.18
6/27/2022 13:30	11.68	-0.24
6/27/2022 13:31	11.68	-0.19
6/27/2022 13:32	11.66	-0.21
6/27/2022 13:33	11.68	-0.23
6/27/2022 13:34	11.67	-0.23
6/27/2022 13:35	11.67	-0.17
6/27/2022 13:36	11.69	-0.19
6/27/2022 13:37	11.65	-0.18
6/27/2022 13:38	11.66	-0.17
6/27/2022 13:39	11.65	-0.19
6/27/2022 13:40	11.67	-0.19
6/27/2022 13:41	11.67	-0.18
6/27/2022 13:42	11.66	-0.22
6/27/2022 13:43	11.69	-0.19
6/27/2022 13:44	11.65	-0.16
6/27/2022 13:45	11.69	-0.20
6/27/2022 13:40	-0.16	
6/27/2022 13:41	-0.10	
6/27/2022 13:42	-0.09	
6/27/2022 13:43	-0.15	
6/27/2022 13:44	-0.09	
6/27/2022 13:45	-0.09	
6/27/2022 13:46	-0.19	
6/27/2022 13:47	-0.07	
6/27/2022 13:48	-0.12	
6/27/2022 13:49	-0.11	
6/27/2022 13:50	-0.11	
6/27/2022 13:51	-0.13	
6/27/2022 13:52	-0.11	
6/27/2022 13:53	-0.09	
6/27/2022 13:54	-0.13	
6/27/2022 13:55	-0.10	
6/27/2022 13:56	-0.11	
6/27/2022 13:57	-0.12	
6/27/2022 13:58	-0.09	
6/27/2022 13:59	-0.11	
6/27/2022 14:00	-0.08	
6/27/2022 14:01	-0.13	
6/27/2022 14:02	-0.11	
6/27/2022 14:03	-0.13	
6/27/2022 14:04	-0.13	
6/27/2022 14:05	-0.14	
6/27/2022 14:06	-0.16	
6/27/2022 14:07	-0.13	
6/27/2022 14:08	-0.11	
6/27/2022 14:09	-0.16	
6/27/2022 14:10	-0.11	
6/27/2022 14:11	-0.11	
6/27/2022 14:12	-0.14	
6/27/2022 14:13	-0.16	
6/27/2022 14:14	-0.17	
6/27/2022 14:15	-0.14	
6/27/2022 14:16	-0.09	
6/27/2022 14:17	-0.15	
6/27/2022 14:18	-0.13	
6/27/2022 14:19	-0.09	
6/27/2022 14:20	-0.14	
6/27/2022 14:21	-0.10	
6/27/2022 14:22	-0.15	
6/27/2022 14:23	-0.16	
6/27/2022 14:24	-0.11	
6/27/2022 14:25	-0.09	
6/27/2022 14:26	-0.16	
6/27/2022 14:27	-0.15	
6/27/2022 14:28	-0.15	
6/27/2022 14:29	-0.16	
6/27/2022 14:30	-0.08	
6/27/2022 14:31	-0.13	
6/27/2022 14:32	-0.12	
6/27/2022 14:33	-0.17	
6/27/2022 14:34	-0.16	
6/27/2022 14:35	-0.11	
6/27/2022 14:36	-0.15	
6/27/2022 14:37	-0.14	
6/27/2022 14:38	-0.15	
6/27/2022 14:39	-0.11	
6/27/2022 14:40	-0.11	
6/27/2022 14:41	-0.11	
6/27/2022 14:42	-0.16	
6/27/2022 14:43	-0.19	
6/27/2022 14:44	-0.07	
6/27/2022 14:45	-0.13	
6/27/2022 14:46	-0.14	
6/27/2022 14:47	-0.14	
6/27/2022 14:48	-0.14	
6/27/2022 14:49	-0.15	
6/27/2022 14:50	-0.12	
6/27/2022 14:51	-0.13	
6/27/2022 14:52	-0.16	
6/27/2022 14:53	-0.12	
6/27/2022 14:54	-0.14	
6/27/2022 14:55	-0.13	
6/27/2022 14:56	-0.12	
6/27/2022 14:57	-0.11	
6/27/2022 14:58	-0.16	
6/27/2022 14:59	-0.14	
6/27/2022 15:00	-0.16	
6/27/2022 15:01	-0.17	
6/27/2022 15:02	-0.19	
6/27/2022 15:03	-0.13	
6/27/2022 15:04	-0.15	
6/27/2022 15:05	-0.13	
6/27/2022 15:06	-0.21	
6/27/2022 15:07	-0.11	

6/27/2022 13:59	11.96	0.03
6/27/2022 14:00	11.95	-0.02
6/27/2022 14:01	11.96	0.03
6/27/2022 14:02	12.01	0.12
6/27/2022 14:03	11.98	0.01
6/27/2022 14:04	12.00	0.07
6/27/2022 14:05	11.98	0.04
6/27/2022 14:06	11.97	0.12
6/27/2022 14:07	12.00	0.03
6/27/2022 14:08	11.97	0.07
6/27/2022 14:09	12.00	0.01
6/27/2022 14:10	11.99	0.08
6/27/2022 14:11	11.99	0.10
6/27/2022 14:12	11.98	0.13
6/27/2022 14:13	11.97	-0.01
6/27/2022 14:14	11.98	0.02
6/27/2022 14:15	11.98	0.12
6/27/2022 14:16	11.99	0.03
6/27/2022 14:17	11.98	0.06
6/27/2022 14:18	12.00	0.06
6/27/2022 14:19	12.00	0.06
6/27/2022 14:20	11.98	0.05
6/27/2022 14:21	11.99	0.02
6/27/2022 14:22	12.00	0.01
6/27/2022 14:23	11.99	0.02
6/27/2022 14:24	12.00	-0.04
6/27/2022 14:25	11.98	0.06
6/27/2022 14:26	12.00	0.12
6/27/2022 14:27	11.98	0.07
6/27/2022 14:28	12.01	0.07
6/27/2022 14:29	12.01	-0.02
6/27/2022 14:30	12.02	0.07
6/27/2022 14:31	12.02	0.04
6/27/2022 14:32	11.99	0.05
6/27/2022 14:33	11.99	0.07
6/27/2022 14:34	12.00	0.01
6/27/2022 14:35	11.97	0.01
6/27/2022 14:36	11.97	0.11
6/27/2022 14:37	12.00	0.01
6/27/2022 14:38	11.96	0.07
6/27/2022 14:39	12.00	0.04
6/27/2022 14:40	11.99	0.11
6/27/2022 14:41	11.97	0.08
6/27/2022 14:42	11.98	0.05
6/27/2022 14:43	11.98	0.07
6/27/2022 14:44	11.98	0.07
6/27/2022 14:45	11.99	0.03
6/27/2022 14:46	11.98	0.04
6/27/2022 14:47	11.97	0.08
6/27/2022 14:48	11.97	0.08
6/27/2022 14:49	11.95	0.06
6/27/2022 14:50	11.96	0.08
6/27/2022 14:51	11.95	0.08
6/27/2022 14:52	11.97	0.05
6/27/2022 14:53	11.96	0.06
6/27/2022 14:54	11.95	0.02
6/27/2022 14:55	11.97	0.06
6/27/2022 14:56	11.96	0.02
6/27/2022 14:57	11.95	0.06
6/27/2022 14:58	11.95	0.07
6/27/2022 14:59	11.97	0.05
6/27/2022 15:00	11.95	0.12
6/27/2022 15:01	11.95	0.01
6/27/2022 15:02	11.97	0.06
6/27/2022 15:03	11.97	0.01
6/27/2022 15:04	11.99	0.09
6/27/2022 15:05	11.98	0.04
6/27/2022 15:06	11.97	0.07
6/27/2022 15:07	11.97	0.17
6/27/2022 15:08	11.99	0.06
6/27/2022 15:09	11.97	0.09
6/27/2022 15:10	11.99	0.10
6/27/2022 15:11	12.00	0.04
6/27/2022 15:12	11.97	0.06
6/27/2022 15:13	11.99	0.15
6/27/2022 15:14	11.97	-0.01
6/27/2022 15:15	11.98	0.09
6/27/2022 15:16	11.96	0.00
6/27/2022 15:17	11.99	0.03
6/27/2022 15:18	11.98	0.01
6/27/2022 15:19	11.99	0.10
6/27/2022 15:20	11.97	0.07
6/27/2022 15:21	11.97	0.06
6/27/2022 15:22	11.98	0.11
6/27/2022 15:23	11.97	0.02
6/27/2022 15:24	11.98	0.03
6/27/2022 15:25	12.00	0.09
6/27/2022 15:26	11.97	0.08
6/27/2022 13:46	11.69	-0.21
6/27/2022 13:47	11.67	-0.22
6/27/2022 13:48	11.66	-0.20
6/27/2022 13:49	11.70	-0.19
6/27/2022 13:50	11.68	-0.23
6/27/2022 13:51	11.67	-0.22
6/27/2022 13:52	11.68	-0.21
6/27/2022 13:53	11.67	-0.21
6/27/2022 13:54	11.65	-0.23
6/27/2022 13:55	11.66	-0.21
6/27/2022 13:56	11.69	-0.20
6/27/2022 13:57	11.64	-0.19
6/27/2022 13:58	11.67	-0.21
6/27/2022 13:59	11.67	-0.18
6/27/2022 14:00	11.68	-0.20
6/27/2022 14:01	11.67	-0.19
6/27/2022 14:02	11.66	-0.20
6/27/2022 14:03	11.64	-0.21
6/27/2022 14:04	11.67	-0.19
6/27/2022 14:05	11.68	-0.19
6/27/2022 14:06	11.66	-0.20
6/27/2022 14:07	11.65	-0.21
6/27/2022 14:08	11.67	-0.22
6/27/2022 14:09	11.64	-0.19
6/27/2022 14:10	11.67	-0.22
6/27/2022 14:11	11.67	-0.23
6/27/2022 14:12	11.67	-0.17
6/27/2022 14:13	11.68	-0.24
6/27/2022 14:14	11.68	-0.20
6/27/2022 14:15	11.68	-0.18
6/27/2022 14:16	11.67	-0.23
6/27/2022 14:17	11.68	-0.22
6/27/2022 14:18	11.66	-0.21
6/27/2022 14:19	11.66	-0.19
6/27/2022 14:20	11.68	-0.22
6/27/2022 14:21	11.66	-0.20
6/27/2022 14:22	11.65	-0.19
6/27/2022 14:23	11.67	-0.20
6/27/2022 14:24	11.68	-0.17
6/27/2022 14:25	11.68	-0.21
6/27/2022 14:26	11.70	-0.22
6/27/2022 14:27	11.66	-0.20
6/27/2022 14:28	11.69	-0.21
6/27/2022 14:29	11.65	-0.18
6/27/2022 14:30	11.66	-0.21
6/27/2022 14:31	11.67	-0.20
6/27/2022 14:32	11.64	-0.16
6/27/2022 14:33	11.67	-0.15
6/27/2022 14:34	11.66	-0.23
6/27/2022 14:35	11.67	-0.17
6/27/2022 14:36	11.66	-0.23
6/27/2022 14:37	11.68	-0.21
6/27/2022 14:38	11.67	-0.24
6/27/2022 14:39	11.67	-0.19
6/27/2022 14:40	11.66	-0.18
6/27/2022 14:41	11.64	-0.16
6/27/2022 14:42	11.67	-0.21
6/27/2022 14:43	11.68	-0.19
6/27/2022 14:44	11.68	-0.18
6/27/2022 14:45	11.65	-0.20
6/27/2022 14:46	11.67	-0.18
6/27/2022 14:47	11.66	-0.22
6/27/2022 14:48	11.66	-0.21
6/27/2022 14:49	11.67	-0.22
6/27/2022 14:50	11.67	-0.25
6/27/2022 14:51	11.68	-0.20
6/27/2022 14:52	11.67	-0.22
6/27/2022 14:53	11.68	-0.23
6/27/2022 14:54	11.67	-0.19
6/27/2022 14:55	11.69	-0.23
6/27/2022 14:56	11.67	-0.26
6/27/2022 14:57	11.69	-0.21
6/27/2022 14:58	11.68	-0.20
6/27/2022 14:59	11.65	-0.20
6/27/2022 15:00	11.69	-0.19
6/27/2022 15:01	11.68	-0.18
6/27/2022 15:02	11.66	-0.18
6/27/2022 15:03	11.67	-0.19
6/27/2022 15:04	11.67	-0.20
6/27/2022 15:05	11.65	-0.18
6/27/2022 15:06	11.65	-0.18
6/27/2022 15:07	11.67	-0.19
6/27/2022 15:08	11.68	-0.20
6/27/2022 15:09	11.69	-0.18
6/27/2022 15:10	11.65	-0.18
6/27/2022 15:11	11.68	-0.22
6/27/2022 15:12	11.65	-0.20
6/27/2022 15:13	11.68	-0.23
6/27/2022 15:08	-0.14
6/27/2022 15:09	-0.12
6/27/2022 15:10	-0.17
6/27/2022 15:11	-0.12
6/27/2022 15:12	-0.22
6/27/2022 15:13	-0.15
6/27/2022 15:14	-0.18
6/27/2022 15:15	-0.13
6/27/2022 15:16	-0.15
6/27/2022 15:17	-0.13
6/27/2022 15:18	-0.09
6/27/2022 15:19	-0.17
6/27/2022 15:20	-0.14
6/27/2022 15:21	-0.07
6/27/2022 15:22	-0.11
6/27/2022 15:23	-0.16
6/27/2022 15:24	-0.16
6/27/2022 15:25	-0.12
6/27/2022 15:26	-0.14
6/27/2022 15:27	-0.16
6/27/2022 15:28	-0.12
6/27/2022 15:29	-0.17
6/27/2022 15:30	-0.13
6/27/2022 15:31	-0.15
6/27/2022 15:32	-0.09
6/27/2022 15:33	-0.12
6/27/2022 15:34	-0.14
6/27/2022 15:35	-0.13
6/27/2022 15:36	-0.15
6/27/2022 15:37	-0.13
6/27/2022 15:38	-0.12
6/27/2022 15:39	-0.12
6/27/2022 15:40	-0.17
6/27/2022 15:41	-0.21
6/27/2022 15:42	-0.15
6/27/2022 15:43	-0.14
6/27/2022 15:44	-0.19
6/27/2022 15:45	-0.16
6/27/2022 15:46	-0.16
6/27/2022 15:47	-0.09
6/27/2022 15:48	-0.12
6/27/2022 15:49	-0.13
6/27/2022 15:50	-0.11
6/27/2022 15:51	-0.13
6/27/2022 15:52	-0.17
6/27/2022 15:53	-0.12
6/27/2022 15:54	-0.17
6/27/2022 15:55	-0.16
6/27/2022 15:56	-0.11
6/27/2022 15:57	-0.11
6/27/2022 15:58	-0.17
6/27/2022 15:59	-0.16
6/27/2022 16:00	-0.16
6/27/2022 16:01	-0.14
6/27/2022 16:02	-0.15
6/27/2022 16:03	-0.17
6/27/2022 16:04	-0.18
6/27/2022 16:05	-0.11
6/27/2022 16:06	-0.16
6/27/2022 16:07	-0.11
6/27/2022 16:08	-0.13
6/27/2022 16:09	-0.15
6/27/2022 16:10	-0.16
6/27/2022 16:11	-0.13
6/27/2022 16:12	-0.14
6/27/2022 16:13	-0.16
6/27/2022 16:14	-0.14
6/27/2022 16:15	-0.11
6/27/2022 16:16	-0.16
6/27/2022 16:17	-0.13
6/27/2022 16:18	-0.14
6/27/2022 16:19	-0.13
6/27/2022 16:20	-0.13
6/27/2022 16:21	-0.17
6/27/2022 16:22	-0.10
6/27/2022 16:23	-0.15
6/27/2022 16:24	-0.11
6/27/2022 16:25	-0.10
6/27/2022 16:26	-0.10
6/27/2022 16:27	-0.11
6/27/2022 16:28	-0.11
6/27/2022 16:29	-0.13
6/27/2022 16:30	-0.16
6/27/2022 16:31	-0.16
6/27/2022 16:32	-0.16
6/27/2022 16:33	-0.15
6/27/2022 16:34	-0.15
6/27/2022 16:35	-0.12

6/27/2022 15:27	11.98	0.11
6/27/2022 15:28	11.99	0.06
6/27/2022 15:29	12.00	0.08
6/27/2022 15:30	12.00	0.07
6/27/2022 15:31	11.97	0.10
6/27/2022 15:32	12.01	0.07
6/27/2022 15:33	11.96	-0.03
6/27/2022 15:34	12.00	0.09
6/27/2022 15:35	11.98	0.11
6/27/2022 15:36	12.00	0.06
6/27/2022 15:37	11.96	0.02
6/27/2022 15:38	11.99	0.07
6/27/2022 15:39	11.96	0.06
6/27/2022 15:40	11.95	0.07
6/27/2022 15:41	11.95	0.11
6/27/2022 15:42	11.97	0.10
6/27/2022 15:43	11.97	0.00
6/27/2022 15:44	11.97	0.07
6/27/2022 15:45	11.95	-0.01
6/27/2022 15:46	12.00	0.02
6/27/2022 15:47	11.97	0.10
6/27/2022 15:48	11.97	0.06
6/27/2022 15:49	11.98	0.01
6/27/2022 15:50	12.00	-0.03
6/27/2022 15:51	11.97	0.04
6/27/2022 15:52	11.97	0.03
6/27/2022 15:53	11.99	0.08
6/27/2022 15:54	11.96	0.04
6/27/2022 15:55	11.99	0.06
6/27/2022 15:56	11.98	0.06
6/27/2022 15:57	11.97	0.06
6/27/2022 15:58	11.98	0.14
6/27/2022 15:59	11.99	0.11
6/27/2022 16:00	11.97	0.06
6/27/2022 16:01	11.94	-0.01
6/27/2022 16:02	12.00	0.11
6/27/2022 16:03	11.98	0.04
6/27/2022 16:04	11.98	0.00
6/27/2022 16:05	11.98	0.06
6/27/2022 16:06	11.96	0.09
6/27/2022 16:07	11.97	0.02
6/27/2022 16:08	11.96	0.07
6/27/2022 16:09	11.96	0.08
6/27/2022 16:10	11.97	0.08
6/27/2022 16:11	11.94	-0.03
6/27/2022 16:12	11.98	-0.03
6/27/2022 16:13	11.99	0.03
6/27/2022 16:14	11.97	0.12
6/27/2022 16:15	11.99	0.05
6/27/2022 16:16	11.93	0.05
6/27/2022 16:17	11.95	0.06
6/27/2022 16:18	11.98	0.17
6/27/2022 16:19	11.97	0.05
6/27/2022 16:20	11.94	0.04
6/27/2022 16:21	11.96	0.07
6/27/2022 16:22	11.98	0.06
6/27/2022 16:23	11.97	0.11
6/27/2022 16:24	11.96	0.02
6/27/2022 16:25	11.96	0.15
6/27/2022 16:26	11.98	0.07
6/27/2022 16:27	11.95	0.07
6/27/2022 16:28	11.98	0.07
6/27/2022 16:29	11.98	0.08
6/27/2022 16:30	11.98	0.08
6/27/2022 16:31	11.99	0.07
6/27/2022 16:32	11.99	0.05
6/27/2022 16:33	11.96	0.07
6/27/2022 16:34	11.94	0.06
6/27/2022 16:35	11.98	0.08
6/27/2022 16:36	11.97	0.03
6/27/2022 16:37	11.98	0.08
6/27/2022 16:38	11.93	0.06
6/27/2022 16:39	11.99	0.06
6/27/2022 16:40	12.01	0.13
6/27/2022 16:41	11.99	0.10
6/27/2022 16:42	12.00	0.01
6/27/2022 16:43	12.00	0.15
6/27/2022 16:44	11.98	0.08
6/27/2022 16:45	11.97	0.23
6/27/2022 16:46	11.99	0.05
6/27/2022 16:47	11.98	0.07
6/27/2022 16:48	11.99	0.08
6/27/2022 16:49	11.96	0.08
6/27/2022 16:50	11.99	0.16
6/27/2022 16:51	11.96	0.07
6/27/2022 16:52	11.98	0.05
6/27/2022 16:53	11.98	0.09
6/27/2022 16:54	11.99	0.10
6/27/2022 15:14	11.65	-0.21
6/27/2022 15:15	11.66	-0.22
6/27/2022 15:16	11.67	-0.17
6/27/2022 15:17	11.67	-0.18
6/27/2022 15:18	11.66	-0.17
6/27/2022 15:19	11.66	-0.18
6/27/2022 15:20	11.67	-0.22
6/27/2022 15:21	11.67	-0.19
6/27/2022 15:22	11.67	-0.17
6/27/2022 15:23	11.66	-0.19
6/27/2022 15:24	11.67	-0.21
6/27/2022 15:25	11.68	-0.21
6/27/2022 15:26	11.67	-0.19
6/27/2022 15:27	11.66	-0.22
6/27/2022 15:28	11.65	-0.19
6/27/2022 15:29	11.68	-0.20
6/27/2022 15:30	11.68	-0.24
6/27/2022 15:31	11.68	-0.20
6/27/2022 15:32	11.64	-0.21
6/27/2022 15:33	11.67	-0.23
6/27/2022 15:34	11.69	-0.18
6/27/2022 15:35	11.67	-0.17
6/27/2022 15:36	11.69	-0.20
6/27/2022 15:37	11.67	-0.19
6/27/2022 15:38	11.67	-0.22
6/27/2022 15:39	11.65	-0.21
6/27/2022 15:40	11.69	-0.22
6/27/2022 15:41	11.65	-0.21
6/27/2022 15:42	11.65	-0.19
6/27/2022 15:43	11.68	-0.16
6/27/2022 15:44	11.67	-0.23
6/27/2022 15:45	11.67	-0.20
6/27/2022 15:46	11.67	-0.18
6/27/2022 15:47	11.67	-0.21
6/27/2022 15:48	11.67	-0.23
6/27/2022 15:49	11.68	-0.22
6/27/2022 15:50	11.66	-0.20
6/27/2022 15:51	11.66	-0.18
6/27/2022 15:52	11.67	-0.21
6/27/2022 15:53	11.65	-0.20
6/27/2022 15:54	11.66	-0.23
6/27/2022 15:55	11.64	-0.18
6/27/2022 15:56	11.66	-0.17
6/27/2022 15:57	11.69	-0.24
6/27/2022 15:58	11.68	-0.20
6/27/2022 15:59	11.67	-0.21
6/27/2022 16:00	11.68	-0.17
6/27/2022 16:01	11.68	-0.20
6/27/2022 16:02	11.64	-0.16
6/27/2022 16:03	11.69	-0.24
6/27/2022 16:04	11.67	-0.18
6/27/2022 16:05	11.67	-0.20
6/27/2022 16:06	11.65	-0.19
6/27/2022 16:07	11.67	-0.23
6/27/2022 16:08	11.68	-0.19
6/27/2022 16:09	11.67	-0.21
6/27/2022 16:10	11.67	-0.19
6/27/2022 16:11	11.69	-0.20
6/27/2022 16:12	11.66	-0.18
6/27/2022 16:13	11.68	-0.19
6/27/2022 16:14	11.66	-0.16
6/27/2022 16:15	11.66	-0.22
6/27/2022 16:16	11.67	-0.22
6/27/2022 16:17	11.69	-0.19
6/27/2022 16:18	11.67	-0.20
6/27/2022 16:19	11.67	-0.22
6/27/2022 16:20	11.66	-0.24
6/27/2022 16:21	11.67	-0.24
6/27/2022 16:22	11.65	-0.22
6/27/2022 16:23	11.66	-0.21
6/27/2022 16:24	11.66	-0.23
6/27/2022 16:25	11.65	-0.23
6/27/2022 16:26	11.66	-0.18
6/27/2022 16:27	11.68	-0.20
6/27/2022 16:28	11.67	-0.20
6/27/2022 16:29	11.66	-0.20
6/27/2022 16:30	11.68	-0.17
6/27/2022 16:31	11.69	-0.21
6/27/2022 16:32	11.65	-0.19
6/27/2022 16:33	11.67	-0.20
6/27/2022 16:34	11.65	-0.22
6/27/2022 16:35	11.66	-0.21
6/27/2022 16:36	11.66	-0.21
6/27/2022 16:37	11.68	-0.23
6/27/2022 16:38	11.66	-0.20
6/27/2022 16:39	11.69	-0.18
6/27/2022 16:40	11.66	-0.20
6/27/2022 16:41	11.68	-0.25
6/27/2022 16:36	-0.14	
6/27/2022 16:37	-0.11	
6/27/2022 16:38	-0.11	
6/27/2022 16:39	-0.09	
6/27/2022 16:40	-0.14	
6/27/2022 16:41	-0.14	
6/27/2022 16:42	-0.14	
6/27/2022 16:43	-0.14	
6/27/2022 16:44	-0.13	
6/27/2022 16:45	-0.14	
6/27/2022 16:46	-0.09	
6/27/2022 16:47	-0.11	
6/27/2022 16:48	-0.11	
6/27/2022 16:49	-0.13	
6/27/2022 16:50	-0.17	
6/27/2022 16:51	-0.12	
6/27/2022 16:52	-0.08	
6/27/2022 16:53	-0.11	
6/27/2022 16:54	-0.10	
6/27/2022 16:55	-0.12	
6/27/2022 16:56	-0.13	
6/27/2022 16:57	-0.10	
6/27/2022 16:58	-0.14	
6/27/2022 16:59	-0.12	
6/27/2022 17:00	-0.12	
6/27/2022 17:01	-0.18	
6/27/2022 17:02	-0.14	
6/27/2022 17:03	-0.19	
6/27/2022 17:04	-0.16	
6/27/2022 17:05	-0.12	
6/27/2022 17:06	-0.19	
6/27/2022 17:07	-0.11	
6/27/2022 17:08	-0.17	
6/27/2022 17:09	-0.16	
6/27/2022 17:10	-0.13	
6/27/2022 17:11	-0.09	
6/27/2022 17:12	-0.11	
6/27/2022 17:13	-0.19	
6/27/2022 17:14	-0.16	
6/27/2022 17:15	-0.15	
6/27/2022 17:16	-0.13	
6/27/2022 17:17	-0.14	
6/27/2022 17:18	-0.07	
6/27/2022 17:19	-0.16	
6/27/2022 17:20	-0.10	
6/27/2022 17:21	-0.15	
6/27/2022 17:22	-0.13	
6/27/2022 17:23	-0.16	
6/27/2022 17:24	-0.10	
6/27/2022 17:25	-0.14	
6/27/2022 17:26	-0.14	
6/27/2022 17:27	-0.14	
6/27/2022 17:28	-0.15	
6/27/2022 17:29	-0.13	
6/27/2022 17:30	-0.14	
6/27/2022 17:31	-0.13	
6/27/2022 17:32	-0.15	
6/27/2022 17:33	-0.10	
6/27/2022 17:34	-0.14	
6/27/2022 17:35	-0.13	
6/27/2022 17:36	-0.05	
6/27/2022 17:37	-0.10	
6/27/2022 17:38	-0.14	
6/27/2022 17:39	-0.12	
6/27/2022 17:40	-0.15	
6/27/2022 17:41	-0.15	
6/27/2022 17:42	-0.19	
6/27/2022 17:43	-0.10	
6/27/2022 17:44	-0.13	
6/27/2022 17:45	-0.11	
6/27/2022 17:46	-0.09	
6/27/2022 17:47	-0.13	
6/27/2022 17:48	-0.15	
6/27/2022 17:49	-0.11	
6/27/2022 17:50	-0.13	
6/27/2022 17:51	-0.11	
6/27/2022 17:52	-0.19	
6/27/2022 17:53	-0.14	
6/27/2022 17:54	-0.11	
6/27/2022 17:55	-0.15	
6/27/2022 17:56	-0.10	
6/27/2022 17:57	-0.12	
6/27/2022 17:58	-0.16	
6/27/2022 17:59	-0.12	
6/27/2022 18:00	-0.12	
6/27/2022 18:01	-0.12	
6/27/2022 18:02	-0.13	
6/27/2022 18:03	-0.11	

6/27/2022 16:55	12.00	0.03
6/27/2022 16:56	11.99	0.12
6/27/2022 16:57	11.98	0.10
6/27/2022 16:58	11.98	0.09
6/27/2022 16:59	12.00	0.10
6/27/2022 17:00	12.03	0.08
6/27/2022 17:01	11.99	0.09
6/27/2022 17:02	11.97	0.08
6/27/2022 17:03	11.97	0.08
6/27/2022 17:04	11.96	0.07
6/27/2022 17:05	11.98	0.04
6/27/2022 17:06	11.96	0.07
6/27/2022 17:07	11.96	0.09
6/27/2022 17:08	11.98	0.11
6/27/2022 17:09	11.96	0.15
6/27/2022 17:10	11.99	-0.08
6/27/2022 17:11	11.97	0.09
6/27/2022 17:12	11.95	0.08
6/27/2022 17:13	11.98	0.05
6/27/2022 17:14	12.00	0.07
6/27/2022 17:15	11.93	0.04
6/27/2022 17:16	11.96	0.01
6/27/2022 17:17	11.94	-0.03
6/27/2022 17:18	11.95	0.07
6/27/2022 17:19	11.94	0.12
6/27/2022 17:20	11.94	0.02
6/27/2022 17:21	11.99	0.07
6/27/2022 17:22	11.95	0.11
6/27/2022 17:23	11.95	0.05
6/27/2022 17:24	11.98	0.07
6/27/2022 17:25	11.93	-0.03
6/27/2022 17:26	11.94	0.11
6/27/2022 17:27	11.99	0.02
6/27/2022 17:28	11.97	0.00
6/27/2022 17:29	12.01	0.14
6/27/2022 17:30	12.01	0.08
6/27/2022 17:31	12.01	0.09
6/27/2022 17:32	12.00	0.05
6/27/2022 17:33	12.00	0.07
6/27/2022 17:34	11.98	0.02
6/27/2022 17:35	12.00	0.07
6/27/2022 17:36	11.97	0.11
6/27/2022 17:37	11.98	0.12
6/27/2022 17:38	11.97	0.07
6/27/2022 17:39	11.98	0.03
6/27/2022 17:40	11.99	0.01
6/27/2022 17:41	12.00	0.02
6/27/2022 17:42	11.97	0.08
6/27/2022 17:43	12.00	0.07
6/27/2022 17:44	12.01	-0.02
6/27/2022 17:45	12.02	0.03
6/27/2022 17:46	12.03	0.05
6/27/2022 17:47	12.01	0.12
6/27/2022 17:48	12.00	0.03
6/27/2022 17:49	11.99	0.03
6/27/2022 17:50	12.02	0.03
6/27/2022 17:51	12.00	0.07
6/27/2022 17:52	12.01	0.02
6/27/2022 17:53	11.98	0.11
6/27/2022 17:54	12.01	-0.02
6/27/2022 17:55	11.99	0.11
6/27/2022 17:56	12.00	0.10
6/27/2022 17:57	12.00	0.09
6/27/2022 17:58	11.99	0.04
6/27/2022 17:59	11.98	0.05
6/27/2022 18:00	11.98	0.12
6/27/2022 18:01	11.96	0.07
6/27/2022 18:02	11.96	0.00
6/27/2022 18:03	11.98	0.08
6/27/2022 18:04	11.98	0.15
6/27/2022 18:05	11.98	0.02
6/27/2022 18:06	11.95	0.05
6/27/2022 18:07	11.98	0.02
6/27/2022 18:08	11.95	0.11
6/27/2022 18:09	11.96	0.07
6/27/2022 18:10	11.96	0.07
6/27/2022 18:11	12.00	0.07
6/27/2022 18:12	11.97	-0.01
6/27/2022 18:13	11.98	0.04
6/27/2022 18:14	12.00	0.06
6/27/2022 18:15	11.98	0.07
6/27/2022 18:16	11.99	0.02
6/27/2022 18:17	11.99	0.01
6/27/2022 18:18	11.98	0.02
6/27/2022 18:19	11.99	0.02
6/27/2022 18:20	11.99	0.01
6/27/2022 18:21	12.00	0.02
6/27/2022 18:22	11.97	0.05
6/27/2022 16:42	11.66	-0.20
6/27/2022 16:43	11.67	-0.21
6/27/2022 16:44	11.66	-0.20
6/27/2022 16:45	11.67	-0.19
6/27/2022 16:46	11.66	-0.22
6/27/2022 16:47	11.66	-0.20
6/27/2022 16:48	11.68	-0.16
6/27/2022 16:49	11.66	-0.21
6/27/2022 16:50	11.69	-0.20
6/27/2022 16:51	11.67	-0.23
6/27/2022 16:52	11.67	-0.23
6/27/2022 16:53	11.67	-0.21
6/27/2022 16:54	11.69	-0.20
6/27/2022 16:55	11.64	-0.21
6/27/2022 16:56	11.67	-0.19
6/27/2022 16:57	11.67	-0.22
6/27/2022 16:58	11.65	-0.21
6/27/2022 16:59	11.66	-0.21
6/27/2022 17:00	11.65	-0.18
6/27/2022 17:01	11.66	-0.20
6/27/2022 17:02	11.68	-0.17
6/27/2022 17:03	11.70	-0.18
6/27/2022 17:04	11.67	-0.20
6/27/2022 17:05	11.69	-0.16
6/27/2022 17:06	11.65	-0.20
6/27/2022 17:07	11.66	-0.19
6/27/2022 17:08	11.67	-0.22
6/27/2022 17:09	11.66	-0.15
6/27/2022 17:10	11.69	-0.18
6/27/2022 17:11	11.67	-0.21
6/27/2022 17:12	11.66	-0.22
6/27/2022 17:13	11.68	-0.24
6/27/2022 17:14	11.68	-0.19
6/27/2022 17:15	11.65	-0.17
6/27/2022 17:16	11.67	-0.22
6/27/2022 17:17	11.67	-0.20
6/27/2022 17:18	11.69	-0.25
6/27/2022 17:19	11.68	-0.20
6/27/2022 17:20	11.65	-0.20
6/27/2022 17:21	11.69	-0.20
6/27/2022 17:22	11.67	-0.21
6/27/2022 17:23	11.67	-0.21
6/27/2022 17:24	11.68	-0.22
6/27/2022 17:25	11.67	-0.20
6/27/2022 17:26	11.67	-0.19
6/27/2022 17:27	11.66	-0.18
6/27/2022 17:28	11.67	-0.18
6/27/2022 17:29	11.67	-0.18
6/27/2022 17:30	11.65	-0.20
6/27/2022 17:31	11.69	-0.18
6/27/2022 17:32	11.69	-0.23
6/27/2022 17:33	11.68	-0.21
6/27/2022 17:34	11.65	-0.17
6/27/2022 17:35	11.67	-0.18
6/27/2022 17:36	11.67	-0.22
6/27/2022 17:37	11.66	-0.18
6/27/2022 17:38	11.67	-0.20
6/27/2022 17:39	11.68	-0.16
6/27/2022 17:40	11.66	-0.20
6/27/2022 17:41	11.69	-0.19
6/27/2022 17:42	11.67	-0.23
6/27/2022 17:43	11.67	-0.22
6/27/2022 17:44	11.67	-0.22
6/27/2022 17:45	11.68	-0.20
6/27/2022 17:46	11.66	-0.21
6/27/2022 17:47	11.67	-0.21
6/27/2022 17:48	11.65	-0.23
6/27/2022 17:49	11.67	-0.22
6/27/2022 17:50	11.66	-0.17
6/27/2022 17:51	11.66	-0.22
6/27/2022 17:52	11.65	-0.21
6/27/2022 17:53	11.67	-0.18
6/27/2022 17:54	11.67	-0.22
6/27/2022 17:55	11.66	-0.20
6/27/2022 17:56	11.65	-0.21
6/27/2022 17:57	11.65	-0.19
6/27/2022 17:58	11.66	-0.22
6/27/2022 17:59	11.67	-0.22
6/27/2022 18:00	11.66	-0.20
6/27/2022 18:01	11.65	-0.15
6/27/2022 18:02	11.65	-0.21
6/27/2022 18:03	11.66	-0.22
6/27/2022 18:04	11.65	-0.21
6/27/2022 18:05	11.67	-0.21
6/27/2022 18:06	11.69	-0.23
6/27/2022 18:07	11.69	-0.19
6/27/2022 18:08	11.68	-0.24
6/27/2022 18:09	11.67	-0.18
6/27/2022 18:04	-0.15
6/27/2022 18:05	-0.14
6/27/2022 18:06	-0.14
6/27/2022 18:07	-0.14
6/27/2022 18:08	-0.15
6/27/2022 18:09	-0.13
6/27/2022 18:10	-0.11
6/27/2022 18:11	-0.14
6/27/2022 18:12	-0.17
6/27/2022 18:13	-0.10
6/27/2022 18:14	-0.11
6/27/2022 18:15	-0.15
6/27/2022 18:16	-0.13
6/27/2022 18:17	-0.12
6/27/2022 18:18	-0.15
6/27/2022 18:19	-0.14
6/27/2022 18:20	-0.16
6/27/2022 18:21	-0.13
6/27/2022 18:22	-0.12
6/27/2022 18:23	-0.15
6/27/2022 18:24	-0.16
6/27/2022 18:25	-0.15
6/27/2022 18:26	-0.14
6/27/2022 18:27	-0.17
6/27/2022 18:28	-0.17
6/27/2022 18:29	-0.14
6/27/2022 18:30	-0.15
6/27/2022 18:31	-0.17
6/27/2022 18:32	-0.10
6/27/2022 18:33	-0.13
6/27/2022 18:34	-0.17
6/27/2022 18:35	-0.18
6/27/2022 18:36	-0.15
6/27/2022 18:37	-0.15
6/27/2022 18:38	-0.15
6/27/2022 18:39	-0.18
6/27/2022 18:40	-0.12
6/27/2022 18:41	-0.09
6/27/2022 18:42	-0.18
6/27/2022 18:43	-0.14
6/27/2022 18:44	-0.14
6/27/2022 18:45	-0.14
6/27/2022 18:46	-0.12
6/27/2022 18:47	-0.13
6/27/2022 18:48	-0.08
6/27/2022 18:49	-0.19
6/27/2022 18:50	-0.20
6/27/2022 18:51	-0.14
6/27/2022 18:52	-0.11
6/27/2022 18:53	-0.13
6/27/2022 18:54	-0.17
6/27/2022 18:55	-0.12
6/27/2022 18:56	-0.15
6/27/2022 18:57	-0.13
6/27/2022 18:58	-0.12
6/27/2022 18:59	-0.13
6/27/2022 19:00	-0.17
6/27/2022 19:01	-0.14
6/27/2022 19:02	-0.16
6/27/2022 19:03	-0.13
6/27/2022 19:04	-0.15
6/27/2022 19:05	-0.10
6/27/2022 19:06	-0.12
6/27/2022 19:07	-0.13
6/27/2022 19:08	-0.13
6/27/2022 19:09	-0.19
6/27/2022 19:10	-0.12
6/27/2022 19:11	-0.13
6/27/2022 19:12	-0.13
6/27/2022 19:13	-0.15
6/27/2022 19:14	-0.15
6/27/2022 19:15	-0.17
6/27/2022 19:16	-0.14
6/27/2022 19:17	-0.17
6/27/2022 19:18	-0.14
6/27/2022 19:19	-0.13
6/27/2022 19:20	-0.16
6/27/2022 19:21	-0.19
6/27/2022 19:22	-0.15
6/27/2022 19:23	-0.19
6/27/2022 19:24	-0.08
6/27/2022 19:25	-0.14
6/27/2022 19:26	-0.15
6/27/2022 19:27	-0.09
6/27/2022 19:28	-0.10
6/27/2022 19:29	-0.13
6/27/2022 19:30	-0.06
6/27/2022 19:31	-0.09

6/27/2022 18:23	11.99	0.08
6/27/2022 18:24	11.97	0.06
6/27/2022 18:25	11.96	0.04
6/27/2022 18:26	12.00	0.09
6/27/2022 18:27	11.96	0.08
6/27/2022 18:28	11.98	0.02
6/27/2022 18:29	11.97	0.11
6/27/2022 18:30	11.98	0.10
6/27/2022 18:31	11.98	0.04
6/27/2022 18:32	11.96	0.18
6/27/2022 18:33	11.99	0.11
6/27/2022 18:34	11.96	0.07
6/27/2022 18:35	11.97	0.05
6/27/2022 18:36	11.99	0.08
6/27/2022 18:37	11.99	0.10
6/27/2022 18:38	12.01	0.08
6/27/2022 18:39	11.99	0.03
6/27/2022 18:40	11.99	0.08
6/27/2022 18:41	11.98	0.02
6/27/2022 18:42	11.98	0.09
6/27/2022 18:43	11.99	0.04
6/27/2022 18:44	11.96	-0.07
6/27/2022 18:45	11.98	0.04
6/27/2022 18:46	11.98	0.00
6/27/2022 18:47	11.96	0.07
6/27/2022 18:48	11.95	0.07
6/27/2022 18:49	11.95	0.02
6/27/2022 18:50	11.98	0.02
6/27/2022 18:51	12.01	0.09
6/27/2022 18:52	11.98	0.10
6/27/2022 18:53	11.98	0.08
6/27/2022 18:54	11.98	-0.12
6/27/2022 18:55	11.96	-0.03
6/27/2022 18:56	11.99	0.04
6/27/2022 18:57	12.01	0.02
6/27/2022 18:58	11.97	0.01
6/27/2022 18:59	11.96	0.11
6/27/2022 19:00	11.97	0.10
6/27/2022 19:01	11.98	0.12
6/27/2022 19:02	11.96	-0.01
6/27/2022 19:03	11.98	0.05
6/27/2022 19:04	11.98	0.02
6/27/2022 19:05	11.97	0.10
6/27/2022 19:06	11.98	-0.01
6/27/2022 19:07	11.99	0.01
6/27/2022 19:08	11.96	0.06
6/27/2022 19:09	11.97	0.03
6/27/2022 19:10	11.98	0.07
6/27/2022 19:11	11.99	0.05
6/27/2022 19:12	11.99	0.02
6/27/2022 19:13	11.97	0.06
6/27/2022 19:14	11.99	0.10
6/27/2022 19:15	11.97	0.09
6/27/2022 19:16	11.96	0.12
6/27/2022 19:17	11.99	0.11
6/27/2022 19:18	12.00	0.11
6/27/2022 19:19	12.00	0.03
6/27/2022 19:20	12.00	0.06
6/27/2022 19:21	11.99	0.02
6/27/2022 19:22	11.99	0.07
6/27/2022 19:23	12.00	0.06
6/27/2022 19:24	12.01	0.08
6/27/2022 19:25	11.99	0.03
6/27/2022 19:26	12.01	0.06
6/27/2022 19:27	11.99	-0.04
6/27/2022 19:28	11.98	0.09
6/27/2022 19:29	12.00	-0.01
6/27/2022 19:30	11.96	0.02
6/27/2022 19:31	11.99	0.06
6/27/2022 19:32	11.96	0.05
6/27/2022 19:33	11.97	0.08
6/27/2022 19:34	11.98	0.06
6/27/2022 19:35	11.97	0.12
6/27/2022 19:36	11.97	0.12
6/27/2022 19:37	11.98	0.07
6/27/2022 19:38	11.98	0.02
6/27/2022 19:39	11.96	0.00
6/27/2022 19:40	11.99	0.01
6/27/2022 19:41	11.97	0.06
6/27/2022 19:42	11.97	0.05
6/27/2022 19:43	11.99	0.08
6/27/2022 19:44	11.94	0.07
6/27/2022 19:45	11.95	0.03
6/27/2022 19:46	11.97	0.11
6/27/2022 19:47	11.97	0.06
6/27/2022 19:48	11.98	0.14
6/27/2022 19:49	11.98	0.13
6/27/2022 19:50	12.00	0.11
6/27/2022 18:10	11.65	-0.21
6/27/2022 18:11	11.67	-0.23
6/27/2022 18:12	11.67	-0.19
6/27/2022 18:13	11.67	-0.19
6/27/2022 18:14	11.66	-0.19
6/27/2022 18:15	11.68	-0.23
6/27/2022 18:16	11.67	-0.24
6/27/2022 18:17	11.67	-0.21
6/27/2022 18:18	11.69	-0.22
6/27/2022 18:19	11.68	-0.16
6/27/2022 18:20	11.65	-0.20
6/27/2022 18:21	11.64	-0.21
6/27/2022 18:22	11.66	-0.24
6/27/2022 18:23	11.64	-0.20
6/27/2022 18:24	11.65	-0.20
6/27/2022 18:25	11.67	-0.19
6/27/2022 18:26	11.66	-0.23
6/27/2022 18:27	11.65	-0.19
6/27/2022 18:28	11.70	-0.21
6/27/2022 18:29	11.69	-0.22
6/27/2022 18:30	11.66	-0.21
6/27/2022 18:31	11.71	-0.16
6/27/2022 18:32	11.69	-0.21
6/27/2022 18:33	11.67	-0.19
6/27/2022 18:34	11.66	-0.17
6/27/2022 18:35	11.65	-0.22
6/27/2022 18:36	11.67	-0.17
6/27/2022 18:37	11.66	-0.20
6/27/2022 18:38	11.67	-0.22
6/27/2022 18:39	11.65	-0.19
6/27/2022 18:40	11.66	-0.23
6/27/2022 18:41	11.69	-0.21
6/27/2022 18:42	11.72	-0.18
6/27/2022 18:43	11.67	-0.21
6/27/2022 18:44	11.68	-0.22
6/27/2022 18:45	11.66	-0.20
6/27/2022 18:46	11.67	-0.20
6/27/2022 18:47	11.66	-0.23
6/27/2022 18:48	11.69	-0.23
6/27/2022 18:49	11.67	-0.20
6/27/2022 18:50	11.68	-0.22
6/27/2022 18:51	11.68	-0.20
6/27/2022 18:52	11.67	-0.18
6/27/2022 18:53	11.69	-0.21
6/27/2022 18:54	11.65	-0.19
6/27/2022 18:55	11.67	-0.18
6/27/2022 18:56	11.67	-0.17
6/27/2022 18:57	11.67	-0.18
6/27/2022 18:58	11.65	-0.17
6/27/2022 18:59	11.67	-0.21
6/27/2022 19:00	11.68	-0.23
6/27/2022 19:01	11.66	-0.16
6/27/2022 19:02	11.69	-0.20
6/27/2022 19:03	11.66	-0.21
6/27/2022 19:04	11.67	-0.22
6/27/2022 19:05	11.66	-0.19
6/27/2022 19:06	11.68	-0.20
6/27/2022 19:07	11.66	-0.20
6/27/2022 19:08	11.66	-0.23
6/27/2022 19:09	11.66	-0.22
6/27/2022 19:10	11.68	-0.19
6/27/2022 19:11	11.69	-0.18
6/27/2022 19:12	11.68	-0.20
6/27/2022 19:13	11.69	-0.20
6/27/2022 19:14	11.67	-0.23
6/27/2022 19:15	11.67	-0.27
6/27/2022 19:16	11.69	-0.22
6/27/2022 19:17	11.68	-0.18
6/27/2022 19:18	11.68	-0.20
6/27/2022 19:19	11.69	-0.22
6/27/2022 19:20	11.64	-0.17
6/27/2022 19:21	11.66	-0.24
6/27/2022 19:22	11.68	-0.18
6/27/2022 19:23	11.67	-0.22
6/27/2022 19:24	11.65	-0.17
6/27/2022 19:25	11.68	-0.19
6/27/2022 19:26	11.66	-0.20
6/27/2022 19:27	11.66	-0.17
6/27/2022 19:28	11.68	-0.25
6/27/2022 19:29	11.65	-0.22
6/27/2022 19:30	11.68	-0.21
6/27/2022 19:31	11.67	-0.21
6/27/2022 19:32	11.66	-0.23
6/27/2022 19:33	11.69	-0.22
6/27/2022 19:34	11.66	-0.18
6/27/2022 19:35	11.67	-0.20
6/27/2022 19:36	11.65	-0.19
6/27/2022 19:37	11.63	-0.19
6/27/2022 19:32	-0.15	
6/27/2022 19:33	-0.11	
6/27/2022 19:34	-0.19	
6/27/2022 19:35	-0.16	
6/27/2022 19:36	-0.16	
6/27/2022 19:37	-0.16	
6/27/2022 19:38	-0.15	
6/27/2022 19:39	-0.07	
6/27/2022 19:40	-0.11	
6/27/2022 19:41	-0.11	
6/27/2022 19:42	-0.15	
6/27/2022 19:43	-0.10	
6/27/2022 19:44	-0.11	
6/27/2022 19:45	-0.10	
6/27/2022 19:46	-0.17	
6/27/2022 19:47	-0.10	
6/27/2022 19:48	-0.12	
6/27/2022 19:49	-0.17	
6/27/2022 19:50	-0.10	
6/27/2022 19:51	-0.12	
6/27/2022 19:52	-0.09	
6/27/2022 19:53	-0.13	
6/27/2022 19:54	-0.09	
6/27/2022 19:55	-0.08	
6/27/2022 19:56	-0.15	
6/27/2022 19:57	-0.09	
6/27/2022 19:58	-0.09	
6/27/2022 19:59	-0.17	
6/27/2022 20:00	-0.18	
6/27/2022 20:01	-0.17	
6/27/2022 20:02	-0.11	
6/27/2022 20:03	-0.11	
6/27/2022 20:04	-0.16	
6/27/2022 20:05	-0.14	
6/27/2022 20:06	-0.14	
6/27/2022 20:07	-0.12	
6/27/2022 20:08	-0.13	
6/27/2022 20:09	-0.11	
6/27/2022 20:10	-0.11	
6/27/2022 20:11	-0.11	
6/27/2022 20:12	-0.13	
6/27/2022 20:13	-0.11	
6/27/2022 20:14	-0.07	
6/27/2022 20:15	-0.11	
6/27/2022 20:16	-0.14	
6/27/2022 20:17	-0.16	
6/27/2022 20:18	-0.11	
6/27/2022 20:19	-0.12	
6/27/2022 20:20	-0.15	
6/27/2022 20:21	-0.15	
6/27/2022 20:22	-0.19	
6/27/2022 20:23	-0.12	
6/27/2022 20:24	-0.15	
6/27/2022 20:25	-0.10	
6/27/2022 20:26	-0.10	
6/27/2022 20:27	-0.13	
6/27/2022 20:28	-0.14	
6/27/2022 20:29	-0.12	
6/27/2022 20:30	-0.13	
6/27/2022 20:31	-0.14	
6/27/2022 20:32	-0.12	
6/27/2022 20:33	-0.14	
6/27/2022 20:34	-0.13	
6/27/2022 20:35	-0.15	
6/27/2022 20:36	-0.17	
6/27/2022 20:37	-0.13	
6/27/2022 20:38	-0.11	
6/27/2022 20:39	-0.14	
6/27/2022 20:40	-0.17	
6/27/2022 20:41	-0.13	
6/27/2022 20:42	-0.15	
6/27/2022 20:43	-0.16	
6/27/2022 20:44	-0.15	
6/27/2022 20:45	-0.11	
6/27/2022 20:46	-0.13	
6/27/2022 20:47	-0.12	
6/27/2022 20:48	-0.09	
6/27/2022 20:49	-0.12	
6/27/2022 20:50	-0.13	
6/27/2022 20:51	-0.15	
6/27/2022 20:52	-0.13	
6/27/2022 20:53	-0.13	
6/27/2022 20:54	-0.18	
6/27/2022 20:55	-0.15	
6/27/2022 20:56	-0.15	
6/27/2022 20:57	-0.15	
6/27/2022 20:58	-0.15	
6/27/2022 20:59	-0.18	

6/27/2022 19:51	11.98	0.07
6/27/2022 19:52	11.98	-0.03
6/27/2022 19:53	12.00	0.07
6/27/2022 19:54	12.00	0.01
6/27/2022 19:55	12.00	0.08
6/27/2022 19:56	11.96	0.10
6/27/2022 19:57	11.97	0.00
6/27/2022 19:58	11.99	0.04
6/27/2022 19:59	11.97	0.07
6/27/2022 20:00	11.96	0.11
6/27/2022 20:01	11.96	0.01
6/27/2022 20:02	11.97	0.11
6/27/2022 20:03	11.98	0.01
6/27/2022 20:04	11.97	0.05
6/27/2022 20:05	11.97	0.07
6/27/2022 20:06	11.99	0.07
6/27/2022 20:07	11.99	0.08
6/27/2022 20:08	11.99	0.06
6/27/2022 20:09	11.97	0.18
6/27/2022 20:10	11.95	0.05
6/27/2022 20:11	11.97	0.16
6/27/2022 20:12	11.98	-0.02
6/27/2022 20:13	11.98	0.02
6/27/2022 20:14	11.99	0.07
6/27/2022 20:15	12.01	0.03
6/27/2022 20:16	11.96	0.05
6/27/2022 20:17	12.01	0.01
6/27/2022 20:18	11.99	0.11
6/27/2022 20:19	11.99	0.05
6/27/2022 20:20	11.96	0.12
6/27/2022 20:21	11.97	0.08
6/27/2022 20:22	11.98	0.03
6/27/2022 20:23	11.97	0.06
6/27/2022 20:24	11.98	0.09
6/27/2022 20:25	11.99	0.05
6/27/2022 20:26	12.00	0.13
6/27/2022 20:27	11.98	0.06
6/27/2022 20:28	11.96	0.11
6/27/2022 20:29	12.00	0.02
6/27/2022 20:30	12.00	0.06
6/27/2022 20:31	11.98	0.06
6/27/2022 20:32	12.00	0.07
6/27/2022 20:33	12.01	0.10
6/27/2022 20:34	12.00	0.06
6/27/2022 20:35	11.98	0.02
6/27/2022 20:36	11.99	0.03
6/27/2022 20:37	11.98	0.02
6/27/2022 20:38	11.96	0.02
6/27/2022 20:39	11.99	0.04
6/27/2022 20:40	11.99	0.02
6/27/2022 20:41	11.96	0.08
6/27/2022 20:42	11.98	0.07
6/27/2022 20:43	11.98	0.06
6/27/2022 20:44	11.97	0.06
6/27/2022 20:45	11.97	0.10
6/27/2022 20:46	12.01	0.11
6/27/2022 20:47	11.98	0.03
6/27/2022 20:48	11.98	0.11
6/27/2022 20:49	11.99	0.10
6/27/2022 20:50	12.00	0.13
6/27/2022 20:51	11.97	0.05
6/27/2022 20:52	12.00	0.08
6/27/2022 20:53	11.96	0.03
6/27/2022 20:54	11.97	0.09
6/27/2022 20:55	11.98	0.06
6/27/2022 20:56	11.96	0.21
6/27/2022 20:57	11.96	0.04
6/27/2022 20:58	11.95	0.05
6/27/2022 20:59	11.96	0.07
6/27/2022 21:00	12.00	0.07
6/27/2022 21:01	12.00	0.06
6/27/2022 21:02	12.00	-0.01
6/27/2022 21:03	11.99	-0.04
6/27/2022 21:04	12.00	0.05
6/27/2022 21:05	11.97	-0.02
6/27/2022 21:06	12.00	0.07
6/27/2022 21:07	11.97	0.07
6/27/2022 21:08	11.97	0.01
6/27/2022 21:09	11.96	0.10
6/27/2022 21:10	11.99	0.01
6/27/2022 21:11	11.98	0.07
6/27/2022 21:12	11.95	0.06
6/27/2022 21:13	11.97	0.10
6/27/2022 21:14	11.96	0.17
6/27/2022 21:15	11.96	0.09
6/27/2022 21:16	11.97	0.04
6/27/2022 21:17	11.97	0.07
6/27/2022 21:18	11.96	0.01
6/27/2022 19:38	11.67	-0.18
6/27/2022 19:39	11.68	-0.18
6/27/2022 19:40	11.66	-0.21
6/27/2022 19:41	11.67	-0.17
6/27/2022 19:42	11.68	-0.16
6/27/2022 19:43	11.69	-0.17
6/27/2022 19:44	11.66	-0.20
6/27/2022 19:45	11.68	-0.23
6/27/2022 19:46	11.66	-0.21
6/27/2022 19:47	11.66	-0.20
6/27/2022 19:48	11.68	-0.20
6/27/2022 19:49	11.67	-0.18
6/27/2022 19:50	11.67	-0.21
6/27/2022 19:51	11.66	-0.21
6/27/2022 19:52	11.68	-0.19
6/27/2022 19:53	11.66	-0.18
6/27/2022 19:54	11.66	-0.19
6/27/2022 19:55	11.68	-0.20
6/27/2022 19:56	11.65	-0.19
6/27/2022 19:57	11.65	-0.24
6/27/2022 19:58	11.67	-0.23
6/27/2022 19:59	11.68	-0.18
6/27/2022 20:00	11.65	-0.20
6/27/2022 20:01	11.69	-0.18
6/27/2022 20:02	11.68	-0.22
6/27/2022 20:03	11.66	-0.17
6/27/2022 20:04	11.64	-0.22
6/27/2022 20:05	11.68	-0.18
6/27/2022 20:06	11.65	-0.23
6/27/2022 20:07	11.66	-0.20
6/27/2022 20:08	11.66	-0.18
6/27/2022 20:09	11.68	-0.22
6/27/2022 20:10	11.68	-0.21
6/27/2022 20:11	11.68	-0.23
6/27/2022 20:12	11.67	-0.21
6/27/2022 20:13	11.65	-0.24
6/27/2022 20:14	11.67	-0.23
6/27/2022 20:15	11.66	-0.18
6/27/2022 20:16	11.67	-0.16
6/27/2022 20:17	11.67	-0.19
6/27/2022 20:18	11.68	-0.22
6/27/2022 20:19	11.66	-0.22
6/27/2022 20:20	11.67	-0.22
6/27/2022 20:21	11.68	-0.21
6/27/2022 20:22	11.69	-0.21
6/27/2022 20:23	11.65	-0.20
6/27/2022 20:24	11.66	-0.23
6/27/2022 20:25	11.67	-0.20
6/27/2022 20:26	11.68	-0.22
6/27/2022 20:27	11.67	-0.22
6/27/2022 20:28	11.68	-0.20
6/27/2022 20:29	11.66	-0.21
6/27/2022 20:30	11.66	-0.18
6/27/2022 20:31	11.68	-0.20
6/27/2022 20:32	11.67	-0.20
6/27/2022 20:33	11.68	-0.17
6/27/2022 20:34	11.70	-0.24
6/27/2022 20:35	11.69	-0.20
6/27/2022 20:36	11.67	-0.18
6/27/2022 20:37	11.66	-0.18
6/27/2022 20:38	11.67	-0.25
6/27/2022 20:39	11.65	-0.19
6/27/2022 20:40	11.64	-0.16
6/27/2022 20:41	11.65	-0.21
6/27/2022 20:42	11.65	-0.21
6/27/2022 20:43	11.67	-0.19
6/27/2022 20:44	11.68	-0.22
6/27/2022 20:45	11.65	-0.22
6/27/2022 20:46	11.67	-0.21
6/27/2022 20:47	11.67	-0.18
6/27/2022 20:48	11.67	-0.18
6/27/2022 20:49	11.65	-0.24
6/27/2022 20:50	11.67	-0.22
6/27/2022 20:51	11.66	-0.26
6/27/2022 20:52	11.66	-0.20
6/27/2022 20:53	11.67	-0.19
6/27/2022 20:54	11.67	-0.23
6/27/2022 20:55	11.70	-0.25
6/27/2022 20:56	11.68	-0.22
6/27/2022 20:57	11.70	-0.20
6/27/2022 20:58	11.68	-0.16
6/27/2022 20:59	11.68	-0.18
6/27/2022 21:00	11.68	-0.20
6/27/2022 21:01	11.67	-0.19
6/27/2022 21:02	11.68	-0.22
6/27/2022 21:03	11.69	-0.19
6/27/2022 21:04	11.66	-0.19
6/27/2022 21:05	11.68	-0.19
6/27/2022 21:00	-0.14	
6/27/2022 21:01	-0.14	
6/27/2022 21:02	-0.16	
6/27/2022 21:03	-0.11	
6/27/2022 21:04	-0.13	
6/27/2022 21:05	-0.08	
6/27/2022 21:06	-0.12	
6/27/2022 21:07	-0.12	
6/27/2022 21:08	-0.09	
6/27/2022 21:09	-0.06	
6/27/2022 21:10	-0.14	
6/27/2022 21:11	-0.15	
6/27/2022 21:12	-0.16	
6/27/2022 21:13	-0.12	
6/27/2022 21:14	-0.12	
6/27/2022 21:15	-0.12	
6/27/2022 21:16	-0.12	
6/27/2022 21:17	-0.11	
6/27/2022 21:18	-0.10	
6/27/2022 21:19	-0.14	
6/27/2022 21:20	-0.14	
6/27/2022 21:21	-0.13	
6/27/2022 21:22	-0.14	
6/27/2022 21:23	-0.13	
6/27/2022 21:24	-0.11	
6/27/2022 21:25	-0.15	
6/27/2022 21:26	-0.14	
6/27/2022 21:27	-0.15	
6/27/2022 21:28	-0.12	
6/27/2022 21:29	-0.10	
6/27/2022 21:30	-0.15	
6/27/2022 21:31	-0.16	
6/27/2022 21:32	-0.14	
6/27/2022 21:33	-0.10	
6/27/2022 21:34	-0.10	
6/27/2022 21:35	-0.15	
6/27/2022 21:36	-0.13	
6/27/2022 21:37	-0.13	
6/27/2022 21:38	-0.15	
6/27/2022 21:39	-0.16	
6/27/2022 21:40	-0.16	
6/27/2022 21:41	-0.14	
6/27/2022 21:42	-0.16	
6/27/2022 21:43	-0.13	
6/27/2022 21:44	-0.11	
6/27/2022 21:45	-0.16	
6/27/2022 21:46	-0.20	
6/27/2022 21:47	-0.12	
6/27/2022 21:48	-0.12	
6/27/2022 21:49	-0.16	
6/27/2022 21:50	-0.11	
6/27/2022 21:51	-0.11	
6/27/2022 21:52	-0.17	
6/27/2022 21:53	-0.15	
6/27/2022 21:54	-0.17	
6/27/2022 21:55	-0.19	
6/27/2022 21:56	-0.15	
6/27/2022 21:57	-0.15	
6/27/2022 21:58	-0.21	
6/27/2022 21:59	-0.13	
6/27/2022 22:00	-0.19	
6/27/2022 22:01	-0.08	
6/27/2022 22:02	-0.12	
6/27/2022 22:03	-0.08	
6/27/2022 22:04	-0.11	
6/27/2022 22:05	-0.14	
6/27/2022 22:06	-0.10	
6/27/2022 22:07	-0.13	
6/27/2022 22:08	-0.13	
6/27/2022 22:09	-0.18	
6/27/2022 22:10	-0.15	
6/27/2022 22:11	-0.14	
6/27/2022 22:12	-0.15	
6/27/2022 22:13	-0.16	
6/27/2022 22:14	-0.10	
6/27/2022 22:15	-0.10	
6/27/2022 22:16	-0.12	
6/27/2022 22:17	-0.14	
6/27/2022 22:18	-0.12	
6/27/2022 22:19	-0.14	
6/27/2022 22:20	-0.18	
6/27/2022 22:21	-0.11	
6/27/2022 22:22	-0.13	
6/27/2022 22:23	-0.07	
6/27/2022 22:24	-0.14	
6/27/2022 22:25	-0.12	
6/27/2022 22:26	-0.11	
6/27/2022 22:27	-0.12	

6/27/2022 21:19	11.97	0.02
6/27/2022 21:20	11.97	-0.03
6/27/2022 21:21	11.98	0.06
6/27/2022 21:22	11.98	0.07
6/27/2022 21:23	11.97	0.00
6/27/2022 21:24	11.96	0.03
6/27/2022 21:25	11.99	0.04
6/27/2022 21:26	11.98	0.01
6/27/2022 21:27	11.98	0.07
6/27/2022 21:28	11.98	0.08
6/27/2022 21:29	11.97	0.09
6/27/2022 21:30	11.97	0.04
6/27/2022 21:31	11.98	-0.03
6/27/2022 21:32	11.94	0.02
6/27/2022 21:33	11.99	0.03
6/27/2022 21:34	11.96	0.05
6/27/2022 21:35	12.00	0.03
6/27/2022 21:36	11.98	0.10
6/27/2022 21:37	12.00	0.06
6/27/2022 21:38	12.00	0.15
6/27/2022 21:39	12.01	0.07
6/27/2022 21:40	11.98	0.07
6/27/2022 21:41	11.97	0.09
6/27/2022 21:42	11.99	0.10
6/27/2022 21:43	12.00	0.05
6/27/2022 21:44	11.98	0.03
6/27/2022 21:45	11.99	0.07
6/27/2022 21:46	11.97	-0.02
6/27/2022 21:47	11.97	0.04
6/27/2022 21:48	11.95	0.12
6/27/2022 21:49	11.95	-0.01
6/27/2022 21:50	11.95	0.07
6/27/2022 21:51	11.94	0.11
6/27/2022 21:52	11.96	0.13
6/27/2022 21:53	11.96	0.06
6/27/2022 21:54	11.98	0.03
6/27/2022 21:55	11.96	0.03
6/27/2022 21:56	11.97	0.06
6/27/2022 21:57	11.99	0.03
6/27/2022 21:58	11.98	0.08
6/27/2022 21:59	12.00	0.11
6/27/2022 22:00	11.97	0.03
6/27/2022 22:01	12.00	0.04
6/27/2022 22:02	12.02	0.11
6/27/2022 22:03	11.99	0.11
6/27/2022 22:04	12.00	0.10
6/27/2022 22:05	12.00	0.02
6/27/2022 22:06	12.01	0.02
6/27/2022 22:07	11.99	0.08
6/27/2022 22:08	11.99	0.07
6/27/2022 22:09	11.98	0.06
6/27/2022 22:10	11.96	0.04
6/27/2022 22:11	11.97	0.06
6/27/2022 22:12	12.00	0.01
6/27/2022 22:13	11.98	0.05
6/27/2022 22:14	11.97	0.06
6/27/2022 22:15	12.00	-0.04
6/27/2022 22:16	11.98	-0.02
6/27/2022 22:17	12.00	0.04
6/27/2022 22:18	12.01	0.01
6/27/2022 22:19	12.00	0.10
6/27/2022 22:20	12.00	0.08
6/27/2022 22:21	12.00	0.02
6/27/2022 22:22	12.02	0.12
6/27/2022 22:23	11.97	0.07
6/27/2022 22:24	11.98	0.07
6/27/2022 22:25	11.98	0.07
6/27/2022 22:26	12.00	0.00
6/27/2022 22:27	12.02	0.08
6/27/2022 22:28	12.02	0.08
6/27/2022 22:29	12.00	0.06
6/27/2022 22:30	11.97	-0.01
6/27/2022 22:31	12.01	0.02
6/27/2022 22:32	11.99	0.05
6/27/2022 22:33	12.01	0.11
6/27/2022 22:34	11.97	0.05
6/27/2022 22:35	11.99	0.12
6/27/2022 22:36	12.00	0.07
6/27/2022 22:37	12.00	0.01
6/27/2022 22:38	11.99	0.04
6/27/2022 22:39	11.99	0.11
6/27/2022 22:40	11.98	0.11
6/27/2022 22:41	11.99	0.02
6/27/2022 22:42	11.97	0.07
6/27/2022 22:43	12.00	0.08
6/27/2022 22:44	11.97	0.03
6/27/2022 22:45	11.97	0.12
6/27/2022 22:46	12.00	0.05
6/27/2022 21:06	11.66	-0.21
6/27/2022 21:07	11.66	-0.14
6/27/2022 21:08	11.66	-0.20
6/27/2022 21:09	11.67	-0.16
6/27/2022 21:10	11.67	-0.20
6/27/2022 21:11	11.66	-0.19
6/27/2022 21:12	11.69	-0.22
6/27/2022 21:13	11.68	-0.18
6/27/2022 21:14	11.66	-0.20
6/27/2022 21:15	11.67	-0.22
6/27/2022 21:16	11.67	-0.17
6/27/2022 21:17	11.68	-0.19
6/27/2022 21:18	11.65	-0.21
6/27/2022 21:19	11.68	-0.21
6/27/2022 21:20	11.68	-0.23
6/27/2022 21:21	11.68	-0.22
6/27/2022 21:22	11.68	-0.20
6/27/2022 21:23	11.69	-0.22
6/27/2022 21:24	11.66	-0.19
6/27/2022 21:25	11.66	-0.20
6/27/2022 21:26	11.69	-0.20
6/27/2022 21:27	11.69	-0.20
6/27/2022 21:28	11.66	-0.22
6/27/2022 21:29	11.68	-0.22
6/27/2022 21:30	11.66	-0.21
6/27/2022 21:31	11.68	-0.18
6/27/2022 21:32	11.67	-0.21
6/27/2022 21:33	11.66	-0.23
6/27/2022 21:34	11.65	-0.22
6/27/2022 21:35	11.65	-0.21
6/27/2022 21:36	11.66	-0.20
6/27/2022 21:37	11.69	-0.21
6/27/2022 21:38	11.68	-0.21
6/27/2022 21:39	11.69	-0.20
6/27/2022 21:40	11.67	-0.19
6/27/2022 21:41	11.67	-0.22
6/27/2022 21:42	11.68	-0.22
6/27/2022 21:43	11.69	-0.21
6/27/2022 21:44	11.68	-0.21
6/27/2022 21:45	11.68	-0.20
6/27/2022 21:46	11.66	-0.21
6/27/2022 21:47	11.70	-0.18
6/27/2022 21:48	11.65	-0.21
6/27/2022 21:49	11.70	-0.21
6/27/2022 21:50	11.66	-0.16
6/27/2022 21:51	11.67	-0.21
6/27/2022 21:52	11.66	-0.20
6/27/2022 21:53	11.69	-0.19
6/27/2022 21:54	11.67	-0.22
6/27/2022 21:55	11.65	-0.20
6/27/2022 21:56	11.68	-0.22
6/27/2022 21:57	11.68	-0.21
6/27/2022 21:58	11.69	-0.20
6/27/2022 21:59	11.70	-0.20
6/27/2022 22:00	11.65	-0.19
6/27/2022 22:01	11.69	-0.19
6/27/2022 22:02	11.68	-0.22
6/27/2022 22:03	11.68	-0.16
6/27/2022 22:04	11.66	-0.18
6/27/2022 22:05	11.67	-0.22
6/27/2022 22:06	11.68	-0.19
6/27/2022 22:07	11.65	-0.16
6/27/2022 22:08	11.67	-0.22
6/27/2022 22:09	11.66	-0.21
6/27/2022 22:10	11.70	-0.19
6/27/2022 22:11	11.67	-0.17
6/27/2022 22:12	11.66	-0.18
6/27/2022 22:13	11.67	-0.24
6/27/2022 22:14	11.68	-0.19
6/27/2022 22:15	11.68	-0.18
6/27/2022 22:16	11.66	-0.17
6/27/2022 22:17	11.68	-0.22
6/27/2022 22:18	11.66	-0.21
6/27/2022 22:19	11.67	-0.15
6/27/2022 22:20	11.66	-0.24
6/27/2022 22:21	11.67	-0.21
6/27/2022 22:22	11.69	-0.20
6/27/2022 22:23	11.68	-0.20
6/27/2022 22:24	11.65	-0.24
6/27/2022 22:25	11.65	-0.22
6/27/2022 22:26	11.67	-0.18
6/27/2022 22:27	11.67	-0.22
6/27/2022 22:28	11.66	-0.23
6/27/2022 22:29	11.67	-0.22
6/27/2022 22:30	11.64	-0.17
6/27/2022 22:31	11.68	-0.20
6/27/2022 22:32	11.67	-0.16
6/27/2022 22:33	11.65	-0.25
6/27/2022 22:28	-0.13	
6/27/2022 22:29	-0.12	
6/27/2022 22:30	-0.07	
6/27/2022 22:31	-0.14	
6/27/2022 22:32	-0.12	
6/27/2022 22:33	-0.14	
6/27/2022 22:34	-0.16	
6/27/2022 22:35	-0.14	
6/27/2022 22:36	-0.13	
6/27/2022 22:37	-0.11	
6/27/2022 22:38	-0.12	
6/27/2022 22:39	-0.12	
6/27/2022 22:40	-0.16	
6/27/2022 22:41	-0.09	
6/27/2022 22:42	-0.14	
6/27/2022 22:43	-0.10	
6/27/2022 22:44	-0.13	
6/27/2022 22:45	-0.15	
6/27/2022 22:46	-0.15	
6/27/2022 22:47	-0.14	
6/27/2022 22:48	-0.13	
6/27/2022 22:49	-0.12	
6/27/2022 22:50	-0.16	
6/27/2022 22:51	-0.15	
6/27/2022 22:52	-0.11	
6/27/2022 22:53	-0.16	
6/27/2022 22:54	-0.11	
6/27/2022 22:55	-0.12	
6/27/2022 22:56	-0.09	
6/27/2022 22:57	-0.16	
6/27/2022 22:58	-0.16	
6/27/2022 22:59	-0.17	
6/27/2022 23:00	-0.14	
6/27/2022 23:01	-0.18	
6/27/2022 23:02	-0.10	
6/27/2022 23:03	-0.16	
6/27/2022 23:04	-0.10	
6/27/2022 23:05	-0.13	
6/27/2022 23:06	-0.15	
6/27/2022 23:07	-0.14	
6/27/2022 23:08	-0.17	
6/27/2022 23:09	-0.12	
6/27/2022 23:10	-0.13	
6/27/2022 23:11	-0.13	
6/27/2022 23:12	-0.15	
6/27/2022 23:13	-0.15	
6/27/2022 23:14	-0.08	
6/27/2022 23:15	-0.12	
6/27/2022 23:16	-0.17	
6/27/2022 23:17	-0.10	
6/27/2022 23:18	-0.12	
6/27/2022 23:19	-0.11	
6/27/2022 23:20	-0.13	
6/27/2022 23:21	-0.16	
6/27/2022 23:22	-0.16	
6/27/2022 23:23	-0.10	
6/27/2022 23:24	-0.12	
6/27/2022 23:25	-0.15	
6/27/2022 23:26	-0.13	
6/27/2022 23:27	-0.13	
6/27/2022 23:28	-0.13	
6/27/2022 23:29	-0.13	
6/27/2022 23:30	-0.16	
6/27/2022 23:31	-0.09	
6/27/2022 23:32	-0.09	
6/27/2022 23:33	-0.13	
6/27/2022 23:34	-0.13	
6/27/2022 23:35	-0.13	
6/27/2022 23:36	-0.17	
6/27/2022 23:37	-0.07	
6/27/2022 23:38	-0.09	
6/27/2022 23:39	-0.09	
6/27/2022 23:40	-0.14	
6/27/2022 23:41	-0.13	
6/27/2022 23:42	-0.09	
6/27/2022 23:43	-0.16	
6/27/2022 23:44	-0.14	
6/27/2022 23:45	-0.13	
6/27/2022 23:46	-0.13	
6/27/2022 23:47	-0.12	
6/27/2022 23:48	-0.19	
6/27/2022 23:49	-0.12	
6/27/2022 23:50	-0.13	
6/27/2022 23:51	-0.14	
6/27/2022 23:52	-0.20	
6/27/2022 23:53	-0.19	
6/27/2022 23:54	-0.20	
6/27/2022 23:55	-0.15	

6/27/2022 22:47	11.98	0.06
6/27/2022 22:48	11.99	0.06
6/27/2022 22:49	11.99	0.01
6/27/2022 22:50	12.00	0.03
6/27/2022 22:51	11.98	0.06
6/27/2022 22:52	12.00	-0.01
6/27/2022 22:53	12.01	-0.09
6/27/2022 22:54	11.98	-0.04
6/27/2022 22:55	11.98	-0.05
6/27/2022 22:56	11.96	0.03
6/27/2022 22:57	12.01	0.08
6/27/2022 22:58	11.98	0.10
6/27/2022 22:59	11.99	0.08
6/27/2022 23:00	11.97	0.05
6/27/2022 23:01	11.99	0.03
6/27/2022 23:02	11.98	-0.01
6/27/2022 23:03	11.97	0.04
6/27/2022 23:04	11.98	-0.03
6/27/2022 23:05	11.96	0.10
6/27/2022 23:06	11.99	0.06
6/27/2022 23:07	11.98	0.03
6/27/2022 23:08	11.99	0.03
6/27/2022 23:09	11.99	0.06
6/27/2022 23:10	12.00	0.11
6/27/2022 23:11	11.98	0.01
6/27/2022 23:12	11.99	0.05
6/27/2022 23:13	11.95	0.13
6/27/2022 23:14	11.95	0.06
6/27/2022 23:15	11.98	0.06
6/27/2022 23:16	12.00	0.07
6/27/2022 23:17	12.01	0.04
6/27/2022 23:18	11.97	0.04
6/27/2022 23:19	11.96	0.09
6/27/2022 23:20	12.01	0.13
6/27/2022 23:21	12.00	0.04
6/27/2022 23:22	12.01	0.12
6/27/2022 23:23	11.99	0.08
6/27/2022 23:24	11.99	0.07
6/27/2022 23:25	11.99	0.06
6/27/2022 23:26	11.98	-0.04
6/27/2022 23:27	11.98	0.06
6/27/2022 23:28	11.98	0.03
6/27/2022 23:29	11.96	0.02
6/27/2022 23:30	11.99	0.10
6/27/2022 23:31	12.00	0.13
6/27/2022 23:32	11.98	0.06
6/27/2022 23:33	11.98	0.06
6/27/2022 23:34	11.98	0.04
6/27/2022 23:35	11.98	0.17
6/27/2022 23:36	12.00	0.16
6/27/2022 23:37	11.97	0.08
6/27/2022 23:38	11.94	0.10
6/27/2022 23:39	11.99	0.07
6/27/2022 23:40	11.99	0.08
6/27/2022 23:41	11.97	0.06
6/27/2022 23:42	12.00	0.12
6/27/2022 23:43	11.99	-0.01
6/27/2022 23:44	11.96	0.11
6/27/2022 23:45	11.97	0.05
6/27/2022 23:46	12.01	0.10
6/27/2022 23:47	12.00	0.07
6/27/2022 23:48	11.99	0.10
6/27/2022 23:49	12.01	0.02
6/27/2022 23:50	11.98	0.02
6/27/2022 23:51	11.99	0.03
6/27/2022 23:52	11.99	0.11
6/27/2022 23:53	11.99	0.07
6/27/2022 23:54	11.97	0.07
6/27/2022 23:55	11.97	0.07
6/27/2022 23:56	11.99	0.09
6/27/2022 23:57	11.97	0.11
6/27/2022 23:58	11.96	0.02
6/27/2022 23:59	11.98	0.01
6/28/2022 0:00	11.98	0.02
6/28/2022 0:01	11.96	0.11
6/28/2022 0:02	11.97	0.05
6/28/2022 0:03	11.98	0.12
6/28/2022 0:04	11.97	0.08
6/28/2022 0:05	11.95	0.09
6/28/2022 0:06	11.96	0.03
6/28/2022 0:07	11.99	0.10
6/28/2022 0:08	11.97	0.07
6/28/2022 0:09	11.97	-0.01
6/28/2022 0:10	11.98	0.11
6/28/2022 0:11	11.97	0.20
6/28/2022 0:12	11.97	0.10
6/28/2022 0:13	11.98	0.08
6/28/2022 0:14	11.99	0.03
6/27/2022 22:34	11.67	-0.21
6/27/2022 22:35	11.65	-0.24
6/27/2022 22:36	11.67	-0.18
6/27/2022 22:37	11.66	-0.22
6/27/2022 22:38	11.65	-0.20
6/27/2022 22:39	11.69	-0.24
6/27/2022 22:40	11.66	-0.15
6/27/2022 22:41	11.67	-0.25
6/27/2022 22:42	11.65	-0.19
6/27/2022 22:43	11.67	-0.19
6/27/2022 22:44	11.68	-0.18
6/27/2022 22:45	11.66	-0.18
6/27/2022 22:46	11.66	-0.19
6/27/2022 22:47	11.66	-0.22
6/27/2022 22:48	11.67	-0.20
6/27/2022 22:49	11.68	-0.18
6/27/2022 22:50	11.67	-0.23
6/27/2022 22:51	11.68	-0.23
6/27/2022 22:52	11.68	-0.21
6/27/2022 22:53	11.68	-0.14
6/27/2022 22:54	11.66	-0.20
6/27/2022 22:55	11.66	-0.25
6/27/2022 22:56	11.69	-0.19
6/27/2022 22:57	11.67	-0.24
6/27/2022 22:58	11.68	-0.23
6/27/2022 22:59	11.68	-0.19
6/27/2022 23:00	11.66	-0.20
6/27/2022 23:01	11.64	-0.20
6/27/2022 23:02	11.65	-0.21
6/27/2022 23:03	11.67	-0.19
6/27/2022 23:04	11.65	-0.21
6/27/2022 23:05	11.68	-0.19
6/27/2022 23:06	11.67	-0.20
6/27/2022 23:07	11.66	-0.23
6/27/2022 23:08	11.67	-0.18
6/27/2022 23:09	11.68	-0.16
6/27/2022 23:10	11.67	-0.21
6/27/2022 23:11	11.65	-0.22
6/27/2022 23:12	11.67	-0.20
6/27/2022 23:13	11.67	-0.22
6/27/2022 23:14	11.66	-0.19
6/27/2022 23:15	11.68	-0.18
6/27/2022 23:16	11.66	-0.22
6/27/2022 23:17	11.70	-0.16
6/27/2022 23:18	11.66	-0.23
6/27/2022 23:19	11.67	-0.17
6/27/2022 23:20	11.65	-0.18
6/27/2022 23:21	11.68	-0.21
6/27/2022 23:22	11.65	-0.19
6/27/2022 23:23	11.67	-0.18
6/27/2022 23:24	11.66	-0.19
6/27/2022 23:25	11.71	-0.20
6/27/2022 23:26	11.66	-0.21
6/27/2022 23:27	11.66	-0.16
6/27/2022 23:28	11.67	-0.24
6/27/2022 23:29	11.67	-0.21
6/27/2022 23:30	11.66	-0.18
6/27/2022 23:31	11.66	-0.20
6/27/2022 23:32	11.70	-0.22
6/27/2022 23:33	11.67	-0.19
6/27/2022 23:34	11.67	-0.20
6/27/2022 23:35	11.66	-0.16
6/27/2022 23:36	11.67	-0.21
6/27/2022 23:37	11.66	-0.16
6/27/2022 23:38	11.68	-0.20
6/27/2022 23:39	11.68	-0.21
6/27/2022 23:40	11.66	-0.23
6/27/2022 23:41	11.67	-0.19
6/27/2022 23:42	11.67	-0.17
6/27/2022 23:43	11.69	-0.18
6/27/2022 23:44	11.66	-0.18
6/27/2022 23:45	11.68	-0.22
6/27/2022 23:46	11.69	-0.21
6/27/2022 23:47	11.66	-0.24
6/27/2022 23:48	11.67	-0.20
6/27/2022 23:49	11.67	-0.17
6/27/2022 23:50	11.68	-0.19
6/27/2022 23:51	11.66	-0.21
6/27/2022 23:52	11.65	-0.20
6/27/2022 23:53	11.66	-0.21
6/27/2022 23:54	11.66	-0.18
6/27/2022 23:55	11.70	-0.19
6/27/2022 23:56	11.67	-0.18
6/27/2022 23:57	11.64	-0.19
6/27/2022 23:58	11.68	-0.21
6/27/2022 23:59	11.68	-0.18
6/28/2022 0:00	11.67	-0.20
6/28/2022 0:01	11.68	-0.18
6/27/2022 23:56	-0.15	
6/27/2022 23:57	-0.20	
6/27/2022 23:58	-0.16	
6/27/2022 23:59	-0.14	
6/28/2022 0:00	-0.11	
6/28/2022 0:01	-0.09	
6/28/2022 0:02	-0.14	
6/28/2022 0:03	-0.16	
6/28/2022 0:04	-0.18	
6/28/2022 0:05	-0.11	
6/28/2022 0:06	-0.11	
6/28/2022 0:07	-0.08	
6/28/2022 0:08	-0.10	
6/28/2022 0:09	-0.11	
6/28/2022 0:10	-0.13	
6/28/2022 0:11	-0.14	
6/28/2022 0:12	-0.12	
6/28/2022 0:13	-0.12	
6/28/2022 0:14	-0.12	
6/28/2022 0:15	-0.09	
6/28/2022 0:16	-0.11	
6/28/2022 0:17	-0.14	
6/28/2022 0:18	-0.14	
6/28/2022 0:19	-0.14	
6/28/2022 0:20	-0.12	
6/28/2022 0:21	-0.16	
6/28/2022 0:22	-0.13	
6/28/2022 0:23	-0.14	
6/28/2022 0:24	-0.11	
6/28/2022 0:25	-0.13	
6/28/2022 0:26	-0.12	
6/28/2022 0:27	-0.12	
6/28/2022 0:28	-0.11	
6/28/2022 0:29	-0.11	
6/28/2022 0:30	-0.09	
6/28/2022 0:31	-0.14	
6/28/2022 0:32	-0.13	
6/28/2022 0:33	-0.13	
6/28/2022 0:34	-0.17	
6/28/2022 0:35	-0.13	
6/28/2022 0:36	-0.12	
6/28/2022 0:37	-0.15	
6/28/2022 0:38	-0.12	
6/28/2022 0:39	-0.16	
6/28/2022 0:40	-0.10	
6/28/2022 0:41	-0.13	
6/28/2022 0:42	-0.16	
6/28/2022 0:43	-0.12	
6/28/2022 0:44	-0.12	
6/28/2022 0:45	-0.11	
6/28/2022 0:46	-0.12	
6/28/2022 0:47	-0.11	
6/28/2022 0:48	-0.10	
6/28/2022 0:49	-0.11	
6/28/2022 0:50	-0.16	
6/28/2022 0:51	-0.13	
6/28/2022 0:52	-0.16	
6/28/2022 0:53	-0.08	
6/28/2022 0:54	-0.13	
6/28/2022 0:55	-0.10	
6/28/2022 0:56	-0.17	
6/28/2022 0:57	-0.15	
6/28/2022 0:58	-0.15	
6/28/2022 0:59	-0.14	
6/28/2022 1:00	-0.10	
6/28/2022 1:01	-0.11	
6/28/2022 1:02	-0.12	
6/28/2022 1:03	-0.14	
6/28/2022 1:04	-0.11	
6/28/2022 1:05	-0.13	
6/28/2022 1:06	-0.13	
6/28/2022 1:07	-0.11	
6/28/2022 1:08	-0.16	
6/28/2022 1:09	-0.14	
6/28/2022 1:10	-0.15	
6/28/2022 1:11	-0.11	
6/28/2022 1:12	-0.11	
6/28/2022 1:13	-0.10	
6/28/2022 1:14	-0.17	
6/28/2022 1:15	-0.17	
6/28/2022 1:16	-0.11	
6/28/2022 1:17	-0.16	
6/28/2022 1:18	-0.15	
6/28/2022 1:19	-0.13	
6/28/2022 1:20	-0.10	
6/28/2022 1:21	-0.11	
6/28/2022 1:22	-0.07	
6/28/2022 1:23	-0.13	

6/28/2022 0:15	12.01	0.12
6/28/2022 0:16	11.97	0.10
6/28/2022 0:17	11.97	0.07
6/28/2022 0:18	12.01	0.08
6/28/2022 0:19	11.94	0.14
6/28/2022 0:20	11.99	0.02
6/28/2022 0:21	11.98	0.06
6/28/2022 0:22	11.96	0.10
6/28/2022 0:23	11.96	0.13
6/28/2022 0:24	11.98	0.07
6/28/2022 0:25	11.98	0.09
6/28/2022 0:26	12.00	0.10
6/28/2022 0:27	11.98	0.03
6/28/2022 0:28	11.96	0.07
6/28/2022 0:29	11.96	0.09
6/28/2022 0:30	11.98	0.08
6/28/2022 0:31	11.98	0.06
6/28/2022 0:32	11.98	0.08
6/28/2022 0:33	11.97	0.09
6/28/2022 0:34	11.96	0.12
6/28/2022 0:35	11.97	0.00
6/28/2022 0:36	11.96	0.10
6/28/2022 0:37	11.99	0.11
6/28/2022 0:38	11.97	0.04
6/28/2022 0:39	11.99	0.12
6/28/2022 0:40	12.02	0.06
6/28/2022 0:41	11.99	0.00
6/28/2022 0:42	12.01	0.09
6/28/2022 0:43	12.00	0.06
6/28/2022 0:44	12.03	-0.01
6/28/2022 0:45	12.00	0.06
6/28/2022 0:46	11.97	0.07
6/28/2022 0:47	11.99	0.08
6/28/2022 0:48	11.98	0.08
6/28/2022 0:49	11.97	0.06
6/28/2022 0:50	11.98	0.10
6/28/2022 0:51	11.97	0.07
6/28/2022 0:52	11.96	0.11
6/28/2022 0:53	11.99	0.08
6/28/2022 0:54	11.98	0.02
6/28/2022 0:55	11.98	0.03
6/28/2022 0:56	11.99	0.13
6/28/2022 0:57	11.97	0.05
6/28/2022 0:58	11.98	0.03
6/28/2022 0:59	11.99	0.06
6/28/2022 1:00	11.99	0.03
6/28/2022 1:01	11.96	0.01
6/28/2022 1:02	11.96	0.16
6/28/2022 1:03	11.97	0.05
6/28/2022 1:04	11.95	0.13
6/28/2022 1:05	12.00	0.04
6/28/2022 1:06	11.97	0.10
6/28/2022 1:07	11.97	0.05
6/28/2022 1:08	11.97	-0.07
6/28/2022 1:09	11.97	0.08
6/28/2022 1:10	12.00	0.01
6/28/2022 1:11	12.00	0.06
6/28/2022 1:12	11.97	0.07
6/28/2022 1:13	11.97	0.06
6/28/2022 1:14	11.98	0.08
6/28/2022 1:15	11.99	0.12
6/28/2022 1:16	12.01	0.07
6/28/2022 1:17	11.99	0.07
6/28/2022 1:18	11.99	0.08
6/28/2022 1:19	12.01	0.00
6/28/2022 1:20	12.00	0.03
6/28/2022 1:21	11.97	0.07
6/28/2022 1:22	12.00	0.10
6/28/2022 1:23	12.00	0.01
6/28/2022 1:24	12.00	0.05
6/28/2022 1:25	12.01	0.04
6/28/2022 1:26	11.97	0.07
6/28/2022 1:27	11.99	0.05
6/28/2022 1:28	11.96	0.07
6/28/2022 1:29	11.97	0.05
6/28/2022 1:30	11.98	0.12
6/28/2022 1:31	11.99	0.07
6/28/2022 1:32	11.98	0.07
6/28/2022 1:33	11.98	0.02
6/28/2022 1:34	12.00	-0.02
6/28/2022 1:35	11.96	0.01
6/28/2022 1:36	11.99	0.04
6/28/2022 1:37	11.98	0.06
6/28/2022 1:38	12.02	0.07
6/28/2022 1:39	12.00	0.04
6/28/2022 1:40	12.01	-0.05
6/28/2022 1:41	12.00	0.05
6/28/2022 1:42	12.00	0.06
6/28/2022 0:02	11.67	-0.20
6/28/2022 0:03	11.65	-0.21
6/28/2022 0:04	11.65	-0.23
6/28/2022 0:05	11.66	-0.20
6/28/2022 0:06	11.67	-0.22
6/28/2022 0:07	11.67	-0.19
6/28/2022 0:08	11.68	-0.22
6/28/2022 0:09	11.68	-0.21
6/28/2022 0:10	11.67	-0.22
6/28/2022 0:11	11.64	-0.21
6/28/2022 0:12	11.66	-0.22
6/28/2022 0:13	11.67	-0.22
6/28/2022 0:14	11.66	-0.20
6/28/2022 0:15	11.68	-0.25
6/28/2022 0:16	11.68	-0.23
6/28/2022 0:17	11.68	-0.22
6/28/2022 0:18	11.64	-0.22
6/28/2022 0:19	11.66	-0.21
6/28/2022 0:20	11.68	-0.19
6/28/2022 0:21	11.68	-0.22
6/28/2022 0:22	11.68	-0.20
6/28/2022 0:23	11.68	-0.18
6/28/2022 0:24	11.65	-0.19
6/28/2022 0:25	11.66	-0.21
6/28/2022 0:26	11.67	-0.22
6/28/2022 0:27	11.67	-0.22
6/28/2022 0:28	11.67	-0.20
6/28/2022 0:29	11.67	-0.22
6/28/2022 0:30	11.67	-0.20
6/28/2022 0:31	11.69	-0.21
6/28/2022 0:32	11.66	-0.23
6/28/2022 0:33	11.69	-0.25
6/28/2022 0:34	11.68	-0.13
6/28/2022 0:35	11.67	-0.21
6/28/2022 0:36	11.65	-0.16
6/28/2022 0:37	11.66	-0.20
6/28/2022 0:38	11.67	-0.21
6/28/2022 0:39	11.67	-0.23
6/28/2022 0:40	11.66	-0.21
6/28/2022 0:41	11.66	-0.21
6/28/2022 0:42	11.67	-0.20
6/28/2022 0:43	11.68	-0.16
6/28/2022 0:44	11.66	-0.19
6/28/2022 0:45	11.68	-0.14
6/28/2022 0:46	11.68	-0.21
6/28/2022 0:47	11.66	-0.25
6/28/2022 0:48	11.69	-0.21
6/28/2022 0:49	11.65	-0.26
6/28/2022 0:50	11.64	-0.21
6/28/2022 0:51	11.66	-0.24
6/28/2022 0:52	11.65	-0.17
6/28/2022 0:53	11.69	-0.19
6/28/2022 0:54	11.68	-0.21
6/28/2022 0:55	11.66	-0.21
6/28/2022 0:56	11.67	-0.19
6/28/2022 0:57	11.69	-0.24
6/28/2022 0:58	11.64	-0.19
6/28/2022 0:59	11.67	-0.19
6/28/2022 1:00	11.66	-0.13
6/28/2022 1:01	11.66	-0.20
6/28/2022 1:02	11.66	-0.17
6/28/2022 1:03	11.67	-0.21
6/28/2022 1:04	11.66	-0.18
6/28/2022 1:05	11.68	-0.17
6/28/2022 1:06	11.66	-0.19
6/28/2022 1:07	11.67	-0.17
6/28/2022 1:08	11.66	-0.23
6/28/2022 1:09	11.66	-0.20
6/28/2022 1:10	11.67	-0.19
6/28/2022 1:11	11.66	-0.21
6/28/2022 1:12	11.66	-0.21
6/28/2022 1:13	11.64	-0.24
6/28/2022 1:14	11.65	-0.21
6/28/2022 1:15	11.67	-0.17
6/28/2022 1:16	11.67	-0.20
6/28/2022 1:17	11.65	-0.21
6/28/2022 1:18	11.69	-0.22
6/28/2022 1:19	11.68	-0.19
6/28/2022 1:20	11.67	-0.19
6/28/2022 1:21	11.67	-0.23
6/28/2022 1:22	11.70	-0.24
6/28/2022 1:23	11.66	-0.26
6/28/2022 1:24	11.67	-0.20
6/28/2022 1:25	11.69	-0.18
6/28/2022 1:26	11.66	-0.20
6/28/2022 1:27	11.68	-0.18
6/28/2022 1:28	11.66	-0.18
6/28/2022 1:29	11.69	-0.21
6/28/2022 1:24	-0.14	
6/28/2022 1:25	-0.10	
6/28/2022 1:26	-0.14	
6/28/2022 1:27	-0.17	
6/28/2022 1:28	-0.17	
6/28/2022 1:29	-0.15	
6/28/2022 1:30	-0.12	
6/28/2022 1:31	-0.12	
6/28/2022 1:32	-0.12	
6/28/2022 1:33	-0.09	
6/28/2022 1:34	-0.17	
6/28/2022 1:35	-0.12	
6/28/2022 1:36	-0.12	
6/28/2022 1:37	-0.17	
6/28/2022 1:38	-0.10	
6/28/2022 1:39	-0.10	
6/28/2022 1:40	-0.19	
6/28/2022 1:41	-0.14	
6/28/2022 1:42	-0.11	
6/28/2022 1:43	-0.16	
6/28/2022 1:44	-0.14	
6/28/2022 1:45	-0.12	
6/28/2022 1:46	-0.11	
6/28/2022 1:47	-0.13	
6/28/2022 1:48	-0.14	
6/28/2022 1:49	-0.11	
6/28/2022 1:50	-0.16	
6/28/2022 1:51	-0.14	
6/28/2022 1:52	-0.14	
6/28/2022 1:53	-0.09	
6/28/2022 1:54	-0.09	
6/28/2022 1:55	-0.09	
6/28/2022 1:56	-0.09	
6/28/2022 1:57	-0.17	
6/28/2022 1:58	-0.06	
6/28/2022 1:59	-0.10	
6/28/2022 2:00	-0.09	
6/28/2022 2:01	-0.15	
6/28/2022 2:02	-0.18	
6/28/2022 2:03	-0.10	
6/28/2022 2:04	-0.10	
6/28/2022 2:05	-0.10	
6/28/2022 2:06	-0.12	
6/28/2022 2:07	-0.13	
6/28/2022 2:08	-0.13	
6/28/2022 2:09	-0.13	
6/28/2022 2:10	-0.10	
6/28/2022 2:11	-0.13	
6/28/2022 2:12	-0.16	
6/28/2022 2:13	-0.13	
6/28/2022 2:14	-0.08	
6/28/2022 2:15	-0.11	
6/28/2022 2:16	-0.15	
6/28/2022 2:17	-0.11	
6/28/2022 2:18	-0.12	
6/28/2022 2:19	-0.12	
6/28/2022 2:20	-0.15	
6/28/2022 2:21	-0.16	
6/28/2022 2:22	-0.12	
6/28/2022 2:23	-0.16	
6/28/2022 2:24	-0.15	
6/28/2022 2:25	-0.09	
6/28/2022 2:26	-0.16	
6/28/2022 2:27	-0.08	
6/28/2022 2:28	-0.17	
6/28/2022 2:29	-0.18	
6/28/2022 2:30	-0.11	
6/28/2022 2:31	-0.11	
6/28/2022 2:32	-0.14	
6/28/2022 2:33	-0.17	
6/28/2022 2:34	-0.13	
6/28/2022 2:35	-0.16	
6/28/2022 2:36	-0.13	
6/28/2022 2:37	-0.12	
6/28/2022 2:38	-0.12	
6/28/2022 2:39	-0.15	
6/28/2022 2:40	-0.09	
6/28/2022 2:41	-0.09	
6/28/2022 2:42	-0.14	
6/28/2022 2:43	-0.10	
6/28/2022 2:44	-0.11	
6/28/2022 2:45	-0.14	
6/28/2022 2:46	-0.16	
6/28/2022 2:47	-0.11	
6/28/2022 2:48	-0.12	
6/28/2022 2:49	-0.13	
6/28/2022 2:50	-0.11	
6/28/2022 2:51	-0.15	

6/28/2022 1:43	11.96	0.02
6/28/2022 1:44	11.97	0.01
6/28/2022 1:45	11.97	0.10
6/28/2022 1:46	11.98	0.07
6/28/2022 1:47	11.99	0.07
6/28/2022 1:48	11.96	0.01
6/28/2022 1:49	12.00	-0.04
6/28/2022 1:50	11.96	0.16
6/28/2022 1:51	12.00	0.02
6/28/2022 1:52	11.96	0.05
6/28/2022 1:53	11.95	0.08
6/28/2022 1:54	11.96	0.06
6/28/2022 1:55	11.97	0.08
6/28/2022 1:56	11.96	0.14
6/28/2022 1:57	11.98	-0.05
6/28/2022 1:58	12.01	0.08
6/28/2022 1:59	12.00	0.06
6/28/2022 2:00	11.99	0.06
6/28/2022 2:01	11.99	0.06
6/28/2022 2:02	11.99	0.05
6/28/2022 2:03	12.01	0.07
6/28/2022 2:04	11.99	0.03
6/28/2022 2:05	11.99	0.06
6/28/2022 2:06	12.03	0.00
6/28/2022 2:07	12.02	0.14
6/28/2022 2:08	11.99	0.02
6/28/2022 2:09	12.00	0.12
6/28/2022 2:10	12.02	0.02
6/28/2022 2:11	12.01	-0.03
6/28/2022 2:12	12.05	0.12
6/28/2022 2:13	12.00	0.07
6/28/2022 2:14	12.02	0.01
6/28/2022 2:15	12.01	0.11
6/28/2022 2:16	12.03	0.06
6/28/2022 2:17	12.01	0.07
6/28/2022 2:18	11.98	0.12
6/28/2022 2:19	11.99	0.10
6/28/2022 2:20	11.98	0.07
6/28/2022 2:21	11.98	0.02
6/28/2022 2:22	12.00	-0.01
6/28/2022 2:23	12.00	0.03
6/28/2022 2:24	11.99	0.11
6/28/2022 2:25	11.98	0.07
6/28/2022 2:26	11.98	0.08
6/28/2022 2:27	12.00	0.07
6/28/2022 2:28	12.01	0.12
6/28/2022 2:29	11.97	0.06
6/28/2022 2:30	12.00	0.08
6/28/2022 2:31	11.97	0.04
6/28/2022 2:32	11.99	0.11
6/28/2022 2:33	11.99	0.03
6/28/2022 2:34	12.01	0.07
6/28/2022 2:35	11.99	0.04
6/28/2022 2:36	11.97	-0.02
6/28/2022 2:37	11.99	0.07
6/28/2022 2:38	11.98	0.03
6/28/2022 2:39	12.02	0.05
6/28/2022 2:40	11.97	0.12
6/28/2022 2:41	12.01	0.01
6/28/2022 2:42	11.97	0.06
6/28/2022 2:43	11.98	0.09
6/28/2022 2:44	11.96	0.07
6/28/2022 2:45	11.98	-0.03
6/28/2022 2:46	11.95	0.07
6/28/2022 2:47	11.98	0.11
6/28/2022 2:48	11.96	0.04
6/28/2022 2:49	11.98	0.10
6/28/2022 2:50	11.98	0.09
6/28/2022 2:51	12.01	0.08
6/28/2022 2:52	11.99	0.13
6/28/2022 2:53	11.97	0.08
6/28/2022 2:54	11.98	-0.03
6/28/2022 2:55	11.98	0.02
6/28/2022 2:56	12.00	-0.07
6/28/2022 2:57	11.98	0.01
6/28/2022 2:58	11.98	0.07
6/28/2022 2:59	11.99	0.07
6/28/2022 3:00	11.97	0.14
6/28/2022 3:01	11.99	0.11
6/28/2022 3:02	11.97	0.17
6/28/2022 3:03	11.99	0.04
6/28/2022 3:04	11.98	0.15
6/28/2022 3:05	12.03	0.04
6/28/2022 3:06	11.97	0.08
6/28/2022 3:07	11.98	0.12
6/28/2022 3:08	11.98	0.07
6/28/2022 3:09	11.99	0.05
6/28/2022 3:10	12.00	0.00
6/28/2022 1:30	11.67	-0.17
6/28/2022 1:31	11.68	-0.19
6/28/2022 1:32	11.68	-0.20
6/28/2022 1:33	11.65	-0.19
6/28/2022 1:34	11.68	-0.20
6/28/2022 1:35	11.67	-0.20
6/28/2022 1:36	11.67	-0.19
6/28/2022 1:37	11.68	-0.19
6/28/2022 1:38	11.66	-0.21
6/28/2022 1:39	11.69	-0.16
6/28/2022 1:40	11.67	-0.19
6/28/2022 1:41	11.68	-0.20
6/28/2022 1:42	11.66	-0.17
6/28/2022 1:43	11.68	-0.18
6/28/2022 1:44	11.65	-0.19
6/28/2022 1:45	11.67	-0.20
6/28/2022 1:46	11.67	-0.19
6/28/2022 1:47	11.67	-0.20
6/28/2022 1:48	11.67	-0.16
6/28/2022 1:49	11.68	-0.18
6/28/2022 1:50	11.67	-0.17
6/28/2022 1:51	11.66	-0.20
6/28/2022 1:52	11.66	-0.17
6/28/2022 1:53	11.68	-0.22
6/28/2022 1:54	11.68	-0.20
6/28/2022 1:55	11.68	-0.19
6/28/2022 1:56	11.68	-0.24
6/28/2022 1:57	11.68	-0.22
6/28/2022 1:58	11.66	-0.18
6/28/2022 1:59	11.68	-0.24
6/28/2022 2:00	11.69	-0.27
6/28/2022 2:01	11.66	-0.22
6/28/2022 2:02	11.69	-0.19
6/28/2022 2:03	11.67	-0.18
6/28/2022 2:04	11.67	-0.21
6/28/2022 2:05	11.68	-0.19
6/28/2022 2:06	11.68	-0.21
6/28/2022 2:07	11.68	-0.20
6/28/2022 2:08	11.67	-0.24
6/28/2022 2:09	11.66	-0.22
6/28/2022 2:10	11.66	-0.17
6/28/2022 2:11	11.67	-0.24
6/28/2022 2:12	11.68	-0.18
6/28/2022 2:13	11.68	-0.17
6/28/2022 2:14	11.67	-0.15
6/28/2022 2:15	11.68	-0.19
6/28/2022 2:16	11.69	-0.21
6/28/2022 2:17	11.65	-0.22
6/28/2022 2:18	11.67	-0.16
6/28/2022 2:19	11.69	-0.20
6/28/2022 2:20	11.66	-0.25
6/28/2022 2:21	11.66	-0.20
6/28/2022 2:22	11.68	-0.19
6/28/2022 2:23	11.68	-0.21
6/28/2022 2:24	11.69	-0.18
6/28/2022 2:25	11.69	-0.22
6/28/2022 2:26	11.65	-0.20
6/28/2022 2:27	11.65	-0.21
6/28/2022 2:28	11.67	-0.19
6/28/2022 2:29	11.68	-0.22
6/28/2022 2:30	11.66	-0.22
6/28/2022 2:31	11.69	-0.17
6/28/2022 2:32	11.66	-0.17
6/28/2022 2:33	11.66	-0.18
6/28/2022 2:34	11.69	-0.22
6/28/2022 2:35	11.67	-0.19
6/28/2022 2:36	11.66	-0.19
6/28/2022 2:37	11.67	-0.22
6/28/2022 2:38	11.67	-0.20
6/28/2022 2:39	11.68	-0.17
6/28/2022 2:40	11.67	-0.21
6/28/2022 2:41	11.67	-0.17
6/28/2022 2:42	11.72	-0.21
6/28/2022 2:43	11.66	-0.21
6/28/2022 2:44	11.67	-0.19
6/28/2022 2:45	11.68	-0.21
6/28/2022 2:46	11.70	-0.22
6/28/2022 2:47	11.67	-0.21
6/28/2022 2:48	11.68	-0.18
6/28/2022 2:49	11.68	-0.21
6/28/2022 2:50	11.68	-0.21
6/28/2022 2:51	11.65	-0.21
6/28/2022 2:52	11.69	-0.18
6/28/2022 2:53	11.68	-0.23
6/28/2022 2:54	11.67	-0.19
6/28/2022 2:55	11.67	-0.21
6/28/2022 2:56	11.67	-0.22
6/28/2022 2:57	11.67	-0.20
6/28/2022 2:52	-0.17	
6/28/2022 2:53	-0.12	
6/28/2022 2:54	-0.15	
6/28/2022 2:55	-0.18	
6/28/2022 2:56	-0.09	
6/28/2022 2:57	-0.10	
6/28/2022 2:58	-0.14	
6/28/2022 2:59	-0.11	
6/28/2022 3:00	-0.14	
6/28/2022 3:01	-0.12	
6/28/2022 3:02	-0.18	
6/28/2022 3:03	-0.10	
6/28/2022 3:04	-0.13	
6/28/2022 3:05	-0.16	
6/28/2022 3:06	-0.12	
6/28/2022 3:07	-0.10	
6/28/2022 3:08	-0.13	
6/28/2022 3:09	-0.12	
6/28/2022 3:10	-0.14	
6/28/2022 3:11	-0.10	
6/28/2022 3:12	-0.15	
6/28/2022 3:13	-0.14	
6/28/2022 3:14	-0.14	
6/28/2022 3:15	-0.12	
6/28/2022 3:16	-0.13	
6/28/2022 3:17	-0.18	
6/28/2022 3:18	-0.14	
6/28/2022 3:19	-0.20	
6/28/2022 3:20	-0.15	
6/28/2022 3:21	-0.17	
6/28/2022 3:22	-0.10	
6/28/2022 3:23	-0.16	
6/28/2022 3:24	-0.11	
6/28/2022 3:25	-0.21	
6/28/2022 3:26	-0.13	
6/28/2022 3:27	-0.17	
6/28/2022 3:28	-0.12	
6/28/2022 3:29	-0.11	
6/28/2022 3:30	-0.13	
6/28/2022 3:31	-0.12	
6/28/2022 3:32	-0.13	
6/28/2022 3:33	-0.16	
6/28/2022 3:34	-0.11	
6/28/2022 3:35	-0.13	
6/28/2022 3:36	-0.12	
6/28/2022 3:37	-0.12	
6/28/2022 3:38	-0.09	
6/28/2022 3:39	-0.14	
6/28/2022 3:40	-0.15	
6/28/2022 3:41	-0.17	
6/28/2022 3:42	-0.11	
6/28/2022 3:43	-0.11	
6/28/2022 3:44	-0.17	
6/28/2022 3:45	-0.15	
6/28/2022 3:46	-0.15	
6/28/2022 3:47	-0.13	
6/28/2022 3:48	-0.13	
6/28/2022 3:49	-0.10	
6/28/2022 3:50	-0.07	
6/28/2022 3:51	-0.11	
6/28/2022 3:52	-0.13	
6/28/2022 3:53	-0.14	
6/28/2022 3:54	-0.17	
6/28/2022 3:55	-0.08	
6/28/2022 3:56	-0.14	
6/28/2022 3:57	-0.13	
6/28/2022 3:58	-0.16	
6/28/2022 3:59	-0.15	
6/28/2022 4:00	-0.13	
6/28/2022 4:01	-0.12	
6/28/2022 4:02	-0.11	
6/28/2022 4:03	-0.10	
6/28/2022 4:04	-0.07	
6/28/2022 4:05	-0.13	
6/28/2022 4:06	-0.15	
6/28/2022 4:07	-0.09	
6/28/2022 4:08	-0.11	
6/28/2022 4:09	-0.09	
6/28/2022 4:10	-0.15	
6/28/2022 4:11	-0.11	
6/28/2022 4:12	-0.14	
6/28/2022 4:13	-0.12	
6/28/2022 4:14	-0.12	
6/28/2022 4:15	-0.13	
6/28/2022 4:16	-0.15	
6/28/2022 4:17	-0.10	
6/28/2022 4:18	-0.13	
6/28/2022 4:19	-0.11	

6/28/2022 3:11	11.99	0.07
6/28/2022 3:12	11.99	0.08
6/28/2022 3:13	11.99	0.08
6/28/2022 3:14	11.99	0.06
6/28/2022 3:15	11.99	0.02
6/28/2022 3:16	11.99	0.04
6/28/2022 3:17	11.98	0.06
6/28/2022 3:18	11.96	0.02
6/28/2022 3:19	11.98	0.07
6/28/2022 3:20	11.97	0.06
6/28/2022 3:21	11.99	0.12
6/28/2022 3:22	11.99	0.10
6/28/2022 3:23	11.98	0.04
6/28/2022 3:24	11.98	0.06
6/28/2022 3:25	11.98	0.10
6/28/2022 3:26	11.96	0.09
6/28/2022 3:27	11.99	0.04
6/28/2022 3:28	12.01	0.11
6/28/2022 3:29	12.00	-0.03
6/28/2022 3:30	12.01	-0.04
6/28/2022 3:31	12.01	0.09
6/28/2022 3:32	12.01	0.06
6/28/2022 3:33	11.99	0.06
6/28/2022 3:34	11.97	-0.03
6/28/2022 3:35	11.97	0.01
6/28/2022 3:36	12.00	0.07
6/28/2022 3:37	11.96	0.02
6/28/2022 3:38	11.97	0.09
6/28/2022 3:39	11.96	0.07
6/28/2022 3:40	11.98	0.11
6/28/2022 3:41	11.97	0.11
6/28/2022 3:42	11.95	0.07
6/28/2022 3:43	11.99	0.11
6/28/2022 3:44	11.99	0.06
6/28/2022 3:45	11.98	0.00
6/28/2022 3:46	12.00	0.03
6/28/2022 3:47	12.00	0.06
6/28/2022 3:48	11.98	0.04
6/28/2022 3:49	12.01	0.06
6/28/2022 3:50	11.97	0.07
6/28/2022 3:51	12.00	0.06
6/28/2022 3:52	11.99	0.09
6/28/2022 3:53	11.98	0.07
6/28/2022 3:54	11.98	0.10
6/28/2022 3:55	11.97	0.10
6/28/2022 3:56	12.00	-0.02
6/28/2022 3:57	11.99	0.07
6/28/2022 3:58	12.00	0.05
6/28/2022 3:59	12.00	0.03
6/28/2022 4:00	11.98	0.11
6/28/2022 4:01	11.97	0.03
6/28/2022 4:02	12.00	0.05
6/28/2022 4:03	12.01	0.06
6/28/2022 4:04	11.99	-0.04
6/28/2022 4:05	11.97	0.07
6/28/2022 4:06	11.97	0.10
6/28/2022 4:07	11.99	0.06
6/28/2022 4:08	11.96	0.12
6/28/2022 4:09	11.99	0.02
6/28/2022 4:10	12.00	0.14
6/28/2022 4:11	11.98	0.16
6/28/2022 4:12	11.99	0.04
6/28/2022 4:13	12.00	0.08
6/28/2022 4:14	11.95	0.09
6/28/2022 4:15	12.00	0.08
6/28/2022 4:16	11.97	-0.01
6/28/2022 4:17	11.95	0.11
6/28/2022 4:18	11.96	0.06
6/28/2022 4:19	11.99	0.06
6/28/2022 4:20	11.96	0.11
6/28/2022 4:21	11.99	0.10
6/28/2022 4:22	12.00	0.04
6/28/2022 4:23	11.99	0.08
6/28/2022 4:24	11.97	0.03
6/28/2022 4:25	11.97	0.05
6/28/2022 4:26	11.97	0.12
6/28/2022 4:27	11.96	-0.01
6/28/2022 4:28	11.99	0.07
6/28/2022 4:29	11.95	0.07
6/28/2022 4:30	11.98	0.01
6/28/2022 4:31	11.96	0.07
6/28/2022 4:32	11.94	0.09
6/28/2022 4:33	11.95	0.02
6/28/2022 4:34	11.96	0.07
6/28/2022 4:35	11.96	0.07
6/28/2022 4:36	11.97	0.11
6/28/2022 4:37	11.97	0.09
6/28/2022 4:38	11.94	0.16
6/28/2022 2:58	11.65	-0.17
6/28/2022 2:59	11.70	-0.22
6/28/2022 3:00	11.66	-0.19
6/28/2022 3:01	11.67	-0.19
6/28/2022 3:02	11.65	-0.23
6/28/2022 3:03	11.68	-0.20
6/28/2022 3:04	11.66	-0.22
6/28/2022 3:05	11.67	-0.18
6/28/2022 3:06	11.66	-0.18
6/28/2022 3:07	11.68	-0.19
6/28/2022 3:08	11.67	-0.23
6/28/2022 3:09	11.66	-0.21
6/28/2022 3:10	11.65	-0.20
6/28/2022 3:11	11.66	-0.25
6/28/2022 3:12	11.67	-0.18
6/28/2022 3:13	11.63	-0.20
6/28/2022 3:14	11.67	-0.19
6/28/2022 3:15	11.69	-0.23
6/28/2022 3:16	11.69	-0.19
6/28/2022 3:17	11.68	-0.21
6/28/2022 3:18	11.69	-0.19
6/28/2022 3:19	11.67	-0.23
6/28/2022 3:20	11.68	-0.20
6/28/2022 3:21	11.65	-0.20
6/28/2022 3:22	11.66	-0.17
6/28/2022 3:23	11.68	-0.19
6/28/2022 3:24	11.67	-0.26
6/28/2022 3:25	11.66	-0.20
6/28/2022 3:26	11.67	-0.19
6/28/2022 3:27	11.65	-0.18
6/28/2022 3:28	11.66	-0.16
6/28/2022 3:29	11.67	-0.19
6/28/2022 3:30	11.66	-0.22
6/28/2022 3:31	11.66	-0.17
6/28/2022 3:32	11.67	-0.18
6/28/2022 3:33	11.68	-0.18
6/28/2022 3:34	11.67	-0.24
6/28/2022 3:35	11.70	-0.22
6/28/2022 3:36	11.69	-0.22
6/28/2022 3:37	11.68	-0.22
6/28/2022 3:38	11.66	-0.22
6/28/2022 3:39	11.67	-0.20
6/28/2022 3:40	11.67	-0.21
6/28/2022 3:41	11.67	-0.16
6/28/2022 3:42	11.65	-0.17
6/28/2022 3:43	11.67	-0.21
6/28/2022 3:44	11.67	-0.17
6/28/2022 3:45	11.68	-0.20
6/28/2022 3:46	11.66	-0.20
6/28/2022 3:47	11.67	-0.18
6/28/2022 3:48	11.67	-0.20
6/28/2022 3:49	11.66	-0.23
6/28/2022 3:50	11.69	-0.23
6/28/2022 3:51	11.67	-0.23
6/28/2022 3:52	11.67	-0.17
6/28/2022 3:53	11.68	-0.22
6/28/2022 3:54	11.66	-0.20
6/28/2022 3:55	11.66	-0.21
6/28/2022 3:56	11.67	-0.19
6/28/2022 3:57	11.64	-0.21
6/28/2022 3:58	11.66	-0.20
6/28/2022 3:59	11.68	-0.21
6/28/2022 4:00	11.66	-0.20
6/28/2022 4:01	11.66	-0.19
6/28/2022 4:02	11.67	-0.19
6/28/2022 4:03	11.67	-0.24
6/28/2022 4:04	11.67	-0.20
6/28/2022 4:05	11.67	-0.18
6/28/2022 4:06	11.67	-0.22
6/28/2022 4:07	11.67	-0.22
6/28/2022 4:08	11.66	-0.16
6/28/2022 4:09	11.66	-0.19
6/28/2022 4:10	11.70	-0.16
6/28/2022 4:11	11.68	-0.21
6/28/2022 4:12	11.67	-0.21
6/28/2022 4:13	11.68	-0.22
6/28/2022 4:14	11.67	-0.21
6/28/2022 4:15	11.66	-0.18
6/28/2022 4:16	11.68	-0.23
6/28/2022 4:17	11.68	-0.17
6/28/2022 4:18	11.66	-0.20
6/28/2022 4:19	11.69	-0.18
6/28/2022 4:20	11.67	-0.24
6/28/2022 4:21	11.68	-0.23
6/28/2022 4:22	11.69	-0.19
6/28/2022 4:23	11.67	-0.16
6/28/2022 4:24	11.68	-0.22
6/28/2022 4:25	11.69	-0.19
6/28/2022 4:20	-0.16	
6/28/2022 4:21	-0.11	
6/28/2022 4:22	-0.13	
6/28/2022 4:23	-0.12	
6/28/2022 4:24	-0.15	
6/28/2022 4:25	-0.13	
6/28/2022 4:26	-0.13	
6/28/2022 4:27	-0.11	
6/28/2022 4:28	-0.10	
6/28/2022 4:29	-0.17	
6/28/2022 4:30	-0.12	
6/28/2022 4:31	-0.16	
6/28/2022 4:32	-0.07	
6/28/2022 4:33	-0.12	
6/28/2022 4:34	-0.15	
6/28/2022 4:35	-0.16	
6/28/2022 4:36	-0.14	
6/28/2022 4:37	-0.16	
6/28/2022 4:38	-0.16	
6/28/2022 4:39	-0.11	
6/28/2022 4:40	-0.04	
6/28/2022 4:41	-0.10	
6/28/2022 4:42	-0.13	
6/28/2022 4:43	-0.10	
6/28/2022 4:44	-0.09	
6/28/2022 4:45	-0.11	
6/28/2022 4:46	-0.11	
6/28/2022 4:47	-0.13	
6/28/2022 4:48	-0.14	
6/28/2022 4:49	-0.14	
6/28/2022 4:50	-0.14	
6/28/2022 4:51	-0.15	
6/28/2022 4:52	-0.12	
6/28/2022 4:53	-0.11	
6/28/2022 4:54	-0.11	
6/28/2022 4:55	-0.15	
6/28/2022 4:56	-0.15	
6/28/2022 4:57	-0.17	
6/28/2022 4:58	-0.15	
6/28/2022 4:59	-0.14	
6/28/2022 5:00	-0.13	
6/28/2022 5:01	-0.12	
6/28/2022 5:02	-0.10	
6/28/2022 5:03	-0.11	
6/28/2022 5:04	-0.16	
6/28/2022 5:05	-0.15	
6/28/2022 5:06	-0.13	
6/28/2022 5:07	-0.21	
6/28/2022 5:08	-0.14	
6/28/2022 5:09	-0.12	
6/28/2022 5:10	-0.12	
6/28/2022 5:11	-0.07	
6/28/2022 5:12	-0.07	
6/28/2022 5:13	-0.11	
6/28/2022 5:14	-0.13	
6/28/2022 5:15	-0.18	
6/28/2022 5:16	-0.16	
6/28/2022 5:17	-0.07	
6/28/2022 5:18	-0.13	
6/28/2022 5:19	-0.12	
6/28/2022 5:20	-0.14	
6/28/2022 5:21	-0.15	
6/28/2022 5:22	-0.13	
6/28/2022 5:23	-0.17	
6/28/2022 5:24	-0.13	
6/28/2022 5:25	-0.10	
6/28/2022 5:26	-0.12	
6/28/2022 5:27	-0.11	
6/28/2022 5:28	-0.13	
6/28/2022 5:29	-0.11	
6/28/2022 5:30	-0.11	
6/28/2022 5:31	-0.13	
6/28/2022 5:32	-0.15	
6/28/2022 5:33	-0.14	
6/28/2022 5:34	-0.14	
6/28/2022 5:35	-0.12	
6/28/2022 5:36	-0.09	
6/28/2022 5:37	-0.14	
6/28/2022 5:38	-0.15	
6/28/2022 5:39	-0.13	
6/28/2022 5:40	-0.19	
6/28/2022 5:41	-0.13	
6/28/2022 5:42	-0.16	
6/28/2022 5:43	-0.12	
6/28/2022 5:44	-0.14	
6/28/2022 5:45	-0.13	
6/28/2022 5:46	-0.10	
6/28/2022 5:47	-0.17	

6/28/2022 4:39	11.98	0.08
6/28/2022 4:40	12.00	0.09
6/28/2022 4:41	11.98	0.06
6/28/2022 4:42	11.97	0.05
6/28/2022 4:43	11.98	0.05
6/28/2022 4:44	11.98	0.07
6/28/2022 4:45	11.98	-0.03
6/28/2022 4:46	12.00	0.07
6/28/2022 4:47	11.97	0.18
6/28/2022 4:48	12.00	0.05
6/28/2022 4:49	12.01	0.09
6/28/2022 4:50	12.00	0.01
6/28/2022 4:51	12.00	0.05
6/28/2022 4:52	12.01	0.19
6/28/2022 4:53	12.00	0.12
6/28/2022 4:54	12.00	0.04
6/28/2022 4:55	12.02	0.10
6/28/2022 4:56	12.03	0.11
6/28/2022 4:57	11.98	-0.02
6/28/2022 4:58	11.98	0.04
6/28/2022 4:59	11.97	0.08
6/28/2022 5:00	11.97	0.13
6/28/2022 5:01	11.97	0.09
6/28/2022 5:02	12.00	0.08
6/28/2022 5:03	11.99	0.11
6/28/2022 5:04	12.00	0.04
6/28/2022 5:05	11.98	0.07
6/28/2022 5:06	11.99	-0.02
6/28/2022 5:07	12.00	0.12
6/28/2022 5:08	11.97	0.06
6/28/2022 5:09	11.98	0.04
6/28/2022 5:10	11.97	0.18
6/28/2022 5:11	11.99	0.06
6/28/2022 5:12	11.99	0.11
6/28/2022 5:13	11.98	0.10
6/28/2022 5:14	12.00	0.05
6/28/2022 5:15	11.98	0.04
6/28/2022 5:16	11.99	0.04
6/28/2022 5:17	12.01	0.10
6/28/2022 5:18	11.98	0.05
6/28/2022 5:19	12.00	-0.02
6/28/2022 5:20	11.99	0.05
6/28/2022 5:21	11.99	0.10
6/28/2022 5:22	12.02	0.10
6/28/2022 5:23	12.01	0.02
6/28/2022 5:24	12.00	0.00
6/28/2022 5:25	11.98	0.07
6/28/2022 5:26	12.01	0.06
6/28/2022 5:27	12.01	0.05
6/28/2022 5:28	12.00	0.06
6/28/2022 5:29	12.01	0.00
6/28/2022 5:30	12.00	0.07
6/28/2022 5:31	12.00	0.17
6/28/2022 5:32	11.99	0.04
6/28/2022 5:33	11.99	0.07
6/28/2022 5:34	11.98	0.10
6/28/2022 5:35	11.98	0.01
6/28/2022 5:36	11.97	0.05
6/28/2022 5:37	11.99	0.07
6/28/2022 5:38	11.99	0.01
6/28/2022 5:39	12.00	0.10
6/28/2022 5:40	11.98	0.05
6/28/2022 5:41	11.99	0.04
6/28/2022 5:42	11.97	0.07
6/28/2022 5:43	11.98	0.08
6/28/2022 5:44	12.00	0.06
6/28/2022 5:45	12.01	0.10
6/28/2022 5:46	12.01	0.06
6/28/2022 5:47	12.00	0.07
6/28/2022 5:48	11.98	0.05
6/28/2022 5:49	11.99	0.11
6/28/2022 5:50	11.97	0.04
6/28/2022 5:51	11.98	0.07
6/28/2022 5:52	11.98	0.12
6/28/2022 5:53	11.98	0.10
6/28/2022 5:54	11.99	0.07
6/28/2022 5:55	12.00	0.12
6/28/2022 5:56	12.00	0.05
6/28/2022 5:57	12.00	0.10
6/28/2022 5:58	11.97	0.06
6/28/2022 5:59	11.97	0.05
6/28/2022 6:00	11.99	0.05
6/28/2022 6:01	11.99	0.07
6/28/2022 6:02	11.98	0.02
6/28/2022 6:03	12.02	0.02
6/28/2022 6:04	12.01	0.02
6/28/2022 6:05	12.00	0.08
6/28/2022 6:06	12.01	0.04
6/28/2022 4:26	11.66	-0.19
6/28/2022 4:27	11.66	-0.22
6/28/2022 4:28	11.65	-0.19
6/28/2022 4:29	11.65	-0.21
6/28/2022 4:30	11.66	-0.22
6/28/2022 4:31	11.68	-0.20
6/28/2022 4:32	11.67	-0.23
6/28/2022 4:33	11.67	-0.23
6/28/2022 4:34	11.67	-0.18
6/28/2022 4:35	11.67	-0.16
6/28/2022 4:36	11.69	-0.19
6/28/2022 4:37	11.67	-0.19
6/28/2022 4:38	11.68	-0.19
6/28/2022 4:39	11.68	-0.22
6/28/2022 4:40	11.68	-0.23
6/28/2022 4:41	11.66	-0.17
6/28/2022 4:42	11.65	-0.18
6/28/2022 4:43	11.69	-0.19
6/28/2022 4:44	11.68	-0.18
6/28/2022 4:45	11.70	-0.24
6/28/2022 4:46	11.67	-0.20
6/28/2022 4:47	11.67	-0.25
6/28/2022 4:48	11.66	-0.24
6/28/2022 4:49	11.68	-0.24
6/28/2022 4:50	11.65	-0.22
6/28/2022 4:51	11.67	-0.19
6/28/2022 4:52	11.66	-0.23
6/28/2022 4:53	11.69	-0.20
6/28/2022 4:54	11.68	-0.22
6/28/2022 4:55	11.67	-0.18
6/28/2022 4:56	11.67	-0.22
6/28/2022 4:57	11.69	-0.22
6/28/2022 4:58	11.66	-0.22
6/28/2022 4:59	11.66	-0.18
6/28/2022 5:00	11.67	-0.18
6/28/2022 5:01	11.68	-0.20
6/28/2022 5:02	11.65	-0.19
6/28/2022 5:03	11.66	-0.21
6/28/2022 5:04	11.67	-0.15
6/28/2022 5:05	11.66	-0.18
6/28/2022 5:06	11.67	-0.20
6/28/2022 5:07	11.66	-0.23
6/28/2022 5:08	11.66	-0.17
6/28/2022 5:09	11.67	-0.20
6/28/2022 5:10	11.66	-0.19
6/28/2022 5:11	11.66	-0.21
6/28/2022 5:12	11.70	-0.17
6/28/2022 5:13	11.67	-0.24
6/28/2022 5:14	11.67	-0.19
6/28/2022 5:15	11.68	-0.16
6/28/2022 5:16	11.66	-0.22
6/28/2022 5:17	11.68	-0.23
6/28/2022 5:18	11.67	-0.17
6/28/2022 5:19	11.69	-0.20
6/28/2022 5:20	11.68	-0.23
6/28/2022 5:21	11.66	-0.21
6/28/2022 5:22	11.67	-0.19
6/28/2022 5:23	11.67	-0.23
6/28/2022 5:24	11.67	-0.16
6/28/2022 5:25	11.67	-0.14
6/28/2022 5:26	11.66	-0.19
6/28/2022 5:27	11.67	-0.23
6/28/2022 5:28	11.68	-0.20
6/28/2022 5:29	11.68	-0.21
6/28/2022 5:30	11.67	-0.18
6/28/2022 5:31	11.65	-0.20
6/28/2022 5:32	11.67	-0.20
6/28/2022 5:33	11.68	-0.20
6/28/2022 5:34	11.67	-0.20
6/28/2022 5:35	11.67	-0.19
6/28/2022 5:36	11.70	-0.18
6/28/2022 5:37	11.69	-0.17
6/28/2022 5:38	11.65	-0.16
6/28/2022 5:39	11.69	-0.21
6/28/2022 5:40	11.65	-0.22
6/28/2022 5:41	11.64	-0.19
6/28/2022 5:42	11.68	-0.18
6/28/2022 5:43	11.66	-0.22
6/28/2022 5:44	11.66	-0.20
6/28/2022 5:45	11.66	-0.20
6/28/2022 5:46	11.67	-0.17
6/28/2022 5:47	11.68	-0.20
6/28/2022 5:48	11.69	-0.17
6/28/2022 5:49	11.66	-0.20
6/28/2022 5:50	11.69	-0.22
6/28/2022 5:51	11.67	-0.19
6/28/2022 5:52	11.66	-0.21
6/28/2022 5:53	11.66	-0.22
6/28/2022 5:48	-0.11	
6/28/2022 5:49	-0.15	
6/28/2022 5:50	-0.10	
6/28/2022 5:51	-0.10	
6/28/2022 5:52	-0.11	
6/28/2022 5:53	-0.11	
6/28/2022 5:54	-0.14	
6/28/2022 5:55	-0.14	
6/28/2022 5:56	-0.17	
6/28/2022 5:57	-0.09	
6/28/2022 5:58	-0.20	
6/28/2022 5:59	-0.12	
6/28/2022 6:00	-0.12	
6/28/2022 6:01	-0.10	
6/28/2022 6:02	-0.11	
6/28/2022 6:03	-0.12	
6/28/2022 6:04	-0.13	
6/28/2022 6:05	-0.11	
6/28/2022 6:06	-0.09	
6/28/2022 6:07	-0.10	
6/28/2022 6:08	-0.15	
6/28/2022 6:09	-0.14	
6/28/2022 6:10	-0.10	
6/28/2022 6:11	-0.16	
6/28/2022 6:12	-0.13	
6/28/2022 6:13	-0.14	
6/28/2022 6:14	-0.07	
6/28/2022 6:15	-0.11	
6/28/2022 6:16	-0.12	
6/28/2022 6:17	-0.06	
6/28/2022 6:18	-0.16	
6/28/2022 6:19	-0.14	
6/28/2022 6:20	-0.07	
6/28/2022 6:21	-0.14	
6/28/2022 6:22	-0.10	
6/28/2022 6:23	-0.15	
6/28/2022 6:24	-0.15	
6/28/2022 6:25	-0.13	
6/28/2022 6:26	-0.15	
6/28/2022 6:27	-0.14	
6/28/2022 6:28	-0.12	
6/28/2022 6:29	-0.18	
6/28/2022 6:30	-0.17	
6/28/2022 6:31	-0.16	
6/28/2022 6:32	-0.11	
6/28/2022 6:33	-0.22	
6/28/2022 6:34	-0.12	
6/28/2022 6:35	-0.12	
6/28/2022 6:36	-0.14	
6/28/2022 6:37	-0.21	
6/28/2022 6:38	-0.08	
6/28/2022 6:39	-0.14	
6/28/2022 6:40	-0.09	
6/28/2022 6:41	-0.14	
6/28/2022 6:42	-0.11	
6/28/2022 6:43	-0.09	
6/28/2022 6:44	-0.14	
6/28/2022 6:45	-0.12	
6/28/2022 6:46	-0.15	
6/28/2022 6:47	-0.16	
6/28/2022 6:48	-0.09	
6/28/2022 6:49	-0.17	
6/28/2022 6:50	-0.12	
6/28/2022 6:51	-0.10	
6/28/2022 6:52	-0.16	
6/28/2022 6:53	-0.12	
6/28/2022 6:54	-0.11	
6/28/2022 6:55	-0.12	
6/28/2022 6:56	-0.11	
6/28/2022 6:57	-0.08	
6/28/2022 6:58	-0.13	
6/28/2022 6:59	-0.16	
6/28/2022 7:00	-0.09	
6/28/2022 7:01	-0.12	
6/28/2022 7:02	-0.16	
6/28/2022 7:03	-0.15	
6/28/2022 7:04	-0.17	
6/28/2022 7:05	-0.14	
6/28/2022 7:06	-0.06	
6/28/2022 7:07	-0.15	
6/28/2022 7:08	-0.11	
6/28/2022 7:09	-0.13	
6/28/2022 7:10	-0.15	
6/28/2022 7:11	-0.11	
6/28/2022 7:12	-0.16	
6/28/2022 7:13	-0.15	
6/28/2022 7:14	-0.09	
6/28/2022 7:15	-0.12	

6/28/2022 6:07	12.01	0.03
6/28/2022 6:08	12.02	0.09
6/28/2022 6:09	12.01	0.04
6/28/2022 6:10	12.01	0.04
6/28/2022 6:11	12.01	0.08
6/28/2022 6:12	12.01	0.02
6/28/2022 6:13	12.02	0.04
6/28/2022 6:14	12.00	0.13
6/28/2022 6:15	11.96	0.12
6/28/2022 6:16	11.96	0.12
6/28/2022 6:17	11.99	0.03
6/28/2022 6:18	11.97	0.21
6/28/2022 6:19	11.95	0.08
6/28/2022 6:20	11.98	-0.01
6/28/2022 6:21	11.96	0.11
6/28/2022 6:22	11.99	0.12
6/28/2022 6:23	11.97	0.06
6/28/2022 6:24	11.97	0.03
6/28/2022 6:25	11.95	0.08
6/28/2022 6:26	11.97	0.06
6/28/2022 6:27	11.97	0.06
6/28/2022 6:28	11.96	0.01
6/28/2022 6:29	11.95	0.09
6/28/2022 6:30	11.96	0.09
6/28/2022 6:31	11.97	0.06
6/28/2022 6:32	11.97	0.05
6/28/2022 6:33	11.97	0.02
6/28/2022 6:34	11.97	0.06
6/28/2022 6:35	11.95	0.07
6/28/2022 6:36	11.97	0.06
6/28/2022 6:37	11.99	0.07
6/28/2022 6:38	12.02	0.12
6/28/2022 6:39	11.98	0.13
6/28/2022 6:40	11.97	-0.03
6/28/2022 6:41	11.98	0.07
6/28/2022 6:42	11.99	0.05
6/28/2022 6:43	11.98	0.04
6/28/2022 6:44	11.97	0.11
6/28/2022 6:45	11.97	0.03
6/28/2022 6:46	11.97	0.04
6/28/2022 6:47	11.97	0.13
6/28/2022 6:48	11.98	0.05
6/28/2022 6:49	12.00	0.05
6/28/2022 6:50	12.00	0.01
6/28/2022 6:51	12.00	0.01
6/28/2022 6:52	11.98	0.07
6/28/2022 6:53	12.01	0.07
6/28/2022 6:54	11.98	0.02
6/28/2022 6:55	11.98	0.05
6/28/2022 6:56	11.99	0.01
6/28/2022 6:57	12.01	0.10
6/28/2022 6:58	12.01	0.09
6/28/2022 6:59	11.98	0.11
6/28/2022 7:00	11.97	0.10
6/28/2022 7:01	11.98	0.03
6/28/2022 7:02	12.00	0.08
6/28/2022 7:03	12.00	0.04
6/28/2022 7:04	12.01	0.07
6/28/2022 7:05	11.99	0.06
6/28/2022 7:06	12.01	0.03
6/28/2022 7:07	12.00	0.04
6/28/2022 7:08	12.03	0.05
6/28/2022 7:09	12.03	0.15
6/28/2022 7:10	12.02	0.07
6/28/2022 7:11	12.02	0.06
6/28/2022 7:12	12.00	0.09
6/28/2022 7:13	12.02	0.05
6/28/2022 7:14	11.99	0.17
6/28/2022 7:15	11.98	0.04
6/28/2022 7:16	11.99	0.04
6/28/2022 7:17	12.00	0.10
6/28/2022 7:18	11.98	0.06
6/28/2022 7:19	11.99	-0.02
6/28/2022 7:20	12.00	0.04
6/28/2022 7:21	11.98	0.05
6/28/2022 7:22	11.97	0.02
6/28/2022 7:23	11.97	0.09
6/28/2022 7:24	11.97	0.04
6/28/2022 7:25	11.97	0.10
6/28/2022 7:26	12.00	0.06
6/28/2022 7:27	11.98	-0.01
6/28/2022 7:28	11.96	0.02
6/28/2022 7:29	11.97	0.06
6/28/2022 7:30	11.97	0.02
6/28/2022 7:31	11.95	-0.02
6/28/2022 7:32	11.96	0.01
6/28/2022 7:33	11.96	0.07
6/28/2022 7:34	11.97	0.09
6/28/2022 5:54	11.64	-0.22
6/28/2022 5:55	11.66	-0.19
6/28/2022 5:56	11.68	-0.21
6/28/2022 5:57	11.68	-0.20
6/28/2022 5:58	11.68	-0.15
6/28/2022 5:59	11.69	-0.19
6/28/2022 6:00	11.67	-0.18
6/28/2022 6:01	11.68	-0.18
6/28/2022 6:02	11.68	-0.23
6/28/2022 6:03	11.67	-0.20
6/28/2022 6:04	11.68	-0.19
6/28/2022 6:05	11.64	-0.18
6/28/2022 6:06	11.67	-0.25
6/28/2022 6:07	11.65	-0.20
6/28/2022 6:08	11.68	-0.20
6/28/2022 6:09	11.68	-0.22
6/28/2022 6:10	11.66	-0.17
6/28/2022 6:11	11.66	-0.29
6/28/2022 6:12	11.66	-0.19
6/28/2022 6:13	11.66	-0.19
6/28/2022 6:14	11.67	-0.19
6/28/2022 6:15	11.65	-0.23
6/28/2022 6:16	11.66	-0.19
6/28/2022 6:17	11.65	-0.18
6/28/2022 6:18	11.67	-0.22
6/28/2022 6:19	11.67	-0.17
6/28/2022 6:20	11.67	-0.21
6/28/2022 6:21	11.66	-0.17
6/28/2022 6:22	11.66	-0.22
6/28/2022 6:23	11.69	-0.17
6/28/2022 6:24	11.67	-0.24
6/28/2022 6:25	11.67	-0.21
6/28/2022 6:26	11.64	-0.20
6/28/2022 6:27	11.67	-0.21
6/28/2022 6:28	11.68	-0.18
6/28/2022 6:29	11.67	-0.22
6/28/2022 6:30	11.66	-0.22
6/28/2022 6:31	11.66	-0.19
6/28/2022 6:32	11.66	-0.14
6/28/2022 6:33	11.67	-0.25
6/28/2022 6:34	11.67	-0.19
6/28/2022 6:35	11.67	-0.21
6/28/2022 6:36	11.65	-0.20
6/28/2022 6:37	11.66	-0.21
6/28/2022 6:38	11.68	-0.18
6/28/2022 6:39	11.67	-0.22
6/28/2022 6:40	11.65	-0.24
6/28/2022 6:41	11.69	-0.23
6/28/2022 6:42	11.66	-0.19
6/28/2022 6:43	11.69	-0.17
6/28/2022 6:44	11.67	-0.20
6/28/2022 6:45	11.67	-0.23
6/28/2022 6:46	11.67	-0.23
6/28/2022 6:47	11.68	-0.23
6/28/2022 6:48	11.67	-0.20
6/28/2022 6:49	11.68	-0.20
6/28/2022 6:50	11.67	-0.20
6/28/2022 6:51	11.69	-0.24
6/28/2022 6:52	11.66	-0.21
6/28/2022 6:53	11.65	-0.20
6/28/2022 6:54	11.65	-0.17
6/28/2022 6:55	11.67	-0.24
6/28/2022 6:56	11.66	-0.24
6/28/2022 6:57	11.68	-0.21
6/28/2022 6:58	11.68	-0.17
6/28/2022 6:59	11.67	-0.19
6/28/2022 7:00	11.65	-0.21
6/28/2022 7:01	11.68	-0.20
6/28/2022 7:02	11.68	-0.17
6/28/2022 7:03	11.68	-0.21
6/28/2022 7:04	11.65	-0.22
6/28/2022 7:05	11.67	-0.21
6/28/2022 7:06	11.66	-0.19
6/28/2022 7:07	11.67	-0.21
6/28/2022 7:08	11.68	-0.23
6/28/2022 7:09	11.65	-0.16
6/28/2022 7:10	11.67	-0.17
6/28/2022 7:11	11.70	-0.21
6/28/2022 7:12	11.70	-0.20
6/28/2022 7:13	11.65	-0.23
6/28/2022 7:14	11.67	-0.17
6/28/2022 7:15	11.69	-0.22
6/28/2022 7:16	11.68	-0.25
6/28/2022 7:17	11.63	-0.20
6/28/2022 7:18	11.66	-0.19
6/28/2022 7:19	11.67	-0.26
6/28/2022 7:20	11.65	-0.26
6/28/2022 7:21	11.67	-0.21
6/28/2022 7:16	-0.17	
6/28/2022 7:17	-0.10	
6/28/2022 7:18	-0.14	
6/28/2022 7:19	-0.13	
6/28/2022 7:20	-0.15	
6/28/2022 7:21	-0.14	
6/28/2022 7:22	-0.11	
6/28/2022 7:23	-0.10	
6/28/2022 7:24	-0.13	
6/28/2022 7:25	-0.07	
6/28/2022 7:26	-0.05	
6/28/2022 7:27	-0.13	
6/28/2022 7:28	-0.11	
6/28/2022 7:29	-0.14	
6/28/2022 7:30	-0.13	
6/28/2022 7:31	-0.15	
6/28/2022 7:32	-0.16	
6/28/2022 7:33	-0.13	
6/28/2022 7:34	-0.14	
6/28/2022 7:35	-0.13	
6/28/2022 7:36	-0.17	
6/28/2022 7:37	-0.09	
6/28/2022 7:38	-0.12	
6/28/2022 7:39	-0.11	
6/28/2022 7:40	-0.11	
6/28/2022 7:41	-0.15	
6/28/2022 7:42	-0.10	
6/28/2022 7:43	-0.14	
6/28/2022 7:44	-0.14	
6/28/2022 7:45	-0.10	
6/28/2022 7:46	-0.13	
6/28/2022 7:47	-0.12	
6/28/2022 7:48	-0.09	
6/28/2022 7:49	-0.08	
6/28/2022 7:50	-0.15	
6/28/2022 7:51	-0.13	
6/28/2022 7:52	-0.11	
6/28/2022 7:53	-0.11	
6/28/2022 7:54	-0.12	
6/28/2022 7:55	-0.11	
6/28/2022 7:56	-0.13	
6/28/2022 7:57	-0.10	
6/28/2022 7:58	-0.12	
6/28/2022 7:59	-0.14	
6/28/2022 8:00	-0.15	
6/28/2022 8:01	-0.14	
6/28/2022 8:02	-0.09	
6/28/2022 8:03	-0.12	
6/28/2022 8:04	-0.08	
6/28/2022 8:05	-0.08	
6/28/2022 8:06	-0.11	
6/28/2022 8:07	-0.16	
6/28/2022 8:08	-0.12	
6/28/2022 8:09	-0.17	
6/28/2022 8:10	-0.16	
6/28/2022 8:11	-0.14	
6/28/2022 8:12	-0.13	
6/28/2022 8:13	-0.13	
6/28/2022 8:14	-0.12	
6/28/2022 8:15	-0.11	
6/28/2022 8:16	-0.09	
6/28/2022 8:17	-0.13	
6/28/2022 8:18	-0.11	
6/28/2022 8:19	-0.10	
6/28/2022 8:20	-0.11	
6/28/2022 8:21	-0.10	
6/28/2022 8:22	-0.14	
6/28/2022 8:23	-0.13	
6/28/2022 8:24	-0.11	
6/28/2022 8:25	-0.12	
6/28/2022 8:26	-0.16	
6/28/2022 8:27	-0.09	
6/28/2022 8:28	-0.14	
6/28/2022 8:29	-0.15	
6/28/2022 8:30	-0.10	
6/28/2022 8:31	-0.11	
6/28/2022 8:32	-0.12	
6/28/2022 8:33	-0.17	
6/28/2022 8:34	-0.11	
6/28/2022 8:35	-0.13	
6/28/2022 8:36	-0.10	
6/28/2022 8:37	-0.12	
6/28/2022 8:38	-0.13	
6/28/2022 8:39	-0.12	
6/28/2022 8:40	-0.15	
6/28/2022 8:41	-0.18	
6/28/2022 8:42	-0.14	
6/28/2022 8:43	-0.08	

6/28/2022 7:35	11.95	0.03
6/28/2022 7:36	11.97	0.12
6/28/2022 7:37	11.95	0.04
6/28/2022 7:38	11.98	0.07
6/28/2022 7:39	11.99	0.10
6/28/2022 7:40	12.02	0.11
6/28/2022 7:41	12.00	0.03
6/28/2022 7:42	12.04	0.02
6/28/2022 7:43	12.01	0.01
6/28/2022 7:44	12.02	0.03
6/28/2022 7:45	12.01	0.04
6/28/2022 7:46	11.99	0.10
6/28/2022 7:47	11.99	0.10
6/28/2022 7:48	11.99	0.03
6/28/2022 7:49	11.99	0.08
6/28/2022 7:50	12.00	0.11
6/28/2022 7:51	11.96	0.08
6/28/2022 7:52	11.97	-0.01
6/28/2022 7:53	11.95	0.00
6/28/2022 7:54	11.96	0.08
6/28/2022 7:55	12.01	0.06
6/28/2022 7:56	11.96	0.08
6/28/2022 7:57	11.96	0.03
6/28/2022 7:58	11.98	0.07
6/28/2022 7:59	11.98	0.08
6/28/2022 8:00	12.00	0.04
6/28/2022 8:01	11.99	0.15
6/28/2022 8:02	11.96	-0.01
6/28/2022 8:03	11.97	0.11
6/28/2022 8:04	11.97	0.07
6/28/2022 8:05	11.96	0.01
6/28/2022 8:06	11.99	0.09
6/28/2022 8:07	11.98	0.07
6/28/2022 8:08	11.98	0.06
6/28/2022 8:09	11.99	0.05
6/28/2022 8:10	12.00	0.05
6/28/2022 8:11	11.98	-0.01
6/28/2022 8:12	11.98	0.11
6/28/2022 8:13	11.97	0.05
6/28/2022 8:14	11.96	0.11
6/28/2022 8:15	11.99	0.00
6/28/2022 8:16	11.98	0.10
6/28/2022 8:17	11.96	0.09
6/28/2022 8:18	11.99	0.03
6/28/2022 8:19	11.99	0.03
6/28/2022 8:20	11.96	0.03
6/28/2022 8:21	11.98	0.15
6/28/2022 8:22	11.97	0.08
6/28/2022 8:23	12.00	0.07
6/28/2022 8:24	11.97	-0.04
6/28/2022 8:25	12.01	0.01
6/28/2022 8:26	11.99	0.06
6/28/2022 8:27	11.99	-0.04
6/28/2022 8:28	11.97	0.10
6/28/2022 8:29	11.97	0.05
6/28/2022 8:30	12.00	0.07
6/28/2022 8:31	11.97	0.05
6/28/2022 8:32	11.98	0.02
6/28/2022 8:33	11.98	0.11
6/28/2022 8:34	11.96	0.08
6/28/2022 8:35	11.95	0.06
6/28/2022 8:36	11.99	0.03
6/28/2022 8:37	11.98	0.07
6/28/2022 8:38	11.98	0.04
6/28/2022 8:39	11.98	0.05
6/28/2022 8:40	11.99	0.01
6/28/2022 8:41	11.98	0.06
6/28/2022 8:42	12.00	0.03
6/28/2022 8:43	11.96	0.08
6/28/2022 8:44	11.99	0.07
6/28/2022 8:45	11.97	0.11
6/28/2022 8:46	11.96	0.09
6/28/2022 8:47	11.97	0.09
6/28/2022 8:48	11.97	0.11
6/28/2022 8:49	11.96	0.07
6/28/2022 8:50	11.95	0.04
6/28/2022 8:51	11.96	0.08
6/28/2022 8:52	11.96	0.05
6/28/2022 8:53	11.96	0.12
6/28/2022 8:54	11.97	0.06
6/28/2022 8:55	11.96	0.02
6/28/2022 8:56	11.97	0.02
6/28/2022 8:57	11.98	0.11
6/28/2022 8:58	11.97	0.13
6/28/2022 8:59	11.97	0.09
6/28/2022 9:00	12.00	0.16
6/28/2022 9:01	11.99	0.07
6/28/2022 9:02	12.00	0.08
6/28/2022 7:22	11.67	-0.18
6/28/2022 7:23	11.68	-0.21
6/28/2022 7:24	11.68	-0.24
6/28/2022 7:25	11.67	-0.19
6/28/2022 7:26	11.67	-0.18
6/28/2022 7:27	11.67	-0.18
6/28/2022 7:28	11.67	-0.18
6/28/2022 7:29	11.66	-0.17
6/28/2022 7:30	11.66	-0.19
6/28/2022 7:31	11.67	-0.18
6/28/2022 7:32	11.68	-0.16
6/28/2022 7:33	11.66	-0.23
6/28/2022 7:34	11.66	-0.19
6/28/2022 7:35	11.67	-0.19
6/28/2022 7:36	11.67	-0.21
6/28/2022 7:37	11.67	-0.24
6/28/2022 7:38	11.66	-0.21
6/28/2022 7:39	11.65	-0.21
6/28/2022 7:40	11.66	-0.15
6/28/2022 7:41	11.67	-0.19
6/28/2022 7:42	11.67	-0.21
6/28/2022 7:43	11.67	-0.24
6/28/2022 7:44	11.69	-0.17
6/28/2022 7:45	11.69	-0.24
6/28/2022 7:46	11.68	-0.21
6/28/2022 7:47	11.67	-0.18
6/28/2022 7:48	11.68	-0.19
6/28/2022 7:49	11.65	-0.20
6/28/2022 7:50	11.68	-0.21
6/28/2022 7:51	11.67	-0.23
6/28/2022 7:52	11.66	-0.20
6/28/2022 7:53	11.67	-0.17
6/28/2022 7:54	11.69	-0.21
6/28/2022 7:55	11.69	-0.20
6/28/2022 7:56	11.67	-0.20
6/28/2022 7:57	11.66	-0.18
6/28/2022 7:58	11.66	-0.22
6/28/2022 7:59	11.69	-0.21
6/28/2022 8:00	11.68	-0.17
6/28/2022 8:01	11.70	-0.20
6/28/2022 8:02	11.66	-0.19
6/28/2022 8:03	11.68	-0.21
6/28/2022 8:04	11.66	-0.23
6/28/2022 8:05	11.68	-0.23
6/28/2022 8:06	11.66	-0.21
6/28/2022 8:07	11.67	-0.24
6/28/2022 8:08	11.63	-0.18
6/28/2022 8:09	11.66	-0.24
6/28/2022 8:10	11.65	-0.22
6/28/2022 8:11	11.69	-0.24
6/28/2022 8:12	11.66	-0.19
6/28/2022 8:13	11.68	-0.21
6/28/2022 8:14	11.67	-0.21
6/28/2022 8:15	11.67	-0.24
6/28/2022 8:16	11.68	-0.18
6/28/2022 8:17	11.66	-0.25
6/28/2022 8:18	11.66	-0.19
6/28/2022 8:19	11.68	-0.23
6/28/2022 8:20	11.67	-0.21
6/28/2022 8:21	11.66	-0.16
6/28/2022 8:22	11.64	-0.19
6/28/2022 8:23	11.69	-0.21
6/28/2022 8:24	11.68	-0.25
6/28/2022 8:25	11.66	-0.21
6/28/2022 8:26	11.67	-0.23
6/28/2022 8:27	11.68	-0.18
6/28/2022 8:28	11.66	-0.20
6/28/2022 8:29	11.67	-0.19
6/28/2022 8:30	11.68	-0.18
6/28/2022 8:31	11.67	-0.20
6/28/2022 8:32	11.65	-0.20
6/28/2022 8:33	11.67	-0.20
6/28/2022 8:34	11.66	-0.22
6/28/2022 8:35	11.69	-0.19
6/28/2022 8:36	11.67	-0.23
6/28/2022 8:37	11.66	-0.27
6/28/2022 8:38	11.68	-0.22
6/28/2022 8:39	11.67	-0.17
6/28/2022 8:40	11.70	-0.23
6/28/2022 8:41	11.67	-0.17
6/28/2022 8:42	11.66	-0.23
6/28/2022 8:43	11.66	-0.24
6/28/2022 8:44	11.67	-0.21
6/28/2022 8:45	11.67	-0.23
6/28/2022 8:46	11.65	-0.18
6/28/2022 8:47	11.67	-0.19
6/28/2022 8:48	11.69	-0.20
6/28/2022 8:49	11.67	-0.19
6/28/2022 8:44	-0.11	
6/28/2022 8:45	-0.11	
6/28/2022 8:46	-0.12	
6/28/2022 8:47	-0.15	
6/28/2022 8:48	-0.15	
6/28/2022 8:49	-0.15	
6/28/2022 8:50	-0.08	
6/28/2022 8:51	-0.18	
6/28/2022 8:52	-0.10	
6/28/2022 8:53	-0.13	
6/28/2022 8:54	-0.13	
6/28/2022 8:55	-0.10	
6/28/2022 8:56	-0.18	
6/28/2022 8:57	-0.12	
6/28/2022 8:58	-0.10	
6/28/2022 8:59	-0.12	
6/28/2022 9:00	-0.17	
6/28/2022 9:01	-0.12	
6/28/2022 9:02	-0.16	
6/28/2022 9:03	-0.14	
6/28/2022 9:04	-0.12	
6/28/2022 9:05	-0.09	
6/28/2022 9:06	-0.11	
6/28/2022 9:07	-0.10	
6/28/2022 9:08	-0.19	
6/28/2022 9:09	-0.16	
6/28/2022 9:10	-0.09	
6/28/2022 9:11	-0.13	
6/28/2022 9:12	-0.06	
6/28/2022 9:13	-0.08	
6/28/2022 9:14	-0.15	
6/28/2022 9:15	-0.13	
6/28/2022 9:16	-0.08	
6/28/2022 9:17	-0.11	
6/28/2022 9:18	-0.11	
6/28/2022 9:19	-0.12	
6/28/2022 9:20	-0.09	
6/28/2022 9:21	-0.11	
6/28/2022 9:22	-0.09	
6/28/2022 9:23	-0.09	
6/28/2022 9:24	-0.15	
6/28/2022 9:25	-0.14	
6/28/2022 9:26	-0.11	
6/28/2022 9:27	-0.15	
6/28/2022 9:28	-0.14	
6/28/2022 9:29	-0.11	
6/28/2022 9:30	-0.13	
6/28/2022 9:31	-0.16	
6/28/2022 9:32	-0.10	
6/28/2022 9:33	-0.08	
6/28/2022 9:34	-0.06	
6/28/2022 9:35	-0.13	
6/28/2022 9:36	-0.09	
6/28/2022 9:37	-0.10	
6/28/2022 9:38	-0.08	
6/28/2022 9:39	-0.11	
6/28/2022 9:40	-0.12	
6/28/2022 9:41	-0.16	
6/28/2022 9:42	-0.13	
6/28/2022 9:43	-0.13	
6/28/2022 9:44	-0.12	
6/28/2022 9:45	-0.13	
6/28/2022 9:46	-0.11	
6/28/2022 9:47	-0.17	
6/28/2022 9:48	-0.08	
6/28/2022 9:49	-0.10	
6/28/2022 9:50	-0.16	
6/28/2022 9:51	-0.13	
6/28/2022 9:52	-0.07	
6/28/2022 9:53	-0.11	
6/28/2022 9:54	-0.11	
6/28/2022 9:55	-0.15	
6/28/2022 9:56	-0.10	
6/28/2022 9:57	-0.08	
6/28/2022 9:58	-0.15	
6/28/2022 9:59	-0.10	
6/28/2022 10:00	-0.14	
6/28/2022 10:01	-0.15	
6/28/2022 10:02	-0.12	
6/28/2022 10:03	-0.13	
6/28/2022 10:04	-0.12	
6/28/2022 10:05	-0.14	
6/28/2022 10:06	-0.11	
6/28/2022 10:07	-0.13	
6/28/2022 10:08	-0.11	
6/28/2022 10:09	-0.12	
6/28/2022 10:10	-0.09	
6/28/2022 10:11	-0.11	

6/28/2022 9:03	12.02	0.07
6/28/2022 9:04	11.98	0.01
6/28/2022 9:05	11.99	-0.04
6/28/2022 9:06	11.97	0.10
6/28/2022 9:07	12.00	0.08
6/28/2022 9:08	11.97	0.04
6/28/2022 9:09	11.97	0.02
6/28/2022 9:10	11.95	0.07
6/28/2022 9:11	11.97	0.01
6/28/2022 9:12	11.96	0.10
6/28/2022 9:13	11.98	0.05
6/28/2022 9:14	11.97	0.11
6/28/2022 9:15	11.97	0.04
6/28/2022 9:16	11.98	0.14
6/28/2022 9:17	11.98	0.12
6/28/2022 9:18	12.01	0.02
6/28/2022 9:19	11.99	0.09
6/28/2022 9:20	12.00	0.16
6/28/2022 9:21	12.00	0.12
6/28/2022 9:22	11.97	0.02

6/28/2022 8:50	11.66	-0.22
6/28/2022 8:51	11.65	-0.24
6/28/2022 8:52	11.67	-0.22
6/28/2022 8:53	11.68	-0.23
6/28/2022 8:54	11.68	-0.19
6/28/2022 8:55	11.69	-0.21
6/28/2022 8:56	11.69	-0.20
6/28/2022 8:57	11.66	-0.22
6/28/2022 8:58	11.69	-0.19
6/28/2022 8:59	11.69	-0.18
6/28/2022 9:00	11.66	-0.21
6/28/2022 9:01	11.67	-0.20
6/28/2022 9:02	11.66	-0.18
6/28/2022 9:03	11.67	-0.19
6/28/2022 9:04	11.66	-0.22
6/28/2022 9:05	11.66	-0.24
6/28/2022 9:06	11.67	-0.17
6/28/2022 9:07	11.69	-0.22
6/28/2022 9:08	11.65	-0.21
6/28/2022 9:09	11.68	-0.15
6/28/2022 9:10	11.65	-0.17
6/28/2022 9:11	11.69	-0.17
6/28/2022 9:12	11.67	-0.21
6/28/2022 9:13	11.67	-0.21
6/28/2022 9:14	11.68	-0.21
6/28/2022 9:15	11.65	-0.21
6/28/2022 9:16	11.67	-0.14
6/28/2022 9:17	11.67	-0.27
6/28/2022 9:18	11.66	-0.24
6/28/2022 9:19	11.66	-0.17
6/28/2022 9:20	11.67	-0.21
6/28/2022 9:21	11.67	-0.18
6/28/2022 9:22	11.69	-0.17
6/28/2022 9:23	11.66	-0.22
6/28/2022 9:24	11.69	-0.18
6/28/2022 9:25	11.66	-0.23
6/28/2022 9:26	11.66	-0.22
6/28/2022 9:27	11.64	-0.22
6/28/2022 9:28	11.66	-0.20
6/28/2022 9:29	11.67	-0.20
6/28/2022 9:30	11.69	-0.22
6/28/2022 9:31	11.67	-0.24
6/28/2022 9:32	11.70	-0.16
6/28/2022 9:33	11.65	-0.22
6/28/2022 9:34	11.69	-0.19
6/28/2022 9:35	11.65	-0.17
6/28/2022 9:36	11.68	-0.21
6/28/2022 9:37	11.67	-0.19
6/28/2022 9:38	11.67	-0.21
6/28/2022 9:39	11.69	-0.19
6/28/2022 9:40	11.67	-0.19
6/28/2022 9:41	11.66	-0.25
6/28/2022 9:42	11.67	-0.20
6/28/2022 9:43	11.67	-0.21
6/28/2022 9:44	11.66	-0.17
6/28/2022 9:45	11.68	-0.21
6/28/2022 9:46	11.67	-0.19
6/28/2022 9:47	11.67	-0.19
6/28/2022 9:48	11.67	-0.19
6/28/2022 9:49	11.66	-0.17
6/28/2022 9:50	11.66	-0.18
6/28/2022 9:51	11.65	-0.19
6/28/2022 9:52	11.66	-0.22
6/28/2022 9:53	11.71	-0.21
6/28/2022 9:54	11.66	-0.17
6/28/2022 9:55	11.67	-0.17
6/28/2022 9:56	11.67	-0.25
6/28/2022 9:57	11.66	-0.23
6/28/2022 9:58	11.69	-0.20
6/28/2022 9:59	11.66	-0.19
6/28/2022 10:00	11.67	-0.20

6/28/2022 10:12	-0.11
6/28/2022 10:13	-0.10
6/28/2022 10:14	-0.12
6/28/2022 10:15	-0.15
6/28/2022 10:16	-0.15
6/28/2022 10:17	-0.06
6/28/2022 10:18	-0.16
6/28/2022 10:19	-0.07
6/28/2022 10:20	-0.11

Former Irrigation Well 3		Irrigation Well 4		Irrigation Well 5		Well 9		MW-10	
Date and Time	Level Depth To Water (ft)	Date and Time	Level Depth To Water (ft)	Date and Time	Level Depth To Water (ft)	Date and Time	Level Depth To Water (ft)	Date and Time	Level Depth To Water (ft)
6/16/2022 13:20	-0.01	6/17/2022 12:09	0.54	6/17/2022 12:32	3.12	6/17/2022 13:55	0.00	6/16/2022 12:40	10.94
6/16/2022 13:20	0.00	6/17/2022 12:10	0.58	6/17/2022 12:33	3.16	6/17/2022 13:56	-0.01	6/16/2022 12:41	10.98
6/16/2022 13:21	0.01	6/17/2022 12:11	0.60	6/17/2022 12:34	3.11	6/17/2022 13:57	-0.01	6/16/2022 12:42	10.91
6/16/2022 13:22	0.01	6/17/2022 12:12	0.61	6/17/2022 12:35	3.14	6/17/2022 13:58	0.05	6/16/2022 12:43	10.89
6/16/2022 13:23	0.00	6/17/2022 12:13	0.63	6/17/2022 12:36	3.14	6/17/2022 13:59	0.02	6/16/2022 12:44	10.93
6/16/2022 13:24	0.00	6/17/2022 12:14	0.64	6/17/2022 12:37	3.13	6/17/2022 14:00	0.06	6/16/2022 12:45	10.97
6/16/2022 13:25	0.00	6/17/2022 12:15	0.64	6/17/2022 12:38	3.17	6/17/2022 14:01	-0.01	6/16/2022 12:46	10.99
6/16/2022 13:26	0.00	6/17/2022 12:16	0.64	6/17/2022 12:39	3.15	6/17/2022 14:02	-0.01	6/16/2022 12:47	10.99
6/16/2022 13:27	0.00	6/17/2022 12:17	0.67	6/17/2022 12:40	3.13	6/17/2022 14:03	0.05	6/16/2022 12:48	10.94
6/16/2022 13:28	0.00	6/17/2022 12:18	0.67	6/17/2022 12:41	3.16	6/17/2022 14:04	0.01	6/16/2022 12:49	10.97
6/16/2022 13:29	0.00	6/17/2022 12:19	0.67	6/17/2022 12:42	3.16	6/17/2022 14:05	0.02	6/16/2022 12:50	10.93
6/16/2022 13:30	-0.01	6/17/2022 12:20	0.67	6/17/2022 12:43	3.13	6/17/2022 14:06	0.02	6/16/2022 12:51	10.99
6/16/2022 13:31	0.00	6/17/2022 12:21	0.67	6/17/2022 12:44	3.11	6/17/2022 14:07	0.03	6/16/2022 12:52	10.94
6/16/2022 13:32	-0.01	6/17/2022 12:22	0.67	6/17/2022 12:45	3.14	6/17/2022 14:08	0.03	6/16/2022 12:53	10.95
6/16/2022 13:33	-0.01	6/17/2022 12:23	0.67	6/17/2022 12:46	3.12	6/17/2022 14:09	0.04	6/16/2022 12:54	10.89
6/16/2022 13:34	-0.01	6/17/2022 12:24	0.67	6/17/2022 12:47	3.12	6/17/2022 14:10	0.05	6/16/2022 12:55	10.95
6/16/2022 13:35	-0.01	6/17/2022 12:25	0.67	6/17/2022 12:48	3.12	6/17/2022 14:11	0.00	6/16/2022 12:56	10.97
6/16/2022 13:36	-0.01	6/17/2022 12:26	0.66	6/17/2022 12:49	3.14	6/17/2022 14:12	0.00	6/16/2022 12:57	10.94
6/16/2022 13:37	-0.01	6/17/2022 12:27	0.66	6/17/2022 12:50	3.12	6/17/2022 14:13	0.03	6/16/2022 12:58	10.98
6/16/2022 13:38	-0.01	6/17/2022 12:28	0.66	6/17/2022 12:51	3.15	6/17/2022 14:14	0.01	6/16/2022 12:59	10.95
6/16/2022 13:39	-0.01	6/17/2022 12:29	0.67	6/17/2022 12:52	3.16	6/17/2022 14:15	0.02	6/16/2022 13:00	10.94
6/16/2022 13:40	-0.01	6/17/2022 12:30	0.67	6/17/2022 12:53	3.12	6/17/2022 14:16	-0.03	6/16/2022 13:01	10.97
6/16/2022 13:41	-0.02	6/17/2022 12:31	0.67	6/17/2022 12:54	3.14	6/17/2022 14:17	0.05	6/16/2022 13:02	10.92
6/16/2022 13:42	-0.01	6/17/2022 12:32	0.67	6/17/2022 12:55	3.17	6/17/2022 14:18	-0.02	6/16/2022 13:03	10.90
6/16/2022 13:43	-0.02	6/17/2022 12:33	0.67	6/17/2022 12:56	3.17	6/17/2022 14:19	0.00	6/16/2022 13:04	10.93
6/16/2022 13:44	-0.02	6/17/2022 12:34	0.66	6/17/2022 12:57	3.15	6/17/2022 14:20	0.01	6/16/2022 13:05	10.94
6/16/2022 13:45	-0.02	6/17/2022 12:35	0.67	6/17/2022 12:58	3.15	6/17/2022 14:21	0.02	6/16/2022 13:06	10.98
6/16/2022 13:46	-0.02	6/17/2022 12:36	0.67	6/17/2022 12:59	3.15	6/17/2022 14:22	-0.05	6/16/2022 13:07	10.93
6/16/2022 13:47	-0.02	6/17/2022 12:37	0.66	6/17/2022 13:00	3.14	6/17/2022 14:23	0.02	6/16/2022 13:08	10.99
6/16/2022 13:48	-0.02	6/17/2022 12:38	0.67	6/17/2022 13:01	3.13	6/17/2022 14:24	0.01	6/16/2022 13:09	10.95
6/16/2022 13:49	-0.02	6/17/2022 12:39	0.67	6/17/2022 13:02	3.14	6/17/2022 14:25	0.05	6/16/2022 13:10	10.98
6/16/2022 13:50	-0.02	6/17/2022 12:40	0.66	6/17/2022 13:03	3.13	6/17/2022 14:26	0.02	6/16/2022 13:11	10.93
6/16/2022 13:51	-0.02	6/17/2022 12:41	0.66	6/17/2022 13:04	3.11	6/17/2022 14:27	0.01	6/16/2022 13:12	10.96
6/16/2022 13:52	-0.02	6/17/2022 12:42	0.66	6/17/2022 13:05	3.14	6/17/2022 14:28	0.01	6/16/2022 13:13	10.98
6/16/2022 13:53	-0.02	6/17/2022 12:43	0.66	6/17/2022 13:06	3.17	6/17/2022 14:29	-0.03	6/16/2022 13:14	10.98
6/16/2022 13:54	-0.02	6/17/2022 12:44	0.67	6/17/2022 13:07	3.15	6/17/2022 14:30	0.02	6/16/2022 13:15	10.99
6/16/2022 13:55	-0.02	6/17/2022 12:45	0.67	6/17/2022 13:08	3.15	6/17/2022 14:31	0.01	6/16/2022 13:16	10.97
6/16/2022 13:56	-0.02	6/17/2022 12:46	0.67	6/17/2022 13:09	3.17	6/17/2022 14:32	-0.02	6/16/2022 13:17	11.00
6/16/2022 13:57	-0.02	6/17/2022 12:47	0.66	6/17/2022 13:10	3.13	6/17/2022 14:33	-0.02	6/16/2022 13:18	11.01
6/16/2022 13:58	-0.02	6/17/2022 12:48	0.66	6/17/2022 13:11	3.14	6/17/2022 14:34	-0.04	6/16/2022 13:19	10.99
6/16/2022 13:59	-0.02	6/17/2022 12:49	0.66	6/17/2022 13:12	3.16	6/17/2022 14:35	-0.03	6/16/2022 13:20	10.99
6/16/2022 14:00	-0.02	6/17/2022 12:50	0.66	6/17/2022 13:13	3.12	6/17/2022 14:36	0.03	6/16/2022 13:21	10.99
6/16/2022 14:01	-0.02	6/17/2022 12:51	0.66	6/17/2022 13:14	3.15	6/17/2022 14:37	0.01	6/16/2022 13:22	10.98
6/16/2022 14:02	-0.02	6/17/2022 12:52	0.66	6/17/2022 13:15	3.14	6/17/2022 14:38	0.00	6/16/2022 13:23	10.95
6/16/2022 14:03	-0.02	6/17/2022 12:53	0.67	6/17/2022 13:16	3.11	6/17/2022 14:39	-0.02	6/16/2022 13:24	10.98
6/16/2022 14:04	-0.02	6/17/2022 12:54	0.66	6/17/2022 13:17	3.13	6/17/2022 14:40	0.04	6/16/2022 13:25	10.94
6/16/2022 14:05	-0.01	6/17/2022 12:55	0.66	6/17/2022 13:18	3.12	6/17/2022 14:41	-0.02	6/16/2022 13:26	10.88
6/16/2022 14:06	-0.02	6/17/2022 12:56	0.66	6/17/2022 13:19	3.15	6/17/2022 14:42	0.02	6/16/2022 13:27	10.96
6/16/2022 14:07	-0.03	6/17/2022 12:57	0.66	6/17/2022 13:20	3.18	6/17/2022 14:43	0.00	6/16/2022 13:28	10.94
6/16/2022 14:08	-0.02	6/17/2022 12:58	0.67	6/17/2022 13:21	3.16	6/17/2022 14:44	-0.01	6/16/2022 13:29	10.95
6/16/2022 14:09	-0.02	6/17/2022 12:59	0.66	6/17/2022 13:22	3.15	6/17/2022 14:45	0.00	6/16/2022 13:30	10.96
6/16/2022 14:10	-0.01	6/17/2022 13:00	0.66	6/17/2022 13:23	3.11	6/17/2022 14:46	-0.03	6/16/2022 13:31	10.98
6/16/2022 14:11	-0.03	6/17/2022 13:01	0.66	6/17/2022 13:24	3.12	6/17/2022 14:47	-0.03	6/16/2022 13:32	10.95
6/16/2022 14:12	-0.02	6/17/2022 13:02	0.66	6/17/2022 13:25	3.13	6/17/2022 14:48	-0.05	6/16/2022 13:33	10.96
6/16/2022 14:13	-0.03	6/17/2022 13:03	0.66	6/17/2022 13:26	3.14	6/17/2022 14:49	-0.01	6/16/2022 13:34	10.96
6/16/2022 14:14	-0.02	6/17/2022 13:04	0.66	6/17/2022 13:27	3.13	6/17/2022 14:50	-0.02	6/16/2022 13:35	11.00
6/16/2022 14:15	-0.03	6/17/2022 13:05	0.66	6/17/2022 13:28	3.10	6/17/2022 14:51	0.02	6/16/2022 13:36	10.98
6/16/2022 14:16	-0.03	6/17/2022 13:06	0.66	6/17/2022 13:29	3.16	6/17/2022 14:52	0.02	6/16/2022 13:37	10.96
6/16/2022 14:17	-0.02	6/17/2022 13:07	0.66	6/17/2022 13:30	3.18	6/17/2022 14:53	0.00	6/16/2022 13:38	10.99
6/16/2022 14:18	-0.03	6/17/2022 13:08	0.66	6/17/2022 13:31	3.13	6/17/2022 14:54	-0.06	6/16/2022 13:39	10.93
6/16/2022 14:19	-0.03	6/17/2022 13:09	0.66	6/17/2022 13:32	3.13	6/17/2022 14:55	-0.03	6/16/2022 13:40	10.94
6/16/2022 14:20	-0.03	6/17/2022 13:10	0.66	6/17/2022 13:33	3.14	6/17/2022 14:56	-0.01	6/16/2022 13:41	10.96
6/16/2022 14:21	-0.03	6/17/2022 13:11	0.66	6/17/2022 13:34	3.12	6/17/2022 14:57	0.00	6/16/2022 13:42	10.93
6/16/2022 14:22	-0.03	6/17/2022 13:12	0.66	6/17/2022 13:35	3.13	6/17/2022 14:58	0.01	6/16/2022 13:43	10.98
6/16/2022 14:23	-0.03	6/17/2022 13:13	0.66	6/17/2022 13:36	3.10	6/17/2022 14:59	0.00	6/16/2022 13:44	10.95
6/16/2022 14:24	-0.03	6/17/2022 13:14	0.66	6/17/2022 13:37	3.14	6/17/2022 15:00	-0.02	6/16/2022 13:45	10.93
6/16/2022 14:25	-0.01	6/17/2022 13:15	0.66	6/17/2022 13:38	3.13	6/17/2022 15:01	0.01	6/16/2022 13:46	10.94
6/16/2022 14:26	-0.03	6/17/2022 13:16	0.66	6/17/2022 13:39	3.12	6/17/2022 15:02	-0.01	6/16/2022 13:47	10.92
6/16/2022 14:27	-0.03	6/17/2022 13:17	0.66	6/17/2022 13:40	3.17	6/17/2022 15:03	0.00	6/16/2022 13:48	10.91
6/16/2022 14:28	-0.03	6/17/2022 13:18	0.66	6/17/2022 13:41	3.13	6/17/2022 15:04	-0.02	6/16/2022 13:49	10.98
6/16/2022 14:29	-0.02	6/17/2022 13:19	0.66	6/17/2022 13:42	3.15	6/17/2022 15:05	-0.06	6/16/2022 13:50	10.99
6/16/2022 14:30	-0.03	6/17/2022 13:20	0.66	6/17/2022 13:43	3.12	6/17/2022 15:06	-0.03	6/16/2022 13:51	10.96
6/16/2022 14:31	-0.02	6/17/2022 13:21	0.66	6/17/2022 13:44	3.15	6/17/2022 15:07	-0.05	6/16/2022 13:52	10.96
6/16/2022 14:32	-0.03	6/17/2022 13:22	0.66	6/17/2022 13:45	3.13	6/17/2022 15:08	0.01	6/16/2022 13:53	10.99
6/16/2022 14:33	-0.03	6/17/2022 13:23	0.66	6/17/2022 13:46	3.13	6/17/2022 15:09	-0.02	6/16/2022 13:54	10.99
6/16/2022 14:34	-0.03	6/17/2022 13:24	0.66	6/17/2022 13:47	3.12	6/17/2022 15:10	0.00	6/16/2022 13:55	10.90
6/16/2022 14:35	-0.03	6/17/2022 13:25	0.66	6/17/2022 13:48	3.17	6/17/2022 15:11	-0.04	6/16/2022 13:56	10.98
6/16/2022 14:36	-0.03	6/17/2022 13:26	0.66	6/17/2022 13:49	3.11	6/17/2022 15:12	-0.03	6/16/2022 13:57	10.98
6/16/2022 14:37	-0.03	6/17/2022 13:27	0.66	6/17/2022 13:50	3.11	6/17/2022 15:13	-0.01	6/16/2022 13:58	10.97
6/16/2022 14:38	-0.01	6/17/2022 13:28	0.66	6/17/2022 13:51	3.18	6/17/2022 15:14	-0.02	6/16/2022 13:59	10.94
6/16/2022 14:39	-0.03	6/17/2022 13:29	0.66	6/17/2022 13:52	3.13	6/17/2022 15:15	0.00	6/16/2022 14:00	10.97
6/16/2022 14:40	-0.03	6/17/2022 13:30	0.66	6/17/2022 13:53	3.14	6/17/2022 15:16	-0.05	6/16/2022 14:01	10.98

6/16/2022 14:41	-0.03	6/17/2022 13:31	0.66	6/17/2022 13:54	3.14	6/17/2022 15:17	-0.05	6/16/2022 14:02	10.92
6/16/2022 14:42	-0.02	6/17/2022 13:32	0.66	6/17/2022 13:55	3.13	6/17/2022 15:18	-0.04	6/16/2022 14:03	10.94
6/16/2022 14:43	-0.03	6/17/2022 13:33	0.66	6/17/2022 13:56	3.10	6/17/2022 15:19	-0.01	6/16/2022 14:04	10.98
6/16/2022 14:44	-0.03	6/17/2022 13:34	0.66	6/17/2022 13:57	3.14	6/17/2022 15:20	-0.04	6/16/2022 14:05	10.99
6/16/2022 14:45	-0.02	6/17/2022 13:35	0.65	6/17/2022 13:58	3.13	6/17/2022 15:21	-0.03	6/16/2022 14:06	11.00
6/16/2022 14:46	-0.03	6/17/2022 13:36	0.66	6/17/2022 13:59	3.13	6/17/2022 15:22	-0.02	6/16/2022 14:07	10.92
6/16/2022 14:47	-0.03	6/17/2022 13:37	0.66	6/17/2022 14:00	3.14	6/17/2022 15:23	-0.01	6/16/2022 14:08	10.98
6/16/2022 14:48	-0.03	6/17/2022 13:38	0.66	6/17/2022 14:01	3.14	6/17/2022 15:24	-0.06	6/16/2022 14:09	10.91
6/16/2022 14:49	-0.03	6/17/2022 13:39	0.65	6/17/2022 14:02	3.17	6/17/2022 15:25	-0.10	6/16/2022 14:10	10.90
6/16/2022 14:50	-0.03	6/17/2022 13:40	0.66	6/17/2022 14:03	3.11	6/17/2022 15:26	-0.02	6/16/2022 14:11	10.93
6/16/2022 14:51	-0.04	6/17/2022 13:41	0.66	6/17/2022 14:04	3.10	6/17/2022 15:27	-0.02	6/16/2022 14:12	10.93
6/16/2022 14:52	-0.02	6/17/2022 13:42	0.66	6/17/2022 14:05	3.11	6/17/2022 15:28	0.02	6/16/2022 14:13	10.96
6/16/2022 14:53	-0.02	6/17/2022 13:43	0.66	6/17/2022 14:06	3.13	6/17/2022 15:29	-0.02	6/16/2022 14:14	10.97
6/16/2022 14:54	-0.03	6/17/2022 13:44	0.65	6/17/2022 14:07	3.12	6/17/2022 15:30	-0.03	6/16/2022 14:15	10.91
6/16/2022 14:55	-0.03	6/17/2022 13:45	0.65	6/17/2022 14:08	3.14	6/17/2022 15:31	-0.02	6/16/2022 14:16	10.95
6/16/2022 14:56	-0.03	6/17/2022 13:46	0.65	6/17/2022 14:09	3.15	6/17/2022 15:32	-0.03	6/16/2022 14:17	10.99
6/16/2022 14:57	-0.03	6/17/2022 13:47	0.66	6/17/2022 14:10	3.11	6/17/2022 15:33	-0.04	6/16/2022 14:18	10.99
6/16/2022 14:58	-0.03	6/17/2022 13:48	0.65	6/17/2022 14:11	3.14	6/17/2022 15:34	-0.02	6/16/2022 14:19	10.94
6/16/2022 14:59	-0.03	6/17/2022 13:49	0.65	6/17/2022 14:12	3.14	6/17/2022 15:35	-0.04	6/16/2022 14:20	11.00
6/16/2022 15:00	-0.02	6/17/2022 13:50	0.65	6/17/2022 14:13	3.14	6/17/2022 15:36	-0.04	6/16/2022 14:21	10.97
6/16/2022 15:01	-0.02	6/17/2022 13:51	0.65	6/17/2022 14:14	3.13	6/17/2022 15:37	-0.05	6/16/2022 14:22	10.94
6/16/2022 15:02	-0.03	6/17/2022 13:52	0.65	6/17/2022 14:15	3.10	6/17/2022 15:38	-0.01	6/16/2022 14:23	10.97
6/16/2022 15:03	-0.03	6/17/2022 13:53	0.65	6/17/2022 14:16	3.11	6/17/2022 15:39	-0.03	6/16/2022 14:24	10.94
6/16/2022 15:04	-0.02	6/17/2022 13:54	0.65	6/17/2022 14:17	3.10	6/17/2022 15:40	-0.03	6/16/2022 14:25	10.90
6/16/2022 15:05	-0.02	6/17/2022 13:55	0.65	6/17/2022 14:18	3.14	6/17/2022 15:41	0.02	6/16/2022 14:26	10.94
6/16/2022 15:06	-0.02	6/17/2022 13:56	0.65	6/17/2022 14:19	3.13	6/17/2022 15:42	-0.02	6/16/2022 14:27	10.98
6/16/2022 15:07	-0.02	6/17/2022 13:57	0.64	6/17/2022 14:20	3.13	6/17/2022 15:43	-0.05	6/16/2022 14:28	10.92
6/16/2022 15:08	-0.03	6/17/2022 13:58	0.65	6/17/2022 14:21	3.14	6/17/2022 15:44	-0.02	6/16/2022 14:29	10.95
6/16/2022 15:09	-0.02	6/17/2022 13:59	0.65	6/17/2022 14:22	3.16	6/17/2022 15:45	-0.02	6/16/2022 14:30	11.00
6/16/2022 15:10	-0.02	6/17/2022 14:00	0.65	6/17/2022 14:23	3.11	6/17/2022 15:46	-0.04	6/16/2022 14:31	10.98
6/16/2022 15:11	-0.02	6/17/2022 14:01	0.65	6/17/2022 14:24	3.07	6/17/2022 15:47	-0.02	6/16/2022 14:32	10.96
6/16/2022 15:12	-0.03	6/17/2022 14:02	0.64	6/17/2022 14:25	3.09	6/17/2022 15:48	-0.03	6/16/2022 14:33	11.00
6/16/2022 15:13	-0.02	6/17/2022 14:03	0.64	6/17/2022 14:26	3.13	6/17/2022 15:49	-0.05	6/16/2022 14:34	11.01
6/16/2022 15:14	-0.02	6/17/2022 14:04	0.65	6/17/2022 14:27	3.11	6/17/2022 15:50	0.00	6/16/2022 14:35	10.94
6/16/2022 15:15	-0.02	6/17/2022 14:05	0.64	6/17/2022 14:28	3.14	6/17/2022 15:51	-0.07	6/16/2022 14:36	10.93
6/16/2022 15:16	-0.02	6/17/2022 14:06	0.64	6/17/2022 14:29	3.12	6/17/2022 15:52	-0.02	6/16/2022 14:37	10.93
6/16/2022 15:17	-0.02	6/17/2022 14:07	0.64	6/17/2022 14:30	3.11	6/17/2022 15:53	-0.02	6/16/2022 14:38	10.96
6/16/2022 15:18	-0.04	6/17/2022 14:08	0.64	6/17/2022 14:31	3.11	6/17/2022 15:54	-0.03	6/16/2022 14:39	10.95
6/16/2022 15:19	-0.02	6/17/2022 14:09	0.64	6/17/2022 14:32	3.11	6/17/2022 15:55	-0.03	6/16/2022 14:40	10.93
6/16/2022 15:20	-0.04	6/17/2022 14:10	0.64	6/17/2022 14:33	3.11	6/17/2022 15:56	-0.07	6/16/2022 14:41	10.97
6/16/2022 15:21	-0.02	6/17/2022 14:11	0.64	6/17/2022 14:34	3.11	6/17/2022 15:57	-0.03	6/16/2022 14:42	10.92
6/16/2022 15:22	-0.04	6/17/2022 14:12	0.64	6/17/2022 14:35	3.12	6/17/2022 15:58	-0.04	6/16/2022 14:43	10.98
6/16/2022 15:23	-0.02	6/17/2022 14:13	0.64	6/17/2022 14:36	3.13	6/17/2022 15:59	-0.04	6/16/2022 14:44	10.89
6/16/2022 15:24	-0.02	6/17/2022 14:14	0.64	6/17/2022 14:37	3.11	6/17/2022 16:00	-0.02	6/16/2022 14:45	10.91
6/16/2022 15:25	-0.03	6/17/2022 14:15	0.64	6/17/2022 14:38	3.14	6/17/2022 16:01	-0.05	6/16/2022 14:46	10.98
6/16/2022 15:26	-0.02	6/17/2022 14:16	0.65	6/17/2022 14:39	3.11	6/17/2022 16:02	-0.06	6/16/2022 14:47	10.93
6/16/2022 15:27	-0.04	6/17/2022 14:17	0.64	6/17/2022 14:40	3.14	6/17/2022 16:03	-0.03	6/16/2022 14:48	10.94
6/16/2022 15:28	-0.02	6/17/2022 14:18	0.64	6/17/2022 14:41	3.10	6/17/2022 16:04	0.00	6/16/2022 14:49	10.93
6/16/2022 15:29	-0.04	6/17/2022 14:19	0.64	6/17/2022 14:42	3.13	6/17/2022 16:05	-0.02	6/16/2022 14:50	10.95
6/16/2022 15:30	-0.02	6/17/2022 14:20	0.64	6/17/2022 14:43	3.14	6/17/2022 16:06	-0.03	6/16/2022 14:51	10.95
6/16/2022 15:31	-0.02	6/17/2022 14:21	0.64	6/17/2022 14:44	3.12	6/17/2022 16:07	-0.06	6/16/2022 14:52	10.91
6/16/2022 15:32	-0.02	6/17/2022 14:22	0.64	6/17/2022 14:45	3.10	6/17/2022 16:08	-0.02	6/16/2022 14:53	10.96
6/16/2022 15:33	-0.02	6/17/2022 14:23	0.64	6/17/2022 14:46	3.12	6/17/2022 16:09	-0.05	6/16/2022 14:54	10.96
6/16/2022 15:34	-0.02	6/17/2022 14:24	0.64	6/17/2022 14:47	3.12	6/17/2022 16:10	-0.08	6/16/2022 14:55	10.91
6/16/2022 15:35	-0.02	6/17/2022 14:25	0.64	6/17/2022 14:48	3.13	6/17/2022 16:11	-0.07	6/16/2022 14:56	10.96
6/16/2022 15:36	-0.02	6/17/2022 14:26	0.64	6/17/2022 14:49	3.13	6/17/2022 16:12	-0.04	6/16/2022 14:57	10.92
6/16/2022 15:37	-0.02	6/17/2022 14:27	0.64	6/17/2022 14:50	3.13	6/17/2022 16:13	-0.02	6/16/2022 14:58	10.90
6/16/2022 15:38	-0.02	6/17/2022 14:28	0.64	6/17/2022 14:51	3.11	6/17/2022 16:14	-0.03	6/16/2022 14:59	10.90
6/16/2022 15:39	-0.04	6/17/2022 14:29	0.64	6/17/2022 14:52	3.14	6/17/2022 16:15	-0.04	6/16/2022 15:00	10.92
6/16/2022 15:40	-0.03	6/17/2022 14:30	0.64	6/17/2022 14:53	3.11	6/17/2022 16:16	-0.02	6/16/2022 15:01	10.92
6/16/2022 15:41	-0.02	6/17/2022 14:31	0.64	6/17/2022 14:54	3.09	6/17/2022 16:17	-0.04	6/16/2022 15:02	10.92
6/16/2022 15:42	-0.02	6/17/2022 14:32	0.64	6/17/2022 14:55	3.10	6/17/2022 16:18	-0.06	6/16/2022 15:03	10.96
6/16/2022 15:43	-0.02	6/17/2022 14:33	0.64	6/17/2022 14:56	3.14	6/17/2022 16:19	-0.02	6/16/2022 15:04	10.93
6/16/2022 15:44	-0.02	6/17/2022 14:34	0.64	6/17/2022 14:57	3.10	6/17/2022 16:20	-0.05	6/16/2022 15:05	10.93
6/16/2022 15:45	-0.02	6/17/2022 14:35	0.64	6/17/2022 14:58	3.12	6/17/2022 16:21	-0.02	6/16/2022 15:06	10.94
6/16/2022 15:46	-0.02	6/17/2022 14:36	0.64	6/17/2022 14:59	3.11	6/17/2022 16:22	-0.03	6/16/2022 15:07	10.96
6/16/2022 15:47	-0.02	6/17/2022 14:37	0.64	6/17/2022 15:00	3.13	6/17/2022 16:23	-0.04	6/16/2022 15:08	10.88
6/16/2022 15:48	-0.02	6/17/2022 14:38	0.63	6/17/2022 15:01	3.13	6/17/2022 16:24	-0.07	6/16/2022 15:09	10.94
6/16/2022 15:49	-0.02	6/17/2022 14:39	0.64	6/17/2022 15:02	3.13	6/17/2022 16:25	-0.04	6/16/2022 15:10	10.96
6/16/2022 15:50	-0.03	6/17/2022 14:40	0.63	6/17/2022 15:03	3.14	6/17/2022 16:26	-0.03	6/16/2022 15:11	10.93
6/16/2022 15:51	-0.05	6/17/2022 14:41	0.63	6/17/2022 15:04	3.13	6/17/2022 16:27	-0.02	6/16/2022 15:12	10.91
6/16/2022 15:52	-0.03	6/17/2022 14:42	0.64	6/17/2022 15:05	3.14	6/17/2022 16:28	-0.02	6/16/2022 15:13	10.91
6/16/2022 15:53	-0.02	6/17/2022 14:43	0.64	6/17/2022 15:06	3.13	6/17/2022 16:29	-0.01	6/16/2022 15:14	10.88
6/16/2022 15:54	-0.03	6/17/2022 14:44	0.66	6/17/2022 15:07	3.16	6/17/2022 16:30	-0.06	6/16/2022 15:15	10.92
6/16/2022 15:55	-0.04	6/17/2022 14:45	0.64	6/17/2022 15:08	3.13	6/17/2022 16:31	-0.04	6/16/2022 15:16	10.91
6/16/2022 15:56	-0.02	6/17/2022 14:46	0.64	6/17/2022 15:09	3.14	6/17/2022 16:32	-0.04	6/16/2022 15:17	10.89
6/16/2022 15:57	-0.02	6/17/2022 14:47	0.64	6/17/2022 15:10	3.13	6/17/2022 16:33	-0.05	6/16/2022 15:18	10.93
6/16/2022 15:58	-0.03	6/17/2022 14:48	0.64	6/17/2022 15:11	3.12	6/17/2022 16:34	-0.02	6/16/2022 15:19	10.92
6/16/2022 15:59	-0.03	6/17/2022 14:49	0.63	6/17/2022 15:12	3.13	6/17/2022 16:35	-0.07	6/16/2022 15:20	10.93
6/16/2022 16:00	-0.03	6/17/2022 14:50	0.63	6/17/2022 15:13	3.13	6/17/2022 16:36	-0.02	6/16/2022 15:21	10.90
6/16/2022 16:01	-0.03	6/17/2022 14:51	0.63	6/17/2022 15:14	3.12	6/17/2022 16:37	-0.02	6/16/2022 15:22	10.94
6/16/2022 16:02	-0.03	6/17/2022 14:52	0.63	6/17/2022 15:15	3.12	6/17/2022 16:38	-0.07	6/16/2022 15:23	10.96
6/16/2022 16:03	-0.02	6/17/2022 14:53	0.65	6/17/2022 15:16	3.09	6/17/2022 16:39	0.00	6/16/2022 15:24	10.88
6/16/2022 16:04	-0.03	6/17/2022 14:54	0.63	6/17/2022 15:17	3.13	6/17/2022 16:40	-0.07	6/16/2022 15:25	10.91
6/16/2022 16:05	-0.03	6/17/2022 14:55	0.63	6/17/2022 15:18	3.15	6/17/2022 16:41	-0.02	6/16/2022 15:26	10.92
6/16/2022 16:06	-0.02	6/17/2022 14:56	0.63	6/17/2022 15:19	3.11	6/17/2022 16:42	-0.06	6/16/2022 15:27	10.96
6/16/2022 16:07	-0.03	6/17/2022 14:57	0.63	6/17/2022 15:20	3.11	6/17/2022 16:43	-0.07	6/16/2022 15:28	10.91
6/16/2022 16:08	-0.03	6/17/2022 14:58	0.65	6/17/2022 15:21	3.12	6/17/2022 16:44	-0.04	6/16/2022 15:29	10.97

6/16/2022 16:09	-0.03	6/17/2022 14:59	0.63	6/17/2022 15:22	3.10	6/17/2022 16:45	-0.04	6/16/2022 15:30	10.96
6/16/2022 16:10	-0.03	6/17/2022 15:00	0.63	6/17/2022 15:23	3.12	6/17/2022 16:46	-0.08	6/16/2022 15:31	10.96
6/16/2022 16:11	-0.03	6/17/2022 15:01	0.63	6/17/2022 15:24	3.12	6/17/2022 16:47	-0.04	6/16/2022 15:32	10.94
6/16/2022 16:12	-0.02	6/17/2022 15:02	0.63	6/17/2022 15:25	3.10	6/17/2022 16:48	-0.05	6/16/2022 15:33	10.99
6/16/2022 16:13	-0.03	6/17/2022 15:03	0.65	6/17/2022 15:26	3.14	6/17/2022 16:49	-0.06	6/16/2022 15:34	10.92
6/16/2022 16:14	-0.03	6/17/2022 15:04	0.63	6/17/2022 15:27	3.12	6/17/2022 16:50	-0.02	6/16/2022 15:35	10.90
6/16/2022 16:15	-0.03	6/17/2022 15:05	0.63	6/17/2022 15:28	3.11	6/17/2022 16:51	-0.03	6/16/2022 15:36	10.98
6/16/2022 16:16	-0.03	6/17/2022 15:06	0.63	6/17/2022 15:29	3.12	6/17/2022 16:52	-0.08	6/16/2022 15:37	10.89
6/16/2022 16:17	-0.03	6/17/2022 15:07	0.65	6/17/2022 15:30	3.09	6/17/2022 16:53	-0.05	6/16/2022 15:38	10.93
6/16/2022 16:18	-0.03	6/17/2022 15:08	0.63	6/17/2022 15:31	3.14	6/17/2022 16:54	-0.02	6/16/2022 15:39	10.90
6/16/2022 16:19	-0.03	6/17/2022 15:09	0.63	6/17/2022 15:32	3.08	6/17/2022 16:55	-0.10	6/16/2022 15:40	10.95
6/16/2022 16:20	-0.03	6/17/2022 15:10	0.63	6/17/2022 15:33	3.08	6/17/2022 16:56	-0.08	6/16/2022 15:41	10.97
6/16/2022 16:21	-0.03	6/17/2022 15:11	0.63	6/17/2022 15:34	3.10	6/17/2022 16:57	-0.08	6/16/2022 15:42	10.94
6/16/2022 16:22	-0.03	6/17/2022 15:12	0.63	6/17/2022 15:35	3.12	6/17/2022 16:58	-0.03	6/16/2022 15:43	10.95
6/16/2022 16:23	-0.03	6/17/2022 15:13	0.63	6/17/2022 15:36	3.13	6/17/2022 16:59	-0.05	6/16/2022 15:44	10.93
6/16/2022 16:24	-0.03	6/17/2022 15:14	0.63	6/17/2022 15:37	3.11	6/17/2022 17:00	-0.08	6/16/2022 15:45	10.93
6/16/2022 16:25	-0.03	6/17/2022 15:15	0.65	6/17/2022 15:38	3.12	6/17/2022 17:01	-0.06	6/16/2022 15:46	10.97
6/16/2022 16:26	-0.03	6/17/2022 15:16	0.63	6/17/2022 15:39	3.10	6/17/2022 17:02	-0.08	6/16/2022 15:47	10.94
6/16/2022 16:27	-0.03	6/17/2022 15:17	0.63	6/17/2022 15:40	3.11	6/17/2022 17:03	-0.06	6/16/2022 15:48	10.94
6/16/2022 16:28	-0.03	6/17/2022 15:18	0.62	6/17/2022 15:41	3.13	6/17/2022 17:04	-0.02	6/16/2022 15:49	10.96
6/16/2022 16:29	-0.03	6/17/2022 15:19	0.62	6/17/2022 15:42	3.12	6/17/2022 17:05	-0.02	6/16/2022 15:50	10.92
6/16/2022 16:30	-0.03	6/17/2022 15:20	0.63	6/17/2022 15:43	3.13	6/17/2022 17:06	-0.05	6/16/2022 15:51	10.86
6/16/2022 16:31	-0.03	6/17/2022 15:21	0.63	6/17/2022 15:44	3.13	6/17/2022 17:07	-0.02	6/16/2022 15:52	10.91
6/16/2022 16:32	-0.03	6/17/2022 15:22	0.63	6/17/2022 15:45	3.13	6/17/2022 17:08	-0.06	6/16/2022 15:53	10.92
6/16/2022 16:33	-0.03	6/17/2022 15:23	0.62	6/17/2022 15:46	3.12	6/17/2022 17:09	-0.04	6/16/2022 15:54	10.91
6/16/2022 16:34	-0.03	6/17/2022 15:24	0.65	6/17/2022 15:47	3.11	6/17/2022 17:10	-0.05	6/16/2022 15:55	10.97
6/16/2022 16:35	-0.03	6/17/2022 15:25	0.62	6/17/2022 15:48	3.11	6/17/2022 17:11	-0.04	6/16/2022 15:56	10.92
6/16/2022 16:36	-0.03	6/17/2022 15:26	0.63	6/17/2022 15:49	3.09	6/17/2022 17:12	-0.04	6/16/2022 15:57	10.91
6/16/2022 16:37	-0.02	6/17/2022 15:27	0.63	6/17/2022 15:50	3.09	6/17/2022 17:13	-0.05	6/16/2022 15:58	10.92
6/16/2022 16:38	-0.03	6/17/2022 15:28	0.62	6/17/2022 15:51	3.12	6/17/2022 17:14	-0.08	6/16/2022 15:59	10.95
6/16/2022 16:39	-0.03	6/17/2022 15:29	0.62	6/17/2022 15:52	3.08	6/17/2022 17:15	-0.05	6/16/2022 16:00	10.87
6/16/2022 16:40	-0.03	6/17/2022 15:30	0.62	6/17/2022 15:53	3.08	6/17/2022 17:16	-0.03	6/16/2022 16:01	10.88
6/16/2022 16:41	-0.05	6/17/2022 15:31	0.62	6/17/2022 15:54	3.09	6/17/2022 17:17	-0.05	6/16/2022 16:02	10.93
6/16/2022 16:42	-0.03	6/17/2022 15:32	0.65	6/17/2022 15:55	3.11	6/17/2022 17:18	-0.08	6/16/2022 16:03	10.94
6/16/2022 16:43	-0.03	6/17/2022 15:33	0.63	6/17/2022 15:56	3.10	6/17/2022 17:19	-0.01	6/16/2022 16:04	10.92
6/16/2022 16:44	-0.03	6/17/2022 15:34	0.62	6/17/2022 15:57	3.12	6/17/2022 17:20	-0.05	6/16/2022 16:05	10.92
6/16/2022 16:45	-0.03	6/17/2022 15:35	0.65	6/17/2022 15:58	3.10	6/17/2022 17:21	-0.05	6/16/2022 16:06	10.89
6/16/2022 16:46	-0.03	6/17/2022 15:36	0.62	6/17/2022 15:59	3.10	6/17/2022 17:22	-0.03	6/16/2022 16:07	10.94
6/16/2022 16:47	-0.03	6/17/2022 15:37	0.62	6/17/2022 16:00	3.12	6/17/2022 17:23	-0.04	6/16/2022 16:08	10.94
6/16/2022 16:48	-0.03	6/17/2022 15:38	0.64	6/17/2022 16:01	3.13	6/17/2022 17:24	-0.06	6/16/2022 16:09	10.94
6/16/2022 16:49	-0.03	6/17/2022 15:39	0.62	6/17/2022 16:02	3.14	6/17/2022 17:25	-0.06	6/16/2022 16:10	10.92
6/16/2022 16:50	-0.03	6/17/2022 15:40	0.62	6/17/2022 16:03	3.12	6/17/2022 17:26	-0.06	6/16/2022 16:11	10.93
6/16/2022 16:51	-0.03	6/17/2022 15:41	0.62	6/17/2022 16:04	3.12	6/17/2022 17:27	-0.05	6/16/2022 16:12	10.91
6/16/2022 16:52	-0.03	6/17/2022 15:42	0.64	6/17/2022 16:05	3.12	6/17/2022 17:28	-0.07	6/16/2022 16:13	10.92
6/16/2022 16:53	-0.03	6/17/2022 15:43	0.62	6/17/2022 16:06	3.10	6/17/2022 17:29	-0.05	6/16/2022 16:14	10.94
6/16/2022 16:54	-0.03	6/17/2022 15:44	0.62	6/17/2022 16:07	3.11	6/17/2022 17:30	-0.07	6/16/2022 16:15	10.95
6/16/2022 16:55	-0.03	6/17/2022 15:45	0.62	6/17/2022 16:08	3.15	6/17/2022 17:31	-0.06	6/16/2022 16:16	10.92
6/16/2022 16:56	-0.02	6/17/2022 15:46	0.62	6/17/2022 16:09	3.14	6/17/2022 17:32	-0.06	6/16/2022 16:17	10.98
6/16/2022 16:57	-0.03	6/17/2022 15:47	0.62	6/17/2022 16:10	3.11	6/17/2022 17:33	-0.04	6/16/2022 16:18	10.96
6/16/2022 16:58	-0.03	6/17/2022 15:48	0.62	6/17/2022 16:11	3.12	6/17/2022 17:34	-0.07	6/16/2022 16:19	10.96
6/16/2022 16:59	-0.03	6/17/2022 15:49	0.62	6/17/2022 16:12	3.09	6/17/2022 17:35	-0.03	6/16/2022 16:20	10.92
6/16/2022 17:00	-0.03	6/17/2022 15:50	0.62	6/17/2022 16:13	3.14	6/17/2022 17:36	-0.03	6/16/2022 16:21	10.94
6/16/2022 17:01	-0.03	6/17/2022 15:51	0.64	6/17/2022 16:14	3.11	6/17/2022 17:37	-0.05	6/16/2022 16:22	10.95
6/16/2022 17:02	-0.03	6/17/2022 15:52	0.62	6/17/2022 16:15	3.12	6/17/2022 17:38	-0.05	6/16/2022 16:23	10.90
6/16/2022 17:03	-0.03	6/17/2022 15:53	0.62	6/17/2022 16:16	3.09	6/17/2022 17:39	-0.05	6/16/2022 16:24	10.94
6/16/2022 17:04	-0.03	6/17/2022 15:54	0.62	6/17/2022 16:17	3.12	6/17/2022 17:40	-0.05	6/16/2022 16:25	10.94
6/16/2022 17:05	-0.03	6/17/2022 15:55	0.64	6/17/2022 16:18	3.11	6/17/2022 17:41	-0.05	6/16/2022 16:26	10.97
6/16/2022 17:06	-0.03	6/17/2022 15:56	0.62	6/17/2022 16:19	3.13	6/17/2022 17:42	-0.05	6/16/2022 16:27	10.92
6/16/2022 17:07	-0.03	6/17/2022 15:57	0.62	6/17/2022 16:20	3.07	6/17/2022 17:43	-0.05	6/16/2022 16:28	10.91
6/16/2022 17:08	-0.03	6/17/2022 15:58	0.62	6/17/2022 16:21	3.11	6/17/2022 17:44	-0.05	6/16/2022 16:29	10.91
6/16/2022 17:09	-0.03	6/17/2022 15:59	0.62	6/17/2022 16:22	3.11	6/17/2022 17:45	-0.08	6/16/2022 16:30	10.92
6/16/2022 17:10	-0.03	6/17/2022 16:00	0.62	6/17/2022 16:23	3.12	6/17/2022 17:46	-0.07	6/16/2022 16:31	10.90
6/16/2022 17:11	-0.03	6/17/2022 16:01	0.61	6/17/2022 16:24	3.10	6/17/2022 17:47	-0.07	6/16/2022 16:32	10.91
6/16/2022 17:12	-0.03	6/17/2022 16:02	0.62	6/17/2022 16:25	3.10	6/17/2022 17:48	-0.07	6/16/2022 16:33	10.90
6/16/2022 17:13	-0.03	6/17/2022 16:03	0.62	6/17/2022 16:26	3.16	6/17/2022 17:49	-0.07	6/16/2022 16:34	10.95
6/16/2022 17:14	-0.03	6/17/2022 16:04	0.62	6/17/2022 16:27	3.11	6/17/2022 17:50	-0.06	6/16/2022 16:35	10.95
6/16/2022 17:15	-0.03	6/17/2022 16:05	0.62	6/17/2022 16:28	3.12	6/17/2022 17:51	-0.03	6/16/2022 16:36	10.96
6/16/2022 17:16	-0.03	6/17/2022 16:06	0.61	6/17/2022 16:29	3.11	6/17/2022 17:52	-0.05	6/16/2022 16:37	10.92
6/16/2022 17:17	-0.03	6/17/2022 16:07	0.62	6/17/2022 16:30	3.13	6/17/2022 17:53	-0.05	6/16/2022 16:38	10.95
6/16/2022 17:18	-0.03	6/17/2022 16:08	0.62	6/17/2022 16:31	3.12	6/17/2022 17:54	-0.04	6/16/2022 16:39	10.92
6/16/2022 17:19	-0.03	6/17/2022 16:09	0.62	6/17/2022 16:32	3.08	6/17/2022 17:55	-0.05	6/16/2022 16:40	10.92
6/16/2022 17:20	-0.03	6/17/2022 16:10	0.61	6/17/2022 16:33	3.12	6/17/2022 17:56	-0.02	6/16/2022 16:41	10.90
6/16/2022 17:21	-0.03	6/17/2022 16:11	0.63	6/17/2022 16:34	3.10	6/17/2022 17:57	-0.02	6/16/2022 16:42	10.93
6/16/2022 17:22	-0.03	6/17/2022 16:12	0.64	6/17/2022 16:35	3.09	6/17/2022 17:58	-0.07	6/16/2022 16:43	10.94
6/16/2022 17:23	-0.03	6/17/2022 16:13	0.62	6/17/2022 16:36	3.10	6/17/2022 17:59	-0.06	6/16/2022 16:44	10.92
6/16/2022 17:24	-0.03	6/17/2022 16:14	0.61	6/17/2022 16:37	3.09	6/17/2022 18:00	-0.06	6/16/2022 16:45	10.88
6/16/2022 17:25	-0.03	6/17/2022 16:15	0.61	6/17/2022 16:38	3.10	6/17/2022 18:01	-0.09	6/16/2022 16:46	10.93
6/16/2022 17:26	-0.03	6/17/2022 16:16	0.61	6/17/2022 16:39	3.07	6/17/2022 18:02	-0.05	6/16/2022 16:47	10.92
6/16/2022 17:27	-0.03	6/17/2022 16:17	0.61	6/17/2022 16:40	3.11	6/17/2022 18:03	-0.05	6/16/2022 16:48	10.96
6/16/2022 17:28	-0.03	6/17/2022 16:18	0.61	6/17/2022 16:41	3.11	6/17/2022 18:04	-0.08	6/16/2022 16:49	10.95
6/16/2022 17:29	-0.03	6/17/2022 16:19	0.63	6/17/2022 16:42	3.09	6/17/2022 18:05	-0.06	6/16/2022 16:50	10.93
6/16/2022 17:30	-0.03	6/17/2022 16:20	0.61	6/17/2022 16:43	3.11	6/17/2022 18:06	-0.07	6/16/2022 16:51	10.90
6/16/2022 17:31	-0.03	6/17/2022 16:21	0.62	6/17/2022 16:44	3.12	6/17/2022 18:07	-0.05	6/16/2022 16:52	10.90
6/16/2022 17:32	-0.03	6/17/2022 16:22	0.61	6/17/2022 16:45	3.10	6/17/2022 18:08	-0.10	6/16/2022 16:53	10.87
6/16/2022 17:33	-0.03	6/17/2022 16:23	0.61	6/17/2022 16:46	3.11	6/17/2022 18:09	-0.02	6/16/2022 16:54	10.86
6/16/2022 17:34	-0.03	6/17/2022 16:24	0.61	6/17/2022 16:47	3.09	6/17/2022 18:10	-0.03	6/16/2022 16:55	10.89
6/16/2022 17:35	-0.03	6/17/2022 16:25	0.61	6/17/2022 16:48	3.09	6/17/2022 18:11	-0.07	6/16/2022 16:56	10.94
6/16/2022 17:36	-0.03	6/17/2022 16:26	0.61	6/17/2022 16:49	3.11	6/17/2022 18:12	-0.09	6/16/2022 16:57	10.88

6/16/2022 17:37	-0.03	6/17/2022 16:27	0.61	6/17/2022 16:50	3.09	6/17/2022 18:13	-0.10	6/16/2022 16:58	10.90
6/16/2022 17:38	-0.03	6/17/2022 16:28	0.61	6/17/2022 16:51	3.09	6/17/2022 18:14	-0.06	6/16/2022 16:59	10.96
6/16/2022 17:39	-0.03	6/17/2022 16:29	0.61	6/17/2022 16:52	3.11	6/17/2022 18:15	-0.08	6/16/2022 17:00	10.90
6/16/2022 17:40	-0.03	6/17/2022 16:30	0.60	6/17/2022 16:53	3.08	6/17/2022 18:16	-0.06	6/16/2022 17:01	10.94
6/16/2022 17:41	-0.03	6/17/2022 16:31	0.61	6/17/2022 16:54	3.10	6/17/2022 18:17	-0.04	6/16/2022 17:02	10.91
6/16/2022 17:42	-0.03	6/17/2022 16:32	0.61	6/17/2022 16:55	3.11	6/17/2022 18:18	-0.09	6/16/2022 17:03	10.93
6/16/2022 17:43	-0.03	6/17/2022 16:33	0.61	6/17/2022 16:56	3.12	6/17/2022 18:19	-0.07	6/16/2022 17:04	10.89
6/16/2022 17:44	-0.03	6/17/2022 16:34	0.61	6/17/2022 16:57	3.12	6/17/2022 18:20	-0.10	6/16/2022 17:05	10.88
6/16/2022 17:45	-0.03	6/17/2022 16:35	0.61	6/17/2022 16:58	3.09	6/17/2022 18:21	-0.06	6/16/2022 17:06	10.94
6/16/2022 17:46	-0.03	6/17/2022 16:36	0.61	6/17/2022 16:59	3.08	6/17/2022 18:22	-0.07	6/16/2022 17:07	10.92
6/16/2022 17:47	-0.04	6/17/2022 16:37	0.61	6/17/2022 17:00	3.11	6/17/2022 18:23	-0.08	6/16/2022 17:08	10.89
6/16/2022 17:48	-0.03	6/17/2022 16:38	0.61	6/17/2022 17:01	3.09	6/17/2022 18:24	-0.07	6/16/2022 17:09	10.87
6/16/2022 17:49	-0.03	6/17/2022 16:39	0.60	6/17/2022 17:02	3.10	6/17/2022 18:25	-0.07	6/16/2022 17:10	10.88
6/16/2022 17:50	-0.03	6/17/2022 16:40	0.61	6/17/2022 17:03	3.12	6/17/2022 18:26	-0.04	6/16/2022 17:11	10.87
6/16/2022 17:51	-0.03	6/17/2022 16:41	0.61	6/17/2022 17:04	3.13	6/17/2022 18:27	-0.05	6/16/2022 17:12	10.92
6/16/2022 17:52	-0.03	6/17/2022 16:42	0.60	6/17/2022 17:05	3.12	6/17/2022 18:28	-0.07	6/16/2022 17:13	10.91
6/16/2022 17:53	-0.03	6/17/2022 16:43	0.63	6/17/2022 17:06	3.11	6/17/2022 18:29	-0.04	6/16/2022 17:14	10.92
6/16/2022 17:54	-0.03	6/17/2022 16:44	0.60	6/17/2022 17:07	3.12	6/17/2022 18:30	-0.02	6/16/2022 17:15	10.91
6/16/2022 17:55	-0.03	6/17/2022 16:45	0.61	6/17/2022 17:08	3.09	6/17/2022 18:31	-0.07	6/16/2022 17:16	10.86
6/16/2022 17:56	-0.04	6/17/2022 16:46	0.61	6/17/2022 17:09	3.11	6/17/2022 18:32	-0.10	6/16/2022 17:17	10.93
6/16/2022 17:57	-0.03	6/17/2022 16:47	0.61	6/17/2022 17:10	3.12	6/17/2022 18:33	-0.05	6/16/2022 17:18	10.86
6/16/2022 17:58	-0.03	6/17/2022 16:48	0.61	6/17/2022 17:11	3.10	6/17/2022 18:34	-0.03	6/16/2022 17:19	10.90
6/16/2022 17:59	-0.03	6/17/2022 16:49	0.60	6/17/2022 17:12	3.11	6/17/2022 18:35	-0.08	6/16/2022 17:20	10.89
6/16/2022 18:00	-0.03	6/17/2022 16:50	0.60	6/17/2022 17:13	3.09	6/17/2022 18:36	-0.10	6/16/2022 17:21	10.89
6/16/2022 18:01	-0.03	6/17/2022 16:51	0.61	6/17/2022 17:14	3.11	6/17/2022 18:37	-0.08	6/16/2022 17:22	10.84
6/16/2022 18:02	-0.03	6/17/2022 16:52	0.60	6/17/2022 17:15	3.09	6/17/2022 18:38	-0.10	6/16/2022 17:23	10.91
6/16/2022 18:03	-0.03	6/17/2022 16:53	0.61	6/17/2022 17:16	3.08	6/17/2022 18:39	-0.07	6/16/2022 17:24	10.88
6/16/2022 18:04	-0.04	6/17/2022 16:54	0.63	6/17/2022 17:17	3.07	6/17/2022 18:40	-0.04	6/16/2022 17:25	10.89
6/16/2022 18:05	-0.03	6/17/2022 16:55	0.60	6/17/2022 17:18	3.12	6/17/2022 18:41	-0.06	6/16/2022 17:26	10.89
6/16/2022 18:06	-0.03	6/17/2022 16:56	0.61	6/17/2022 17:19	3.14	6/17/2022 18:42	-0.03	6/16/2022 17:27	10.90
6/16/2022 18:07	-0.03	6/17/2022 16:57	0.61	6/17/2022 17:20	3.11	6/17/2022 18:43	-0.13	6/16/2022 17:28	10.89
6/16/2022 18:08	-0.04	6/17/2022 16:58	0.61	6/17/2022 17:21	3.14	6/17/2022 18:44	-0.10	6/16/2022 17:29	10.90
6/16/2022 18:09	-0.03	6/17/2022 16:59	0.60	6/17/2022 17:22	3.06	6/17/2022 18:45	-0.06	6/16/2022 17:30	10.87
6/16/2022 18:10	-0.03	6/17/2022 17:00	0.63	6/17/2022 17:23	3.10	6/17/2022 18:46	-0.09	6/16/2022 17:31	10.92
6/16/2022 18:11	-0.04	6/17/2022 17:01	0.61	6/17/2022 17:24	3.09	6/17/2022 18:47	-0.11	6/16/2022 17:32	10.91
6/16/2022 18:12	-0.03	6/17/2022 17:02	0.61	6/17/2022 17:25	3.13	6/17/2022 18:48	-0.08	6/16/2022 17:33	10.93
6/16/2022 18:13	-0.03	6/17/2022 17:03	0.60	6/17/2022 17:26	3.12	6/17/2022 18:49	-0.09	6/16/2022 17:34	10.89
6/16/2022 18:14	-0.03	6/17/2022 17:04	0.60	6/17/2022 17:27	3.13	6/17/2022 18:50	-0.10	6/16/2022 17:35	10.92
6/16/2022 18:15	-0.03	6/17/2022 17:05	0.60	6/17/2022 17:28	3.09	6/17/2022 18:51	-0.11	6/16/2022 17:36	10.91
6/16/2022 18:16	-0.03	6/17/2022 17:06	0.61	6/17/2022 17:29	3.10	6/17/2022 18:52	-0.08	6/16/2022 17:37	10.90
6/16/2022 18:17	-0.03	6/17/2022 17:07	0.63	6/17/2022 17:30	3.10	6/17/2022 18:53	-0.06	6/16/2022 17:38	10.90
6/16/2022 18:18	-0.04	6/17/2022 17:08	0.63	6/17/2022 17:31	3.11	6/17/2022 18:54	-0.03	6/16/2022 17:39	10.91
6/16/2022 18:19	-0.04	6/17/2022 17:09	0.61	6/17/2022 17:32	3.10	6/17/2022 18:55	-0.07	6/16/2022 17:40	10.90
6/16/2022 18:20	-0.04	6/17/2022 17:10	0.61	6/17/2022 17:33	3.11	6/17/2022 18:56	-0.09	6/16/2022 17:41	10.90
6/16/2022 18:21	-0.04	6/17/2022 17:11	0.60	6/17/2022 17:34	3.12	6/17/2022 18:57	-0.05	6/16/2022 17:42	10.93
6/16/2022 18:22	-0.04	6/17/2022 17:12	0.60	6/17/2022 17:35	3.08	6/17/2022 18:58	-0.13	6/16/2022 17:43	10.88
6/16/2022 18:23	-0.03	6/17/2022 17:13	0.60	6/17/2022 17:36	3.09	6/17/2022 18:59	-0.08	6/16/2022 17:44	10.91
6/16/2022 18:24	-0.03	6/17/2022 17:14	0.61	6/17/2022 17:37	3.09	6/17/2022 19:00	-0.05	6/16/2022 17:45	10.87
6/16/2022 18:25	-0.03	6/17/2022 17:15	0.61	6/17/2022 17:38	3.11	6/17/2022 19:01	-0.08	6/16/2022 17:46	10.92
6/16/2022 18:26	-0.03	6/17/2022 17:16	0.60	6/17/2022 17:39	3.08	6/17/2022 19:02	-0.04	6/16/2022 17:47	10.87
6/16/2022 18:27	-0.03	6/17/2022 17:17	0.60	6/17/2022 17:40	3.12	6/17/2022 19:03	-0.09	6/16/2022 17:48	10.91
6/16/2022 18:28	-0.03	6/17/2022 17:18	0.60	6/17/2022 17:41	3.10	6/17/2022 19:04	-0.08	6/16/2022 17:49	10.88
6/16/2022 18:29	-0.03	6/17/2022 17:19	0.60	6/17/2022 17:42	3.09	6/17/2022 19:05	-0.11	6/16/2022 17:50	10.90
6/16/2022 18:30	-0.03	6/17/2022 17:20	0.62	6/17/2022 17:43	3.07	6/17/2022 19:06	-0.10	6/16/2022 17:51	10.88
6/16/2022 18:31	-0.03	6/17/2022 17:21	0.60	6/17/2022 17:44	3.10	6/17/2022 19:07	-0.10	6/16/2022 17:52	10.90
6/16/2022 18:32	-0.03	6/17/2022 17:22	0.60	6/17/2022 17:45	3.08	6/17/2022 19:08	-0.10	6/16/2022 17:53	10.88
6/16/2022 18:33	-0.03	6/17/2022 17:23	0.60	6/17/2022 17:46	3.09	6/17/2022 19:09	-0.06	6/16/2022 17:54	10.88
6/16/2022 18:34	-0.03	6/17/2022 17:24	0.60	6/17/2022 17:47	3.11	6/17/2022 19:10	-0.09	6/16/2022 17:55	10.94
6/16/2022 18:35	-0.03	6/17/2022 17:25	0.60	6/17/2022 17:48	3.11	6/17/2022 19:11	-0.08	6/16/2022 17:56	10.92
6/16/2022 18:36	-0.03	6/17/2022 17:26	0.60	6/17/2022 17:49	3.11	6/17/2022 19:12	-0.06	6/16/2022 17:57	10.98
6/16/2022 18:37	-0.03	6/17/2022 17:27	0.60	6/17/2022 17:50	3.12	6/17/2022 19:13	-0.13	6/16/2022 17:58	10.80
6/16/2022 18:38	-0.03	6/17/2022 17:28	0.60	6/17/2022 17:51	3.13	6/17/2022 19:14	-0.07	6/16/2022 17:59	10.95
6/16/2022 18:39	-0.04	6/17/2022 17:29	0.60	6/17/2022 17:52	3.11	6/17/2022 19:15	-0.07	6/16/2022 18:00	10.88
6/16/2022 18:40	-0.03	6/17/2022 17:30	0.60	6/17/2022 17:53	3.09	6/17/2022 19:16	-0.08	6/16/2022 18:01	10.93
6/16/2022 18:41	-0.03	6/17/2022 17:31	0.60	6/17/2022 17:54	3.12	6/17/2022 19:17	-0.09	6/16/2022 18:02	10.86
6/16/2022 18:42	-0.04	6/17/2022 17:32	0.62	6/17/2022 17:55	3.12	6/17/2022 19:18	-0.07	6/16/2022 18:03	10.91
6/16/2022 18:43	-0.03	6/17/2022 17:33	0.62	6/17/2022 17:56	3.13	6/17/2022 19:19	-0.10	6/16/2022 18:04	10.96
6/16/2022 18:44	-0.03	6/17/2022 17:34	0.60	6/17/2022 17:57	3.13	6/17/2022 19:20	-0.08	6/16/2022 18:05	10.92
6/16/2022 18:45	-0.03	6/17/2022 17:35	0.62	6/17/2022 17:58	3.10	6/17/2022 19:21	-0.10	6/16/2022 18:06	10.97
6/16/2022 18:46	-0.03	6/17/2022 17:36	0.60	6/17/2022 17:59	3.11	6/17/2022 19:22	-0.09	6/16/2022 18:07	10.93
6/16/2022 18:47	-0.03	6/17/2022 17:37	0.60	6/17/2022 18:00	3.10	6/17/2022 19:23	-0.04	6/16/2022 18:08	10.90
6/16/2022 18:48	-0.03	6/17/2022 17:38	0.62	6/17/2022 18:01	3.10	6/17/2022 19:24	-0.09	6/16/2022 18:09	10.92
6/16/2022 18:49	-0.03	6/17/2022 17:39	0.60	6/17/2022 18:02	3.12	6/17/2022 19:25	-0.05	6/16/2022 18:10	10.93
6/16/2022 18:50	-0.03	6/17/2022 17:40	0.62	6/17/2022 18:03	3.08	6/17/2022 19:26	-0.08	6/16/2022 18:11	10.87
6/16/2022 18:51	-0.03	6/17/2022 17:41	0.62	6/17/2022 18:04	3.08	6/17/2022 19:27	-0.10	6/16/2022 18:12	10.96
6/16/2022 18:52	-0.03	6/17/2022 17:42	0.60	6/17/2022 18:05	3.12	6/17/2022 19:28	-0.07	6/16/2022 18:13	10.88
6/16/2022 18:53	-0.03	6/17/2022 17:43	0.60	6/17/2022 18:06	3.11	6/17/2022 19:29	-0.07	6/16/2022 18:14	10.88
6/16/2022 18:54	-0.04	6/17/2022 17:44	0.62	6/17/2022 18:07	3.13	6/17/2022 19:30	-0.12	6/16/2022 18:15	10.95
6/16/2022 18:55	-0.03	6/17/2022 17:45	0.60	6/17/2022 18:08	3.14	6/17/2022 19:31	-0.10	6/16/2022 18:16	10.92
6/16/2022 18:56	-0.03	6/17/2022 17:46	0.60	6/17/2022 18:09	3.13	6/17/2022 19:32	-0.10	6/16/2022 18:17	10.90
6/16/2022 18:57	-0.03	6/17/2022 17:47	0.62	6/17/2022 18:10	3.08	6/17/2022 19:33	-0.06	6/16/2022 18:18	10.91
6/16/2022 18:58	-0.03	6/17/2022 17:48	0.60	6/17/2022 18:11	3.11	6/17/2022 19:34	-0.04	6/16/2022 18:19	10.88
6/16/2022 18:59	-0.04	6/17/2022 17:49	0.60	6/17/2022 18:12	3.10	6/17/2022 19:35	-0.14	6/16/2022 18:20	10.92
6/16/2022 19:00	-0.04	6/17/2022 17:50	0.60	6/17/2022 18:13	3.10	6/17/2022 19:36	-0.06	6/16/2022 18:21	10.95
6/16/2022 19:01	-0.03	6/17/2022 17:51	0.60	6/17/2022 18:14	3.12	6/17/2022 19:37	-0.10	6/16/2022 18:22	10.87
6/16/2022 19:02	-0.03	6/17/2022 17:52	0.60	6/17/2022 18:15	3.12	6/17/2022 19:38	-0.10	6/16/2022 18:23	10.94
6/16/2022 19:03	-0.04	6/17/2022 17:53	0.60	6/17/2022 18:16	3.10	6/17/2022 19:39	-0.08	6/16/2022 18:24	10.90
6/16/2022 19:04	-0.04	6/17/2022 17:54	0.60	6/17/2022 18:17	3.10	6/17/2022 19:40	-0.06	6/16/2022 18:25	10.91

6/16/2022 19:05	-0.04	6/17/2022 17:55	0.60	6/17/2022 18:18	3.10	6/17/2022 19:41	-0.07	6/16/2022 18:26	10.98
6/16/2022 19:06	-0.04	6/17/2022 17:56	0.60	6/17/2022 18:19	3.12	6/17/2022 19:42	-0.09	6/16/2022 18:27	10.92
6/16/2022 19:07	-0.04	6/17/2022 17:57	0.60	6/17/2022 18:20	3.12	6/17/2022 19:43	-0.07	6/16/2022 18:28	10.92
6/16/2022 19:08	-0.04	6/17/2022 17:58	0.60	6/17/2022 18:21	3.10	6/17/2022 19:44	-0.10	6/16/2022 18:29	10.89
6/16/2022 19:09	-0.03	6/17/2022 17:59	0.60	6/17/2022 18:22	3.10	6/17/2022 19:45	-0.09	6/16/2022 18:30	10.88
6/16/2022 19:10	-0.04	6/17/2022 18:00	0.60	6/17/2022 18:23	3.12	6/17/2022 19:46	-0.08	6/16/2022 18:31	10.91
6/16/2022 19:11	-0.03	6/17/2022 18:01	0.60	6/17/2022 18:24	3.09	6/17/2022 19:47	-0.10	6/16/2022 18:32	10.88
6/16/2022 19:12	-0.04	6/17/2022 18:02	0.60	6/17/2022 18:25	3.13	6/17/2022 19:48	-0.08	6/16/2022 18:33	10.92
6/16/2022 19:13	-0.04	6/17/2022 18:03	0.60	6/17/2022 18:26	3.12	6/17/2022 19:49	-0.11	6/16/2022 18:34	10.89
6/16/2022 19:14	-0.03	6/17/2022 18:04	0.60	6/17/2022 18:27	3.13	6/17/2022 19:50	-0.12	6/16/2022 18:35	10.91
6/16/2022 19:15	-0.03	6/17/2022 18:05	0.60	6/17/2022 18:28	3.09	6/17/2022 19:51	-0.06	6/16/2022 18:36	10.90
6/16/2022 19:16	-0.03	6/17/2022 18:06	0.59	6/17/2022 18:29	3.11	6/17/2022 19:52	-0.14	6/16/2022 18:37	10.89
6/16/2022 19:17	-0.03	6/17/2022 18:07	0.60	6/17/2022 18:30	3.10	6/17/2022 19:53	-0.07	6/16/2022 18:38	10.86
6/16/2022 19:18	-0.03	6/17/2022 18:08	0.60	6/17/2022 18:31	3.12	6/17/2022 19:54	-0.08	6/16/2022 18:39	10.88
6/16/2022 19:19	-0.04	6/17/2022 18:09	0.59	6/17/2022 18:32	3.11	6/17/2022 19:55	-0.07	6/16/2022 18:40	10.88
6/16/2022 19:20	-0.04	6/17/2022 18:10	0.60	6/17/2022 18:33	3.13	6/17/2022 19:56	-0.07	6/16/2022 18:41	10.95
6/16/2022 19:21	-0.04	6/17/2022 18:11	0.60	6/17/2022 18:34	3.10	6/17/2022 19:57	-0.07	6/16/2022 18:42	10.92
6/16/2022 19:22	-0.04	6/17/2022 18:12	0.60	6/17/2022 18:35	3.14	6/17/2022 19:58	-0.10	6/16/2022 18:43	10.92
6/16/2022 19:23	-0.03	6/17/2022 18:13	0.60	6/17/2022 18:36	3.11	6/17/2022 19:59	-0.07	6/16/2022 18:44	10.89
6/16/2022 19:24	-0.04	6/17/2022 18:14	0.60	6/17/2022 18:37	3.13	6/17/2022 20:00	-0.10	6/16/2022 18:45	10.93
6/16/2022 19:25	-0.03	6/17/2022 18:15	0.62	6/17/2022 18:38	3.09	6/17/2022 20:01	-0.06	6/16/2022 18:46	10.94
6/16/2022 19:26	-0.03	6/17/2022 18:16	0.60	6/17/2022 18:39	3.09	6/17/2022 20:02	-0.06	6/16/2022 18:47	10.90
6/16/2022 19:27	-0.03	6/17/2022 18:17	0.60	6/17/2022 18:40	3.14	6/17/2022 20:03	-0.12	6/16/2022 18:48	10.87
6/16/2022 19:28	-0.04	6/17/2022 18:18	0.60	6/17/2022 18:41	3.12	6/17/2022 20:04	-0.05	6/16/2022 18:49	10.92
6/16/2022 19:29	-0.04	6/17/2022 18:19	0.60	6/17/2022 18:42	3.09	6/17/2022 20:05	-0.08	6/16/2022 18:50	10.95
6/16/2022 19:30	-0.03	6/17/2022 18:20	0.60	6/17/2022 18:43	3.13	6/17/2022 20:06	-0.08	6/16/2022 18:51	10.94
6/16/2022 19:31	-0.04	6/17/2022 18:21	0.60	6/17/2022 18:44	3.14	6/17/2022 20:07	-0.09	6/16/2022 18:52	10.94
6/16/2022 19:32	-0.04	6/17/2022 18:22	0.60	6/17/2022 18:45	3.14	6/17/2022 20:08	-0.07	6/16/2022 18:53	10.94
6/16/2022 19:33	-0.04	6/17/2022 18:23	0.60	6/17/2022 18:46	3.09	6/17/2022 20:09	-0.10	6/16/2022 18:54	10.85
6/16/2022 19:34	-0.04	6/17/2022 18:24	0.60	6/17/2022 18:47	3.11	6/17/2022 20:10	-0.10	6/16/2022 18:55	10.90
6/16/2022 19:35	-0.04	6/17/2022 18:25	0.62	6/17/2022 18:48	3.09	6/17/2022 20:11	-0.09	6/16/2022 18:56	10.91
6/16/2022 19:36	-0.04	6/17/2022 18:26	0.62	6/17/2022 18:49	3.11	6/17/2022 20:12	-0.08	6/16/2022 18:57	10.88
6/16/2022 19:37	-0.03	6/17/2022 18:27	0.62	6/17/2022 18:50	3.13	6/17/2022 20:13	-0.09	6/16/2022 18:58	10.94
6/16/2022 19:38	-0.02	6/17/2022 18:28	0.60	6/17/2022 18:51	3.12	6/17/2022 20:14	-0.07	6/16/2022 18:59	10.91
6/16/2022 19:39	-0.03	6/17/2022 18:29	0.60	6/17/2022 18:52	3.11	6/17/2022 20:15	-0.08	6/16/2022 19:00	10.94
6/16/2022 19:40	-0.04	6/17/2022 18:30	0.60	6/17/2022 18:53	3.10	6/17/2022 20:16	-0.12	6/16/2022 19:01	10.95
6/16/2022 19:41	-0.02	6/17/2022 18:31	0.60	6/17/2022 18:54	3.13	6/17/2022 20:17	-0.12	6/16/2022 19:02	10.92
6/16/2022 19:42	-0.04	6/17/2022 18:32	0.60	6/17/2022 18:55	3.12	6/17/2022 20:18	-0.08	6/16/2022 19:03	10.91
6/16/2022 19:43	-0.04	6/17/2022 18:33	0.62	6/17/2022 18:56	3.14	6/17/2022 20:19	-0.13	6/16/2022 19:04	10.91
6/16/2022 19:44	-0.04	6/17/2022 18:34	0.62	6/17/2022 18:57	3.11	6/17/2022 20:20	-0.11	6/16/2022 19:05	10.96
6/16/2022 19:45	-0.04	6/17/2022 18:35	0.60	6/17/2022 18:58	3.11	6/17/2022 20:21	-0.07	6/16/2022 19:06	10.90
6/16/2022 19:46	-0.04	6/17/2022 18:36	0.60	6/17/2022 18:59	3.11	6/17/2022 20:22	-0.09	6/16/2022 19:07	10.88
6/16/2022 19:47	-0.02	6/17/2022 18:37	0.60	6/17/2022 19:00	3.13	6/17/2022 20:23	-0.09	6/16/2022 19:08	10.89
6/16/2022 19:48	-0.04	6/17/2022 18:38	0.60	6/17/2022 19:01	3.11	6/17/2022 20:24	-0.07	6/16/2022 19:09	10.95
6/16/2022 19:49	-0.04	6/17/2022 18:39	0.62	6/17/2022 19:02	3.12	6/17/2022 20:25	-0.07	6/16/2022 19:10	10.90
6/16/2022 19:50	-0.02	6/17/2022 18:40	0.60	6/17/2022 19:03	3.12	6/17/2022 20:26	-0.09	6/16/2022 19:11	10.91
6/16/2022 19:51	-0.04	6/17/2022 18:41	0.60	6/17/2022 19:04	3.13	6/17/2022 20:27	-0.10	6/16/2022 19:12	10.93
6/16/2022 19:52	-0.04	6/17/2022 18:42	0.60	6/17/2022 19:05	3.10	6/17/2022 20:28	-0.10	6/16/2022 19:13	10.97
6/16/2022 19:53	-0.04	6/17/2022 18:43	0.60	6/17/2022 19:06	3.11	6/17/2022 20:29	-0.10	6/16/2022 19:14	10.94
6/16/2022 19:54	-0.04	6/17/2022 18:44	0.62	6/17/2022 19:07	3.12	6/17/2022 20:30	-0.14	6/16/2022 19:15	10.92
6/16/2022 19:55	-0.04	6/17/2022 18:45	0.60	6/17/2022 19:08	3.13	6/17/2022 20:31	-0.09	6/16/2022 19:16	10.94
6/16/2022 19:56	-0.04	6/17/2022 18:46	0.60	6/17/2022 19:09	3.12	6/17/2022 20:32	-0.10	6/16/2022 19:17	10.91
6/16/2022 19:57	-0.04	6/17/2022 18:47	0.63	6/17/2022 19:10	3.12	6/17/2022 20:33	-0.09	6/16/2022 19:18	10.93
6/16/2022 19:58	-0.04	6/17/2022 18:48	0.60	6/17/2022 19:11	3.10	6/17/2022 20:34	-0.08	6/16/2022 19:19	10.96
6/16/2022 19:59	-0.04	6/17/2022 18:49	0.61	6/17/2022 19:12	3.11	6/17/2022 20:35	-0.05	6/16/2022 19:20	10.95
6/16/2022 20:00	-0.04	6/17/2022 18:50	0.60	6/17/2022 19:13	3.16	6/17/2022 20:36	-0.06	6/16/2022 19:21	10.92
6/16/2022 20:01	-0.04	6/17/2022 18:51	0.60	6/17/2022 19:14	3.13	6/17/2022 20:37	-0.07	6/16/2022 19:22	10.93
6/16/2022 20:02	-0.04	6/17/2022 18:52	0.60	6/17/2022 19:15	3.11	6/17/2022 20:38	-0.11	6/16/2022 19:23	10.98
6/16/2022 20:03	-0.04	6/17/2022 18:53	0.60	6/17/2022 19:16	3.13	6/17/2022 20:39	-0.09	6/16/2022 19:24	10.95
6/16/2022 20:04	-0.04	6/17/2022 18:54	0.60	6/17/2022 19:17	3.14	6/17/2022 20:40	-0.11	6/16/2022 19:25	10.92
6/16/2022 20:05	-0.04	6/17/2022 18:55	0.62	6/17/2022 19:18	3.11	6/17/2022 20:41	-0.09	6/16/2022 19:26	10.92
6/16/2022 20:06	-0.04	6/17/2022 18:56	0.60	6/17/2022 19:19	3.10	6/17/2022 20:42	-0.09	6/16/2022 19:27	10.93
6/16/2022 20:07	-0.04	6/17/2022 18:57	0.60	6/17/2022 19:20	3.10	6/17/2022 20:43	-0.09	6/16/2022 19:28	10.92
6/16/2022 20:08	-0.03	6/17/2022 18:58	0.61	6/17/2022 19:21	3.12	6/17/2022 20:44	-0.09	6/16/2022 19:29	10.94
6/16/2022 20:09	-0.05	6/17/2022 18:59	0.60	6/17/2022 19:22	3.13	6/17/2022 20:45	-0.10	6/16/2022 19:30	10.89
6/16/2022 20:10	-0.02	6/17/2022 19:00	0.63	6/17/2022 19:23	3.13	6/17/2022 20:46	-0.10	6/16/2022 19:31	10.90
6/16/2022 20:11	-0.02	6/17/2022 19:01	0.61	6/17/2022 19:24	3.13	6/17/2022 20:47	-0.06	6/16/2022 19:32	10.88
6/16/2022 20:12	-0.04	6/17/2022 19:02	0.63	6/17/2022 19:25	3.11	6/17/2022 20:48	-0.12	6/16/2022 19:33	10.90
6/16/2022 20:13	-0.04	6/17/2022 19:03	0.60	6/17/2022 19:26	3.14	6/17/2022 20:49	-0.09	6/16/2022 19:34	10.96
6/16/2022 20:14	-0.04	6/17/2022 19:04	0.61	6/17/2022 19:27	3.14	6/17/2022 20:50	-0.09	6/16/2022 19:35	10.92
6/16/2022 20:15	-0.04	6/17/2022 19:05	0.60	6/17/2022 19:28	3.12	6/17/2022 20:51	-0.06	6/16/2022 19:36	10.90
6/16/2022 20:16	-0.04	6/17/2022 19:06	0.60	6/17/2022 19:29	3.12	6/17/2022 20:52	-0.07	6/16/2022 19:37	10.94
6/16/2022 20:17	-0.02	6/17/2022 19:07	0.62	6/17/2022 19:30	3.13	6/17/2022 20:53	-0.09	6/16/2022 19:38	10.93
6/16/2022 20:18	-0.04	6/17/2022 19:08	0.60	6/17/2022 19:31	3.12	6/17/2022 20:54	-0.09	6/16/2022 19:39	10.95
6/16/2022 20:19	-0.04	6/17/2022 19:09	0.61	6/17/2022 19:32	3.14	6/17/2022 20:55	-0.09	6/16/2022 19:40	10.90
6/16/2022 20:20	-0.04	6/17/2022 19:10	0.60	6/17/2022 19:33	3.13	6/17/2022 20:56	-0.11	6/16/2022 19:41	10.91
6/16/2022 20:21	-0.04	6/17/2022 19:11	0.60	6/17/2022 19:34	3.15	6/17/2022 20:57	-0.13	6/16/2022 19:42	10.94
6/16/2022 20:22	-0.04	6/17/2022 19:12	0.60	6/17/2022 19:35	3.12	6/17/2022 20:58	-0.05	6/16/2022 19:43	10.93
6/16/2022 20:23	-0.04	6/17/2022 19:13	0.60	6/17/2022 19:36	3.12	6/17/2022 20:59	-0.08	6/16/2022 19:44	10.94
6/16/2022 20:24	-0.04	6/17/2022 19:14	0.60	6/17/2022 19:37	3.15	6/17/2022 21:00	-0.10	6/16/2022 19:45	10.90
6/16/2022 20:25	-0.04	6/17/2022 19:15	0.60	6/17/2022 19:38	3.09	6/17/2022 21:01	-0.10	6/16/2022 19:46	10.93
6/16/2022 20:26	-0.02	6/17/2022 19:16	0.60	6/17/2022 19:39	3.11	6/17/2022 21:02	-0.10	6/16/2022 19:47	10.96
6/16/2022 20:27	-0.03	6/17/2022 19:17	0.60	6/17/2022 19:40	3.10	6/17/2022 21:03	-0.13	6/16/2022 19:48	10.94
6/16/2022 20:28	-0.04	6/17/2022 19:18	0.60	6/17/2022 19:41	3.14	6/17/2022 21:04	-0.11	6/16/2022 19:49	10.94
6/16/2022 20:29	-0.04	6/17/2022 19:19	0.62	6/17/2022 19:42	3.14	6/17/2022 21:05	-0.06	6/16/2022 19:50	10.93
6/16/2022 20:30	-0.04	6/17/2022 19:20	0.60	6/17/2022 19:43	3.15	6/17/2022 21:06	-0.10	6/16/2022 19:51	10.96
6/16/2022 20:31	-0.04	6/17/2022 19:21	0.62	6/17/2022 19:44	3.15	6/17/2022 21:07	-0.09	6/16/2022 19:52	10.92
6/16/2022 20:32	-0.04	6/17/2022 19:22	0.60	6/17/2022 19:45	3.12	6/17/2022 21:08	-0.11	6/16/2022 19:53	10.89

6/16/2022 20:33	-0.03	6/17/2022 19:23	0.61	6/17/2022 19:46	3.14	6/17/2022 21:09	-0.10	6/16/2022 19:54	10.91
6/16/2022 20:34	-0.04	6/17/2022 19:24	0.60	6/17/2022 19:47	3.12	6/17/2022 21:10	-0.08	6/16/2022 19:55	10.94
6/16/2022 20:35	-0.04	6/17/2022 19:25	0.60	6/17/2022 19:48	3.13	6/17/2022 21:11	-0.07	6/16/2022 19:56	10.97
6/16/2022 20:36	-0.03	6/17/2022 19:26	0.60	6/17/2022 19:49	3.10	6/17/2022 21:12	-0.13	6/16/2022 19:57	10.91
6/16/2022 20:37	-0.02	6/17/2022 19:27	0.62	6/17/2022 19:50	3.15	6/17/2022 21:13	-0.11	6/16/2022 19:58	10.93
6/16/2022 20:38	-0.04	6/17/2022 19:28	0.60	6/17/2022 19:51	3.13	6/17/2022 21:14	-0.08	6/16/2022 19:59	10.97
6/16/2022 20:39	-0.04	6/17/2022 19:29	0.60	6/17/2022 19:52	3.13	6/17/2022 21:15	-0.07	6/16/2022 20:00	10.92
6/16/2022 20:40	-0.04	6/17/2022 19:30	0.61	6/17/2022 19:53	3.12	6/17/2022 21:16	-0.10	6/16/2022 20:01	10.92
6/16/2022 20:41	-0.04	6/17/2022 19:31	0.61	6/17/2022 19:54	3.12	6/17/2022 21:17	-0.09	6/16/2022 20:02	10.92
6/16/2022 20:42	-0.03	6/17/2022 19:32	0.60	6/17/2022 19:55	3.12	6/17/2022 21:18	-0.06	6/16/2022 20:03	10.93
6/16/2022 20:43	-0.04	6/17/2022 19:33	0.60	6/17/2022 19:56	3.15	6/17/2022 21:19	-0.09	6/16/2022 20:04	10.93
6/16/2022 20:44	-0.03	6/17/2022 19:34	0.63	6/17/2022 19:57	3.12	6/17/2022 21:20	-0.09	6/16/2022 20:05	10.87
6/16/2022 20:45	-0.05	6/17/2022 19:35	0.60	6/17/2022 19:58	3.11	6/17/2022 21:21	-0.10	6/16/2022 20:06	10.91
6/16/2022 20:46	-0.04	6/17/2022 19:36	0.60	6/17/2022 19:59	3.12	6/17/2022 21:22	-0.13	6/16/2022 20:07	10.96
6/16/2022 20:47	-0.04	6/17/2022 19:37	0.60	6/17/2022 20:00	3.13	6/17/2022 21:23	-0.10	6/16/2022 20:08	10.89
6/16/2022 20:48	-0.04	6/17/2022 19:38	0.60	6/17/2022 20:01	3.12	6/17/2022 21:24	-0.09	6/16/2022 20:09	10.90
6/16/2022 20:49	-0.04	6/17/2022 19:39	0.60	6/17/2022 20:02	3.13	6/17/2022 21:25	-0.13	6/16/2022 20:10	10.89
6/16/2022 20:50	-0.03	6/17/2022 19:40	0.60	6/17/2022 20:03	3.13	6/17/2022 21:26	-0.10	6/16/2022 20:11	10.86
6/16/2022 20:51	-0.03	6/17/2022 19:41	0.60	6/17/2022 20:04	3.14	6/17/2022 21:27	-0.10	6/16/2022 20:12	10.93
6/16/2022 20:52	-0.04	6/17/2022 19:42	0.60	6/17/2022 20:05	3.13	6/17/2022 21:28	-0.08	6/16/2022 20:13	10.94
6/16/2022 20:53	-0.02	6/17/2022 19:43	0.60	6/17/2022 20:06	3.14	6/17/2022 21:29	-0.11	6/16/2022 20:14	10.93
6/16/2022 20:54	-0.04	6/17/2022 19:44	0.61	6/17/2022 20:07	3.15	6/17/2022 21:30	-0.12	6/16/2022 20:15	10.91
6/16/2022 20:55	-0.04	6/17/2022 19:45	0.60	6/17/2022 20:08	3.12	6/17/2022 21:31	-0.11	6/16/2022 20:16	10.91
6/16/2022 20:56	-0.03	6/17/2022 19:46	0.61	6/17/2022 20:09	3.11	6/17/2022 21:32	-0.10	6/16/2022 20:17	10.93
6/16/2022 20:57	-0.02	6/17/2022 19:47	0.60	6/17/2022 20:10	3.17	6/17/2022 21:33	-0.09	6/16/2022 20:18	10.95
6/16/2022 20:58	-0.03	6/17/2022 19:48	0.60	6/17/2022 20:11	3.15	6/17/2022 21:34	-0.09	6/16/2022 20:19	10.94
6/16/2022 20:59	-0.04	6/17/2022 19:49	0.61	6/17/2022 20:12	3.13	6/17/2022 21:35	-0.10	6/16/2022 20:20	10.91
6/16/2022 21:00	-0.04	6/17/2022 19:50	0.61	6/17/2022 20:13	3.12	6/17/2022 21:36	-0.10	6/16/2022 20:21	10.91
6/16/2022 21:01	-0.04	6/17/2022 19:51	0.63	6/17/2022 20:14	3.13	6/17/2022 21:37	-0.09	6/16/2022 20:22	10.87
6/16/2022 21:02	-0.03	6/17/2022 19:52	0.62	6/17/2022 20:15	3.10	6/17/2022 21:38	-0.09	6/16/2022 20:23	10.87
6/16/2022 21:03	-0.04	6/17/2022 19:53	0.60	6/17/2022 20:16	3.13	6/17/2022 21:39	-0.11	6/16/2022 20:24	10.91
6/16/2022 21:04	-0.03	6/17/2022 19:54	0.61	6/17/2022 20:17	3.12	6/17/2022 21:40	-0.13	6/16/2022 20:25	10.93
6/16/2022 21:05	-0.04	6/17/2022 19:55	0.61	6/17/2022 20:18	3.13	6/17/2022 21:41	-0.16	6/16/2022 20:26	10.90
6/16/2022 21:06	-0.04	6/17/2022 19:56	0.61	6/17/2022 20:19	3.11	6/17/2022 21:42	-0.08	6/16/2022 20:27	10.97
6/16/2022 21:07	-0.04	6/17/2022 19:57	0.61	6/17/2022 20:20	3.10	6/17/2022 21:43	-0.09	6/16/2022 20:28	10.93
6/16/2022 21:08	-0.02	6/17/2022 19:58	0.61	6/17/2022 20:21	3.10	6/17/2022 21:44	-0.10	6/16/2022 20:29	10.89
6/16/2022 21:09	-0.04	6/17/2022 19:59	0.61	6/17/2022 20:22	3.13	6/17/2022 21:45	-0.10	6/16/2022 20:30	10.92
6/16/2022 21:10	-0.04	6/17/2022 20:00	0.61	6/17/2022 20:23	3.13	6/17/2022 21:46	-0.08	6/16/2022 20:31	10.88
6/16/2022 21:11	-0.04	6/17/2022 20:01	0.61	6/17/2022 20:24	3.12	6/17/2022 21:47	-0.10	6/16/2022 20:32	10.89
6/16/2022 21:12	-0.04	6/17/2022 20:02	0.60	6/17/2022 20:25	3.13	6/17/2022 21:48	-0.10	6/16/2022 20:33	10.92
6/16/2022 21:13	-0.04	6/17/2022 20:03	0.61	6/17/2022 20:26	3.16	6/17/2022 21:49	-0.08	6/16/2022 20:34	10.92
6/16/2022 21:14	-0.04	6/17/2022 20:04	0.61	6/17/2022 20:27	3.13	6/17/2022 21:50	-0.09	6/16/2022 20:35	10.89
6/16/2022 21:15	-0.03	6/17/2022 20:05	0.61	6/17/2022 20:28	3.14	6/17/2022 21:51	-0.11	6/16/2022 20:36	10.87
6/16/2022 21:16	-0.04	6/17/2022 20:06	0.61	6/17/2022 20:29	3.14	6/17/2022 21:52	-0.11	6/16/2022 20:37	10.90
6/16/2022 21:17	-0.04	6/17/2022 20:07	0.61	6/17/2022 20:30	3.15	6/17/2022 21:53	-0.13	6/16/2022 20:38	10.93
6/16/2022 21:18	-0.04	6/17/2022 20:08	0.61	6/17/2022 20:31	3.11	6/17/2022 21:54	-0.12	6/16/2022 20:39	10.95
6/16/2022 21:19	-0.05	6/17/2022 20:09	0.61	6/17/2022 20:32	3.13	6/17/2022 21:55	-0.12	6/16/2022 20:40	10.91
6/16/2022 21:20	-0.04	6/17/2022 20:10	0.63	6/17/2022 20:33	3.14	6/17/2022 21:56	-0.12	6/16/2022 20:41	10.91
6/16/2022 21:21	-0.04	6/17/2022 20:11	0.61	6/17/2022 20:34	3.14	6/17/2022 21:57	-0.13	6/16/2022 20:42	10.91
6/16/2022 21:22	-0.02	6/17/2022 20:12	0.61	6/17/2022 20:35	3.15	6/17/2022 21:58	-0.10	6/16/2022 20:43	10.91
6/16/2022 21:23	-0.04	6/17/2022 20:13	0.61	6/17/2022 20:36	3.13	6/17/2022 21:59	-0.10	6/16/2022 20:44	10.90
6/16/2022 21:24	-0.04	6/17/2022 20:14	0.61	6/17/2022 20:37	3.14	6/17/2022 22:00	-0.12	6/16/2022 20:45	10.89
6/16/2022 21:25	-0.05	6/17/2022 20:15	0.61	6/17/2022 20:38	3.14	6/17/2022 22:01	-0.12	6/16/2022 20:46	10.96
6/16/2022 21:26	-0.02	6/17/2022 20:16	0.60	6/17/2022 20:39	3.12	6/17/2022 22:02	-0.09	6/16/2022 20:47	10.92
6/16/2022 21:27	-0.04	6/17/2022 20:17	0.61	6/17/2022 20:40	3.12	6/17/2022 22:03	-0.11	6/16/2022 20:48	10.93
6/16/2022 21:28	-0.04	6/17/2022 20:18	0.61	6/17/2022 20:41	3.16	6/17/2022 22:04	-0.09	6/16/2022 20:49	10.96
6/16/2022 21:29	-0.05	6/17/2022 20:19	0.61	6/17/2022 20:42	3.11	6/17/2022 22:05	-0.12	6/16/2022 20:50	10.91
6/16/2022 21:30	-0.04	6/17/2022 20:20	0.63	6/17/2022 20:43	3.14	6/17/2022 22:06	-0.11	6/16/2022 20:51	10.95
6/16/2022 21:31	-0.05	6/17/2022 20:21	0.63	6/17/2022 20:44	3.14	6/17/2022 22:07	-0.09	6/16/2022 20:52	10.94
6/16/2022 21:32	-0.05	6/17/2022 20:22	0.61	6/17/2022 20:45	3.13	6/17/2022 22:08	-0.07	6/16/2022 20:53	10.93
6/16/2022 21:33	-0.04	6/17/2022 20:23	0.61	6/17/2022 20:46	3.12	6/17/2022 22:09	-0.07	6/16/2022 20:54	10.90
6/16/2022 21:34	-0.04	6/17/2022 20:24	0.61	6/17/2022 20:47	3.13	6/17/2022 22:10	-0.08	6/16/2022 20:55	10.89
6/16/2022 21:35	-0.04	6/17/2022 20:25	0.61	6/17/2022 20:48	3.14	6/17/2022 22:11	-0.10	6/16/2022 20:56	10.97
6/16/2022 21:36	-0.05	6/17/2022 20:26	0.63	6/17/2022 20:49	3.13	6/17/2022 22:12	-0.07	6/16/2022 20:57	10.93
6/16/2022 21:37	-0.03	6/17/2022 20:27	0.61	6/17/2022 20:50	3.13	6/17/2022 22:13	-0.09	6/16/2022 20:58	10.91
6/16/2022 21:38	-0.04	6/17/2022 20:28	0.61	6/17/2022 20:51	3.14	6/17/2022 22:14	-0.11	6/16/2022 20:59	10.90
6/16/2022 21:39	-0.03	6/17/2022 20:29	0.61	6/17/2022 20:52	3.13	6/17/2022 22:15	-0.12	6/16/2022 21:00	10.93
6/16/2022 21:40	-0.04	6/17/2022 20:30	0.61	6/17/2022 20:53	3.13	6/17/2022 22:16	-0.12	6/16/2022 21:01	10.92
6/16/2022 21:41	-0.03	6/17/2022 20:31	0.63	6/17/2022 20:54	3.14	6/17/2022 22:17	-0.13	6/16/2022 21:02	10.92
6/16/2022 21:42	-0.05	6/17/2022 20:32	0.61	6/17/2022 20:55	3.16	6/17/2022 22:18	-0.07	6/16/2022 21:03	10.92
6/16/2022 21:43	-0.04	6/17/2022 20:33	0.61	6/17/2022 20:56	3.14	6/17/2022 22:19	-0.12	6/16/2022 21:04	10.87
6/16/2022 21:44	-0.04	6/17/2022 20:34	0.61	6/17/2022 20:57	3.12	6/17/2022 22:20	-0.13	6/16/2022 21:05	10.87
6/16/2022 21:45	-0.03	6/17/2022 20:35	0.61	6/17/2022 20:58	3.13	6/17/2022 22:21	-0.08	6/16/2022 21:06	10.93
6/16/2022 21:46	-0.05	6/17/2022 20:36	0.61	6/17/2022 20:59	3.17	6/17/2022 22:22	-0.15	6/16/2022 21:07	10.91
6/16/2022 21:47	-0.03	6/17/2022 20:37	0.61	6/17/2022 21:00	3.13	6/17/2022 22:23	-0.07	6/16/2022 21:08	10.88
6/16/2022 21:48	-0.03	6/17/2022 20:38	0.61	6/17/2022 21:01	3.12	6/17/2022 22:24	-0.10	6/16/2022 21:09	10.91
6/16/2022 21:49	-0.04	6/17/2022 20:39	0.61	6/17/2022 21:02	3.12	6/17/2022 22:25	-0.07	6/16/2022 21:10	10.91
6/16/2022 21:50	-0.03	6/17/2022 20:40	0.61	6/17/2022 21:03	3.12	6/17/2022 22:26	-0.10	6/16/2022 21:11	10.90
6/16/2022 21:51	-0.04	6/17/2022 20:41	0.61	6/17/2022 21:04	3.15	6/17/2022 22:27	-0.13	6/16/2022 21:12	10.86
6/16/2022 21:52	-0.04	6/17/2022 20:42	0.63	6/17/2022 21:05	3.11	6/17/2022 22:28	-0.12	6/16/2022 21:13	10.97
6/16/2022 21:53	-0.04	6/17/2022 20:43	0.61	6/17/2022 21:06	3.10	6/17/2022 22:29	-0.12	6/16/2022 21:14	10.89
6/16/2022 21:54	-0.05	6/17/2022 20:44	0.61	6/17/2022 21:07	3.12	6/17/2022 22:30	-0.13	6/16/2022 21:15	10.88
6/16/2022 21:55	-0.03	6/17/2022 20:45	0.61	6/17/2022 21:08	3.16	6/17/2022 22:31	-0.13	6/16/2022 21:16	10.90
6/16/2022 21:56	-0.04	6/17/2022 20:46	0.61	6/17/2022 21:09	3.09	6/17/2022 22:32	-0.12	6/16/2022 21:17	10.91
6/16/2022 21:57	-0.05	6/17/2022 20:47	0.61	6/17/2022 21:10	3.09	6/17/2022 22:33	-0.13	6/16/2022 21:18	10.93
6/16/2022 21:58	-0.04	6/17/2022 20:48	0.61	6/17/2022 21:11	3.13	6/17/2022 22:34	-0.10	6/16/2022 21:19	10.91
6/16/2022 21:59	-0.05	6/17/2022 20:49	0.61	6/17/2022 21:12	3.14	6/17/2022 22:35	-0.13	6/16/2022 21:20	10.94
6/16/2022 22:00	-0.04	6/17/2022 20:50	0.61	6/17/2022 21:13	3.15	6/17/2022 22:36	-0.11	6/16/2022 21:21	10.92

6/16/2022 22:01	-0.04	6/17/2022 20:51	0.61	6/17/2022 21:14	3.14	6/17/2022 22:37	-0.10	6/16/2022 21:22	10.92
6/16/2022 22:02	-0.03	6/17/2022 20:52	0.61	6/17/2022 21:15	3.14	6/17/2022 22:38	-0.10	6/16/2022 21:23	10.94
6/16/2022 22:03	-0.04	6/17/2022 20:53	0.61	6/17/2022 21:16	3.15	6/17/2022 22:39	-0.10	6/16/2022 21:24	10.89
6/16/2022 22:04	-0.03	6/17/2022 20:54	0.63	6/17/2022 21:17	3.12	6/17/2022 22:40	-0.10	6/16/2022 21:25	10.92
6/16/2022 22:05	-0.04	6/17/2022 20:55	0.61	6/17/2022 21:18	3.13	6/17/2022 22:41	-0.12	6/16/2022 21:26	10.90
6/16/2022 22:06	-0.05	6/17/2022 20:56	0.63	6/17/2022 21:19	3.15	6/17/2022 22:42	-0.09	6/16/2022 21:27	10.91
6/16/2022 22:07	-0.03	6/17/2022 20:57	0.61	6/17/2022 21:20	3.16	6/17/2022 22:43	-0.09	6/16/2022 21:28	10.93
6/16/2022 22:08	-0.04	6/17/2022 20:58	0.61	6/17/2022 21:21	3.16	6/17/2022 22:44	-0.11	6/16/2022 21:29	10.92
6/16/2022 22:09	-0.03	6/17/2022 20:59	0.61	6/17/2022 21:22	3.15	6/17/2022 22:45	-0.13	6/16/2022 21:30	10.89
6/16/2022 22:10	-0.03	6/17/2022 21:00	0.63	6/17/2022 21:23	3.16	6/17/2022 22:46	-0.14	6/16/2022 21:31	10.94
6/16/2022 22:11	-0.04	6/17/2022 21:01	0.61	6/17/2022 21:24	3.13	6/17/2022 22:47	-0.10	6/16/2022 21:32	10.97
6/16/2022 22:12	-0.04	6/17/2022 21:02	0.61	6/17/2022 21:25	3.13	6/17/2022 22:48	-0.13	6/16/2022 21:33	10.87
6/16/2022 22:13	-0.04	6/17/2022 21:03	0.61	6/17/2022 21:26	3.14	6/17/2022 22:49	-0.09	6/16/2022 21:34	10.90
6/16/2022 22:14	-0.04	6/17/2022 21:04	0.61	6/17/2022 21:27	3.13	6/17/2022 22:50	-0.09	6/16/2022 21:35	10.97
6/16/2022 22:15	-0.04	6/17/2022 21:05	0.61	6/17/2022 21:28	3.15	6/17/2022 22:51	-0.11	6/16/2022 21:36	10.89
6/16/2022 22:16	-0.04	6/17/2022 21:06	0.61	6/17/2022 21:29	3.13	6/17/2022 22:52	-0.08	6/16/2022 21:37	10.89
6/16/2022 22:17	-0.05	6/17/2022 21:07	0.61	6/17/2022 21:30	3.12	6/17/2022 22:53	-0.06	6/16/2022 21:38	10.93
6/16/2022 22:18	-0.04	6/17/2022 21:08	0.61	6/17/2022 21:31	3.13	6/17/2022 22:54	-0.13	6/16/2022 21:39	10.89
6/16/2022 22:19	-0.03	6/17/2022 21:09	0.61	6/17/2022 21:32	3.13	6/17/2022 22:55	-0.10	6/16/2022 21:40	10.95
6/16/2022 22:20	-0.05	6/17/2022 21:10	0.63	6/17/2022 21:33	3.11	6/17/2022 22:56	-0.09	6/16/2022 21:41	10.95
6/16/2022 22:21	-0.03	6/17/2022 21:11	0.64	6/17/2022 21:34	3.12	6/17/2022 22:57	-0.13	6/16/2022 21:42	10.91
6/16/2022 22:22	-0.03	6/17/2022 21:12	0.61	6/17/2022 21:35	3.11	6/17/2022 22:58	-0.15	6/16/2022 21:43	10.90
6/16/2022 22:23	-0.04	6/17/2022 21:13	0.62	6/17/2022 21:36	3.16	6/17/2022 22:59	-0.12	6/16/2022 21:44	10.84
6/16/2022 22:24	-0.02	6/17/2022 21:14	0.61	6/17/2022 21:37	3.11	6/17/2022 23:00	-0.13	6/16/2022 21:45	10.89
6/16/2022 22:25	-0.04	6/17/2022 21:15	0.61	6/17/2022 21:38	3.13	6/17/2022 23:01	-0.09	6/16/2022 21:46	10.88
6/16/2022 22:26	-0.04	6/17/2022 21:16	0.61	6/17/2022 21:39	3.11	6/17/2022 23:02	-0.13	6/16/2022 21:47	10.93
6/16/2022 22:27	-0.05	6/17/2022 21:17	0.61	6/17/2022 21:40	3.16	6/17/2022 23:03	-0.08	6/16/2022 21:48	10.93
6/16/2022 22:28	-0.03	6/17/2022 21:18	0.64	6/17/2022 21:41	3.14	6/17/2022 23:04	-0.12	6/16/2022 21:49	10.89
6/16/2022 22:29	-0.05	6/17/2022 21:19	0.61	6/17/2022 21:42	3.12	6/17/2022 23:05	-0.09	6/16/2022 21:50	10.95
6/16/2022 22:30	-0.04	6/17/2022 21:20	0.62	6/17/2022 21:43	3.15	6/17/2022 23:06	-0.13	6/16/2022 21:51	10.91
6/16/2022 22:31	-0.04	6/17/2022 21:21	0.62	6/17/2022 21:44	3.13	6/17/2022 23:07	-0.08	6/16/2022 21:52	10.88
6/16/2022 22:32	-0.04	6/17/2022 21:22	0.61	6/17/2022 21:45	3.12	6/17/2022 23:08	-0.16	6/16/2022 21:53	10.90
6/16/2022 22:33	-0.02	6/17/2022 21:23	0.62	6/17/2022 21:46	3.15	6/17/2022 23:09	-0.15	6/16/2022 21:54	10.94
6/16/2022 22:34	-0.04	6/17/2022 21:24	0.64	6/17/2022 21:47	3.14	6/17/2022 23:10	-0.12	6/16/2022 21:55	10.87
6/16/2022 22:35	-0.03	6/17/2022 21:25	0.62	6/17/2022 21:48	3.14	6/17/2022 23:11	-0.10	6/16/2022 21:56	10.88
6/16/2022 22:36	-0.04	6/17/2022 21:26	0.62	6/17/2022 21:49	3.14	6/17/2022 23:12	-0.15	6/16/2022 21:57	10.90
6/16/2022 22:37	-0.04	6/17/2022 21:27	0.62	6/17/2022 21:50	3.13	6/17/2022 23:13	-0.06	6/16/2022 21:58	10.92
6/16/2022 22:38	-0.03	6/17/2022 21:28	0.62	6/17/2022 21:51	3.16	6/17/2022 23:14	-0.12	6/16/2022 21:59	10.89
6/16/2022 22:39	-0.04	6/17/2022 21:29	0.62	6/17/2022 21:52	3.13	6/17/2022 23:15	-0.11	6/16/2022 22:00	10.92
6/16/2022 22:40	-0.05	6/17/2022 21:30	0.62	6/17/2022 21:53	3.15	6/17/2022 23:16	-0.12	6/16/2022 22:01	10.90
6/16/2022 22:41	-0.04	6/17/2022 21:31	0.64	6/17/2022 21:54	3.14	6/17/2022 23:17	-0.11	6/16/2022 22:02	10.93
6/16/2022 22:42	-0.04	6/17/2022 21:32	0.64	6/17/2022 21:55	3.13	6/17/2022 23:18	-0.10	6/16/2022 22:03	10.89
6/16/2022 22:43	-0.05	6/17/2022 21:33	0.62	6/17/2022 21:56	3.14	6/17/2022 23:19	-0.10	6/16/2022 22:04	10.87
6/16/2022 22:44	-0.03	6/17/2022 21:34	0.64	6/17/2022 21:57	3.13	6/17/2022 23:20	-0.13	6/16/2022 22:05	10.96
6/16/2022 22:45	-0.03	6/17/2022 21:35	0.62	6/17/2022 21:58	3.14	6/17/2022 23:21	-0.12	6/16/2022 22:06	10.88
6/16/2022 22:46	-0.05	6/17/2022 21:36	0.62	6/17/2022 21:59	3.13	6/17/2022 23:22	-0.13	6/16/2022 22:07	10.87
6/16/2022 22:47	-0.04	6/17/2022 21:37	0.62	6/17/2022 22:00	3.11	6/17/2022 23:23	-0.10	6/16/2022 22:08	10.85
6/16/2022 22:48	-0.04	6/17/2022 21:38	0.62	6/17/2022 22:01	3.15	6/17/2022 23:24	-0.12	6/16/2022 22:09	10.84
6/16/2022 22:49	-0.02	6/17/2022 21:39	0.61	6/17/2022 22:02	3.15	6/17/2022 23:25	-0.13	6/16/2022 22:10	10.98
6/16/2022 22:50	-0.04	6/17/2022 21:40	0.62	6/17/2022 22:03	3.13	6/17/2022 23:26	-0.14	6/16/2022 22:11	10.89
6/16/2022 22:51	-0.05	6/17/2022 21:41	0.62	6/17/2022 22:04	3.13	6/17/2022 23:27	-0.09	6/16/2022 22:12	10.96
6/16/2022 22:52	-0.03	6/17/2022 21:42	0.62	6/17/2022 22:05	3.16	6/17/2022 23:28	-0.05	6/16/2022 22:13	10.88
6/16/2022 22:53	-0.04	6/17/2022 21:43	0.62	6/17/2022 22:06	3.13	6/17/2022 23:29	-0.12	6/16/2022 22:14	10.89
6/16/2022 22:54	-0.04	6/17/2022 21:44	0.62	6/17/2022 22:07	3.17	6/17/2022 23:30	-0.10	6/16/2022 22:15	10.95
6/16/2022 22:55	-0.05	6/17/2022 21:45	0.62	6/17/2022 22:08	3.15	6/17/2022 23:31	-0.12	6/16/2022 22:16	10.94
6/16/2022 22:56	-0.03	6/17/2022 21:46	0.62	6/17/2022 22:09	3.16	6/17/2022 23:32	-0.13	6/16/2022 22:17	10.93
6/16/2022 22:57	-0.04	6/17/2022 21:47	0.62	6/17/2022 22:10	3.10	6/17/2022 23:33	-0.10	6/16/2022 22:18	10.98
6/16/2022 22:58	-0.03	6/17/2022 21:48	0.62	6/17/2022 22:11	3.13	6/17/2022 23:34	-0.10	6/16/2022 22:19	10.90
6/16/2022 22:59	-0.04	6/17/2022 21:49	0.62	6/17/2022 22:12	3.16	6/17/2022 23:35	-0.13	6/16/2022 22:20	10.94
6/16/2022 23:00	-0.04	6/17/2022 21:50	0.62	6/17/2022 22:13	3.14	6/17/2022 23:36	-0.08	6/16/2022 22:21	10.88
6/16/2022 23:01	-0.04	6/17/2022 21:51	0.62	6/17/2022 22:14	3.14	6/17/2022 23:37	-0.10	6/16/2022 22:22	10.94
6/16/2022 23:02	-0.03	6/17/2022 21:52	0.64	6/17/2022 22:15	3.14	6/17/2022 23:38	-0.10	6/16/2022 22:23	10.98
6/16/2022 23:03	-0.03	6/17/2022 21:53	0.62	6/17/2022 22:16	3.14	6/17/2022 23:39	-0.14	6/16/2022 22:24	10.94
6/16/2022 23:04	-0.05	6/17/2022 21:54	0.62	6/17/2022 22:17	3.13	6/17/2022 23:40	-0.13	6/16/2022 22:25	10.95
6/16/2022 23:05	-0.04	6/17/2022 21:55	0.62	6/17/2022 22:18	3.14	6/17/2022 23:41	-0.15	6/16/2022 22:26	10.90
6/16/2022 23:06	-0.04	6/17/2022 21:56	0.62	6/17/2022 22:19	3.15	6/17/2022 23:42	-0.12	6/16/2022 22:27	10.92
6/16/2022 23:07	-0.04	6/17/2022 21:57	0.62	6/17/2022 22:20	3.13	6/17/2022 23:43	-0.11	6/16/2022 22:28	10.90
6/16/2022 23:08	-0.05	6/17/2022 21:58	0.62	6/17/2022 22:21	3.10	6/17/2022 23:44	-0.13	6/16/2022 22:29	10.89
6/16/2022 23:09	-0.05	6/17/2022 21:59	0.62	6/17/2022 22:22	3.17	6/17/2022 23:45	-0.07	6/16/2022 22:30	10.91
6/16/2022 23:10	-0.04	6/17/2022 22:00	0.62	6/17/2022 22:23	3.11	6/17/2022 23:46	-0.09	6/16/2022 22:31	10.93
6/16/2022 23:11	-0.03	6/17/2022 22:01	0.61	6/17/2022 22:24	3.16	6/17/2022 23:47	-0.12	6/16/2022 22:32	10.92
6/16/2022 23:12	-0.05	6/17/2022 22:02	0.64	6/17/2022 22:25	3.14	6/17/2022 23:48	-0.05	6/16/2022 22:33	10.92
6/16/2022 23:13	-0.05	6/17/2022 22:03	0.62	6/17/2022 22:26	3.16	6/17/2022 23:49	-0.09	6/16/2022 22:34	10.94
6/16/2022 23:14	-0.05	6/17/2022 22:04	0.62	6/17/2022 22:27	3.15	6/17/2022 23:50	-0.12	6/16/2022 22:35	10.92
6/16/2022 23:15	-0.04	6/17/2022 22:05	0.62	6/17/2022 22:28	3.13	6/17/2022 23:51	-0.09	6/16/2022 22:36	10.89
6/16/2022 23:16	-0.03	6/17/2022 22:06	0.62	6/17/2022 22:29	3.14	6/17/2022 23:52	-0.11	6/16/2022 22:37	10.92
6/16/2022 23:17	-0.03	6/17/2022 22:07	0.62	6/17/2022 22:30	3.12	6/17/2022 23:53	-0.10	6/16/2022 22:38	10.93
6/16/2022 23:18	-0.05	6/17/2022 22:08	0.62	6/17/2022 22:31	3.14	6/17/2022 23:54	-0.12	6/16/2022 22:39	10.89
6/16/2022 23:19	-0.03	6/17/2022 22:09	0.62	6/17/2022 22:32	3.13	6/17/2022 23:55	-0.11	6/16/2022 22:40	10.93
6/16/2022 23:20	-0.03	6/17/2022 22:10	0.62	6/17/2022 22:33	3.16	6/17/2022 23:56	-0.09	6/16/2022 22:41	10.95
6/16/2022 23:21	-0.03	6/17/2022 22:11	0.62	6/17/2022 22:34	3.14	6/17/2022 23:57	-0.10	6/16/2022 22:42	10.93
6/16/2022 23:22	-0.03	6/17/2022 22:12	0.64	6/17/2022 22:35	3.12	6/17/2022 23:58	-0.13	6/16/2022 22:43	10.90
6/16/2022 23:23	-0.03	6/17/2022 22:13	0.64	6/17/2022 22:36	3.13	6/17/2022 23:59	-0.10	6/16/2022 22:44	10.91
6/16/2022 23:24	-0.05	6/17/2022 22:14	0.64	6/17/2022 22:37	3.13	6/18/2022 0:00	-0.14	6/16/2022 22:45	10.89
6/16/2022 23:25	-0.04	6/17/2022 22:15	0.64	6/17/2022 22:38	3.13	6/18/2022 0:01	-0.16	6/16/2022 22:46	10.95
6/16/2022 23:26	-0.04	6/17/2022 22:16	0.62	6/17/2022 22:39	3.13	6/18/2022 0:02	-0.09	6/16/2022 22:47	10.91
6/16/2022 23:27	-0.04	6/17/2022 22:17	0.62	6/17/2022 22:40	3.12	6/18/2022 0:03	-0.11	6/16/2022 22:48	10.91
6/16/2022 23:28	-0.04	6/17/2022 22:18	0.62	6/17/2022 22:41	3.13	6/18/2022 0:04	-0.13	6/16/2022 22:49	10.91

6/16/2022 23:29	-0.04	6/17/2022 22:19	0.62	6/17/2022 22:42	3.14	6/18/2022 0:05	-0.12	6/16/2022 22:50	10.95
6/16/2022 23:30	-0.03	6/17/2022 22:20	0.64	6/17/2022 22:43	3.13	6/18/2022 0:06	-0.10	6/16/2022 22:51	10.88
6/16/2022 23:31	-0.04	6/17/2022 22:21	0.62	6/17/2022 22:44	3.12	6/18/2022 0:07	-0.09	6/16/2022 22:52	10.88
6/16/2022 23:32	-0.03	6/17/2022 22:22	0.62	6/17/2022 22:45	3.15	6/18/2022 0:08	-0.09	6/16/2022 22:53	10.89
6/16/2022 23:33	-0.03	6/17/2022 22:23	0.62	6/17/2022 22:46	3.13	6/18/2022 0:09	-0.11	6/16/2022 22:54	10.94
6/16/2022 23:34	-0.05	6/17/2022 22:24	0.62	6/17/2022 22:47	3.13	6/18/2022 0:10	-0.17	6/16/2022 22:55	10.89
6/16/2022 23:35	-0.03	6/17/2022 22:25	0.62	6/17/2022 22:48	3.15	6/18/2022 0:11	-0.11	6/16/2022 22:56	10.99
6/16/2022 23:36	-0.03	6/17/2022 22:26	0.62	6/17/2022 22:49	3.14	6/18/2022 0:12	-0.14	6/16/2022 22:57	10.91
6/16/2022 23:37	-0.05	6/17/2022 22:27	0.64	6/17/2022 22:50	3.13	6/18/2022 0:13	-0.09	6/16/2022 22:58	10.94
6/16/2022 23:38	-0.05	6/17/2022 22:28	0.62	6/17/2022 22:51	3.16	6/18/2022 0:14	-0.10	6/16/2022 22:59	10.90
6/16/2022 23:39	-0.05	6/17/2022 22:29	0.62	6/17/2022 22:52	3.13	6/18/2022 0:15	-0.09	6/16/2022 23:00	10.91
6/16/2022 23:40	-0.04	6/17/2022 22:30	0.62	6/17/2022 22:53	3.14	6/18/2022 0:16	-0.10	6/16/2022 23:01	10.93
6/16/2022 23:41	-0.04	6/17/2022 22:31	0.64	6/17/2022 22:54	3.14	6/18/2022 0:17	-0.14	6/16/2022 23:02	10.95
6/16/2022 23:42	-0.03	6/17/2022 22:32	0.62	6/17/2022 22:55	3.12	6/18/2022 0:18	-0.10	6/16/2022 23:03	10.93
6/16/2022 23:43	-0.03	6/17/2022 22:33	0.62	6/17/2022 22:56	3.17	6/18/2022 0:19	-0.14	6/16/2022 23:04	10.90
6/16/2022 23:44	-0.04	6/17/2022 22:34	0.62	6/17/2022 22:57	3.16	6/18/2022 0:20	-0.04	6/16/2022 23:05	10.92
6/16/2022 23:45	-0.03	6/17/2022 22:35	0.62	6/17/2022 22:58	3.15	6/18/2022 0:21	-0.12	6/16/2022 23:06	10.96
6/16/2022 23:46	-0.04	6/17/2022 22:36	0.62	6/17/2022 22:59	3.16	6/18/2022 0:22	-0.11	6/16/2022 23:07	10.89
6/16/2022 23:47	-0.04	6/17/2022 22:37	0.64	6/17/2022 23:00	3.13	6/18/2022 0:23	-0.07	6/16/2022 23:08	10.91
6/16/2022 23:48	-0.03	6/17/2022 22:38	0.62	6/17/2022 23:01	3.15	6/18/2022 0:24	-0.12	6/16/2022 23:09	10.91
6/16/2022 23:49	-0.04	6/17/2022 22:39	0.62	6/17/2022 23:02	3.13	6/18/2022 0:25	-0.14	6/16/2022 23:10	10.92
6/16/2022 23:50	-0.04	6/17/2022 22:40	0.62	6/17/2022 23:03	3.12	6/18/2022 0:26	-0.12	6/16/2022 23:11	10.91
6/16/2022 23:51	-0.04	6/17/2022 22:41	0.62	6/17/2022 23:04	3.12	6/18/2022 0:27	-0.09	6/16/2022 23:12	10.90
6/16/2022 23:52	-0.04	6/17/2022 22:42	0.62	6/17/2022 23:05	3.13	6/18/2022 0:28	-0.13	6/16/2022 23:13	10.91
6/16/2022 23:53	-0.03	6/17/2022 22:43	0.62	6/17/2022 23:06	3.14	6/18/2022 0:29	-0.11	6/16/2022 23:14	10.91
6/16/2022 23:54	-0.04	6/17/2022 22:44	0.62	6/17/2022 23:07	3.13	6/18/2022 0:30	-0.10	6/16/2022 23:15	10.89
6/16/2022 23:55	-0.05	6/17/2022 22:45	0.62	6/17/2022 23:08	3.11	6/18/2022 0:31	-0.13	6/16/2022 23:16	10.89
6/16/2022 23:56	-0.05	6/17/2022 22:46	0.62	6/17/2022 23:09	3.13	6/18/2022 0:32	-0.12	6/16/2022 23:17	10.94
6/16/2022 23:57	-0.04	6/17/2022 22:47	0.62	6/17/2022 23:10	3.11	6/18/2022 0:33	-0.10	6/16/2022 23:18	10.91
6/16/2022 23:58	-0.03	6/17/2022 22:48	0.62	6/17/2022 23:11	3.16	6/18/2022 0:34	-0.12	6/16/2022 23:19	10.92
6/16/2022 23:59	-0.03	6/17/2022 22:49	0.62	6/17/2022 23:12	3.14	6/18/2022 0:35	-0.10	6/16/2022 23:20	10.89
6/17/2022 0:00	-0.04	6/17/2022 22:50	0.63	6/17/2022 23:13	3.16	6/18/2022 0:36	-0.11	6/16/2022 23:21	10.92
6/17/2022 0:01	-0.03	6/17/2022 22:51	0.63	6/17/2022 23:14	3.17	6/18/2022 0:37	-0.07	6/16/2022 23:22	10.92
6/17/2022 0:02	-0.03	6/17/2022 22:52	0.65	6/17/2022 23:15	3.12	6/18/2022 0:38	-0.12	6/16/2022 23:23	10.92
6/17/2022 0:03	-0.05	6/17/2022 22:53	0.62	6/17/2022 23:16	3.13	6/18/2022 0:39	-0.13	6/16/2022 23:24	10.91
6/17/2022 0:04	-0.05	6/17/2022 22:54	0.62	6/17/2022 23:17	3.14	6/18/2022 0:40	-0.09	6/16/2022 23:25	10.89
6/17/2022 0:05	-0.04	6/17/2022 22:55	0.62	6/17/2022 23:18	3.13	6/18/2022 0:41	-0.10	6/16/2022 23:26	10.86
6/17/2022 0:06	-0.03	6/17/2022 22:56	0.62	6/17/2022 23:19	3.16	6/18/2022 0:42	-0.09	6/16/2022 23:27	10.93
6/17/2022 0:07	-0.05	6/17/2022 22:57	0.62	6/17/2022 23:20	3.14	6/18/2022 0:43	-0.13	6/16/2022 23:28	10.91
6/17/2022 0:08	-0.05	6/17/2022 22:58	0.63	6/17/2022 23:21	3.13	6/18/2022 0:44	-0.12	6/16/2022 23:29	10.89
6/17/2022 0:09	-0.04	6/17/2022 22:59	0.62	6/17/2022 23:22	3.12	6/18/2022 0:45	-0.07	6/16/2022 23:30	10.87
6/17/2022 0:10	-0.03	6/17/2022 23:00	0.62	6/17/2022 23:23	3.15	6/18/2022 0:46	-0.10	6/16/2022 23:31	10.94
6/17/2022 0:11	-0.05	6/17/2022 23:01	0.62	6/17/2022 23:24	3.11	6/18/2022 0:47	-0.07	6/16/2022 23:32	10.92
6/17/2022 0:12	-0.05	6/17/2022 23:02	0.62	6/17/2022 23:25	3.11	6/18/2022 0:48	-0.12	6/16/2022 23:33	10.90
6/17/2022 0:13	-0.04	6/17/2022 23:03	0.62	6/17/2022 23:26	3.15	6/18/2022 0:49	-0.09	6/16/2022 23:34	10.93
6/17/2022 0:14	-0.05	6/17/2022 23:04	0.62	6/17/2022 23:27	3.14	6/18/2022 0:50	-0.14	6/16/2022 23:35	10.87
6/17/2022 0:15	-0.05	6/17/2022 23:05	0.62	6/17/2022 23:28	3.14	6/18/2022 0:51	-0.12	6/16/2022 23:36	10.92
6/17/2022 0:16	-0.05	6/17/2022 23:06	0.62	6/17/2022 23:29	3.12	6/18/2022 0:52	-0.10	6/16/2022 23:37	10.95
6/17/2022 0:17	-0.05	6/17/2022 23:07	0.62	6/17/2022 23:30	3.13	6/18/2022 0:53	-0.09	6/16/2022 23:38	10.92
6/17/2022 0:18	-0.05	6/17/2022 23:08	0.62	6/17/2022 23:31	3.13	6/18/2022 0:54	-0.09	6/16/2022 23:39	10.89
6/17/2022 0:19	-0.03	6/17/2022 23:09	0.62	6/17/2022 23:32	3.12	6/18/2022 0:55	-0.09	6/16/2022 23:40	10.89
6/17/2022 0:20	-0.05	6/17/2022 23:10	0.62	6/17/2022 23:33	3.12	6/18/2022 0:56	-0.07	6/16/2022 23:41	10.95
6/17/2022 0:21	-0.05	6/17/2022 23:11	0.64	6/17/2022 23:34	3.13	6/18/2022 0:57	-0.09	6/16/2022 23:42	10.89
6/17/2022 0:22	-0.05	6/17/2022 23:12	0.62	6/17/2022 23:35	3.12	6/18/2022 0:58	-0.11	6/16/2022 23:43	10.92
6/17/2022 0:23	-0.05	6/17/2022 23:13	0.62	6/17/2022 23:36	3.14	6/18/2022 0:59	-0.11	6/16/2022 23:44	10.92
6/17/2022 0:24	-0.05	6/17/2022 23:14	0.62	6/17/2022 23:37	3.12	6/18/2022 1:00	-0.12	6/16/2022 23:45	10.93
6/17/2022 0:25	-0.03	6/17/2022 23:15	0.63	6/17/2022 23:38	3.16	6/18/2022 1:01	-0.09	6/16/2022 23:46	10.94
6/17/2022 0:26	-0.03	6/17/2022 23:16	0.62	6/17/2022 23:39	3.15	6/18/2022 1:02	-0.14	6/16/2022 23:47	10.90
6/17/2022 0:27	-0.04	6/17/2022 23:17	0.62	6/17/2022 23:40	3.16	6/18/2022 1:03	-0.11	6/16/2022 23:48	10.92
6/17/2022 0:28	-0.05	6/17/2022 23:18	0.62	6/17/2022 23:41	3.12	6/18/2022 1:04	-0.11	6/16/2022 23:49	10.93
6/17/2022 0:29	-0.05	6/17/2022 23:19	0.63	6/17/2022 23:42	3.14	6/18/2022 1:05	-0.11	6/16/2022 23:50	10.92
6/17/2022 0:30	-0.04	6/17/2022 23:20	0.63	6/17/2022 23:43	3.17	6/18/2022 1:06	-0.15	6/16/2022 23:51	10.87
6/17/2022 0:31	-0.05	6/17/2022 23:21	0.64	6/17/2022 23:44	3.09	6/18/2022 1:07	-0.17	6/16/2022 23:52	10.92
6/17/2022 0:32	-0.05	6/17/2022 23:22	0.62	6/17/2022 23:45	3.15	6/18/2022 1:08	-0.11	6/16/2022 23:53	10.92
6/17/2022 0:33	-0.05	6/17/2022 23:23	0.63	6/17/2022 23:46	3.12	6/18/2022 1:09	-0.15	6/16/2022 23:54	10.91
6/17/2022 0:34	-0.04	6/17/2022 23:24	0.62	6/17/2022 23:47	3.16	6/18/2022 1:10	-0.14	6/16/2022 23:55	10.90
6/17/2022 0:35	-0.04	6/17/2022 23:25	0.62	6/17/2022 23:48	3.15	6/18/2022 1:11	-0.14	6/16/2022 23:56	10.93
6/17/2022 0:36	-0.05	6/17/2022 23:26	0.64	6/17/2022 23:49	3.17	6/18/2022 1:12	-0.12	6/16/2022 23:57	10.92
6/17/2022 0:37	-0.04	6/17/2022 23:27	0.63	6/17/2022 23:50	3.12	6/18/2022 1:13	-0.13	6/16/2022 23:58	10.95
6/17/2022 0:38	-0.03	6/17/2022 23:28	0.63	6/17/2022 23:51	3.16	6/18/2022 1:14	-0.12	6/16/2022 23:59	10.93
6/17/2022 0:39	-0.03	6/17/2022 23:29	0.62	6/17/2022 23:52	3.12	6/18/2022 1:15	-0.14	6/17/2022 0:00	10.96
6/17/2022 0:40	-0.04	6/17/2022 23:30	0.63	6/17/2022 23:53	3.14	6/18/2022 1:16	-0.14	6/17/2022 0:01	10.91
6/17/2022 0:41	-0.03	6/17/2022 23:31	0.63	6/17/2022 23:54	3.18	6/18/2022 1:17	-0.12	6/17/2022 0:02	10.94
6/17/2022 0:42	-0.05	6/17/2022 23:32	0.62	6/17/2022 23:55	3.12	6/18/2022 1:18	-0.12	6/17/2022 0:03	10.90
6/17/2022 0:43	-0.05	6/17/2022 23:33	0.63	6/17/2022 23:56	3.15	6/18/2022 1:19	-0.18	6/17/2022 0:04	10.89
6/17/2022 0:44	-0.05	6/17/2022 23:34	0.63	6/17/2022 23:57	3.16	6/18/2022 1:20	-0.14	6/17/2022 0:05	10.93
6/17/2022 0:45	-0.05	6/17/2022 23:35	0.62	6/17/2022 23:58	3.13	6/18/2022 1:21	-0.13	6/17/2022 0:06	10.91
6/17/2022 0:46	-0.04	6/17/2022 23:36	0.62	6/17/2022 23:59	3.13	6/18/2022 1:22	-0.17	6/17/2022 0:07	10.91
6/17/2022 0:47	-0.05	6/17/2022 23:37	0.63	6/18/2022 0:00	3.15	6/18/2022 1:23	-0.16	6/17/2022 0:08	10.86
6/17/2022 0:48	-0.04	6/17/2022 23:38	0.62	6/18/2022 0:01	3.14	6/18/2022 1:24	-0.13	6/17/2022 0:09	10.89
6/17/2022 0:49	-0.05	6/17/2022 23:39	0.65	6/18/2022 0:02	3.18	6/18/2022 1:25	-0.13	6/17/2022 0:10	10.92
6/17/2022 0:50	-0.04	6/17/2022 23:40	0.65	6/18/2022 0:03	3.11	6/18/2022 1:26	-0.09	6/17/2022 0:11	10.91
6/17/2022 0:51	-0.03	6/17/2022 23:41	0.63	6/18/2022 0:04	3.13	6/18/2022 1:27	-0.14	6/17/2022 0:12	10.85
6/17/2022 0:52	-0.03	6/17/2022 23:42	0.62	6/18/2022 0:05	3.18	6/18/2022 1:28	-0.14	6/17/2022 0:13	10.91
6/17/2022 0:53	-0.05	6/17/2022 23:43	0.63	6/18/2022 0:06	3.13	6/18/2022 1:29	-0.13	6/17/2022 0:14	10.90
6/17/2022 0:54	-0.03	6/17/2022 23:44	0.63	6/18/2022 0:07	3.15	6/18/2022 1:30	-0.16	6/17/2022 0:15	10.89
6/17/2022 0:55	-0.04	6/17/2022 23:45	0.62	6/18/2022 0:08	3.13	6/18/2022 1:31	-0.15	6/17/2022 0:16	10.89
6/17/2022 0:56	-0.03	6/17/2022 23:46	0.62	6/18/2022 0:09	3.15	6/18/2022 1:32	-0.14	6/17/2022 0:17	10.91

6/17/2022 0:57	-0.04	6/17/2022 23:47	0.63	6/18/2022 0:10	3.15	6/18/2022 1:33	-0.11	6/17/2022 0:18	10.91
6/17/2022 0:58	-0.05	6/17/2022 23:48	0.63	6/18/2022 0:11	3.14	6/18/2022 1:34	-0.13	6/17/2022 0:19	10.90
6/17/2022 0:59	-0.05	6/17/2022 23:49	0.63	6/18/2022 0:12	3.15	6/18/2022 1:35	-0.17	6/17/2022 0:20	10.92
6/17/2022 1:00	-0.03	6/17/2022 23:50	0.63	6/18/2022 0:13	3.16	6/18/2022 1:36	-0.15	6/17/2022 0:21	10.90
6/17/2022 1:01	-0.05	6/17/2022 23:51	0.63	6/18/2022 0:14	3.12	6/18/2022 1:37	-0.15	6/17/2022 0:22	10.95
6/17/2022 1:02	-0.05	6/17/2022 23:52	0.62	6/18/2022 0:15	3.14	6/18/2022 1:38	-0.15	6/17/2022 0:23	10.90
6/17/2022 1:03	-0.05	6/17/2022 23:53	0.63	6/18/2022 0:16	3.11	6/18/2022 1:39	-0.14	6/17/2022 0:24	10.89
6/17/2022 1:04	-0.05	6/17/2022 23:54	0.63	6/18/2022 0:17	3.11	6/18/2022 1:40	-0.17	6/17/2022 0:25	10.98
6/17/2022 1:05	-0.05	6/17/2022 23:55	0.63	6/18/2022 0:18	3.14	6/18/2022 1:41	-0.11	6/17/2022 0:26	10.89
6/17/2022 1:06	-0.03	6/17/2022 23:56	0.62	6/18/2022 0:19	3.15	6/18/2022 1:42	-0.15	6/17/2022 0:27	10.91
6/17/2022 1:07	-0.05	6/17/2022 23:57	0.63	6/18/2022 0:20	3.14	6/18/2022 1:43	-0.15	6/17/2022 0:28	10.93
6/17/2022 1:08	-0.03	6/17/2022 23:58	0.63	6/18/2022 0:21	3.14	6/18/2022 1:44	-0.15	6/17/2022 0:29	10.88
6/17/2022 1:09	-0.03	6/17/2022 23:59	0.63	6/18/2022 0:22	3.17	6/18/2022 1:45	-0.14	6/17/2022 0:30	10.91
6/17/2022 1:10	-0.05	6/18/2022 0:00	0.62	6/18/2022 0:23	3.16	6/18/2022 1:46	-0.16	6/17/2022 0:31	10.86
6/17/2022 1:11	-0.05	6/18/2022 0:01	0.62	6/18/2022 0:24	3.14	6/18/2022 1:47	-0.12	6/17/2022 0:32	10.93
6/17/2022 1:12	-0.03	6/18/2022 0:02	0.62	6/18/2022 0:25	3.13	6/18/2022 1:48	-0.13	6/17/2022 0:33	10.88
6/17/2022 1:13	-0.03	6/18/2022 0:03	0.63	6/18/2022 0:26	3.16	6/18/2022 1:49	-0.13	6/17/2022 0:34	10.90
6/17/2022 1:14	-0.05	6/18/2022 0:04	0.62	6/18/2022 0:27	3.18	6/18/2022 1:50	-0.12	6/17/2022 0:35	10.90
6/17/2022 1:15	-0.05	6/18/2022 0:05	0.62	6/18/2022 0:28	3.14	6/18/2022 1:51	-0.11	6/17/2022 0:36	10.87
6/17/2022 1:16	-0.05	6/18/2022 0:06	0.62	6/18/2022 0:29	3.12	6/18/2022 1:52	-0.16	6/17/2022 0:37	10.87
6/17/2022 1:17	-0.05	6/18/2022 0:07	0.62	6/18/2022 0:30	3.13	6/18/2022 1:53	-0.13	6/17/2022 0:38	10.90
6/17/2022 1:18	-0.04	6/18/2022 0:08	0.63	6/18/2022 0:31	3.16	6/18/2022 1:54	-0.13	6/17/2022 0:39	10.89
6/17/2022 1:19	-0.05	6/18/2022 0:09	0.62	6/18/2022 0:32	3.15	6/18/2022 1:55	-0.16	6/17/2022 0:40	10.92
6/17/2022 1:20	-0.03	6/18/2022 0:10	0.62	6/18/2022 0:33	3.17	6/18/2022 1:56	-0.14	6/17/2022 0:41	10.94
6/17/2022 1:21	-0.03	6/18/2022 0:11	0.62	6/18/2022 0:34	3.14	6/18/2022 1:57	-0.13	6/17/2022 0:42	10.89
6/17/2022 1:22	-0.03	6/18/2022 0:12	0.62	6/18/2022 0:35	3.13	6/18/2022 1:58	-0.15	6/17/2022 0:43	10.91
6/17/2022 1:23	-0.05	6/18/2022 0:13	0.63	6/18/2022 0:36	3.17	6/18/2022 1:59	-0.17	6/17/2022 0:44	10.89
6/17/2022 1:24	-0.05	6/18/2022 0:14	0.62	6/18/2022 0:37	3.15	6/18/2022 2:00	-0.17	6/17/2022 0:45	10.93
6/17/2022 1:25	-0.05	6/18/2022 0:15	0.65	6/18/2022 0:38	3.11	6/18/2022 2:01	-0.12	6/17/2022 0:46	10.93
6/17/2022 1:26	-0.05	6/18/2022 0:16	0.62	6/18/2022 0:39	3.13	6/18/2022 2:02	-0.12	6/17/2022 0:47	10.88
6/17/2022 1:27	-0.03	6/18/2022 0:17	0.62	6/18/2022 0:40	3.14	6/18/2022 2:03	-0.13	6/17/2022 0:48	10.88
6/17/2022 1:28	-0.05	6/18/2022 0:18	0.63	6/18/2022 0:41	3.10	6/18/2022 2:04	-0.13	6/17/2022 0:49	10.94
6/17/2022 1:29	-0.05	6/18/2022 0:19	0.62	6/18/2022 0:42	3.18	6/18/2022 2:05	-0.18	6/17/2022 0:50	10.90
6/17/2022 1:30	-0.05	6/18/2022 0:20	0.62	6/18/2022 0:43	3.14	6/18/2022 2:06	-0.10	6/17/2022 0:51	10.92
6/17/2022 1:31	-0.03	6/18/2022 0:21	0.62	6/18/2022 0:44	3.12	6/18/2022 2:07	-0.17	6/17/2022 0:52	10.91
6/17/2022 1:32	-0.05	6/18/2022 0:22	0.62	6/18/2022 0:45	3.14	6/18/2022 2:08	-0.15	6/17/2022 0:53	10.93
6/17/2022 1:33	-0.04	6/18/2022 0:23	0.63	6/18/2022 0:46	3.14	6/18/2022 2:09	-0.14	6/17/2022 0:54	10.95
6/17/2022 1:34	-0.05	6/18/2022 0:24	0.63	6/18/2022 0:47	3.13	6/18/2022 2:10	-0.13	6/17/2022 0:55	10.90
6/17/2022 1:35	-0.05	6/18/2022 0:25	0.63	6/18/2022 0:48	3.14	6/18/2022 2:11	-0.13	6/17/2022 0:56	10.90
6/17/2022 1:36	-0.03	6/18/2022 0:26	0.62	6/18/2022 0:49	3.14	6/18/2022 2:12	-0.15	6/17/2022 0:57	10.91
6/17/2022 1:37	-0.05	6/18/2022 0:27	0.63	6/18/2022 0:50	3.12	6/18/2022 2:13	-0.16	6/17/2022 0:58	10.89
6/17/2022 1:38	-0.05	6/18/2022 0:28	0.62	6/18/2022 0:51	3.13	6/18/2022 2:14	-0.15	6/17/2022 0:59	10.89
6/17/2022 1:39	-0.03	6/18/2022 0:29	0.64	6/18/2022 0:52	3.14	6/18/2022 2:15	-0.17	6/17/2022 1:00	10.90
6/17/2022 1:40	-0.03	6/18/2022 0:30	0.62	6/18/2022 0:53	3.15	6/18/2022 2:16	-0.15	6/17/2022 1:01	10.93
6/17/2022 1:41	-0.05	6/18/2022 0:31	0.63	6/18/2022 0:54	3.16	6/18/2022 2:17	-0.17	6/17/2022 1:02	10.94
6/17/2022 1:42	-0.05	6/18/2022 0:32	0.63	6/18/2022 0:55	3.14	6/18/2022 2:18	-0.13	6/17/2022 1:03	10.85
6/17/2022 1:43	-0.05	6/18/2022 0:33	0.63	6/18/2022 0:56	3.14	6/18/2022 2:19	-0.12	6/17/2022 1:04	10.89
6/17/2022 1:44	-0.03	6/18/2022 0:34	0.63	6/18/2022 0:57	3.12	6/18/2022 2:20	-0.12	6/17/2022 1:05	10.90
6/17/2022 1:45	-0.03	6/18/2022 0:35	0.62	6/18/2022 0:58	3.14	6/18/2022 2:21	-0.15	6/17/2022 1:06	10.92
6/17/2022 1:46	-0.03	6/18/2022 0:36	0.63	6/18/2022 0:59	3.16	6/18/2022 2:22	-0.14	6/17/2022 1:07	10.88
6/17/2022 1:47	-0.03	6/18/2022 0:37	0.63	6/18/2022 1:00	3.13	6/18/2022 2:23	-0.15	6/17/2022 1:08	10.83
6/17/2022 1:48	-0.05	6/18/2022 0:38	0.62	6/18/2022 1:01	3.12	6/18/2022 2:24	-0.15	6/17/2022 1:09	10.91
6/17/2022 1:49	-0.05	6/18/2022 0:39	0.63	6/18/2022 1:02	3.13	6/18/2022 2:25	-0.18	6/17/2022 1:10	10.96
6/17/2022 1:50	-0.05	6/18/2022 0:40	0.63	6/18/2022 1:03	3.14	6/18/2022 2:26	-0.13	6/17/2022 1:11	10.90
6/17/2022 1:51	-0.05	6/18/2022 0:41	0.63	6/18/2022 1:04	3.11	6/18/2022 2:27	-0.14	6/17/2022 1:12	10.90
6/17/2022 1:52	-0.03	6/18/2022 0:42	0.63	6/18/2022 1:05	3.14	6/18/2022 2:28	-0.17	6/17/2022 1:13	10.88
6/17/2022 1:53	-0.05	6/18/2022 0:43	0.62	6/18/2022 1:06	3.11	6/18/2022 2:29	-0.16	6/17/2022 1:14	10.91
6/17/2022 1:54	-0.05	6/18/2022 0:44	0.63	6/18/2022 1:07	3.11	6/18/2022 2:30	-0.17	6/17/2022 1:15	10.86
6/17/2022 1:55	-0.05	6/18/2022 0:45	0.62	6/18/2022 1:08	3.14	6/18/2022 2:31	-0.13	6/17/2022 1:16	10.91
6/17/2022 1:56	-0.05	6/18/2022 0:46	0.62	6/18/2022 1:09	3.15	6/18/2022 2:32	-0.15	6/17/2022 1:17	10.90
6/17/2022 1:57	-0.05	6/18/2022 0:47	0.63	6/18/2022 1:10	3.12	6/18/2022 2:33	-0.15	6/17/2022 1:18	10.87
6/17/2022 1:58	-0.05	6/18/2022 0:48	0.63	6/18/2022 1:11	3.15	6/18/2022 2:34	-0.15	6/17/2022 1:19	10.92
6/17/2022 1:59	-0.05	6/18/2022 0:49	0.62	6/18/2022 1:12	3.14	6/18/2022 2:35	-0.14	6/17/2022 1:20	10.97
6/17/2022 2:00	-0.05	6/18/2022 0:50	0.62	6/18/2022 1:13	3.13	6/18/2022 2:36	-0.12	6/17/2022 1:21	10.89
6/17/2022 2:01	-0.03	6/18/2022 0:51	0.63	6/18/2022 1:14	3.14	6/18/2022 2:37	-0.15	6/17/2022 1:22	10.87
6/17/2022 2:02	-0.05	6/18/2022 0:52	0.63	6/18/2022 1:15	3.15	6/18/2022 2:38	-0.11	6/17/2022 1:23	10.90
6/17/2022 2:03	-0.05	6/18/2022 0:53	0.62	6/18/2022 1:16	3.16	6/18/2022 2:39	-0.12	6/17/2022 1:24	10.89
6/17/2022 2:04	-0.05	6/18/2022 0:54	0.63	6/18/2022 1:17	3.12	6/18/2022 2:40	-0.17	6/17/2022 1:25	10.87
6/17/2022 2:05	-0.03	6/18/2022 0:55	0.62	6/18/2022 1:18	3.15	6/18/2022 2:41	-0.14	6/17/2022 1:26	10.92
6/17/2022 2:06	-0.03	6/18/2022 0:56	0.63	6/18/2022 1:19	3.12	6/18/2022 2:42	-0.16	6/17/2022 1:27	10.89
6/17/2022 2:07	-0.05	6/18/2022 0:57	0.63	6/18/2022 1:20	3.13	6/18/2022 2:43	-0.15	6/17/2022 1:28	10.90
6/17/2022 2:08	-0.04	6/18/2022 0:58	0.62	6/18/2022 1:21	3.13	6/18/2022 2:44	-0.18	6/17/2022 1:29	10.87
6/17/2022 2:09	-0.05	6/18/2022 0:59	0.63	6/18/2022 1:22	3.15	6/18/2022 2:45	-0.13	6/17/2022 1:30	10.91
6/17/2022 2:10	-0.03	6/18/2022 1:00	0.65	6/18/2022 1:23	3.09	6/18/2022 2:46	-0.14	6/17/2022 1:31	10.92
6/17/2022 2:11	-0.03	6/18/2022 1:01	0.63	6/18/2022 1:24	3.14	6/18/2022 2:47	-0.12	6/17/2022 1:32	10.92
6/17/2022 2:12	-0.03	6/18/2022 1:02	0.63	6/18/2022 1:25	3.15	6/18/2022 2:48	-0.11	6/17/2022 1:33	10.95
6/17/2022 2:13	-0.03	6/18/2022 1:03	0.62	6/18/2022 1:26	3.13	6/18/2022 2:49	-0.12	6/17/2022 1:34	10.91
6/17/2022 2:14	-0.05	6/18/2022 1:04	0.65	6/18/2022 1:27	3.13	6/18/2022 2:50	-0.14	6/17/2022 1:35	10.90
6/17/2022 2:15	-0.03	6/18/2022 1:05	0.62	6/18/2022 1:28	3.14	6/18/2022 2:51	-0.17	6/17/2022 1:36	10.87
6/17/2022 2:16	-0.03	6/18/2022 1:06	0.63	6/18/2022 1:29	3.17	6/18/2022 2:52	-0.19	6/17/2022 1:37	10.90
6/17/2022 2:17	-0.03	6/18/2022 1:07	0.63	6/18/2022 1:30	3.12	6/18/2022 2:53	-0.13	6/17/2022 1:38	10.93
6/17/2022 2:18	-0.03	6/18/2022 1:08	0.63	6/18/2022 1:31	3.16	6/18/2022 2:54	-0.15	6/17/2022 1:39	10.91
6/17/2022 2:19	-0.03	6/18/2022 1:09	0.63	6/18/2022 1:32	3.18	6/18/2022 2:55	-0.11	6/17/2022 1:40	10.86
6/17/2022 2:20	-0.05	6/18/2022 1:10	0.62	6/18/2022 1:33	3.14	6/18/2022 2:56	-0.17	6/17/2022 1:41	10.95
6/17/2022 2:21	-0.03	6/18/2022 1:11	0.63	6/18/2022 1:34	3.13	6/18/2022 2:57	-0.15	6/17/2022 1:42	10.86
6/17/2022 2:22	-0.05	6/18/2022 1:12	0.63	6/18/2022 1:35	3.13	6/18/2022 2:58	-0.14	6/17/2022 1:43	10.87
6/17/2022 2:23	-0.05	6/18/2022 1:13	0.63	6/18/2022 1:36	3.13	6/18/2022 2:59	-0.14	6/17/2022 1:44	10.92
6/17/2022 2:24	-0.05	6/18/2022 1:14	0.63	6/18/2022 1:37	3.15	6/18/2022 3:00	-0.13	6/17/2022 1:45	10.91

6/17/2022 2:25	-0.03	6/18/2022 1:15	0.65	6/18/2022 1:38	3.15	6/18/2022 3:01	-0.09	6/17/2022 1:46	10.88
6/17/2022 2:26	-0.05	6/18/2022 1:16	0.62	6/18/2022 1:39	3.15	6/18/2022 3:02	-0.09	6/17/2022 1:47	10.94
6/17/2022 2:27	-0.03	6/18/2022 1:17	0.63	6/18/2022 1:40	3.13	6/18/2022 3:03	-0.15	6/17/2022 1:48	10.88
6/17/2022 2:28	-0.03	6/18/2022 1:18	0.65	6/18/2022 1:41	3.13	6/18/2022 3:04	-0.12	6/17/2022 1:49	10.93
6/17/2022 2:29	-0.05	6/18/2022 1:19	0.63	6/18/2022 1:42	3.17	6/18/2022 3:05	-0.12	6/17/2022 1:50	10.87
6/17/2022 2:30	-0.05	6/18/2022 1:20	0.63	6/18/2022 1:43	3.12	6/18/2022 3:06	-0.17	6/17/2022 1:51	10.87
6/17/2022 2:31	-0.05	6/18/2022 1:21	0.63	6/18/2022 1:44	3.13	6/18/2022 3:07	-0.12	6/17/2022 1:52	10.95
6/17/2022 2:32	-0.03	6/18/2022 1:22	0.63	6/18/2022 1:45	3.13	6/18/2022 3:08	-0.16	6/17/2022 1:53	10.87
6/17/2022 2:33	-0.05	6/18/2022 1:23	0.63	6/18/2022 1:46	3.15	6/18/2022 3:09	-0.12	6/17/2022 1:54	10.86
6/17/2022 2:34	-0.03	6/18/2022 1:24	0.63	6/18/2022 1:47	3.13	6/18/2022 3:10	-0.13	6/17/2022 1:55	10.89
6/17/2022 2:35	-0.03	6/18/2022 1:25	0.63	6/18/2022 1:48	3.13	6/18/2022 3:11	-0.13	6/17/2022 1:56	10.84
6/17/2022 2:36	-0.03	6/18/2022 1:26	0.63	6/18/2022 1:49	3.12	6/18/2022 3:12	-0.15	6/17/2022 1:57	10.87
6/17/2022 2:37	-0.05	6/18/2022 1:27	0.63	6/18/2022 1:50	3.12	6/18/2022 3:13	-0.10	6/17/2022 1:58	10.84
6/17/2022 2:38	-0.03	6/18/2022 1:28	0.63	6/18/2022 1:51	3.13	6/18/2022 3:14	-0.14	6/17/2022 1:59	10.88
6/17/2022 2:39	-0.05	6/18/2022 1:29	0.63	6/18/2022 1:52	3.11	6/18/2022 3:15	-0.15	6/17/2022 2:00	10.89
6/17/2022 2:40	-0.05	6/18/2022 1:30	0.63	6/18/2022 1:53	3.14	6/18/2022 3:16	-0.18	6/17/2022 2:01	10.90
6/17/2022 2:41	-0.03	6/18/2022 1:31	0.63	6/18/2022 1:54	3.14	6/18/2022 3:17	-0.14	6/17/2022 2:02	10.86
6/17/2022 2:42	-0.05	6/18/2022 1:32	0.63	6/18/2022 1:55	3.15	6/18/2022 3:18	-0.15	6/17/2022 2:03	10.86
6/17/2022 2:43	-0.03	6/18/2022 1:33	0.63	6/18/2022 1:56	3.15	6/18/2022 3:19	-0.16	6/17/2022 2:04	10.89
6/17/2022 2:44	-0.03	6/18/2022 1:34	0.63	6/18/2022 1:57	3.11	6/18/2022 3:20	-0.14	6/17/2022 2:05	10.83
6/17/2022 2:45	-0.03	6/18/2022 1:35	0.63	6/18/2022 1:58	3.10	6/18/2022 3:21	-0.13	6/17/2022 2:06	10.87
6/17/2022 2:46	-0.05	6/18/2022 1:36	0.63	6/18/2022 1:59	3.12	6/18/2022 3:22	-0.16	6/17/2022 2:07	10.88
6/17/2022 2:47	-0.03	6/18/2022 1:37	0.63	6/18/2022 2:00	3.13	6/18/2022 3:23	-0.11	6/17/2022 2:08	10.86
6/17/2022 2:48	-0.05	6/18/2022 1:38	0.62	6/18/2022 2:01	3.14	6/18/2022 3:24	-0.14	6/17/2022 2:09	10.89
6/17/2022 2:49	-0.05	6/18/2022 1:39	0.63	6/18/2022 2:02	3.15	6/18/2022 3:25	-0.16	6/17/2022 2:10	10.88
6/17/2022 2:50	-0.03	6/18/2022 1:40	0.63	6/18/2022 2:03	3.15	6/18/2022 3:26	-0.15	6/17/2022 2:11	10.90
6/17/2022 2:51	-0.03	6/18/2022 1:41	0.63	6/18/2022 2:04	3.13	6/18/2022 3:27	-0.12	6/17/2022 2:12	10.94
6/17/2022 2:52	-0.03	6/18/2022 1:42	0.63	6/18/2022 2:05	3.15	6/18/2022 3:28	-0.11	6/17/2022 2:13	10.90
6/17/2022 2:53	-0.05	6/18/2022 1:43	0.62	6/18/2022 2:06	3.13	6/18/2022 3:29	-0.15	6/17/2022 2:14	10.92
6/17/2022 2:54	-0.03	6/18/2022 1:44	0.63	6/18/2022 2:07	3.13	6/18/2022 3:30	-0.12	6/17/2022 2:15	10.94
6/17/2022 2:55	-0.03	6/18/2022 1:45	0.63	6/18/2022 2:08	3.10	6/18/2022 3:31	-0.13	6/17/2022 2:16	10.90
6/17/2022 2:56	-0.05	6/18/2022 1:46	0.62	6/18/2022 2:09	3.16	6/18/2022 3:32	-0.10	6/17/2022 2:17	10.92
6/17/2022 2:57	-0.05	6/18/2022 1:47	0.63	6/18/2022 2:10	3.16	6/18/2022 3:33	-0.15	6/17/2022 2:18	10.89
6/17/2022 2:58	-0.03	6/18/2022 1:48	0.62	6/18/2022 2:11	3.13	6/18/2022 3:34	-0.14	6/17/2022 2:19	10.95
6/17/2022 2:59	-0.03	6/18/2022 1:49	0.63	6/18/2022 2:12	3.15	6/18/2022 3:35	-0.16	6/17/2022 2:20	10.91
6/17/2022 3:00	-0.05	6/18/2022 1:50	0.63	6/18/2022 2:13	3.13	6/18/2022 3:36	-0.16	6/17/2022 2:21	10.88
6/17/2022 3:01	-0.03	6/18/2022 1:51	0.63	6/18/2022 2:14	3.12	6/18/2022 3:37	-0.13	6/17/2022 2:22	10.89
6/17/2022 3:02	-0.03	6/18/2022 1:52	0.63	6/18/2022 2:15	3.13	6/18/2022 3:38	-0.14	6/17/2022 2:23	10.94
6/17/2022 3:03	-0.05	6/18/2022 1:53	0.62	6/18/2022 2:16	3.13	6/18/2022 3:39	-0.09	6/17/2022 2:24	10.88
6/17/2022 3:04	-0.05	6/18/2022 1:54	0.65	6/18/2022 2:17	3.16	6/18/2022 3:40	-0.15	6/17/2022 2:25	10.90
6/17/2022 3:05	-0.05	6/18/2022 1:55	0.62	6/18/2022 2:18	3.16	6/18/2022 3:41	-0.16	6/17/2022 2:26	10.88
6/17/2022 3:06	-0.03	6/18/2022 1:56	0.63	6/18/2022 2:19	3.13	6/18/2022 3:42	-0.14	6/17/2022 2:27	10.92
6/17/2022 3:07	-0.04	6/18/2022 1:57	0.63	6/18/2022 2:20	3.13	6/18/2022 3:43	-0.17	6/17/2022 2:28	10.84
6/17/2022 3:08	-0.03	6/18/2022 1:58	0.62	6/18/2022 2:21	3.12	6/18/2022 3:44	-0.15	6/17/2022 2:29	10.88
6/17/2022 3:09	-0.05	6/18/2022 1:59	0.62	6/18/2022 2:22	3.15	6/18/2022 3:45	-0.13	6/17/2022 2:30	10.88
6/17/2022 3:10	-0.05	6/18/2022 2:00	0.62	6/18/2022 2:23	3.16	6/18/2022 3:46	-0.13	6/17/2022 2:31	10.90
6/17/2022 3:11	-0.03	6/18/2022 2:01	0.62	6/18/2022 2:24	3.13	6/18/2022 3:47	-0.13	6/17/2022 2:32	10.91
6/17/2022 3:12	-0.05	6/18/2022 2:02	0.62	6/18/2022 2:25	3.14	6/18/2022 3:48	-0.17	6/17/2022 2:33	10.87
6/17/2022 3:13	-0.03	6/18/2022 2:03	0.63	6/18/2022 2:26	3.15	6/18/2022 3:49	-0.15	6/17/2022 2:34	10.90
6/17/2022 3:14	-0.05	6/18/2022 2:04	0.63	6/18/2022 2:27	3.14	6/18/2022 3:50	-0.14	6/17/2022 2:35	10.84
6/17/2022 3:15	-0.05	6/18/2022 2:05	0.65	6/18/2022 2:28	3.13	6/18/2022 3:51	-0.13	6/17/2022 2:36	10.94
6/17/2022 3:16	-0.05	6/18/2022 2:06	0.62	6/18/2022 2:29	3.14	6/18/2022 3:52	-0.15	6/17/2022 2:37	10.87
6/17/2022 3:17	-0.05	6/18/2022 2:07	0.63	6/18/2022 2:30	3.15	6/18/2022 3:53	-0.13	6/17/2022 2:38	10.89
6/17/2022 3:18	-0.05	6/18/2022 2:08	0.62	6/18/2022 2:31	3.17	6/18/2022 3:54	-0.19	6/17/2022 2:39	10.88
6/17/2022 3:19	-0.05	6/18/2022 2:09	0.63	6/18/2022 2:32	3.12	6/18/2022 3:55	-0.13	6/17/2022 2:40	10.87
6/17/2022 3:20	-0.05	6/18/2022 2:10	0.63	6/18/2022 2:33	3.14	6/18/2022 3:56	-0.16	6/17/2022 2:41	10.85
6/17/2022 3:21	-0.05	6/18/2022 2:11	0.62	6/18/2022 2:34	3.14	6/18/2022 3:57	-0.16	6/17/2022 2:42	10.87
6/17/2022 3:22	-0.03	6/18/2022 2:12	0.62	6/18/2022 2:35	3.14	6/18/2022 3:58	-0.15	6/17/2022 2:43	10.89
6/17/2022 3:23	-0.05	6/18/2022 2:13	0.63	6/18/2022 2:36	3.14	6/18/2022 3:59	-0.17	6/17/2022 2:44	10.88
6/17/2022 3:24	-0.05	6/18/2022 2:14	0.62	6/18/2022 2:37	3.12	6/18/2022 4:00	-0.17	6/17/2022 2:45	10.87
6/17/2022 3:25	-0.05	6/18/2022 2:15	0.62	6/18/2022 2:38	3.13	6/18/2022 4:01	-0.12	6/17/2022 2:46	10.91
6/17/2022 3:26	-0.03	6/18/2022 2:16	0.62	6/18/2022 2:39	3.16	6/18/2022 4:02	-0.18	6/17/2022 2:47	10.89
6/17/2022 3:27	-0.03	6/18/2022 2:17	0.62	6/18/2022 2:40	3.14	6/18/2022 4:03	-0.13	6/17/2022 2:48	10.88
6/17/2022 3:28	-0.03	6/18/2022 2:18	0.62	6/18/2022 2:41	3.13	6/18/2022 4:04	-0.15	6/17/2022 2:49	10.85
6/17/2022 3:29	-0.04	6/18/2022 2:19	0.63	6/18/2022 2:42	3.15	6/18/2022 4:05	-0.17	6/17/2022 2:50	10.93
6/17/2022 3:30	-0.05	6/18/2022 2:20	0.62	6/18/2022 2:43	3.14	6/18/2022 4:06	-0.13	6/17/2022 2:51	10.87
6/17/2022 3:31	-0.05	6/18/2022 2:21	0.63	6/18/2022 2:44	3.13	6/18/2022 4:07	-0.13	6/17/2022 2:52	10.84
6/17/2022 3:32	-0.05	6/18/2022 2:22	0.62	6/18/2022 2:45	3.15	6/18/2022 4:08	-0.12	6/17/2022 2:53	10.87
6/17/2022 3:33	-0.05	6/18/2022 2:23	0.63	6/18/2022 2:46	3.12	6/18/2022 4:09	-0.13	6/17/2022 2:54	10.83
6/17/2022 3:34	-0.03	6/18/2022 2:24	0.63	6/18/2022 2:47	3.15	6/18/2022 4:10	-0.15	6/17/2022 2:55	10.89
6/17/2022 3:35	-0.05	6/18/2022 2:25	0.62	6/18/2022 2:48	3.19	6/18/2022 4:11	-0.13	6/17/2022 2:56	10.89
6/17/2022 3:36	-0.05	6/18/2022 2:26	0.63	6/18/2022 2:49	3.15	6/18/2022 4:12	-0.12	6/17/2022 2:57	10.86
6/17/2022 3:37	-0.04	6/18/2022 2:27	0.62	6/18/2022 2:50	3.14	6/18/2022 4:13	-0.15	6/17/2022 2:58	10.86
6/17/2022 3:38	-0.03	6/18/2022 2:28	0.62	6/18/2022 2:51	3.15	6/18/2022 4:14	-0.13	6/17/2022 2:59	10.85
6/17/2022 3:39	-0.05	6/18/2022 2:29	0.63	6/18/2022 2:52	3.12	6/18/2022 4:15	-0.12	6/17/2022 3:00	10.87
6/17/2022 3:40	-0.03	6/18/2022 2:30	0.63	6/18/2022 2:53	3.15	6/18/2022 4:16	-0.18	6/17/2022 3:01	10.87
6/17/2022 3:41	-0.03	6/18/2022 2:31	0.63	6/18/2022 2:54	3.13	6/18/2022 4:17	-0.14	6/17/2022 3:02	10.86
6/17/2022 3:42	-0.03	6/18/2022 2:32	0.62	6/18/2022 2:55	3.16	6/18/2022 4:18	-0.12	6/17/2022 3:03	10.87
6/17/2022 3:43	-0.05	6/18/2022 2:33	0.63	6/18/2022 2:56	3.12	6/18/2022 4:19	-0.16	6/17/2022 3:04	10.84
6/17/2022 3:44	-0.03	6/18/2022 2:34	0.63	6/18/2022 2:57	3.15	6/18/2022 4:20	-0.19	6/17/2022 3:05	10.89
6/17/2022 3:45	-0.03	6/18/2022 2:35	0.63	6/18/2022 2:58	3.13	6/18/2022 4:21	-0.17	6/17/2022 3:06	10.87
6/17/2022 3:46	-0.05	6/18/2022 2:36	0.63	6/18/2022 2:59	3.14	6/18/2022 4:22	-0.15	6/17/2022 3:07	10.85
6/17/2022 3:47	-0.05	6/18/2022 2:37	0.62	6/18/2022 3:00	3.14	6/18/2022 4:23	-0.15	6/17/2022 3:08	10.87
6/17/2022 3:48	-0.05	6/18/2022 2:38	0.63	6/18/2022 3:01	3.15	6/18/2022 4:24	-0.16	6/17/2022 3:09	10.92
6/17/2022 3:49	-0.04	6/18/2022 2:39	0.62	6/18/2022 3:02	3.14	6/18/2022 4:25	-0.15	6/17/2022 3:10	10.92
6/17/2022 3:50	-0.03	6/18/2022 2:40	0.63	6/18/2022 3:03	3.14	6/18/2022 4:26	-0.15	6/17/2022 3:11	10.92
6/17/2022 3:51	-0.03	6/18/2022 2:41	0.63	6/18/2022 3:04	3.14	6/18/2022 4:27	-0.15	6/17/2022 3:12	10.87
6/17/2022 3:52	-0.05	6/18/2022 2:42	0.63	6/18/2022 3:05	3.15	6/18/2022 4:28	-0.15	6/17/2022 3:13	10.85

6/17/2022 3:53	-0.03	6/18/2022 2:43	0.62	6/18/2022 3:06	3.13	6/18/2022 4:29	-0.17	6/17/2022 3:14	10.90
6/17/2022 3:54	-0.05	6/18/2022 2:44	0.62	6/18/2022 3:07	3.13	6/18/2022 4:30	-0.12	6/17/2022 3:15	10.87
6/17/2022 3:55	-0.05	6/18/2022 2:45	0.63	6/18/2022 3:08	3.13	6/18/2022 4:31	-0.16	6/17/2022 3:16	10.92
6/17/2022 3:56	-0.05	6/18/2022 2:46	0.63	6/18/2022 3:09	3.15	6/18/2022 4:32	-0.14	6/17/2022 3:17	10.90
6/17/2022 3:57	-0.05	6/18/2022 2:47	0.62	6/18/2022 3:10	3.16	6/18/2022 4:33	-0.15	6/17/2022 3:18	10.90
6/17/2022 3:58	-0.05	6/18/2022 2:48	0.62	6/18/2022 3:11	3.14	6/18/2022 4:34	-0.11	6/17/2022 3:19	10.88
6/17/2022 3:59	-0.05	6/18/2022 2:49	0.63	6/18/2022 3:12	3.15	6/18/2022 4:35	-0.15	6/17/2022 3:20	10.86
6/17/2022 4:00	-0.05	6/18/2022 2:50	0.63	6/18/2022 3:13	3.18	6/18/2022 4:36	-0.16	6/17/2022 3:21	10.85
6/17/2022 4:01	-0.05	6/18/2022 2:51	0.63	6/18/2022 3:14	3.16	6/18/2022 4:37	-0.15	6/17/2022 3:22	10.88
6/17/2022 4:02	-0.04	6/18/2022 2:52	0.63	6/18/2022 3:15	3.14	6/18/2022 4:38	-0.14	6/17/2022 3:23	10.89
6/17/2022 4:03	-0.05	6/18/2022 2:53	0.63	6/18/2022 3:16	3.18	6/18/2022 4:39	-0.16	6/17/2022 3:24	10.84
6/17/2022 4:04	-0.05	6/18/2022 2:54	0.63	6/18/2022 3:17	3.13	6/18/2022 4:40	-0.18	6/17/2022 3:25	10.91
6/17/2022 4:05	-0.05	6/18/2022 2:55	0.63	6/18/2022 3:18	3.13	6/18/2022 4:41	-0.17	6/17/2022 3:26	10.87
6/17/2022 4:06	-0.05	6/18/2022 2:56	0.63	6/18/2022 3:19	3.16	6/18/2022 4:42	-0.15	6/17/2022 3:27	10.92
6/17/2022 4:07	-0.05	6/18/2022 2:57	0.62	6/18/2022 3:20	3.15	6/18/2022 4:43	-0.15	6/17/2022 3:28	10.90
6/17/2022 4:08	-0.05	6/18/2022 2:58	0.63	6/18/2022 3:21	3.16	6/18/2022 4:44	-0.14	6/17/2022 3:29	10.88
6/17/2022 4:09	-0.05	6/18/2022 2:59	0.63	6/18/2022 3:22	3.15	6/18/2022 4:45	-0.14	6/17/2022 3:30	10.87
6/17/2022 4:10	-0.05	6/18/2022 3:00	0.63	6/18/2022 3:23	3.12	6/18/2022 4:46	-0.19	6/17/2022 3:31	10.92
6/17/2022 4:11	-0.05	6/18/2022 3:01	0.63	6/18/2022 3:24	3.16	6/18/2022 4:47	-0.15	6/17/2022 3:32	10.85
6/17/2022 4:12	-0.03	6/18/2022 3:02	0.62	6/18/2022 3:25	3.12	6/18/2022 4:48	-0.13	6/17/2022 3:33	10.90
6/17/2022 4:13	-0.05	6/18/2022 3:03	0.65	6/18/2022 3:26	3.15	6/18/2022 4:49	-0.16	6/17/2022 3:34	10.92
6/17/2022 4:14	-0.05	6/18/2022 3:04	0.63	6/18/2022 3:27	3.18	6/18/2022 4:50	-0.13	6/17/2022 3:35	10.88
6/17/2022 4:15	-0.05	6/18/2022 3:05	0.63	6/18/2022 3:28	3.14	6/18/2022 4:51	-0.16	6/17/2022 3:36	10.88
6/17/2022 4:16	-0.05	6/18/2022 3:06	0.62	6/18/2022 3:29	3.14	6/18/2022 4:52	-0.13	6/17/2022 3:37	10.86
6/17/2022 4:17	-0.04	6/18/2022 3:07	0.63	6/18/2022 3:30	3.16	6/18/2022 4:53	-0.16	6/17/2022 3:38	10.89
6/17/2022 4:18	-0.05	6/18/2022 3:08	0.63	6/18/2022 3:31	3.15	6/18/2022 4:54	-0.18	6/17/2022 3:39	10.86
6/17/2022 4:19	-0.03	6/18/2022 3:09	0.63	6/18/2022 3:32	3.12	6/18/2022 4:55	-0.14	6/17/2022 3:40	10.90
6/17/2022 4:20	-0.05	6/18/2022 3:10	0.63	6/18/2022 3:33	3.14	6/18/2022 4:56	-0.16	6/17/2022 3:41	10.86
6/17/2022 4:21	-0.03	6/18/2022 3:11	0.63	6/18/2022 3:34	3.13	6/18/2022 4:57	-0.14	6/17/2022 3:42	10.87
6/17/2022 4:22	-0.05	6/18/2022 3:12	0.63	6/18/2022 3:35	3.14	6/18/2022 4:58	-0.10	6/17/2022 3:43	10.89
6/17/2022 4:23	-0.05	6/18/2022 3:13	0.63	6/18/2022 3:36	3.16	6/18/2022 4:59	-0.17	6/17/2022 3:44	10.95
6/17/2022 4:24	-0.04	6/18/2022 3:14	0.65	6/18/2022 3:37	3.18	6/18/2022 5:00	-0.17	6/17/2022 3:45	10.90
6/17/2022 4:25	-0.03	6/18/2022 3:15	0.62	6/18/2022 3:38	3.16	6/18/2022 5:01	-0.15	6/17/2022 3:46	10.92
6/17/2022 4:26	-0.05	6/18/2022 3:16	0.63	6/18/2022 3:39	3.15	6/18/2022 5:02	-0.14	6/17/2022 3:47	10.91
6/17/2022 4:27	-0.05	6/18/2022 3:17	0.63	6/18/2022 3:40	3.16	6/18/2022 5:03	-0.17	6/17/2022 3:48	10.92
6/17/2022 4:28	-0.03	6/18/2022 3:18	0.63	6/18/2022 3:41	3.16	6/18/2022 5:04	-0.17	6/17/2022 3:49	10.88
6/17/2022 4:29	-0.05	6/18/2022 3:19	0.63	6/18/2022 3:42	3.18	6/18/2022 5:05	-0.15	6/17/2022 3:50	10.96
6/17/2022 4:30	-0.03	6/18/2022 3:20	0.62	6/18/2022 3:43	3.15	6/18/2022 5:06	-0.17	6/17/2022 3:51	10.88
6/17/2022 4:31	-0.05	6/18/2022 3:21	0.63	6/18/2022 3:44	3.17	6/18/2022 5:07	-0.17	6/17/2022 3:52	10.91
6/17/2022 4:32	-0.05	6/18/2022 3:22	0.63	6/18/2022 3:45	3.16	6/18/2022 5:08	-0.12	6/17/2022 3:53	10.90
6/17/2022 4:33	-0.04	6/18/2022 3:23	0.63	6/18/2022 3:46	3.17	6/18/2022 5:09	-0.19	6/17/2022 3:54	10.91
6/17/2022 4:34	-0.05	6/18/2022 3:24	0.62	6/18/2022 3:47	3.13	6/18/2022 5:10	-0.11	6/17/2022 3:55	10.86
6/17/2022 4:35	-0.05	6/18/2022 3:25	0.63	6/18/2022 3:48	3.16	6/18/2022 5:11	-0.15	6/17/2022 3:56	10.84
6/17/2022 4:36	-0.05	6/18/2022 3:26	0.63	6/18/2022 3:49	3.15	6/18/2022 5:12	-0.15	6/17/2022 3:57	10.92
6/17/2022 4:37	-0.05	6/18/2022 3:27	0.63	6/18/2022 3:50	3.13	6/18/2022 5:13	-0.17	6/17/2022 3:58	10.92
6/17/2022 4:38	-0.03	6/18/2022 3:28	0.63	6/18/2022 3:51	3.13	6/18/2022 5:14	-0.13	6/17/2022 3:59	10.93
6/17/2022 4:39	-0.05	6/18/2022 3:29	0.63	6/18/2022 3:52	3.17	6/18/2022 5:15	-0.13	6/17/2022 4:00	10.93
6/17/2022 4:40	-0.05	6/18/2022 3:30	0.63	6/18/2022 3:53	3.15	6/18/2022 5:16	-0.15	6/17/2022 4:01	10.90
6/17/2022 4:41	-0.03	6/18/2022 3:31	0.63	6/18/2022 3:54	3.14	6/18/2022 5:17	-0.15	6/17/2022 4:02	10.92
6/17/2022 4:42	-0.05	6/18/2022 3:32	0.63	6/18/2022 3:55	3.14	6/18/2022 5:18	-0.17	6/17/2022 4:03	10.90
6/17/2022 4:43	-0.04	6/18/2022 3:33	0.63	6/18/2022 3:56	3.20	6/18/2022 5:19	-0.17	6/17/2022 4:04	10.90
6/17/2022 4:44	-0.05	6/18/2022 3:34	0.63	6/18/2022 3:57	3.11	6/18/2022 5:20	-0.17	6/17/2022 4:05	10.89
6/17/2022 4:45	-0.05	6/18/2022 3:35	0.63	6/18/2022 3:58	3.16	6/18/2022 5:21	-0.16	6/17/2022 4:06	10.89
6/17/2022 4:46	-0.05	6/18/2022 3:36	0.65	6/18/2022 3:59	3.14	6/18/2022 5:22	-0.15	6/17/2022 4:07	10.93
6/17/2022 4:47	-0.04	6/18/2022 3:37	0.63	6/18/2022 4:00	3.15	6/18/2022 5:23	-0.13	6/17/2022 4:08	10.86
6/17/2022 4:48	-0.04	6/18/2022 3:38	0.63	6/18/2022 4:01	3.18	6/18/2022 5:24	-0.13	6/17/2022 4:09	10.90
6/17/2022 4:49	-0.05	6/18/2022 3:39	0.63	6/18/2022 4:02	3.18	6/18/2022 5:25	-0.12	6/17/2022 4:10	10.89
6/17/2022 4:50	-0.03	6/18/2022 3:40	0.63	6/18/2022 4:03	3.15	6/18/2022 5:26	-0.13	6/17/2022 4:11	10.86
6/17/2022 4:51	-0.03	6/18/2022 3:41	0.63	6/18/2022 4:04	3.14	6/18/2022 5:27	-0.15	6/17/2022 4:12	10.86
6/17/2022 4:52	-0.04	6/18/2022 3:42	0.63	6/18/2022 4:05	3.19	6/18/2022 5:28	-0.15	6/17/2022 4:13	10.89
6/17/2022 4:53	-0.05	6/18/2022 3:43	0.63	6/18/2022 4:06	3.17	6/18/2022 5:29	-0.15	6/17/2022 4:14	10.90
6/17/2022 4:54	-0.04	6/18/2022 3:44	0.63	6/18/2022 4:07	3.17	6/18/2022 5:30	-0.16	6/17/2022 4:15	10.95
6/17/2022 4:55	-0.04	6/18/2022 3:45	0.63	6/18/2022 4:08	3.14	6/18/2022 5:31	-0.15	6/17/2022 4:16	10.95
6/17/2022 4:56	-0.05	6/18/2022 3:46	0.63	6/18/2022 4:09	3.19	6/18/2022 5:32	-0.15	6/17/2022 4:17	10.85
6/17/2022 4:57	-0.03	6/18/2022 3:47	0.63	6/18/2022 4:10	3.14	6/18/2022 5:33	-0.14	6/17/2022 4:18	10.94
6/17/2022 4:58	-0.05	6/18/2022 3:48	0.63	6/18/2022 4:11	3.17	6/18/2022 5:34	-0.11	6/17/2022 4:19	10.93
6/17/2022 4:59	-0.05	6/18/2022 3:49	0.63	6/18/2022 4:12	3.15	6/18/2022 5:35	-0.16	6/17/2022 4:20	10.91
6/17/2022 5:00	-0.05	6/18/2022 3:50	0.63	6/18/2022 4:13	3.16	6/18/2022 5:36	-0.17	6/17/2022 4:21	10.88
6/17/2022 5:01	-0.05	6/18/2022 3:51	0.62	6/18/2022 4:14	3.18	6/18/2022 5:37	-0.13	6/17/2022 4:22	10.86
6/17/2022 5:02	-0.05	6/18/2022 3:52	0.63	6/18/2022 4:15	3.19	6/18/2022 5:38	-0.18	6/17/2022 4:23	10.91
6/17/2022 5:03	-0.05	6/18/2022 3:53	0.63	6/18/2022 4:16	3.16	6/18/2022 5:39	-0.18	6/17/2022 4:24	10.94
6/17/2022 5:04	-0.05	6/18/2022 3:54	0.63	6/18/2022 4:17	3.17	6/18/2022 5:40	-0.15	6/17/2022 4:25	10.94
6/17/2022 5:05	-0.04	6/18/2022 3:55	0.63	6/18/2022 4:18	3.14	6/18/2022 5:41	-0.16	6/17/2022 4:26	10.87
6/17/2022 5:06	-0.05	6/18/2022 3:56	0.63	6/18/2022 4:19	3.14	6/18/2022 5:42	-0.12	6/17/2022 4:27	10.93
6/17/2022 5:07	-0.04	6/18/2022 3:57	0.63	6/18/2022 4:20	3.19	6/18/2022 5:43	-0.19	6/17/2022 4:28	10.94
6/17/2022 5:08	-0.04	6/18/2022 3:58	0.63	6/18/2022 4:21	3.15	6/18/2022 5:44	-0.17	6/17/2022 4:29	10.91
6/17/2022 5:09	-0.05	6/18/2022 3:59	0.63	6/18/2022 4:22	3.14	6/18/2022 5:45	-0.15	6/17/2022 4:30	10.92
6/17/2022 5:10	-0.05	6/18/2022 4:00	0.62	6/18/2022 4:23	3.15	6/18/2022 5:46	-0.13	6/17/2022 4:31	10.91
6/17/2022 5:11	-0.05	6/18/2022 4:01	0.62	6/18/2022 4:24	3.17	6/18/2022 5:47	-0.13	6/17/2022 4:32	10.90
6/17/2022 5:12	-0.05	6/18/2022 4:02	0.63	6/18/2022 4:25	3.16	6/18/2022 5:48	-0.13	6/17/2022 4:33	10.91
6/17/2022 5:13	-0.04	6/18/2022 4:03	0.63	6/18/2022 4:26	3.13	6/18/2022 5:49	-0.16	6/17/2022 4:34	10.95
6/17/2022 5:14	-0.05	6/18/2022 4:04	0.63	6/18/2022 4:27	3.17	6/18/2022 5:50	-0.17	6/17/2022 4:35	10.89
6/17/2022 5:15	-0.05	6/18/2022 4:05	0.63	6/18/2022 4:28	3.15	6/18/2022 5:51	-0.17	6/17/2022 4:36	10.87
6/17/2022 5:16	-0.06	6/18/2022 4:06	0.63	6/18/2022 4:29	3.13	6/18/2022 5:52	-0.16	6/17/2022 4:37	10.88
6/17/2022 5:17	-0.05	6/18/2022 4:07	0.63	6/18/2022 4:30	3.16	6/18/2022 5:53	-0.16	6/17/2022 4:38	10.94
6/17/2022 5:18	-0.03	6/18/2022 4:08	0.63	6/18/2022 4:31	3.17	6/18/2022 5:54	-0.22	6/17/2022 4:39	10.86
6/17/2022 5:19	-0.05	6/18/2022 4:09	0.63	6/18/2022 4:32	3.19	6/18/2022 5:55	-0.15	6/17/2022 4:40	10.92
6/17/2022 5:20	-0.05	6/18/2022 4:10	0.63	6/18/2022 4:33	3.14	6/18/2022 5:56	-0.17	6/17/2022 4:41	10.92

6/17/2022 5:21	-0.03	6/18/2022 4:11	0.63	6/18/2022 4:34	3.14	6/18/2022 5:57	-0.15	6/17/2022 4:42	10.91
6/17/2022 5:22	-0.03	6/18/2022 4:12	0.63	6/18/2022 4:35	3.17	6/18/2022 5:58	-0.18	6/17/2022 4:43	10.91
6/17/2022 5:23	-0.04	6/18/2022 4:13	0.63	6/18/2022 4:36	3.15	6/18/2022 5:59	-0.17	6/17/2022 4:44	10.92
6/17/2022 5:24	-0.05	6/18/2022 4:14	0.63	6/18/2022 4:37	3.12	6/18/2022 6:00	-0.16	6/17/2022 4:45	10.89
6/17/2022 5:25	-0.04	6/18/2022 4:15	0.63	6/18/2022 4:38	3.15	6/18/2022 6:01	-0.12	6/17/2022 4:46	10.91
6/17/2022 5:26	-0.05	6/18/2022 4:16	0.63	6/18/2022 4:39	3.18	6/18/2022 6:02	-0.22	6/17/2022 4:47	10.89
6/17/2022 5:27	-0.05	6/18/2022 4:17	0.62	6/18/2022 4:40	3.18	6/18/2022 6:03	-0.16	6/17/2022 4:48	10.91
6/17/2022 5:28	-0.05	6/18/2022 4:18	0.63	6/18/2022 4:41	3.16	6/18/2022 6:04	-0.17	6/17/2022 4:49	10.90
6/17/2022 5:29	-0.05	6/18/2022 4:19	0.63	6/18/2022 4:42	3.17	6/18/2022 6:05	-0.17	6/17/2022 4:50	10.91
6/17/2022 5:30	-0.04	6/18/2022 4:20	0.63	6/18/2022 4:43	3.16	6/18/2022 6:06	-0.18	6/17/2022 4:51	10.88
6/17/2022 5:31	-0.04	6/18/2022 4:21	0.63	6/18/2022 4:44	3.16	6/18/2022 6:07	-0.17	6/17/2022 4:52	10.88
6/17/2022 5:32	-0.05	6/18/2022 4:22	0.63	6/18/2022 4:45	3.13	6/18/2022 6:08	-0.18	6/17/2022 4:53	10.85
6/17/2022 5:33	-0.05	6/18/2022 4:23	0.62	6/18/2022 4:46	3.15	6/18/2022 6:09	-0.18	6/17/2022 4:54	10.90
6/17/2022 5:34	-0.05	6/18/2022 4:24	0.63	6/18/2022 4:47	3.18	6/18/2022 6:10	-0.15	6/17/2022 4:55	10.90
6/17/2022 5:35	-0.04	6/18/2022 4:25	0.62	6/18/2022 4:48	3.15	6/18/2022 6:11	-0.16	6/17/2022 4:56	10.90
6/17/2022 5:36	-0.05	6/18/2022 4:26	0.62	6/18/2022 4:49	3.17	6/18/2022 6:12	-0.17	6/17/2022 4:57	10.92
6/17/2022 5:37	-0.05	6/18/2022 4:27	0.62	6/18/2022 4:50	3.14	6/18/2022 6:13	-0.16	6/17/2022 4:58	10.88
6/17/2022 5:38	-0.05	6/18/2022 4:28	0.63	6/18/2022 4:51	3.15	6/18/2022 6:14	-0.18	6/17/2022 4:59	10.94
6/17/2022 5:39	-0.03	6/18/2022 4:29	0.63	6/18/2022 4:52	3.13	6/18/2022 6:15	-0.16	6/17/2022 5:00	10.93
6/17/2022 5:40	-0.04	6/18/2022 4:30	0.62	6/18/2022 4:53	3.14	6/18/2022 6:16	-0.17	6/17/2022 5:01	10.93
6/17/2022 5:41	-0.05	6/18/2022 4:31	0.63	6/18/2022 4:54	3.16	6/18/2022 6:17	-0.19	6/17/2022 5:02	10.88
6/17/2022 5:42	-0.05	6/18/2022 4:32	0.63	6/18/2022 4:55	3.17	6/18/2022 6:18	-0.17	6/17/2022 5:03	10.94
6/17/2022 5:43	-0.03	6/18/2022 4:33	0.62	6/18/2022 4:56	3.15	6/18/2022 6:19	-0.18	6/17/2022 5:04	10.86
6/17/2022 5:44	-0.03	6/18/2022 4:34	0.63	6/18/2022 4:57	3.16	6/18/2022 6:20	-0.17	6/17/2022 5:05	10.89
6/17/2022 5:45	-0.05	6/18/2022 4:35	0.62	6/18/2022 4:58	3.17	6/18/2022 6:21	-0.12	6/17/2022 5:06	10.93
6/17/2022 5:46	-0.05	6/18/2022 4:36	0.63	6/18/2022 4:59	3.15	6/18/2022 6:22	-0.17	6/17/2022 5:07	10.91
6/17/2022 5:47	-0.05	6/18/2022 4:37	0.63	6/18/2022 5:00	3.16	6/18/2022 6:23	-0.17	6/17/2022 5:08	10.92
6/17/2022 5:48	-0.05	6/18/2022 4:38	0.63	6/18/2022 5:01	3.17	6/18/2022 6:24	-0.14	6/17/2022 5:09	10.95
6/17/2022 5:49	-0.05	6/18/2022 4:39	0.62	6/18/2022 5:02	3.15	6/18/2022 6:25	-0.17	6/17/2022 5:10	10.86
6/17/2022 5:50	-0.05	6/18/2022 4:40	0.63	6/18/2022 5:03	3.17	6/18/2022 6:26	-0.14	6/17/2022 5:11	10.95
6/17/2022 5:51	-0.05	6/18/2022 4:41	0.63	6/18/2022 5:04	3.17	6/18/2022 6:27	-0.17	6/17/2022 5:12	10.90
6/17/2022 5:52	-0.04	6/18/2022 4:42	0.63	6/18/2022 5:05	3.17	6/18/2022 6:28	-0.16	6/17/2022 5:13	10.89
6/17/2022 5:53	-0.05	6/18/2022 4:43	0.63	6/18/2022 5:06	3.16	6/18/2022 6:29	-0.15	6/17/2022 5:14	10.88
6/17/2022 5:54	-0.05	6/18/2022 4:44	0.63	6/18/2022 5:07	3.18	6/18/2022 6:30	-0.20	6/17/2022 5:15	10.91
6/17/2022 5:55	-0.05	6/18/2022 4:45	0.63	6/18/2022 5:08	3.14	6/18/2022 6:31	-0.22	6/17/2022 5:16	10.85
6/17/2022 5:56	-0.05	6/18/2022 4:46	0.63	6/18/2022 5:09	3.17	6/18/2022 6:32	-0.19	6/17/2022 5:17	10.85
6/17/2022 5:57	-0.05	6/18/2022 4:47	0.63	6/18/2022 5:10	3.17	6/18/2022 6:33	-0.17	6/17/2022 5:18	10.89
6/17/2022 5:58	-0.05	6/18/2022 4:48	0.63	6/18/2022 5:11	3.18	6/18/2022 6:34	-0.15	6/17/2022 5:19	10.85
6/17/2022 5:59	-0.05	6/18/2022 4:49	0.63	6/18/2022 5:12	3.18	6/18/2022 6:35	-0.15	6/17/2022 5:20	10.95
6/17/2022 6:00	-0.05	6/18/2022 4:50	0.63	6/18/2022 5:13	3.13	6/18/2022 6:36	-0.18	6/17/2022 5:21	10.89
6/17/2022 6:01	-0.04	6/18/2022 4:51	0.63	6/18/2022 5:14	3.19	6/18/2022 6:37	-0.17	6/17/2022 5:22	10.88
6/17/2022 6:02	-0.03	6/18/2022 4:52	0.63	6/18/2022 5:15	3.16	6/18/2022 6:38	-0.18	6/17/2022 5:23	10.90
6/17/2022 6:03	-0.05	6/18/2022 4:53	0.63	6/18/2022 5:16	3.13	6/18/2022 6:39	-0.22	6/17/2022 5:24	10.89
6/17/2022 6:04	-0.03	6/18/2022 4:54	0.63	6/18/2022 5:17	3.17	6/18/2022 6:40	-0.15	6/17/2022 5:25	10.90
6/17/2022 6:05	-0.03	6/18/2022 4:55	0.63	6/18/2022 5:18	3.18	6/18/2022 6:41	-0.17	6/17/2022 5:26	10.93
6/17/2022 6:06	-0.03	6/18/2022 4:56	0.63	6/18/2022 5:19	3.15	6/18/2022 6:42	-0.18	6/17/2022 5:27	10.87
6/17/2022 6:07	-0.04	6/18/2022 4:57	0.63	6/18/2022 5:20	3.21	6/18/2022 6:43	-0.17	6/17/2022 5:28	10.89
6/17/2022 6:08	-0.04	6/18/2022 4:58	0.62	6/18/2022 5:21	3.14	6/18/2022 6:44	-0.17	6/17/2022 5:29	10.91
6/17/2022 6:09	-0.04	6/18/2022 4:59	0.63	6/18/2022 5:22	3.17	6/18/2022 6:45	-0.17	6/17/2022 5:30	10.94
6/17/2022 6:10	-0.05	6/18/2022 5:00	0.63	6/18/2022 5:23	3.19	6/18/2022 6:46	-0.17	6/17/2022 5:31	10.96
6/17/2022 6:11	-0.05	6/18/2022 5:01	0.63	6/18/2022 5:24	3.16	6/18/2022 6:47	-0.19	6/17/2022 5:32	10.91
6/17/2022 6:12	-0.04	6/18/2022 5:02	0.63	6/18/2022 5:25	3.18	6/18/2022 6:48	-0.15	6/17/2022 5:33	10.97
6/17/2022 6:13	-0.03	6/18/2022 5:03	0.63	6/18/2022 5:26	3.15	6/18/2022 6:49	-0.13	6/17/2022 5:34	10.87
6/17/2022 6:14	-0.05	6/18/2022 5:04	0.63	6/18/2022 5:27	3.14	6/18/2022 6:50	-0.18	6/17/2022 5:35	10.89
6/17/2022 6:15	-0.04	6/18/2022 5:05	0.63	6/18/2022 5:28	3.20	6/18/2022 6:51	-0.14	6/17/2022 5:36	10.90
6/17/2022 6:16	-0.05	6/18/2022 5:06	0.63	6/18/2022 5:29	3.16	6/18/2022 6:52	-0.18	6/17/2022 5:37	10.90
6/17/2022 6:17	-0.04	6/18/2022 5:07	0.63	6/18/2022 5:30	3.14	6/18/2022 6:53	-0.18	6/17/2022 5:38	10.85
6/17/2022 6:18	-0.06	6/18/2022 5:08	0.63	6/18/2022 5:31	3.18	6/18/2022 6:54	-0.15	6/17/2022 5:39	10.89
6/17/2022 6:19	-0.05	6/18/2022 5:09	0.63	6/18/2022 5:32	3.15	6/18/2022 6:55	-0.15	6/17/2022 5:40	10.92
6/17/2022 6:20	-0.05	6/18/2022 5:10	0.65	6/18/2022 5:33	3.16	6/18/2022 6:56	-0.15	6/17/2022 5:41	10.84
6/17/2022 6:21	-0.03	6/18/2022 5:11	0.63	6/18/2022 5:34	3.17	6/18/2022 6:57	-0.16	6/17/2022 5:42	10.94
6/17/2022 6:22	-0.05	6/18/2022 5:12	0.63	6/18/2022 5:35	3.17	6/18/2022 6:58	-0.18	6/17/2022 5:43	10.91
6/17/2022 6:23	-0.05	6/18/2022 5:13	0.62	6/18/2022 5:36	3.18	6/18/2022 6:59	-0.17	6/17/2022 5:44	10.89
6/17/2022 6:24	-0.05	6/18/2022 5:14	0.65	6/18/2022 5:37	3.15	6/18/2022 7:00	-0.19	6/17/2022 5:45	10.92
6/17/2022 6:25	-0.05	6/18/2022 5:15	0.63	6/18/2022 5:38	3.12	6/18/2022 7:01	-0.17	6/17/2022 5:46	10.87
6/17/2022 6:26	-0.05	6/18/2022 5:16	0.63	6/18/2022 5:39	3.18	6/18/2022 7:02	-0.17	6/17/2022 5:47	10.90
6/17/2022 6:27	-0.04	6/18/2022 5:17	0.63	6/18/2022 5:40	3.18	6/18/2022 7:03	-0.13	6/17/2022 5:48	10.88
6/17/2022 6:28	-0.04	6/18/2022 5:18	0.63	6/18/2022 5:41	3.15	6/18/2022 7:04	-0.12	6/17/2022 5:49	10.89
6/17/2022 6:29	-0.05	6/18/2022 5:19	0.63	6/18/2022 5:42	3.18	6/18/2022 7:05	-0.17	6/17/2022 5:50	10.93
6/17/2022 6:30	-0.05	6/18/2022 5:20	0.63	6/18/2022 5:43	3.17	6/18/2022 7:06	-0.19	6/17/2022 5:51	10.86
6/17/2022 6:31	-0.05	6/18/2022 5:21	0.63	6/18/2022 5:44	3.18	6/18/2022 7:07	-0.20	6/17/2022 5:52	10.92
6/17/2022 6:32	-0.05	6/18/2022 5:22	0.63	6/18/2022 5:45	3.14	6/18/2022 7:08	-0.15	6/17/2022 5:53	10.86
6/17/2022 6:33	-0.05	6/18/2022 5:23	0.63	6/18/2022 5:46	3.18	6/18/2022 7:09	-0.17	6/17/2022 5:54	10.93
6/17/2022 6:34	-0.03	6/18/2022 5:24	0.63	6/18/2022 5:47	3.18	6/18/2022 7:10	-0.17	6/17/2022 5:55	10.89
6/17/2022 6:35	-0.05	6/18/2022 5:25	0.63	6/18/2022 5:48	3.17	6/18/2022 7:11	-0.15	6/17/2022 5:56	10.85
6/17/2022 6:36	-0.04	6/18/2022 5:26	0.63	6/18/2022 5:49	3.14	6/18/2022 7:12	-0.15	6/17/2022 5:57	10.88
6/17/2022 6:37	-0.05	6/18/2022 5:27	0.63	6/18/2022 5:50	3.17	6/18/2022 7:13	-0.15	6/17/2022 5:58	10.93
6/17/2022 6:38	-0.05	6/18/2022 5:28	0.63	6/18/2022 5:51	3.17	6/18/2022 7:14	-0.19	6/17/2022 5:59	10.85
6/17/2022 6:39	-0.06	6/18/2022 5:29	0.63	6/18/2022 5:52	3.18	6/18/2022 7:15	-0.16	6/17/2022 6:00	10.90
6/17/2022 6:40	-0.06	6/18/2022 5:30	0.63	6/18/2022 5:53	3.19	6/18/2022 7:16	-0.18	6/17/2022 6:01	10.87
6/17/2022 6:41	-0.05	6/18/2022 5:31	0.63	6/18/2022 5:54	3.14	6/18/2022 7:17	-0.19	6/17/2022 6:02	10.89
6/17/2022 6:42	-0.05	6/18/2022 5:32	0.63	6/18/2022 5:55	3.17	6/18/2022 7:18	-0.19	6/17/2022 6:03	10.86
6/17/2022 6:43	-0.06	6/18/2022 5:33	0.63	6/18/2022 5:56	3.17	6/18/2022 7:19	-0.17	6/17/2022 6:04	10.90
6/17/2022 6:44	-0.04	6/18/2022 5:34	0.63	6/18/2022 5:57	3.18	6/18/2022 7:20	-0.13	6/17/2022 6:05	10.90
6/17/2022 6:45	-0.04	6/18/2022 5:35	0.65	6/18/2022 5:58	3.20	6/18/2022 7:21	-0.18	6/17/2022 6:06	10.93
6/17/2022 6:46	-0.05	6/18/2022 5:36	0.65	6/18/2022 5:59	3.20	6/18/2022 7:22	-0.18	6/17/2022 6:07	10.92
6/17/2022 6:47	-0.05	6/18/2022 5:37	0.63	6/18/2022 6:00	3.16	6/18/2022 7:23	-0.17	6/17/2022 6:08	10.88
6/17/2022 6:48	-0.04	6/18/2022 5:38	0.63	6/18/2022 6:01	3.17	6/18/2022 7:24	-0.19	6/17/2022 6:09	10.87

6/17/2022 6:49	-0.04	6/18/2022 5:39	0.65	6/18/2022 6:02	3.19	6/18/2022 7:25	-0.15	6/17/2022 6:10	10.91
6/17/2022 6:50	-0.04	6/18/2022 5:40	0.63	6/18/2022 6:03	3.18	6/18/2022 7:26	-0.18	6/17/2022 6:11	10.92
6/17/2022 6:51	-0.04	6/18/2022 5:41	0.63	6/18/2022 6:04	3.18	6/18/2022 7:27	-0.17	6/17/2022 6:12	10.91
6/17/2022 6:52	-0.04	6/18/2022 5:42	0.63	6/18/2022 6:05	3.19	6/18/2022 7:28	-0.18	6/17/2022 6:13	10.88
6/17/2022 6:53	-0.05	6/18/2022 5:43	0.63	6/18/2022 6:06	3.19	6/18/2022 7:29	-0.17	6/17/2022 6:14	10.89
6/17/2022 6:54	-0.03	6/18/2022 5:44	0.63	6/18/2022 6:07	3.16	6/18/2022 7:30	-0.16	6/17/2022 6:15	10.91
6/17/2022 6:55	-0.03	6/18/2022 5:45	0.63	6/18/2022 6:08	3.17	6/18/2022 7:31	-0.16	6/17/2022 6:16	10.91
6/17/2022 6:56	-0.04	6/18/2022 5:46	0.63	6/18/2022 6:09	3.16	6/18/2022 7:32	-0.15	6/17/2022 6:17	10.92
6/17/2022 6:57	-0.04	6/18/2022 5:47	0.63	6/18/2022 6:10	3.17	6/18/2022 7:33	-0.19	6/17/2022 6:18	10.94
6/17/2022 6:58	-0.06	6/18/2022 5:48	0.63	6/18/2022 6:11	3.21	6/18/2022 7:34	-0.14	6/17/2022 6:19	10.88
6/17/2022 6:59	-0.05	6/18/2022 5:49	0.63	6/18/2022 6:12	3.17	6/18/2022 7:35	-0.17	6/17/2022 6:20	10.87
6/17/2022 7:00	-0.05	6/18/2022 5:50	0.63	6/18/2022 6:13	3.18	6/18/2022 7:36	-0.15	6/17/2022 6:21	10.94
6/17/2022 7:01	-0.04	6/18/2022 5:51	0.63	6/18/2022 6:14	3.19	6/18/2022 7:37	-0.13	6/17/2022 6:22	10.95
6/17/2022 7:02	-0.05	6/18/2022 5:52	0.63	6/18/2022 6:15	3.18	6/18/2022 7:38	-0.17	6/17/2022 6:23	10.93
6/17/2022 7:03	-0.04	6/18/2022 5:53	0.63	6/18/2022 6:16	3.18	6/18/2022 7:39	-0.17	6/17/2022 6:24	10.89
6/17/2022 7:04	-0.05	6/18/2022 5:54	0.63	6/18/2022 6:17	3.19	6/18/2022 7:40	-0.15	6/17/2022 6:25	10.89
6/17/2022 7:05	-0.05	6/18/2022 5:55	0.65	6/18/2022 6:18	3.18	6/18/2022 7:41	-0.15	6/17/2022 6:26	10.88
6/17/2022 7:06	-0.03	6/18/2022 5:56	0.63	6/18/2022 6:19	3.18	6/18/2022 7:42	-0.17	6/17/2022 6:27	10.92
6/17/2022 7:07	-0.04	6/18/2022 5:57	0.63	6/18/2022 6:20	3.18	6/18/2022 7:43	-0.16	6/17/2022 6:28	10.93
6/17/2022 7:08	-0.06	6/18/2022 5:58	0.63	6/18/2022 6:21	3.15	6/18/2022 7:44	-0.17	6/17/2022 6:29	10.92
6/17/2022 7:09	-0.05	6/18/2022 5:59	0.63	6/18/2022 6:22	3.22	6/18/2022 7:45	-0.14	6/17/2022 6:30	10.94
6/17/2022 7:10	-0.05	6/18/2022 6:00	0.63	6/18/2022 6:23	3.19	6/18/2022 7:46	-0.16	6/17/2022 6:31	10.91
6/17/2022 7:11	-0.05	6/18/2022 6:01	0.63	6/18/2022 6:24	3.16	6/18/2022 7:47	-0.18	6/17/2022 6:32	10.88
6/17/2022 7:12	-0.06	6/18/2022 6:02	0.63	6/18/2022 6:25	3.14	6/18/2022 7:48	-0.17	6/17/2022 6:33	10.91
6/17/2022 7:13	-0.05	6/18/2022 6:03	0.63	6/18/2022 6:26	3.19	6/18/2022 7:49	-0.15	6/17/2022 6:34	10.94
6/17/2022 7:14	-0.05	6/18/2022 6:04	0.63	6/18/2022 6:27	3.17	6/18/2022 7:50	-0.21	6/17/2022 6:35	10.92
6/17/2022 7:15	-0.05	6/18/2022 6:05	0.63	6/18/2022 6:28	3.21	6/18/2022 7:51	-0.17	6/17/2022 6:36	10.93
6/17/2022 7:16	-0.06	6/18/2022 6:06	0.64	6/18/2022 6:29	3.16	6/18/2022 7:52	-0.18	6/17/2022 6:37	10.86
6/17/2022 7:17	-0.04	6/18/2022 6:07	0.63	6/18/2022 6:30	3.19	6/18/2022 7:53	-0.19	6/17/2022 6:38	10.90
6/17/2022 7:18	-0.05	6/18/2022 6:08	0.63	6/18/2022 6:31	3.17	6/18/2022 7:54	-0.17	6/17/2022 6:39	10.94
6/17/2022 7:19	-0.04	6/18/2022 6:09	0.66	6/18/2022 6:32	3.19	6/18/2022 7:55	-0.20	6/17/2022 6:40	10.93
6/17/2022 7:20	-0.04	6/18/2022 6:10	0.64	6/18/2022 6:33	3.20	6/18/2022 7:56	-0.17	6/17/2022 6:41	10.92
6/17/2022 7:21	-0.05	6/18/2022 6:11	0.63	6/18/2022 6:34	3.16	6/18/2022 7:57	-0.17	6/17/2022 6:42	10.91
6/17/2022 7:22	-0.05	6/18/2022 6:12	0.66	6/18/2022 6:35	3.19	6/18/2022 7:58	-0.17	6/17/2022 6:43	10.89
6/17/2022 7:23	-0.06	6/18/2022 6:13	0.63	6/18/2022 6:36	3.19	6/18/2022 7:59	-0.14	6/17/2022 6:44	10.89
6/17/2022 7:24	-0.06	6/18/2022 6:14	0.64	6/18/2022 6:37	3.14	6/18/2022 8:00	-0.15	6/17/2022 6:45	10.93
6/17/2022 7:25	-0.05	6/18/2022 6:15	0.63	6/18/2022 6:38	3.19	6/18/2022 8:01	-0.21	6/17/2022 6:46	10.91
6/17/2022 7:26	-0.04	6/18/2022 6:16	0.63	6/18/2022 6:39	3.20	6/18/2022 8:02	-0.14	6/17/2022 6:47	10.90
6/17/2022 7:27	-0.04	6/18/2022 6:17	0.63	6/18/2022 6:40	3.20	6/18/2022 8:03	-0.24	6/17/2022 6:48	10.85
6/17/2022 7:28	-0.04	6/18/2022 6:18	0.64	6/18/2022 6:41	3.18	6/18/2022 8:04	-0.18	6/17/2022 6:49	10.86
6/17/2022 7:29	-0.05	6/18/2022 6:19	0.63	6/18/2022 6:42	3.18	6/18/2022 8:05	-0.17	6/17/2022 6:50	10.88
6/17/2022 7:30	-0.05	6/18/2022 6:20	0.63	6/18/2022 6:43	3.18	6/18/2022 8:06	-0.17	6/17/2022 6:51	10.90
6/17/2022 7:31	-0.05	6/18/2022 6:21	0.63	6/18/2022 6:44	3.18	6/18/2022 8:07	-0.17	6/17/2022 6:52	10.92
6/17/2022 7:32	-0.03	6/18/2022 6:22	0.63	6/18/2022 6:45	3.17	6/18/2022 8:08	-0.19	6/17/2022 6:53	10.90
6/17/2022 7:33	-0.04	6/18/2022 6:23	0.63	6/18/2022 6:46	3.20	6/18/2022 8:09	-0.17	6/17/2022 6:54	10.92
6/17/2022 7:34	-0.04	6/18/2022 6:24	0.64	6/18/2022 6:47	3.15	6/18/2022 8:10	-0.22	6/17/2022 6:55	10.93
6/17/2022 7:35	-0.04	6/18/2022 6:25	0.63	6/18/2022 6:48	3.18	6/18/2022 8:11	-0.18	6/17/2022 6:56	10.89
6/17/2022 7:36	-0.05	6/18/2022 6:26	0.63	6/18/2022 6:49	3.16	6/18/2022 8:12	-0.16	6/17/2022 6:57	10.92
6/17/2022 7:37	-0.05	6/18/2022 6:27	0.64	6/18/2022 6:50	3.19	6/18/2022 8:13	-0.19	6/17/2022 6:58	10.93
6/17/2022 7:38	-0.03	6/18/2022 6:28	0.64	6/18/2022 6:51	3.20	6/18/2022 8:14	-0.15	6/17/2022 6:59	10.90
6/17/2022 7:39	-0.05	6/18/2022 6:29	0.64	6/18/2022 6:52	3.17	6/18/2022 8:15	-0.22	6/17/2022 7:00	10.90
6/17/2022 7:40	-0.05	6/18/2022 6:30	0.64	6/18/2022 6:53	3.18	6/18/2022 8:16	-0.14	6/17/2022 7:01	10.89
6/17/2022 7:41	-0.03	6/18/2022 6:31	0.64	6/18/2022 6:54	3.19	6/18/2022 8:17	-0.17	6/17/2022 7:02	10.93
6/17/2022 7:42	-0.05	6/18/2022 6:32	0.63	6/18/2022 6:55	3.18	6/18/2022 8:18	-0.18	6/17/2022 7:03	10.93
6/17/2022 7:43	-0.05	6/18/2022 6:33	0.63	6/18/2022 6:56	3.20	6/18/2022 8:19	-0.16	6/17/2022 7:04	10.92
6/17/2022 7:44	-0.05	6/18/2022 6:34	0.63	6/18/2022 6:57	3.18	6/18/2022 8:20	-0.16	6/17/2022 7:05	10.93
6/17/2022 7:45	-0.05	6/18/2022 6:35	0.64	6/18/2022 6:58	3.18	6/18/2022 8:21	-0.17	6/17/2022 7:06	10.90
6/17/2022 7:46	-0.05	6/18/2022 6:36	0.64	6/18/2022 6:59	3.22	6/18/2022 8:22	-0.18	6/17/2022 7:07	10.92
6/17/2022 7:47	-0.05	6/18/2022 6:37	0.64	6/18/2022 7:00	3.20	6/18/2022 8:23	-0.16	6/17/2022 7:08	10.91
6/17/2022 7:48	-0.05	6/18/2022 6:38	0.64	6/18/2022 7:01	3.16	6/18/2022 8:24	-0.16	6/17/2022 7:09	10.87
6/17/2022 7:49	-0.05	6/18/2022 6:39	0.64	6/18/2022 7:02	3.20	6/18/2022 8:25	-0.17	6/17/2022 7:10	10.94
6/17/2022 7:50	-0.06	6/18/2022 6:40	0.64	6/18/2022 7:03	3.20	6/18/2022 8:26	-0.19	6/17/2022 7:11	10.93
6/17/2022 7:51	-0.06	6/18/2022 6:41	0.64	6/18/2022 7:04	3.20	6/18/2022 8:27	-0.18	6/17/2022 7:12	10.94
6/17/2022 7:52	-0.05	6/18/2022 6:42	0.64	6/18/2022 7:05	3.18	6/18/2022 8:28	-0.17	6/17/2022 7:13	10.92
6/17/2022 7:53	-0.06	6/18/2022 6:43	0.64	6/18/2022 7:06	3.18	6/18/2022 8:29	-0.15	6/17/2022 7:14	10.90
6/17/2022 7:54	-0.04	6/18/2022 6:44	0.64	6/18/2022 7:07	3.19	6/18/2022 8:30	-0.20	6/17/2022 7:15	10.94
6/17/2022 7:55	-0.06	6/18/2022 6:45	0.64	6/18/2022 7:08	3.18	6/18/2022 8:31	-0.17	6/17/2022 7:16	10.89
6/17/2022 7:56	-0.05	6/18/2022 6:46	0.64	6/18/2022 7:09	3.22	6/18/2022 8:32	-0.17	6/17/2022 7:17	10.92
6/17/2022 7:57	-0.05	6/18/2022 6:47	0.64	6/18/2022 7:10	3.18	6/18/2022 8:33	-0.17	6/17/2022 7:18	10.90
6/17/2022 7:58	-0.05	6/18/2022 6:48	0.64	6/18/2022 7:11	3.19	6/18/2022 8:34	-0.20	6/17/2022 7:19	10.97
6/17/2022 7:59	-0.05	6/18/2022 6:49	0.64	6/18/2022 7:12	3.18	6/18/2022 8:35	-0.18	6/17/2022 7:20	10.93
6/17/2022 8:00	-0.04	6/18/2022 6:50	0.64	6/18/2022 7:13	3.19	6/18/2022 8:36	-0.13	6/17/2022 7:21	10.92
6/17/2022 8:01	-0.05	6/18/2022 6:51	0.64	6/18/2022 7:14	3.20	6/18/2022 8:37	-0.24	6/17/2022 7:22	10.88
6/17/2022 8:02	-0.04	6/18/2022 6:52	0.64	6/18/2022 7:15	3.20	6/18/2022 8:38	-0.20	6/17/2022 7:23	10.88
6/17/2022 8:03	-0.05	6/18/2022 6:53	0.64	6/18/2022 7:16	3.19	6/18/2022 8:39	-0.15	6/17/2022 7:24	10.88
6/17/2022 8:04	-0.05	6/18/2022 6:54	0.64	6/18/2022 7:17	3.18	6/18/2022 8:40	-0.17	6/17/2022 7:25	10.90
6/17/2022 8:05	-0.05	6/18/2022 6:55	0.64	6/18/2022 7:18	3.18	6/18/2022 8:41	-0.18	6/17/2022 7:26	10.87
6/17/2022 8:06	-0.05	6/18/2022 6:56	0.64	6/18/2022 7:19	3.18	6/18/2022 8:42	-0.19	6/17/2022 7:27	10.91
6/17/2022 8:07	-0.05	6/18/2022 6:57	0.64	6/18/2022 7:20	3.19	6/18/2022 8:43	-0.20	6/17/2022 7:28	10.92
6/17/2022 8:08	-0.05	6/18/2022 6:58	0.64	6/18/2022 7:21	3.19	6/18/2022 8:44	-0.14	6/17/2022 7:29	10.87
6/17/2022 8:09	-0.05	6/18/2022 6:59	0.64	6/18/2022 7:22	3.19	6/18/2022 8:45	-0.20	6/17/2022 7:30	10.90
6/17/2022 8:10	-0.03	6/18/2022 7:00	0.64	6/18/2022 7:23	3.19	6/18/2022 8:46	-0.15	6/17/2022 7:31	10.92
6/17/2022 8:11	-0.06	6/18/2022 7:01	0.64	6/18/2022 7:24	3.19	6/18/2022 8:47	-0.19	6/17/2022 7:32	10.90
6/17/2022 8:12	-0.05	6/18/2022 7:02	0.64	6/18/2022 7:25	3.21	6/18/2022 8:48	-0.17	6/17/2022 7:33	10.89
6/17/2022 8:13	-0.05	6/18/2022 7:03	0.64	6/18/2022 7:26	3.21	6/18/2022 8:49	-0.19	6/17/2022 7:34	10.84
6/17/2022 8:14	-0.03	6/18/2022 7:04	0.64	6/18/2022 7:27	3.20	6/18/2022 8:50	-0.15	6/17/2022 7:35	10.94
6/17/2022 8:15	-0.04	6/18/2022 7:05	0.65	6/18/2022 7:28	3.20	6/18/2022 8:51	-0.17	6/17/2022 7:36	10.89
6/17/2022 8:16	-0.04	6/18/2022 7:06	0.65	6/18/2022 7:29	3.18	6/18/2022 8:52	-0.18	6/17/2022 7:37	10.94

6/17/2022 8:17	-0.05	6/18/2022 7:07	0.65	6/18/2022 7:30	3.21	6/18/2022 8:53	-0.16	6/17/2022 7:38	10.93
6/17/2022 8:18	-0.06	6/18/2022 7:08	0.67	6/18/2022 7:31	3.19	6/18/2022 8:54	-0.19	6/17/2022 7:39	10.95
6/17/2022 8:19	-0.05	6/18/2022 7:09	0.65	6/18/2022 7:32	3.23	6/18/2022 8:55	-0.17	6/17/2022 7:40	10.88
6/17/2022 8:20	-0.04	6/18/2022 7:10	0.65	6/18/2022 7:33	3.21	6/18/2022 8:56	-0.17	6/17/2022 7:41	10.92
6/17/2022 8:21	-0.04	6/18/2022 7:11	0.65	6/18/2022 7:34	3.19	6/18/2022 8:57	-0.18	6/17/2022 7:42	10.92
6/17/2022 8:22	-0.04	6/18/2022 7:12	0.67	6/18/2022 7:35	3.21	6/18/2022 8:58	-0.14	6/17/2022 7:43	10.90
6/17/2022 8:23	-0.05	6/18/2022 7:13	0.65	6/18/2022 7:36	3.17	6/18/2022 8:59	-0.22	6/17/2022 7:44	10.89
6/17/2022 8:24	-0.05	6/18/2022 7:14	0.65	6/18/2022 7:37	3.18	6/18/2022 9:00	-0.17	6/17/2022 7:45	10.91
6/17/2022 8:25	-0.05	6/18/2022 7:15	0.65	6/18/2022 7:38	3.15	6/18/2022 9:01	-0.17	6/17/2022 7:46	10.91
6/17/2022 8:26	-0.05	6/18/2022 7:16	0.65	6/18/2022 7:39	3.17	6/18/2022 9:02	-0.18	6/17/2022 7:47	10.88
6/17/2022 8:27	-0.05	6/18/2022 7:17	0.65	6/18/2022 7:40	3.20	6/18/2022 9:03	-0.16	6/17/2022 7:48	10.87
6/17/2022 8:28	-0.05	6/18/2022 7:18	0.65	6/18/2022 7:41	3.21	6/18/2022 9:04	-0.19	6/17/2022 7:49	10.90
6/17/2022 8:29	-0.05	6/18/2022 7:19	0.64	6/18/2022 7:42	3.16	6/18/2022 9:05	-0.16	6/17/2022 7:50	10.93
6/17/2022 8:30	-0.04	6/18/2022 7:20	0.65	6/18/2022 7:43	3.19	6/18/2022 9:06	-0.13	6/17/2022 7:51	10.93
6/17/2022 8:31	-0.04	6/18/2022 7:21	0.65	6/18/2022 7:44	3.21	6/18/2022 9:07	-0.19	6/17/2022 7:52	10.86
6/17/2022 8:32	-0.05	6/18/2022 7:22	0.65	6/18/2022 7:45	3.17	6/18/2022 9:08	-0.15	6/17/2022 7:53	10.90
6/17/2022 8:33	-0.04	6/18/2022 7:23	0.65	6/18/2022 7:46	3.20	6/18/2022 9:09	-0.14	6/17/2022 7:54	10.89
6/17/2022 8:34	-0.05	6/18/2022 7:24	0.65	6/18/2022 7:47	3.18	6/18/2022 9:10	-0.19	6/17/2022 7:55	10.88
6/17/2022 8:35	-0.05	6/18/2022 7:25	0.65	6/18/2022 7:48	3.20	6/18/2022 9:11	-0.15	6/17/2022 7:56	10.93
6/17/2022 8:36	-0.05	6/18/2022 7:26	0.67	6/18/2022 7:49	3.16	6/18/2022 9:12	-0.16	6/17/2022 7:57	10.91
6/17/2022 8:37	-0.05	6/18/2022 7:27	0.65	6/18/2022 7:50	3.15	6/18/2022 9:13	-0.19	6/17/2022 7:58	10.92
6/17/2022 8:38	-0.06	6/18/2022 7:28	0.65	6/18/2022 7:51	3.23	6/18/2022 9:14	-0.17	6/17/2022 7:59	10.89
6/17/2022 8:39	-0.05	6/18/2022 7:29	0.65	6/18/2022 7:52	3.21	6/18/2022 9:15	-0.17	6/17/2022 8:00	10.97
6/17/2022 8:40	-0.04	6/18/2022 7:30	0.65	6/18/2022 7:53	3.19	6/18/2022 9:16	-0.20	6/17/2022 8:01	10.91
6/17/2022 8:41	-0.05	6/18/2022 7:31	0.65	6/18/2022 7:54	3.17	6/18/2022 9:17	-0.19	6/17/2022 8:02	10.93
6/17/2022 8:42	-0.05	6/18/2022 7:32	0.65	6/18/2022 7:55	3.21	6/18/2022 9:18	-0.15	6/17/2022 8:03	10.87
6/17/2022 8:43	-0.05	6/18/2022 7:33	0.65	6/18/2022 7:56	3.20	6/18/2022 9:19	-0.16	6/17/2022 8:04	10.89
6/17/2022 8:44	-0.04	6/18/2022 7:34	0.65	6/18/2022 7:57	3.21	6/18/2022 9:20	-0.18	6/17/2022 8:05	10.90
6/17/2022 8:45	-0.05	6/18/2022 7:35	0.65	6/18/2022 7:58	3.21	6/18/2022 9:21	-0.12	6/17/2022 8:06	10.90
6/17/2022 8:46	-0.05	6/18/2022 7:36	0.66	6/18/2022 7:59	3.21	6/18/2022 9:22	-0.18	6/17/2022 8:07	10.87
6/17/2022 8:47	-0.06	6/18/2022 7:37	0.65	6/18/2022 8:00	3.21	6/18/2022 9:23	-0.17	6/17/2022 8:08	10.88
6/17/2022 8:48	-0.05	6/18/2022 7:38	0.66	6/18/2022 8:01	3.20	6/18/2022 9:24	-0.17	6/17/2022 8:09	10.87
6/17/2022 8:49	-0.05	6/18/2022 7:39	0.65	6/18/2022 8:02	3.23	6/18/2022 9:25	-0.19	6/17/2022 8:10	10.92
6/17/2022 8:50	-0.05	6/18/2022 7:40	0.65	6/18/2022 8:03	3.19	6/18/2022 9:26	-0.19	6/17/2022 8:11	10.95
6/17/2022 8:51	-0.06	6/18/2022 7:41	0.66	6/18/2022 8:04	3.22	6/18/2022 9:27	-0.17	6/17/2022 8:12	10.90
6/17/2022 8:52	-0.06	6/18/2022 7:42	0.65	6/18/2022 8:05	3.18	6/18/2022 9:28	-0.17	6/17/2022 8:13	10.93
6/17/2022 8:53	-0.05	6/18/2022 7:43	0.66	6/18/2022 8:06	3.22	6/18/2022 9:29	-0.16	6/17/2022 8:14	10.91
6/17/2022 8:54	-0.05	6/18/2022 7:44	0.65	6/18/2022 8:07	3.19	6/18/2022 9:30	-0.17	6/17/2022 8:15	10.92
6/17/2022 8:55	-0.05	6/18/2022 7:45	0.65	6/18/2022 8:08	3.17	6/18/2022 9:31	-0.14	6/17/2022 8:16	10.90
6/17/2022 8:56	-0.04	6/18/2022 7:46	0.65	6/18/2022 8:09	3.21	6/18/2022 9:32	-0.23	6/17/2022 8:17	10.96
6/17/2022 8:57	-0.05	6/18/2022 7:47	0.65	6/18/2022 8:10	3.20	6/18/2022 9:33	-0.15	6/17/2022 8:18	10.95
6/17/2022 8:58	-0.04	6/18/2022 7:48	0.65	6/18/2022 8:11	3.20	6/18/2022 9:34	-0.20	6/17/2022 8:19	10.88
6/17/2022 8:59	-0.06	6/18/2022 7:49	0.65	6/18/2022 8:12	3.18	6/18/2022 9:35	-0.18	6/17/2022 8:20	10.99
6/17/2022 9:00	-0.06	6/18/2022 7:50	0.65	6/18/2022 8:13	3.20	6/18/2022 9:36	-0.19	6/17/2022 8:21	10.92
6/17/2022 9:01	-0.05	6/18/2022 7:51	0.66	6/18/2022 8:14	3.21	6/18/2022 9:37	-0.17	6/17/2022 8:22	10.92
6/17/2022 9:02	-0.06	6/18/2022 7:52	0.66	6/18/2022 8:15	3.20	6/18/2022 9:38	-0.20	6/17/2022 8:23	10.93
6/17/2022 9:03	-0.05	6/18/2022 7:53	0.67	6/18/2022 8:16	3.19	6/18/2022 9:39	-0.13	6/17/2022 8:24	10.93
6/17/2022 9:04	-0.04	6/18/2022 7:54	0.65	6/18/2022 8:17	3.19	6/18/2022 9:40	-0.19	6/17/2022 8:25	10.88
6/17/2022 9:05	-0.05	6/18/2022 7:55	0.66	6/18/2022 8:18	3.16	6/18/2022 9:41	-0.19	6/17/2022 8:26	10.93
6/17/2022 9:06	-0.04	6/18/2022 7:56	0.66	6/18/2022 8:19	3.18	6/18/2022 9:42	-0.18	6/17/2022 8:27	10.88
6/17/2022 9:07	-0.06	6/18/2022 7:57	0.66	6/18/2022 8:20	3.20	6/18/2022 9:43	-0.15	6/17/2022 8:28	10.86
6/17/2022 9:08	-0.06	6/18/2022 7:58	0.66	6/18/2022 8:21	3.19	6/18/2022 9:44	-0.18	6/17/2022 8:29	10.89
6/17/2022 9:09	-0.06	6/18/2022 7:59	0.66	6/18/2022 8:22	3.20	6/18/2022 9:45	-0.15	6/17/2022 8:30	10.96
6/17/2022 9:10	-0.05	6/18/2022 8:00	0.66	6/18/2022 8:23	3.20	6/18/2022 9:46	-0.15	6/17/2022 8:31	10.91
6/17/2022 9:11	-0.04	6/18/2022 8:01	0.66	6/18/2022 8:24	3.18	6/18/2022 9:47	-0.18	6/17/2022 8:32	10.93
6/17/2022 9:12	-0.06	6/18/2022 8:02	0.65	6/18/2022 8:25	3.23	6/18/2022 9:48	-0.17	6/17/2022 8:33	10.88
6/17/2022 9:13	-0.06	6/18/2022 8:03	0.66	6/18/2022 8:26	3.20	6/18/2022 9:49	-0.14	6/17/2022 8:34	10.91
6/17/2022 9:14	-0.04	6/18/2022 8:04	0.66	6/18/2022 8:27	3.22	6/18/2022 9:50	-0.19	6/17/2022 8:35	10.93
6/17/2022 9:15	-0.04	6/18/2022 8:05	0.66	6/18/2022 8:28	3.22	6/18/2022 9:51	-0.16	6/17/2022 8:36	10.91
6/17/2022 9:16	-0.05	6/18/2022 8:06	0.66	6/18/2022 8:29	3.21	6/18/2022 9:52	-0.20	6/17/2022 8:37	10.91
6/17/2022 9:17	-0.06	6/18/2022 8:07	0.66	6/18/2022 8:30	3.21	6/18/2022 9:53	-0.15	6/17/2022 8:38	10.89
6/17/2022 9:18	-0.06	6/18/2022 8:08	0.66	6/18/2022 8:31	3.21	6/18/2022 9:54	-0.15	6/17/2022 8:39	10.92
6/17/2022 9:19	-0.06	6/18/2022 8:09	0.66	6/18/2022 8:32	3.19	6/18/2022 9:55	-0.22	6/17/2022 8:40	10.89
6/17/2022 9:20	-0.05	6/18/2022 8:10	0.66	6/18/2022 8:33	3.20	6/18/2022 9:56	-0.17	6/17/2022 8:41	10.92
6/17/2022 9:21	-0.05	6/18/2022 8:11	0.66	6/18/2022 8:34	3.25	6/18/2022 9:57	-0.17	6/17/2022 8:42	10.93
6/17/2022 9:22	-0.05	6/18/2022 8:12	0.66	6/18/2022 8:35	3.24	6/18/2022 9:58	-0.17	6/17/2022 8:43	10.96
6/17/2022 9:23	-0.04	6/18/2022 8:13	0.66	6/18/2022 8:36	3.23	6/18/2022 9:59	-0.17	6/17/2022 8:44	10.95
6/17/2022 9:24	-0.04	6/18/2022 8:14	0.66	6/18/2022 8:37	3.22	6/18/2022 10:00	-0.21	6/17/2022 8:45	10.95
6/17/2022 9:25	-0.06	6/18/2022 8:15	0.66	6/18/2022 8:38	3.19	6/18/2022 10:01	-0.21	6/17/2022 8:46	10.94
6/17/2022 9:26	-0.05	6/18/2022 8:16	0.66	6/18/2022 8:39	3.20	6/18/2022 10:02	-0.17	6/17/2022 8:47	10.93
6/17/2022 9:27	-0.04	6/18/2022 8:17	0.67	6/18/2022 8:40	3.23	6/18/2022 10:03	-0.18	6/17/2022 8:48	10.91
6/17/2022 9:28	-0.06	6/18/2022 8:18	0.66	6/18/2022 8:41	3.20	6/18/2022 10:04	-0.20	6/17/2022 8:49	10.95
6/17/2022 9:29	-0.06	6/18/2022 8:19	0.66	6/18/2022 8:42	3.23	6/18/2022 10:05	-0.18	6/17/2022 8:50	10.87
6/17/2022 9:30	-0.04	6/18/2022 8:20	0.66	6/18/2022 8:43	3.21	6/18/2022 10:06	-0.20	6/17/2022 8:51	10.92
6/17/2022 9:31	-0.04	6/18/2022 8:21	0.66	6/18/2022 8:44	3.23	6/18/2022 10:07	-0.17	6/17/2022 8:52	10.93
6/17/2022 9:32	-0.06	6/18/2022 8:22	0.66	6/18/2022 8:45	3.19	6/18/2022 10:08	-0.17	6/17/2022 8:53	10.97
6/17/2022 9:33	-0.05	6/18/2022 8:23	0.66	6/18/2022 8:46	3.20	6/18/2022 10:09	-0.13	6/17/2022 8:54	10.96
6/17/2022 9:34	-0.06	6/18/2022 8:24	0.65	6/18/2022 8:47	3.23	6/18/2022 10:10	-0.14	6/17/2022 8:55	10.92
6/17/2022 9:35	-0.05	6/18/2022 8:25	0.66	6/18/2022 8:48	3.22	6/18/2022 10:11	-0.16	6/17/2022 8:56	10.87
6/17/2022 9:36	-0.04	6/18/2022 8:26	0.66	6/18/2022 8:49	3.22	6/18/2022 10:12	-0.18	6/17/2022 8:57	10.92
6/17/2022 9:37	-0.04	6/18/2022 8:27	0.66	6/18/2022 8:50	3.21	6/18/2022 10:13	-0.14	6/17/2022 8:58	10.94
6/17/2022 9:38	-0.04	6/18/2022 8:28	0.67	6/18/2022 8:51	3.21	6/18/2022 10:14	-0.17	6/17/2022 8:59	10.91
6/17/2022 9:39	-0.04	6/18/2022 8:29	0.66	6/18/2022 8:52	3.21	6/18/2022 10:15	-0.17	6/17/2022 9:00	10.98
6/17/2022 9:40	-0.05	6/18/2022 8:30	0.67	6/18/2022 8:53	3.19	6/18/2022 10:16	-0.13	6/17/2022 9:01	10.88
6/17/2022 9:41	-0.04	6/18/2022 8:31	0.67	6/18/2022 8:54	3.22	6/18/2022 10:17	-0.17	6/17/2022 9:02	10.92
6/17/2022 9:42	-0.06	6/18/2022 8:32	0.66	6/18/2022 8:55	3.23	6/18/2022 10:18	-0.18	6/17/2022 9:03	10.94
6/17/2022 9:43	-0.05	6/18/2022 8:33	0.66	6/18/2022 8:56	3.18	6/18/2022 10:19	-0.21	6/17/2022 9:04	10.90
6/17/2022 9:44	-0.03	6/18/2022 8:34	0.66	6/18/2022 8:57	3.21	6/18/2022 10:20	-0.17	6/17/2022 9:05	10.91

6/17/2022 9:45	-0.05	6/18/2022 8:35	0.67	6/18/2022 8:58	3.25	6/18/2022 10:21	-0.16	6/17/2022 9:06	10.92
6/17/2022 9:46	-0.05	6/18/2022 8:36	0.67	6/18/2022 8:59	3.21	6/18/2022 10:22	-0.15	6/17/2022 9:07	10.92
6/17/2022 9:47	-0.06	6/18/2022 8:37	0.67	6/18/2022 9:00	3.22	6/18/2022 10:23	-0.16	6/17/2022 9:08	10.89
6/17/2022 9:48	-0.05	6/18/2022 8:38	0.67	6/18/2022 9:01	3.20	6/18/2022 10:24	-0.15	6/17/2022 9:09	10.90
6/17/2022 9:49	-0.04	6/18/2022 8:39	0.67	6/18/2022 9:02	3.22	6/18/2022 10:25	-0.13	6/17/2022 9:10	10.91
6/17/2022 9:50	-0.04	6/18/2022 8:40	0.67	6/18/2022 9:03	3.19	6/18/2022 10:26	-0.17	6/17/2022 9:11	10.90
6/17/2022 9:51	-0.04	6/18/2022 8:41	0.66	6/18/2022 9:04	3.20	6/18/2022 10:27	-0.16	6/17/2022 9:12	10.87
6/17/2022 9:52	-0.05	6/18/2022 8:42	0.67	6/18/2022 9:05	3.22	6/18/2022 10:28	-0.17	6/17/2022 9:13	10.94
6/17/2022 9:53	-0.04	6/18/2022 8:43	0.67	6/18/2022 9:06	3.23	6/18/2022 10:29	-0.20	6/17/2022 9:14	10.89
6/17/2022 9:54	-0.04	6/18/2022 8:44	0.67	6/18/2022 9:07	3.23	6/18/2022 10:30	-0.17	6/17/2022 9:15	10.90
6/17/2022 9:55	-0.04	6/18/2022 8:45	0.67	6/18/2022 9:08	3.23	6/18/2022 10:31	-0.15	6/17/2022 9:16	10.92
6/17/2022 9:56	-0.06	6/18/2022 8:46	0.67	6/18/2022 9:09	3.23	6/18/2022 10:32	-0.18	6/17/2022 9:17	10.94
6/17/2022 9:57	-0.05	6/18/2022 8:47	0.67	6/18/2022 9:10	3.22	6/18/2022 10:33	-0.21	6/17/2022 9:18	10.89
6/17/2022 9:58	-0.04	6/18/2022 8:48	0.67	6/18/2022 9:11	3.22	6/18/2022 10:34	-0.20	6/17/2022 9:19	10.92
6/17/2022 9:59	-0.04	6/18/2022 8:49	0.67	6/18/2022 9:12	3.23	6/18/2022 10:35	-0.20	6/17/2022 9:20	10.92
6/17/2022 10:00	-0.05	6/18/2022 8:50	0.67	6/18/2022 9:13	3.18	6/18/2022 10:36	-0.18	6/17/2022 9:21	10.92
6/17/2022 10:01	-0.04	6/18/2022 8:51	0.67	6/18/2022 9:14	3.22	6/18/2022 10:37	-0.18	6/17/2022 9:22	10.92
6/17/2022 10:02	-0.05	6/18/2022 8:52	0.67	6/18/2022 9:15	3.18	6/18/2022 10:38	-0.19	6/17/2022 9:23	10.95
6/17/2022 10:03	-0.05	6/18/2022 8:53	0.67	6/18/2022 9:16	3.21	6/18/2022 10:39	-0.20	6/17/2022 9:24	10.95
6/17/2022 10:04	-0.06	6/18/2022 8:54	0.67	6/18/2022 9:17	3.23	6/18/2022 10:40	-0.15	6/17/2022 9:25	10.91
6/17/2022 10:05	-0.06	6/18/2022 8:55	0.67	6/18/2022 9:18	3.23	6/18/2022 10:41	-0.15	6/17/2022 9:26	10.93
6/17/2022 10:06	-0.06	6/18/2022 8:56	0.67	6/18/2022 9:19	3.25	6/18/2022 10:42	-0.19	6/17/2022 9:27	10.93
6/17/2022 10:07	-0.05	6/18/2022 8:57	0.67	6/18/2022 9:20	3.21	6/18/2022 10:43	-0.17	6/17/2022 9:28	10.96
6/17/2022 10:08	-0.05	6/18/2022 8:58	0.67	6/18/2022 9:21	3.19	6/18/2022 10:44	-0.17	6/17/2022 9:29	10.88
6/17/2022 10:09	-0.05	6/18/2022 8:59	0.67	6/18/2022 9:22	3.24	6/18/2022 10:45	-0.20	6/17/2022 9:30	10.90
6/17/2022 10:10	-0.04	6/18/2022 9:00	0.67	6/18/2022 9:23	3.21	6/18/2022 10:46	-0.19	6/17/2022 9:31	10.92
6/17/2022 10:11	-0.03	6/18/2022 9:01	0.67	6/18/2022 9:24	3.20	6/18/2022 10:47	-0.20	6/17/2022 9:32	10.88
6/17/2022 10:12	-0.05	6/18/2022 9:02	0.67	6/18/2022 9:25	3.24	6/18/2022 10:48	-0.15	6/17/2022 9:33	10.86
6/17/2022 10:13	-0.05	6/18/2022 9:03	0.67	6/18/2022 9:26	3.23	6/18/2022 10:49	-0.17	6/17/2022 9:34	10.89
6/17/2022 10:14	-0.05	6/18/2022 9:04	0.67	6/18/2022 9:27	3.20	6/18/2022 10:50	-0.20	6/17/2022 9:35	10.93
6/17/2022 10:15	-0.05	6/18/2022 9:05	0.67	6/18/2022 9:28	3.22	6/18/2022 10:51	-0.15	6/17/2022 9:36	10.92
6/17/2022 10:16	-0.05	6/18/2022 9:06	0.67	6/18/2022 9:29	3.20	6/18/2022 10:52	-0.16	6/17/2022 9:37	10.84
6/17/2022 10:17	-0.05	6/18/2022 9:07	0.67	6/18/2022 9:30	3.23	6/18/2022 10:53	-0.19	6/17/2022 9:38	10.88
6/17/2022 10:18	-0.06	6/18/2022 9:08	0.67	6/18/2022 9:31	3.22	6/18/2022 10:54	-0.17	6/17/2022 9:39	10.90
6/17/2022 10:19	-0.04	6/18/2022 9:09	0.67	6/18/2022 9:32	3.19	6/18/2022 10:55	-0.16	6/17/2022 9:40	10.95
6/17/2022 10:20	-0.05	6/18/2022 9:10	0.67	6/18/2022 9:33	3.20	6/18/2022 10:56	-0.15	6/17/2022 9:41	10.92
6/17/2022 10:21	-0.04	6/18/2022 9:11	0.67	6/18/2022 9:34	3.22	6/18/2022 10:57	-0.16	6/17/2022 9:42	10.90
6/17/2022 10:22	-0.04	6/18/2022 9:12	0.70	6/18/2022 9:35	3.20	6/18/2022 10:58	-0.18	6/17/2022 9:43	10.89
6/17/2022 10:23	-0.05	6/18/2022 9:13	0.67	6/18/2022 9:36	3.22	6/18/2022 10:59	-0.20	6/17/2022 9:44	10.94
6/17/2022 10:24	-0.04	6/18/2022 9:14	0.67	6/18/2022 9:37	3.23	6/18/2022 11:00	-0.16	6/17/2022 9:45	10.92
6/17/2022 10:25	-0.06	6/18/2022 9:15	0.67	6/18/2022 9:38	3.22	6/18/2022 11:01	-0.17	6/17/2022 9:46	10.92
6/17/2022 10:26	-0.05	6/18/2022 9:16	0.67	6/18/2022 9:39	3.21	6/18/2022 11:02	-0.17	6/17/2022 9:47	10.94
6/17/2022 10:27	-0.04	6/18/2022 9:17	0.67	6/18/2022 9:40	3.21	6/18/2022 11:03	-0.17	6/17/2022 9:48	10.92
6/17/2022 10:28	-0.04	6/18/2022 9:18	0.67	6/18/2022 9:41	3.21	6/18/2022 11:04	-0.18	6/17/2022 9:49	10.89
6/17/2022 10:29	-0.05	6/18/2022 9:19	0.67	6/18/2022 9:42	3.23	6/18/2022 11:05	-0.14	6/17/2022 9:50	10.91
6/17/2022 10:30	-0.04	6/18/2022 9:20	0.67	6/18/2022 9:43	3.23	6/18/2022 11:06	-0.17	6/17/2022 9:51	10.86
6/17/2022 10:31	-0.06	6/18/2022 9:21	0.67	6/18/2022 9:44	3.22	6/18/2022 11:07	-0.15	6/17/2022 9:52	10.93
6/17/2022 10:32	-0.06	6/18/2022 9:22	0.67	6/18/2022 9:45	3.19	6/18/2022 11:08	-0.16	6/17/2022 9:53	10.95
6/17/2022 10:33	-0.06	6/18/2022 9:23	0.67	6/18/2022 9:46	3.20	6/18/2022 11:09	-0.18	6/17/2022 9:54	10.95
6/17/2022 10:34	-0.05	6/18/2022 9:24	0.67	6/18/2022 9:47	3.24	6/18/2022 11:10	-0.16	6/17/2022 9:55	10.96
6/17/2022 10:35	-0.04	6/18/2022 9:25	0.68	6/18/2022 9:48	3.21	6/18/2022 11:11	-0.23	6/17/2022 9:56	10.94
6/17/2022 10:36	-0.04	6/18/2022 9:26	0.67	6/18/2022 9:49	3.23	6/18/2022 11:12	-0.17	6/17/2022 9:57	10.93
6/17/2022 10:37	-0.06	6/18/2022 9:27	0.67	6/18/2022 9:50	3.21	6/18/2022 11:13	-0.18	6/17/2022 9:58	10.85
6/17/2022 10:38	-0.06	6/18/2022 9:28	0.67	6/18/2022 9:51	3.24	6/18/2022 11:14	-0.17	6/17/2022 9:59	10.88
6/17/2022 10:39	-0.05	6/18/2022 9:29	0.67	6/18/2022 9:52	3.18	6/18/2022 11:15	-0.15	6/17/2022 10:00	10.94
6/17/2022 10:40	-0.06	6/18/2022 9:30	0.67	6/18/2022 9:53	3.20	6/18/2022 11:16	-0.13	6/17/2022 10:01	10.95
6/17/2022 10:41	-0.06	6/18/2022 9:31	0.67	6/18/2022 9:54	3.21	6/18/2022 11:17	-0.20	6/17/2022 10:02	10.95
6/17/2022 10:42	-0.06	6/18/2022 9:32	0.67	6/18/2022 9:55	3.22	6/18/2022 11:18	-0.13	6/17/2022 10:03	10.92
6/17/2022 10:43	-0.06	6/18/2022 9:33	0.67	6/18/2022 9:56	3.21	6/18/2022 11:19	-0.22	6/17/2022 10:04	10.97
6/17/2022 10:44	-0.04	6/18/2022 9:34	0.67	6/18/2022 9:57	3.22	6/18/2022 11:20	-0.19	6/17/2022 10:05	10.93
6/17/2022 10:45	-0.06	6/18/2022 9:35	0.69	6/18/2022 9:58	3.23	6/18/2022 11:21	-0.15	6/17/2022 10:06	10.87
6/17/2022 10:46	-0.04	6/18/2022 9:36	0.68	6/18/2022 9:59	3.26	6/18/2022 11:22	-0.19	6/17/2022 10:07	10.87
6/17/2022 10:47	-0.06	6/18/2022 9:37	0.68	6/18/2022 10:00	3.26	6/18/2022 11:23	-0.24	6/17/2022 10:08	10.91
6/17/2022 10:48	-0.04	6/18/2022 9:38	0.68	6/18/2022 10:01	3.22	6/18/2022 11:24	-0.19	6/17/2022 10:09	10.93
6/17/2022 10:49	-0.04	6/18/2022 9:39	0.68	6/18/2022 10:02	3.19	6/18/2022 11:25	-0.16	6/17/2022 10:10	10.90
6/17/2022 10:50	-0.04	6/18/2022 9:40	0.67	6/18/2022 10:03	3.23	6/18/2022 11:26	-0.16	6/17/2022 10:11	10.89
6/17/2022 10:51	-0.05	6/18/2022 9:41	0.68	6/18/2022 10:04	3.23	6/18/2022 11:27	-0.18	6/17/2022 10:12	10.93
6/17/2022 10:52	-0.06	6/18/2022 9:42	0.68	6/18/2022 10:05	3.26	6/18/2022 11:28	-0.17	6/17/2022 10:13	10.93
6/17/2022 10:53	-0.05	6/18/2022 9:43	0.68	6/18/2022 10:06	3.24	6/18/2022 11:29	-0.19	6/17/2022 10:14	10.86
6/17/2022 10:54	-0.06	6/18/2022 9:44	0.67	6/18/2022 10:07	3.22	6/18/2022 11:30	-0.20	6/17/2022 10:15	10.91
6/17/2022 10:55	-0.06	6/18/2022 9:45	0.68	6/18/2022 10:08	3.24	6/18/2022 11:31	-0.18	6/17/2022 10:16	10.88
6/17/2022 10:56	-0.04	6/18/2022 9:46	0.68	6/18/2022 10:09	3.24	6/18/2022 11:32	-0.18	6/17/2022 10:17	10.98
6/17/2022 10:57	-0.06	6/18/2022 9:47	0.68	6/18/2022 10:10	3.22	6/18/2022 11:33	-0.16	6/17/2022 10:18	10.94
6/17/2022 10:58	-0.04	6/18/2022 9:48	0.67	6/18/2022 10:11	3.24	6/18/2022 11:34	-0.17	6/17/2022 10:19	10.93
6/17/2022 10:59	-0.06	6/18/2022 9:49	0.68	6/18/2022 10:12	3.26	6/18/2022 11:35	-0.18	6/17/2022 10:20	10.91
6/17/2022 11:00	-0.06	6/18/2022 9:50	0.68	6/18/2022 10:13	3.21	6/18/2022 11:36	-0.19	6/17/2022 10:21	10.94
6/17/2022 11:01	-0.06	6/18/2022 9:51	0.68	6/18/2022 10:14	3.24	6/18/2022 11:37	-0.19	6/17/2022 10:22	10.92
6/17/2022 11:02	-0.05	6/18/2022 9:52	0.68	6/18/2022 10:15	3.24	6/18/2022 11:38	-0.17	6/17/2022 10:23	10.94
6/17/2022 11:03	-0.06	6/18/2022 9:53	0.68	6/18/2022 10:16	3.22	6/18/2022 11:39	-0.17	6/17/2022 10:24	10.91
6/17/2022 11:04	-0.05	6/18/2022 9:54	0.68	6/18/2022 10:17	3.23	6/18/2022 11:40	-0.15	6/17/2022 10:25	10.92
6/17/2022 11:05	-0.04	6/18/2022 9:55	0.68	6/18/2022 10:18	3.24	6/18/2022 11:41	-0.23	6/17/2022 10:26	10.95
6/17/2022 11:06	-0.04	6/18/2022 9:56	0.68	6/18/2022 10:19	3.24	6/18/2022 11:42	-0.19	6/17/2022 10:27	10.94
6/17/2022 11:07	-0.04	6/18/2022 9:57	0.67	6/18/2022 10:20	3.24	6/18/2022 11:43	-0.18	6/17/2022 10:28	10.94
6/17/2022 11:08	-0.05	6/18/2022 9:58	0.70	6/18/2022 10:21	3.24	6/18/2022 11:44	-0.14	6/17/2022 10:29	10.91
6/17/2022 11:09	-0.06	6/18/2022 9:59	0.68	6/18/2022 10:22	3.24	6/18/2022 11:45	-0.19	6/17/2022 10:30	10.91
6/17/2022 11:10	-0.05	6/18/2022 10:00	0.69	6/18/2022 10:23	3.25	6/18/2022 11:46	-0.20	6/17/2022 10:31	10.87
6/17/2022 11:11	-0.06	6/18/2022 10:01	0.68	6/18/2022 10:24	3.22	6/18/2022 11:47	-0.11	6/17/2022 10:32	10.94
6/17/2022 11:12	-0.04	6/18/2022 10:02	0.68	6/18/2022 10:25	3.21	6/18/2022 11:48	-0.17	6/17/2022 10:33	10.92

6/17/2022 11:13	-0.05	6/18/2022 10:03	0.68	6/18/2022 10:26	3.24	6/18/2022 11:49	-0.15	6/17/2022 10:34	10.92
6/17/2022 11:14	-0.05	6/18/2022 10:04	0.69	6/18/2022 10:27	3.22	6/18/2022 11:50	-0.15	6/17/2022 10:35	10.97
6/17/2022 11:15	-0.06	6/18/2022 10:05	0.68	6/18/2022 10:28	3.22	6/18/2022 11:51	-0.16	6/17/2022 10:36	10.91
6/17/2022 11:16	-0.05	6/18/2022 10:06	0.68	6/18/2022 10:29	3.26	6/18/2022 11:52	-0.18	6/17/2022 10:37	10.93
6/17/2022 11:17	-0.04	6/18/2022 10:07	0.68	6/18/2022 10:30	3.21	6/18/2022 11:53	-0.21	6/17/2022 10:38	10.92
6/17/2022 11:18	-0.04	6/18/2022 10:08	0.68	6/18/2022 10:31	3.23	6/18/2022 11:54	-0.20	6/17/2022 10:39	10.92
6/17/2022 11:19	-0.05	6/18/2022 10:09	0.68	6/18/2022 10:32	3.26	6/18/2022 11:55	-0.19	6/17/2022 10:40	10.92
6/17/2022 11:20	-0.06	6/18/2022 10:10	0.68	6/18/2022 10:33	3.22	6/18/2022 11:56	-0.21	6/17/2022 10:41	10.88
6/17/2022 11:21	-0.04	6/18/2022 10:11	0.68	6/18/2022 10:34	3.24	6/18/2022 11:57	-0.19	6/17/2022 10:42	10.92
6/17/2022 11:22	-0.06	6/18/2022 10:12	0.69	6/18/2022 10:35	3.29	6/18/2022 11:58	-0.20	6/17/2022 10:43	10.88
6/17/2022 11:23	-0.04	6/18/2022 10:13	0.68	6/18/2022 10:36	3.23	6/18/2022 11:59	-0.22	6/17/2022 10:44	10.91
6/17/2022 11:24	-0.06	6/18/2022 10:14	0.69	6/18/2022 10:37	3.22	6/18/2022 12:00	-0.15	6/17/2022 10:45	10.92
6/17/2022 11:25	-0.04	6/18/2022 10:15	0.69	6/18/2022 10:38	3.24	6/18/2022 12:01	-0.15	6/17/2022 10:46	10.91
6/17/2022 11:26	-0.05	6/18/2022 10:16	0.69	6/18/2022 10:39	3.23	6/18/2022 12:02	-0.17	6/17/2022 10:47	10.92
6/17/2022 11:27	-0.06	6/18/2022 10:17	0.69	6/18/2022 10:40	3.23	6/18/2022 12:03	-0.19	6/17/2022 10:48	10.94
6/17/2022 11:28	-0.04	6/18/2022 10:18	0.68	6/18/2022 10:41	3.24	6/18/2022 12:04	-0.17	6/17/2022 10:49	10.95
6/17/2022 11:29	-0.06	6/18/2022 10:19	0.69	6/18/2022 10:42	3.26	6/18/2022 12:05	-0.19	6/17/2022 10:50	10.89
6/17/2022 11:30	-0.05	6/18/2022 10:20	0.69	6/18/2022 10:43	3.23	6/18/2022 12:06	-0.18	6/17/2022 10:51	10.97
6/17/2022 11:31	-0.04	6/18/2022 10:21	0.69	6/18/2022 10:44	3.25	6/18/2022 12:07	-0.18	6/17/2022 10:52	10.94
6/17/2022 11:32	-0.06	6/18/2022 10:22	0.69	6/18/2022 10:45	3.24	6/18/2022 12:08	-0.15	6/17/2022 10:53	10.93
6/17/2022 11:33	-0.06	6/18/2022 10:23	0.69	6/18/2022 10:46	3.23	6/18/2022 12:09	-0.18	6/17/2022 10:54	10.95
6/17/2022 11:34	-0.06	6/18/2022 10:24	0.69	6/18/2022 10:47	3.21	6/18/2022 12:10	-0.18	6/17/2022 10:55	10.94
6/17/2022 11:35	-0.05	6/18/2022 10:25	0.69	6/18/2022 10:48	3.28	6/18/2022 12:11	-0.15	6/17/2022 10:56	10.91
6/17/2022 11:36	-0.04	6/18/2022 10:26	0.69	6/18/2022 10:49	3.24	6/18/2022 12:12	-0.19	6/17/2022 10:57	10.93
6/17/2022 11:37	-0.06	6/18/2022 10:27	0.69	6/18/2022 10:50	3.24	6/18/2022 12:13	-0.21	6/17/2022 10:58	10.94
6/17/2022 11:38	-0.04	6/18/2022 10:28	0.69	6/18/2022 10:51	3.24	6/18/2022 12:14	-0.20	6/17/2022 10:59	11.00
6/17/2022 11:39	-0.06	6/18/2022 10:29	0.69	6/18/2022 10:52	3.27	6/18/2022 12:15	-0.19	6/17/2022 11:00	10.93
6/17/2022 11:40	-0.06	6/18/2022 10:30	0.69	6/18/2022 10:53	3.23	6/18/2022 12:16	-0.17	6/17/2022 11:01	10.94
6/17/2022 11:41	-0.04	6/18/2022 10:31	0.69	6/18/2022 10:54	3.25	6/18/2022 12:17	-0.20	6/17/2022 11:02	10.90
6/17/2022 11:42	-0.04	6/18/2022 10:32	0.69	6/18/2022 10:55	3.25	6/18/2022 12:18	-0.19	6/17/2022 11:03	10.93
6/17/2022 11:43	-0.05	6/18/2022 10:33	0.69	6/18/2022 10:56	3.29	6/18/2022 12:19	-0.17	6/17/2022 11:04	10.96
6/17/2022 11:44	-0.06	6/18/2022 10:34	0.69	6/18/2022 10:57	3.25	6/18/2022 12:20	-0.17	6/17/2022 11:05	10.92
6/17/2022 11:45	-0.06	6/18/2022 10:35	0.69	6/18/2022 10:58	3.26	6/18/2022 12:21	-0.15	6/17/2022 11:06	10.94
6/17/2022 11:46	-0.06	6/18/2022 10:36	0.70	6/18/2022 10:59	3.23	6/18/2022 12:22	-0.17	6/17/2022 11:07	10.90
6/17/2022 11:47	-0.04	6/18/2022 10:37	0.69	6/18/2022 11:00	3.24	6/18/2022 12:23	-0.15	6/17/2022 11:08	10.92
6/17/2022 11:48	-0.04	6/18/2022 10:38	0.71	6/18/2022 11:01	3.22	6/18/2022 12:24	-0.21	6/17/2022 11:09	10.91
6/17/2022 11:49	-0.05	6/18/2022 10:39	0.69	6/18/2022 11:02	3.23	6/18/2022 12:25	-0.21	6/17/2022 11:10	10.94
6/17/2022 11:50	-0.06	6/18/2022 10:40	0.69	6/18/2022 11:03	3.28	6/18/2022 12:26	-0.19	6/17/2022 11:11	10.92
6/17/2022 11:51	-0.04	6/18/2022 10:41	0.69	6/18/2022 11:04	3.24	6/18/2022 12:27	-0.17	6/17/2022 11:12	10.95
6/17/2022 11:52	-0.06	6/18/2022 10:42	0.70	6/18/2022 11:05	3.23	6/18/2022 12:28	-0.20	6/17/2022 11:13	10.91
6/17/2022 11:53	-0.06	6/18/2022 10:43	0.70	6/18/2022 11:06	3.24	6/18/2022 12:29	-0.17	6/17/2022 11:14	10.91
6/17/2022 11:54	-0.04	6/18/2022 10:44	0.70	6/18/2022 11:07	3.25	6/18/2022 12:30	-0.23	6/17/2022 11:15	10.94
6/17/2022 11:55	-0.06	6/18/2022 10:45	0.71	6/18/2022 11:08	3.24	6/18/2022 12:31	-0.18	6/17/2022 11:16	10.95
6/17/2022 11:56	-0.04	6/18/2022 10:46	0.69	6/18/2022 11:09	3.26	6/18/2022 12:32	-0.19	6/17/2022 11:17	10.95
6/17/2022 11:57	-0.04	6/18/2022 10:47	0.69	6/18/2022 11:10	3.25	6/18/2022 12:33	-0.17	6/17/2022 11:18	10.95
6/17/2022 11:58	-0.06	6/18/2022 10:48	0.69	6/18/2022 11:11	3.24	6/18/2022 12:34	-0.18	6/17/2022 11:19	10.95
6/17/2022 11:59	-0.04	6/18/2022 10:49	0.69	6/18/2022 11:12	3.26	6/18/2022 12:35	-0.17	6/17/2022 11:20	10.92
6/17/2022 12:00	-0.04	6/18/2022 10:50	0.70	6/18/2022 11:13	3.24	6/18/2022 12:36	-0.18	6/17/2022 11:21	10.88
6/17/2022 12:01	-0.04	6/18/2022 10:51	0.70	6/18/2022 11:14	3.30	6/18/2022 12:37	-0.16	6/17/2022 11:22	10.99
6/17/2022 12:02	-0.06	6/18/2022 10:52	0.70	6/18/2022 11:15	3.25	6/18/2022 12:38	-0.17	6/17/2022 11:23	10.93
6/17/2022 12:03	-0.04	6/18/2022 10:53	0.69	6/18/2022 11:16	3.23	6/18/2022 12:39	-0.17	6/17/2022 11:24	10.87
6/17/2022 12:04	-0.06	6/18/2022 10:54	0.70	6/18/2022 11:17	3.22	6/18/2022 12:40	-0.19	6/17/2022 11:25	10.91
6/17/2022 12:05	-0.06	6/18/2022 10:55	0.70	6/18/2022 11:18	3.24	6/18/2022 12:41	-0.17	6/17/2022 11:26	10.95
6/17/2022 12:06	-0.04	6/18/2022 10:56	0.70	6/18/2022 11:19	3.27	6/18/2022 12:42	-0.18	6/17/2022 11:27	10.94
6/17/2022 12:07	-0.06	6/18/2022 10:57	0.70	6/18/2022 11:20	3.25	6/18/2022 12:43	-0.18	6/17/2022 11:28	10.94
6/17/2022 12:08	-0.06	6/18/2022 10:58	0.70	6/18/2022 11:21	3.24	6/18/2022 12:44	-0.18	6/17/2022 11:29	10.92
6/17/2022 12:09	-0.05	6/18/2022 10:59	0.70	6/18/2022 11:22	3.25	6/18/2022 12:45	-0.20	6/17/2022 11:30	10.89
6/17/2022 12:10	-0.06	6/18/2022 11:00	0.70	6/18/2022 11:23	3.24	6/18/2022 12:46	-0.18	6/17/2022 11:31	10.90
6/17/2022 12:11	-0.04	6/18/2022 11:01	0.69	6/18/2022 11:24	3.25	6/18/2022 12:47	-0.20	6/17/2022 11:32	10.93
6/17/2022 12:12	-0.06	6/18/2022 11:02	0.70	6/18/2022 11:25	3.26	6/18/2022 12:48	-0.17	6/17/2022 11:33	10.89
6/17/2022 12:13	-0.04	6/18/2022 11:03	0.70	6/18/2022 11:26	3.26	6/18/2022 12:49	-0.17	6/17/2022 11:34	10.93
6/17/2022 12:14	-0.03	6/18/2022 11:04	0.70	6/18/2022 11:27	3.26	6/18/2022 12:50	-0.16	6/17/2022 11:35	10.91
6/17/2022 12:15	-0.05	6/18/2022 11:05	0.70	6/18/2022 11:28	3.27	6/18/2022 12:51	-0.17	6/17/2022 11:36	10.90
6/17/2022 12:16	-0.04	6/18/2022 11:06	0.72	6/18/2022 11:29	3.26	6/18/2022 12:52	-0.19	6/17/2022 11:37	10.90
6/17/2022 12:17	-0.02	6/18/2022 11:07	0.69	6/18/2022 11:30	3.26	6/18/2022 12:53	-0.17	6/17/2022 11:38	10.97
6/17/2022 12:18	-0.04	6/18/2022 11:08	0.70	6/18/2022 11:31	3.25	6/18/2022 12:54	-0.15	6/17/2022 11:39	10.92
6/17/2022 12:19	-0.02	6/18/2022 11:09	0.70	6/18/2022 11:32	3.26	6/18/2022 12:55	-0.20	6/17/2022 11:40	10.87
6/17/2022 12:20	-0.03	6/18/2022 11:10	0.70	6/18/2022 11:33	3.27	6/18/2022 12:56	-0.19	6/17/2022 11:41	10.89
6/17/2022 12:21	-0.02	6/18/2022 11:11	0.71	6/18/2022 11:34	3.28	6/18/2022 12:57	-0.18	6/17/2022 11:42	10.98
6/17/2022 12:22	-0.02	6/18/2022 11:12	0.70	6/18/2022 11:35	3.26	6/18/2022 12:58	-0.17	6/17/2022 11:43	10.90
6/17/2022 12:23	-0.02	6/18/2022 11:13	0.72	6/18/2022 11:36	3.26	6/18/2022 12:59	-0.20	6/17/2022 11:44	10.90
6/17/2022 12:24	-0.03	6/18/2022 11:14	0.70	6/18/2022 11:37	3.28	6/18/2022 13:00	-0.19	6/17/2022 11:45	10.92
6/17/2022 12:25	-0.02	6/18/2022 11:15	0.70	6/18/2022 11:38	3.28	6/18/2022 13:01	-0.19	6/17/2022 11:46	10.95
6/17/2022 12:26	-0.02	6/18/2022 11:16	0.70	6/18/2022 11:39	3.28	6/18/2022 13:02	-0.22	6/17/2022 11:47	10.94
6/17/2022 12:27	-0.02	6/18/2022 11:17	0.70	6/18/2022 11:40	3.28	6/18/2022 13:03	-0.18	6/17/2022 11:48	10.90
6/17/2022 12:28	-0.02	6/18/2022 11:18	0.70	6/18/2022 11:41	3.25	6/18/2022 13:04	-0.19	6/17/2022 11:49	10.93
6/17/2022 12:29	-0.04	6/18/2022 11:19	0.70	6/18/2022 11:42	3.27	6/18/2022 13:05	-0.13	6/17/2022 11:50	10.94
6/17/2022 12:30	-0.04	6/18/2022 11:20	0.73	6/18/2022 11:43	3.23	6/18/2022 13:06	-0.17	6/17/2022 11:51	10.90
6/17/2022 12:31	-0.02	6/18/2022 11:21	0.70	6/18/2022 11:44	3.25	6/18/2022 13:07	-0.19	6/17/2022 11:52	10.90
6/17/2022 12:32	-0.04	6/18/2022 11:22	0.70	6/18/2022 11:45	3.27	6/18/2022 13:08	-0.15	6/17/2022 11:53	10.91
6/17/2022 12:33	-0.02	6/18/2022 11:23	0.70	6/18/2022 11:46	3.27	6/18/2022 13:09	-0.18	6/17/2022 11:54	10.95
6/17/2022 12:34	-0.02	6/18/2022 11:24	0.70	6/18/2022 11:47	3.25	6/18/2022 13:10	-0.19	6/17/2022 11:55	10.92
6/17/2022 12:35	-0.04	6/18/2022 11:25	0.71	6/18/2022 11:48	3.24	6/18/2022 13:11	-0.15	6/17/2022 11:56	10.92
6/17/2022 12:36	-0.02	6/18/2022 11:26	0.70	6/18/2022 11:49	3.26	6/18/2022 13:12	-0.18	6/17/2022 11:57	10.94
6/17/2022 12:37	-0.03	6/18/2022 11:27	0.73	6/18/2022 11:50	3.26	6/18/2022 13:13	-0.16	6/17/2022 11:58	10.91
6/17/2022 12:38	-0.02	6/18/2022 11:28	0.70	6/18/2022 11:51	3.22	6/18/2022 13:14	-0.17	6/17/2022 11:59	10.93
6/17/2022 12:39	-0.04	6/18/2022 11:29	0.71	6/18/2022 11:52	3.27	6/18/2022 13:15	-0.19	6/17/2022 12:00	10.92
6/17/2022 12:40	-0.02	6/18/2022 11:30	0.70	6/18/2022 11:53	3.28	6/18/2022 13:16	-0.18	6/17/2022 12:01	10.91

6/17/2022 12:41	-0.02	6/18/2022 11:31	0.71	6/18/2022 11:54	3.29	6/18/2022 13:17	-0.18	6/17/2022 12:02	10.90
6/17/2022 12:42	-0.03	6/18/2022 11:32	0.71	6/18/2022 11:55	3.24	6/18/2022 13:18	-0.20	6/17/2022 12:03	10.88
6/17/2022 12:43	-0.04	6/18/2022 11:33	0.71	6/18/2022 11:56	3.25	6/18/2022 13:19	-0.20	6/17/2022 12:04	10.88
6/17/2022 12:44	-0.02	6/18/2022 11:34	0.71	6/18/2022 11:57	3.23	6/18/2022 13:20	-0.17	6/17/2022 12:05	10.95
6/17/2022 12:45	-0.04	6/18/2022 11:35	0.70	6/18/2022 11:58	3.27	6/18/2022 13:21	-0.13	6/17/2022 12:06	10.95
6/17/2022 12:46	-0.04	6/18/2022 11:36	0.71	6/18/2022 11:59	3.30	6/18/2022 13:22	-0.16	6/17/2022 12:07	10.94
6/17/2022 12:47	-0.04	6/18/2022 11:37	0.71	6/18/2022 12:00	3.27	6/18/2022 13:23	-0.22	6/17/2022 12:08	10.88
6/17/2022 12:48	-0.04	6/18/2022 11:38	0.70	6/18/2022 12:01	3.26	6/18/2022 13:24	-0.15	6/17/2022 12:09	10.96
6/17/2022 12:49	-0.02	6/18/2022 11:39	0.73	6/18/2022 12:02	3.29	6/18/2022 13:25	-0.21	6/17/2022 12:10	10.94
6/17/2022 12:50	-0.03	6/18/2022 11:40	0.71	6/18/2022 12:03	3.26	6/18/2022 13:26	-0.19	6/17/2022 12:11	10.93
6/17/2022 12:51	-0.04	6/18/2022 11:41	0.71	6/18/2022 12:04	3.25	6/18/2022 13:27	-0.19	6/17/2022 12:12	10.89
6/17/2022 12:52	-0.02	6/18/2022 11:42	0.71	6/18/2022 12:05	3.23	6/18/2022 13:28	-0.19	6/17/2022 12:13	10.91
6/17/2022 12:53	-0.03	6/18/2022 11:43	0.71	6/18/2022 12:06	3.26	6/18/2022 13:29	-0.19	6/17/2022 12:14	10.91
6/17/2022 12:54	-0.02	6/18/2022 11:44	0.71	6/18/2022 12:07	3.24	6/18/2022 13:30	-0.22	6/17/2022 12:15	10.95
6/17/2022 12:55	-0.04	6/18/2022 11:45	0.71	6/18/2022 12:08	3.29	6/18/2022 13:31	-0.21	6/17/2022 12:16	10.86
6/17/2022 12:56	-0.04	6/18/2022 11:46	0.71	6/18/2022 12:09	3.26	6/18/2022 13:32	-0.15	6/17/2022 12:17	10.92
6/17/2022 12:57	-0.04	6/18/2022 11:47	0.71	6/18/2022 12:10	3.22	6/18/2022 13:33	-0.18	6/17/2022 12:18	10.94
6/17/2022 12:58	-0.04	6/18/2022 11:48	0.73	6/18/2022 12:11	3.27	6/18/2022 13:34	-0.17	6/17/2022 12:19	10.93
6/17/2022 12:59	-0.02	6/18/2022 11:49	0.71	6/18/2022 12:12	3.24	6/18/2022 13:35	-0.16	6/17/2022 12:20	10.86
6/17/2022 13:00	-0.02	6/18/2022 11:50	0.71	6/18/2022 12:13	3.26	6/18/2022 13:36	-0.18	6/17/2022 12:21	10.92
6/17/2022 13:01	-0.04	6/18/2022 11:51	0.71	6/18/2022 12:14	3.31	6/18/2022 13:37	-0.18	6/17/2022 12:22	10.96
6/17/2022 13:02	-0.04	6/18/2022 11:52	0.71	6/18/2022 12:15	3.27	6/18/2022 13:38	-0.18	6/17/2022 12:23	10.90
6/17/2022 13:03	-0.04	6/18/2022 11:53	0.71	6/18/2022 12:16	3.26	6/18/2022 13:39	-0.18	6/17/2022 12:24	10.90
6/17/2022 13:04	-0.03	6/18/2022 11:54	0.71	6/18/2022 12:17	3.26	6/18/2022 13:40	-0.19	6/17/2022 12:25	10.96
6/17/2022 13:05	-0.03	6/18/2022 11:55	0.71	6/18/2022 12:18	3.28	6/18/2022 13:41	-0.17	6/17/2022 12:26	10.89
6/17/2022 13:06	-0.02	6/18/2022 11:56	0.71	6/18/2022 12:19	3.28	6/18/2022 13:42	-0.17	6/17/2022 12:27	10.94
6/17/2022 13:07	-0.02	6/18/2022 11:57	0.71	6/18/2022 12:20	3.27	6/18/2022 13:43	-0.19	6/17/2022 12:28	10.91
6/17/2022 13:08	-0.02	6/18/2022 11:58	0.71	6/18/2022 12:21	3.29	6/18/2022 13:44	-0.17	6/17/2022 12:29	10.87
6/17/2022 13:09	-0.02	6/18/2022 11:59	0.71	6/18/2022 12:22	3.27	6/18/2022 13:45	-0.20	6/17/2022 12:30	10.93
6/17/2022 13:10	-0.04	6/18/2022 12:00	0.72	6/18/2022 12:23	3.26	6/18/2022 13:46	-0.15	6/17/2022 12:31	10.87
6/17/2022 13:11	-0.02	6/18/2022 12:01	0.71	6/18/2022 12:24	3.29	6/18/2022 13:47	-0.19	6/17/2022 12:32	10.89
6/17/2022 13:12	-0.02	6/18/2022 12:02	0.71	6/18/2022 12:25	3.27	6/18/2022 13:48	-0.21	6/17/2022 12:33	10.91
6/17/2022 13:13	-0.02	6/18/2022 12:03	0.71	6/18/2022 12:26	3.30	6/18/2022 13:49	-0.18	6/17/2022 12:34	10.95
6/17/2022 13:14	-0.02	6/18/2022 12:04	0.71	6/18/2022 12:27	3.29	6/18/2022 13:50	-0.13	6/17/2022 12:35	10.97
6/17/2022 13:15	-0.04	6/18/2022 12:05	0.71	6/18/2022 12:28	3.27	6/18/2022 13:51	-0.17	6/17/2022 12:36	10.92
6/17/2022 13:16	-0.02	6/18/2022 12:06	0.71	6/18/2022 12:29	3.25	6/18/2022 13:52	-0.17	6/17/2022 12:37	10.91
6/17/2022 13:17	-0.04	6/18/2022 12:07	0.71	6/18/2022 12:30	3.26	6/18/2022 13:53	-0.16	6/17/2022 12:38	10.94
6/17/2022 13:18	-0.02	6/18/2022 12:08	0.72	6/18/2022 12:31	3.27	6/18/2022 13:54	-0.18	6/17/2022 12:39	10.92
6/17/2022 13:19	-0.04	6/18/2022 12:09	0.71	6/18/2022 12:32	3.26	6/18/2022 13:55	-0.19	6/17/2022 12:40	10.92
6/17/2022 13:20	-0.02	6/18/2022 12:10	0.71	6/18/2022 12:33	3.28	6/18/2022 13:56	-0.17	6/17/2022 12:41	10.96
6/17/2022 13:21	-0.04	6/18/2022 12:11	0.72	6/18/2022 12:34	3.27	6/18/2022 13:57	-0.15	6/17/2022 12:42	10.92
6/17/2022 13:22	-0.02	6/18/2022 12:12	0.71	6/18/2022 12:35	3.30	6/18/2022 13:58	-0.19	6/17/2022 12:43	10.94
6/17/2022 13:23	-0.04	6/18/2022 12:13	0.72	6/18/2022 12:36	3.23	6/18/2022 13:59	-0.16	6/17/2022 12:44	10.90
6/17/2022 13:24	-0.04	6/18/2022 12:14	0.72	6/18/2022 12:37	3.28	6/18/2022 14:00	-0.19	6/17/2022 12:45	10.87
6/17/2022 13:25	-0.04	6/18/2022 12:15	0.71	6/18/2022 12:38	3.25	6/18/2022 14:01	-0.17	6/17/2022 12:46	10.91
6/17/2022 13:26	-0.04	6/18/2022 12:16	0.72	6/18/2022 12:39	3.26	6/18/2022 14:02	-0.19	6/17/2022 12:47	10.88
6/17/2022 13:27	-0.02	6/18/2022 12:17	0.72	6/18/2022 12:40	3.27	6/18/2022 14:03	-0.17	6/17/2022 12:48	10.94
6/17/2022 13:28	-0.04	6/18/2022 12:18	0.71	6/18/2022 12:41	3.25	6/18/2022 14:04	-0.17	6/17/2022 12:49	10.91
6/17/2022 13:29	-0.04	6/18/2022 12:19	0.72	6/18/2022 12:42	3.28	6/18/2022 14:05	-0.22	6/17/2022 12:50	10.92
6/17/2022 13:30	-0.04	6/18/2022 12:20	0.74	6/18/2022 12:43	3.26	6/18/2022 14:06	-0.19	6/17/2022 12:51	10.93
6/17/2022 13:31	-0.02	6/18/2022 12:21	0.72	6/18/2022 12:44	3.30	6/18/2022 14:07	-0.17	6/17/2022 12:52	10.89
6/17/2022 13:32	-0.03	6/18/2022 12:22	0.71	6/18/2022 12:45	3.23	6/18/2022 14:08	-0.17	6/17/2022 12:53	10.90
6/17/2022 13:33	-0.04	6/18/2022 12:23	0.72	6/18/2022 12:46	3.24	6/18/2022 14:09	-0.19	6/17/2022 12:54	10.93
6/17/2022 13:34	-0.02	6/18/2022 12:24	0.72	6/18/2022 12:47	3.23	6/18/2022 14:10	-0.19	6/17/2022 12:55	10.90
6/17/2022 13:35	-0.02	6/18/2022 12:25	0.71	6/18/2022 12:48	3.24	6/18/2022 14:11	-0.19	6/17/2022 12:56	10.94
6/17/2022 13:36	-0.02	6/18/2022 12:26	0.71	6/18/2022 12:49	3.32	6/18/2022 14:12	-0.20	6/17/2022 12:57	10.94
6/17/2022 13:37	-0.02	6/18/2022 12:27	0.71	6/18/2022 12:50	3.28	6/18/2022 14:13	-0.20	6/17/2022 12:58	10.92
6/17/2022 13:38	-0.02	6/18/2022 12:28	0.72	6/18/2022 12:51	3.29	6/18/2022 14:14	-0.18	6/17/2022 12:59	10.89
6/17/2022 13:39	-0.02	6/18/2022 12:29	0.72	6/18/2022 12:52	3.26	6/18/2022 14:15	-0.21	6/17/2022 13:00	10.94
6/17/2022 13:40	-0.04	6/18/2022 12:30	0.72	6/18/2022 12:53	3.27	6/18/2022 14:16	-0.21	6/17/2022 13:01	10.91
6/17/2022 13:41	-0.02	6/18/2022 12:31	0.72	6/18/2022 12:54	3.28	6/18/2022 14:17	-0.16	6/17/2022 13:02	10.96
6/17/2022 13:42	-0.02	6/18/2022 12:32	0.72	6/18/2022 12:55	3.27	6/18/2022 14:18	-0.17	6/17/2022 13:03	10.88
6/17/2022 13:43	-0.04	6/18/2022 12:33	0.72	6/18/2022 12:56	3.25	6/18/2022 14:19	-0.17	6/17/2022 13:04	10.89
6/17/2022 13:44	-0.02	6/18/2022 12:34	0.74	6/18/2022 12:57	3.28	6/18/2022 14:20	-0.15	6/17/2022 13:05	10.92
6/17/2022 13:45	-0.04	6/18/2022 12:35	0.72	6/18/2022 12:58	3.27	6/18/2022 14:21	-0.20	6/17/2022 13:06	10.91
6/17/2022 13:46	-0.04	6/18/2022 12:36	0.72	6/18/2022 12:59	3.26	6/18/2022 14:22	-0.17	6/17/2022 13:07	10.91
6/17/2022 13:47	-0.04	6/18/2022 12:37	0.72	6/18/2022 13:00	3.26	6/18/2022 14:23	-0.19	6/17/2022 13:08	10.93
6/17/2022 13:48	-0.02	6/18/2022 12:38	0.72	6/18/2022 13:01	3.27	6/18/2022 14:24	-0.14	6/17/2022 13:09	10.93
6/17/2022 13:49	-0.02	6/18/2022 12:39	0.72	6/18/2022 13:02	3.31	6/18/2022 14:25	-0.20	6/17/2022 13:10	10.93
6/17/2022 13:50	-0.02	6/18/2022 12:40	0.72	6/18/2022 13:03	3.29	6/18/2022 14:26	-0.17	6/17/2022 13:11	10.97
6/17/2022 13:51	-0.02	6/18/2022 12:41	0.72	6/18/2022 13:04	3.26	6/18/2022 14:27	-0.16	6/17/2022 13:12	10.95
6/17/2022 13:52	-0.02	6/18/2022 12:42	0.72	6/18/2022 13:05	3.28	6/18/2022 14:28	-0.19	6/17/2022 13:13	10.89
6/17/2022 13:53	-0.04	6/18/2022 12:43	0.72	6/18/2022 13:06	3.27	6/18/2022 14:29	-0.19	6/17/2022 13:14	10.89
6/17/2022 13:54	-0.04	6/18/2022 12:44	0.72	6/18/2022 13:07	3.27	6/18/2022 14:30	-0.18	6/17/2022 13:15	10.92
6/17/2022 13:55	-0.04	6/18/2022 12:45	0.72	6/18/2022 13:08	3.27	6/18/2022 14:31	-0.20	6/17/2022 13:16	10.97
6/17/2022 13:56	-0.04	6/18/2022 12:46	0.74	6/18/2022 13:09	3.30	6/18/2022 14:32	-0.19	6/17/2022 13:17	10.98
6/17/2022 13:57	-0.04	6/18/2022 12:47	0.72	6/18/2022 13:10	3.26	6/18/2022 14:33	-0.16	6/17/2022 13:18	10.91
6/17/2022 13:58	-0.04	6/18/2022 12:48	0.72	6/18/2022 13:11	3.29	6/18/2022 14:34	-0.21	6/17/2022 13:19	10.90
6/17/2022 13:59	-0.04	6/18/2022 12:49	0.72	6/18/2022 13:12	3.26	6/18/2022 14:35	-0.16	6/17/2022 13:20	10.95
6/17/2022 14:00	-0.04	6/18/2022 12:50	0.72	6/18/2022 13:13	3.30	6/18/2022 14:36	-0.19	6/17/2022 13:21	10.92
6/17/2022 14:01	-0.04	6/18/2022 12:51	0.72	6/18/2022 13:14	3.25	6/18/2022 14:37	-0.17	6/17/2022 13:22	10.93
6/17/2022 14:02	-0.04	6/18/2022 12:52	0.74	6/18/2022 13:15	3.27	6/18/2022 14:38	-0.20	6/17/2022 13:23	10.86
6/17/2022 14:03	-0.02	6/18/2022 12:53	0.72	6/18/2022 13:16	3.32	6/18/2022 14:39	-0.19	6/17/2022 13:24	10.89
6/17/2022 14:04	-0.04	6/18/2022 12:54	0.72	6/18/2022 13:17	3.26	6/18/2022 14:40	-0.20	6/17/2022 13:25	10.97
6/17/2022 14:05	-0.04	6/18/2022 12:55	0.72	6/18/2022 13:18	3.27	6/18/2022 14:41	-0.21	6/17/2022 13:26	10.94
6/17/2022 14:06	-0.03	6/18/2022 12:56	0.72	6/18/2022 13:19	3.29	6/18/2022 14:42	-0.19	6/17/2022 13:27	10.95
6/17/2022 14:07	-0.04	6/18/2022 12:57	0.72	6/18/2022 13:20	3.27	6/18/2022 14:43	-0.21	6/17/2022 13:28	10.94
6/17/2022 14:08	-0.04	6/18/2022 12:58	0.72	6/18/2022 13:21	3.28	6/18/2022 14:44	-0.15	6/17/2022 13:29	10.92

6/17/2022 14:09	-0.04	6/18/2022 12:59	0.72	6/18/2022 13:22	3.32	6/18/2022 14:45	-0.17	6/17/2022 13:30	10.93
6/17/2022 14:10	-0.04	6/18/2022 13:00	0.72	6/18/2022 13:23	3.26	6/18/2022 14:46	-0.20	6/17/2022 13:31	10.91
6/17/2022 14:11	-0.02	6/18/2022 13:01	0.72	6/18/2022 13:24	3.30	6/18/2022 14:47	-0.19	6/17/2022 13:32	10.92
6/17/2022 14:12	-0.04	6/18/2022 13:02	0.72	6/18/2022 13:25	3.26	6/18/2022 14:48	-0.17	6/17/2022 13:33	10.94
6/17/2022 14:13	-0.04	6/18/2022 13:03	0.72	6/18/2022 13:26	3.29	6/18/2022 14:49	-0.15	6/17/2022 13:34	10.95
6/17/2022 14:14	-0.02	6/18/2022 13:04	0.72	6/18/2022 13:27	3.28	6/18/2022 14:50	-0.21	6/17/2022 13:35	10.94
6/17/2022 14:15	-0.02	6/18/2022 13:05	0.72	6/18/2022 13:28	3.27	6/18/2022 14:51	-0.18	6/17/2022 13:36	10.95
6/17/2022 14:16	-0.02	6/18/2022 13:06	0.72	6/18/2022 13:29	3.27	6/18/2022 14:52	-0.19	6/17/2022 13:37	10.87
6/17/2022 14:17	-0.04	6/18/2022 13:07	0.72	6/18/2022 13:30	3.31	6/18/2022 14:53	-0.17	6/17/2022 13:38	10.87
6/17/2022 14:18	-0.04	6/18/2022 13:08	0.75	6/18/2022 13:31	3.27	6/18/2022 14:54	-0.17	6/17/2022 13:39	10.91
6/17/2022 14:19	-0.04	6/18/2022 13:09	0.72	6/18/2022 13:32	3.27	6/18/2022 14:55	-0.19	6/17/2022 13:40	10.93
6/17/2022 14:20	-0.02	6/18/2022 13:10	0.75	6/18/2022 13:33	3.26	6/18/2022 14:56	-0.19	6/17/2022 13:44	10.89
6/17/2022 14:21	-0.02	6/18/2022 13:11	0.72	6/18/2022 13:34	3.29	6/18/2022 14:57	-0.19	6/17/2022 13:45	10.93
6/17/2022 14:22	-0.04	6/18/2022 13:12	0.72	6/18/2022 13:35	3.28	6/18/2022 14:58	-0.19	6/17/2022 13:46	10.88
6/17/2022 14:23	-0.03	6/18/2022 13:13	0.73	6/18/2022 13:36	3.27	6/18/2022 14:59	-0.19	6/17/2022 13:47	10.85
6/17/2022 14:24	-0.04	6/18/2022 13:14	0.73	6/18/2022 13:37	3.28	6/18/2022 15:00	-0.18	6/17/2022 13:48	10.87
6/17/2022 14:25	-0.03	6/18/2022 13:15	0.72	6/18/2022 13:38	3.29	6/18/2022 15:01	-0.19	6/17/2022 13:49	10.85
6/17/2022 14:26	-0.03	6/18/2022 13:16	0.72	6/18/2022 13:39	3.26	6/18/2022 15:02	-0.16	6/17/2022 13:50	10.87
6/17/2022 14:27	-0.04	6/18/2022 13:17	0.73	6/18/2022 13:40	3.31	6/18/2022 15:03	-0.17	6/17/2022 13:51	10.94
6/17/2022 14:28	-0.02	6/18/2022 13:18	0.72	6/18/2022 13:41	3.28	6/18/2022 15:04	-0.19	6/17/2022 13:52	10.90
6/17/2022 14:29	-0.04	6/18/2022 13:19	0.72	6/18/2022 13:42	3.28	6/18/2022 15:05	-0.19	6/17/2022 13:53	10.93
6/17/2022 14:30	-0.04	6/18/2022 13:20	0.72	6/18/2022 13:43	3.29	6/18/2022 15:06	-0.21	6/17/2022 13:54	10.86
6/17/2022 14:31	-0.02	6/18/2022 13:21	0.72	6/18/2022 13:44	3.28	6/18/2022 15:07	-0.19	6/17/2022 13:55	10.88
6/17/2022 14:32	-0.04	6/18/2022 13:22	0.72	6/18/2022 13:45	3.29	6/18/2022 15:08	-0.17	6/17/2022 13:56	10.88
6/17/2022 14:33	-0.04	6/18/2022 13:23	0.72	6/18/2022 13:46	3.30	6/18/2022 15:09	-0.20	6/17/2022 13:57	10.92
6/17/2022 14:34	-0.03	6/18/2022 13:24	0.72	6/18/2022 13:47	3.29	6/18/2022 15:10	-0.19	6/17/2022 13:58	10.84
6/17/2022 14:35	-0.02	6/18/2022 13:25	0.73	6/18/2022 13:48	3.27	6/18/2022 15:11	-0.17	6/17/2022 13:59	10.87
6/17/2022 14:36	-0.02	6/18/2022 13:26	0.73	6/18/2022 13:49	3.27	6/18/2022 15:12	-0.18	6/17/2022 14:00	10.89
6/17/2022 14:37	-0.02	6/18/2022 13:27	0.73	6/18/2022 13:50	3.26	6/18/2022 15:13	-0.17	6/17/2022 14:01	10.88
6/17/2022 14:38	-0.02	6/18/2022 13:28	0.72	6/18/2022 13:51	3.30	6/18/2022 15:14	-0.24	6/17/2022 14:02	10.84
6/17/2022 14:39	-0.02	6/18/2022 13:29	0.72	6/18/2022 13:52	3.28	6/18/2022 15:15	-0.21	6/17/2022 14:03	10.95
6/17/2022 14:40	-0.02	6/18/2022 13:30	0.73	6/18/2022 13:53	3.29	6/18/2022 15:16	-0.15	6/17/2022 14:04	10.89
6/17/2022 14:41	-0.04	6/18/2022 13:31	0.72	6/18/2022 13:54	3.29	6/18/2022 15:17	-0.15	6/17/2022 14:05	10.90
6/17/2022 14:42	-0.04	6/18/2022 13:32	0.72	6/18/2022 13:55	3.29	6/18/2022 15:18	-0.17	6/17/2022 14:06	10.89
6/17/2022 14:43	-0.02	6/18/2022 13:33	0.73	6/18/2022 13:56	3.25	6/18/2022 15:19	-0.17	6/17/2022 14:07	10.88
6/17/2022 14:44	-0.02	6/18/2022 13:34	0.72	6/18/2022 13:57	3.26	6/18/2022 15:20	-0.16	6/17/2022 14:08	10.86
6/17/2022 14:45	-0.02	6/18/2022 13:35	0.72	6/18/2022 13:58	3.26	6/18/2022 15:21	-0.14	6/17/2022 14:09	10.82
6/17/2022 14:46	-0.02	6/18/2022 13:36	0.72	6/18/2022 13:59	3.26	6/18/2022 15:22	-0.19	6/17/2022 14:10	10.87
6/17/2022 14:47	-0.02	6/18/2022 13:37	0.73	6/18/2022 14:00	3.31	6/18/2022 15:23	-0.19	6/17/2022 14:11	10.84
6/17/2022 14:48	-0.02	6/18/2022 13:38	0.72	6/18/2022 14:01	3.35	6/18/2022 15:24	-0.18	6/17/2022 14:12	10.89
6/17/2022 14:49	-0.02	6/18/2022 13:39	0.75	6/18/2022 14:02	3.29	6/18/2022 15:25	-0.18	6/17/2022 14:13	10.91
6/17/2022 14:50	-0.02	6/18/2022 13:40	0.72	6/18/2022 14:03	3.27	6/18/2022 15:26	-0.18	6/17/2022 14:14	10.90
6/17/2022 14:51	-0.04	6/18/2022 13:41	0.72	6/18/2022 14:04	3.28	6/18/2022 15:27	-0.14	6/17/2022 14:15	10.88
6/17/2022 14:52	-0.04	6/18/2022 13:42	0.73	6/18/2022 14:05	3.30	6/18/2022 15:28	-0.18	6/17/2022 14:16	10.89
6/17/2022 14:53	-0.04	6/18/2022 13:43	0.75	6/18/2022 14:06	3.28	6/18/2022 15:29	-0.21	6/17/2022 14:17	10.85
6/17/2022 14:54	-0.04	6/18/2022 13:44	0.73	6/18/2022 14:07	3.29	6/18/2022 15:30	-0.22	6/17/2022 14:18	10.88
6/17/2022 14:55	-0.02	6/18/2022 13:45	0.73	6/18/2022 14:08	3.30	6/18/2022 15:31	-0.17	6/17/2022 14:19	10.88
6/17/2022 14:56	-0.04	6/18/2022 13:46	0.73	6/18/2022 14:09	3.26	6/18/2022 15:32	-0.18	6/17/2022 14:20	10.88
6/17/2022 14:57	-0.04	6/18/2022 13:47	0.73	6/18/2022 14:10	3.29	6/18/2022 15:33	-0.22	6/17/2022 14:21	10.88
6/17/2022 14:58	-0.03	6/18/2022 13:48	0.73	6/18/2022 14:11	3.30	6/18/2022 15:34	-0.19	6/17/2022 14:22	10.92
6/17/2022 14:59	-0.04	6/18/2022 13:49	0.73	6/18/2022 14:12	3.29	6/18/2022 15:35	-0.18	6/17/2022 14:23	10.86
6/17/2022 15:00	-0.02	6/18/2022 13:50	0.72	6/18/2022 14:13	3.27	6/18/2022 15:36	-0.21	6/17/2022 14:24	10.88
6/17/2022 15:01	-0.04	6/18/2022 13:51	0.73	6/18/2022 14:14	3.29	6/18/2022 15:37	-0.17	6/17/2022 14:25	10.90
6/17/2022 15:02	-0.04	6/18/2022 13:52	0.73	6/18/2022 14:15	3.30	6/18/2022 15:38	-0.23	6/17/2022 14:26	10.85
6/17/2022 15:03	-0.04	6/18/2022 13:53	0.75	6/18/2022 14:16	3.28	6/18/2022 15:39	-0.22	6/17/2022 14:27	10.89
6/17/2022 15:04	-0.04	6/18/2022 13:54	0.75	6/18/2022 14:17	3.30	6/18/2022 15:40	-0.17	6/17/2022 14:28	10.92
6/17/2022 15:05	-0.02	6/18/2022 13:55	0.73	6/18/2022 14:18	3.32	6/18/2022 15:41	-0.18	6/17/2022 14:29	10.88
6/17/2022 15:06	-0.02	6/18/2022 13:56	0.73	6/18/2022 14:19	3.29	6/18/2022 15:42	-0.20	6/17/2022 14:30	10.90
6/17/2022 15:07	-0.04	6/18/2022 13:57	0.73	6/18/2022 14:20	3.27	6/18/2022 15:43	-0.19	6/17/2022 14:31	10.82
6/17/2022 15:08	-0.02	6/18/2022 13:58	0.75	6/18/2022 14:21	3.30	6/18/2022 15:44	-0.19	6/17/2022 14:32	10.91
6/17/2022 15:09	-0.02	6/18/2022 13:59	0.73	6/18/2022 14:22	3.28	6/18/2022 15:45	-0.18	6/17/2022 14:33	10.84
6/17/2022 15:10	-0.04	6/18/2022 14:00	0.73	6/18/2022 14:23	3.28	6/18/2022 15:46	-0.18	6/17/2022 14:34	10.90
6/17/2022 15:11	-0.02	6/18/2022 14:01	0.73	6/18/2022 14:24	3.33	6/18/2022 15:47	-0.19	6/17/2022 14:35	10.93
6/17/2022 15:12	-0.04	6/18/2022 14:02	0.73	6/18/2022 14:25	3.31	6/18/2022 15:48	-0.19	6/17/2022 14:36	10.87
6/17/2022 15:13	-0.04	6/18/2022 14:03	0.73	6/18/2022 14:26	3.31	6/18/2022 15:49	-0.19	6/17/2022 14:37	10.85
6/17/2022 15:14	-0.02	6/18/2022 14:04	0.73	6/18/2022 14:27	3.29	6/18/2022 15:50	-0.18	6/17/2022 14:38	10.87
6/17/2022 15:15	-0.02	6/18/2022 14:05	0.72	6/18/2022 14:28	3.27	6/18/2022 15:51	-0.19	6/17/2022 14:39	10.85
6/17/2022 15:16	-0.04	6/18/2022 14:06	0.73	6/18/2022 14:29	3.35	6/18/2022 15:52	-0.22	6/17/2022 14:40	10.95
6/17/2022 15:17	-0.02	6/18/2022 14:07	0.73	6/18/2022 14:30	3.27	6/18/2022 15:53	-0.17	6/17/2022 14:41	10.88
6/17/2022 15:18	-0.04	6/18/2022 14:08	0.73	6/18/2022 14:31	3.30	6/18/2022 15:54	-0.16	6/17/2022 14:42	10.90
6/17/2022 15:19	-0.02	6/18/2022 14:09	0.73	6/18/2022 14:32	3.29	6/18/2022 15:55	-0.16	6/17/2022 14:43	10.89
6/17/2022 15:20	-0.04	6/18/2022 14:10	0.75	6/18/2022 14:33	3.28	6/18/2022 15:56	-0.19	6/17/2022 14:44	10.90
6/17/2022 15:21	-0.02	6/18/2022 14:11	0.73	6/18/2022 14:34	3.29	6/18/2022 15:57	-0.17	6/17/2022 14:45	10.90
6/17/2022 15:22	-0.02	6/18/2022 14:12	0.73	6/18/2022 14:35	3.27	6/18/2022 15:58	-0.20	6/17/2022 14:46	10.84
6/17/2022 15:23	-0.04	6/18/2022 14:13	0.73	6/18/2022 14:36	3.30	6/18/2022 15:59	-0.17	6/17/2022 14:47	10.89
6/17/2022 15:24	-0.03	6/18/2022 14:14	0.73	6/18/2022 14:37	3.31	6/18/2022 16:00	-0.17	6/17/2022 14:48	10.86
6/17/2022 15:25	-0.02	6/18/2022 14:15	0.73	6/18/2022 14:38	3.29	6/18/2022 16:01	-0.21	6/17/2022 14:49	10.87
6/17/2022 15:26	-0.02	6/18/2022 14:16	0.73	6/18/2022 14:39	3.26	6/18/2022 16:02	-0.15	6/17/2022 14:50	10.86
6/17/2022 15:27	-0.04	6/18/2022 14:17	0.73	6/18/2022 14:40	3.25	6/18/2022 16:03	-0.20	6/17/2022 14:51	10.86
6/17/2022 15:28	-0.02	6/18/2022 14:18	0.73	6/18/2022 14:41	3.30	6/18/2022 16:04	-0.19	6/17/2022 14:52	10.87
6/17/2022 15:29	-0.02	6/18/2022 14:19	0.73	6/18/2022 14:42	3.31	6/18/2022 16:05	-0.21	6/17/2022 14:53	10.90
6/17/2022 15:30	-0.03	6/18/2022 14:20	0.75	6/18/2022 14:43	3.32	6/18/2022 16:06	-0.20	6/17/2022 14:54	10.90
6/17/2022 15:31	-0.03	6/18/2022 14:21	0.75	6/18/2022 14:44	3.30	6/18/2022 16:07	-0.19	6/17/2022 14:55	10.84
6/17/2022 15:32	-0.04	6/18/2022 14:22	0.73	6/18/2022 14:45	3.28	6/18/2022 16:08	-0.13	6/17/2022 14:56	10.84
6/17/2022 15:33	-0.04	6/18/2022 14:23	0.73	6/18/2022 14:46	3.28	6/18/2022 16:09	-0.18	6/17/2022 14:57	10.87
6/17/2022 15:34	-0.02	6/18/2022 14:24	0.73	6/18/2022 14:47	3.33	6/18/2022 16:10	-0.14	6/17/2022 14:58	10.87
6/17/2022 15:35	-0.04	6/18/2022 14:25	0.73	6/18/2022 14:48	3.29	6/18/2022 16:11	-0.18	6/17/2022 14:59	10.93
6/17/2022 15:36	-0.04	6/18/2022 14:26	0.73	6/18/2022 14:49	3.28	6/18/2022 16:12	-0.18	6/17/2022 15:00	10.87

6/17/2022 15:37	-0.02	6/18/2022 14:27	0.73	6/18/2022 14:50	3.28	6/18/2022 16:13	-0.21	6/17/2022 15:01	10.89
6/17/2022 15:38	-0.02	6/18/2022 14:28	0.73	6/18/2022 14:51	3.30	6/18/2022 16:14	-0.19	6/17/2022 15:02	10.91
6/17/2022 15:39	-0.04	6/18/2022 14:29	0.73	6/18/2022 14:52	3.28	6/18/2022 16:15	-0.17	6/17/2022 15:03	10.89
6/17/2022 15:40	-0.02	6/18/2022 14:30	0.73	6/18/2022 14:53	3.31	6/18/2022 16:16	-0.23	6/17/2022 15:04	10.84
6/17/2022 15:41	-0.04	6/18/2022 14:31	0.73	6/18/2022 14:54	3.27	6/18/2022 16:17	-0.22	6/17/2022 15:05	10.88
6/17/2022 15:42	-0.03	6/18/2022 14:32	0.75	6/18/2022 14:55	3.30	6/18/2022 16:18	-0.21	6/17/2022 15:06	10.86
6/17/2022 15:43	-0.02	6/18/2022 14:33	0.73	6/18/2022 14:56	3.30	6/18/2022 16:19	-0.18	6/17/2022 15:07	10.88
6/17/2022 15:44	-0.04	6/18/2022 14:34	0.73	6/18/2022 14:57	3.30	6/18/2022 16:20	-0.18	6/17/2022 15:08	10.88
6/17/2022 15:45	-0.04	6/18/2022 14:35	0.73	6/18/2022 14:58	3.30	6/18/2022 16:21	-0.18	6/17/2022 15:09	10.85
6/17/2022 15:46	-0.04	6/18/2022 14:36	0.73	6/18/2022 14:59	3.29	6/18/2022 16:22	-0.21	6/17/2022 15:10	10.94
6/17/2022 15:47	-0.05	6/18/2022 14:37	0.73	6/18/2022 15:00	3.30	6/18/2022 16:23	-0.23	6/17/2022 15:11	10.86
6/17/2022 15:48	-0.04	6/18/2022 14:38	0.73	6/18/2022 15:01	3.31	6/18/2022 16:24	-0.17	6/17/2022 15:12	10.89
6/17/2022 15:49	-0.02	6/18/2022 14:39	0.73	6/18/2022 15:02	3.31	6/18/2022 16:25	-0.18	6/17/2022 15:13	10.88
6/17/2022 15:50	-0.03	6/18/2022 14:40	0.73	6/18/2022 15:03	3.30	6/18/2022 16:26	-0.18	6/17/2022 15:14	10.90
6/17/2022 15:51	-0.02	6/18/2022 14:41	0.73	6/18/2022 15:04	3.30	6/18/2022 16:27	-0.19	6/17/2022 15:15	10.87
6/17/2022 15:52	-0.02	6/18/2022 14:42	0.73	6/18/2022 15:05	3.29	6/18/2022 16:28	-0.19	6/17/2022 15:16	10.84
6/17/2022 15:53	-0.03	6/18/2022 14:43	0.73	6/18/2022 15:06	3.31	6/18/2022 16:29	-0.19	6/17/2022 15:17	10.90
6/17/2022 15:54	-0.04	6/18/2022 14:44	0.73	6/18/2022 15:07	3.28	6/18/2022 16:30	-0.19	6/17/2022 15:18	10.86
6/17/2022 15:55	-0.02	6/18/2022 14:45	0.73	6/18/2022 15:08	3.26	6/18/2022 16:31	-0.19	6/17/2022 15:19	10.87
6/17/2022 15:56	-0.04	6/18/2022 14:46	0.73	6/18/2022 15:09	3.28	6/18/2022 16:32	-0.24	6/17/2022 15:20	10.86
6/17/2022 15:57	-0.02	6/18/2022 14:47	0.74	6/18/2022 15:10	3.29	6/18/2022 16:33	-0.25	6/17/2022 15:21	10.89
6/17/2022 15:58	-0.04	6/18/2022 14:48	0.74	6/18/2022 15:11	3.29	6/18/2022 16:34	-0.21	6/17/2022 15:22	10.86
6/17/2022 15:59	-0.04	6/18/2022 14:49	0.75	6/18/2022 15:12	3.29	6/18/2022 16:35	-0.20	6/17/2022 15:23	10.88
6/17/2022 16:00	-0.02	6/18/2022 14:50	0.73	6/18/2022 15:13	3.29	6/18/2022 16:36	-0.20	6/17/2022 15:24	10.86
6/17/2022 16:01	-0.04	6/18/2022 14:51	0.73	6/18/2022 15:14	3.28	6/18/2022 16:37	-0.22	6/17/2022 15:25	10.86
6/17/2022 16:02	-0.04	6/18/2022 14:52	0.73	6/18/2022 15:15	3.28	6/18/2022 16:38	-0.24	6/17/2022 15:26	10.91
6/17/2022 16:03	-0.03	6/18/2022 14:53	0.74	6/18/2022 15:16	3.30	6/18/2022 16:39	-0.22	6/17/2022 15:27	10.89
6/17/2022 16:04	-0.04	6/18/2022 14:54	0.73	6/18/2022 15:17	3.28	6/18/2022 16:40	-0.23	6/17/2022 15:28	10.88
6/17/2022 16:05	-0.02	6/18/2022 14:55	0.74	6/18/2022 15:18	3.29	6/18/2022 16:41	-0.23	6/17/2022 15:29	10.87
6/17/2022 16:06	-0.02	6/18/2022 14:56	0.74	6/18/2022 15:19	3.31	6/18/2022 16:42	-0.19	6/17/2022 15:30	10.84
6/17/2022 16:07	-0.03	6/18/2022 14:57	0.74	6/18/2022 15:20	3.30	6/18/2022 16:43	-0.16	6/17/2022 15:31	10.87
6/17/2022 16:08	-0.02	6/18/2022 14:58	0.73	6/18/2022 15:21	3.30	6/18/2022 16:44	-0.20	6/17/2022 15:32	10.90
6/17/2022 16:09	-0.03	6/18/2022 14:59	0.74	6/18/2022 15:22	3.31	6/18/2022 16:45	-0.23	6/17/2022 15:33	10.89
6/17/2022 16:10	-0.02	6/18/2022 15:00	0.74	6/18/2022 15:23	3.32	6/18/2022 16:46	-0.22	6/17/2022 15:34	10.86
6/17/2022 16:11	-0.03	6/18/2022 15:01	0.76	6/18/2022 15:24	3.30	6/18/2022 16:47	-0.19	6/17/2022 15:35	10.88
6/17/2022 16:12	-0.04	6/18/2022 15:02	0.73	6/18/2022 15:25	3.30	6/18/2022 16:48	-0.23	6/17/2022 15:36	10.86
6/17/2022 16:13	-0.02	6/18/2022 15:03	0.74	6/18/2022 15:26	3.31	6/18/2022 16:49	-0.19	6/17/2022 15:37	10.91
6/17/2022 16:14	-0.02	6/18/2022 15:04	0.76	6/18/2022 15:27	3.30	6/18/2022 16:50	-0.21	6/17/2022 15:38	10.89
6/17/2022 16:15	-0.04	6/18/2022 15:05	0.73	6/18/2022 15:28	3.31	6/18/2022 16:51	-0.19	6/17/2022 15:39	10.85
6/17/2022 16:16	-0.02	6/18/2022 15:06	0.74	6/18/2022 15:29	3.29	6/18/2022 16:52	-0.21	6/17/2022 15:40	10.94
6/17/2022 16:17	-0.02	6/18/2022 15:07	0.74	6/18/2022 15:30	3.28	6/18/2022 16:53	-0.22	6/17/2022 15:41	10.85
6/17/2022 16:18	-0.02	6/18/2022 15:08	0.74	6/18/2022 15:31	3.28	6/18/2022 16:54	-0.19	6/17/2022 15:42	10.86
6/17/2022 16:19	-0.04	6/18/2022 15:09	0.73	6/18/2022 15:32	3.30	6/18/2022 16:55	-0.20	6/17/2022 15:43	10.85
6/17/2022 16:20	-0.04	6/18/2022 15:10	0.74	6/18/2022 15:33	3.29	6/18/2022 16:56	-0.21	6/17/2022 15:44	10.87
6/17/2022 16:21	-0.04	6/18/2022 15:11	0.74	6/18/2022 15:34	3.31	6/18/2022 16:57	-0.21	6/17/2022 15:45	10.87
6/17/2022 16:22	-0.04	6/18/2022 15:12	0.76	6/18/2022 15:35	3.29	6/18/2022 16:58	-0.25	6/17/2022 15:46	10.90
6/17/2022 16:23	-0.02	6/18/2022 15:13	0.74	6/18/2022 15:36	3.30	6/18/2022 16:59	-0.22	6/17/2022 15:47	10.92
6/17/2022 16:24	-0.04	6/18/2022 15:14	0.74	6/18/2022 15:37	3.30	6/18/2022 17:00	-0.21	6/17/2022 15:48	10.90
6/17/2022 16:25	-0.02	6/18/2022 15:15	0.73	6/18/2022 15:38	3.29	6/18/2022 17:01	-0.21	6/17/2022 15:49	10.88
6/17/2022 16:26	-0.04	6/18/2022 15:16	0.74	6/18/2022 15:39	3.28	6/18/2022 17:02	-0.21	6/17/2022 15:50	10.83
6/17/2022 16:27	-0.04	6/18/2022 15:17	0.73	6/18/2022 15:40	3.30	6/18/2022 17:03	-0.21	6/17/2022 15:51	10.91
6/17/2022 16:28	-0.02	6/18/2022 15:18	0.73	6/18/2022 15:41	3.29	6/18/2022 17:04	-0.21	6/17/2022 15:52	10.90
6/17/2022 16:29	-0.04	6/18/2022 15:19	0.74	6/18/2022 15:42	3.28	6/18/2022 17:05	-0.18	6/17/2022 15:53	10.91
6/17/2022 16:30	-0.04	6/18/2022 15:20	0.73	6/18/2022 15:43	3.32	6/18/2022 17:06	-0.25	6/17/2022 15:54	10.85
6/17/2022 16:31	-0.04	6/18/2022 15:21	0.74	6/18/2022 15:44	3.30	6/18/2022 17:07	-0.17	6/17/2022 15:55	10.93
6/17/2022 16:32	-0.02	6/18/2022 15:22	0.73	6/18/2022 15:45	3.31	6/18/2022 17:08	-0.21	6/17/2022 15:56	10.86
6/17/2022 16:33	-0.04	6/18/2022 15:23	0.74	6/18/2022 15:46	3.31	6/18/2022 17:09	-0.22	6/17/2022 15:57	10.91
6/17/2022 16:34	-0.04	6/18/2022 15:24	0.74	6/18/2022 15:47	3.32	6/18/2022 17:10	-0.23	6/17/2022 15:58	10.91
6/17/2022 16:35	-0.04	6/18/2022 15:25	0.73	6/18/2022 15:48	3.32	6/18/2022 17:11	-0.19	6/17/2022 15:59	10.87
6/17/2022 16:36	-0.02	6/18/2022 15:26	0.74	6/18/2022 15:49	3.27	6/18/2022 17:12	-0.22	6/17/2022 16:00	10.88
6/17/2022 16:37	-0.02	6/18/2022 15:27	0.73	6/18/2022 15:50	3.28	6/18/2022 17:13	-0.21	6/17/2022 16:01	10.89
6/17/2022 16:38	-0.02	6/18/2022 15:28	0.74	6/18/2022 15:51	3.29	6/18/2022 17:14	-0.19	6/17/2022 16:02	10.87
6/17/2022 16:39	-0.03	6/18/2022 15:29	0.74	6/18/2022 15:52	3.34	6/18/2022 17:15	-0.17	6/17/2022 16:03	10.91
6/17/2022 16:40	-0.04	6/18/2022 15:30	0.74	6/18/2022 15:53	3.26	6/18/2022 17:16	-0.21	6/17/2022 16:04	10.86
6/17/2022 16:41	-0.03	6/18/2022 15:31	0.74	6/18/2022 15:54	3.29	6/18/2022 17:17	-0.21	6/17/2022 16:05	10.89
6/17/2022 16:42	-0.04	6/18/2022 15:32	0.73	6/18/2022 15:55	3.29	6/18/2022 17:18	-0.21	6/17/2022 16:06	10.92
6/17/2022 16:43	-0.02	6/18/2022 15:33	0.74	6/18/2022 15:56	3.31	6/18/2022 17:19	-0.17	6/17/2022 16:07	10.89
6/17/2022 16:44	-0.03	6/18/2022 15:34	0.74	6/18/2022 15:57	3.32	6/18/2022 17:20	-0.21	6/17/2022 16:08	10.91
6/17/2022 16:45	-0.03	6/18/2022 15:35	0.74	6/18/2022 15:58	3.30	6/18/2022 17:21	-0.19	6/17/2022 16:09	10.91
6/17/2022 16:46	-0.04	6/18/2022 15:36	0.74	6/18/2022 15:59	3.31	6/18/2022 17:22	-0.17	6/17/2022 16:10	10.90
6/17/2022 16:47	-0.03	6/18/2022 15:37	0.73	6/18/2022 16:00	3.30	6/18/2022 17:23	-0.18	6/17/2022 16:11	10.91
6/17/2022 16:48	-0.05	6/18/2022 15:38	0.73	6/18/2022 16:01	3.32	6/18/2022 17:24	-0.22	6/17/2022 16:12	10.89
6/17/2022 16:49	-0.03	6/18/2022 15:39	0.73	6/18/2022 16:02	3.29	6/18/2022 17:25	-0.19	6/17/2022 16:13	10.88
6/17/2022 16:50	-0.03	6/18/2022 15:40	0.74	6/18/2022 16:03	3.30	6/18/2022 17:26	-0.20	6/17/2022 16:14	10.92
6/17/2022 16:51	-0.02	6/18/2022 15:41	0.74	6/18/2022 16:04	3.28	6/18/2022 17:27	-0.24	6/17/2022 16:15	10.91
6/17/2022 16:52	-0.04	6/18/2022 15:42	0.73	6/18/2022 16:05	3.29	6/18/2022 17:28	-0.17	6/17/2022 16:16	10.87
6/17/2022 16:53	-0.04	6/18/2022 15:43	0.73	6/18/2022 16:06	3.33	6/18/2022 17:29	-0.20	6/17/2022 16:17	10.89
6/17/2022 16:54	-0.02	6/18/2022 15:44	0.74	6/18/2022 16:07	3.28	6/18/2022 17:30	-0.19	6/17/2022 16:18	10.87
6/17/2022 16:55	-0.02	6/18/2022 15:45	0.74	6/18/2022 16:08	3.29	6/18/2022 17:31	-0.15	6/17/2022 16:19	10.87
6/17/2022 16:56	-0.03	6/18/2022 15:46	0.74	6/18/2022 16:09	3.32	6/18/2022 17:32	-0.21	6/17/2022 16:20	10.90
6/17/2022 16:57	-0.04	6/18/2022 15:47	0.74	6/18/2022 16:10	3.30	6/18/2022 17:33	-0.17	6/17/2022 16:21	10.95
6/17/2022 16:58	-0.04	6/18/2022 15:48	0.74	6/18/2022 16:11	3.32	6/18/2022 17:34	-0.18	6/17/2022 16:22	10.87
6/17/2022 16:59	-0.02	6/18/2022 15:49	0.76	6/18/2022 16:12	3.28	6/18/2022 17:35	-0.20	6/17/2022 16:23	10.86
6/17/2022 17:00	-0.02	6/18/2022 15:50	0.74	6/18/2022 16:13	3.30	6/18/2022 17:36	-0.22	6/17/2022 16:24	10.84
6/17/2022 17:01	-0.04	6/18/2022 15:51	0.74	6/18/2022 16:14	3.31	6/18/2022 17:37	-0.18	6/17/2022 16:25	10.85
6/17/2022 17:02	-0.03	6/18/2022 15:52	0.73	6/18/2022 16:15	3.29	6/18/2022 17:38	-0.20	6/17/2022 16:26	10.89
6/17/2022 17:03	-0.04	6/18/2022 15:53	0.74	6/18/2022 16:16	3.33	6/18/2022 17:39	-0.23	6/17/2022 16:27	10.86
6/17/2022 17:04	-0.03	6/18/2022 15:54	0.74	6/18/2022 16:17	3.32	6/18/2022 17:40	-0.24	6/17/2022 16:28	10.86

6/17/2022 17:05	-0.02	6/18/2022 15:55	0.74	6/18/2022 16:18	3.31	6/18/2022 17:41	-0.20	6/17/2022 16:29	10.83
6/17/2022 17:06	-0.02	6/18/2022 15:56	0.74	6/18/2022 16:19	3.31	6/18/2022 17:42	-0.22	6/17/2022 16:30	10.88
6/17/2022 17:07	-0.03	6/18/2022 15:57	0.74	6/18/2022 16:20	3.32	6/18/2022 17:43	-0.20	6/17/2022 16:31	10.86
6/17/2022 17:08	-0.03	6/18/2022 15:58	0.74	6/18/2022 16:21	3.30	6/18/2022 17:44	-0.22	6/17/2022 16:32	10.85
6/17/2022 17:09	-0.02	6/18/2022 15:59	0.74	6/18/2022 16:22	3.32	6/18/2022 17:45	-0.22	6/17/2022 16:33	10.89
6/17/2022 17:10	-0.02	6/18/2022 16:00	0.74	6/18/2022 16:23	3.33	6/18/2022 17:46	-0.16	6/17/2022 16:34	10.92
6/17/2022 17:11	-0.03	6/18/2022 16:01	0.74	6/18/2022 16:24	3.31	6/18/2022 17:47	-0.20	6/17/2022 16:35	10.86
6/17/2022 17:12	-0.04	6/18/2022 16:02	0.74	6/18/2022 16:25	3.28	6/18/2022 17:48	-0.22	6/17/2022 16:36	10.92
6/17/2022 17:13	-0.03	6/18/2022 16:03	0.74	6/18/2022 16:26	3.30	6/18/2022 17:49	-0.20	6/17/2022 16:37	10.94
6/17/2022 17:14	-0.04	6/18/2022 16:04	0.74	6/18/2022 16:27	3.31	6/18/2022 17:50	-0.18	6/17/2022 16:38	10.90
6/17/2022 17:15	-0.04	6/18/2022 16:05	0.73	6/18/2022 16:28	3.33	6/18/2022 17:51	-0.22	6/17/2022 16:39	10.86
6/17/2022 17:16	-0.02	6/18/2022 16:06	0.74	6/18/2022 16:29	3.32	6/18/2022 17:52	-0.25	6/17/2022 16:40	10.91
6/17/2022 17:17	-0.02	6/18/2022 16:07	0.74	6/18/2022 16:30	3.35	6/18/2022 17:53	-0.17	6/17/2022 16:41	10.85
6/17/2022 17:18	-0.05	6/18/2022 16:08	0.74	6/18/2022 16:31	3.30	6/18/2022 17:54	-0.21	6/17/2022 16:42	10.91
6/17/2022 17:19	-0.04	6/18/2022 16:09	0.74	6/18/2022 16:32	3.31	6/18/2022 17:55	-0.21	6/17/2022 16:43	10.88
6/17/2022 17:20	-0.04	6/18/2022 16:10	0.74	6/18/2022 16:33	3.32	6/18/2022 17:56	-0.22	6/17/2022 16:44	10.89
6/17/2022 17:21	-0.04	6/18/2022 16:11	0.74	6/18/2022 16:34	3.34	6/18/2022 17:57	-0.25	6/17/2022 16:45	10.88
6/17/2022 17:22	-0.04	6/18/2022 16:12	0.73	6/18/2022 16:35	3.33	6/18/2022 17:58	-0.24	6/17/2022 16:46	10.92
6/17/2022 17:23	-0.03	6/18/2022 16:13	0.74	6/18/2022 16:36	3.31	6/18/2022 17:59	-0.20	6/17/2022 16:47	10.89
6/17/2022 17:24	-0.02	6/18/2022 16:14	0.74	6/18/2022 16:37	3.31	6/18/2022 18:00	-0.20	6/17/2022 16:48	10.87
6/17/2022 17:25	-0.04	6/18/2022 16:15	0.74	6/18/2022 16:38	3.31	6/18/2022 18:01	-0.17	6/17/2022 16:49	10.83
6/17/2022 17:26	-0.04	6/18/2022 16:16	0.74	6/18/2022 16:39	3.33	6/18/2022 18:02	-0.21	6/17/2022 16:50	10.89
6/17/2022 17:27	-0.02	6/18/2022 16:17	0.74	6/18/2022 16:40	3.33	6/18/2022 18:03	-0.19	6/17/2022 16:51	10.86
6/17/2022 17:28	-0.02	6/18/2022 16:18	0.74	6/18/2022 16:41	3.27	6/18/2022 18:04	-0.19	6/17/2022 16:52	10.84
6/17/2022 17:29	-0.02	6/18/2022 16:19	0.74	6/18/2022 16:42	3.32	6/18/2022 18:05	-0.21	6/17/2022 16:53	10.91
6/17/2022 17:30	-0.04	6/18/2022 16:20	0.74	6/18/2022 16:43	3.34	6/18/2022 18:06	-0.17	6/17/2022 16:54	10.89
6/17/2022 17:31	-0.02	6/18/2022 16:21	0.74	6/18/2022 16:44	3.31	6/18/2022 18:07	-0.19	6/17/2022 16:55	10.89
6/17/2022 17:32	-0.04	6/18/2022 16:22	0.74	6/18/2022 16:45	3.34	6/18/2022 18:08	-0.19	6/17/2022 16:56	10.82
6/17/2022 17:33	-0.03	6/18/2022 16:23	0.74	6/18/2022 16:46	3.31	6/18/2022 18:09	-0.23	6/17/2022 16:57	10.92
6/17/2022 17:34	-0.04	6/18/2022 16:24	0.74	6/18/2022 16:47	3.32	6/18/2022 18:10	-0.26	6/17/2022 16:58	10.87
6/17/2022 17:35	-0.02	6/18/2022 16:25	0.74	6/18/2022 16:48	3.29	6/18/2022 18:11	-0.22	6/17/2022 16:59	10.89
6/17/2022 17:36	-0.03	6/18/2022 16:26	0.74	6/18/2022 16:49	3.34	6/18/2022 18:12	-0.21	6/17/2022 17:00	10.86
6/17/2022 17:37	-0.03	6/18/2022 16:27	0.74	6/18/2022 16:50	3.31	6/18/2022 18:13	-0.22	6/17/2022 17:01	10.86
6/17/2022 17:38	-0.04	6/18/2022 16:28	0.74	6/18/2022 16:51	3.32	6/18/2022 18:14	-0.23	6/17/2022 17:02	10.88
6/17/2022 17:39	-0.03	6/18/2022 16:29	0.74	6/18/2022 16:52	3.34	6/18/2022 18:15	-0.16	6/17/2022 17:03	10.89
6/17/2022 17:40	-0.03	6/18/2022 16:30	0.74	6/18/2022 16:53	3.34	6/18/2022 18:16	-0.20	6/17/2022 17:04	10.91
6/17/2022 17:41	-0.03	6/18/2022 16:31	0.74	6/18/2022 16:54	3.29	6/18/2022 18:17	-0.18	6/17/2022 17:05	10.90
6/17/2022 17:42	-0.03	6/18/2022 16:32	0.74	6/18/2022 16:55	3.32	6/18/2022 18:18	-0.24	6/17/2022 17:06	10.89
6/17/2022 17:43	-0.03	6/18/2022 16:33	0.76	6/18/2022 16:56	3.34	6/18/2022 18:19	-0.22	6/17/2022 17:07	10.85
6/17/2022 17:44	-0.04	6/18/2022 16:34	0.74	6/18/2022 16:57	3.36	6/18/2022 18:20	-0.20	6/17/2022 17:08	10.93
6/17/2022 17:45	-0.03	6/18/2022 16:35	0.74	6/18/2022 16:58	3.32	6/18/2022 18:21	-0.21	6/17/2022 17:09	10.86
6/17/2022 17:46	-0.05	6/18/2022 16:36	0.74	6/18/2022 16:59	3.35	6/18/2022 18:22	-0.18	6/17/2022 17:10	10.84
6/17/2022 17:47	-0.02	6/18/2022 16:37	0.74	6/18/2022 17:00	3.33	6/18/2022 18:23	-0.19	6/17/2022 17:11	10.87
6/17/2022 17:48	-0.02	6/18/2022 16:38	0.74	6/18/2022 17:01	3.29	6/18/2022 18:24	-0.24	6/17/2022 17:12	10.91
6/17/2022 17:49	-0.02	6/18/2022 16:39	0.74	6/18/2022 17:02	3.33	6/18/2022 18:25	-0.21	6/17/2022 17:13	10.87
6/17/2022 17:50	-0.03	6/18/2022 16:40	0.74	6/18/2022 17:03	3.32	6/18/2022 18:26	-0.23	6/17/2022 17:14	10.86
6/17/2022 17:51	-0.03	6/18/2022 16:41	0.74	6/18/2022 17:04	3.31	6/18/2022 18:27	-0.22	6/17/2022 17:15	10.88
6/17/2022 17:52	-0.02	6/18/2022 16:42	0.74	6/18/2022 17:05	3.29	6/18/2022 18:28	-0.21	6/17/2022 17:16	10.86
6/17/2022 17:53	-0.04	6/18/2022 16:43	0.74	6/18/2022 17:06	3.30	6/18/2022 18:29	-0.22	6/17/2022 17:17	10.90
6/17/2022 17:54	-0.04	6/18/2022 16:44	0.74	6/18/2022 17:07	3.34	6/18/2022 18:30	-0.23	6/17/2022 17:18	10.89
6/17/2022 17:55	-0.02	6/18/2022 16:45	0.74	6/18/2022 17:08	3.31	6/18/2022 18:31	-0.20	6/17/2022 17:19	10.89
6/17/2022 17:56	-0.02	6/18/2022 16:46	0.74	6/18/2022 17:09	3.32	6/18/2022 18:32	-0.19	6/17/2022 17:20	10.91
6/17/2022 17:57	-0.02	6/18/2022 16:47	0.74	6/18/2022 17:10	3.34	6/18/2022 18:33	-0.19	6/17/2022 17:21	10.88
6/17/2022 17:58	-0.03	6/18/2022 16:48	0.75	6/18/2022 17:11	3.30	6/18/2022 18:34	-0.17	6/17/2022 17:22	10.89
6/17/2022 17:59	-0.04	6/18/2022 16:49	0.74	6/18/2022 17:12	3.33	6/18/2022 18:35	-0.21	6/17/2022 17:23	10.91
6/17/2022 18:00	-0.04	6/18/2022 16:50	0.74	6/18/2022 17:13	3.31	6/18/2022 18:36	-0.18	6/17/2022 17:24	10.87
6/17/2022 18:01	-0.03	6/18/2022 16:51	0.74	6/18/2022 17:14	3.31	6/18/2022 18:37	-0.18	6/17/2022 17:25	10.86
6/17/2022 18:02	-0.04	6/18/2022 16:52	0.74	6/18/2022 17:15	3.36	6/18/2022 18:38	-0.17	6/17/2022 17:26	10.91
6/17/2022 18:03	-0.02	6/18/2022 16:53	0.74	6/18/2022 17:16	3.31	6/18/2022 18:39	-0.22	6/17/2022 17:27	10.84
6/17/2022 18:04	-0.04	6/18/2022 16:54	0.74	6/18/2022 17:17	3.34	6/18/2022 18:40	-0.22	6/17/2022 17:28	10.88
6/17/2022 18:05	-0.04	6/18/2022 16:55	0.75	6/18/2022 17:18	3.31	6/18/2022 18:41	-0.19	6/17/2022 17:29	10.82
6/17/2022 18:06	-0.03	6/18/2022 16:56	0.74	6/18/2022 17:19	3.33	6/18/2022 18:42	-0.18	6/17/2022 17:30	10.91
6/17/2022 18:07	-0.03	6/18/2022 16:57	0.74	6/18/2022 17:20	3.35	6/18/2022 18:43	-0.23	6/17/2022 17:31	10.90
6/17/2022 18:08	-0.04	6/18/2022 16:58	0.74	6/18/2022 17:21	3.34	6/18/2022 18:44	-0.20	6/17/2022 17:32	10.89
6/17/2022 18:09	-0.04	6/18/2022 16:59	0.74	6/18/2022 17:22	3.31	6/18/2022 18:45	-0.19	6/17/2022 17:33	10.87
6/17/2022 18:10	-0.02	6/18/2022 17:00	0.74	6/18/2022 17:23	3.32	6/18/2022 18:46	-0.20	6/17/2022 17:34	10.86
6/17/2022 18:11	-0.02	6/18/2022 17:01	0.74	6/18/2022 17:24	3.33	6/18/2022 18:47	-0.20	6/17/2022 17:35	10.88
6/17/2022 18:12	-0.02	6/18/2022 17:02	0.75	6/18/2022 17:25	3.30	6/18/2022 18:48	-0.21	6/17/2022 17:36	10.93
6/17/2022 18:13	-0.04	6/18/2022 17:03	0.74	6/18/2022 17:26	3.32	6/18/2022 18:49	-0.21	6/17/2022 17:37	10.90
6/17/2022 18:14	-0.04	6/18/2022 17:04	0.74	6/18/2022 17:27	3.33	6/18/2022 18:50	-0.22	6/17/2022 17:38	10.89
6/17/2022 18:15	-0.04	6/18/2022 17:05	0.74	6/18/2022 17:28	3.33	6/18/2022 18:51	-0.21	6/17/2022 17:39	10.87
6/17/2022 18:16	-0.04	6/18/2022 17:06	0.74	6/18/2022 17:29	3.35	6/18/2022 18:52	-0.18	6/17/2022 17:40	10.90
6/17/2022 18:17	-0.02	6/18/2022 17:07	0.74	6/18/2022 17:30	3.34	6/18/2022 18:53	-0.20	6/17/2022 17:41	10.89
6/17/2022 18:18	-0.03	6/18/2022 17:08	0.74	6/18/2022 17:31	3.32	6/18/2022 18:54	-0.18	6/17/2022 17:42	10.87
6/17/2022 18:19	-0.04	6/18/2022 17:09	0.75	6/18/2022 17:32	3.33	6/18/2022 18:55	-0.22	6/17/2022 17:43	10.88
6/17/2022 18:20	-0.03	6/18/2022 17:10	0.75	6/18/2022 17:33	3.34	6/18/2022 18:56	-0.17	6/17/2022 17:44	10.85
6/17/2022 18:21	-0.02	6/18/2022 17:11	0.74	6/18/2022 17:34	3.34	6/18/2022 18:57	-0.25	6/17/2022 17:45	10.85
6/17/2022 18:22	-0.03	6/18/2022 17:12	0.75	6/18/2022 17:35	3.30	6/18/2022 18:58	-0.22	6/17/2022 17:46	10.87
6/17/2022 18:23	-0.03	6/18/2022 17:13	0.74	6/18/2022 17:36	3.33	6/18/2022 18:59	-0.21	6/17/2022 17:47	10.88
6/17/2022 18:24	-0.02	6/18/2022 17:14	0.74	6/18/2022 17:37	3.36	6/18/2022 19:00	-0.20	6/17/2022 17:48	10.88
6/17/2022 18:25	-0.03	6/18/2022 17:15	0.74	6/18/2022 17:38	3.34	6/18/2022 19:01	-0.22	6/17/2022 17:49	10.86
6/17/2022 18:26	-0.02	6/18/2022 17:16	0.74	6/18/2022 17:39	3.34	6/18/2022 19:02	-0.24	6/17/2022 17:50	10.89
6/17/2022 18:27	-0.02	6/18/2022 17:17	0.74	6/18/2022 17:40	3.33	6/18/2022 19:03	-0.23	6/17/2022 17:51	10.93
6/17/2022 18:28	-0.02	6/18/2022 17:18	0.74	6/18/2022 17:41	3.32	6/18/2022 19:04	-0.20	6/17/2022 17:52	10.88
6/17/2022 18:29	-0.04	6/18/2022 17:19	0.74	6/18/2022 17:42	3.31	6/18/2022 19:05	-0.23	6/17/2022 17:53	10.84
6/17/2022 18:30	-0.03	6/18/2022 17:20	0.74	6/18/2022 17:43	3.36	6/18/2022 19:06	-0.20	6/17/2022 17:54	10.88
6/17/2022 18:31	-0.02	6/18/2022 17:21	0.75	6/18/2022 17:44	3.33	6/18/2022 19:07	-0.24	6/17/2022 17:55	10.85
6/17/2022 18:32	-0.04	6/18/2022 17:22	0.74	6/18/2022 17:45	3.35	6/18/2022 19:08	-0.21	6/17/2022 17:56	10.87

6/17/2022 18:33	-0.02	6/18/2022 17:23	0.74	6/18/2022 17:46	3.35	6/18/2022 19:09	-0.24	6/17/2022 17:57	10.91
6/17/2022 18:34	-0.04	6/18/2022 17:24	0.74	6/18/2022 17:47	3.33	6/18/2022 19:10	-0.20	6/17/2022 17:58	10.91
6/17/2022 18:35	-0.02	6/18/2022 17:25	0.74	6/18/2022 17:48	3.32	6/18/2022 19:11	-0.22	6/17/2022 17:59	10.87
6/17/2022 18:36	-0.02	6/18/2022 17:26	0.75	6/18/2022 17:49	3.34	6/18/2022 19:12	-0.19	6/17/2022 18:00	10.91
6/17/2022 18:37	-0.02	6/18/2022 17:27	0.74	6/18/2022 17:50	3.35	6/18/2022 19:13	-0.19	6/17/2022 18:01	10.88
6/17/2022 18:38	-0.04	6/18/2022 17:28	0.74	6/18/2022 17:51	3.35	6/18/2022 19:14	-0.19	6/17/2022 18:02	10.88
6/17/2022 18:39	-0.02	6/18/2022 17:29	0.75	6/18/2022 17:52	3.34	6/18/2022 19:15	-0.20	6/17/2022 18:03	10.87
6/17/2022 18:40	-0.03	6/18/2022 17:30	0.75	6/18/2022 17:53	3.35	6/18/2022 19:16	-0.22	6/17/2022 18:04	10.89
6/17/2022 18:41	-0.02	6/18/2022 17:31	0.75	6/18/2022 17:54	3.31	6/18/2022 19:17	-0.17	6/17/2022 18:05	10.86
6/17/2022 18:42	-0.02	6/18/2022 17:32	0.75	6/18/2022 17:55	3.34	6/18/2022 19:18	-0.21	6/17/2022 18:06	10.91
6/17/2022 18:43	-0.04	6/18/2022 17:33	0.75	6/18/2022 17:56	3.34	6/18/2022 19:19	-0.21	6/17/2022 18:07	10.89
6/17/2022 18:44	-0.02	6/18/2022 17:34	0.75	6/18/2022 17:57	3.35	6/18/2022 19:20	-0.18	6/17/2022 18:08	10.93
6/17/2022 18:45	-0.02	6/18/2022 17:35	0.75	6/18/2022 17:58	3.34	6/18/2022 19:21	-0.23	6/17/2022 18:09	10.80
6/17/2022 18:46	-0.04	6/18/2022 17:36	0.74	6/18/2022 17:59	3.35	6/18/2022 19:22	-0.19	6/17/2022 18:10	10.86
6/17/2022 18:47	-0.05	6/18/2022 17:37	0.75	6/18/2022 18:00	3.33	6/18/2022 19:23	-0.18	6/17/2022 18:11	10.84
6/17/2022 18:48	-0.02	6/18/2022 17:38	0.75	6/18/2022 18:01	3.38	6/18/2022 19:24	-0.22	6/17/2022 18:12	10.84
6/17/2022 18:49	-0.02	6/18/2022 17:39	0.75	6/18/2022 18:02	3.34	6/18/2022 19:25	-0.21	6/17/2022 18:13	10.85
6/17/2022 18:50	-0.04	6/18/2022 17:40	0.75	6/18/2022 18:03	3.32	6/18/2022 19:26	-0.15	6/17/2022 18:14	10.91
6/17/2022 18:51	-0.04	6/18/2022 17:41	0.75	6/18/2022 18:04	3.33	6/18/2022 19:27	-0.22	6/17/2022 18:15	10.92
6/17/2022 18:52	-0.04	6/18/2022 17:42	0.75	6/18/2022 18:05	3.34	6/18/2022 19:28	-0.18	6/17/2022 18:16	10.85
6/17/2022 18:53	-0.03	6/18/2022 17:43	0.74	6/18/2022 18:06	3.35	6/18/2022 19:29	-0.17	6/17/2022 18:17	10.83
6/17/2022 18:54	-0.03	6/18/2022 17:44	0.75	6/18/2022 18:07	3.38	6/18/2022 19:30	-0.19	6/17/2022 18:18	10.88
6/17/2022 18:55	-0.04	6/18/2022 17:45	0.74	6/18/2022 18:08	3.35	6/18/2022 19:31	-0.20	6/17/2022 18:19	10.89
6/17/2022 18:56	-0.03	6/18/2022 17:46	0.75	6/18/2022 18:09	3.36	6/18/2022 19:32	-0.23	6/17/2022 18:20	10.93
6/17/2022 18:57	-0.03	6/18/2022 17:47	0.75	6/18/2022 18:10	3.34	6/18/2022 19:33	-0.22	6/17/2022 18:21	10.92
6/17/2022 18:58	-0.04	6/18/2022 17:48	0.75	6/18/2022 18:11	3.32	6/18/2022 19:34	-0.19	6/17/2022 18:22	10.93
6/17/2022 18:59	-0.04	6/18/2022 17:49	0.75	6/18/2022 18:12	3.36	6/18/2022 19:35	-0.21	6/17/2022 18:23	10.83
6/17/2022 19:00	-0.05	6/18/2022 17:50	0.75	6/18/2022 18:13	3.36	6/18/2022 19:36	-0.20	6/17/2022 18:24	10.86
6/17/2022 19:01	-0.03	6/18/2022 17:51	0.74	6/18/2022 18:14	3.34	6/18/2022 19:37	-0.19	6/17/2022 18:25	10.86
6/17/2022 19:02	-0.04	6/18/2022 17:52	0.75	6/18/2022 18:15	3.34	6/18/2022 19:38	-0.24	6/17/2022 18:26	10.87
6/17/2022 19:03	-0.03	6/18/2022 17:53	0.77	6/18/2022 18:16	3.36	6/18/2022 19:39	-0.24	6/17/2022 18:27	10.92
6/17/2022 19:04	-0.03	6/18/2022 17:54	0.77	6/18/2022 18:17	3.33	6/18/2022 19:40	-0.18	6/17/2022 18:28	10.94
6/17/2022 19:05	-0.04	6/18/2022 17:55	0.75	6/18/2022 18:18	3.34	6/18/2022 19:41	-0.21	6/17/2022 18:29	10.90
6/17/2022 19:06	-0.02	6/18/2022 17:56	0.77	6/18/2022 18:19	3.33	6/18/2022 19:42	-0.22	6/17/2022 18:30	10.87
6/17/2022 19:07	-0.03	6/18/2022 17:57	0.75	6/18/2022 18:20	3.31	6/18/2022 19:43	-0.19	6/17/2022 18:31	10.89
6/17/2022 19:08	-0.04	6/18/2022 17:58	0.75	6/18/2022 18:21	3.36	6/18/2022 19:44	-0.20	6/17/2022 18:32	10.85
6/17/2022 19:09	-0.02	6/18/2022 17:59	0.75	6/18/2022 18:22	3.34	6/18/2022 19:45	-0.22	6/17/2022 18:33	10.90
6/17/2022 19:10	-0.02	6/18/2022 18:00	0.75	6/18/2022 18:23	3.35	6/18/2022 19:46	-0.20	6/17/2022 18:34	10.86
6/17/2022 19:11	-0.04	6/18/2022 18:01	0.75	6/18/2022 18:24	3.35	6/18/2022 19:47	-0.21	6/17/2022 18:35	10.88
6/17/2022 19:12	-0.04	6/18/2022 18:02	0.75	6/18/2022 18:25	3.32	6/18/2022 19:48	-0.17	6/17/2022 18:36	10.90
6/17/2022 19:13	-0.02	6/18/2022 18:03	0.75	6/18/2022 18:26	3.35	6/18/2022 19:49	-0.23	6/17/2022 18:37	10.93
6/17/2022 19:14	-0.02	6/18/2022 18:04	0.77	6/18/2022 18:27	3.33	6/18/2022 19:50	-0.21	6/17/2022 18:38	10.89
6/17/2022 19:15	-0.03	6/18/2022 18:05	0.75	6/18/2022 18:28	3.35	6/18/2022 19:51	-0.24	6/17/2022 18:39	10.92
6/17/2022 19:16	-0.04	6/18/2022 18:06	0.75	6/18/2022 18:29	3.33	6/18/2022 19:52	-0.19	6/17/2022 18:40	10.90
6/17/2022 19:17	-0.03	6/18/2022 18:07	0.75	6/18/2022 18:30	3.32	6/18/2022 19:53	-0.21	6/17/2022 18:41	10.86
6/17/2022 19:18	-0.02	6/18/2022 18:08	0.75	6/18/2022 18:31	3.33	6/18/2022 19:54	-0.17	6/17/2022 18:42	10.90
6/17/2022 19:19	-0.02	6/18/2022 18:09	0.75	6/18/2022 18:32	3.39	6/18/2022 19:55	-0.18	6/17/2022 18:43	10.88
6/17/2022 19:20	-0.02	6/18/2022 18:10	0.75	6/18/2022 18:33	3.36	6/18/2022 19:56	-0.23	6/17/2022 18:44	10.91
6/17/2022 19:21	-0.03	6/18/2022 18:11	0.75	6/18/2022 18:34	3.39	6/18/2022 19:57	-0.23	6/17/2022 18:45	10.89
6/17/2022 19:22	-0.03	6/18/2022 18:12	0.75	6/18/2022 18:35	3.35	6/18/2022 19:58	-0.21	6/17/2022 18:46	10.88
6/17/2022 19:23	-0.02	6/18/2022 18:13	0.75	6/18/2022 18:36	3.35	6/18/2022 19:59	-0.21	6/17/2022 18:47	10.88
6/17/2022 19:24	-0.02	6/18/2022 18:14	0.75	6/18/2022 18:37	3.36	6/18/2022 20:00	-0.22	6/17/2022 18:48	10.88
6/17/2022 19:25	-0.03	6/18/2022 18:15	0.75	6/18/2022 18:38	3.35	6/18/2022 20:01	-0.22	6/17/2022 18:49	10.85
6/17/2022 19:26	-0.03	6/18/2022 18:16	0.77	6/18/2022 18:39	3.30	6/18/2022 20:02	-0.21	6/17/2022 18:50	10.90
6/17/2022 19:27	-0.04	6/18/2022 18:17	0.75	6/18/2022 18:40	3.36	6/18/2022 20:03	-0.15	6/17/2022 18:51	10.85
6/17/2022 19:28	-0.02	6/18/2022 18:18	0.75	6/18/2022 18:41	3.33	6/18/2022 20:04	-0.22	6/17/2022 18:52	10.89
6/17/2022 19:29	-0.04	6/18/2022 18:19	0.75	6/18/2022 18:42	3.36	6/18/2022 20:05	-0.18	6/17/2022 18:53	10.88
6/17/2022 19:30	-0.03	6/18/2022 18:20	0.75	6/18/2022 18:43	3.38	6/18/2022 20:06	-0.23	6/17/2022 18:54	10.86
6/17/2022 19:31	-0.03	6/18/2022 18:21	0.75	6/18/2022 18:44	3.38	6/18/2022 20:07	-0.17	6/17/2022 18:55	10.86
6/17/2022 19:32	-0.02	6/18/2022 18:22	0.75	6/18/2022 18:45	3.31	6/18/2022 20:08	-0.21	6/17/2022 18:56	10.89
6/17/2022 19:33	-0.04	6/18/2022 18:23	0.75	6/18/2022 18:46	3.34	6/18/2022 20:09	-0.19	6/17/2022 18:57	10.91
6/17/2022 19:34	-0.04	6/18/2022 18:24	0.75	6/18/2022 18:47	3.34	6/18/2022 20:10	-0.25	6/17/2022 18:58	10.88
6/17/2022 19:35	-0.04	6/18/2022 18:25	0.76	6/18/2022 18:48	3.35	6/18/2022 20:11	-0.20	6/17/2022 18:59	10.88
6/17/2022 19:36	-0.04	6/18/2022 18:26	0.76	6/18/2022 18:49	3.34	6/18/2022 20:12	-0.20	6/17/2022 19:00	10.85
6/17/2022 19:37	-0.04	6/18/2022 18:27	0.75	6/18/2022 18:50	3.33	6/18/2022 20:13	-0.20	6/17/2022 19:01	10.85
6/17/2022 19:38	-0.05	6/18/2022 18:28	0.75	6/18/2022 18:51	3.34	6/18/2022 20:14	-0.19	6/17/2022 19:02	10.91
6/17/2022 19:39	-0.03	6/18/2022 18:29	0.75	6/18/2022 18:52	3.32	6/18/2022 20:15	-0.21	6/17/2022 19:03	10.87
6/17/2022 19:40	-0.03	6/18/2022 18:30	0.75	6/18/2022 18:53	3.35	6/18/2022 20:16	-0.21	6/17/2022 19:04	10.88
6/17/2022 19:41	-0.02	6/18/2022 18:31	0.75	6/18/2022 18:54	3.35	6/18/2022 20:17	-0.19	6/17/2022 19:05	10.90
6/17/2022 19:42	-0.04	6/18/2022 18:32	0.75	6/18/2022 18:55	3.39	6/18/2022 20:18	-0.20	6/17/2022 19:06	10.84
6/17/2022 19:43	-0.04	6/18/2022 18:33	0.75	6/18/2022 18:56	3.36	6/18/2022 20:19	-0.21	6/17/2022 19:07	10.86
6/17/2022 19:44	-0.03	6/18/2022 18:34	0.75	6/18/2022 18:57	3.38	6/18/2022 20:20	-0.21	6/17/2022 19:08	10.89
6/17/2022 19:45	-0.03	6/18/2022 18:35	0.75	6/18/2022 18:58	3.35	6/18/2022 20:21	-0.20	6/17/2022 19:09	10.87
6/17/2022 19:46	-0.04	6/18/2022 18:36	0.75	6/18/2022 18:59	3.34	6/18/2022 20:22	-0.19	6/17/2022 19:10	10.88
6/17/2022 19:47	-0.02	6/18/2022 18:37	0.77	6/18/2022 19:00	3.35	6/18/2022 20:23	-0.21	6/17/2022 19:11	10.91
6/17/2022 19:48	-0.02	6/18/2022 18:38	0.76	6/18/2022 19:01	3.34	6/18/2022 20:24	-0.19	6/17/2022 19:12	10.85
6/17/2022 19:49	-0.03	6/18/2022 18:39	0.75	6/18/2022 19:02	3.36	6/18/2022 20:25	-0.18	6/17/2022 19:13	10.88
6/17/2022 19:50	-0.03	6/18/2022 18:40	0.75	6/18/2022 19:03	3.34	6/18/2022 20:26	-0.20	6/17/2022 19:14	10.83
6/17/2022 19:51	-0.02	6/18/2022 18:41	0.75	6/18/2022 19:04	3.37	6/18/2022 20:27	-0.21	6/17/2022 19:15	10.91
6/17/2022 19:52	-0.03	6/18/2022 18:42	0.75	6/18/2022 19:05	3.36	6/18/2022 20:28	-0.19	6/17/2022 19:16	10.85
6/17/2022 19:53	-0.03	6/18/2022 18:43	0.75	6/18/2022 19:06	3.38	6/18/2022 20:29	-0.21	6/17/2022 19:17	10.85
6/17/2022 19:54	-0.02	6/18/2022 18:44	0.78	6/18/2022 19:07	3.33	6/18/2022 20:30	-0.18	6/17/2022 19:18	10.85
6/17/2022 19:55	-0.03	6/18/2022 18:45	0.75	6/18/2022 19:08	3.39	6/18/2022 20:31	-0.18	6/17/2022 19:19	10.87
6/17/2022 19:56	-0.03	6/18/2022 18:46	0.76	6/18/2022 19:09	3.38	6/18/2022 20:32	-0.19	6/17/2022 19:20	10.87
6/17/2022 19:57	-0.04	6/18/2022 18:47	0.75	6/18/2022 19:10	3.38	6/18/2022 20:33	-0.17	6/17/2022 19:21	10.85
6/17/2022 19:58	-0.03	6/18/2022 18:48	0.75	6/18/2022 19:11	3.36	6/18/2022 20:34	-0.19	6/17/2022 19:22	10.87
6/17/2022 19:59	-0.04	6/18/2022 18:49	0.75	6/18/2022 19:12	3.33	6/18/2022 20:35	-0.21	6/17/2022 19:23	10.90
6/17/2022 20:00	-0.04	6/18/2022 18:50	0.76	6/18/2022 19:13	3.36	6/18/2022 20:36	-0.18	6/17/2022 19:24	10.94

6/17/2022 20:01	-0.03	6/18/2022 18:51	0.78	6/18/2022 19:14	3.34	6/18/2022 20:37	-0.20	6/17/2022 19:25	10.91
6/17/2022 20:02	-0.02	6/18/2022 18:52	0.75	6/18/2022 19:15	3.37	6/18/2022 20:38	-0.20	6/17/2022 19:26	10.87
6/17/2022 20:03	-0.02	6/18/2022 18:53	0.76	6/18/2022 19:16	3.35	6/18/2022 20:39	-0.24	6/17/2022 19:27	10.93
6/17/2022 20:04	-0.03	6/18/2022 18:54	0.77	6/18/2022 19:17	3.35	6/18/2022 20:40	-0.21	6/17/2022 19:28	10.88
6/17/2022 20:05	-0.03	6/18/2022 18:55	0.75	6/18/2022 19:18	3.34	6/18/2022 20:41	-0.21	6/17/2022 19:29	10.85
6/17/2022 20:06	-0.03	6/18/2022 18:56	0.75	6/18/2022 19:19	3.35	6/18/2022 20:42	-0.20	6/17/2022 19:30	10.91
6/17/2022 20:07	-0.02	6/18/2022 18:57	0.76	6/18/2022 19:20	3.37	6/18/2022 20:43	-0.18	6/17/2022 19:31	10.88
6/17/2022 20:08	-0.04	6/18/2022 18:58	0.76	6/18/2022 19:21	3.34	6/18/2022 20:44	-0.21	6/17/2022 19:32	10.87
6/17/2022 20:09	-0.03	6/18/2022 18:59	0.75	6/18/2022 19:22	3.38	6/18/2022 20:45	-0.18	6/17/2022 19:33	10.89
6/17/2022 20:10	-0.04	6/18/2022 19:00	0.75	6/18/2022 19:23	3.33	6/18/2022 20:46	-0.24	6/17/2022 19:34	10.88
6/17/2022 20:11	-0.03	6/18/2022 19:01	0.76	6/18/2022 19:24	3.35	6/18/2022 20:47	-0.21	6/17/2022 19:35	10.89
6/17/2022 20:12	-0.03	6/18/2022 19:02	0.75	6/18/2022 19:25	3.37	6/18/2022 20:48	-0.20	6/17/2022 19:36	10.89
6/17/2022 20:13	-0.02	6/18/2022 19:03	0.75	6/18/2022 19:26	3.36	6/18/2022 20:49	-0.23	6/17/2022 19:37	10.92
6/17/2022 20:14	-0.05	6/18/2022 19:04	0.75	6/18/2022 19:27	3.34	6/18/2022 20:50	-0.20	6/17/2022 19:38	10.83
6/17/2022 20:15	-0.03	6/18/2022 19:05	0.75	6/18/2022 19:28	3.36	6/18/2022 20:51	-0.20	6/17/2022 19:39	10.87
6/17/2022 20:16	-0.04	6/18/2022 19:06	0.78	6/18/2022 19:29	3.34	6/18/2022 20:52	-0.24	6/17/2022 19:40	10.96
6/17/2022 20:17	-0.02	6/18/2022 19:07	0.75	6/18/2022 19:30	3.36	6/18/2022 20:53	-0.20	6/17/2022 19:41	10.89
6/17/2022 20:18	-0.04	6/18/2022 19:08	0.76	6/18/2022 19:31	3.31	6/18/2022 20:54	-0.23	6/17/2022 19:42	10.91
6/17/2022 20:19	-0.02	6/18/2022 19:09	0.76	6/18/2022 19:32	3.34	6/18/2022 20:55	-0.22	6/17/2022 19:43	10.88
6/17/2022 20:20	-0.04	6/18/2022 19:10	0.78	6/18/2022 19:33	3.37	6/18/2022 20:56	-0.16	6/17/2022 19:44	10.86
6/17/2022 20:21	-0.02	6/18/2022 19:11	0.76	6/18/2022 19:34	3.35	6/18/2022 20:57	-0.22	6/17/2022 19:45	10.91
6/17/2022 20:22	-0.04	6/18/2022 19:12	0.75	6/18/2022 19:35	3.33	6/18/2022 20:58	-0.20	6/17/2022 19:46	10.83
6/17/2022 20:23	-0.03	6/18/2022 19:13	0.76	6/18/2022 19:36	3.32	6/18/2022 20:59	-0.24	6/17/2022 19:47	10.85
6/17/2022 20:24	-0.02	6/18/2022 19:14	0.76	6/18/2022 19:37	3.37	6/18/2022 21:00	-0.20	6/17/2022 19:48	10.87
6/17/2022 20:25	-0.04	6/18/2022 19:15	0.76	6/18/2022 19:38	3.36	6/18/2022 21:01	-0.19	6/17/2022 19:49	10.87
6/17/2022 20:26	-0.03	6/18/2022 19:16	0.76	6/18/2022 19:39	3.36	6/18/2022 21:02	-0.22	6/17/2022 19:50	10.91
6/17/2022 20:27	-0.02	6/18/2022 19:17	0.75	6/18/2022 19:40	3.37	6/18/2022 21:03	-0.20	6/17/2022 19:51	10.89
6/17/2022 20:28	-0.03	6/18/2022 19:18	0.76	6/18/2022 19:41	3.37	6/18/2022 21:04	-0.18	6/17/2022 19:52	10.86
6/17/2022 20:29	-0.03	6/18/2022 19:19	0.75	6/18/2022 19:42	3.37	6/18/2022 21:05	-0.19	6/17/2022 19:53	10.89
6/17/2022 20:30	-0.03	6/18/2022 19:20	0.75	6/18/2022 19:43	3.38	6/18/2022 21:06	-0.19	6/17/2022 19:54	10.90
6/17/2022 20:31	-0.05	6/18/2022 19:21	0.76	6/18/2022 19:44	3.35	6/18/2022 21:07	-0.20	6/17/2022 19:55	10.90
6/17/2022 20:32	-0.04	6/18/2022 19:22	0.76	6/18/2022 19:45	3.37	6/18/2022 21:08	-0.19	6/17/2022 19:56	10.92
6/17/2022 20:33	-0.05	6/18/2022 19:23	0.78	6/18/2022 19:46	3.32	6/18/2022 21:09	-0.24	6/17/2022 19:57	10.91
6/17/2022 20:34	-0.03	6/18/2022 19:24	0.78	6/18/2022 19:47	3.38	6/18/2022 21:10	-0.23	6/17/2022 19:58	10.88
6/17/2022 20:35	-0.03	6/18/2022 19:25	0.76	6/18/2022 19:48	3.32	6/18/2022 21:11	-0.21	6/17/2022 19:59	10.89
6/17/2022 20:36	-0.04	6/18/2022 19:26	0.75	6/18/2022 19:49	3.32	6/18/2022 21:12	-0.18	6/17/2022 20:00	10.92
6/17/2022 20:37	-0.03	6/18/2022 19:27	0.75	6/18/2022 19:50	3.36	6/18/2022 21:13	-0.21	6/17/2022 20:01	10.88
6/17/2022 20:38	-0.05	6/18/2022 19:28	0.77	6/18/2022 19:51	3.36	6/18/2022 21:14	-0.19	6/17/2022 20:02	10.90
6/17/2022 20:39	-0.04	6/18/2022 19:29	0.76	6/18/2022 19:52	3.33	6/18/2022 21:15	-0.24	6/17/2022 20:03	10.87
6/17/2022 20:40	-0.04	6/18/2022 19:30	0.76	6/18/2022 19:53	3.35	6/18/2022 21:16	-0.22	6/17/2022 20:04	10.87
6/17/2022 20:41	-0.04	6/18/2022 19:31	0.76	6/18/2022 19:54	3.37	6/18/2022 21:17	-0.19	6/17/2022 20:05	10.87
6/17/2022 20:42	-0.04	6/18/2022 19:32	0.75	6/18/2022 19:55	3.37	6/18/2022 21:18	-0.18	6/17/2022 20:06	10.90
6/17/2022 20:43	-0.03	6/18/2022 19:33	0.76	6/18/2022 19:56	3.37	6/18/2022 21:19	-0.20	6/17/2022 20:07	10.88
6/17/2022 20:44	-0.02	6/18/2022 19:34	0.75	6/18/2022 19:57	3.35	6/18/2022 21:20	-0.23	6/17/2022 20:08	10.86
6/17/2022 20:45	-0.03	6/18/2022 19:35	0.77	6/18/2022 19:58	3.34	6/18/2022 21:21	-0.21	6/17/2022 20:09	10.93
6/17/2022 20:46	-0.02	6/18/2022 19:36	0.78	6/18/2022 19:59	3.33	6/18/2022 21:22	-0.23	6/17/2022 20:10	10.85
6/17/2022 20:47	-0.04	6/18/2022 19:37	0.75	6/18/2022 20:00	3.36	6/18/2022 21:23	-0.21	6/17/2022 20:11	10.88
6/17/2022 20:48	-0.03	6/18/2022 19:38	0.78	6/18/2022 20:01	3.36	6/18/2022 21:24	-0.20	6/17/2022 20:12	10.86
6/17/2022 20:49	-0.04	6/18/2022 19:39	0.75	6/18/2022 20:02	3.36	6/18/2022 21:25	-0.23	6/17/2022 20:13	10.90
6/17/2022 20:50	-0.04	6/18/2022 19:40	0.76	6/18/2022 20:03	3.37	6/18/2022 21:26	-0.21	6/17/2022 20:14	10.90
6/17/2022 20:51	-0.03	6/18/2022 19:41	0.75	6/18/2022 20:04	3.35	6/18/2022 21:27	-0.23	6/17/2022 20:15	10.87
6/17/2022 20:52	-0.02	6/18/2022 19:42	0.76	6/18/2022 20:05	3.34	6/18/2022 21:28	-0.22	6/17/2022 20:16	10.84
6/17/2022 20:53	-0.03	6/18/2022 19:43	0.75	6/18/2022 20:06	3.35	6/18/2022 21:29	-0.22	6/17/2022 20:17	10.87
6/17/2022 20:54	-0.04	6/18/2022 19:44	0.76	6/18/2022 20:07	3.36	6/18/2022 21:30	-0.21	6/17/2022 20:18	10.91
6/17/2022 20:55	-0.03	6/18/2022 19:45	0.75	6/18/2022 20:08	3.32	6/18/2022 21:31	-0.21	6/17/2022 20:19	10.90
6/17/2022 20:56	-0.02	6/18/2022 19:46	0.75	6/18/2022 20:09	3.34	6/18/2022 21:32	-0.24	6/17/2022 20:20	10.91
6/17/2022 20:57	-0.04	6/18/2022 19:47	0.75	6/18/2022 20:10	3.36	6/18/2022 21:33	-0.21	6/17/2022 20:21	10.91
6/17/2022 20:58	-0.03	6/18/2022 19:48	0.75	6/18/2022 20:11	3.34	6/18/2022 21:34	-0.23	6/17/2022 20:22	10.88
6/17/2022 20:59	-0.04	6/18/2022 19:49	0.77	6/18/2022 20:12	3.33	6/18/2022 21:35	-0.20	6/17/2022 20:23	10.86
6/17/2022 21:00	-0.02	6/18/2022 19:50	0.77	6/18/2022 20:13	3.33	6/18/2022 21:36	-0.22	6/17/2022 20:24	10.87
6/17/2022 21:01	-0.04	6/18/2022 19:51	0.78	6/18/2022 20:14	3.37	6/18/2022 21:37	-0.21	6/17/2022 20:25	10.90
6/17/2022 21:02	-0.02	6/18/2022 19:52	0.75	6/18/2022 20:15	3.37	6/18/2022 21:38	-0.18	6/17/2022 20:26	10.87
6/17/2022 21:03	-0.02	6/18/2022 19:53	0.77	6/18/2022 20:16	3.35	6/18/2022 21:39	-0.21	6/17/2022 20:27	10.89
6/17/2022 21:04	-0.03	6/18/2022 19:54	0.75	6/18/2022 20:17	3.37	6/18/2022 21:40	-0.24	6/17/2022 20:28	10.93
6/17/2022 21:05	-0.03	6/18/2022 19:55	0.75	6/18/2022 20:18	3.36	6/18/2022 21:41	-0.20	6/17/2022 20:29	10.88
6/17/2022 21:06	-0.03	6/18/2022 19:56	0.76	6/18/2022 20:19	3.35	6/18/2022 21:42	-0.18	6/17/2022 20:30	10.88
6/17/2022 21:07	-0.03	6/18/2022 19:57	0.76	6/18/2022 20:20	3.34	6/18/2022 21:43	-0.21	6/17/2022 20:31	10.85
6/17/2022 21:08	-0.03	6/18/2022 19:58	0.76	6/18/2022 20:21	3.38	6/18/2022 21:44	-0.24	6/17/2022 20:32	10.90
6/17/2022 21:09	-0.03	6/18/2022 19:59	0.76	6/18/2022 20:22	3.36	6/18/2022 21:45	-0.20	6/17/2022 20:33	10.89
6/17/2022 21:10	-0.04	6/18/2022 20:00	0.78	6/18/2022 20:23	3.37	6/18/2022 21:46	-0.23	6/17/2022 20:34	10.89
6/17/2022 21:11	-0.03	6/18/2022 20:01	0.75	6/18/2022 20:24	3.36	6/18/2022 21:47	-0.18	6/17/2022 20:35	10.89
6/17/2022 21:12	-0.04	6/18/2022 20:02	0.76	6/18/2022 20:25	3.38	6/18/2022 21:48	-0.20	6/17/2022 20:36	10.89
6/17/2022 21:13	-0.03	6/18/2022 20:03	0.75	6/18/2022 20:26	3.37	6/18/2022 21:49	-0.22	6/17/2022 20:37	10.82
6/17/2022 21:14	-0.04	6/18/2022 20:04	0.78	6/18/2022 20:27	3.35	6/18/2022 21:50	-0.21	6/17/2022 20:38	10.86
6/17/2022 21:15	-0.04	6/18/2022 20:05	0.76	6/18/2022 20:28	3.34	6/18/2022 21:51	-0.22	6/17/2022 20:39	10.87
6/17/2022 21:16	-0.02	6/18/2022 20:06	0.76	6/18/2022 20:29	3.37	6/18/2022 21:52	-0.22	6/17/2022 20:40	10.89
6/17/2022 21:17	-0.02	6/18/2022 20:07	0.75	6/18/2022 20:30	3.34	6/18/2022 21:53	-0.23	6/17/2022 20:41	10.90
6/17/2022 21:18	-0.02	6/18/2022 20:08	0.76	6/18/2022 20:31	3.35	6/18/2022 21:54	-0.21	6/17/2022 20:42	10.94
6/17/2022 21:19	-0.03	6/18/2022 20:09	0.76	6/18/2022 20:32	3.37	6/18/2022 21:55	-0.20	6/17/2022 20:43	10.85
6/17/2022 21:20	-0.04	6/18/2022 20:10	0.76	6/18/2022 20:33	3.38	6/18/2022 21:56	-0.24	6/17/2022 20:44	10.88
6/17/2022 21:21	-0.04	6/18/2022 20:11	0.75	6/18/2022 20:34	3.38	6/18/2022 21:57	-0.20	6/17/2022 20:45	10.86
6/17/2022 21:22	-0.03	6/18/2022 20:12	0.76	6/18/2022 20:35	3.37	6/18/2022 21:58	-0.25	6/17/2022 20:46	10.90
6/17/2022 21:23	-0.04	6/18/2022 20:13	0.76	6/18/2022 20:36	3.33	6/18/2022 21:59	-0.21	6/17/2022 20:47	10.90
6/17/2022 21:24	-0.04	6/18/2022 20:14	0.75	6/18/2022 20:37	3.40	6/18/2022 22:00	-0.22	6/17/2022 20:48	10.89
6/17/2022 21:25	-0.04	6/18/2022 20:15	0.78	6/18/2022 20:38	3.36	6/18/2022 22:01	-0.21	6/17/2022 20:49	10.85
6/17/2022 21:26	-0.04	6/18/2022 20:16	0.76	6/18/2022 20:39	3.36	6/18/2022 22:02	-0.16	6/17/2022 20:50	10.84
6/17/2022 21:27	-0.04	6/18/2022 20:17	0.76	6/18/2022 20:40	3.35	6/18/2022 22:03	-0.22	6/17/2022 20:51	10.89
6/17/2022 21:28	-0.04	6/18/2022 20:18	0.78	6/18/2022 20:41	3.37	6/18/2022 22:04	-0.24	6/17/2022 20:52	10.89

6/17/2022 21:29	-0.02	6/18/2022 20:19	0.76	6/18/2022 20:42	3.38	6/18/2022 22:05	-0.21	6/17/2022 20:53	10.89
6/17/2022 21:30	-0.03	6/18/2022 20:20	0.76	6/18/2022 20:43	3.39	6/18/2022 22:06	-0.20	6/17/2022 20:54	10.89
6/17/2022 21:31	-0.04	6/18/2022 20:21	0.76	6/18/2022 20:44	3.37	6/18/2022 22:07	-0.21	6/17/2022 20:55	10.86
6/17/2022 21:32	-0.02	6/18/2022 20:22	0.78	6/18/2022 20:45	3.35	6/18/2022 22:08	-0.18	6/17/2022 20:56	10.86
6/17/2022 21:33	-0.03	6/18/2022 20:23	0.75	6/18/2022 20:46	3.37	6/18/2022 22:09	-0.24	6/17/2022 20:57	10.85
6/17/2022 21:34	-0.03	6/18/2022 20:24	0.75	6/18/2022 20:47	3.37	6/18/2022 22:10	-0.20	6/17/2022 20:58	10.89
6/17/2022 21:35	-0.04	6/18/2022 20:25	0.78	6/18/2022 20:48	3.34	6/18/2022 22:11	-0.24	6/17/2022 20:59	10.92
6/17/2022 21:36	-0.03	6/18/2022 20:26	0.75	6/18/2022 20:49	3.35	6/18/2022 22:12	-0.22	6/17/2022 21:00	10.85
6/17/2022 21:37	-0.03	6/18/2022 20:27	0.75	6/18/2022 20:50	3.36	6/18/2022 22:13	-0.23	6/17/2022 21:01	10.93
6/17/2022 21:38	-0.04	6/18/2022 20:28	0.75	6/18/2022 20:51	3.34	6/18/2022 22:14	-0.24	6/17/2022 21:02	10.89
6/17/2022 21:39	-0.04	6/18/2022 20:29	0.76	6/18/2022 20:52	3.36	6/18/2022 22:15	-0.19	6/17/2022 21:03	10.86
6/17/2022 21:40	-0.03	6/18/2022 20:30	0.76	6/18/2022 20:53	3.36	6/18/2022 22:16	-0.19	6/17/2022 21:04	10.87
6/17/2022 21:41	-0.04	6/18/2022 20:31	0.76	6/18/2022 20:54	3.36	6/18/2022 22:17	-0.26	6/17/2022 21:05	10.88
6/17/2022 21:42	-0.04	6/18/2022 20:32	0.76	6/18/2022 20:55	3.37	6/18/2022 22:18	-0.25	6/17/2022 21:06	10.91
6/17/2022 21:43	-0.04	6/18/2022 20:33	0.76	6/18/2022 20:56	3.36	6/18/2022 22:19	-0.23	6/17/2022 21:07	10.89
6/17/2022 21:44	-0.02	6/18/2022 20:34	0.76	6/18/2022 20:57	3.35	6/18/2022 22:20	-0.18	6/17/2022 21:08	10.88
6/17/2022 21:45	-0.03	6/18/2022 20:35	0.76	6/18/2022 20:58	3.35	6/18/2022 22:21	-0.24	6/17/2022 21:09	10.83
6/17/2022 21:46	-0.05	6/18/2022 20:36	0.76	6/18/2022 20:59	3.39	6/18/2022 22:22	-0.24	6/17/2022 21:10	10.87
6/17/2022 21:47	-0.04	6/18/2022 20:37	0.76	6/18/2022 21:00	3.37	6/18/2022 22:23	-0.21	6/17/2022 21:11	10.89
6/17/2022 21:48	-0.03	6/18/2022 20:38	0.75	6/18/2022 21:01	3.38	6/18/2022 22:24	-0.19	6/17/2022 21:12	10.88
6/17/2022 21:49	-0.02	6/18/2022 20:39	0.76	6/18/2022 21:02	3.35	6/18/2022 22:25	-0.21	6/17/2022 21:13	10.89
6/17/2022 21:50	-0.03	6/18/2022 20:40	0.76	6/18/2022 21:03	3.37	6/18/2022 22:26	-0.21	6/17/2022 21:14	10.86
6/17/2022 21:51	-0.04	6/18/2022 20:41	0.76	6/18/2022 21:04	3.35	6/18/2022 22:27	-0.21	6/17/2022 21:15	10.88
6/17/2022 21:52	-0.03	6/18/2022 20:42	0.76	6/18/2022 21:05	3.36	6/18/2022 22:28	-0.25	6/17/2022 21:16	10.91
6/17/2022 21:53	-0.05	6/18/2022 20:43	0.76	6/18/2022 21:06	3.38	6/18/2022 22:29	-0.24	6/17/2022 21:17	10.90
6/17/2022 21:54	-0.02	6/18/2022 20:44	0.76	6/18/2022 21:07	3.35	6/18/2022 22:30	-0.25	6/17/2022 21:18	10.90
6/17/2022 21:55	-0.03	6/18/2022 20:45	0.76	6/18/2022 21:08	3.35	6/18/2022 22:31	-0.26	6/17/2022 21:19	10.85
6/17/2022 21:56	-0.03	6/18/2022 20:46	0.76	6/18/2022 21:09	3.32	6/18/2022 22:32	-0.20	6/17/2022 21:20	10.92
6/17/2022 21:57	-0.04	6/18/2022 20:47	0.76	6/18/2022 21:10	3.39	6/18/2022 22:33	-0.22	6/17/2022 21:21	10.92
6/17/2022 21:58	-0.02	6/18/2022 20:48	0.76	6/18/2022 21:11	3.39	6/18/2022 22:34	-0.20	6/17/2022 21:22	10.89
6/17/2022 21:59	-0.03	6/18/2022 20:49	0.76	6/18/2022 21:12	3.39	6/18/2022 22:35	-0.19	6/17/2022 21:23	10.88
6/17/2022 22:00	-0.03	6/18/2022 20:50	0.76	6/18/2022 21:13	3.32	6/18/2022 22:36	-0.19	6/17/2022 21:24	10.89
6/17/2022 22:01	-0.02	6/18/2022 20:51	0.78	6/18/2022 21:14	3.37	6/18/2022 22:37	-0.26	6/17/2022 21:25	10.82
6/17/2022 22:02	-0.02	6/18/2022 20:52	0.76	6/18/2022 21:15	3.39	6/18/2022 22:38	-0.24	6/17/2022 21:26	10.87
6/17/2022 22:03	-0.04	6/18/2022 20:53	0.76	6/18/2022 21:16	3.39	6/18/2022 22:39	-0.24	6/17/2022 21:27	10.85
6/17/2022 22:04	-0.02	6/18/2022 20:54	0.76	6/18/2022 21:17	3.37	6/18/2022 22:40	-0.21	6/17/2022 21:28	10.92
6/17/2022 22:05	-0.04	6/18/2022 20:55	0.76	6/18/2022 21:18	3.39	6/18/2022 22:41	-0.25	6/17/2022 21:29	10.89
6/17/2022 22:06	-0.03	6/18/2022 20:56	0.76	6/18/2022 21:19	3.36	6/18/2022 22:42	-0.22	6/17/2022 21:30	10.88
6/17/2022 22:07	-0.02	6/18/2022 20:57	0.76	6/18/2022 21:20	3.33	6/18/2022 22:43	-0.23	6/17/2022 21:31	10.84
6/17/2022 22:08	-0.04	6/18/2022 20:58	0.76	6/18/2022 21:21	3.37	6/18/2022 22:44	-0.27	6/17/2022 21:32	10.88
6/17/2022 22:09	-0.04	6/18/2022 20:59	0.76	6/18/2022 21:22	3.39	6/18/2022 22:45	-0.22	6/17/2022 21:33	10.84
6/17/2022 22:10	-0.04	6/18/2022 21:00	0.76	6/18/2022 21:23	3.36	6/18/2022 22:46	-0.20	6/17/2022 21:34	10.92
6/17/2022 22:11	-0.04	6/18/2022 21:01	0.76	6/18/2022 21:24	3.36	6/18/2022 22:47	-0.21	6/17/2022 21:35	10.91
6/17/2022 22:12	-0.03	6/18/2022 21:02	0.76	6/18/2022 21:25	3.36	6/18/2022 22:48	-0.20	6/17/2022 21:36	10.88
6/17/2022 22:13	-0.02	6/18/2022 21:03	0.77	6/18/2022 21:26	3.34	6/18/2022 22:49	-0.22	6/17/2022 21:37	10.89
6/17/2022 22:14	-0.04	6/18/2022 21:04	0.76	6/18/2022 21:27	3.39	6/18/2022 22:50	-0.23	6/17/2022 21:38	10.90
6/17/2022 22:15	-0.04	6/18/2022 21:05	0.76	6/18/2022 21:28	3.39	6/18/2022 22:51	-0.20	6/17/2022 21:39	10.89
6/17/2022 22:16	-0.03	6/18/2022 21:06	0.76	6/18/2022 21:29	3.37	6/18/2022 22:52	-0.21	6/17/2022 21:40	10.88
6/17/2022 22:17	-0.04	6/18/2022 21:07	0.76	6/18/2022 21:30	3.37	6/18/2022 22:53	-0.21	6/17/2022 21:41	10.88
6/17/2022 22:18	-0.03	6/18/2022 21:08	0.77	6/18/2022 21:31	3.36	6/18/2022 22:54	-0.20	6/17/2022 21:42	10.85
6/17/2022 22:19	-0.04	6/18/2022 21:09	0.76	6/18/2022 21:32	3.37	6/18/2022 22:55	-0.23	6/17/2022 21:43	10.89
6/17/2022 22:20	-0.03	6/18/2022 21:10	0.76	6/18/2022 21:33	3.34	6/18/2022 22:56	-0.22	6/17/2022 21:44	10.89
6/17/2022 22:21	-0.03	6/18/2022 21:11	0.76	6/18/2022 21:34	3.36	6/18/2022 22:57	-0.24	6/17/2022 21:45	10.91
6/17/2022 22:22	-0.03	6/18/2022 21:12	0.76	6/18/2022 21:35	3.37	6/18/2022 22:58	-0.25	6/17/2022 21:46	10.86
6/17/2022 22:23	-0.03	6/18/2022 21:13	0.76	6/18/2022 21:36	3.38	6/18/2022 22:59	-0.23	6/17/2022 21:47	10.87
6/17/2022 22:24	-0.03	6/18/2022 21:14	0.76	6/18/2022 21:37	3.36	6/18/2022 23:00	-0.23	6/17/2022 21:48	10.94
6/17/2022 22:25	-0.03	6/18/2022 21:15	0.77	6/18/2022 21:38	3.34	6/18/2022 23:01	-0.22	6/17/2022 21:49	10.90
6/17/2022 22:26	-0.04	6/18/2022 21:16	0.76	6/18/2022 21:39	3.40	6/18/2022 23:02	-0.22	6/17/2022 21:50	10.92
6/17/2022 22:27	-0.03	6/18/2022 21:17	0.77	6/18/2022 21:40	3.37	6/18/2022 23:03	-0.22	6/17/2022 21:51	10.90
6/17/2022 22:28	-0.04	6/18/2022 21:18	0.76	6/18/2022 21:41	3.36	6/18/2022 23:04	-0.29	6/17/2022 21:52	10.87
6/17/2022 22:29	-0.04	6/18/2022 21:19	0.76	6/18/2022 21:42	3.33	6/18/2022 23:05	-0.23	6/17/2022 21:53	10.87
6/17/2022 22:30	-0.03	6/18/2022 21:20	0.76	6/18/2022 21:43	3.36	6/18/2022 23:06	-0.26	6/17/2022 21:54	10.86
6/17/2022 22:31	-0.04	6/18/2022 21:21	0.76	6/18/2022 21:44	3.37	6/18/2022 23:07	-0.25	6/17/2022 21:55	10.87
6/17/2022 22:32	-0.04	6/18/2022 21:22	0.76	6/18/2022 21:45	3.37	6/18/2022 23:08	-0.19	6/17/2022 21:56	10.84
6/17/2022 22:33	-0.04	6/18/2022 21:23	0.76	6/18/2022 21:46	3.40	6/18/2022 23:09	-0.19	6/17/2022 21:57	10.85
6/17/2022 22:34	-0.04	6/18/2022 21:24	0.76	6/18/2022 21:47	3.39	6/18/2022 23:10	-0.22	6/17/2022 21:58	10.85
6/17/2022 22:35	-0.03	6/18/2022 21:25	0.76	6/18/2022 21:48	3.37	6/18/2022 23:11	-0.19	6/17/2022 21:59	10.92
6/17/2022 22:36	-0.04	6/18/2022 21:26	0.79	6/18/2022 21:49	3.39	6/18/2022 23:12	-0.21	6/17/2022 22:00	10.91
6/17/2022 22:37	-0.03	6/18/2022 21:27	0.77	6/18/2022 21:50	3.39	6/18/2022 23:13	-0.23	6/17/2022 22:01	10.88
6/17/2022 22:38	-0.04	6/18/2022 21:28	0.77	6/18/2022 21:51	3.37	6/18/2022 23:14	-0.23	6/17/2022 22:02	10.92
6/17/2022 22:39	-0.03	6/18/2022 21:29	0.77	6/18/2022 21:52	3.37	6/18/2022 23:15	-0.25	6/17/2022 22:03	10.89
6/17/2022 22:40	-0.02	6/18/2022 21:30	0.76	6/18/2022 21:53	3.35	6/18/2022 23:16	-0.23	6/17/2022 22:04	10.87
6/17/2022 22:41	-0.03	6/18/2022 21:31	0.76	6/18/2022 21:54	3.35	6/18/2022 23:17	-0.21	6/17/2022 22:05	10.86
6/17/2022 22:42	-0.02	6/18/2022 21:32	0.79	6/18/2022 21:55	3.39	6/18/2022 23:18	-0.27	6/17/2022 22:06	10.88
6/17/2022 22:43	-0.03	6/18/2022 21:33	0.76	6/18/2022 21:56	3.40	6/18/2022 23:19	-0.23	6/17/2022 22:07	10.88
6/17/2022 22:44	-0.02	6/18/2022 21:34	0.77	6/18/2022 21:57	3.36	6/18/2022 23:20	-0.20	6/17/2022 22:08	10.92
6/17/2022 22:45	-0.03	6/18/2022 21:35	0.76	6/18/2022 21:58	3.34	6/18/2022 23:21	-0.21	6/17/2022 22:09	10.89
6/17/2022 22:46	-0.03	6/18/2022 21:36	0.76	6/18/2022 21:59	3.36	6/18/2022 23:22	-0.21	6/17/2022 22:10	10.92
6/17/2022 22:47	-0.03	6/18/2022 21:37	0.76	6/18/2022 22:00	3.38	6/18/2022 23:23	-0.24	6/17/2022 22:11	10.85
6/17/2022 22:48	-0.02	6/18/2022 21:38	0.77	6/18/2022 22:01	3.38	6/18/2022 23:24	-0.23	6/17/2022 22:12	10.88
6/17/2022 22:49	-0.04	6/18/2022 21:39	0.76	6/18/2022 22:02	3.35	6/18/2022 23:25	-0.25	6/17/2022 22:13	10.83
6/17/2022 22:50	-0.03	6/18/2022 21:40	0.77	6/18/2022 22:03	3.39	6/18/2022 23:26	-0.22	6/17/2022 22:14	10.90
6/17/2022 22:51	-0.03	6/18/2022 21:41	0.76	6/18/2022 22:04	3.32	6/18/2022 23:27	-0.19	6/17/2022 22:15	10.84
6/17/2022 22:52	-0.03	6/18/2022 21:42	0.77	6/18/2022 22:05	3.39	6/18/2022 23:28	-0.21	6/17/2022 22:16	10.91
6/17/2022 22:53	-0.03	6/18/2022 21:43	0.76	6/18/2022 22:06	3.36	6/18/2022 23:29	-0.20	6/17/2022 22:17	10.85
6/17/2022 22:54	-0.02	6/18/2022 21:44	0.77	6/18/2022 22:07	3.38	6/18/2022 23:30	-0.24	6/17/2022 22:18	10.85
6/17/2022 22:55	-0.03	6/18/2022 21:45	0.77	6/18/2022 22:08	3.35	6/18/2022 23:31	-0.22	6/17/2022 22:19	10.94
6/17/2022 22:56	-0.02	6/18/2022 21:46	0.76	6/18/2022 22:09	3.35	6/18/2022 23:32	-0.19	6/17/2022 22:20	10.85

6/17/2022 22:57	-0.03	6/18/2022 21:47	0.77	6/18/2022 22:10	3.39	6/18/2022 23:33	-0.25	6/17/2022 22:21	10.87
6/17/2022 22:58	-0.04	6/18/2022 21:48	0.77	6/18/2022 22:11	3.35	6/18/2022 23:34	-0.26	6/17/2022 22:22	10.83
6/17/2022 22:59	-0.02	6/18/2022 21:49	0.77	6/18/2022 22:12	3.39	6/18/2022 23:35	-0.24	6/17/2022 22:23	10.87
6/17/2022 23:00	-0.04	6/18/2022 21:50	0.77	6/18/2022 22:13	3.38	6/18/2022 23:36	-0.23	6/17/2022 22:24	10.88
6/17/2022 23:01	-0.04	6/18/2022 21:51	0.77	6/18/2022 22:14	3.34	6/18/2022 23:37	-0.21	6/17/2022 22:25	10.85
6/17/2022 23:02	-0.02	6/18/2022 21:52	0.79	6/18/2022 22:15	3.39	6/18/2022 23:38	-0.19	6/17/2022 22:26	10.87
6/17/2022 23:03	-0.02	6/18/2022 21:53	0.77	6/18/2022 22:16	3.36	6/18/2022 23:39	-0.24	6/17/2022 22:27	10.91
6/17/2022 23:04	-0.04	6/18/2022 21:54	0.77	6/18/2022 22:17	3.37	6/18/2022 23:40	-0.22	6/17/2022 22:28	10.84
6/17/2022 23:05	-0.04	6/18/2022 21:55	0.77	6/18/2022 22:18	3.38	6/18/2022 23:41	-0.19	6/17/2022 22:29	10.83
6/17/2022 23:06	-0.03	6/18/2022 21:56	0.79	6/18/2022 22:19	3.36	6/18/2022 23:42	-0.20	6/17/2022 22:30	10.94
6/17/2022 23:07	-0.03	6/18/2022 21:57	0.77	6/18/2022 22:20	3.39	6/18/2022 23:43	-0.24	6/17/2022 22:31	10.89
6/17/2022 23:08	-0.02	6/18/2022 21:58	0.77	6/18/2022 22:21	3.38	6/18/2022 23:44	-0.19	6/17/2022 22:32	10.93
6/17/2022 23:09	-0.03	6/18/2022 21:59	0.77	6/18/2022 22:22	3.37	6/18/2022 23:45	-0.24	6/17/2022 22:33	10.88
6/17/2022 23:10	-0.02	6/18/2022 22:00	0.77	6/18/2022 22:23	3.40	6/18/2022 23:46	-0.18	6/17/2022 22:34	10.88
6/17/2022 23:11	-0.04	6/18/2022 22:01	0.77	6/18/2022 22:24	3.37	6/18/2022 23:47	-0.22	6/17/2022 22:35	10.89
6/17/2022 23:12	-0.04	6/18/2022 22:02	0.77	6/18/2022 22:25	3.37	6/18/2022 23:48	-0.21	6/17/2022 22:36	10.88
6/17/2022 23:13	-0.04	6/18/2022 22:03	0.77	6/18/2022 22:26	3.37	6/18/2022 23:49	-0.23	6/17/2022 22:37	10.85
6/17/2022 23:14	-0.04	6/18/2022 22:04	0.77	6/18/2022 22:27	3.37	6/18/2022 23:50	-0.23	6/17/2022 22:38	10.90
6/17/2022 23:15	-0.03	6/18/2022 22:05	0.77	6/18/2022 22:28	3.36	6/18/2022 23:51	-0.18	6/17/2022 22:39	10.93
6/17/2022 23:16	-0.04	6/18/2022 22:06	0.77	6/18/2022 22:29	3.39	6/18/2022 23:52	-0.19	6/17/2022 22:40	10.87
6/17/2022 23:17	-0.04	6/18/2022 22:07	0.77	6/18/2022 22:30	3.36	6/18/2022 23:53	-0.19	6/17/2022 22:41	10.88
6/17/2022 23:18	-0.04	6/18/2022 22:08	0.77	6/18/2022 22:31	3.36	6/18/2022 23:54	-0.17	6/17/2022 22:42	10.89
6/17/2022 23:19	-0.03	6/18/2022 22:09	0.77	6/18/2022 22:32	3.36	6/18/2022 23:55	-0.26	6/17/2022 22:43	10.88
6/17/2022 23:20	-0.03	6/18/2022 22:10	0.77	6/18/2022 22:33	3.36	6/18/2022 23:56	-0.18	6/17/2022 22:44	10.87
6/17/2022 23:21	-0.03	6/18/2022 22:11	0.77	6/18/2022 22:34	3.34	6/18/2022 23:57	-0.21	6/17/2022 22:45	10.85
6/17/2022 23:22	-0.04	6/18/2022 22:12	0.77	6/18/2022 22:35	3.41	6/18/2022 23:58	-0.20	6/17/2022 22:46	10.89
6/17/2022 23:23	-0.03	6/18/2022 22:13	0.77	6/18/2022 22:36	3.39	6/18/2022 23:59	-0.22	6/17/2022 22:47	10.87
6/17/2022 23:24	-0.03	6/18/2022 22:14	0.77	6/18/2022 22:37	3.41	6/19/2022 0:00	-0.23	6/17/2022 22:48	10.83
6/17/2022 23:25	-0.02	6/18/2022 22:15	0.77	6/18/2022 22:38	3.37	6/19/2022 0:01	-0.24	6/17/2022 22:49	10.90
6/17/2022 23:26	-0.04	6/18/2022 22:16	0.77	6/18/2022 22:39	3.39	6/19/2022 0:02	-0.23	6/17/2022 22:50	10.87
6/17/2022 23:27	-0.04	6/18/2022 22:17	0.77	6/18/2022 22:40	3.36	6/19/2022 0:03	-0.23	6/17/2022 22:51	10.92
6/17/2022 23:28	-0.04	6/18/2022 22:18	0.78	6/18/2022 22:41	3.42	6/19/2022 0:04	-0.17	6/17/2022 22:52	10.87
6/17/2022 23:29	-0.03	6/18/2022 22:19	0.78	6/18/2022 22:42	3.38	6/19/2022 0:05	-0.21	6/17/2022 22:53	10.90
6/17/2022 23:30	-0.03	6/18/2022 22:20	0.77	6/18/2022 22:43	3.37	6/19/2022 0:06	-0.21	6/17/2022 22:54	10.91
6/17/2022 23:31	-0.03	6/18/2022 22:21	0.77	6/18/2022 22:44	3.39	6/19/2022 0:07	-0.21	6/17/2022 22:55	10.87
6/17/2022 23:32	-0.03	6/18/2022 22:22	0.78	6/18/2022 22:45	3.40	6/19/2022 0:08	-0.25	6/17/2022 22:56	10.87
6/17/2022 23:33	-0.04	6/18/2022 22:23	0.78	6/18/2022 22:46	3.39	6/19/2022 0:09	-0.23	6/17/2022 22:57	10.85
6/17/2022 23:34	-0.03	6/18/2022 22:24	0.77	6/18/2022 22:47	3.37	6/19/2022 0:10	-0.21	6/17/2022 22:58	10.87
6/17/2022 23:35	-0.04	6/18/2022 22:25	0.78	6/18/2022 22:48	3.38	6/19/2022 0:11	-0.22	6/17/2022 22:59	10.89
6/17/2022 23:36	-0.04	6/18/2022 22:26	0.77	6/18/2022 22:49	3.40	6/19/2022 0:12	-0.21	6/17/2022 23:00	10.85
6/17/2022 23:37	-0.04	6/18/2022 22:27	0.77	6/18/2022 22:50	3.38	6/19/2022 0:13	-0.17	6/17/2022 23:01	10.84
6/17/2022 23:38	-0.02	6/18/2022 22:28	0.77	6/18/2022 22:51	3.40	6/19/2022 0:14	-0.28	6/17/2022 23:02	10.90
6/17/2022 23:39	-0.04	6/18/2022 22:29	0.78	6/18/2022 22:52	3.38	6/19/2022 0:15	-0.24	6/17/2022 23:03	10.87
6/17/2022 23:40	-0.03	6/18/2022 22:30	0.78	6/18/2022 22:53	3.38	6/19/2022 0:16	-0.19	6/17/2022 23:04	10.93
6/17/2022 23:41	-0.04	6/18/2022 22:31	0.78	6/18/2022 22:54	3.39	6/19/2022 0:17	-0.24	6/17/2022 23:05	10.93
6/17/2022 23:42	-0.04	6/18/2022 22:32	0.77	6/18/2022 22:55	3.38	6/19/2022 0:18	-0.20	6/17/2022 23:06	10.87
6/17/2022 23:43	-0.03	6/18/2022 22:33	0.78	6/18/2022 22:56	3.38	6/19/2022 0:19	-0.22	6/17/2022 23:07	10.91
6/17/2022 23:44	-0.03	6/18/2022 22:34	0.78	6/18/2022 22:57	3.39	6/19/2022 0:20	-0.20	6/17/2022 23:08	10.90
6/17/2022 23:45	-0.03	6/18/2022 22:35	0.78	6/18/2022 22:58	3.38	6/19/2022 0:21	-0.25	6/17/2022 23:09	10.91
6/17/2022 23:46	-0.02	6/18/2022 22:36	0.78	6/18/2022 22:59	3.35	6/19/2022 0:22	-0.22	6/17/2022 23:10	10.90
6/17/2022 23:47	-0.02	6/18/2022 22:37	0.78	6/18/2022 23:00	3.42	6/19/2022 0:23	-0.19	6/17/2022 23:11	10.90
6/17/2022 23:48	-0.03	6/18/2022 22:38	0.78	6/18/2022 23:01	3.37	6/19/2022 0:24	-0.22	6/17/2022 23:12	10.89
6/17/2022 23:49	-0.04	6/18/2022 22:39	0.78	6/18/2022 23:02	3.37	6/19/2022 0:25	-0.23	6/17/2022 23:13	10.91
6/17/2022 23:50	-0.04	6/18/2022 22:40	0.77	6/18/2022 23:03	3.39	6/19/2022 0:26	-0.24	6/17/2022 23:14	10.88
6/17/2022 23:51	-0.04	6/18/2022 22:41	0.78	6/18/2022 23:04	3.40	6/19/2022 0:27	-0.24	6/17/2022 23:15	10.94
6/17/2022 23:52	-0.03	6/18/2022 22:42	0.78	6/18/2022 23:05	3.37	6/19/2022 0:28	-0.28	6/17/2022 23:16	10.90
6/17/2022 23:53	-0.03	6/18/2022 22:43	0.78	6/18/2022 23:06	3.35	6/19/2022 0:29	-0.25	6/17/2022 23:17	10.96
6/17/2022 23:54	-0.02	6/18/2022 22:44	0.78	6/18/2022 23:07	3.37	6/19/2022 0:30	-0.22	6/17/2022 23:18	10.92
6/17/2022 23:55	-0.04	6/18/2022 22:45	0.78	6/18/2022 23:08	3.39	6/19/2022 0:31	-0.22	6/17/2022 23:19	10.88
6/17/2022 23:56	-0.03	6/18/2022 22:46	0.77	6/18/2022 23:09	3.41	6/19/2022 0:32	-0.23	6/17/2022 23:20	10.95
6/17/2022 23:57	-0.03	6/18/2022 22:47	0.78	6/18/2022 23:10	3.35	6/19/2022 0:33	-0.24	6/17/2022 23:21	10.87
6/17/2022 23:58	-0.04	6/18/2022 22:48	0.78	6/18/2022 23:11	3.36	6/19/2022 0:34	-0.22	6/17/2022 23:22	10.90
6/17/2022 23:59	-0.03	6/18/2022 22:49	0.78	6/18/2022 23:12	3.40	6/19/2022 0:35	-0.20	6/17/2022 23:23	10.94
6/18/2022 0:00	-0.03	6/18/2022 22:50	0.78	6/18/2022 23:13	3.37	6/19/2022 0:36	-0.18	6/17/2022 23:24	10.89
6/18/2022 0:01	-0.03	6/18/2022 22:51	0.78	6/18/2022 23:14	3.41	6/19/2022 0:37	-0.23	6/17/2022 23:25	10.93
6/18/2022 0:02	-0.02	6/18/2022 22:52	0.78	6/18/2022 23:15	3.41	6/19/2022 0:38	-0.23	6/17/2022 23:26	10.90
6/18/2022 0:03	-0.03	6/18/2022 22:53	0.78	6/18/2022 23:16	3.42	6/19/2022 0:39	-0.23	6/17/2022 23:27	10.89
6/18/2022 0:04	-0.03	6/18/2022 22:54	0.78	6/18/2022 23:17	3.38	6/19/2022 0:40	-0.22	6/17/2022 23:28	10.85
6/18/2022 0:05	-0.03	6/18/2022 22:55	0.78	6/18/2022 23:18	3.36	6/19/2022 0:41	-0.17	6/17/2022 23:29	10.89
6/18/2022 0:06	-0.02	6/18/2022 22:56	0.78	6/18/2022 23:19	3.37	6/19/2022 0:42	-0.20	6/17/2022 23:30	10.84
6/18/2022 0:07	-0.03	6/18/2022 22:57	0.78	6/18/2022 23:20	3.39	6/19/2022 0:43	-0.24	6/17/2022 23:31	10.88
6/18/2022 0:08	-0.04	6/18/2022 22:58	0.78	6/18/2022 23:21	3.39	6/19/2022 0:44	-0.24	6/17/2022 23:32	10.88
6/18/2022 0:09	-0.03	6/18/2022 22:59	0.78	6/18/2022 23:22	3.40	6/19/2022 0:45	-0.25	6/17/2022 23:33	10.87
6/18/2022 0:10	-0.03	6/18/2022 23:00	0.78	6/18/2022 23:23	3.38	6/19/2022 0:46	-0.22	6/17/2022 23:34	10.89
6/18/2022 0:11	-0.03	6/18/2022 23:01	0.78	6/18/2022 23:24	3.38	6/19/2022 0:47	-0.22	6/17/2022 23:35	10.87
6/18/2022 0:12	-0.02	6/18/2022 23:02	0.78	6/18/2022 23:25	3.42	6/19/2022 0:48	-0.20	6/17/2022 23:36	10.88
6/18/2022 0:13	-0.03	6/18/2022 23:03	0.78	6/18/2022 23:26	3.39	6/19/2022 0:49	-0.21	6/17/2022 23:37	10.87
6/18/2022 0:14	-0.04	6/18/2022 23:04	0.78	6/18/2022 23:27	3.41	6/19/2022 0:50	-0.22	6/17/2022 23:38	10.89
6/18/2022 0:15	-0.04	6/18/2022 23:05	0.78	6/18/2022 23:28	3.39	6/19/2022 0:51	-0.22	6/17/2022 23:39	10.88
6/18/2022 0:16	-0.03	6/18/2022 23:06	0.78	6/18/2022 23:29	3.39	6/19/2022 0:52	-0.21	6/17/2022 23:40	10.85
6/18/2022 0:17	-0.03	6/18/2022 23:07	0.78	6/18/2022 23:30	3.37	6/19/2022 0:53	-0.22	6/17/2022 23:41	10.93
6/18/2022 0:18	-0.03	6/18/2022 23:08	0.78	6/18/2022 23:31	3.40	6/19/2022 0:54	-0.25	6/17/2022 23:42	10.87
6/18/2022 0:19	-0.04	6/18/2022 23:09	0.78	6/18/2022 23:32	3.37	6/19/2022 0:55	-0.21	6/17/2022 23:43	10.91
6/18/2022 0:20	-0.04	6/18/2022 23:10	0.78	6/18/2022 23:33	3.39	6/19/2022 0:56	-0.23	6/17/2022 23:44	10.89
6/18/2022 0:21	-0.03	6/18/2022 23:11	0.78	6/18/2022 23:34	3.39	6/19/2022 0:57	-0.19	6/17/2022 23:45	10.85
6/18/2022 0:22	-0.03	6/18/2022 23:12	0.78	6/18/2022 23:35	3.36	6/19/2022 0:58	-0.24	6/17/2022 23:46	10.93
6/18/2022 0:23	-0.02	6/18/2022 23:13	0.78	6/18/2022 23:36	3.41	6/19/2022 0:59	-0.25	6/17/2022 23:47	10.92
6/18/2022 0:24	-0.03	6/18/2022 23:14	0.78	6/18/2022 23:37	3.37	6/19/2022 1:00	-0.19	6/17/2022 23:48	10.90

6/18/2022 0:25	-0.02	6/18/2022 23:15	0.78	6/18/2022 23:38	3.41	6/19/2022 1:01	-0.24	6/17/2022 23:49	10.92
6/18/2022 0:26	-0.04	6/18/2022 23:16	0.78	6/18/2022 23:39	3.40	6/19/2022 1:02	-0.25	6/17/2022 23:50	10.89
6/18/2022 0:27	-0.03	6/18/2022 23:17	0.78	6/18/2022 23:40	3.36	6/19/2022 1:03	-0.22	6/17/2022 23:51	10.93
6/18/2022 0:28	-0.04	6/18/2022 23:18	0.78	6/18/2022 23:41	3.40	6/19/2022 1:04	-0.22	6/17/2022 23:52	10.92
6/18/2022 0:29	-0.04	6/18/2022 23:19	0.79	6/18/2022 23:42	3.36	6/19/2022 1:05	-0.22	6/17/2022 23:53	10.88
6/18/2022 0:30	-0.03	6/18/2022 23:20	0.78	6/18/2022 23:43	3.39	6/19/2022 1:06	-0.25	6/17/2022 23:54	10.88
6/18/2022 0:31	-0.03	6/18/2022 23:21	0.78	6/18/2022 23:44	3.37	6/19/2022 1:07	-0.22	6/17/2022 23:55	10.87
6/18/2022 0:32	-0.04	6/18/2022 23:22	0.78	6/18/2022 23:45	3.35	6/19/2022 1:08	-0.22	6/17/2022 23:56	10.93
6/18/2022 0:33	-0.03	6/18/2022 23:23	0.79	6/18/2022 23:46	3.38	6/19/2022 1:09	-0.22	6/17/2022 23:57	10.91
6/18/2022 0:34	-0.03	6/18/2022 23:24	0.79	6/18/2022 23:47	3.38	6/19/2022 1:10	-0.23	6/17/2022 23:58	10.91
6/18/2022 0:35	-0.04	6/18/2022 23:25	0.78	6/18/2022 23:48	3.39	6/19/2022 1:11	-0.25	6/17/2022 23:59	10.89
6/18/2022 0:36	-0.02	6/18/2022 23:26	0.78	6/18/2022 23:49	3.38	6/19/2022 1:12	-0.21	6/18/2022 0:00	10.91
6/18/2022 0:37	-0.04	6/18/2022 23:27	0.78	6/18/2022 23:50	3.38	6/19/2022 1:13	-0.22	6/18/2022 0:01	10.91
6/18/2022 0:38	-0.04	6/18/2022 23:28	0.79	6/18/2022 23:51	3.34	6/19/2022 1:14	-0.24	6/18/2022 0:02	10.91
6/18/2022 0:39	-0.03	6/18/2022 23:29	0.78	6/18/2022 23:52	3.39	6/19/2022 1:15	-0.25	6/18/2022 0:03	10.96
6/18/2022 0:40	-0.03	6/18/2022 23:30	0.79	6/18/2022 23:53	3.38	6/19/2022 1:16	-0.25	6/18/2022 0:04	10.94
6/18/2022 0:41	-0.03	6/18/2022 23:31	0.79	6/18/2022 23:54	3.40	6/19/2022 1:17	-0.25	6/18/2022 0:05	10.89
6/18/2022 0:42	-0.04	6/18/2022 23:32	0.78	6/18/2022 23:55	3.37	6/19/2022 1:18	-0.18	6/18/2022 0:06	10.88
6/18/2022 0:43	-0.03	6/18/2022 23:33	0.79	6/18/2022 23:56	3.36	6/19/2022 1:19	-0.23	6/18/2022 0:07	10.92
6/18/2022 0:44	-0.03	6/18/2022 23:34	0.78	6/18/2022 23:57	3.38	6/19/2022 1:20	-0.19	6/18/2022 0:08	10.88
6/18/2022 0:45	-0.03	6/18/2022 23:35	0.79	6/18/2022 23:58	3.40	6/19/2022 1:21	-0.24	6/18/2022 0:09	10.90
6/18/2022 0:46	-0.04	6/18/2022 23:36	0.79	6/18/2022 23:59	3.38	6/19/2022 1:22	-0.18	6/18/2022 0:10	10.95
6/18/2022 0:47	-0.02	6/18/2022 23:37	0.81	6/19/2022 0:00	3.39	6/19/2022 1:23	-0.22	6/18/2022 0:11	10.91
6/18/2022 0:48	-0.02	6/18/2022 23:38	0.79	6/19/2022 0:01	3.39	6/19/2022 1:24	-0.22	6/18/2022 0:12	10.92
6/18/2022 0:49	-0.04	6/18/2022 23:39	0.79	6/19/2022 0:02	3.37	6/19/2022 1:25	-0.24	6/18/2022 0:13	10.88
6/18/2022 0:50	-0.04	6/18/2022 23:40	0.78	6/19/2022 0:03	3.42	6/19/2022 1:26	-0.24	6/18/2022 0:14	10.90
6/18/2022 0:51	-0.04	6/18/2022 23:41	0.79	6/19/2022 0:04	3.36	6/19/2022 1:27	-0.21	6/18/2022 0:15	10.86
6/18/2022 0:52	-0.04	6/18/2022 23:42	0.79	6/19/2022 0:05	3.37	6/19/2022 1:28	-0.24	6/18/2022 0:16	10.90
6/18/2022 0:53	-0.03	6/18/2022 23:43	0.79	6/19/2022 0:06	3.40	6/19/2022 1:29	-0.23	6/18/2022 0:17	10.88
6/18/2022 0:54	-0.03	6/18/2022 23:44	0.79	6/19/2022 0:07	3.36	6/19/2022 1:30	-0.19	6/18/2022 0:18	10.93
6/18/2022 0:55	-0.02	6/18/2022 23:45	0.79	6/19/2022 0:08	3.38	6/19/2022 1:31	-0.22	6/18/2022 0:19	10.87
6/18/2022 0:56	-0.03	6/18/2022 23:46	0.79	6/19/2022 0:09	3.36	6/19/2022 1:32	-0.25	6/18/2022 0:20	10.92
6/18/2022 0:57	-0.04	6/18/2022 23:47	0.79	6/19/2022 0:10	3.40	6/19/2022 1:33	-0.21	6/18/2022 0:21	10.89
6/18/2022 0:58	-0.04	6/18/2022 23:48	0.79	6/19/2022 0:11	3.38	6/19/2022 1:34	-0.23	6/18/2022 0:22	10.87
6/18/2022 0:59	-0.03	6/18/2022 23:49	0.79	6/19/2022 0:12	3.38	6/19/2022 1:35	-0.21	6/18/2022 0:23	10.89
6/18/2022 1:00	-0.03	6/18/2022 23:50	0.79	6/19/2022 0:13	3.40	6/19/2022 1:36	-0.24	6/18/2022 0:24	10.89
6/18/2022 1:01	-0.04	6/18/2022 23:51	0.79	6/19/2022 0:14	3.38	6/19/2022 1:37	-0.20	6/18/2022 0:25	10.89
6/18/2022 1:02	-0.03	6/18/2022 23:52	0.79	6/19/2022 0:15	3.42	6/19/2022 1:38	-0.22	6/18/2022 0:26	10.85
6/18/2022 1:03	-0.04	6/18/2022 23:53	0.79	6/19/2022 0:16	3.41	6/19/2022 1:39	-0.24	6/18/2022 0:27	10.89
6/18/2022 1:04	-0.03	6/18/2022 23:54	0.79	6/19/2022 0:17	3.39	6/19/2022 1:40	-0.21	6/18/2022 0:28	10.86
6/18/2022 1:05	-0.03	6/18/2022 23:55	0.79	6/19/2022 0:18	3.37	6/19/2022 1:41	-0.24	6/18/2022 0:29	10.96
6/18/2022 1:06	-0.03	6/18/2022 23:56	0.79	6/19/2022 0:19	3.41	6/19/2022 1:42	-0.20	6/18/2022 0:30	10.92
6/18/2022 1:07	-0.03	6/18/2022 23:57	0.79	6/19/2022 0:20	3.38	6/19/2022 1:43	-0.23	6/18/2022 0:31	10.94
6/18/2022 1:08	-0.02	6/18/2022 23:58	0.79	6/19/2022 0:21	3.38	6/19/2022 1:44	-0.21	6/18/2022 0:32	10.87
6/18/2022 1:09	-0.04	6/18/2022 23:59	0.79	6/19/2022 0:22	3.37	6/19/2022 1:45	-0.24	6/18/2022 0:33	10.94
6/18/2022 1:10	-0.04	6/19/2022 0:00	0.79	6/19/2022 0:23	3.39	6/19/2022 1:46	-0.22	6/18/2022 0:34	10.94
6/18/2022 1:11	-0.03	6/19/2022 0:01	0.79	6/19/2022 0:24	3.39	6/19/2022 1:47	-0.23	6/18/2022 0:35	10.93
6/18/2022 1:12	-0.02	6/19/2022 0:02	0.79	6/19/2022 0:25	3.38	6/19/2022 1:48	-0.23	6/18/2022 0:36	10.91
6/18/2022 1:13	-0.04	6/19/2022 0:03	0.79	6/19/2022 0:26	3.38	6/19/2022 1:49	-0.25	6/18/2022 0:37	10.92
6/18/2022 1:14	-0.03	6/19/2022 0:04	0.79	6/19/2022 0:27	3.38	6/19/2022 1:50	-0.25	6/18/2022 0:38	10.92
6/18/2022 1:15	-0.04	6/19/2022 0:05	0.79	6/19/2022 0:28	3.35	6/19/2022 1:51	-0.24	6/18/2022 0:39	10.91
6/18/2022 1:16	-0.03	6/19/2022 0:06	0.79	6/19/2022 0:29	3.38	6/19/2022 1:52	-0.27	6/18/2022 0:40	10.89
6/18/2022 1:17	-0.04	6/19/2022 0:07	0.79	6/19/2022 0:30	3.40	6/19/2022 1:53	-0.21	6/18/2022 0:41	10.90
6/18/2022 1:18	-0.04	6/19/2022 0:08	0.79	6/19/2022 0:31	3.39	6/19/2022 1:54	-0.24	6/18/2022 0:42	10.90
6/18/2022 1:19	-0.04	6/19/2022 0:09	0.79	6/19/2022 0:32	3.39	6/19/2022 1:55	-0.20	6/18/2022 0:43	10.90
6/18/2022 1:20	-0.02	6/19/2022 0:10	0.79	6/19/2022 0:33	3.41	6/19/2022 1:56	-0.24	6/18/2022 0:44	10.88
6/18/2022 1:21	-0.02	6/19/2022 0:11	0.79	6/19/2022 0:34	3.40	6/19/2022 1:57	-0.24	6/18/2022 0:45	10.91
6/18/2022 1:22	-0.04	6/19/2022 0:12	0.79	6/19/2022 0:35	3.39	6/19/2022 1:58	-0.20	6/18/2022 0:46	10.91
6/18/2022 1:23	-0.03	6/19/2022 0:13	0.79	6/19/2022 0:36	3.39	6/19/2022 1:59	-0.23	6/18/2022 0:47	10.91
6/18/2022 1:24	-0.04	6/19/2022 0:14	0.79	6/19/2022 0:37	3.40	6/19/2022 2:00	-0.21	6/18/2022 0:48	10.88
6/18/2022 1:25	-0.04	6/19/2022 0:15	0.79	6/19/2022 0:38	3.38	6/19/2022 2:01	-0.22	6/18/2022 0:49	10.91
6/18/2022 1:26	-0.03	6/19/2022 0:16	0.79	6/19/2022 0:39	3.40	6/19/2022 2:02	-0.21	6/18/2022 0:50	10.92
6/18/2022 1:27	-0.04	6/19/2022 0:17	0.79	6/19/2022 0:40	3.39	6/19/2022 2:03	-0.24	6/18/2022 0:51	10.90
6/18/2022 1:28	-0.03	6/19/2022 0:18	0.79	6/19/2022 0:41	3.37	6/19/2022 2:04	-0.25	6/18/2022 0:52	10.96
6/18/2022 1:29	-0.04	6/19/2022 0:19	0.79	6/19/2022 0:42	3.38	6/19/2022 2:05	-0.21	6/18/2022 0:53	10.85
6/18/2022 1:30	-0.03	6/19/2022 0:20	0.79	6/19/2022 0:43	3.37	6/19/2022 2:06	-0.24	6/18/2022 0:54	10.91
6/18/2022 1:31	-0.03	6/19/2022 0:21	0.79	6/19/2022 0:44	3.43	6/19/2022 2:07	-0.24	6/18/2022 0:55	10.88
6/18/2022 1:32	-0.02	6/19/2022 0:22	0.79	6/19/2022 0:45	3.37	6/19/2022 2:08	-0.22	6/18/2022 0:56	10.88
6/18/2022 1:33	-0.03	6/19/2022 0:23	0.79	6/19/2022 0:46	3.39	6/19/2022 2:09	-0.20	6/18/2022 0:57	10.91
6/18/2022 1:34	-0.03	6/19/2022 0:24	0.79	6/19/2022 0:47	3.41	6/19/2022 2:10	-0.21	6/18/2022 0:58	10.92
6/18/2022 1:35	-0.03	6/19/2022 0:25	0.79	6/19/2022 0:48	3.33	6/19/2022 2:11	-0.23	6/18/2022 0:59	10.89
6/18/2022 1:36	-0.03	6/19/2022 0:26	0.79	6/19/2022 0:49	3.39	6/19/2022 2:12	-0.22	6/18/2022 1:00	10.89
6/18/2022 1:37	-0.03	6/19/2022 0:27	0.79	6/19/2022 0:50	3.38	6/19/2022 2:13	-0.28	6/18/2022 1:01	10.91
6/18/2022 1:38	-0.03	6/19/2022 0:28	0.79	6/19/2022 0:51	3.40	6/19/2022 2:14	-0.22	6/18/2022 1:02	10.93
6/18/2022 1:39	-0.03	6/19/2022 0:29	0.79	6/19/2022 0:52	3.40	6/19/2022 2:15	-0.19	6/18/2022 1:03	10.92
6/18/2022 1:40	-0.04	6/19/2022 0:30	0.79	6/19/2022 0:53	3.39	6/19/2022 2:16	-0.25	6/18/2022 1:04	10.93
6/18/2022 1:41	-0.04	6/19/2022 0:31	0.79	6/19/2022 0:54	3.39	6/19/2022 2:17	-0.24	6/18/2022 1:05	10.89
6/18/2022 1:42	-0.03	6/19/2022 0:32	0.79	6/19/2022 0:55	3.39	6/19/2022 2:18	-0.23	6/18/2022 1:06	10.88
6/18/2022 1:43	-0.05	6/19/2022 0:33	0.79	6/19/2022 0:56	3.37	6/19/2022 2:19	-0.19	6/18/2022 1:07	10.86
6/18/2022 1:44	-0.03	6/19/2022 0:34	0.79	6/19/2022 0:57	3.37	6/19/2022 2:20	-0.22	6/18/2022 1:08	10.92
6/18/2022 1:45	-0.03	6/19/2022 0:35	0.79	6/19/2022 0:58	3.40	6/19/2022 2:21	-0.25	6/18/2022 1:09	10.86
6/18/2022 1:46	-0.02	6/19/2022 0:36	0.79	6/19/2022 0:59	3.40	6/19/2022 2:22	-0.26	6/18/2022 1:10	10.89
6/18/2022 1:47	-0.03	6/19/2022 0:37	0.79	6/19/2022 1:00	3.36	6/19/2022 2:23	-0.28	6/18/2022 1:11	10.85
6/18/2022 1:48	-0.02	6/19/2022 0:38	0.79	6/19/2022 1:01	3.38	6/19/2022 2:24	-0.24	6/18/2022 1:12	10.83
6/18/2022 1:49	-0.04	6/19/2022 0:39	0.79	6/19/2022 1:02	3.36	6/19/2022 2:25	-0.23	6/18/2022 1:13	10.88
6/18/2022 1:50	-0.04	6/19/2022 0:40	0.79	6/19/2022 1:03	3.39	6/19/2022 2:26	-0.20	6/18/2022 1:14	10.88
6/18/2022 1:51	-0.02	6/19/2022 0:41	0.79	6/19/2022 1:04	3.36	6/19/2022 2:27	-0.21	6/18/2022 1:15	10.93
6/18/2022 1:52	-0.05	6/19/2022 0:42	0.79	6/19/2022 1:05	3.42	6/19/2022 2:28	-0.21	6/18/2022 1:16	10.87

6/18/2022 1:53	-0.03	6/19/2022 0:43	0.79	6/19/2022 1:06	3.38	6/19/2022 2:29	-0.20	6/18/2022 1:17	10.86
6/18/2022 1:54	-0.02	6/19/2022 0:44	0.79	6/19/2022 1:07	3.37	6/19/2022 2:30	-0.20	6/18/2022 1:18	10.90
6/18/2022 1:55	-0.04	6/19/2022 0:45	0.79	6/19/2022 1:08	3.37	6/19/2022 2:31	-0.22	6/18/2022 1:19	10.82
6/18/2022 1:56	-0.03	6/19/2022 0:46	0.79	6/19/2022 1:09	3.39	6/19/2022 2:32	-0.25	6/18/2022 1:20	10.87
6/18/2022 1:57	-0.03	6/19/2022 0:47	0.80	6/19/2022 1:10	3.39	6/19/2022 2:33	-0.23	6/18/2022 1:21	10.88
6/18/2022 1:58	-0.03	6/19/2022 0:48	0.79	6/19/2022 1:11	3.37	6/19/2022 2:34	-0.22	6/18/2022 1:22	10.86
6/18/2022 1:59	-0.03	6/19/2022 0:49	0.80	6/19/2022 1:12	3.38	6/19/2022 2:35	-0.24	6/18/2022 1:23	10.88
6/18/2022 2:00	-0.03	6/19/2022 0:50	0.79	6/19/2022 1:13	3.37	6/19/2022 2:36	-0.21	6/18/2022 1:24	10.85
6/18/2022 2:01	-0.04	6/19/2022 0:51	0.79	6/19/2022 1:14	3.37	6/19/2022 2:37	-0.24	6/18/2022 1:25	10.89
6/18/2022 2:02	-0.04	6/19/2022 0:52	0.79	6/19/2022 1:15	3.37	6/19/2022 2:38	-0.21	6/18/2022 1:26	10.85
6/18/2022 2:03	-0.02	6/19/2022 0:53	0.80	6/19/2022 1:16	3.40	6/19/2022 2:39	-0.24	6/18/2022 1:27	10.90
6/18/2022 2:04	-0.03	6/19/2022 0:54	0.79	6/19/2022 1:17	3.41	6/19/2022 2:40	-0.22	6/18/2022 1:28	10.90
6/18/2022 2:05	-0.05	6/19/2022 0:55	0.79	6/19/2022 1:18	3.40	6/19/2022 2:41	-0.25	6/18/2022 1:29	10.89
6/18/2022 2:06	-0.02	6/19/2022 0:56	0.79	6/19/2022 1:19	3.37	6/19/2022 2:42	-0.24	6/18/2022 1:30	10.95
6/18/2022 2:07	-0.04	6/19/2022 0:57	0.80	6/19/2022 1:20	3.43	6/19/2022 2:43	-0.25	6/18/2022 1:31	10.89
6/18/2022 2:08	-0.02	6/19/2022 0:58	0.79	6/19/2022 1:21	3.39	6/19/2022 2:44	-0.24	6/18/2022 1:32	10.94
6/18/2022 2:09	-0.04	6/19/2022 0:59	0.79	6/19/2022 1:22	3.38	6/19/2022 2:45	-0.25	6/18/2022 1:33	10.88
6/18/2022 2:10	-0.03	6/19/2022 1:00	0.79	6/19/2022 1:23	3.40	6/19/2022 2:46	-0.22	6/18/2022 1:34	10.91
6/18/2022 2:11	-0.03	6/19/2022 1:01	0.80	6/19/2022 1:24	3.36	6/19/2022 2:47	-0.24	6/18/2022 1:35	10.91
6/18/2022 2:12	-0.03	6/19/2022 1:02	0.79	6/19/2022 1:25	3.38	6/19/2022 2:48	-0.19	6/18/2022 1:36	10.90
6/18/2022 2:13	-0.03	6/19/2022 1:03	0.79	6/19/2022 1:26	3.38	6/19/2022 2:49	-0.19	6/18/2022 1:37	10.88
6/18/2022 2:14	-0.02	6/19/2022 1:04	0.80	6/19/2022 1:27	3.40	6/19/2022 2:50	-0.23	6/18/2022 1:38	10.89
6/18/2022 2:15	-0.02	6/19/2022 1:05	0.79	6/19/2022 1:28	3.41	6/19/2022 2:51	-0.22	6/18/2022 1:39	10.93
6/18/2022 2:16	-0.05	6/19/2022 1:06	0.80	6/19/2022 1:29	3.38	6/19/2022 2:52	-0.23	6/18/2022 1:40	10.91
6/18/2022 2:17	-0.04	6/19/2022 1:07	0.79	6/19/2022 1:30	3.38	6/19/2022 2:53	-0.24	6/18/2022 1:41	10.90
6/18/2022 2:18	-0.02	6/19/2022 1:08	0.79	6/19/2022 1:31	3.38	6/19/2022 2:54	-0.20	6/18/2022 1:42	10.89
6/18/2022 2:19	-0.03	6/19/2022 1:09	0.80	6/19/2022 1:32	3.39	6/19/2022 2:55	-0.26	6/18/2022 1:43	10.89
6/18/2022 2:20	-0.04	6/19/2022 1:10	0.79	6/19/2022 1:33	3.37	6/19/2022 2:56	-0.24	6/18/2022 1:44	10.87
6/18/2022 2:21	-0.04	6/19/2022 1:11	0.79	6/19/2022 1:34	3.38	6/19/2022 2:57	-0.21	6/18/2022 1:45	10.88
6/18/2022 2:22	-0.02	6/19/2022 1:12	0.79	6/19/2022 1:35	3.41	6/19/2022 2:58	-0.25	6/18/2022 1:46	10.91
6/18/2022 2:23	-0.04	6/19/2022 1:13	0.79	6/19/2022 1:36	3.38	6/19/2022 2:59	-0.27	6/18/2022 1:47	10.91
6/18/2022 2:24	-0.02	6/19/2022 1:14	0.80	6/19/2022 1:37	3.37	6/19/2022 3:00	-0.23	6/18/2022 1:48	10.89
6/18/2022 2:25	-0.04	6/19/2022 1:15	0.79	6/19/2022 1:38	3.41	6/19/2022 3:01	-0.19	6/18/2022 1:49	10.90
6/18/2022 2:26	-0.03	6/19/2022 1:16	0.79	6/19/2022 1:39	3.39	6/19/2022 3:02	-0.27	6/18/2022 1:50	10.89
6/18/2022 2:27	-0.04	6/19/2022 1:17	0.80	6/19/2022 1:40	3.39	6/19/2022 3:03	-0.26	6/18/2022 1:51	10.90
6/18/2022 2:28	-0.03	6/19/2022 1:18	0.79	6/19/2022 1:41	3.38	6/19/2022 3:04	-0.22	6/18/2022 1:52	10.92
6/18/2022 2:29	-0.03	6/19/2022 1:19	0.80	6/19/2022 1:42	3.39	6/19/2022 3:05	-0.23	6/18/2022 1:53	10.89
6/18/2022 2:30	-0.05	6/19/2022 1:20	0.79	6/19/2022 1:43	3.39	6/19/2022 3:06	-0.25	6/18/2022 1:54	10.89
6/18/2022 2:31	-0.04	6/19/2022 1:21	0.79	6/19/2022 1:44	3.37	6/19/2022 3:07	-0.19	6/18/2022 1:55	10.87
6/18/2022 2:32	-0.03	6/19/2022 1:22	0.79	6/19/2022 1:45	3.40	6/19/2022 3:08	-0.23	6/18/2022 1:56	10.92
6/18/2022 2:33	-0.03	6/19/2022 1:23	0.80	6/19/2022 1:46	3.39	6/19/2022 3:09	-0.22	6/18/2022 1:57	10.92
6/18/2022 2:34	-0.03	6/19/2022 1:24	0.79	6/19/2022 1:47	3.39	6/19/2022 3:10	-0.19	6/18/2022 1:58	10.87
6/18/2022 2:35	-0.04	6/19/2022 1:25	0.80	6/19/2022 1:48	3.37	6/19/2022 3:11	-0.22	6/18/2022 1:59	10.88
6/18/2022 2:36	-0.03	6/19/2022 1:26	0.80	6/19/2022 1:49	3.38	6/19/2022 3:12	-0.26	6/18/2022 2:00	10.89
6/18/2022 2:37	-0.03	6/19/2022 1:27	0.80	6/19/2022 1:50	3.40	6/19/2022 3:13	-0.23	6/18/2022 2:01	10.92
6/18/2022 2:38	-0.04	6/19/2022 1:28	0.80	6/19/2022 1:51	3.38	6/19/2022 3:14	-0.23	6/18/2022 2:02	10.94
6/18/2022 2:39	-0.03	6/19/2022 1:29	0.80	6/19/2022 1:52	3.40	6/19/2022 3:15	-0.20	6/18/2022 2:03	10.87
6/18/2022 2:40	-0.04	6/19/2022 1:30	0.80	6/19/2022 1:53	3.36	6/19/2022 3:16	-0.26	6/18/2022 2:04	10.95
6/18/2022 2:41	-0.03	6/19/2022 1:31	0.80	6/19/2022 1:54	3.38	6/19/2022 3:17	-0.18	6/18/2022 2:05	10.92
6/18/2022 2:42	-0.04	6/19/2022 1:32	0.80	6/19/2022 1:55	3.39	6/19/2022 3:18	-0.22	6/18/2022 2:06	10.91
6/18/2022 2:43	-0.03	6/19/2022 1:33	0.80	6/19/2022 1:56	3.38	6/19/2022 3:19	-0.21	6/18/2022 2:07	10.85
6/18/2022 2:44	-0.04	6/19/2022 1:34	0.80	6/19/2022 1:57	3.37	6/19/2022 3:20	-0.23	6/18/2022 2:08	10.87
6/18/2022 2:45	-0.05	6/19/2022 1:35	0.80	6/19/2022 1:58	3.37	6/19/2022 3:21	-0.19	6/18/2022 2:09	10.90
6/18/2022 2:46	-0.03	6/19/2022 1:36	0.82	6/19/2022 1:59	3.42	6/19/2022 3:22	-0.25	6/18/2022 2:10	10.87
6/18/2022 2:47	-0.03	6/19/2022 1:37	0.79	6/19/2022 2:00	3.40	6/19/2022 3:23	-0.24	6/18/2022 2:11	10.90
6/18/2022 2:48	-0.02	6/19/2022 1:38	0.80	6/19/2022 2:01	3.39	6/19/2022 3:24	-0.24	6/18/2022 2:12	10.86
6/18/2022 2:49	-0.03	6/19/2022 1:39	0.80	6/19/2022 2:02	3.40	6/19/2022 3:25	-0.22	6/18/2022 2:13	10.90
6/18/2022 2:50	-0.04	6/19/2022 1:40	0.80	6/19/2022 2:03	3.38	6/19/2022 3:26	-0.24	6/18/2022 2:14	10.86
6/18/2022 2:51	-0.04	6/19/2022 1:41	0.80	6/19/2022 2:04	3.38	6/19/2022 3:27	-0.24	6/18/2022 2:15	10.91
6/18/2022 2:52	-0.05	6/19/2022 1:42	0.80	6/19/2022 2:05	3.41	6/19/2022 3:28	-0.25	6/18/2022 2:16	10.89
6/18/2022 2:53	-0.04	6/19/2022 1:43	0.80	6/19/2022 2:06	3.41	6/19/2022 3:29	-0.24	6/18/2022 2:17	10.90
6/18/2022 2:54	-0.05	6/19/2022 1:44	0.80	6/19/2022 2:07	3.37	6/19/2022 3:30	-0.23	6/18/2022 2:18	10.90
6/18/2022 2:55	-0.03	6/19/2022 1:45	0.80	6/19/2022 2:08	3.37	6/19/2022 3:31	-0.22	6/18/2022 2:19	10.90
6/18/2022 2:56	-0.03	6/19/2022 1:46	0.80	6/19/2022 2:09	3.41	6/19/2022 3:32	-0.19	6/18/2022 2:20	10.86
6/18/2022 2:57	-0.05	6/19/2022 1:47	0.79	6/19/2022 2:10	3.38	6/19/2022 3:33	-0.21	6/18/2022 2:21	10.89
6/18/2022 2:58	-0.04	6/19/2022 1:48	0.80	6/19/2022 2:11	3.39	6/19/2022 3:34	-0.21	6/18/2022 2:22	10.93
6/18/2022 2:59	-0.03	6/19/2022 1:49	0.80	6/19/2022 2:12	3.37	6/19/2022 3:35	-0.19	6/18/2022 2:23	10.91
6/18/2022 3:00	-0.04	6/19/2022 1:50	0.80	6/19/2022 2:13	3.40	6/19/2022 3:36	-0.21	6/18/2022 2:24	10.88
6/18/2022 3:01	-0.04	6/19/2022 1:51	0.80	6/19/2022 2:14	3.39	6/19/2022 3:37	-0.23	6/18/2022 2:25	10.87
6/18/2022 3:02	-0.03	6/19/2022 1:52	0.80	6/19/2022 2:15	3.38	6/19/2022 3:38	-0.17	6/18/2022 2:26	10.93
6/18/2022 3:03	-0.03	6/19/2022 1:53	0.80	6/19/2022 2:16	3.40	6/19/2022 3:39	-0.23	6/18/2022 2:27	10.91
6/18/2022 3:04	-0.05	6/19/2022 1:54	0.80	6/19/2022 2:17	3.39	6/19/2022 3:40	-0.22	6/18/2022 2:28	10.90
6/18/2022 3:05	-0.03	6/19/2022 1:55	0.80	6/19/2022 2:18	3.40	6/19/2022 3:41	-0.25	6/18/2022 2:29	10.92
6/18/2022 3:06	-0.02	6/19/2022 1:56	0.80	6/19/2022 2:19	3.38	6/19/2022 3:42	-0.26	6/18/2022 2:30	10.88
6/18/2022 3:07	-0.03	6/19/2022 1:57	0.80	6/19/2022 2:20	3.41	6/19/2022 3:43	-0.24	6/18/2022 2:31	10.87
6/18/2022 3:08	-0.03	6/19/2022 1:58	0.80	6/19/2022 2:21	3.43	6/19/2022 3:44	-0.22	6/18/2022 2:32	10.92
6/18/2022 3:09	-0.05	6/19/2022 1:59	0.80	6/19/2022 2:22	3.41	6/19/2022 3:45	-0.20	6/18/2022 2:33	10.89
6/18/2022 3:10	-0.04	6/19/2022 2:00	0.80	6/19/2022 2:23	3.39	6/19/2022 3:46	-0.24	6/18/2022 2:34	10.88
6/18/2022 3:11	-0.04	6/19/2022 2:01	0.80	6/19/2022 2:24	3.40	6/19/2022 3:47	-0.19	6/18/2022 2:35	10.94
6/18/2022 3:12	-0.03	6/19/2022 2:02	0.80	6/19/2022 2:25	3.41	6/19/2022 3:48	-0.22	6/18/2022 2:36	10.88
6/18/2022 3:13	-0.04	6/19/2022 2:03	0.80	6/19/2022 2:26	3.38	6/19/2022 3:49	-0.24	6/18/2022 2:37	10.88
6/18/2022 3:14	-0.03	6/19/2022 2:04	0.80	6/19/2022 2:27	3.43	6/19/2022 3:50	-0.21	6/18/2022 2:38	10.88
6/18/2022 3:15	-0.05	6/19/2022 2:05	0.80	6/19/2022 2:28	3.39	6/19/2022 3:51	-0.27	6/18/2022 2:39	10.87
6/18/2022 3:16	-0.03	6/19/2022 2:06	0.80	6/19/2022 2:29	3.37	6/19/2022 3:52	-0.22	6/18/2022 2:40	10.92
6/18/2022 3:17	-0.03	6/19/2022 2:07	0.80	6/19/2022 2:30	3.40	6/19/2022 3:53	-0.22	6/18/2022 2:41	10.90
6/18/2022 3:18	-0.03	6/19/2022 2:08	0.80	6/19/2022 2:31	3.40	6/19/2022 3:54	-0.22	6/18/2022 2:42	10.90
6/18/2022 3:19	-0.03	6/19/2022 2:09	0.80	6/19/2022 2:32	3.41	6/19/2022 3:55	-0.24	6/18/2022 2:43	10.86
6/18/2022 3:20	-0.03	6/19/2022 2:10	0.80	6/19/2022 2:33	3.38	6/19/2022 3:56	-0.21	6/18/2022 2:44	10.88

6/18/2022 3:21	-0.05	6/19/2022 2:11	0.80	6/19/2022 2:34	3.39	6/19/2022 3:57	-0.23	6/18/2022 2:45	10.88
6/18/2022 3:22	-0.03	6/19/2022 2:12	0.80	6/19/2022 2:35	3.40	6/19/2022 3:58	-0.26	6/18/2022 2:46	10.85
6/18/2022 3:23	-0.03	6/19/2022 2:13	0.80	6/19/2022 2:36	3.40	6/19/2022 3:59	-0.26	6/18/2022 2:47	10.90
6/18/2022 3:24	-0.05	6/19/2022 2:14	0.80	6/19/2022 2:37	3.39	6/19/2022 4:00	-0.25	6/18/2022 2:48	10.88
6/18/2022 3:25	-0.03	6/19/2022 2:15	0.80	6/19/2022 2:38	3.39	6/19/2022 4:01	-0.23	6/18/2022 2:49	10.91
6/18/2022 3:26	-0.04	6/19/2022 2:16	0.80	6/19/2022 2:39	3.39	6/19/2022 4:02	-0.22	6/18/2022 2:50	10.94
6/18/2022 3:27	-0.04	6/19/2022 2:17	0.80	6/19/2022 2:40	3.40	6/19/2022 4:03	-0.24	6/18/2022 2:51	10.90
6/18/2022 3:28	-0.04	6/19/2022 2:18	0.80	6/19/2022 2:41	3.39	6/19/2022 4:04	-0.24	6/18/2022 2:52	10.86
6/18/2022 3:29	-0.05	6/19/2022 2:19	0.80	6/19/2022 2:42	3.38	6/19/2022 4:05	-0.23	6/18/2022 2:53	10.89
6/18/2022 3:30	-0.05	6/19/2022 2:20	0.80	6/19/2022 2:43	3.40	6/19/2022 4:06	-0.22	6/18/2022 2:54	10.93
6/18/2022 3:31	-0.05	6/19/2022 2:21	0.79	6/19/2022 2:44	3.38	6/19/2022 4:07	-0.21	6/18/2022 2:55	10.94
6/18/2022 3:32	-0.03	6/19/2022 2:22	0.80	6/19/2022 2:45	3.37	6/19/2022 4:08	-0.25	6/18/2022 2:56	10.93
6/18/2022 3:33	-0.03	6/19/2022 2:23	0.80	6/19/2022 2:46	3.38	6/19/2022 4:09	-0.24	6/18/2022 2:57	10.89
6/18/2022 3:34	-0.04	6/19/2022 2:24	0.80	6/19/2022 2:47	3.39	6/19/2022 4:10	-0.24	6/18/2022 2:58	10.87
6/18/2022 3:35	-0.05	6/19/2022 2:25	0.80	6/19/2022 2:48	3.40	6/19/2022 4:11	-0.23	6/18/2022 2:59	10.90
6/18/2022 3:36	-0.05	6/19/2022 2:26	0.80	6/19/2022 2:49	3.37	6/19/2022 4:12	-0.22	6/18/2022 3:00	10.89
6/18/2022 3:37	-0.03	6/19/2022 2:27	0.80	6/19/2022 2:50	3.39	6/19/2022 4:13	-0.18	6/18/2022 3:01	10.86
6/18/2022 3:38	-0.03	6/19/2022 2:28	0.80	6/19/2022 2:51	3.40	6/19/2022 4:14	-0.21	6/18/2022 3:02	10.90
6/18/2022 3:39	-0.03	6/19/2022 2:29	0.80	6/19/2022 2:52	3.38	6/19/2022 4:15	-0.23	6/18/2022 3:03	10.88
6/18/2022 3:40	-0.04	6/19/2022 2:30	0.80	6/19/2022 2:53	3.41	6/19/2022 4:16	-0.21	6/18/2022 3:04	10.91
6/18/2022 3:41	-0.03	6/19/2022 2:31	0.80	6/19/2022 2:54	3.40	6/19/2022 4:17	-0.27	6/18/2022 3:05	10.94
6/18/2022 3:42	-0.03	6/19/2022 2:32	0.80	6/19/2022 2:55	3.39	6/19/2022 4:18	-0.25	6/18/2022 3:06	10.91
6/18/2022 3:43	-0.03	6/19/2022 2:33	0.80	6/19/2022 2:56	3.41	6/19/2022 4:19	-0.26	6/18/2022 3:07	10.94
6/18/2022 3:44	-0.03	6/19/2022 2:34	0.80	6/19/2022 2:57	3.42	6/19/2022 4:20	-0.24	6/18/2022 3:08	10.94
6/18/2022 3:45	-0.03	6/19/2022 2:35	0.80	6/19/2022 2:58	3.42	6/19/2022 4:21	-0.24	6/18/2022 3:09	10.86
6/18/2022 3:46	-0.03	6/19/2022 2:36	0.80	6/19/2022 2:59	3.38	6/19/2022 4:22	-0.23	6/18/2022 3:10	10.89
6/18/2022 3:47	-0.05	6/19/2022 2:37	0.80	6/19/2022 3:00	3.43	6/19/2022 4:23	-0.25	6/18/2022 3:11	10.94
6/18/2022 3:48	-0.04	6/19/2022 2:38	0.80	6/19/2022 3:01	3.43	6/19/2022 4:24	-0.21	6/18/2022 3:12	10.92
6/18/2022 3:49	-0.05	6/19/2022 2:39	0.80	6/19/2022 3:02	3.44	6/19/2022 4:25	-0.24	6/18/2022 3:13	10.93
6/18/2022 3:50	-0.05	6/19/2022 2:40	0.80	6/19/2022 3:03	3.39	6/19/2022 4:26	-0.28	6/18/2022 3:14	10.91
6/18/2022 3:51	-0.04	6/19/2022 2:41	0.80	6/19/2022 3:04	3.39	6/19/2022 4:27	-0.23	6/18/2022 3:15	10.96
6/18/2022 3:52	-0.05	6/19/2022 2:42	0.80	6/19/2022 3:05	3.40	6/19/2022 4:28	-0.24	6/18/2022 3:16	10.93
6/18/2022 3:53	-0.03	6/19/2022 2:43	0.80	6/19/2022 3:06	3.40	6/19/2022 4:29	-0.24	6/18/2022 3:17	10.92
6/18/2022 3:54	-0.03	6/19/2022 2:44	0.80	6/19/2022 3:07	3.40	6/19/2022 4:30	-0.21	6/18/2022 3:18	10.88
6/18/2022 3:55	-0.04	6/19/2022 2:45	0.80	6/19/2022 3:08	3.38	6/19/2022 4:31	-0.22	6/18/2022 3:19	10.91
6/18/2022 3:56	-0.04	6/19/2022 2:46	0.80	6/19/2022 3:09	3.40	6/19/2022 4:32	-0.21	6/18/2022 3:20	10.88
6/18/2022 3:57	-0.02	6/19/2022 2:47	0.80	6/19/2022 3:10	3.39	6/19/2022 4:33	-0.23	6/18/2022 3:21	10.93
6/18/2022 3:58	-0.05	6/19/2022 2:48	0.80	6/19/2022 3:11	3.41	6/19/2022 4:34	-0.23	6/18/2022 3:22	10.89
6/18/2022 3:59	-0.03	6/19/2022 2:49	0.80	6/19/2022 3:12	3.41	6/19/2022 4:35	-0.21	6/18/2022 3:23	10.92
6/18/2022 4:00	-0.04	6/19/2022 2:50	0.80	6/19/2022 3:13	3.41	6/19/2022 4:36	-0.19	6/18/2022 3:24	10.94
6/18/2022 4:01	-0.03	6/19/2022 2:51	0.80	6/19/2022 3:14	3.41	6/19/2022 4:37	-0.23	6/18/2022 3:25	10.91
6/18/2022 4:02	-0.04	6/19/2022 2:52	0.80	6/19/2022 3:15	3.42	6/19/2022 4:38	-0.21	6/18/2022 3:26	10.94
6/18/2022 4:03	-0.05	6/19/2022 2:53	0.80	6/19/2022 3:16	3.41	6/19/2022 4:39	-0.23	6/18/2022 3:27	10.90
6/18/2022 4:04	-0.03	6/19/2022 2:54	0.80	6/19/2022 3:17	3.43	6/19/2022 4:40	-0.23	6/18/2022 3:28	10.92
6/18/2022 4:05	-0.03	6/19/2022 2:55	0.80	6/19/2022 3:18	3.39	6/19/2022 4:41	-0.22	6/18/2022 3:29	10.91
6/18/2022 4:06	-0.03	6/19/2022 2:56	0.80	6/19/2022 3:19	3.41	6/19/2022 4:42	-0.26	6/18/2022 3:30	10.91
6/18/2022 4:07	-0.05	6/19/2022 2:57	0.80	6/19/2022 3:20	3.40	6/19/2022 4:43	-0.24	6/18/2022 3:31	10.94
6/18/2022 4:08	-0.03	6/19/2022 2:58	0.80	6/19/2022 3:21	3.42	6/19/2022 4:44	-0.23	6/18/2022 3:32	10.89
6/18/2022 4:09	-0.03	6/19/2022 2:59	0.80	6/19/2022 3:22	3.42	6/19/2022 4:45	-0.23	6/18/2022 3:33	10.91
6/18/2022 4:10	-0.05	6/19/2022 3:00	0.80	6/19/2022 3:23	3.43	6/19/2022 4:46	-0.21	6/18/2022 3:34	10.94
6/18/2022 4:11	-0.03	6/19/2022 3:01	0.80	6/19/2022 3:24	3.39	6/19/2022 4:47	-0.24	6/18/2022 3:35	10.89
6/18/2022 4:12	-0.04	6/19/2022 3:02	0.80	6/19/2022 3:25	3.40	6/19/2022 4:48	-0.22	6/18/2022 3:36	10.91
6/18/2022 4:13	-0.03	6/19/2022 3:03	0.80	6/19/2022 3:26	3.40	6/19/2022 4:49	-0.21	6/18/2022 3:37	10.88
6/18/2022 4:14	-0.03	6/19/2022 3:04	0.80	6/19/2022 3:27	3.44	6/19/2022 4:50	-0.26	6/18/2022 3:38	10.86
6/18/2022 4:15	-0.04	6/19/2022 3:05	0.80	6/19/2022 3:28	3.41	6/19/2022 4:51	-0.23	6/18/2022 3:39	10.88
6/18/2022 4:16	-0.03	6/19/2022 3:06	0.80	6/19/2022 3:29	3.40	6/19/2022 4:52	-0.26	6/18/2022 3:40	10.96
6/18/2022 4:17	-0.03	6/19/2022 3:07	0.80	6/19/2022 3:30	3.40	6/19/2022 4:53	-0.25	6/18/2022 3:41	10.87
6/18/2022 4:18	-0.04	6/19/2022 3:08	0.80	6/19/2022 3:31	3.40	6/19/2022 4:54	-0.22	6/18/2022 3:42	10.89
6/18/2022 4:19	-0.04	6/19/2022 3:09	0.80	6/19/2022 3:32	3.40	6/19/2022 4:55	-0.23	6/18/2022 3:43	10.86
6/18/2022 4:20	-0.03	6/19/2022 3:10	0.80	6/19/2022 3:33	3.38	6/19/2022 4:56	-0.27	6/18/2022 3:44	10.89
6/18/2022 4:21	-0.04	6/19/2022 3:11	0.80	6/19/2022 3:34	3.41	6/19/2022 4:57	-0.27	6/18/2022 3:45	10.90
6/18/2022 4:22	-0.03	6/19/2022 3:12	0.80	6/19/2022 3:35	3.42	6/19/2022 4:58	-0.23	6/18/2022 3:46	10.95
6/18/2022 4:23	-0.03	6/19/2022 3:13	0.80	6/19/2022 3:36	3.40	6/19/2022 4:59	-0.29	6/18/2022 3:47	10.92
6/18/2022 4:24	-0.05	6/19/2022 3:14	0.80	6/19/2022 3:37	3.39	6/19/2022 5:00	-0.22	6/18/2022 3:48	10.91
6/18/2022 4:25	-0.03	6/19/2022 3:15	0.80	6/19/2022 3:38	3.42	6/19/2022 5:01	-0.24	6/18/2022 3:49	10.90
6/18/2022 4:26	-0.04	6/19/2022 3:16	0.80	6/19/2022 3:39	3.41	6/19/2022 5:02	-0.22	6/18/2022 3:50	10.96
6/18/2022 4:27	-0.03	6/19/2022 3:17	0.80	6/19/2022 3:40	3.37	6/19/2022 5:03	-0.26	6/18/2022 3:51	10.85
6/18/2022 4:28	-0.03	6/19/2022 3:18	0.80	6/19/2022 3:41	3.38	6/19/2022 5:04	-0.19	6/18/2022 3:52	10.92
6/18/2022 4:29	-0.03	6/19/2022 3:19	0.80	6/19/2022 3:42	3.38	6/19/2022 5:05	-0.25	6/18/2022 3:53	10.93
6/18/2022 4:30	-0.02	6/19/2022 3:20	0.80	6/19/2022 3:43	3.39	6/19/2022 5:06	-0.24	6/18/2022 3:54	10.88
6/18/2022 4:31	-0.04	6/19/2022 3:21	0.80	6/19/2022 3:44	3.43	6/19/2022 5:07	-0.23	6/18/2022 3:55	10.85
6/18/2022 4:32	-0.03	6/19/2022 3:22	0.80	6/19/2022 3:45	3.41	6/19/2022 5:08	-0.25	6/18/2022 3:56	10.92
6/18/2022 4:33	-0.03	6/19/2022 3:23	0.81	6/19/2022 3:46	3.42	6/19/2022 5:09	-0.24	6/18/2022 3:57	10.96
6/18/2022 4:34	-0.03	6/19/2022 3:24	0.80	6/19/2022 3:47	3.40	6/19/2022 5:10	-0.27	6/18/2022 3:58	10.89
6/18/2022 4:35	-0.03	6/19/2022 3:25	0.80	6/19/2022 3:48	3.42	6/19/2022 5:11	-0.17	6/18/2022 3:59	10.89
6/18/2022 4:36	-0.03	6/19/2022 3:26	0.80	6/19/2022 3:49	3.39	6/19/2022 5:12	-0.22	6/18/2022 4:00	10.99
6/18/2022 4:37	-0.03	6/19/2022 3:27	0.80	6/19/2022 3:50	3.40	6/19/2022 5:13	-0.24	6/18/2022 4:01	10.87
6/18/2022 4:38	-0.03	6/19/2022 3:28	0.80	6/19/2022 3:51	3.39	6/19/2022 5:14	-0.24	6/18/2022 4:02	10.87
6/18/2022 4:39	-0.03	6/19/2022 3:29	0.81	6/19/2022 3:52	3.40	6/19/2022 5:15	-0.22	6/18/2022 4:03	10.92
6/18/2022 4:40	-0.03	6/19/2022 3:30	0.80	6/19/2022 3:53	3.42	6/19/2022 5:16	-0.17	6/18/2022 4:04	10.84
6/18/2022 4:41	-0.03	6/19/2022 3:31	0.80	6/19/2022 3:54	3.38	6/19/2022 5:17	-0.19	6/18/2022 4:05	10.87
6/18/2022 4:42	-0.03	6/19/2022 3:32	0.80	6/19/2022 3:55	3.40	6/19/2022 5:18	-0.23	6/18/2022 4:06	10.94
6/18/2022 4:43	-0.05	6/19/2022 3:33	0.80	6/19/2022 3:56	3.42	6/19/2022 5:19	-0.21	6/18/2022 4:07	10.88
6/18/2022 4:44	-0.03	6/19/2022 3:34	0.80	6/19/2022 3:57	3.37	6/19/2022 5:20	-0.20	6/18/2022 4:08	10.90
6/18/2022 4:45	-0.05	6/19/2022 3:35	0.80	6/19/2022 3:58	3.43	6/19/2022 5:21	-0.23	6/18/2022 4:09	10.89
6/18/2022 4:46	-0.03	6/19/2022 3:36	0.81	6/19/2022 3:59	3.42	6/19/2022 5:22	-0.24	6/18/2022 4:10	10.91
6/18/2022 4:47	-0.03	6/19/2022 3:37	0.80	6/19/2022 4:00	3.39	6/19/2022 5:23	-0.28	6/18/2022 4:11	10.89
6/18/2022 4:48	-0.03	6/19/2022 3:38	0.80	6/19/2022 4:01	3.40	6/19/2022 5:24	-0.22	6/18/2022 4:12	10.88

6/18/2022 4:49	-0.04	6/19/2022 3:39	0.81	6/19/2022 4:02	3.40	6/19/2022 5:25	-0.27	6/18/2022 4:13	10.91
6/18/2022 4:50	-0.04	6/19/2022 3:40	0.80	6/19/2022 4:03	3.40	6/19/2022 5:26	-0.21	6/18/2022 4:14	10.93
6/18/2022 4:51	-0.03	6/19/2022 3:41	0.80	6/19/2022 4:04	3.40	6/19/2022 5:27	-0.23	6/18/2022 4:15	10.89
6/18/2022 4:52	-0.03	6/19/2022 3:42	0.81	6/19/2022 4:05	3.43	6/19/2022 5:28	-0.22	6/18/2022 4:16	10.91
6/18/2022 4:53	-0.03	6/19/2022 3:43	0.81	6/19/2022 4:06	3.41	6/19/2022 5:29	-0.23	6/18/2022 4:17	10.94
6/18/2022 4:54	-0.03	6/19/2022 3:44	0.80	6/19/2022 4:07	3.38	6/19/2022 5:30	-0.24	6/18/2022 4:18	10.91
6/18/2022 4:55	-0.03	6/19/2022 3:45	0.80	6/19/2022 4:08	3.38	6/19/2022 5:31	-0.24	6/18/2022 4:19	10.92
6/18/2022 4:56	-0.05	6/19/2022 3:46	0.81	6/19/2022 4:09	3.41	6/19/2022 5:32	-0.24	6/18/2022 4:20	10.92
6/18/2022 4:57	-0.03	6/19/2022 3:47	0.80	6/19/2022 4:10	3.39	6/19/2022 5:33	-0.25	6/18/2022 4:21	10.92
6/18/2022 4:58	-0.03	6/19/2022 3:48	0.80	6/19/2022 4:11	3.40	6/19/2022 5:34	-0.23	6/18/2022 4:22	10.89
6/18/2022 4:59	-0.03	6/19/2022 3:49	0.80	6/19/2022 4:12	3.41	6/19/2022 5:35	-0.24	6/18/2022 4:23	10.89
6/18/2022 5:00	-0.05	6/19/2022 3:50	0.80	6/19/2022 4:13	3.42	6/19/2022 5:36	-0.23	6/18/2022 4:24	10.90
6/18/2022 5:01	-0.03	6/19/2022 3:51	0.81	6/19/2022 4:14	3.42	6/19/2022 5:37	-0.21	6/18/2022 4:25	10.87
6/18/2022 5:02	-0.03	6/19/2022 3:52	0.80	6/19/2022 4:15	3.41	6/19/2022 5:38	-0.23	6/18/2022 4:26	10.96
6/18/2022 5:03	-0.03	6/19/2022 3:53	0.80	6/19/2022 4:16	3.41	6/19/2022 5:39	-0.23	6/18/2022 4:27	10.90
6/18/2022 5:04	-0.03	6/19/2022 3:54	0.81	6/19/2022 4:17	3.41	6/19/2022 5:40	-0.22	6/18/2022 4:28	10.90
6/18/2022 5:05	-0.05	6/19/2022 3:55	0.80	6/19/2022 4:18	3.42	6/19/2022 5:41	-0.22	6/18/2022 4:29	10.91
6/18/2022 5:06	-0.03	6/19/2022 3:56	0.80	6/19/2022 4:19	3.38	6/19/2022 5:42	-0.22	6/18/2022 4:30	10.95
6/18/2022 5:07	-0.03	6/19/2022 3:57	0.80	6/19/2022 4:20	3.41	6/19/2022 5:43	-0.24	6/18/2022 4:31	10.90
6/18/2022 5:08	-0.03	6/19/2022 3:58	0.81	6/19/2022 4:21	3.41	6/19/2022 5:44	-0.22	6/18/2022 4:32	10.92
6/18/2022 5:09	-0.03	6/19/2022 3:59	0.80	6/19/2022 4:22	3.42	6/19/2022 5:45	-0.23	6/18/2022 4:33	10.85
6/18/2022 5:10	-0.03	6/19/2022 4:00	0.80	6/19/2022 4:23	3.42	6/19/2022 5:46	-0.22	6/18/2022 4:34	10.88
6/18/2022 5:11	-0.03	6/19/2022 4:01	0.80	6/19/2022 4:24	3.42	6/19/2022 5:47	-0.23	6/18/2022 4:35	10.97
6/18/2022 5:12	-0.03	6/19/2022 4:02	0.81	6/19/2022 4:25	3.41	6/19/2022 5:48	-0.22	6/18/2022 4:36	10.93
6/18/2022 5:13	-0.03	6/19/2022 4:03	0.80	6/19/2022 4:26	3.41	6/19/2022 5:49	-0.26	6/18/2022 4:37	10.95
6/18/2022 5:14	-0.03	6/19/2022 4:04	0.80	6/19/2022 4:27	3.38	6/19/2022 5:50	-0.19	6/18/2022 4:38	10.93
6/18/2022 5:15	-0.03	6/19/2022 4:05	0.81	6/19/2022 4:28	3.41	6/19/2022 5:51	-0.22	6/18/2022 4:39	10.92
6/18/2022 5:16	-0.04	6/19/2022 4:06	0.80	6/19/2022 4:29	3.42	6/19/2022 5:52	-0.23	6/18/2022 4:40	10.89
6/18/2022 5:17	-0.03	6/19/2022 4:07	0.80	6/19/2022 4:30	3.41	6/19/2022 5:53	-0.23	6/18/2022 4:41	10.91
6/18/2022 5:18	-0.03	6/19/2022 4:08	0.81	6/19/2022 4:31	3.39	6/19/2022 5:54	-0.25	6/18/2022 4:42	10.94
6/18/2022 5:19	-0.03	6/19/2022 4:09	0.80	6/19/2022 4:32	3.42	6/19/2022 5:55	-0.19	6/18/2022 4:43	10.96
6/18/2022 5:20	-0.04	6/19/2022 4:10	0.80	6/19/2022 4:33	3.42	6/19/2022 5:56	-0.24	6/18/2022 4:44	10.94
6/18/2022 5:21	-0.03	6/19/2022 4:11	0.80	6/19/2022 4:34	3.38	6/19/2022 5:57	-0.23	6/18/2022 4:45	10.90
6/18/2022 5:22	-0.05	6/19/2022 4:12	0.80	6/19/2022 4:35	3.42	6/19/2022 5:58	-0.24	6/18/2022 4:46	10.92
6/18/2022 5:23	-0.02	6/19/2022 4:13	0.80	6/19/2022 4:36	3.40	6/19/2022 5:59	-0.21	6/18/2022 4:47	10.87
6/18/2022 5:24	-0.05	6/19/2022 4:14	0.81	6/19/2022 4:37	3.40	6/19/2022 6:00	-0.23	6/18/2022 4:48	10.92
6/18/2022 5:25	-0.05	6/19/2022 4:15	0.80	6/19/2022 4:38	3.41	6/19/2022 6:01	-0.22	6/18/2022 4:49	10.93
6/18/2022 5:26	-0.05	6/19/2022 4:16	0.80	6/19/2022 4:39	3.39	6/19/2022 6:02	-0.24	6/18/2022 4:50	10.86
6/18/2022 5:27	-0.04	6/19/2022 4:17	0.80	6/19/2022 4:40	3.43	6/19/2022 6:03	-0.24	6/18/2022 4:51	10.90
6/18/2022 5:28	-0.05	6/19/2022 4:18	0.80	6/19/2022 4:41	3.41	6/19/2022 6:04	-0.25	6/18/2022 4:52	10.93
6/18/2022 5:29	-0.03	6/19/2022 4:19	0.80	6/19/2022 4:42	3.41	6/19/2022 6:05	-0.24	6/18/2022 4:53	10.88
6/18/2022 5:30	-0.04	6/19/2022 4:20	0.80	6/19/2022 4:43	3.40	6/19/2022 6:06	-0.20	6/18/2022 4:54	10.89
6/18/2022 5:31	-0.04	6/19/2022 4:21	0.81	6/19/2022 4:44	3.42	6/19/2022 6:07	-0.24	6/18/2022 4:55	10.95
6/18/2022 5:32	-0.03	6/19/2022 4:22	0.81	6/19/2022 4:45	3.41	6/19/2022 6:08	-0.23	6/18/2022 4:56	10.92
6/18/2022 5:33	-0.05	6/19/2022 4:23	0.80	6/19/2022 4:46	3.41	6/19/2022 6:09	-0.21	6/18/2022 4:57	10.97
6/18/2022 5:34	-0.03	6/19/2022 4:24	0.80	6/19/2022 4:47	3.40	6/19/2022 6:10	-0.22	6/18/2022 4:58	10.90
6/18/2022 5:35	-0.03	6/19/2022 4:25	0.81	6/19/2022 4:48	3.41	6/19/2022 6:11	-0.17	6/18/2022 4:59	10.94
6/18/2022 5:36	-0.03	6/19/2022 4:26	0.80	6/19/2022 4:49	3.41	6/19/2022 6:12	-0.20	6/18/2022 5:00	10.95
6/18/2022 5:37	-0.03	6/19/2022 4:27	0.80	6/19/2022 4:50	3.40	6/19/2022 6:13	-0.27	6/18/2022 5:01	10.95
6/18/2022 5:38	-0.05	6/19/2022 4:28	0.80	6/19/2022 4:51	3.42	6/19/2022 6:14	-0.22	6/18/2022 5:02	10.91
6/18/2022 5:39	-0.03	6/19/2022 4:29	0.81	6/19/2022 4:52	3.40	6/19/2022 6:15	-0.19	6/18/2022 5:03	10.96
6/18/2022 5:40	-0.03	6/19/2022 4:30	0.80	6/19/2022 4:53	3.42	6/19/2022 6:16	-0.22	6/18/2022 5:04	10.91
6/18/2022 5:41	-0.03	6/19/2022 4:31	0.81	6/19/2022 4:54	3.41	6/19/2022 6:17	-0.25	6/18/2022 5:05	10.96
6/18/2022 5:42	-0.03	6/19/2022 4:32	0.81	6/19/2022 4:55	3.42	6/19/2022 6:18	-0.20	6/18/2022 5:06	10.94
6/18/2022 5:43	-0.03	6/19/2022 4:33	0.81	6/19/2022 4:56	3.38	6/19/2022 6:19	-0.20	6/18/2022 5:07	10.97
6/18/2022 5:44	-0.03	6/19/2022 4:34	0.81	6/19/2022 4:57	3.41	6/19/2022 6:20	-0.24	6/18/2022 5:08	10.92
6/18/2022 5:45	-0.05	6/19/2022 4:35	0.80	6/19/2022 4:58	3.40	6/19/2022 6:21	-0.22	6/18/2022 5:09	10.94
6/18/2022 5:46	-0.05	6/19/2022 4:36	0.80	6/19/2022 4:59	3.43	6/19/2022 6:22	-0.25	6/18/2022 5:10	10.98
6/18/2022 5:47	-0.03	6/19/2022 4:37	0.80	6/19/2022 5:00	3.41	6/19/2022 6:23	-0.20	6/18/2022 5:11	10.92
6/18/2022 5:48	-0.05	6/19/2022 4:38	0.80	6/19/2022 5:01	3.40	6/19/2022 6:24	-0.17	6/18/2022 5:12	10.92
6/18/2022 5:49	-0.03	6/19/2022 4:39	0.80	6/19/2022 5:02	3.42	6/19/2022 6:25	-0.22	6/18/2022 5:13	10.93
6/18/2022 5:50	-0.03	6/19/2022 4:40	0.80	6/19/2022 5:03	3.43	6/19/2022 6:26	-0.25	6/18/2022 5:14	10.87
6/18/2022 5:51	-0.03	6/19/2022 4:41	0.81	6/19/2022 5:04	3.41	6/19/2022 6:27	-0.22	6/18/2022 5:15	10.88
6/18/2022 5:52	-0.03	6/19/2022 4:42	0.81	6/19/2022 5:05	3.42	6/19/2022 6:28	-0.25	6/18/2022 5:16	10.90
6/18/2022 5:53	-0.03	6/19/2022 4:43	0.81	6/19/2022 5:06	3.41	6/19/2022 6:29	-0.21	6/18/2022 5:17	10.94
6/18/2022 5:54	-0.03	6/19/2022 4:44	0.80	6/19/2022 5:07	3.38	6/19/2022 6:30	-0.25	6/18/2022 5:18	10.89
6/18/2022 5:55	-0.05	6/19/2022 4:45	0.81	6/19/2022 5:08	3.43	6/19/2022 6:31	-0.26	6/18/2022 5:19	10.94
6/18/2022 5:56	-0.03	6/19/2022 4:46	0.81	6/19/2022 5:09	3.41	6/19/2022 6:32	-0.22	6/18/2022 5:20	10.91
6/18/2022 5:57	-0.03	6/19/2022 4:47	0.81	6/19/2022 5:10	3.41	6/19/2022 6:33	-0.23	6/18/2022 5:21	10.91
6/18/2022 5:58	-0.03	6/19/2022 4:48	0.81	6/19/2022 5:11	3.42	6/19/2022 6:34	-0.24	6/18/2022 5:22	10.93
6/18/2022 5:59	-0.03	6/19/2022 4:49	0.80	6/19/2022 5:12	3.42	6/19/2022 6:35	-0.19	6/18/2022 5:23	10.94
6/18/2022 6:00	-0.03	6/19/2022 4:50	0.80	6/19/2022 5:13	3.41	6/19/2022 6:36	-0.22	6/18/2022 5:24	10.95
6/18/2022 6:01	-0.03	6/19/2022 4:51	0.80	6/19/2022 5:14	3.40	6/19/2022 6:37	-0.21	6/18/2022 5:25	10.96
6/18/2022 6:02	-0.03	6/19/2022 4:52	0.81	6/19/2022 5:15	3.44	6/19/2022 6:38	-0.26	6/18/2022 5:26	10.90
6/18/2022 6:03	-0.03	6/19/2022 4:53	0.80	6/19/2022 5:16	3.44	6/19/2022 6:39	-0.20	6/18/2022 5:27	10.90
6/18/2022 6:04	-0.03	6/19/2022 4:54	0.80	6/19/2022 5:17	3.43	6/19/2022 6:40	-0.21	6/18/2022 5:28	10.89
6/18/2022 6:05	-0.03	6/19/2022 4:55	0.80	6/19/2022 5:18	3.40	6/19/2022 6:41	-0.21	6/18/2022 5:29	10.97
6/18/2022 6:06	-0.03	6/19/2022 4:56	0.80	6/19/2022 5:19	3.44	6/19/2022 6:42	-0.24	6/18/2022 5:30	10.93
6/18/2022 6:07	-0.03	6/19/2022 4:57	0.80	6/19/2022 5:20	3.40	6/19/2022 6:43	-0.24	6/18/2022 5:31	10.92
6/18/2022 6:08	-0.03	6/19/2022 4:58	0.80	6/19/2022 5:21	3.41	6/19/2022 6:44	-0.20	6/18/2022 5:32	10.97
6/18/2022 6:09	-0.05	6/19/2022 4:59	0.80	6/19/2022 5:22	3.44	6/19/2022 6:45	-0.22	6/18/2022 5:33	10.95
6/18/2022 6:10	-0.05	6/19/2022 5:00	0.80	6/19/2022 5:23	3.42	6/19/2022 6:46	-0.19	6/18/2022 5:34	10.92
6/18/2022 6:11	-0.03	6/19/2022 5:01	0.81	6/19/2022 5:24	3.38	6/19/2022 6:47	-0.25	6/18/2022 5:35	10.88
6/18/2022 6:12	-0.03	6/19/2022 5:02	0.81	6/19/2022 5:25	3.39	6/19/2022 6:48	-0.24	6/18/2022 5:36	10.90
6/18/2022 6:13	-0.03	6/19/2022 5:03	0.81	6/19/2022 5:26	3.40	6/19/2022 6:49	-0.22	6/18/2022 5:37	10.91
6/18/2022 6:14	-0.05	6/19/2022 5:04	0.81	6/19/2022 5:27	3.42	6/19/2022 6:50	-0.22	6/18/2022 5:38	10.95
6/18/2022 6:15	-0.03	6/19/2022 5:05	0.81	6/19/2022 5:28	3.41	6/19/2022 6:51	-0.20	6/18/2022 5:39	10.89
6/18/2022 6:16	-0.04	6/19/2022 5:06	0.81	6/19/2022 5:29	3.41	6/19/2022 6:52	-0.25	6/18/2022 5:40	10.93

6/18/2022 6:17	-0.05	6/19/2022 5:07	0.81	6/19/2022 5:30	3.45	6/19/2022 6:53	-0.23	6/18/2022 5:41	10.90
6/18/2022 6:18	-0.03	6/19/2022 5:08	0.80	6/19/2022 5:31	3.42	6/19/2022 6:54	-0.20	6/18/2022 5:42	10.88
6/18/2022 6:19	-0.03	6/19/2022 5:09	0.81	6/19/2022 5:32	3.41	6/19/2022 6:55	-0.24	6/18/2022 5:43	10.91
6/18/2022 6:20	-0.03	6/19/2022 5:10	0.81	6/19/2022 5:33	3.44	6/19/2022 6:56	-0.23	6/18/2022 5:44	10.92
6/18/2022 6:21	-0.05	6/19/2022 5:11	0.81	6/19/2022 5:34	3.38	6/19/2022 6:57	-0.22	6/18/2022 5:45	10.91
6/18/2022 6:22	-0.03	6/19/2022 5:12	0.81	6/19/2022 5:35	3.41	6/19/2022 6:58	-0.21	6/18/2022 5:46	10.88
6/18/2022 6:23	-0.03	6/19/2022 5:13	0.81	6/19/2022 5:36	3.41	6/19/2022 6:59	-0.23	6/18/2022 5:47	10.96
6/18/2022 6:24	-0.05	6/19/2022 5:14	0.81	6/19/2022 5:37	3.39	6/19/2022 7:00	-0.25	6/18/2022 5:48	10.91
6/18/2022 6:25	-0.03	6/19/2022 5:15	0.81	6/19/2022 5:38	3.40	6/19/2022 7:01	-0.22	6/18/2022 5:49	10.91
6/18/2022 6:26	-0.03	6/19/2022 5:16	0.81	6/19/2022 5:39	3.40	6/19/2022 7:02	-0.27	6/18/2022 5:50	10.91
6/18/2022 6:27	-0.03	6/19/2022 5:17	0.81	6/19/2022 5:40	3.40	6/19/2022 7:03	-0.22	6/18/2022 5:51	10.96
6/18/2022 6:28	-0.05	6/19/2022 5:18	0.81	6/19/2022 5:41	3.41	6/19/2022 7:04	-0.21	6/18/2022 5:52	10.93
6/18/2022 6:29	-0.03	6/19/2022 5:19	0.81	6/19/2022 5:42	3.39	6/19/2022 7:05	-0.25	6/18/2022 5:53	10.89
6/18/2022 6:30	-0.05	6/19/2022 5:20	0.81	6/19/2022 5:43	3.40	6/19/2022 7:06	-0.22	6/18/2022 5:54	10.90
6/18/2022 6:31	-0.03	6/19/2022 5:21	0.81	6/19/2022 5:44	3.41	6/19/2022 7:07	-0.23	6/18/2022 5:55	10.88
6/18/2022 6:32	-0.05	6/19/2022 5:22	0.80	6/19/2022 5:45	3.42	6/19/2022 7:08	-0.26	6/18/2022 5:56	10.94
6/18/2022 6:33	-0.03	6/19/2022 5:23	0.81	6/19/2022 5:46	3.39	6/19/2022 7:09	-0.21	6/18/2022 5:57	10.93
6/18/2022 6:34	-0.03	6/19/2022 5:24	0.80	6/19/2022 5:47	3.42	6/19/2022 7:10	-0.21	6/18/2022 5:58	10.94
6/18/2022 6:35	-0.03	6/19/2022 5:25	0.81	6/19/2022 5:48	3.41	6/19/2022 7:11	-0.26	6/18/2022 5:59	10.89
6/18/2022 6:36	-0.03	6/19/2022 5:26	0.81	6/19/2022 5:49	3.43	6/19/2022 7:12	-0.27	6/18/2022 6:00	10.85
6/18/2022 6:37	-0.03	6/19/2022 5:27	0.81	6/19/2022 5:50	3.42	6/19/2022 7:13	-0.25	6/18/2022 6:01	10.90
6/18/2022 6:38	-0.03	6/19/2022 5:28	0.81	6/19/2022 5:51	3.40	6/19/2022 7:14	-0.22	6/18/2022 6:02	10.89
6/18/2022 6:39	-0.03	6/19/2022 5:29	0.80	6/19/2022 5:52	3.40	6/19/2022 7:15	-0.22	6/18/2022 6:03	10.91
6/18/2022 6:40	-0.03	6/19/2022 5:30	0.80	6/19/2022 5:53	3.40	6/19/2022 7:16	-0.23	6/18/2022 6:04	10.91
6/18/2022 6:41	-0.03	6/19/2022 5:31	0.81	6/19/2022 5:54	3.40	6/19/2022 7:17	-0.23	6/18/2022 6:05	10.91
6/18/2022 6:42	-0.03	6/19/2022 5:32	0.80	6/19/2022 5:55	3.44	6/19/2022 7:18	-0.27	6/18/2022 6:06	10.91
6/18/2022 6:43	-0.03	6/19/2022 5:33	0.81	6/19/2022 5:56	3.39	6/19/2022 7:19	-0.26	6/18/2022 6:07	10.94
6/18/2022 6:44	-0.05	6/19/2022 5:34	0.81	6/19/2022 5:57	3.42	6/19/2022 7:20	-0.21	6/18/2022 6:08	10.91
6/18/2022 6:45	-0.02	6/19/2022 5:35	0.81	6/19/2022 5:58	3.44	6/19/2022 7:21	-0.22	6/18/2022 6:09	10.96
6/18/2022 6:46	-0.03	6/19/2022 5:36	0.80	6/19/2022 5:59	3.40	6/19/2022 7:22	-0.26	6/18/2022 6:10	10.91
6/18/2022 6:47	-0.05	6/19/2022 5:37	0.81	6/19/2022 6:00	3.39	6/19/2022 7:23	-0.27	6/18/2022 6:11	10.94
6/18/2022 6:48	-0.03	6/19/2022 5:38	0.80	6/19/2022 6:01	3.41	6/19/2022 7:24	-0.24	6/18/2022 6:12	10.90
6/18/2022 6:49	-0.05	6/19/2022 5:39	0.81	6/19/2022 6:02	3.39	6/19/2022 7:25	-0.27	6/18/2022 6:13	10.91
6/18/2022 6:50	-0.03	6/19/2022 5:40	0.81	6/19/2022 6:03	3.40	6/19/2022 7:26	-0.20	6/18/2022 6:14	10.93
6/18/2022 6:51	-0.03	6/19/2022 5:41	0.81	6/19/2022 6:04	3.42	6/19/2022 7:27	-0.23	6/18/2022 6:15	10.95
6/18/2022 6:52	-0.03	6/19/2022 5:42	0.81	6/19/2022 6:05	3.42	6/19/2022 7:28	-0.15	6/18/2022 6:16	10.95
6/18/2022 6:53	-0.03	6/19/2022 5:43	0.81	6/19/2022 6:06	3.39	6/19/2022 7:29	-0.21	6/18/2022 6:17	10.93
6/18/2022 6:54	-0.03	6/19/2022 5:44	0.81	6/19/2022 6:07	3.42	6/19/2022 7:30	-0.21	6/18/2022 6:18	10.91
6/18/2022 6:55	-0.03	6/19/2022 5:45	0.81	6/19/2022 6:08	3.41	6/19/2022 7:31	-0.23	6/18/2022 6:19	10.92
6/18/2022 6:56	-0.05	6/19/2022 5:46	0.81	6/19/2022 6:09	3.42	6/19/2022 7:32	-0.25	6/18/2022 6:20	10.89
6/18/2022 6:57	-0.03	6/19/2022 5:47	0.81	6/19/2022 6:10	3.41	6/19/2022 7:33	-0.25	6/18/2022 6:21	10.92
6/18/2022 6:58	-0.03	6/19/2022 5:48	0.80	6/19/2022 6:11	3.42	6/19/2022 7:34	-0.21	6/18/2022 6:22	10.94
6/18/2022 6:59	-0.03	6/19/2022 5:49	0.81	6/19/2022 6:12	3.38	6/19/2022 7:35	-0.25	6/18/2022 6:23	10.92
6/18/2022 7:00	-0.03	6/19/2022 5:50	0.81	6/19/2022 6:13	3.42	6/19/2022 7:36	-0.22	6/18/2022 6:24	10.93
6/18/2022 7:01	-0.03	6/19/2022 5:51	0.81	6/19/2022 6:14	3.42	6/19/2022 7:37	-0.23	6/18/2022 6:25	10.90
6/18/2022 7:02	-0.03	6/19/2022 5:52	0.80	6/19/2022 6:15	3.40	6/19/2022 7:38	-0.24	6/18/2022 6:26	10.88
6/18/2022 7:03	-0.03	6/19/2022 5:53	0.80	6/19/2022 6:16	3.41	6/19/2022 7:39	-0.21	6/18/2022 6:27	10.93
6/18/2022 7:04	-0.03	6/19/2022 5:54	0.80	6/19/2022 6:17	3.40	6/19/2022 7:40	-0.24	6/18/2022 6:28	10.90
6/18/2022 7:05	-0.03	6/19/2022 5:55	0.80	6/19/2022 6:18	3.41	6/19/2022 7:41	-0.22	6/18/2022 6:29	10.92
6/18/2022 7:06	-0.03	6/19/2022 5:56	0.80	6/19/2022 6:19	3.40	6/19/2022 7:42	-0.20	6/18/2022 6:30	10.94
6/18/2022 7:07	-0.02	6/19/2022 5:57	0.80	6/19/2022 6:20	3.40	6/19/2022 7:43	-0.21	6/18/2022 6:31	10.93
6/18/2022 7:08	-0.03	6/19/2022 5:58	0.80	6/19/2022 6:21	3.43	6/19/2022 7:44	-0.23	6/18/2022 6:32	10.98
6/18/2022 7:09	-0.03	6/19/2022 5:59	0.80	6/19/2022 6:22	3.40	6/19/2022 7:45	-0.25	6/18/2022 6:33	10.97
6/18/2022 7:10	-0.03	6/19/2022 6:00	0.80	6/19/2022 6:23	3.38	6/19/2022 7:46	-0.26	6/18/2022 6:34	10.89
6/18/2022 7:11	-0.03	6/19/2022 6:01	0.80	6/19/2022 6:24	3.40	6/19/2022 7:47	-0.21	6/18/2022 6:35	10.91
6/18/2022 7:12	-0.05	6/19/2022 6:02	0.80	6/19/2022 6:25	3.39	6/19/2022 7:48	-0.24	6/18/2022 6:36	10.93
6/18/2022 7:13	-0.03	6/19/2022 6:03	0.80	6/19/2022 6:26	3.43	6/19/2022 7:49	-0.25	6/18/2022 6:37	10.92
6/18/2022 7:14	-0.04	6/19/2022 6:04	0.80	6/19/2022 6:27	3.42	6/19/2022 7:50	-0.21	6/18/2022 6:38	10.93
6/18/2022 7:15	-0.03	6/19/2022 6:05	0.80	6/19/2022 6:28	3.41	6/19/2022 7:51	-0.24	6/18/2022 6:39	10.90
6/18/2022 7:16	-0.05	6/19/2022 6:06	0.80	6/19/2022 6:29	3.42	6/19/2022 7:52	-0.24	6/18/2022 6:40	10.92
6/18/2022 7:17	-0.03	6/19/2022 6:07	0.80	6/19/2022 6:30	3.41	6/19/2022 7:53	-0.25	6/18/2022 6:41	10.90
6/18/2022 7:18	-0.03	6/19/2022 6:08	0.80	6/19/2022 6:31	3.41	6/19/2022 7:54	-0.24	6/18/2022 6:42	10.93
6/18/2022 7:19	-0.03	6/19/2022 6:09	0.80	6/19/2022 6:32	3.40	6/19/2022 7:55	-0.22	6/18/2022 6:43	10.95
6/18/2022 7:20	-0.03	6/19/2022 6:10	0.80	6/19/2022 6:33	3.39	6/19/2022 7:56	-0.25	6/18/2022 6:44	10.94
6/18/2022 7:21	-0.03	6/19/2022 6:11	0.80	6/19/2022 6:34	3.38	6/19/2022 7:57	-0.22	6/18/2022 6:45	10.91
6/18/2022 7:22	-0.03	6/19/2022 6:12	0.80	6/19/2022 6:35	3.45	6/19/2022 7:58	-0.21	6/18/2022 6:46	10.93
6/18/2022 7:23	-0.03	6/19/2022 6:13	0.80	6/19/2022 6:36	3.43	6/19/2022 7:59	-0.26	6/18/2022 6:47	10.88
6/18/2022 7:24	-0.04	6/19/2022 6:14	0.80	6/19/2022 6:37	3.38	6/19/2022 8:00	-0.28	6/18/2022 6:48	10.98
6/18/2022 7:25	-0.03	6/19/2022 6:15	0.81	6/19/2022 6:38	3.41	6/19/2022 8:01	-0.23	6/18/2022 6:49	10.91
6/18/2022 7:26	-0.04	6/19/2022 6:16	0.80	6/19/2022 6:39	3.43	6/19/2022 8:02	-0.27	6/18/2022 6:50	10.92
6/18/2022 7:27	-0.03	6/19/2022 6:17	0.81	6/19/2022 6:40	3.41	6/19/2022 8:03	-0.20	6/18/2022 6:51	10.88
6/18/2022 7:28	-0.03	6/19/2022 6:18	0.80	6/19/2022 6:41	3.41	6/19/2022 8:04	-0.25	6/18/2022 6:52	10.94
6/18/2022 7:29	-0.05	6/19/2022 6:19	0.80	6/19/2022 6:42	3.42	6/19/2022 8:05	-0.22	6/18/2022 6:53	10.92
6/18/2022 7:30	-0.03	6/19/2022 6:20	0.80	6/19/2022 6:43	3.42	6/19/2022 8:06	-0.25	6/18/2022 6:54	10.99
6/18/2022 7:31	-0.03	6/19/2022 6:21	0.80	6/19/2022 6:44	3.43	6/19/2022 8:07	-0.25	6/18/2022 6:55	10.91
6/18/2022 7:32	-0.03	6/19/2022 6:22	0.80	6/19/2022 6:45	3.45	6/19/2022 8:08	-0.25	6/18/2022 6:56	10.92
6/18/2022 7:33	-0.03	6/19/2022 6:23	0.80	6/19/2022 6:46	3.42	6/19/2022 8:09	-0.24	6/18/2022 6:57	10.87
6/18/2022 7:34	-0.03	6/19/2022 6:24	0.80	6/19/2022 6:47	3.42	6/19/2022 8:10	-0.25	6/18/2022 6:58	10.93
6/18/2022 7:35	-0.03	6/19/2022 6:25	0.80	6/19/2022 6:48	3.40	6/19/2022 8:11	-0.24	6/18/2022 6:59	10.95
6/18/2022 7:36	-0.05	6/19/2022 6:26	0.80	6/19/2022 6:49	3.42	6/19/2022 8:12	-0.23	6/18/2022 7:00	11.01
6/18/2022 7:37	-0.03	6/19/2022 6:27	0.80	6/19/2022 6:50	3.43	6/19/2022 8:13	-0.25	6/18/2022 7:01	10.90
6/18/2022 7:38	-0.05	6/19/2022 6:28	0.80	6/19/2022 6:51	3.47	6/19/2022 8:14	-0.24	6/18/2022 7:02	10.94
6/18/2022 7:39	-0.05	6/19/2022 6:29	0.80	6/19/2022 6:52	3.41	6/19/2022 8:15	-0.20	6/18/2022 7:03	10.93
6/18/2022 7:40	-0.03	6/19/2022 6:30	0.81	6/19/2022 6:53	3.43	6/19/2022 8:16	-0.27	6/18/2022 7:04	10.91
6/18/2022 7:41	-0.03	6/19/2022 6:31	0.80	6/19/2022 6:54	3.42	6/19/2022 8:17	-0.23	6/18/2022 7:05	10.93
6/18/2022 7:42	-0.03	6/19/2022 6:32	0.80	6/19/2022 6:55	3.41	6/19/2022 8:18	-0.26	6/18/2022 7:06	10.93
6/18/2022 7:43	-0.03	6/19/2022 6:33	0.80	6/19/2022 6:56	3.46	6/19/2022 8:19	-0.22	6/18/2022 7:07	10.93
6/18/2022 7:44	-0.03	6/19/2022 6:34	0.80	6/19/2022 6:57	3.43	6/19/2022 8:20	-0.24	6/18/2022 7:08	10.90

6/18/2022 7:45	-0.03	6/19/2022 6:35	0.80	6/19/2022 6:58	3.40	6/19/2022 8:21	-0.21	6/18/2022 7:09	10.89
6/18/2022 7:46	-0.03	6/19/2022 6:36	0.80	6/19/2022 6:59	3.42	6/19/2022 8:22	-0.23	6/18/2022 7:10	10.94
6/18/2022 7:47	-0.03	6/19/2022 6:37	0.80	6/19/2022 7:00	3.42	6/19/2022 8:23	-0.23	6/18/2022 7:11	10.96
6/18/2022 7:48	-0.03	6/19/2022 6:38	0.80	6/19/2022 7:01	3.43	6/19/2022 8:24	-0.24	6/18/2022 7:12	10.94
6/18/2022 7:49	-0.03	6/19/2022 6:39	0.81	6/19/2022 7:02	3.39	6/19/2022 8:25	-0.25	6/18/2022 7:13	10.96
6/18/2022 7:50	-0.05	6/19/2022 6:40	0.80	6/19/2022 7:03	3.42	6/19/2022 8:26	-0.24	6/18/2022 7:14	10.96
6/18/2022 7:51	-0.05	6/19/2022 6:41	0.80	6/19/2022 7:04	3.40	6/19/2022 8:27	-0.25	6/18/2022 7:15	10.95
6/18/2022 7:52	-0.05	6/19/2022 6:42	0.80	6/19/2022 7:05	3.43	6/19/2022 8:28	-0.20	6/18/2022 7:16	10.91
6/18/2022 7:53	-0.05	6/19/2022 6:43	0.80	6/19/2022 7:06	3.43	6/19/2022 8:29	-0.25	6/18/2022 7:17	10.97
6/18/2022 7:54	-0.05	6/19/2022 6:44	0.80	6/19/2022 7:07	3.42	6/19/2022 8:30	-0.22	6/18/2022 7:18	10.93
6/18/2022 7:55	-0.03	6/19/2022 6:45	0.80	6/19/2022 7:08	3.40	6/19/2022 8:31	-0.23	6/18/2022 7:19	10.95
6/18/2022 7:56	-0.03	6/19/2022 6:46	0.80	6/19/2022 7:09	3.42	6/19/2022 8:32	-0.25	6/18/2022 7:20	10.91
6/18/2022 7:57	-0.04	6/19/2022 6:47	0.81	6/19/2022 7:10	3.40	6/19/2022 8:33	-0.25	6/18/2022 7:21	10.94
6/18/2022 7:58	-0.05	6/19/2022 6:48	0.81	6/19/2022 7:11	3.40	6/19/2022 8:34	-0.22	6/18/2022 7:22	10.96
6/18/2022 7:59	-0.05	6/19/2022 6:49	0.80	6/19/2022 7:12	3.41	6/19/2022 8:35	-0.24	6/18/2022 7:23	10.92
6/18/2022 8:00	-0.03	6/19/2022 6:50	0.80	6/19/2022 7:13	3.44	6/19/2022 8:36	-0.24	6/18/2022 7:24	10.93
6/18/2022 8:01	-0.05	6/19/2022 6:51	0.81	6/19/2022 7:14	3.41	6/19/2022 8:37	-0.25	6/18/2022 7:25	10.92
6/18/2022 8:02	-0.03	6/19/2022 6:52	0.80	6/19/2022 7:15	3.41	6/19/2022 8:38	-0.26	6/18/2022 7:26	10.94
6/18/2022 8:03	-0.03	6/19/2022 6:53	0.80	6/19/2022 7:16	3.42	6/19/2022 8:39	-0.24	6/18/2022 7:27	10.93
6/18/2022 8:04	-0.03	6/19/2022 6:54	0.80	6/19/2022 7:17	3.43	6/19/2022 8:40	-0.24	6/18/2022 7:28	10.94
6/18/2022 8:05	-0.03	6/19/2022 6:55	0.81	6/19/2022 7:18	3.41	6/19/2022 8:41	-0.25	6/18/2022 7:29	10.93
6/18/2022 8:06	-0.03	6/19/2022 6:56	0.80	6/19/2022 7:19	3.43	6/19/2022 8:42	-0.24	6/18/2022 7:30	10.93
6/18/2022 8:07	-0.05	6/19/2022 6:57	0.80	6/19/2022 7:20	3.40	6/19/2022 8:43	-0.26	6/18/2022 7:31	10.93
6/18/2022 8:08	-0.03	6/19/2022 6:58	0.80	6/19/2022 7:21	3.44	6/19/2022 8:44	-0.24	6/18/2022 7:32	10.94
6/18/2022 8:09	-0.03	6/19/2022 6:59	0.80	6/19/2022 7:22	3.43	6/19/2022 8:45	-0.22	6/18/2022 7:33	10.92
6/18/2022 8:10	-0.05	6/19/2022 7:00	0.80	6/19/2022 7:23	3.43	6/19/2022 8:46	-0.22	6/18/2022 7:34	10.92
6/18/2022 8:11	-0.03	6/19/2022 7:01	0.80	6/19/2022 7:24	3.44	6/19/2022 8:47	-0.26	6/18/2022 7:35	10.92
6/18/2022 8:12	-0.03	6/19/2022 7:02	0.80	6/19/2022 7:25	3.43	6/19/2022 8:48	-0.24	6/18/2022 7:36	10.90
6/18/2022 8:13	-0.03	6/19/2022 7:03	0.80	6/19/2022 7:26	3.42	6/19/2022 8:49	-0.22	6/18/2022 7:37	10.91
6/18/2022 8:14	-0.03	6/19/2022 7:04	0.80	6/19/2022 7:27	3.41	6/19/2022 8:50	-0.24	6/18/2022 7:38	10.87
6/18/2022 8:15	-0.03	6/19/2022 7:05	0.80	6/19/2022 7:28	3.40	6/19/2022 8:51	-0.23	6/18/2022 7:39	10.92
6/18/2022 8:16	-0.03	6/19/2022 7:06	0.80	6/19/2022 7:29	3.42	6/19/2022 8:52	-0.24	6/18/2022 7:40	10.96
6/18/2022 8:17	-0.03	6/19/2022 7:07	0.81	6/19/2022 7:30	3.40	6/19/2022 8:53	-0.25	6/18/2022 7:41	10.88
6/18/2022 8:18	-0.03	6/19/2022 7:08	0.81	6/19/2022 7:31	3.42	6/19/2022 8:54	-0.24	6/18/2022 7:42	10.90
6/18/2022 8:19	-0.03	6/19/2022 7:09	0.80	6/19/2022 7:32	3.41	6/19/2022 8:55	-0.22	6/18/2022 7:43	10.96
6/18/2022 8:20	-0.03	6/19/2022 7:10	0.81	6/19/2022 7:33	3.47	6/19/2022 8:56	-0.25	6/18/2022 7:44	10.87
6/18/2022 8:21	-0.04	6/19/2022 7:11	0.80	6/19/2022 7:34	3.46	6/19/2022 8:57	-0.22	6/18/2022 7:45	10.95
6/18/2022 8:22	-0.05	6/19/2022 7:12	0.80	6/19/2022 7:35	3.42	6/19/2022 8:58	-0.23	6/18/2022 7:46	10.94
6/18/2022 8:23	-0.05	6/19/2022 7:13	0.81	6/19/2022 7:36	3.44	6/19/2022 8:59	-0.21	6/18/2022 7:47	10.90
6/18/2022 8:24	-0.04	6/19/2022 7:14	0.81	6/19/2022 7:37	3.43	6/19/2022 9:00	-0.23	6/18/2022 7:48	10.92
6/18/2022 8:25	-0.05	6/19/2022 7:15	0.80	6/19/2022 7:38	3.42	6/19/2022 9:01	-0.24	6/18/2022 7:49	10.94
6/18/2022 8:26	-0.03	6/19/2022 7:16	0.81	6/19/2022 7:39	3.45	6/19/2022 9:02	-0.25	6/18/2022 7:50	10.94
6/18/2022 8:27	-0.05	6/19/2022 7:17	0.81	6/19/2022 7:40	3.41	6/19/2022 9:03	-0.22	6/18/2022 7:51	10.95
6/18/2022 8:28	-0.03	6/19/2022 7:18	0.80	6/19/2022 7:41	3.42	6/19/2022 9:04	-0.21	6/18/2022 7:52	10.94
6/18/2022 8:29	-0.03	6/19/2022 7:19	0.81	6/19/2022 7:42	3.40	6/19/2022 9:05	-0.24	6/18/2022 7:53	10.93
6/18/2022 8:30	-0.03	6/19/2022 7:20	0.81	6/19/2022 7:43	3.41	6/19/2022 9:06	-0.23	6/18/2022 7:54	10.95
6/18/2022 8:31	-0.03	6/19/2022 7:21	0.81	6/19/2022 7:44	3.44	6/19/2022 9:07	-0.23	6/18/2022 7:55	10.92
6/18/2022 8:32	-0.03	6/19/2022 7:22	0.80	6/19/2022 7:45	3.42	6/19/2022 9:08	-0.27	6/18/2022 7:56	10.89
6/18/2022 8:33	-0.05	6/19/2022 7:23	0.80	6/19/2022 7:46	3.42	6/19/2022 9:09	-0.27	6/18/2022 7:57	10.89
6/18/2022 8:34	-0.03	6/19/2022 7:24	0.81	6/19/2022 7:47	3.40	6/19/2022 9:10	-0.23	6/18/2022 7:58	10.90
6/18/2022 8:35	-0.03	6/19/2022 7:25	0.81	6/19/2022 7:48	3.42	6/19/2022 9:11	-0.24	6/18/2022 7:59	10.95
6/18/2022 8:36	-0.03	6/19/2022 7:26	0.81	6/19/2022 7:49	3.41	6/19/2022 9:12	-0.26	6/18/2022 8:00	10.98
6/18/2022 8:37	-0.05	6/19/2022 7:27	0.81	6/19/2022 7:50	3.44	6/19/2022 9:13	-0.23	6/18/2022 8:01	10.89
6/18/2022 8:38	-0.03	6/19/2022 7:28	0.81	6/19/2022 7:51	3.44	6/19/2022 9:14	-0.26	6/18/2022 8:02	10.95
6/18/2022 8:39	-0.03	6/19/2022 7:29	0.81	6/19/2022 7:52	3.41	6/19/2022 9:15	-0.23	6/18/2022 8:03	10.92
6/18/2022 8:40	-0.03	6/19/2022 7:30	0.81	6/19/2022 7:53	3.44	6/19/2022 9:16	-0.25	6/18/2022 8:04	10.90
6/18/2022 8:41	-0.05	6/19/2022 7:31	0.80	6/19/2022 7:54	3.45	6/19/2022 9:17	-0.22	6/18/2022 8:05	10.89
6/18/2022 8:42	-0.03	6/19/2022 7:32	0.81	6/19/2022 7:55	3.45	6/19/2022 9:18	-0.24	6/18/2022 8:06	10.95
6/18/2022 8:43	-0.03	6/19/2022 7:33	0.81	6/19/2022 7:56	3.42	6/19/2022 9:19	-0.24	6/18/2022 8:07	10.97
6/18/2022 8:44	-0.03	6/19/2022 7:34	0.81	6/19/2022 7:57	3.43	6/19/2022 9:20	-0.25	6/18/2022 8:08	10.88
6/18/2022 8:45	-0.03	6/19/2022 7:35	0.81	6/19/2022 7:58	3.41	6/19/2022 9:21	-0.23	6/18/2022 8:09	10.94
6/18/2022 8:46	-0.05	6/19/2022 7:36	0.80	6/19/2022 7:59	3.42	6/19/2022 9:22	-0.22	6/18/2022 8:10	10.91
6/18/2022 8:47	-0.03	6/19/2022 7:37	0.81	6/19/2022 8:00	3.47	6/19/2022 9:23	-0.22	6/18/2022 8:11	10.93
6/18/2022 8:48	-0.03	6/19/2022 7:38	0.80	6/19/2022 8:01	3.43	6/19/2022 9:24	-0.24	6/18/2022 8:12	10.94
6/18/2022 8:49	-0.03	6/19/2022 7:39	0.81	6/19/2022 8:02	3.45	6/19/2022 9:25	-0.23	6/18/2022 8:13	10.97
6/18/2022 8:50	-0.04	6/19/2022 7:40	0.81	6/19/2022 8:03	3.42	6/19/2022 9:26	-0.25	6/18/2022 8:14	10.94
6/18/2022 8:51	-0.03	6/19/2022 7:41	0.81	6/19/2022 8:04	3.45	6/19/2022 9:27	-0.24	6/18/2022 8:15	10.95
6/18/2022 8:52	-0.03	6/19/2022 7:42	0.81	6/19/2022 8:05	3.43	6/19/2022 9:28	-0.25	6/18/2022 8:16	10.97
6/18/2022 8:53	-0.05	6/19/2022 7:43	0.81	6/19/2022 8:06	3.42	6/19/2022 9:29	-0.20	6/18/2022 8:17	10.98
6/18/2022 8:54	-0.03	6/19/2022 7:44	0.80	6/19/2022 8:07	3.46	6/19/2022 9:30	-0.24	6/18/2022 8:18	10.96
6/18/2022 8:55	-0.03	6/19/2022 7:45	0.81	6/19/2022 8:08	3.42	6/19/2022 9:31	-0.22	6/18/2022 8:19	10.92
6/18/2022 8:56	-0.03	6/19/2022 7:46	0.81	6/19/2022 8:09	3.43	6/19/2022 9:32	-0.26	6/18/2022 8:20	10.93
6/18/2022 8:57	-0.05	6/19/2022 7:47	0.81	6/19/2022 8:10	3.42	6/19/2022 9:33	-0.23	6/18/2022 8:21	10.96
6/18/2022 8:58	-0.03	6/19/2022 7:48	0.81	6/19/2022 8:11	3.44	6/19/2022 9:34	-0.22	6/18/2022 8:22	10.92
6/18/2022 8:59	-0.03	6/19/2022 7:49	0.81	6/19/2022 8:12	3.45	6/19/2022 9:35	-0.23	6/18/2022 8:23	10.98
6/18/2022 9:00	-0.03	6/19/2022 7:50	0.81	6/19/2022 8:13	3.41	6/19/2022 9:36	-0.27	6/18/2022 8:24	10.94
6/18/2022 9:01	-0.05	6/19/2022 7:51	0.81	6/19/2022 8:14	3.39	6/19/2022 9:37	-0.21	6/18/2022 8:25	10.93
6/18/2022 9:02	-0.03	6/19/2022 7:52	0.81	6/19/2022 8:15	3.44	6/19/2022 9:38	-0.22	6/18/2022 8:26	10.93
6/18/2022 9:03	-0.04	6/19/2022 7:53	0.81	6/19/2022 8:16	3.45	6/19/2022 9:39	-0.23	6/18/2022 8:27	10.97
6/18/2022 9:04	-0.03	6/19/2022 7:54	0.81	6/19/2022 8:17	3.43	6/19/2022 9:40	-0.22	6/18/2022 8:28	10.96
6/18/2022 9:05	-0.03	6/19/2022 7:55	0.81	6/19/2022 8:18	3.44	6/19/2022 9:41	-0.24	6/18/2022 8:29	10.98
6/18/2022 9:06	-0.03	6/19/2022 7:56	0.81	6/19/2022 8:19	3.43	6/19/2022 9:42	-0.24	6/18/2022 8:30	10.99
6/18/2022 9:07	-0.05	6/19/2022 7:57	0.81	6/19/2022 8:20	3.43	6/19/2022 9:43	-0.24	6/18/2022 8:31	10.90
6/18/2022 9:08	-0.05	6/19/2022 7:58	0.81	6/19/2022 8:21	3.43	6/19/2022 9:44	-0.23	6/18/2022 8:32	10.95
6/18/2022 9:09	-0.03	6/19/2022 7:59	0.81	6/19/2022 8:22	3.42	6/19/2022 9:45	-0.21	6/18/2022 8:33	10.97
6/18/2022 9:10	-0.03	6/19/2022 8:00	0.81	6/19/2022 8:23	3.41	6/19/2022 9:46	-0.21	6/18/2022 8:34	10.94
6/18/2022 9:11	-0.03	6/19/2022 8:01	0.81	6/19/2022 8:24	3.44	6/19/2022 9:47	-0.22	6/18/2022 8:35	10.88
6/18/2022 9:12	-0.03	6/19/2022 8:02	0.81	6/19/2022 8:25	3.42	6/19/2022 9:48	-0.25	6/18/2022 8:36	10.96

6/18/2022 9:13	-0.03	6/19/2022 8:03	0.81	6/19/2022 8:26	3.44	6/19/2022 9:49	-0.23	6/18/2022 8:37	10.97
6/18/2022 9:14	-0.03	6/19/2022 8:04	0.81	6/19/2022 8:27	3.42	6/19/2022 9:50	-0.25	6/18/2022 8:38	10.94
6/18/2022 9:15	-0.03	6/19/2022 8:05	0.81	6/19/2022 8:28	3.42	6/19/2022 9:51	-0.24	6/18/2022 8:39	10.93
6/18/2022 9:16	-0.04	6/19/2022 8:06	0.81	6/19/2022 8:29	3.42	6/19/2022 9:52	-0.26	6/18/2022 8:40	10.93
6/18/2022 9:17	-0.03	6/19/2022 8:07	0.81	6/19/2022 8:30	3.42	6/19/2022 9:53	-0.26	6/18/2022 8:41	11.00
6/18/2022 9:18	-0.03	6/19/2022 8:08	0.81	6/19/2022 8:31	3.43	6/19/2022 9:54	-0.25	6/18/2022 8:42	10.99
6/18/2022 9:19	-0.03	6/19/2022 8:09	0.81	6/19/2022 8:32	3.42	6/19/2022 9:55	-0.24	6/18/2022 8:43	10.97
6/18/2022 9:20	-0.04	6/19/2022 8:10	0.81	6/19/2022 8:33	3.45	6/19/2022 9:56	-0.26	6/18/2022 8:44	10.95
6/18/2022 9:21	-0.03	6/19/2022 8:11	0.81	6/19/2022 8:34	3.42	6/19/2022 9:57	-0.23	6/18/2022 8:45	10.92
6/18/2022 9:22	-0.04	6/19/2022 8:12	0.81	6/19/2022 8:35	3.42	6/19/2022 9:58	-0.23	6/18/2022 8:46	10.90
6/18/2022 9:23	-0.05	6/19/2022 8:13	0.81	6/19/2022 8:36	3.41	6/19/2022 9:59	-0.24	6/18/2022 8:47	10.95
6/18/2022 9:24	-0.03	6/19/2022 8:14	0.81	6/19/2022 8:37	3.43	6/19/2022 10:00	-0.25	6/18/2022 8:48	10.98
6/18/2022 9:25	-0.05	6/19/2022 8:15	0.81	6/19/2022 8:38	3.40	6/19/2022 10:01	-0.22	6/18/2022 8:49	10.92
6/18/2022 9:26	-0.05	6/19/2022 8:16	0.81	6/19/2022 8:39	3.42	6/19/2022 10:02	-0.21	6/18/2022 8:50	10.98
6/18/2022 9:27	-0.03	6/19/2022 8:17	0.81	6/19/2022 8:40	3.40	6/19/2022 10:03	-0.27	6/18/2022 8:51	11.02
6/18/2022 9:28	-0.02	6/19/2022 8:18	0.81	6/19/2022 8:41	3.44	6/19/2022 10:04	-0.20	6/18/2022 8:52	10.95
6/18/2022 9:29	-0.03	6/19/2022 8:19	0.81	6/19/2022 8:42	3.44	6/19/2022 10:05	-0.27	6/18/2022 8:53	10.93
6/18/2022 9:30	-0.05	6/19/2022 8:20	0.81	6/19/2022 8:43	3.41	6/19/2022 10:06	-0.25	6/18/2022 8:54	10.91
6/18/2022 9:31	-0.04	6/19/2022 8:21	0.81	6/19/2022 8:44	3.41	6/19/2022 10:07	-0.27	6/18/2022 8:55	10.94
6/18/2022 9:32	-0.03	6/19/2022 8:22	0.81	6/19/2022 8:45	3.41	6/19/2022 10:08	-0.21	6/18/2022 8:56	10.93
6/18/2022 9:33	-0.03	6/19/2022 8:23	0.81	6/19/2022 8:46	3.45	6/19/2022 10:09	-0.24	6/18/2022 8:57	10.94
6/18/2022 9:34	-0.05	6/19/2022 8:24	0.81	6/19/2022 8:47	3.43	6/19/2022 10:10	-0.23	6/18/2022 8:58	10.95
6/18/2022 9:35	-0.03	6/19/2022 8:25	0.81	6/19/2022 8:48	3.45	6/19/2022 10:11	-0.23	6/18/2022 8:59	10.97
6/18/2022 9:36	-0.03	6/19/2022 8:26	0.81	6/19/2022 8:49	3.46	6/19/2022 10:12	-0.28	6/18/2022 9:00	10.97
6/18/2022 9:37	-0.03	6/19/2022 8:27	0.81	6/19/2022 8:50	3.43	6/19/2022 10:13	-0.25	6/18/2022 9:01	10.93
6/18/2022 9:38	-0.05	6/19/2022 8:28	0.81	6/19/2022 8:51	3.42	6/19/2022 10:14	-0.27	6/18/2022 9:02	10.96
6/18/2022 9:39	-0.04	6/19/2022 8:29	0.81	6/19/2022 8:52	3.45	6/19/2022 10:15	-0.22	6/18/2022 9:03	10.97
6/18/2022 9:40	-0.05	6/19/2022 8:30	0.81	6/19/2022 8:53	3.41	6/19/2022 10:16	-0.23	6/18/2022 9:04	10.98
6/18/2022 9:41	-0.04	6/19/2022 8:31	0.81	6/19/2022 8:54	3.41	6/19/2022 10:17	-0.25	6/18/2022 9:05	10.97
6/18/2022 9:42	-0.03	6/19/2022 8:32	0.81	6/19/2022 8:55	3.39	6/19/2022 10:18	-0.23	6/18/2022 9:06	10.95
6/18/2022 9:43	-0.03	6/19/2022 8:33	0.81	6/19/2022 8:56	3.43	6/19/2022 10:19	-0.22	6/18/2022 9:07	10.93
6/18/2022 9:44	-0.03	6/19/2022 8:34	0.81	6/19/2022 8:57	3.45	6/19/2022 10:20	-0.25	6/18/2022 9:08	10.97
6/18/2022 9:45	-0.03	6/19/2022 8:35	0.81	6/19/2022 8:58	3.45	6/19/2022 10:21	-0.22	6/18/2022 9:09	10.94
6/18/2022 9:46	-0.03	6/19/2022 8:36	0.81	6/19/2022 8:59	3.40	6/19/2022 10:22	-0.24	6/18/2022 9:10	10.94
6/18/2022 9:47	-0.03	6/19/2022 8:37	0.81	6/19/2022 9:00	3.46	6/19/2022 10:23	-0.24	6/18/2022 9:11	10.93
6/18/2022 9:48	-0.05	6/19/2022 8:38	0.81	6/19/2022 9:01	3.44	6/19/2022 10:24	-0.24	6/18/2022 9:12	10.92
6/18/2022 9:49	-0.03	6/19/2022 8:39	0.81	6/19/2022 9:02	3.42	6/19/2022 10:25	-0.25	6/18/2022 9:13	10.97
6/18/2022 9:50	-0.03	6/19/2022 8:40	0.81	6/19/2022 9:03	3.43	6/19/2022 10:26	-0.20	6/18/2022 9:14	11.00
6/18/2022 9:51	-0.03	6/19/2022 8:41	0.81	6/19/2022 9:04	3.45	6/19/2022 10:27	-0.20	6/18/2022 9:15	10.98
6/18/2022 9:52	-0.04	6/19/2022 8:42	0.81	6/19/2022 9:05	3.44	6/19/2022 10:28	-0.23	6/18/2022 9:16	10.94
6/18/2022 9:53	-0.03	6/19/2022 8:43	0.81	6/19/2022 9:06	3.41	6/19/2022 10:29	-0.24	6/18/2022 9:17	10.96
6/18/2022 9:54	-0.05	6/19/2022 8:44	0.81	6/19/2022 9:07	3.43	6/19/2022 10:30	-0.22	6/18/2022 9:18	10.94
6/18/2022 9:55	-0.03	6/19/2022 8:45	0.81	6/19/2022 9:08	3.43	6/19/2022 10:31	-0.27	6/18/2022 9:19	10.93
6/18/2022 9:56	-0.03	6/19/2022 8:46	0.81	6/19/2022 9:09	3.41	6/19/2022 10:32	-0.21	6/18/2022 9:20	10.98
6/18/2022 9:57	-0.05	6/19/2022 8:47	0.81	6/19/2022 9:10	3.43	6/19/2022 10:33	-0.23	6/18/2022 9:21	10.95
6/18/2022 9:58	-0.03	6/19/2022 8:48	0.81	6/19/2022 9:11	3.45	6/19/2022 10:34	-0.23	6/18/2022 9:22	10.91
6/18/2022 9:59	-0.03	6/19/2022 8:49	0.81	6/19/2022 9:12	3.40	6/19/2022 10:35	-0.27	6/18/2022 9:23	10.89
6/18/2022 10:00	-0.03	6/19/2022 8:50	0.81	6/19/2022 9:13	3.42	6/19/2022 10:36	-0.22	6/18/2022 9:24	10.99
6/18/2022 10:01	-0.03	6/19/2022 8:51	0.81	6/19/2022 9:14	3.45	6/19/2022 10:37	-0.24	6/18/2022 9:25	10.98
6/18/2022 10:02	-0.03	6/19/2022 8:52	0.81	6/19/2022 9:15	3.42	6/19/2022 10:38	-0.26	6/18/2022 9:26	10.96
6/18/2022 10:03	-0.03	6/19/2022 8:53	0.81	6/19/2022 9:16	3.43	6/19/2022 10:39	-0.23	6/18/2022 9:27	10.93
6/18/2022 10:04	-0.03	6/19/2022 8:54	0.81	6/19/2022 9:17	3.43	6/19/2022 10:40	-0.24	6/18/2022 9:28	10.96
6/18/2022 10:05	-0.03	6/19/2022 8:55	0.81	6/19/2022 9:18	3.44	6/19/2022 10:41	-0.23	6/18/2022 9:29	10.97
6/18/2022 10:06	-0.03	6/19/2022 8:56	0.81	6/19/2022 9:19	3.43	6/19/2022 10:42	-0.25	6/18/2022 9:30	10.94
6/18/2022 10:07	-0.03	6/19/2022 8:57	0.81	6/19/2022 9:20	3.43	6/19/2022 10:43	-0.21	6/18/2022 9:31	10.91
6/18/2022 10:08	-0.05	6/19/2022 8:58	0.81	6/19/2022 9:21	3.43	6/19/2022 10:44	-0.25	6/18/2022 9:32	10.98
6/18/2022 10:09	-0.04	6/19/2022 8:59	0.81	6/19/2022 9:22	3.41	6/19/2022 10:45	-0.24	6/18/2022 9:33	10.92
6/18/2022 10:10	-0.03	6/19/2022 9:00	0.81	6/19/2022 9:23	3.43	6/19/2022 10:46	-0.25	6/18/2022 9:34	10.94
6/18/2022 10:11	-0.03	6/19/2022 9:01	0.81	6/19/2022 9:24	3.42	6/19/2022 10:47	-0.22	6/18/2022 9:35	10.98
6/18/2022 10:12	-0.03	6/19/2022 9:02	0.81	6/19/2022 9:25	3.43	6/19/2022 10:48	-0.25	6/18/2022 9:36	10.96
6/18/2022 10:13	-0.04	6/19/2022 9:03	0.81	6/19/2022 9:26	3.41	6/19/2022 10:49	-0.25	6/18/2022 9:37	10.96
6/18/2022 10:14	-0.03	6/19/2022 9:04	0.81	6/19/2022 9:27	3.42	6/19/2022 10:50	-0.25	6/18/2022 9:38	10.95
6/18/2022 10:15	-0.03	6/19/2022 9:05	0.81	6/19/2022 9:28	3.44	6/19/2022 10:51	-0.26	6/18/2022 9:39	10.97
6/18/2022 10:16	-0.03	6/19/2022 9:06	0.81	6/19/2022 9:29	3.44	6/19/2022 10:52	-0.24	6/18/2022 9:40	10.95
6/18/2022 10:17	-0.03	6/19/2022 9:07	0.81	6/19/2022 9:30	3.42	6/19/2022 10:53	-0.22	6/18/2022 9:41	10.99
6/18/2022 10:18	-0.03	6/19/2022 9:08	0.81	6/19/2022 9:31	3.43	6/19/2022 10:54	-0.22	6/18/2022 9:42	10.91
6/18/2022 10:19	-0.05	6/19/2022 9:09	0.81	6/19/2022 9:32	3.42	6/19/2022 10:55	-0.25	6/18/2022 9:43	10.96
6/18/2022 10:20	-0.03	6/19/2022 9:10	0.81	6/19/2022 9:33	3.45	6/19/2022 10:56	-0.25	6/18/2022 9:44	10.97
6/18/2022 10:21	-0.04	6/19/2022 9:11	0.81	6/19/2022 9:34	3.42	6/19/2022 10:57	-0.22	6/18/2022 9:45	10.92
6/18/2022 10:22	-0.05	6/19/2022 9:12	0.81	6/19/2022 9:35	3.44	6/19/2022 10:58	-0.21	6/18/2022 9:46	10.90
6/18/2022 10:23	-0.03	6/19/2022 9:13	0.81	6/19/2022 9:36	3.41	6/19/2022 10:59	-0.22	6/18/2022 9:47	10.99
6/18/2022 10:24	-0.03	6/19/2022 9:14	0.81	6/19/2022 9:37	3.39	6/19/2022 11:00	-0.22	6/18/2022 9:48	10.99
6/18/2022 10:25	-0.03	6/19/2022 9:15	0.81	6/19/2022 9:38	3.44	6/19/2022 11:01	-0.18	6/18/2022 9:49	10.97
6/18/2022 10:26	-0.05	6/19/2022 9:16	0.81	6/19/2022 9:39	3.39	6/19/2022 11:02	-0.24	6/18/2022 9:50	10.94
6/18/2022 10:27	-0.05	6/19/2022 9:17	0.81	6/19/2022 9:40	3.42	6/19/2022 11:03	-0.26	6/18/2022 9:51	10.96
6/18/2022 10:28	-0.04	6/19/2022 9:18	0.81	6/19/2022 9:41	3.42	6/19/2022 11:04	-0.22	6/18/2022 9:52	10.94
6/18/2022 10:29	-0.03	6/19/2022 9:19	0.81	6/19/2022 9:42	3.40	6/19/2022 11:05	-0.23	6/18/2022 9:53	10.95
6/18/2022 10:30	-0.03	6/19/2022 9:20	0.81	6/19/2022 9:43	3.45	6/19/2022 11:06	-0.24	6/18/2022 9:54	10.94
6/18/2022 10:31	-0.03	6/19/2022 9:21	0.81	6/19/2022 9:44	3.42	6/19/2022 11:07	-0.22	6/18/2022 9:55	10.95
6/18/2022 10:32	-0.03	6/19/2022 9:22	0.81	6/19/2022 9:45	3.40	6/19/2022 11:08	-0.21	6/18/2022 9:56	10.89
6/18/2022 10:33	-0.03	6/19/2022 9:23	0.81	6/19/2022 9:46	3.41	6/19/2022 11:09	-0.25	6/18/2022 9:57	10.90
6/18/2022 10:34	-0.03	6/19/2022 9:24	0.81	6/19/2022 9:47	3.42	6/19/2022 11:10	-0.24	6/18/2022 9:58	10.95
6/18/2022 10:35	-0.03	6/19/2022 9:25	0.81	6/19/2022 9:48	3.43	6/19/2022 11:11	-0.24	6/18/2022 9:59	10.94
6/18/2022 10:36	-0.03	6/19/2022 9:26	0.81	6/19/2022 9:49	3.39	6/19/2022 11:12	-0.22	6/18/2022 10:00	10.96
6/18/2022 10:37	-0.03	6/19/2022 9:27	0.81	6/19/2022 9:50	3.44	6/19/2022 11:13	-0.26	6/18/2022 10:01	10.96
6/18/2022 10:38	-0.03	6/19/2022 9:28	0.81	6/19/2022 9:51	3.42	6/19/2022 11:14	-0.23	6/18/2022 10:02	10.90
6/18/2022 10:39	-0.03	6/19/2022 9:29	0.81	6/19/2022 9:52	3.42	6/19/2022 11:15	-0.23	6/18/2022 10:03	10.99
6/18/2022 10:40	-0.04	6/19/2022 9:30	0.81	6/19/2022 9:53	3.45	6/19/2022 11:16	-0.24	6/18/2022 10:04	10.97

6/18/2022 10:41	-0.03	6/19/2022 9:31	0.81	6/19/2022 9:54	3.42	6/19/2022 11:17	-0.22	6/18/2022 10:05	10.94
6/18/2022 10:42	-0.05	6/19/2022 9:32	0.81	6/19/2022 9:55	3.43	6/19/2022 11:18	-0.27	6/18/2022 10:06	10.90
6/18/2022 10:43	-0.05	6/19/2022 9:33	0.81	6/19/2022 9:56	3.41	6/19/2022 11:19	-0.23	6/18/2022 10:07	10.93
6/18/2022 10:44	-0.03	6/19/2022 9:34	0.81	6/19/2022 9:57	3.43	6/19/2022 11:20	-0.23	6/18/2022 10:08	10.96
6/18/2022 10:45	-0.03	6/19/2022 9:35	0.81	6/19/2022 9:58	3.42	6/19/2022 11:21	-0.23	6/18/2022 10:09	10.93
6/18/2022 10:46	-0.03	6/19/2022 9:36	0.81	6/19/2022 9:59	3.44	6/19/2022 11:22	-0.24	6/18/2022 10:10	10.96
6/18/2022 10:47	-0.03	6/19/2022 9:37	0.81	6/19/2022 10:00	3.43	6/19/2022 11:23	-0.24	6/18/2022 10:11	10.97
6/18/2022 10:48	-0.03	6/19/2022 9:38	0.81	6/19/2022 10:01	3.42	6/19/2022 11:24	-0.25	6/18/2022 10:12	10.96
6/18/2022 10:49	-0.03	6/19/2022 9:39	0.81	6/19/2022 10:02	3.43	6/19/2022 11:25	-0.27	6/18/2022 10:13	10.92
6/18/2022 10:50	-0.05	6/19/2022 9:40	0.81	6/19/2022 10:03	3.44	6/19/2022 11:26	-0.26	6/18/2022 10:14	10.95
6/18/2022 10:51	-0.05	6/19/2022 9:41	0.81	6/19/2022 10:04	3.43	6/19/2022 11:27	-0.24	6/18/2022 10:15	10.96
6/18/2022 10:52	-0.04	6/19/2022 9:42	0.81	6/19/2022 10:05	3.42	6/19/2022 11:28	-0.21	6/18/2022 10:16	10.94
6/18/2022 10:53	-0.03	6/19/2022 9:43	0.81	6/19/2022 10:06	3.45	6/19/2022 11:29	-0.24	6/18/2022 10:17	10.94
6/18/2022 10:54	-0.03	6/19/2022 9:44	0.81	6/19/2022 10:07	3.42	6/19/2022 11:30	-0.24	6/18/2022 10:18	10.91
6/18/2022 10:55	-0.03	6/19/2022 9:45	0.81	6/19/2022 10:08	3.45	6/19/2022 11:31	-0.22	6/18/2022 10:19	10.99
6/18/2022 10:56	-0.04	6/19/2022 9:46	0.80	6/19/2022 10:09	3.43	6/19/2022 11:32	-0.24	6/18/2022 10:20	10.95
6/18/2022 10:57	-0.03	6/19/2022 9:47	0.81	6/19/2022 10:10	3.40	6/19/2022 11:33	-0.21	6/18/2022 10:21	10.98
6/18/2022 10:58	-0.03	6/19/2022 9:48	0.81	6/19/2022 10:11	3.44	6/19/2022 11:34	-0.24	6/18/2022 10:22	10.93
6/18/2022 10:59	-0.06	6/19/2022 9:49	0.81	6/19/2022 10:12	3.39	6/19/2022 11:35	-0.22	6/18/2022 10:23	10.94
6/18/2022 11:00	-0.03	6/19/2022 9:50	0.81	6/19/2022 10:13	3.45	6/19/2022 11:36	-0.22	6/18/2022 10:24	10.93
6/18/2022 11:01	-0.03	6/19/2022 9:51	0.81	6/19/2022 10:14	3.42	6/19/2022 11:37	-0.21	6/18/2022 10:25	10.97
6/18/2022 11:02	-0.03	6/19/2022 9:52	0.81	6/19/2022 10:15	3.43	6/19/2022 11:38	-0.25	6/18/2022 10:26	10.93
6/18/2022 11:03	-0.03	6/19/2022 9:53	0.81	6/19/2022 10:16	3.44	6/19/2022 11:39	-0.23	6/18/2022 10:27	10.92
6/18/2022 11:04	-0.04	6/19/2022 9:54	0.81	6/19/2022 10:17	3.42	6/19/2022 11:40	-0.23	6/18/2022 10:28	10.94
6/18/2022 11:05	-0.03	6/19/2022 9:55	0.81	6/19/2022 10:18	3.44	6/19/2022 11:41	-0.27	6/18/2022 10:29	10.93
6/18/2022 11:06	-0.04	6/19/2022 9:56	0.81	6/19/2022 10:19	3.43	6/19/2022 11:42	-0.26	6/18/2022 10:30	10.93
6/18/2022 11:07	-0.04	6/19/2022 9:57	0.81	6/19/2022 10:20	3.43	6/19/2022 11:43	-0.23	6/18/2022 10:31	10.92
6/18/2022 11:08	-0.04	6/19/2022 9:58	0.81	6/19/2022 10:21	3.43	6/19/2022 11:44	-0.23	6/18/2022 10:32	11.03
6/18/2022 11:09	-0.03	6/19/2022 9:59	0.81	6/19/2022 10:22	3.43	6/19/2022 11:45	-0.23	6/18/2022 10:33	10.96
6/18/2022 11:10	-0.03	6/19/2022 10:00	0.81	6/19/2022 10:23	3.41	6/19/2022 11:46	-0.20	6/18/2022 10:34	11.00
6/18/2022 11:11	-0.05	6/19/2022 10:01	0.81	6/19/2022 10:24	3.39	6/19/2022 11:47	-0.28	6/18/2022 10:35	10.98
6/18/2022 11:12	-0.03	6/19/2022 10:02	0.81	6/19/2022 10:25	3.41	6/19/2022 11:48	-0.22	6/18/2022 10:36	10.98
6/18/2022 11:13	-0.04	6/19/2022 10:03	0.81	6/19/2022 10:26	3.42	6/19/2022 11:49	-0.22	6/18/2022 10:37	10.95
6/18/2022 11:14	-0.03	6/19/2022 10:04	0.81	6/19/2022 10:27	3.37	6/19/2022 11:50	-0.24	6/18/2022 10:38	10.94
6/18/2022 11:15	-0.03	6/19/2022 10:05	0.81	6/19/2022 10:28	3.42	6/19/2022 11:51	-0.25	6/18/2022 10:39	10.96
6/18/2022 11:16	-0.03	6/19/2022 10:06	0.81	6/19/2022 10:29	3.43	6/19/2022 11:52	-0.25	6/18/2022 10:40	10.97
6/18/2022 11:17	-0.03	6/19/2022 10:07	0.81	6/19/2022 10:30	3.43	6/19/2022 11:53	-0.20	6/18/2022 10:41	10.93
6/18/2022 11:18	-0.05	6/19/2022 10:08	0.81	6/19/2022 10:31	3.43	6/19/2022 11:54	-0.22	6/18/2022 10:42	10.97
6/18/2022 11:19	-0.03	6/19/2022 10:09	0.81	6/19/2022 10:32	3.40	6/19/2022 11:55	-0.22	6/18/2022 10:43	10.97
6/18/2022 11:20	-0.03	6/19/2022 10:10	0.81	6/19/2022 10:33	3.42	6/19/2022 11:56	-0.24	6/18/2022 10:44	10.97
6/18/2022 11:21	-0.03	6/19/2022 10:11	0.81	6/19/2022 10:34	3.46	6/19/2022 11:57	-0.28	6/18/2022 10:45	10.93
6/18/2022 11:22	-0.03	6/19/2022 10:12	0.81	6/19/2022 10:35	3.41	6/19/2022 11:58	-0.21	6/18/2022 10:46	10.97
6/18/2022 11:23	-0.03	6/19/2022 10:13	0.81	6/19/2022 10:36	3.43	6/19/2022 11:59	-0.22	6/18/2022 10:47	10.95
6/18/2022 11:24	-0.03	6/19/2022 10:14	0.81	6/19/2022 10:37	3.42	6/19/2022 12:00	-0.23	6/18/2022 10:48	10.94
6/18/2022 11:25	-0.03	6/19/2022 10:15	0.81	6/19/2022 10:38	3.45	6/19/2022 12:01	-0.27	6/18/2022 10:49	10.91
6/18/2022 11:26	-0.03	6/19/2022 10:16	0.81	6/19/2022 10:39	3.41	6/19/2022 12:02	-0.24	6/18/2022 10:50	10.97
6/18/2022 11:27	-0.05	6/19/2022 10:17	0.81	6/19/2022 10:40	3.42	6/19/2022 12:03	-0.24	6/18/2022 10:51	10.93
6/18/2022 11:28	-0.03	6/19/2022 10:18	0.81	6/19/2022 10:41	3.41	6/19/2022 12:04	-0.21	6/18/2022 10:52	10.92
6/18/2022 11:29	-0.03	6/19/2022 10:19	0.81	6/19/2022 10:42	3.44	6/19/2022 12:05	-0.24	6/18/2022 10:53	10.93
6/18/2022 11:30	-0.05	6/19/2022 10:20	0.81	6/19/2022 10:43	3.40	6/19/2022 12:06	-0.25	6/18/2022 10:54	10.98
6/18/2022 11:31	-0.03	6/19/2022 10:21	0.81	6/19/2022 10:44	3.43	6/19/2022 12:07	-0.21	6/18/2022 10:55	10.97
6/18/2022 11:32	-0.03	6/19/2022 10:22	0.81	6/19/2022 10:45	3.43	6/19/2022 12:08	-0.21	6/18/2022 10:56	10.96
6/18/2022 11:33	-0.03	6/19/2022 10:23	0.81	6/19/2022 10:46	3.41	6/19/2022 12:09	-0.25	6/18/2022 10:57	11.00
6/18/2022 11:34	-0.03	6/19/2022 10:24	0.81	6/19/2022 10:47	3.44	6/19/2022 12:10	-0.25	6/18/2022 10:58	11.01
6/18/2022 11:35	-0.03	6/19/2022 10:25	0.81	6/19/2022 10:48	3.41	6/19/2022 12:11	-0.28	6/18/2022 10:59	10.95
6/18/2022 11:36	-0.03	6/19/2022 10:26	0.81	6/19/2022 10:49	3.42	6/19/2022 12:12	-0.21	6/18/2022 11:00	10.94
6/18/2022 11:37	-0.04	6/19/2022 10:27	0.81	6/19/2022 10:50	3.46	6/19/2022 12:13	-0.25	6/18/2022 11:01	11.00
6/18/2022 11:38	-0.03	6/19/2022 10:28	0.81	6/19/2022 10:51	3.41	6/19/2022 12:14	-0.27	6/18/2022 11:02	10.95
6/18/2022 11:39	-0.03	6/19/2022 10:29	0.81	6/19/2022 10:52	3.42	6/19/2022 12:15	-0.26	6/18/2022 11:03	11.00
6/18/2022 11:40	-0.03	6/19/2022 10:30	0.81	6/19/2022 10:53	3.46	6/19/2022 12:16	-0.21	6/18/2022 11:04	10.97
6/18/2022 11:41	-0.03	6/19/2022 10:31	0.81	6/19/2022 10:54	3.44	6/19/2022 12:17	-0.24	6/18/2022 11:05	10.97
6/18/2022 11:42	-0.03	6/19/2022 10:32	0.81	6/19/2022 10:55	3.42	6/19/2022 12:18	-0.24	6/18/2022 11:06	10.96
6/18/2022 11:43	-0.04	6/19/2022 10:33	0.81	6/19/2022 10:56	3.44	6/19/2022 12:19	-0.24	6/18/2022 11:07	10.93
6/18/2022 11:44	-0.03	6/19/2022 10:34	0.81	6/19/2022 10:57	3.43	6/19/2022 12:20	-0.26	6/18/2022 11:08	10.96
6/18/2022 11:45	-0.03	6/19/2022 10:35	0.81	6/19/2022 10:58	3.44	6/19/2022 12:21	-0.22	6/18/2022 11:09	10.93
6/18/2022 11:46	-0.03	6/19/2022 10:36	0.81	6/19/2022 10:59	3.43	6/19/2022 12:22	-0.26	6/18/2022 11:10	10.97
6/18/2022 11:47	-0.03	6/19/2022 10:37	0.81	6/19/2022 11:00	3.39	6/19/2022 12:23	-0.22	6/18/2022 11:11	10.98
6/18/2022 11:48	-0.03	6/19/2022 10:38	0.81	6/19/2022 11:01	3.43	6/19/2022 12:24	-0.24	6/18/2022 11:12	10.97
6/18/2022 11:49	-0.03	6/19/2022 10:39	0.81	6/19/2022 11:02	3.44	6/19/2022 12:25	-0.24	6/18/2022 11:13	10.94
6/18/2022 11:50	-0.03	6/19/2022 10:40	0.81	6/19/2022 11:03	3.38	6/19/2022 12:26	-0.23	6/18/2022 11:14	10.93
6/18/2022 11:51	-0.03	6/19/2022 10:41	0.82	6/19/2022 11:04	3.39	6/19/2022 12:27	-0.24	6/18/2022 11:15	10.96
6/18/2022 11:52	-0.03	6/19/2022 10:42	0.81	6/19/2022 11:05	3.38	6/19/2022 12:28	-0.26	6/18/2022 11:16	10.94
6/18/2022 11:53	-0.03	6/19/2022 10:43	0.81	6/19/2022 11:06	3.41	6/19/2022 12:29	-0.25	6/18/2022 11:17	10.99
6/18/2022 11:54	-0.05	6/19/2022 10:44	0.81	6/19/2022 11:07	3.42	6/19/2022 12:30	-0.21	6/18/2022 11:18	10.91
6/18/2022 11:55	-0.03	6/19/2022 10:45	0.81	6/19/2022 11:08	3.43	6/19/2022 12:31	-0.24	6/18/2022 11:19	10.95
6/18/2022 11:56	-0.03	6/19/2022 10:46	0.82	6/19/2022 11:09	3.42	6/19/2022 12:32	-0.21	6/18/2022 11:20	10.96
6/18/2022 11:57	-0.05	6/19/2022 10:47	0.81	6/19/2022 11:10	3.41	6/19/2022 12:33	-0.26	6/18/2022 11:21	10.98
6/18/2022 11:58	-0.03	6/19/2022 10:48	0.81	6/19/2022 11:11	3.42	6/19/2022 12:34	-0.23	6/18/2022 11:22	10.96
6/18/2022 11:59	-0.03	6/19/2022 10:49	0.81	6/19/2022 11:12	3.39	6/19/2022 12:35	-0.27	6/18/2022 11:23	10.92
6/18/2022 12:00	-0.05	6/19/2022 10:50	0.81	6/19/2022 11:13	3.42	6/19/2022 12:36	-0.22	6/18/2022 11:24	10.97
6/18/2022 12:01	-0.03	6/19/2022 10:51	0.81	6/19/2022 11:14	3.40	6/19/2022 12:37	-0.22	6/18/2022 11:25	10.95
6/18/2022 12:02	-0.04	6/19/2022 10:52	0.81	6/19/2022 11:15	3.43	6/19/2022 12:38	-0.22	6/18/2022 11:26	10.96
6/18/2022 12:03	-0.05	6/19/2022 10:53	0.81	6/19/2022 11:16	3.45	6/19/2022 12:39	-0.22	6/18/2022 11:27	10.97
6/18/2022 12:04	-0.03	6/19/2022 10:54	0.81	6/19/2022 11:17	3.45	6/19/2022 12:40	-0.23	6/18/2022 11:28	10.98
6/18/2022 12:05	-0.03	6/19/2022 10:55	0.81	6/19/2022 11:18	3.41	6/19/2022 12:41	-0.26	6/18/2022 11:29	10.96
6/18/2022 12:06	-0.03	6/19/2022 10:56	0.82	6/19/2022 11:19	3.44	6/19/2022 12:42	-0.23	6/18/2022 11:30	10.98
6/18/2022 12:07	-0.03	6/19/2022 10:57	0.81	6/19/2022 11:20	3.44	6/19/2022 12:43	-0.24	6/18/2022 11:31	11.00
6/18/2022 12:08	-0.04	6/19/2022 10:58	0.82	6/19/2022 11:21	3.41	6/19/2022 12:44	-0.26	6/18/2022 11:32	10.96

6/18/2022 12:09	-0.03	6/19/2022 10:59	0.81	6/19/2022 11:22	3.43	6/19/2022 12:45	-0.22	6/18/2022 11:33	10.97
6/18/2022 12:10	-0.03	6/19/2022 11:00	0.81	6/19/2022 11:23	3.44	6/19/2022 12:46	-0.25	6/18/2022 11:34	10.95
6/18/2022 12:11	-0.03	6/19/2022 11:01	0.81	6/19/2022 11:24	3.40	6/19/2022 12:47	-0.21	6/18/2022 11:35	10.97
6/18/2022 12:12	-0.03	6/19/2022 11:02	0.81	6/19/2022 11:25	3.43	6/19/2022 12:48	-0.23	6/18/2022 11:36	10.99
6/18/2022 12:13	-0.03	6/19/2022 11:03	0.81	6/19/2022 11:26	3.41	6/19/2022 12:49	-0.29	6/18/2022 11:37	10.99
6/18/2022 12:14	-0.03	6/19/2022 11:04	0.81	6/19/2022 11:27	3.39	6/19/2022 12:50	-0.21	6/18/2022 11:38	10.97
6/18/2022 12:15	-0.05	6/19/2022 11:05	0.81	6/19/2022 11:28	3.40	6/19/2022 12:51	-0.22	6/18/2022 11:39	10.92
6/18/2022 12:16	-0.03	6/19/2022 11:06	0.82	6/19/2022 11:29	3.43	6/19/2022 12:52	-0.25	6/18/2022 11:40	10.91
6/18/2022 12:17	-0.03	6/19/2022 11:07	0.82	6/19/2022 11:30	3.43	6/19/2022 12:53	-0.23	6/18/2022 11:41	10.95
6/18/2022 12:18	-0.05	6/19/2022 11:08	0.81	6/19/2022 11:31	3.43	6/19/2022 12:54	-0.27	6/18/2022 11:42	10.97
6/18/2022 12:19	-0.05	6/19/2022 11:09	0.81	6/19/2022 11:32	3.41	6/19/2022 12:55	-0.24	6/18/2022 11:43	10.96
6/18/2022 12:20	-0.03	6/19/2022 11:10	0.81	6/19/2022 11:33	3.40	6/19/2022 12:56	-0.24	6/18/2022 11:44	10.99
6/18/2022 12:21	-0.03	6/19/2022 11:11	0.81	6/19/2022 11:34	3.42	6/19/2022 12:57	-0.24	6/18/2022 11:45	10.97
6/18/2022 12:22	-0.04	6/19/2022 11:12	0.81	6/19/2022 11:35	3.44	6/19/2022 12:58	-0.26	6/18/2022 11:46	10.95
6/18/2022 12:23	-0.03	6/19/2022 11:13	0.82	6/19/2022 11:36	3.39	6/19/2022 12:59	-0.22	6/18/2022 11:47	10.98
6/18/2022 12:24	-0.03	6/19/2022 11:14	0.81	6/19/2022 11:37	3.42	6/19/2022 13:00	-0.26	6/18/2022 11:48	10.99
6/18/2022 12:25	-0.03	6/19/2022 11:15	0.81	6/19/2022 11:38	3.43	6/19/2022 13:01	-0.22	6/18/2022 11:49	10.99
6/18/2022 12:26	-0.03	6/19/2022 11:16	0.81	6/19/2022 11:39	3.42	6/19/2022 13:02	-0.22	6/18/2022 11:50	10.93
6/18/2022 12:27	-0.03	6/19/2022 11:17	0.81	6/19/2022 11:40	3.42	6/19/2022 13:03	-0.23	6/18/2022 11:51	10.99
6/18/2022 12:28	-0.03	6/19/2022 11:18	0.81	6/19/2022 11:41	3.45	6/19/2022 13:04	-0.24	6/18/2022 11:52	10.97
6/18/2022 12:29	-0.03	6/19/2022 11:19	0.81	6/19/2022 11:42	3.43	6/19/2022 13:05	-0.27	6/18/2022 11:53	11.00
6/18/2022 12:30	-0.03	6/19/2022 11:20	0.81	6/19/2022 11:43	3.40	6/19/2022 13:06	-0.21	6/18/2022 11:54	11.01
6/18/2022 12:31	-0.03	6/19/2022 11:21	0.81	6/19/2022 11:44	3.41	6/19/2022 13:07	-0.24	6/18/2022 11:55	10.95
6/18/2022 12:32	-0.03	6/19/2022 11:22	0.82	6/19/2022 11:45	3.42	6/19/2022 13:08	-0.23	6/18/2022 11:56	10.94
6/18/2022 12:33	-0.03	6/19/2022 11:23	0.84	6/19/2022 11:46	3.43	6/19/2022 13:09	-0.26	6/18/2022 11:57	10.92
6/18/2022 12:34	-0.03	6/19/2022 11:24	0.81	6/19/2022 11:47	3.42	6/19/2022 13:10	-0.26	6/18/2022 11:58	10.97
6/18/2022 12:35	-0.03	6/19/2022 11:25	0.82	6/19/2022 11:48	3.39	6/19/2022 13:11	-0.26	6/18/2022 11:59	11.02
6/18/2022 12:36	-0.03	6/19/2022 11:26	0.81	6/19/2022 11:49	3.42	6/19/2022 13:12	-0.27	6/18/2022 12:00	10.96
6/18/2022 12:37	-0.03	6/19/2022 11:27	0.83	6/19/2022 11:50	3.41	6/19/2022 13:13	-0.24	6/18/2022 12:01	10.98
6/18/2022 12:38	-0.03	6/19/2022 11:28	0.84	6/19/2022 11:51	3.44	6/19/2022 13:14	-0.25	6/18/2022 12:02	10.97
6/18/2022 12:39	-0.04	6/19/2022 11:29	0.82	6/19/2022 11:52	3.42	6/19/2022 13:15	-0.28	6/18/2022 12:03	10.97
6/18/2022 12:40	-0.05	6/19/2022 11:30	0.81	6/19/2022 11:53	3.43	6/19/2022 13:16	-0.28	6/18/2022 12:04	10.96
6/18/2022 12:41	-0.03	6/19/2022 11:31	0.81	6/19/2022 11:54	3.43	6/19/2022 13:17	-0.20	6/18/2022 12:05	10.99
6/18/2022 12:42	-0.03	6/19/2022 11:32	0.81	6/19/2022 11:55	3.43	6/19/2022 13:18	-0.22	6/18/2022 12:06	11.01
6/18/2022 12:43	-0.03	6/19/2022 11:33	0.81	6/19/2022 11:56	3.41	6/19/2022 13:19	-0.29	6/18/2022 12:07	11.05
6/18/2022 12:44	-0.03	6/19/2022 11:34	0.82	6/19/2022 11:57	3.39	6/19/2022 13:20	-0.26	6/18/2022 12:08	10.94
6/18/2022 12:45	-0.03	6/19/2022 11:35	0.81	6/19/2022 11:58	3.41	6/19/2022 13:21	-0.25	6/18/2022 12:09	10.98
6/18/2022 12:46	-0.05	6/19/2022 11:36	0.81	6/19/2022 11:59	3.42	6/19/2022 13:22	-0.25	6/18/2022 12:10	10.97
6/18/2022 12:47	-0.03	6/19/2022 11:37	0.81	6/19/2022 12:00	3.41	6/19/2022 13:23	-0.23	6/18/2022 12:11	11.00
6/18/2022 12:48	-0.03	6/19/2022 11:38	0.81	6/19/2022 12:01	3.39	6/19/2022 13:24	-0.25	6/18/2022 12:12	10.98
6/18/2022 12:49	-0.03	6/19/2022 11:39	0.82	6/19/2022 12:02	3.41	6/19/2022 13:25	-0.25	6/18/2022 12:13	10.98
6/18/2022 12:50	-0.04	6/19/2022 11:40	0.81	6/19/2022 12:03	3.40	6/19/2022 13:26	-0.24	6/18/2022 12:14	10.99
6/18/2022 12:51	-0.03	6/19/2022 11:41	0.81	6/19/2022 12:04	3.42	6/19/2022 13:27	-0.30	6/18/2022 12:15	11.00
6/18/2022 12:52	-0.05	6/19/2022 11:42	0.81	6/19/2022 12:05	3.42	6/19/2022 13:28	-0.28	6/18/2022 12:16	11.01
6/18/2022 12:53	-0.03	6/19/2022 11:43	0.81	6/19/2022 12:06	3.40	6/19/2022 13:29	-0.24	6/18/2022 12:17	10.98
6/18/2022 12:54	-0.03	6/19/2022 11:44	0.82	6/19/2022 12:07	3.40	6/19/2022 13:30	-0.27	6/18/2022 12:18	10.98
6/18/2022 12:55	-0.05	6/19/2022 11:45	0.81	6/19/2022 12:08	3.42	6/19/2022 13:31	-0.30	6/18/2022 12:19	11.03
6/18/2022 12:56	-0.05	6/19/2022 11:46	0.81	6/19/2022 12:09	3.43	6/19/2022 13:32	-0.27	6/18/2022 12:20	10.99
6/18/2022 12:57	-0.05	6/19/2022 11:47	0.81	6/19/2022 12:10	3.45	6/19/2022 13:33	-0.27	6/18/2022 12:21	11.02
6/18/2022 12:58	-0.03	6/19/2022 11:48	0.81	6/19/2022 12:11	3.43	6/19/2022 13:34	-0.32	6/18/2022 12:22	11.01
6/18/2022 12:59	-0.03	6/19/2022 11:49	0.81	6/19/2022 12:12	3.41	6/19/2022 13:35	-0.25	6/18/2022 12:23	10.96
6/18/2022 13:00	-0.05	6/19/2022 11:50	0.82	6/19/2022 12:13	3.42	6/19/2022 13:36	-0.23	6/18/2022 12:24	11.01
6/18/2022 13:01	-0.03	6/19/2022 11:51	0.82	6/19/2022 12:14	3.45	6/19/2022 13:37	-0.23	6/18/2022 12:25	10.99
6/18/2022 13:02	-0.03	6/19/2022 11:52	0.81	6/19/2022 12:15	3.43	6/19/2022 13:38	-0.25	6/18/2022 12:26	10.98
6/18/2022 13:03	-0.03	6/19/2022 11:53	0.81	6/19/2022 12:16	3.41	6/19/2022 13:39	-0.23	6/18/2022 12:27	10.93
6/18/2022 13:04	-0.03	6/19/2022 11:54	0.81	6/19/2022 12:17	3.47	6/19/2022 13:40	-0.22	6/18/2022 12:28	10.92
6/18/2022 13:05	-0.03	6/19/2022 11:55	0.81	6/19/2022 12:18	3.42	6/19/2022 13:41	-0.25	6/18/2022 12:29	11.00
6/18/2022 13:06	-0.03	6/19/2022 11:56	0.82	6/19/2022 12:19	3.42	6/19/2022 13:42	-0.26	6/18/2022 12:30	10.98
6/18/2022 13:07	-0.03	6/19/2022 11:57	0.81	6/19/2022 12:20	3.44	6/19/2022 13:43	-0.25	6/18/2022 12:31	10.95
6/18/2022 13:08	-0.03	6/19/2022 11:58	0.82	6/19/2022 12:21	3.44	6/19/2022 13:44	-0.28	6/18/2022 12:32	10.95
6/18/2022 13:09	-0.03	6/19/2022 11:59	0.81	6/19/2022 12:22	3.42	6/19/2022 13:45	-0.25	6/18/2022 12:33	10.99
6/18/2022 13:10	-0.03	6/19/2022 12:00	0.81	6/19/2022 12:23	3.41	6/19/2022 13:46	-0.28	6/18/2022 12:34	10.98
6/18/2022 13:11	-0.03	6/19/2022 12:01	0.82	6/19/2022 12:24	3.44	6/19/2022 13:47	-0.26	6/18/2022 12:35	11.01
6/18/2022 13:12	-0.04	6/19/2022 12:02	0.81	6/19/2022 12:25	3.43	6/19/2022 13:48	-0.26	6/18/2022 12:36	10.98
6/18/2022 13:13	-0.03	6/19/2022 12:03	0.81	6/19/2022 12:26	3.40	6/19/2022 13:49	-0.28	6/18/2022 12:37	10.93
6/18/2022 13:14	-0.03	6/19/2022 12:04	0.81	6/19/2022 12:27	3.42	6/19/2022 13:50	-0.27	6/18/2022 12:38	10.97
6/18/2022 13:15	-0.03	6/19/2022 12:05	0.82	6/19/2022 12:28	3.42	6/19/2022 13:51	-0.28	6/18/2022 12:39	10.97
6/18/2022 13:16	-0.03	6/19/2022 12:06	0.81	6/19/2022 12:29	3.43	6/19/2022 13:52	-0.23	6/18/2022 12:40	10.96
6/18/2022 13:17	-0.05	6/19/2022 12:07	0.82	6/19/2022 12:30	3.45	6/19/2022 13:53	-0.28	6/18/2022 12:41	10.95
6/18/2022 13:18	-0.03	6/19/2022 12:08	0.82	6/19/2022 12:31	3.44	6/19/2022 13:54	-0.29	6/18/2022 12:42	11.01
6/18/2022 13:19	-0.03	6/19/2022 12:09	0.81	6/19/2022 12:32	3.43	6/19/2022 13:55	-0.26	6/18/2022 12:43	10.98
6/18/2022 13:20	-0.03	6/19/2022 12:10	0.82	6/19/2022 12:33	3.42	6/19/2022 13:56	-0.26	6/18/2022 12:44	10.97
6/18/2022 13:21	-0.03	6/19/2022 12:11	0.81	6/19/2022 12:34	3.41	6/19/2022 13:57	-0.24	6/18/2022 12:45	11.02
6/18/2022 13:22	-0.03	6/19/2022 12:12	0.81	6/19/2022 12:35	3.43	6/19/2022 13:58	-0.30	6/18/2022 12:46	10.95
6/18/2022 13:23	-0.03	6/19/2022 12:13	0.82	6/19/2022 12:36	3.42	6/19/2022 13:59	-0.25	6/18/2022 12:47	10.93
6/18/2022 13:24	-0.03	6/19/2022 12:14	0.81	6/19/2022 12:37	3.46	6/19/2022 14:00	-0.26	6/18/2022 12:48	10.98
6/18/2022 13:25	-0.04	6/19/2022 12:15	0.81	6/19/2022 12:38	3.44	6/19/2022 14:01	-0.29	6/18/2022 12:49	11.00
6/18/2022 13:26	-0.04	6/19/2022 12:16	0.82	6/19/2022 12:39	3.42	6/19/2022 14:02	-0.26	6/18/2022 12:50	10.96
6/18/2022 13:27	-0.03	6/19/2022 12:17	0.82	6/19/2022 12:40	3.44	6/19/2022 14:03	-0.26	6/18/2022 12:51	10.96
6/18/2022 13:28	-0.02	6/19/2022 12:18	0.81	6/19/2022 12:41	3.45	6/19/2022 14:04	-0.28	6/18/2022 12:52	10.99
6/18/2022 13:29	-0.05	6/19/2022 12:19	0.82	6/19/2022 12:42	3.41	6/19/2022 14:05	-0.34	6/18/2022 12:53	11.03
6/18/2022 13:30	-0.05	6/19/2022 12:20	0.82	6/19/2022 12:43	3.44	6/19/2022 14:06	-0.27	6/18/2022 12:54	10.98
6/18/2022 13:31	-0.05	6/19/2022 12:21	0.81	6/19/2022 12:44	3.41	6/19/2022 14:07	-0.26	6/18/2022 12:55	10.99
6/18/2022 13:32	-0.05	6/19/2022 12:22	0.81	6/19/2022 12:45	3.42	6/19/2022 14:08	-0.26	6/18/2022 12:56	10.95
6/18/2022 13:33	-0.03	6/19/2022 12:23	0.84	6/19/2022 12:46	3.42	6/19/2022 14:09	-0.26	6/18/2022 12:57	11.08
6/18/2022 13:34	-0.03	6/19/2022 12:24	0.82	6/19/2022 12:47	3.43	6/19/2022 14:10	-0.27	6/18/2022 12:58	10.96
6/18/2022 13:35	-0.03	6/19/2022 12:25	0.81	6/19/2022 12:48	3.41	6/19/2022 14:11	-0.23	6/18/2022 12:59	10.99
6/18/2022 13:36	-0.03	6/19/2022 12:26	0.81	6/19/2022 12:49	3.41	6/19/2022 14:12	-0.26	6/18/2022 13:00	10.96

6/18/2022 13:37	-0.03	6/19/2022 12:27	0.82	6/19/2022 12:50	3.43	6/19/2022 14:13	-0.27	6/18/2022 13:01	10.96
6/18/2022 13:38	-0.05	6/19/2022 12:28	0.82	6/19/2022 12:51	3.40	6/19/2022 14:14	-0.23	6/18/2022 13:02	11.00
6/18/2022 13:39	-0.03	6/19/2022 12:29	0.82	6/19/2022 12:52	3.43	6/19/2022 14:15	-0.20	6/18/2022 13:03	10.97
6/18/2022 13:40	-0.03	6/19/2022 12:30	0.82	6/19/2022 12:53	3.42	6/19/2022 14:16	-0.29	6/18/2022 13:04	10.99
6/18/2022 13:41	-0.03	6/19/2022 12:31	0.82	6/19/2022 12:54	3.42	6/19/2022 14:17	-0.27	6/18/2022 13:05	11.00
6/18/2022 13:42	-0.03	6/19/2022 12:32	0.82	6/19/2022 12:55	3.42	6/19/2022 14:18	-0.27	6/18/2022 13:06	10.92
6/18/2022 13:43	-0.03	6/19/2022 12:33	0.82	6/19/2022 12:56	3.43	6/19/2022 14:19	-0.27	6/18/2022 13:07	10.98
6/18/2022 13:44	-0.05	6/19/2022 12:34	0.82	6/19/2022 12:57	3.43	6/19/2022 14:20	-0.25	6/18/2022 13:08	10.95
6/18/2022 13:45	-0.03	6/19/2022 12:35	0.82	6/19/2022 12:58	3.43	6/19/2022 14:21	-0.25	6/18/2022 13:09	10.98
6/18/2022 13:46	-0.03	6/19/2022 12:36	0.82	6/19/2022 12:59	3.45	6/19/2022 14:22	-0.25	6/18/2022 13:10	11.00
6/18/2022 13:47	-0.05	6/19/2022 12:37	0.81	6/19/2022 13:00	3.40	6/19/2022 14:23	-0.26	6/18/2022 13:11	11.00
6/18/2022 13:48	-0.03	6/19/2022 12:38	0.82	6/19/2022 13:01	3.42	6/19/2022 14:24	-0.24	6/18/2022 13:12	11.03
6/18/2022 13:49	-0.03	6/19/2022 12:39	0.82	6/19/2022 13:02	3.44	6/19/2022 14:25	-0.29	6/18/2022 13:13	10.99
6/18/2022 13:50	-0.05	6/19/2022 12:40	0.82	6/19/2022 13:03	3.44	6/19/2022 14:26	-0.26	6/18/2022 13:14	10.96
6/18/2022 13:51	-0.03	6/19/2022 12:41	0.81	6/19/2022 13:04	3.44	6/19/2022 14:27	-0.27	6/18/2022 13:15	10.97
6/18/2022 13:52	-0.03	6/19/2022 12:42	0.82	6/19/2022 13:05	3.42	6/19/2022 14:28	-0.29	6/18/2022 13:16	11.00
6/18/2022 13:53	-0.05	6/19/2022 12:43	0.81	6/19/2022 13:06	3.38	6/19/2022 14:29	-0.26	6/18/2022 13:17	11.00
6/18/2022 13:54	-0.03	6/19/2022 12:44	0.82	6/19/2022 13:07	3.42	6/19/2022 14:30	-0.25	6/18/2022 13:18	10.98
6/18/2022 13:55	-0.03	6/19/2022 12:45	0.82	6/19/2022 13:08	3.43	6/19/2022 14:31	-0.25	6/18/2022 13:19	11.00
6/18/2022 13:56	-0.03	6/19/2022 12:46	0.82	6/19/2022 13:09	3.44	6/19/2022 14:32	-0.19	6/18/2022 13:20	10.99
6/18/2022 13:57	-0.05	6/19/2022 12:47	0.82	6/19/2022 13:10	3.41	6/19/2022 14:33	-0.24	6/18/2022 13:21	10.96
6/18/2022 13:58	-0.04	6/19/2022 12:48	0.82	6/19/2022 13:11	3.41	6/19/2022 14:34	-0.24	6/18/2022 13:22	11.02
6/18/2022 13:59	-0.03	6/19/2022 12:49	0.82	6/19/2022 13:12	3.42	6/19/2022 14:35	-0.26	6/18/2022 13:23	10.97
6/18/2022 14:00	-0.03	6/19/2022 12:50	0.82	6/19/2022 13:13	3.44	6/19/2022 14:36	-0.24	6/18/2022 13:24	11.01
6/18/2022 14:01	-0.04	6/19/2022 12:51	0.82	6/19/2022 13:14	3.43	6/19/2022 14:37	-0.25	6/18/2022 13:25	11.00
6/18/2022 14:02	-0.03	6/19/2022 12:52	0.82	6/19/2022 13:15	3.41	6/19/2022 14:38	-0.23	6/18/2022 13:26	10.99
6/18/2022 14:03	-0.03	6/19/2022 12:53	0.82	6/19/2022 13:16	3.42	6/19/2022 14:39	-0.25	6/18/2022 13:27	10.98
6/18/2022 14:04	-0.04	6/19/2022 12:54	0.82	6/19/2022 13:17	3.40	6/19/2022 14:40	-0.24	6/18/2022 13:28	10.95
6/18/2022 14:05	-0.03	6/19/2022 12:55	0.82	6/19/2022 13:18	3.42	6/19/2022 14:41	-0.24	6/18/2022 13:29	10.99
6/18/2022 14:06	-0.03	6/19/2022 12:56	0.82	6/19/2022 13:19	3.43	6/19/2022 14:42	-0.26	6/18/2022 13:30	11.02
6/18/2022 14:07	-0.03	6/19/2022 12:57	0.82	6/19/2022 13:20	3.41	6/19/2022 14:43	-0.23	6/18/2022 13:31	11.00
6/18/2022 14:08	-0.03	6/19/2022 12:58	0.82	6/19/2022 13:21	3.46	6/19/2022 14:44	-0.27	6/18/2022 13:32	11.02
6/18/2022 14:09	-0.05	6/19/2022 12:59	0.82	6/19/2022 13:22	3.39	6/19/2022 14:45	-0.25	6/18/2022 13:33	10.98
6/18/2022 14:10	-0.03	6/19/2022 13:00	0.82	6/19/2022 13:23	3.42	6/19/2022 14:46	-0.29	6/18/2022 13:34	10.97
6/18/2022 14:11	-0.03	6/19/2022 13:01	0.82	6/19/2022 13:24	3.41	6/19/2022 14:47	-0.25	6/18/2022 13:35	10.97
6/18/2022 14:12	-0.03	6/19/2022 13:02	0.82	6/19/2022 13:25	3.43	6/19/2022 14:48	-0.24	6/18/2022 13:36	11.01
6/18/2022 14:13	-0.03	6/19/2022 13:03	0.82	6/19/2022 13:26	3.42	6/19/2022 14:49	-0.27	6/18/2022 13:37	11.05
6/18/2022 14:14	-0.03	6/19/2022 13:04	0.82	6/19/2022 13:27	3.42	6/19/2022 14:50	-0.27	6/18/2022 13:38	11.00
6/18/2022 14:15	-0.05	6/19/2022 13:05	0.82	6/19/2022 13:28	3.44	6/19/2022 14:51	-0.29	6/18/2022 13:39	10.95
6/18/2022 14:16	-0.03	6/19/2022 13:06	0.82	6/19/2022 13:29	3.42	6/19/2022 14:52	-0.24	6/18/2022 13:40	10.98
6/18/2022 14:17	-0.06	6/19/2022 13:07	0.82	6/19/2022 13:30	3.42	6/19/2022 14:53	-0.26	6/18/2022 13:41	10.97
6/18/2022 14:18	-0.03	6/19/2022 13:08	0.82	6/19/2022 13:31	3.41	6/19/2022 14:54	-0.23	6/18/2022 13:42	11.05
6/18/2022 14:19	-0.03	6/19/2022 13:09	0.82	6/19/2022 13:32	3.41	6/19/2022 14:55	-0.26	6/18/2022 13:43	10.96
6/18/2022 14:20	-0.03	6/19/2022 13:10	0.82	6/19/2022 13:33	3.44	6/19/2022 14:56	-0.27	6/18/2022 13:44	11.00
6/18/2022 14:21	-0.03	6/19/2022 13:11	0.82	6/19/2022 13:34	3.43	6/19/2022 14:57	-0.24	6/18/2022 13:45	11.01
6/18/2022 14:22	-0.03	6/19/2022 13:12	0.82	6/19/2022 13:35	3.43	6/19/2022 14:58	-0.26	6/18/2022 13:46	11.00
6/18/2022 14:23	-0.03	6/19/2022 13:13	0.82	6/19/2022 13:36	3.43	6/19/2022 14:59	-0.23	6/18/2022 13:47	10.99
6/18/2022 14:24	-0.03	6/19/2022 13:14	0.82	6/19/2022 13:37	3.41	6/19/2022 15:00	-0.30	6/18/2022 13:48	10.97
6/18/2022 14:25	-0.03	6/19/2022 13:15	0.82	6/19/2022 13:38	3.41	6/19/2022 15:01	-0.25	6/18/2022 13:49	11.00
6/18/2022 14:26	-0.05	6/19/2022 13:16	0.82	6/19/2022 13:39	3.43	6/19/2022 15:02	-0.28	6/18/2022 13:50	10.99
6/18/2022 14:27	-0.05	6/19/2022 13:17	0.82	6/19/2022 13:40	3.42	6/19/2022 15:03	-0.30	6/18/2022 13:51	10.97
6/18/2022 14:28	-0.03	6/19/2022 13:18	0.82	6/19/2022 13:41	3.41	6/19/2022 15:04	-0.27	6/18/2022 13:52	11.03
6/18/2022 14:29	-0.03	6/19/2022 13:19	0.82	6/19/2022 13:42	3.44	6/19/2022 15:05	-0.25	6/18/2022 13:53	10.99
6/18/2022 14:30	-0.05	6/19/2022 13:20	0.82	6/19/2022 13:43	3.41	6/19/2022 15:06	-0.25	6/18/2022 13:54	11.03
6/18/2022 14:31	-0.03	6/19/2022 13:21	0.82	6/19/2022 13:44	3.41	6/19/2022 15:07	-0.27	6/18/2022 13:55	10.94
6/18/2022 14:32	-0.03	6/19/2022 13:22	0.82	6/19/2022 13:45	3.43	6/19/2022 15:08	-0.28	6/18/2022 13:56	10.95
6/18/2022 14:33	-0.03	6/19/2022 13:23	0.82	6/19/2022 13:46	3.44	6/19/2022 15:09	-0.29	6/18/2022 13:57	10.99
6/18/2022 14:34	-0.05	6/19/2022 13:24	0.82	6/19/2022 13:47	3.39	6/19/2022 15:10	-0.26	6/18/2022 13:58	11.04
6/18/2022 14:35	-0.04	6/19/2022 13:25	0.82	6/19/2022 13:48	3.41	6/19/2022 15:11	-0.30	6/18/2022 13:59	10.98
6/18/2022 14:36	-0.03	6/19/2022 13:26	0.82	6/19/2022 13:49	3.42	6/19/2022 15:12	-0.26	6/18/2022 14:00	11.00
6/18/2022 14:37	-0.03	6/19/2022 13:27	0.82	6/19/2022 13:50	3.44	6/19/2022 15:13	-0.24	6/18/2022 14:01	11.01
6/18/2022 14:38	-0.03	6/19/2022 13:28	0.82	6/19/2022 13:51	3.41	6/19/2022 15:14	-0.27	6/18/2022 14:02	10.93
6/18/2022 14:39	-0.03	6/19/2022 13:29	0.81	6/19/2022 13:52	3.43	6/19/2022 15:15	-0.24	6/18/2022 14:03	11.02
6/18/2022 14:40	-0.03	6/19/2022 13:30	0.82	6/19/2022 13:53	3.42	6/19/2022 15:16	-0.29	6/18/2022 14:04	11.00
6/18/2022 14:41	-0.03	6/19/2022 13:31	0.82	6/19/2022 13:54	3.43	6/19/2022 15:17	-0.27	6/18/2022 14:05	10.96
6/18/2022 14:42	-0.03	6/19/2022 13:32	0.82	6/19/2022 13:55	3.43	6/19/2022 15:18	-0.26	6/18/2022 14:06	11.01
6/18/2022 14:43	-0.05	6/19/2022 13:33	0.82	6/19/2022 13:56	3.43	6/19/2022 15:19	-0.25	6/18/2022 14:07	10.98
6/18/2022 14:44	-0.04	6/19/2022 13:34	0.82	6/19/2022 13:57	3.41	6/19/2022 15:20	-0.25	6/18/2022 14:08	10.98
6/18/2022 14:45	-0.03	6/19/2022 13:35	0.82	6/19/2022 13:58	3.41	6/19/2022 15:21	-0.29	6/18/2022 14:09	10.96
6/18/2022 14:46	-0.03	6/19/2022 13:36	0.82	6/19/2022 13:59	3.43	6/19/2022 15:22	-0.25	6/18/2022 14:10	10.98
6/18/2022 14:47	-0.03	6/19/2022 13:37	0.82	6/19/2022 14:00	3.41	6/19/2022 15:23	-0.28	6/18/2022 14:11	11.00
6/18/2022 14:48	-0.03	6/19/2022 13:38	0.82	6/19/2022 14:01	3.43	6/19/2022 15:24	-0.30	6/18/2022 14:12	10.96
6/18/2022 14:49	-0.03	6/19/2022 13:39	0.82	6/19/2022 14:02	3.43	6/19/2022 15:25	-0.32	6/18/2022 14:13	10.95
6/18/2022 14:50	-0.03	6/19/2022 13:40	0.82	6/19/2022 14:03	3.42	6/19/2022 15:26	-0.26	6/18/2022 14:14	10.97
6/18/2022 14:51	-0.05	6/19/2022 13:41	0.82	6/19/2022 14:04	3.43	6/19/2022 15:27	-0.25	6/18/2022 14:15	10.97
6/18/2022 14:52	-0.03	6/19/2022 13:42	0.82	6/19/2022 14:05	3.40	6/19/2022 15:28	-0.27	6/18/2022 14:16	10.99
6/18/2022 14:53	-0.03	6/19/2022 13:43	0.82	6/19/2022 14:06	3.41	6/19/2022 15:29	-0.26	6/18/2022 14:17	11.00
6/18/2022 14:54	-0.03	6/19/2022 13:44	0.82	6/19/2022 14:07	3.41	6/19/2022 15:30	-0.25	6/18/2022 14:18	11.00
6/18/2022 14:55	-0.03	6/19/2022 13:45	0.82	6/19/2022 14:08	3.41	6/19/2022 15:31	-0.28	6/18/2022 14:19	11.00
6/18/2022 14:56	-0.03	6/19/2022 13:46	0.82	6/19/2022 14:09	3.42	6/19/2022 15:32	-0.22	6/18/2022 14:20	10.99
6/18/2022 14:57	-0.03	6/19/2022 13:47	0.82	6/19/2022 14:10	3.43	6/19/2022 15:33	-0.27	6/18/2022 14:21	10.96
6/18/2022 14:58	-0.03	6/19/2022 13:48	0.82	6/19/2022 14:11	3.44	6/19/2022 15:34	-0.26	6/18/2022 14:22	11.03
6/18/2022 14:59	-0.03	6/19/2022 13:49	0.82	6/19/2022 14:12	3.40	6/19/2022 15:35	-0.29	6/18/2022 14:23	11.01
6/18/2022 15:00	-0.03	6/19/2022 13:50	0.82	6/19/2022 14:13	3.42	6/19/2022 15:36	-0.23	6/18/2022 14:24	11.00
6/18/2022 15:01	-0.03	6/19/2022 13:51	0.82	6/19/2022 14:14	3.43	6/19/2022 15:37	-0.24	6/18/2022 14:25	10.99
6/18/2022 15:02	-0.03	6/19/2022 13:52	0.82	6/19/2022 14:15	3.43	6/19/2022 15:38	-0.26	6/18/2022 14:26	11.01
6/18/2022 15:03	-0.03	6/19/2022 13:53	0.82	6/19/2022 14:16	3.45	6/19/2022 15:39	-0.22	6/18/2022 14:27	10.98
6/18/2022 15:04	-0.03	6/19/2022 13:54	0.83	6/19/2022 14:17	3.43	6/19/2022 15:40	-0.22	6/18/2022 14:28	10.97

6/18/2022 15:05	-0.05	6/19/2022 13:55	0.82	6/19/2022 14:18	3.40	6/19/2022 15:41	-0.23	6/18/2022 14:29	10.98
6/18/2022 15:06	-0.03	6/19/2022 13:56	0.82	6/19/2022 14:19	3.42	6/19/2022 15:42	-0.22	6/18/2022 14:30	10.99
6/18/2022 15:07	-0.03	6/19/2022 13:57	0.82	6/19/2022 14:20	3.43	6/19/2022 15:43	-0.27	6/18/2022 14:31	11.03
6/18/2022 15:08	-0.03	6/19/2022 13:58	0.82	6/19/2022 14:21	3.41	6/19/2022 15:44	-0.28	6/18/2022 14:32	11.03
6/18/2022 15:09	-0.03	6/19/2022 13:59	0.82	6/19/2022 14:22	3.41	6/19/2022 15:45	-0.22	6/18/2022 14:33	11.03
6/18/2022 15:10	-0.05	6/19/2022 14:00	0.82	6/19/2022 14:23	3.45	6/19/2022 15:46	-0.27	6/18/2022 14:34	10.95
6/18/2022 15:11	-0.03	6/19/2022 14:01	0.82	6/19/2022 14:24	3.43	6/19/2022 15:47	-0.27	6/18/2022 14:35	10.99
6/18/2022 15:12	-0.03	6/19/2022 14:02	0.83	6/19/2022 14:25	3.43	6/19/2022 15:48	-0.28	6/18/2022 14:36	11.02
6/18/2022 15:13	-0.03	6/19/2022 14:03	0.82	6/19/2022 14:26	3.42	6/19/2022 15:49	-0.26	6/18/2022 14:37	10.99
6/18/2022 15:14	-0.04	6/19/2022 14:04	0.82	6/19/2022 14:27	3.44	6/19/2022 15:50	-0.25	6/18/2022 14:38	11.00
6/18/2022 15:15	-0.05	6/19/2022 14:05	0.83	6/19/2022 14:28	3.43	6/19/2022 15:51	-0.26	6/18/2022 14:39	10.97
6/18/2022 15:16	-0.03	6/19/2022 14:06	0.82	6/19/2022 14:29	3.42	6/19/2022 15:52	-0.26	6/18/2022 14:40	11.02
6/18/2022 15:17	-0.03	6/19/2022 14:07	0.82	6/19/2022 14:30	3.43	6/19/2022 15:53	-0.29	6/18/2022 14:41	10.95
6/18/2022 15:18	-0.03	6/19/2022 14:08	0.82	6/19/2022 14:31	3.43	6/19/2022 15:54	-0.24	6/18/2022 14:42	10.96
6/18/2022 15:19	-0.05	6/19/2022 14:09	0.82	6/19/2022 14:32	3.42	6/19/2022 15:55	-0.27	6/18/2022 14:43	11.02
6/18/2022 15:20	-0.05	6/19/2022 14:10	0.82	6/19/2022 14:33	3.43	6/19/2022 15:56	-0.25	6/18/2022 14:44	10.97
6/18/2022 15:21	-0.05	6/19/2022 14:11	0.82	6/19/2022 14:34	3.44	6/19/2022 15:57	-0.25	6/18/2022 14:45	11.02
6/18/2022 15:22	-0.03	6/19/2022 14:12	0.82	6/19/2022 14:35	3.44	6/19/2022 15:58	-0.22	6/18/2022 14:46	10.95
6/18/2022 15:23	-0.03	6/19/2022 14:13	0.82	6/19/2022 14:36	3.44	6/19/2022 15:59	-0.22	6/18/2022 14:47	11.00
6/18/2022 15:24	-0.03	6/19/2022 14:14	0.82	6/19/2022 14:37	3.44	6/19/2022 16:00	-0.25	6/18/2022 14:48	11.01
6/18/2022 15:25	-0.03	6/19/2022 14:15	0.82	6/19/2022 14:38	3.44	6/19/2022 16:01	-0.25	6/18/2022 14:49	10.97
6/18/2022 15:26	-0.05	6/19/2022 14:16	0.82	6/19/2022 14:39	3.46	6/19/2022 16:02	-0.26	6/18/2022 14:50	11.01
6/18/2022 15:27	-0.03	6/19/2022 14:17	0.82	6/19/2022 14:40	3.39	6/19/2022 16:03	-0.26	6/18/2022 14:51	11.03
6/18/2022 15:28	-0.03	6/19/2022 14:18	0.82	6/19/2022 14:41	3.42	6/19/2022 16:04	-0.22	6/18/2022 14:52	11.02
6/18/2022 15:29	-0.03	6/19/2022 14:19	0.82	6/19/2022 14:42	3.42	6/19/2022 16:05	-0.29	6/18/2022 14:53	11.01
6/18/2022 15:30	-0.03	6/19/2022 14:20	0.82	6/19/2022 14:43	3.43	6/19/2022 16:06	-0.28	6/18/2022 14:54	11.02
6/18/2022 15:31	-0.04	6/19/2022 14:21	0.82	6/19/2022 14:44	3.42	6/19/2022 16:07	-0.26	6/18/2022 14:55	11.01
6/18/2022 15:32	-0.03	6/19/2022 14:22	0.82	6/19/2022 14:45	3.43	6/19/2022 16:08	-0.29	6/18/2022 14:56	10.98
6/18/2022 15:33	-0.03	6/19/2022 14:23	0.82	6/19/2022 14:46	3.43	6/19/2022 16:09	-0.23	6/18/2022 14:57	11.02
6/18/2022 15:34	-0.03	6/19/2022 14:24	0.82	6/19/2022 14:47	3.42	6/19/2022 16:10	-0.32	6/18/2022 14:58	11.00
6/18/2022 15:35	-0.03	6/19/2022 14:25	0.82	6/19/2022 14:48	3.39	6/19/2022 16:11	-0.26	6/18/2022 14:59	11.05
6/18/2022 15:36	-0.04	6/19/2022 14:26	0.82	6/19/2022 14:49	3.48	6/19/2022 16:12	-0.22	6/18/2022 15:00	11.01
6/18/2022 15:37	-0.04	6/19/2022 14:27	0.82	6/19/2022 14:50	3.46	6/19/2022 16:13	-0.29	6/18/2022 15:01	10.99
6/18/2022 15:38	-0.03	6/19/2022 14:28	0.82	6/19/2022 14:51	3.41	6/19/2022 16:14	-0.26	6/18/2022 15:02	11.01
6/18/2022 15:39	-0.03	6/19/2022 14:29	0.82	6/19/2022 14:52	3.42	6/19/2022 16:15	-0.26	6/18/2022 15:03	11.00
6/18/2022 15:40	-0.03	6/19/2022 14:30	0.82	6/19/2022 14:53	3.41	6/19/2022 16:16	-0.26	6/18/2022 15:04	10.99
6/18/2022 15:41	-0.05	6/19/2022 14:31	0.82	6/19/2022 14:54	3.43	6/19/2022 16:17	-0.26	6/18/2022 15:05	10.99
6/18/2022 15:42	-0.03	6/19/2022 14:32	0.82	6/19/2022 14:55	3.45	6/19/2022 16:18	-0.28	6/18/2022 15:06	10.95
6/18/2022 15:43	-0.03	6/19/2022 14:33	0.82	6/19/2022 14:56	3.39	6/19/2022 16:19	-0.27	6/18/2022 15:07	11.00
6/18/2022 15:44	-0.03	6/19/2022 14:34	0.82	6/19/2022 14:57	3.42	6/19/2022 16:20	-0.24	6/18/2022 15:08	10.98
6/18/2022 15:45	-0.03	6/19/2022 14:35	0.82	6/19/2022 14:58	3.43	6/19/2022 16:21	-0.26	6/18/2022 15:09	11.01
6/18/2022 15:46	-0.03	6/19/2022 14:36	0.82	6/19/2022 14:59	3.43	6/19/2022 16:22	-0.29	6/18/2022 15:10	11.03
6/18/2022 15:47	-0.03	6/19/2022 14:37	0.82	6/19/2022 15:00	3.41	6/19/2022 16:23	-0.25	6/18/2022 15:11	11.04
6/18/2022 15:48	-0.03	6/19/2022 14:38	0.82	6/19/2022 15:01	3.42	6/19/2022 16:24	-0.27	6/18/2022 15:12	11.03
6/18/2022 15:49	-0.03	6/19/2022 14:39	0.82	6/19/2022 15:02	3.40	6/19/2022 16:25	-0.24	6/18/2022 15:13	11.01
6/18/2022 15:50	-0.03	6/19/2022 14:40	0.82	6/19/2022 15:03	3.43	6/19/2022 16:26	-0.26	6/18/2022 15:14	11.01
6/18/2022 15:51	-0.03	6/19/2022 14:41	0.82	6/19/2022 15:04	3.44	6/19/2022 16:27	-0.20	6/18/2022 15:15	10.96
6/18/2022 15:52	-0.03	6/19/2022 14:42	0.82	6/19/2022 15:05	3.42	6/19/2022 16:28	-0.25	6/18/2022 15:16	10.98
6/18/2022 15:53	-0.03	6/19/2022 14:43	0.82	6/19/2022 15:06	3.42	6/19/2022 16:29	-0.25	6/18/2022 15:17	10.91
6/18/2022 15:54	-0.03	6/19/2022 14:44	0.82	6/19/2022 15:07	3.42	6/19/2022 16:30	-0.26	6/18/2022 15:18	10.98
6/18/2022 15:55	-0.03	6/19/2022 14:45	0.82	6/19/2022 15:08	3.42	6/19/2022 16:31	-0.26	6/18/2022 15:19	10.98
6/18/2022 15:56	-0.05	6/19/2022 14:46	0.82	6/19/2022 15:09	3.42	6/19/2022 16:32	-0.27	6/18/2022 15:20	11.02
6/18/2022 15:57	-0.03	6/19/2022 14:47	0.82	6/19/2022 15:10	3.42	6/19/2022 16:33	-0.21	6/18/2022 15:21	10.97
6/18/2022 15:58	-0.03	6/19/2022 14:48	0.82	6/19/2022 15:11	3.40	6/19/2022 16:34	-0.27	6/18/2022 15:22	10.99
6/18/2022 15:59	-0.03	6/19/2022 14:49	0.82	6/19/2022 15:12	3.45	6/19/2022 16:35	-0.23	6/18/2022 15:23	10.96
6/18/2022 16:00	-0.03	6/19/2022 14:50	0.81	6/19/2022 15:13	3.42	6/19/2022 16:36	-0.26	6/18/2022 15:24	10.97
6/18/2022 16:01	-0.05	6/19/2022 14:51	0.82	6/19/2022 15:14	3.40	6/19/2022 16:37	-0.27	6/18/2022 15:25	10.95
6/18/2022 16:02	-0.03	6/19/2022 14:52	0.82	6/19/2022 15:15	3.42	6/19/2022 16:38	-0.26	6/18/2022 15:26	10.98
6/18/2022 16:03	-0.03	6/19/2022 14:53	0.82	6/19/2022 15:16	3.42	6/19/2022 16:39	-0.24	6/18/2022 15:27	10.96
6/18/2022 16:04	-0.03	6/19/2022 14:54	0.84	6/19/2022 15:17	3.43	6/19/2022 16:40	-0.25	6/18/2022 15:28	10.93
6/18/2022 16:05	-0.03	6/19/2022 14:55	0.82	6/19/2022 15:18	3.44	6/19/2022 16:41	-0.26	6/18/2022 15:29	10.97
6/18/2022 16:06	-0.03	6/19/2022 14:56	0.82	6/19/2022 15:19	3.44	6/19/2022 16:42	-0.28	6/18/2022 15:30	11.04
6/18/2022 16:07	-0.03	6/19/2022 14:57	0.82	6/19/2022 15:20	3.43	6/19/2022 16:43	-0.28	6/18/2022 15:31	11.00
6/18/2022 16:08	-0.03	6/19/2022 14:58	0.82	6/19/2022 15:21	3.42	6/19/2022 16:44	-0.25	6/18/2022 15:32	11.00
6/18/2022 16:09	-0.03	6/19/2022 14:59	0.82	6/19/2022 15:22	3.46	6/19/2022 16:45	-0.29	6/18/2022 15:33	11.01
6/18/2022 16:10	-0.03	6/19/2022 15:00	0.82	6/19/2022 15:23	3.44	6/19/2022 16:46	-0.25	6/18/2022 15:34	11.02
6/18/2022 16:11	-0.03	6/19/2022 15:01	0.82	6/19/2022 15:24	3.40	6/19/2022 16:47	-0.26	6/18/2022 15:35	11.01
6/18/2022 16:12	-0.03	6/19/2022 15:02	0.82	6/19/2022 15:25	3.43	6/19/2022 16:48	-0.22	6/18/2022 15:36	11.05
6/18/2022 16:13	-0.03	6/19/2022 15:03	0.82	6/19/2022 15:26	3.40	6/19/2022 16:49	-0.22	6/18/2022 15:37	10.92
6/18/2022 16:14	-0.04	6/19/2022 15:04	0.82	6/19/2022 15:27	3.42	6/19/2022 16:50	-0.24	6/18/2022 15:38	10.97
6/18/2022 16:15	-0.05	6/19/2022 15:05	0.82	6/19/2022 15:28	3.45	6/19/2022 16:51	-0.26	6/18/2022 15:39	11.03
6/18/2022 16:16	-0.03	6/19/2022 15:06	0.82	6/19/2022 15:29	3.44	6/19/2022 16:52	-0.24	6/18/2022 15:40	11.00
6/18/2022 16:17	-0.03	6/19/2022 15:07	0.82	6/19/2022 15:30	3.42	6/19/2022 16:53	-0.28	6/18/2022 15:41	10.96
6/18/2022 16:18	-0.05	6/19/2022 15:08	0.82	6/19/2022 15:31	3.42	6/19/2022 16:54	-0.29	6/18/2022 15:42	10.96
6/18/2022 16:19	-0.05	6/19/2022 15:09	0.82	6/19/2022 15:32	3.45	6/19/2022 16:55	-0.26	6/18/2022 15:43	10.98
6/18/2022 16:20	-0.03	6/19/2022 15:10	0.82	6/19/2022 15:33	3.43	6/19/2022 16:56	-0.26	6/18/2022 15:44	11.05
6/18/2022 16:21	-0.03	6/19/2022 15:11	0.82	6/19/2022 15:34	3.42	6/19/2022 16:57	-0.26	6/18/2022 15:45	11.01
6/18/2022 16:22	-0.03	6/19/2022 15:12	0.82	6/19/2022 15:35	3.42	6/19/2022 16:58	-0.28	6/18/2022 15:46	11.03
6/18/2022 16:23	-0.03	6/19/2022 15:13	0.82	6/19/2022 15:36	3.39	6/19/2022 16:59	-0.26	6/18/2022 15:47	10.95
6/18/2022 16:24	-0.03	6/19/2022 15:14	0.82	6/19/2022 15:37	3.41	6/19/2022 17:00	-0.27	6/18/2022 15:48	10.99
6/18/2022 16:25	-0.03	6/19/2022 15:15	0.83	6/19/2022 15:38	3.43	6/19/2022 17:01	-0.26	6/18/2022 15:49	11.01
6/18/2022 16:26	-0.03	6/19/2022 15:16	0.82	6/19/2022 15:39	3.44	6/19/2022 17:02	-0.25	6/18/2022 15:50	11.00
6/18/2022 16:27	-0.03	6/19/2022 15:17	0.82	6/19/2022 15:40	3.41	6/19/2022 17:03	-0.21	6/18/2022 15:51	11.01
6/18/2022 16:28	-0.03	6/19/2022 15:18	0.82	6/19/2022 15:41	3.42	6/19/2022 17:04	-0.25	6/18/2022 15:52	11.05
6/18/2022 16:29	-0.03	6/19/2022 15:19	0.82	6/19/2022 15:42	3.47	6/19/2022 17:05	-0.29	6/18/2022 15:53	10.98
6/18/2022 16:30	-0.03	6/19/2022 15:20	0.82	6/19/2022 15:43	3.43	6/19/2022 17:06	-0.23	6/18/2022 15:54	10.97
6/18/2022 16:31	-0.03	6/19/2022 15:21	0.82	6/19/2022 15:44	3.42	6/19/2022 17:07	-0.26	6/18/2022 15:55	10.96
6/18/2022 16:32	-0.03	6/19/2022 15:22	0.82	6/19/2022 15:45	3.41	6/19/2022 17:08	-0.26	6/18/2022 15:56	10.99

6/18/2022 16:33	-0.03	6/19/2022 15:23	0.82	6/19/2022 15:46	3.43	6/19/2022 17:09	-0.25	6/18/2022 15:57	10.97
6/18/2022 16:34	-0.04	6/19/2022 15:24	0.82	6/19/2022 15:47	3.44	6/19/2022 17:10	-0.25	6/18/2022 15:58	11.00
6/18/2022 16:35	-0.03	6/19/2022 15:25	0.82	6/19/2022 15:48	3.42	6/19/2022 17:11	-0.28	6/18/2022 15:59	11.04
6/18/2022 16:36	-0.03	6/19/2022 15:26	0.82	6/19/2022 15:49	3.41	6/19/2022 17:12	-0.24	6/18/2022 16:00	11.01
6/18/2022 16:37	-0.04	6/19/2022 15:27	0.82	6/19/2022 15:50	3.43	6/19/2022 17:13	-0.28	6/18/2022 16:01	11.04
6/18/2022 16:38	-0.03	6/19/2022 15:28	0.83	6/19/2022 15:51	3.42	6/19/2022 17:14	-0.25	6/18/2022 16:02	10.99
6/18/2022 16:39	-0.05	6/19/2022 15:29	0.82	6/19/2022 15:52	3.45	6/19/2022 17:15	-0.26	6/18/2022 16:03	10.99
6/18/2022 16:40	-0.03	6/19/2022 15:30	0.82	6/19/2022 15:53	3.43	6/19/2022 17:16	-0.27	6/18/2022 16:04	11.02
6/18/2022 16:41	-0.03	6/19/2022 15:31	0.82	6/19/2022 15:54	3.44	6/19/2022 17:17	-0.25	6/18/2022 16:05	11.01
6/18/2022 16:42	-0.03	6/19/2022 15:32	0.82	6/19/2022 15:55	3.41	6/19/2022 17:18	-0.23	6/18/2022 16:06	11.03
6/18/2022 16:43	-0.04	6/19/2022 15:33	0.82	6/19/2022 15:56	3.43	6/19/2022 17:19	-0.24	6/18/2022 16:07	10.94
6/18/2022 16:44	-0.03	6/19/2022 15:34	0.82	6/19/2022 15:57	3.40	6/19/2022 17:20	-0.26	6/18/2022 16:08	11.00
6/18/2022 16:45	-0.04	6/19/2022 15:35	0.82	6/19/2022 15:58	3.43	6/19/2022 17:21	-0.27	6/18/2022 16:09	10.99
6/18/2022 16:46	-0.04	6/19/2022 15:36	0.82	6/19/2022 15:59	3.41	6/19/2022 17:22	-0.24	6/18/2022 16:10	11.00
6/18/2022 16:47	-0.03	6/19/2022 15:37	0.82	6/19/2022 16:00	3.43	6/19/2022 17:23	-0.25	6/18/2022 16:11	11.01
6/18/2022 16:48	-0.03	6/19/2022 15:38	0.82	6/19/2022 16:01	3.42	6/19/2022 17:24	-0.23	6/18/2022 16:12	11.00
6/18/2022 16:49	-0.05	6/19/2022 15:39	0.84	6/19/2022 16:02	3.41	6/19/2022 17:25	-0.26	6/18/2022 16:13	10.97
6/18/2022 16:50	-0.03	6/19/2022 15:40	0.82	6/19/2022 16:03	3.43	6/19/2022 17:26	-0.25	6/18/2022 16:14	11.04
6/18/2022 16:51	-0.03	6/19/2022 15:41	0.82	6/19/2022 16:04	3.47	6/19/2022 17:27	-0.25	6/18/2022 16:15	10.98
6/18/2022 16:52	-0.04	6/19/2022 15:42	0.82	6/19/2022 16:05	3.42	6/19/2022 17:28	-0.27	6/18/2022 16:16	11.00
6/18/2022 16:53	-0.03	6/19/2022 15:43	0.82	6/19/2022 16:06	3.43	6/19/2022 17:29	-0.25	6/18/2022 16:17	11.01
6/18/2022 16:54	-0.03	6/19/2022 15:44	0.82	6/19/2022 16:07	3.43	6/19/2022 17:30	-0.25	6/18/2022 16:18	11.01
6/18/2022 16:55	-0.03	6/19/2022 15:45	0.82	6/19/2022 16:08	3.45	6/19/2022 17:31	-0.26	6/18/2022 16:19	11.01
6/18/2022 16:56	-0.03	6/19/2022 15:46	0.82	6/19/2022 16:09	3.47	6/19/2022 17:32	-0.25	6/18/2022 16:20	11.01
6/18/2022 16:57	-0.03	6/19/2022 15:47	0.82	6/19/2022 16:10	3.42	6/19/2022 17:33	-0.22	6/18/2022 16:21	11.03
6/18/2022 16:58	-0.03	6/19/2022 15:48	0.82	6/19/2022 16:11	3.42	6/19/2022 17:34	-0.27	6/18/2022 16:22	10.99
6/18/2022 16:59	-0.03	6/19/2022 15:49	0.82	6/19/2022 16:12	3.43	6/19/2022 17:35	-0.29	6/18/2022 16:23	10.97
6/18/2022 17:00	-0.03	6/19/2022 15:50	0.82	6/19/2022 16:13	3.41	6/19/2022 17:36	-0.27	6/18/2022 16:24	11.07
6/18/2022 17:01	-0.03	6/19/2022 15:51	0.82	6/19/2022 16:14	3.45	6/19/2022 17:37	-0.27	6/18/2022 16:25	11.00
6/18/2022 17:02	-0.03	6/19/2022 15:52	0.83	6/19/2022 16:15	3.43	6/19/2022 17:38	-0.26	6/18/2022 16:26	11.03
6/18/2022 17:03	-0.03	6/19/2022 15:53	0.83	6/19/2022 16:16	3.43	6/19/2022 17:39	-0.24	6/18/2022 16:27	10.96
6/18/2022 17:04	-0.03	6/19/2022 15:54	0.83	6/19/2022 16:17	3.45	6/19/2022 17:40	-0.27	6/18/2022 16:28	11.00
6/18/2022 17:05	-0.03	6/19/2022 15:55	0.82	6/19/2022 16:18	3.44	6/19/2022 17:41	-0.25	6/18/2022 16:29	11.00
6/18/2022 17:06	-0.03	6/19/2022 15:56	0.82	6/19/2022 16:19	3.42	6/19/2022 17:42	-0.24	6/18/2022 16:30	11.02
6/18/2022 17:07	-0.05	6/19/2022 15:57	0.82	6/19/2022 16:20	3.44	6/19/2022 17:43	-0.26	6/18/2022 16:31	11.01
6/18/2022 17:08	-0.03	6/19/2022 15:58	0.82	6/19/2022 16:21	3.41	6/19/2022 17:44	-0.27	6/18/2022 16:32	11.03
6/18/2022 17:09	-0.05	6/19/2022 15:59	0.82	6/19/2022 16:22	3.42	6/19/2022 17:45	-0.19	6/18/2022 16:33	11.02
6/18/2022 17:10	-0.03	6/19/2022 16:00	0.82	6/19/2022 16:23	3.45	6/19/2022 17:46	-0.31	6/18/2022 16:34	11.06
6/18/2022 17:11	-0.03	6/19/2022 16:01	0.83	6/19/2022 16:24	3.41	6/19/2022 17:47	-0.26	6/18/2022 16:35	11.01
6/18/2022 17:12	-0.04	6/19/2022 16:02	0.83	6/19/2022 16:25	3.43	6/19/2022 17:48	-0.24	6/18/2022 16:36	10.99
6/18/2022 17:13	-0.04	6/19/2022 16:03	0.82	6/19/2022 16:26	3.42	6/19/2022 17:49	-0.28	6/18/2022 16:37	11.02
6/18/2022 17:14	-0.04	6/19/2022 16:04	0.83	6/19/2022 16:27	3.42	6/19/2022 17:50	-0.28	6/18/2022 16:38	10.99
6/18/2022 17:15	-0.03	6/19/2022 16:05	0.82	6/19/2022 16:28	3.41	6/19/2022 17:51	-0.28	6/18/2022 16:39	11.00
6/18/2022 17:16	-0.05	6/19/2022 16:06	0.82	6/19/2022 16:29	3.43	6/19/2022 17:52	-0.25	6/18/2022 16:40	11.04
6/18/2022 17:17	-0.05	6/19/2022 16:07	0.82	6/19/2022 16:30	3.41	6/19/2022 17:53	-0.29	6/18/2022 16:41	11.00
6/18/2022 17:18	-0.04	6/19/2022 16:08	0.82	6/19/2022 16:31	3.42	6/19/2022 17:54	-0.22	6/18/2022 16:42	11.03
6/18/2022 17:19	-0.05	6/19/2022 16:09	0.82	6/19/2022 16:32	3.44	6/19/2022 17:55	-0.25	6/18/2022 16:43	11.01
6/18/2022 17:20	-0.03	6/19/2022 16:10	0.82	6/19/2022 16:33	3.40	6/19/2022 17:56	-0.27	6/18/2022 16:44	11.02
6/18/2022 17:21	-0.05	6/19/2022 16:11	0.82	6/19/2022 16:34	3.44	6/19/2022 17:57	-0.25	6/18/2022 16:45	11.07
6/18/2022 17:22	-0.03	6/19/2022 16:12	0.82	6/19/2022 16:35	3.43	6/19/2022 17:58	-0.23	6/18/2022 16:46	11.02
6/18/2022 17:23	-0.04	6/19/2022 16:13	0.82	6/19/2022 16:36	3.41	6/19/2022 17:59	-0.23	6/18/2022 16:47	10.97
6/18/2022 17:24	-0.04	6/19/2022 16:14	0.82	6/19/2022 16:37	3.40	6/19/2022 18:00	-0.24	6/18/2022 16:48	11.02
6/18/2022 17:25	-0.03	6/19/2022 16:15	0.82	6/19/2022 16:38	3.42	6/19/2022 18:01	-0.26	6/18/2022 16:49	10.99
6/18/2022 17:26	-0.05	6/19/2022 16:16	0.82	6/19/2022 16:39	3.44	6/19/2022 18:02	-0.24	6/18/2022 16:50	11.05
6/18/2022 17:27	-0.03	6/19/2022 16:17	0.82	6/19/2022 16:40	3.43	6/19/2022 18:03	-0.26	6/18/2022 16:51	11.02
6/18/2022 17:28	-0.03	6/19/2022 16:18	0.83	6/19/2022 16:41	3.41	6/19/2022 18:04	-0.27	6/18/2022 16:52	11.01
6/18/2022 17:29	-0.03	6/19/2022 16:19	0.82	6/19/2022 16:42	3.43	6/19/2022 18:05	-0.24	6/18/2022 16:53	11.00
6/18/2022 17:30	-0.03	6/19/2022 16:20	0.83	6/19/2022 16:43	3.47	6/19/2022 18:06	-0.23	6/18/2022 16:54	11.03
6/18/2022 17:31	-0.05	6/19/2022 16:21	0.83	6/19/2022 16:44	3.43	6/19/2022 18:07	-0.29	6/18/2022 16:55	11.01
6/18/2022 17:32	-0.03	6/19/2022 16:22	0.82	6/19/2022 16:45	3.45	6/19/2022 18:08	-0.27	6/18/2022 16:56	11.03
6/18/2022 17:33	-0.04	6/19/2022 16:23	0.82	6/19/2022 16:46	3.44	6/19/2022 18:09	-0.28	6/18/2022 16:57	11.05
6/18/2022 17:34	-0.04	6/19/2022 16:24	0.82	6/19/2022 16:47	3.43	6/19/2022 18:10	-0.30	6/18/2022 16:58	11.02
6/18/2022 17:35	-0.03	6/19/2022 16:25	0.82	6/19/2022 16:48	3.44	6/19/2022 18:11	-0.27	6/18/2022 16:59	11.01
6/18/2022 17:36	-0.03	6/19/2022 16:26	0.82	6/19/2022 16:49	3.45	6/19/2022 18:12	-0.26	6/18/2022 17:00	10.99
6/18/2022 17:37	-0.03	6/19/2022 16:27	0.82	6/19/2022 16:50	3.45	6/19/2022 18:13	-0.24	6/18/2022 17:01	11.01
6/18/2022 17:38	-0.03	6/19/2022 16:28	0.82	6/19/2022 16:51	3.42	6/19/2022 18:14	-0.28	6/18/2022 17:02	11.03
6/18/2022 17:39	-0.03	6/19/2022 16:29	0.83	6/19/2022 16:52	3.42	6/19/2022 18:15	-0.25	6/18/2022 17:03	10.98
6/18/2022 17:40	-0.03	6/19/2022 16:30	0.82	6/19/2022 16:53	3.44	6/19/2022 18:16	-0.24	6/18/2022 17:04	11.03
6/18/2022 17:41	-0.03	6/19/2022 16:31	0.82	6/19/2022 16:54	3.43	6/19/2022 18:17	-0.26	6/18/2022 17:05	10.99
6/18/2022 17:42	-0.03	6/19/2022 16:32	0.83	6/19/2022 16:55	3.47	6/19/2022 18:18	-0.23	6/18/2022 17:06	11.01
6/18/2022 17:43	-0.03	6/19/2022 16:33	0.82	6/19/2022 16:56	3.45	6/19/2022 18:19	-0.26	6/18/2022 17:07	11.02
6/18/2022 17:44	-0.05	6/19/2022 16:34	0.82	6/19/2022 16:57	3.43	6/19/2022 18:20	-0.25	6/18/2022 17:08	11.05
6/18/2022 17:45	-0.03	6/19/2022 16:35	0.82	6/19/2022 16:58	3.43	6/19/2022 18:21	-0.21	6/18/2022 17:09	11.04
6/18/2022 17:46	-0.03	6/19/2022 16:36	0.83	6/19/2022 16:59	3.42	6/19/2022 18:22	-0.24	6/18/2022 17:10	10.96
6/18/2022 17:47	-0.03	6/19/2022 16:37	0.82	6/19/2022 17:00	3.42	6/19/2022 18:23	-0.26	6/18/2022 17:11	10.96
6/18/2022 17:48	-0.03	6/19/2022 16:38	0.82	6/19/2022 17:01	3.44	6/19/2022 18:24	-0.26	6/18/2022 17:12	11.02
6/18/2022 17:49	-0.03	6/19/2022 16:39	0.83	6/19/2022 17:02	3.46	6/19/2022 18:25	-0.27	6/18/2022 17:13	10.98
6/18/2022 17:50	-0.03	6/19/2022 16:40	0.82	6/19/2022 17:03	3.41	6/19/2022 18:26	-0.22	6/18/2022 17:14	11.01
6/18/2022 17:51	-0.03	6/19/2022 16:41	0.82	6/19/2022 17:04	3.46	6/19/2022 18:27	-0.22	6/18/2022 17:15	10.98
6/18/2022 17:52	-0.03	6/19/2022 16:42	0.82	6/19/2022 17:05	3.43	6/19/2022 18:28	-0.23	6/18/2022 17:16	10.99
6/18/2022 17:53	-0.04	6/19/2022 16:43	0.82	6/19/2022 17:06	3.44	6/19/2022 18:29	-0.24	6/18/2022 17:17	11.02
6/18/2022 17:54	-0.03	6/19/2022 16:44	0.82	6/19/2022 17:07	3.44	6/19/2022 18:30	-0.25	6/18/2022 17:18	11.02
6/18/2022 17:55	-0.03	6/19/2022 16:45	0.83	6/19/2022 17:08	3.45	6/19/2022 18:31	-0.25	6/18/2022 17:19	10.98
6/18/2022 17:56	-0.03	6/19/2022 16:46	0.82	6/19/2022 17:09	3.44	6/19/2022 18:32	-0.26	6/18/2022 17:20	10.97
6/18/2022 17:57	-0.03	6/19/2022 16:47	0.82	6/19/2022 17:10	3.41	6/19/2022 18:33	-0.26	6/18/2022 17:21	11.01
6/18/2022 17:58	-0.03	6/19/2022 16:48	0.82	6/19/2022 17:11	3.44	6/19/2022 18:34	-0.22	6/18/2022 17:22	10.98
6/18/2022 17:59	-0.03	6/19/2022 16:49	0.82	6/19/2022 17:12	3.45	6/19/2022 18:35	-0.25	6/18/2022 17:23	10.97
6/18/2022 18:00	-0.05	6/19/2022 16:50	0.82	6/19/2022 17:13	3.41	6/19/2022 18:36	-0.27	6/18/2022 17:24	10.98

6/18/2022 18:01	-0.05	6/19/2022 16:51	0.82	6/19/2022 17:14	3.47	6/19/2022 18:37	-0.28	6/18/2022 17:25	11.03
6/18/2022 18:02	-0.03	6/19/2022 16:52	0.82	6/19/2022 17:15	3.42	6/19/2022 18:38	-0.25	6/18/2022 17:26	11.01
6/18/2022 18:03	-0.03	6/19/2022 16:53	0.82	6/19/2022 17:16	3.42	6/19/2022 18:39	-0.30	6/18/2022 17:27	11.01
6/18/2022 18:04	-0.03	6/19/2022 16:54	0.82	6/19/2022 17:17	3.44	6/19/2022 18:40	-0.26	6/18/2022 17:28	10.98
6/18/2022 18:05	-0.03	6/19/2022 16:55	0.82	6/19/2022 17:18	3.41	6/19/2022 18:41	-0.25	6/18/2022 17:29	11.01
6/18/2022 18:06	-0.03	6/19/2022 16:56	0.82	6/19/2022 17:19	3.45	6/19/2022 18:42	-0.26	6/18/2022 17:30	10.97
6/18/2022 18:07	-0.03	6/19/2022 16:57	0.83	6/19/2022 17:20	3.45	6/19/2022 18:43	-0.28	6/18/2022 17:31	10.99
6/18/2022 18:08	-0.03	6/19/2022 16:58	0.82	6/19/2022 17:21	3.42	6/19/2022 18:44	-0.26	6/18/2022 17:32	11.00
6/18/2022 18:09	-0.03	6/19/2022 16:59	0.85	6/19/2022 17:22	3.44	6/19/2022 18:45	-0.25	6/18/2022 17:33	11.04
6/18/2022 18:10	-0.03	6/19/2022 17:00	0.82	6/19/2022 17:23	3.42	6/19/2022 18:46	-0.27	6/18/2022 17:34	11.04
6/18/2022 18:11	-0.03	6/19/2022 17:01	0.83	6/19/2022 17:24	3.47	6/19/2022 18:47	-0.28	6/18/2022 17:35	11.00
6/18/2022 18:12	-0.03	6/19/2022 17:02	0.82	6/19/2022 17:25	3.46	6/19/2022 18:48	-0.27	6/18/2022 17:36	10.99
6/18/2022 18:13	-0.03	6/19/2022 17:03	0.82	6/19/2022 17:26	3.43	6/19/2022 18:49	-0.25	6/18/2022 17:37	11.00
6/18/2022 18:14	-0.03	6/19/2022 17:04	0.82	6/19/2022 17:27	3.44	6/19/2022 18:50	-0.25	6/18/2022 17:38	11.01
6/18/2022 18:15	-0.03	6/19/2022 17:05	0.82	6/19/2022 17:28	3.44	6/19/2022 18:51	-0.27	6/18/2022 17:39	11.01
6/18/2022 18:16	-0.03	6/19/2022 17:06	0.82	6/19/2022 17:29	3.43	6/19/2022 18:52	-0.24	6/18/2022 17:40	11.00
6/18/2022 18:17	-0.03	6/19/2022 17:07	0.82	6/19/2022 17:30	3.44	6/19/2022 18:53	-0.26	6/18/2022 17:41	11.00
6/18/2022 18:18	-0.03	6/19/2022 17:08	0.82	6/19/2022 17:31	3.44	6/19/2022 18:54	-0.24	6/18/2022 17:42	10.97
6/18/2022 18:19	-0.05	6/19/2022 17:09	0.82	6/19/2022 17:32	3.45	6/19/2022 18:55	-0.29	6/18/2022 17:43	10.99
6/18/2022 18:20	-0.03	6/19/2022 17:10	0.82	6/19/2022 17:33	3.46	6/19/2022 18:56	-0.22	6/18/2022 17:44	10.96
6/18/2022 18:21	-0.03	6/19/2022 17:11	0.82	6/19/2022 17:34	3.46	6/19/2022 18:57	-0.27	6/18/2022 17:45	10.99
6/18/2022 18:22	-0.03	6/19/2022 17:12	0.82	6/19/2022 17:35	3.44	6/19/2022 18:58	-0.28	6/18/2022 17:46	10.97
6/18/2022 18:23	-0.03	6/19/2022 17:13	0.82	6/19/2022 17:36	3.43	6/19/2022 18:59	-0.25	6/18/2022 17:47	11.05
6/18/2022 18:24	-0.03	6/19/2022 17:14	0.82	6/19/2022 17:37	3.41	6/19/2022 19:00	-0.28	6/18/2022 17:48	11.02
6/18/2022 18:25	-0.03	6/19/2022 17:15	0.82	6/19/2022 17:38	3.44	6/19/2022 19:01	-0.29	6/18/2022 17:49	10.96
6/18/2022 18:26	-0.03	6/19/2022 17:16	0.82	6/19/2022 17:39	3.46	6/19/2022 19:02	-0.26	6/18/2022 17:50	10.99
6/18/2022 18:27	-0.03	6/19/2022 17:17	0.82	6/19/2022 17:40	3.44	6/19/2022 19:03	-0.27	6/18/2022 17:51	10.99
6/18/2022 18:28	-0.03	6/19/2022 17:18	0.82	6/19/2022 17:41	3.45	6/19/2022 19:04	-0.24	6/18/2022 17:52	11.03
6/18/2022 18:29	-0.05	6/19/2022 17:19	0.82	6/19/2022 17:42	3.46	6/19/2022 19:05	-0.24	6/18/2022 17:53	11.02
6/18/2022 18:30	-0.03	6/19/2022 17:20	0.82	6/19/2022 17:43	3.43	6/19/2022 19:06	-0.22	6/18/2022 17:54	11.03
6/18/2022 18:31	-0.03	6/19/2022 17:21	0.82	6/19/2022 17:44	3.44	6/19/2022 19:07	-0.29	6/18/2022 17:55	11.03
6/18/2022 18:32	-0.03	6/19/2022 17:22	0.82	6/19/2022 17:45	3.45	6/19/2022 19:08	-0.24	6/18/2022 17:56	11.01
6/18/2022 18:33	-0.03	6/19/2022 17:23	0.82	6/19/2022 17:46	3.45	6/19/2022 19:09	-0.27	6/18/2022 17:57	10.99
6/18/2022 18:34	-0.03	6/19/2022 17:24	0.83	6/19/2022 17:47	3.43	6/19/2022 19:10	-0.23	6/18/2022 17:58	10.98
6/18/2022 18:35	-0.03	6/19/2022 17:25	0.82	6/19/2022 17:48	3.45	6/19/2022 19:11	-0.29	6/18/2022 17:59	10.99
6/18/2022 18:36	-0.03	6/19/2022 17:26	0.82	6/19/2022 17:49	3.43	6/19/2022 19:12	-0.22	6/18/2022 18:00	10.99
6/18/2022 18:37	-0.03	6/19/2022 17:27	0.82	6/19/2022 17:50	3.47	6/19/2022 19:13	-0.26	6/18/2022 18:01	11.00
6/18/2022 18:38	-0.03	6/19/2022 17:28	0.82	6/19/2022 17:51	3.43	6/19/2022 19:14	-0.23	6/18/2022 18:02	11.02
6/18/2022 18:39	-0.05	6/19/2022 17:29	0.82	6/19/2022 17:52	3.43	6/19/2022 19:15	-0.21	6/18/2022 18:03	11.05
6/18/2022 18:40	-0.03	6/19/2022 17:30	0.82	6/19/2022 17:53	3.45	6/19/2022 19:16	-0.27	6/18/2022 18:04	11.00
6/18/2022 18:41	-0.03	6/19/2022 17:31	0.83	6/19/2022 17:54	3.43	6/19/2022 19:17	-0.27	6/18/2022 18:05	11.07
6/18/2022 18:42	-0.03	6/19/2022 17:32	0.82	6/19/2022 17:55	3.44	6/19/2022 19:18	-0.26	6/18/2022 18:06	11.00
6/18/2022 18:43	-0.03	6/19/2022 17:33	0.82	6/19/2022 17:56	3.45	6/19/2022 19:19	-0.26	6/18/2022 18:07	11.04
6/18/2022 18:44	-0.03	6/19/2022 17:34	0.83	6/19/2022 17:57	3.43	6/19/2022 19:20	-0.25	6/18/2022 18:08	11.03
6/18/2022 18:45	-0.05	6/19/2022 17:35	0.82	6/19/2022 17:58	3.46	6/19/2022 19:21	-0.26	6/18/2022 18:09	11.00
6/18/2022 18:46	-0.03	6/19/2022 17:36	0.82	6/19/2022 17:59	3.41	6/19/2022 19:22	-0.32	6/18/2022 18:10	11.02
6/18/2022 18:47	-0.03	6/19/2022 17:37	0.82	6/19/2022 18:00	3.41	6/19/2022 19:23	-0.29	6/18/2022 18:11	11.04
6/18/2022 18:48	-0.03	6/19/2022 17:38	0.83	6/19/2022 18:01	3.44	6/19/2022 19:24	-0.24	6/18/2022 18:12	11.02
6/18/2022 18:49	-0.03	6/19/2022 17:39	0.82	6/19/2022 18:02	3.44	6/19/2022 19:25	-0.24	6/18/2022 18:13	10.97
6/18/2022 18:50	-0.03	6/19/2022 17:40	0.82	6/19/2022 18:03	3.44	6/19/2022 19:26	-0.32	6/18/2022 18:14	11.08
6/18/2022 18:51	-0.03	6/19/2022 17:41	0.83	6/19/2022 18:04	3.40	6/19/2022 19:27	-0.26	6/18/2022 18:15	11.00
6/18/2022 18:52	-0.03	6/19/2022 17:42	0.83	6/19/2022 18:05	3.42	6/19/2022 19:28	-0.28	6/18/2022 18:16	11.00
6/18/2022 18:53	-0.03	6/19/2022 17:43	0.85	6/19/2022 18:06	3.44	6/19/2022 19:29	-0.27	6/18/2022 18:17	11.02
6/18/2022 18:54	-0.03	6/19/2022 17:44	0.82	6/19/2022 18:07	3.40	6/19/2022 19:30	-0.26	6/18/2022 18:18	11.04
6/18/2022 18:55	-0.04	6/19/2022 17:45	0.83	6/19/2022 18:08	3.43	6/19/2022 19:31	-0.26	6/18/2022 18:19	11.00
6/18/2022 18:56	-0.04	6/19/2022 17:46	0.82	6/19/2022 18:09	3.42	6/19/2022 19:32	-0.27	6/18/2022 18:20	11.00
6/18/2022 18:57	-0.03	6/19/2022 17:47	0.82	6/19/2022 18:10	3.45	6/19/2022 19:33	-0.29	6/18/2022 18:21	11.01
6/18/2022 18:58	-0.03	6/19/2022 17:48	0.82	6/19/2022 18:11	3.46	6/19/2022 19:34	-0.27	6/18/2022 18:22	10.99
6/18/2022 18:59	-0.03	6/19/2022 17:49	0.83	6/19/2022 18:12	3.42	6/19/2022 19:35	-0.28	6/18/2022 18:23	11.03
6/18/2022 19:00	-0.05	6/19/2022 17:50	0.82	6/19/2022 18:13	3.45	6/19/2022 19:36	-0.24	6/18/2022 18:24	11.02
6/18/2022 19:01	-0.03	6/19/2022 17:51	0.82	6/19/2022 18:14	3.45	6/19/2022 19:37	-0.24	6/18/2022 18:25	11.00
6/18/2022 19:02	-0.03	6/19/2022 17:52	0.83	6/19/2022 18:15	3.44	6/19/2022 19:38	-0.32	6/18/2022 18:26	11.00
6/18/2022 19:03	-0.03	6/19/2022 17:53	0.83	6/19/2022 18:16	3.42	6/19/2022 19:39	-0.27	6/18/2022 18:27	11.06
6/18/2022 19:04	-0.03	6/19/2022 17:54	0.83	6/19/2022 18:17	3.42	6/19/2022 19:40	-0.27	6/18/2022 18:28	11.04
6/18/2022 19:05	-0.03	6/19/2022 17:55	0.83	6/19/2022 18:18	3.40	6/19/2022 19:41	-0.29	6/18/2022 18:29	11.02
6/18/2022 19:06	-0.03	6/19/2022 17:56	0.82	6/19/2022 18:19	3.46	6/19/2022 19:42	-0.28	6/18/2022 18:30	11.05
6/18/2022 19:07	-0.03	6/19/2022 17:57	0.83	6/19/2022 18:20	3.45	6/19/2022 19:43	-0.32	6/18/2022 18:31	11.02
6/18/2022 19:08	-0.04	6/19/2022 17:58	0.82	6/19/2022 18:21	3.43	6/19/2022 19:44	-0.23	6/18/2022 18:32	11.02
6/18/2022 19:09	-0.03	6/19/2022 17:59	0.83	6/19/2022 18:22	3.46	6/19/2022 19:45	-0.28	6/18/2022 18:33	11.05
6/18/2022 19:10	-0.03	6/19/2022 18:00	0.83	6/19/2022 18:23	3.44	6/19/2022 19:46	-0.27	6/18/2022 18:34	11.08
6/18/2022 19:11	-0.03	6/19/2022 18:01	0.82	6/19/2022 18:24	3.44	6/19/2022 19:47	-0.25	6/18/2022 18:35	11.01
6/18/2022 19:12	-0.03	6/19/2022 18:02	0.82	6/19/2022 18:25	3.45	6/19/2022 19:48	-0.26	6/18/2022 18:36	10.97
6/18/2022 19:13	-0.03	6/19/2022 18:03	0.82	6/19/2022 18:26	3.43	6/19/2022 19:49	-0.27	6/18/2022 18:37	11.04
6/18/2022 19:14	-0.03	6/19/2022 18:04	0.82	6/19/2022 18:27	3.44	6/19/2022 19:50	-0.26	6/18/2022 18:38	11.02
6/18/2022 19:15	-0.03	6/19/2022 18:05	0.82	6/19/2022 18:28	3.45	6/19/2022 19:51	-0.27	6/18/2022 18:39	11.00
6/18/2022 19:16	-0.03	6/19/2022 18:06	0.82	6/19/2022 18:29	3.46	6/19/2022 19:52	-0.28	6/18/2022 18:40	11.06
6/18/2022 19:17	-0.03	6/19/2022 18:07	0.82	6/19/2022 18:30	3.42	6/19/2022 19:53	-0.27	6/18/2022 18:41	11.02
6/18/2022 19:18	-0.03	6/19/2022 18:08	0.83	6/19/2022 18:31	3.45	6/19/2022 19:54	-0.27	6/18/2022 18:42	11.00
6/18/2022 19:19	-0.03	6/19/2022 18:09	0.82	6/19/2022 18:32	3.47	6/19/2022 19:55	-0.26	6/18/2022 18:43	10.99
6/18/2022 19:20	-0.03	6/19/2022 18:10	0.83	6/19/2022 18:33	3.46	6/19/2022 19:56	-0.24	6/18/2022 18:44	11.07
6/18/2022 19:21	-0.03	6/19/2022 18:11	0.83	6/19/2022 18:34	3.46	6/19/2022 19:57	-0.28	6/18/2022 18:45	10.97
6/18/2022 19:22	-0.03	6/19/2022 18:12	0.83	6/19/2022 18:35	3.43	6/19/2022 19:58	-0.24	6/18/2022 18:46	10.99
6/18/2022 19:23	-0.03	6/19/2022 18:13	0.83	6/19/2022 18:36	3.47	6/19/2022 19:59	-0.25	6/18/2022 18:47	11.02
6/18/2022 19:24	-0.03	6/19/2022 18:14	0.83	6/19/2022 18:37	3.44	6/19/2022 20:00	-0.24	6/18/2022 18:48	11.01
6/18/2022 19:25	-0.03	6/19/2022 18:15	0.83	6/19/2022 18:38	3.42	6/19/2022 20:01	-0.24	6/18/2022 18:49	11.02
6/18/2022 19:26	-0.03	6/19/2022 18:16	0.82	6/19/2022 18:39	3.47	6/19/2022 20:02	-0.28	6/18/2022 18:50	11.01
6/18/2022 19:27	-0.03	6/19/2022 18:17	0.83	6/19/2022 18:40	3.45	6/19/2022 20:03	-0.28	6/18/2022 18:51	10.99
6/18/2022 19:28	-0.04	6/19/2022 18:18	0.83	6/19/2022 18:41	3.46	6/19/2022 20:04	-0.23	6/18/2022 18:52	10.99

6/18/2022 19:29	-0.03	6/19/2022 18:19	0.82	6/19/2022 18:42	3.45	6/19/2022 20:05	-0.26	6/18/2022 18:53	11.02
6/18/2022 19:30	-0.05	6/19/2022 18:20	0.83	6/19/2022 18:43	3.43	6/19/2022 20:06	-0.34	6/18/2022 18:54	11.05
6/18/2022 19:31	-0.03	6/19/2022 18:21	0.82	6/19/2022 18:44	3.46	6/19/2022 20:07	-0.27	6/18/2022 18:55	11.09
6/18/2022 19:32	-0.04	6/19/2022 18:22	0.83	6/19/2022 18:45	3.45	6/19/2022 20:08	-0.27	6/18/2022 18:56	11.00
6/18/2022 19:33	-0.03	6/19/2022 18:23	0.83	6/19/2022 18:46	3.47	6/19/2022 20:09	-0.24	6/18/2022 18:57	11.05
6/18/2022 19:34	-0.03	6/19/2022 18:24	0.82	6/19/2022 18:47	3.43	6/19/2022 20:10	-0.25	6/18/2022 18:58	11.03
6/18/2022 19:35	-0.06	6/19/2022 18:25	0.82	6/19/2022 18:48	3.44	6/19/2022 20:11	-0.27	6/18/2022 18:59	11.01
6/18/2022 19:36	-0.03	6/19/2022 18:26	0.82	6/19/2022 18:49	3.43	6/19/2022 20:12	-0.27	6/18/2022 19:00	11.02
6/18/2022 19:37	-0.03	6/19/2022 18:27	0.82	6/19/2022 18:50	3.44	6/19/2022 20:13	-0.24	6/18/2022 19:01	11.02
6/18/2022 19:38	-0.03	6/19/2022 18:28	0.82	6/19/2022 18:51	3.43	6/19/2022 20:14	-0.29	6/18/2022 19:02	11.02
6/18/2022 19:39	-0.03	6/19/2022 18:29	0.82	6/19/2022 18:52	3.47	6/19/2022 20:15	-0.31	6/18/2022 19:03	11.02
6/18/2022 19:40	-0.03	6/19/2022 18:30	0.82	6/19/2022 18:53	3.45	6/19/2022 20:16	-0.26	6/18/2022 19:04	11.03
6/18/2022 19:41	-0.05	6/19/2022 18:31	0.82	6/19/2022 18:54	3.45	6/19/2022 20:17	-0.27	6/18/2022 19:05	11.09
6/18/2022 19:42	-0.04	6/19/2022 18:32	0.82	6/19/2022 18:55	3.43	6/19/2022 20:18	-0.25	6/18/2022 19:06	11.03
6/18/2022 19:43	-0.03	6/19/2022 18:33	0.83	6/19/2022 18:56	3.43	6/19/2022 20:19	-0.28	6/18/2022 19:07	11.07
6/18/2022 19:44	-0.03	6/19/2022 18:34	0.83	6/19/2022 18:57	3.42	6/19/2022 20:20	-0.25	6/18/2022 19:08	11.02
6/18/2022 19:45	-0.04	6/19/2022 18:35	0.82	6/19/2022 18:58	3.43	6/19/2022 20:21	-0.25	6/18/2022 19:09	11.01
6/18/2022 19:46	-0.03	6/19/2022 18:36	0.82	6/19/2022 18:59	3.44	6/19/2022 20:22	-0.23	6/18/2022 19:10	11.07
6/18/2022 19:47	-0.03	6/19/2022 18:37	0.82	6/19/2022 19:00	3.47	6/19/2022 20:23	-0.26	6/18/2022 19:11	11.05
6/18/2022 19:48	-0.04	6/19/2022 18:38	0.83	6/19/2022 19:01	3.45	6/19/2022 20:24	-0.29	6/18/2022 19:12	11.05
6/18/2022 19:49	-0.03	6/19/2022 18:39	0.83	6/19/2022 19:02	3.45	6/19/2022 20:25	-0.26	6/18/2022 19:13	11.01
6/18/2022 19:50	-0.03	6/19/2022 18:40	0.83	6/19/2022 19:03	3.45	6/19/2022 20:26	-0.25	6/18/2022 19:14	11.06
6/18/2022 19:51	-0.03	6/19/2022 18:41	0.83	6/19/2022 19:04	3.47	6/19/2022 20:27	-0.27	6/18/2022 19:15	11.05
6/18/2022 19:52	-0.04	6/19/2022 18:42	0.83	6/19/2022 19:05	3.43	6/19/2022 20:28	-0.27	6/18/2022 19:16	11.02
6/18/2022 19:53	-0.04	6/19/2022 18:43	0.83	6/19/2022 19:06	3.48	6/19/2022 20:29	-0.28	6/18/2022 19:17	11.01
6/18/2022 19:54	-0.03	6/19/2022 18:44	0.83	6/19/2022 19:07	3.47	6/19/2022 20:30	-0.24	6/18/2022 19:18	11.06
6/18/2022 19:55	-0.03	6/19/2022 18:45	0.82	6/19/2022 19:08	3.48	6/19/2022 20:31	-0.26	6/18/2022 19:19	11.03
6/18/2022 19:56	-0.03	6/19/2022 18:46	0.82	6/19/2022 19:09	3.47	6/19/2022 20:32	-0.32	6/18/2022 19:20	11.06
6/18/2022 19:57	-0.03	6/19/2022 18:47	0.83	6/19/2022 19:10	3.45	6/19/2022 20:33	-0.27	6/18/2022 19:21	11.00
6/18/2022 19:58	-0.03	6/19/2022 18:48	0.83	6/19/2022 19:11	3.42	6/19/2022 20:34	-0.27	6/18/2022 19:22	11.02
6/18/2022 19:59	-0.03	6/19/2022 18:49	0.83	6/19/2022 19:12	3.45	6/19/2022 20:35	-0.26	6/18/2022 19:23	11.01
6/18/2022 20:00	-0.03	6/19/2022 18:50	0.83	6/19/2022 19:13	3.47	6/19/2022 20:36	-0.28	6/18/2022 19:24	11.10
6/18/2022 20:01	-0.03	6/19/2022 18:51	0.83	6/19/2022 19:14	3.46	6/19/2022 20:37	-0.30	6/18/2022 19:25	11.04
6/18/2022 20:02	-0.03	6/19/2022 18:52	0.83	6/19/2022 19:15	3.44	6/19/2022 20:38	-0.24	6/18/2022 19:26	11.04
6/18/2022 20:03	-0.03	6/19/2022 18:53	0.82	6/19/2022 19:16	3.46	6/19/2022 20:39	-0.22	6/18/2022 19:27	11.03
6/18/2022 20:04	-0.03	6/19/2022 18:54	0.83	6/19/2022 19:17	3.43	6/19/2022 20:40	-0.25	6/18/2022 19:28	11.04
6/18/2022 20:05	-0.03	6/19/2022 18:55	0.83	6/19/2022 19:18	3.44	6/19/2022 20:41	-0.26	6/18/2022 19:29	11.03
6/18/2022 20:06	-0.03	6/19/2022 18:56	0.85	6/19/2022 19:19	3.46	6/19/2022 20:42	-0.27	6/18/2022 19:30	11.05
6/18/2022 20:07	-0.03	6/19/2022 18:57	0.83	6/19/2022 19:20	3.46	6/19/2022 20:43	-0.29	6/18/2022 19:31	11.01
6/18/2022 20:08	-0.03	6/19/2022 18:58	0.82	6/19/2022 19:21	3.47	6/19/2022 20:44	-0.29	6/18/2022 19:32	11.02
6/18/2022 20:09	-0.03	6/19/2022 18:59	0.83	6/19/2022 19:22	3.45	6/19/2022 20:45	-0.26	6/18/2022 19:33	11.01
6/18/2022 20:10	-0.03	6/19/2022 19:00	0.83	6/19/2022 19:23	3.44	6/19/2022 20:46	-0.22	6/18/2022 19:34	11.03
6/18/2022 20:11	-0.03	6/19/2022 19:01	0.83	6/19/2022 19:24	3.46	6/19/2022 20:47	-0.29	6/18/2022 19:35	11.00
6/18/2022 20:12	-0.03	6/19/2022 19:02	0.83	6/19/2022 19:25	3.45	6/19/2022 20:48	-0.25	6/18/2022 19:36	11.06
6/18/2022 20:13	-0.03	6/19/2022 19:03	0.83	6/19/2022 19:26	3.46	6/19/2022 20:49	-0.24	6/18/2022 19:37	11.06
6/18/2022 20:14	-0.03	6/19/2022 19:04	0.83	6/19/2022 19:27	3.45	6/19/2022 20:50	-0.25	6/18/2022 19:38	11.06
6/18/2022 20:15	-0.03	6/19/2022 19:05	0.83	6/19/2022 19:28	3.42	6/19/2022 20:51	-0.26	6/18/2022 19:39	11.08
6/18/2022 20:16	-0.03	6/19/2022 19:06	0.83	6/19/2022 19:29	3.45	6/19/2022 20:52	-0.24	6/18/2022 19:40	11.04
6/18/2022 20:17	-0.03	6/19/2022 19:07	0.83	6/19/2022 19:30	3.43	6/19/2022 20:53	-0.26	6/18/2022 19:41	11.03
6/18/2022 20:18	-0.03	6/19/2022 19:08	0.83	6/19/2022 19:31	3.46	6/19/2022 20:54	-0.21	6/18/2022 19:42	11.03
6/18/2022 20:19	-0.04	6/19/2022 19:09	0.83	6/19/2022 19:32	3.46	6/19/2022 20:55	-0.26	6/18/2022 19:43	11.05
6/18/2022 20:20	-0.03	6/19/2022 19:10	0.83	6/19/2022 19:33	3.46	6/19/2022 20:56	-0.27	6/18/2022 19:44	10.97
6/18/2022 20:21	-0.04	6/19/2022 19:11	0.83	6/19/2022 19:34	3.44	6/19/2022 20:57	-0.24	6/18/2022 19:45	11.05
6/18/2022 20:22	-0.03	6/19/2022 19:12	0.83	6/19/2022 19:35	3.44	6/19/2022 20:58	-0.31	6/18/2022 19:46	11.04
6/18/2022 20:23	-0.03	6/19/2022 19:13	0.83	6/19/2022 19:36	3.46	6/19/2022 20:59	-0.22	6/18/2022 19:47	11.01
6/18/2022 20:24	-0.04	6/19/2022 19:14	0.83	6/19/2022 19:37	3.45	6/19/2022 21:00	-0.28	6/18/2022 19:48	11.06
6/18/2022 20:25	-0.03	6/19/2022 19:15	0.83	6/19/2022 19:38	3.48	6/19/2022 21:01	-0.26	6/18/2022 19:49	11.06
6/18/2022 20:26	-0.03	6/19/2022 19:16	0.85	6/19/2022 19:39	3.49	6/19/2022 21:02	-0.29	6/18/2022 19:50	11.09
6/18/2022 20:27	-0.03	6/19/2022 19:17	0.85	6/19/2022 19:40	3.47	6/19/2022 21:03	-0.26	6/18/2022 19:51	11.05
6/18/2022 20:28	-0.03	6/19/2022 19:18	0.83	6/19/2022 19:41	3.48	6/19/2022 21:04	-0.29	6/18/2022 19:52	11.04
6/18/2022 20:29	-0.03	6/19/2022 19:19	0.83	6/19/2022 19:42	3.44	6/19/2022 21:05	-0.23	6/18/2022 19:53	11.06
6/18/2022 20:30	-0.03	6/19/2022 19:20	0.83	6/19/2022 19:43	3.44	6/19/2022 21:06	-0.26	6/18/2022 19:54	11.05
6/18/2022 20:31	-0.04	6/19/2022 19:21	0.82	6/19/2022 19:44	3.45	6/19/2022 21:07	-0.27	6/18/2022 19:55	11.05
6/18/2022 20:32	-0.03	6/19/2022 19:22	0.83	6/19/2022 19:45	3.47	6/19/2022 21:08	-0.29	6/18/2022 19:56	11.01
6/18/2022 20:33	-0.03	6/19/2022 19:23	0.83	6/19/2022 19:46	3.45	6/19/2022 21:09	-0.24	6/18/2022 19:57	11.06
6/18/2022 20:34	-0.03	6/19/2022 19:24	0.83	6/19/2022 19:47	3.50	6/19/2022 21:10	-0.23	6/18/2022 19:58	11.07
6/18/2022 20:35	-0.03	6/19/2022 19:25	0.83	6/19/2022 19:48	3.45	6/19/2022 21:11	-0.24	6/18/2022 19:59	11.02
6/18/2022 20:36	-0.03	6/19/2022 19:26	0.83	6/19/2022 19:49	3.47	6/19/2022 21:12	-0.25	6/18/2022 20:00	11.05
6/18/2022 20:37	-0.03	6/19/2022 19:27	0.83	6/19/2022 19:50	3.47	6/19/2022 21:13	-0.27	6/18/2022 20:01	11.03
6/18/2022 20:38	-0.03	6/19/2022 19:28	0.85	6/19/2022 19:51	3.46	6/19/2022 21:14	-0.29	6/18/2022 20:02	11.03
6/18/2022 20:39	-0.03	6/19/2022 19:29	0.83	6/19/2022 19:52	3.46	6/19/2022 21:15	-0.22	6/18/2022 20:03	11.02
6/18/2022 20:40	-0.03	6/19/2022 19:30	0.83	6/19/2022 19:53	3.50	6/19/2022 21:16	-0.27	6/18/2022 20:04	11.00
6/18/2022 20:41	-0.03	6/19/2022 19:31	0.83	6/19/2022 19:54	3.44	6/19/2022 21:17	-0.25	6/18/2022 20:05	11.01
6/18/2022 20:42	-0.03	6/19/2022 19:32	0.85	6/19/2022 19:55	3.45	6/19/2022 21:18	-0.26	6/18/2022 20:06	11.07
6/18/2022 20:43	-0.04	6/19/2022 19:33	0.83	6/19/2022 19:56	3.46	6/19/2022 21:19	-0.25	6/18/2022 20:07	11.08
6/18/2022 20:44	-0.03	6/19/2022 19:34	0.85	6/19/2022 19:57	3.45	6/19/2022 21:20	-0.28	6/18/2022 20:08	11.06
6/18/2022 20:45	-0.03	6/19/2022 19:35	0.83	6/19/2022 19:58	3.47	6/19/2022 21:21	-0.28	6/18/2022 20:09	11.01
6/18/2022 20:46	-0.04	6/19/2022 19:36	0.83	6/19/2022 19:59	3.46	6/19/2022 21:22	-0.27	6/18/2022 20:10	11.06
6/18/2022 20:47	-0.03	6/19/2022 19:37	0.85	6/19/2022 20:00	3.47	6/19/2022 21:23	-0.26	6/18/2022 20:11	11.03
6/18/2022 20:48	-0.04	6/19/2022 19:38	0.83	6/19/2022 20:01	3.49	6/19/2022 21:24	-0.28	6/18/2022 20:12	11.03
6/18/2022 20:49	-0.04	6/19/2022 19:39	0.83	6/19/2022 20:02	3.45	6/19/2022 21:25	-0.22	6/18/2022 20:13	11.03
6/18/2022 20:50	-0.03	6/19/2022 19:40	0.83	6/19/2022 20:03	3.45	6/19/2022 21:26	-0.28	6/18/2022 20:14	11.00
6/18/2022 20:51	-0.03	6/19/2022 19:41	0.83	6/19/2022 20:04	3.43	6/19/2022 21:27	-0.26	6/18/2022 20:15	11.02
6/18/2022 20:52	-0.03	6/19/2022 19:42	0.83	6/19/2022 20:05	3.49	6/19/2022 21:28	-0.27	6/18/2022 20:16	11.04
6/18/2022 20:53	-0.03	6/19/2022 19:43	0.83	6/19/2022 20:06	3.45	6/19/2022 21:29	-0.26	6/18/2022 20:17	11.01
6/18/2022 20:54	-0.03	6/19/2022 19:44	0.86	6/19/2022 20:07	3.44	6/19/2022 21:30	-0.31	6/18/2022 20:18	11.01
6/18/2022 20:55	-0.03	6/19/2022 19:45	0.83	6/19/2022 20:08	3.48	6/19/2022 21:31	-0.28	6/18/2022 20:19	11.03
6/18/2022 20:56	-0.03	6/19/2022 19:46	0.83	6/19/2022 20:09	3.45	6/19/2022 21:32	-0.23	6/18/2022 20:20	11.01

6/18/2022 20:57	-0.03	6/19/2022 19:47	0.83	6/19/2022 20:10	3.47	6/19/2022 21:33	-0.27	6/18/2022 20:21	11.01
6/18/2022 20:58	-0.03	6/19/2022 19:48	0.83	6/19/2022 20:11	3.45	6/19/2022 21:34	-0.25	6/18/2022 20:22	11.01
6/18/2022 20:59	-0.03	6/19/2022 19:49	0.83	6/19/2022 20:12	3.46	6/19/2022 21:35	-0.25	6/18/2022 20:23	10.99
6/18/2022 21:00	-0.03	6/19/2022 19:50	0.83	6/19/2022 20:13	3.46	6/19/2022 21:36	-0.27	6/18/2022 20:24	11.03
6/18/2022 21:01	-0.03	6/19/2022 19:51	0.83	6/19/2022 20:14	3.43	6/19/2022 21:37	-0.24	6/18/2022 20:25	11.03
6/18/2022 21:02	-0.03	6/19/2022 19:52	0.83	6/19/2022 20:15	3.48	6/19/2022 21:38	-0.28	6/18/2022 20:26	11.03
6/18/2022 21:03	-0.03	6/19/2022 19:53	0.83	6/19/2022 20:16	3.46	6/19/2022 21:39	-0.28	6/18/2022 20:27	10.99
6/18/2022 21:04	-0.03	6/19/2022 19:54	0.83	6/19/2022 20:17	3.50	6/19/2022 21:40	-0.27	6/18/2022 20:28	11.02
6/18/2022 21:05	-0.03	6/19/2022 19:55	0.83	6/19/2022 20:18	3.45	6/19/2022 21:41	-0.25	6/18/2022 20:29	11.08
6/18/2022 21:06	-0.03	6/19/2022 19:56	0.83	6/19/2022 20:19	3.46	6/19/2022 21:42	-0.26	6/18/2022 20:30	11.02
6/18/2022 21:07	-0.03	6/19/2022 19:57	0.83	6/19/2022 20:20	3.46	6/19/2022 21:43	-0.32	6/18/2022 20:31	11.02
6/18/2022 21:08	-0.03	6/19/2022 19:58	0.83	6/19/2022 20:21	3.47	6/19/2022 21:44	-0.24	6/18/2022 20:32	11.01
6/18/2022 21:09	-0.03	6/19/2022 19:59	0.83	6/19/2022 20:22	3.46	6/19/2022 21:45	-0.22	6/18/2022 20:33	11.01
6/18/2022 21:10	-0.04	6/19/2022 20:00	0.83	6/19/2022 20:23	3.47	6/19/2022 21:46	-0.26	6/18/2022 20:34	11.04
6/18/2022 21:11	-0.03	6/19/2022 20:01	0.83	6/19/2022 20:24	3.45	6/19/2022 21:47	-0.31	6/18/2022 20:35	11.05
6/18/2022 21:12	-0.03	6/19/2022 20:02	0.83	6/19/2022 20:25	3.48	6/19/2022 21:48	-0.29	6/18/2022 20:36	11.02
6/18/2022 21:13	-0.04	6/19/2022 20:03	0.83	6/19/2022 20:26	3.46	6/19/2022 21:49	-0.26	6/18/2022 20:37	11.02
6/18/2022 21:14	-0.04	6/19/2022 20:04	0.83	6/19/2022 20:27	3.46	6/19/2022 21:50	-0.23	6/18/2022 20:38	11.00
6/18/2022 21:15	-0.04	6/19/2022 20:05	0.83	6/19/2022 20:28	3.46	6/19/2022 21:51	-0.26	6/18/2022 20:39	11.03
6/18/2022 21:16	-0.04	6/19/2022 20:06	0.83	6/19/2022 20:29	3.44	6/19/2022 21:52	-0.27	6/18/2022 20:40	11.02
6/18/2022 21:17	-0.03	6/19/2022 20:07	0.84	6/19/2022 20:30	3.46	6/19/2022 21:53	-0.26	6/18/2022 20:41	11.03
6/18/2022 21:18	-0.03	6/19/2022 20:08	0.83	6/19/2022 20:31	3.47	6/19/2022 21:54	-0.23	6/18/2022 20:42	11.05
6/18/2022 21:19	-0.04	6/19/2022 20:09	0.83	6/19/2022 20:32	3.47	6/19/2022 21:55	-0.30	6/18/2022 20:43	11.01
6/18/2022 21:20	-0.03	6/19/2022 20:10	0.83	6/19/2022 20:33	3.47	6/19/2022 21:56	-0.27	6/18/2022 20:44	11.02
6/18/2022 21:21	-0.03	6/19/2022 20:11	0.83	6/19/2022 20:34	3.48	6/19/2022 21:57	-0.27	6/18/2022 20:45	11.06
6/18/2022 21:22	-0.03	6/19/2022 20:12	0.83	6/19/2022 20:35	3.46	6/19/2022 21:58	-0.25	6/18/2022 20:46	11.04
6/18/2022 21:23	-0.03	6/19/2022 20:13	0.83	6/19/2022 20:36	3.49	6/19/2022 21:59	-0.27	6/18/2022 20:47	11.01
6/18/2022 21:24	-0.03	6/19/2022 20:14	0.83	6/19/2022 20:37	3.47	6/19/2022 22:00	-0.29	6/18/2022 20:48	11.04
6/18/2022 21:25	-0.04	6/19/2022 20:15	0.83	6/19/2022 20:38	3.45	6/19/2022 22:01	-0.22	6/18/2022 20:49	11.02
6/18/2022 21:26	-0.03	6/19/2022 20:16	0.83	6/19/2022 20:39	3.47	6/19/2022 22:02	-0.24	6/18/2022 20:50	11.04
6/18/2022 21:27	-0.03	6/19/2022 20:17	0.83	6/19/2022 20:40	3.46	6/19/2022 22:03	-0.28	6/18/2022 20:51	11.09
6/18/2022 21:28	-0.03	6/19/2022 20:18	0.83	6/19/2022 20:41	3.48	6/19/2022 22:04	-0.28	6/18/2022 20:52	11.06
6/18/2022 21:29	-0.03	6/19/2022 20:19	0.83	6/19/2022 20:42	3.48	6/19/2022 22:05	-0.23	6/18/2022 20:53	11.05
6/18/2022 21:30	-0.03	6/19/2022 20:20	0.83	6/19/2022 20:43	3.47	6/19/2022 22:06	-0.30	6/18/2022 20:54	10.98
6/18/2022 21:31	-0.03	6/19/2022 20:21	0.83	6/19/2022 20:44	3.49	6/19/2022 22:07	-0.26	6/18/2022 20:55	11.03
6/18/2022 21:32	-0.03	6/19/2022 20:22	0.83	6/19/2022 20:45	3.50	6/19/2022 22:08	-0.29	6/18/2022 20:56	11.01
6/18/2022 21:33	-0.03	6/19/2022 20:23	0.84	6/19/2022 20:46	3.46	6/19/2022 22:09	-0.24	6/18/2022 20:57	11.02
6/18/2022 21:34	-0.03	6/19/2022 20:24	0.83	6/19/2022 20:47	3.47	6/19/2022 22:10	-0.27	6/18/2022 20:58	11.06
6/18/2022 21:35	-0.03	6/19/2022 20:25	0.83	6/19/2022 20:48	3.50	6/19/2022 22:11	-0.24	6/18/2022 20:59	11.03
6/18/2022 21:36	-0.04	6/19/2022 20:26	0.85	6/19/2022 20:49	3.47	6/19/2022 22:12	-0.24	6/18/2022 21:00	11.03
6/18/2022 21:37	-0.03	6/19/2022 20:27	0.83	6/19/2022 20:50	3.47	6/19/2022 22:13	-0.27	6/18/2022 21:01	11.04
6/18/2022 21:38	-0.03	6/19/2022 20:28	0.83	6/19/2022 20:51	3.46	6/19/2022 22:14	-0.25	6/18/2022 21:02	11.04
6/18/2022 21:39	-0.03	6/19/2022 20:29	0.83	6/19/2022 20:52	3.46	6/19/2022 22:15	-0.27	6/18/2022 21:03	10.98
6/18/2022 21:40	-0.03	6/19/2022 20:30	0.83	6/19/2022 20:53	3.48	6/19/2022 22:16	-0.29	6/18/2022 21:04	11.05
6/18/2022 21:41	-0.04	6/19/2022 20:31	0.83	6/19/2022 20:54	3.44	6/19/2022 22:17	-0.26	6/18/2022 21:05	11.06
6/18/2022 21:42	-0.03	6/19/2022 20:32	0.83	6/19/2022 20:55	3.49	6/19/2022 22:18	-0.25	6/18/2022 21:06	11.02
6/18/2022 21:43	-0.03	6/19/2022 20:33	0.83	6/19/2022 20:56	3.47	6/19/2022 22:19	-0.28	6/18/2022 21:07	11.07
6/18/2022 21:44	-0.03	6/19/2022 20:34	0.83	6/19/2022 20:57	3.46	6/19/2022 22:20	-0.24	6/18/2022 21:08	11.02
6/18/2022 21:45	-0.03	6/19/2022 20:35	0.84	6/19/2022 20:58	3.47	6/19/2022 22:21	-0.24	6/18/2022 21:09	11.03
6/18/2022 21:46	-0.03	6/19/2022 20:36	0.83	6/19/2022 20:59	3.51	6/19/2022 22:22	-0.28	6/18/2022 21:10	11.02
6/18/2022 21:47	-0.04	6/19/2022 20:37	0.83	6/19/2022 21:00	3.46	6/19/2022 22:23	-0.27	6/18/2022 21:11	11.03
6/18/2022 21:48	-0.03	6/19/2022 20:38	0.84	6/19/2022 21:01	3.46	6/19/2022 22:24	-0.27	6/18/2022 21:12	11.08
6/18/2022 21:49	-0.03	6/19/2022 20:39	0.84	6/19/2022 21:02	3.46	6/19/2022 22:25	-0.26	6/18/2022 21:13	11.07
6/18/2022 21:50	-0.03	6/19/2022 20:40	0.83	6/19/2022 21:03	3.47	6/19/2022 22:26	-0.29	6/18/2022 21:14	11.05
6/18/2022 21:51	-0.03	6/19/2022 20:41	0.84	6/19/2022 21:04	3.50	6/19/2022 22:27	-0.27	6/18/2022 21:15	11.03
6/18/2022 21:52	-0.03	6/19/2022 20:42	0.84	6/19/2022 21:05	3.46	6/19/2022 22:28	-0.27	6/18/2022 21:16	11.03
6/18/2022 21:53	-0.03	6/19/2022 20:43	0.83	6/19/2022 21:06	3.47	6/19/2022 22:29	-0.26	6/18/2022 21:17	11.03
6/18/2022 21:54	-0.03	6/19/2022 20:44	0.84	6/19/2022 21:07	3.46	6/19/2022 22:30	-0.26	6/18/2022 21:18	11.01
6/18/2022 21:55	-0.03	6/19/2022 20:45	0.83	6/19/2022 21:08	3.50	6/19/2022 22:31	-0.26	6/18/2022 21:19	11.05
6/18/2022 21:56	-0.03	6/19/2022 20:46	0.83	6/19/2022 21:09	3.49	6/19/2022 22:32	-0.26	6/18/2022 21:20	11.06
6/18/2022 21:57	-0.03	6/19/2022 20:47	0.84	6/19/2022 21:10	3.47	6/19/2022 22:33	-0.26	6/18/2022 21:21	11.03
6/18/2022 21:58	-0.03	6/19/2022 20:48	0.84	6/19/2022 21:11	3.47	6/19/2022 22:34	-0.29	6/18/2022 21:22	11.07
6/18/2022 21:59	-0.05	6/19/2022 20:49	0.84	6/19/2022 21:12	3.46	6/19/2022 22:35	-0.28	6/18/2022 21:23	11.04
6/18/2022 22:00	-0.03	6/19/2022 20:50	0.84	6/19/2022 21:13	3.44	6/19/2022 22:36	-0.30	6/18/2022 21:24	11.02
6/18/2022 22:01	-0.03	6/19/2022 20:51	0.84	6/19/2022 21:14	3.46	6/19/2022 22:37	-0.25	6/18/2022 21:25	11.00
6/18/2022 22:02	-0.03	6/19/2022 20:52	0.83	6/19/2022 21:15	3.48	6/19/2022 22:38	-0.27	6/18/2022 21:26	11.07
6/18/2022 22:03	-0.03	6/19/2022 20:53	0.84	6/19/2022 21:16	3.48	6/19/2022 22:39	-0.29	6/18/2022 21:27	11.01
6/18/2022 22:04	-0.03	6/19/2022 20:54	0.84	6/19/2022 21:17	3.48	6/19/2022 22:40	-0.28	6/18/2022 21:28	11.05
6/18/2022 22:05	-0.03	6/19/2022 20:55	0.84	6/19/2022 21:18	3.46	6/19/2022 22:41	-0.27	6/18/2022 21:29	11.05
6/18/2022 22:06	-0.03	6/19/2022 20:56	0.83	6/19/2022 21:19	3.49	6/19/2022 22:42	-0.27	6/18/2022 21:30	11.03
6/18/2022 22:07	-0.03	6/19/2022 20:57	0.84	6/19/2022 21:20	3.48	6/19/2022 22:43	-0.26	6/18/2022 21:31	11.02
6/18/2022 22:08	-0.03	6/19/2022 20:58	0.84	6/19/2022 21:21	3.48	6/19/2022 22:44	-0.26	6/18/2022 21:32	11.05
6/18/2022 22:09	-0.03	6/19/2022 20:59	0.84	6/19/2022 21:22	3.48	6/19/2022 22:45	-0.26	6/18/2022 21:33	11.00
6/18/2022 22:10	-0.04	6/19/2022 21:00	0.84	6/19/2022 21:23	3.49	6/19/2022 22:46	-0.24	6/18/2022 21:34	11.06
6/18/2022 22:11	-0.03	6/19/2022 21:01	0.84	6/19/2022 21:24	3.50	6/19/2022 22:47	-0.30	6/18/2022 21:35	11.09
6/18/2022 22:12	-0.03	6/19/2022 21:02	0.84	6/19/2022 21:25	3.48	6/19/2022 22:48	-0.23	6/18/2022 21:36	11.03
6/18/2022 22:13	-0.03	6/19/2022 21:03	0.84	6/19/2022 21:26	3.49	6/19/2022 22:49	-0.24	6/18/2022 21:37	11.00
6/18/2022 22:14	-0.03	6/19/2022 21:04	0.84	6/19/2022 21:27	3.48	6/19/2022 22:50	-0.25	6/18/2022 21:38	11.04
6/18/2022 22:15	-0.03	6/19/2022 21:05	0.84	6/19/2022 21:28	3.45	6/19/2022 22:51	-0.26	6/18/2022 21:39	11.05
6/18/2022 22:16	-0.04	6/19/2022 21:06	0.84	6/19/2022 21:29	3.52	6/19/2022 22:52	-0.30	6/18/2022 21:40	11.04
6/18/2022 22:17	-0.03	6/19/2022 21:07	0.84	6/19/2022 21:30	3.49	6/19/2022 22:53	-0.27	6/18/2022 21:41	11.04
6/18/2022 22:18	-0.03	6/19/2022 21:08	0.84	6/19/2022 21:31	3.50	6/19/2022 22:54	-0.30	6/18/2022 21:42	11.04
6/18/2022 22:19	-0.03	6/19/2022 21:09	0.84	6/19/2022 21:32	3.47	6/19/2022 22:55	-0.28	6/18/2022 21:43	11.04
6/18/2022 22:20	-0.03	6/19/2022 21:10	0.84	6/19/2022 21:33	3.47	6/19/2022 22:56	-0.27	6/18/2022 21:44	10.99
6/18/2022 22:21	-0.03	6/19/2022 21:11	0.84	6/19/2022 21:34	3.48	6/19/2022 22:57	-0.26	6/18/2022 21:45	11.00
6/18/2022 22:22	-0.03	6/19/2022 21:12	0.84	6/19/2022 21:35	3.47	6/19/2022 22:58	-0.26	6/18/2022 21:46	11.05
6/18/2022 22:23	-0.03	6/19/2022 21:13	0.84	6/19/2022 21:36	3.49	6/19/2022 22:59	-0.26	6/18/2022 21:47	11.03
6/18/2022 22:24	-0.03	6/19/2022 21:14	0.85	6/19/2022 21:37	3.49	6/19/2022 23:00	-0.30	6/18/2022 21:48	11.02

6/18/2022 22:25	-0.04	6/19/2022 21:15	0.84	6/19/2022 21:38	3.47	6/19/2022 23:01	-0.24	6/18/2022 21:49	11.06
6/18/2022 22:26	-0.04	6/19/2022 21:16	0.84	6/19/2022 21:39	3.46	6/19/2022 23:02	-0.25	6/18/2022 21:50	11.06
6/18/2022 22:27	-0.03	6/19/2022 21:17	0.84	6/19/2022 21:40	3.49	6/19/2022 23:03	-0.24	6/18/2022 21:51	11.04
6/18/2022 22:28	-0.03	6/19/2022 21:18	0.84	6/19/2022 21:41	3.50	6/19/2022 23:04	-0.29	6/18/2022 21:52	11.03
6/18/2022 22:29	-0.03	6/19/2022 21:19	0.84	6/19/2022 21:42	3.50	6/19/2022 23:05	-0.24	6/18/2022 21:53	11.06
6/18/2022 22:30	-0.03	6/19/2022 21:20	0.84	6/19/2022 21:43	3.49	6/19/2022 23:06	-0.30	6/18/2022 21:54	11.10
6/18/2022 22:31	-0.03	6/19/2022 21:21	0.84	6/19/2022 21:44	3.47	6/19/2022 23:07	-0.26	6/18/2022 21:55	11.05
6/18/2022 22:32	-0.03	6/19/2022 21:22	0.84	6/19/2022 21:45	3.49	6/19/2022 23:08	-0.27	6/18/2022 21:56	10.99
6/18/2022 22:33	-0.03	6/19/2022 21:23	0.84	6/19/2022 21:46	3.46	6/19/2022 23:09	-0.24	6/18/2022 21:57	11.07
6/18/2022 22:34	-0.04	6/19/2022 21:24	0.84	6/19/2022 21:47	3.49	6/19/2022 23:10	-0.22	6/18/2022 21:58	11.03
6/18/2022 22:35	-0.03	6/19/2022 21:25	0.84	6/19/2022 21:48	3.50	6/19/2022 23:11	-0.28	6/18/2022 21:59	11.06
6/18/2022 22:36	-0.03	6/19/2022 21:26	0.84	6/19/2022 21:49	3.49	6/19/2022 23:12	-0.29	6/18/2022 22:00	11.07
6/18/2022 22:37	-0.04	6/19/2022 21:27	0.84	6/19/2022 21:50	3.49	6/19/2022 23:13	-0.27	6/18/2022 22:01	11.07
6/18/2022 22:38	-0.03	6/19/2022 21:28	0.84	6/19/2022 21:51	3.50	6/19/2022 23:14	-0.29	6/18/2022 22:02	11.07
6/18/2022 22:39	-0.03	6/19/2022 21:29	0.84	6/19/2022 21:52	3.50	6/19/2022 23:15	-0.28	6/18/2022 22:03	11.08
6/18/2022 22:40	-0.03	6/19/2022 21:30	0.84	6/19/2022 21:53	3.46	6/19/2022 23:16	-0.29	6/18/2022 22:04	11.07
6/18/2022 22:41	-0.03	6/19/2022 21:31	0.84	6/19/2022 21:54	3.51	6/19/2022 23:17	-0.25	6/18/2022 22:05	11.02
6/18/2022 22:42	-0.03	6/19/2022 21:32	0.84	6/19/2022 21:55	3.50	6/19/2022 23:18	-0.25	6/18/2022 22:06	11.03
6/18/2022 22:43	-0.03	6/19/2022 21:33	0.85	6/19/2022 21:56	3.47	6/19/2022 23:19	-0.26	6/18/2022 22:07	11.04
6/18/2022 22:44	-0.03	6/19/2022 21:34	0.85	6/19/2022 21:57	3.48	6/19/2022 23:20	-0.30	6/18/2022 22:08	11.06
6/18/2022 22:45	-0.03	6/19/2022 21:35	0.85	6/19/2022 21:58	3.47	6/19/2022 23:21	-0.26	6/18/2022 22:09	11.07
6/18/2022 22:46	-0.03	6/19/2022 21:36	0.84	6/19/2022 21:59	3.45	6/19/2022 23:22	-0.23	6/18/2022 22:10	11.07
6/18/2022 22:47	-0.03	6/19/2022 21:37	0.85	6/19/2022 22:00	3.48	6/19/2022 23:23	-0.23	6/18/2022 22:11	11.04
6/18/2022 22:48	-0.03	6/19/2022 21:38	0.85	6/19/2022 22:01	3.51	6/19/2022 23:24	-0.28	6/18/2022 22:12	11.04
6/18/2022 22:49	-0.03	6/19/2022 21:39	0.85	6/19/2022 22:02	3.49	6/19/2022 23:25	-0.23	6/18/2022 22:13	11.08
6/18/2022 22:50	-0.03	6/19/2022 21:40	0.85	6/19/2022 22:03	3.44	6/19/2022 23:26	-0.27	6/18/2022 22:14	11.14
6/18/2022 22:51	-0.03	6/19/2022 21:41	0.85	6/19/2022 22:04	3.49	6/19/2022 23:27	-0.30	6/18/2022 22:15	11.04
6/18/2022 22:52	-0.04	6/19/2022 21:42	0.85	6/19/2022 22:05	3.47	6/19/2022 23:28	-0.27	6/18/2022 22:16	11.06
6/18/2022 22:53	-0.03	6/19/2022 21:43	0.85	6/19/2022 22:06	3.48	6/19/2022 23:29	-0.30	6/18/2022 22:17	11.10
6/18/2022 22:54	-0.04	6/19/2022 21:44	0.85	6/19/2022 22:07	3.52	6/19/2022 23:30	-0.24	6/18/2022 22:18	11.06
6/18/2022 22:55	-0.03	6/19/2022 21:45	0.85	6/19/2022 22:08	3.47	6/19/2022 23:31	-0.25	6/18/2022 22:19	11.10
6/18/2022 22:56	-0.03	6/19/2022 21:46	0.85	6/19/2022 22:09	3.48	6/19/2022 23:32	-0.24	6/18/2022 22:20	11.04
6/18/2022 22:57	-0.03	6/19/2022 21:47	0.84	6/19/2022 22:10	3.47	6/19/2022 23:33	-0.27	6/18/2022 22:21	11.05
6/18/2022 22:58	-0.03	6/19/2022 21:48	0.85	6/19/2022 22:11	3.47	6/19/2022 23:34	-0.27	6/18/2022 22:22	11.15
6/18/2022 22:59	-0.03	6/19/2022 21:49	0.85	6/19/2022 22:12	3.49	6/19/2022 23:35	-0.29	6/18/2022 22:23	11.08
6/18/2022 23:00	-0.03	6/19/2022 21:50	0.85	6/19/2022 22:13	3.50	6/19/2022 23:36	-0.25	6/18/2022 22:24	11.08
6/18/2022 23:01	-0.03	6/19/2022 21:51	0.85	6/19/2022 22:14	3.47	6/19/2022 23:37	-0.27	6/18/2022 22:25	11.07
6/18/2022 23:02	-0.03	6/19/2022 21:52	0.85	6/19/2022 22:15	3.50	6/19/2022 23:38	-0.27	6/18/2022 22:26	11.01
6/18/2022 23:03	-0.03	6/19/2022 21:53	0.85	6/19/2022 22:16	3.50	6/19/2022 23:39	-0.30	6/18/2022 22:27	11.03
6/18/2022 23:04	-0.03	6/19/2022 21:54	0.84	6/19/2022 22:17	3.49	6/19/2022 23:40	-0.30	6/18/2022 22:28	11.08
6/18/2022 23:05	-0.03	6/19/2022 21:55	0.85	6/19/2022 22:18	3.52	6/19/2022 23:41	-0.28	6/18/2022 22:29	11.05
6/18/2022 23:06	-0.03	6/19/2022 21:56	0.85	6/19/2022 22:19	3.47	6/19/2022 23:42	-0.27	6/18/2022 22:30	11.06
6/18/2022 23:07	-0.03	6/19/2022 21:57	0.85	6/19/2022 22:20	3.50	6/19/2022 23:43	-0.26	6/18/2022 22:31	11.03
6/18/2022 23:08	-0.03	6/19/2022 21:58	0.85	6/19/2022 22:21	3.51	6/19/2022 23:44	-0.25	6/18/2022 22:32	11.05
6/18/2022 23:09	-0.03	6/19/2022 21:59	0.85	6/19/2022 22:22	3.50	6/19/2022 23:45	-0.28	6/18/2022 22:33	11.06
6/18/2022 23:10	-0.03	6/19/2022 22:00	0.85	6/19/2022 22:23	3.48	6/19/2022 23:46	-0.27	6/18/2022 22:34	11.05
6/18/2022 23:11	-0.03	6/19/2022 22:01	0.85	6/19/2022 22:24	3.51	6/19/2022 23:47	-0.23	6/18/2022 22:35	11.06
6/18/2022 23:12	-0.03	6/19/2022 22:02	0.85	6/19/2022 22:25	3.48	6/19/2022 23:48	-0.27	6/18/2022 22:36	11.08
6/18/2022 23:13	-0.03	6/19/2022 22:03	0.85	6/19/2022 22:26	3.49	6/19/2022 23:49	-0.30	6/18/2022 22:37	11.02
6/18/2022 23:14	-0.03	6/19/2022 22:04	0.85	6/19/2022 22:27	3.50	6/19/2022 23:50	-0.29	6/18/2022 22:38	11.06
6/18/2022 23:15	-0.03	6/19/2022 22:05	0.85	6/19/2022 22:28	3.49	6/19/2022 23:51	-0.29	6/18/2022 22:39	11.04
6/18/2022 23:16	-0.03	6/19/2022 22:06	0.85	6/19/2022 22:29	3.50	6/19/2022 23:52	-0.28	6/18/2022 22:40	11.02
6/18/2022 23:17	-0.03	6/19/2022 22:07	0.85	6/19/2022 22:30	3.49	6/19/2022 23:53	-0.28	6/18/2022 22:41	11.12
6/18/2022 23:18	-0.04	6/19/2022 22:08	0.85	6/19/2022 22:31	3.49	6/19/2022 23:54	-0.28	6/18/2022 22:42	11.04
6/18/2022 23:19	-0.03	6/19/2022 22:09	0.85	6/19/2022 22:32	3.50	6/19/2022 23:55	-0.27	6/18/2022 22:43	11.06
6/18/2022 23:20	-0.03	6/19/2022 22:10	0.85	6/19/2022 22:33	3.47	6/19/2022 23:56	-0.27	6/18/2022 22:44	11.05
6/18/2022 23:21	-0.03	6/19/2022 22:11	0.85	6/19/2022 22:34	3.49	6/19/2022 23:57	-0.29	6/18/2022 22:45	11.07
6/18/2022 23:22	-0.03	6/19/2022 22:12	0.85	6/19/2022 22:35	3.50	6/19/2022 23:58	-0.28	6/18/2022 22:46	11.08
6/18/2022 23:23	-0.04	6/19/2022 22:13	0.85	6/19/2022 22:36	3.50	6/19/2022 23:59	-0.30	6/18/2022 22:47	11.08
6/18/2022 23:24	-0.03	6/19/2022 22:14	0.85	6/19/2022 22:37	3.51	6/20/2022 0:00	-0.28	6/18/2022 22:48	11.08
6/18/2022 23:25	-0.03	6/19/2022 22:15	0.85	6/19/2022 22:38	3.52	6/20/2022 0:01	-0.27	6/18/2022 22:49	11.07
6/18/2022 23:26	-0.03	6/19/2022 22:16	0.85	6/19/2022 22:39	3.49	6/20/2022 0:02	-0.28	6/18/2022 22:50	11.08
6/18/2022 23:27	-0.04	6/19/2022 22:17	0.85	6/19/2022 22:40	3.48	6/20/2022 0:03	-0.29	6/18/2022 22:51	11.11
6/18/2022 23:28	-0.03	6/19/2022 22:18	0.86	6/19/2022 22:41	3.47	6/20/2022 0:04	-0.30	6/18/2022 22:52	11.05
6/18/2022 23:29	-0.03	6/19/2022 22:19	0.85	6/19/2022 22:42	3.48	6/20/2022 0:05	-0.30	6/18/2022 22:53	11.06
6/18/2022 23:30	-0.03	6/19/2022 22:20	0.85	6/19/2022 22:43	3.48	6/20/2022 0:06	-0.28	6/18/2022 22:54	11.07
6/18/2022 23:31	-0.03	6/19/2022 22:21	0.85	6/19/2022 22:44	3.44	6/20/2022 0:07	-0.24	6/18/2022 22:55	11.07
6/18/2022 23:32	-0.03	6/19/2022 22:22	0.85	6/19/2022 22:45	3.48	6/20/2022 0:08	-0.30	6/18/2022 22:56	11.08
6/18/2022 23:33	-0.03	6/19/2022 22:23	0.85	6/19/2022 22:46	3.46	6/20/2022 0:09	-0.27	6/18/2022 22:57	11.06
6/18/2022 23:34	-0.03	6/19/2022 22:24	0.85	6/19/2022 22:47	3.48	6/20/2022 0:10	-0.27	6/18/2022 22:58	11.03
6/18/2022 23:35	-0.03	6/19/2022 22:25	0.85	6/19/2022 22:48	3.47	6/20/2022 0:11	-0.26	6/18/2022 22:59	11.09
6/18/2022 23:36	-0.05	6/19/2022 22:26	0.85	6/19/2022 22:49	3.47	6/20/2022 0:12	-0.29	6/18/2022 23:00	11.07
6/18/2022 23:37	-0.03	6/19/2022 22:27	0.85	6/19/2022 22:50	3.46	6/20/2022 0:13	-0.25	6/18/2022 23:01	11.08
6/18/2022 23:38	-0.03	6/19/2022 22:28	0.85	6/19/2022 22:51	3.48	6/20/2022 0:14	-0.24	6/18/2022 23:02	11.05
6/18/2022 23:39	-0.03	6/19/2022 22:29	0.85	6/19/2022 22:52	3.48	6/20/2022 0:15	-0.31	6/18/2022 23:03	11.02
6/18/2022 23:40	-0.03	6/19/2022 22:30	0.87	6/19/2022 22:53	3.52	6/20/2022 0:16	-0.28	6/18/2022 23:04	11.05
6/18/2022 23:41	-0.03	6/19/2022 22:31	0.85	6/19/2022 22:54	3.49	6/20/2022 0:17	-0.27	6/18/2022 23:05	11.08
6/18/2022 23:42	-0.03	6/19/2022 22:32	0.85	6/19/2022 22:55	3.48	6/20/2022 0:18	-0.28	6/18/2022 23:06	11.04
6/18/2022 23:43	-0.03	6/19/2022 22:33	0.85	6/19/2022 22:56	3.49	6/20/2022 0:19	-0.28	6/18/2022 23:07	11.04
6/18/2022 23:44	-0.03	6/19/2022 22:34	0.85	6/19/2022 22:57	3.49	6/20/2022 0:20	-0.24	6/18/2022 23:08	11.01
6/18/2022 23:45	-0.03	6/19/2022 22:35	0.85	6/19/2022 22:58	3.48	6/20/2022 0:21	-0.24	6/18/2022 23:09	11.06
6/18/2022 23:46	-0.04	6/19/2022 22:36	0.85	6/19/2022 22:59	3.48	6/20/2022 0:22	-0.28	6/18/2022 23:10	11.06
6/18/2022 23:47	-0.04	6/19/2022 22:37	0.85	6/19/2022 23:00	3.49	6/20/2022 0:23	-0.30	6/18/2022 23:11	11.05
6/18/2022 23:48	-0.04	6/19/2022 22:38	0.86	6/19/2022 23:01	3.47	6/20/2022 0:24	-0.24	6/18/2022 23:12	11.05
6/18/2022 23:49	-0.03	6/19/2022 22:39	0.85	6/19/2022 23:02	3.50	6/20/2022 0:25	-0.24	6/18/2022 23:13	11.09
6/18/2022 23:50	-0.03	6/19/2022 22:40	0.85	6/19/2022 23:03	3.49	6/20/2022 0:26	-0.28	6/18/2022 23:14	11.04
6/18/2022 23:51	-0.03	6/19/2022 22:41	0.85	6/19/2022 23:04	3.47	6/20/2022 0:27	-0.23	6/18/2022 23:15	11.09
6/18/2022 23:52	-0.03	6/19/2022 22:42	0.85	6/19/2022 23:05	3.50	6/20/2022 0:28	-0.23	6/18/2022 23:16	11.05

6/18/2022 23:53	-0.03	6/19/2022 22:43	0.86	6/19/2022 23:06	3.47	6/20/2022 0:29	-0.24	6/18/2022 23:17	11.05
6/18/2022 23:54	-0.03	6/19/2022 22:44	0.86	6/19/2022 23:07	3.51	6/20/2022 0:30	-0.25	6/18/2022 23:18	11.07
6/18/2022 23:55	-0.03	6/19/2022 22:45	0.85	6/19/2022 23:08	3.52	6/20/2022 0:31	-0.28	6/18/2022 23:19	11.09
6/18/2022 23:56	-0.03	6/19/2022 22:46	0.86	6/19/2022 23:09	3.49	6/20/2022 0:32	-0.29	6/18/2022 23:20	11.11
6/18/2022 23:57	-0.03	6/19/2022 22:47	0.85	6/19/2022 23:10	3.48	6/20/2022 0:33	-0.28	6/18/2022 23:21	11.05
6/18/2022 23:58	-0.04	6/19/2022 22:48	0.86	6/19/2022 23:11	3.51	6/20/2022 0:34	-0.27	6/18/2022 23:22	11.01
6/18/2022 23:59	-0.03	6/19/2022 22:49	0.86	6/19/2022 23:12	3.49	6/20/2022 0:35	-0.28	6/18/2022 23:23	11.06
6/19/2022 0:00	-0.03	6/19/2022 22:50	0.85	6/19/2022 23:13	3.54	6/20/2022 0:36	-0.29	6/18/2022 23:24	11.07
6/19/2022 0:01	-0.03	6/19/2022 22:51	0.86	6/19/2022 23:14	3.47	6/20/2022 0:37	-0.34	6/18/2022 23:25	11.04
6/19/2022 0:02	-0.03	6/19/2022 22:52	0.86	6/19/2022 23:15	3.52	6/20/2022 0:38	-0.28	6/18/2022 23:26	11.03
6/19/2022 0:03	-0.04	6/19/2022 22:53	0.85	6/19/2022 23:16	3.51	6/20/2022 0:39	-0.25	6/18/2022 23:27	11.10
6/19/2022 0:04	-0.03	6/19/2022 22:54	0.86	6/19/2022 23:17	3.50	6/20/2022 0:40	-0.29	6/18/2022 23:28	11.03
6/19/2022 0:05	-0.03	6/19/2022 22:55	0.86	6/19/2022 23:18	3.50	6/20/2022 0:41	-0.24	6/18/2022 23:29	11.05
6/19/2022 0:06	-0.03	6/19/2022 22:56	0.85	6/19/2022 23:19	3.50	6/20/2022 0:42	-0.26	6/18/2022 23:30	11.13
6/19/2022 0:07	-0.03	6/19/2022 22:57	0.86	6/19/2022 23:20	3.50	6/20/2022 0:43	-0.27	6/18/2022 23:31	11.02
6/19/2022 0:08	-0.03	6/19/2022 22:58	0.86	6/19/2022 23:21	3.55	6/20/2022 0:44	-0.25	6/18/2022 23:32	11.06
6/19/2022 0:09	-0.03	6/19/2022 22:59	0.86	6/19/2022 23:22	3.51	6/20/2022 0:45	-0.27	6/18/2022 23:33	11.11
6/19/2022 0:10	-0.03	6/19/2022 23:00	0.86	6/19/2022 23:23	3.51	6/20/2022 0:46	-0.26	6/18/2022 23:34	11.03
6/19/2022 0:11	-0.04	6/19/2022 23:01	0.86	6/19/2022 23:24	3.49	6/20/2022 0:47	-0.28	6/18/2022 23:35	11.09
6/19/2022 0:12	-0.03	6/19/2022 23:02	0.86	6/19/2022 23:25	3.49	6/20/2022 0:48	-0.26	6/18/2022 23:36	11.07
6/19/2022 0:13	-0.03	6/19/2022 23:03	0.85	6/19/2022 23:26	3.49	6/20/2022 0:49	-0.28	6/18/2022 23:37	11.06
6/19/2022 0:14	-0.03	6/19/2022 23:04	0.86	6/19/2022 23:27	3.51	6/20/2022 0:50	-0.27	6/18/2022 23:38	11.11
6/19/2022 0:15	-0.03	6/19/2022 23:05	0.86	6/19/2022 23:28	3.52	6/20/2022 0:51	-0.25	6/18/2022 23:39	11.05
6/19/2022 0:16	-0.04	6/19/2022 23:06	0.86	6/19/2022 23:29	3.51	6/20/2022 0:52	-0.25	6/18/2022 23:40	11.08
6/19/2022 0:17	-0.03	6/19/2022 23:07	0.86	6/19/2022 23:30	3.50	6/20/2022 0:53	-0.30	6/18/2022 23:41	11.07
6/19/2022 0:18	-0.03	6/19/2022 23:08	0.86	6/19/2022 23:31	3.49	6/20/2022 0:54	-0.26	6/18/2022 23:42	11.07
6/19/2022 0:19	-0.03	6/19/2022 23:09	0.86	6/19/2022 23:32	3.49	6/20/2022 0:55	-0.29	6/18/2022 23:43	11.11
6/19/2022 0:20	-0.03	6/19/2022 23:10	0.86	6/19/2022 23:33	3.51	6/20/2022 0:56	-0.27	6/18/2022 23:44	11.05
6/19/2022 0:21	-0.03	6/19/2022 23:11	0.86	6/19/2022 23:34	3.50	6/20/2022 0:57	-0.27	6/18/2022 23:45	11.07
6/19/2022 0:22	-0.04	6/19/2022 23:12	0.86	6/19/2022 23:35	3.48	6/20/2022 0:58	-0.26	6/18/2022 23:46	11.00
6/19/2022 0:23	-0.03	6/19/2022 23:13	0.86	6/19/2022 23:36	3.52	6/20/2022 0:59	-0.23	6/18/2022 23:47	11.04
6/19/2022 0:24	-0.03	6/19/2022 23:14	0.86	6/19/2022 23:37	3.51	6/20/2022 1:00	-0.27	6/18/2022 23:48	11.06
6/19/2022 0:25	-0.04	6/19/2022 23:15	0.86	6/19/2022 23:38	3.51	6/20/2022 1:01	-0.24	6/18/2022 23:49	11.00
6/19/2022 0:26	-0.03	6/19/2022 23:16	0.86	6/19/2022 23:39	3.50	6/20/2022 1:02	-0.29	6/18/2022 23:50	11.05
6/19/2022 0:27	-0.03	6/19/2022 23:17	0.86	6/19/2022 23:40	3.50	6/20/2022 1:03	-0.27	6/18/2022 23:51	11.06
6/19/2022 0:28	-0.04	6/19/2022 23:18	0.86	6/19/2022 23:41	3.50	6/20/2022 1:04	-0.25	6/18/2022 23:52	11.06
6/19/2022 0:29	-0.03	6/19/2022 23:19	0.86	6/19/2022 23:42	3.50	6/20/2022 1:05	-0.24	6/18/2022 23:53	11.12
6/19/2022 0:30	-0.03	6/19/2022 23:20	0.86	6/19/2022 23:43	3.51	6/20/2022 1:06	-0.29	6/18/2022 23:54	11.05
6/19/2022 0:31	-0.03	6/19/2022 23:21	0.86	6/19/2022 23:44	3.52	6/20/2022 1:07	-0.27	6/18/2022 23:55	11.08
6/19/2022 0:32	-0.04	6/19/2022 23:22	0.86	6/19/2022 23:45	3.49	6/20/2022 1:08	-0.29	6/18/2022 23:56	11.04
6/19/2022 0:33	-0.05	6/19/2022 23:23	0.88	6/19/2022 23:46	3.51	6/20/2022 1:09	-0.28	6/18/2022 23:57	11.05
6/19/2022 0:34	-0.03	6/19/2022 23:24	0.86	6/19/2022 23:47	3.49	6/20/2022 1:10	-0.28	6/18/2022 23:58	11.03
6/19/2022 0:35	-0.04	6/19/2022 23:25	0.87	6/19/2022 23:48	3.50	6/20/2022 1:11	-0.28	6/18/2022 23:59	11.08
6/19/2022 0:36	-0.03	6/19/2022 23:26	0.86	6/19/2022 23:49	3.49	6/20/2022 1:12	-0.30	6/19/2022 0:00	11.09
6/19/2022 0:37	-0.03	6/19/2022 23:27	0.86	6/19/2022 23:50	3.51	6/20/2022 1:13	-0.24	6/19/2022 0:01	11.04
6/19/2022 0:38	-0.04	6/19/2022 23:28	0.87	6/19/2022 23:51	3.52	6/20/2022 1:14	-0.27	6/19/2022 0:02	11.04
6/19/2022 0:39	-0.03	6/19/2022 23:29	0.86	6/19/2022 23:52	3.52	6/20/2022 1:15	-0.28	6/19/2022 0:03	11.08
6/19/2022 0:40	-0.03	6/19/2022 23:30	0.86	6/19/2022 23:53	3.49	6/20/2022 1:16	-0.26	6/19/2022 0:04	11.03
6/19/2022 0:41	-0.03	6/19/2022 23:31	0.86	6/19/2022 23:54	3.49	6/20/2022 1:17	-0.25	6/19/2022 0:05	11.05
6/19/2022 0:42	-0.03	6/19/2022 23:32	0.86	6/19/2022 23:55	3.48	6/20/2022 1:18	-0.28	6/19/2022 0:06	11.06
6/19/2022 0:43	-0.03	6/19/2022 23:33	0.87	6/19/2022 23:56	3.50	6/20/2022 1:19	-0.24	6/19/2022 0:07	11.08
6/19/2022 0:44	-0.03	6/19/2022 23:34	0.89	6/19/2022 23:57	3.49	6/20/2022 1:20	-0.29	6/19/2022 0:08	11.10
6/19/2022 0:45	-0.03	6/19/2022 23:35	0.86	6/19/2022 23:58	3.48	6/20/2022 1:21	-0.28	6/19/2022 0:09	11.11
6/19/2022 0:46	-0.03	6/19/2022 23:36	0.86	6/19/2022 23:59	3.49	6/20/2022 1:22	-0.28	6/19/2022 0:10	11.08
6/19/2022 0:47	-0.03	6/19/2022 23:37	0.86	6/20/2022 0:00	3.53	6/20/2022 1:23	-0.26	6/19/2022 0:11	11.06
6/19/2022 0:48	-0.03	6/19/2022 23:38	0.87	6/20/2022 0:01	3.48	6/20/2022 1:24	-0.28	6/19/2022 0:12	11.08
6/19/2022 0:49	-0.03	6/19/2022 23:39	0.87	6/20/2022 0:02	3.50	6/20/2022 1:25	-0.29	6/19/2022 0:13	11.04
6/19/2022 0:50	-0.03	6/19/2022 23:40	0.86	6/20/2022 0:03	3.50	6/20/2022 1:26	-0.27	6/19/2022 0:14	11.06
6/19/2022 0:51	-0.03	6/19/2022 23:41	0.86	6/20/2022 0:04	3.50	6/20/2022 1:27	-0.27	6/19/2022 0:15	11.10
6/19/2022 0:52	-0.03	6/19/2022 23:42	0.86	6/20/2022 0:05	3.55	6/20/2022 1:28	-0.26	6/19/2022 0:16	11.08
6/19/2022 0:53	-0.03	6/19/2022 23:43	0.86	6/20/2022 0:06	3.49	6/20/2022 1:29	-0.27	6/19/2022 0:17	11.11
6/19/2022 0:54	-0.03	6/19/2022 23:44	0.86	6/20/2022 0:07	3.52	6/20/2022 1:30	-0.29	6/19/2022 0:18	11.09
6/19/2022 0:55	-0.03	6/19/2022 23:45	0.86	6/20/2022 0:08	3.51	6/20/2022 1:31	-0.27	6/19/2022 0:19	11.07
6/19/2022 0:56	-0.03	6/19/2022 23:46	0.87	6/20/2022 0:09	3.53	6/20/2022 1:32	-0.30	6/19/2022 0:20	11.01
6/19/2022 0:57	-0.03	6/19/2022 23:47	0.87	6/20/2022 0:10	3.51	6/20/2022 1:33	-0.25	6/19/2022 0:21	11.11
6/19/2022 0:58	-0.03	6/19/2022 23:48	0.87	6/20/2022 0:11	3.52	6/20/2022 1:34	-0.25	6/19/2022 0:22	11.09
6/19/2022 0:59	-0.03	6/19/2022 23:49	0.87	6/20/2022 0:12	3.52	6/20/2022 1:35	-0.30	6/19/2022 0:23	11.09
6/19/2022 1:00	-0.03	6/19/2022 23:50	0.87	6/20/2022 0:13	3.51	6/20/2022 1:36	-0.28	6/19/2022 0:24	11.10
6/19/2022 1:01	-0.03	6/19/2022 23:51	0.86	6/20/2022 0:14	3.50	6/20/2022 1:37	-0.28	6/19/2022 0:25	11.08
6/19/2022 1:02	-0.03	6/19/2022 23:52	0.87	6/20/2022 0:15	3.50	6/20/2022 1:38	-0.29	6/19/2022 0:26	11.04
6/19/2022 1:03	-0.05	6/19/2022 23:53	0.87	6/20/2022 0:16	3.52	6/20/2022 1:39	-0.26	6/19/2022 0:27	11.05
6/19/2022 1:04	-0.03	6/19/2022 23:54	0.87	6/20/2022 0:17	3.54	6/20/2022 1:40	-0.29	6/19/2022 0:28	11.12
6/19/2022 1:05	-0.04	6/19/2022 23:55	0.87	6/20/2022 0:18	3.51	6/20/2022 1:41	-0.24	6/19/2022 0:29	11.07
6/19/2022 1:06	-0.04	6/19/2022 23:56	0.87	6/20/2022 0:19	3.51	6/20/2022 1:42	-0.26	6/19/2022 0:30	11.12
6/19/2022 1:07	-0.03	6/19/2022 23:57	0.87	6/20/2022 0:20	3.51	6/20/2022 1:43	-0.23	6/19/2022 0:31	11.10
6/19/2022 1:08	-0.03	6/19/2022 23:58	0.87	6/20/2022 0:21	3.52	6/20/2022 1:44	-0.25	6/19/2022 0:32	11.09
6/19/2022 1:09	-0.03	6/19/2022 23:59	0.87	6/20/2022 0:22	3.50	6/20/2022 1:45	-0.31	6/19/2022 0:33	11.13
6/19/2022 1:10	-0.03	6/20/2022 0:00	0.87	6/20/2022 0:23	3.50	6/20/2022 1:46	-0.26	6/19/2022 0:34	11.03
6/19/2022 1:11	-0.03	6/20/2022 0:01	0.87	6/20/2022 0:24	3.50	6/20/2022 1:47	-0.30	6/19/2022 0:35	11.04
6/19/2022 1:12	-0.03	6/20/2022 0:02	0.87	6/20/2022 0:25	3.52	6/20/2022 1:48	-0.27	6/19/2022 0:36	11.09
6/19/2022 1:13	-0.03	6/20/2022 0:03	0.87	6/20/2022 0:26	3.51	6/20/2022 1:49	-0.27	6/19/2022 0:37	11.10
6/19/2022 1:14	-0.03	6/20/2022 0:04	0.87	6/20/2022 0:27	3.49	6/20/2022 1:50	-0.30	6/19/2022 0:38	11.06
6/19/2022 1:15	-0.03	6/20/2022 0:05	0.87	6/20/2022 0:28	3.55	6/20/2022 1:51	-0.22	6/19/2022 0:39	11.07
6/19/2022 1:16	-0.03	6/20/2022 0:06	0.87	6/20/2022 0:29	3.53	6/20/2022 1:52	-0.27	6/19/2022 0:40	11.08
6/19/2022 1:17	-0.03	6/20/2022 0:07	0.87	6/20/2022 0:30	3.51	6/20/2022 1:53	-0.27	6/19/2022 0:41	11.08
6/19/2022 1:18	-0.03	6/20/2022 0:08	0.87	6/20/2022 0:31	3.51	6/20/2022 1:54	-0.25	6/19/2022 0:42	11.10
6/19/2022 1:19	-0.03	6/20/2022 0:09	0.87	6/20/2022 0:32	3.52	6/20/2022 1:55	-0.29	6/19/2022 0:43	11.06
6/19/2022 1:20	-0.03	6/20/2022 0:10	0.87	6/20/2022 0:33	3.52	6/20/2022 1:56	-0.25	6/19/2022 0:44	11.08

6/19/2022 1:21	-0.03	6/20/2022 0:11	0.87	6/20/2022 0:34	3.50	6/20/2022 1:57	-0.27	6/19/2022 0:45	11.13
6/19/2022 1:22	-0.03	6/20/2022 0:12	0.87	6/20/2022 0:35	3.47	6/20/2022 1:58	-0.27	6/19/2022 0:46	11.14
6/19/2022 1:23	-0.03	6/20/2022 0:13	0.87	6/20/2022 0:36	3.54	6/20/2022 1:59	-0.29	6/19/2022 0:47	11.06
6/19/2022 1:24	-0.03	6/20/2022 0:14	0.87	6/20/2022 0:37	3.48	6/20/2022 2:00	-0.28	6/19/2022 0:48	11.11
6/19/2022 1:25	-0.04	6/20/2022 0:15	0.88	6/20/2022 0:38	3.51	6/20/2022 2:01	-0.27	6/19/2022 0:49	11.05
6/19/2022 1:26	-0.03	6/20/2022 0:16	0.87	6/20/2022 0:39	3.52	6/20/2022 2:02	-0.30	6/19/2022 0:50	11.06
6/19/2022 1:27	-0.03	6/20/2022 0:17	0.88	6/20/2022 0:40	3.52	6/20/2022 2:03	-0.27	6/19/2022 0:51	11.03
6/19/2022 1:28	-0.04	6/20/2022 0:18	0.88	6/20/2022 0:41	3.51	6/20/2022 2:04	-0.28	6/19/2022 0:52	11.06
6/19/2022 1:29	-0.03	6/20/2022 0:19	0.88	6/20/2022 0:42	3.51	6/20/2022 2:05	-0.30	6/19/2022 0:53	11.08
6/19/2022 1:30	-0.03	6/20/2022 0:20	0.88	6/20/2022 0:43	3.49	6/20/2022 2:06	-0.27	6/19/2022 0:54	11.06
6/19/2022 1:31	-0.03	6/20/2022 0:21	0.88	6/20/2022 0:44	3.47	6/20/2022 2:07	-0.29	6/19/2022 0:55	11.09
6/19/2022 1:32	-0.03	6/20/2022 0:22	0.88	6/20/2022 0:45	3.51	6/20/2022 2:08	-0.30	6/19/2022 0:56	11.06
6/19/2022 1:33	-0.04	6/20/2022 0:23	0.88	6/20/2022 0:46	3.53	6/20/2022 2:09	-0.27	6/19/2022 0:57	11.08
6/19/2022 1:34	-0.03	6/20/2022 0:24	0.88	6/20/2022 0:47	3.50	6/20/2022 2:10	-0.24	6/19/2022 0:58	11.04
6/19/2022 1:35	-0.04	6/20/2022 0:25	0.88	6/20/2022 0:48	3.52	6/20/2022 2:11	-0.25	6/19/2022 0:59	11.07
6/19/2022 1:36	-0.03	6/20/2022 0:26	0.87	6/20/2022 0:49	3.50	6/20/2022 2:12	-0.23	6/19/2022 1:00	11.08
6/19/2022 1:37	-0.04	6/20/2022 0:27	0.88	6/20/2022 0:50	3.51	6/20/2022 2:13	-0.25	6/19/2022 1:01	11.08
6/19/2022 1:38	-0.03	6/20/2022 0:28	0.88	6/20/2022 0:51	3.51	6/20/2022 2:14	-0.30	6/19/2022 1:02	11.08
6/19/2022 1:39	-0.03	6/20/2022 0:29	0.88	6/20/2022 0:52	3.51	6/20/2022 2:15	-0.30	6/19/2022 1:03	11.06
6/19/2022 1:40	-0.03	6/20/2022 0:30	0.88	6/20/2022 0:53	3.54	6/20/2022 2:16	-0.26	6/19/2022 1:04	11.06
6/19/2022 1:41	-0.03	6/20/2022 0:31	0.88	6/20/2022 0:54	3.52	6/20/2022 2:17	-0.27	6/19/2022 1:05	11.07
6/19/2022 1:42	-0.04	6/20/2022 0:32	0.88	6/20/2022 0:55	3.54	6/20/2022 2:18	-0.26	6/19/2022 1:06	11.08
6/19/2022 1:43	-0.04	6/20/2022 0:33	0.88	6/20/2022 0:56	3.52	6/20/2022 2:19	-0.25	6/19/2022 1:07	11.04
6/19/2022 1:44	-0.04	6/20/2022 0:34	0.88	6/20/2022 0:57	3.53	6/20/2022 2:20	-0.27	6/19/2022 1:08	11.06
6/19/2022 1:45	-0.03	6/20/2022 0:35	0.88	6/20/2022 0:58	3.50	6/20/2022 2:21	-0.29	6/19/2022 1:09	11.05
6/19/2022 1:46	-0.03	6/20/2022 0:36	0.88	6/20/2022 0:59	3.49	6/20/2022 2:22	-0.29	6/19/2022 1:10	11.07
6/19/2022 1:47	-0.03	6/20/2022 0:37	0.88	6/20/2022 1:00	3.50	6/20/2022 2:23	-0.19	6/19/2022 1:11	11.09
6/19/2022 1:48	-0.03	6/20/2022 0:38	0.88	6/20/2022 1:01	3.49	6/20/2022 2:24	-0.28	6/19/2022 1:12	11.04
6/19/2022 1:49	-0.03	6/20/2022 0:39	0.88	6/20/2022 1:02	3.51	6/20/2022 2:25	-0.26	6/19/2022 1:13	11.05
6/19/2022 1:50	-0.03	6/20/2022 0:40	0.88	6/20/2022 1:03	3.51	6/20/2022 2:26	-0.27	6/19/2022 1:14	11.06
6/19/2022 1:51	-0.04	6/20/2022 0:41	0.88	6/20/2022 1:04	3.49	6/20/2022 2:27	-0.26	6/19/2022 1:15	11.07
6/19/2022 1:52	-0.04	6/20/2022 0:42	0.88	6/20/2022 1:05	3.49	6/20/2022 2:28	-0.25	6/19/2022 1:16	11.03
6/19/2022 1:53	-0.03	6/20/2022 0:43	0.88	6/20/2022 1:06	3.48	6/20/2022 2:29	-0.28	6/19/2022 1:17	11.09
6/19/2022 1:54	-0.04	6/20/2022 0:44	0.88	6/20/2022 1:07	3.48	6/20/2022 2:30	-0.26	6/19/2022 1:18	11.06
6/19/2022 1:55	-0.03	6/20/2022 0:45	0.88	6/20/2022 1:08	3.52	6/20/2022 2:31	-0.28	6/19/2022 1:19	11.08
6/19/2022 1:56	-0.03	6/20/2022 0:46	0.88	6/20/2022 1:09	3.51	6/20/2022 2:32	-0.29	6/19/2022 1:20	11.04
6/19/2022 1:57	-0.03	6/20/2022 0:47	0.88	6/20/2022 1:10	3.47	6/20/2022 2:33	-0.27	6/19/2022 1:21	11.06
6/19/2022 1:58	-0.04	6/20/2022 0:48	0.88	6/20/2022 1:11	3.53	6/20/2022 2:34	-0.28	6/19/2022 1:22	11.02
6/19/2022 1:59	-0.03	6/20/2022 0:49	0.88	6/20/2022 1:12	3.53	6/20/2022 2:35	-0.27	6/19/2022 1:23	11.08
6/19/2022 2:00	-0.03	6/20/2022 0:50	0.88	6/20/2022 1:13	3.54	6/20/2022 2:36	-0.25	6/19/2022 1:24	11.10
6/19/2022 2:01	-0.03	6/20/2022 0:51	0.87	6/20/2022 1:14	3.52	6/20/2022 2:37	-0.25	6/19/2022 1:25	11.08
6/19/2022 2:02	-0.03	6/20/2022 0:52	0.88	6/20/2022 1:15	3.51	6/20/2022 2:38	-0.32	6/19/2022 1:26	11.02
6/19/2022 2:03	-0.03	6/20/2022 0:53	0.88	6/20/2022 1:16	3.53	6/20/2022 2:39	-0.27	6/19/2022 1:27	11.07
6/19/2022 2:04	-0.03	6/20/2022 0:54	0.88	6/20/2022 1:17	3.49	6/20/2022 2:40	-0.27	6/19/2022 1:28	11.12
6/19/2022 2:05	-0.03	6/20/2022 0:55	0.88	6/20/2022 1:18	3.47	6/20/2022 2:41	-0.28	6/19/2022 1:29	11.07
6/19/2022 2:06	-0.03	6/20/2022 0:56	0.88	6/20/2022 1:19	3.49	6/20/2022 2:42	-0.28	6/19/2022 1:30	11.05
6/19/2022 2:07	-0.03	6/20/2022 0:57	0.88	6/20/2022 1:20	3.52	6/20/2022 2:43	-0.29	6/19/2022 1:31	11.09
6/19/2022 2:08	-0.03	6/20/2022 0:58	0.88	6/20/2022 1:21	3.47	6/20/2022 2:44	-0.25	6/19/2022 1:32	11.06
6/19/2022 2:09	-0.05	6/20/2022 0:59	0.88	6/20/2022 1:22	3.52	6/20/2022 2:45	-0.27	6/19/2022 1:33	11.03
6/19/2022 2:10	-0.04	6/20/2022 1:00	0.88	6/20/2022 1:23	3.51	6/20/2022 2:46	-0.24	6/19/2022 1:34	11.07
6/19/2022 2:11	-0.03	6/20/2022 1:01	0.88	6/20/2022 1:24	3.49	6/20/2022 2:47	-0.29	6/19/2022 1:35	11.08
6/19/2022 2:12	-0.03	6/20/2022 1:02	0.88	6/20/2022 1:25	3.50	6/20/2022 2:48	-0.28	6/19/2022 1:36	11.10
6/19/2022 2:13	-0.03	6/20/2022 1:03	0.88	6/20/2022 1:26	3.50	6/20/2022 2:49	-0.25	6/19/2022 1:37	11.09
6/19/2022 2:14	-0.03	6/20/2022 1:04	0.88	6/20/2022 1:27	3.53	6/20/2022 2:50	-0.25	6/19/2022 1:38	11.09
6/19/2022 2:15	-0.04	6/20/2022 1:05	0.88	6/20/2022 1:28	3.53	6/20/2022 2:51	-0.31	6/19/2022 1:39	11.06
6/19/2022 2:16	-0.04	6/20/2022 1:06	0.88	6/20/2022 1:29	3.50	6/20/2022 2:52	-0.25	6/19/2022 1:40	11.07
6/19/2022 2:17	-0.03	6/20/2022 1:07	0.88	6/20/2022 1:30	3.57	6/20/2022 2:53	-0.25	6/19/2022 1:41	11.02
6/19/2022 2:18	-0.03	6/20/2022 1:08	0.88	6/20/2022 1:31	3.49	6/20/2022 2:54	-0.29	6/19/2022 1:42	11.04
6/19/2022 2:19	-0.03	6/20/2022 1:09	0.88	6/20/2022 1:32	3.53	6/20/2022 2:55	-0.27	6/19/2022 1:43	11.08
6/19/2022 2:20	-0.03	6/20/2022 1:10	0.88	6/20/2022 1:33	3.51	6/20/2022 2:56	-0.30	6/19/2022 1:44	11.07
6/19/2022 2:21	-0.03	6/20/2022 1:11	0.88	6/20/2022 1:34	3.53	6/20/2022 2:57	-0.24	6/19/2022 1:45	11.11
6/19/2022 2:22	-0.03	6/20/2022 1:12	0.88	6/20/2022 1:35	3.51	6/20/2022 2:58	-0.28	6/19/2022 1:46	11.08
6/19/2022 2:23	-0.03	6/20/2022 1:13	0.88	6/20/2022 1:36	3.52	6/20/2022 2:59	-0.24	6/19/2022 1:47	11.09
6/19/2022 2:24	-0.03	6/20/2022 1:14	0.88	6/20/2022 1:37	3.51	6/20/2022 3:00	-0.28	6/19/2022 1:48	11.07
6/19/2022 2:25	-0.03	6/20/2022 1:15	0.88	6/20/2022 1:38	3.51	6/20/2022 3:01	-0.26	6/19/2022 1:49	11.05
6/19/2022 2:26	-0.03	6/20/2022 1:16	0.88	6/20/2022 1:39	3.52	6/20/2022 3:02	-0.26	6/19/2022 1:50	11.06
6/19/2022 2:27	-0.03	6/20/2022 1:17	0.88	6/20/2022 1:40	3.50	6/20/2022 3:03	-0.28	6/19/2022 1:51	11.02
6/19/2022 2:28	-0.03	6/20/2022 1:18	0.88	6/20/2022 1:41	3.50	6/20/2022 3:04	-0.29	6/19/2022 1:52	11.10
6/19/2022 2:29	-0.05	6/20/2022 1:19	0.88	6/20/2022 1:42	3.51	6/20/2022 3:05	-0.28	6/19/2022 1:53	11.06
6/19/2022 2:30	-0.05	6/20/2022 1:20	0.88	6/20/2022 1:43	3.52	6/20/2022 3:06	-0.25	6/19/2022 1:54	11.03
6/19/2022 2:31	-0.03	6/20/2022 1:21	0.88	6/20/2022 1:44	3.49	6/20/2022 3:07	-0.30	6/19/2022 1:55	11.05
6/19/2022 2:32	-0.04	6/20/2022 1:22	0.88	6/20/2022 1:45	3.53	6/20/2022 3:08	-0.27	6/19/2022 1:56	11.08
6/19/2022 2:33	-0.03	6/20/2022 1:23	0.88	6/20/2022 1:46	3.49	6/20/2022 3:09	-0.24	6/19/2022 1:57	11.07
6/19/2022 2:34	-0.03	6/20/2022 1:24	0.88	6/20/2022 1:47	3.45	6/20/2022 3:10	-0.28	6/19/2022 1:58	11.05
6/19/2022 2:35	-0.03	6/20/2022 1:25	0.88	6/20/2022 1:48	3.52	6/20/2022 3:11	-0.28	6/19/2022 1:59	11.05
6/19/2022 2:36	-0.03	6/20/2022 1:26	0.88	6/20/2022 1:49	3.54	6/20/2022 3:12	-0.27	6/19/2022 2:00	11.08
6/19/2022 2:37	-0.03	6/20/2022 1:27	0.88	6/20/2022 1:50	3.54	6/20/2022 3:13	-0.28	6/19/2022 2:01	11.08
6/19/2022 2:38	-0.03	6/20/2022 1:28	0.88	6/20/2022 1:51	3.50	6/20/2022 3:14	-0.27	6/19/2022 2:02	11.12
6/19/2022 2:39	-0.03	6/20/2022 1:29	0.88	6/20/2022 1:52	3.53	6/20/2022 3:15	-0.26	6/19/2022 2:03	11.07
6/19/2022 2:40	-0.03	6/20/2022 1:30	0.88	6/20/2022 1:53	3.51	6/20/2022 3:16	-0.25	6/19/2022 2:04	11.15
6/19/2022 2:41	-0.04	6/20/2022 1:31	0.88	6/20/2022 1:54	3.50	6/20/2022 3:17	-0.29	6/19/2022 2:05	11.09
6/19/2022 2:42	-0.04	6/20/2022 1:32	0.88	6/20/2022 1:55	3.50	6/20/2022 3:18	-0.29	6/19/2022 2:06	11.08
6/19/2022 2:43	-0.05	6/20/2022 1:33	0.88	6/20/2022 1:56	3.49	6/20/2022 3:19	-0.26	6/19/2022 2:07	11.03
6/19/2022 2:44	-0.03	6/20/2022 1:34	0.88	6/20/2022 1:57	3.51	6/20/2022 3:20	-0.25	6/19/2022 2:08	11.06
6/19/2022 2:45	-0.05	6/20/2022 1:35	0.89	6/20/2022 1:58	3.52	6/20/2022 3:21	-0.28	6/19/2022 2:09	11.09
6/19/2022 2:46	-0.03	6/20/2022 1:36	0.89	6/20/2022 1:59	3.50	6/20/2022 3:22	-0.30	6/19/2022 2:10	11.07
6/19/2022 2:47	-0.03	6/20/2022 1:37	0.88	6/20/2022 2:00	3.50	6/20/2022 3:23	-0.25	6/19/2022 2:11	11.08
6/19/2022 2:48	-0.03	6/20/2022 1:38	0.88	6/20/2022 2:01	3.54	6/20/2022 3:24	-0.30	6/19/2022 2:12	11.13

6/19/2022 2:49	-0.03	6/20/2022 1:39	0.88	6/20/2022 2:02	3.51	6/20/2022 3:25	-0.24	6/19/2022 2:13	11.09
6/19/2022 2:50	-0.03	6/20/2022 1:40	0.88	6/20/2022 2:03	3.48	6/20/2022 3:26	-0.25	6/19/2022 2:14	11.06
6/19/2022 2:51	-0.03	6/20/2022 1:41	0.88	6/20/2022 2:04	3.50	6/20/2022 3:27	-0.29	6/19/2022 2:15	11.02
6/19/2022 2:52	-0.04	6/20/2022 1:42	0.88	6/20/2022 2:05	3.52	6/20/2022 3:28	-0.27	6/19/2022 2:16	11.07
6/19/2022 2:53	-0.03	6/20/2022 1:43	0.88	6/20/2022 2:06	3.55	6/20/2022 3:29	-0.27	6/19/2022 2:17	11.02
6/19/2022 2:54	-0.04	6/20/2022 1:44	0.88	6/20/2022 2:07	3.51	6/20/2022 3:30	-0.30	6/19/2022 2:18	11.11
6/19/2022 2:55	-0.03	6/20/2022 1:45	0.88	6/20/2022 2:08	3.50	6/20/2022 3:31	-0.28	6/19/2022 2:19	11.06
6/19/2022 2:56	-0.04	6/20/2022 1:46	0.88	6/20/2022 2:09	3.51	6/20/2022 3:32	-0.26	6/19/2022 2:20	11.15
6/19/2022 2:57	-0.03	6/20/2022 1:47	0.88	6/20/2022 2:10	3.53	6/20/2022 3:33	-0.24	6/19/2022 2:21	11.08
6/19/2022 2:58	-0.03	6/20/2022 1:48	0.88	6/20/2022 2:11	3.53	6/20/2022 3:34	-0.31	6/19/2022 2:22	11.04
6/19/2022 2:59	-0.04	6/20/2022 1:49	0.88	6/20/2022 2:12	3.53	6/20/2022 3:35	-0.25	6/19/2022 2:23	11.13
6/19/2022 3:00	-0.03	6/20/2022 1:50	0.88	6/20/2022 2:13	3.53	6/20/2022 3:36	-0.29	6/19/2022 2:24	11.04
6/19/2022 3:01	-0.04	6/20/2022 1:51	0.88	6/20/2022 2:14	3.51	6/20/2022 3:37	-0.29	6/19/2022 2:25	11.07
6/19/2022 3:02	-0.03	6/20/2022 1:52	0.88	6/20/2022 2:15	3.53	6/20/2022 3:38	-0.23	6/19/2022 2:26	11.11
6/19/2022 3:03	-0.04	6/20/2022 1:53	0.88	6/20/2022 2:16	3.49	6/20/2022 3:39	-0.25	6/19/2022 2:27	11.05
6/19/2022 3:04	-0.03	6/20/2022 1:54	0.88	6/20/2022 2:17	3.53	6/20/2022 3:40	-0.27	6/19/2022 2:28	11.13
6/19/2022 3:05	-0.04	6/20/2022 1:55	0.88	6/20/2022 2:18	3.52	6/20/2022 3:41	-0.28	6/19/2022 2:29	11.12
6/19/2022 3:06	-0.04	6/20/2022 1:56	0.88	6/20/2022 2:19	3.51	6/20/2022 3:42	-0.27	6/19/2022 2:30	11.06
6/19/2022 3:07	-0.03	6/20/2022 1:57	0.88	6/20/2022 2:20	3.49	6/20/2022 3:43	-0.27	6/19/2022 2:31	11.14
6/19/2022 3:08	-0.03	6/20/2022 1:58	0.88	6/20/2022 2:21	3.50	6/20/2022 3:44	-0.28	6/19/2022 2:32	11.07
6/19/2022 3:09	-0.03	6/20/2022 1:59	0.88	6/20/2022 2:22	3.53	6/20/2022 3:45	-0.28	6/19/2022 2:33	11.10
6/19/2022 3:10	-0.04	6/20/2022 2:00	0.88	6/20/2022 2:23	3.53	6/20/2022 3:46	-0.28	6/19/2022 2:34	11.08
6/19/2022 3:11	-0.03	6/20/2022 2:01	0.88	6/20/2022 2:24	3.51	6/20/2022 3:47	-0.24	6/19/2022 2:35	11.05
6/19/2022 3:12	-0.03	6/20/2022 2:02	0.88	6/20/2022 2:25	3.51	6/20/2022 3:48	-0.24	6/19/2022 2:36	11.01
6/19/2022 3:13	-0.04	6/20/2022 2:03	0.89	6/20/2022 2:26	3.51	6/20/2022 3:49	-0.27	6/19/2022 2:37	11.04
6/19/2022 3:14	-0.03	6/20/2022 2:04	0.88	6/20/2022 2:27	3.54	6/20/2022 3:50	-0.27	6/19/2022 2:38	11.05
6/19/2022 3:15	-0.03	6/20/2022 2:05	0.88	6/20/2022 2:28	3.55	6/20/2022 3:51	-0.30	6/19/2022 2:39	11.02
6/19/2022 3:16	-0.03	6/20/2022 2:06	0.88	6/20/2022 2:29	3.53	6/20/2022 3:52	-0.31	6/19/2022 2:40	11.05
6/19/2022 3:17	-0.03	6/20/2022 2:07	0.88	6/20/2022 2:30	3.52	6/20/2022 3:53	-0.27	6/19/2022 2:41	11.07
6/19/2022 3:18	-0.03	6/20/2022 2:08	0.88	6/20/2022 2:31	3.51	6/20/2022 3:54	-0.29	6/19/2022 2:42	11.11
6/19/2022 3:19	-0.03	6/20/2022 2:09	0.89	6/20/2022 2:32	3.53	6/20/2022 3:55	-0.29	6/19/2022 2:43	11.07
6/19/2022 3:20	-0.03	6/20/2022 2:10	0.88	6/20/2022 2:33	3.54	6/20/2022 3:56	-0.27	6/19/2022 2:44	11.09
6/19/2022 3:21	-0.03	6/20/2022 2:11	0.88	6/20/2022 2:34	3.52	6/20/2022 3:57	-0.26	6/19/2022 2:45	11.06
6/19/2022 3:22	-0.03	6/20/2022 2:12	0.88	6/20/2022 2:35	3.56	6/20/2022 3:58	-0.24	6/19/2022 2:46	11.09
6/19/2022 3:23	-0.04	6/20/2022 2:13	0.89	6/20/2022 2:36	3.52	6/20/2022 3:59	-0.30	6/19/2022 2:47	11.08
6/19/2022 3:24	-0.04	6/20/2022 2:14	0.88	6/20/2022 2:37	3.53	6/20/2022 4:00	-0.26	6/19/2022 2:48	11.07
6/19/2022 3:25	-0.03	6/20/2022 2:15	0.88	6/20/2022 2:38	3.50	6/20/2022 4:01	-0.28	6/19/2022 2:49	11.07
6/19/2022 3:26	-0.04	6/20/2022 2:16	0.89	6/20/2022 2:39	3.50	6/20/2022 4:02	-0.26	6/19/2022 2:50	11.10
6/19/2022 3:27	-0.03	6/20/2022 2:17	0.88	6/20/2022 2:40	3.48	6/20/2022 4:03	-0.27	6/19/2022 2:51	11.08
6/19/2022 3:28	-0.03	6/20/2022 2:18	0.88	6/20/2022 2:41	3.55	6/20/2022 4:04	-0.27	6/19/2022 2:52	11.02
6/19/2022 3:29	-0.03	6/20/2022 2:19	0.88	6/20/2022 2:42	3.53	6/20/2022 4:05	-0.27	6/19/2022 2:53	11.07
6/19/2022 3:30	-0.04	6/20/2022 2:20	0.89	6/20/2022 2:43	3.49	6/20/2022 4:06	-0.27	6/19/2022 2:54	11.09
6/19/2022 3:31	-0.03	6/20/2022 2:21	0.89	6/20/2022 2:44	3.52	6/20/2022 4:07	-0.27	6/19/2022 2:55	11.04
6/19/2022 3:32	-0.03	6/20/2022 2:22	0.89	6/20/2022 2:45	3.51	6/20/2022 4:08	-0.25	6/19/2022 2:56	11.08
6/19/2022 3:33	-0.04	6/20/2022 2:23	0.89	6/20/2022 2:46	3.54	6/20/2022 4:09	-0.27	6/19/2022 2:57	11.15
6/19/2022 3:34	-0.04	6/20/2022 2:24	0.89	6/20/2022 2:47	3.53	6/20/2022 4:10	-0.27	6/19/2022 2:58	11.03
6/19/2022 3:35	-0.03	6/20/2022 2:25	0.89	6/20/2022 2:48	3.51	6/20/2022 4:11	-0.25	6/19/2022 2:59	11.10
6/19/2022 3:36	-0.04	6/20/2022 2:26	0.88	6/20/2022 2:49	3.50	6/20/2022 4:12	-0.29	6/19/2022 3:00	11.06
6/19/2022 3:37	-0.03	6/20/2022 2:27	0.89	6/20/2022 2:50	3.53	6/20/2022 4:13	-0.30	6/19/2022 3:01	11.06
6/19/2022 3:38	-0.04	6/20/2022 2:28	0.88	6/20/2022 2:51	3.50	6/20/2022 4:14	-0.24	6/19/2022 3:02	11.10
6/19/2022 3:39	-0.03	6/20/2022 2:29	0.88	6/20/2022 2:52	3.53	6/20/2022 4:15	-0.27	6/19/2022 3:03	11.02
6/19/2022 3:40	-0.04	6/20/2022 2:30	0.89	6/20/2022 2:53	3.52	6/20/2022 4:16	-0.24	6/19/2022 3:04	11.04
6/19/2022 3:41	-0.03	6/20/2022 2:31	0.88	6/20/2022 2:54	3.53	6/20/2022 4:17	-0.26	6/19/2022 3:05	11.07
6/19/2022 3:42	-0.03	6/20/2022 2:32	0.89	6/20/2022 2:55	3.52	6/20/2022 4:18	-0.25	6/19/2022 3:06	11.09
6/19/2022 3:43	-0.03	6/20/2022 2:33	0.89	6/20/2022 2:56	3.50	6/20/2022 4:19	-0.25	6/19/2022 3:07	11.07
6/19/2022 3:44	-0.03	6/20/2022 2:34	0.89	6/20/2022 2:57	3.54	6/20/2022 4:20	-0.24	6/19/2022 3:08	11.07
6/19/2022 3:45	-0.03	6/20/2022 2:35	0.89	6/20/2022 2:58	3.50	6/20/2022 4:21	-0.25	6/19/2022 3:09	11.03
6/19/2022 3:46	-0.03	6/20/2022 2:36	0.89	6/20/2022 2:59	3.50	6/20/2022 4:22	-0.26	6/19/2022 3:10	11.10
6/19/2022 3:47	-0.03	6/20/2022 2:37	0.89	6/20/2022 3:00	3.50	6/20/2022 4:23	-0.27	6/19/2022 3:11	11.11
6/19/2022 3:48	-0.04	6/20/2022 2:38	0.89	6/20/2022 3:01	3.50	6/20/2022 4:24	-0.29	6/19/2022 3:12	11.06
6/19/2022 3:49	-0.04	6/20/2022 2:39	0.89	6/20/2022 3:02	3.51	6/20/2022 4:25	-0.24	6/19/2022 3:13	11.02
6/19/2022 3:50	-0.03	6/20/2022 2:40	0.89	6/20/2022 3:03	3.52	6/20/2022 4:26	-0.30	6/19/2022 3:14	11.05
6/19/2022 3:51	-0.03	6/20/2022 2:41	0.89	6/20/2022 3:04	3.53	6/20/2022 4:27	-0.24	6/19/2022 3:15	11.09
6/19/2022 3:52	-0.03	6/20/2022 2:42	0.89	6/20/2022 3:05	3.55	6/20/2022 4:28	-0.30	6/19/2022 3:16	11.05
6/19/2022 3:53	-0.03	6/20/2022 2:43	0.89	6/20/2022 3:06	3.54	6/20/2022 4:29	-0.24	6/19/2022 3:17	11.07
6/19/2022 3:54	-0.03	6/20/2022 2:44	0.88	6/20/2022 3:07	3.53	6/20/2022 4:30	-0.29	6/19/2022 3:18	11.05
6/19/2022 3:55	-0.03	6/20/2022 2:45	0.89	6/20/2022 3:08	3.52	6/20/2022 4:31	-0.25	6/19/2022 3:19	11.09
6/19/2022 3:56	-0.03	6/20/2022 2:46	0.89	6/20/2022 3:09	3.52	6/20/2022 4:32	-0.25	6/19/2022 3:20	11.10
6/19/2022 3:57	-0.04	6/20/2022 2:47	0.89	6/20/2022 3:10	3.54	6/20/2022 4:33	-0.29	6/19/2022 3:21	11.11
6/19/2022 3:58	-0.04	6/20/2022 2:48	0.89	6/20/2022 3:11	3.52	6/20/2022 4:34	-0.25	6/19/2022 3:22	11.07
6/19/2022 3:59	-0.03	6/20/2022 2:49	0.89	6/20/2022 3:12	3.55	6/20/2022 4:35	-0.25	6/19/2022 3:23	11.08
6/19/2022 4:00	-0.03	6/20/2022 2:50	0.89	6/20/2022 3:13	3.51	6/20/2022 4:36	-0.24	6/19/2022 3:24	11.11
6/19/2022 4:01	-0.03	6/20/2022 2:51	0.89	6/20/2022 3:14	3.52	6/20/2022 4:37	-0.25	6/19/2022 3:25	11.11
6/19/2022 4:02	-0.04	6/20/2022 2:52	0.89	6/20/2022 3:15	3.53	6/20/2022 4:38	-0.32	6/19/2022 3:26	11.12
6/19/2022 4:03	-0.03	6/20/2022 2:53	0.89	6/20/2022 3:16	3.52	6/20/2022 4:39	-0.30	6/19/2022 3:27	11.05
6/19/2022 4:04	-0.03	6/20/2022 2:54	0.89	6/20/2022 3:17	3.50	6/20/2022 4:40	-0.31	6/19/2022 3:28	11.05
6/19/2022 4:05	-0.03	6/20/2022 2:55	0.89	6/20/2022 3:18	3.52	6/20/2022 4:41	-0.30	6/19/2022 3:29	11.11
6/19/2022 4:06	-0.03	6/20/2022 2:56	0.89	6/20/2022 3:19	3.54	6/20/2022 4:42	-0.27	6/19/2022 3:30	11.09
6/19/2022 4:07	-0.03	6/20/2022 2:57	0.89	6/20/2022 3:20	3.54	6/20/2022 4:43	-0.25	6/19/2022 3:31	11.09
6/19/2022 4:08	-0.04	6/20/2022 2:58	0.91	6/20/2022 3:21	3.53	6/20/2022 4:44	-0.30	6/19/2022 3:32	11.06
6/19/2022 4:09	-0.03	6/20/2022 2:59	0.89	6/20/2022 3:22	3.50	6/20/2022 4:45	-0.26	6/19/2022 3:33	11.06
6/19/2022 4:10	-0.04	6/20/2022 3:00	0.89	6/20/2022 3:23	3.52	6/20/2022 4:46	-0.26	6/19/2022 3:34	11.07
6/19/2022 4:11	-0.03	6/20/2022 3:01	0.91	6/20/2022 3:24	3.51	6/20/2022 4:47	-0.25	6/19/2022 3:35	11.04
6/19/2022 4:12	-0.03	6/20/2022 3:02	0.89	6/20/2022 3:25	3.51	6/20/2022 4:48	-0.27	6/19/2022 3:36	11.08
6/19/2022 4:13	-0.03	6/20/2022 3:03	0.89	6/20/2022 3:26	3.51	6/20/2022 4:49	-0.27	6/19/2022 3:37	11.09
6/19/2022 4:14	-0.03	6/20/2022 3:04	0.89	6/20/2022 3:27	3.51	6/20/2022 4:50	-0.22	6/19/2022 3:38	11.04
6/19/2022 4:15	-0.03	6/20/2022 3:05	0.89	6/20/2022 3:28	3.52	6/20/2022 4:51	-0.28	6/19/2022 3:39	11.04
6/19/2022 4:16	-0.03	6/20/2022 3:06	0.89	6/20/2022 3:29	3.49	6/20/2022 4:52	-0.29	6/19/2022 3:40	11.06

6/19/2022 4:17	-0.04	6/20/2022 3:07	0.89	6/20/2022 3:30	3.49	6/20/2022 4:53	-0.23	6/19/2022 3:41	11.08
6/19/2022 4:18	-0.04	6/20/2022 3:08	0.89	6/20/2022 3:31	3.51	6/20/2022 4:54	-0.30	6/19/2022 3:42	11.09
6/19/2022 4:19	-0.04	6/20/2022 3:09	0.89	6/20/2022 3:32	3.49	6/20/2022 4:55	-0.28	6/19/2022 3:43	11.05
6/19/2022 4:20	-0.04	6/20/2022 3:10	0.89	6/20/2022 3:33	3.53	6/20/2022 4:56	-0.28	6/19/2022 3:44	11.12
6/19/2022 4:21	-0.03	6/20/2022 3:11	0.89	6/20/2022 3:34	3.50	6/20/2022 4:57	-0.28	6/19/2022 3:45	11.06
6/19/2022 4:22	-0.04	6/20/2022 3:12	0.89	6/20/2022 3:35	3.52	6/20/2022 4:58	-0.24	6/19/2022 3:46	11.04
6/19/2022 4:23	-0.04	6/20/2022 3:13	0.89	6/20/2022 3:36	3.53	6/20/2022 4:59	-0.26	6/19/2022 3:47	11.07
6/19/2022 4:24	-0.05	6/20/2022 3:14	0.89	6/20/2022 3:37	3.48	6/20/2022 5:00	-0.26	6/19/2022 3:48	11.05
6/19/2022 4:25	-0.03	6/20/2022 3:15	0.89	6/20/2022 3:38	3.53	6/20/2022 5:01	-0.26	6/19/2022 3:49	11.09
6/19/2022 4:26	-0.04	6/20/2022 3:16	0.89	6/20/2022 3:39	3.52	6/20/2022 5:02	-0.26	6/19/2022 3:50	11.06
6/19/2022 4:27	-0.04	6/20/2022 3:17	0.89	6/20/2022 3:40	3.51	6/20/2022 5:03	-0.27	6/19/2022 3:51	11.12
6/19/2022 4:28	-0.03	6/20/2022 3:18	0.89	6/20/2022 3:41	3.52	6/20/2022 5:04	-0.29	6/19/2022 3:52	11.12
6/19/2022 4:29	-0.03	6/20/2022 3:19	0.89	6/20/2022 3:42	3.50	6/20/2022 5:05	-0.26	6/19/2022 3:53	11.05
6/19/2022 4:30	-0.03	6/20/2022 3:20	0.89	6/20/2022 3:43	3.54	6/20/2022 5:06	-0.25	6/19/2022 3:54	11.08
6/19/2022 4:31	-0.03	6/20/2022 3:21	0.89	6/20/2022 3:44	3.54	6/20/2022 5:07	-0.23	6/19/2022 3:55	11.10
6/19/2022 4:32	-0.03	6/20/2022 3:22	0.89	6/20/2022 3:45	3.52	6/20/2022 5:08	-0.29	6/19/2022 3:56	11.13
6/19/2022 4:33	-0.04	6/20/2022 3:23	0.89	6/20/2022 3:46	3.51	6/20/2022 5:09	-0.23	6/19/2022 3:57	11.08
6/19/2022 4:34	-0.03	6/20/2022 3:24	0.89	6/20/2022 3:47	3.53	6/20/2022 5:10	-0.27	6/19/2022 3:58	11.05
6/19/2022 4:35	-0.03	6/20/2022 3:25	0.89	6/20/2022 3:48	3.53	6/20/2022 5:11	-0.23	6/19/2022 3:59	11.05
6/19/2022 4:36	-0.03	6/20/2022 3:26	0.89	6/20/2022 3:49	3.50	6/20/2022 5:12	-0.26	6/19/2022 4:00	11.06
6/19/2022 4:37	-0.03	6/20/2022 3:27	0.89	6/20/2022 3:50	3.54	6/20/2022 5:13	-0.25	6/19/2022 4:01	11.07
6/19/2022 4:38	-0.03	6/20/2022 3:28	0.89	6/20/2022 3:51	3.51	6/20/2022 5:14	-0.28	6/19/2022 4:02	11.08
6/19/2022 4:39	-0.03	6/20/2022 3:29	0.89	6/20/2022 3:52	3.54	6/20/2022 5:15	-0.30	6/19/2022 4:03	11.08
6/19/2022 4:40	-0.04	6/20/2022 3:30	0.89	6/20/2022 3:53	3.49	6/20/2022 5:16	-0.24	6/19/2022 4:04	11.07
6/19/2022 4:41	-0.03	6/20/2022 3:31	0.89	6/20/2022 3:54	3.52	6/20/2022 5:17	-0.24	6/19/2022 4:05	11.10
6/19/2022 4:42	-0.04	6/20/2022 3:32	0.89	6/20/2022 3:55	3.53	6/20/2022 5:18	-0.26	6/19/2022 4:06	11.12
6/19/2022 4:43	-0.03	6/20/2022 3:33	0.89	6/20/2022 3:56	3.54	6/20/2022 5:19	-0.27	6/19/2022 4:07	11.06
6/19/2022 4:44	-0.04	6/20/2022 3:34	0.89	6/20/2022 3:57	3.49	6/20/2022 5:20	-0.29	6/19/2022 4:08	11.08
6/19/2022 4:45	-0.03	6/20/2022 3:35	0.89	6/20/2022 3:58	3.56	6/20/2022 5:21	-0.27	6/19/2022 4:09	11.08
6/19/2022 4:46	-0.04	6/20/2022 3:36	0.91	6/20/2022 3:59	3.53	6/20/2022 5:22	-0.32	6/19/2022 4:10	11.10
6/19/2022 4:47	-0.04	6/20/2022 3:37	0.89	6/20/2022 4:00	3.53	6/20/2022 5:23	-0.29	6/19/2022 4:11	11.02
6/19/2022 4:48	-0.04	6/20/2022 3:38	0.89	6/20/2022 4:01	3.53	6/20/2022 5:24	-0.25	6/19/2022 4:12	11.08
6/19/2022 4:49	-0.04	6/20/2022 3:39	0.89	6/20/2022 4:02	3.54	6/20/2022 5:25	-0.27	6/19/2022 4:13	11.06
6/19/2022 4:50	-0.03	6/20/2022 3:40	0.89	6/20/2022 4:03	3.51	6/20/2022 5:26	-0.28	6/19/2022 4:14	11.07
6/19/2022 4:51	-0.04	6/20/2022 3:41	0.89	6/20/2022 4:04	3.54	6/20/2022 5:27	-0.32	6/19/2022 4:15	11.08
6/19/2022 4:52	-0.03	6/20/2022 3:42	0.89	6/20/2022 4:05	3.53	6/20/2022 5:28	-0.30	6/19/2022 4:16	11.13
6/19/2022 4:53	-0.04	6/20/2022 3:43	0.89	6/20/2022 4:06	3.51	6/20/2022 5:29	-0.28	6/19/2022 4:17	11.06
6/19/2022 4:54	-0.03	6/20/2022 3:44	0.89	6/20/2022 4:07	3.50	6/20/2022 5:30	-0.29	6/19/2022 4:18	11.07
6/19/2022 4:55	-0.03	6/20/2022 3:45	0.89	6/20/2022 4:08	3.53	6/20/2022 5:31	-0.25	6/19/2022 4:19	11.12
6/19/2022 4:56	-0.03	6/20/2022 3:46	0.89	6/20/2022 4:09	3.54	6/20/2022 5:32	-0.28	6/19/2022 4:20	11.07
6/19/2022 4:57	-0.03	6/20/2022 3:47	0.89	6/20/2022 4:10	3.53	6/20/2022 5:33	-0.29	6/19/2022 4:21	11.09
6/19/2022 4:58	-0.03	6/20/2022 3:48	0.89	6/20/2022 4:11	3.53	6/20/2022 5:34	-0.26	6/19/2022 4:22	11.09
6/19/2022 4:59	-0.04	6/20/2022 3:49	0.89	6/20/2022 4:12	3.50	6/20/2022 5:35	-0.25	6/19/2022 4:23	11.07
6/19/2022 5:00	-0.03	6/20/2022 3:50	0.89	6/20/2022 4:13	3.52	6/20/2022 5:36	-0.24	6/19/2022 4:24	11.09
6/19/2022 5:01	-0.03	6/20/2022 3:51	0.89	6/20/2022 4:14	3.53	6/20/2022 5:37	-0.22	6/19/2022 4:25	11.07
6/19/2022 5:02	-0.04	6/20/2022 3:52	0.89	6/20/2022 4:15	3.53	6/20/2022 5:38	-0.25	6/19/2022 4:26	11.08
6/19/2022 5:03	-0.04	6/20/2022 3:53	0.89	6/20/2022 4:16	3.53	6/20/2022 5:39	-0.26	6/19/2022 4:27	11.07
6/19/2022 5:04	-0.03	6/20/2022 3:54	0.89	6/20/2022 4:17	3.54	6/20/2022 5:40	-0.25	6/19/2022 4:28	11.11
6/19/2022 5:05	-0.03	6/20/2022 3:55	0.89	6/20/2022 4:18	3.56	6/20/2022 5:41	-0.28	6/19/2022 4:29	11.05
6/19/2022 5:06	-0.03	6/20/2022 3:56	0.89	6/20/2022 4:19	3.51	6/20/2022 5:42	-0.24	6/19/2022 4:30	11.09
6/19/2022 5:07	-0.03	6/20/2022 3:57	0.89	6/20/2022 4:20	3.49	6/20/2022 5:43	-0.30	6/19/2022 4:31	11.07
6/19/2022 5:08	-0.03	6/20/2022 3:58	0.89	6/20/2022 4:21	3.51	6/20/2022 5:44	-0.29	6/19/2022 4:32	11.07
6/19/2022 5:09	-0.03	6/20/2022 3:59	0.89	6/20/2022 4:22	3.52	6/20/2022 5:45	-0.26	6/19/2022 4:33	11.07
6/19/2022 5:10	-0.03	6/20/2022 4:00	0.89	6/20/2022 4:23	3.54	6/20/2022 5:46	-0.30	6/19/2022 4:34	11.09
6/19/2022 5:11	-0.03	6/20/2022 4:01	0.89	6/20/2022 4:24	3.50	6/20/2022 5:47	-0.26	6/19/2022 4:35	11.05
6/19/2022 5:12	-0.03	6/20/2022 4:02	0.89	6/20/2022 4:25	3.52	6/20/2022 5:48	-0.27	6/19/2022 4:36	11.08
6/19/2022 5:13	-0.04	6/20/2022 4:03	0.89	6/20/2022 4:26	3.51	6/20/2022 5:49	-0.28	6/19/2022 4:37	11.08
6/19/2022 5:14	-0.03	6/20/2022 4:04	0.89	6/20/2022 4:27	3.52	6/20/2022 5:50	-0.25	6/19/2022 4:38	11.03
6/19/2022 5:15	-0.05	6/20/2022 4:05	0.89	6/20/2022 4:28	3.54	6/20/2022 5:51	-0.29	6/19/2022 4:39	11.08
6/19/2022 5:16	-0.04	6/20/2022 4:06	0.89	6/20/2022 4:29	3.54	6/20/2022 5:52	-0.29	6/19/2022 4:40	11.08
6/19/2022 5:17	-0.03	6/20/2022 4:07	0.89	6/20/2022 4:30	3.51	6/20/2022 5:53	-0.30	6/19/2022 4:41	11.10
6/19/2022 5:18	-0.04	6/20/2022 4:08	0.89	6/20/2022 4:31	3.52	6/20/2022 5:54	-0.29	6/19/2022 4:42	11.10
6/19/2022 5:19	-0.04	6/20/2022 4:09	0.89	6/20/2022 4:32	3.51	6/20/2022 5:55	-0.25	6/19/2022 4:43	11.13
6/19/2022 5:20	-0.04	6/20/2022 4:10	0.89	6/20/2022 4:33	3.52	6/20/2022 5:56	-0.25	6/19/2022 4:44	11.09
6/19/2022 5:21	-0.04	6/20/2022 4:11	0.89	6/20/2022 4:34	3.51	6/20/2022 5:57	-0.26	6/19/2022 4:45	11.15
6/19/2022 5:22	-0.03	6/20/2022 4:12	0.89	6/20/2022 4:35	3.53	6/20/2022 5:58	-0.24	6/19/2022 4:46	11.11
6/19/2022 5:23	-0.04	6/20/2022 4:13	0.89	6/20/2022 4:36	3.53	6/20/2022 5:59	-0.24	6/19/2022 4:47	11.10
6/19/2022 5:24	-0.03	6/20/2022 4:14	0.89	6/20/2022 4:37	3.52	6/20/2022 6:00	-0.31	6/19/2022 4:48	11.13
6/19/2022 5:25	-0.05	6/20/2022 4:15	0.89	6/20/2022 4:38	3.52	6/20/2022 6:01	-0.30	6/19/2022 4:49	11.10
6/19/2022 5:26	-0.03	6/20/2022 4:16	0.89	6/20/2022 4:39	3.53	6/20/2022 6:02	-0.27	6/19/2022 4:50	11.11
6/19/2022 5:27	-0.04	6/20/2022 4:17	0.89	6/20/2022 4:40	3.51	6/20/2022 6:03	-0.29	6/19/2022 4:51	11.10
6/19/2022 5:28	-0.03	6/20/2022 4:18	0.89	6/20/2022 4:41	3.55	6/20/2022 6:04	-0.25	6/19/2022 4:52	11.08
6/19/2022 5:29	-0.03	6/20/2022 4:19	0.89	6/20/2022 4:42	3.52	6/20/2022 6:05	-0.30	6/19/2022 4:53	11.09
6/19/2022 5:30	-0.03	6/20/2022 4:20	0.89	6/20/2022 4:43	3.51	6/20/2022 6:06	-0.24	6/19/2022 4:54	11.06
6/19/2022 5:31	-0.04	6/20/2022 4:21	0.89	6/20/2022 4:44	3.54	6/20/2022 6:07	-0.27	6/19/2022 4:55	11.11
6/19/2022 5:32	-0.03	6/20/2022 4:22	0.89	6/20/2022 4:45	3.48	6/20/2022 6:08	-0.25	6/19/2022 4:56	11.09
6/19/2022 5:33	-0.03	6/20/2022 4:23	0.89	6/20/2022 4:46	3.51	6/20/2022 6:09	-0.28	6/19/2022 4:57	11.10
6/19/2022 5:34	-0.03	6/20/2022 4:24	0.89	6/20/2022 4:47	3.54	6/20/2022 6:10	-0.28	6/19/2022 4:58	11.11
6/19/2022 5:35	-0.03	6/20/2022 4:25	0.89	6/20/2022 4:48	3.54	6/20/2022 6:11	-0.28	6/19/2022 4:59	11.09
6/19/2022 5:36	-0.03	6/20/2022 4:26	0.89	6/20/2022 4:49	3.50	6/20/2022 6:12	-0.30	6/19/2022 5:00	11.13
6/19/2022 5:37	-0.04	6/20/2022 4:27	0.89	6/20/2022 4:50	3.52	6/20/2022 6:13	-0.25	6/19/2022 5:01	11.13
6/19/2022 5:38	-0.04	6/20/2022 4:28	0.89	6/20/2022 4:51	3.53	6/20/2022 6:14	-0.25	6/19/2022 5:02	11.07
6/19/2022 5:39	-0.04	6/20/2022 4:29	0.89	6/20/2022 4:52	3.51	6/20/2022 6:15	-0.27	6/19/2022 5:03	11.06
6/19/2022 5:40	-0.04	6/20/2022 4:30	0.89	6/20/2022 4:53	3.50	6/20/2022 6:16	-0.30	6/19/2022 5:04	11.10
6/19/2022 5:41	-0.04	6/20/2022 4:31	0.89	6/20/2022 4:54	3.53	6/20/2022 6:17	-0.24	6/19/2022 5:05	11.12
6/19/2022 5:42	-0.04	6/20/2022 4:32	0.89	6/20/2022 4:55	3.52	6/20/2022 6:18	-0.29	6/19/2022 5:06	11.09
6/19/2022 5:43	-0.03	6/20/2022 4:33	0.89	6/20/2022 4:56	3.52	6/20/2022 6:19	-0.29	6/19/2022 5:07	11.08
6/19/2022 5:44	-0.03	6/20/2022 4:34	0.89	6/20/2022 4:57	3.53	6/20/2022 6:20	-0.25	6/19/2022 5:08	11.13

6/19/2022 5:45	-0.03	6/20/2022 4:35	0.89	6/20/2022 4:58	3.52	6/20/2022 6:21	-0.25	6/19/2022 5:09	11.08
6/19/2022 5:46	-0.03	6/20/2022 4:36	0.89	6/20/2022 4:59	3.50	6/20/2022 6:22	-0.26	6/19/2022 5:10	11.11
6/19/2022 5:47	-0.04	6/20/2022 4:37	0.89	6/20/2022 5:00	3.53	6/20/2022 6:23	-0.26	6/19/2022 5:11	11.09
6/19/2022 5:48	-0.04	6/20/2022 4:38	0.89	6/20/2022 5:01	3.55	6/20/2022 6:24	-0.29	6/19/2022 5:12	11.09
6/19/2022 5:49	-0.03	6/20/2022 4:39	0.89	6/20/2022 5:02	3.52	6/20/2022 6:25	-0.26	6/19/2022 5:13	11.12
6/19/2022 5:50	-0.03	6/20/2022 4:40	0.89	6/20/2022 5:03	3.54	6/20/2022 6:26	-0.25	6/19/2022 5:14	11.10
6/19/2022 5:51	-0.04	6/20/2022 4:41	0.89	6/20/2022 5:04	3.53	6/20/2022 6:27	-0.28	6/19/2022 5:15	11.11
6/19/2022 5:52	-0.03	6/20/2022 4:42	0.89	6/20/2022 5:05	3.53	6/20/2022 6:28	-0.29	6/19/2022 5:16	11.15
6/19/2022 5:53	-0.03	6/20/2022 4:43	0.90	6/20/2022 5:06	3.53	6/20/2022 6:29	-0.30	6/19/2022 5:17	11.11
6/19/2022 5:54	-0.03	6/20/2022 4:44	0.89	6/20/2022 5:07	3.51	6/20/2022 6:30	-0.28	6/19/2022 5:18	11.11
6/19/2022 5:55	-0.04	6/20/2022 4:45	0.89	6/20/2022 5:08	3.55	6/20/2022 6:31	-0.27	6/19/2022 5:19	11.10
6/19/2022 5:56	-0.03	6/20/2022 4:46	0.89	6/20/2022 5:09	3.52	6/20/2022 6:32	-0.25	6/19/2022 5:20	11.10
6/19/2022 5:57	-0.04	6/20/2022 4:47	0.89	6/20/2022 5:10	3.49	6/20/2022 6:33	-0.28	6/19/2022 5:21	11.11
6/19/2022 5:58	-0.03	6/20/2022 4:48	0.89	6/20/2022 5:11	3.53	6/20/2022 6:34	-0.25	6/19/2022 5:22	11.10
6/19/2022 5:59	-0.03	6/20/2022 4:49	0.89	6/20/2022 5:12	3.55	6/20/2022 6:35	-0.30	6/19/2022 5:23	11.06
6/19/2022 6:00	-0.03	6/20/2022 4:50	0.89	6/20/2022 5:13	3.55	6/20/2022 6:36	-0.26	6/19/2022 5:24	11.06
6/19/2022 6:01	-0.03	6/20/2022 4:51	0.89	6/20/2022 5:14	3.53	6/20/2022 6:37	-0.28	6/19/2022 5:25	11.10
6/19/2022 6:02	-0.04	6/20/2022 4:52	0.89	6/20/2022 5:15	3.56	6/20/2022 6:38	-0.25	6/19/2022 5:26	11.13
6/19/2022 6:03	-0.03	6/20/2022 4:53	0.89	6/20/2022 5:16	3.52	6/20/2022 6:39	-0.30	6/19/2022 5:27	11.09
6/19/2022 6:04	-0.03	6/20/2022 4:54	0.89	6/20/2022 5:17	3.51	6/20/2022 6:40	-0.27	6/19/2022 5:28	11.12
6/19/2022 6:05	-0.03	6/20/2022 4:55	0.89	6/20/2022 5:18	3.51	6/20/2022 6:41	-0.28	6/19/2022 5:29	11.12
6/19/2022 6:06	-0.04	6/20/2022 4:56	0.89	6/20/2022 5:19	3.54	6/20/2022 6:42	-0.24	6/19/2022 5:30	11.08
6/19/2022 6:07	-0.03	6/20/2022 4:57	0.89	6/20/2022 5:20	3.53	6/20/2022 6:43	-0.34	6/19/2022 5:31	11.14
6/19/2022 6:08	-0.03	6/20/2022 4:58	0.89	6/20/2022 5:21	3.56	6/20/2022 6:44	-0.29	6/19/2022 5:32	11.09
6/19/2022 6:09	-0.03	6/20/2022 4:59	0.89	6/20/2022 5:22	3.53	6/20/2022 6:45	-0.26	6/19/2022 5:33	11.11
6/19/2022 6:10	-0.04	6/20/2022 5:00	0.89	6/20/2022 5:23	3.53	6/20/2022 6:46	-0.24	6/19/2022 5:34	11.10
6/19/2022 6:11	-0.04	6/20/2022 5:01	0.89	6/20/2022 5:24	3.54	6/20/2022 6:47	-0.26	6/19/2022 5:35	11.11
6/19/2022 6:12	-0.04	6/20/2022 5:02	0.89	6/20/2022 5:25	3.54	6/20/2022 6:48	-0.30	6/19/2022 5:36	11.06
6/19/2022 6:13	-0.04	6/20/2022 5:03	0.89	6/20/2022 5:26	3.49	6/20/2022 6:49	-0.27	6/19/2022 5:37	11.17
6/19/2022 6:14	-0.03	6/20/2022 5:04	0.89	6/20/2022 5:27	3.54	6/20/2022 6:50	-0.27	6/19/2022 5:38	11.04
6/19/2022 6:15	-0.03	6/20/2022 5:05	0.89	6/20/2022 5:28	3.51	6/20/2022 6:51	-0.24	6/19/2022 5:39	11.05
6/19/2022 6:16	-0.04	6/20/2022 5:06	0.90	6/20/2022 5:29	3.54	6/20/2022 6:52	-0.26	6/19/2022 5:40	11.15
6/19/2022 6:17	-0.03	6/20/2022 5:07	0.89	6/20/2022 5:30	3.56	6/20/2022 6:53	-0.28	6/19/2022 5:41	11.11
6/19/2022 6:18	-0.03	6/20/2022 5:08	0.89	6/20/2022 5:31	3.53	6/20/2022 6:54	-0.27	6/19/2022 5:42	11.10
6/19/2022 6:19	-0.03	6/20/2022 5:09	0.89	6/20/2022 5:32	3.55	6/20/2022 6:55	-0.27	6/19/2022 5:43	11.08
6/19/2022 6:20	-0.04	6/20/2022 5:10	0.91	6/20/2022 5:33	3.50	6/20/2022 6:56	-0.27	6/19/2022 5:44	11.15
6/19/2022 6:21	-0.03	6/20/2022 5:11	0.89	6/20/2022 5:34	3.53	6/20/2022 6:57	-0.30	6/19/2022 5:45	11.13
6/19/2022 6:22	-0.04	6/20/2022 5:12	0.89	6/20/2022 5:35	3.51	6/20/2022 6:58	-0.28	6/19/2022 5:46	11.11
6/19/2022 6:23	-0.03	6/20/2022 5:13	0.89	6/20/2022 5:36	3.54	6/20/2022 6:59	-0.28	6/19/2022 5:47	11.10
6/19/2022 6:24	-0.04	6/20/2022 5:14	0.89	6/20/2022 5:37	3.55	6/20/2022 7:00	-0.28	6/19/2022 5:48	11.10
6/19/2022 6:25	-0.03	6/20/2022 5:15	0.89	6/20/2022 5:38	3.53	6/20/2022 7:01	-0.29	6/19/2022 5:49	11.11
6/19/2022 6:26	-0.03	6/20/2022 5:16	0.89	6/20/2022 5:39	3.54	6/20/2022 7:02	-0.29	6/19/2022 5:50	11.08
6/19/2022 6:27	-0.04	6/20/2022 5:17	0.89	6/20/2022 5:40	3.50	6/20/2022 7:03	-0.29	6/19/2022 5:51	11.10
6/19/2022 6:28	-0.04	6/20/2022 5:18	0.89	6/20/2022 5:41	3.49	6/20/2022 7:04	-0.28	6/19/2022 5:52	11.11
6/19/2022 6:29	-0.04	6/20/2022 5:19	0.89	6/20/2022 5:42	3.52	6/20/2022 7:05	-0.24	6/19/2022 5:53	11.05
6/19/2022 6:30	-0.03	6/20/2022 5:20	0.89	6/20/2022 5:43	3.51	6/20/2022 7:06	-0.27	6/19/2022 5:54	11.07
6/19/2022 6:31	-0.03	6/20/2022 5:21	0.89	6/20/2022 5:44	3.52	6/20/2022 7:07	-0.32	6/19/2022 5:55	11.09
6/19/2022 6:32	-0.04	6/20/2022 5:22	0.89	6/20/2022 5:45	3.56	6/20/2022 7:08	-0.28	6/19/2022 5:56	11.16
6/19/2022 6:33	-0.03	6/20/2022 5:23	0.89	6/20/2022 5:46	3.51	6/20/2022 7:09	-0.27	6/19/2022 5:57	11.08
6/19/2022 6:34	-0.03	6/20/2022 5:24	0.89	6/20/2022 5:47	3.51	6/20/2022 7:10	-0.29	6/19/2022 5:58	11.08
6/19/2022 6:35	-0.04	6/20/2022 5:25	0.89	6/20/2022 5:48	3.52	6/20/2022 7:11	-0.25	6/19/2022 5:59	11.05
6/19/2022 6:36	-0.03	6/20/2022 5:26	0.89	6/20/2022 5:49	3.54	6/20/2022 7:12	-0.29	6/19/2022 6:00	11.12
6/19/2022 6:37	-0.04	6/20/2022 5:27	0.89	6/20/2022 5:50	3.50	6/20/2022 7:13	-0.26	6/19/2022 6:01	11.09
6/19/2022 6:38	-0.03	6/20/2022 5:28	0.89	6/20/2022 5:51	3.52	6/20/2022 7:14	-0.28	6/19/2022 6:02	11.10
6/19/2022 6:39	-0.04	6/20/2022 5:29	0.89	6/20/2022 5:52	3.50	6/20/2022 7:15	-0.25	6/19/2022 6:03	11.08
6/19/2022 6:40	-0.04	6/20/2022 5:30	0.89	6/20/2022 5:53	3.52	6/20/2022 7:16	-0.24	6/19/2022 6:04	11.14
6/19/2022 6:41	-0.03	6/20/2022 5:31	0.89	6/20/2022 5:54	3.54	6/20/2022 7:17	-0.23	6/19/2022 6:05	11.07
6/19/2022 6:42	-0.03	6/20/2022 5:32	0.89	6/20/2022 5:55	3.57	6/20/2022 7:18	-0.28	6/19/2022 6:06	11.05
6/19/2022 6:43	-0.03	6/20/2022 5:33	0.89	6/20/2022 5:56	3.53	6/20/2022 7:19	-0.27	6/19/2022 6:07	11.11
6/19/2022 6:44	-0.03	6/20/2022 5:34	0.89	6/20/2022 5:57	3.53	6/20/2022 7:20	-0.30	6/19/2022 6:08	11.10
6/19/2022 6:45	-0.04	6/20/2022 5:35	0.89	6/20/2022 5:58	3.58	6/20/2022 7:21	-0.28	6/19/2022 6:09	11.12
6/19/2022 6:46	-0.03	6/20/2022 5:36	0.89	6/20/2022 5:59	3.52	6/20/2022 7:22	-0.27	6/19/2022 6:10	11.11
6/19/2022 6:47	-0.04	6/20/2022 5:37	0.89	6/20/2022 6:00	3.53	6/20/2022 7:23	-0.26	6/19/2022 6:11	11.07
6/19/2022 6:48	-0.04	6/20/2022 5:38	0.89	6/20/2022 6:01	3.55	6/20/2022 7:24	-0.23	6/19/2022 6:12	11.08
6/19/2022 6:49	-0.04	6/20/2022 5:39	0.89	6/20/2022 6:02	3.56	6/20/2022 7:25	-0.26	6/19/2022 6:13	11.15
6/19/2022 6:50	-0.04	6/20/2022 5:40	0.89	6/20/2022 6:03	3.52	6/20/2022 7:26	-0.30	6/19/2022 6:14	11.09
6/19/2022 6:51	-0.04	6/20/2022 5:41	0.89	6/20/2022 6:04	3.53	6/20/2022 7:27	-0.28	6/19/2022 6:15	11.11
6/19/2022 6:52	-0.03	6/20/2022 5:42	0.89	6/20/2022 6:05	3.51	6/20/2022 7:28	-0.30	6/19/2022 6:16	11.07
6/19/2022 6:53	-0.04	6/20/2022 5:43	0.89	6/20/2022 6:06	3.54	6/20/2022 7:29	-0.26	6/19/2022 6:17	11.16
6/19/2022 6:54	-0.04	6/20/2022 5:44	0.89	6/20/2022 6:07	3.51	6/20/2022 7:30	-0.29	6/19/2022 6:18	11.13
6/19/2022 6:55	-0.04	6/20/2022 5:45	0.90	6/20/2022 6:08	3.55	6/20/2022 7:31	-0.29	6/19/2022 6:19	11.09
6/19/2022 6:56	-0.04	6/20/2022 5:46	0.89	6/20/2022 6:09	3.54	6/20/2022 7:32	-0.24	6/19/2022 6:20	11.09
6/19/2022 6:57	-0.04	6/20/2022 5:47	0.90	6/20/2022 6:10	3.55	6/20/2022 7:33	-0.27	6/19/2022 6:21	11.14
6/19/2022 6:58	-0.04	6/20/2022 5:48	0.89	6/20/2022 6:11	3.53	6/20/2022 7:34	-0.31	6/19/2022 6:22	11.12
6/19/2022 6:59	-0.04	6/20/2022 5:49	0.89	6/20/2022 6:12	3.55	6/20/2022 7:35	-0.24	6/19/2022 6:23	11.09
6/19/2022 7:00	-0.05	6/20/2022 5:50	0.89	6/20/2022 6:13	3.56	6/20/2022 7:36	-0.29	6/19/2022 6:24	11.12
6/19/2022 7:01	-0.03	6/20/2022 5:51	0.89	6/20/2022 6:14	3.54	6/20/2022 7:37	-0.29	6/19/2022 6:25	11.06
6/19/2022 7:02	-0.03	6/20/2022 5:52	0.90	6/20/2022 6:15	3.51	6/20/2022 7:38	-0.26	6/19/2022 6:26	11.09
6/19/2022 7:03	-0.03	6/20/2022 5:53	0.89	6/20/2022 6:16	3.53	6/20/2022 7:39	-0.25	6/19/2022 6:27	11.12
6/19/2022 7:04	-0.04	6/20/2022 5:54	0.89	6/20/2022 6:17	3.54	6/20/2022 7:40	-0.29	6/19/2022 6:28	11.04
6/19/2022 7:05	-0.03	6/20/2022 5:55	0.89	6/20/2022 6:18	3.57	6/20/2022 7:41	-0.27	6/19/2022 6:29	11.13
6/19/2022 7:06	-0.03	6/20/2022 5:56	0.89	6/20/2022 6:19	3.50	6/20/2022 7:42	-0.27	6/19/2022 6:30	11.18
6/19/2022 7:07	-0.03	6/20/2022 5:57	0.89	6/20/2022 6:20	3.54	6/20/2022 7:43	-0.29	6/19/2022 6:31	11.14
6/19/2022 7:08	-0.03	6/20/2022 5:58	0.89	6/20/2022 6:21	3.56	6/20/2022 7:44	-0.28	6/19/2022 6:32	11.11
6/19/2022 7:09	-0.03	6/20/2022 5:59	0.89	6/20/2022 6:22	3.54	6/20/2022 7:45	-0.27	6/19/2022 6:33	11.13
6/19/2022 7:10	-0.03	6/20/2022 6:00	0.89	6/20/2022 6:23	3.55	6/20/2022 7:46	-0.25	6/19/2022 6:34	11.09
6/19/2022 7:11	-0.03	6/20/2022 6:01	0.89	6/20/2022 6:24	3.51	6/20/2022 7:47	-0.28	6/19/2022 6:35	11.16
6/19/2022 7:12	-0.04	6/20/2022 6:02	0.89	6/20/2022 6:25	3.54	6/20/2022 7:48	-0.27	6/19/2022 6:36	11.10

6/19/2022 7:13	-0.03	6/20/2022 6:03	0.89	6/20/2022 6:26	3.55	6/20/2022 7:49	-0.27	6/19/2022 6:37	11.11
6/19/2022 7:14	-0.04	6/20/2022 6:04	0.89	6/20/2022 6:27	3.55	6/20/2022 7:50	-0.28	6/19/2022 6:38	11.12
6/19/2022 7:15	-0.04	6/20/2022 6:05	0.89	6/20/2022 6:28	3.51	6/20/2022 7:51	-0.30	6/19/2022 6:39	11.09
6/19/2022 7:16	-0.04	6/20/2022 6:06	0.89	6/20/2022 6:29	3.56	6/20/2022 7:52	-0.28	6/19/2022 6:40	11.08
6/19/2022 7:17	-0.03	6/20/2022 6:07	0.89	6/20/2022 6:30	3.55	6/20/2022 7:53	-0.27	6/19/2022 6:41	11.11
6/19/2022 7:18	-0.03	6/20/2022 6:08	0.89	6/20/2022 6:31	3.54	6/20/2022 7:54	-0.23	6/19/2022 6:42	11.09
6/19/2022 7:19	-0.04	6/20/2022 6:09	0.89	6/20/2022 6:32	3.55	6/20/2022 7:55	-0.32	6/19/2022 6:43	11.11
6/19/2022 7:20	-0.05	6/20/2022 6:10	0.89	6/20/2022 6:33	3.49	6/20/2022 7:56	-0.29	6/19/2022 6:44	11.12
6/19/2022 7:21	-0.03	6/20/2022 6:11	0.89	6/20/2022 6:34	3.54	6/20/2022 7:57	-0.25	6/19/2022 6:45	11.14
6/19/2022 7:22	-0.03	6/20/2022 6:12	0.90	6/20/2022 6:35	3.56	6/20/2022 7:58	-0.25	6/19/2022 6:46	11.12
6/19/2022 7:23	-0.04	6/20/2022 6:13	0.89	6/20/2022 6:36	3.56	6/20/2022 7:59	-0.26	6/19/2022 6:47	11.13
6/19/2022 7:24	-0.03	6/20/2022 6:14	0.89	6/20/2022 6:37	3.52	6/20/2022 8:00	-0.29	6/19/2022 6:48	11.07
6/19/2022 7:25	-0.04	6/20/2022 6:15	0.89	6/20/2022 6:38	3.54	6/20/2022 8:01	-0.29	6/19/2022 6:49	11.08
6/19/2022 7:26	-0.03	6/20/2022 6:16	0.89	6/20/2022 6:39	3.51	6/20/2022 8:02	-0.25	6/19/2022 6:50	11.09
6/19/2022 7:27	-0.03	6/20/2022 6:17	0.89	6/20/2022 6:40	3.56	6/20/2022 8:03	-0.30	6/19/2022 6:51	11.11
6/19/2022 7:28	-0.04	6/20/2022 6:18	0.89	6/20/2022 6:41	3.54	6/20/2022 8:04	-0.32	6/19/2022 6:52	11.14
6/19/2022 7:29	-0.03	6/20/2022 6:19	0.89	6/20/2022 6:42	3.57	6/20/2022 8:05	-0.25	6/19/2022 6:53	11.11
6/19/2022 7:30	-0.03	6/20/2022 6:20	0.89	6/20/2022 6:43	3.52	6/20/2022 8:06	-0.28	6/19/2022 6:54	11.08
6/19/2022 7:31	-0.04	6/20/2022 6:21	0.89	6/20/2022 6:44	3.53	6/20/2022 8:07	-0.29	6/19/2022 6:55	11.06
6/19/2022 7:32	-0.04	6/20/2022 6:22	0.89	6/20/2022 6:45	3.55	6/20/2022 8:08	-0.26	6/19/2022 6:56	11.13
6/19/2022 7:33	-0.03	6/20/2022 6:23	0.89	6/20/2022 6:46	3.53	6/20/2022 8:09	-0.26	6/19/2022 6:57	11.09
6/19/2022 7:34	-0.04	6/20/2022 6:24	0.89	6/20/2022 6:47	3.54	6/20/2022 8:10	-0.26	6/19/2022 6:58	11.06
6/19/2022 7:35	-0.03	6/20/2022 6:25	0.89	6/20/2022 6:48	3.58	6/20/2022 8:11	-0.29	6/19/2022 6:59	11.11
6/19/2022 7:36	-0.04	6/20/2022 6:26	0.89	6/20/2022 6:49	3.51	6/20/2022 8:12	-0.28	6/19/2022 7:00	11.15
6/19/2022 7:37	-0.04	6/20/2022 6:27	0.89	6/20/2022 6:50	3.57	6/20/2022 8:13	-0.28	6/19/2022 7:01	11.10
6/19/2022 7:38	-0.03	6/20/2022 6:28	0.89	6/20/2022 6:51	3.58	6/20/2022 8:14	-0.27	6/19/2022 7:02	11.09
6/19/2022 7:39	-0.04	6/20/2022 6:29	0.89	6/20/2022 6:52	3.55	6/20/2022 8:15	-0.27	6/19/2022 7:03	11.08
6/19/2022 7:40	-0.03	6/20/2022 6:30	0.89	6/20/2022 6:53	3.53	6/20/2022 8:16	-0.23	6/19/2022 7:04	11.13
6/19/2022 7:41	-0.04	6/20/2022 6:31	0.89	6/20/2022 6:54	3.56	6/20/2022 8:17	-0.25	6/19/2022 7:05	11.09
6/19/2022 7:42	-0.04	6/20/2022 6:32	0.89	6/20/2022 6:55	3.53	6/20/2022 8:18	-0.28	6/19/2022 7:06	11.09
6/19/2022 7:43	-0.03	6/20/2022 6:33	0.89	6/20/2022 6:56	3.56	6/20/2022 8:19	-0.30	6/19/2022 7:07	11.12
6/19/2022 7:44	-0.03	6/20/2022 6:34	0.90	6/20/2022 6:57	3.56	6/20/2022 8:20	-0.27	6/19/2022 7:08	11.10
6/19/2022 7:45	-0.04	6/20/2022 6:35	0.90	6/20/2022 6:58	3.55	6/20/2022 8:21	-0.28	6/19/2022 7:09	11.08
6/19/2022 7:46	-0.03	6/20/2022 6:36	0.89	6/20/2022 6:59	3.53	6/20/2022 8:22	-0.28	6/19/2022 7:10	11.10
6/19/2022 7:47	-0.03	6/20/2022 6:37	0.89	6/20/2022 7:00	3.51	6/20/2022 8:23	-0.30	6/19/2022 7:11	11.11
6/19/2022 7:48	-0.03	6/20/2022 6:38	0.89	6/20/2022 7:01	3.53	6/20/2022 8:24	-0.25	6/19/2022 7:12	11.07
6/19/2022 7:49	-0.03	6/20/2022 6:39	0.89	6/20/2022 7:02	3.55	6/20/2022 8:25	-0.24	6/19/2022 7:13	11.13
6/19/2022 7:50	-0.04	6/20/2022 6:40	0.89	6/20/2022 7:03	3.56	6/20/2022 8:26	-0.31	6/19/2022 7:14	11.05
6/19/2022 7:51	-0.04	6/20/2022 6:41	0.89	6/20/2022 7:04	3.56	6/20/2022 8:27	-0.31	6/19/2022 7:15	11.12
6/19/2022 7:52	-0.03	6/20/2022 6:42	0.89	6/20/2022 7:05	3.54	6/20/2022 8:28	-0.26	6/19/2022 7:16	11.07
6/19/2022 7:53	-0.03	6/20/2022 6:43	0.89	6/20/2022 7:06	3.52	6/20/2022 8:29	-0.26	6/19/2022 7:17	11.13
6/19/2022 7:54	-0.04	6/20/2022 6:44	0.90	6/20/2022 7:07	3.57	6/20/2022 8:30	-0.28	6/19/2022 7:18	11.11
6/19/2022 7:55	-0.03	6/20/2022 6:45	0.92	6/20/2022 7:08	3.52	6/20/2022 8:31	-0.29	6/19/2022 7:19	11.08
6/19/2022 7:56	-0.03	6/20/2022 6:46	0.89	6/20/2022 7:09	3.53	6/20/2022 8:32	-0.22	6/19/2022 7:20	11.11
6/19/2022 7:57	-0.03	6/20/2022 6:47	0.89	6/20/2022 7:10	3.53	6/20/2022 8:33	-0.27	6/19/2022 7:21	11.08
6/19/2022 7:58	-0.04	6/20/2022 6:48	0.90	6/20/2022 7:11	3.56	6/20/2022 8:34	-0.27	6/19/2022 7:22	11.04
6/19/2022 7:59	-0.03	6/20/2022 6:49	0.89	6/20/2022 7:12	3.55	6/20/2022 8:35	-0.24	6/19/2022 7:23	11.10
6/19/2022 8:00	-0.03	6/20/2022 6:50	0.89	6/20/2022 7:13	3.53	6/20/2022 8:36	-0.24	6/19/2022 7:24	11.11
6/19/2022 8:01	-0.03	6/20/2022 6:51	0.89	6/20/2022 7:14	3.54	6/20/2022 8:37	-0.25	6/19/2022 7:25	11.10
6/19/2022 8:02	-0.04	6/20/2022 6:52	0.90	6/20/2022 7:15	3.56	6/20/2022 8:38	-0.24	6/19/2022 7:26	11.09
6/19/2022 8:03	-0.04	6/20/2022 6:53	0.90	6/20/2022 7:16	3.55	6/20/2022 8:39	-0.29	6/19/2022 7:27	11.11
6/19/2022 8:04	-0.04	6/20/2022 6:54	0.90	6/20/2022 7:17	3.55	6/20/2022 8:40	-0.29	6/19/2022 7:28	11.12
6/19/2022 8:05	-0.04	6/20/2022 6:55	0.89	6/20/2022 7:18	3.58	6/20/2022 8:41	-0.30	6/19/2022 7:29	11.15
6/19/2022 8:06	-0.04	6/20/2022 6:56	0.90	6/20/2022 7:19	3.57	6/20/2022 8:42	-0.29	6/19/2022 7:30	11.10
6/19/2022 8:07	-0.03	6/20/2022 6:57	0.89	6/20/2022 7:20	3.54	6/20/2022 8:43	-0.30	6/19/2022 7:31	11.13
6/19/2022 8:08	-0.04	6/20/2022 6:58	0.89	6/20/2022 7:21	3.52	6/20/2022 8:44	-0.28	6/19/2022 7:32	11.13
6/19/2022 8:09	-0.03	6/20/2022 6:59	0.90	6/20/2022 7:22	3.55	6/20/2022 8:45	-0.23	6/19/2022 7:33	11.09
6/19/2022 8:10	-0.04	6/20/2022 7:00	0.89	6/20/2022 7:23	3.53	6/20/2022 8:46	-0.28	6/19/2022 7:34	11.12
6/19/2022 8:11	-0.03	6/20/2022 7:01	0.89	6/20/2022 7:24	3.54	6/20/2022 8:47	-0.26	6/19/2022 7:35	11.10
6/19/2022 8:12	-0.04	6/20/2022 7:02	0.90	6/20/2022 7:25	3.55	6/20/2022 8:48	-0.28	6/19/2022 7:36	11.13
6/19/2022 8:13	-0.04	6/20/2022 7:03	0.89	6/20/2022 7:26	3.53	6/20/2022 8:49	-0.26	6/19/2022 7:37	11.13
6/19/2022 8:14	-0.03	6/20/2022 7:04	0.90	6/20/2022 7:27	3.54	6/20/2022 8:50	-0.27	6/19/2022 7:38	11.14
6/19/2022 8:15	-0.04	6/20/2022 7:05	0.90	6/20/2022 7:28	3.57	6/20/2022 8:51	-0.25	6/19/2022 7:39	11.10
6/19/2022 8:16	-0.03	6/20/2022 7:06	0.90	6/20/2022 7:29	3.54	6/20/2022 8:52	-0.26	6/19/2022 7:40	11.06
6/19/2022 8:17	-0.04	6/20/2022 7:07	0.89	6/20/2022 7:30	3.55	6/20/2022 8:53	-0.27	6/19/2022 7:41	11.10
6/19/2022 8:18	-0.04	6/20/2022 7:08	0.90	6/20/2022 7:31	3.56	6/20/2022 8:54	-0.25	6/19/2022 7:42	11.04
6/19/2022 8:19	-0.03	6/20/2022 7:09	0.90	6/20/2022 7:32	3.56	6/20/2022 8:55	-0.24	6/19/2022 7:43	11.06
6/19/2022 8:20	-0.03	6/20/2022 7:10	0.92	6/20/2022 7:33	3.56	6/20/2022 8:56	-0.29	6/19/2022 7:44	11.07
6/19/2022 8:21	-0.04	6/20/2022 7:11	0.90	6/20/2022 7:34	3.55	6/20/2022 8:57	-0.28	6/19/2022 7:45	11.15
6/19/2022 8:22	-0.04	6/20/2022 7:12	0.89	6/20/2022 7:35	3.58	6/20/2022 8:58	-0.26	6/19/2022 7:46	11.07
6/19/2022 8:23	-0.03	6/20/2022 7:13	0.90	6/20/2022 7:36	3.52	6/20/2022 8:59	-0.27	6/19/2022 7:47	11.12
6/19/2022 8:24	-0.03	6/20/2022 7:14	0.90	6/20/2022 7:37	3.59	6/20/2022 9:00	-0.29	6/19/2022 7:48	11.10
6/19/2022 8:25	-0.03	6/20/2022 7:15	0.89	6/20/2022 7:38	3.53	6/20/2022 9:01	-0.27	6/19/2022 7:49	11.08
6/19/2022 8:26	-0.04	6/20/2022 7:16	0.89	6/20/2022 7:39	3.55	6/20/2022 9:02	-0.26	6/19/2022 7:50	11.11
6/19/2022 8:27	-0.04	6/20/2022 7:17	0.90	6/20/2022 7:40	3.54	6/20/2022 9:03	-0.23	6/19/2022 7:51	11.09
6/19/2022 8:28	-0.03	6/20/2022 7:18	0.90	6/20/2022 7:41	3.57	6/20/2022 9:04	-0.24	6/19/2022 7:52	11.14
6/19/2022 8:29	-0.03	6/20/2022 7:19	0.89	6/20/2022 7:42	3.53	6/20/2022 9:05	-0.26	6/19/2022 7:53	11.12
6/19/2022 8:30	-0.04	6/20/2022 7:20	0.90	6/20/2022 7:43	3.55	6/20/2022 9:06	-0.25	6/19/2022 7:54	11.08
6/19/2022 8:31	-0.05	6/20/2022 7:21	0.90	6/20/2022 7:44	3.53	6/20/2022 9:07	-0.24	6/19/2022 7:55	11.12
6/19/2022 8:32	-0.03	6/20/2022 7:22	0.90	6/20/2022 7:45	3.56	6/20/2022 9:08	-0.26	6/19/2022 7:56	11.13
6/19/2022 8:33	-0.04	6/20/2022 7:23	0.90	6/20/2022 7:46	3.59	6/20/2022 9:09	-0.29	6/19/2022 7:57	11.07
6/19/2022 8:34	-0.03	6/20/2022 7:24	0.90	6/20/2022 7:47	3.55	6/20/2022 9:10	-0.25	6/19/2022 7:58	11.07
6/19/2022 8:35	-0.03	6/20/2022 7:25	0.89	6/20/2022 7:48	3.56	6/20/2022 9:11	-0.28	6/19/2022 7:59	11.13
6/19/2022 8:36	-0.03	6/20/2022 7:26	0.90	6/20/2022 7:49	3.55	6/20/2022 9:12	-0.24	6/19/2022 8:00	11.10
6/19/2022 8:37	-0.04	6/20/2022 7:27	0.89	6/20/2022 7:50	3.55	6/20/2022 9:13	-0.25	6/19/2022 8:01	11.07
6/19/2022 8:38	-0.04	6/20/2022 7:28	0.89	6/20/2022 7:51	3.55	6/20/2022 9:14	-0.34	6/19/2022 8:02	11.09
6/19/2022 8:39	-0.03	6/20/2022 7:29	0.89	6/20/2022 7:52	3.56	6/20/2022 9:15	-0.25	6/19/2022 8:03	11.12
6/19/2022 8:40	-0.03	6/20/2022 7:30	0.89	6/20/2022 7:53	3.56	6/20/2022 9:16	-0.27	6/19/2022 8:04	11.07

6/19/2022 8:41	-0.03	6/20/2022 7:31	0.90	6/20/2022 7:54	3.58	6/20/2022 9:17	-0.27	6/19/2022 8:05	11.13
6/19/2022 8:42	-0.03	6/20/2022 7:32	0.89	6/20/2022 7:55	3.55	6/20/2022 9:18	-0.24	6/19/2022 8:06	11.08
6/19/2022 8:43	-0.03	6/20/2022 7:33	0.89	6/20/2022 7:56	3.56	6/20/2022 9:19	-0.27	6/19/2022 8:07	11.11
6/19/2022 8:44	-0.04	6/20/2022 7:34	0.89	6/20/2022 7:57	3.59	6/20/2022 9:20	-0.25	6/19/2022 8:08	11.15
6/19/2022 8:45	-0.04	6/20/2022 7:35	0.90	6/20/2022 7:58	3.56	6/20/2022 9:21	-0.23	6/19/2022 8:09	11.09
6/19/2022 8:46	-0.03	6/20/2022 7:36	0.90	6/20/2022 7:59	3.57	6/20/2022 9:22	-0.24	6/19/2022 8:10	11.12
6/19/2022 8:47	-0.03	6/20/2022 7:37	0.90	6/20/2022 8:00	3.55	6/20/2022 9:23	-0.28	6/19/2022 8:11	11.11
6/19/2022 8:48	-0.04	6/20/2022 7:38	0.90	6/20/2022 8:01	3.56	6/20/2022 9:24	-0.25	6/19/2022 8:12	11.12
6/19/2022 8:49	-0.04	6/20/2022 7:39	0.90	6/20/2022 8:02	3.54	6/20/2022 9:25	-0.27	6/19/2022 8:13	11.10
6/19/2022 8:50	-0.04	6/20/2022 7:40	0.89	6/20/2022 8:03	3.58	6/20/2022 9:26	-0.26	6/19/2022 8:14	11.12
6/19/2022 8:51	-0.03	6/20/2022 7:41	0.90	6/20/2022 8:04	3.54	6/20/2022 9:27	-0.26	6/19/2022 8:15	11.08
6/19/2022 8:52	-0.04	6/20/2022 7:42	0.90	6/20/2022 8:05	3.57	6/20/2022 9:28	-0.29	6/19/2022 8:16	11.09
6/19/2022 8:53	-0.04	6/20/2022 7:43	0.90	6/20/2022 8:06	3.59	6/20/2022 9:29	-0.26	6/19/2022 8:17	11.11
6/19/2022 8:54	-0.03	6/20/2022 7:44	0.90	6/20/2022 8:07	3.58	6/20/2022 9:30	-0.25	6/19/2022 8:18	11.13
6/19/2022 8:55	-0.04	6/20/2022 7:45	0.90	6/20/2022 8:08	3.56	6/20/2022 9:31	-0.26	6/19/2022 8:19	11.08
6/19/2022 8:56	-0.04	6/20/2022 7:46	0.90	6/20/2022 8:09	3.55	6/20/2022 9:32	-0.23	6/19/2022 8:20	11.04
6/19/2022 8:57	-0.04	6/20/2022 7:47	0.89	6/20/2022 8:10	3.58	6/20/2022 9:33	-0.30	6/19/2022 8:21	11.05
6/19/2022 8:58	-0.03	6/20/2022 7:48	0.90	6/20/2022 8:11	3.58	6/20/2022 9:34	-0.27	6/19/2022 8:22	11.16
6/19/2022 8:59	-0.03	6/20/2022 7:49	0.90	6/20/2022 8:12	3.56	6/20/2022 9:35	-0.25	6/19/2022 8:23	11.10
6/19/2022 9:00	-0.03	6/20/2022 7:50	0.90	6/20/2022 8:13	3.52	6/20/2022 9:36	-0.24	6/19/2022 8:24	11.10
6/19/2022 9:01	-0.04	6/20/2022 7:51	0.90	6/20/2022 8:14	3.55	6/20/2022 9:37	-0.30	6/19/2022 8:25	11.16
6/19/2022 9:02	-0.03	6/20/2022 7:52	0.89	6/20/2022 8:15	3.55	6/20/2022 9:38	-0.28	6/19/2022 8:26	11.12
6/19/2022 9:03	-0.03	6/20/2022 7:53	0.89	6/20/2022 8:16	3.57	6/20/2022 9:39	-0.29	6/19/2022 8:27	11.12
6/19/2022 9:04	-0.03	6/20/2022 7:54	0.90	6/20/2022 8:17	3.56	6/20/2022 9:40	-0.29	6/19/2022 8:28	11.06
6/19/2022 9:05	-0.03	6/20/2022 7:55	0.90	6/20/2022 8:18	3.56	6/20/2022 9:41	-0.25	6/19/2022 8:29	11.10
6/19/2022 9:06	-0.03	6/20/2022 7:56	0.90	6/20/2022 8:19	3.55	6/20/2022 9:42	-0.23	6/19/2022 8:30	11.07
6/19/2022 9:07	-0.04	6/20/2022 7:57	0.90	6/20/2022 8:20	3.57	6/20/2022 9:43	-0.24	6/19/2022 8:31	11.10
6/19/2022 9:08	-0.03	6/20/2022 7:58	0.89	6/20/2022 8:21	3.59	6/20/2022 9:44	-0.25	6/19/2022 8:32	11.10
6/19/2022 9:09	-0.04	6/20/2022 7:59	0.90	6/20/2022 8:22	3.57	6/20/2022 9:45	-0.26	6/19/2022 8:33	11.18
6/19/2022 9:10	-0.03	6/20/2022 8:00	0.90	6/20/2022 8:23	3.59	6/20/2022 9:46	-0.22	6/19/2022 8:34	11.07
6/19/2022 9:11	-0.03	6/20/2022 8:01	0.89	6/20/2022 8:24	3.62	6/20/2022 9:47	-0.23	6/19/2022 8:35	11.14
6/19/2022 9:12	-0.03	6/20/2022 8:02	0.90	6/20/2022 8:25	3.61	6/20/2022 9:48	-0.28	6/19/2022 8:36	11.09
6/19/2022 9:13	-0.04	6/20/2022 8:03	0.90	6/20/2022 8:26	3.60	6/20/2022 9:49	-0.27	6/19/2022 8:37	11.13
6/19/2022 9:14	-0.04	6/20/2022 8:04	0.90	6/20/2022 8:27	3.56	6/20/2022 9:50	-0.28	6/19/2022 8:38	11.11
6/19/2022 9:15	-0.03	6/20/2022 8:05	0.90	6/20/2022 8:28	3.56	6/20/2022 9:51	-0.28	6/19/2022 8:39	11.12
6/19/2022 9:16	-0.03	6/20/2022 8:06	0.89	6/20/2022 8:29	3.57	6/20/2022 9:52	-0.28	6/19/2022 8:40	11.07
6/19/2022 9:17	-0.03	6/20/2022 8:07	0.90	6/20/2022 8:30	3.59	6/20/2022 9:53	-0.25	6/19/2022 8:41	11.13
6/19/2022 9:18	-0.04	6/20/2022 8:08	0.90	6/20/2022 8:31	3.58	6/20/2022 9:54	-0.24	6/19/2022 8:42	11.15
6/19/2022 9:19	-0.03	6/20/2022 8:09	0.90	6/20/2022 8:32	3.56	6/20/2022 9:55	-0.27	6/19/2022 8:43	11.14
6/19/2022 9:20	-0.04	6/20/2022 8:10	0.90	6/20/2022 8:33	3.58	6/20/2022 9:56	-0.28	6/19/2022 8:44	11.12
6/19/2022 9:21	-0.03	6/20/2022 8:11	0.90	6/20/2022 8:34	3.58	6/20/2022 9:57	-0.29	6/19/2022 8:45	11.13
6/19/2022 9:22	-0.04	6/20/2022 8:12	0.90	6/20/2022 8:35	3.57	6/20/2022 9:58	-0.23	6/19/2022 8:46	11.07
6/19/2022 9:23	-0.03	6/20/2022 8:13	0.90	6/20/2022 8:36	3.59	6/20/2022 9:59	-0.29	6/19/2022 8:47	11.09
6/19/2022 9:24	-0.04	6/20/2022 8:14	0.90	6/20/2022 8:37	3.56	6/20/2022 10:00	-0.27	6/19/2022 8:48	11.14
6/19/2022 9:25	-0.03	6/20/2022 8:15	0.90	6/20/2022 8:38	3.54	6/20/2022 10:01	-0.27	6/19/2022 8:49	11.12
6/19/2022 9:26	-0.04	6/20/2022 8:16	0.90	6/20/2022 8:39	3.58	6/20/2022 10:02	-0.24	6/19/2022 8:50	11.14
6/19/2022 9:27	-0.04	6/20/2022 8:17	0.90	6/20/2022 8:40	3.56	6/20/2022 10:03	-0.23	6/19/2022 8:51	11.09
6/19/2022 9:28	-0.04	6/20/2022 8:18	0.90	6/20/2022 8:41	3.59	6/20/2022 10:04	-0.24	6/19/2022 8:52	11.12
6/19/2022 9:29	-0.04	6/20/2022 8:19	0.90	6/20/2022 8:42	3.57	6/20/2022 10:05	-0.30	6/19/2022 8:53	11.10
6/19/2022 9:30	-0.04	6/20/2022 8:20	0.90	6/20/2022 8:43	3.58	6/20/2022 10:06	-0.26	6/19/2022 8:54	11.12
6/19/2022 9:31	-0.04	6/20/2022 8:21	0.90	6/20/2022 8:44	3.57	6/20/2022 10:07	-0.27	6/19/2022 8:55	11.12
6/19/2022 9:32	-0.04	6/20/2022 8:22	0.90	6/20/2022 8:45	3.58	6/20/2022 10:08	-0.25	6/19/2022 8:56	11.09
6/19/2022 9:33	-0.03	6/20/2022 8:23	0.90	6/20/2022 8:46	3.61	6/20/2022 10:09	-0.29	6/19/2022 8:57	11.09
6/19/2022 9:34	-0.04	6/20/2022 8:24	0.90	6/20/2022 8:47	3.55	6/20/2022 10:10	-0.28	6/19/2022 8:58	11.10
6/19/2022 9:35	-0.04	6/20/2022 8:25	0.90	6/20/2022 8:48	3.57	6/20/2022 10:11	-0.27	6/19/2022 8:59	11.10
6/19/2022 9:36	-0.04	6/20/2022 8:26	0.90	6/20/2022 8:49	3.57	6/20/2022 10:12	-0.28	6/19/2022 9:00	11.10
6/19/2022 9:37	-0.03	6/20/2022 8:27	0.90	6/20/2022 8:50	3.58	6/20/2022 10:13	-0.27	6/19/2022 9:01	11.14
6/19/2022 9:38	-0.03	6/20/2022 8:28	0.90	6/20/2022 8:51	3.59	6/20/2022 10:14	-0.31	6/19/2022 9:02	11.10
6/19/2022 9:39	-0.03	6/20/2022 8:29	0.90	6/20/2022 8:52	3.56	6/20/2022 10:15	-0.29	6/19/2022 9:03	11.12
6/19/2022 9:40	-0.03	6/20/2022 8:30	0.90	6/20/2022 8:53	3.60	6/20/2022 10:16	-0.28	6/19/2022 9:04	11.19
6/19/2022 9:41	-0.04	6/20/2022 8:31	0.90	6/20/2022 8:54	3.56	6/20/2022 10:17	-0.26	6/19/2022 9:05	11.07
6/19/2022 9:42	-0.04	6/20/2022 8:32	0.90	6/20/2022 8:55	3.57	6/20/2022 10:18	-0.27	6/19/2022 9:06	11.08
6/19/2022 9:43	-0.03	6/20/2022 8:33	0.90	6/20/2022 8:56	3.56	6/20/2022 10:19	-0.25	6/19/2022 9:07	11.14
6/19/2022 9:44	-0.03	6/20/2022 8:34	0.90	6/20/2022 8:57	3.55	6/20/2022 10:20	-0.28	6/19/2022 9:08	11.08
6/19/2022 9:45	-0.04	6/20/2022 8:35	0.90	6/20/2022 8:58	3.58	6/20/2022 10:21	-0.29	6/19/2022 9:09	11.09
6/19/2022 9:46	-0.04	6/20/2022 8:36	0.90	6/20/2022 8:59	3.61	6/20/2022 10:22	-0.27	6/19/2022 9:10	11.09
6/19/2022 9:47	-0.04	6/20/2022 8:37	0.91	6/20/2022 9:00	3.57	6/20/2022 10:23	-0.27	6/19/2022 9:11	11.12
6/19/2022 9:48	-0.04	6/20/2022 8:38	0.90	6/20/2022 9:01	3.58	6/20/2022 10:24	-0.25	6/19/2022 9:12	11.11
6/19/2022 9:49	-0.04	6/20/2022 8:39	0.90	6/20/2022 9:02	3.57	6/20/2022 10:25	-0.27	6/19/2022 9:13	11.08
6/19/2022 9:50	-0.03	6/20/2022 8:40	0.91	6/20/2022 9:03	3.57	6/20/2022 10:26	-0.26	6/19/2022 9:14	11.09
6/19/2022 9:51	-0.03	6/20/2022 8:41	0.91	6/20/2022 9:04	3.57	6/20/2022 10:27	-0.25	6/19/2022 9:15	11.11
6/19/2022 9:52	-0.04	6/20/2022 8:42	0.90	6/20/2022 9:05	3.56	6/20/2022 10:28	-0.25	6/19/2022 9:16	11.15
6/19/2022 9:53	-0.04	6/20/2022 8:43	0.91	6/20/2022 9:06	3.56	6/20/2022 10:29	-0.29	6/19/2022 9:17	11.09
6/19/2022 9:54	-0.04	6/20/2022 8:44	0.90	6/20/2022 9:07	3.63	6/20/2022 10:30	-0.28	6/19/2022 9:18	11.12
6/19/2022 9:55	-0.03	6/20/2022 8:45	0.90	6/20/2022 9:08	3.58	6/20/2022 10:31	-0.24	6/19/2022 9:19	11.09
6/19/2022 9:56	-0.03	6/20/2022 8:46	0.91	6/20/2022 9:09	3.59	6/20/2022 10:32	-0.28	6/19/2022 9:20	11.11
6/19/2022 9:57	-0.04	6/20/2022 8:47	0.90	6/20/2022 9:10	3.59	6/20/2022 10:33	-0.27	6/19/2022 9:21	11.11
6/19/2022 9:58	-0.04	6/20/2022 8:48	0.91	6/20/2022 9:11	3.59	6/20/2022 10:34	-0.26	6/19/2022 9:22	11.11
6/19/2022 9:59	-0.04	6/20/2022 8:49	0.91	6/20/2022 9:12	3.60	6/20/2022 10:35	-0.26	6/19/2022 9:23	11.10
6/19/2022 10:00	-0.04	6/20/2022 8:50	0.90	6/20/2022 9:13	3.58	6/20/2022 10:36	-0.26	6/19/2022 9:24	11.09
6/19/2022 10:01	-0.04	6/20/2022 8:51	0.90	6/20/2022 9:14	3.62	6/20/2022 10:37	-0.26	6/19/2022 9:25	11.15
6/19/2022 10:02	-0.04	6/20/2022 8:52	0.91	6/20/2022 9:15	3.64	6/20/2022 10:38	-0.29	6/19/2022 9:26	11.12
6/19/2022 10:03	-0.04	6/20/2022 8:53	0.91	6/20/2022 9:16	3.61	6/20/2022 10:39	-0.25	6/19/2022 9:27	11.12
6/19/2022 10:04	-0.03	6/20/2022 8:54	0.90	6/20/2022 9:17	3.59	6/20/2022 10:40	-0.24	6/19/2022 9:28	11.12
6/19/2022 10:05	-0.04	6/20/2022 8:55	0.91	6/20/2022 9:18	3.56	6/20/2022 10:41	-0.26	6/19/2022 9:29	11.11
6/19/2022 10:06	-0.04	6/20/2022 8:56	0.91	6/20/2022 9:19	3.56	6/20/2022 10:42	-0.26	6/19/2022 9:30	11.07
6/19/2022 10:07	-0.03	6/20/2022 8:57	0.91	6/20/2022 9:20	3.56	6/20/2022 10:43	-0.24	6/19/2022 9:31	11.05
6/19/2022 10:08	-0.04	6/20/2022 8:58	0.90	6/20/2022 9:21	3.57	6/20/2022 10:44	-0.28	6/19/2022 9:32	11.14

6/19/2022 10:09	-0.03	6/20/2022 8:59	0.91	6/20/2022 9:22	3.56	6/20/2022 10:45	-0.28	6/19/2022 9:33	11.11
6/19/2022 10:10	-0.03	6/20/2022 9:00	0.90	6/20/2022 9:23	3.55	6/20/2022 10:46	-0.23	6/19/2022 9:34	11.12
6/19/2022 10:11	-0.04	6/20/2022 9:01	0.91	6/20/2022 9:24	3.56	6/20/2022 10:47	-0.27	6/19/2022 9:35	11.10
6/19/2022 10:12	-0.04	6/20/2022 9:02	0.91	6/20/2022 9:25	3.60	6/20/2022 10:48	-0.25	6/19/2022 9:36	11.11
6/19/2022 10:13	-0.04	6/20/2022 9:03	0.91	6/20/2022 9:26	3.57	6/20/2022 10:49	-0.28	6/19/2022 9:37	11.12
6/19/2022 10:14	-0.03	6/20/2022 9:04	0.91	6/20/2022 9:27	3.58	6/20/2022 10:50	-0.27	6/19/2022 9:38	11.12
6/19/2022 10:15	-0.04	6/20/2022 9:05	0.91	6/20/2022 9:28	3.59	6/20/2022 10:51	-0.33	6/19/2022 9:39	11.14
6/19/2022 10:16	-0.03	6/20/2022 9:06	0.91	6/20/2022 9:29	3.53	6/20/2022 10:52	-0.26	6/19/2022 9:40	11.10
6/19/2022 10:17	-0.03	6/20/2022 9:07	0.91	6/20/2022 9:30	3.59	6/20/2022 10:53	-0.25	6/19/2022 9:41	11.13
6/19/2022 10:18	-0.03	6/20/2022 9:08	0.90	6/20/2022 9:31	3.57	6/20/2022 10:54	-0.26	6/19/2022 9:42	11.10
6/19/2022 10:19	-0.04	6/20/2022 9:09	0.91	6/20/2022 9:32	3.59	6/20/2022 10:55	-0.27	6/19/2022 9:43	11.07
6/19/2022 10:20	-0.03	6/20/2022 9:10	0.90	6/20/2022 9:33	3.54	6/20/2022 10:56	-0.27	6/19/2022 9:44	11.08
6/19/2022 10:21	-0.04	6/20/2022 9:11	0.91	6/20/2022 9:34	3.59	6/20/2022 10:57	-0.28	6/19/2022 9:45	11.07
6/19/2022 10:22	-0.04	6/20/2022 9:12	0.91	6/20/2022 9:35	3.61	6/20/2022 10:58	-0.30	6/19/2022 9:46	11.09
6/19/2022 10:23	-0.03	6/20/2022 9:13	0.91	6/20/2022 9:36	3.58	6/20/2022 10:59	-0.27	6/19/2022 9:47	11.14
6/19/2022 10:24	-0.04	6/20/2022 9:14	0.91	6/20/2022 9:37	3.58	6/20/2022 11:00	-0.22	6/19/2022 9:48	11.10
6/19/2022 10:25	-0.04	6/20/2022 9:15	0.90	6/20/2022 9:38	3.56	6/20/2022 11:01	-0.21	6/19/2022 9:49	11.09
6/19/2022 10:26	-0.03	6/20/2022 9:16	0.91	6/20/2022 9:39	3.58	6/20/2022 11:02	-0.29	6/19/2022 9:50	11.12
6/19/2022 10:27	-0.04	6/20/2022 9:17	0.90	6/20/2022 9:40	3.55	6/20/2022 11:03	-0.24	6/19/2022 9:51	11.08
6/19/2022 10:28	-0.04	6/20/2022 9:18	0.88	6/20/2022 9:41	3.61	6/20/2022 11:04	-0.30	6/19/2022 9:52	11.12
6/19/2022 10:29	-0.04	6/20/2022 9:19	0.90	6/20/2022 9:42	3.55	6/20/2022 11:05	-0.24	6/19/2022 9:53	11.11
6/19/2022 10:30	-0.04	6/20/2022 9:20	0.90	6/20/2022 9:43	3.57	6/20/2022 11:06	-0.30	6/19/2022 9:54	11.11
6/19/2022 10:31	-0.04	6/20/2022 9:21	0.90	6/20/2022 9:44	3.60	6/20/2022 11:07	-0.25	6/19/2022 9:55	11.07
6/19/2022 10:32	-0.04	6/20/2022 9:22	0.90	6/20/2022 9:45	3.55	6/20/2022 11:08	-0.30	6/19/2022 9:56	11.12
6/19/2022 10:33	-0.03	6/20/2022 9:23	0.90	6/20/2022 9:46	3.59	6/20/2022 11:09	-0.24	6/19/2022 9:57	11.08
6/19/2022 10:34	-0.04	6/20/2022 9:24	0.90	6/20/2022 9:47	3.57	6/20/2022 11:10	-0.25	6/19/2022 9:58	11.07
6/19/2022 10:35	-0.04	6/20/2022 9:25	0.90	6/20/2022 9:48	3.58	6/20/2022 11:11	-0.30	6/19/2022 9:59	11.13
6/19/2022 10:36	-0.03	6/20/2022 9:26	0.90	6/20/2022 9:49	3.56	6/20/2022 11:12	-0.25	6/19/2022 10:00	11.07
6/19/2022 10:37	-0.04	6/20/2022 9:27	0.90	6/20/2022 9:50	3.60	6/20/2022 11:13	-0.28	6/19/2022 10:01	11.10
6/19/2022 10:38	-0.04	6/20/2022 9:28	0.90	6/20/2022 9:51	3.56	6/20/2022 11:14	-0.24	6/19/2022 10:02	11.14
6/19/2022 10:39	-0.04	6/20/2022 9:29	0.90	6/20/2022 9:52	3.57	6/20/2022 11:15	-0.29	6/19/2022 10:03	11.14
6/19/2022 10:40	-0.03	6/20/2022 9:30	0.90	6/20/2022 9:53	3.60	6/20/2022 11:16	-0.26	6/19/2022 10:04	11.08
6/19/2022 10:41	-0.04	6/20/2022 9:31	0.90	6/20/2022 9:54	3.61	6/20/2022 11:17	-0.24	6/19/2022 10:05	11.12
6/19/2022 10:42	-0.04	6/20/2022 9:32	0.90	6/20/2022 9:55	3.58	6/20/2022 11:18	-0.28	6/19/2022 10:06	11.11
6/19/2022 10:43	-0.04	6/20/2022 9:33	0.90	6/20/2022 9:56	3.62	6/20/2022 11:19	-0.25	6/19/2022 10:07	11.15
6/19/2022 10:44	-0.03	6/20/2022 9:34	0.90	6/20/2022 9:57	3.54	6/20/2022 11:20	-0.28	6/19/2022 10:08	11.08
6/19/2022 10:45	-0.03	6/20/2022 9:35	0.90	6/20/2022 9:58	3.55	6/20/2022 11:21	-0.25	6/19/2022 10:09	11.12
6/19/2022 10:46	-0.03	6/20/2022 9:36	0.90	6/20/2022 9:59	3.57	6/20/2022 11:22	-0.27	6/19/2022 10:10	11.12
6/19/2022 10:47	-0.03	6/20/2022 9:37	0.90	6/20/2022 10:00	3.58	6/20/2022 11:23	-0.22	6/19/2022 10:11	11.12
6/19/2022 10:48	-0.03	6/20/2022 9:38	0.90	6/20/2022 10:01	3.56	6/20/2022 11:24	-0.26	6/19/2022 10:12	11.15
6/19/2022 10:49	-0.04	6/20/2022 9:39	0.90	6/20/2022 10:02	3.56	6/20/2022 11:25	-0.26	6/19/2022 10:13	11.13
6/19/2022 10:50	-0.04	6/20/2022 9:40	0.90	6/20/2022 10:03	3.55	6/20/2022 11:26	-0.27	6/19/2022 10:14	11.15
6/19/2022 10:51	-0.04	6/20/2022 9:41	0.90	6/20/2022 10:04	3.59	6/20/2022 11:27	-0.30	6/19/2022 10:15	11.11
6/19/2022 10:52	-0.04	6/20/2022 9:42	0.90	6/20/2022 10:05	3.57	6/20/2022 11:28	-0.28	6/19/2022 10:16	11.13
6/19/2022 10:53	-0.03	6/20/2022 9:43	0.90	6/20/2022 10:06	3.58	6/20/2022 11:29	-0.27	6/19/2022 10:17	11.10
6/19/2022 10:54	-0.03	6/20/2022 9:44	0.90	6/20/2022 10:07	3.59	6/20/2022 11:30	-0.25	6/19/2022 10:18	11.11
6/19/2022 10:55	-0.04	6/20/2022 9:45	0.90	6/20/2022 10:08	3.60	6/20/2022 11:31	-0.31	6/19/2022 10:19	11.10
6/19/2022 10:56	-0.03	6/20/2022 9:46	0.90	6/20/2022 10:09	3.57	6/20/2022 11:32	-0.24	6/19/2022 10:20	11.13
6/19/2022 10:57	-0.04	6/20/2022 9:47	0.90	6/20/2022 10:10	3.55	6/20/2022 11:33	-0.24	6/19/2022 10:21	11.15
6/19/2022 10:58	-0.04	6/20/2022 9:48	0.90	6/20/2022 10:11	3.56	6/20/2022 11:34	-0.27	6/19/2022 10:22	11.11
6/19/2022 10:59	-0.04	6/20/2022 9:49	0.90	6/20/2022 10:12	3.57	6/20/2022 11:35	-0.28	6/19/2022 10:23	11.12
6/19/2022 11:00	-0.03	6/20/2022 9:50	0.90	6/20/2022 10:13	3.60	6/20/2022 11:36	-0.27	6/19/2022 10:24	11.09
6/19/2022 11:01	-0.03	6/20/2022 9:51	0.90	6/20/2022 10:14	3.57	6/20/2022 11:37	-0.30	6/19/2022 10:25	11.13
6/19/2022 11:02	-0.04	6/20/2022 9:52	0.91	6/20/2022 10:15	3.61	6/20/2022 11:38	-0.26	6/19/2022 10:26	11.10
6/19/2022 11:03	-0.04	6/20/2022 9:53	0.90	6/20/2022 10:16	3.60	6/20/2022 11:39	-0.28	6/19/2022 10:27	11.15
6/19/2022 11:04	-0.03	6/20/2022 9:54	0.90	6/20/2022 10:17	3.59	6/20/2022 11:40	-0.31	6/19/2022 10:28	11.11
6/19/2022 11:05	-0.04	6/20/2022 9:55	0.91	6/20/2022 10:18	3.56	6/20/2022 11:41	-0.28	6/19/2022 10:29	11.14
6/19/2022 11:06	-0.04	6/20/2022 9:56	0.90	6/20/2022 10:19	3.57	6/20/2022 11:42	-0.29	6/19/2022 10:30	11.12
6/19/2022 11:07	-0.03	6/20/2022 9:57	0.90	6/20/2022 10:20	3.57	6/20/2022 11:43	-0.30	6/19/2022 10:31	11.13
6/19/2022 11:08	-0.04	6/20/2022 9:58	0.90	6/20/2022 10:21	3.60	6/20/2022 11:44	-0.25	6/19/2022 10:32	11.11
6/19/2022 11:09	-0.03	6/20/2022 9:59	0.90	6/20/2022 10:22	3.56	6/20/2022 11:45	-0.27	6/19/2022 10:33	11.16
6/19/2022 11:10	-0.03	6/20/2022 10:00	0.90	6/20/2022 10:23	3.56	6/20/2022 11:46	-0.27	6/19/2022 10:34	11.13
6/19/2022 11:11	-0.04	6/20/2022 10:01	0.90	6/20/2022 10:24	3.55	6/20/2022 11:47	-0.29	6/19/2022 10:35	11.12
6/19/2022 11:12	-0.04	6/20/2022 10:02	0.91	6/20/2022 10:25	3.58	6/20/2022 11:48	-0.28	6/19/2022 10:36	11.12
6/19/2022 11:13	-0.04	6/20/2022 10:03	0.90	6/20/2022 10:26	3.59	6/20/2022 11:49	-0.24	6/19/2022 10:37	11.14
6/19/2022 11:14	-0.03	6/20/2022 10:04	0.91	6/20/2022 10:27	3.57	6/20/2022 11:50	-0.25	6/19/2022 10:38	11.12
6/19/2022 11:15	-0.03	6/20/2022 10:05	0.90	6/20/2022 10:28	3.58	6/20/2022 11:51	-0.29	6/19/2022 10:39	11.08
6/19/2022 11:16	-0.03	6/20/2022 10:06	0.90	6/20/2022 10:29	3.56	6/20/2022 11:52	-0.24	6/19/2022 10:40	11.12
6/19/2022 11:17	-0.03	6/20/2022 10:07	0.91	6/20/2022 10:30	3.56	6/20/2022 11:53	-0.27	6/19/2022 10:41	11.15
6/19/2022 11:18	-0.03	6/20/2022 10:08	0.91	6/20/2022 10:31	3.59	6/20/2022 11:54	-0.24	6/19/2022 10:42	11.10
6/19/2022 11:19	-0.03	6/20/2022 10:09	0.91	6/20/2022 10:32	3.56	6/20/2022 11:55	-0.29	6/19/2022 10:43	11.14
6/19/2022 11:20	-0.04	6/20/2022 10:10	0.90	6/20/2022 10:33	3.57	6/20/2022 11:56	-0.28	6/19/2022 10:44	11.10
6/19/2022 11:21	-0.04	6/20/2022 10:11	0.91	6/20/2022 10:34	3.60	6/20/2022 11:57	-0.30	6/19/2022 10:45	11.14
6/19/2022 11:22	-0.04	6/20/2022 10:12	0.90	6/20/2022 10:35	3.60	6/20/2022 11:58	-0.29	6/19/2022 10:46	11.08
6/19/2022 11:23	-0.04	6/20/2022 10:13	0.90	6/20/2022 10:36	3.58	6/20/2022 11:59	-0.30	6/19/2022 10:47	11.12
6/19/2022 11:24	-0.04	6/20/2022 10:14	0.91	6/20/2022 10:37	3.56	6/20/2022 12:00	-0.27	6/19/2022 10:48	11.11
6/19/2022 11:25	-0.03	6/20/2022 10:15	0.91	6/20/2022 10:38	3.55	6/20/2022 12:01	-0.22	6/19/2022 10:49	11.13
6/19/2022 11:26	-0.03	6/20/2022 10:16	0.91	6/20/2022 10:39	3.55	6/20/2022 12:02	-0.29	6/19/2022 10:50	11.16
6/19/2022 11:27	-0.03	6/20/2022 10:17	0.91	6/20/2022 10:40	3.56	6/20/2022 12:03	-0.27	6/19/2022 10:51	11.05
6/19/2022 11:28	-0.04	6/20/2022 10:18	0.91	6/20/2022 10:41	3.57	6/20/2022 12:04	-0.28	6/19/2022 10:52	11.09
6/19/2022 11:29	-0.04	6/20/2022 10:19	0.91	6/20/2022 10:42	3.59	6/20/2022 12:05	-0.27	6/19/2022 10:53	11.11
6/19/2022 11:30	-0.04	6/20/2022 10:20	0.91	6/20/2022 10:43	3.57	6/20/2022 12:06	-0.28	6/19/2022 10:54	11.09
6/19/2022 11:31	-0.04	6/20/2022 10:21	0.91	6/20/2022 10:44	3.57	6/20/2022 12:07	-0.28	6/19/2022 10:55	11.13
6/19/2022 11:32	-0.04	6/20/2022 10:22	0.91	6/20/2022 10:45	3.52	6/20/2022 12:08	-0.28	6/19/2022 10:56	11.10
6/19/2022 11:33	-0.04	6/20/2022 10:23	0.91	6/20/2022 10:46	3.58	6/20/2022 12:09	-0.32	6/19/2022 10:57	11.11
6/19/2022 11:34	-0.04	6/20/2022 10:24	0.91	6/20/2022 10:47	3.58	6/20/2022 12:10	-0.32	6/19/2022 10:58	11.15
6/19/2022 11:35	-0.04	6/20/2022 10:25	0.91	6/20/2022 10:48	3.55	6/20/2022 12:11	-0.26	6/19/2022 10:59	11.12
6/19/2022 11:36	-0.04	6/20/2022 10:26	0.91	6/20/2022 10:49	3.55	6/20/2022 12:12	-0.26	6/19/2022 11:00	11.10

6/19/2022 11:37	-0.04	6/20/2022 10:27	0.91	6/20/2022 10:50	3.60	6/20/2022 12:13	-0.32	6/19/2022 11:01	11.13
6/19/2022 11:38	-0.03	6/20/2022 10:28	0.91	6/20/2022 10:51	3.57	6/20/2022 12:14	-0.24	6/19/2022 11:02	11.11
6/19/2022 11:39	-0.04	6/20/2022 10:29	0.91	6/20/2022 10:52	3.57	6/20/2022 12:15	-0.24	6/19/2022 11:03	11.08
6/19/2022 11:40	-0.03	6/20/2022 10:30	0.91	6/20/2022 10:53	3.60	6/20/2022 12:16	-0.30	6/19/2022 11:04	11.12
6/19/2022 11:41	-0.03	6/20/2022 10:31	0.91	6/20/2022 10:54	3.57	6/20/2022 12:17	-0.28	6/19/2022 11:05	11.12
6/19/2022 11:42	-0.03	6/20/2022 10:32	0.91	6/20/2022 10:55	3.57	6/20/2022 12:18	-0.27	6/19/2022 11:06	11.13
6/19/2022 11:43	-0.03	6/20/2022 10:33	0.91	6/20/2022 10:56	3.58	6/20/2022 12:19	-0.30	6/19/2022 11:07	11.10
6/19/2022 11:44	-0.04	6/20/2022 10:34	0.91	6/20/2022 10:57	3.56	6/20/2022 12:20	-0.26	6/19/2022 11:08	11.06
6/19/2022 11:45	-0.03	6/20/2022 10:35	0.91	6/20/2022 10:58	3.57	6/20/2022 12:21	-0.24	6/19/2022 11:09	11.13
6/19/2022 11:46	-0.04	6/20/2022 10:36	0.91	6/20/2022 10:59	3.59	6/20/2022 12:22	-0.26	6/19/2022 11:10	11.12
6/19/2022 11:47	-0.04	6/20/2022 10:37	0.91	6/20/2022 11:00	3.59	6/20/2022 12:23	-0.27	6/19/2022 11:11	11.10
6/19/2022 11:48	-0.04	6/20/2022 10:38	0.91	6/20/2022 11:01	3.60	6/20/2022 12:24	-0.26	6/19/2022 11:12	11.09
6/19/2022 11:49	-0.04	6/20/2022 10:39	0.91	6/20/2022 11:02	3.59	6/20/2022 12:25	-0.27	6/19/2022 11:13	11.12
6/19/2022 11:50	-0.04	6/20/2022 10:40	0.91	6/20/2022 11:03	3.58	6/20/2022 12:26	-0.28	6/19/2022 11:14	11.11
6/19/2022 11:51	-0.04	6/20/2022 10:41	0.91	6/20/2022 11:04	3.59	6/20/2022 12:27	-0.29	6/19/2022 11:15	11.12
6/19/2022 11:52	-0.04	6/20/2022 10:42	0.91	6/20/2022 11:05	3.61	6/20/2022 12:28	-0.25	6/19/2022 11:16	11.14
6/19/2022 11:53	-0.04	6/20/2022 10:43	0.91	6/20/2022 11:06	3.60	6/20/2022 12:29	-0.28	6/19/2022 11:17	11.05
6/19/2022 11:54	-0.04	6/20/2022 10:44	0.91	6/20/2022 11:07	3.60	6/20/2022 12:30	-0.25	6/19/2022 11:18	11.11
6/19/2022 11:55	-0.03	6/20/2022 10:45	0.91	6/20/2022 11:08	3.60	6/20/2022 12:31	-0.27	6/19/2022 11:19	11.15
6/19/2022 11:56	-0.03	6/20/2022 10:46	0.91	6/20/2022 11:09	3.54	6/20/2022 12:32	-0.25	6/19/2022 11:20	11.07
6/19/2022 11:57	-0.04	6/20/2022 10:47	0.91	6/20/2022 11:10	3.57	6/20/2022 12:33	-0.26	6/19/2022 11:21	11.16
6/19/2022 11:58	-0.03	6/20/2022 10:48	0.91	6/20/2022 11:11	3.55	6/20/2022 12:34	-0.25	6/19/2022 11:22	11.09
6/19/2022 11:59	-0.04	6/20/2022 10:49	0.91	6/20/2022 11:12	3.57	6/20/2022 12:35	-0.29	6/19/2022 11:23	11.13
6/19/2022 12:00	-0.04	6/20/2022 10:50	0.91	6/20/2022 11:13	3.59	6/20/2022 12:36	-0.32	6/19/2022 11:24	11.07
6/19/2022 12:01	-0.04	6/20/2022 10:51	0.91	6/20/2022 11:14	3.58	6/20/2022 12:37	-0.26	6/19/2022 11:25	11.12
6/19/2022 12:02	-0.04	6/20/2022 10:52	0.91	6/20/2022 11:15	3.58	6/20/2022 12:38	-0.25	6/19/2022 11:26	11.12
6/19/2022 12:03	-0.04	6/20/2022 10:53	0.91	6/20/2022 11:16	3.61	6/20/2022 12:39	-0.28	6/19/2022 11:27	11.14
6/19/2022 12:04	-0.03	6/20/2022 10:54	0.91	6/20/2022 11:17	3.57	6/20/2022 12:40	-0.31	6/19/2022 11:28	11.08
6/19/2022 12:05	-0.03	6/20/2022 10:55	0.91	6/20/2022 11:18	3.60	6/20/2022 12:41	-0.28	6/19/2022 11:29	11.14
6/19/2022 12:06	-0.03	6/20/2022 10:56	0.91	6/20/2022 11:19	3.56	6/20/2022 12:42	-0.30	6/19/2022 11:30	11.13
6/19/2022 12:07	-0.04	6/20/2022 10:57	0.91	6/20/2022 11:20	3.52	6/20/2022 12:43	-0.24	6/19/2022 11:31	11.11
6/19/2022 12:08	-0.04	6/20/2022 10:58	0.91	6/20/2022 11:21	3.56	6/20/2022 12:44	-0.28	6/19/2022 11:32	11.09
6/19/2022 12:09	-0.04	6/20/2022 10:59	0.91	6/20/2022 11:22	3.59	6/20/2022 12:45	-0.25	6/19/2022 11:33	11.12
6/19/2022 12:10	-0.04	6/20/2022 11:00	0.91	6/20/2022 11:23	3.58	6/20/2022 12:46	-0.25	6/19/2022 11:34	11.04
6/19/2022 12:11	-0.04	6/20/2022 11:01	0.91	6/20/2022 11:24	3.60	6/20/2022 12:47	-0.30	6/19/2022 11:35	11.14
6/19/2022 12:12	-0.04	6/20/2022 11:02	0.91	6/20/2022 11:25	3.57	6/20/2022 12:48	-0.29	6/19/2022 11:36	11.14
6/19/2022 12:13	-0.04	6/20/2022 11:03	0.92	6/20/2022 11:26	3.59	6/20/2022 12:49	-0.29	6/19/2022 11:37	11.09
6/19/2022 12:14	-0.04	6/20/2022 11:04	0.91	6/20/2022 11:27	3.59	6/20/2022 12:50	-0.27	6/19/2022 11:38	11.15
6/19/2022 12:15	-0.04	6/20/2022 11:05	0.91	6/20/2022 11:28	3.59	6/20/2022 12:51	-0.27	6/19/2022 11:39	11.13
6/19/2022 12:16	-0.04	6/20/2022 11:06	0.92	6/20/2022 11:29	3.59	6/20/2022 12:52	-0.27	6/19/2022 11:40	11.13
6/19/2022 12:17	-0.04	6/20/2022 11:07	0.92	6/20/2022 11:30	3.60	6/20/2022 12:53	-0.27	6/19/2022 11:41	11.07
6/19/2022 12:18	-0.04	6/20/2022 11:08	0.91	6/20/2022 11:31	3.61	6/20/2022 12:54	-0.25	6/19/2022 11:42	11.12
6/19/2022 12:19	-0.04	6/20/2022 11:09	0.92	6/20/2022 11:32	3.55	6/20/2022 12:55	-0.26	6/19/2022 11:43	11.13
6/19/2022 12:20	-0.04	6/20/2022 11:10	0.92	6/20/2022 11:33	3.58	6/20/2022 12:56	-0.32	6/19/2022 11:44	11.08
6/19/2022 12:21	-0.03	6/20/2022 11:11	0.92	6/20/2022 11:34	3.59	6/20/2022 12:57	-0.28	6/19/2022 11:45	11.09
6/19/2022 12:22	-0.04	6/20/2022 11:12	0.92	6/20/2022 11:35	3.56	6/20/2022 12:58	-0.24	6/19/2022 11:46	11.13
6/19/2022 12:23	-0.03	6/20/2022 11:13	0.92	6/20/2022 11:36	3.58	6/20/2022 12:59	-0.26	6/19/2022 11:47	11.11
6/19/2022 12:24	-0.04	6/20/2022 11:14	0.92	6/20/2022 11:37	3.59	6/20/2022 13:00	-0.28	6/19/2022 11:48	11.11
6/19/2022 12:25	-0.04	6/20/2022 11:15	0.92	6/20/2022 11:38	3.59	6/20/2022 13:01	-0.29	6/19/2022 11:49	11.16
6/19/2022 12:26	-0.03	6/20/2022 11:16	0.92	6/20/2022 11:39	3.57	6/20/2022 13:02	-0.25	6/19/2022 11:50	11.10
6/19/2022 12:27	-0.04	6/20/2022 11:17	0.92	6/20/2022 11:40	3.59	6/20/2022 13:03	-0.26	6/19/2022 11:51	11.09
6/19/2022 12:28	-0.03	6/20/2022 11:18	0.92	6/20/2022 11:41	3.57	6/20/2022 13:04	-0.24	6/19/2022 11:52	11.10
6/19/2022 12:29	-0.04	6/20/2022 11:19	0.92	6/20/2022 11:42	3.58	6/20/2022 13:05	-0.27	6/19/2022 11:53	11.09
6/19/2022 12:30	-0.04	6/20/2022 11:20	0.92	6/20/2022 11:43	3.59	6/20/2022 13:06	-0.27	6/19/2022 11:54	11.10
6/19/2022 12:31	-0.04	6/20/2022 11:21	0.92	6/20/2022 11:44	3.60	6/20/2022 13:07	-0.25	6/19/2022 11:55	11.12
6/19/2022 12:32	-0.04	6/20/2022 11:22	0.92	6/20/2022 11:45	3.57	6/20/2022 13:08	-0.29	6/19/2022 11:56	11.08
6/19/2022 12:33	-0.03	6/20/2022 11:23	0.92	6/20/2022 11:46	3.57	6/20/2022 13:09	-0.30	6/19/2022 11:57	11.11
6/19/2022 12:34	-0.04	6/20/2022 11:24	0.92	6/20/2022 11:47	3.56	6/20/2022 13:10	-0.29	6/19/2022 11:58	11.17
6/19/2022 12:35	-0.03	6/20/2022 11:25	0.92	6/20/2022 11:48	3.60	6/20/2022 13:11	-0.29	6/19/2022 11:59	11.11
6/19/2022 12:36	-0.04	6/20/2022 11:26	0.92	6/20/2022 11:49	3.59	6/20/2022 13:12	-0.24	6/19/2022 12:00	11.12
6/19/2022 12:37	-0.04	6/20/2022 11:27	0.92	6/20/2022 11:50	3.58	6/20/2022 13:13	-0.26	6/19/2022 12:01	11.10
6/19/2022 12:38	-0.03	6/20/2022 11:28	0.92	6/20/2022 11:51	3.59	6/20/2022 13:14	-0.24	6/19/2022 12:02	11.17
6/19/2022 12:39	-0.03	6/20/2022 11:29	0.92	6/20/2022 11:52	3.60	6/20/2022 13:15	-0.26	6/19/2022 12:03	11.14
6/19/2022 12:40	-0.04	6/20/2022 11:30	0.92	6/20/2022 11:53	3.59	6/20/2022 13:16	-0.29	6/19/2022 12:04	11.10
6/19/2022 12:41	-0.04	6/20/2022 11:31	0.92	6/20/2022 11:54	3.63	6/20/2022 13:17	-0.25	6/19/2022 12:05	11.12
6/19/2022 12:42	-0.05	6/20/2022 11:32	0.92	6/20/2022 11:55	3.57	6/20/2022 13:18	-0.27	6/19/2022 12:06	11.11
6/19/2022 12:43	-0.04	6/20/2022 11:33	0.92	6/20/2022 11:56	3.59	6/20/2022 13:19	-0.26	6/19/2022 12:07	11.10
6/19/2022 12:44	-0.03	6/20/2022 11:34	0.92	6/20/2022 11:57	3.59	6/20/2022 13:20	-0.24	6/19/2022 12:08	11.08
6/19/2022 12:45	-0.03	6/20/2022 11:35	0.92	6/20/2022 11:58	3.60	6/20/2022 13:21	-0.26	6/19/2022 12:09	11.04
6/19/2022 12:46	-0.03	6/20/2022 11:36	0.92	6/20/2022 11:59	3.59	6/20/2022 13:22	-0.24	6/19/2022 12:10	11.13
6/19/2022 12:47	-0.04	6/20/2022 11:37	0.92	6/20/2022 12:00	3.60	6/20/2022 13:23	-0.24	6/19/2022 12:11	11.15
6/19/2022 12:48	-0.04	6/20/2022 11:38	0.93	6/20/2022 12:01	3.58	6/20/2022 13:24	-0.29	6/19/2022 12:12	11.15
6/19/2022 12:49	-0.04	6/20/2022 11:39	0.92	6/20/2022 12:02	3.62	6/20/2022 13:25	-0.27	6/19/2022 12:13	11.10
6/19/2022 12:50	-0.04	6/20/2022 11:40	0.93	6/20/2022 12:03	3.56	6/20/2022 13:26	-0.28	6/19/2022 12:14	11.10
6/19/2022 12:51	-0.03	6/20/2022 11:41	0.93	6/20/2022 12:04	3.56	6/20/2022 13:27	-0.27	6/19/2022 12:15	11.09
6/19/2022 12:52	-0.04	6/20/2022 11:42	0.93	6/20/2022 12:05	3.58	6/20/2022 13:28	-0.26	6/19/2022 12:16	11.11
6/19/2022 12:53	-0.04	6/20/2022 11:43	0.93	6/20/2022 12:06	3.58	6/20/2022 13:29	-0.28	6/19/2022 12:17	11.09
6/19/2022 12:54	-0.04	6/20/2022 11:44	0.92	6/20/2022 12:07	3.60	6/20/2022 13:30	-0.28	6/19/2022 12:18	11.07
6/19/2022 12:55	-0.04	6/20/2022 11:45	0.92	6/20/2022 12:08	3.57	6/20/2022 13:31	-0.25	6/19/2022 12:19	11.13
6/19/2022 12:56	-0.03	6/20/2022 11:46	0.93	6/20/2022 12:09	3.60	6/20/2022 13:32	-0.28	6/19/2022 12:20	11.15
6/19/2022 12:57	-0.03	6/20/2022 11:47	0.93	6/20/2022 12:10	3.60	6/20/2022 13:33	-0.29	6/19/2022 12:21	11.04
6/19/2022 12:58	-0.04	6/20/2022 11:48	0.93	6/20/2022 12:11	3.59	6/20/2022 13:34	-0.24	6/19/2022 12:22	11.13
6/19/2022 12:59	-0.04	6/20/2022 11:49	0.93	6/20/2022 12:12	3.61	6/20/2022 13:35	-0.30	6/19/2022 12:23	11.13
6/19/2022 13:00	-0.04	6/20/2022 11:50	0.93	6/20/2022 12:13	3.58	6/20/2022 13:36	-0.26	6/19/2022 12:24	11.14
6/19/2022 13:01	-0.04	6/20/2022 11:51	0.93	6/20/2022 12:14	3.59	6/20/2022 13:37	-0.27	6/19/2022 12:25	11.14
6/19/2022 13:02	-0.04	6/20/2022 11:52	0.93	6/20/2022 12:15	3.62	6/20/2022 13:38	-0.24	6/19/2022 12:26	11.10
6/19/2022 13:03	-0.04	6/20/2022 11:53	0.93	6/20/2022 12:16	3.60	6/20/2022 13:39	-0.26	6/19/2022 12:27	11.14
6/19/2022 13:04	-0.03	6/20/2022 11:54	0.93	6/20/2022 12:17	3.63	6/20/2022 13:40	-0.26	6/19/2022 12:28	11.11

6/19/2022 13:05	-0.04	6/20/2022 11:55	0.93	6/20/2022 12:18	3.59	6/20/2022 13:41	-0.23	6/19/2022 12:29	11.07
6/19/2022 13:06	-0.04	6/20/2022 11:56	0.93	6/20/2022 12:19	3.58	6/20/2022 13:42	-0.27	6/19/2022 12:30	11.11
6/19/2022 13:07	-0.04	6/20/2022 11:57	0.93	6/20/2022 12:20	3.60	6/20/2022 13:43	-0.24	6/19/2022 12:31	11.09
6/19/2022 13:08	-0.04	6/20/2022 11:58	0.93	6/20/2022 12:21	3.60	6/20/2022 13:44	-0.24	6/19/2022 12:32	11.10
6/19/2022 13:09	-0.03	6/20/2022 11:59	0.93	6/20/2022 12:22	3.58	6/20/2022 13:45	-0.26	6/19/2022 12:33	11.10
6/19/2022 13:10	-0.03	6/20/2022 12:00	0.93	6/20/2022 12:23	3.57	6/20/2022 13:46	-0.27	6/19/2022 12:34	11.12
6/19/2022 13:11	-0.03	6/20/2022 12:01	0.93	6/20/2022 12:24	3.61	6/20/2022 13:47	-0.21	6/19/2022 12:35	11.14
6/19/2022 13:12	-0.03	6/20/2022 12:02	0.93	6/20/2022 12:25	3.59	6/20/2022 13:48	-0.30	6/19/2022 12:36	11.12
6/19/2022 13:13	-0.04	6/20/2022 12:03	0.93	6/20/2022 12:26	3.58	6/20/2022 13:49	-0.25	6/19/2022 12:37	11.14
6/19/2022 13:14	-0.04	6/20/2022 12:04	0.93	6/20/2022 12:27	3.57	6/20/2022 13:50	-0.28	6/19/2022 12:38	11.10
6/19/2022 13:15	-0.04	6/20/2022 12:05	0.93	6/20/2022 12:28	3.59	6/20/2022 13:51	-0.25	6/19/2022 12:39	11.12
6/19/2022 13:16	-0.04	6/20/2022 12:06	0.93	6/20/2022 12:29	3.59	6/20/2022 13:52	-0.26	6/19/2022 12:40	11.14
6/19/2022 13:17	-0.04	6/20/2022 12:07	0.92	6/20/2022 12:30	3.58	6/20/2022 13:53	-0.29	6/19/2022 12:41	11.11
6/19/2022 13:18	-0.04	6/20/2022 12:08	0.93	6/20/2022 12:31	3.62	6/20/2022 13:54	-0.30	6/19/2022 12:42	11.16
6/19/2022 13:19	-0.04	6/20/2022 12:09	0.93	6/20/2022 12:32	3.61	6/20/2022 13:55	-0.27	6/19/2022 12:43	11.12
6/19/2022 13:20	-0.03	6/20/2022 12:10	0.93	6/20/2022 12:33	3.60	6/20/2022 13:56	-0.27	6/19/2022 12:44	11.12
6/19/2022 13:21	-0.04	6/20/2022 12:11	0.93	6/20/2022 12:34	3.61	6/20/2022 13:57	-0.24	6/19/2022 12:45	11.13
6/19/2022 13:22	-0.04	6/20/2022 12:12	0.93	6/20/2022 12:35	3.57	6/20/2022 13:58	-0.25	6/19/2022 12:46	11.14
6/19/2022 13:23	-0.03	6/20/2022 12:13	0.93	6/20/2022 12:36	3.60	6/20/2022 13:59	-0.29	6/19/2022 12:47	11.12
6/19/2022 13:24	-0.04	6/20/2022 12:14	0.93	6/20/2022 12:37	3.60	6/20/2022 14:00	-0.31	6/19/2022 12:48	11.07
6/19/2022 13:25	-0.03	6/20/2022 12:15	0.93	6/20/2022 12:38	3.59	6/20/2022 14:01	-0.28	6/19/2022 12:49	11.12
6/19/2022 13:26	-0.04	6/20/2022 12:16	0.93	6/20/2022 12:39	3.60	6/20/2022 14:02	-0.29	6/19/2022 12:50	11.08
6/19/2022 13:27	-0.04	6/20/2022 12:17	0.93	6/20/2022 12:40	3.60	6/20/2022 14:03	-0.24	6/19/2022 12:51	11.15
6/19/2022 13:28	-0.04	6/20/2022 12:18	0.93	6/20/2022 12:41	3.61	6/20/2022 14:04	-0.26	6/19/2022 12:52	11.16
6/19/2022 13:29	-0.04	6/20/2022 12:19	0.93	6/20/2022 12:42	3.56	6/20/2022 14:05	-0.26	6/19/2022 12:53	11.16
6/19/2022 13:30	-0.03	6/20/2022 12:20	0.93	6/20/2022 12:43	3.59	6/20/2022 14:06	-0.28	6/19/2022 12:54	11.06
6/19/2022 13:31	-0.04	6/20/2022 12:21	0.93	6/20/2022 12:44	3.59	6/20/2022 14:07	-0.24	6/19/2022 12:55	11.13
6/19/2022 13:32	-0.04	6/20/2022 12:22	0.93	6/20/2022 12:45	3.60	6/20/2022 14:08	-0.30	6/19/2022 12:56	11.11
6/19/2022 13:33	-0.03	6/20/2022 12:23	0.93	6/20/2022 12:46	3.60	6/20/2022 14:09	-0.25	6/19/2022 12:57	11.15
6/19/2022 13:34	-0.04	6/20/2022 12:24	0.93	6/20/2022 12:47	3.57	6/20/2022 14:10	-0.27	6/19/2022 12:58	11.13
6/19/2022 13:35	-0.04	6/20/2022 12:25	0.93	6/20/2022 12:48	3.59	6/20/2022 14:11	-0.26	6/19/2022 12:59	11.07
6/19/2022 13:36	-0.03	6/20/2022 12:26	0.93	6/20/2022 12:49	3.57	6/20/2022 14:12	-0.24	6/19/2022 13:00	11.09
6/19/2022 13:37	-0.04	6/20/2022 12:27	0.93	6/20/2022 12:50	3.62	6/20/2022 14:13	-0.26	6/19/2022 13:01	11.09
6/19/2022 13:38	-0.04	6/20/2022 12:28	0.93	6/20/2022 12:51	3.61	6/20/2022 14:14	-0.25	6/19/2022 13:02	11.10
6/19/2022 13:39	-0.04	6/20/2022 12:29	0.93	6/20/2022 12:52	3.62	6/20/2022 14:15	-0.27	6/19/2022 13:03	11.16
6/19/2022 13:40	-0.04	6/20/2022 12:30	0.93	6/20/2022 12:53	3.63	6/20/2022 14:16	-0.27	6/19/2022 13:04	11.09
6/19/2022 13:41	-0.04	6/20/2022 12:31	0.93	6/20/2022 12:54	3.60	6/20/2022 14:17	-0.27	6/19/2022 13:05	11.14
6/19/2022 13:42	-0.03	6/20/2022 12:32	0.93	6/20/2022 12:55	3.58	6/20/2022 14:18	-0.25	6/19/2022 13:06	11.13
6/19/2022 13:43	-0.04	6/20/2022 12:33	0.93	6/20/2022 12:56	3.58	6/20/2022 14:19	-0.26	6/19/2022 13:07	11.14
6/19/2022 13:44	-0.03	6/20/2022 12:34	0.93	6/20/2022 12:57	3.57	6/20/2022 14:20	-0.27	6/19/2022 13:08	11.13
6/19/2022 13:45	-0.04	6/20/2022 12:35	0.93	6/20/2022 12:58	3.57	6/20/2022 14:21	-0.27	6/19/2022 13:09	11.16
6/19/2022 13:46	-0.03	6/20/2022 12:36	0.93	6/20/2022 12:59	3.58	6/20/2022 14:22	-0.24	6/19/2022 13:10	11.13
6/19/2022 13:47	-0.04	6/20/2022 12:37	0.93	6/20/2022 13:00	3.58	6/20/2022 14:23	-0.25	6/19/2022 13:11	11.16
6/19/2022 13:48	-0.04	6/20/2022 12:38	0.93	6/20/2022 13:01	3.57	6/20/2022 14:24	-0.28	6/19/2022 13:12	11.15
6/19/2022 13:49	-0.04	6/20/2022 12:39	0.93	6/20/2022 13:02	3.61	6/20/2022 14:25	-0.24	6/19/2022 13:13	11.11
6/19/2022 13:50	-0.04	6/20/2022 12:40	0.93	6/20/2022 13:03	3.58	6/20/2022 14:26	-0.23	6/19/2022 13:14	11.13
6/19/2022 13:51	-0.04	6/20/2022 12:41	0.93	6/20/2022 13:04	3.60	6/20/2022 14:27	-0.28	6/19/2022 13:15	11.12
6/19/2022 13:52	-0.04	6/20/2022 12:42	0.93	6/20/2022 13:05	3.58	6/20/2022 14:28	-0.25	6/19/2022 13:16	11.13
6/19/2022 13:53	-0.04	6/20/2022 12:43	0.93	6/20/2022 13:06	3.60	6/20/2022 14:29	-0.26	6/19/2022 13:17	11.15
6/19/2022 13:54	-0.03	6/20/2022 12:44	0.93	6/20/2022 13:07	3.60	6/20/2022 14:30	-0.29	6/19/2022 13:18	11.15
6/19/2022 13:55	-0.04	6/20/2022 12:45	0.93	6/20/2022 13:08	3.59	6/20/2022 14:31	-0.26	6/19/2022 13:19	11.12
6/19/2022 13:56	-0.04	6/20/2022 12:46	0.93	6/20/2022 13:09	3.62	6/20/2022 14:32	-0.30	6/19/2022 13:20	11.12
6/19/2022 13:57	-0.04	6/20/2022 12:47	0.93	6/20/2022 13:10	3.58	6/20/2022 14:33	-0.27	6/19/2022 13:21	11.12
6/19/2022 13:58	-0.04	6/20/2022 12:48	0.93	6/20/2022 13:11	3.61	6/20/2022 14:34	-0.26	6/19/2022 13:22	11.14
6/19/2022 13:59	-0.04	6/20/2022 12:49	0.93	6/20/2022 13:12	3.60	6/20/2022 14:35	-0.27	6/19/2022 13:23	11.10
6/19/2022 14:00	-0.04	6/20/2022 12:50	0.93	6/20/2022 13:13	3.64	6/20/2022 14:36	-0.30	6/19/2022 13:24	11.10
6/19/2022 14:01	-0.04	6/20/2022 12:51	0.93	6/20/2022 13:14	3.60	6/20/2022 14:37	-0.27	6/19/2022 13:25	11.11
6/19/2022 14:02	-0.04	6/20/2022 12:52	0.93	6/20/2022 13:15	3.60	6/20/2022 14:38	-0.27	6/19/2022 13:26	11.10
6/19/2022 14:03	-0.04	6/20/2022 12:53	0.93	6/20/2022 13:16	3.59	6/20/2022 14:39	-0.25	6/19/2022 13:27	11.08
6/19/2022 14:04	-0.03	6/20/2022 12:54	0.93	6/20/2022 13:17	3.60	6/20/2022 14:40	-0.25	6/19/2022 13:28	11.11
6/19/2022 14:05	-0.04	6/20/2022 12:55	0.93	6/20/2022 13:18	3.60	6/20/2022 14:41	-0.28	6/19/2022 13:29	11.10
6/19/2022 14:06	-0.04	6/20/2022 12:56	0.93	6/20/2022 13:19	3.61	6/20/2022 14:42	-0.29	6/19/2022 13:30	11.15
6/19/2022 14:07	-0.04	6/20/2022 12:57	0.93	6/20/2022 13:20	3.60	6/20/2022 14:43	-0.29	6/19/2022 13:31	11.11
6/19/2022 14:08	-0.04	6/20/2022 12:58	0.93	6/20/2022 13:21	3.63	6/20/2022 14:44	-0.27	6/19/2022 13:32	11.14
6/19/2022 14:09	-0.04	6/20/2022 12:59	0.93	6/20/2022 13:22	3.60	6/20/2022 14:45	-0.29	6/19/2022 13:33	11.11
6/19/2022 14:10	-0.04	6/20/2022 13:00	0.93	6/20/2022 13:23	3.62	6/20/2022 14:46	-0.27	6/19/2022 13:34	11.12
6/19/2022 14:11	-0.04	6/20/2022 13:01	0.92	6/20/2022 13:24	3.60	6/20/2022 14:47	-0.27	6/19/2022 13:35	11.14
6/19/2022 14:12	-0.04	6/20/2022 13:02	0.93	6/20/2022 13:25	3.63	6/20/2022 14:48	-0.29	6/19/2022 13:36	11.17
6/19/2022 14:13	-0.04	6/20/2022 13:03	0.93	6/20/2022 13:26	3.60	6/20/2022 14:49	-0.29	6/19/2022 13:37	11.09
6/19/2022 14:14	-0.04	6/20/2022 13:04	0.93	6/20/2022 13:27	3.62	6/20/2022 14:50	-0.29	6/19/2022 13:38	11.08
6/19/2022 14:15	-0.04	6/20/2022 13:05	0.93	6/20/2022 13:28	3.61	6/20/2022 14:51	-0.27	6/19/2022 13:39	11.09
6/19/2022 14:16	-0.04	6/20/2022 13:06	0.93	6/20/2022 13:29	3.64	6/20/2022 14:52	-0.27	6/19/2022 13:40	11.05
6/19/2022 14:17	-0.04	6/20/2022 13:07	0.93	6/20/2022 13:30	3.63	6/20/2022 14:53	-0.28	6/19/2022 13:41	11.12
6/19/2022 14:18	-0.03	6/20/2022 13:08	0.93	6/20/2022 13:31	3.59	6/20/2022 14:54	-0.26	6/19/2022 13:42	11.14
6/19/2022 14:19	-0.04	6/20/2022 13:09	0.93	6/20/2022 13:32	3.61	6/20/2022 14:55	-0.26	6/19/2022 13:43	11.14
6/19/2022 14:20	-0.04	6/20/2022 13:10	0.93	6/20/2022 13:33	3.64	6/20/2022 14:56	-0.25	6/19/2022 13:44	11.13
6/19/2022 14:21	-0.03	6/20/2022 13:11	0.93	6/20/2022 13:34	3.59	6/20/2022 14:57	-0.31	6/19/2022 13:45	11.12
6/19/2022 14:22	-0.04	6/20/2022 13:12	0.93	6/20/2022 13:35	3.62	6/20/2022 14:58	-0.25	6/19/2022 13:46	11.15
6/19/2022 14:23	-0.04	6/20/2022 13:13	0.93	6/20/2022 13:36	3.63	6/20/2022 14:59	-0.27	6/19/2022 13:47	11.09
6/19/2022 14:24	-0.03	6/20/2022 13:14	0.93	6/20/2022 13:37	3.62	6/20/2022 15:00	-0.29	6/19/2022 13:48	11.14
6/19/2022 14:25	-0.03	6/20/2022 13:15	0.93	6/20/2022 13:38	3.64	6/20/2022 15:01	-0.28	6/19/2022 13:49	11.11
6/19/2022 14:26	-0.03	6/20/2022 13:16	0.93	6/20/2022 13:39	3.64	6/20/2022 15:02	-0.28	6/19/2022 13:50	11.08
6/19/2022 14:27	-0.04	6/20/2022 13:17	0.93	6/20/2022 13:40	3.65	6/20/2022 15:03	-0.25	6/19/2022 13:51	11.15
6/19/2022 14:28	-0.03	6/20/2022 13:18	0.93	6/20/2022 13:41	3.65	6/20/2022 15:04	-0.27	6/19/2022 13:52	11.11
6/19/2022 14:29	-0.04	6/20/2022 13:19	0.93	6/20/2022 13:42	3.63	6/20/2022 15:05	-0.30	6/19/2022 13:53	11.07
6/19/2022 14:30	-0.03	6/20/2022 13:20	0.93	6/20/2022 13:43	3.60	6/20/2022 15:06	-0.27	6/19/2022 13:54	11.10
6/19/2022 14:31	-0.04	6/20/2022 13:21	0.93	6/20/2022 13:44	3.62	6/20/2022 15:07	-0.26	6/19/2022 13:55	11.09
6/19/2022 14:32	-0.04	6/20/2022 13:22	0.93	6/20/2022 13:45	3.68	6/20/2022 15:08	-0.27	6/19/2022 13:56	11.14

6/19/2022 14:33	-0.04	6/20/2022 13:23	0.93	6/20/2022 13:46	3.65	6/20/2022 15:09	-0.26	6/19/2022 13:57	11.08
6/19/2022 14:34	-0.04	6/20/2022 13:24	0.93	6/20/2022 13:47	3.63	6/20/2022 15:10	-0.26	6/19/2022 13:58	11.13
6/19/2022 14:35	-0.04	6/20/2022 13:25	0.93	6/20/2022 13:48	3.67	6/20/2022 15:11	-0.26	6/19/2022 13:59	11.07
6/19/2022 14:36	-0.04	6/20/2022 13:26	0.93	6/20/2022 13:49	3.63	6/20/2022 15:12	-0.28	6/19/2022 14:00	11.08
6/19/2022 14:37	-0.03	6/20/2022 13:27	0.93	6/20/2022 13:50	3.65	6/20/2022 15:13	-0.29	6/19/2022 14:01	11.08
6/19/2022 14:38	-0.04	6/20/2022 13:28	0.93	6/20/2022 13:51	3.65	6/20/2022 15:14	-0.30	6/19/2022 14:02	11.10
6/19/2022 14:39	-0.04	6/20/2022 13:29	0.93	6/20/2022 13:52	3.64	6/20/2022 15:15	-0.28	6/19/2022 14:03	11.10
6/19/2022 14:40	-0.03	6/20/2022 13:30	0.93	6/20/2022 13:53	3.67	6/20/2022 15:16	-0.27	6/19/2022 14:04	11.11
6/19/2022 14:41	-0.04	6/20/2022 13:31	0.93	6/20/2022 13:54	3.64	6/20/2022 15:17	-0.28	6/19/2022 14:05	11.10
6/19/2022 14:42	-0.04	6/20/2022 13:32	0.93	6/20/2022 13:55	3.67	6/20/2022 15:18	-0.27	6/19/2022 14:06	11.14
6/19/2022 14:43	-0.04	6/20/2022 13:33	0.93	6/20/2022 13:56	3.67	6/20/2022 15:19	-0.27	6/19/2022 14:07	11.06
6/19/2022 14:44	-0.03	6/20/2022 13:34	0.93	6/20/2022 13:57	3.68	6/20/2022 15:20	-0.24	6/19/2022 14:08	11.11
6/19/2022 14:45	-0.04	6/20/2022 13:35	0.93	6/20/2022 13:58	3.67	6/20/2022 15:21	-0.27	6/19/2022 14:09	11.12
6/19/2022 14:46	-0.04	6/20/2022 13:36	0.93	6/20/2022 13:59	3.65	6/20/2022 15:22	-0.26	6/19/2022 14:10	11.13
6/19/2022 14:47	-0.05	6/20/2022 13:37	0.93	6/20/2022 14:00	3.64	6/20/2022 15:23	-0.27	6/19/2022 14:11	11.10
6/19/2022 14:48	-0.04	6/20/2022 13:38	0.94	6/20/2022 14:01	3.67	6/20/2022 15:24	-0.28	6/19/2022 14:12	11.14
6/19/2022 14:49	-0.04	6/20/2022 13:39	0.94	6/20/2022 14:02	3.67	6/20/2022 15:25	-0.29	6/19/2022 14:13	11.17
6/19/2022 14:50	-0.04	6/20/2022 13:40	0.93	6/20/2022 14:03	3.69	6/20/2022 15:26	-0.26	6/19/2022 14:14	11.14
6/19/2022 14:51	-0.04	6/20/2022 13:41	0.93	6/20/2022 14:04	3.68	6/20/2022 15:27	-0.27	6/19/2022 14:15	11.10
6/19/2022 14:52	-0.04	6/20/2022 13:42	0.93	6/20/2022 14:05	3.70	6/20/2022 15:28	-0.29	6/19/2022 14:16	11.11
6/19/2022 14:53	-0.04	6/20/2022 13:43	0.93	6/20/2022 14:06	3.69	6/20/2022 15:29	-0.26	6/19/2022 14:17	11.19
6/19/2022 14:54	-0.04	6/20/2022 13:44	0.93	6/20/2022 14:07	3.67	6/20/2022 15:30	-0.26	6/19/2022 14:18	11.12
6/19/2022 14:55	-0.04	6/20/2022 13:45	0.94	6/20/2022 14:08	3.70	6/20/2022 15:31	-0.26	6/19/2022 14:19	11.11
6/19/2022 14:56	-0.04	6/20/2022 13:46	0.94	6/20/2022 14:09	3.70	6/20/2022 15:32	-0.28	6/19/2022 14:20	11.13
6/19/2022 14:57	-0.04	6/20/2022 13:47	0.94	6/20/2022 14:10	3.70	6/20/2022 15:33	-0.26	6/19/2022 14:21	11.10
6/19/2022 14:58	-0.04	6/20/2022 13:48	0.93	6/20/2022 14:11	3.74	6/20/2022 15:34	-0.25	6/19/2022 14:22	11.13
6/19/2022 14:59	-0.03	6/20/2022 13:49	0.93	6/20/2022 14:12	3.70	6/20/2022 15:35	-0.21	6/19/2022 14:23	11.10
6/19/2022 15:00	-0.04	6/20/2022 13:50	0.94	6/20/2022 14:13	3.69	6/20/2022 15:36	-0.25	6/19/2022 14:24	11.13
6/19/2022 15:01	-0.04	6/20/2022 13:51	0.94	6/20/2022 14:14	3.71	6/20/2022 15:37	-0.31	6/19/2022 14:25	11.15
6/19/2022 15:02	-0.04	6/20/2022 13:52	0.94	6/20/2022 14:15	3.72	6/20/2022 15:38	-0.29	6/19/2022 14:26	11.13
6/19/2022 15:03	-0.03	6/20/2022 13:53	0.94	6/20/2022 14:16	3.73	6/20/2022 15:39	-0.29	6/19/2022 14:27	11.12
6/19/2022 15:04	-0.04	6/20/2022 13:54	0.94	6/20/2022 14:17	3.69	6/20/2022 15:40	-0.24	6/19/2022 14:28	11.17
6/19/2022 15:05	-0.04	6/20/2022 13:55	0.94	6/20/2022 14:18	3.72	6/20/2022 15:41	-0.22	6/19/2022 14:29	11.12
6/19/2022 15:06	-0.04	6/20/2022 13:56	0.94	6/20/2022 14:19	3.72	6/20/2022 15:42	-0.28	6/19/2022 14:30	11.16
6/19/2022 15:07	-0.04	6/20/2022 13:57	0.94	6/20/2022 14:20	3.72	6/20/2022 15:43	-0.27	6/19/2022 14:31	11.12
6/19/2022 15:08	-0.04	6/20/2022 13:58	0.94	6/20/2022 14:21	3.73	6/20/2022 15:44	-0.26	6/19/2022 14:32	11.12
6/19/2022 15:09	-0.04	6/20/2022 13:59	0.94	6/20/2022 14:22	3.73	6/20/2022 15:45	-0.28	6/19/2022 14:33	11.13
6/19/2022 15:10	-0.04	6/20/2022 14:00	0.94	6/20/2022 14:23	3.72	6/20/2022 15:46	-0.24	6/19/2022 14:34	11.10
6/19/2022 15:11	-0.04	6/20/2022 14:01	0.94	6/20/2022 14:24	3.73	6/20/2022 15:47	-0.25	6/19/2022 14:35	11.16
6/19/2022 15:12	-0.04	6/20/2022 14:02	0.94	6/20/2022 14:25	3.73	6/20/2022 15:48	-0.31	6/19/2022 14:36	11.22
6/19/2022 15:13	-0.04	6/20/2022 14:03	0.94	6/20/2022 14:26	3.74	6/20/2022 15:49	-0.28	6/19/2022 14:37	11.14
6/19/2022 15:14	-0.04	6/20/2022 14:04	0.94	6/20/2022 14:27	3.73	6/20/2022 15:50	-0.28	6/19/2022 14:38	11.06
6/19/2022 15:15	-0.04	6/20/2022 14:05	0.94	6/20/2022 14:28	3.73	6/20/2022 15:51	-0.29	6/19/2022 14:39	11.11
6/19/2022 15:16	-0.04	6/20/2022 14:06	0.96	6/20/2022 14:29	3.74	6/20/2022 15:52	-0.27	6/19/2022 14:40	11.14
6/19/2022 15:17	-0.04	6/20/2022 14:07	0.95	6/20/2022 14:30	3.72	6/20/2022 15:53	-0.28	6/19/2022 14:41	11.14
6/19/2022 15:18	-0.03	6/20/2022 14:08	0.95	6/20/2022 14:31	3.74	6/20/2022 15:54	-0.21	6/19/2022 14:42	11.18
6/19/2022 15:19	-0.03	6/20/2022 14:09	0.94	6/20/2022 14:32	3.77	6/20/2022 15:55	-0.29	6/19/2022 14:43	11.11
6/19/2022 15:20	-0.04	6/20/2022 14:10	0.95	6/20/2022 14:33	3.74	6/20/2022 15:56	-0.26	6/19/2022 14:44	11.14
6/19/2022 15:21	-0.04	6/20/2022 14:11	0.95	6/20/2022 14:34	3.72	6/20/2022 15:57	-0.28	6/19/2022 14:45	11.16
6/19/2022 15:22	-0.03	6/20/2022 14:12	0.95	6/20/2022 14:35	3.76	6/20/2022 15:58	-0.31	6/19/2022 14:46	11.11
6/19/2022 15:23	-0.03	6/20/2022 14:13	0.95	6/20/2022 14:36	3.75	6/20/2022 15:59	-0.30	6/19/2022 14:47	11.14
6/19/2022 15:24	-0.04	6/20/2022 14:14	0.95	6/20/2022 14:37	3.74	6/20/2022 16:00	-0.30	6/19/2022 14:48	11.16
6/19/2022 15:25	-0.04	6/20/2022 14:15	0.95	6/20/2022 14:38	3.74	6/20/2022 16:01	-0.28	6/19/2022 14:49	11.12
6/19/2022 15:26	-0.03	6/20/2022 14:16	0.94	6/20/2022 14:39	3.75	6/20/2022 16:02	-0.28	6/19/2022 14:50	11.15
6/19/2022 15:27	-0.04	6/20/2022 14:17	0.95	6/20/2022 14:40	3.77	6/20/2022 16:03	-0.28	6/19/2022 14:51	11.12
6/19/2022 15:28	-0.03	6/20/2022 14:18	0.95	6/20/2022 14:41	3.72	6/20/2022 16:04	-0.26	6/19/2022 14:52	11.12
6/19/2022 15:29	-0.04	6/20/2022 14:19	0.95	6/20/2022 14:42	3.78	6/20/2022 16:05	-0.24	6/19/2022 14:53	11.18
6/19/2022 15:30	-0.04	6/20/2022 14:20	0.95	6/20/2022 14:43	3.76	6/20/2022 16:06	-0.29	6/19/2022 14:54	11.12
6/19/2022 15:31	-0.04	6/20/2022 14:21	0.95	6/20/2022 14:44	3.79	6/20/2022 16:07	-0.29	6/19/2022 14:55	11.12
6/19/2022 15:32	-0.04	6/20/2022 14:22	0.95	6/20/2022 14:45	3.78	6/20/2022 16:08	-0.27	6/19/2022 14:56	11.11
6/19/2022 15:33	-0.04	6/20/2022 14:23	0.95	6/20/2022 14:46	3.79	6/20/2022 16:09	-0.24	6/19/2022 14:57	11.15
6/19/2022 15:34	-0.04	6/20/2022 14:24	0.95	6/20/2022 14:47	3.76	6/20/2022 16:10	-0.30	6/19/2022 14:58	11.16
6/19/2022 15:35	-0.04	6/20/2022 14:25	0.95	6/20/2022 14:48	3.75	6/20/2022 16:11	-0.29	6/19/2022 14:59	11.09
6/19/2022 15:36	-0.03	6/20/2022 14:26	0.96	6/20/2022 14:49	3.77	6/20/2022 16:12	-0.28	6/19/2022 15:00	11.11
6/19/2022 15:37	-0.04	6/20/2022 14:27	0.96	6/20/2022 14:50	3.79	6/20/2022 16:13	-0.27	6/19/2022 15:01	11.13
6/19/2022 15:38	-0.03	6/20/2022 14:28	0.96	6/20/2022 14:51	3.77	6/20/2022 16:14	-0.24	6/19/2022 15:02	11.14
6/19/2022 15:39	-0.04	6/20/2022 14:29	0.95	6/20/2022 14:52	3.79	6/20/2022 16:15	-0.31	6/19/2022 15:03	11.14
6/19/2022 15:40	-0.04	6/20/2022 14:30	0.96	6/20/2022 14:53	3.80	6/20/2022 16:16	-0.25	6/19/2022 15:04	11.07
6/19/2022 15:41	-0.04	6/20/2022 14:31	0.96	6/20/2022 14:54	3.79	6/20/2022 16:17	-0.28	6/19/2022 15:05	11.19
6/19/2022 15:42	-0.04	6/20/2022 14:32	0.96	6/20/2022 14:55	3.78	6/20/2022 16:18	-0.27	6/19/2022 15:06	11.16
6/19/2022 15:43	-0.04	6/20/2022 14:33	0.96	6/20/2022 14:56	3.77	6/20/2022 16:19	-0.28	6/19/2022 15:07	11.11
6/19/2022 15:44	-0.04	6/20/2022 14:34	0.95	6/20/2022 14:57	3.80	6/20/2022 16:20	-0.27	6/19/2022 15:08	11.10
6/19/2022 15:45	-0.04	6/20/2022 14:35	0.96	6/20/2022 14:58	3.78	6/20/2022 16:21	-0.28	6/19/2022 15:09	11.09
6/19/2022 15:46	-0.04	6/20/2022 14:36	0.96	6/20/2022 14:59	3.78	6/20/2022 16:22	-0.28	6/19/2022 15:10	11.18
6/19/2022 15:47	-0.04	6/20/2022 14:37	0.96	6/20/2022 15:00	3.80	6/20/2022 16:23	-0.24	6/19/2022 15:11	11.17
6/19/2022 15:48	-0.04	6/20/2022 14:38	0.96	6/20/2022 15:01	3.86	6/20/2022 16:24	-0.26	6/19/2022 15:12	11.16
6/19/2022 15:49	-0.04	6/20/2022 14:39	0.96	6/20/2022 15:02	3.79	6/20/2022 16:25	-0.29	6/19/2022 15:13	11.13
6/19/2022 15:50	-0.04	6/20/2022 14:40	0.96	6/20/2022 15:03	3.81	6/20/2022 16:26	-0.26	6/19/2022 15:14	11.15
6/19/2022 15:51	-0.04	6/20/2022 14:41	0.96	6/20/2022 15:04	3.81	6/20/2022 16:27	-0.26	6/19/2022 15:15	11.11
6/19/2022 15:52	-0.04	6/20/2022 14:42	0.97	6/20/2022 15:05	3.81	6/20/2022 16:28	-0.25	6/19/2022 15:16	11.11
6/19/2022 15:53	-0.03	6/20/2022 14:43	0.96	6/20/2022 15:06	3.80	6/20/2022 16:29	-0.29	6/19/2022 15:17	11.15
6/19/2022 15:54	-0.04	6/20/2022 14:44	0.97	6/20/2022 15:07	3.83	6/20/2022 16:30	-0.27	6/19/2022 15:18	11.14
6/19/2022 15:55	-0.04	6/20/2022 14:45	0.96	6/20/2022 15:08	3.84	6/20/2022 16:31	-0.30	6/19/2022 15:19	11.13
6/19/2022 15:56	-0.04	6/20/2022 14:46	0.97	6/20/2022 15:09	3.82	6/20/2022 16:32	-0.28	6/19/2022 15:20	11.13
6/19/2022 15:57	-0.04	6/20/2022 14:47	0.97	6/20/2022 15:10	3.82	6/20/2022 16:33	-0.26	6/19/2022 15:21	11.13
6/19/2022 15:58	-0.04	6/20/2022 14:48	0.97	6/20/2022 15:11	3.82	6/20/2022 16:34	-0.29	6/19/2022 15:22	11.11
6/19/2022 15:59	-0.04	6/20/2022 14:49	0.97	6/20/2022 15:12	3.84	6/20/2022 16:35	-0.29	6/19/2022 15:23	11.15
6/19/2022 16:00	-0.04	6/20/2022 14:50	0.97	6/20/2022 15:13	3.78	6/20/2022 16:36	-0.30	6/19/2022 15:24	11.12

6/19/2022 16:01	-0.04	6/20/2022 14:51	0.97	6/20/2022 15:14	3.87	6/20/2022 16:37	-0.30	6/19/2022 15:25	11.14
6/19/2022 16:02	-0.03	6/20/2022 14:52	0.97	6/20/2022 15:15	3.86	6/20/2022 16:38	-0.31	6/19/2022 15:26	11.15
6/19/2022 16:03	-0.03	6/20/2022 14:53	0.97	6/20/2022 15:16	3.86	6/20/2022 16:39	-0.26	6/19/2022 15:27	11.16
6/19/2022 16:04	-0.04	6/20/2022 14:54	0.97	6/20/2022 15:17	3.84	6/20/2022 16:40	-0.28	6/19/2022 15:28	11.16
6/19/2022 16:05	-0.04	6/20/2022 14:55	0.97	6/20/2022 15:18	3.82	6/20/2022 16:41	-0.31	6/19/2022 15:29	11.19
6/19/2022 16:06	-0.04	6/20/2022 14:56	0.97	6/20/2022 15:19	3.84	6/20/2022 16:42	-0.29	6/19/2022 15:30	11.14
6/19/2022 16:07	-0.04	6/20/2022 14:57	0.97	6/20/2022 15:20	3.81	6/20/2022 16:43	-0.25	6/19/2022 15:31	11.14
6/19/2022 16:08	-0.04	6/20/2022 14:58	0.98	6/20/2022 15:21	3.86	6/20/2022 16:44	-0.26	6/19/2022 15:32	11.11
6/19/2022 16:09	-0.04	6/20/2022 14:59	0.97	6/20/2022 15:22	3.84	6/20/2022 16:45	-0.28	6/19/2022 15:33	11.09
6/19/2022 16:10	-0.04	6/20/2022 15:00	0.98	6/20/2022 15:23	3.85	6/20/2022 16:46	-0.27	6/19/2022 15:34	11.17
6/19/2022 16:11	-0.03	6/20/2022 15:01	0.98	6/20/2022 15:24	3.84	6/20/2022 16:47	-0.34	6/19/2022 15:35	11.14
6/19/2022 16:12	-0.03	6/20/2022 15:02	0.98	6/20/2022 15:25	3.86	6/20/2022 16:48	-0.26	6/19/2022 15:36	11.16
6/19/2022 16:13	-0.04	6/20/2022 15:03	0.98	6/20/2022 15:26	3.84	6/20/2022 16:49	-0.26	6/19/2022 15:37	11.14
6/19/2022 16:14	-0.04	6/20/2022 15:04	0.98	6/20/2022 15:27	3.90	6/20/2022 16:50	-0.28	6/19/2022 15:38	11.17
6/19/2022 16:15	-0.04	6/20/2022 15:05	0.98	6/20/2022 15:28	3.85	6/20/2022 16:51	-0.30	6/19/2022 15:39	11.11
6/19/2022 16:16	-0.03	6/20/2022 15:06	0.98	6/20/2022 15:29	3.81	6/20/2022 16:52	-0.27	6/19/2022 15:40	11.16
6/19/2022 16:17	-0.04	6/20/2022 15:07	0.98	6/20/2022 15:30	3.84	6/20/2022 16:53	-0.28	6/19/2022 15:41	11.15
6/19/2022 16:18	-0.03	6/20/2022 15:08	0.98	6/20/2022 15:31	3.85	6/20/2022 16:54	-0.32	6/19/2022 15:42	11.09
6/19/2022 16:19	-0.04	6/20/2022 15:09	0.99	6/20/2022 15:32	3.87	6/20/2022 16:55	-0.29	6/19/2022 15:43	11.12
6/19/2022 16:20	-0.04	6/20/2022 15:10	0.98	6/20/2022 15:33	3.88	6/20/2022 16:56	-0.30	6/19/2022 15:44	11.14
6/19/2022 16:21	-0.04	6/20/2022 15:11	0.99	6/20/2022 15:34	3.86	6/20/2022 16:57	-0.27	6/19/2022 15:45	11.09
6/19/2022 16:22	-0.04	6/20/2022 15:12	0.98	6/20/2022 15:35	3.89	6/20/2022 16:58	-0.27	6/19/2022 15:46	11.11
6/19/2022 16:23	-0.04	6/20/2022 15:13	0.99	6/20/2022 15:36	3.91	6/20/2022 16:59	-0.28	6/19/2022 15:47	11.14
6/19/2022 16:24	-0.04	6/20/2022 15:14	0.99	6/20/2022 15:37	3.88	6/20/2022 17:00	-0.28	6/19/2022 15:48	11.16
6/19/2022 16:25	-0.04	6/20/2022 15:15	0.99	6/20/2022 15:38	3.88	6/20/2022 17:01	-0.28	6/19/2022 15:49	11.12
6/19/2022 16:26	-0.03	6/20/2022 15:16	0.99	6/20/2022 15:39	3.86	6/20/2022 17:02	-0.26	6/19/2022 15:50	11.13
6/19/2022 16:27	-0.04	6/20/2022 15:17	0.99	6/20/2022 15:40	3.89	6/20/2022 17:03	-0.28	6/19/2022 15:51	11.10
6/19/2022 16:28	-0.03	6/20/2022 15:18	0.99	6/20/2022 15:41	3.88	6/20/2022 17:04	-0.29	6/19/2022 15:52	11.13
6/19/2022 16:29	-0.04	6/20/2022 15:19	0.99	6/20/2022 15:42	3.89	6/20/2022 17:05	-0.31	6/19/2022 15:53	11.12
6/19/2022 16:30	-0.04	6/20/2022 15:20	0.99	6/20/2022 15:43	3.88	6/20/2022 17:06	-0.26	6/19/2022 15:54	11.16
6/19/2022 16:31	-0.04	6/20/2022 15:21	0.99	6/20/2022 15:44	3.88	6/20/2022 17:07	-0.28	6/19/2022 15:55	11.13
6/19/2022 16:32	-0.04	6/20/2022 15:22	0.99	6/20/2022 15:45	3.90	6/20/2022 17:08	-0.28	6/19/2022 15:56	11.13
6/19/2022 16:33	-0.04	6/20/2022 15:23	0.99	6/20/2022 15:46	3.90	6/20/2022 17:09	-0.31	6/19/2022 15:57	11.17
6/19/2022 16:34	-0.04	6/20/2022 15:24	0.99	6/20/2022 15:47	3.89	6/20/2022 17:10	-0.27	6/19/2022 15:58	11.09
6/19/2022 16:35	-0.04	6/20/2022 15:25	1.01	6/20/2022 15:48	3.90	6/20/2022 17:11	-0.28	6/19/2022 15:59	11.19
6/19/2022 16:36	-0.04	6/20/2022 15:26	0.99	6/20/2022 15:49	3.92	6/20/2022 17:12	-0.24	6/19/2022 16:00	11.18
6/19/2022 16:37	-0.04	6/20/2022 15:27	0.99	6/20/2022 15:50	3.92	6/20/2022 17:13	-0.27	6/19/2022 16:01	11.11
6/19/2022 16:38	-0.04	6/20/2022 15:28	1.02	6/20/2022 15:51	3.88	6/20/2022 17:14	-0.27	6/19/2022 16:02	11.10
6/19/2022 16:39	-0.04	6/20/2022 15:29	0.99	6/20/2022 15:52	3.90	6/20/2022 17:15	-0.28	6/19/2022 16:03	11.14
6/19/2022 16:40	-0.04	6/20/2022 15:30	0.99	6/20/2022 15:53	3.89	6/20/2022 17:16	-0.29	6/19/2022 16:04	11.12
6/19/2022 16:41	-0.04	6/20/2022 15:31	0.99	6/20/2022 15:54	3.91	6/20/2022 17:17	-0.31	6/19/2022 16:05	11.15
6/19/2022 16:42	-0.04	6/20/2022 15:32	1.00	6/20/2022 15:55	3.95	6/20/2022 17:18	-0.25	6/19/2022 16:06	11.17
6/19/2022 16:43	-0.04	6/20/2022 15:33	1.00	6/20/2022 15:56	3.91	6/20/2022 17:19	-0.31	6/19/2022 16:07	11.15
6/19/2022 16:44	-0.03	6/20/2022 15:34	1.00	6/20/2022 15:57	3.94	6/20/2022 17:20	-0.32	6/19/2022 16:08	11.12
6/19/2022 16:45	-0.04	6/20/2022 15:35	1.00	6/20/2022 15:58	3.90	6/20/2022 17:21	-0.27	6/19/2022 16:09	11.10
6/19/2022 16:46	-0.04	6/20/2022 15:36	1.00	6/20/2022 15:59	3.93	6/20/2022 17:22	-0.30	6/19/2022 16:10	11.13
6/19/2022 16:47	-0.04	6/20/2022 15:37	1.00	6/20/2022 16:00	3.92	6/20/2022 17:23	-0.27	6/19/2022 16:11	11.10
6/19/2022 16:48	-0.04	6/20/2022 15:38	1.00	6/20/2022 16:01	3.91	6/20/2022 17:24	-0.28	6/19/2022 16:12	11.10
6/19/2022 16:49	-0.04	6/20/2022 15:39	1.00	6/20/2022 16:02	3.92	6/20/2022 17:25	-0.30	6/19/2022 16:13	11.13
6/19/2022 16:50	-0.04	6/20/2022 15:40	1.00	6/20/2022 16:03	3.96	6/20/2022 17:26	-0.31	6/19/2022 16:14	11.15
6/19/2022 16:51	-0.04	6/20/2022 15:41	1.00	6/20/2022 16:04	3.92	6/20/2022 17:27	-0.25	6/19/2022 16:15	11.13
6/19/2022 16:52	-0.04	6/20/2022 15:42	1.02	6/20/2022 16:05	3.96	6/20/2022 17:28	-0.26	6/19/2022 16:16	11.14
6/19/2022 16:53	-0.04	6/20/2022 15:43	1.00	6/20/2022 16:06	3.94	6/20/2022 17:29	-0.24	6/19/2022 16:17	11.13
6/19/2022 16:54	-0.04	6/20/2022 15:44	1.01	6/20/2022 16:07	3.93	6/20/2022 17:30	-0.28	6/19/2022 16:18	11.15
6/19/2022 16:55	-0.04	6/20/2022 15:45	1.01	6/20/2022 16:08	3.94	6/20/2022 17:31	-0.29	6/19/2022 16:19	11.16
6/19/2022 16:56	-0.04	6/20/2022 15:46	1.01	6/20/2022 16:09	3.95	6/20/2022 17:32	-0.26	6/19/2022 16:20	11.14
6/19/2022 16:57	-0.04	6/20/2022 15:47	1.01	6/20/2022 16:10	3.96	6/20/2022 17:33	-0.26	6/19/2022 16:21	11.14
6/19/2022 16:58	-0.04	6/20/2022 15:48	1.01	6/20/2022 16:11	3.94	6/20/2022 17:34	-0.28	6/19/2022 16:22	11.15
6/19/2022 16:59	-0.03	6/20/2022 15:49	1.01	6/20/2022 16:12	3.96	6/20/2022 17:35	-0.27	6/19/2022 16:23	11.20
6/19/2022 17:00	-0.04	6/20/2022 15:50	1.01	6/20/2022 16:13	3.98	6/20/2022 17:36	-0.26	6/19/2022 16:24	11.15
6/19/2022 17:01	-0.04	6/20/2022 15:51	1.01	6/20/2022 16:14	3.96	6/20/2022 17:37	-0.28	6/19/2022 16:25	11.15
6/19/2022 17:02	-0.04	6/20/2022 15:52	1.01	6/20/2022 16:15	3.98	6/20/2022 17:38	-0.27	6/19/2022 16:26	11.16
6/19/2022 17:03	-0.04	6/20/2022 15:53	1.01	6/20/2022 16:16	3.96	6/20/2022 17:39	-0.29	6/19/2022 16:27	11.13
6/19/2022 17:04	-0.03	6/20/2022 15:54	1.01	6/20/2022 16:17	3.94	6/20/2022 17:40	-0.26	6/19/2022 16:28	11.15
6/19/2022 17:05	-0.04	6/20/2022 15:55	1.01	6/20/2022 16:18	3.95	6/20/2022 17:41	-0.31	6/19/2022 16:29	11.14
6/19/2022 17:06	-0.04	6/20/2022 15:56	1.01	6/20/2022 16:19	3.96	6/20/2022 17:42	-0.29	6/19/2022 16:30	11.14
6/19/2022 17:07	-0.04	6/20/2022 15:57	1.01	6/20/2022 16:20	3.96	6/20/2022 17:43	-0.31	6/19/2022 16:31	11.10
6/19/2022 17:08	-0.04	6/20/2022 15:58	1.01	6/20/2022 16:21	3.94	6/20/2022 17:44	-0.29	6/19/2022 16:32	11.16
6/19/2022 17:09	-0.04	6/20/2022 15:59	1.01	6/20/2022 16:22	3.98	6/20/2022 17:45	-0.30	6/19/2022 16:33	11.14
6/19/2022 17:10	-0.03	6/20/2022 16:00	1.01	6/20/2022 16:23	3.96	6/20/2022 17:46	-0.28	6/19/2022 16:34	11.15
6/19/2022 17:11	-0.04	6/20/2022 16:01	1.02	6/20/2022 16:24	3.95	6/20/2022 17:47	-0.25	6/19/2022 16:35	11.12
6/19/2022 17:12	-0.04	6/20/2022 16:02	1.01	6/20/2022 16:25	3.97	6/20/2022 17:48	-0.28	6/19/2022 16:36	11.20
6/19/2022 17:13	-0.04	6/20/2022 16:03	1.01	6/20/2022 16:26	3.95	6/20/2022 17:49	-0.27	6/19/2022 16:37	11.09
6/19/2022 17:14	-0.04	6/20/2022 16:04	1.02	6/20/2022 16:27	4.01	6/20/2022 17:50	-0.26	6/19/2022 16:38	11.12
6/19/2022 17:15	-0.03	6/20/2022 16:05	1.02	6/20/2022 16:28	3.98	6/20/2022 17:51	-0.29	6/19/2022 16:39	11.14
6/19/2022 17:16	-0.04	6/20/2022 16:06	1.02	6/20/2022 16:29	3.94	6/20/2022 17:52	-0.32	6/19/2022 16:40	11.17
6/19/2022 17:17	-0.04	6/20/2022 16:07	1.02	6/20/2022 16:30	3.98	6/20/2022 17:53	-0.26	6/19/2022 16:41	11.17
6/19/2022 17:18	-0.04	6/20/2022 16:08	1.02	6/20/2022 16:31	3.99	6/20/2022 17:54	-0.31	6/19/2022 16:42	11.14
6/19/2022 17:19	-0.04	6/20/2022 16:09	1.02	6/20/2022 16:32	3.98	6/20/2022 17:55	-0.24	6/19/2022 16:43	11.15
6/19/2022 17:20	-0.04	6/20/2022 16:10	1.02	6/20/2022 16:33	3.98	6/20/2022 17:56	-0.23	6/19/2022 16:44	11.17
6/19/2022 17:21	-0.04	6/20/2022 16:11	1.02	6/20/2022 16:34	4.01	6/20/2022 17:57	-0.27	6/19/2022 16:45	11.18
6/19/2022 17:22	-0.04	6/20/2022 16:12	1.02	6/20/2022 16:35	4.02	6/20/2022 17:58	-0.31	6/19/2022 16:46	11.15
6/19/2022 17:23	-0.03	6/20/2022 16:13	1.02	6/20/2022 16:36	4.00	6/20/2022 17:59	-0.26	6/19/2022 16:47	11.14
6/19/2022 17:24	-0.04	6/20/2022 16:14	1.02	6/20/2022 16:37	4.00	6/20/2022 18:00	-0.29	6/19/2022 16:48	11.08
6/19/2022 17:25	-0.04	6/20/2022 16:15	1.03	6/20/2022 16:38	3.99	6/20/2022 18:01	-0.28	6/19/2022 16:49	11.11
6/19/2022 17:26	-0.04	6/20/2022 16:16	1.03	6/20/2022 16:39	4.00	6/20/2022 18:02	-0.28	6/19/2022 16:50	11.14
6/19/2022 17:27	-0.04	6/20/2022 16:17	1.02	6/20/2022 16:40	4.02	6/20/2022 18:03	-0.29	6/19/2022 16:51	11.19
6/19/2022 17:28	-0.04	6/20/2022 16:18	1.02	6/20/2022 16:41	4.02	6/20/2022 18:04	-0.28	6/19/2022 16:52	11.09

6/19/2022 17:29	-0.04	6/20/2022 16:19	1.03	6/20/2022 16:42	4.00	6/20/2022 18:05	-0.25	6/19/2022 16:53	11.12
6/19/2022 17:30	-0.03	6/20/2022 16:20	1.02	6/20/2022 16:43	4.01	6/20/2022 18:06	-0.26	6/19/2022 16:54	11.15
6/19/2022 17:31	-0.04	6/20/2022 16:21	1.03	6/20/2022 16:44	4.02	6/20/2022 18:07	-0.24	6/19/2022 16:55	11.10
6/19/2022 17:32	-0.04	6/20/2022 16:22	1.02	6/20/2022 16:45	4.01	6/20/2022 18:08	-0.23	6/19/2022 16:56	11.16
6/19/2022 17:33	-0.04	6/20/2022 16:23	1.03	6/20/2022 16:46	3.98	6/20/2022 18:09	-0.30	6/19/2022 16:57	11.14
6/19/2022 17:34	-0.04	6/20/2022 16:24	1.03	6/20/2022 16:47	4.02	6/20/2022 18:10	-0.27	6/19/2022 16:58	11.11
6/19/2022 17:35	-0.04	6/20/2022 16:25	1.03	6/20/2022 16:48	4.05	6/20/2022 18:11	-0.29	6/19/2022 16:59	11.16
6/19/2022 17:36	-0.04	6/20/2022 16:26	1.03	6/20/2022 16:49	4.06	6/20/2022 18:12	-0.28	6/19/2022 17:00	11.18
6/19/2022 17:37	-0.04	6/20/2022 16:27	1.03	6/20/2022 16:50	4.01	6/20/2022 18:13	-0.32	6/19/2022 17:01	11.13
6/19/2022 17:38	-0.04	6/20/2022 16:28	1.02	6/20/2022 16:51	4.01	6/20/2022 18:14	-0.32	6/19/2022 17:02	11.11
6/19/2022 17:39	-0.04	6/20/2022 16:29	1.03	6/20/2022 16:52	4.06	6/20/2022 18:15	-0.29	6/19/2022 17:03	11.16
6/19/2022 17:40	-0.04	6/20/2022 16:30	1.03	6/20/2022 16:53	4.02	6/20/2022 18:16	-0.29	6/19/2022 17:04	11.13
6/19/2022 17:41	-0.04	6/20/2022 16:31	1.03	6/20/2022 16:54	4.02	6/20/2022 18:17	-0.24	6/19/2022 17:05	11.13
6/19/2022 17:42	-0.04	6/20/2022 16:32	1.03	6/20/2022 16:55	4.05	6/20/2022 18:18	-0.28	6/19/2022 17:06	11.14
6/19/2022 17:43	-0.03	6/20/2022 16:33	1.03	6/20/2022 16:56	4.07	6/20/2022 18:19	-0.26	6/19/2022 17:07	11.18
6/19/2022 17:44	-0.04	6/20/2022 16:34	1.03	6/20/2022 16:57	4.05	6/20/2022 18:20	-0.29	6/19/2022 17:08	11.12
6/19/2022 17:45	-0.04	6/20/2022 16:35	1.03	6/20/2022 16:58	4.03	6/20/2022 18:21	-0.25	6/19/2022 17:09	11.16
6/19/2022 17:46	-0.04	6/20/2022 16:36	1.03	6/20/2022 16:59	4.04	6/20/2022 18:22	-0.28	6/19/2022 17:10	11.13
6/19/2022 17:47	-0.04	6/20/2022 16:37	1.04	6/20/2022 17:00	4.02	6/20/2022 18:23	-0.28	6/19/2022 17:11	11.14
6/19/2022 17:48	-0.04	6/20/2022 16:38	1.04	6/20/2022 17:01	4.06	6/20/2022 18:24	-0.28	6/19/2022 17:12	11.11
6/19/2022 17:49	-0.04	6/20/2022 16:39	1.03	6/20/2022 17:02	4.02	6/20/2022 18:25	-0.29	6/19/2022 17:13	11.17
6/19/2022 17:50	-0.04	6/20/2022 16:40	1.03	6/20/2022 17:03	4.06	6/20/2022 18:26	-0.29	6/19/2022 17:14	11.08
6/19/2022 17:51	-0.04	6/20/2022 16:41	1.04	6/20/2022 17:04	4.05	6/20/2022 18:27	-0.29	6/19/2022 17:15	11.13
6/19/2022 17:52	-0.04	6/20/2022 16:42	1.04	6/20/2022 17:05	4.09	6/20/2022 18:28	-0.29	6/19/2022 17:16	11.13
6/19/2022 17:53	-0.04	6/20/2022 16:43	1.04	6/20/2022 17:06	4.06	6/20/2022 18:29	-0.24	6/19/2022 17:17	11.16
6/19/2022 17:54	-0.04	6/20/2022 16:44	1.04	6/20/2022 17:07	4.06	6/20/2022 18:30	-0.30	6/19/2022 17:18	11.14
6/19/2022 17:55	-0.04	6/20/2022 16:45	1.04	6/20/2022 17:08	4.06	6/20/2022 18:31	-0.29	6/19/2022 17:19	11.13
6/19/2022 17:56	-0.04	6/20/2022 16:46	1.04	6/20/2022 17:09	4.05	6/20/2022 18:32	-0.30	6/19/2022 17:20	11.13
6/19/2022 17:57	-0.04	6/20/2022 16:47	1.04	6/20/2022 17:10	4.03	6/20/2022 18:33	-0.29	6/19/2022 17:21	11.14
6/19/2022 17:58	-0.04	6/20/2022 16:48	1.04	6/20/2022 17:11	4.07	6/20/2022 18:34	-0.29	6/19/2022 17:22	11.18
6/19/2022 17:59	-0.04	6/20/2022 16:49	1.04	6/20/2022 17:12	4.06	6/20/2022 18:35	-0.27	6/19/2022 17:23	11.12
6/19/2022 18:00	-0.04	6/20/2022 16:50	1.04	6/20/2022 17:13	4.03	6/20/2022 18:36	-0.27	6/19/2022 17:24	11.15
6/19/2022 18:01	-0.04	6/20/2022 16:51	1.04	6/20/2022 17:14	4.08	6/20/2022 18:37	-0.28	6/19/2022 17:25	11.13
6/19/2022 18:02	-0.04	6/20/2022 16:52	1.04	6/20/2022 17:15	4.06	6/20/2022 18:38	-0.30	6/19/2022 17:26	11.11
6/19/2022 18:03	-0.04	6/20/2022 16:53	1.04	6/20/2022 17:16	4.06	6/20/2022 18:39	-0.29	6/19/2022 17:27	11.10
6/19/2022 18:04	-0.04	6/20/2022 16:54	1.04	6/20/2022 17:17	4.09	6/20/2022 18:40	-0.28	6/19/2022 17:28	11.15
6/19/2022 18:05	-0.04	6/20/2022 16:55	1.05	6/20/2022 17:18	4.10	6/20/2022 18:41	-0.29	6/19/2022 17:29	11.16
6/19/2022 18:06	-0.04	6/20/2022 16:56	1.05	6/20/2022 17:19	4.12	6/20/2022 18:42	-0.28	6/19/2022 17:30	11.17
6/19/2022 18:07	-0.03	6/20/2022 16:57	1.05	6/20/2022 17:20	4.07	6/20/2022 18:43	-0.29	6/19/2022 17:31	11.10
6/19/2022 18:08	-0.04	6/20/2022 16:58	1.05	6/20/2022 17:21	4.08	6/20/2022 18:44	-0.26	6/19/2022 17:32	11.12
6/19/2022 18:09	-0.04	6/20/2022 16:59	1.05	6/20/2022 17:22	4.06	6/20/2022 18:45	-0.27	6/19/2022 17:33	11.13
6/19/2022 18:10	-0.04	6/20/2022 17:00	1.05	6/20/2022 17:23	4.10	6/20/2022 18:46	-0.26	6/19/2022 17:34	11.09
6/19/2022 18:11	-0.04	6/20/2022 17:01	1.05	6/20/2022 17:24	4.10	6/20/2022 18:47	-0.26	6/19/2022 17:35	11.08
6/19/2022 18:12	-0.04	6/20/2022 17:02	1.05	6/20/2022 17:25	4.09	6/20/2022 18:48	-0.29	6/19/2022 17:36	11.19
6/19/2022 18:13	-0.04	6/20/2022 17:03	1.05	6/20/2022 17:26	4.11	6/20/2022 18:49	-0.28	6/19/2022 17:37	11.15
6/19/2022 18:14	-0.04	6/20/2022 17:04	1.05	6/20/2022 17:27	4.06	6/20/2022 18:50	-0.29	6/19/2022 17:38	11.14
6/19/2022 18:15	-0.04	6/20/2022 17:05	1.05	6/20/2022 17:28	4.07	6/20/2022 18:51	-0.29	6/19/2022 17:39	11.18
6/19/2022 18:16	-0.04	6/20/2022 17:06	1.05	6/20/2022 17:29	4.10	6/20/2022 18:52	-0.25	6/19/2022 17:40	11.15
6/19/2022 18:17	-0.04	6/20/2022 17:07	1.05	6/20/2022 17:30	4.11	6/20/2022 18:53	-0.30	6/19/2022 17:41	11.15
6/19/2022 18:18	-0.04	6/20/2022 17:08	1.05	6/20/2022 17:31	4.11	6/20/2022 18:54	-0.29	6/19/2022 17:42	11.14
6/19/2022 18:19	-0.04	6/20/2022 17:09	1.06	6/20/2022 17:32	4.10	6/20/2022 18:55	-0.30	6/19/2022 17:43	11.13
6/19/2022 18:20	-0.04	6/20/2022 17:10	1.06	6/20/2022 17:33	4.12	6/20/2022 18:56	-0.31	6/19/2022 17:44	11.11
6/19/2022 18:21	-0.04	6/20/2022 17:11	1.06	6/20/2022 17:34	4.11	6/20/2022 18:57	-0.29	6/19/2022 17:45	11.13
6/19/2022 18:22	-0.04	6/20/2022 17:12	1.06	6/20/2022 17:35	4.10	6/20/2022 18:58	-0.28	6/19/2022 17:46	11.11
6/19/2022 18:23	-0.03	6/20/2022 17:13	1.06	6/20/2022 17:36	4.09	6/20/2022 18:59	-0.33	6/19/2022 17:47	11.14
6/19/2022 18:24	-0.04	6/20/2022 17:14	1.06	6/20/2022 17:37	4.11	6/20/2022 19:00	-0.21	6/19/2022 17:48	11.16
6/19/2022 18:25	-0.04	6/20/2022 17:15	1.06	6/20/2022 17:38	4.11	6/20/2022 19:01	-0.27	6/19/2022 17:49	11.16
6/19/2022 18:26	-0.04	6/20/2022 17:16	1.06	6/20/2022 17:39	4.18	6/20/2022 19:02	-0.25	6/19/2022 17:50	11.16
6/19/2022 18:27	-0.04	6/20/2022 17:17	1.06	6/20/2022 17:40	4.11	6/20/2022 19:03	-0.31	6/19/2022 17:51	11.11
6/19/2022 18:28	-0.04	6/20/2022 17:18	1.07	6/20/2022 17:41	4.10	6/20/2022 19:04	-0.25	6/19/2022 17:52	11.15
6/19/2022 18:29	-0.04	6/20/2022 17:19	1.06	6/20/2022 17:42	4.11	6/20/2022 19:05	-0.29	6/19/2022 17:53	11.14
6/19/2022 18:30	-0.04	6/20/2022 17:20	1.07	6/20/2022 17:43	4.10	6/20/2022 19:06	-0.30	6/19/2022 17:54	11.14
6/19/2022 18:31	-0.04	6/20/2022 17:21	1.07	6/20/2022 17:44	4.12	6/20/2022 19:07	-0.30	6/19/2022 17:55	11.14
6/19/2022 18:32	-0.04	6/20/2022 17:22	1.07	6/20/2022 17:45	4.15	6/20/2022 19:08	-0.28	6/19/2022 17:56	11.17
6/19/2022 18:33	-0.04	6/20/2022 17:23	1.07	6/20/2022 17:46	4.14	6/20/2022 19:09	-0.32	6/19/2022 17:57	11.16
6/19/2022 18:34	-0.03	6/20/2022 17:24	1.07	6/20/2022 17:47	4.14	6/20/2022 19:10	-0.28	6/19/2022 17:58	11.18
6/19/2022 18:35	-0.04	6/20/2022 17:25	1.07	6/20/2022 17:48	4.18	6/20/2022 19:11	-0.30	6/19/2022 17:59	11.14
6/19/2022 18:36	-0.04	6/20/2022 17:26	1.07	6/20/2022 17:49	4.16	6/20/2022 19:12	-0.28	6/19/2022 18:00	11.17
6/19/2022 18:37	-0.03	6/20/2022 17:27	1.07	6/20/2022 17:50	4.16	6/20/2022 19:13	-0.27	6/19/2022 18:01	11.13
6/19/2022 18:38	-0.04	6/20/2022 17:28	1.07	6/20/2022 17:51	4.15	6/20/2022 19:14	-0.27	6/19/2022 18:02	11.17
6/19/2022 18:39	-0.03	6/20/2022 17:29	1.07	6/20/2022 17:52	4.16	6/20/2022 19:15	-0.30	6/19/2022 18:03	11.10
6/19/2022 18:40	-0.04	6/20/2022 17:30	1.07	6/20/2022 17:53	4.14	6/20/2022 19:16	-0.32	6/19/2022 18:04	11.14
6/19/2022 18:41	-0.04	6/20/2022 17:31	1.08	6/20/2022 17:54	4.12	6/20/2022 19:17	-0.30	6/19/2022 18:05	11.19
6/19/2022 18:42	-0.04	6/20/2022 17:32	1.08	6/20/2022 17:55	4.13	6/20/2022 19:18	-0.29	6/19/2022 18:06	11.17
6/19/2022 18:43	-0.03	6/20/2022 17:33	1.08	6/20/2022 17:56	4.18	6/20/2022 19:19	-0.27	6/19/2022 18:07	11.18
6/19/2022 18:44	-0.04	6/20/2022 17:34	1.08	6/20/2022 17:57	4.16	6/20/2022 19:20	-0.26	6/19/2022 18:08	11.12
6/19/2022 18:45	-0.04	6/20/2022 17:35	1.08	6/20/2022 17:58	4.15	6/20/2022 19:21	-0.33	6/19/2022 18:09	11.16
6/19/2022 18:46	-0.04	6/20/2022 17:36	1.08	6/20/2022 17:59	4.19	6/20/2022 19:22	-0.29	6/19/2022 18:10	11.16
6/19/2022 18:47	-0.04	6/20/2022 17:37	1.08	6/20/2022 18:00	4.15	6/20/2022 19:23	-0.30	6/19/2022 18:11	11.10
6/19/2022 18:48	-0.04	6/20/2022 17:38	1.08	6/20/2022 18:01	4.15	6/20/2022 19:24	-0.28	6/19/2022 18:12	11.14
6/19/2022 18:49	-0.04	6/20/2022 17:39	1.08	6/20/2022 18:02	4.15	6/20/2022 19:25	-0.29	6/19/2022 18:13	11.15
6/19/2022 18:50	-0.04	6/20/2022 17:40	1.08	6/20/2022 18:03	4.13	6/20/2022 19:26	-0.28	6/19/2022 18:14	11.16
6/19/2022 18:51	-0.04	6/20/2022 17:41	1.08	6/20/2022 18:04	4.18	6/20/2022 19:27	-0.33	6/19/2022 18:15	11.18
6/19/2022 18:52	-0.04	6/20/2022 17:42	1.08	6/20/2022 18:05	4.20	6/20/2022 19:28	-0.26	6/19/2022 18:16	11.07
6/19/2022 18:53	-0.04	6/20/2022 17:43	1.08	6/20/2022 18:06	4.17	6/20/2022 19:29	-0.28	6/19/2022 18:17	11.18
6/19/2022 18:54	-0.04	6/20/2022 17:44	1.09	6/20/2022 18:07	4.16	6/20/2022 19:30	-0.30	6/19/2022 18:18	11.18
6/19/2022 18:55	-0.04	6/20/2022 17:45	1.09	6/20/2022 18:08	4.20	6/20/2022 19:31	-0.28	6/19/2022 18:19	11.19
6/19/2022 18:56	-0.04	6/20/2022 17:46	1.09	6/20/2022 18:09	4.21	6/20/2022 19:32	-0.30	6/19/2022 18:20	11.16

6/19/2022 18:57	-0.04	6/20/2022 17:47	1.09	6/20/2022 18:10	4.20	6/20/2022 19:33	-0.26	6/19/2022 18:21	11.16
6/19/2022 18:58	-0.04	6/20/2022 17:48	1.09	6/20/2022 18:11	4.17	6/20/2022 19:34	-0.31	6/19/2022 18:22	11.15
6/19/2022 18:59	-0.04	6/20/2022 17:49	1.09	6/20/2022 18:12	4.14	6/20/2022 19:35	-0.30	6/19/2022 18:23	11.18
6/19/2022 19:00	-0.04	6/20/2022 17:50	1.09	6/20/2022 18:13	4.16	6/20/2022 19:36	-0.28	6/19/2022 18:24	11.11
6/19/2022 19:01	-0.04	6/20/2022 17:51	1.09	6/20/2022 18:14	4.17	6/20/2022 19:37	-0.29	6/19/2022 18:25	11.10
6/19/2022 19:02	-0.04	6/20/2022 17:52	1.09	6/20/2022 18:15	4.15	6/20/2022 19:38	-0.30	6/19/2022 18:26	11.13
6/19/2022 19:03	-0.04	6/20/2022 17:53	1.09	6/20/2022 18:16	4.20	6/20/2022 19:39	-0.30	6/19/2022 18:27	11.20
6/19/2022 19:04	-0.04	6/20/2022 17:54	1.09	6/20/2022 18:17	4.19	6/20/2022 19:40	-0.30	6/19/2022 18:28	11.19
6/19/2022 19:05	-0.04	6/20/2022 17:55	1.10	6/20/2022 18:18	4.18	6/20/2022 19:41	-0.28	6/19/2022 18:29	11.16
6/19/2022 19:06	-0.04	6/20/2022 17:56	1.10	6/20/2022 18:19	4.22	6/20/2022 19:42	-0.31	6/19/2022 18:30	11.10
6/19/2022 19:07	-0.04	6/20/2022 17:57	1.10	6/20/2022 18:20	4.17	6/20/2022 19:43	-0.28	6/19/2022 18:31	11.12
6/19/2022 19:08	-0.04	6/20/2022 17:58	1.10	6/20/2022 18:21	4.21	6/20/2022 19:44	-0.27	6/19/2022 18:32	11.14
6/19/2022 19:09	-0.04	6/20/2022 17:59	1.12	6/20/2022 18:22	4.20	6/20/2022 19:45	-0.30	6/19/2022 18:33	11.17
6/19/2022 19:10	-0.04	6/20/2022 18:00	1.10	6/20/2022 18:23	4.19	6/20/2022 19:46	-0.28	6/19/2022 18:34	11.17
6/19/2022 19:11	-0.03	6/20/2022 18:01	1.10	6/20/2022 18:24	4.23	6/20/2022 19:47	-0.28	6/19/2022 18:35	11.13
6/19/2022 19:12	-0.04	6/20/2022 18:02	1.10	6/20/2022 18:25	4.21	6/20/2022 19:48	-0.30	6/19/2022 18:36	11.14
6/19/2022 19:13	-0.04	6/20/2022 18:03	1.10	6/20/2022 18:26	4.20	6/20/2022 19:49	-0.31	6/19/2022 18:37	11.18
6/19/2022 19:14	-0.04	6/20/2022 18:04	1.10	6/20/2022 18:27	4.22	6/20/2022 19:50	-0.31	6/19/2022 18:38	11.14
6/19/2022 19:15	-0.04	6/20/2022 18:05	1.11	6/20/2022 18:28	4.21	6/20/2022 19:51	-0.29	6/19/2022 18:39	11.17
6/19/2022 19:16	-0.04	6/20/2022 18:06	1.11	6/20/2022 18:29	4.18	6/20/2022 19:52	-0.29	6/19/2022 18:40	11.16
6/19/2022 19:17	-0.04	6/20/2022 18:07	1.11	6/20/2022 18:30	4.18	6/20/2022 19:53	-0.27	6/19/2022 18:41	11.16
6/19/2022 19:18	-0.04	6/20/2022 18:08	1.11	6/20/2022 18:31	4.21	6/20/2022 19:54	-0.32	6/19/2022 18:42	11.15
6/19/2022 19:19	-0.04	6/20/2022 18:09	1.11	6/20/2022 18:32	4.21	6/20/2022 19:55	-0.27	6/19/2022 18:43	11.21
6/19/2022 19:20	-0.04	6/20/2022 18:10	1.11	6/20/2022 18:33	4.20	6/20/2022 19:56	-0.29	6/19/2022 18:44	11.12
6/19/2022 19:21	-0.04	6/20/2022 18:11	1.11	6/20/2022 18:34	4.21	6/20/2022 19:57	-0.32	6/19/2022 18:45	11.13
6/19/2022 19:22	-0.04	6/20/2022 18:12	1.11	6/20/2022 18:35	4.22	6/20/2022 19:58	-0.30	6/19/2022 18:46	11.13
6/19/2022 19:23	-0.04	6/20/2022 18:13	1.11	6/20/2022 18:36	4.25	6/20/2022 19:59	-0.25	6/19/2022 18:47	11.12
6/19/2022 19:24	-0.04	6/20/2022 18:14	1.12	6/20/2022 18:37	4.23	6/20/2022 20:00	-0.29	6/19/2022 18:48	11.11
6/19/2022 19:25	-0.04	6/20/2022 18:15	1.12	6/20/2022 18:38	4.21	6/20/2022 20:01	-0.26	6/19/2022 18:49	11.17
6/19/2022 19:26	-0.04	6/20/2022 18:16	1.12	6/20/2022 18:39	4.23	6/20/2022 20:02	-0.33	6/19/2022 18:50	11.16
6/19/2022 19:27	-0.04	6/20/2022 18:17	1.12	6/20/2022 18:40	4.23	6/20/2022 20:03	-0.30	6/19/2022 18:51	11.13
6/19/2022 19:28	-0.04	6/20/2022 18:18	1.12	6/20/2022 18:41	4.23	6/20/2022 20:04	-0.29	6/19/2022 18:52	11.15
6/19/2022 19:29	-0.04	6/20/2022 18:19	1.12	6/20/2022 18:42	4.25	6/20/2022 20:05	-0.29	6/19/2022 18:53	11.19
6/19/2022 19:30	-0.03	6/20/2022 18:20	1.12	6/20/2022 18:43	4.24	6/20/2022 20:06	-0.28	6/19/2022 18:54	11.14
6/19/2022 19:31	-0.04	6/20/2022 18:21	1.12	6/20/2022 18:44	4.25	6/20/2022 20:07	-0.29	6/19/2022 18:55	11.15
6/19/2022 19:32	-0.04	6/20/2022 18:22	1.12	6/20/2022 18:45	4.23	6/20/2022 20:08	-0.28	6/19/2022 18:56	11.17
6/19/2022 19:33	-0.04	6/20/2022 18:23	1.12	6/20/2022 18:46	4.23	6/20/2022 20:09	-0.31	6/19/2022 18:57	11.23
6/19/2022 19:34	-0.04	6/20/2022 18:24	1.13	6/20/2022 18:47	4.24	6/20/2022 20:10	-0.27	6/19/2022 18:58	11.14
6/19/2022 19:35	-0.04	6/20/2022 18:25	1.12	6/20/2022 18:48	4.24	6/20/2022 20:11	-0.30	6/19/2022 18:59	11.14
6/19/2022 19:36	-0.04	6/20/2022 18:26	1.13	6/20/2022 18:49	4.27	6/20/2022 20:12	-0.30	6/19/2022 19:00	11.20
6/19/2022 19:37	-0.04	6/20/2022 18:27	1.13	6/20/2022 18:50	4.27	6/20/2022 20:13	-0.31	6/19/2022 19:01	11.15
6/19/2022 19:38	-0.04	6/20/2022 18:28	1.13	6/20/2022 18:51	4.23	6/20/2022 20:14	-0.31	6/19/2022 19:02	11.16
6/19/2022 19:39	-0.04	6/20/2022 18:29	1.13	6/20/2022 18:52	4.24	6/20/2022 20:15	-0.31	6/19/2022 19:03	11.12
6/19/2022 19:40	-0.04	6/20/2022 18:30	1.13	6/20/2022 18:53	4.26	6/20/2022 20:16	-0.30	6/19/2022 19:04	11.14
6/19/2022 19:41	-0.04	6/20/2022 18:31	1.13	6/20/2022 18:54	4.25	6/20/2022 20:17	-0.35	6/19/2022 19:05	11.18
6/19/2022 19:42	-0.04	6/20/2022 18:32	1.13	6/20/2022 18:55	4.23	6/20/2022 20:18	-0.28	6/19/2022 19:06	11.17
6/19/2022 19:43	-0.04	6/20/2022 18:33	1.13	6/20/2022 18:56	4.23	6/20/2022 20:19	-0.24	6/19/2022 19:07	11.20
6/19/2022 19:44	-0.04	6/20/2022 18:34	1.13	6/20/2022 18:57	4.24	6/20/2022 20:20	-0.30	6/19/2022 19:08	11.16
6/19/2022 19:45	-0.04	6/20/2022 18:35	1.13	6/20/2022 18:58	4.26	6/20/2022 20:21	-0.31	6/19/2022 19:09	11.17
6/19/2022 19:46	-0.04	6/20/2022 18:36	1.13	6/20/2022 18:59	4.26	6/20/2022 20:22	-0.32	6/19/2022 19:10	11.09
6/19/2022 19:47	-0.04	6/20/2022 18:37	1.13	6/20/2022 19:00	4.26	6/20/2022 20:23	-0.32	6/19/2022 19:11	11.14
6/19/2022 19:48	-0.03	6/20/2022 18:38	1.13	6/20/2022 19:01	4.32	6/20/2022 20:24	-0.32	6/19/2022 19:12	11.15
6/19/2022 19:49	-0.04	6/20/2022 18:39	1.13	6/20/2022 19:02	4.24	6/20/2022 20:25	-0.24	6/19/2022 19:13	11.15
6/19/2022 19:50	-0.04	6/20/2022 18:40	1.14	6/20/2022 19:03	4.26	6/20/2022 20:26	-0.32	6/19/2022 19:14	11.18
6/19/2022 19:51	-0.04	6/20/2022 18:41	1.13	6/20/2022 19:04	4.27	6/20/2022 20:27	-0.25	6/19/2022 19:15	11.17
6/19/2022 19:52	-0.04	6/20/2022 18:42	1.14	6/20/2022 19:05	4.27	6/20/2022 20:28	-0.27	6/19/2022 19:16	11.12
6/19/2022 19:53	-0.04	6/20/2022 18:43	1.14	6/20/2022 19:06	4.28	6/20/2022 20:29	-0.27	6/19/2022 19:17	11.16
6/19/2022 19:54	-0.03	6/20/2022 18:44	1.13	6/20/2022 19:07	4.27	6/20/2022 20:30	-0.30	6/19/2022 19:18	11.16
6/19/2022 19:55	-0.04	6/20/2022 18:45	1.14	6/20/2022 19:08	4.28	6/20/2022 20:31	-0.29	6/19/2022 19:19	11.10
6/19/2022 19:56	-0.04	6/20/2022 18:46	1.14	6/20/2022 19:09	4.29	6/20/2022 20:32	-0.30	6/19/2022 19:20	11.14
6/19/2022 19:57	-0.04	6/20/2022 18:47	1.14	6/20/2022 19:10	4.30	6/20/2022 20:33	-0.29	6/19/2022 19:21	11.19
6/19/2022 19:58	-0.04	6/20/2022 18:48	1.15	6/20/2022 19:11	4.30	6/20/2022 20:34	-0.29	6/19/2022 19:22	11.16
6/19/2022 19:59	-0.04	6/20/2022 18:49	1.15	6/20/2022 19:12	4.27	6/20/2022 20:35	-0.28	6/19/2022 19:23	11.18
6/19/2022 20:00	-0.04	6/20/2022 18:50	1.14	6/20/2022 19:13	4.31	6/20/2022 20:36	-0.29	6/19/2022 19:24	11.18
6/19/2022 20:01	-0.04	6/20/2022 18:51	1.14	6/20/2022 19:14	4.29	6/20/2022 20:37	-0.26	6/19/2022 19:25	11.22
6/19/2022 20:02	-0.04	6/20/2022 18:52	1.15	6/20/2022 19:15	4.30	6/20/2022 20:38	-0.27	6/19/2022 19:26	11.12
6/19/2022 20:03	-0.04	6/20/2022 18:53	1.15	6/20/2022 19:16	4.30	6/20/2022 20:39	-0.30	6/19/2022 19:27	11.20
6/19/2022 20:04	-0.04	6/20/2022 18:54	1.15	6/20/2022 19:17	4.31	6/20/2022 20:40	-0.24	6/19/2022 19:28	11.10
6/19/2022 20:05	-0.04	6/20/2022 18:55	1.15	6/20/2022 19:18	4.29	6/20/2022 20:41	-0.30	6/19/2022 19:29	11.14
6/19/2022 20:06	-0.04	6/20/2022 18:56	1.15	6/20/2022 19:19	4.29	6/20/2022 20:42	-0.29	6/19/2022 19:30	11.11
6/19/2022 20:07	-0.04	6/20/2022 18:57	1.15	6/20/2022 19:20	4.32	6/20/2022 20:43	-0.31	6/19/2022 19:31	11.17
6/19/2022 20:08	-0.04	6/20/2022 18:58	1.15	6/20/2022 19:21	4.35	6/20/2022 20:44	-0.31	6/19/2022 19:32	11.11
6/19/2022 20:09	-0.04	6/20/2022 18:59	1.15	6/20/2022 19:22	4.30	6/20/2022 20:45	-0.28	6/19/2022 19:33	11.16
6/19/2022 20:10	-0.03	6/20/2022 19:00	1.15	6/20/2022 19:23	4.32	6/20/2022 20:46	-0.29	6/19/2022 19:34	11.22
6/19/2022 20:11	-0.05	6/20/2022 19:01	1.15	6/20/2022 19:24	4.32	6/20/2022 20:47	-0.29	6/19/2022 19:35	11.22
6/19/2022 20:12	-0.04	6/20/2022 19:02	1.16	6/20/2022 19:25	4.29	6/20/2022 20:48	-0.27	6/19/2022 19:36	11.17
6/19/2022 20:13	-0.03	6/20/2022 19:03	1.16	6/20/2022 19:26	4.30	6/20/2022 20:49	-0.33	6/19/2022 19:37	11.18
6/19/2022 20:14	-0.04	6/20/2022 19:04	1.16	6/20/2022 19:27	4.31	6/20/2022 20:50	-0.31	6/19/2022 19:38	11.17
6/19/2022 20:15	-0.04	6/20/2022 19:05	1.16	6/20/2022 19:28	4.35	6/20/2022 20:51	-0.33	6/19/2022 19:39	11.18
6/19/2022 20:16	-0.04	6/20/2022 19:06	1.16	6/20/2022 19:29	4.33	6/20/2022 20:52	-0.26	6/19/2022 19:40	11.19
6/19/2022 20:17	-0.04	6/20/2022 19:07	1.16	6/20/2022 19:30	4.32	6/20/2022 20:53	-0.29	6/19/2022 19:41	11.19
6/19/2022 20:18	-0.03	6/20/2022 19:08	1.16	6/20/2022 19:31	4.32	6/20/2022 20:54	-0.29	6/19/2022 19:42	11.15
6/19/2022 20:19	-0.04	6/20/2022 19:09	1.16	6/20/2022 19:32	4.33	6/20/2022 20:55	-0.31	6/19/2022 19:43	11.14
6/19/2022 20:20	-0.04	6/20/2022 19:10	1.16	6/20/2022 19:33	4.34	6/20/2022 20:56	-0.30	6/19/2022 19:44	11.16
6/19/2022 20:21	-0.04	6/20/2022 19:11	1.16	6/20/2022 19:34	4.32	6/20/2022 20:57	-0.29	6/19/2022 19:45	11.23
6/19/2022 20:22	-0.03	6/20/2022 19:12	1.16	6/20/2022 19:35	4.32	6/20/2022 20:58	-0.30	6/19/2022 19:46	11.17
6/19/2022 20:23	-0.04	6/20/2022 19:13	1.16	6/20/2022 19:36	4.34	6/20/2022 20:59	-0.28	6/19/2022 19:47	11.16
6/19/2022 20:24	-0.04	6/20/2022 19:14	1.16	6/20/2022 19:37	4.36	6/20/2022 21:00	-0.29	6/19/2022 19:48	11.16

6/19/2022 20:25	-0.04	6/20/2022 19:15	1.17	6/20/2022 19:38	4.32	6/20/2022 21:01	-0.35	6/19/2022 19:49	11.18
6/19/2022 20:26	-0.04	6/20/2022 19:16	1.17	6/20/2022 19:39	4.34	6/20/2022 21:02	-0.27	6/19/2022 19:50	11.16
6/19/2022 20:27	-0.04	6/20/2022 19:17	1.17	6/20/2022 19:40	4.34	6/20/2022 21:03	-0.35	6/19/2022 19:51	11.15
6/19/2022 20:28	-0.04	6/20/2022 19:18	1.17	6/20/2022 19:41	4.33	6/20/2022 21:04	-0.29	6/19/2022 19:52	11.12
6/19/2022 20:29	-0.04	6/20/2022 19:19	1.17	6/20/2022 19:42	4.33	6/20/2022 21:05	-0.28	6/19/2022 19:53	11.18
6/19/2022 20:30	-0.04	6/20/2022 19:20	1.17	6/20/2022 19:43	4.33	6/20/2022 21:06	-0.29	6/19/2022 19:54	11.17
6/19/2022 20:31	-0.04	6/20/2022 19:21	1.17	6/20/2022 19:44	4.33	6/20/2022 21:07	-0.30	6/19/2022 19:55	11.17
6/19/2022 20:32	-0.04	6/20/2022 19:22	1.17	6/20/2022 19:45	4.35	6/20/2022 21:08	-0.30	6/19/2022 19:56	11.11
6/19/2022 20:33	-0.04	6/20/2022 19:23	1.17	6/20/2022 19:46	4.34	6/20/2022 21:09	-0.28	6/19/2022 19:57	11.19
6/19/2022 20:34	-0.04	6/20/2022 19:24	1.20	6/20/2022 19:47	4.35	6/20/2022 21:10	-0.28	6/19/2022 19:58	11.13
6/19/2022 20:35	-0.04	6/20/2022 19:25	1.17	6/20/2022 19:48	4.34	6/20/2022 21:11	-0.28	6/19/2022 19:59	11.16
6/19/2022 20:36	-0.04	6/20/2022 19:26	1.17	6/20/2022 19:49	4.33	6/20/2022 21:12	-0.29	6/19/2022 20:00	11.17
6/19/2022 20:37	-0.04	6/20/2022 19:27	1.17	6/20/2022 19:50	4.31	6/20/2022 21:13	-0.31	6/19/2022 20:01	11.22
6/19/2022 20:38	-0.04	6/20/2022 19:28	1.18	6/20/2022 19:51	4.33	6/20/2022 21:14	-0.29	6/19/2022 20:02	11.13
6/19/2022 20:39	-0.04	6/20/2022 19:29	1.18	6/20/2022 19:52	4.35	6/20/2022 21:15	-0.26	6/19/2022 20:03	11.20
6/19/2022 20:40	-0.04	6/20/2022 19:30	1.18	6/20/2022 19:53	4.35	6/20/2022 21:16	-0.32	6/19/2022 20:04	11.16
6/19/2022 20:41	-0.04	6/20/2022 19:31	1.18	6/20/2022 19:54	4.35	6/20/2022 21:17	-0.30	6/19/2022 20:05	11.14
6/19/2022 20:42	-0.04	6/20/2022 19:32	1.18	6/20/2022 19:55	4.37	6/20/2022 21:18	-0.25	6/19/2022 20:06	11.15
6/19/2022 20:43	-0.04	6/20/2022 19:33	1.18	6/20/2022 19:56	4.35	6/20/2022 21:19	-0.29	6/19/2022 20:07	11.11
6/19/2022 20:44	-0.04	6/20/2022 19:34	1.18	6/20/2022 19:57	4.35	6/20/2022 21:20	-0.31	6/19/2022 20:08	11.22
6/19/2022 20:45	-0.04	6/20/2022 19:35	1.18	6/20/2022 19:58	4.37	6/20/2022 21:21	-0.33	6/19/2022 20:09	11.16
6/19/2022 20:46	-0.04	6/20/2022 19:36	1.18	6/20/2022 19:59	4.37	6/20/2022 21:22	-0.28	6/19/2022 20:10	11.20
6/19/2022 20:47	-0.04	6/20/2022 19:37	1.18	6/20/2022 20:00	4.34	6/20/2022 21:23	-0.27	6/19/2022 20:11	11.17
6/19/2022 20:48	-0.04	6/20/2022 19:38	1.19	6/20/2022 20:01	4.35	6/20/2022 21:24	-0.31	6/19/2022 20:12	11.18
6/19/2022 20:49	-0.04	6/20/2022 19:39	1.19	6/20/2022 20:02	4.37	6/20/2022 21:25	-0.28	6/19/2022 20:13	11.16
6/19/2022 20:50	-0.04	6/20/2022 19:40	1.18	6/20/2022 20:03	4.36	6/20/2022 21:26	-0.25	6/19/2022 20:14	11.17
6/19/2022 20:51	-0.03	6/20/2022 19:41	1.18	6/20/2022 20:04	4.38	6/20/2022 21:27	-0.29	6/19/2022 20:15	11.18
6/19/2022 20:52	-0.03	6/20/2022 19:42	1.19	6/20/2022 20:05	4.38	6/20/2022 21:28	-0.28	6/19/2022 20:16	11.17
6/19/2022 20:53	-0.03	6/20/2022 19:43	1.19	6/20/2022 20:06	4.40	6/20/2022 21:29	-0.32	6/19/2022 20:17	11.14
6/19/2022 20:54	-0.04	6/20/2022 19:44	1.19	6/20/2022 20:07	4.37	6/20/2022 21:30	-0.29	6/19/2022 20:18	11.20
6/19/2022 20:55	-0.04	6/20/2022 19:45	1.19	6/20/2022 20:08	4.36	6/20/2022 21:31	-0.31	6/19/2022 20:19	11.16
6/19/2022 20:56	-0.04	6/20/2022 19:46	1.19	6/20/2022 20:09	4.38	6/20/2022 21:32	-0.28	6/19/2022 20:20	11.17
6/19/2022 20:57	-0.03	6/20/2022 19:47	1.19	6/20/2022 20:10	4.37	6/20/2022 21:33	-0.33	6/19/2022 20:21	11.15
6/19/2022 20:58	-0.04	6/20/2022 19:48	1.19	6/20/2022 20:11	4.38	6/20/2022 21:34	-0.31	6/19/2022 20:22	11.17
6/19/2022 20:59	-0.04	6/20/2022 19:49	1.19	6/20/2022 20:12	4.39	6/20/2022 21:35	-0.26	6/19/2022 20:23	11.24
6/19/2022 21:00	-0.04	6/20/2022 19:50	1.19	6/20/2022 20:13	4.37	6/20/2022 21:36	-0.28	6/19/2022 20:24	11.17
6/19/2022 21:01	-0.04	6/20/2022 19:51	1.19	6/20/2022 20:14	4.37	6/20/2022 21:37	-0.25	6/19/2022 20:25	11.14
6/19/2022 21:02	-0.04	6/20/2022 19:52	1.19	6/20/2022 20:15	4.40	6/20/2022 21:38	-0.29	6/19/2022 20:26	11.21
6/19/2022 21:03	-0.04	6/20/2022 19:53	1.19	6/20/2022 20:16	4.41	6/20/2022 21:39	-0.27	6/19/2022 20:27	11.15
6/19/2022 21:04	-0.04	6/20/2022 19:54	1.20	6/20/2022 20:17	4.40	6/20/2022 21:40	-0.32	6/19/2022 20:28	11.14
6/19/2022 21:05	-0.03	6/20/2022 19:55	1.19	6/20/2022 20:18	4.43	6/20/2022 21:41	-0.29	6/19/2022 20:29	11.12
6/19/2022 21:06	-0.04	6/20/2022 19:56	1.20	6/20/2022 20:19	4.42	6/20/2022 21:42	-0.32	6/19/2022 20:30	11.17
6/19/2022 21:07	-0.04	6/20/2022 19:57	1.20	6/20/2022 20:20	4.41	6/20/2022 21:43	-0.27	6/19/2022 20:31	11.15
6/19/2022 21:08	-0.04	6/20/2022 19:58	1.20	6/20/2022 20:21	4.41	6/20/2022 21:44	-0.28	6/19/2022 20:32	11.14
6/19/2022 21:09	-0.03	6/20/2022 19:59	1.20	6/20/2022 20:22	4.41	6/20/2022 21:45	-0.35	6/19/2022 20:33	11.19
6/19/2022 21:10	-0.04	6/20/2022 20:00	1.20	6/20/2022 20:23	4.42	6/20/2022 21:46	-0.32	6/19/2022 20:34	11.17
6/19/2022 21:11	-0.04	6/20/2022 20:01	1.20	6/20/2022 20:24	4.46	6/20/2022 21:47	-0.29	6/19/2022 20:35	11.19
6/19/2022 21:12	-0.04	6/20/2022 20:02	1.20	6/20/2022 20:25	4.39	6/20/2022 21:48	-0.27	6/19/2022 20:36	11.17
6/19/2022 21:13	-0.04	6/20/2022 20:03	1.20	6/20/2022 20:26	4.42	6/20/2022 21:49	-0.29	6/19/2022 20:37	11.17
6/19/2022 21:14	-0.04	6/20/2022 20:04	1.20	6/20/2022 20:27	4.41	6/20/2022 21:50	-0.28	6/19/2022 20:38	11.14
6/19/2022 21:15	-0.03	6/20/2022 20:05	1.20	6/20/2022 20:28	4.42	6/20/2022 21:51	-0.27	6/19/2022 20:39	11.13
6/19/2022 21:16	-0.03	6/20/2022 20:06	1.21	6/20/2022 20:29	4.41	6/20/2022 21:52	-0.32	6/19/2022 20:40	11.18
6/19/2022 21:17	-0.04	6/20/2022 20:07	1.20	6/20/2022 20:30	4.45	6/20/2022 21:53	-0.28	6/19/2022 20:41	11.12
6/19/2022 21:18	-0.03	6/20/2022 20:08	1.21	6/20/2022 20:31	4.43	6/20/2022 21:54	-0.28	6/19/2022 20:42	11.14
6/19/2022 21:19	-0.04	6/20/2022 20:09	1.21	6/20/2022 20:32	4.41	6/20/2022 21:55	-0.31	6/19/2022 20:43	11.18
6/19/2022 21:20	-0.03	6/20/2022 20:10	1.21	6/20/2022 20:33	4.44	6/20/2022 21:56	-0.31	6/19/2022 20:44	11.11
6/19/2022 21:21	-0.04	6/20/2022 20:11	1.21	6/20/2022 20:34	4.44	6/20/2022 21:57	-0.30	6/19/2022 20:45	11.16
6/19/2022 21:22	-0.04	6/20/2022 20:12	1.21	6/20/2022 20:35	4.40	6/20/2022 21:58	-0.29	6/19/2022 20:46	11.14
6/19/2022 21:23	-0.04	6/20/2022 20:13	1.21	6/20/2022 20:36	4.43	6/20/2022 21:59	-0.30	6/19/2022 20:47	11.17
6/19/2022 21:24	-0.04	6/20/2022 20:14	1.21	6/20/2022 20:37	4.41	6/20/2022 22:00	-0.31	6/19/2022 20:48	11.13
6/19/2022 21:25	-0.04	6/20/2022 20:15	1.21	6/20/2022 20:38	4.43	6/20/2022 22:01	-0.31	6/19/2022 20:49	11.20
6/19/2022 21:26	-0.04	6/20/2022 20:16	1.21	6/20/2022 20:39	4.46	6/20/2022 22:02	-0.28	6/19/2022 20:50	11.21
6/19/2022 21:27	-0.04	6/20/2022 20:17	1.21	6/20/2022 20:40	4.44	6/20/2022 22:03	-0.30	6/19/2022 20:51	11.16
6/19/2022 21:28	-0.04	6/20/2022 20:18	1.22	6/20/2022 20:41	4.47	6/20/2022 22:04	-0.31	6/19/2022 20:52	11.18
6/19/2022 21:29	-0.04	6/20/2022 20:19	1.21	6/20/2022 20:42	4.43	6/20/2022 22:05	-0.29	6/19/2022 20:53	11.20
6/19/2022 21:30	-0.04	6/20/2022 20:20	1.21	6/20/2022 20:43	4.47	6/20/2022 22:06	-0.27	6/19/2022 20:54	11.18
6/19/2022 21:31	-0.04	6/20/2022 20:21	1.22	6/20/2022 20:44	4.44	6/20/2022 22:07	-0.31	6/19/2022 20:55	11.19
6/19/2022 21:32	-0.04	6/20/2022 20:22	1.22	6/20/2022 20:45	4.45	6/20/2022 22:08	-0.26	6/19/2022 20:56	11.14
6/19/2022 21:33	-0.04	6/20/2022 20:23	1.22	6/20/2022 20:46	4.46	6/20/2022 22:09	-0.31	6/19/2022 20:57	11.17
6/19/2022 21:34	-0.04	6/20/2022 20:24	1.22	6/20/2022 20:47	4.52	6/20/2022 22:10	-0.25	6/19/2022 20:58	11.19
6/19/2022 21:35	-0.04	6/20/2022 20:25	1.22	6/20/2022 20:48	4.45	6/20/2022 22:11	-0.25	6/19/2022 20:59	11.14
6/19/2022 21:36	-0.04	6/20/2022 20:26	1.22	6/20/2022 20:49	4.43	6/20/2022 22:12	-0.28	6/19/2022 21:00	11.14
6/19/2022 21:37	-0.04	6/20/2022 20:27	1.23	6/20/2022 20:50	4.48	6/20/2022 22:13	-0.31	6/19/2022 21:01	11.17
6/19/2022 21:38	-0.04	6/20/2022 20:28	1.22	6/20/2022 20:51	4.43	6/20/2022 22:14	-0.31	6/19/2022 21:02	11.19
6/19/2022 21:39	-0.04	6/20/2022 20:29	1.22	6/20/2022 20:52	4.46	6/20/2022 22:15	-0.31	6/19/2022 21:03	11.13
6/19/2022 21:40	-0.04	6/20/2022 20:30	1.22	6/20/2022 20:53	4.44	6/20/2022 22:16	-0.27	6/19/2022 21:04	11.13
6/19/2022 21:41	-0.04	6/20/2022 20:31	1.22	6/20/2022 20:54	4.43	6/20/2022 22:17	-0.30	6/19/2022 21:05	11.20
6/19/2022 21:42	-0.04	6/20/2022 20:32	1.23	6/20/2022 20:55	4.44	6/20/2022 22:18	-0.25	6/19/2022 21:06	11.18
6/19/2022 21:43	-0.04	6/20/2022 20:33	1.22	6/20/2022 20:56	4.45	6/20/2022 22:19	-0.33	6/19/2022 21:07	11.19
6/19/2022 21:44	-0.04	6/20/2022 20:34	1.22	6/20/2022 20:57	4.50	6/20/2022 22:20	-0.30	6/19/2022 21:08	11.17
6/19/2022 21:45	-0.04	6/20/2022 20:35	1.23	6/20/2022 20:58	4.49	6/20/2022 22:21	-0.27	6/19/2022 21:09	11.18
6/19/2022 21:46	-0.04	6/20/2022 20:36	1.23	6/20/2022 20:59	4.48	6/20/2022 22:22	-0.30	6/19/2022 21:10	11.15
6/19/2022 21:47	-0.04	6/20/2022 20:37	1.23	6/20/2022 21:00	4.45	6/20/2022 22:23	-0.27	6/19/2022 21:11	11.18
6/19/2022 21:48	-0.04	6/20/2022 20:38	1.23	6/20/2022 21:01	4.47	6/20/2022 22:24	-0.30	6/19/2022 21:12	11.16
6/19/2022 21:49	-0.04	6/20/2022 20:39	1.23	6/20/2022 21:02	4.48	6/20/2022 22:25	-0.29	6/19/2022 21:13	11.18
6/19/2022 21:50	-0.04	6/20/2022 20:40	1.23	6/20/2022 21:03	4.48	6/20/2022 22:26	-0.30	6/19/2022 21:14	11.16
6/19/2022 21:51	-0.04	6/20/2022 20:41	1.23	6/20/2022 21:04	4.46	6/20/2022 22:27	-0.27	6/19/2022 21:15	11.18
6/19/2022 21:52	-0.04	6/20/2022 20:42	1.23	6/20/2022 21:05	4.49	6/20/2022 22:28	-0.29	6/19/2022 21:16	11.13

6/19/2022 21:53	-0.04	6/20/2022 20:43	1.23	6/20/2022 21:06	4.43	6/20/2022 22:29	-0.33	6/19/2022 21:17	11.19
6/19/2022 21:54	-0.04	6/20/2022 20:44	1.23	6/20/2022 21:07	4.50	6/20/2022 22:30	-0.30	6/19/2022 21:18	11.15
6/19/2022 21:55	-0.04	6/20/2022 20:45	1.24	6/20/2022 21:08	4.49	6/20/2022 22:31	-0.27	6/19/2022 21:19	11.21
6/19/2022 21:56	-0.04	6/20/2022 20:46	1.26	6/20/2022 21:09	4.48	6/20/2022 22:32	-0.29	6/19/2022 21:20	11.20
6/19/2022 21:57	-0.04	6/20/2022 20:47	1.24	6/20/2022 21:10	4.50	6/20/2022 22:33	-0.24	6/19/2022 21:21	11.19
6/19/2022 21:58	-0.04	6/20/2022 20:48	1.24	6/20/2022 21:11	4.49	6/20/2022 22:34	-0.33	6/19/2022 21:22	11.20
6/19/2022 21:59	-0.04	6/20/2022 20:49	1.24	6/20/2022 21:12	4.50	6/20/2022 22:35	-0.26	6/19/2022 21:23	11.14
6/19/2022 22:00	-0.04	6/20/2022 20:50	1.24	6/20/2022 21:13	4.48	6/20/2022 22:36	-0.28	6/19/2022 21:24	11.21
6/19/2022 22:01	-0.04	6/20/2022 20:51	1.24	6/20/2022 21:14	4.52	6/20/2022 22:37	-0.26	6/19/2022 21:25	11.14
6/19/2022 22:02	-0.04	6/20/2022 20:52	1.24	6/20/2022 21:15	4.49	6/20/2022 22:38	-0.29	6/19/2022 21:26	11.18
6/19/2022 22:03	-0.04	6/20/2022 20:53	1.24	6/20/2022 21:16	4.49	6/20/2022 22:39	-0.31	6/19/2022 21:27	11.12
6/19/2022 22:04	-0.04	6/20/2022 20:54	1.24	6/20/2022 21:17	4.51	6/20/2022 22:40	-0.29	6/19/2022 21:28	11.17
6/19/2022 22:05	-0.04	6/20/2022 20:55	1.24	6/20/2022 21:18	4.52	6/20/2022 22:41	-0.32	6/19/2022 21:29	11.17
6/19/2022 22:06	-0.04	6/20/2022 20:56	1.25	6/20/2022 21:19	4.52	6/20/2022 22:42	-0.26	6/19/2022 21:30	11.19
6/19/2022 22:07	-0.04	6/20/2022 20:57	1.24	6/20/2022 21:20	4.49	6/20/2022 22:43	-0.27	6/19/2022 21:31	11.21
6/19/2022 22:08	-0.04	6/20/2022 20:58	1.25	6/20/2022 21:21	4.50	6/20/2022 22:44	-0.31	6/19/2022 21:32	11.21
6/19/2022 22:09	-0.04	6/20/2022 20:59	1.25	6/20/2022 21:22	4.49	6/20/2022 22:45	-0.30	6/19/2022 21:33	11.14
6/19/2022 22:10	-0.04	6/20/2022 21:00	1.24	6/20/2022 21:23	4.48	6/20/2022 22:46	-0.29	6/19/2022 21:34	11.18
6/19/2022 22:11	-0.04	6/20/2022 21:01	1.25	6/20/2022 21:24	4.50	6/20/2022 22:47	-0.26	6/19/2022 21:35	11.18
6/19/2022 22:12	-0.04	6/20/2022 21:02	1.25	6/20/2022 21:25	4.49	6/20/2022 22:48	-0.30	6/19/2022 21:36	11.19
6/19/2022 22:13	-0.04	6/20/2022 21:03	1.25	6/20/2022 21:26	4.54	6/20/2022 22:49	-0.27	6/19/2022 21:37	11.19
6/19/2022 22:14	-0.04	6/20/2022 21:04	1.25	6/20/2022 21:27	4.51	6/20/2022 22:50	-0.30	6/19/2022 21:38	11.20
6/19/2022 22:15	-0.03	6/20/2022 21:05	1.25	6/20/2022 21:28	4.51	6/20/2022 22:51	-0.31	6/19/2022 21:39	11.18
6/19/2022 22:16	-0.04	6/20/2022 21:06	1.25	6/20/2022 21:29	4.51	6/20/2022 22:52	-0.31	6/19/2022 21:40	11.20
6/19/2022 22:17	-0.04	6/20/2022 21:07	1.26	6/20/2022 21:30	4.53	6/20/2022 22:53	-0.33	6/19/2022 21:41	11.20
6/19/2022 22:18	-0.04	6/20/2022 21:08	1.25	6/20/2022 21:31	4.54	6/20/2022 22:54	-0.32	6/19/2022 21:42	11.19
6/19/2022 22:19	-0.04	6/20/2022 21:09	1.26	6/20/2022 21:32	4.54	6/20/2022 22:55	-0.28	6/19/2022 21:43	11.10
6/19/2022 22:20	-0.04	6/20/2022 21:10	1.25	6/20/2022 21:33	4.51	6/20/2022 22:56	-0.30	6/19/2022 21:44	11.15
6/19/2022 22:21	-0.04	6/20/2022 21:11	1.25	6/20/2022 21:34	4.51	6/20/2022 22:57	-0.31	6/19/2022 21:45	11.14
6/19/2022 22:22	-0.04	6/20/2022 21:12	1.26	6/20/2022 21:35	4.50	6/20/2022 22:58	-0.31	6/19/2022 21:46	11.19
6/19/2022 22:23	-0.04	6/20/2022 21:13	1.26	6/20/2022 21:36	4.54	6/20/2022 22:59	-0.29	6/19/2022 21:47	11.19
6/19/2022 22:24	-0.04	6/20/2022 21:14	1.25	6/20/2022 21:37	4.53	6/20/2022 23:00	-0.33	6/19/2022 21:48	11.22
6/19/2022 22:25	-0.04	6/20/2022 21:15	1.26	6/20/2022 21:38	4.52	6/20/2022 23:01	-0.25	6/19/2022 21:49	11.20
6/19/2022 22:26	-0.03	6/20/2022 21:16	1.26	6/20/2022 21:39	4.53	6/20/2022 23:02	-0.29	6/19/2022 21:50	11.17
6/19/2022 22:27	-0.04	6/20/2022 21:17	1.26	6/20/2022 21:40	4.51	6/20/2022 23:03	-0.29	6/19/2022 21:51	11.19
6/19/2022 22:28	-0.03	6/20/2022 21:18	1.26	6/20/2022 21:41	4.52	6/20/2022 23:04	-0.29	6/19/2022 21:52	11.17
6/19/2022 22:29	-0.04	6/20/2022 21:19	1.26	6/20/2022 21:42	4.52	6/20/2022 23:05	-0.28	6/19/2022 21:53	11.16
6/19/2022 22:30	-0.04	6/20/2022 21:20	1.26	6/20/2022 21:43	4.56	6/20/2022 23:06	-0.28	6/19/2022 21:54	11.15
6/19/2022 22:31	-0.04	6/20/2022 21:21	1.26	6/20/2022 21:44	4.51	6/20/2022 23:07	-0.27	6/19/2022 21:55	11.16
6/19/2022 22:32	-0.03	6/20/2022 21:22	1.27	6/20/2022 21:45	4.55	6/20/2022 23:08	-0.30	6/19/2022 21:56	11.20
6/19/2022 22:33	-0.04	6/20/2022 21:23	1.27	6/20/2022 21:46	4.55	6/20/2022 23:09	-0.25	6/19/2022 21:57	11.17
6/19/2022 22:34	-0.04	6/20/2022 21:24	1.27	6/20/2022 21:47	4.54	6/20/2022 23:10	-0.27	6/19/2022 21:58	11.17
6/19/2022 22:35	-0.04	6/20/2022 21:25	1.27	6/20/2022 21:48	4.54	6/20/2022 23:11	-0.24	6/19/2022 21:59	11.18
6/19/2022 22:36	-0.04	6/20/2022 21:26	1.27	6/20/2022 21:49	4.54	6/20/2022 23:12	-0.28	6/19/2022 22:00	11.19
6/19/2022 22:37	-0.04	6/20/2022 21:27	1.27	6/20/2022 21:50	4.55	6/20/2022 23:13	-0.32	6/19/2022 22:01	11.15
6/19/2022 22:38	-0.04	6/20/2022 21:28	1.27	6/20/2022 21:51	4.56	6/20/2022 23:14	-0.27	6/19/2022 22:02	11.17
6/19/2022 22:39	-0.04	6/20/2022 21:29	1.27	6/20/2022 21:52	4.55	6/20/2022 23:15	-0.27	6/19/2022 22:03	11.13
6/19/2022 22:40	-0.04	6/20/2022 21:30	1.27	6/20/2022 21:53	4.56	6/20/2022 23:16	-0.29	6/19/2022 22:04	11.17
6/19/2022 22:41	-0.04	6/20/2022 21:31	1.27	6/20/2022 21:54	4.54	6/20/2022 23:17	-0.30	6/19/2022 22:05	11.16
6/19/2022 22:42	-0.04	6/20/2022 21:32	1.27	6/20/2022 21:55	4.56	6/20/2022 23:18	-0.30	6/19/2022 22:06	11.21
6/19/2022 22:43	-0.04	6/20/2022 21:33	1.27	6/20/2022 21:56	4.59	6/20/2022 23:19	-0.28	6/19/2022 22:07	11.20
6/19/2022 22:44	-0.04	6/20/2022 21:34	1.27	6/20/2022 21:57	4.57	6/20/2022 23:20	-0.32	6/19/2022 22:08	11.17
6/19/2022 22:45	-0.04	6/20/2022 21:35	1.27	6/20/2022 21:58	4.55	6/20/2022 23:21	-0.31	6/19/2022 22:09	11.19
6/19/2022 22:46	-0.04	6/20/2022 21:36	1.27	6/20/2022 21:59	4.58	6/20/2022 23:22	-0.29	6/19/2022 22:10	11.17
6/19/2022 22:47	-0.04	6/20/2022 21:37	1.28	6/20/2022 22:00	4.56	6/20/2022 23:23	-0.31	6/19/2022 22:11	11.16
6/19/2022 22:48	-0.04	6/20/2022 21:38	1.28	6/20/2022 22:01	4.56	6/20/2022 23:24	-0.32	6/19/2022 22:12	11.16
6/19/2022 22:49	-0.04	6/20/2022 21:39	1.27	6/20/2022 22:02	4.57	6/20/2022 23:25	-0.30	6/19/2022 22:13	11.21
6/19/2022 22:50	-0.04	6/20/2022 21:40	1.27	6/20/2022 22:03	4.58	6/20/2022 23:26	-0.27	6/19/2022 22:14	11.17
6/19/2022 22:51	-0.04	6/20/2022 21:41	1.28	6/20/2022 22:04	4.54	6/20/2022 23:27	-0.26	6/19/2022 22:15	11.15
6/19/2022 22:52	-0.04	6/20/2022 21:42	1.28	6/20/2022 22:05	4.55	6/20/2022 23:28	-0.29	6/19/2022 22:16	11.18
6/19/2022 22:53	-0.04	6/20/2022 21:43	1.28	6/20/2022 22:06	4.59	6/20/2022 23:29	-0.28	6/19/2022 22:17	11.14
6/19/2022 22:54	-0.03	6/20/2022 21:44	1.28	6/20/2022 22:07	4.59	6/20/2022 23:30	-0.30	6/19/2022 22:18	11.18
6/19/2022 22:55	-0.04	6/20/2022 21:45	1.28	6/20/2022 22:08	4.57	6/20/2022 23:31	-0.29	6/19/2022 22:19	11.15
6/19/2022 22:56	-0.04	6/20/2022 21:46	1.28	6/20/2022 22:09	4.54	6/20/2022 23:32	-0.29	6/19/2022 22:20	11.18
6/19/2022 22:57	-0.04	6/20/2022 21:47	1.28	6/20/2022 22:10	4.58	6/20/2022 23:33	-0.28	6/19/2022 22:21	11.20
6/19/2022 22:58	-0.04	6/20/2022 21:48	1.28	6/20/2022 22:11	4.60	6/20/2022 23:34	-0.32	6/19/2022 22:22	11.19
6/19/2022 22:59	-0.04	6/20/2022 21:49	1.29	6/20/2022 22:12	4.59	6/20/2022 23:35	-0.28	6/19/2022 22:23	11.20
6/19/2022 23:00	-0.04	6/20/2022 21:50	1.28	6/20/2022 22:13	4.60	6/20/2022 23:36	-0.35	6/19/2022 22:24	11.24
6/19/2022 23:01	-0.04	6/20/2022 21:51	1.28	6/20/2022 22:14	4.59	6/20/2022 23:37	-0.28	6/19/2022 22:25	11.11
6/19/2022 23:02	-0.04	6/20/2022 21:52	1.28	6/20/2022 22:15	4.62	6/20/2022 23:38	-0.30	6/19/2022 22:26	11.17
6/19/2022 23:03	-0.04	6/20/2022 21:53	1.28	6/20/2022 22:16	4.58	6/20/2022 23:39	-0.24	6/19/2022 22:27	11.20
6/19/2022 23:04	-0.03	6/20/2022 21:54	1.28	6/20/2022 22:17	4.58	6/20/2022 23:40	-0.28	6/19/2022 22:28	11.19
6/19/2022 23:05	-0.03	6/20/2022 21:55	1.29	6/20/2022 22:18	4.59	6/20/2022 23:41	-0.27	6/19/2022 22:29	11.20
6/19/2022 23:06	-0.04	6/20/2022 21:56	1.29	6/20/2022 22:19	4.58	6/20/2022 23:42	-0.29	6/19/2022 22:30	11.22
6/19/2022 23:07	-0.04	6/20/2022 21:57	1.29	6/20/2022 22:20	4.61	6/20/2022 23:43	-0.27	6/19/2022 22:31	11.17
6/19/2022 23:08	-0.04	6/20/2022 21:58	1.29	6/20/2022 22:21	4.61	6/20/2022 23:44	-0.28	6/19/2022 22:32	11.20
6/19/2022 23:09	-0.04	6/20/2022 21:59	1.29	6/20/2022 22:22	4.61	6/20/2022 23:45	-0.30	6/19/2022 22:33	11.15
6/19/2022 23:10	-0.04	6/20/2022 22:00	1.29	6/20/2022 22:23	4.63	6/20/2022 23:46	-0.31	6/19/2022 22:34	11.19
6/19/2022 23:11	-0.04	6/20/2022 22:01	1.29	6/20/2022 22:24	4.61	6/20/2022 23:47	-0.31	6/19/2022 22:35	11.17
6/19/2022 23:12	-0.04	6/20/2022 22:02	1.29	6/20/2022 22:25	4.61	6/20/2022 23:48	-0.31	6/19/2022 22:36	11.21
6/19/2022 23:13	-0.04	6/20/2022 22:03	1.29	6/20/2022 22:26	4.60	6/20/2022 23:49	-0.29	6/19/2022 22:37	11.19
6/19/2022 23:14	-0.04	6/20/2022 22:04	1.29	6/20/2022 22:27	4.59	6/20/2022 23:50	-0.27	6/19/2022 22:38	11.19
6/19/2022 23:15	-0.04	6/20/2022 22:05	1.29	6/20/2022 22:28	4.64	6/20/2022 23:51	-0.29	6/19/2022 22:39	11.18
6/19/2022 23:16	-0.04	6/20/2022 22:06	1.30	6/20/2022 22:29	4.61	6/20/2022 23:52	-0.32	6/19/2022 22:40	11.14
6/19/2022 23:17	-0.04	6/20/2022 22:07	1.29	6/20/2022 22:30	4.61	6/20/2022 23:53	-0.27	6/19/2022 22:41	11.20
6/19/2022 23:18	-0.03	6/20/2022 22:08	1.30	6/20/2022 22:31	4.63	6/20/2022 23:54	-0.27	6/19/2022 22:42	11.18
6/19/2022 23:19	-0.04	6/20/2022 22:09	1.30	6/20/2022 22:32	4.64	6/20/2022 23:55	-0.29	6/19/2022 22:43	11.16
6/19/2022 23:20	-0.04	6/20/2022 22:10	1.30	6/20/2022 22:33	4.64	6/20/2022 23:56	-0.30	6/19/2022 22:44	11.14

6/19/2022 23:21	-0.04	6/20/2022 22:11	1.30	6/20/2022 22:34	4.63	6/20/2022 23:57	-0.27	6/19/2022 22:45	11.21
6/19/2022 23:22	-0.04	6/20/2022 22:12	1.30	6/20/2022 22:35	4.59	6/20/2022 23:58	-0.28	6/19/2022 22:46	11.18
6/19/2022 23:23	-0.04	6/20/2022 22:13	1.30	6/20/2022 22:36	4.62	6/20/2022 23:59	-0.31	6/19/2022 22:47	11.19
6/19/2022 23:24	-0.04	6/20/2022 22:14	1.30	6/20/2022 22:37	4.64	6/21/2022 0:00	-0.35	6/19/2022 22:48	11.20
6/19/2022 23:25	-0.04	6/20/2022 22:15	1.30	6/20/2022 22:38	4.64	6/21/2022 0:01	-0.30	6/19/2022 22:49	11.27
6/19/2022 23:26	-0.04	6/20/2022 22:16	1.30	6/20/2022 22:39	4.65	6/21/2022 0:02	-0.27	6/19/2022 22:50	11.20
6/19/2022 23:27	-0.04	6/20/2022 22:17	1.30	6/20/2022 22:40	4.65	6/21/2022 0:03	-0.26	6/19/2022 22:51	11.17
6/19/2022 23:28	-0.04	6/20/2022 22:18	1.30	6/20/2022 22:41	4.64	6/21/2022 0:04	-0.28	6/19/2022 22:52	11.18
6/19/2022 23:29	-0.03	6/20/2022 22:19	1.30	6/20/2022 22:42	4.64	6/21/2022 0:05	-0.30	6/19/2022 22:53	11.21
6/19/2022 23:30	-0.04	6/20/2022 22:20	1.31	6/20/2022 22:43	4.63	6/21/2022 0:06	-0.26	6/19/2022 22:54	11.15
6/19/2022 23:31	-0.04	6/20/2022 22:21	1.31	6/20/2022 22:44	4.63	6/21/2022 0:07	-0.32	6/19/2022 22:55	11.22
6/19/2022 23:32	-0.04	6/20/2022 22:22	1.31	6/20/2022 22:45	4.64	6/21/2022 0:08	-0.27	6/19/2022 22:56	11.19
6/19/2022 23:33	-0.04	6/20/2022 22:23	1.30	6/20/2022 22:46	4.62	6/21/2022 0:09	-0.29	6/19/2022 22:57	11.16
6/19/2022 23:34	-0.04	6/20/2022 22:24	1.30	6/20/2022 22:47	4.64	6/21/2022 0:10	-0.30	6/19/2022 22:58	11.17
6/19/2022 23:35	-0.04	6/20/2022 22:25	1.31	6/20/2022 22:48	4.66	6/21/2022 0:11	-0.30	6/19/2022 22:59	11.18
6/19/2022 23:36	-0.04	6/20/2022 22:26	1.31	6/20/2022 22:49	4.65	6/21/2022 0:12	-0.26	6/19/2022 23:00	11.18
6/19/2022 23:37	-0.03	6/20/2022 22:27	1.31	6/20/2022 22:50	4.65	6/21/2022 0:13	-0.29	6/19/2022 23:01	11.23
6/19/2022 23:38	-0.04	6/20/2022 22:28	1.31	6/20/2022 22:51	4.63	6/21/2022 0:14	-0.27	6/19/2022 23:02	11.22
6/19/2022 23:39	-0.04	6/20/2022 22:29	1.31	6/20/2022 22:52	4.64	6/21/2022 0:15	-0.28	6/19/2022 23:03	11.19
6/19/2022 23:40	-0.04	6/20/2022 22:30	1.31	6/20/2022 22:53	4.67	6/21/2022 0:16	-0.35	6/19/2022 23:04	11.22
6/19/2022 23:41	-0.03	6/20/2022 22:31	1.31	6/20/2022 22:54	4.65	6/21/2022 0:17	-0.28	6/19/2022 23:05	11.23
6/19/2022 23:42	-0.04	6/20/2022 22:32	1.31	6/20/2022 22:55	4.65	6/21/2022 0:18	-0.26	6/19/2022 23:06	11.19
6/19/2022 23:43	-0.04	6/20/2022 22:33	1.31	6/20/2022 22:56	4.65	6/21/2022 0:19	-0.29	6/19/2022 23:07	11.15
6/19/2022 23:44	-0.04	6/20/2022 22:34	1.31	6/20/2022 22:57	4.65	6/21/2022 0:20	-0.32	6/19/2022 23:08	11.23
6/19/2022 23:45	-0.04	6/20/2022 22:35	1.31	6/20/2022 22:58	4.66	6/21/2022 0:21	-0.30	6/19/2022 23:09	11.21
6/19/2022 23:46	-0.04	6/20/2022 22:36	1.32	6/20/2022 22:59	4.65	6/21/2022 0:22	-0.32	6/19/2022 23:10	11.18
6/19/2022 23:47	-0.04	6/20/2022 22:37	1.32	6/20/2022 23:00	4.69	6/21/2022 0:23	-0.29	6/19/2022 23:11	11.23
6/19/2022 23:48	-0.04	6/20/2022 22:38	1.32	6/20/2022 23:01	4.67	6/21/2022 0:24	-0.32	6/19/2022 23:12	11.19
6/19/2022 23:49	-0.04	6/20/2022 22:39	1.32	6/20/2022 23:02	4.66	6/21/2022 0:25	-0.33	6/19/2022 23:13	11.22
6/19/2022 23:50	-0.04	6/20/2022 22:40	1.32	6/20/2022 23:03	4.68	6/21/2022 0:26	-0.28	6/19/2022 23:14	11.19
6/19/2022 23:51	-0.04	6/20/2022 22:41	1.32	6/20/2022 23:04	4.68	6/21/2022 0:27	-0.25	6/19/2022 23:15	11.17
6/19/2022 23:52	-0.04	6/20/2022 22:42	1.32	6/20/2022 23:05	4.67	6/21/2022 0:28	-0.30	6/19/2022 23:16	11.16
6/19/2022 23:53	-0.03	6/20/2022 22:43	1.32	6/20/2022 23:06	4.68	6/21/2022 0:29	-0.26	6/19/2022 23:17	11.19
6/19/2022 23:54	-0.04	6/20/2022 22:44	1.32	6/20/2022 23:07	4.67	6/21/2022 0:30	-0.31	6/19/2022 23:18	11.19
6/19/2022 23:55	-0.04	6/20/2022 22:45	1.32	6/20/2022 23:08	4.69	6/21/2022 0:31	-0.30	6/19/2022 23:19	11.20
6/19/2022 23:56	-0.04	6/20/2022 22:46	1.33	6/20/2022 23:09	4.68	6/21/2022 0:32	-0.28	6/19/2022 23:20	11.16
6/19/2022 23:57	-0.04	6/20/2022 22:47	1.32	6/20/2022 23:10	4.68	6/21/2022 0:33	-0.29	6/19/2022 23:21	11.17
6/19/2022 23:58	-0.04	6/20/2022 22:48	1.33	6/20/2022 23:11	4.65	6/21/2022 0:34	-0.32	6/19/2022 23:22	11.21
6/19/2022 23:59	-0.04	6/20/2022 22:49	1.33	6/20/2022 23:12	4.66	6/21/2022 0:35	-0.25	6/19/2022 23:23	11.12
6/20/2022 0:00	-0.04	6/20/2022 22:50	1.32	6/20/2022 23:13	4.67	6/21/2022 0:36	-0.25	6/19/2022 23:24	11.17
6/20/2022 0:01	-0.04	6/20/2022 22:51	1.33	6/20/2022 23:14	4.66	6/21/2022 0:37	-0.28	6/19/2022 23:25	11.14
6/20/2022 0:02	-0.04	6/20/2022 22:52	1.33	6/20/2022 23:15	4.65	6/21/2022 0:38	-0.29	6/19/2022 23:26	11.19
6/20/2022 0:03	-0.04	6/20/2022 22:53	1.33	6/20/2022 23:16	4.65	6/21/2022 0:39	-0.28	6/19/2022 23:27	11.17
6/20/2022 0:04	-0.04	6/20/2022 22:54	1.33	6/20/2022 23:17	4.69	6/21/2022 0:40	-0.24	6/19/2022 23:28	11.20
6/20/2022 0:05	-0.04	6/20/2022 22:55	1.33	6/20/2022 23:18	4.64	6/21/2022 0:41	-0.30	6/19/2022 23:29	11.16
6/20/2022 0:06	-0.04	6/20/2022 22:56	1.33	6/20/2022 23:19	4.69	6/21/2022 0:42	-0.25	6/19/2022 23:30	11.19
6/20/2022 0:07	-0.04	6/20/2022 22:57	1.33	6/20/2022 23:20	4.67	6/21/2022 0:43	-0.26	6/19/2022 23:31	11.17
6/20/2022 0:08	-0.04	6/20/2022 22:58	1.33	6/20/2022 23:21	4.68	6/21/2022 0:44	-0.26	6/19/2022 23:32	11.16
6/20/2022 0:09	-0.04	6/20/2022 22:59	1.33	6/20/2022 23:22	4.73	6/21/2022 0:45	-0.30	6/19/2022 23:33	11.22
6/20/2022 0:10	-0.04	6/20/2022 23:00	1.33	6/20/2022 23:23	4.71	6/21/2022 0:46	-0.34	6/19/2022 23:34	11.20
6/20/2022 0:11	-0.03	6/20/2022 23:01	1.33	6/20/2022 23:24	4.69	6/21/2022 0:47	-0.30	6/19/2022 23:35	11.19
6/20/2022 0:12	-0.04	6/20/2022 23:02	1.33	6/20/2022 23:25	4.67	6/21/2022 0:48	-0.27	6/19/2022 23:36	11.18
6/20/2022 0:13	-0.04	6/20/2022 23:03	1.33	6/20/2022 23:26	4.69	6/21/2022 0:49	-0.29	6/19/2022 23:37	11.22
6/20/2022 0:14	-0.04	6/20/2022 23:04	1.34	6/20/2022 23:27	4.70	6/21/2022 0:50	-0.27	6/19/2022 23:38	11.17
6/20/2022 0:15	-0.03	6/20/2022 23:05	1.34	6/20/2022 23:28	4.71	6/21/2022 0:51	-0.27	6/19/2022 23:39	11.15
6/20/2022 0:16	-0.04	6/20/2022 23:06	1.34	6/20/2022 23:29	4.70	6/21/2022 0:52	-0.28	6/19/2022 23:40	11.17
6/20/2022 0:17	-0.03	6/20/2022 23:07	1.34	6/20/2022 23:30	4.71	6/21/2022 0:53	-0.29	6/19/2022 23:41	11.17
6/20/2022 0:18	-0.04	6/20/2022 23:08	1.34	6/20/2022 23:31	4.72	6/21/2022 0:54	-0.29	6/19/2022 23:42	11.22
6/20/2022 0:19	-0.04	6/20/2022 23:09	1.34	6/20/2022 23:32	4.71	6/21/2022 0:55	-0.29	6/19/2022 23:43	11.20
6/20/2022 0:20	-0.04	6/20/2022 23:10	1.35	6/20/2022 23:33	4.70	6/21/2022 0:56	-0.29	6/19/2022 23:44	11.19
6/20/2022 0:21	-0.04	6/20/2022 23:11	1.34	6/20/2022 23:34	4.70	6/21/2022 0:57	-0.31	6/19/2022 23:45	11.16
6/20/2022 0:22	-0.04	6/20/2022 23:12	1.34	6/20/2022 23:35	4.70	6/21/2022 0:58	-0.29	6/19/2022 23:46	11.20
6/20/2022 0:23	-0.04	6/20/2022 23:13	1.35	6/20/2022 23:36	4.69	6/21/2022 0:59	-0.30	6/19/2022 23:47	11.17
6/20/2022 0:24	-0.04	6/20/2022 23:14	1.34	6/20/2022 23:37	4.74	6/21/2022 1:00	-0.28	6/19/2022 23:48	11.20
6/20/2022 0:25	-0.04	6/20/2022 23:15	1.35	6/20/2022 23:38	4.73	6/21/2022 1:01	-0.30	6/19/2022 23:49	11.20
6/20/2022 0:26	-0.04	6/20/2022 23:16	1.35	6/20/2022 23:39	4.74	6/21/2022 1:02	-0.26	6/19/2022 23:50	11.21
6/20/2022 0:27	-0.04	6/20/2022 23:17	1.34	6/20/2022 23:40	4.73	6/21/2022 1:03	-0.28	6/19/2022 23:51	11.16
6/20/2022 0:28	-0.04	6/20/2022 23:18	1.35	6/20/2022 23:41	4.71	6/21/2022 1:04	-0.28	6/19/2022 23:52	11.23
6/20/2022 0:29	-0.03	6/20/2022 23:19	1.35	6/20/2022 23:42	4.70	6/21/2022 1:05	-0.32	6/19/2022 23:53	11.19
6/20/2022 0:30	-0.04	6/20/2022 23:20	1.35	6/20/2022 23:43	4.71	6/21/2022 1:06	-0.31	6/19/2022 23:54	11.17
6/20/2022 0:31	-0.03	6/20/2022 23:21	1.37	6/20/2022 23:44	4.75	6/21/2022 1:07	-0.29	6/19/2022 23:55	11.18
6/20/2022 0:32	-0.04	6/20/2022 23:22	1.35	6/20/2022 23:45	4.71	6/21/2022 1:08	-0.26	6/19/2022 23:56	11.22
6/20/2022 0:33	-0.04	6/20/2022 23:23	1.35	6/20/2022 23:46	4.72	6/21/2022 1:09	-0.27	6/19/2022 23:57	11.20
6/20/2022 0:34	-0.04	6/20/2022 23:24	1.35	6/20/2022 23:47	4.71	6/21/2022 1:10	-0.31	6/19/2022 23:58	11.21
6/20/2022 0:35	-0.04	6/20/2022 23:25	1.36	6/20/2022 23:48	4.74	6/21/2022 1:11	-0.31	6/19/2022 23:59	11.22
6/20/2022 0:36	-0.03	6/20/2022 23:26	1.36	6/20/2022 23:49	4.75	6/21/2022 1:12	-0.29	6/20/2022 0:00	11.14
6/20/2022 0:37	-0.03	6/20/2022 23:27	1.35	6/20/2022 23:50	4.75	6/21/2022 1:13	-0.30	6/20/2022 0:01	11.18
6/20/2022 0:38	-0.04	6/20/2022 23:28	1.36	6/20/2022 23:51	4.71	6/21/2022 1:14	-0.30	6/20/2022 0:02	11.20
6/20/2022 0:39	-0.04	6/20/2022 23:29	1.36	6/20/2022 23:52	4.74	6/21/2022 1:15	-0.30	6/20/2022 0:03	11.18
6/20/2022 0:40	-0.04	6/20/2022 23:30	1.36	6/20/2022 23:53	4.72	6/21/2022 1:16	-0.30	6/20/2022 0:04	11.21
6/20/2022 0:41	-0.03	6/20/2022 23:31	1.36	6/20/2022 23:54	4.75	6/21/2022 1:17	-0.29	6/20/2022 0:05	11.18
6/20/2022 0:42	-0.04	6/20/2022 23:32	1.36	6/20/2022 23:55	4.71	6/21/2022 1:18	-0.26	6/20/2022 0:06	11.20
6/20/2022 0:43	-0.04	6/20/2022 23:33	1.36	6/20/2022 23:56	4.73	6/21/2022 1:19	-0.30	6/20/2022 0:07	11.20
6/20/2022 0:44	-0.04	6/20/2022 23:34	1.36	6/20/2022 23:57	4.79	6/21/2022 1:20	-0.29	6/20/2022 0:08	11.18
6/20/2022 0:45	-0.03	6/20/2022 23:35	1.36	6/20/2022 23:58	4.74	6/21/2022 1:21	-0.31	6/20/2022 0:09	11.12
6/20/2022 0:46	-0.04	6/20/2022 23:36	1.36	6/20/2022 23:59	4.74	6/21/2022 1:22	-0.26	6/20/2022 0:10	11.20
6/20/2022 0:47	-0.04	6/20/2022 23:37	1.36	6/21/2022 0:00	4.76	6/21/2022 1:23	-0.25	6/20/2022 0:11	11.19
6/20/2022 0:48	-0.04	6/20/2022 23:38	1.36	6/21/2022 0:01	4.75	6/21/2022 1:24	-0.28	6/20/2022 0:12	11.26

6/20/2022 0:49	-0.04	6/20/2022 23:39	1.36	6/21/2022 0:02	4.74	6/21/2022 1:25	-0.28	6/20/2022 0:13	11.20
6/20/2022 0:50	-0.04	6/20/2022 23:40	1.36	6/21/2022 0:03	4.77	6/21/2022 1:26	-0.28	6/20/2022 0:14	11.18
6/20/2022 0:51	-0.04	6/20/2022 23:41	1.36	6/21/2022 0:04	4.73	6/21/2022 1:27	-0.28	6/20/2022 0:15	11.21
6/20/2022 0:52	-0.04	6/20/2022 23:42	1.37	6/21/2022 0:05	4.74	6/21/2022 1:28	-0.29	6/20/2022 0:16	11.23
6/20/2022 0:53	-0.04	6/20/2022 23:43	1.37	6/21/2022 0:06	4.74	6/21/2022 1:29	-0.33	6/20/2022 0:17	11.17
6/20/2022 0:54	-0.04	6/20/2022 23:44	1.37	6/21/2022 0:07	4.76	6/21/2022 1:30	-0.29	6/20/2022 0:18	11.22
6/20/2022 0:55	-0.03	6/20/2022 23:45	1.37	6/21/2022 0:08	4.73	6/21/2022 1:31	-0.29	6/20/2022 0:19	11.19
6/20/2022 0:56	-0.04	6/20/2022 23:46	1.37	6/21/2022 0:09	4.76	6/21/2022 1:32	-0.31	6/20/2022 0:20	11.21
6/20/2022 0:57	-0.04	6/20/2022 23:47	1.37	6/21/2022 0:10	4.76	6/21/2022 1:33	-0.25	6/20/2022 0:21	11.16
6/20/2022 0:58	-0.04	6/20/2022 23:48	1.37	6/21/2022 0:11	4.75	6/21/2022 1:34	-0.28	6/20/2022 0:22	11.23
6/20/2022 0:59	-0.04	6/20/2022 23:49	1.37	6/21/2022 0:12	4.79	6/21/2022 1:35	-0.27	6/20/2022 0:23	11.17
6/20/2022 1:00	-0.04	6/20/2022 23:50	1.37	6/21/2022 0:13	4.78	6/21/2022 1:36	-0.27	6/20/2022 0:24	11.19
6/20/2022 1:01	-0.04	6/20/2022 23:51	1.38	6/21/2022 0:14	4.75	6/21/2022 1:37	-0.29	6/20/2022 0:25	11.24
6/20/2022 1:02	-0.04	6/20/2022 23:52	1.37	6/21/2022 0:15	4.78	6/21/2022 1:38	-0.29	6/20/2022 0:26	11.22
6/20/2022 1:03	-0.04	6/20/2022 23:53	1.38	6/21/2022 0:16	4.78	6/21/2022 1:39	-0.30	6/20/2022 0:27	11.22
6/20/2022 1:04	-0.04	6/20/2022 23:54	1.37	6/21/2022 0:17	4.79	6/21/2022 1:40	-0.31	6/20/2022 0:28	11.26
6/20/2022 1:05	-0.04	6/20/2022 23:55	1.37	6/21/2022 0:18	4.78	6/21/2022 1:41	-0.28	6/20/2022 0:29	11.23
6/20/2022 1:06	-0.04	6/20/2022 23:56	1.38	6/21/2022 0:19	4.77	6/21/2022 1:42	-0.29	6/20/2022 0:30	11.20
6/20/2022 1:07	-0.04	6/20/2022 23:57	1.38	6/21/2022 0:20	4.80	6/21/2022 1:43	-0.33	6/20/2022 0:31	11.20
6/20/2022 1:08	-0.04	6/20/2022 23:58	1.38	6/21/2022 0:21	4.81	6/21/2022 1:44	-0.31	6/20/2022 0:32	11.15
6/20/2022 1:09	-0.04	6/20/2022 23:59	1.38	6/21/2022 0:22	4.78	6/21/2022 1:45	-0.29	6/20/2022 0:33	11.24
6/20/2022 1:10	-0.04	6/21/2022 0:00	1.38	6/21/2022 0:23	4.78	6/21/2022 1:46	-0.26	6/20/2022 0:34	11.15
6/20/2022 1:11	-0.04	6/21/2022 0:01	1.38	6/21/2022 0:24	4.81	6/21/2022 1:47	-0.30	6/20/2022 0:35	11.25
6/20/2022 1:12	-0.04	6/21/2022 0:02	1.38	6/21/2022 0:25	4.77	6/21/2022 1:48	-0.29	6/20/2022 0:36	11.23
6/20/2022 1:13	-0.03	6/21/2022 0:03	1.38	6/21/2022 0:26	4.77	6/21/2022 1:49	-0.29	6/20/2022 0:37	11.21
6/20/2022 1:14	-0.03	6/21/2022 0:04	1.38	6/21/2022 0:27	4.78	6/21/2022 1:50	-0.28	6/20/2022 0:38	11.23
6/20/2022 1:15	-0.04	6/21/2022 0:05	1.38	6/21/2022 0:28	4.79	6/21/2022 1:51	-0.28	6/20/2022 0:39	11.22
6/20/2022 1:16	-0.04	6/21/2022 0:06	1.38	6/21/2022 0:29	4.81	6/21/2022 1:52	-0.33	6/20/2022 0:40	11.19
6/20/2022 1:17	-0.04	6/21/2022 0:07	1.38	6/21/2022 0:30	4.79	6/21/2022 1:53	-0.26	6/20/2022 0:41	11.22
6/20/2022 1:18	-0.04	6/21/2022 0:08	1.38	6/21/2022 0:31	4.82	6/21/2022 1:54	-0.32	6/20/2022 0:42	11.15
6/20/2022 1:19	-0.04	6/21/2022 0:09	1.38	6/21/2022 0:32	4.81	6/21/2022 1:55	-0.31	6/20/2022 0:43	11.21
6/20/2022 1:20	-0.04	6/21/2022 0:10	1.38	6/21/2022 0:33	4.80	6/21/2022 1:56	-0.30	6/20/2022 0:44	11.23
6/20/2022 1:21	-0.04	6/21/2022 0:11	1.39	6/21/2022 0:34	4.79	6/21/2022 1:57	-0.29	6/20/2022 0:45	11.22
6/20/2022 1:22	-0.04	6/21/2022 0:12	1.39	6/21/2022 0:35	4.80	6/21/2022 1:58	-0.34	6/20/2022 0:46	11.25
6/20/2022 1:23	-0.04	6/21/2022 0:13	1.39	6/21/2022 0:36	4.82	6/21/2022 1:59	-0.30	6/20/2022 0:47	11.21
6/20/2022 1:24	-0.03	6/21/2022 0:14	1.39	6/21/2022 0:37	4.76	6/21/2022 2:00	-0.35	6/20/2022 0:48	11.20
6/20/2022 1:25	-0.04	6/21/2022 0:15	1.39	6/21/2022 0:38	4.81	6/21/2022 2:01	-0.31	6/20/2022 0:49	11.22
6/20/2022 1:26	-0.04	6/21/2022 0:16	1.39	6/21/2022 0:39	4.81	6/21/2022 2:02	-0.32	6/20/2022 0:50	11.18
6/20/2022 1:27	-0.04	6/21/2022 0:17	1.39	6/21/2022 0:40	4.81	6/21/2022 2:03	-0.28	6/20/2022 0:51	11.19
6/20/2022 1:28	-0.04	6/21/2022 0:18	1.39	6/21/2022 0:41	4.82	6/21/2022 2:04	-0.32	6/20/2022 0:52	11.21
6/20/2022 1:29	-0.04	6/21/2022 0:19	1.39	6/21/2022 0:42	4.80	6/21/2022 2:05	-0.29	6/20/2022 0:53	11.18
6/20/2022 1:30	-0.04	6/21/2022 0:20	1.39	6/21/2022 0:43	4.81	6/21/2022 2:06	-0.31	6/20/2022 0:54	11.23
6/20/2022 1:31	-0.04	6/21/2022 0:21	1.40	6/21/2022 0:44	4.82	6/21/2022 2:07	-0.26	6/20/2022 0:55	11.20
6/20/2022 1:32	-0.04	6/21/2022 0:22	1.39	6/21/2022 0:45	4.81	6/21/2022 2:08	-0.29	6/20/2022 0:56	11.19
6/20/2022 1:33	-0.04	6/21/2022 0:23	1.40	6/21/2022 0:46	4.80	6/21/2022 2:09	-0.28	6/20/2022 0:57	11.20
6/20/2022 1:34	-0.04	6/21/2022 0:24	1.40	6/21/2022 0:47	4.84	6/21/2022 2:10	-0.32	6/20/2022 0:58	11.26
6/20/2022 1:35	-0.04	6/21/2022 0:25	1.40	6/21/2022 0:48	4.81	6/21/2022 2:11	-0.28	6/20/2022 0:59	11.14
6/20/2022 1:36	-0.04	6/21/2022 0:26	1.40	6/21/2022 0:49	4.81	6/21/2022 2:12	-0.26	6/20/2022 1:00	11.20
6/20/2022 1:37	-0.04	6/21/2022 0:27	1.40	6/21/2022 0:50	4.85	6/21/2022 2:13	-0.31	6/20/2022 1:01	11.26
6/20/2022 1:38	-0.04	6/21/2022 0:28	1.40	6/21/2022 0:51	4.82	6/21/2022 2:14	-0.28	6/20/2022 1:02	11.22
6/20/2022 1:39	-0.04	6/21/2022 0:29	1.40	6/21/2022 0:52	4.85	6/21/2022 2:15	-0.32	6/20/2022 1:03	11.21
6/20/2022 1:40	-0.04	6/21/2022 0:30	1.40	6/21/2022 0:53	4.86	6/21/2022 2:16	-0.25	6/20/2022 1:04	11.18
6/20/2022 1:41	-0.04	6/21/2022 0:31	1.40	6/21/2022 0:54	4.81	6/21/2022 2:17	-0.26	6/20/2022 1:05	11.19
6/20/2022 1:42	-0.04	6/21/2022 0:32	1.43	6/21/2022 0:55	4.83	6/21/2022 2:18	-0.33	6/20/2022 1:06	11.19
6/20/2022 1:43	-0.04	6/21/2022 0:33	1.40	6/21/2022 0:56	4.82	6/21/2022 2:19	-0.29	6/20/2022 1:07	11.24
6/20/2022 1:44	-0.03	6/21/2022 0:34	1.41	6/21/2022 0:57	4.82	6/21/2022 2:20	-0.30	6/20/2022 1:08	11.19
6/20/2022 1:45	-0.04	6/21/2022 0:35	1.41	6/21/2022 0:58	4.82	6/21/2022 2:21	-0.29	6/20/2022 1:09	11.16
6/20/2022 1:46	-0.04	6/21/2022 0:36	1.41	6/21/2022 0:59	4.83	6/21/2022 2:22	-0.26	6/20/2022 1:10	11.17
6/20/2022 1:47	-0.04	6/21/2022 0:37	1.41	6/21/2022 1:00	4.82	6/21/2022 2:23	-0.25	6/20/2022 1:11	11.17
6/20/2022 1:48	-0.04	6/21/2022 0:38	1.41	6/21/2022 1:01	4.84	6/21/2022 2:24	-0.30	6/20/2022 1:12	11.18
6/20/2022 1:49	-0.04	6/21/2022 0:39	1.41	6/21/2022 1:02	4.83	6/21/2022 2:25	-0.23	6/20/2022 1:13	11.13
6/20/2022 1:50	-0.04	6/21/2022 0:40	1.41	6/21/2022 1:03	4.83	6/21/2022 2:26	-0.29	6/20/2022 1:14	11.20
6/20/2022 1:51	-0.04	6/21/2022 0:41	1.41	6/21/2022 1:04	4.86	6/21/2022 2:27	-0.30	6/20/2022 1:15	11.19
6/20/2022 1:52	-0.03	6/21/2022 0:42	1.41	6/21/2022 1:05	4.86	6/21/2022 2:28	-0.28	6/20/2022 1:16	11.19
6/20/2022 1:53	-0.03	6/21/2022 0:43	1.41	6/21/2022 1:06	4.84	6/21/2022 2:29	-0.31	6/20/2022 1:17	11.21
6/20/2022 1:54	-0.04	6/21/2022 0:44	1.41	6/21/2022 1:07	4.85	6/21/2022 2:30	-0.29	6/20/2022 1:18	11.20
6/20/2022 1:55	-0.04	6/21/2022 0:45	1.42	6/21/2022 1:08	4.87	6/21/2022 2:31	-0.30	6/20/2022 1:19	11.20
6/20/2022 1:56	-0.04	6/21/2022 0:46	1.41	6/21/2022 1:09	4.84	6/21/2022 2:32	-0.27	6/20/2022 1:20	11.23
6/20/2022 1:57	-0.04	6/21/2022 0:47	1.41	6/21/2022 1:10	4.86	6/21/2022 2:33	-0.29	6/20/2022 1:21	11.25
6/20/2022 1:58	-0.04	6/21/2022 0:48	1.41	6/21/2022 1:11	4.88	6/21/2022 2:34	-0.31	6/20/2022 1:22	11.24
6/20/2022 1:59	-0.04	6/21/2022 0:49	1.41	6/21/2022 1:12	4.85	6/21/2022 2:35	-0.25	6/20/2022 1:23	11.21
6/20/2022 2:00	-0.04	6/21/2022 0:50	1.41	6/21/2022 1:13	4.87	6/21/2022 2:36	-0.29	6/20/2022 1:24	11.20
6/20/2022 2:01	-0.04	6/21/2022 0:51	1.42	6/21/2022 1:14	4.86	6/21/2022 2:37	-0.28	6/20/2022 1:25	11.22
6/20/2022 2:02	-0.04	6/21/2022 0:52	1.42	6/21/2022 1:15	4.83	6/21/2022 2:38	-0.30	6/20/2022 1:26	11.21
6/20/2022 2:03	-0.04	6/21/2022 0:53	1.42	6/21/2022 1:16	4.85	6/21/2022 2:39	-0.29	6/20/2022 1:27	11.23
6/20/2022 2:04	-0.04	6/21/2022 0:54	1.42	6/21/2022 1:17	4.86	6/21/2022 2:40	-0.26	6/20/2022 1:28	11.21
6/20/2022 2:05	-0.04	6/21/2022 0:55	1.42	6/21/2022 1:18	4.87	6/21/2022 2:41	-0.27	6/20/2022 1:29	11.19
6/20/2022 2:06	-0.04	6/21/2022 0:56	1.42	6/21/2022 1:19	4.83	6/21/2022 2:42	-0.28	6/20/2022 1:30	11.25
6/20/2022 2:07	-0.04	6/21/2022 0:57	1.42	6/21/2022 1:20	4.85	6/21/2022 2:43	-0.28	6/20/2022 1:31	11.21
6/20/2022 2:08	-0.04	6/21/2022 0:58	1.42	6/21/2022 1:21	4.87	6/21/2022 2:44	-0.30	6/20/2022 1:32	11.21
6/20/2022 2:09	-0.04	6/21/2022 0:59	1.42	6/21/2022 1:22	4.82	6/21/2022 2:45	-0.30	6/20/2022 1:33	11.17
6/20/2022 2:10	-0.04	6/21/2022 1:00	1.42	6/21/2022 1:23	4.89	6/21/2022 2:46	-0.30	6/20/2022 1:34	11.20
6/20/2022 2:11	-0.04	6/21/2022 1:01	1.42	6/21/2022 1:24	4.85	6/21/2022 2:47	-0.33	6/20/2022 1:35	11.24
6/20/2022 2:12	-0.04	6/21/2022 1:02	1.42	6/21/2022 1:25	4.86	6/21/2022 2:48	-0.30	6/20/2022 1:36	11.22
6/20/2022 2:13	-0.04	6/21/2022 1:03	1.42	6/21/2022 1:26	4.86	6/21/2022 2:49	-0.27	6/20/2022 1:37	11.26
6/20/2022 2:14	-0.04	6/21/2022 1:04	1.43	6/21/2022 1:27	4.85	6/21/2022 2:50	-0.27	6/20/2022 1:38	11.24
6/20/2022 2:15	-0.04	6/21/2022 1:05	1.43	6/21/2022 1:28	4.86	6/21/2022 2:51	-0.27	6/20/2022 1:39	11.24
6/20/2022 2:16	-0.04	6/21/2022 1:06	1.43	6/21/2022 1:29	4.88	6/21/2022 2:52	-0.27	6/20/2022 1:40	11.21

6/20/2022 2:17	-0.04	6/21/2022 1:07	1.43	6/21/2022 1:30	4.84	6/21/2022 2:53	-0.28	6/20/2022 1:41	11.25
6/20/2022 2:18	-0.04	6/21/2022 1:08	1.43	6/21/2022 1:31	4.92	6/21/2022 2:54	-0.30	6/20/2022 1:42	11.27
6/20/2022 2:19	-0.04	6/21/2022 1:09	1.43	6/21/2022 1:32	4.87	6/21/2022 2:55	-0.30	6/20/2022 1:43	11.20
6/20/2022 2:20	-0.04	6/21/2022 1:10	1.43	6/21/2022 1:33	4.91	6/21/2022 2:56	-0.28	6/20/2022 1:44	11.23
6/20/2022 2:21	-0.04	6/21/2022 1:11	1.43	6/21/2022 1:34	4.87	6/21/2022 2:57	-0.28	6/20/2022 1:45	11.18
6/20/2022 2:22	-0.03	6/21/2022 1:12	1.43	6/21/2022 1:35	4.89	6/21/2022 2:58	-0.32	6/20/2022 1:46	11.26
6/20/2022 2:23	-0.04	6/21/2022 1:13	1.43	6/21/2022 1:36	4.90	6/21/2022 2:59	-0.30	6/20/2022 1:47	11.24
6/20/2022 2:24	-0.04	6/21/2022 1:14	1.43	6/21/2022 1:37	4.90	6/21/2022 3:00	-0.31	6/20/2022 1:48	11.20
6/20/2022 2:25	-0.04	6/21/2022 1:15	1.43	6/21/2022 1:38	4.90	6/21/2022 3:01	-0.29	6/20/2022 1:49	11.25
6/20/2022 2:26	-0.04	6/21/2022 1:16	1.43	6/21/2022 1:39	4.86	6/21/2022 3:02	-0.29	6/20/2022 1:50	11.23
6/20/2022 2:27	-0.04	6/21/2022 1:17	1.43	6/21/2022 1:40	4.87	6/21/2022 3:03	-0.35	6/20/2022 1:51	11.19
6/20/2022 2:28	-0.03	6/21/2022 1:18	1.43	6/21/2022 1:41	4.90	6/21/2022 3:04	-0.30	6/20/2022 1:52	11.22
6/20/2022 2:29	-0.04	6/21/2022 1:19	1.44	6/21/2022 1:42	4.91	6/21/2022 3:05	-0.33	6/20/2022 1:53	11.21
6/20/2022 2:30	-0.04	6/21/2022 1:20	1.43	6/21/2022 1:43	4.90	6/21/2022 3:06	-0.27	6/20/2022 1:54	11.22
6/20/2022 2:31	-0.04	6/21/2022 1:21	1.44	6/21/2022 1:44	4.90	6/21/2022 3:07	-0.25	6/20/2022 1:55	11.19
6/20/2022 2:32	-0.03	6/21/2022 1:22	1.44	6/21/2022 1:45	4.89	6/21/2022 3:08	-0.30	6/20/2022 1:56	11.21
6/20/2022 2:33	-0.04	6/21/2022 1:23	1.44	6/21/2022 1:46	4.89	6/21/2022 3:09	-0.30	6/20/2022 1:57	11.21
6/20/2022 2:34	-0.04	6/21/2022 1:24	1.44	6/21/2022 1:47	4.91	6/21/2022 3:10	-0.27	6/20/2022 1:58	11.22
6/20/2022 2:35	-0.04	6/21/2022 1:25	1.44	6/21/2022 1:48	4.90	6/21/2022 3:11	-0.31	6/20/2022 1:59	11.20
6/20/2022 2:36	-0.04	6/21/2022 1:26	1.44	6/21/2022 1:49	4.89	6/21/2022 3:12	-0.28	6/20/2022 2:00	11.18
6/20/2022 2:37	-0.04	6/21/2022 1:27	1.44	6/21/2022 1:50	4.90	6/21/2022 3:13	-0.28	6/20/2022 2:01	11.17
6/20/2022 2:38	-0.04	6/21/2022 1:28	1.44	6/21/2022 1:51	4.93	6/21/2022 3:14	-0.28	6/20/2022 2:02	11.25
6/20/2022 2:39	-0.04	6/21/2022 1:29	1.44	6/21/2022 1:52	4.93	6/21/2022 3:15	-0.29	6/20/2022 2:03	11.26
6/20/2022 2:40	-0.04	6/21/2022 1:30	1.45	6/21/2022 1:53	4.89	6/21/2022 3:16	-0.29	6/20/2022 2:04	11.26
6/20/2022 2:41	-0.04	6/21/2022 1:31	1.44	6/21/2022 1:54	4.91	6/21/2022 3:17	-0.30	6/20/2022 2:05	11.20
6/20/2022 2:42	-0.04	6/21/2022 1:32	1.44	6/21/2022 1:55	4.96	6/21/2022 3:18	-0.26	6/20/2022 2:06	11.23
6/20/2022 2:43	-0.04	6/21/2022 1:33	1.44	6/21/2022 1:56	4.92	6/21/2022 3:19	-0.29	6/20/2022 2:07	11.18
6/20/2022 2:44	-0.04	6/21/2022 1:34	1.44	6/21/2022 1:57	4.93	6/21/2022 3:20	-0.33	6/20/2022 2:08	11.29
6/20/2022 2:45	-0.04	6/21/2022 1:35	1.45	6/21/2022 1:58	4.94	6/21/2022 3:21	-0.31	6/20/2022 2:09	11.22
6/20/2022 2:46	-0.04	6/21/2022 1:36	1.45	6/21/2022 1:59	4.93	6/21/2022 3:22	-0.27	6/20/2022 2:10	11.26
6/20/2022 2:47	-0.04	6/21/2022 1:37	1.45	6/21/2022 2:00	4.94	6/21/2022 3:23	-0.29	6/20/2022 2:11	11.20
6/20/2022 2:48	-0.03	6/21/2022 1:38	1.45	6/21/2022 2:01	4.89	6/21/2022 3:24	-0.26	6/20/2022 2:12	11.26
6/20/2022 2:49	-0.04	6/21/2022 1:39	1.45	6/21/2022 2:02	4.94	6/21/2022 3:25	-0.31	6/20/2022 2:13	11.21
6/20/2022 2:50	-0.03	6/21/2022 1:40	1.45	6/21/2022 2:03	4.91	6/21/2022 3:26	-0.31	6/20/2022 2:14	11.21
6/20/2022 2:51	-0.04	6/21/2022 1:41	1.45	6/21/2022 2:04	4.92	6/21/2022 3:27	-0.31	6/20/2022 2:15	11.18
6/20/2022 2:52	-0.04	6/21/2022 1:42	1.45	6/21/2022 2:05	4.90	6/21/2022 3:28	-0.30	6/20/2022 2:16	11.21
6/20/2022 2:53	-0.04	6/21/2022 1:43	1.45	6/21/2022 2:06	4.95	6/21/2022 3:29	-0.25	6/20/2022 2:17	11.20
6/20/2022 2:54	-0.03	6/21/2022 1:44	1.45	6/21/2022 2:07	4.90	6/21/2022 3:30	-0.26	6/20/2022 2:18	11.19
6/20/2022 2:55	-0.04	6/21/2022 1:45	1.45	6/21/2022 2:08	4.95	6/21/2022 3:31	-0.31	6/20/2022 2:19	11.29
6/20/2022 2:56	-0.04	6/21/2022 1:46	1.45	6/21/2022 2:09	4.93	6/21/2022 3:32	-0.30	6/20/2022 2:20	11.23
6/20/2022 2:57	-0.04	6/21/2022 1:47	1.46	6/21/2022 2:10	4.94	6/21/2022 3:33	-0.28	6/20/2022 2:21	11.23
6/20/2022 2:58	-0.04	6/21/2022 1:48	1.46	6/21/2022 2:11	4.96	6/21/2022 3:34	-0.28	6/20/2022 2:22	11.24
6/20/2022 2:59	-0.04	6/21/2022 1:49	1.46	6/21/2022 2:12	4.90	6/21/2022 3:35	-0.28	6/20/2022 2:23	11.19
6/20/2022 3:00	-0.04	6/21/2022 1:50	1.46	6/21/2022 2:13	4.93	6/21/2022 3:36	-0.28	6/20/2022 2:24	11.19
6/20/2022 3:01	-0.04	6/21/2022 1:51	1.46	6/21/2022 2:14	4.98	6/21/2022 3:37	-0.29	6/20/2022 2:25	11.17
6/20/2022 3:02	-0.04	6/21/2022 1:52	1.46	6/21/2022 2:15	4.91	6/21/2022 3:38	-0.31	6/20/2022 2:26	11.23
6/20/2022 3:03	-0.04	6/21/2022 1:53	1.46	6/21/2022 2:16	4.96	6/21/2022 3:39	-0.30	6/20/2022 2:27	11.23
6/20/2022 3:04	-0.04	6/21/2022 1:54	1.46	6/21/2022 2:17	4.94	6/21/2022 3:40	-0.29	6/20/2022 2:28	11.22
6/20/2022 3:05	-0.04	6/21/2022 1:55	1.46	6/21/2022 2:18	4.94	6/21/2022 3:41	-0.30	6/20/2022 2:29	11.19
6/20/2022 3:06	-0.04	6/21/2022 1:56	1.46	6/21/2022 2:19	4.95	6/21/2022 3:42	-0.28	6/20/2022 2:30	11.16
6/20/2022 3:07	-0.03	6/21/2022 1:57	1.46	6/21/2022 2:20	4.97	6/21/2022 3:43	-0.30	6/20/2022 2:31	11.20
6/20/2022 3:08	-0.03	6/21/2022 1:58	1.46	6/21/2022 2:21	4.96	6/21/2022 3:44	-0.31	6/20/2022 2:32	11.24
6/20/2022 3:09	-0.04	6/21/2022 1:59	1.46	6/21/2022 2:22	4.96	6/21/2022 3:45	-0.32	6/20/2022 2:33	11.18
6/20/2022 3:10	-0.04	6/21/2022 2:00	1.46	6/21/2022 2:23	4.95	6/21/2022 3:46	-0.25	6/20/2022 2:34	11.23
6/20/2022 3:11	-0.04	6/21/2022 2:01	1.46	6/21/2022 2:24	4.93	6/21/2022 3:47	-0.30	6/20/2022 2:35	11.24
6/20/2022 3:12	-0.04	6/21/2022 2:02	1.47	6/21/2022 2:25	4.96	6/21/2022 3:48	-0.29	6/20/2022 2:36	11.19
6/20/2022 3:13	-0.04	6/21/2022 2:03	1.46	6/21/2022 2:26	4.95	6/21/2022 3:49	-0.33	6/20/2022 2:37	11.22
6/20/2022 3:14	-0.03	6/21/2022 2:04	1.47	6/21/2022 2:27	4.98	6/21/2022 3:50	-0.27	6/20/2022 2:38	11.20
6/20/2022 3:15	-0.04	6/21/2022 2:05	1.47	6/21/2022 2:28	4.97	6/21/2022 3:51	-0.34	6/20/2022 2:39	11.23
6/20/2022 3:16	-0.04	6/21/2022 2:06	1.47	6/21/2022 2:29	4.98	6/21/2022 3:52	-0.29	6/20/2022 2:40	11.20
6/20/2022 3:17	-0.04	6/21/2022 2:07	1.47	6/21/2022 2:30	4.95	6/21/2022 3:53	-0.26	6/20/2022 2:41	11.25
6/20/2022 3:18	-0.04	6/21/2022 2:08	1.47	6/21/2022 2:31	4.98	6/21/2022 3:54	-0.30	6/20/2022 2:42	11.20
6/20/2022 3:19	-0.04	6/21/2022 2:09	1.47	6/21/2022 2:32	5.01	6/21/2022 3:55	-0.32	6/20/2022 2:43	11.19
6/20/2022 3:20	-0.04	6/21/2022 2:10	1.47	6/21/2022 2:33	4.97	6/21/2022 3:56	-0.30	6/20/2022 2:44	11.21
6/20/2022 3:21	-0.04	6/21/2022 2:11	1.47	6/21/2022 2:34	4.97	6/21/2022 3:57	-0.30	6/20/2022 2:45	11.19
6/20/2022 3:22	-0.04	6/21/2022 2:12	1.47	6/21/2022 2:35	4.97	6/21/2022 3:58	-0.29	6/20/2022 2:46	11.21
6/20/2022 3:23	-0.04	6/21/2022 2:13	1.47	6/21/2022 2:36	4.97	6/21/2022 3:59	-0.30	6/20/2022 2:47	11.24
6/20/2022 3:24	-0.04	6/21/2022 2:14	1.47	6/21/2022 2:37	4.95	6/21/2022 4:00	-0.34	6/20/2022 2:48	11.23
6/20/2022 3:25	-0.03	6/21/2022 2:15	1.47	6/21/2022 2:38	4.96	6/21/2022 4:01	-0.29	6/20/2022 2:49	11.23
6/20/2022 3:26	-0.04	6/21/2022 2:16	1.48	6/21/2022 2:39	4.96	6/21/2022 4:02	-0.31	6/20/2022 2:50	11.21
6/20/2022 3:27	-0.03	6/21/2022 2:17	1.48	6/21/2022 2:40	5.00	6/21/2022 4:03	-0.31	6/20/2022 2:51	11.19
6/20/2022 3:28	-0.04	6/21/2022 2:18	1.48	6/21/2022 2:41	4.97	6/21/2022 4:04	-0.29	6/20/2022 2:52	11.21
6/20/2022 3:29	-0.04	6/21/2022 2:19	1.48	6/21/2022 2:42	5.01	6/21/2022 4:05	-0.29	6/20/2022 2:53	11.23
6/20/2022 3:30	-0.04	6/21/2022 2:20	1.48	6/21/2022 2:43	4.98	6/21/2022 4:06	-0.28	6/20/2022 2:54	11.16
6/20/2022 3:31	-0.03	6/21/2022 2:21	1.48	6/21/2022 2:44	4.98	6/21/2022 4:07	-0.29	6/20/2022 2:55	11.22
6/20/2022 3:32	-0.04	6/21/2022 2:22	1.48	6/21/2022 2:45	4.97	6/21/2022 4:08	-0.29	6/20/2022 2:56	11.22
6/20/2022 3:33	-0.04	6/21/2022 2:23	1.48	6/21/2022 2:46	4.96	6/21/2022 4:09	-0.28	6/20/2022 2:57	11.23
6/20/2022 3:34	-0.03	6/21/2022 2:24	1.48	6/21/2022 2:47	4.96	6/21/2022 4:10	-0.30	6/20/2022 2:58	11.22
6/20/2022 3:35	-0.04	6/21/2022 2:25	1.48	6/21/2022 2:48	4.98	6/21/2022 4:11	-0.29	6/20/2022 2:59	11.23
6/20/2022 3:36	-0.04	6/21/2022 2:26	1.48	6/21/2022 2:49	4.98	6/21/2022 4:12	-0.27	6/20/2022 3:00	11.23
6/20/2022 3:37	-0.04	6/21/2022 2:27	1.48	6/21/2022 2:50	4.98	6/21/2022 4:13	-0.32	6/20/2022 3:01	11.16
6/20/2022 3:38	-0.04	6/21/2022 2:28	1.48	6/21/2022 2:51	4.97	6/21/2022 4:14	-0.30	6/20/2022 3:02	11.22
6/20/2022 3:39	-0.04	6/21/2022 2:29	1.49	6/21/2022 2:52	4.99	6/21/2022 4:15	-0.30	6/20/2022 3:03	11.20
6/20/2022 3:40	-0.04	6/21/2022 2:30	1.49	6/21/2022 2:53	5.00	6/21/2022 4:16	-0.28	6/20/2022 3:04	11.22
6/20/2022 3:41	-0.04	6/21/2022 2:31	1.48	6/21/2022 2:54	5.01	6/21/2022 4:17	-0.31	6/20/2022 3:05	11.23
6/20/2022 3:42	-0.04	6/21/2022 2:32	1.48	6/21/2022 2:55	4.98	6/21/2022 4:18	-0.30	6/20/2022 3:06	11.26
6/20/2022 3:43	-0.04	6/21/2022 2:33	1.48	6/21/2022 2:56	5.00	6/21/2022 4:19	-0.28	6/20/2022 3:07	11.21
6/20/2022 3:44	-0.04	6/21/2022 2:34	1.49	6/21/2022 2:57	4.98	6/21/2022 4:20	-0.33	6/20/2022 3:08	11.20

6/20/2022 3:45	-0.04	6/21/2022 2:35	1.49	6/21/2022 2:58	4.99	6/21/2022 4:21	-0.28	6/20/2022 3:09	11.16
6/20/2022 3:46	-0.04	6/21/2022 2:36	1.49	6/21/2022 2:59	5.02	6/21/2022 4:22	-0.30	6/20/2022 3:10	11.18
6/20/2022 3:47	-0.04	6/21/2022 2:37	1.49	6/21/2022 3:00	5.03	6/21/2022 4:23	-0.31	6/20/2022 3:11	11.22
6/20/2022 3:48	-0.04	6/21/2022 2:38	1.49	6/21/2022 3:01	4.98	6/21/2022 4:24	-0.31	6/20/2022 3:12	11.23
6/20/2022 3:49	-0.04	6/21/2022 2:39	1.49	6/21/2022 3:02	5.03	6/21/2022 4:25	-0.29	6/20/2022 3:13	11.28
6/20/2022 3:50	-0.04	6/21/2022 2:40	1.49	6/21/2022 3:03	5.00	6/21/2022 4:26	-0.31	6/20/2022 3:14	11.19
6/20/2022 3:51	-0.04	6/21/2022 2:41	1.49	6/21/2022 3:04	5.00	6/21/2022 4:27	-0.30	6/20/2022 3:15	11.24
6/20/2022 3:52	-0.04	6/21/2022 2:42	1.49	6/21/2022 3:05	5.00	6/21/2022 4:28	-0.27	6/20/2022 3:16	11.25
6/20/2022 3:53	-0.04	6/21/2022 2:43	1.49	6/21/2022 3:06	5.01	6/21/2022 4:29	-0.30	6/20/2022 3:17	11.17
6/20/2022 3:54	-0.04	6/21/2022 2:44	1.49	6/21/2022 3:07	5.01	6/21/2022 4:30	-0.28	6/20/2022 3:18	11.17
6/20/2022 3:55	-0.04	6/21/2022 2:45	1.49	6/21/2022 3:08	5.00	6/21/2022 4:31	-0.29	6/20/2022 3:19	11.24
6/20/2022 3:56	-0.04	6/21/2022 2:46	1.50	6/21/2022 3:09	5.02	6/21/2022 4:32	-0.29	6/20/2022 3:20	11.22
6/20/2022 3:57	-0.04	6/21/2022 2:47	1.49	6/21/2022 3:10	5.02	6/21/2022 4:33	-0.29	6/20/2022 3:21	11.23
6/20/2022 3:58	-0.04	6/21/2022 2:48	1.50	6/21/2022 3:11	5.06	6/21/2022 4:34	-0.31	6/20/2022 3:22	11.25
6/20/2022 3:59	-0.04	6/21/2022 2:49	1.50	6/21/2022 3:12	5.03	6/21/2022 4:35	-0.30	6/20/2022 3:23	11.23
6/20/2022 4:00	-0.04	6/21/2022 2:50	1.49	6/21/2022 3:13	5.04	6/21/2022 4:36	-0.33	6/20/2022 3:24	11.16
6/20/2022 4:01	-0.04	6/21/2022 2:51	1.50	6/21/2022 3:14	5.03	6/21/2022 4:37	-0.29	6/20/2022 3:25	11.18
6/20/2022 4:02	-0.04	6/21/2022 2:52	1.50	6/21/2022 3:15	5.02	6/21/2022 4:38	-0.29	6/20/2022 3:26	11.23
6/20/2022 4:03	-0.04	6/21/2022 2:53	1.49	6/21/2022 3:16	5.02	6/21/2022 4:39	-0.29	6/20/2022 3:27	11.19
6/20/2022 4:04	-0.04	6/21/2022 2:54	1.50	6/21/2022 3:17	5.01	6/21/2022 4:40	-0.29	6/20/2022 3:28	11.19
6/20/2022 4:05	-0.04	6/21/2022 2:55	1.50	6/21/2022 3:18	5.01	6/21/2022 4:41	-0.28	6/20/2022 3:29	11.22
6/20/2022 4:06	-0.03	6/21/2022 2:56	1.50	6/21/2022 3:19	5.03	6/21/2022 4:42	-0.29	6/20/2022 3:30	11.22
6/20/2022 4:07	-0.04	6/21/2022 2:57	1.50	6/21/2022 3:20	5.02	6/21/2022 4:43	-0.30	6/20/2022 3:31	11.18
6/20/2022 4:08	-0.04	6/21/2022 2:58	1.50	6/21/2022 3:21	5.03	6/21/2022 4:44	-0.29	6/20/2022 3:32	11.21
6/20/2022 4:09	-0.04	6/21/2022 2:59	1.50	6/21/2022 3:22	5.05	6/21/2022 4:45	-0.27	6/20/2022 3:33	11.14
6/20/2022 4:10	-0.04	6/21/2022 3:00	1.51	6/21/2022 3:23	5.05	6/21/2022 4:46	-0.30	6/20/2022 3:34	11.20
6/20/2022 4:11	-0.04	6/21/2022 3:01	1.51	6/21/2022 3:24	5.05	6/21/2022 4:47	-0.33	6/20/2022 3:35	11.20
6/20/2022 4:12	-0.04	6/21/2022 3:02	1.50	6/21/2022 3:25	5.04	6/21/2022 4:48	-0.29	6/20/2022 3:36	11.26
6/20/2022 4:13	-0.04	6/21/2022 3:03	1.51	6/21/2022 3:26	5.05	6/21/2022 4:49	-0.31	6/20/2022 3:37	11.19
6/20/2022 4:14	-0.04	6/21/2022 3:04	1.50	6/21/2022 3:27	5.03	6/21/2022 4:50	-0.28	6/20/2022 3:38	11.24
6/20/2022 4:15	-0.03	6/21/2022 3:05	1.51	6/21/2022 3:28	5.04	6/21/2022 4:51	-0.33	6/20/2022 3:39	11.22
6/20/2022 4:16	-0.04	6/21/2022 3:06	1.51	6/21/2022 3:29	5.05	6/21/2022 4:52	-0.29	6/20/2022 3:40	11.21
6/20/2022 4:17	-0.04	6/21/2022 3:07	1.51	6/21/2022 3:30	5.05	6/21/2022 4:53	-0.30	6/20/2022 3:41	11.20
6/20/2022 4:18	-0.04	6/21/2022 3:08	1.51	6/21/2022 3:31	5.04	6/21/2022 4:54	-0.33	6/20/2022 3:42	11.22
6/20/2022 4:19	-0.04	6/21/2022 3:09	1.51	6/21/2022 3:32	5.01	6/21/2022 4:55	-0.30	6/20/2022 3:43	11.26
6/20/2022 4:20	-0.04	6/21/2022 3:10	1.51	6/21/2022 3:33	5.06	6/21/2022 4:56	-0.30	6/20/2022 3:44	11.17
6/20/2022 4:21	-0.04	6/21/2022 3:11	1.51	6/21/2022 3:34	5.05	6/21/2022 4:57	-0.29	6/20/2022 3:45	11.20
6/20/2022 4:22	-0.04	6/21/2022 3:12	1.51	6/21/2022 3:35	5.03	6/21/2022 4:58	-0.26	6/20/2022 3:46	11.20
6/20/2022 4:23	-0.04	6/21/2022 3:13	1.52	6/21/2022 3:36	5.04	6/21/2022 4:59	-0.29	6/20/2022 3:47	11.20
6/20/2022 4:24	-0.04	6/21/2022 3:14	1.51	6/21/2022 3:37	5.07	6/21/2022 5:00	-0.32	6/20/2022 3:48	11.21
6/20/2022 4:25	-0.04	6/21/2022 3:15	1.51	6/21/2022 3:38	5.06	6/21/2022 5:01	-0.28	6/20/2022 3:49	11.22
6/20/2022 4:26	-0.04	6/21/2022 3:16	1.51	6/21/2022 3:39	5.03	6/21/2022 5:02	-0.32	6/20/2022 3:50	11.19
6/20/2022 4:27	-0.04	6/21/2022 3:17	1.52	6/21/2022 3:40	5.05	6/21/2022 5:03	-0.30	6/20/2022 3:51	11.22
6/20/2022 4:28	-0.04	6/21/2022 3:18	1.52	6/21/2022 3:41	5.07	6/21/2022 5:04	-0.32	6/20/2022 3:52	11.18
6/20/2022 4:29	-0.04	6/21/2022 3:19	1.52	6/21/2022 3:42	5.07	6/21/2022 5:05	-0.34	6/20/2022 3:53	11.21
6/20/2022 4:30	-0.04	6/21/2022 3:20	1.52	6/21/2022 3:43	5.05	6/21/2022 5:06	-0.27	6/20/2022 3:54	11.22
6/20/2022 4:31	-0.04	6/21/2022 3:21	1.51	6/21/2022 3:44	5.07	6/21/2022 5:07	-0.31	6/20/2022 3:55	11.16
6/20/2022 4:32	-0.04	6/21/2022 3:22	1.52	6/21/2022 3:45	5.06	6/21/2022 5:08	-0.30	6/20/2022 3:56	11.23
6/20/2022 4:33	-0.04	6/21/2022 3:23	1.52	6/21/2022 3:46	5.07	6/21/2022 5:09	-0.31	6/20/2022 3:57	11.16
6/20/2022 4:34	-0.04	6/21/2022 3:24	1.52	6/21/2022 3:47	5.06	6/21/2022 5:10	-0.26	6/20/2022 3:58	11.21
6/20/2022 4:35	-0.04	6/21/2022 3:25	1.52	6/21/2022 3:48	5.04	6/21/2022 5:11	-0.27	6/20/2022 3:59	11.17
6/20/2022 4:36	-0.04	6/21/2022 3:26	1.53	6/21/2022 3:49	5.09	6/21/2022 5:12	-0.30	6/20/2022 4:00	11.20
6/20/2022 4:37	-0.04	6/21/2022 3:27	1.53	6/21/2022 3:50	5.08	6/21/2022 5:13	-0.29	6/20/2022 4:01	11.23
6/20/2022 4:38	-0.04	6/21/2022 3:28	1.53	6/21/2022 3:51	5.11	6/21/2022 5:14	-0.31	6/20/2022 4:02	11.18
6/20/2022 4:39	-0.04	6/21/2022 3:29	1.53	6/21/2022 3:52	5.09	6/21/2022 5:15	-0.26	6/20/2022 4:03	11.22
6/20/2022 4:40	-0.04	6/21/2022 3:30	1.53	6/21/2022 3:53	5.08	6/21/2022 5:16	-0.30	6/20/2022 4:04	11.19
6/20/2022 4:41	-0.04	6/21/2022 3:31	1.53	6/21/2022 3:54	5.11	6/21/2022 5:17	-0.29	6/20/2022 4:05	11.20
6/20/2022 4:42	-0.03	6/21/2022 3:32	1.53	6/21/2022 3:55	5.04	6/21/2022 5:18	-0.33	6/20/2022 4:06	11.21
6/20/2022 4:43	-0.04	6/21/2022 3:33	1.53	6/21/2022 3:56	5.05	6/21/2022 5:19	-0.33	6/20/2022 4:07	11.22
6/20/2022 4:44	-0.04	6/21/2022 3:34	1.53	6/21/2022 3:57	5.09	6/21/2022 5:20	-0.30	6/20/2022 4:08	11.27
6/20/2022 4:45	-0.04	6/21/2022 3:35	1.53	6/21/2022 3:58	5.09	6/21/2022 5:21	-0.27	6/20/2022 4:09	11.23
6/20/2022 4:46	-0.04	6/21/2022 3:36	1.53	6/21/2022 3:59	5.06	6/21/2022 5:22	-0.31	6/20/2022 4:10	11.21
6/20/2022 4:47	-0.04	6/21/2022 3:37	1.53	6/21/2022 4:00	5.08	6/21/2022 5:23	-0.25	6/20/2022 4:11	11.20
6/20/2022 4:48	-0.04	6/21/2022 3:38	1.53	6/21/2022 4:01	5.11	6/21/2022 5:24	-0.31	6/20/2022 4:12	11.13
6/20/2022 4:49	-0.04	6/21/2022 3:39	1.53	6/21/2022 4:02	5.10	6/21/2022 5:25	-0.30	6/20/2022 4:13	11.21
6/20/2022 4:50	-0.04	6/21/2022 3:40	1.53	6/21/2022 4:03	5.06	6/21/2022 5:26	-0.28	6/20/2022 4:14	11.21
6/20/2022 4:51	-0.04	6/21/2022 3:41	1.53	6/21/2022 4:04	5.11	6/21/2022 5:27	-0.30	6/20/2022 4:15	11.20
6/20/2022 4:52	-0.04	6/21/2022 3:42	1.54	6/21/2022 4:05	5.08	6/21/2022 5:28	-0.30	6/20/2022 4:16	11.17
6/20/2022 4:53	-0.04	6/21/2022 3:43	1.53	6/21/2022 4:06	5.07	6/21/2022 5:29	-0.30	6/20/2022 4:17	11.22
6/20/2022 4:54	-0.04	6/21/2022 3:44	1.54	6/21/2022 4:07	5.10	6/21/2022 5:30	-0.30	6/20/2022 4:18	11.19
6/20/2022 4:55	-0.04	6/21/2022 3:45	1.54	6/21/2022 4:08	5.09	6/21/2022 5:31	-0.29	6/20/2022 4:19	11.24
6/20/2022 4:56	-0.04	6/21/2022 3:46	1.54	6/21/2022 4:09	5.10	6/21/2022 5:32	-0.24	6/20/2022 4:20	11.20
6/20/2022 4:57	-0.04	6/21/2022 3:47	1.54	6/21/2022 4:10	5.11	6/21/2022 5:33	-0.32	6/20/2022 4:21	11.24
6/20/2022 4:58	-0.04	6/21/2022 3:48	1.54	6/21/2022 4:11	5.10	6/21/2022 5:34	-0.30	6/20/2022 4:22	11.23
6/20/2022 4:59	-0.04	6/21/2022 3:49	1.54	6/21/2022 4:12	5.08	6/21/2022 5:35	-0.28	6/20/2022 4:23	11.22
6/20/2022 5:00	-0.04	6/21/2022 3:50	1.54	6/21/2022 4:13	5.11	6/21/2022 5:36	-0.27	6/20/2022 4:24	11.21
6/20/2022 5:01	-0.04	6/21/2022 3:51	1.54	6/21/2022 4:14	5.13	6/21/2022 5:37	-0.31	6/20/2022 4:25	11.16
6/20/2022 5:02	-0.04	6/21/2022 3:52	1.54	6/21/2022 4:15	5.09	6/21/2022 5:38	-0.30	6/20/2022 4:26	11.21
6/20/2022 5:03	-0.04	6/21/2022 3:53	1.54	6/21/2022 4:16	5.12	6/21/2022 5:39	-0.29	6/20/2022 4:27	11.25
6/20/2022 5:04	-0.04	6/21/2022 3:54	1.54	6/21/2022 4:17	5.14	6/21/2022 5:40	-0.28	6/20/2022 4:28	11.22
6/20/2022 5:05	-0.04	6/21/2022 3:55	1.55	6/21/2022 4:18	5.10	6/21/2022 5:41	-0.31	6/20/2022 4:29	11.18
6/20/2022 5:06	-0.04	6/21/2022 3:56	1.54	6/21/2022 4:19	5.12	6/21/2022 5:42	-0.36	6/20/2022 4:30	11.24
6/20/2022 5:07	-0.04	6/21/2022 3:57	1.54	6/21/2022 4:20	5.11	6/21/2022 5:43	-0.30	6/20/2022 4:31	11.20
6/20/2022 5:08	-0.04	6/21/2022 3:58	1.55	6/21/2022 4:21	5.11	6/21/2022 5:44	-0.28	6/20/2022 4:32	11.14
6/20/2022 5:09	-0.04	6/21/2022 3:59	1.55	6/21/2022 4:22	5.14	6/21/2022 5:45	-0.32	6/20/2022 4:33	11.21
6/20/2022 5:10	-0.04	6/21/2022 4:00	1.55	6/21/2022 4:23	5.14	6/21/2022 5:46	-0.27	6/20/2022 4:34	11.18
6/20/2022 5:11	-0.04	6/21/2022 4:01	1.55	6/21/2022 4:24	5.13	6/21/2022 5:47	-0.29	6/20/2022 4:35	11.26
6/20/2022 5:12	-0.04	6/21/2022 4:02	1.55	6/21/2022 4:25	5.08	6/21/2022 5:48	-0.31	6/20/2022 4:36	11.19

6/20/2022 5:13	-0.04	6/21/2022 4:03	1.55	6/21/2022 4:26	5.13	6/21/2022 5:49	-0.29	6/20/2022 4:37	11.25
6/20/2022 5:14	-0.04	6/21/2022 4:04	1.55	6/21/2022 4:27	5.11	6/21/2022 5:50	-0.28	6/20/2022 4:38	11.20
6/20/2022 5:15	-0.04	6/21/2022 4:05	1.55	6/21/2022 4:28	5.13	6/21/2022 5:51	-0.28	6/20/2022 4:39	11.22
6/20/2022 5:16	-0.04	6/21/2022 4:06	1.55	6/21/2022 4:29	5.12	6/21/2022 5:52	-0.34	6/20/2022 4:40	11.26
6/20/2022 5:17	-0.04	6/21/2022 4:07	1.55	6/21/2022 4:30	5.13	6/21/2022 5:53	-0.28	6/20/2022 4:41	11.21
6/20/2022 5:18	-0.04	6/21/2022 4:08	1.55	6/21/2022 4:31	5.15	6/21/2022 5:54	-0.29	6/20/2022 4:42	11.21
6/20/2022 5:19	-0.04	6/21/2022 4:09	1.56	6/21/2022 4:32	5.13	6/21/2022 5:55	-0.31	6/20/2022 4:43	11.24
6/20/2022 5:20	-0.04	6/21/2022 4:10	1.55	6/21/2022 4:33	5.16	6/21/2022 5:56	-0.28	6/20/2022 4:44	11.20
6/20/2022 5:21	-0.04	6/21/2022 4:11	1.56	6/21/2022 4:34	5.13	6/21/2022 5:57	-0.33	6/20/2022 4:45	11.20
6/20/2022 5:22	-0.04	6/21/2022 4:12	1.56	6/21/2022 4:35	5.14	6/21/2022 5:58	-0.32	6/20/2022 4:46	11.21
6/20/2022 5:23	-0.04	6/21/2022 4:13	1.56	6/21/2022 4:36	5.13	6/21/2022 5:59	-0.29	6/20/2022 4:47	11.23
6/20/2022 5:24	-0.04	6/21/2022 4:14	1.56	6/21/2022 4:37	5.15	6/21/2022 6:00	-0.28	6/20/2022 4:48	11.19
6/20/2022 5:25	-0.04	6/21/2022 4:15	1.56	6/21/2022 4:38	5.11	6/21/2022 6:01	-0.33	6/20/2022 4:49	11.21
6/20/2022 5:26	-0.03	6/21/2022 4:16	1.56	6/21/2022 4:39	5.12	6/21/2022 6:02	-0.26	6/20/2022 4:50	11.22
6/20/2022 5:27	-0.04	6/21/2022 4:17	1.56	6/21/2022 4:40	5.14	6/21/2022 6:03	-0.29	6/20/2022 4:51	11.19
6/20/2022 5:28	-0.04	6/21/2022 4:18	1.56	6/21/2022 4:41	5.14	6/21/2022 6:04	-0.30	6/20/2022 4:52	11.19
6/20/2022 5:29	-0.04	6/21/2022 4:19	1.56	6/21/2022 4:42	5.15	6/21/2022 6:05	-0.28	6/20/2022 4:53	11.24
6/20/2022 5:30	-0.04	6/21/2022 4:20	1.56	6/21/2022 4:43	5.17	6/21/2022 6:06	-0.31	6/20/2022 4:54	11.24
6/20/2022 5:31	-0.04	6/21/2022 4:21	1.56	6/21/2022 4:44	5.17	6/21/2022 6:07	-0.29	6/20/2022 4:55	11.25
6/20/2022 5:32	-0.04	6/21/2022 4:22	1.56	6/21/2022 4:45	5.16	6/21/2022 6:08	-0.29	6/20/2022 4:56	11.20
6/20/2022 5:33	-0.04	6/21/2022 4:23	1.57	6/21/2022 4:46	5.15	6/21/2022 6:09	-0.30	6/20/2022 4:57	11.24
6/20/2022 5:34	-0.03	6/21/2022 4:24	1.56	6/21/2022 4:47	5.13	6/21/2022 6:10	-0.30	6/20/2022 4:58	11.22
6/20/2022 5:35	-0.04	6/21/2022 4:25	1.57	6/21/2022 4:48	5.15	6/21/2022 6:11	-0.33	6/20/2022 4:59	11.19
6/20/2022 5:36	-0.04	6/21/2022 4:26	1.57	6/21/2022 4:49	5.18	6/21/2022 6:12	-0.29	6/20/2022 5:00	11.22
6/20/2022 5:37	-0.04	6/21/2022 4:27	1.57	6/21/2022 4:50	5.14	6/21/2022 6:13	-0.28	6/20/2022 5:01	11.19
6/20/2022 5:38	-0.04	6/21/2022 4:28	1.57	6/21/2022 4:51	5.17	6/21/2022 6:14	-0.31	6/20/2022 5:02	11.25
6/20/2022 5:39	-0.04	6/21/2022 4:29	1.57	6/21/2022 4:52	5.20	6/21/2022 6:15	-0.30	6/20/2022 5:03	11.18
6/20/2022 5:40	-0.04	6/21/2022 4:30	1.57	6/21/2022 4:53	5.15	6/21/2022 6:16	-0.32	6/20/2022 5:04	11.18
6/20/2022 5:41	-0.04	6/21/2022 4:31	1.57	6/21/2022 4:54	5.15	6/21/2022 6:17	-0.29	6/20/2022 5:05	11.24
6/20/2022 5:42	-0.04	6/21/2022 4:32	1.57	6/21/2022 4:55	5.14	6/21/2022 6:18	-0.30	6/20/2022 5:06	11.20
6/20/2022 5:43	-0.04	6/21/2022 4:33	1.57	6/21/2022 4:56	5.16	6/21/2022 6:19	-0.27	6/20/2022 5:07	11.20
6/20/2022 5:44	-0.04	6/21/2022 4:34	1.57	6/21/2022 4:57	5.16	6/21/2022 6:20	-0.32	6/20/2022 5:08	11.25
6/20/2022 5:45	-0.04	6/21/2022 4:35	1.57	6/21/2022 4:58	5.14	6/21/2022 6:21	-0.32	6/20/2022 5:09	11.24
6/20/2022 5:46	-0.04	6/21/2022 4:36	1.57	6/21/2022 4:59	5.19	6/21/2022 6:22	-0.30	6/20/2022 5:10	11.22
6/20/2022 5:47	-0.04	6/21/2022 4:37	1.57	6/21/2022 5:00	5.16	6/21/2022 6:23	-0.28	6/20/2022 5:11	11.24
6/20/2022 5:48	-0.04	6/21/2022 4:38	1.57	6/21/2022 5:01	5.18	6/21/2022 6:24	-0.30	6/20/2022 5:12	11.22
6/20/2022 5:49	-0.04	6/21/2022 4:39	1.58	6/21/2022 5:02	5.20	6/21/2022 6:25	-0.29	6/20/2022 5:13	11.20
6/20/2022 5:50	-0.04	6/21/2022 4:40	1.58	6/21/2022 5:03	5.16	6/21/2022 6:26	-0.26	6/20/2022 5:14	11.21
6/20/2022 5:51	-0.04	6/21/2022 4:41	1.58	6/21/2022 5:04	5.18	6/21/2022 6:27	-0.30	6/20/2022 5:15	11.27
6/20/2022 5:52	-0.04	6/21/2022 4:42	1.58	6/21/2022 5:05	5.17	6/21/2022 6:28	-0.28	6/20/2022 5:16	11.17
6/20/2022 5:53	-0.04	6/21/2022 4:43	1.58	6/21/2022 5:06	5.18	6/21/2022 6:29	-0.31	6/20/2022 5:17	11.17
6/20/2022 5:54	-0.04	6/21/2022 4:44	1.58	6/21/2022 5:07	5.18	6/21/2022 6:30	-0.29	6/20/2022 5:18	11.21
6/20/2022 5:55	-0.04	6/21/2022 4:45	1.58	6/21/2022 5:08	5.21	6/21/2022 6:31	-0.28	6/20/2022 5:19	11.26
6/20/2022 5:56	-0.04	6/21/2022 4:46	1.58	6/21/2022 5:09	5.18	6/21/2022 6:32	-0.31	6/20/2022 5:20	11.23
6/20/2022 5:57	-0.04	6/21/2022 4:47	1.58	6/21/2022 5:10	5.18	6/21/2022 6:33	-0.29	6/20/2022 5:21	11.22
6/20/2022 5:58	-0.04	6/21/2022 4:48	1.58	6/21/2022 5:11	5.18	6/21/2022 6:34	-0.29	6/20/2022 5:22	11.17
6/20/2022 5:59	-0.04	6/21/2022 4:49	1.58	6/21/2022 5:12	5.19	6/21/2022 6:35	-0.28	6/20/2022 5:23	11.25
6/20/2022 6:00	-0.04	6/21/2022 4:50	1.59	6/21/2022 5:13	5.17	6/21/2022 6:36	-0.33	6/20/2022 5:24	11.19
6/20/2022 6:01	-0.04	6/21/2022 4:51	1.59	6/21/2022 5:14	5.16	6/21/2022 6:37	-0.30	6/20/2022 5:25	11.18
6/20/2022 6:02	-0.04	6/21/2022 4:52	1.59	6/21/2022 5:15	5.20	6/21/2022 6:38	-0.28	6/20/2022 5:26	11.24
6/20/2022 6:03	-0.04	6/21/2022 4:53	1.58	6/21/2022 5:16	5.20	6/21/2022 6:39	-0.32	6/20/2022 5:27	11.20
6/20/2022 6:04	-0.03	6/21/2022 4:54	1.59	6/21/2022 5:17	5.21	6/21/2022 6:40	-0.30	6/20/2022 5:28	11.23
6/20/2022 6:05	-0.04	6/21/2022 4:55	1.59	6/21/2022 5:18	5.21	6/21/2022 6:41	-0.30	6/20/2022 5:29	11.21
6/20/2022 6:06	-0.04	6/21/2022 4:56	1.59	6/21/2022 5:19	5.21	6/21/2022 6:42	-0.29	6/20/2022 5:30	11.17
6/20/2022 6:07	-0.04	6/21/2022 4:57	1.59	6/21/2022 5:20	5.19	6/21/2022 6:43	-0.30	6/20/2022 5:31	11.23
6/20/2022 6:08	-0.04	6/21/2022 4:58	1.59	6/21/2022 5:21	5.19	6/21/2022 6:44	-0.33	6/20/2022 5:32	11.21
6/20/2022 6:09	-0.04	6/21/2022 4:59	1.59	6/21/2022 5:22	5.15	6/21/2022 6:45	-0.30	6/20/2022 5:33	11.28
6/20/2022 6:10	-0.04	6/21/2022 5:00	1.59	6/21/2022 5:23	5.20	6/21/2022 6:46	-0.29	6/20/2022 5:34	11.18
6/20/2022 6:11	-0.04	6/21/2022 5:01	1.59	6/21/2022 5:24	5.21	6/21/2022 6:47	-0.29	6/20/2022 5:35	11.22
6/20/2022 6:12	-0.04	6/21/2022 5:02	1.60	6/21/2022 5:25	5.23	6/21/2022 6:48	-0.27	6/20/2022 5:36	11.26
6/20/2022 6:13	-0.04	6/21/2022 5:03	1.59	6/21/2022 5:26	5.22	6/21/2022 6:49	-0.30	6/20/2022 5:37	11.23
6/20/2022 6:14	-0.04	6/21/2022 5:04	1.60	6/21/2022 5:27	5.20	6/21/2022 6:50	-0.28	6/20/2022 5:38	11.17
6/20/2022 6:15	-0.04	6/21/2022 5:05	1.60	6/21/2022 5:28	5.20	6/21/2022 6:51	-0.32	6/20/2022 5:39	11.21
6/20/2022 6:16	-0.04	6/21/2022 5:06	1.60	6/21/2022 5:29	5.21	6/21/2022 6:52	-0.28	6/20/2022 5:40	11.22
6/20/2022 6:17	-0.04	6/21/2022 5:07	1.60	6/21/2022 5:30	5.20	6/21/2022 6:53	-0.35	6/20/2022 5:41	11.22
6/20/2022 6:18	-0.04	6/21/2022 5:08	1.60	6/21/2022 5:31	5.23	6/21/2022 6:54	-0.30	6/20/2022 5:42	11.24
6/20/2022 6:19	-0.04	6/21/2022 5:09	1.60	6/21/2022 5:32	5.23	6/21/2022 6:55	-0.30	6/20/2022 5:43	11.20
6/20/2022 6:20	-0.04	6/21/2022 5:10	1.60	6/21/2022 5:33	5.19	6/21/2022 6:56	-0.29	6/20/2022 5:44	11.23
6/20/2022 6:21	-0.04	6/21/2022 5:11	1.60	6/21/2022 5:34	5.22	6/21/2022 6:57	-0.27	6/20/2022 5:45	11.26
6/20/2022 6:22	-0.04	6/21/2022 5:12	1.60	6/21/2022 5:35	5.21	6/21/2022 6:58	-0.29	6/20/2022 5:46	11.22
6/20/2022 6:23	-0.04	6/21/2022 5:13	1.60	6/21/2022 5:36	5.22	6/21/2022 6:59	-0.28	6/20/2022 5:47	11.21
6/20/2022 6:24	-0.04	6/21/2022 5:14	1.60	6/21/2022 5:37	5.23	6/21/2022 7:00	-0.34	6/20/2022 5:48	11.16
6/20/2022 6:25	-0.04	6/21/2022 5:15	1.60	6/21/2022 5:38	5.20	6/21/2022 7:01	-0.31	6/20/2022 5:49	11.23
6/20/2022 6:26	-0.04	6/21/2022 5:16	1.60	6/21/2022 5:39	5.20	6/21/2022 7:02	-0.30	6/20/2022 5:50	11.21
6/20/2022 6:27	-0.04	6/21/2022 5:17	1.60	6/21/2022 5:40	5.19	6/21/2022 7:03	-0.31	6/20/2022 5:51	11.22
6/20/2022 6:28	-0.04	6/21/2022 5:18	1.61	6/21/2022 5:41	5.22	6/21/2022 7:04	-0.33	6/20/2022 5:52	11.22
6/20/2022 6:29	-0.04	6/21/2022 5:19	1.61	6/21/2022 5:42	5.25	6/21/2022 7:05	-0.33	6/20/2022 5:53	11.20
6/20/2022 6:30	-0.04	6/21/2022 5:20	1.61	6/21/2022 5:43	5.26	6/21/2022 7:06	-0.28	6/20/2022 5:54	11.19
6/20/2022 6:31	-0.04	6/21/2022 5:21	1.61	6/21/2022 5:44	5.27	6/21/2022 7:07	-0.26	6/20/2022 5:55	11.18
6/20/2022 6:32	-0.04	6/21/2022 5:22	1.60	6/21/2022 5:45	5.25	6/21/2022 7:08	-0.28	6/20/2022 5:56	11.24
6/20/2022 6:33	-0.04	6/21/2022 5:23	1.61	6/21/2022 5:46	5.21	6/21/2022 7:09	-0.27	6/20/2022 5:57	11.24
6/20/2022 6:34	-0.04	6/21/2022 5:24	1.61	6/21/2022 5:47	5.23	6/21/2022 7:10	-0.30	6/20/2022 5:58	11.23
6/20/2022 6:35	-0.04	6/21/2022 5:25	1.61	6/21/2022 5:48	5.26	6/21/2022 7:11	-0.31	6/20/2022 5:59	11.18
6/20/2022 6:36	-0.04	6/21/2022 5:26	1.61	6/21/2022 5:49	5.22	6/21/2022 7:12	-0.29	6/20/2022 6:00	11.14
6/20/2022 6:37	-0.04	6/21/2022 5:27	1.61	6/21/2022 5:50	5.24	6/21/2022 7:13	-0.28	6/20/2022 6:01	11.25
6/20/2022 6:38	-0.04	6/21/2022 5:28	1.61	6/21/2022 5:51	5.24	6/21/2022 7:14	-0.29	6/20/2022 6:02	11.22
6/20/2022 6:39	-0.04	6/21/2022 5:29	1.61	6/21/2022 5:52	5.25	6/21/2022 7:15	-0.27	6/20/2022 6:03	11.20
6/20/2022 6:40	-0.04	6/21/2022 5:30	1.61	6/21/2022 5:53	5.26	6/21/2022 7:16	-0.32	6/20/2022 6:04	11.22

6/20/2022 6:41	-0.04	6/21/2022 5:31	1.61	6/21/2022 5:54	5.26	6/21/2022 7:17	-0.31	6/20/2022 6:05	11.22
6/20/2022 6:42	-0.04	6/21/2022 5:32	1.61	6/21/2022 5:55	5.28	6/21/2022 7:18	-0.24	6/20/2022 6:06	11.20
6/20/2022 6:43	-0.04	6/21/2022 5:33	1.61	6/21/2022 5:56	5.27	6/21/2022 7:19	-0.29	6/20/2022 6:07	11.19
6/20/2022 6:44	-0.04	6/21/2022 5:34	1.62	6/21/2022 5:57	5.25	6/21/2022 7:20	-0.29	6/20/2022 6:08	11.22
6/20/2022 6:45	-0.04	6/21/2022 5:35	1.62	6/21/2022 5:58	5.25	6/21/2022 7:21	-0.29	6/20/2022 6:09	11.22
6/20/2022 6:46	-0.04	6/21/2022 5:36	1.62	6/21/2022 5:59	5.26	6/21/2022 7:22	-0.31	6/20/2022 6:10	11.25
6/20/2022 6:47	-0.04	6/21/2022 5:37	1.62	6/21/2022 6:00	5.27	6/21/2022 7:23	-0.31	6/20/2022 6:11	11.23
6/20/2022 6:48	-0.04	6/21/2022 5:38	1.62	6/21/2022 6:01	5.23	6/21/2022 7:24	-0.31	6/20/2022 6:12	11.23
6/20/2022 6:49	-0.04	6/21/2022 5:39	1.62	6/21/2022 6:02	5.31	6/21/2022 7:25	-0.30	6/20/2022 6:13	11.20
6/20/2022 6:50	-0.04	6/21/2022 5:40	1.62	6/21/2022 6:03	5.28	6/21/2022 7:26	-0.29	6/20/2022 6:14	11.23
6/20/2022 6:51	-0.04	6/21/2022 5:41	1.62	6/21/2022 6:04	5.24	6/21/2022 7:27	-0.32	6/20/2022 6:15	11.20
6/20/2022 6:52	-0.04	6/21/2022 5:42	1.62	6/21/2022 6:05	5.28	6/21/2022 7:28	-0.30	6/20/2022 6:16	11.25
6/20/2022 6:53	-0.04	6/21/2022 5:43	1.62	6/21/2022 6:06	5.26	6/21/2022 7:29	-0.33	6/20/2022 6:17	11.24
6/20/2022 6:54	-0.04	6/21/2022 5:44	1.62	6/21/2022 6:07	5.25	6/21/2022 7:30	-0.27	6/20/2022 6:18	11.22
6/20/2022 6:55	-0.04	6/21/2022 5:45	1.63	6/21/2022 6:08	5.27	6/21/2022 7:31	-0.33	6/20/2022 6:19	11.20
6/20/2022 6:56	-0.04	6/21/2022 5:46	1.62	6/21/2022 6:09	5.29	6/21/2022 7:32	-0.29	6/20/2022 6:20	11.25
6/20/2022 6:57	-0.04	6/21/2022 5:47	1.62	6/21/2022 6:10	5.24	6/21/2022 7:33	-0.31	6/20/2022 6:21	11.23
6/20/2022 6:58	-0.04	6/21/2022 5:48	1.63	6/21/2022 6:11	5.27	6/21/2022 7:34	-0.31	6/20/2022 6:22	11.24
6/20/2022 6:59	-0.03	6/21/2022 5:49	1.63	6/21/2022 6:12	5.29	6/21/2022 7:35	-0.26	6/20/2022 6:23	11.20
6/20/2022 7:00	-0.04	6/21/2022 5:50	1.63	6/21/2022 6:13	5.28	6/21/2022 7:36	-0.29	6/20/2022 6:24	11.23
6/20/2022 7:01	-0.04	6/21/2022 5:51	1.63	6/21/2022 6:14	5.27	6/21/2022 7:37	-0.32	6/20/2022 6:25	11.24
6/20/2022 7:02	-0.04	6/21/2022 5:52	1.63	6/21/2022 6:15	5.28	6/21/2022 7:38	-0.31	6/20/2022 6:26	11.24
6/20/2022 7:03	-0.04	6/21/2022 5:53	1.63	6/21/2022 6:16	5.27	6/21/2022 7:39	-0.29	6/20/2022 6:27	11.24
6/20/2022 7:04	-0.04	6/21/2022 5:54	1.63	6/21/2022 6:17	5.25	6/21/2022 7:40	-0.33	6/20/2022 6:28	11.21
6/20/2022 7:05	-0.04	6/21/2022 5:55	1.63	6/21/2022 6:18	5.30	6/21/2022 7:41	-0.28	6/20/2022 6:29	11.18
6/20/2022 7:06	-0.04	6/21/2022 5:56	1.63	6/21/2022 6:19	5.29	6/21/2022 7:42	-0.30	6/20/2022 6:30	11.27
6/20/2022 7:07	-0.04	6/21/2022 5:57	1.63	6/21/2022 6:20	5.27	6/21/2022 7:43	-0.28	6/20/2022 6:31	11.19
6/20/2022 7:08	-0.04	6/21/2022 5:58	1.64	6/21/2022 6:21	5.27	6/21/2022 7:44	-0.31	6/20/2022 6:32	11.21
6/20/2022 7:09	-0.04	6/21/2022 5:59	1.63	6/21/2022 6:22	5.28	6/21/2022 7:45	-0.27	6/20/2022 6:33	11.24
6/20/2022 7:10	-0.04	6/21/2022 6:00	1.64	6/21/2022 6:23	5.30	6/21/2022 7:46	-0.28	6/20/2022 6:34	11.26
6/20/2022 7:11	-0.04	6/21/2022 6:01	1.64	6/21/2022 6:24	5.28	6/21/2022 7:47	-0.28	6/20/2022 6:35	11.21
6/20/2022 7:12	-0.04	6/21/2022 6:02	1.64	6/21/2022 6:25	5.30	6/21/2022 7:48	-0.29	6/20/2022 6:36	11.21
6/20/2022 7:13	-0.04	6/21/2022 6:03	1.64	6/21/2022 6:26	5.28	6/21/2022 7:49	-0.26	6/20/2022 6:37	11.20
6/20/2022 7:14	-0.04	6/21/2022 6:04	1.64	6/21/2022 6:27	5.27	6/21/2022 7:50	-0.29	6/20/2022 6:38	11.18
6/20/2022 7:15	-0.04	6/21/2022 6:05	1.64	6/21/2022 6:28	5.28	6/21/2022 7:51	-0.31	6/20/2022 6:39	11.21
6/20/2022 7:16	-0.04	6/21/2022 6:06	1.64	6/21/2022 6:29	5.29	6/21/2022 7:52	-0.29	6/20/2022 6:40	11.25
6/20/2022 7:17	-0.04	6/21/2022 6:07	1.64	6/21/2022 6:30	5.28	6/21/2022 7:53	-0.32	6/20/2022 6:41	11.25
6/20/2022 7:18	-0.04	6/21/2022 6:08	1.64	6/21/2022 6:31	5.29	6/21/2022 7:54	-0.31	6/20/2022 6:42	11.24
6/20/2022 7:19	-0.04	6/21/2022 6:09	1.64	6/21/2022 6:32	5.27	6/21/2022 7:55	-0.30	6/20/2022 6:43	11.23
6/20/2022 7:20	-0.04	6/21/2022 6:10	1.64	6/21/2022 6:33	5.31	6/21/2022 7:56	-0.31	6/20/2022 6:44	11.19
6/20/2022 7:21	-0.04	6/21/2022 6:11	1.65	6/21/2022 6:34	5.28	6/21/2022 7:57	-0.27	6/20/2022 6:45	11.17
6/20/2022 7:22	-0.04	6/21/2022 6:12	1.65	6/21/2022 6:35	5.28	6/21/2022 7:58	-0.28	6/20/2022 6:46	11.26
6/20/2022 7:23	-0.04	6/21/2022 6:13	1.64	6/21/2022 6:36	5.31	6/21/2022 7:59	-0.29	6/20/2022 6:47	11.22
6/20/2022 7:24	-0.04	6/21/2022 6:14	1.64	6/21/2022 6:37	5.31	6/21/2022 8:00	-0.33	6/20/2022 6:48	11.21
6/20/2022 7:25	-0.04	6/21/2022 6:15	1.64	6/21/2022 6:38	5.35	6/21/2022 8:01	-0.28	6/20/2022 6:49	11.24
6/20/2022 7:26	-0.04	6/21/2022 6:16	1.65	6/21/2022 6:39	5.29	6/21/2022 8:02	-0.27	6/20/2022 6:50	11.25
6/20/2022 7:27	-0.04	6/21/2022 6:17	1.64	6/21/2022 6:40	5.30	6/21/2022 8:03	-0.28	6/20/2022 6:51	11.20
6/20/2022 7:28	-0.04	6/21/2022 6:18	1.64	6/21/2022 6:41	5.30	6/21/2022 8:04	-0.28	6/20/2022 6:52	11.22
6/20/2022 7:29	-0.04	6/21/2022 6:19	1.65	6/21/2022 6:42	5.32	6/21/2022 8:05	-0.32	6/20/2022 6:53	11.23
6/20/2022 7:30	-0.04	6/21/2022 6:20	1.65	6/21/2022 6:43	5.32	6/21/2022 8:06	-0.28	6/20/2022 6:54	11.24
6/20/2022 7:31	-0.04	6/21/2022 6:21	1.65	6/21/2022 6:44	5.34	6/21/2022 8:07	-0.30	6/20/2022 6:55	11.25
6/20/2022 7:32	-0.04	6/21/2022 6:22	1.65	6/21/2022 6:45	5.30	6/21/2022 8:08	-0.28	6/20/2022 6:56	11.24
6/20/2022 7:33	-0.04	6/21/2022 6:23	1.65	6/21/2022 6:46	5.30	6/21/2022 8:09	-0.31	6/20/2022 6:57	11.21
6/20/2022 7:34	-0.04	6/21/2022 6:24	1.65	6/21/2022 6:47	5.33	6/21/2022 8:10	-0.31	6/20/2022 6:58	11.22
6/20/2022 7:35	-0.04	6/21/2022 6:25	1.65	6/21/2022 6:48	5.31	6/21/2022 8:11	-0.29	6/20/2022 6:59	11.23
6/20/2022 7:36	-0.04	6/21/2022 6:26	1.65	6/21/2022 6:49	5.32	6/21/2022 8:12	-0.31	6/20/2022 7:00	11.16
6/20/2022 7:37	-0.04	6/21/2022 6:27	1.65	6/21/2022 6:50	5.31	6/21/2022 8:13	-0.32	6/20/2022 7:01	11.21
6/20/2022 7:38	-0.04	6/21/2022 6:28	1.65	6/21/2022 6:51	5.32	6/21/2022 8:14	-0.28	6/20/2022 7:02	11.22
6/20/2022 7:39	-0.04	6/21/2022 6:29	1.65	6/21/2022 6:52	5.32	6/21/2022 8:15	-0.32	6/20/2022 7:03	11.25
6/20/2022 7:40	-0.04	6/21/2022 6:30	1.66	6/21/2022 6:53	5.33	6/21/2022 8:16	-0.27	6/20/2022 7:04	11.27
6/20/2022 7:41	-0.04	6/21/2022 6:31	1.66	6/21/2022 6:54	5.33	6/21/2022 8:17	-0.26	6/20/2022 7:05	11.20
6/20/2022 7:42	-0.04	6/21/2022 6:32	1.66	6/21/2022 6:55	5.32	6/21/2022 8:18	-0.24	6/20/2022 7:06	11.27
6/20/2022 7:43	-0.04	6/21/2022 6:33	1.66	6/21/2022 6:56	5.35	6/21/2022 8:19	-0.32	6/20/2022 7:07	11.27
6/20/2022 7:44	-0.03	6/21/2022 6:34	1.65	6/21/2022 6:57	5.33	6/21/2022 8:20	-0.32	6/20/2022 7:08	11.19
6/20/2022 7:45	-0.04	6/21/2022 6:35	1.66	6/21/2022 6:58	5.34	6/21/2022 8:21	-0.30	6/20/2022 7:09	11.19
6/20/2022 7:46	-0.04	6/21/2022 6:36	1.66	6/21/2022 6:59	5.33	6/21/2022 8:22	-0.31	6/20/2022 7:10	11.23
6/20/2022 7:47	-0.04	6/21/2022 6:37	1.66	6/21/2022 7:00	5.33	6/21/2022 8:23	-0.30	6/20/2022 7:11	11.24
6/20/2022 7:48	-0.04	6/21/2022 6:38	1.66	6/21/2022 7:01	5.30	6/21/2022 8:24	-0.30	6/20/2022 7:12	11.21
6/20/2022 7:49	-0.04	6/21/2022 6:39	1.66	6/21/2022 7:02	5.32	6/21/2022 8:25	-0.27	6/20/2022 7:13	11.25
6/20/2022 7:50	-0.04	6/21/2022 6:40	1.66	6/21/2022 7:03	5.33	6/21/2022 8:26	-0.31	6/20/2022 7:14	11.24
6/20/2022 7:51	-0.04	6/21/2022 6:41	1.66	6/21/2022 7:04	5.33	6/21/2022 8:27	-0.27	6/20/2022 7:15	11.26
6/20/2022 7:52	-0.04	6/21/2022 6:42	1.66	6/21/2022 7:05	5.34	6/21/2022 8:28	-0.30	6/20/2022 7:16	11.27
6/20/2022 7:53	-0.04	6/21/2022 6:43	1.66	6/21/2022 7:06	5.36	6/21/2022 8:29	-0.26	6/20/2022 7:17	11.27
6/20/2022 7:54	-0.04	6/21/2022 6:44	1.66	6/21/2022 7:07	5.34	6/21/2022 8:30	-0.32	6/20/2022 7:18	11.21
6/20/2022 7:55	-0.04	6/21/2022 6:45	1.67	6/21/2022 7:08	5.33	6/21/2022 8:31	-0.29	6/20/2022 7:19	11.19
6/20/2022 7:56	-0.04	6/21/2022 6:46	1.67	6/21/2022 7:09	5.35	6/21/2022 8:32	-0.28	6/20/2022 7:20	11.27
6/20/2022 7:57	-0.04	6/21/2022 6:47	1.67	6/21/2022 7:10	5.36	6/21/2022 8:33	-0.28	6/20/2022 7:21	11.24
6/20/2022 7:58	-0.04	6/21/2022 6:48	1.66	6/21/2022 7:11	5.36	6/21/2022 8:34	-0.30	6/20/2022 7:22	11.20
6/20/2022 7:59	-0.04	6/21/2022 6:49	1.67	6/21/2022 7:12	5.34	6/21/2022 8:35	-0.28	6/20/2022 7:23	11.25
6/20/2022 8:00	-0.04	6/21/2022 6:50	1.67	6/21/2022 7:13	5.35	6/21/2022 8:36	-0.28	6/20/2022 7:24	11.23
6/20/2022 8:01	-0.04	6/21/2022 6:51	1.66	6/21/2022 7:14	5.37	6/21/2022 8:37	-0.30	6/20/2022 7:25	11.25
6/20/2022 8:02	-0.04	6/21/2022 6:52	1.66	6/21/2022 7:15	5.36	6/21/2022 8:38	-0.30	6/20/2022 7:26	11.18
6/20/2022 8:03	-0.04	6/21/2022 6:53	1.67	6/21/2022 7:16	5.38	6/21/2022 8:39	-0.32	6/20/2022 7:27	11.22
6/20/2022 8:04	-0.04	6/21/2022 6:54	1.67	6/21/2022 7:17	5.35	6/21/2022 8:40	-0.27	6/20/2022 7:28	11.28
6/20/2022 8:05	-0.04	6/21/2022 6:55	1.67	6/21/2022 7:18	5.31	6/21/2022 8:41	-0.28	6/20/2022 7:29	11.24
6/20/2022 8:06	-0.04	6/21/2022 6:56	1.67	6/21/2022 7:19	5.37	6/21/2022 8:42	-0.31	6/20/2022 7:30	11.23
6/20/2022 8:07	-0.04	6/21/2022 6:57	1.67	6/21/2022 7:20	5.36	6/21/2022 8:43	-0.31	6/20/2022 7:31	11.25
6/20/2022 8:08	-0.04	6/21/2022 6:58	1.67	6/21/2022 7:21	5.35	6/21/2022 8:44	-0.29	6/20/2022 7:32	11.28

6/20/2022 8:09	-0.04	6/21/2022 6:59	1.67	6/21/2022 7:22	5.35	6/21/2022 8:45	-0.28	6/20/2022 7:33	11.21
6/20/2022 8:10	-0.04	6/21/2022 7:00	1.67	6/21/2022 7:23	5.37	6/21/2022 8:46	-0.29	6/20/2022 7:34	11.20
6/20/2022 8:11	-0.04	6/21/2022 7:01	1.68	6/21/2022 7:24	5.37	6/21/2022 8:47	-0.30	6/20/2022 7:35	11.26
6/20/2022 8:12	-0.04	6/21/2022 7:02	1.67	6/21/2022 7:25	5.39	6/21/2022 8:48	-0.30	6/20/2022 7:36	11.23
6/20/2022 8:13	-0.04	6/21/2022 7:03	1.67	6/21/2022 7:26	5.34	6/21/2022 8:49	-0.27	6/20/2022 7:37	11.25
6/20/2022 8:14	-0.04	6/21/2022 7:04	1.67	6/21/2022 7:27	5.37	6/21/2022 8:50	-0.31	6/20/2022 7:38	11.24
6/20/2022 8:15	-0.04	6/21/2022 7:05	1.68	6/21/2022 7:28	5.33	6/21/2022 8:51	-0.32	6/20/2022 7:39	11.21
6/20/2022 8:16	-0.04	6/21/2022 7:06	1.67	6/21/2022 7:29	5.37	6/21/2022 8:52	-0.33	6/20/2022 7:40	11.22
6/20/2022 8:17	-0.04	6/21/2022 7:07	1.67	6/21/2022 7:30	5.37	6/21/2022 8:53	-0.34	6/20/2022 7:41	11.19
6/20/2022 8:18	-0.04	6/21/2022 7:08	1.68	6/21/2022 7:31	5.37	6/21/2022 8:54	-0.31	6/20/2022 7:42	11.27
6/20/2022 8:19	-0.04	6/21/2022 7:09	1.68	6/21/2022 7:32	5.40	6/21/2022 8:55	-0.27	6/20/2022 7:43	11.21
6/20/2022 8:20	-0.04	6/21/2022 7:10	1.68	6/21/2022 7:33	5.36	6/21/2022 8:56	-0.28	6/20/2022 7:44	11.22
6/20/2022 8:21	-0.04	6/21/2022 7:11	1.68	6/21/2022 7:34	5.38	6/21/2022 8:57	-0.29	6/20/2022 7:45	11.23
6/20/2022 8:22	-0.04	6/21/2022 7:12	1.68	6/21/2022 7:35	5.37	6/21/2022 8:58	-0.28	6/20/2022 7:46	11.22
6/20/2022 8:23	-0.04	6/21/2022 7:13	1.68	6/21/2022 7:36	5.39	6/21/2022 8:59	-0.29	6/20/2022 7:47	11.20
6/20/2022 8:24	-0.04	6/21/2022 7:14	1.68	6/21/2022 7:37	5.38	6/21/2022 9:00	-0.33	6/20/2022 7:48	11.22
6/20/2022 8:25	-0.04	6/21/2022 7:15	1.68	6/21/2022 7:38	5.34	6/21/2022 9:01	-0.31	6/20/2022 7:49	11.21
6/20/2022 8:26	-0.04	6/21/2022 7:16	1.68	6/21/2022 7:39	5.37	6/21/2022 9:02	-0.29	6/20/2022 7:50	11.22
6/20/2022 8:27	-0.04	6/21/2022 7:17	1.68	6/21/2022 7:40	5.36	6/21/2022 9:03	-0.29	6/20/2022 7:51	11.24
6/20/2022 8:28	-0.04	6/21/2022 7:18	1.68	6/21/2022 7:41	5.39	6/21/2022 9:04	-0.30	6/20/2022 7:52	11.26
6/20/2022 8:29	-0.04	6/21/2022 7:19	1.68	6/21/2022 7:42	5.39	6/21/2022 9:05	-0.28	6/20/2022 7:53	11.23
6/20/2022 8:30	-0.04	6/21/2022 7:20	1.68	6/21/2022 7:43	5.38	6/21/2022 9:06	-0.29	6/20/2022 7:54	11.24
6/20/2022 8:31	-0.04	6/21/2022 7:21	1.68	6/21/2022 7:44	5.37	6/21/2022 9:07	-0.30	6/20/2022 7:55	11.29
6/20/2022 8:32	-0.04	6/21/2022 7:22	1.68	6/21/2022 7:45	5.39	6/21/2022 9:08	-0.27	6/20/2022 7:56	11.28
6/20/2022 8:33	-0.04	6/21/2022 7:23	1.69	6/21/2022 7:46	5.42	6/21/2022 9:09	-0.32	6/20/2022 7:57	11.24
6/20/2022 8:34	-0.04	6/21/2022 7:24	1.68	6/21/2022 7:47	5.40	6/21/2022 9:10	-0.30	6/20/2022 7:58	11.23
6/20/2022 8:35	-0.04	6/21/2022 7:25	1.69	6/21/2022 7:48	5.38	6/21/2022 9:11	-0.29	6/20/2022 7:59	11.28
6/20/2022 8:36	-0.04	6/21/2022 7:26	1.69	6/21/2022 7:49	5.41	6/21/2022 9:12	-0.32	6/20/2022 8:00	11.26
6/20/2022 8:37	-0.04	6/21/2022 7:27	1.69	6/21/2022 7:50	5.38	6/21/2022 9:13	-0.25	6/20/2022 8:01	11.24
6/20/2022 8:38	-0.04	6/21/2022 7:28	1.69	6/21/2022 7:51	5.39	6/21/2022 9:14	-0.29	6/20/2022 8:02	11.22
6/20/2022 8:39	-0.04	6/21/2022 7:29	1.69	6/21/2022 7:52	5.41	6/21/2022 9:15	-0.27	6/20/2022 8:03	11.28
6/20/2022 8:40	-0.04	6/21/2022 7:30	1.69	6/21/2022 7:53	5.39	6/21/2022 9:16	-0.30	6/20/2022 8:04	11.23
6/20/2022 8:41	-0.04	6/21/2022 7:31	1.69	6/21/2022 7:54	5.38	6/21/2022 9:17	-0.33	6/20/2022 8:05	11.21
6/20/2022 8:42	-0.04	6/21/2022 7:32	1.69	6/21/2022 7:55	5.40	6/21/2022 9:18	-0.33	6/20/2022 8:06	11.23
6/20/2022 8:43	-0.04	6/21/2022 7:33	1.69	6/21/2022 7:56	5.41	6/21/2022 9:19	-0.30	6/20/2022 8:07	11.22
6/20/2022 8:44	-0.04	6/21/2022 7:34	1.69	6/21/2022 7:57	5.42	6/21/2022 9:20	-0.30	6/20/2022 8:08	11.22
6/20/2022 8:45	-0.04	6/21/2022 7:35	1.69	6/21/2022 7:58	5.44	6/21/2022 9:21	-0.25	6/20/2022 8:09	11.22
6/20/2022 8:46	-0.04	6/21/2022 7:36	1.69	6/21/2022 7:59	5.42	6/21/2022 9:22	-0.31	6/20/2022 8:10	11.24
6/20/2022 8:47	-0.04	6/21/2022 7:37	1.69	6/21/2022 8:00	5.41	6/21/2022 9:23	-0.30	6/20/2022 8:11	11.29
6/20/2022 8:48	-0.04	6/21/2022 7:38	1.69	6/21/2022 8:01	5.41	6/21/2022 9:24	-0.33	6/20/2022 8:12	11.19
6/20/2022 8:49	-0.04	6/21/2022 7:39	1.69	6/21/2022 8:02	5.43	6/21/2022 9:25	-0.32	6/20/2022 8:13	11.25
6/20/2022 8:50	-0.04	6/21/2022 7:40	1.69	6/21/2022 8:03	5.41	6/21/2022 9:26	-0.24	6/20/2022 8:14	11.24
6/20/2022 8:51	-0.04	6/21/2022 7:41	1.70	6/21/2022 8:04	5.43	6/21/2022 9:27	-0.30	6/20/2022 8:15	11.24
6/20/2022 8:52	-0.04	6/21/2022 7:42	1.70	6/21/2022 8:05	5.39	6/21/2022 9:28	-0.30	6/20/2022 8:16	11.19
6/20/2022 8:53	-0.04	6/21/2022 7:43	1.70	6/21/2022 8:06	5.39	6/21/2022 9:29	-0.26	6/20/2022 8:17	11.25
6/20/2022 8:54	-0.04	6/21/2022 7:44	1.70	6/21/2022 8:07	5.40	6/21/2022 9:30	-0.31	6/20/2022 8:18	11.17
6/20/2022 8:55	-0.04	6/21/2022 7:45	1.69	6/21/2022 8:08	5.39	6/21/2022 9:31	-0.28	6/20/2022 8:19	11.32
6/20/2022 8:56	-0.04	6/21/2022 7:46	1.70	6/21/2022 8:09	5.42	6/21/2022 9:32	-0.30	6/20/2022 8:20	11.29
6/20/2022 8:57	-0.04	6/21/2022 7:47	1.70	6/21/2022 8:10	5.40	6/21/2022 9:33	-0.30	6/20/2022 8:21	11.29
6/20/2022 8:58	-0.04	6/21/2022 7:48	1.70	6/21/2022 8:11	5.46	6/21/2022 9:34	-0.30	6/20/2022 8:22	11.22
6/20/2022 8:59	-0.04	6/21/2022 7:49	1.70	6/21/2022 8:12	5.42	6/21/2022 9:35	-0.30	6/20/2022 8:23	11.23
6/20/2022 9:00	-0.04	6/21/2022 7:50	1.70	6/21/2022 8:13	5.43	6/21/2022 9:36	-0.27	6/20/2022 8:24	11.22
6/20/2022 9:01	-0.04	6/21/2022 7:51	1.71	6/21/2022 8:14	5.42	6/21/2022 9:37	-0.29	6/20/2022 8:25	11.21
6/20/2022 9:02	-0.04	6/21/2022 7:52	1.70	6/21/2022 8:15	5.40	6/21/2022 9:38	-0.26	6/20/2022 8:26	11.22
6/20/2022 9:03	-0.04	6/21/2022 7:53	1.70	6/21/2022 8:16	5.42	6/21/2022 9:39	-0.30	6/20/2022 8:27	11.24
6/20/2022 9:04	-0.04	6/21/2022 7:54	1.70	6/21/2022 8:17	5.41	6/21/2022 9:40	-0.32	6/20/2022 8:28	11.23
6/20/2022 9:05	-0.04	6/21/2022 7:55	1.70	6/21/2022 8:18	5.43	6/21/2022 9:41	-0.30	6/20/2022 8:29	11.26
6/20/2022 9:06	-0.04	6/21/2022 7:56	1.70	6/21/2022 8:19	5.46	6/21/2022 9:42	-0.27	6/20/2022 8:30	11.24
6/20/2022 9:07	-0.04	6/21/2022 7:57	1.70	6/21/2022 8:20	5.42	6/21/2022 9:43	-0.31	6/20/2022 8:31	11.21
6/20/2022 9:08	-0.04	6/21/2022 7:58	1.71	6/21/2022 8:21	5.42	6/21/2022 9:44	-0.31	6/20/2022 8:32	11.20
6/20/2022 9:09	-0.04	6/21/2022 7:59	1.71	6/21/2022 8:22	5.42	6/21/2022 9:45	-0.32	6/20/2022 8:33	11.27
6/20/2022 9:10	-0.04	6/21/2022 8:00	1.71	6/21/2022 8:23	5.41	6/21/2022 9:46	-0.34	6/20/2022 8:34	11.26
6/20/2022 9:11	-0.04	6/21/2022 8:01	1.71	6/21/2022 8:24	5.43	6/21/2022 9:47	-0.29	6/20/2022 8:35	11.24
6/20/2022 9:12	-0.04	6/21/2022 8:02	1.71	6/21/2022 8:25	5.42	6/21/2022 9:48	-0.30	6/20/2022 8:36	11.22
6/20/2022 9:13	-0.04	6/21/2022 8:03	1.71	6/21/2022 8:26	5.43	6/21/2022 9:49	-0.30	6/20/2022 8:37	11.26
6/20/2022 9:14	-0.04	6/21/2022 8:04	1.71	6/21/2022 8:27	5.44	6/21/2022 9:50	-0.31	6/20/2022 8:38	11.25
6/20/2022 9:15	-0.04	6/21/2022 8:05	1.71	6/21/2022 8:28	5.46	6/21/2022 9:51	-0.31	6/20/2022 8:39	11.20
6/20/2022 9:16	-0.04	6/21/2022 8:06	1.71	6/21/2022 8:29	5.48	6/21/2022 9:52	-0.29	6/20/2022 8:40	11.24
6/20/2022 9:17	-0.04	6/21/2022 8:07	1.71	6/21/2022 8:30	5.43	6/21/2022 9:53	-0.29	6/20/2022 8:41	11.25
6/20/2022 9:18	-0.04	6/21/2022 8:08	1.71	6/21/2022 8:31	5.43	6/21/2022 9:54	-0.28	6/20/2022 8:42	11.22
6/20/2022 9:19	-0.04	6/21/2022 8:09	1.71	6/21/2022 8:32	5.46	6/21/2022 9:55	-0.28	6/20/2022 8:43	11.29
6/20/2022 9:20	-0.04	6/21/2022 8:10	1.71	6/21/2022 8:33	5.42	6/21/2022 9:56	-0.33	6/20/2022 8:44	11.24
6/20/2022 9:21	-0.04	6/21/2022 8:11	1.71	6/21/2022 8:34	5.43	6/21/2022 9:57	-0.28	6/20/2022 8:45	11.31
6/20/2022 9:22	-0.07	6/21/2022 8:12	1.72	6/21/2022 8:35	5.47	6/21/2022 9:58	-0.32	6/20/2022 8:46	11.20
6/20/2022 9:23	-0.08	6/21/2022 8:13	1.71	6/21/2022 8:36	5.46	6/21/2022 9:59	-0.26	6/20/2022 8:47	11.25
6/20/2022 9:24	-0.06	6/21/2022 8:14	1.71	6/21/2022 8:37	5.45	6/21/2022 10:00	-0.32	6/20/2022 8:48	11.22
6/20/2022 9:25	-0.06	6/21/2022 8:15	1.72	6/21/2022 8:38	5.44	6/21/2022 10:01	-0.31	6/20/2022 8:49	11.24
6/20/2022 9:26	-0.06	6/21/2022 8:16	1.71	6/21/2022 8:39	5.44	6/21/2022 10:02	-0.28	6/20/2022 8:50	11.24
6/20/2022 9:27	-0.06	6/21/2022 8:17	1.72	6/21/2022 8:40	5.44	6/21/2022 10:03	-0.27	6/20/2022 8:51	11.22
6/20/2022 9:28	-0.06	6/21/2022 8:18	1.72	6/21/2022 8:41	5.49	6/21/2022 10:04	-0.31	6/20/2022 8:52	11.21
6/20/2022 9:29	-0.06	6/21/2022 8:19	1.72	6/21/2022 8:42	5.43	6/21/2022 10:05	-0.29	6/20/2022 8:53	11.22
6/20/2022 9:30	-0.06	6/21/2022 8:20	1.72	6/21/2022 8:43	5.46	6/21/2022 10:06	-0.30	6/20/2022 8:54	11.24
6/20/2022 9:31	-0.06	6/21/2022 8:21	1.72	6/21/2022 8:44	5.46	6/21/2022 10:07	-0.30	6/20/2022 8:55	11.26
6/20/2022 9:32	-0.06	6/21/2022 8:22	1.72	6/21/2022 8:45	5.44	6/21/2022 10:08	-0.28	6/20/2022 8:56	11.21
6/20/2022 9:33	-0.06	6/21/2022 8:23	1.72	6/21/2022 8:46	5.43	6/21/2022 10:09	-0.29	6/20/2022 8:57	11.22
6/20/2022 9:34	-0.06	6/21/2022 8:24	1.72	6/21/2022 8:47	5.47	6/21/2022 10:10	-0.29	6/20/2022 8:58	11.25
6/20/2022 9:35	-0.06	6/21/2022 8:25	1.72	6/21/2022 8:48	5.46	6/21/2022 10:11	-0.29	6/20/2022 8:59	11.20
6/20/2022 9:36	-0.06	6/21/2022 8:26	1.72	6/21/2022 8:49	5.43	6/21/2022 10:12	-0.32	6/20/2022 9:00	11.23

6/20/2022 9:37	-0.06	6/21/2022 8:27	1.72	6/21/2022 8:50	5.47	6/21/2022 10:13	-0.30	6/20/2022 9:01	11.22
6/20/2022 9:38	-0.06	6/21/2022 8:28	1.72	6/21/2022 8:51	5.46	6/21/2022 10:14	-0.29	6/20/2022 9:02	11.21
6/20/2022 9:39	-0.06	6/21/2022 8:29	1.72	6/21/2022 8:52	5.50	6/21/2022 10:15	-0.31	6/20/2022 9:03	11.25
6/20/2022 9:40	-0.06	6/21/2022 8:30	1.73	6/21/2022 8:53	5.46	6/21/2022 10:16	-0.26	6/20/2022 9:04	11.25
6/20/2022 9:41	-0.06	6/21/2022 8:31	1.72	6/21/2022 8:54	5.47	6/21/2022 10:17	-0.29	6/20/2022 9:05	11.22
6/20/2022 9:42	-0.06	6/21/2022 8:32	1.72	6/21/2022 8:55	5.48	6/21/2022 10:18	-0.33	6/20/2022 9:06	11.17
6/20/2022 9:43	-0.06	6/21/2022 8:33	1.72	6/21/2022 8:56	5.46	6/21/2022 10:19	-0.31	6/20/2022 9:07	11.25
6/20/2022 9:44	-0.06	6/21/2022 8:34	1.72	6/21/2022 8:57	5.48	6/21/2022 10:20	-0.26	6/20/2022 9:08	11.25
6/20/2022 9:45	-0.06	6/21/2022 8:35	1.73	6/21/2022 8:58	5.46	6/21/2022 10:21	-0.30	6/20/2022 9:09	11.23
6/20/2022 9:46	-0.06	6/21/2022 8:36	1.72	6/21/2022 8:59	5.47	6/21/2022 10:22	-0.26	6/20/2022 9:10	11.27
6/20/2022 9:47	-0.06	6/21/2022 8:37	1.72	6/21/2022 9:00	5.45	6/21/2022 10:23	-0.27	6/20/2022 9:11	11.23
6/20/2022 9:48	-0.06	6/21/2022 8:38	1.72	6/21/2022 9:01	5.48	6/21/2022 10:24	-0.33	6/20/2022 9:12	11.30
6/20/2022 9:49	-0.06	6/21/2022 8:39	1.72	6/21/2022 9:02	5.45	6/21/2022 10:25	-0.28	6/20/2022 9:13	11.25
6/20/2022 9:50	-0.06	6/21/2022 8:40	1.73	6/21/2022 9:03	5.45	6/21/2022 10:26	-0.30	6/20/2022 9:14	11.24
6/20/2022 9:51	-0.06	6/21/2022 8:41	1.73	6/21/2022 9:04	5.49	6/21/2022 10:27	-0.31	6/20/2022 9:15	11.19
6/20/2022 9:52	-0.06	6/21/2022 8:42	1.73	6/21/2022 9:05	5.46	6/21/2022 10:28	-0.33	6/20/2022 9:16	11.23
6/20/2022 9:53	-0.06	6/21/2022 8:43	1.73	6/21/2022 9:06	5.47	6/21/2022 10:29	-0.27	6/20/2022 9:17	11.23
6/20/2022 9:54	-0.06	6/21/2022 8:44	1.73	6/21/2022 9:07	5.48	6/21/2022 10:30	-0.30	6/20/2022 9:18	11.20
6/20/2022 9:55	-0.07	6/21/2022 8:45	1.73	6/21/2022 9:08	5.45	6/21/2022 10:31	-0.31	6/20/2022 9:19	11.25
6/20/2022 9:56	-0.07	6/21/2022 8:46	1.73	6/21/2022 9:09	5.49	6/21/2022 10:32	-0.29	6/20/2022 9:20	11.21
6/20/2022 9:57	-0.06	6/21/2022 8:47	1.73	6/21/2022 9:10	5.48	6/21/2022 10:33	-0.33	6/20/2022 9:21	11.22
6/20/2022 9:58	-0.06	6/21/2022 8:48	1.73	6/21/2022 9:11	5.44	6/21/2022 10:34	-0.32	6/20/2022 9:22	11.22
6/20/2022 9:59	-0.06	6/21/2022 8:49	1.73	6/21/2022 9:12	5.47	6/21/2022 10:35	-0.30	6/20/2022 9:23	11.28
6/20/2022 10:00	-0.06	6/21/2022 8:50	1.73	6/21/2022 9:13	5.49	6/21/2022 10:36	-0.30	6/20/2022 9:24	11.23
6/20/2022 10:01	-0.06	6/21/2022 8:51	1.73	6/21/2022 9:14	5.47	6/21/2022 10:37	-0.28	6/20/2022 9:25	11.26
6/20/2022 10:02	-0.06	6/21/2022 8:52	1.73	6/21/2022 9:15	5.47	6/21/2022 10:38	-0.33	6/20/2022 9:26	11.22
6/20/2022 10:03	-0.06	6/21/2022 8:53	1.74	6/21/2022 9:16	5.50	6/21/2022 10:39	-0.29	6/20/2022 9:27	11.25
6/20/2022 10:04	-0.06	6/21/2022 8:54	1.73	6/21/2022 9:17	5.48	6/21/2022 10:40	-0.30	6/20/2022 9:28	11.23
6/20/2022 10:05	-0.06	6/21/2022 8:55	1.73	6/21/2022 9:18	5.49	6/21/2022 10:41	-0.29	6/20/2022 9:29	11.26
6/20/2022 10:06	-0.06	6/21/2022 8:56	1.74	6/21/2022 9:19	5.45	6/21/2022 10:42	-0.27	6/20/2022 9:30	11.26
6/20/2022 10:07	-0.06	6/21/2022 8:57	1.74	6/21/2022 9:20	5.51	6/21/2022 10:43	-0.31	6/20/2022 9:31	11.23
6/20/2022 10:08	-0.06	6/21/2022 8:58	1.74	6/21/2022 9:21	5.49	6/21/2022 10:44	-0.31	6/20/2022 9:32	11.21
6/20/2022 10:09	-0.06	6/21/2022 8:59	1.74	6/21/2022 9:22	5.46	6/21/2022 10:45	-0.29	6/20/2022 9:33	11.22
6/20/2022 10:10	-0.06	6/21/2022 9:00	1.74	6/21/2022 9:23	5.48	6/21/2022 10:46	-0.32	6/20/2022 9:34	11.30
6/20/2022 10:11	-0.06	6/21/2022 9:01	1.74	6/21/2022 9:24	5.48	6/21/2022 10:47	-0.28	6/20/2022 9:35	11.26
6/20/2022 10:12	-0.06	6/21/2022 9:02	1.74	6/21/2022 9:25	5.50	6/21/2022 10:48	-0.30	6/20/2022 9:36	11.21
6/20/2022 10:13	-0.06	6/21/2022 9:03	1.74	6/21/2022 9:26	5.51	6/21/2022 10:49	-0.30	6/20/2022 9:37	11.27
6/20/2022 10:14	-0.07	6/21/2022 9:04	1.74	6/21/2022 9:27	5.49	6/21/2022 10:50	-0.32	6/20/2022 9:38	11.21
6/20/2022 10:15	-0.06	6/21/2022 9:05	1.74	6/21/2022 9:28	5.49	6/21/2022 10:51	-0.30	6/20/2022 9:39	11.23
6/20/2022 10:16	-0.06	6/21/2022 9:06	1.74	6/21/2022 9:29	5.49	6/21/2022 10:52	-0.29	6/20/2022 9:40	11.20
6/20/2022 10:17	-0.06	6/21/2022 9:07	1.74	6/21/2022 9:30	5.50	6/21/2022 10:53	-0.30	6/20/2022 9:41	11.27
6/20/2022 10:18	-0.06	6/21/2022 9:08	1.74	6/21/2022 9:31	5.51	6/21/2022 10:54	-0.27	6/20/2022 9:42	11.23
6/20/2022 10:19	-0.06	6/21/2022 9:09	1.74	6/21/2022 9:32	5.53	6/21/2022 10:55	-0.31	6/20/2022 9:43	11.24
6/20/2022 10:20	-0.06	6/21/2022 9:10	1.74	6/21/2022 9:33	5.47	6/21/2022 10:56	-0.31	6/20/2022 9:44	11.25
6/20/2022 10:21	-0.06	6/21/2022 9:11	1.74	6/21/2022 9:34	5.47	6/21/2022 10:57	-0.32	6/20/2022 9:45	11.22
6/20/2022 10:22	-0.06	6/21/2022 9:12	1.74	6/21/2022 9:35	5.47	6/21/2022 10:58	-0.31	6/20/2022 9:46	11.21
6/20/2022 10:23	-0.06	6/21/2022 9:13	1.74	6/21/2022 9:36	5.52	6/21/2022 10:59	-0.32	6/20/2022 9:47	11.23
6/20/2022 10:24	-0.06	6/21/2022 9:14	1.74	6/21/2022 9:37	5.48	6/21/2022 11:00	-0.30	6/20/2022 9:48	11.23
6/20/2022 10:25	-0.06	6/21/2022 9:15	1.74	6/21/2022 9:38	5.52	6/21/2022 11:01	-0.28	6/20/2022 9:49	11.21
6/20/2022 10:26	-0.06	6/21/2022 9:16	1.74	6/21/2022 9:39	5.52	6/21/2022 11:02	-0.31	6/20/2022 9:50	11.28
6/20/2022 10:27	-0.06	6/21/2022 9:17	1.75	6/21/2022 9:40	5.49	6/21/2022 11:03	-0.33	6/20/2022 9:51	11.20
6/20/2022 10:28	-0.06	6/21/2022 9:18	1.75	6/21/2022 9:41	5.50	6/21/2022 11:04	-0.27	6/20/2022 9:52	11.21
6/20/2022 10:29	-0.06	6/21/2022 9:19	1.75	6/21/2022 9:42	5.49	6/21/2022 11:05	-0.31	6/20/2022 9:53	11.27
6/20/2022 10:30	-0.07	6/21/2022 9:20	1.74	6/21/2022 9:43	5.52	6/21/2022 11:06	-0.31	6/20/2022 9:54	11.26
6/20/2022 10:31	-0.06	6/21/2022 9:21	1.74	6/21/2022 9:44	5.55	6/21/2022 11:07	-0.30	6/20/2022 9:55	11.26
6/20/2022 10:32	-0.06	6/21/2022 9:22	1.75	6/21/2022 9:45	5.52	6/21/2022 11:08	-0.28	6/20/2022 9:56	11.21
6/20/2022 10:33	-0.06	6/21/2022 9:23	1.74	6/21/2022 9:46	5.52	6/21/2022 11:09	-0.29	6/20/2022 9:57	11.20
6/20/2022 10:34	-0.06	6/21/2022 9:24	1.75	6/21/2022 9:47	5.50	6/21/2022 11:10	-0.32	6/20/2022 9:58	11.24
6/20/2022 10:35	-0.06	6/21/2022 9:25	1.75	6/21/2022 9:48	5.51	6/21/2022 11:11	-0.31	6/20/2022 9:59	11.25
6/20/2022 10:36	-0.06	6/21/2022 9:26	1.75	6/21/2022 9:49	5.55	6/21/2022 11:12	-0.30	6/20/2022 10:00	11.19
6/20/2022 10:37	-0.06	6/21/2022 9:27	1.75	6/21/2022 9:50	5.54	6/21/2022 11:13	-0.33	6/20/2022 10:01	11.20
6/20/2022 10:38	-0.07	6/21/2022 9:28	1.75	6/21/2022 9:51	5.52	6/21/2022 11:14	-0.32	6/20/2022 10:02	11.22
6/20/2022 10:39	-0.06	6/21/2022 9:29	1.75	6/21/2022 9:52	5.51	6/21/2022 11:15	-0.32	6/20/2022 10:03	11.21
6/20/2022 10:40	-0.06	6/21/2022 9:30	1.75	6/21/2022 9:53	5.50	6/21/2022 11:16	-0.26	6/20/2022 10:04	11.27
6/20/2022 10:41	-0.06	6/21/2022 9:31	1.75	6/21/2022 9:54	5.53	6/21/2022 11:17	-0.31	6/20/2022 10:05	11.28
6/20/2022 10:42	-0.06	6/21/2022 9:32	1.75	6/21/2022 9:55	5.54	6/21/2022 11:18	-0.35	6/20/2022 10:06	11.26
6/20/2022 10:43	-0.06	6/21/2022 9:33	1.75	6/21/2022 9:56	5.50	6/21/2022 11:19	-0.29	6/20/2022 10:07	11.26
6/20/2022 10:44	-0.06	6/21/2022 9:34	1.75	6/21/2022 9:57	5.53	6/21/2022 11:20	-0.35	6/20/2022 10:08	11.25
6/20/2022 10:45	-0.06	6/21/2022 9:35	1.75	6/21/2022 9:58	5.52	6/21/2022 11:21	-0.30	6/20/2022 10:09	11.23
6/20/2022 10:46	-0.07	6/21/2022 9:36	1.75	6/21/2022 9:59	5.52	6/21/2022 11:22	-0.27	6/20/2022 10:10	11.24
6/20/2022 10:47	-0.06	6/21/2022 9:37	1.75	6/21/2022 10:00	5.54	6/21/2022 11:23	-0.34	6/20/2022 10:11	11.24
6/20/2022 10:48	-0.06	6/21/2022 9:38	1.75	6/21/2022 10:01	5.50	6/21/2022 11:24	-0.33	6/20/2022 10:12	11.23
6/20/2022 10:49	-0.06	6/21/2022 9:39	1.75	6/21/2022 10:02	5.53	6/21/2022 11:25	-0.32	6/20/2022 10:13	11.28
6/20/2022 10:50	-0.06	6/21/2022 9:40	1.76	6/21/2022 10:03	5.54	6/21/2022 11:26	-0.27	6/20/2022 10:14	11.21
6/20/2022 10:51	-0.07	6/21/2022 9:41	1.76	6/21/2022 10:04	5.54	6/21/2022 11:27	-0.31	6/20/2022 10:15	11.23
6/20/2022 10:52	-0.06	6/21/2022 9:42	1.76	6/21/2022 10:05	5.51	6/21/2022 11:28	-0.29	6/20/2022 10:16	11.26
6/20/2022 10:53	-0.06	6/21/2022 9:43	1.76	6/21/2022 10:06	5.55	6/21/2022 11:29	-0.30	6/20/2022 10:17	11.26
6/20/2022 10:54	-0.07	6/21/2022 9:44	1.76	6/21/2022 10:07	5.53	6/21/2022 11:30	-0.30	6/20/2022 10:18	11.29
6/20/2022 10:55	-0.06	6/21/2022 9:45	1.76	6/21/2022 10:08	5.56	6/21/2022 11:31	-0.28	6/20/2022 10:19	11.25
6/20/2022 10:56	-0.06	6/21/2022 9:46	1.76	6/21/2022 10:09	5.56	6/21/2022 11:32	-0.29	6/20/2022 10:20	11.26
6/20/2022 10:57	-0.07	6/21/2022 9:47	1.76	6/21/2022 10:10	5.54	6/21/2022 11:33	-0.34	6/20/2022 10:21	11.22
6/20/2022 10:58	-0.06	6/21/2022 9:48	1.76	6/21/2022 10:11	5.54	6/21/2022 11:34	-0.32	6/20/2022 10:22	11.29
6/20/2022 10:59	-0.07	6/21/2022 9:49	1.76	6/21/2022 10:12	5.56	6/21/2022 11:35	-0.27	6/20/2022 10:23	11.24
6/20/2022 11:00	-0.06	6/21/2022 9:50	1.76	6/21/2022 10:13	5.54	6/21/2022 11:36	-0.29	6/20/2022 10:24	11.25
6/20/2022 11:01	-0.06	6/21/2022 9:51	1.76	6/21/2022 10:14	5.54	6/21/2022 11:37	-0.29	6/20/2022 10:25	11.26
6/20/2022 11:02	-0.06	6/21/2022 9:52	1.76	6/21/2022 10:15	5.51	6/21/2022 11:38	-0.29	6/20/2022 10:26	11.29
6/20/2022 11:03	-0.06	6/21/2022 9:53	1.76	6/21/2022 10:16	5.55	6/21/2022 11:39	-0.29	6/20/2022 10:27	11.26
6/20/2022 11:04	-0.06	6/21/2022 9:54	1.76	6/21/2022 10:17	5.55	6/21/2022 11:40	-0.30	6/20/2022 10:28	11.22

6/20/2022 11:05	-0.06	6/21/2022 9:55	1.76	6/21/2022 10:18	5.57	6/21/2022 11:41	-0.32	6/20/2022 10:29	11.24
6/20/2022 11:06	-0.07	6/21/2022 9:56	1.76	6/21/2022 10:19	5.55	6/21/2022 11:42	-0.31	6/20/2022 10:30	11.23
6/20/2022 11:07	-0.06	6/21/2022 9:57	1.76	6/21/2022 10:20	5.53	6/21/2022 11:43	-0.31	6/20/2022 10:31	11.20
6/20/2022 11:08	-0.06	6/21/2022 9:58	1.77	6/21/2022 10:21	5.54	6/21/2022 11:44	-0.27	6/20/2022 10:32	11.24
6/20/2022 11:09	-0.06	6/21/2022 9:59	1.76	6/21/2022 10:22	5.55	6/21/2022 11:45	-0.29	6/20/2022 10:33	11.19
6/20/2022 11:10	-0.06	6/21/2022 10:00	1.76	6/21/2022 10:23	5.52	6/21/2022 11:46	-0.29	6/20/2022 10:34	11.25
6/20/2022 11:11	-0.06	6/21/2022 10:01	1.77	6/21/2022 10:24	5.52	6/21/2022 11:47	-0.28	6/20/2022 10:35	11.24
6/20/2022 11:12	-0.06	6/21/2022 10:02	1.76	6/21/2022 10:25	5.58	6/21/2022 11:48	-0.28	6/20/2022 10:36	11.25
6/20/2022 11:13	-0.06	6/21/2022 10:03	1.77	6/21/2022 10:26	5.54	6/21/2022 11:49	-0.27	6/20/2022 10:37	11.23
6/20/2022 11:14	-0.06	6/21/2022 10:04	1.77	6/21/2022 10:27	5.56	6/21/2022 11:50	-0.32	6/20/2022 10:38	11.23
6/20/2022 11:15	-0.06	6/21/2022 10:05	1.77	6/21/2022 10:28	5.54	6/21/2022 11:51	-0.26	6/20/2022 10:39	11.26
6/20/2022 11:16	-0.06	6/21/2022 10:06	1.77	6/21/2022 10:29	5.57	6/21/2022 11:52	-0.31	6/20/2022 10:40	11.24
6/20/2022 11:17	-0.06	6/21/2022 10:07	1.77	6/21/2022 10:30	5.57	6/21/2022 11:53	-0.30	6/20/2022 10:41	11.25
6/20/2022 11:18	-0.06	6/21/2022 10:08	1.77	6/21/2022 10:31	5.57	6/21/2022 11:54	-0.29	6/20/2022 10:42	11.22
6/20/2022 11:19	-0.06	6/21/2022 10:09	1.77	6/21/2022 10:32	5.57	6/21/2022 11:55	-0.28	6/20/2022 10:43	11.25
6/20/2022 11:20	-0.07	6/21/2022 10:10	1.77	6/21/2022 10:33	5.57	6/21/2022 11:56	-0.27	6/20/2022 10:44	11.22
6/20/2022 11:21	-0.07	6/21/2022 10:11	1.77	6/21/2022 10:34	5.56	6/21/2022 11:57	-0.33	6/20/2022 10:45	11.20
6/20/2022 11:22	-0.06	6/21/2022 10:12	1.77	6/21/2022 10:35	5.57	6/21/2022 11:58	-0.28	6/20/2022 10:46	11.24
6/20/2022 11:23	-0.06	6/21/2022 10:13	1.77	6/21/2022 10:36	5.57	6/21/2022 11:59	-0.31	6/20/2022 10:47	11.23
6/20/2022 11:24	-0.06	6/21/2022 10:14	1.77	6/21/2022 10:37	5.58	6/21/2022 12:00	-0.33	6/20/2022 10:48	11.24
6/20/2022 11:25	-0.07	6/21/2022 10:15	1.77	6/21/2022 10:38	5.58	6/21/2022 12:01	-0.25	6/20/2022 10:49	11.25
6/20/2022 11:26	-0.07	6/21/2022 10:16	1.77	6/21/2022 10:39	5.54	6/21/2022 12:02	-0.25	6/20/2022 10:50	11.21
6/20/2022 11:27	-0.06	6/21/2022 10:17	1.78	6/21/2022 10:40	5.56	6/21/2022 12:03	-0.30	6/20/2022 10:51	11.23
6/20/2022 11:28	-0.07	6/21/2022 10:18	1.77	6/21/2022 10:41	5.56	6/21/2022 12:04	-0.32	6/20/2022 10:52	11.23
6/20/2022 11:29	-0.06	6/21/2022 10:19	1.77	6/21/2022 10:42	5.57	6/21/2022 12:05	-0.33	6/20/2022 10:53	11.27
6/20/2022 11:30	-0.06	6/21/2022 10:20	1.78	6/21/2022 10:43	5.60	6/21/2022 12:06	-0.33	6/20/2022 10:54	11.26
6/20/2022 11:31	-0.06	6/21/2022 10:21	1.78	6/21/2022 10:44	5.55	6/21/2022 12:07	-0.29	6/20/2022 10:55	11.25
6/20/2022 11:32	-0.06	6/21/2022 10:22	1.77	6/21/2022 10:45	5.60	6/21/2022 12:08	-0.30	6/20/2022 10:56	11.27
6/20/2022 11:33	-0.06	6/21/2022 10:23	1.78	6/21/2022 10:46	5.58	6/21/2022 12:09	-0.28	6/20/2022 10:57	11.26
6/20/2022 11:34	-0.06	6/21/2022 10:24	1.78	6/21/2022 10:47	5.56	6/21/2022 12:10	-0.29	6/20/2022 10:58	11.21
6/20/2022 11:35	-0.06	6/21/2022 10:25	1.78	6/21/2022 10:48	5.57	6/21/2022 12:11	-0.27	6/20/2022 10:59	11.24
6/20/2022 11:36	-0.06	6/21/2022 10:26	1.78	6/21/2022 10:49	5.56	6/21/2022 12:12	-0.31	6/20/2022 11:00	11.26
6/20/2022 11:37	-0.06	6/21/2022 10:27	1.78	6/21/2022 10:50	5.57	6/21/2022 12:13	-0.28	6/20/2022 11:01	11.24
6/20/2022 11:38	-0.06	6/21/2022 10:28	1.78	6/21/2022 10:51	5.57	6/21/2022 12:14	-0.28	6/20/2022 11:02	11.32
6/20/2022 11:39	-0.06	6/21/2022 10:29	1.78	6/21/2022 10:52	5.57	6/21/2022 12:15	-0.28	6/20/2022 11:03	11.27
6/20/2022 11:40	-0.06	6/21/2022 10:30	1.78	6/21/2022 10:53	5.58	6/21/2022 12:16	-0.33	6/20/2022 11:04	11.23
6/20/2022 11:41	-0.06	6/21/2022 10:31	1.78	6/21/2022 10:54	5.55	6/21/2022 12:17	-0.31	6/20/2022 11:05	11.29
6/20/2022 11:42	-0.06	6/21/2022 10:32	1.78	6/21/2022 10:55	5.61	6/21/2022 12:18	-0.30	6/20/2022 11:06	11.26
6/20/2022 11:43	-0.06	6/21/2022 10:33	1.78	6/21/2022 10:56	5.59	6/21/2022 12:19	-0.33	6/20/2022 11:07	11.21
6/20/2022 11:44	-0.06	6/21/2022 10:34	1.78	6/21/2022 10:57	5.56	6/21/2022 12:20	-0.30	6/20/2022 11:08	11.28
6/20/2022 11:45	-0.07	6/21/2022 10:35	1.78	6/21/2022 10:58	5.57	6/21/2022 12:21	-0.32	6/20/2022 11:09	11.29
6/20/2022 11:46	-0.06	6/21/2022 10:36	1.78	6/21/2022 10:59	5.57	6/21/2022 12:22	-0.29	6/20/2022 11:10	11.26
6/20/2022 11:47	-0.06	6/21/2022 10:37	1.78	6/21/2022 11:00	5.64	6/21/2022 12:23	-0.33	6/20/2022 11:11	11.22
6/20/2022 11:48	-0.06	6/21/2022 10:38	1.78	6/21/2022 11:01	5.54	6/21/2022 12:24	-0.30	6/20/2022 11:12	11.20
6/20/2022 11:49	-0.06	6/21/2022 10:39	1.78	6/21/2022 11:02	5.62	6/21/2022 12:25	-0.31	6/20/2022 11:13	11.22
6/20/2022 11:50	-0.06	6/21/2022 10:40	1.78	6/21/2022 11:03	5.59	6/21/2022 12:26	-0.30	6/20/2022 11:14	11.26
6/20/2022 11:51	-0.06	6/21/2022 10:41	1.78	6/21/2022 11:04	5.57	6/21/2022 12:27	-0.25	6/20/2022 11:15	11.27
6/20/2022 11:52	-0.06	6/21/2022 10:42	1.78	6/21/2022 11:05	5.56	6/21/2022 12:28	-0.29	6/20/2022 11:16	11.22
6/20/2022 11:53	-0.06	6/21/2022 10:43	1.79	6/21/2022 11:06	5.56	6/21/2022 12:29	-0.29	6/20/2022 11:17	11.28
6/20/2022 11:54	-0.06	6/21/2022 10:44	1.79	6/21/2022 11:07	5.59	6/21/2022 12:30	-0.27	6/20/2022 11:18	11.25
6/20/2022 11:55	-0.06	6/21/2022 10:45	1.78	6/21/2022 11:08	5.55	6/21/2022 12:31	-0.27	6/20/2022 11:19	11.26
6/20/2022 11:56	-0.06	6/21/2022 10:46	1.79	6/21/2022 11:09	5.62	6/21/2022 12:32	-0.30	6/20/2022 11:20	11.21
6/20/2022 11:57	-0.06	6/21/2022 10:47	1.79	6/21/2022 11:10	5.59	6/21/2022 12:33	-0.29	6/20/2022 11:21	11.27
6/20/2022 11:58	-0.06	6/21/2022 10:48	1.79	6/21/2022 11:11	5.62	6/21/2022 12:34	-0.29	6/20/2022 11:22	11.30
6/20/2022 11:59	-0.06	6/21/2022 10:49	1.79	6/21/2022 11:12	5.61	6/21/2022 12:35	-0.31	6/20/2022 11:23	11.29
6/20/2022 12:00	-0.06	6/21/2022 10:50	1.79	6/21/2022 11:13	5.58	6/21/2022 12:36	-0.33	6/20/2022 11:24	11.22
6/20/2022 12:01	-0.06	6/21/2022 10:51	1.79	6/21/2022 11:14	5.62	6/21/2022 12:37	-0.29	6/20/2022 11:25	11.27
6/20/2022 12:02	-0.06	6/21/2022 10:52	1.79	6/21/2022 11:15	5.60	6/21/2022 12:38	-0.29	6/20/2022 11:26	11.25
6/20/2022 12:03	-0.06	6/21/2022 10:53	1.79	6/21/2022 11:16	5.60	6/21/2022 12:39	-0.29	6/20/2022 11:27	11.25
6/20/2022 12:04	-0.07	6/21/2022 10:54	1.79	6/21/2022 11:17	5.61	6/21/2022 12:40	-0.30	6/20/2022 11:28	11.27
6/20/2022 12:05	-0.06	6/21/2022 10:55	1.79	6/21/2022 11:18	5.62	6/21/2022 12:41	-0.30	6/20/2022 11:29	11.24
6/20/2022 12:06	-0.07	6/21/2022 10:56	1.79	6/21/2022 11:19	5.60	6/21/2022 12:42	-0.33	6/20/2022 11:30	11.25
6/20/2022 12:07	-0.06	6/21/2022 10:57	1.79	6/21/2022 11:20	5.56	6/21/2022 12:43	-0.31	6/20/2022 11:31	11.25
6/20/2022 12:08	-0.06	6/21/2022 10:58	1.79	6/21/2022 11:21	5.61	6/21/2022 12:44	-0.29	6/20/2022 11:32	11.21
6/20/2022 12:09	-0.06	6/21/2022 10:59	1.79	6/21/2022 11:22	5.62	6/21/2022 12:45	-0.32	6/20/2022 11:33	11.19
6/20/2022 12:10	-0.06	6/21/2022 11:00	1.79	6/21/2022 11:23	5.61	6/21/2022 12:46	-0.27	6/20/2022 11:34	11.25
6/20/2022 12:11	-0.06	6/21/2022 11:01	1.79	6/21/2022 11:24	5.61	6/21/2022 12:47	-0.27	6/20/2022 11:35	11.26
6/20/2022 12:12	-0.06	6/21/2022 11:02	1.79	6/21/2022 11:25	5.63	6/21/2022 12:48	-0.29	6/20/2022 11:36	11.26
6/20/2022 12:13	-0.07	6/21/2022 11:03	1.79	6/21/2022 11:26	5.62	6/21/2022 12:49	-0.29	6/20/2022 11:37	11.20
6/20/2022 12:14	-0.06	6/21/2022 11:04	1.79	6/21/2022 11:27	5.63	6/21/2022 12:50	-0.32	6/20/2022 11:38	11.26
6/20/2022 12:15	-0.06	6/21/2022 11:05	1.80	6/21/2022 11:28	5.61	6/21/2022 12:51	-0.32	6/20/2022 11:39	11.21
6/20/2022 12:16	-0.06	6/21/2022 11:06	1.80	6/21/2022 11:29	5.62	6/21/2022 12:52	-0.29	6/20/2022 11:40	11.23
6/20/2022 12:17	-0.06	6/21/2022 11:07	1.80	6/21/2022 11:30	5.63	6/21/2022 12:53	-0.29	6/20/2022 11:41	11.23
6/20/2022 12:18	-0.06	6/21/2022 11:08	1.79	6/21/2022 11:31	5.60	6/21/2022 12:54	-0.30	6/20/2022 11:42	11.27
6/20/2022 12:19	-0.06	6/21/2022 11:09	1.79	6/21/2022 11:32	5.63	6/21/2022 12:55	-0.32	6/20/2022 11:43	11.22
6/20/2022 12:20	-0.06	6/21/2022 11:10	1.80	6/21/2022 11:33	5.58	6/21/2022 12:56	-0.28	6/20/2022 11:44	11.22
6/20/2022 12:21	-0.06	6/21/2022 11:11	1.79	6/21/2022 11:34	5.61	6/21/2022 12:57	-0.31	6/20/2022 11:45	11.28
6/20/2022 12:22	-0.06	6/21/2022 11:12	1.80	6/21/2022 11:35	5.63	6/21/2022 12:58	-0.32	6/20/2022 11:46	11.23
6/20/2022 12:23	-0.06	6/21/2022 11:13	1.80	6/21/2022 11:36	5.63	6/21/2022 12:59	-0.29	6/20/2022 11:47	11.20
6/20/2022 12:24	-0.06	6/21/2022 11:14	1.80	6/21/2022 11:37	5.59	6/21/2022 13:00	-0.31	6/20/2022 11:48	11.25
6/20/2022 12:25	-0.06	6/21/2022 11:15	1.80	6/21/2022 11:38	5.65	6/21/2022 13:01	-0.33	6/20/2022 11:49	11.24
6/20/2022 12:26	-0.06	6/21/2022 11:16	1.80	6/21/2022 11:39	5.60	6/21/2022 13:02	-0.31	6/20/2022 11:50	11.26
6/20/2022 12:27	-0.06	6/21/2022 11:17	1.80	6/21/2022 11:40	5.61	6/21/2022 13:03	-0.32	6/20/2022 11:51	11.24
6/20/2022 12:28	-0.06	6/21/2022 11:18	1.80	6/21/2022 11:41	5.64	6/21/2022 13:04	-0.30	6/20/2022 11:52	11.28
6/20/2022 12:29	-0.06	6/21/2022 11:19	1.80	6/21/2022 11:42	5.66	6/21/2022 13:05	-0.28	6/20/2022 11:53	11.24
6/20/2022 12:30	-0.06	6/21/2022 11:20	1.80	6/21/2022 11:43	5.63	6/21/2022 13:06	-0.28	6/20/2022 11:54	11.26
6/20/2022 12:31	-0.06	6/21/2022 11:21	1.80	6/21/2022 11:44	5.63	6/21/2022 13:07	-0.26	6/20/2022 11:55	11.29
6/20/2022 12:32	-0.06	6/21/2022 11:22	1.80	6/21/2022 11:45	5.66	6/21/2022 13:08	-0.28	6/20/2022 11:56	11.25

6/20/2022 12:33	-0.06	6/21/2022 11:23	1.80	6/21/2022 11:46	5.64	6/21/2022 13:09	-0.32	6/20/2022 11:57	11.27
6/20/2022 12:34	-0.06	6/21/2022 11:24	1.80	6/21/2022 11:47	5.62	6/21/2022 13:10	-0.27	6/20/2022 11:58	11.25
6/20/2022 12:35	-0.06	6/21/2022 11:25	1.81	6/21/2022 11:48	5.62	6/21/2022 13:11	-0.30	6/20/2022 11:59	11.27
6/20/2022 12:36	-0.06	6/21/2022 11:26	1.81	6/21/2022 11:49	5.65	6/21/2022 13:12	-0.28	6/20/2022 12:00	11.23
6/20/2022 12:37	-0.06	6/21/2022 11:27	1.80	6/21/2022 11:50	5.65	6/21/2022 13:13	-0.27	6/20/2022 12:01	11.27
6/20/2022 12:38	-0.06	6/21/2022 11:28	1.80	6/21/2022 11:51	5.67	6/21/2022 13:14	-0.33	6/20/2022 12:02	11.24
6/20/2022 12:39	-0.06	6/21/2022 11:29	1.80	6/21/2022 11:52	5.70	6/21/2022 13:15	-0.30	6/20/2022 12:03	11.28
6/20/2022 12:40	-0.06	6/21/2022 11:30	1.80	6/21/2022 11:53	5.67	6/21/2022 13:16	-0.31	6/20/2022 12:04	11.28
6/20/2022 12:41	-0.06	6/21/2022 11:31	1.80	6/21/2022 11:54	5.65	6/21/2022 13:17	-0.29	6/20/2022 12:05	11.25
6/20/2022 12:42	-0.06	6/21/2022 11:32	1.81	6/21/2022 11:55	5.61	6/21/2022 13:18	-0.32	6/20/2022 12:06	11.23
6/20/2022 12:43	-0.06	6/21/2022 11:33	1.81	6/21/2022 11:56	5.64	6/21/2022 13:19	-0.28	6/20/2022 12:07	11.22
6/20/2022 12:44	-0.06	6/21/2022 11:34	1.81	6/21/2022 11:57	5.63	6/21/2022 13:20	-0.31	6/20/2022 12:08	11.28
6/20/2022 12:45	-0.06	6/21/2022 11:35	1.81	6/21/2022 11:58	5.69	6/21/2022 13:21	-0.29	6/20/2022 12:09	11.22
6/20/2022 12:46	-0.06	6/21/2022 11:36	1.81	6/21/2022 11:59	5.62	6/21/2022 13:22	-0.34	6/20/2022 12:10	11.26
6/20/2022 12:47	-0.06	6/21/2022 11:37	1.81	6/21/2022 12:00	5.71	6/21/2022 13:23	-0.32	6/20/2022 12:11	11.27
6/20/2022 12:48	-0.06	6/21/2022 11:38	1.81	6/21/2022 12:01	5.70	6/21/2022 13:24	-0.26	6/20/2022 12:12	11.27
6/20/2022 12:49	-0.06	6/21/2022 11:39	1.81	6/21/2022 12:02	5.63	6/21/2022 13:25	-0.29	6/20/2022 12:13	11.28
6/20/2022 12:50	-0.07	6/21/2022 11:40	1.82	6/21/2022 12:03	5.64	6/21/2022 13:26	-0.30	6/20/2022 12:14	11.26
6/20/2022 12:51	-0.06	6/21/2022 11:41	1.81	6/21/2022 12:04	5.64	6/21/2022 13:27	-0.30	6/20/2022 12:15	11.25
6/20/2022 12:52	-0.06	6/21/2022 11:42	1.81	6/21/2022 12:05	5.72	6/21/2022 13:28	-0.29	6/20/2022 12:16	11.21
6/20/2022 12:53	-0.06	6/21/2022 11:43	1.82	6/21/2022 12:06	5.65	6/21/2022 13:29	-0.32	6/20/2022 12:17	11.22
6/20/2022 12:54	-0.06	6/21/2022 11:44	1.82	6/21/2022 12:07	5.63	6/21/2022 13:30	-0.27	6/20/2022 12:18	11.25
6/20/2022 12:55	-0.06	6/21/2022 11:45	1.82	6/21/2022 12:08	5.58	6/21/2022 13:31	-0.27	6/20/2022 12:19	11.25
6/20/2022 12:56	-0.06	6/21/2022 11:46	1.82	6/21/2022 12:09	5.69	6/21/2022 13:32	-0.28	6/20/2022 12:20	11.25
6/20/2022 12:57	-0.07	6/21/2022 11:47	1.82	6/21/2022 12:10	5.69	6/21/2022 13:33	-0.32	6/20/2022 12:21	11.21
6/20/2022 12:58	-0.06	6/21/2022 11:48	1.82	6/21/2022 12:11	5.67	6/21/2022 13:34	-0.32	6/20/2022 12:22	11.29
6/20/2022 12:59	-0.06	6/21/2022 11:49	1.82	6/21/2022 12:12	5.70	6/21/2022 13:35	-0.30	6/20/2022 12:23	11.26
6/20/2022 13:00	-0.06	6/21/2022 11:50	1.82	6/21/2022 12:13	5.62	6/21/2022 13:36	-0.28	6/20/2022 12:24	11.23
6/20/2022 13:01	-0.06	6/21/2022 11:51	1.81	6/21/2022 12:14	5.65	6/21/2022 13:37	-0.28	6/20/2022 12:25	11.25
6/20/2022 13:02	-0.06	6/21/2022 11:52	1.82	6/21/2022 12:15	5.69	6/21/2022 13:38	-0.30	6/20/2022 12:26	11.28
6/20/2022 13:03	-0.06	6/21/2022 11:53	1.82	6/21/2022 12:16	5.67	6/21/2022 13:39	-0.29	6/20/2022 12:27	11.26
6/20/2022 13:04	-0.06	6/21/2022 11:54	1.82	6/21/2022 12:17	5.68	6/21/2022 13:40	-0.27	6/20/2022 12:28	11.25
6/20/2022 13:05	-0.06	6/21/2022 11:55	1.82	6/21/2022 12:18	5.69	6/21/2022 13:41	-0.32	6/20/2022 12:29	11.17
6/20/2022 13:06	-0.06	6/21/2022 11:56	1.82	6/21/2022 12:19	5.69	6/21/2022 13:42	-0.28	6/20/2022 12:30	11.24
6/20/2022 13:07	-0.06	6/21/2022 11:57	1.82	6/21/2022 12:20	5.67	6/21/2022 13:43	-0.31	6/20/2022 12:31	11.22
6/20/2022 13:08	-0.06	6/21/2022 11:58	1.80	6/21/2022 12:21	5.66	6/21/2022 13:44	-0.28	6/20/2022 12:32	11.22
6/20/2022 13:09	-0.06	6/21/2022 11:59	1.86	6/21/2022 12:22	5.69	6/21/2022 13:45	-0.34	6/20/2022 12:33	11.29
6/20/2022 13:10	-0.06	6/21/2022 12:00	1.82	6/21/2022 12:23	5.67	6/21/2022 13:46	-0.27	6/20/2022 12:34	11.25
6/20/2022 13:11	-0.06	6/21/2022 12:01	1.83	6/21/2022 12:24	5.68	6/21/2022 13:47	-0.27	6/20/2022 12:35	11.22
6/20/2022 13:12	-0.06	6/21/2022 12:02	1.82	6/21/2022 12:25	5.72	6/21/2022 13:48	-0.30	6/20/2022 12:36	11.24
6/20/2022 13:13	-0.07	6/21/2022 12:03	1.83	6/21/2022 12:26	5.73	6/21/2022 13:49	-0.32	6/20/2022 12:37	11.25
6/20/2022 13:14	-0.06	6/21/2022 12:04	1.83	6/21/2022 12:27	5.68	6/21/2022 13:50	-0.29	6/20/2022 12:38	11.27
6/20/2022 13:15	-0.06	6/21/2022 12:05	1.82	6/21/2022 12:28	5.66	6/21/2022 13:51	-0.27	6/20/2022 12:39	11.26
6/20/2022 13:16	-0.06	6/21/2022 12:06	1.82	6/21/2022 12:29	5.72	6/21/2022 13:52	-0.29	6/20/2022 12:40	11.25
6/20/2022 13:17	-0.06	6/21/2022 12:07	1.82	6/21/2022 12:30	5.64	6/21/2022 13:53	-0.31	6/20/2022 12:41	11.30
6/20/2022 13:18	-0.06	6/21/2022 12:08	1.83	6/21/2022 12:31	5.66	6/21/2022 13:54	-0.27	6/20/2022 12:42	11.24
6/20/2022 13:19	-0.06	6/21/2022 12:09	1.83	6/21/2022 12:32	5.72	6/21/2022 13:55	-0.30	6/20/2022 12:43	11.24
6/20/2022 13:20	-0.06	6/21/2022 12:10	1.83	6/21/2022 12:33	5.69	6/21/2022 13:56	-0.29	6/20/2022 12:44	11.24
6/20/2022 13:21	-0.06	6/21/2022 12:11	1.83	6/21/2022 12:34	5.65	6/21/2022 13:57	-0.28	6/20/2022 12:45	11.25
6/20/2022 13:22	-0.06	6/21/2022 12:12	1.83	6/21/2022 12:35	5.69	6/21/2022 13:58	-0.28	6/20/2022 12:46	11.31
6/20/2022 13:23	-0.06	6/21/2022 12:13	1.83	6/21/2022 12:36	5.72	6/21/2022 13:59	-0.28	6/20/2022 12:47	11.28
6/20/2022 13:24	-0.06	6/21/2022 12:14	1.83	6/21/2022 12:37	5.65	6/21/2022 14:00	-0.30	6/20/2022 12:48	11.26
6/20/2022 13:25	-0.06	6/21/2022 12:15	1.84	6/21/2022 12:38	5.71	6/21/2022 14:01	-0.34	6/20/2022 12:49	11.27
6/20/2022 13:26	-0.06	6/21/2022 12:16	1.84	6/21/2022 12:39	5.74	6/21/2022 14:02	-0.30	6/20/2022 12:50	11.19
6/20/2022 13:27	-0.06	6/21/2022 12:17	1.83	6/21/2022 12:40	5.68	6/21/2022 14:03	-0.29	6/20/2022 12:51	11.23
6/20/2022 13:28	-0.06	6/21/2022 12:18	1.84	6/21/2022 12:41	5.70	6/21/2022 14:04	-0.29	6/20/2022 12:52	11.20
6/20/2022 13:29	-0.06	6/21/2022 12:19	1.84	6/21/2022 12:42	5.74	6/21/2022 14:05	-0.28	6/20/2022 12:53	11.25
6/20/2022 13:30	-0.06	6/21/2022 12:20	1.84	6/21/2022 12:43	5.71	6/21/2022 14:06	-0.28	6/20/2022 12:54	11.23
6/20/2022 13:31	-0.06	6/21/2022 12:21	1.84	6/21/2022 12:44	5.67	6/21/2022 14:07	-0.25	6/20/2022 12:55	11.27
6/20/2022 13:32	-0.06	6/21/2022 12:22	1.84	6/21/2022 12:45	5.65	6/21/2022 14:08	-0.28	6/20/2022 12:56	11.25
6/20/2022 13:33	-0.07	6/21/2022 12:23	1.84	6/21/2022 12:46	5.70	6/21/2022 14:09	-0.33	6/20/2022 12:57	11.32
6/20/2022 13:34	-0.06	6/21/2022 12:24	1.84	6/21/2022 12:47	5.70	6/21/2022 14:10	-0.30	6/20/2022 12:58	11.26
6/20/2022 13:35	-0.06	6/21/2022 12:25	1.84	6/21/2022 12:48	5.72	6/21/2022 14:11	-0.29	6/20/2022 12:59	11.23
6/20/2022 13:36	-0.06	6/21/2022 12:26	1.84	6/21/2022 12:49	5.72	6/21/2022 14:12	-0.31	6/20/2022 13:00	11.20
6/20/2022 13:37	-0.06	6/21/2022 12:27	1.85	6/21/2022 12:50	5.75	6/21/2022 14:13	-0.28	6/20/2022 13:01	11.21
6/20/2022 13:38	-0.06	6/21/2022 12:28	1.84	6/21/2022 12:51	5.68	6/21/2022 14:14	-0.32	6/20/2022 13:02	11.25
6/20/2022 13:39	-0.07	6/21/2022 12:29	1.84	6/21/2022 12:52	5.73	6/21/2022 14:15	-0.32	6/20/2022 13:03	11.28
6/20/2022 13:40	-0.06	6/21/2022 12:30	1.84	6/21/2022 12:53	5.68	6/21/2022 14:16	-0.29	6/20/2022 13:04	11.26
6/20/2022 13:41	-0.06	6/21/2022 12:31	1.84	6/21/2022 12:54	5.66	6/21/2022 14:17	-0.30	6/20/2022 13:05	11.26
6/20/2022 13:42	-0.06	6/21/2022 12:32	1.85	6/21/2022 12:55	5.67	6/21/2022 14:18	-0.31	6/20/2022 13:06	11.24
6/20/2022 13:43	-0.07	6/21/2022 12:33	1.85	6/21/2022 12:56	5.70	6/21/2022 14:19	-0.30	6/20/2022 13:07	11.23
6/20/2022 13:44	-0.06	6/21/2022 12:34	1.85	6/21/2022 12:57	5.72	6/21/2022 14:20	-0.31	6/20/2022 13:08	11.23
6/20/2022 13:45	-0.06	6/21/2022 12:35	1.85	6/21/2022 12:58	5.68	6/21/2022 14:21	-0.30	6/20/2022 13:09	11.22
6/20/2022 13:46	-0.06	6/21/2022 12:36	1.85	6/21/2022 12:59	5.76	6/21/2022 14:22	-0.29	6/20/2022 13:10	11.24
6/20/2022 13:47	-0.06	6/21/2022 12:37	1.84	6/21/2022 13:00	5.74	6/21/2022 14:23	-0.33	6/20/2022 13:11	11.26
6/20/2022 13:48	-0.06	6/21/2022 12:38	1.85	6/21/2022 13:01	5.74	6/21/2022 14:24	-0.32	6/20/2022 13:12	11.25
6/20/2022 13:49	-0.06	6/21/2022 12:39	1.85	6/21/2022 13:02	5.73	6/21/2022 14:25	-0.31	6/20/2022 13:13	11.29
6/20/2022 13:50	-0.06	6/21/2022 12:40	1.85	6/21/2022 13:03	5.70	6/21/2022 14:26	-0.28	6/20/2022 13:14	11.28
6/20/2022 13:51	-0.07	6/21/2022 12:41	1.85	6/21/2022 13:04	5.74	6/21/2022 14:27	-0.29	6/20/2022 13:15	11.28
6/20/2022 13:52	-0.07	6/21/2022 12:42	1.85	6/21/2022 13:05	5.66	6/21/2022 14:28	-0.29	6/20/2022 13:16	11.23
6/20/2022 13:53	-0.07	6/21/2022 12:43	1.85	6/21/2022 13:06	5.77	6/21/2022 14:29	-0.34	6/20/2022 13:17	11.27
6/20/2022 13:54	-0.06	6/21/2022 12:44	1.85	6/21/2022 13:07	5.70	6/21/2022 14:30	-0.29	6/20/2022 13:18	11.22
6/20/2022 13:55	-0.06	6/21/2022 12:45	1.85	6/21/2022 13:08	5.74	6/21/2022 14:31	-0.32	6/20/2022 13:19	11.26
6/20/2022 13:56	-0.07	6/21/2022 12:46	1.85	6/21/2022 13:09	5.77	6/21/2022 14:32	-0.30	6/20/2022 13:20	11.23
6/20/2022 13:57	-0.06	6/21/2022 12:47	1.85	6/21/2022 13:10	5.71	6/21/2022 14:33	-0.31	6/20/2022 13:21	11.25
6/20/2022 13:58	-0.07	6/21/2022 12:48	1.85	6/21/2022 13:11	5.74	6/21/2022 14:34	-0.28	6/20/2022 13:22	11.26
6/20/2022 13:59	-0.06	6/21/2022 12:49	1.85	6/21/2022 13:12	5.72	6/21/2022 14:35	-0.31	6/20/2022 13:23	11.29
6/20/2022 14:00	-0.06	6/21/2022 12:50	1.85	6/21/2022 13:13	5.77	6/21/2022 14:36	-0.28	6/20/2022 13:24	11.25

6/20/2022 14:01	-0.07	6/21/2022 12:51	1.86	6/21/2022 13:14	5.73	6/21/2022 14:37	-0.32	6/20/2022 13:25	11.27
6/20/2022 14:02	-0.06	6/21/2022 12:52	1.85	6/21/2022 13:15	5.73	6/21/2022 14:38	-0.25	6/20/2022 13:26	11.26
6/20/2022 14:03	-0.06	6/21/2022 12:53	1.86	6/21/2022 13:16	5.75	6/21/2022 14:39	-0.29	6/20/2022 13:27	11.27
6/20/2022 14:04	-0.06	6/21/2022 12:54	1.86	6/21/2022 13:17	5.71	6/21/2022 14:40	-0.29	6/20/2022 13:28	11.21
6/20/2022 14:05	-0.06	6/21/2022 12:55	1.86	6/21/2022 13:18	5.75	6/21/2022 14:41	-0.29	6/20/2022 13:29	11.22
6/20/2022 14:06	-0.06	6/21/2022 12:56	1.86	6/21/2022 13:19	5.72	6/21/2022 14:42	-0.27	6/20/2022 13:30	11.24
6/20/2022 14:07	-0.07	6/21/2022 12:57	1.86	6/21/2022 13:20	5.66	6/21/2022 14:43	-0.27	6/20/2022 13:31	11.27
6/20/2022 14:08	-0.06	6/21/2022 12:58	1.86	6/21/2022 13:21	5.72	6/21/2022 14:44	-0.30	6/20/2022 13:32	11.26
6/20/2022 14:09	-0.06	6/21/2022 12:59	1.86	6/21/2022 13:22	5.73	6/21/2022 14:45	-0.29	6/20/2022 13:33	11.28
6/20/2022 14:10	-0.06	6/21/2022 13:00	1.86	6/21/2022 13:23	5.78	6/21/2022 14:46	-0.28	6/20/2022 13:34	11.26
6/20/2022 14:11	-0.06	6/21/2022 13:01	1.86	6/21/2022 13:24	5.74	6/21/2022 14:47	-0.30	6/20/2022 13:35	11.21
6/20/2022 14:12	-0.06	6/21/2022 13:02	1.87	6/21/2022 13:25	5.67	6/21/2022 14:48	-0.32	6/20/2022 13:36	11.20
6/20/2022 14:13	-0.06	6/21/2022 13:03	1.86	6/21/2022 13:26	5.68	6/21/2022 14:49	-0.35	6/20/2022 13:37	11.26
6/20/2022 14:14	-0.06	6/21/2022 13:04	1.86	6/21/2022 13:27	5.70	6/21/2022 14:50	-0.31	6/20/2022 13:38	11.21
6/20/2022 14:15	-0.06	6/21/2022 13:05	1.86	6/21/2022 13:28	5.74	6/21/2022 14:51	-0.32	6/20/2022 13:39	11.24
6/20/2022 14:16	-0.07	6/21/2022 13:06	1.87	6/21/2022 13:29	5.73	6/21/2022 14:52	-0.29	6/20/2022 13:40	11.26
6/20/2022 14:17	-0.07	6/21/2022 13:07	1.87	6/21/2022 13:30	5.70	6/21/2022 14:53	-0.32	6/20/2022 13:41	11.28
6/20/2022 14:18	-0.07	6/21/2022 13:08	1.86	6/21/2022 13:31	5.78	6/21/2022 14:54	-0.29	6/20/2022 13:42	11.25
6/20/2022 14:19	-0.06	6/21/2022 13:09	1.87	6/21/2022 13:32	5.80	6/21/2022 14:55	-0.32	6/20/2022 13:43	11.27
6/20/2022 14:20	-0.06	6/21/2022 13:10	1.87	6/21/2022 13:33	5.75	6/21/2022 14:56	-0.33	6/20/2022 13:44	11.29
6/20/2022 14:21	-0.06	6/21/2022 13:11	1.87	6/21/2022 13:34	5.72	6/21/2022 14:57	-0.30	6/20/2022 13:45	11.29
6/20/2022 14:22	-0.06	6/21/2022 13:12	1.87	6/21/2022 13:35	5.72	6/21/2022 14:58	-0.25	6/20/2022 13:46	11.22
6/20/2022 14:23	-0.06	6/21/2022 13:13	1.87	6/21/2022 13:36	5.74	6/21/2022 14:59	-0.28	6/20/2022 13:47	11.25
6/20/2022 14:24	-0.06	6/21/2022 13:14	1.87	6/21/2022 13:37	5.74	6/21/2022 15:00	-0.31	6/20/2022 13:48	11.21
6/20/2022 14:25	-0.07	6/21/2022 13:15	1.87	6/21/2022 13:38	5.75	6/21/2022 15:01	-0.28	6/20/2022 13:49	11.32
6/20/2022 14:26	-0.06	6/21/2022 13:16	1.87	6/21/2022 13:39	5.76	6/21/2022 15:02	-0.28	6/20/2022 13:50	11.26
6/20/2022 14:27	-0.06	6/21/2022 13:17	1.87	6/21/2022 13:40	5.75	6/21/2022 15:03	-0.25	6/20/2022 13:51	11.27
6/20/2022 14:28	-0.06	6/21/2022 13:18	1.87	6/21/2022 13:41	5.78	6/21/2022 15:04	-0.30	6/20/2022 13:52	11.25
6/20/2022 14:29	-0.06	6/21/2022 13:19	1.87	6/21/2022 13:42	5.78	6/21/2022 15:05	-0.27	6/20/2022 13:53	11.25
6/20/2022 14:30	-0.06	6/21/2022 13:20	1.87	6/21/2022 13:43	5.72	6/21/2022 15:06	-0.26	6/20/2022 13:54	11.25
6/20/2022 14:31	-0.06	6/21/2022 13:21	1.87	6/21/2022 13:44	5.71	6/21/2022 15:07	-0.32	6/20/2022 13:55	11.22
6/20/2022 14:32	-0.07	6/21/2022 13:22	1.87	6/21/2022 13:45	5.76	6/21/2022 15:08	-0.29	6/20/2022 13:56	11.25
6/20/2022 14:33	-0.06	6/21/2022 13:23	1.87	6/21/2022 13:46	5.78	6/21/2022 15:09	-0.30	6/20/2022 13:57	11.26
6/20/2022 14:34	-0.07	6/21/2022 13:24	1.87	6/21/2022 13:47	5.74	6/21/2022 15:10	-0.34	6/20/2022 13:58	11.23
6/20/2022 14:35	-0.07	6/21/2022 13:25	1.87	6/21/2022 13:48	5.74	6/21/2022 15:11	-0.30	6/20/2022 13:59	11.20
6/20/2022 14:36	-0.06	6/21/2022 13:26	1.87	6/21/2022 13:49	5.79	6/21/2022 15:12	-0.28	6/20/2022 14:00	11.27
6/20/2022 14:37	-0.06	6/21/2022 13:27	1.87	6/21/2022 13:50	5.77	6/21/2022 15:13	-0.26	6/20/2022 14:01	11.29
6/20/2022 14:38	-0.06	6/21/2022 13:28	1.87	6/21/2022 13:51	5.80	6/21/2022 15:14	-0.31	6/20/2022 14:02	11.29
6/20/2022 14:39	-0.07	6/21/2022 13:29	1.87	6/21/2022 13:52	5.73	6/21/2022 15:15	-0.27	6/20/2022 14:03	11.24
6/20/2022 14:40	-0.06	6/21/2022 13:30	1.87	6/21/2022 13:53	5.72	6/21/2022 15:16	-0.28	6/20/2022 14:04	11.27
6/20/2022 14:41	-0.07	6/21/2022 13:31	1.88	6/21/2022 13:54	5.74	6/21/2022 15:17	-0.28	6/20/2022 14:05	11.27
6/20/2022 14:42	-0.06	6/21/2022 13:32	1.88	6/21/2022 13:55	5.78	6/21/2022 15:18	-0.29	6/20/2022 14:06	11.19
6/20/2022 14:43	-0.06	6/21/2022 13:33	1.88	6/21/2022 13:56	5.74	6/21/2022 15:19	-0.29	6/20/2022 14:07	11.23
6/20/2022 14:44	-0.07	6/21/2022 13:34	1.88	6/21/2022 13:57	5.81	6/21/2022 15:20	-0.35	6/20/2022 14:08	11.25
6/20/2022 14:45	-0.07	6/21/2022 13:35	1.88	6/21/2022 13:58	5.86	6/21/2022 15:21	-0.29	6/20/2022 14:09	11.27
6/20/2022 14:46	-0.06	6/21/2022 13:36	1.88	6/21/2022 13:59	5.78	6/21/2022 15:22	-0.30	6/20/2022 14:10	11.25
6/20/2022 14:47	-0.06	6/21/2022 13:37	1.88	6/21/2022 14:00	5.78	6/21/2022 15:23	-0.27	6/20/2022 14:11	11.25
6/20/2022 14:48	-0.06	6/21/2022 13:38	1.88	6/21/2022 14:01	5.78	6/21/2022 15:24	-0.29	6/20/2022 14:12	11.25
6/20/2022 14:49	-0.06	6/21/2022 13:39	1.88	6/21/2022 14:02	5.76	6/21/2022 15:25	-0.28	6/20/2022 14:13	11.23
6/20/2022 14:50	-0.06	6/21/2022 13:40	1.88	6/21/2022 14:03	5.82	6/21/2022 15:26	-0.31	6/20/2022 14:14	11.24
6/20/2022 14:51	-0.06	6/21/2022 13:41	1.88	6/21/2022 14:04	5.80	6/21/2022 15:27	-0.30	6/20/2022 14:15	11.22
6/20/2022 14:52	-0.06	6/21/2022 13:42	1.88	6/21/2022 14:05	5.73	6/21/2022 15:28	-0.28	6/20/2022 14:16	11.25
6/20/2022 14:53	-0.06	6/21/2022 13:43	1.88	6/21/2022 14:06	5.79	6/21/2022 15:29	-0.30	6/20/2022 14:17	11.28
6/20/2022 14:54	-0.06	6/21/2022 13:44	1.88	6/21/2022 14:07	5.71	6/21/2022 15:30	-0.29	6/20/2022 14:18	11.26
6/20/2022 14:55	-0.06	6/21/2022 13:45	1.88	6/21/2022 14:08	5.81	6/21/2022 15:31	-0.33	6/20/2022 14:19	11.25
6/20/2022 14:56	-0.06	6/21/2022 13:46	1.88	6/21/2022 14:09	5.77	6/21/2022 15:32	-0.29	6/20/2022 14:20	11.23
6/20/2022 14:57	-0.07	6/21/2022 13:47	1.88	6/21/2022 14:10	5.77	6/21/2022 15:33	-0.33	6/20/2022 14:21	11.29
6/20/2022 14:58	-0.06	6/21/2022 13:48	1.89	6/21/2022 14:11	5.81	6/21/2022 15:34	-0.26	6/20/2022 14:22	11.28
6/20/2022 14:59	-0.06	6/21/2022 13:49	1.89	6/21/2022 14:12	5.78	6/21/2022 15:35	-0.31	6/20/2022 14:23	11.30
6/20/2022 15:00	-0.07	6/21/2022 13:50	1.89	6/21/2022 14:13	5.75	6/21/2022 15:36	-0.30	6/20/2022 14:24	11.25
6/20/2022 15:01	-0.06	6/21/2022 13:51	1.89	6/21/2022 14:14	5.78	6/21/2022 15:37	-0.29	6/20/2022 14:25	11.28
6/20/2022 15:02	-0.07	6/21/2022 13:52	1.89	6/21/2022 14:15	5.77	6/21/2022 15:38	-0.32	6/20/2022 14:26	11.30
6/20/2022 15:03	-0.07	6/21/2022 13:53	1.89	6/21/2022 14:16	5.83	6/21/2022 15:39	-0.31	6/20/2022 14:27	11.27
6/20/2022 15:04	-0.07	6/21/2022 13:54	1.88	6/21/2022 14:17	5.75	6/21/2022 15:40	-0.29	6/20/2022 14:28	11.24
6/20/2022 15:05	-0.07	6/21/2022 13:55	1.89	6/21/2022 14:18	5.75	6/21/2022 15:41	-0.26	6/20/2022 14:29	11.29
6/20/2022 15:06	-0.07	6/21/2022 13:56	1.88	6/21/2022 14:19	5.80	6/21/2022 15:42	-0.30	6/20/2022 14:30	11.27
6/20/2022 15:07	-0.07	6/21/2022 13:57	1.89	6/21/2022 14:20	5.74	6/21/2022 15:43	-0.31	6/20/2022 14:31	11.29
6/20/2022 15:08	-0.07	6/21/2022 13:58	1.89	6/21/2022 14:21	5.76	6/21/2022 15:44	-0.30	6/20/2022 14:32	11.23
6/20/2022 15:09	-0.07	6/21/2022 13:59	1.89	6/21/2022 14:22	5.84	6/21/2022 15:45	-0.32	6/20/2022 14:33	11.28
6/20/2022 15:10	-0.07	6/21/2022 14:00	1.89	6/21/2022 14:23	5.77	6/21/2022 15:46	-0.33	6/20/2022 14:34	11.27
6/20/2022 15:11	-0.07	6/21/2022 14:01	1.89	6/21/2022 14:24	5.71	6/21/2022 15:47	-0.31	6/20/2022 14:35	11.31
6/20/2022 15:12	-0.07	6/21/2022 14:02	1.89	6/21/2022 14:25	5.81	6/21/2022 15:48	-0.31	6/20/2022 14:36	11.26
6/20/2022 15:13	-0.07	6/21/2022 14:03	1.89	6/21/2022 14:26	5.78	6/21/2022 15:49	-0.33	6/20/2022 14:37	11.25
6/20/2022 15:14	-0.07	6/21/2022 14:04	1.89	6/21/2022 14:27	5.76	6/21/2022 15:50	-0.29	6/20/2022 14:38	11.26
6/20/2022 15:15	-0.07	6/21/2022 14:05	1.89	6/21/2022 14:28	5.80	6/21/2022 15:51	-0.28	6/20/2022 14:39	11.25
6/20/2022 15:16	-0.07	6/21/2022 14:06	1.89	6/21/2022 14:29	5.76	6/21/2022 15:52	-0.30	6/20/2022 14:40	11.30
6/20/2022 15:17	-0.07	6/21/2022 14:07	1.89	6/21/2022 14:30	5.86	6/21/2022 15:53	-0.23	6/20/2022 14:41	11.30
6/20/2022 15:18	-0.07	6/21/2022 14:08	1.89	6/21/2022 14:31	5.79	6/21/2022 15:54	-0.31	6/20/2022 14:42	11.23
6/20/2022 15:19	-0.07	6/21/2022 14:09	1.89	6/21/2022 14:32	5.78	6/21/2022 15:55	-0.32	6/20/2022 14:43	11.26
6/20/2022 15:20	-0.07	6/21/2022 14:10	1.89	6/21/2022 14:33	5.84	6/21/2022 15:56	-0.29	6/20/2022 14:44	11.27
6/20/2022 15:21	-0.07	6/21/2022 14:11	1.89	6/21/2022 14:34	5.81	6/21/2022 15:57	-0.31	6/20/2022 14:45	11.26
6/20/2022 15:22	-0.07	6/21/2022 14:12	1.89	6/21/2022 14:35	5.83	6/21/2022 15:58	-0.31	6/20/2022 14:46	11.29
6/20/2022 15:23	-0.07	6/21/2022 14:13	1.89	6/21/2022 14:36	5.78	6/21/2022 15:59	-0.32	6/20/2022 14:47	11.29
6/20/2022 15:24	-0.07	6/21/2022 14:14	1.89	6/21/2022 14:37	5.79	6/21/2022 16:00	-0.31	6/20/2022 14:48	11.29
6/20/2022 15:25	-0.07	6/21/2022 14:15	1.89	6/21/2022 14:38	5.82	6/21/2022 16:01	-0.29	6/20/2022 14:49	11.24
6/20/2022 15:26	-0.07	6/21/2022 14:16	1.89	6/21/2022 14:39	5.80	6/21/2022 16:02	-0.35	6/20/2022 14:50	11.22
6/20/2022 15:27	-0.07	6/21/2022 14:17	1.89	6/21/2022 14:40	5.79	6/21/2022 16:03	-0.34	6/20/2022 14:51	11.26
6/20/2022 15:28	-0.07	6/21/2022 14:18	1.90	6/21/2022 14:41	5.84	6/21/2022 16:04	-0.29	6/20/2022 14:52	11.22

6/20/2022 15:29	-0.07	6/21/2022 14:19	1.89	6/21/2022 14:42	5.79	6/21/2022 16:05	-0.29	6/20/2022 14:53	11.32
6/20/2022 15:30	-0.07	6/21/2022 14:20	1.89	6/21/2022 14:43	5.78	6/21/2022 16:06	-0.32	6/20/2022 14:54	11.25
6/20/2022 15:31	-0.07	6/21/2022 14:21	1.90	6/21/2022 14:44	5.85	6/21/2022 16:07	-0.29	6/20/2022 14:55	11.26
6/20/2022 15:32	-0.07	6/21/2022 14:22	1.90	6/21/2022 14:45	5.84	6/21/2022 16:08	-0.28	6/20/2022 14:56	11.24
6/20/2022 15:33	-0.07	6/21/2022 14:23	1.90	6/21/2022 14:46	5.78	6/21/2022 16:09	-0.32	6/20/2022 14:57	11.23
6/20/2022 15:34	-0.07	6/21/2022 14:24	1.89	6/21/2022 14:47	5.82	6/21/2022 16:10	-0.29	6/20/2022 14:58	11.30
6/20/2022 15:35	-0.07	6/21/2022 14:25	1.90	6/21/2022 14:48	5.78	6/21/2022 16:11	-0.29	6/20/2022 14:59	11.26
6/20/2022 15:36	-0.07	6/21/2022 14:26	1.90	6/21/2022 14:49	5.81	6/21/2022 16:12	-0.34	6/20/2022 15:00	11.32
6/20/2022 15:37	-0.07	6/21/2022 14:27	1.90	6/21/2022 14:50	5.85	6/21/2022 16:13	-0.34	6/20/2022 15:01	11.26
6/20/2022 15:38	-0.07	6/21/2022 14:28	1.90	6/21/2022 14:51	5.85	6/21/2022 16:14	-0.25	6/20/2022 15:02	11.25
6/20/2022 15:39	-0.07	6/21/2022 14:29	1.90	6/21/2022 14:52	5.83	6/21/2022 16:15	-0.31	6/20/2022 15:03	11.29
6/20/2022 15:40	-0.07	6/21/2022 14:30	1.90	6/21/2022 14:53	5.82	6/21/2022 16:16	-0.29	6/20/2022 15:04	11.25
6/20/2022 15:41	-0.06	6/21/2022 14:31	1.90	6/21/2022 14:54	5.84	6/21/2022 16:17	-0.33	6/20/2022 15:05	11.28
6/20/2022 15:42	-0.07	6/21/2022 14:32	1.90	6/21/2022 14:55	5.75	6/21/2022 16:18	-0.27	6/20/2022 15:06	11.32
6/20/2022 15:43	-0.07	6/21/2022 14:33	1.90	6/21/2022 14:56	5.77	6/21/2022 16:19	-0.28	6/20/2022 15:07	11.27
6/20/2022 15:44	-0.07	6/21/2022 14:34	1.90	6/21/2022 14:57	5.77	6/21/2022 16:20	-0.32	6/20/2022 15:08	11.23
6/20/2022 15:45	-0.07	6/21/2022 14:35	1.90	6/21/2022 14:58	5.86	6/21/2022 16:21	-0.26	6/20/2022 15:09	11.27
6/20/2022 15:46	-0.07	6/21/2022 14:36	1.90	6/21/2022 14:59	5.84	6/21/2022 16:22	-0.32	6/20/2022 15:10	11.27
6/20/2022 15:47	-0.07	6/21/2022 14:37	1.90	6/21/2022 15:00	5.84	6/21/2022 16:23	-0.32	6/20/2022 15:11	11.22
6/20/2022 15:48	-0.07	6/21/2022 14:38	1.90	6/21/2022 15:01	5.82	6/21/2022 16:24	-0.32	6/20/2022 15:12	11.24
6/20/2022 15:49	-0.07	6/21/2022 14:39	1.90	6/21/2022 15:02	5.78	6/21/2022 16:25	-0.29	6/20/2022 15:13	11.28
6/20/2022 15:50	-0.07	6/21/2022 14:40	1.90	6/21/2022 15:03	5.87	6/21/2022 16:26	-0.29	6/20/2022 15:14	11.25
6/20/2022 15:51	-0.07	6/21/2022 14:41	1.91	6/21/2022 15:04	5.81	6/21/2022 16:27	-0.30	6/20/2022 15:15	11.28
6/20/2022 15:52	-0.07	6/21/2022 14:42	1.90	6/21/2022 15:05	5.78	6/21/2022 16:28	-0.32	6/20/2022 15:16	11.23
6/20/2022 15:53	-0.07	6/21/2022 14:43	1.91	6/21/2022 15:06	5.78	6/21/2022 16:29	-0.35	6/20/2022 15:17	11.24
6/20/2022 15:54	-0.07	6/21/2022 14:44	1.91	6/21/2022 15:07	5.80	6/21/2022 16:30	-0.30	6/20/2022 15:18	11.22
6/20/2022 15:55	-0.07	6/21/2022 14:45	1.91	6/21/2022 15:08	5.86	6/21/2022 16:31	-0.32	6/20/2022 15:19	11.29
6/20/2022 15:56	-0.07	6/21/2022 14:46	1.91	6/21/2022 15:09	5.80	6/21/2022 16:32	-0.30	6/20/2022 15:20	11.26
6/20/2022 15:57	-0.07	6/21/2022 14:47	1.91	6/21/2022 15:10	5.82	6/21/2022 16:33	-0.30	6/20/2022 15:21	11.24
6/20/2022 15:58	-0.07	6/21/2022 14:48	1.91	6/21/2022 15:11	5.86	6/21/2022 16:34	-0.34	6/20/2022 15:22	11.27
6/20/2022 15:59	-0.07	6/21/2022 14:49	1.91	6/21/2022 15:12	5.80	6/21/2022 16:35	-0.28	6/20/2022 15:23	11.26
6/20/2022 16:00	-0.07	6/21/2022 14:50	1.91	6/21/2022 15:13	5.80	6/21/2022 16:36	-0.35	6/20/2022 15:24	11.30
6/20/2022 16:01	-0.07	6/21/2022 14:51	1.91	6/21/2022 15:14	5.85	6/21/2022 16:37	-0.34	6/20/2022 15:25	11.28
6/20/2022 16:02	-0.07	6/21/2022 14:52	1.91	6/21/2022 15:15	5.80	6/21/2022 16:38	-0.28	6/20/2022 15:26	11.29
6/20/2022 16:03	-0.06	6/21/2022 14:53	1.91	6/21/2022 15:16	5.80	6/21/2022 16:39	-0.31	6/20/2022 15:27	11.34
6/20/2022 16:04	-0.07	6/21/2022 14:54	1.91	6/21/2022 15:17	5.79	6/21/2022 16:40	-0.27	6/20/2022 15:28	11.20
6/20/2022 16:05	-0.07	6/21/2022 14:55	1.91	6/21/2022 15:18	5.79	6/21/2022 16:41	-0.32	6/20/2022 15:29	11.28
6/20/2022 16:06	-0.07	6/21/2022 14:56	1.92	6/21/2022 15:19	5.79	6/21/2022 16:42	-0.29	6/20/2022 15:30	11.21
6/20/2022 16:07	-0.07	6/21/2022 14:57	1.92	6/21/2022 15:20	5.85	6/21/2022 16:43	-0.29	6/20/2022 15:31	11.19
6/20/2022 16:08	-0.07	6/21/2022 14:58	1.91	6/21/2022 15:21	5.78	6/21/2022 16:44	-0.31	6/20/2022 15:32	11.25
6/20/2022 16:09	-0.07	6/21/2022 14:59	1.91	6/21/2022 15:22	5.82	6/21/2022 16:45	-0.28	6/20/2022 15:33	11.28
6/20/2022 16:10	-0.07	6/21/2022 15:00	1.92	6/21/2022 15:23	5.80	6/21/2022 16:46	-0.31	6/20/2022 15:34	11.24
6/20/2022 16:11	-0.07	6/21/2022 15:01	1.92	6/21/2022 15:24	5.82	6/21/2022 16:47	-0.34	6/20/2022 15:35	11.29
6/20/2022 16:12	-0.07	6/21/2022 15:02	1.91	6/21/2022 15:25	5.88	6/21/2022 16:48	-0.31	6/20/2022 15:36	11.24
6/20/2022 16:13	-0.07	6/21/2022 15:03	1.91	6/21/2022 15:26	5.83	6/21/2022 16:49	-0.31	6/20/2022 15:37	11.27
6/20/2022 16:14	-0.07	6/21/2022 15:04	1.92	6/21/2022 15:27	5.88	6/21/2022 16:50	-0.31	6/20/2022 15:38	11.30
6/20/2022 16:15	-0.07	6/21/2022 15:05	1.92	6/21/2022 15:28	5.87	6/21/2022 16:51	-0.35	6/20/2022 15:39	11.28
6/20/2022 16:16	-0.07	6/21/2022 15:06	1.92	6/21/2022 15:29	5.83	6/21/2022 16:52	-0.32	6/20/2022 15:40	11.26
6/20/2022 16:17	-0.07	6/21/2022 15:07	1.92	6/21/2022 15:30	5.78	6/21/2022 16:53	-0.29	6/20/2022 15:41	11.27
6/20/2022 16:18	-0.07	6/21/2022 15:08	1.92	6/21/2022 15:31	5.84	6/21/2022 16:54	-0.30	6/20/2022 15:42	11.24
6/20/2022 16:19	-0.07	6/21/2022 15:09	1.92	6/21/2022 15:32	5.81	6/21/2022 16:55	-0.29	6/20/2022 15:43	11.28
6/20/2022 16:20	-0.07	6/21/2022 15:10	1.92	6/21/2022 15:33	5.81	6/21/2022 16:56	-0.33	6/20/2022 15:44	11.23
6/20/2022 16:21	-0.07	6/21/2022 15:11	1.92	6/21/2022 15:34	5.90	6/21/2022 16:57	-0.30	6/20/2022 15:45	11.27
6/20/2022 16:22	-0.07	6/21/2022 15:12	1.92	6/21/2022 15:35	5.90	6/21/2022 16:58	-0.26	6/20/2022 15:46	11.24
6/20/2022 16:23	-0.07	6/21/2022 15:13	1.92	6/21/2022 15:36	5.89	6/21/2022 16:59	-0.31	6/20/2022 15:47	11.29
6/20/2022 16:24	-0.07	6/21/2022 15:14	1.91	6/21/2022 15:37	5.87	6/21/2022 17:00	-0.30	6/20/2022 15:48	11.25
6/20/2022 16:25	-0.07	6/21/2022 15:15	1.92	6/21/2022 15:38	5.80	6/21/2022 17:01	-0.31	6/20/2022 15:49	11.25
6/20/2022 16:26	-0.07	6/21/2022 15:16	1.92	6/21/2022 15:39	5.76	6/21/2022 17:02	-0.26	6/20/2022 15:50	11.28
6/20/2022 16:27	-0.07	6/21/2022 15:17	1.92	6/21/2022 15:40	5.82	6/21/2022 17:03	-0.29	6/20/2022 15:51	11.30
6/20/2022 16:28	-0.07	6/21/2022 15:18	1.92	6/21/2022 15:41	5.81	6/21/2022 17:04	-0.28	6/20/2022 15:52	11.32
6/20/2022 16:29	-0.07	6/21/2022 15:19	1.92	6/21/2022 15:42	5.81	6/21/2022 17:05	-0.31	6/20/2022 15:53	11.28
6/20/2022 16:30	-0.07	6/21/2022 15:20	1.92	6/21/2022 15:43	5.86	6/21/2022 17:06	-0.29	6/20/2022 15:54	11.26
6/20/2022 16:31	-0.07	6/21/2022 15:21	1.92	6/21/2022 15:44	5.81	6/21/2022 17:07	-0.35	6/20/2022 15:55	11.26
6/20/2022 16:32	-0.07	6/21/2022 15:22	1.92	6/21/2022 15:45	5.87	6/21/2022 17:08	-0.29	6/20/2022 15:56	11.24
6/20/2022 16:33	-0.07	6/21/2022 15:23	1.92	6/21/2022 15:46	5.83	6/21/2022 17:09	-0.29	6/20/2022 15:57	11.26
6/20/2022 16:34	-0.07	6/21/2022 15:24	1.93	6/21/2022 15:47	5.81	6/21/2022 17:10	-0.30	6/20/2022 15:58	11.31
6/20/2022 16:35	-0.07	6/21/2022 15:25	1.92	6/21/2022 15:48	5.83	6/21/2022 17:11	-0.28	6/20/2022 15:59	11.24
6/20/2022 16:36	-0.07	6/21/2022 15:26	1.93	6/21/2022 15:49	5.84	6/21/2022 17:12	-0.26	6/20/2022 16:00	11.27
6/20/2022 16:37	-0.07	6/21/2022 15:27	1.93	6/21/2022 15:50	5.83	6/21/2022 17:13	-0.31	6/20/2022 16:01	11.25
6/20/2022 16:38	-0.07	6/21/2022 15:28	1.93	6/21/2022 15:51	5.81	6/21/2022 17:14	-0.30	6/20/2022 16:02	11.22
6/20/2022 16:39	-0.06	6/21/2022 15:29	1.93	6/21/2022 15:52	5.82	6/21/2022 17:15	-0.31	6/20/2022 16:03	11.27
6/20/2022 16:40	-0.07	6/21/2022 15:30	1.93	6/21/2022 15:53	5.82	6/21/2022 17:16	-0.29	6/20/2022 16:04	11.25
6/20/2022 16:41	-0.07	6/21/2022 15:31	1.93	6/21/2022 15:54	5.86	6/21/2022 17:17	-0.32	6/20/2022 16:05	11.25
6/20/2022 16:42	-0.07	6/21/2022 15:32	1.93	6/21/2022 15:55	5.87	6/21/2022 17:18	-0.31	6/20/2022 16:06	11.25
6/20/2022 16:43	-0.07	6/21/2022 15:33	1.93	6/21/2022 15:56	5.89	6/21/2022 17:19	-0.31	6/20/2022 16:07	11.25
6/20/2022 16:44	-0.07	6/21/2022 15:34	1.93	6/21/2022 15:57	5.89	6/21/2022 17:20	-0.29	6/20/2022 16:08	11.26
6/20/2022 16:45	-0.07	6/21/2022 15:35	1.93	6/21/2022 15:58	5.89	6/21/2022 17:21	-0.31	6/20/2022 16:09	11.25
6/20/2022 16:46	-0.07	6/21/2022 15:36	1.93	6/21/2022 15:59	5.86	6/21/2022 17:22	-0.32	6/20/2022 16:10	11.25
6/20/2022 16:47	-0.07	6/21/2022 15:37	1.93	6/21/2022 16:00	5.88	6/21/2022 17:23	-0.29	6/20/2022 16:11	11.22
6/20/2022 16:48	-0.07	6/21/2022 15:38	1.93	6/21/2022 16:01	5.88	6/21/2022 17:24	-0.31	6/20/2022 16:12	11.23
6/20/2022 16:49	-0.07	6/21/2022 15:39	1.93	6/21/2022 16:02	5.86	6/21/2022 17:25	-0.31	6/20/2022 16:13	11.25
6/20/2022 16:50	-0.07	6/21/2022 15:40	1.93	6/21/2022 16:03	5.92	6/21/2022 17:26	-0.29	6/20/2022 16:14	11.26
6/20/2022 16:51	-0.07	6/21/2022 15:41	1.93	6/21/2022 16:04	5.90	6/21/2022 17:27	-0.35	6/20/2022 16:15	11.26
6/20/2022 16:52	-0.07	6/21/2022 15:42	1.93	6/21/2022 16:05	5.86	6/21/2022 17:28	-0.32	6/20/2022 16:16	11.27
6/20/2022 16:53	-0.07	6/21/2022 15:43	1.93	6/21/2022 16:06	5.84	6/21/2022 17:29	-0.30	6/20/2022 16:17	11.26
6/20/2022 16:54	-0.07	6/21/2022 15:44	1.93	6/21/2022 16:07	5.84	6/21/2022 17:30	-0.29	6/20/2022 16:18	11.22
6/20/2022 16:55	-0.07	6/21/2022 15:45	1.94	6/21/2022 16:08	5.90	6/21/2022 17:31	-0.31	6/20/2022 16:19	11.28
6/20/2022 16:56	-0.07	6/21/2022 15:46	1.93	6/21/2022 16:09	5.86	6/21/2022 17:32	-0.30	6/20/2022 16:20	11.26

6/20/2022 16:57	-0.07	6/21/2022 15:47	1.93	6/21/2022 16:10	5.87	6/21/2022 17:33	-0.28	6/20/2022 16:21	11.23
6/20/2022 16:58	-0.07	6/21/2022 15:48	1.94	6/21/2022 16:11	5.85	6/21/2022 17:34	-0.30	6/20/2022 16:22	11.30
6/20/2022 16:59	-0.07	6/21/2022 15:49	1.94	6/21/2022 16:12	5.83	6/21/2022 17:35	-0.33	6/20/2022 16:23	11.24
6/20/2022 17:00	-0.07	6/21/2022 15:50	1.93	6/21/2022 16:13	5.86	6/21/2022 17:36	-0.30	6/20/2022 16:24	11.22
6/20/2022 17:01	-0.07	6/21/2022 15:51	1.94	6/21/2022 16:14	5.86	6/21/2022 17:37	-0.27	6/20/2022 16:25	11.25
6/20/2022 17:02	-0.06	6/21/2022 15:52	1.94	6/21/2022 16:15	5.84	6/21/2022 17:38	-0.32	6/20/2022 16:26	11.21
6/20/2022 17:03	-0.06	6/21/2022 15:53	1.94	6/21/2022 16:16	5.83	6/21/2022 17:39	-0.33	6/20/2022 16:27	11.26
6/20/2022 17:04	-0.07	6/21/2022 15:54	1.94	6/21/2022 16:17	5.84	6/21/2022 17:40	-0.31	6/20/2022 16:28	11.27
6/20/2022 17:05	-0.07	6/21/2022 15:55	1.94	6/21/2022 16:18	5.84	6/21/2022 17:41	-0.29	6/20/2022 16:29	11.25
6/20/2022 17:06	-0.07	6/21/2022 15:56	1.94	6/21/2022 16:19	5.86	6/21/2022 17:42	-0.32	6/20/2022 16:30	11.23
6/20/2022 17:07	-0.06	6/21/2022 15:57	1.94	6/21/2022 16:20	5.86	6/21/2022 17:43	-0.35	6/20/2022 16:31	11.29
6/20/2022 17:08	-0.07	6/21/2022 15:58	1.94	6/21/2022 16:21	5.83	6/21/2022 17:44	-0.32	6/20/2022 16:32	11.26
6/20/2022 17:09	-0.07	6/21/2022 15:59	1.94	6/21/2022 16:22	5.88	6/21/2022 17:45	-0.30	6/20/2022 16:33	11.27
6/20/2022 17:10	-0.07	6/21/2022 16:00	1.94	6/21/2022 16:23	5.88	6/21/2022 17:46	-0.33	6/20/2022 16:34	11.29
6/20/2022 17:11	-0.07	6/21/2022 16:01	1.94	6/21/2022 16:24	5.89	6/21/2022 17:47	-0.29	6/20/2022 16:35	11.28
6/20/2022 17:12	-0.07	6/21/2022 16:02	1.94	6/21/2022 16:25	5.90	6/21/2022 17:48	-0.30	6/20/2022 16:36	11.30
6/20/2022 17:13	-0.07	6/21/2022 16:03	1.94	6/21/2022 16:26	5.86	6/21/2022 17:49	-0.31	6/20/2022 16:37	11.29
6/20/2022 17:14	-0.07	6/21/2022 16:04	1.94	6/21/2022 16:27	5.89	6/21/2022 17:50	-0.29	6/20/2022 16:38	11.23
6/20/2022 17:15	-0.07	6/21/2022 16:05	1.94	6/21/2022 16:28	5.87	6/21/2022 17:51	-0.30	6/20/2022 16:39	11.25
6/20/2022 17:16	-0.07	6/21/2022 16:06	1.94	6/21/2022 16:29	5.90	6/21/2022 17:52	-0.35	6/20/2022 16:40	11.29
6/20/2022 17:17	-0.07	6/21/2022 16:07	1.94	6/21/2022 16:30	5.85	6/21/2022 17:53	-0.32	6/20/2022 16:41	11.22
6/20/2022 17:18	-0.07	6/21/2022 16:08	1.94	6/21/2022 16:31	5.87	6/21/2022 17:54	-0.34	6/20/2022 16:42	11.30
6/20/2022 17:19	-0.07	6/21/2022 16:09	1.94	6/21/2022 16:32	5.88	6/21/2022 17:55	-0.32	6/20/2022 16:43	11.22
6/20/2022 17:20	-0.07	6/21/2022 16:10	1.95	6/21/2022 16:33	5.83	6/21/2022 17:56	-0.30	6/20/2022 16:44	11.27
6/20/2022 17:21	-0.07	6/21/2022 16:11	1.95	6/21/2022 16:34	5.84	6/21/2022 17:57	-0.31	6/20/2022 16:45	11.25
6/20/2022 17:22	-0.07	6/21/2022 16:12	1.94	6/21/2022 16:35	5.88	6/21/2022 17:58	-0.29	6/20/2022 16:46	11.22
6/20/2022 17:23	-0.07	6/21/2022 16:13	1.95	6/21/2022 16:36	5.91	6/21/2022 17:59	-0.32	6/20/2022 16:47	11.28
6/20/2022 17:24	-0.07	6/21/2022 16:14	1.94	6/21/2022 16:37	5.89	6/21/2022 18:00	-0.30	6/20/2022 16:48	11.29
6/20/2022 17:25	-0.07	6/21/2022 16:15	1.95	6/21/2022 16:38	5.88	6/21/2022 18:01	-0.32	6/20/2022 16:49	11.22
6/20/2022 17:26	-0.07	6/21/2022 16:16	1.95	6/21/2022 16:39	5.88	6/21/2022 18:02	-0.29	6/20/2022 16:50	11.30
6/20/2022 17:27	-0.06	6/21/2022 16:17	1.94	6/21/2022 16:40	5.86	6/21/2022 18:03	-0.32	6/20/2022 16:51	11.28
6/20/2022 17:28	-0.07	6/21/2022 16:18	1.94	6/21/2022 16:41	5.93	6/21/2022 18:04	-0.32	6/20/2022 16:52	11.29
6/20/2022 17:29	-0.07	6/21/2022 16:19	1.95	6/21/2022 16:42	5.92	6/21/2022 18:05	-0.30	6/20/2022 16:53	11.28
6/20/2022 17:30	-0.07	6/21/2022 16:20	1.95	6/21/2022 16:43	5.92	6/21/2022 18:06	-0.32	6/20/2022 16:54	11.28
6/20/2022 17:31	-0.07	6/21/2022 16:21	1.95	6/21/2022 16:44	5.88	6/21/2022 18:07	-0.35	6/20/2022 16:55	11.27
6/20/2022 17:32	-0.06	6/21/2022 16:22	1.95	6/21/2022 16:45	5.88	6/21/2022 18:08	-0.31	6/20/2022 16:56	11.22
6/20/2022 17:33	-0.07	6/21/2022 16:23	1.95	6/21/2022 16:46	5.88	6/21/2022 18:09	-0.30	6/20/2022 16:57	11.27
6/20/2022 17:34	-0.07	6/21/2022 16:24	1.95	6/21/2022 16:47	5.92	6/21/2022 18:10	-0.28	6/20/2022 16:58	11.29
6/20/2022 17:35	-0.07	6/21/2022 16:25	1.95	6/21/2022 16:48	5.88	6/21/2022 18:11	-0.32	6/20/2022 16:59	11.27
6/20/2022 17:36	-0.06	6/21/2022 16:26	1.95	6/21/2022 16:49	5.90	6/21/2022 18:12	-0.26	6/20/2022 17:00	11.26
6/20/2022 17:37	-0.07	6/21/2022 16:27	1.95	6/21/2022 16:50	5.87	6/21/2022 18:13	-0.30	6/20/2022 17:01	11.21
6/20/2022 17:38	-0.07	6/21/2022 16:28	1.95	6/21/2022 16:51	5.89	6/21/2022 18:14	-0.29	6/20/2022 17:02	11.28
6/20/2022 17:39	-0.07	6/21/2022 16:29	1.95	6/21/2022 16:52	5.90	6/21/2022 18:15	-0.36	6/20/2022 17:03	11.30
6/20/2022 17:40	-0.07	6/21/2022 16:30	1.95	6/21/2022 16:53	5.91	6/21/2022 18:16	-0.32	6/20/2022 17:04	11.25
6/20/2022 17:41	-0.07	6/21/2022 16:31	1.95	6/21/2022 16:54	5.95	6/21/2022 18:17	-0.32	6/20/2022 17:05	11.25
6/20/2022 17:42	-0.07	6/21/2022 16:32	1.95	6/21/2022 16:55	5.96	6/21/2022 18:18	-0.31	6/20/2022 17:06	11.24
6/20/2022 17:43	-0.07	6/21/2022 16:33	1.95	6/21/2022 16:56	5.91	6/21/2022 18:19	-0.31	6/20/2022 17:07	11.26
6/20/2022 17:44	-0.07	6/21/2022 16:34	1.95	6/21/2022 16:57	5.87	6/21/2022 18:20	-0.32	6/20/2022 17:08	11.28
6/20/2022 17:45	-0.06	6/21/2022 16:35	1.95	6/21/2022 16:58	5.91	6/21/2022 18:21	-0.35	6/20/2022 17:09	11.26
6/20/2022 17:46	-0.07	6/21/2022 16:36	1.95	6/21/2022 16:59	5.89	6/21/2022 18:22	-0.33	6/20/2022 17:10	11.23
6/20/2022 17:47	-0.07	6/21/2022 16:37	1.96	6/21/2022 17:00	5.89	6/21/2022 18:23	-0.29	6/20/2022 17:11	11.20
6/20/2022 17:48	-0.07	6/21/2022 16:38	1.96	6/21/2022 17:01	5.96	6/21/2022 18:24	-0.28	6/20/2022 17:12	11.23
6/20/2022 17:49	-0.07	6/21/2022 16:39	1.96	6/21/2022 17:02	5.90	6/21/2022 18:25	-0.30	6/20/2022 17:13	11.28
6/20/2022 17:50	-0.07	6/21/2022 16:40	1.96	6/21/2022 17:03	5.91	6/21/2022 18:26	-0.33	6/20/2022 17:14	11.25
6/20/2022 17:51	-0.07	6/21/2022 16:41	1.96	6/21/2022 17:04	5.95	6/21/2022 18:27	-0.29	6/20/2022 17:15	11.24
6/20/2022 17:52	-0.07	6/21/2022 16:42	1.95	6/21/2022 17:05	5.91	6/21/2022 18:28	-0.33	6/20/2022 17:16	11.23
6/20/2022 17:53	-0.07	6/21/2022 16:43	1.95	6/21/2022 17:06	5.90	6/21/2022 18:29	-0.30	6/20/2022 17:17	11.26
6/20/2022 17:54	-0.07	6/21/2022 16:44	1.96	6/21/2022 17:07	5.97	6/21/2022 18:30	-0.32	6/20/2022 17:18	11.25
6/20/2022 17:55	-0.07	6/21/2022 16:45	1.96	6/21/2022 17:08	5.94	6/21/2022 18:31	-0.32	6/20/2022 17:19	11.27
6/20/2022 17:56	-0.07	6/21/2022 16:46	1.96	6/21/2022 17:09	5.92	6/21/2022 18:32	-0.30	6/20/2022 17:20	11.27
6/20/2022 17:57	-0.07	6/21/2022 16:47	1.96	6/21/2022 17:10	5.94	6/21/2022 18:33	-0.29	6/20/2022 17:21	11.22
6/20/2022 17:58	-0.07	6/21/2022 16:48	1.96	6/21/2022 17:11	5.94	6/21/2022 18:34	-0.28	6/20/2022 17:22	11.22
6/20/2022 17:59	-0.07	6/21/2022 16:49	1.96	6/21/2022 17:12	5.93	6/21/2022 18:35	-0.31	6/20/2022 17:23	11.28
6/20/2022 18:00	-0.07	6/21/2022 16:50	1.96	6/21/2022 17:13	5.94	6/21/2022 18:36	-0.33	6/20/2022 17:24	11.29
6/20/2022 18:01	-0.07	6/21/2022 16:51	1.96	6/21/2022 17:14	5.91	6/21/2022 18:37	-0.29	6/20/2022 17:25	11.26
6/20/2022 18:02	-0.07	6/21/2022 16:52	1.96	6/21/2022 17:15	5.94	6/21/2022 18:38	-0.28	6/20/2022 17:26	11.22
6/20/2022 18:03	-0.06	6/21/2022 16:53	1.96	6/21/2022 17:16	5.90	6/21/2022 18:39	-0.32	6/20/2022 17:27	11.22
6/20/2022 18:04	-0.07	6/21/2022 16:54	1.96	6/21/2022 17:17	5.95	6/21/2022 18:40	-0.32	6/20/2022 17:28	11.23
6/20/2022 18:05	-0.07	6/21/2022 16:55	1.96	6/21/2022 17:18	5.90	6/21/2022 18:41	-0.30	6/20/2022 17:29	11.26
6/20/2022 18:06	-0.07	6/21/2022 16:56	1.96	6/21/2022 17:19	5.97	6/21/2022 18:42	-0.29	6/20/2022 17:30	11.24
6/20/2022 18:07	-0.06	6/21/2022 16:57	1.96	6/21/2022 17:20	5.93	6/21/2022 18:43	-0.30	6/20/2022 17:31	11.24
6/20/2022 18:08	-0.06	6/21/2022 16:58	1.97	6/21/2022 17:21	5.89	6/21/2022 18:44	-0.29	6/20/2022 17:32	11.25
6/20/2022 18:09	-0.07	6/21/2022 16:59	1.96	6/21/2022 17:22	5.95	6/21/2022 18:45	-0.28	6/20/2022 17:33	11.27
6/20/2022 18:10	-0.07	6/21/2022 17:00	1.96	6/21/2022 17:23	5.93	6/21/2022 18:46	-0.29	6/20/2022 17:34	11.23
6/20/2022 18:11	-0.07	6/21/2022 17:01	1.96	6/21/2022 17:24	5.94	6/21/2022 18:47	-0.28	6/20/2022 17:35	11.27
6/20/2022 18:12	-0.07	6/21/2022 17:02	1.96	6/21/2022 17:25	5.94	6/21/2022 18:48	-0.32	6/20/2022 17:36	11.28
6/20/2022 18:13	-0.07	6/21/2022 17:03	1.96	6/21/2022 17:26	5.95	6/21/2022 18:49	-0.31	6/20/2022 17:37	11.27
6/20/2022 18:14	-0.07	6/21/2022 17:04	1.97	6/21/2022 17:27	5.90	6/21/2022 18:50	-0.30	6/20/2022 17:38	11.24
6/20/2022 18:15	-0.07	6/21/2022 17:05	1.97	6/21/2022 17:28	5.97	6/21/2022 18:51	-0.32	6/20/2022 17:39	11.26
6/20/2022 18:16	-0.06	6/21/2022 17:06	1.97	6/21/2022 17:29	5.95	6/21/2022 18:52	-0.34	6/20/2022 17:40	11.27
6/20/2022 18:17	-0.07	6/21/2022 17:07	1.97	6/21/2022 17:30	5.92	6/21/2022 18:53	-0.29	6/20/2022 17:41	11.23
6/20/2022 18:18	-0.07	6/21/2022 17:08	1.97	6/21/2022 17:31	5.97	6/21/2022 18:54	-0.29	6/20/2022 17:42	11.26
6/20/2022 18:19	-0.07	6/21/2022 17:09	1.97	6/21/2022 17:32	5.94	6/21/2022 18:55	-0.34	6/20/2022 17:43	11.24
6/20/2022 18:20	-0.07	6/21/2022 17:10	1.97	6/21/2022 17:33	5.98	6/21/2022 18:56	-0.32	6/20/2022 17:44	11.31
6/20/2022 18:21	-0.07	6/21/2022 17:11	1.97	6/21/2022 17:34	5.95	6/21/2022 18:57	-0.29	6/20/2022 17:45	11.26
6/20/2022 18:22	-0.07	6/21/2022 17:12	1.97	6/21/2022 17:35	5.93	6/21/2022 18:58	-0.29	6/20/2022 17:46	11.27
6/20/2022 18:23	-0.07	6/21/2022 17:13	1.97	6/21/2022 17:36	5.99	6/21/2022 18:59	-0.31	6/20/2022 17:47	11.24
6/20/2022 18:24	-0.07	6/21/2022 17:14	1.97	6/21/2022 17:37	5.95	6/21/2022 19:00	-0.31	6/20/2022 17:48	11.26

6/20/2022 18:25	-0.07	6/21/2022 17:15	1.97	6/21/2022 17:38	5.95	6/21/2022 19:01	-0.31	6/20/2022 17:49	11.26
6/20/2022 18:26	-0.06	6/21/2022 17:16	1.97	6/21/2022 17:39	6.01	6/21/2022 19:02	-0.30	6/20/2022 17:50	11.23
6/20/2022 18:27	-0.07	6/21/2022 17:17	1.97	6/21/2022 17:40	5.95	6/21/2022 19:03	-0.30	6/20/2022 17:51	11.21
6/20/2022 18:28	-0.06	6/21/2022 17:18	1.97	6/21/2022 17:41	5.93	6/21/2022 19:04	-0.25	6/20/2022 17:52	11.24
6/20/2022 18:29	-0.07	6/21/2022 17:19	1.97	6/21/2022 17:42	5.96	6/21/2022 19:05	-0.36	6/20/2022 17:53	11.24
6/20/2022 18:30	-0.07	6/21/2022 17:20	1.97	6/21/2022 17:43	5.93	6/21/2022 19:06	-0.29	6/20/2022 17:54	11.22
6/20/2022 18:31	-0.06	6/21/2022 17:21	1.98	6/21/2022 17:44	5.93	6/21/2022 19:07	-0.32	6/20/2022 17:55	11.28
6/20/2022 18:32	-0.07	6/21/2022 17:22	1.98	6/21/2022 17:45	5.98	6/21/2022 19:08	-0.29	6/20/2022 17:56	11.28
6/20/2022 18:33	-0.07	6/21/2022 17:23	1.97	6/21/2022 17:46	5.92	6/21/2022 19:09	-0.31	6/20/2022 17:57	11.29
6/20/2022 18:34	-0.07	6/21/2022 17:24	1.97	6/21/2022 17:47	5.95	6/21/2022 19:10	-0.32	6/20/2022 17:58	11.23
6/20/2022 18:35	-0.07	6/21/2022 17:25	1.98	6/21/2022 17:48	5.98	6/21/2022 19:11	-0.28	6/20/2022 17:59	11.28
6/20/2022 18:36	-0.07	6/21/2022 17:26	1.97	6/21/2022 17:49	6.00	6/21/2022 19:12	-0.29	6/20/2022 18:00	11.26
6/20/2022 18:37	-0.07	6/21/2022 17:27	1.98	6/21/2022 17:50	5.95	6/21/2022 19:13	-0.33	6/20/2022 18:01	11.26
6/20/2022 18:38	-0.06	6/21/2022 17:28	1.97	6/21/2022 17:51	5.92	6/21/2022 19:14	-0.30	6/20/2022 18:02	11.25
6/20/2022 18:39	-0.06	6/21/2022 17:29	1.99	6/21/2022 17:52	5.98	6/21/2022 19:15	-0.28	6/20/2022 18:03	11.23
6/20/2022 18:40	-0.07	6/21/2022 17:30	1.98	6/21/2022 17:53	5.98	6/21/2022 19:16	-0.34	6/20/2022 18:04	11.26
6/20/2022 18:41	-0.06	6/21/2022 17:31	1.98	6/21/2022 17:54	5.97	6/21/2022 19:17	-0.30	6/20/2022 18:05	11.26
6/20/2022 18:42	-0.07	6/21/2022 17:32	1.98	6/21/2022 17:55	5.96	6/21/2022 19:18	-0.31	6/20/2022 18:06	11.20
6/20/2022 18:43	-0.07	6/21/2022 17:33	1.98	6/21/2022 17:56	5.96	6/21/2022 19:19	-0.29	6/20/2022 18:07	11.26
6/20/2022 18:44	-0.06	6/21/2022 17:34	1.98	6/21/2022 17:57	5.98	6/21/2022 19:20	-0.29	6/20/2022 18:08	11.25
6/20/2022 18:45	-0.07	6/21/2022 17:35	1.98	6/21/2022 17:58	5.99	6/21/2022 19:21	-0.38	6/20/2022 18:09	11.31
6/20/2022 18:46	-0.07	6/21/2022 17:36	1.98	6/21/2022 17:59	6.00	6/21/2022 19:22	-0.32	6/20/2022 18:10	11.26
6/20/2022 18:47	-0.07	6/21/2022 17:37	1.98	6/21/2022 18:00	5.98	6/21/2022 19:23	-0.33	6/20/2022 18:11	11.29
6/20/2022 18:48	-0.07	6/21/2022 17:38	1.98	6/21/2022 18:01	5.93	6/21/2022 19:24	-0.26	6/20/2022 18:12	11.24
6/20/2022 18:49	-0.07	6/21/2022 17:39	1.98	6/21/2022 18:02	5.93	6/21/2022 19:25	-0.27	6/20/2022 18:13	11.26
6/20/2022 18:50	-0.07	6/21/2022 17:40	1.98	6/21/2022 18:03	6.00	6/21/2022 19:26	-0.26	6/20/2022 18:14	11.26
6/20/2022 18:51	-0.07	6/21/2022 17:41	1.99	6/21/2022 18:04	5.99	6/21/2022 19:27	-0.28	6/20/2022 18:15	11.28
6/20/2022 18:52	-0.07	6/21/2022 17:42	1.98	6/21/2022 18:05	6.01	6/21/2022 19:28	-0.34	6/20/2022 18:16	11.28
6/20/2022 18:53	-0.07	6/21/2022 17:43	1.98	6/21/2022 18:06	5.97	6/21/2022 19:29	-0.32	6/20/2022 18:17	11.27
6/20/2022 18:54	-0.07	6/21/2022 17:44	1.98	6/21/2022 18:07	5.98	6/21/2022 19:30	-0.34	6/20/2022 18:18	11.30
6/20/2022 18:55	-0.07	6/21/2022 17:45	1.99	6/21/2022 18:08	5.91	6/21/2022 19:31	-0.30	6/20/2022 18:19	11.27
6/20/2022 18:56	-0.07	6/21/2022 17:46	1.98	6/21/2022 18:09	5.96	6/21/2022 19:32	-0.32	6/20/2022 18:20	11.26
6/20/2022 18:57	-0.06	6/21/2022 17:47	1.99	6/21/2022 18:10	5.97	6/21/2022 19:33	-0.28	6/20/2022 18:21	11.25
6/20/2022 18:58	-0.07	6/21/2022 17:48	1.99	6/21/2022 18:11	5.98	6/21/2022 19:34	-0.33	6/20/2022 18:22	11.31
6/20/2022 18:59	-0.07	6/21/2022 17:49	1.99	6/21/2022 18:12	5.96	6/21/2022 19:35	-0.28	6/20/2022 18:23	11.24
6/20/2022 19:00	-0.07	6/21/2022 17:50	1.99	6/21/2022 18:13	5.97	6/21/2022 19:36	-0.30	6/20/2022 18:24	11.33
6/20/2022 19:01	-0.07	6/21/2022 17:51	1.99	6/21/2022 18:14	5.99	6/21/2022 19:37	-0.34	6/20/2022 18:25	11.32
6/20/2022 19:02	-0.06	6/21/2022 17:52	1.99	6/21/2022 18:15	6.00	6/21/2022 19:38	-0.32	6/20/2022 18:26	11.26
6/20/2022 19:03	-0.06	6/21/2022 17:53	1.99	6/21/2022 18:16	5.99	6/21/2022 19:39	-0.32	6/20/2022 18:27	11.26
6/20/2022 19:04	-0.07	6/21/2022 17:54	1.99	6/21/2022 18:17	6.01	6/21/2022 19:40	-0.29	6/20/2022 18:28	11.28
6/20/2022 19:05	-0.06	6/21/2022 17:55	1.99	6/21/2022 18:18	6.00	6/21/2022 19:41	-0.31	6/20/2022 18:29	11.27
6/20/2022 19:06	-0.07	6/21/2022 17:56	1.99	6/21/2022 18:19	6.00	6/21/2022 19:42	-0.29	6/20/2022 18:30	11.27
6/20/2022 19:07	-0.07	6/21/2022 17:57	1.99	6/21/2022 18:20	5.97	6/21/2022 19:43	-0.36	6/20/2022 18:31	11.27
6/20/2022 19:08	-0.07	6/21/2022 17:58	1.99	6/21/2022 18:21	6.01	6/21/2022 19:44	-0.28	6/20/2022 18:32	11.29
6/20/2022 19:09	-0.07	6/21/2022 17:59	1.99	6/21/2022 18:22	6.03	6/21/2022 19:45	-0.37	6/20/2022 18:33	11.23
6/20/2022 19:10	-0.07	6/21/2022 18:00	2.00	6/21/2022 18:23	6.01	6/21/2022 19:46	-0.34	6/20/2022 18:34	11.30
6/20/2022 19:11	-0.07	6/21/2022 18:01	1.99	6/21/2022 18:24	6.01	6/21/2022 19:47	-0.30	6/20/2022 18:35	11.24
6/20/2022 19:12	-0.07	6/21/2022 18:02	1.99	6/21/2022 18:25	5.98	6/21/2022 19:48	-0.32	6/20/2022 18:36	11.24
6/20/2022 19:13	-0.07	6/21/2022 18:03	1.99	6/21/2022 18:26	5.97	6/21/2022 19:49	-0.31	6/20/2022 18:37	11.25
6/20/2022 19:14	-0.07	6/21/2022 18:04	1.99	6/21/2022 18:27	6.04	6/21/2022 19:50	-0.31	6/20/2022 18:38	11.25
6/20/2022 19:15	-0.07	6/21/2022 18:05	2.00	6/21/2022 18:28	6.01	6/21/2022 19:51	-0.29	6/20/2022 18:39	11.26
6/20/2022 19:16	-0.07	6/21/2022 18:06	2.00	6/21/2022 18:29	6.02	6/21/2022 19:52	-0.31	6/20/2022 18:40	11.28
6/20/2022 19:17	-0.07	6/21/2022 18:07	2.00	6/21/2022 18:30	6.03	6/21/2022 19:53	-0.32	6/20/2022 18:41	11.18
6/20/2022 19:18	-0.07	6/21/2022 18:08	2.00	6/21/2022 18:31	6.02	6/21/2022 19:54	-0.35	6/20/2022 18:42	11.29
6/20/2022 19:19	-0.07	6/21/2022 18:09	2.00	6/21/2022 18:32	5.99	6/21/2022 19:55	-0.34	6/20/2022 18:43	11.26
6/20/2022 19:20	-0.07	6/21/2022 18:10	2.00	6/21/2022 18:33	6.02	6/21/2022 19:56	-0.29	6/20/2022 18:44	11.24
6/20/2022 19:21	-0.07	6/21/2022 18:11	2.00	6/21/2022 18:34	5.96	6/21/2022 19:57	-0.32	6/20/2022 18:45	11.33
6/20/2022 19:22	-0.07	6/21/2022 18:12	2.00	6/21/2022 18:35	6.04	6/21/2022 19:58	-0.32	6/20/2022 18:46	11.24
6/20/2022 19:23	-0.07	6/21/2022 18:13	2.00	6/21/2022 18:36	5.98	6/21/2022 19:59	-0.30	6/20/2022 18:47	11.26
6/20/2022 19:24	-0.07	6/21/2022 18:14	2.00	6/21/2022 18:37	5.96	6/21/2022 20:00	-0.29	6/20/2022 18:48	11.25
6/20/2022 19:25	-0.07	6/21/2022 18:15	2.00	6/21/2022 18:38	5.97	6/21/2022 20:01	-0.29	6/20/2022 18:49	11.23
6/20/2022 19:26	-0.07	6/21/2022 18:16	2.00	6/21/2022 18:39	6.03	6/21/2022 20:02	-0.37	6/20/2022 18:50	11.19
6/20/2022 19:27	-0.07	6/21/2022 18:17	2.00	6/21/2022 18:40	5.97	6/21/2022 20:03	-0.31	6/20/2022 18:51	11.24
6/20/2022 19:28	-0.07	6/21/2022 18:18	2.00	6/21/2022 18:41	5.99	6/21/2022 20:04	-0.37	6/20/2022 18:52	11.22
6/20/2022 19:29	-0.07	6/21/2022 18:19	2.00	6/21/2022 18:42	6.01	6/21/2022 20:05	-0.30	6/20/2022 18:53	11.22
6/20/2022 19:30	-0.07	6/21/2022 18:20	2.00	6/21/2022 18:43	6.01	6/21/2022 20:06	-0.28	6/20/2022 18:54	11.23
6/20/2022 19:31	-0.07	6/21/2022 18:21	2.00	6/21/2022 18:44	5.98	6/21/2022 20:07	-0.30	6/20/2022 18:55	11.25
6/20/2022 19:32	-0.07	6/21/2022 18:22	2.00	6/21/2022 18:45	5.96	6/21/2022 20:08	-0.30	6/20/2022 18:56	11.22
6/20/2022 19:33	-0.06	6/21/2022 18:23	2.00	6/21/2022 18:46	6.06	6/21/2022 20:09	-0.32	6/20/2022 18:57	11.27
6/20/2022 19:34	-0.07	6/21/2022 18:24	2.00	6/21/2022 18:47	5.98	6/21/2022 20:10	-0.32	6/20/2022 18:58	11.25
6/20/2022 19:35	-0.07	6/21/2022 18:25	2.00	6/21/2022 18:48	5.98	6/21/2022 20:11	-0.31	6/20/2022 18:59	11.23
6/20/2022 19:36	-0.07	6/21/2022 18:26	2.00	6/21/2022 18:49	6.01	6/21/2022 20:12	-0.32	6/20/2022 19:00	11.29
6/20/2022 19:37	-0.06	6/21/2022 18:27	2.00	6/21/2022 18:50	6.01	6/21/2022 20:13	-0.28	6/20/2022 19:01	11.27
6/20/2022 19:38	-0.06	6/21/2022 18:28	2.00	6/21/2022 18:51	6.01	6/21/2022 20:14	-0.32	6/20/2022 19:02	11.30
6/20/2022 19:39	-0.07	6/21/2022 18:29	2.01	6/21/2022 18:52	6.04	6/21/2022 20:15	-0.29	6/20/2022 19:03	11.29
6/20/2022 19:40	-0.07	6/21/2022 18:30	2.00	6/21/2022 18:53	6.04	6/21/2022 20:16	-0.32	6/20/2022 19:04	11.22
6/20/2022 19:41	-0.06	6/21/2022 18:31	2.01	6/21/2022 18:54	6.03	6/21/2022 20:17	-0.30	6/20/2022 19:05	11.31
6/20/2022 19:42	-0.07	6/21/2022 18:32	2.01	6/21/2022 18:55	5.97	6/21/2022 20:18	-0.33	6/20/2022 19:06	11.22
6/20/2022 19:43	-0.07	6/21/2022 18:33	2.01	6/21/2022 18:56	6.04	6/21/2022 20:19	-0.33	6/20/2022 19:07	11.27
6/20/2022 19:44	-0.06	6/21/2022 18:34	2.01	6/21/2022 18:57	6.04	6/21/2022 20:20	-0.35	6/20/2022 19:08	11.25
6/20/2022 19:45	-0.07	6/21/2022 18:35	2.01	6/21/2022 18:58	6.04	6/21/2022 20:21	-0.30	6/20/2022 19:09	11.30
6/20/2022 19:46	-0.06	6/21/2022 18:36	2.01	6/21/2022 18:59	6.02	6/21/2022 20:22	-0.34	6/20/2022 19:10	11.27
6/20/2022 19:47	-0.07	6/21/2022 18:37	2.01	6/21/2022 19:00	6.05	6/21/2022 20:23	-0.33	6/20/2022 19:11	11.26
6/20/2022 19:48	-0.06	6/21/2022 18:38	2.01	6/21/2022 19:01	6.03	6/21/2022 20:24	-0.33	6/20/2022 19:12	11.27
6/20/2022 19:49	-0.07	6/21/2022 18:39	2.01	6/21/2022 19:02	6.02	6/21/2022 20:25	-0.31	6/20/2022 19:13	11.27
6/20/2022 19:50	-0.06	6/21/2022 18:40	2.01	6/21/2022 19:03	6.07	6/21/2022 20:26	-0.30	6/20/2022 19:14	11.22
6/20/2022 19:51	-0.07	6/21/2022 18:41	2.01	6/21/2022 19:04	6.02	6/21/2022 20:27	-0.33	6/20/2022 19:15	11.29
6/20/2022 19:52	-0.07	6/21/2022 18:42	2.01	6/21/2022 19:05	6.02	6/21/2022 20:28	-0.31	6/20/2022 19:16	11.24

6/20/2022 19:53	-0.07	6/21/2022 18:43	2.01	6/21/2022 19:06	6.03	6/21/2022 20:29	-0.31	6/20/2022 19:17	11.27
6/20/2022 19:54	-0.06	6/21/2022 18:44	2.01	6/21/2022 19:07	6.02	6/21/2022 20:30	-0.28	6/20/2022 19:18	11.25
6/20/2022 19:55	-0.07	6/21/2022 18:45	2.01	6/21/2022 19:08	6.06	6/21/2022 20:31	-0.31	6/20/2022 19:19	11.28
6/20/2022 19:56	-0.07	6/21/2022 18:46	2.01	6/21/2022 19:09	6.09	6/21/2022 20:32	-0.30	6/20/2022 19:20	11.25
6/20/2022 19:57	-0.06	6/21/2022 18:47	2.01	6/21/2022 19:10	6.02	6/21/2022 20:33	-0.31	6/20/2022 19:21	11.25
6/20/2022 19:58	-0.07	6/21/2022 18:48	2.01	6/21/2022 19:11	6.01	6/21/2022 20:34	-0.31	6/20/2022 19:22	11.32
6/20/2022 19:59	-0.07	6/21/2022 18:49	2.01	6/21/2022 19:12	6.03	6/21/2022 20:35	-0.33	6/20/2022 19:23	11.22
6/20/2022 20:00	-0.07	6/21/2022 18:50	2.01	6/21/2022 19:13	6.01	6/21/2022 20:36	-0.35	6/20/2022 19:24	11.26
6/20/2022 20:01	-0.07	6/21/2022 18:51	2.02	6/21/2022 19:14	6.03	6/21/2022 20:37	-0.30	6/20/2022 19:25	11.26
6/20/2022 20:02	-0.07	6/21/2022 18:52	2.02	6/21/2022 19:15	6.02	6/21/2022 20:38	-0.33	6/20/2022 19:26	11.28
6/20/2022 20:03	-0.07	6/21/2022 18:53	2.02	6/21/2022 19:16	6.05	6/21/2022 20:39	-0.29	6/20/2022 19:27	11.25
6/20/2022 20:04	-0.07	6/21/2022 18:54	2.02	6/21/2022 19:17	6.05	6/21/2022 20:40	-0.32	6/20/2022 19:28	11.28
6/20/2022 20:05	-0.07	6/21/2022 18:55	2.02	6/21/2022 19:18	6.04	6/21/2022 20:41	-0.33	6/20/2022 19:29	11.26
6/20/2022 20:06	-0.07	6/21/2022 18:56	2.02	6/21/2022 19:19	6.00	6/21/2022 20:42	-0.30	6/20/2022 19:30	11.25
6/20/2022 20:07	-0.07	6/21/2022 18:57	2.02	6/21/2022 19:20	6.07	6/21/2022 20:43	-0.28	6/20/2022 19:31	11.24
6/20/2022 20:08	-0.07	6/21/2022 18:58	2.02	6/21/2022 19:21	6.08	6/21/2022 20:44	-0.30	6/20/2022 19:32	11.23
6/20/2022 20:09	-0.07	6/21/2022 18:59	2.02	6/21/2022 19:22	6.01	6/21/2022 20:45	-0.31	6/20/2022 19:33	11.26
6/20/2022 20:10	-0.07	6/21/2022 19:00	2.02	6/21/2022 19:23	6.04	6/21/2022 20:46	-0.29	6/20/2022 19:34	11.22
6/20/2022 20:11	-0.07	6/21/2022 19:01	2.02	6/21/2022 19:24	6.07	6/21/2022 20:47	-0.35	6/20/2022 19:35	11.22
6/20/2022 20:12	-0.07	6/21/2022 19:02	2.02	6/21/2022 19:25	6.03	6/21/2022 20:48	-0.33	6/20/2022 19:36	11.23
6/20/2022 20:13	-0.07	6/21/2022 19:03	2.02	6/21/2022 19:26	6.04	6/21/2022 20:49	-0.31	6/20/2022 19:37	11.25
6/20/2022 20:14	-0.07	6/21/2022 19:04	2.02	6/21/2022 19:27	6.06	6/21/2022 20:50	-0.32	6/20/2022 19:38	11.23
6/20/2022 20:15	-0.07	6/21/2022 19:05	2.02	6/21/2022 19:28	6.03	6/21/2022 20:51	-0.29	6/20/2022 19:39	11.23
6/20/2022 20:16	-0.07	6/21/2022 19:06	2.02	6/21/2022 19:29	6.03	6/21/2022 20:52	-0.30	6/20/2022 19:40	11.28
6/20/2022 20:17	-0.07	6/21/2022 19:07	2.02	6/21/2022 19:30	6.04	6/21/2022 20:53	-0.30	6/20/2022 19:41	11.29
6/20/2022 20:18	-0.06	6/21/2022 19:08	2.03	6/21/2022 19:31	6.06	6/21/2022 20:54	-0.33	6/20/2022 19:42	11.28
6/20/2022 20:19	-0.07	6/21/2022 19:09	2.02	6/21/2022 19:32	6.04	6/21/2022 20:55	-0.28	6/20/2022 19:43	11.28
6/20/2022 20:20	-0.06	6/21/2022 19:10	2.03	6/21/2022 19:33	6.03	6/21/2022 20:56	-0.32	6/20/2022 19:44	11.26
6/20/2022 20:21	-0.07	6/21/2022 19:11	2.02	6/21/2022 19:34	6.07	6/21/2022 20:57	-0.31	6/20/2022 19:45	11.23
6/20/2022 20:22	-0.06	6/21/2022 19:12	2.03	6/21/2022 19:35	6.07	6/21/2022 20:58	-0.31	6/20/2022 19:46	11.24
6/20/2022 20:23	-0.07	6/21/2022 19:13	2.03	6/21/2022 19:36	6.07	6/21/2022 20:59	-0.31	6/20/2022 19:47	11.24
6/20/2022 20:24	-0.07	6/21/2022 19:14	2.03	6/21/2022 19:37	6.06	6/21/2022 21:00	-0.32	6/20/2022 19:48	11.23
6/20/2022 20:25	-0.07	6/21/2022 19:15	2.03	6/21/2022 19:38	6.04	6/21/2022 21:01	-0.31	6/20/2022 19:49	11.25
6/20/2022 20:26	-0.07	6/21/2022 19:16	2.03	6/21/2022 19:39	6.06	6/21/2022 21:02	-0.36	6/20/2022 19:50	11.26
6/20/2022 20:27	-0.06	6/21/2022 19:17	2.03	6/21/2022 19:40	6.04	6/21/2022 21:03	-0.30	6/20/2022 19:51	11.26
6/20/2022 20:28	-0.07	6/21/2022 19:18	2.03	6/21/2022 19:41	6.06	6/21/2022 21:04	-0.29	6/20/2022 19:52	11.21
6/20/2022 20:29	-0.06	6/21/2022 19:19	2.03	6/21/2022 19:42	6.02	6/21/2022 21:05	-0.33	6/20/2022 19:53	11.23
6/20/2022 20:30	-0.06	6/21/2022 19:20	2.03	6/21/2022 19:43	6.03	6/21/2022 21:06	-0.30	6/20/2022 19:54	11.26
6/20/2022 20:31	-0.07	6/21/2022 19:21	2.03	6/21/2022 19:44	6.05	6/21/2022 21:07	-0.28	6/20/2022 19:55	11.28
6/20/2022 20:32	-0.06	6/21/2022 19:22	2.03	6/21/2022 19:45	6.10	6/21/2022 21:08	-0.31	6/20/2022 19:56	11.26
6/20/2022 20:33	-0.07	6/21/2022 19:23	2.03	6/21/2022 19:46	6.00	6/21/2022 21:09	-0.32	6/20/2022 19:57	11.29
6/20/2022 20:34	-0.06	6/21/2022 19:24	2.03	6/21/2022 19:47	6.06	6/21/2022 21:10	-0.31	6/20/2022 19:58	11.25
6/20/2022 20:35	-0.07	6/21/2022 19:25	2.03	6/21/2022 19:48	6.07	6/21/2022 21:11	-0.30	6/20/2022 19:59	11.26
6/20/2022 20:36	-0.07	6/21/2022 19:26	2.03	6/21/2022 19:49	6.06	6/21/2022 21:12	-0.32	6/20/2022 20:00	11.23
6/20/2022 20:37	-0.07	6/21/2022 19:27	2.03	6/21/2022 19:50	6.10	6/21/2022 21:13	-0.30	6/20/2022 20:01	11.24
6/20/2022 20:38	-0.07	6/21/2022 19:28	2.03	6/21/2022 19:51	6.05	6/21/2022 21:14	-0.33	6/20/2022 20:02	11.27
6/20/2022 20:39	-0.07	6/21/2022 19:29	2.03	6/21/2022 19:52	6.08	6/21/2022 21:15	-0.31	6/20/2022 20:03	11.21
6/20/2022 20:40	-0.07	6/21/2022 19:30	2.03	6/21/2022 19:53	6.05	6/21/2022 21:16	-0.34	6/20/2022 20:04	11.23
6/20/2022 20:41	-0.07	6/21/2022 19:31	2.03	6/21/2022 19:54	6.09	6/21/2022 21:17	-0.29	6/20/2022 20:05	11.24
6/20/2022 20:42	-0.07	6/21/2022 19:32	2.04	6/21/2022 19:55	6.04	6/21/2022 21:18	-0.32	6/20/2022 20:06	11.28
6/20/2022 20:43	-0.07	6/21/2022 19:33	2.03	6/21/2022 19:56	6.06	6/21/2022 21:19	-0.30	6/20/2022 20:07	11.25
6/20/2022 20:44	-0.07	6/21/2022 19:34	2.04	6/21/2022 19:57	6.12	6/21/2022 21:20	-0.34	6/20/2022 20:08	11.22
6/20/2022 20:45	-0.07	6/21/2022 19:35	2.03	6/21/2022 19:58	6.07	6/21/2022 21:21	-0.31	6/20/2022 20:09	11.28
6/20/2022 20:46	-0.07	6/21/2022 19:36	2.03	6/21/2022 19:59	6.08	6/21/2022 21:22	-0.30	6/20/2022 20:10	11.23
6/20/2022 20:47	-0.06	6/21/2022 19:37	2.03	6/21/2022 20:00	6.06	6/21/2022 21:23	-0.33	6/20/2022 20:11	11.24
6/20/2022 20:48	-0.07	6/21/2022 19:38	2.03	6/21/2022 20:01	6.02	6/21/2022 21:24	-0.34	6/20/2022 20:12	11.25
6/20/2022 20:49	-0.07	6/21/2022 19:39	2.04	6/21/2022 20:02	6.09	6/21/2022 21:25	-0.31	6/20/2022 20:13	11.26
6/20/2022 20:50	-0.07	6/21/2022 19:40	2.04	6/21/2022 20:03	6.09	6/21/2022 21:26	-0.34	6/20/2022 20:14	11.24
6/20/2022 20:51	-0.07	6/21/2022 19:41	2.04	6/21/2022 20:04	6.08	6/21/2022 21:27	-0.35	6/20/2022 20:15	11.24
6/20/2022 20:52	-0.07	6/21/2022 19:42	2.04	6/21/2022 20:05	6.07	6/21/2022 21:28	-0.34	6/20/2022 20:16	11.26
6/20/2022 20:53	-0.06	6/21/2022 19:43	2.04	6/21/2022 20:06	6.05	6/21/2022 21:29	-0.34	6/20/2022 20:17	11.27
6/20/2022 20:54	-0.07	6/21/2022 19:44	2.04	6/21/2022 20:07	6.08	6/21/2022 21:30	-0.30	6/20/2022 20:18	11.28
6/20/2022 20:55	-0.07	6/21/2022 19:45	2.04	6/21/2022 20:08	6.13	6/21/2022 21:31	-0.31	6/20/2022 20:19	11.28
6/20/2022 20:56	-0.07	6/21/2022 19:46	2.04	6/21/2022 20:09	6.15	6/21/2022 21:32	-0.32	6/20/2022 20:20	11.25
6/20/2022 20:57	-0.06	6/21/2022 19:47	2.04	6/21/2022 20:10	6.05	6/21/2022 21:33	-0.34	6/20/2022 20:21	11.23
6/20/2022 20:58	-0.07	6/21/2022 19:48	2.04	6/21/2022 20:11	6.08	6/21/2022 21:34	-0.33	6/20/2022 20:22	11.25
6/20/2022 20:59	-0.06	6/21/2022 19:49	2.04	6/21/2022 20:12	6.06	6/21/2022 21:35	-0.33	6/20/2022 20:23	11.25
6/20/2022 21:00	-0.06	6/21/2022 19:50	2.04	6/21/2022 20:13	6.07	6/21/2022 21:36	-0.34	6/20/2022 20:24	11.19
6/20/2022 21:01	-0.07	6/21/2022 19:51	2.04	6/21/2022 20:14	6.06	6/21/2022 21:37	-0.33	6/20/2022 20:25	11.28
6/20/2022 21:02	-0.07	6/21/2022 19:52	2.04	6/21/2022 20:15	6.07	6/21/2022 21:38	-0.31	6/20/2022 20:26	11.24
6/20/2022 21:03	-0.07	6/21/2022 19:53	2.05	6/21/2022 20:16	6.09	6/21/2022 21:39	-0.29	6/20/2022 20:27	11.20
6/20/2022 21:04	-0.06	6/21/2022 19:54	2.05	6/21/2022 20:17	6.06	6/21/2022 21:40	-0.29	6/20/2022 20:28	11.24
6/20/2022 21:05	-0.07	6/21/2022 19:55	2.04	6/21/2022 20:18	6.08	6/21/2022 21:41	-0.30	6/20/2022 20:29	11.22
6/20/2022 21:06	-0.06	6/21/2022 19:56	2.05	6/21/2022 20:19	6.09	6/21/2022 21:42	-0.31	6/20/2022 20:30	11.25
6/20/2022 21:07	-0.06	6/21/2022 19:57	2.05	6/21/2022 20:20	6.14	6/21/2022 21:43	-0.31	6/20/2022 20:31	11.27
6/20/2022 21:08	-0.06	6/21/2022 19:58	2.04	6/21/2022 20:21	6.09	6/21/2022 21:44	-0.30	6/20/2022 20:32	11.21
6/20/2022 21:09	-0.07	6/21/2022 19:59	2.04	6/21/2022 20:22	6.08	6/21/2022 21:45	-0.30	6/20/2022 20:33	11.26
6/20/2022 21:10	-0.06	6/21/2022 20:00	2.04	6/21/2022 20:23	6.08	6/21/2022 21:46	-0.31	6/20/2022 20:34	11.26
6/20/2022 21:11	-0.06	6/21/2022 20:01	2.04	6/21/2022 20:24	6.04	6/21/2022 21:47	-0.33	6/20/2022 20:35	11.23
6/20/2022 21:12	-0.06	6/21/2022 20:02	2.05	6/21/2022 20:25	6.12	6/21/2022 21:48	-0.33	6/20/2022 20:36	11.19
6/20/2022 21:13	-0.07	6/21/2022 20:03	2.05	6/21/2022 20:26	6.10	6/21/2022 21:49	-0.33	6/20/2022 20:37	11.21
6/20/2022 21:14	-0.07	6/21/2022 20:04	2.05	6/21/2022 20:27	6.11	6/21/2022 21:50	-0.29	6/20/2022 20:38	11.25
6/20/2022 21:15	-0.07	6/21/2022 20:05	2.05	6/21/2022 20:28	6.09	6/21/2022 21:51	-0.32	6/20/2022 20:39	11.24
6/20/2022 21:16	-0.07	6/21/2022 20:06	2.05	6/21/2022 20:29	6.10	6/21/2022 21:52	-0.31	6/20/2022 20:40	11.23
6/20/2022 21:17	-0.06	6/21/2022 20:07	2.05	6/21/2022 20:30	6.12	6/21/2022 21:53	-0.26	6/20/2022 20:41	11.24
6/20/2022 21:18	-0.06	6/21/2022 20:08	2.05	6/21/2022 20:31	6.11	6/21/2022 21:54	-0.34	6/20/2022 20:42	11.21
6/20/2022 21:19	-0.07	6/21/2022 20:09	2.05	6/21/2022 20:32	6.10	6/21/2022 21:55	-0.32	6/20/2022 20:43	11.24
6/20/2022 21:20	-0.07	6/21/2022 20:10	2.05	6/21/2022 20:33	6.15	6/21/2022 21:56	-0.32	6/20/2022 20:44	11.24

6/20/2022 21:21	-0.07	6/21/2022 20:11	2.05	6/21/2022 20:34	6.10	6/21/2022 21:57	-0.30	6/20/2022 20:45	11.23
6/20/2022 21:22	-0.07	6/21/2022 20:12	2.05	6/21/2022 20:35	6.11	6/21/2022 21:58	-0.30	6/20/2022 20:46	11.31
6/20/2022 21:23	-0.07	6/21/2022 20:13	2.06	6/21/2022 20:36	6.13	6/21/2022 21:59	-0.36	6/20/2022 20:47	11.26
6/20/2022 21:24	-0.06	6/21/2022 20:14	2.05	6/21/2022 20:37	6.08	6/21/2022 22:00	-0.33	6/20/2022 20:48	11.20
6/20/2022 21:25	-0.06	6/21/2022 20:15	2.05	6/21/2022 20:38	6.10	6/21/2022 22:01	-0.28	6/20/2022 20:49	11.28
6/20/2022 21:26	-0.06	6/21/2022 20:16	2.05	6/21/2022 20:39	6.08	6/21/2022 22:02	-0.31	6/20/2022 20:50	11.26
6/20/2022 21:27	-0.07	6/21/2022 20:17	2.05	6/21/2022 20:40	6.09	6/21/2022 22:03	-0.32	6/20/2022 20:51	11.25
6/20/2022 21:28	-0.07	6/21/2022 20:18	2.05	6/21/2022 20:41	6.08	6/21/2022 22:04	-0.34	6/20/2022 20:52	11.23
6/20/2022 21:29	-0.07	6/21/2022 20:19	2.05	6/21/2022 20:42	6.13	6/21/2022 22:05	-0.37	6/20/2022 20:53	11.27
6/20/2022 21:30	-0.07	6/21/2022 20:20	2.05	6/21/2022 20:43	6.07	6/21/2022 22:06	-0.33	6/20/2022 20:54	11.25
6/20/2022 21:31	-0.06	6/21/2022 20:21	2.05	6/21/2022 20:44	6.11	6/21/2022 22:07	-0.33	6/20/2022 20:55	11.27
6/20/2022 21:32	-0.06	6/21/2022 20:22	2.05	6/21/2022 20:45	6.10	6/21/2022 22:08	-0.31	6/20/2022 20:56	11.30
6/20/2022 21:33	-0.06	6/21/2022 20:23	2.06	6/21/2022 20:46	6.11	6/21/2022 22:09	-0.34	6/20/2022 20:57	11.27
6/20/2022 21:34	-0.06	6/21/2022 20:24	2.05	6/21/2022 20:47	6.12	6/21/2022 22:10	-0.34	6/20/2022 20:58	11.28
6/20/2022 21:35	-0.06	6/21/2022 20:25	2.05	6/21/2022 20:48	6.11	6/21/2022 22:11	-0.32	6/20/2022 20:59	11.30
6/20/2022 21:36	-0.07	6/21/2022 20:26	2.05	6/21/2022 20:49	6.11	6/21/2022 22:12	-0.33	6/20/2022 21:00	11.22
6/20/2022 21:37	-0.06	6/21/2022 20:27	2.05	6/21/2022 20:50	6.10	6/21/2022 22:13	-0.35	6/20/2022 21:01	11.28
6/20/2022 21:38	-0.07	6/21/2022 20:28	2.06	6/21/2022 20:51	6.10	6/21/2022 22:14	-0.33	6/20/2022 21:02	11.28
6/20/2022 21:39	-0.07	6/21/2022 20:29	2.06	6/21/2022 20:52	6.11	6/21/2022 22:15	-0.32	6/20/2022 21:03	11.22
6/20/2022 21:40	-0.06	6/21/2022 20:30	2.06	6/21/2022 20:53	6.09	6/21/2022 22:16	-0.31	6/20/2022 21:04	11.23
6/20/2022 21:41	-0.06	6/21/2022 20:31	2.05	6/21/2022 20:54	6.14	6/21/2022 22:17	-0.30	6/20/2022 21:05	11.23
6/20/2022 21:42	-0.06	6/21/2022 20:32	2.05	6/21/2022 20:55	6.12	6/21/2022 22:18	-0.28	6/20/2022 21:06	11.26
6/20/2022 21:43	-0.06	6/21/2022 20:33	2.06	6/21/2022 20:56	6.11	6/21/2022 22:19	-0.29	6/20/2022 21:07	11.30
6/20/2022 21:44	-0.06	6/21/2022 20:34	2.06	6/21/2022 20:57	6.14	6/21/2022 22:20	-0.34	6/20/2022 21:08	11.25
6/20/2022 21:45	-0.06	6/21/2022 20:35	2.06	6/21/2022 20:58	6.09	6/21/2022 22:21	-0.28	6/20/2022 21:09	11.23
6/20/2022 21:46	-0.07	6/21/2022 20:36	2.06	6/21/2022 20:59	6.16	6/21/2022 22:22	-0.33	6/20/2022 21:10	11.26
6/20/2022 21:47	-0.06	6/21/2022 20:37	2.06	6/21/2022 21:00	6.14	6/21/2022 22:23	-0.32	6/20/2022 21:11	11.27
6/20/2022 21:48	-0.06	6/21/2022 20:38	2.06	6/21/2022 21:01	6.10	6/21/2022 22:24	-0.32	6/20/2022 21:12	11.30
6/20/2022 21:49	-0.06	6/21/2022 20:39	2.06	6/21/2022 21:02	6.11	6/21/2022 22:25	-0.30	6/20/2022 21:13	11.30
6/20/2022 21:50	-0.06	6/21/2022 20:40	2.06	6/21/2022 21:03	6.17	6/21/2022 22:26	-0.31	6/20/2022 21:14	11.23
6/20/2022 21:51	-0.07	6/21/2022 20:41	2.06	6/21/2022 21:04	6.17	6/21/2022 22:27	-0.33	6/20/2022 21:15	11.24
6/20/2022 21:52	-0.07	6/21/2022 20:42	2.06	6/21/2022 21:05	6.14	6/21/2022 22:28	-0.34	6/20/2022 21:16	11.30
6/20/2022 21:53	-0.06	6/21/2022 20:43	2.06	6/21/2022 21:06	6.08	6/21/2022 22:29	-0.32	6/20/2022 21:17	11.28
6/20/2022 21:54	-0.06	6/21/2022 20:44	2.06	6/21/2022 21:07	6.10	6/21/2022 22:30	-0.32	6/20/2022 21:18	11.24
6/20/2022 21:55	-0.06	6/21/2022 20:45	2.06	6/21/2022 21:08	6.10	6/21/2022 22:31	-0.32	6/20/2022 21:19	11.30
6/20/2022 21:56	-0.06	6/21/2022 20:46	2.06	6/21/2022 21:09	6.11	6/21/2022 22:32	-0.30	6/20/2022 21:20	11.26
6/20/2022 21:57	-0.07	6/21/2022 20:47	2.06	6/21/2022 21:10	6.14	6/21/2022 22:33	-0.33	6/20/2022 21:21	11.24
6/20/2022 21:58	-0.07	6/21/2022 20:48	2.07	6/21/2022 21:11	6.13	6/21/2022 22:34	-0.27	6/20/2022 21:22	11.25
6/20/2022 21:59	-0.07	6/21/2022 20:49	2.06	6/21/2022 21:12	6.12	6/21/2022 22:35	-0.33	6/20/2022 21:23	11.29
6/20/2022 22:00	-0.06	6/21/2022 20:50	2.06	6/21/2022 21:13	6.11	6/21/2022 22:36	-0.30	6/20/2022 21:24	11.27
6/20/2022 22:01	-0.06	6/21/2022 20:51	2.06	6/21/2022 21:14	6.12	6/21/2022 22:37	-0.32	6/20/2022 21:25	11.26
6/20/2022 22:02	-0.07	6/21/2022 20:52	2.06	6/21/2022 21:15	6.09	6/21/2022 22:38	-0.30	6/20/2022 21:26	11.23
6/20/2022 22:03	-0.07	6/21/2022 20:53	2.06	6/21/2022 21:16	6.10	6/21/2022 22:39	-0.35	6/20/2022 21:27	11.26
6/20/2022 22:04	-0.06	6/21/2022 20:54	2.06	6/21/2022 21:17	6.12	6/21/2022 22:40	-0.31	6/20/2022 21:28	11.27
6/20/2022 22:05	-0.07	6/21/2022 20:55	2.06	6/21/2022 21:18	6.17	6/21/2022 22:41	-0.31	6/20/2022 21:29	11.26
6/20/2022 22:06	-0.06	6/21/2022 20:56	2.06	6/21/2022 21:19	6.16	6/21/2022 22:42	-0.32	6/20/2022 21:30	11.26
6/20/2022 22:07	-0.06	6/21/2022 20:57	2.07	6/21/2022 21:20	6.14	6/21/2022 22:43	-0.33	6/20/2022 21:31	11.26
6/20/2022 22:08	-0.07	6/21/2022 20:58	2.06	6/21/2022 21:21	6.15	6/21/2022 22:44	-0.31	6/20/2022 21:32	11.24
6/20/2022 22:09	-0.07	6/21/2022 20:59	2.06	6/21/2022 21:22	6.12	6/21/2022 22:45	-0.32	6/20/2022 21:33	11.27
6/20/2022 22:10	-0.07	6/21/2022 21:00	2.07	6/21/2022 21:23	6.15	6/21/2022 22:46	-0.32	6/20/2022 21:34	11.27
6/20/2022 22:11	-0.07	6/21/2022 21:01	2.06	6/21/2022 21:24	6.12	6/21/2022 22:47	-0.32	6/20/2022 21:35	11.31
6/20/2022 22:12	-0.07	6/21/2022 21:02	2.07	6/21/2022 21:25	6.13	6/21/2022 22:48	-0.29	6/20/2022 21:36	11.24
6/20/2022 22:13	-0.07	6/21/2022 21:03	2.07	6/21/2022 21:26	6.13	6/21/2022 22:49	-0.32	6/20/2022 21:37	11.28
6/20/2022 22:14	-0.07	6/21/2022 21:04	2.06	6/21/2022 21:27	6.12	6/21/2022 22:50	-0.32	6/20/2022 21:38	11.27
6/20/2022 22:15	-0.07	6/21/2022 21:05	2.07	6/21/2022 21:28	6.15	6/21/2022 22:51	-0.28	6/20/2022 21:39	11.24
6/20/2022 22:16	-0.07	6/21/2022 21:06	2.07	6/21/2022 21:29	6.09	6/21/2022 22:52	-0.32	6/20/2022 21:40	11.23
6/20/2022 22:17	-0.07	6/21/2022 21:07	2.07	6/21/2022 21:30	6.13	6/21/2022 22:53	-0.34	6/20/2022 21:41	11.25
6/20/2022 22:18	-0.06	6/21/2022 21:08	2.07	6/21/2022 21:31	6.12	6/21/2022 22:54	-0.32	6/20/2022 21:42	11.30
6/20/2022 22:19	-0.07	6/21/2022 21:09	2.07	6/21/2022 21:32	6.12	6/21/2022 22:55	-0.32	6/20/2022 21:43	11.27
6/20/2022 22:20	-0.07	6/21/2022 21:10	2.07	6/21/2022 21:33	6.10	6/21/2022 22:56	-0.32	6/20/2022 21:44	11.26
6/20/2022 22:21	-0.06	6/21/2022 21:11	2.07	6/21/2022 21:34	6.17	6/21/2022 22:57	-0.29	6/20/2022 21:45	11.26
6/20/2022 22:22	-0.07	6/21/2022 21:12	2.07	6/21/2022 21:35	6.11	6/21/2022 22:58	-0.32	6/20/2022 21:46	11.30
6/20/2022 22:23	-0.07	6/21/2022 21:13	2.07	6/21/2022 21:36	6.13	6/21/2022 22:59	-0.24	6/20/2022 21:47	11.29
6/20/2022 22:24	-0.07	6/21/2022 21:14	2.07	6/21/2022 21:37	6.14	6/21/2022 23:00	-0.27	6/20/2022 21:48	11.28
6/20/2022 22:25	-0.06	6/21/2022 21:15	2.07	6/21/2022 21:38	6.12	6/21/2022 23:01	-0.30	6/20/2022 21:49	11.25
6/20/2022 22:26	-0.07	6/21/2022 21:16	2.07	6/21/2022 21:39	6.13	6/21/2022 23:02	-0.35	6/20/2022 21:50	11.27
6/20/2022 22:27	-0.06	6/21/2022 21:17	2.07	6/21/2022 21:40	6.15	6/21/2022 23:03	-0.33	6/20/2022 21:51	11.28
6/20/2022 22:28	-0.07	6/21/2022 21:18	2.07	6/21/2022 21:41	6.15	6/21/2022 23:04	-0.30	6/20/2022 21:52	11.27
6/20/2022 22:29	-0.07	6/21/2022 21:19	2.07	6/21/2022 21:42	6.15	6/21/2022 23:05	-0.32	6/20/2022 21:53	11.24
6/20/2022 22:30	-0.06	6/21/2022 21:20	2.07	6/21/2022 21:43	6.17	6/21/2022 23:06	-0.32	6/20/2022 21:54	11.26
6/20/2022 22:31	-0.07	6/21/2022 21:21	2.07	6/21/2022 21:44	6.11	6/21/2022 23:07	-0.29	6/20/2022 21:55	11.25
6/20/2022 22:32	-0.07	6/21/2022 21:22	2.07	6/21/2022 21:45	6.14	6/21/2022 23:08	-0.34	6/20/2022 21:56	11.26
6/20/2022 22:33	-0.07	6/21/2022 21:23	2.07	6/21/2022 21:46	6.17	6/21/2022 23:09	-0.34	6/20/2022 21:57	11.26
6/20/2022 22:34	-0.07	6/21/2022 21:24	2.08	6/21/2022 21:47	6.14	6/21/2022 23:10	-0.32	6/20/2022 21:58	11.27
6/20/2022 22:35	-0.07	6/21/2022 21:25	2.08	6/21/2022 21:48	6.15	6/21/2022 23:11	-0.32	6/20/2022 21:59	11.28
6/20/2022 22:36	-0.07	6/21/2022 21:26	2.08	6/21/2022 21:49	6.12	6/21/2022 23:12	-0.29	6/20/2022 22:00	11.23
6/20/2022 22:37	-0.06	6/21/2022 21:27	2.08	6/21/2022 21:50	6.16	6/21/2022 23:13	-0.33	6/20/2022 22:01	11.26
6/20/2022 22:38	-0.07	6/21/2022 21:28	2.08	6/21/2022 21:51	6.14	6/21/2022 23:14	-0.35	6/20/2022 22:02	11.30
6/20/2022 22:39	-0.06	6/21/2022 21:29	2.08	6/21/2022 21:52	6.15	6/21/2022 23:15	-0.30	6/20/2022 22:03	11.25
6/20/2022 22:40	-0.07	6/21/2022 21:30	2.08	6/21/2022 21:53	6.16	6/21/2022 23:16	-0.31	6/20/2022 22:04	11.29
6/20/2022 22:41	-0.06	6/21/2022 21:31	2.08	6/21/2022 21:54	6.16	6/21/2022 23:17	-0.33	6/20/2022 22:05	11.22
6/20/2022 22:42	-0.07	6/21/2022 21:32	2.08	6/21/2022 21:55	6.14	6/21/2022 23:18	-0.30	6/20/2022 22:06	11.30
6/20/2022 22:43	-0.07	6/21/2022 21:33	2.08	6/21/2022 21:56	6.14	6/21/2022 23:19	-0.35	6/20/2022 22:07	11.26
6/20/2022 22:44	-0.06	6/21/2022 21:34	2.08	6/21/2022 21:57	6.17	6/21/2022 23:20	-0.29	6/20/2022 22:08	11.25
6/20/2022 22:45	-0.07	6/21/2022 21:35	2.08	6/21/2022 21:58	6.19	6/21/2022 23:21	-0.32	6/20/2022 22:09	11.23
6/20/2022 22:46	-0.06	6/21/2022 21:36	2.08	6/21/2022 21:59	6.16	6/21/2022 23:22	-0.28	6/20/2022 22:10	11.25
6/20/2022 22:47	-0.06	6/21/2022 21:37	2.08	6/21/2022 22:00	6.14	6/21/2022 23:23	-0.29	6/20/2022 22:11	11.25
6/20/2022 22:48	-0.07	6/21/2022 21:38	2.08	6/21/2022 22:01	6.19	6/21/2022 23:24	-0.32	6/20/2022 22:12	11.28

6/20/2022 22:49	-0.06	6/21/2022 21:39	2.08	6/21/2022 22:02	6.19	6/21/2022 23:25	-0.32	6/20/2022 22:13	11.24
6/20/2022 22:50	-0.06	6/21/2022 21:40	2.08	6/21/2022 22:03	6.15	6/21/2022 23:26	-0.31	6/20/2022 22:14	11.27
6/20/2022 22:51	-0.06	6/21/2022 21:41	2.08	6/21/2022 22:04	6.17	6/21/2022 23:27	-0.32	6/20/2022 22:15	11.27
6/20/2022 22:52	-0.07	6/21/2022 21:42	2.08	6/21/2022 22:05	6.17	6/21/2022 23:28	-0.33	6/20/2022 22:16	11.25
6/20/2022 22:53	-0.07	6/21/2022 21:43	2.08	6/21/2022 22:06	6.15	6/21/2022 23:29	-0.32	6/20/2022 22:17	11.22
6/20/2022 22:54	-0.07	6/21/2022 21:44	2.08	6/21/2022 22:07	6.20	6/21/2022 23:30	-0.33	6/20/2022 22:18	11.30
6/20/2022 22:55	-0.06	6/21/2022 21:45	2.08	6/21/2022 22:08	6.20	6/21/2022 23:31	-0.32	6/20/2022 22:19	11.27
6/20/2022 22:56	-0.07	6/21/2022 21:46	2.09	6/21/2022 22:09	6.17	6/21/2022 23:32	-0.35	6/20/2022 22:20	11.25
6/20/2022 22:57	-0.06	6/21/2022 21:47	2.09	6/21/2022 22:10	6.15	6/21/2022 23:33	-0.36	6/20/2022 22:21	11.26
6/20/2022 22:58	-0.07	6/21/2022 21:48	2.08	6/21/2022 22:11	6.15	6/21/2022 23:34	-0.31	6/20/2022 22:22	11.26
6/20/2022 22:59	-0.06	6/21/2022 21:49	2.09	6/21/2022 22:12	6.20	6/21/2022 23:35	-0.32	6/20/2022 22:23	11.29
6/20/2022 23:00	-0.07	6/21/2022 21:50	2.08	6/21/2022 22:13	6.17	6/21/2022 23:36	-0.31	6/20/2022 22:24	11.29
6/20/2022 23:01	-0.07	6/21/2022 21:51	2.09	6/21/2022 22:14	6.16	6/21/2022 23:37	-0.31	6/20/2022 22:25	11.27
6/20/2022 23:02	-0.06	6/21/2022 21:52	2.08	6/21/2022 22:15	6.20	6/21/2022 23:38	-0.32	6/20/2022 22:26	11.29
6/20/2022 23:03	-0.06	6/21/2022 21:53	2.09	6/21/2022 22:16	6.17	6/21/2022 23:39	-0.31	6/20/2022 22:27	11.30
6/20/2022 23:04	-0.06	6/21/2022 21:54	2.09	6/21/2022 22:17	6.18	6/21/2022 23:40	-0.32	6/20/2022 22:28	11.29
6/20/2022 23:05	-0.06	6/21/2022 21:55	2.08	6/21/2022 22:18	6.13	6/21/2022 23:41	-0.31	6/20/2022 22:29	11.27
6/20/2022 23:06	-0.07	6/21/2022 21:56	2.09	6/21/2022 22:19	6.18	6/21/2022 23:42	-0.31	6/20/2022 22:30	11.29
6/20/2022 23:07	-0.06	6/21/2022 21:57	2.09	6/21/2022 22:20	6.19	6/21/2022 23:43	-0.36	6/20/2022 22:31	11.28
6/20/2022 23:08	-0.07	6/21/2022 21:58	2.09	6/21/2022 22:21	6.18	6/21/2022 23:44	-0.34	6/20/2022 22:32	11.29
6/20/2022 23:09	-0.07	6/21/2022 21:59	2.09	6/21/2022 22:22	6.18	6/21/2022 23:45	-0.30	6/20/2022 22:33	11.30
6/20/2022 23:10	-0.07	6/21/2022 22:00	2.09	6/21/2022 22:23	6.20	6/21/2022 23:46	-0.29	6/20/2022 22:34	11.27
6/20/2022 23:11	-0.07	6/21/2022 22:01	2.09	6/21/2022 22:24	6.17	6/21/2022 23:47	-0.33	6/20/2022 22:35	11.27
6/20/2022 23:12	-0.07	6/21/2022 22:02	2.09	6/21/2022 22:25	6.19	6/21/2022 23:48	-0.32	6/20/2022 22:36	11.26
6/20/2022 23:13	-0.06	6/21/2022 22:03	2.09	6/21/2022 22:26	6.22	6/21/2022 23:49	-0.32	6/20/2022 22:37	11.26
6/20/2022 23:14	-0.07	6/21/2022 22:04	2.09	6/21/2022 22:27	6.20	6/21/2022 23:50	-0.33	6/20/2022 22:38	11.28
6/20/2022 23:15	-0.06	6/21/2022 22:05	2.09	6/21/2022 22:28	6.17	6/21/2022 23:51	-0.30	6/20/2022 22:39	11.27
6/20/2022 23:16	-0.06	6/21/2022 22:06	2.09	6/21/2022 22:29	6.21	6/21/2022 23:52	-0.34	6/20/2022 22:40	11.28
6/20/2022 23:17	-0.06	6/21/2022 22:07	2.09	6/21/2022 22:30	6.17	6/21/2022 23:53	-0.37	6/20/2022 22:41	11.26
6/20/2022 23:18	-0.06	6/21/2022 22:08	2.09	6/21/2022 22:31	6.21	6/21/2022 23:54	-0.31	6/20/2022 22:42	11.26
6/20/2022 23:19	-0.07	6/21/2022 22:09	2.09	6/21/2022 22:32	6.18	6/21/2022 23:55	-0.29	6/20/2022 22:43	11.30
6/20/2022 23:20	-0.07	6/21/2022 22:10	2.09	6/21/2022 22:33	6.16	6/21/2022 23:56	-0.32	6/20/2022 22:44	11.25
6/20/2022 23:21	-0.06	6/21/2022 22:11	2.09	6/21/2022 22:34	6.15	6/21/2022 23:57	-0.33	6/20/2022 22:45	11.24
6/20/2022 23:22	-0.06	6/21/2022 22:12	2.09	6/21/2022 22:35	6.22	6/21/2022 23:58	-0.35	6/20/2022 22:46	11.21
6/20/2022 23:23	-0.07	6/21/2022 22:13	2.09	6/21/2022 22:36	6.17	6/21/2022 23:59	-0.27	6/20/2022 22:47	11.26
6/20/2022 23:24	-0.07	6/21/2022 22:14	2.09	6/21/2022 22:37	6.20	6/22/2022 0:00	-0.35	6/20/2022 22:48	11.25
6/20/2022 23:25	-0.07	6/21/2022 22:15	2.09	6/21/2022 22:38	6.19	6/22/2022 0:01	-0.29	6/20/2022 22:49	11.24
6/20/2022 23:26	-0.07	6/21/2022 22:16	2.09	6/21/2022 22:39	6.15	6/22/2022 0:02	-0.34	6/20/2022 22:50	11.26
6/20/2022 23:27	-0.07	6/21/2022 22:17	2.09	6/21/2022 22:40	6.15	6/22/2022 0:03	-0.34	6/20/2022 22:51	11.23
6/20/2022 23:28	-0.07	6/21/2022 22:18	2.10	6/21/2022 22:41	6.19	6/22/2022 0:04	-0.31	6/20/2022 22:52	11.28
6/20/2022 23:29	-0.07	6/21/2022 22:19	2.09	6/21/2022 22:42	6.20	6/22/2022 0:05	-0.35	6/20/2022 22:53	11.23
6/20/2022 23:30	-0.07	6/21/2022 22:20	2.09	6/21/2022 22:43	6.19	6/22/2022 0:06	-0.34	6/20/2022 22:54	11.25
6/20/2022 23:31	-0.07	6/21/2022 22:21	2.09	6/21/2022 22:44	6.20	6/22/2022 0:07	-0.28	6/20/2022 22:55	11.28
6/20/2022 23:32	-0.06	6/21/2022 22:22	2.10	6/21/2022 22:45	6.18	6/22/2022 0:08	-0.32	6/20/2022 22:56	11.22
6/20/2022 23:33	-0.07	6/21/2022 22:23	2.10	6/21/2022 22:46	6.20	6/22/2022 0:09	-0.28	6/20/2022 22:57	11.28
6/20/2022 23:34	-0.06	6/21/2022 22:24	2.09	6/21/2022 22:47	6.16	6/22/2022 0:10	-0.32	6/20/2022 22:58	11.23
6/20/2022 23:35	-0.06	6/21/2022 22:25	2.09	6/21/2022 22:48	6.20	6/22/2022 0:11	-0.32	6/20/2022 22:59	11.26
6/20/2022 23:36	-0.07	6/21/2022 22:26	2.09	6/21/2022 22:49	6.22	6/22/2022 0:12	-0.32	6/20/2022 23:00	11.27
6/20/2022 23:37	-0.06	6/21/2022 22:27	2.10	6/21/2022 22:50	6.21	6/22/2022 0:13	-0.32	6/20/2022 23:01	11.27
6/20/2022 23:38	-0.07	6/21/2022 22:28	2.10	6/21/2022 22:51	6.18	6/22/2022 0:14	-0.30	6/20/2022 23:02	11.27
6/20/2022 23:39	-0.06	6/21/2022 22:29	2.10	6/21/2022 22:52	6.18	6/22/2022 0:15	-0.29	6/20/2022 23:03	11.29
6/20/2022 23:40	-0.06	6/21/2022 22:30	2.10	6/21/2022 22:53	6.21	6/22/2022 0:16	-0.31	6/20/2022 23:04	11.25
6/20/2022 23:41	-0.06	6/21/2022 22:31	2.10	6/21/2022 22:54	6.17	6/22/2022 0:17	-0.33	6/20/2022 23:05	11.24
6/20/2022 23:42	-0.06	6/21/2022 22:32	2.10	6/21/2022 22:55	6.22	6/22/2022 0:18	-0.31	6/20/2022 23:06	11.28
6/20/2022 23:43	-0.07	6/21/2022 22:33	2.09	6/21/2022 22:56	6.22	6/22/2022 0:19	-0.31	6/20/2022 23:07	11.26
6/20/2022 23:44	-0.07	6/21/2022 22:34	2.10	6/21/2022 22:57	6.19	6/22/2022 0:20	-0.34	6/20/2022 23:08	11.27
6/20/2022 23:45	-0.06	6/21/2022 22:35	2.10	6/21/2022 22:58	6.20	6/22/2022 0:21	-0.30	6/20/2022 23:09	11.27
6/20/2022 23:46	-0.07	6/21/2022 22:36	2.10	6/21/2022 22:59	6.22	6/22/2022 0:22	-0.33	6/20/2022 23:10	11.27
6/20/2022 23:47	-0.07	6/21/2022 22:37	2.10	6/21/2022 23:00	6.24	6/22/2022 0:23	-0.31	6/20/2022 23:11	11.26
6/20/2022 23:48	-0.07	6/21/2022 22:38	2.10	6/21/2022 23:01	6.18	6/22/2022 0:24	-0.31	6/20/2022 23:12	11.23
6/20/2022 23:49	-0.06	6/21/2022 22:39	2.10	6/21/2022 23:02	6.22	6/22/2022 0:25	-0.34	6/20/2022 23:13	11.25
6/20/2022 23:50	-0.06	6/21/2022 22:40	2.10	6/21/2022 23:03	6.23	6/22/2022 0:26	-0.33	6/20/2022 23:14	11.26
6/20/2022 23:51	-0.07	6/21/2022 22:41	2.10	6/21/2022 23:04	6.20	6/22/2022 0:27	-0.32	6/20/2022 23:15	11.25
6/20/2022 23:52	-0.07	6/21/2022 22:42	2.10	6/21/2022 23:05	6.22	6/22/2022 0:28	-0.34	6/20/2022 23:16	11.27
6/20/2022 23:53	-0.06	6/21/2022 22:43	2.10	6/21/2022 23:06	6.18	6/22/2022 0:29	-0.32	6/20/2022 23:17	11.31
6/20/2022 23:54	-0.07	6/21/2022 22:44	2.10	6/21/2022 23:07	6.21	6/22/2022 0:30	-0.35	6/20/2022 23:18	11.25
6/20/2022 23:55	-0.06	6/21/2022 22:45	2.10	6/21/2022 23:08	6.20	6/22/2022 0:31	-0.31	6/20/2022 23:19	11.26
6/20/2022 23:56	-0.06	6/21/2022 22:46	2.10	6/21/2022 23:09	6.22	6/22/2022 0:32	-0.33	6/20/2022 23:20	11.25
6/20/2022 23:57	-0.06	6/21/2022 22:47	2.10	6/21/2022 23:10	6.21	6/22/2022 0:33	-0.29	6/20/2022 23:21	11.24
6/20/2022 23:58	-0.07	6/21/2022 22:48	2.11	6/21/2022 23:11	6.25	6/22/2022 0:34	-0.33	6/20/2022 23:22	11.28
6/20/2022 23:59	-0.06	6/21/2022 22:49	2.10	6/21/2022 23:12	6.19	6/22/2022 0:35	-0.34	6/20/2022 23:23	11.28
6/21/2022 0:00	-0.06	6/21/2022 22:50	2.10	6/21/2022 23:13	6.20	6/22/2022 0:36	-0.30	6/20/2022 23:24	11.21
6/21/2022 0:01	-0.07	6/21/2022 22:51	2.10	6/21/2022 23:14	6.21	6/22/2022 0:37	-0.33	6/20/2022 23:25	11.23
6/21/2022 0:02	-0.06	6/21/2022 22:52	2.11	6/21/2022 23:15	6.20	6/22/2022 0:38	-0.31	6/20/2022 23:26	11.26
6/21/2022 0:03	-0.07	6/21/2022 22:53	2.11	6/21/2022 23:16	6.20	6/22/2022 0:39	-0.29	6/20/2022 23:27	11.27
6/21/2022 0:04	-0.06	6/21/2022 22:54	2.11	6/21/2022 23:17	6.20	6/22/2022 0:40	-0.31	6/20/2022 23:28	11.25
6/21/2022 0:05	-0.06	6/21/2022 22:55	2.11	6/21/2022 23:18	6.21	6/22/2022 0:41	-0.29	6/20/2022 23:29	11.26
6/21/2022 0:06	-0.07	6/21/2022 22:56	2.10	6/21/2022 23:19	6.25	6/22/2022 0:42	-0.30	6/20/2022 23:30	11.29
6/21/2022 0:07	-0.06	6/21/2022 22:57	2.11	6/21/2022 23:20	6.24	6/22/2022 0:43	-0.33	6/20/2022 23:31	11.30
6/21/2022 0:08	-0.06	6/21/2022 22:58	2.11	6/21/2022 23:21	6.25	6/22/2022 0:44	-0.37	6/20/2022 23:32	11.25
6/21/2022 0:09	-0.06	6/21/2022 22:59	2.11	6/21/2022 23:22	6.19	6/22/2022 0:45	-0.31	6/20/2022 23:33	11.25
6/21/2022 0:10	-0.06	6/21/2022 23:00	2.11	6/21/2022 23:23	6.22	6/22/2022 0:46	-0.32	6/20/2022 23:34	11.27
6/21/2022 0:11	-0.06	6/21/2022 23:01	2.11	6/21/2022 23:24	6.22	6/22/2022 0:47	-0.32	6/20/2022 23:35	11.27
6/21/2022 0:12	-0.07	6/21/2022 23:02	2.11	6/21/2022 23:25	6.21	6/22/2022 0:48	-0.30	6/20/2022 23:36	11.26
6/21/2022 0:13	-0.07	6/21/2022 23:03	2.11	6/21/2022 23:26	6.27	6/22/2022 0:49	-0.33	6/20/2022 23:37	11.29
6/21/2022 0:14	-0.07	6/21/2022 23:04	2.11	6/21/2022 23:27	6.24	6/22/2022 0:50	-0.30	6/20/2022 23:38	11.23
6/21/2022 0:15	-0.06	6/21/2022 23:05	2.11	6/21/2022 23:28	6.20	6/22/2022 0:51	-0.34	6/20/2022 23:39	11.23
6/21/2022 0:16	-0.06	6/21/2022 23:06	2.11	6/21/2022 23:29	6.23	6/22/2022 0:52	-0.32	6/20/2022 23:40	11.30

6/21/2022 0:17	-0.06	6/21/2022 23:07	2.11	6/21/2022 23:30	6.21	6/22/2022 0:53	-0.32	6/20/2022 23:41	11.34
6/21/2022 0:18	-0.07	6/21/2022 23:08	2.11	6/21/2022 23:31	6.22	6/22/2022 0:54	-0.35	6/20/2022 23:42	11.24
6/21/2022 0:19	-0.06	6/21/2022 23:09	2.11	6/21/2022 23:32	6.24	6/22/2022 0:55	-0.31	6/20/2022 23:43	11.32
6/21/2022 0:20	-0.06	6/21/2022 23:10	2.11	6/21/2022 23:33	6.24	6/22/2022 0:56	-0.35	6/20/2022 23:44	11.27
6/21/2022 0:21	-0.06	6/21/2022 23:11	2.11	6/21/2022 23:34	6.21	6/22/2022 0:57	-0.30	6/20/2022 23:45	11.24
6/21/2022 0:22	-0.07	6/21/2022 23:12	2.11	6/21/2022 23:35	6.23	6/22/2022 0:58	-0.35	6/20/2022 23:46	11.23
6/21/2022 0:23	-0.06	6/21/2022 23:13	2.11	6/21/2022 23:36	6.24	6/22/2022 0:59	-0.32	6/20/2022 23:47	11.25
6/21/2022 0:24	-0.07	6/21/2022 23:14	2.11	6/21/2022 23:37	6.25	6/22/2022 1:00	-0.31	6/20/2022 23:48	11.26
6/21/2022 0:25	-0.07	6/21/2022 23:15	2.11	6/21/2022 23:38	6.26	6/22/2022 1:01	-0.30	6/20/2022 23:49	11.24
6/21/2022 0:26	-0.07	6/21/2022 23:16	2.11	6/21/2022 23:39	6.22	6/22/2022 1:02	-0.32	6/20/2022 23:50	11.27
6/21/2022 0:27	-0.06	6/21/2022 23:17	2.11	6/21/2022 23:40	6.23	6/22/2022 1:03	-0.34	6/20/2022 23:51	11.25
6/21/2022 0:28	-0.06	6/21/2022 23:18	2.11	6/21/2022 23:41	6.24	6/22/2022 1:04	-0.28	6/20/2022 23:52	11.26
6/21/2022 0:29	-0.06	6/21/2022 23:19	2.11	6/21/2022 23:42	6.26	6/22/2022 1:05	-0.29	6/20/2022 23:53	11.25
6/21/2022 0:30	-0.06	6/21/2022 23:20	2.11	6/21/2022 23:43	6.26	6/22/2022 1:06	-0.34	6/20/2022 23:54	11.34
6/21/2022 0:31	-0.06	6/21/2022 23:21	2.11	6/21/2022 23:44	6.27	6/22/2022 1:07	-0.31	6/20/2022 23:55	11.28
6/21/2022 0:32	-0.06	6/21/2022 23:22	2.11	6/21/2022 23:45	6.25	6/22/2022 1:08	-0.32	6/20/2022 23:56	11.27
6/21/2022 0:33	-0.07	6/21/2022 23:23	2.12	6/21/2022 23:46	6.24	6/22/2022 1:09	-0.33	6/20/2022 23:57	11.32
6/21/2022 0:34	-0.07	6/21/2022 23:24	2.11	6/21/2022 23:47	6.26	6/22/2022 1:10	-0.34	6/20/2022 23:58	11.27
6/21/2022 0:35	-0.06	6/21/2022 23:25	2.12	6/21/2022 23:48	6.26	6/22/2022 1:11	-0.30	6/20/2022 23:59	11.26
6/21/2022 0:36	-0.06	6/21/2022 23:26	2.12	6/21/2022 23:49	6.22	6/22/2022 1:12	-0.33	6/21/2022 0:00	11.29
6/21/2022 0:37	-0.06	6/21/2022 23:27	2.12	6/21/2022 23:50	6.23	6/22/2022 1:13	-0.33	6/21/2022 0:01	11.25
6/21/2022 0:38	-0.06	6/21/2022 23:28	2.12	6/21/2022 23:51	6.30	6/22/2022 1:14	-0.35	6/21/2022 0:02	11.29
6/21/2022 0:39	-0.07	6/21/2022 23:29	2.12	6/21/2022 23:52	6.27	6/22/2022 1:15	-0.33	6/21/2022 0:03	11.30
6/21/2022 0:40	-0.07	6/21/2022 23:30	2.12	6/21/2022 23:53	6.24	6/22/2022 1:16	-0.33	6/21/2022 0:04	11.26
6/21/2022 0:41	-0.06	6/21/2022 23:31	2.12	6/21/2022 23:54	6.27	6/22/2022 1:17	-0.33	6/21/2022 0:05	11.27
6/21/2022 0:42	-0.06	6/21/2022 23:32	2.12	6/21/2022 23:55	6.26	6/22/2022 1:18	-0.30	6/21/2022 0:06	11.30
6/21/2022 0:43	-0.07	6/21/2022 23:33	2.12	6/21/2022 23:56	6.26	6/22/2022 1:19	-0.37	6/21/2022 0:07	11.26
6/21/2022 0:44	-0.06	6/21/2022 23:34	2.12	6/21/2022 23:57	6.22	6/22/2022 1:20	-0.33	6/21/2022 0:08	11.30
6/21/2022 0:45	-0.06	6/21/2022 23:35	2.12	6/21/2022 23:58	6.22	6/22/2022 1:21	-0.32	6/21/2022 0:09	11.26
6/21/2022 0:46	-0.06	6/21/2022 23:36	2.12	6/21/2022 23:59	6.25	6/22/2022 1:22	-0.29	6/21/2022 0:10	11.24
6/21/2022 0:47	-0.06	6/21/2022 23:37	2.12	6/22/2022 0:00	6.28	6/22/2022 1:23	-0.33	6/21/2022 0:11	11.32
6/21/2022 0:48	-0.07	6/21/2022 23:38	2.12	6/22/2022 0:01	6.21	6/22/2022 1:24	-0.34	6/21/2022 0:12	11.24
6/21/2022 0:49	-0.07	6/21/2022 23:39	2.12	6/22/2022 0:02	6.23	6/22/2022 1:25	-0.33	6/21/2022 0:13	11.22
6/21/2022 0:50	-0.07	6/21/2022 23:40	2.12	6/22/2022 0:03	6.23	6/22/2022 1:26	-0.31	6/21/2022 0:14	11.25
6/21/2022 0:51	-0.06	6/21/2022 23:41	2.12	6/22/2022 0:04	6.25	6/22/2022 1:27	-0.31	6/21/2022 0:15	11.29
6/21/2022 0:52	-0.07	6/21/2022 23:42	2.13	6/22/2022 0:05	6.26	6/22/2022 1:28	-0.31	6/21/2022 0:16	11.30
6/21/2022 0:53	-0.06	6/21/2022 23:43	2.12	6/22/2022 0:06	6.25	6/22/2022 1:29	-0.37	6/21/2022 0:17	11.28
6/21/2022 0:54	-0.06	6/21/2022 23:44	2.13	6/22/2022 0:07	6.25	6/22/2022 1:30	-0.28	6/21/2022 0:18	11.26
6/21/2022 0:55	-0.06	6/21/2022 23:45	2.13	6/22/2022 0:08	6.28	6/22/2022 1:31	-0.33	6/21/2022 0:19	11.29
6/21/2022 0:56	-0.06	6/21/2022 23:46	2.13	6/22/2022 0:09	6.23	6/22/2022 1:32	-0.34	6/21/2022 0:20	11.24
6/21/2022 0:57	-0.06	6/21/2022 23:47	2.12	6/22/2022 0:10	6.25	6/22/2022 1:33	-0.30	6/21/2022 0:21	11.21
6/21/2022 0:58	-0.06	6/21/2022 23:48	2.13	6/22/2022 0:11	6.24	6/22/2022 1:34	-0.31	6/21/2022 0:22	11.29
6/21/2022 0:59	-0.06	6/21/2022 23:49	2.13	6/22/2022 0:12	6.28	6/22/2022 1:35	-0.34	6/21/2022 0:23	11.29
6/21/2022 1:00	-0.06	6/21/2022 23:50	2.12	6/22/2022 0:13	6.27	6/22/2022 1:36	-0.30	6/21/2022 0:24	11.24
6/21/2022 1:01	-0.06	6/21/2022 23:51	2.13	6/22/2022 0:14	6.24	6/22/2022 1:37	-0.30	6/21/2022 0:25	11.31
6/21/2022 1:02	-0.06	6/21/2022 23:52	2.13	6/22/2022 0:15	6.27	6/22/2022 1:38	-0.32	6/21/2022 0:26	11.30
6/21/2022 1:03	-0.07	6/21/2022 23:53	2.13	6/22/2022 0:16	6.23	6/22/2022 1:39	-0.30	6/21/2022 0:27	11.27
6/21/2022 1:04	-0.07	6/21/2022 23:54	2.13	6/22/2022 0:17	6.22	6/22/2022 1:40	-0.31	6/21/2022 0:28	11.27
6/21/2022 1:05	-0.06	6/21/2022 23:55	2.13	6/22/2022 0:18	6.25	6/22/2022 1:41	-0.29	6/21/2022 0:29	11.25
6/21/2022 1:06	-0.07	6/21/2022 23:56	2.13	6/22/2022 0:19	6.25	6/22/2022 1:42	-0.33	6/21/2022 0:30	11.26
6/21/2022 1:07	-0.06	6/21/2022 23:57	2.13	6/22/2022 0:20	6.27	6/22/2022 1:43	-0.31	6/21/2022 0:31	11.24
6/21/2022 1:08	-0.06	6/21/2022 23:58	2.13	6/22/2022 0:21	6.26	6/22/2022 1:44	-0.31	6/21/2022 0:32	11.31
6/21/2022 1:09	-0.06	6/21/2022 23:59	2.13	6/22/2022 0:22	6.28	6/22/2022 1:45	-0.32	6/21/2022 0:33	11.28
6/21/2022 1:10	-0.07	6/22/2022 0:00	2.13	6/22/2022 0:23	6.29	6/22/2022 1:46	-0.33	6/21/2022 0:34	11.27
6/21/2022 1:11	-0.06	6/22/2022 0:01	2.13	6/22/2022 0:24	6.27	6/22/2022 1:47	-0.35	6/21/2022 0:35	11.21
6/21/2022 1:12	-0.07	6/22/2022 0:02	2.13	6/22/2022 0:25	6.27	6/22/2022 1:48	-0.30	6/21/2022 0:36	11.21
6/21/2022 1:13	-0.07	6/22/2022 0:03	2.14	6/22/2022 0:26	6.28	6/22/2022 1:49	-0.36	6/21/2022 0:37	11.29
6/21/2022 1:14	-0.07	6/22/2022 0:04	2.14	6/22/2022 0:27	6.28	6/22/2022 1:50	-0.29	6/21/2022 0:38	11.30
6/21/2022 1:15	-0.07	6/22/2022 0:05	2.13	6/22/2022 0:28	6.28	6/22/2022 1:51	-0.32	6/21/2022 0:39	11.26
6/21/2022 1:16	-0.07	6/22/2022 0:06	2.13	6/22/2022 0:29	6.30	6/22/2022 1:52	-0.35	6/21/2022 0:40	11.26
6/21/2022 1:17	-0.06	6/22/2022 0:07	2.13	6/22/2022 0:30	6.26	6/22/2022 1:53	-0.32	6/21/2022 0:41	11.22
6/21/2022 1:18	-0.07	6/22/2022 0:08	2.13	6/22/2022 0:31	6.26	6/22/2022 1:54	-0.31	6/21/2022 0:42	11.28
6/21/2022 1:19	-0.07	6/22/2022 0:09	2.13	6/22/2022 0:32	6.25	6/22/2022 1:55	-0.35	6/21/2022 0:43	11.29
6/21/2022 1:20	-0.06	6/22/2022 0:10	2.13	6/22/2022 0:33	6.26	6/22/2022 1:56	-0.32	6/21/2022 0:44	11.28
6/21/2022 1:21	-0.07	6/22/2022 0:11	2.14	6/22/2022 0:34	6.28	6/22/2022 1:57	-0.29	6/21/2022 0:45	11.27
6/21/2022 1:22	-0.06	6/22/2022 0:12	2.13	6/22/2022 0:35	6.27	6/22/2022 1:58	-0.30	6/21/2022 0:46	11.28
6/21/2022 1:23	-0.07	6/22/2022 0:13	2.13	6/22/2022 0:36	6.28	6/22/2022 1:59	-0.31	6/21/2022 0:47	11.30
6/21/2022 1:24	-0.07	6/22/2022 0:14	2.14	6/22/2022 0:37	6.27	6/22/2022 2:00	-0.33	6/21/2022 0:48	11.31
6/21/2022 1:25	-0.07	6/22/2022 0:15	2.14	6/22/2022 0:38	6.24	6/22/2022 2:01	-0.32	6/21/2022 0:49	11.25
6/21/2022 1:26	-0.07	6/22/2022 0:16	2.14	6/22/2022 0:39	6.24	6/22/2022 2:02	-0.33	6/21/2022 0:50	11.22
6/21/2022 1:27	-0.07	6/22/2022 0:17	2.13	6/22/2022 0:40	6.25	6/22/2022 2:03	-0.31	6/21/2022 0:51	11.25
6/21/2022 1:28	-0.07	6/22/2022 0:18	2.13	6/22/2022 0:41	6.26	6/22/2022 2:04	-0.37	6/21/2022 0:52	11.27
6/21/2022 1:29	-0.07	6/22/2022 0:19	2.14	6/22/2022 0:42	6.26	6/22/2022 2:05	-0.33	6/21/2022 0:53	11.26
6/21/2022 1:30	-0.05	6/22/2022 0:20	2.14	6/22/2022 0:43	6.28	6/22/2022 2:06	-0.29	6/21/2022 0:54	11.28
6/21/2022 1:31	-0.05	6/22/2022 0:21	2.13	6/22/2022 0:44	6.23	6/22/2022 2:07	-0.32	6/21/2022 0:55	11.23
6/21/2022 1:32	-0.05	6/22/2022 0:22	2.13	6/22/2022 0:45	6.28	6/22/2022 2:08	-0.35	6/21/2022 0:56	11.21
6/21/2022 1:33	-0.07	6/22/2022 0:23	2.14	6/22/2022 0:46	6.29	6/22/2022 2:09	-0.31	6/21/2022 0:57	11.28
6/21/2022 1:34	-0.07	6/22/2022 0:24	2.13	6/22/2022 0:47	6.28	6/22/2022 2:10	-0.28	6/21/2022 0:58	11.29
6/21/2022 1:35	-0.07	6/22/2022 0:25	2.13	6/22/2022 0:48	6.29	6/22/2022 2:11	-0.31	6/21/2022 0:59	11.31
6/21/2022 1:36	-0.07	6/22/2022 0:26	2.14	6/22/2022 0:49	6.25	6/22/2022 2:12	-0.28	6/21/2022 1:00	11.31
6/21/2022 1:37	-0.07	6/22/2022 0:27	2.13	6/22/2022 0:50	6.27	6/22/2022 2:13	-0.32	6/21/2022 1:01	11.22
6/21/2022 1:38	-0.06	6/22/2022 0:28	2.14	6/22/2022 0:51	6.28	6/22/2022 2:14	-0.37	6/21/2022 1:02	11.24
6/21/2022 1:39	-0.06	6/22/2022 0:29	2.14	6/22/2022 0:52	6.27	6/22/2022 2:15	-0.34	6/21/2022 1:03	11.20
6/21/2022 1:40	-0.07	6/22/2022 0:30	2.14	6/22/2022 0:53	6.24	6/22/2022 2:16	-0.34	6/21/2022 1:04	11.27
6/21/2022 1:41	-0.07	6/22/2022 0:31	2.14	6/22/2022 0:54	6.25	6/22/2022 2:17	-0.31	6/21/2022 1:05	11.27
6/21/2022 1:42	-0.07	6/22/2022 0:32	2.14	6/22/2022 0:55	6.25	6/22/2022 2:18	-0.28	6/21/2022 1:06	11.30
6/21/2022 1:43	-0.07	6/22/2022 0:33	2.14	6/22/2022 0:56	6.29	6/22/2022 2:19	-0.31	6/21/2022 1:07	11.23
6/21/2022 1:44	-0.05	6/22/2022 0:34	2.14	6/22/2022 0:57	6.24	6/22/2022 2:20	-0.35	6/21/2022 1:08	11.22

6/21/2022 1:45	-0.07	6/22/2022 0:35	2.14	6/22/2022 0:58	6.30	6/22/2022 2:21	-0.30	6/21/2022 1:09	11.23
6/21/2022 1:46	-0.07	6/22/2022 0:36	2.14	6/22/2022 0:59	6.27	6/22/2022 2:22	-0.34	6/21/2022 1:10	11.28
6/21/2022 1:47	-0.05	6/22/2022 0:37	2.14	6/22/2022 1:00	6.31	6/22/2022 2:23	-0.32	6/21/2022 1:11	11.28
6/21/2022 1:48	-0.07	6/22/2022 0:38	2.14	6/22/2022 1:01	6.30	6/22/2022 2:24	-0.30	6/21/2022 1:12	11.29
6/21/2022 1:49	-0.05	6/22/2022 0:39	2.14	6/22/2022 1:02	6.25	6/22/2022 2:25	-0.29	6/21/2022 1:13	11.27
6/21/2022 1:50	-0.05	6/22/2022 0:40	2.14	6/22/2022 1:03	6.29	6/22/2022 2:26	-0.35	6/21/2022 1:14	11.31
6/21/2022 1:51	-0.06	6/22/2022 0:41	2.14	6/22/2022 1:04	6.26	6/22/2022 2:27	-0.34	6/21/2022 1:15	11.30
6/21/2022 1:52	-0.07	6/22/2022 0:42	2.14	6/22/2022 1:05	6.32	6/22/2022 2:28	-0.33	6/21/2022 1:16	11.29
6/21/2022 1:53	-0.05	6/22/2022 0:43	2.14	6/22/2022 1:06	6.29	6/22/2022 2:29	-0.30	6/21/2022 1:17	11.30
6/21/2022 1:54	-0.07	6/22/2022 0:44	2.14	6/22/2022 1:07	6.29	6/22/2022 2:30	-0.31	6/21/2022 1:18	11.31
6/21/2022 1:55	-0.06	6/22/2022 0:45	2.15	6/22/2022 1:08	6.29	6/22/2022 2:31	-0.34	6/21/2022 1:19	11.27
6/21/2022 1:56	-0.07	6/22/2022 0:46	2.14	6/22/2022 1:09	6.27	6/22/2022 2:32	-0.31	6/21/2022 1:20	11.28
6/21/2022 1:57	-0.07	6/22/2022 0:47	2.14	6/22/2022 1:10	6.25	6/22/2022 2:33	-0.32	6/21/2022 1:21	11.25
6/21/2022 1:58	-0.07	6/22/2022 0:48	2.14	6/22/2022 1:11	6.26	6/22/2022 2:34	-0.30	6/21/2022 1:22	11.27
6/21/2022 1:59	-0.07	6/22/2022 0:49	2.15	6/22/2022 1:12	6.26	6/22/2022 2:35	-0.32	6/21/2022 1:23	11.25
6/21/2022 2:00	-0.06	6/22/2022 0:50	2.15	6/22/2022 1:13	6.29	6/22/2022 2:36	-0.33	6/21/2022 1:24	11.20
6/21/2022 2:01	-0.06	6/22/2022 0:51	2.14	6/22/2022 1:14	6.28	6/22/2022 2:37	-0.32	6/21/2022 1:25	11.30
6/21/2022 2:02	-0.07	6/22/2022 0:52	2.14	6/22/2022 1:15	6.27	6/22/2022 2:38	-0.31	6/21/2022 1:26	11.29
6/21/2022 2:03	-0.07	6/22/2022 0:53	2.14	6/22/2022 1:16	6.27	6/22/2022 2:39	-0.33	6/21/2022 1:27	11.27
6/21/2022 2:04	-0.07	6/22/2022 0:54	2.15	6/22/2022 1:17	6.27	6/22/2022 2:40	-0.33	6/21/2022 1:28	11.27
6/21/2022 2:05	-0.07	6/22/2022 0:55	2.14	6/22/2022 1:18	6.30	6/22/2022 2:41	-0.35	6/21/2022 1:29	11.30
6/21/2022 2:06	-0.07	6/22/2022 0:56	2.15	6/22/2022 1:19	6.29	6/22/2022 2:42	-0.31	6/21/2022 1:30	11.29
6/21/2022 2:07	-0.07	6/22/2022 0:57	2.14	6/22/2022 1:20	6.30	6/22/2022 2:43	-0.35	6/21/2022 1:31	11.25
6/21/2022 2:08	-0.07	6/22/2022 0:58	2.15	6/22/2022 1:21	6.32	6/22/2022 2:44	-0.34	6/21/2022 1:32	11.27
6/21/2022 2:09	-0.07	6/22/2022 0:59	2.15	6/22/2022 1:22	6.30	6/22/2022 2:45	-0.35	6/21/2022 1:33	11.28
6/21/2022 2:10	-0.07	6/22/2022 1:00	2.15	6/22/2022 1:23	6.25	6/22/2022 2:46	-0.34	6/21/2022 1:34	11.29
6/21/2022 2:11	-0.06	6/22/2022 1:01	2.15	6/22/2022 1:24	6.28	6/22/2022 2:47	-0.30	6/21/2022 1:35	11.25
6/21/2022 2:12	-0.07	6/22/2022 1:02	2.15	6/22/2022 1:25	6.34	6/22/2022 2:48	-0.28	6/21/2022 1:36	11.31
6/21/2022 2:13	-0.05	6/22/2022 1:03	2.15	6/22/2022 1:26	6.29	6/22/2022 2:49	-0.29	6/21/2022 1:37	11.29
6/21/2022 2:14	-0.05	6/22/2022 1:04	2.15	6/22/2022 1:27	6.31	6/22/2022 2:50	-0.31	6/21/2022 1:38	11.26
6/21/2022 2:15	-0.07	6/22/2022 1:05	2.15	6/22/2022 1:28	6.28	6/22/2022 2:51	-0.33	6/21/2022 1:39	11.27
6/21/2022 2:16	-0.07	6/22/2022 1:06	2.15	6/22/2022 1:29	6.28	6/22/2022 2:52	-0.33	6/21/2022 1:40	11.28
6/21/2022 2:17	-0.07	6/22/2022 1:07	2.15	6/22/2022 1:30	6.27	6/22/2022 2:53	-0.31	6/21/2022 1:41	11.26
6/21/2022 2:18	-0.07	6/22/2022 1:08	2.15	6/22/2022 1:31	6.29	6/22/2022 2:54	-0.29	6/21/2022 1:42	11.30
6/21/2022 2:19	-0.07	6/22/2022 1:09	2.15	6/22/2022 1:32	6.28	6/22/2022 2:55	-0.33	6/21/2022 1:43	11.26
6/21/2022 2:20	-0.05	6/22/2022 1:10	2.15	6/22/2022 1:33	6.30	6/22/2022 2:56	-0.34	6/21/2022 1:44	11.28
6/21/2022 2:21	-0.05	6/22/2022 1:11	2.15	6/22/2022 1:34	6.29	6/22/2022 2:57	-0.32	6/21/2022 1:45	11.25
6/21/2022 2:22	-0.06	6/22/2022 1:12	2.15	6/22/2022 1:35	6.32	6/22/2022 2:58	-0.27	6/21/2022 1:46	11.30
6/21/2022 2:23	-0.06	6/22/2022 1:13	2.15	6/22/2022 1:36	6.31	6/22/2022 2:59	-0.35	6/21/2022 1:47	11.24
6/21/2022 2:24	-0.07	6/22/2022 1:14	2.15	6/22/2022 1:37	6.31	6/22/2022 3:00	-0.29	6/21/2022 1:48	11.26
6/21/2022 2:25	-0.05	6/22/2022 1:15	2.15	6/22/2022 1:38	6.31	6/22/2022 3:01	-0.33	6/21/2022 1:49	11.28
6/21/2022 2:26	-0.07	6/22/2022 1:16	2.15	6/22/2022 1:39	6.30	6/22/2022 3:02	-0.30	6/21/2022 1:50	11.20
6/21/2022 2:27	-0.07	6/22/2022 1:17	2.16	6/22/2022 1:40	6.29	6/22/2022 3:03	-0.33	6/21/2022 1:51	11.22
6/21/2022 2:28	-0.07	6/22/2022 1:18	2.15	6/22/2022 1:41	6.30	6/22/2022 3:04	-0.30	6/21/2022 1:52	11.29
6/21/2022 2:29	-0.07	6/22/2022 1:19	2.16	6/22/2022 1:42	6.26	6/22/2022 3:05	-0.33	6/21/2022 1:53	11.26
6/21/2022 2:30	-0.07	6/22/2022 1:20	2.15	6/22/2022 1:43	6.27	6/22/2022 3:06	-0.30	6/21/2022 1:54	11.31
6/21/2022 2:31	-0.05	6/22/2022 1:21	2.16	6/22/2022 1:44	6.29	6/22/2022 3:07	-0.29	6/21/2022 1:55	11.29
6/21/2022 2:32	-0.07	6/22/2022 1:22	2.16	6/22/2022 1:45	6.26	6/22/2022 3:08	-0.30	6/21/2022 1:56	11.25
6/21/2022 2:33	-0.07	6/22/2022 1:23	2.16	6/22/2022 1:46	6.30	6/22/2022 3:09	-0.32	6/21/2022 1:57	11.30
6/21/2022 2:34	-0.07	6/22/2022 1:24	2.16	6/22/2022 1:47	6.28	6/22/2022 3:10	-0.33	6/21/2022 1:58	11.30
6/21/2022 2:35	-0.07	6/22/2022 1:25	2.16	6/22/2022 1:48	6.33	6/22/2022 3:11	-0.36	6/21/2022 1:59	11.30
6/21/2022 2:36	-0.06	6/22/2022 1:26	2.16	6/22/2022 1:49	6.33	6/22/2022 3:12	-0.30	6/21/2022 2:00	11.27
6/21/2022 2:37	-0.07	6/22/2022 1:27	2.16	6/22/2022 1:50	6.26	6/22/2022 3:13	-0.33	6/21/2022 2:01	11.28
6/21/2022 2:38	-0.05	6/22/2022 1:28	2.16	6/22/2022 1:51	6.30	6/22/2022 3:14	-0.33	6/21/2022 2:02	11.29
6/21/2022 2:39	-0.08	6/22/2022 1:29	2.16	6/22/2022 1:52	6.27	6/22/2022 3:15	-0.34	6/21/2022 2:03	11.32
6/21/2022 2:40	-0.05	6/22/2022 1:30	2.16	6/22/2022 1:53	6.34	6/22/2022 3:16	-0.33	6/21/2022 2:04	11.33
6/21/2022 2:41	-0.08	6/22/2022 1:31	2.16	6/22/2022 1:54	6.33	6/22/2022 3:17	-0.29	6/21/2022 2:05	11.26
6/21/2022 2:42	-0.07	6/22/2022 1:32	2.16	6/22/2022 1:55	6.31	6/22/2022 3:18	-0.31	6/21/2022 2:06	11.25
6/21/2022 2:43	-0.05	6/22/2022 1:33	2.16	6/22/2022 1:56	6.30	6/22/2022 3:19	-0.32	6/21/2022 2:07	11.30
6/21/2022 2:44	-0.07	6/22/2022 1:34	2.16	6/22/2022 1:57	6.32	6/22/2022 3:20	-0.30	6/21/2022 2:08	11.31
6/21/2022 2:45	-0.07	6/22/2022 1:35	2.16	6/22/2022 1:58	6.31	6/22/2022 3:21	-0.28	6/21/2022 2:09	11.28
6/21/2022 2:46	-0.07	6/22/2022 1:36	2.16	6/22/2022 1:59	6.30	6/22/2022 3:22	-0.28	6/21/2022 2:10	11.32
6/21/2022 2:47	-0.07	6/22/2022 1:37	2.16	6/22/2022 2:00	6.30	6/22/2022 3:23	-0.32	6/21/2022 2:11	11.27
6/21/2022 2:48	-0.07	6/22/2022 1:38	2.16	6/22/2022 2:01	6.33	6/22/2022 3:24	-0.34	6/21/2022 2:12	11.26
6/21/2022 2:49	-0.07	6/22/2022 1:39	2.16	6/22/2022 2:02	6.29	6/22/2022 3:25	-0.29	6/21/2022 2:13	11.28
6/21/2022 2:50	-0.07	6/22/2022 1:40	2.16	6/22/2022 2:03	6.31	6/22/2022 3:26	-0.31	6/21/2022 2:14	11.27
6/21/2022 2:51	-0.07	6/22/2022 1:41	2.16	6/22/2022 2:04	6.27	6/22/2022 3:27	-0.30	6/21/2022 2:15	11.30
6/21/2022 2:52	-0.07	6/22/2022 1:42	2.17	6/22/2022 2:05	6.29	6/22/2022 3:28	-0.29	6/21/2022 2:16	11.29
6/21/2022 2:53	-0.07	6/22/2022 1:43	2.16	6/22/2022 2:06	6.32	6/22/2022 3:29	-0.32	6/21/2022 2:17	11.25
6/21/2022 2:54	-0.07	6/22/2022 1:44	2.16	6/22/2022 2:07	6.33	6/22/2022 3:30	-0.32	6/21/2022 2:18	11.27
6/21/2022 2:55	-0.07	6/22/2022 1:45	2.17	6/22/2022 2:08	6.33	6/22/2022 3:31	-0.35	6/21/2022 2:19	11.27
6/21/2022 2:56	-0.05	6/22/2022 1:46	2.16	6/22/2022 2:09	6.32	6/22/2022 3:32	-0.32	6/21/2022 2:20	11.31
6/21/2022 2:57	-0.07	6/22/2022 1:47	2.16	6/22/2022 2:10	6.31	6/22/2022 3:33	-0.32	6/21/2022 2:21	11.28
6/21/2022 2:58	-0.07	6/22/2022 1:48	2.16	6/22/2022 2:11	6.31	6/22/2022 3:34	-0.33	6/21/2022 2:22	11.29
6/21/2022 2:59	-0.07	6/22/2022 1:49	2.17	6/22/2022 2:12	6.31	6/22/2022 3:35	-0.33	6/21/2022 2:23	11.29
6/21/2022 3:00	-0.05	6/22/2022 1:50	2.16	6/22/2022 2:13	6.32	6/22/2022 3:36	-0.31	6/21/2022 2:24	11.32
6/21/2022 3:01	-0.07	6/22/2022 1:51	2.16	6/22/2022 2:14	6.33	6/22/2022 3:37	-0.37	6/21/2022 2:25	11.26
6/21/2022 3:02	-0.07	6/22/2022 1:52	2.17	6/22/2022 2:15	6.35	6/22/2022 3:38	-0.30	6/21/2022 2:26	11.26
6/21/2022 3:03	-0.07	6/22/2022 1:53	2.16	6/22/2022 2:16	6.34	6/22/2022 3:39	-0.31	6/21/2022 2:27	11.32
6/21/2022 3:04	-0.07	6/22/2022 1:54	2.17	6/22/2022 2:17	6.34	6/22/2022 3:40	-0.32	6/21/2022 2:28	11.27
6/21/2022 3:05	-0.07	6/22/2022 1:55	2.16	6/22/2022 2:18	6.31	6/22/2022 3:41	-0.32	6/21/2022 2:29	11.33
6/21/2022 3:06	-0.07	6/22/2022 1:56	2.17	6/22/2022 2:19	6.32	6/22/2022 3:42	-0.31	6/21/2022 2:30	11.29
6/21/2022 3:07	-0.07	6/22/2022 1:57	2.16	6/22/2022 2:20	6.32	6/22/2022 3:43	-0.29	6/21/2022 2:31	11.30
6/21/2022 3:08	-0.07	6/22/2022 1:58	2.16	6/22/2022 2:21	6.35	6/22/2022 3:44	-0.33	6/21/2022 2:32	11.27
6/21/2022 3:09	-0.07	6/22/2022 1:59	2.17	6/22/2022 2:22	6.34	6/22/2022 3:45	-0.26	6/21/2022 2:33	11.27
6/21/2022 3:10	-0.07	6/22/2022 2:00	2.17	6/22/2022 2:23	6.32	6/22/2022 3:46	-0.30	6/21/2022 2:34	11.28
6/21/2022 3:11	-0.07	6/22/2022 2:01	2.17	6/22/2022 2:24	6.34	6/22/2022 3:47	-0.38	6/21/2022 2:35	11.30
6/21/2022 3:12	-0.05	6/22/2022 2:02	2.17	6/22/2022 2:25	6.30	6/22/2022 3:48	-0.35	6/21/2022 2:36	11.30

6/21/2022 3:13	-0.07	6/22/2022 2:03	2.17	6/22/2022 2:26	6.30	6/22/2022 3:49	-0.34	6/21/2022 2:37	11.27
6/21/2022 3:14	-0.07	6/22/2022 2:04	2.17	6/22/2022 2:27	6.35	6/22/2022 3:50	-0.32	6/21/2022 2:38	11.27
6/21/2022 3:15	-0.07	6/22/2022 2:05	2.17	6/22/2022 2:28	6.33	6/22/2022 3:51	-0.34	6/21/2022 2:39	11.30
6/21/2022 3:16	-0.07	6/22/2022 2:06	2.17	6/22/2022 2:29	6.32	6/22/2022 3:52	-0.33	6/21/2022 2:40	11.25
6/21/2022 3:17	-0.07	6/22/2022 2:07	2.17	6/22/2022 2:30	6.37	6/22/2022 3:53	-0.28	6/21/2022 2:41	11.27
6/21/2022 3:18	-0.07	6/22/2022 2:08	2.18	6/22/2022 2:31	6.33	6/22/2022 3:54	-0.33	6/21/2022 2:42	11.29
6/21/2022 3:19	-0.07	6/22/2022 2:09	2.18	6/22/2022 2:32	6.34	6/22/2022 3:55	-0.29	6/21/2022 2:43	11.32
6/21/2022 3:20	-0.07	6/22/2022 2:10	2.17	6/22/2022 2:33	6.33	6/22/2022 3:56	-0.28	6/21/2022 2:44	11.29
6/21/2022 3:21	-0.07	6/22/2022 2:11	2.18	6/22/2022 2:34	6.33	6/22/2022 3:57	-0.35	6/21/2022 2:45	11.28
6/21/2022 3:22	-0.07	6/22/2022 2:12	2.18	6/22/2022 2:35	6.33	6/22/2022 3:58	-0.32	6/21/2022 2:46	11.30
6/21/2022 3:23	-0.07	6/22/2022 2:13	2.18	6/22/2022 2:36	6.34	6/22/2022 3:59	-0.34	6/21/2022 2:47	11.24
6/21/2022 3:24	-0.07	6/22/2022 2:14	2.18	6/22/2022 2:37	6.34	6/22/2022 4:00	-0.31	6/21/2022 2:48	11.36
6/21/2022 3:25	-0.07	6/22/2022 2:15	2.18	6/22/2022 2:38	6.36	6/22/2022 4:01	-0.31	6/21/2022 2:49	11.31
6/21/2022 3:26	-0.07	6/22/2022 2:16	2.17	6/22/2022 2:39	6.33	6/22/2022 4:02	-0.32	6/21/2022 2:50	11.32
6/21/2022 3:27	-0.06	6/22/2022 2:17	2.17	6/22/2022 2:40	6.34	6/22/2022 4:03	-0.32	6/21/2022 2:51	11.23
6/21/2022 3:28	-0.05	6/22/2022 2:18	2.18	6/22/2022 2:41	6.36	6/22/2022 4:04	-0.34	6/21/2022 2:52	11.32
6/21/2022 3:29	-0.07	6/22/2022 2:19	2.18	6/22/2022 2:42	6.34	6/22/2022 4:05	-0.31	6/21/2022 2:53	11.34
6/21/2022 3:30	-0.06	6/22/2022 2:20	2.18	6/22/2022 2:43	6.30	6/22/2022 4:06	-0.28	6/21/2022 2:54	11.27
6/21/2022 3:31	-0.07	6/22/2022 2:21	2.18	6/22/2022 2:44	6.33	6/22/2022 4:07	-0.32	6/21/2022 2:55	11.28
6/21/2022 3:32	-0.07	6/22/2022 2:22	2.18	6/22/2022 2:45	6.29	6/22/2022 4:08	-0.35	6/21/2022 2:56	11.25
6/21/2022 3:33	-0.07	6/22/2022 2:23	2.18	6/22/2022 2:46	6.37	6/22/2022 4:09	-0.32	6/21/2022 2:57	11.27
6/21/2022 3:34	-0.07	6/22/2022 2:24	2.18	6/22/2022 2:47	6.33	6/22/2022 4:10	-0.36	6/21/2022 2:58	11.27
6/21/2022 3:35	-0.07	6/22/2022 2:25	2.18	6/22/2022 2:48	6.35	6/22/2022 4:11	-0.28	6/21/2022 2:59	11.34
6/21/2022 3:36	-0.07	6/22/2022 2:26	2.18	6/22/2022 2:49	6.34	6/22/2022 4:12	-0.33	6/21/2022 3:00	11.32
6/21/2022 3:37	-0.07	6/22/2022 2:27	2.18	6/22/2022 2:50	6.33	6/22/2022 4:13	-0.30	6/21/2022 3:01	11.30
6/21/2022 3:38	-0.07	6/22/2022 2:28	2.18	6/22/2022 2:51	6.35	6/22/2022 4:14	-0.31	6/21/2022 3:02	11.30
6/21/2022 3:39	-0.07	6/22/2022 2:29	2.18	6/22/2022 2:52	6.36	6/22/2022 4:15	-0.35	6/21/2022 3:03	11.28
6/21/2022 3:40	-0.07	6/22/2022 2:30	2.18	6/22/2022 2:53	6.40	6/22/2022 4:16	-0.32	6/21/2022 3:04	11.27
6/21/2022 3:41	-0.07	6/22/2022 2:31	2.18	6/22/2022 2:54	6.35	6/22/2022 4:17	-0.31	6/21/2022 3:05	11.26
6/21/2022 3:42	-0.07	6/22/2022 2:32	2.18	6/22/2022 2:55	6.33	6/22/2022 4:18	-0.32	6/21/2022 3:06	11.28
6/21/2022 3:43	-0.07	6/22/2022 2:33	2.18	6/22/2022 2:56	6.35	6/22/2022 4:19	-0.30	6/21/2022 3:07	11.28
6/21/2022 3:44	-0.07	6/22/2022 2:34	2.19	6/22/2022 2:57	6.30	6/22/2022 4:20	-0.31	6/21/2022 3:08	11.29
6/21/2022 3:45	-0.07	6/22/2022 2:35	2.18	6/22/2022 2:58	6.35	6/22/2022 4:21	-0.35	6/21/2022 3:09	11.30
6/21/2022 3:46	-0.07	6/22/2022 2:36	2.18	6/22/2022 2:59	6.34	6/22/2022 4:22	-0.35	6/21/2022 3:10	11.28
6/21/2022 3:47	-0.07	6/22/2022 2:37	2.18	6/22/2022 3:00	6.37	6/22/2022 4:23	-0.31	6/21/2022 3:11	11.24
6/21/2022 3:48	-0.05	6/22/2022 2:38	2.19	6/22/2022 3:01	6.37	6/22/2022 4:24	-0.36	6/21/2022 3:12	11.30
6/21/2022 3:49	-0.07	6/22/2022 2:39	2.18	6/22/2022 3:02	6.35	6/22/2022 4:25	-0.31	6/21/2022 3:13	11.27
6/21/2022 3:50	-0.05	6/22/2022 2:40	2.19	6/22/2022 3:03	6.36	6/22/2022 4:26	-0.31	6/21/2022 3:14	11.31
6/21/2022 3:51	-0.07	6/22/2022 2:41	2.19	6/22/2022 3:04	6.34	6/22/2022 4:27	-0.29	6/21/2022 3:15	11.31
6/21/2022 3:52	-0.07	6/22/2022 2:42	2.19	6/22/2022 3:05	6.36	6/22/2022 4:28	-0.30	6/21/2022 3:16	11.27
6/21/2022 3:53	-0.05	6/22/2022 2:43	2.19	6/22/2022 3:06	6.35	6/22/2022 4:29	-0.34	6/21/2022 3:17	11.31
6/21/2022 3:54	-0.07	6/22/2022 2:44	2.19	6/22/2022 3:07	6.35	6/22/2022 4:30	-0.29	6/21/2022 3:18	11.29
6/21/2022 3:55	-0.05	6/22/2022 2:45	2.19	6/22/2022 3:08	6.37	6/22/2022 4:31	-0.28	6/21/2022 3:19	11.31
6/21/2022 3:56	-0.07	6/22/2022 2:46	2.19	6/22/2022 3:09	6.35	6/22/2022 4:32	-0.29	6/21/2022 3:20	11.27
6/21/2022 3:57	-0.07	6/22/2022 2:47	2.19	6/22/2022 3:10	6.36	6/22/2022 4:33	-0.30	6/21/2022 3:21	11.29
6/21/2022 3:58	-0.07	6/22/2022 2:48	2.19	6/22/2022 3:11	6.35	6/22/2022 4:34	-0.34	6/21/2022 3:22	11.26
6/21/2022 3:59	-0.07	6/22/2022 2:49	2.18	6/22/2022 3:12	6.36	6/22/2022 4:35	-0.34	6/21/2022 3:23	11.29
6/21/2022 4:00	-0.07	6/22/2022 2:50	2.19	6/22/2022 3:13	6.35	6/22/2022 4:36	-0.30	6/21/2022 3:24	11.28
6/21/2022 4:01	-0.07	6/22/2022 2:51	2.19	6/22/2022 3:14	6.35	6/22/2022 4:37	-0.33	6/21/2022 3:25	11.31
6/21/2022 4:02	-0.07	6/22/2022 2:52	2.19	6/22/2022 3:15	6.35	6/22/2022 4:38	-0.35	6/21/2022 3:26	11.29
6/21/2022 4:03	-0.05	6/22/2022 2:53	2.19	6/22/2022 3:16	6.37	6/22/2022 4:39	-0.31	6/21/2022 3:27	11.28
6/21/2022 4:04	-0.07	6/22/2022 2:54	2.19	6/22/2022 3:17	6.39	6/22/2022 4:40	-0.30	6/21/2022 3:28	11.29
6/21/2022 4:05	-0.07	6/22/2022 2:55	2.19	6/22/2022 3:18	6.38	6/22/2022 4:41	-0.31	6/21/2022 3:29	11.31
6/21/2022 4:06	-0.05	6/22/2022 2:56	2.19	6/22/2022 3:19	6.35	6/22/2022 4:42	-0.30	6/21/2022 3:30	11.31
6/21/2022 4:07	-0.05	6/22/2022 2:57	2.19	6/22/2022 3:20	6.36	6/22/2022 4:43	-0.28	6/21/2022 3:31	11.31
6/21/2022 4:08	-0.07	6/22/2022 2:58	2.19	6/22/2022 3:21	6.36	6/22/2022 4:44	-0.33	6/21/2022 3:32	11.32
6/21/2022 4:09	-0.07	6/22/2022 2:59	2.19	6/22/2022 3:22	6.37	6/22/2022 4:45	-0.32	6/21/2022 3:33	11.25
6/21/2022 4:10	-0.07	6/22/2022 3:00	2.19	6/22/2022 3:23	6.39	6/22/2022 4:46	-0.34	6/21/2022 3:34	11.27
6/21/2022 4:11	-0.07	6/22/2022 3:01	2.19	6/22/2022 3:24	6.37	6/22/2022 4:47	-0.30	6/21/2022 3:35	11.34
6/21/2022 4:12	-0.07	6/22/2022 3:02	2.19	6/22/2022 3:25	6.37	6/22/2022 4:48	-0.34	6/21/2022 3:36	11.29
6/21/2022 4:13	-0.07	6/22/2022 3:03	2.19	6/22/2022 3:26	6.38	6/22/2022 4:49	-0.34	6/21/2022 3:37	11.30
6/21/2022 4:14	-0.07	6/22/2022 3:04	2.20	6/22/2022 3:27	6.34	6/22/2022 4:50	-0.33	6/21/2022 3:38	11.33
6/21/2022 4:15	-0.07	6/22/2022 3:05	2.20	6/22/2022 3:28	6.35	6/22/2022 4:51	-0.37	6/21/2022 3:39	11.26
6/21/2022 4:16	-0.07	6/22/2022 3:06	2.20	6/22/2022 3:29	6.36	6/22/2022 4:52	-0.32	6/21/2022 3:40	11.26
6/21/2022 4:17	-0.05	6/22/2022 3:07	2.20	6/22/2022 3:30	6.38	6/22/2022 4:53	-0.33	6/21/2022 3:41	11.28
6/21/2022 4:18	-0.07	6/22/2022 3:08	2.20	6/22/2022 3:31	6.35	6/22/2022 4:54	-0.31	6/21/2022 3:42	11.29
6/21/2022 4:19	-0.07	6/22/2022 3:09	2.20	6/22/2022 3:32	6.38	6/22/2022 4:55	-0.30	6/21/2022 3:43	11.27
6/21/2022 4:20	-0.07	6/22/2022 3:10	2.19	6/22/2022 3:33	6.40	6/22/2022 4:56	-0.31	6/21/2022 3:44	11.31
6/21/2022 4:21	-0.07	6/22/2022 3:11	2.19	6/22/2022 3:34	6.39	6/22/2022 4:57	-0.33	6/21/2022 3:45	11.31
6/21/2022 4:22	-0.07	6/22/2022 3:12	2.20	6/22/2022 3:35	6.34	6/22/2022 4:58	-0.33	6/21/2022 3:46	11.27
6/21/2022 4:23	-0.07	6/22/2022 3:13	2.20	6/22/2022 3:36	6.36	6/22/2022 4:59	-0.31	6/21/2022 3:47	11.30
6/21/2022 4:24	-0.07	6/22/2022 3:14	2.20	6/22/2022 3:37	6.35	6/22/2022 5:00	-0.37	6/21/2022 3:48	11.30
6/21/2022 4:25	-0.05	6/22/2022 3:15	2.20	6/22/2022 3:38	6.39	6/22/2022 5:01	-0.29	6/21/2022 3:49	11.27
6/21/2022 4:26	-0.05	6/22/2022 3:16	2.20	6/22/2022 3:39	6.37	6/22/2022 5:02	-0.29	6/21/2022 3:50	11.32
6/21/2022 4:27	-0.07	6/22/2022 3:17	2.20	6/22/2022 3:40	6.38	6/22/2022 5:03	-0.33	6/21/2022 3:51	11.23
6/21/2022 4:28	-0.07	6/22/2022 3:18	2.20	6/22/2022 3:41	6.37	6/22/2022 5:04	-0.32	6/21/2022 3:52	11.27
6/21/2022 4:29	-0.07	6/22/2022 3:19	2.20	6/22/2022 3:42	6.36	6/22/2022 5:05	-0.29	6/21/2022 3:53	11.23
6/21/2022 4:30	-0.07	6/22/2022 3:20	2.20	6/22/2022 3:43	6.39	6/22/2022 5:06	-0.31	6/21/2022 3:54	11.30
6/21/2022 4:31	-0.07	6/22/2022 3:21	2.20	6/22/2022 3:44	6.38	6/22/2022 5:07	-0.29	6/21/2022 3:55	11.30
6/21/2022 4:32	-0.05	6/22/2022 3:22	2.20	6/22/2022 3:45	6.37	6/22/2022 5:08	-0.35	6/21/2022 3:56	11.27
6/21/2022 4:33	-0.07	6/22/2022 3:23	2.20	6/22/2022 3:46	6.38	6/22/2022 5:09	-0.34	6/21/2022 3:57	11.31
6/21/2022 4:34	-0.07	6/22/2022 3:24	2.20	6/22/2022 3:47	6.37	6/22/2022 5:10	-0.31	6/21/2022 3:58	11.27
6/21/2022 4:35	-0.05	6/22/2022 3:25	2.20	6/22/2022 3:48	6.36	6/22/2022 5:11	-0.36	6/21/2022 3:59	11.23
6/21/2022 4:36	-0.07	6/22/2022 3:26	2.20	6/22/2022 3:49	6.41	6/22/2022 5:12	-0.31	6/21/2022 4:00	11.30
6/21/2022 4:37	-0.05	6/22/2022 3:27	2.20	6/22/2022 3:50	6.36	6/22/2022 5:13	-0.32	6/21/2022 4:01	11.32
6/21/2022 4:38	-0.05	6/22/2022 3:28	2.20	6/22/2022 3:51	6.37	6/22/2022 5:14	-0.33	6/21/2022 4:02	11.34
6/21/2022 4:39	-0.07	6/22/2022 3:29	2.20	6/22/2022 3:52	6.39	6/22/2022 5:15	-0.35	6/21/2022 4:03	11.31
6/21/2022 4:40	-0.07	6/22/2022 3:30	2.20	6/22/2022 3:53	6.40	6/22/2022 5:16	-0.32	6/21/2022 4:04	11.32

6/21/2022 4:41	-0.07	6/22/2022 3:31	2.20	6/22/2022 3:54	6.38	6/22/2022 5:17	-0.32	6/21/2022 4:05	11.27
6/21/2022 4:42	-0.05	6/22/2022 3:32	2.20	6/22/2022 3:55	6.38	6/22/2022 5:18	-0.32	6/21/2022 4:06	11.29
6/21/2022 4:43	-0.07	6/22/2022 3:33	2.20	6/22/2022 3:56	6.40	6/22/2022 5:19	-0.32	6/21/2022 4:07	11.29
6/21/2022 4:44	-0.07	6/22/2022 3:34	2.20	6/22/2022 3:57	6.39	6/22/2022 5:20	-0.32	6/21/2022 4:08	11.30
6/21/2022 4:45	-0.07	6/22/2022 3:35	2.21	6/22/2022 3:58	6.40	6/22/2022 5:21	-0.33	6/21/2022 4:09	11.32
6/21/2022 4:46	-0.07	6/22/2022 3:36	2.21	6/22/2022 3:59	6.38	6/22/2022 5:22	-0.32	6/21/2022 4:10	11.30
6/21/2022 4:47	-0.07	6/22/2022 3:37	2.20	6/22/2022 4:00	6.39	6/22/2022 5:23	-0.34	6/21/2022 4:11	11.34
6/21/2022 4:48	-0.07	6/22/2022 3:38	2.21	6/22/2022 4:01	6.38	6/22/2022 5:24	-0.31	6/21/2022 4:12	11.32
6/21/2022 4:49	-0.07	6/22/2022 3:39	2.21	6/22/2022 4:02	6.37	6/22/2022 5:25	-0.35	6/21/2022 4:13	11.29
6/21/2022 4:50	-0.07	6/22/2022 3:40	2.21	6/22/2022 4:03	6.37	6/22/2022 5:26	-0.32	6/21/2022 4:14	11.31
6/21/2022 4:51	-0.06	6/22/2022 3:41	2.21	6/22/2022 4:04	6.40	6/22/2022 5:27	-0.32	6/21/2022 4:15	11.29
6/21/2022 4:52	-0.07	6/22/2022 3:42	2.21	6/22/2022 4:05	6.38	6/22/2022 5:28	-0.27	6/21/2022 4:16	11.30
6/21/2022 4:53	-0.07	6/22/2022 3:43	2.21	6/22/2022 4:06	6.39	6/22/2022 5:29	-0.35	6/21/2022 4:17	11.29
6/21/2022 4:54	-0.07	6/22/2022 3:44	2.21	6/22/2022 4:07	6.38	6/22/2022 5:30	-0.32	6/21/2022 4:18	11.29
6/21/2022 4:55	-0.07	6/22/2022 3:45	2.21	6/22/2022 4:08	6.40	6/22/2022 5:31	-0.32	6/21/2022 4:19	11.26
6/21/2022 4:56	-0.07	6/22/2022 3:46	2.21	6/22/2022 4:09	6.42	6/22/2022 5:32	-0.32	6/21/2022 4:20	11.31
6/21/2022 4:57	-0.07	6/22/2022 3:47	2.21	6/22/2022 4:10	6.41	6/22/2022 5:33	-0.36	6/21/2022 4:21	11.27
6/21/2022 4:58	-0.07	6/22/2022 3:48	2.21	6/22/2022 4:11	6.37	6/22/2022 5:34	-0.34	6/21/2022 4:22	11.32
6/21/2022 4:59	-0.07	6/22/2022 3:49	2.22	6/22/2022 4:12	6.40	6/22/2022 5:35	-0.31	6/21/2022 4:23	11.32
6/21/2022 5:00	-0.07	6/22/2022 3:50	2.21	6/22/2022 4:13	6.41	6/22/2022 5:36	-0.32	6/21/2022 4:24	11.25
6/21/2022 5:01	-0.07	6/22/2022 3:51	2.21	6/22/2022 4:14	6.38	6/22/2022 5:37	-0.32	6/21/2022 4:25	11.24
6/21/2022 5:02	-0.07	6/22/2022 3:52	2.21	6/22/2022 4:15	6.42	6/22/2022 5:38	-0.32	6/21/2022 4:26	11.30
6/21/2022 5:03	-0.07	6/22/2022 3:53	2.21	6/22/2022 4:16	6.39	6/22/2022 5:39	-0.32	6/21/2022 4:27	11.30
6/21/2022 5:04	-0.07	6/22/2022 3:54	2.21	6/22/2022 4:17	6.38	6/22/2022 5:40	-0.30	6/21/2022 4:28	11.31
6/21/2022 5:05	-0.07	6/22/2022 3:55	2.22	6/22/2022 4:18	6.39	6/22/2022 5:41	-0.30	6/21/2022 4:29	11.25
6/21/2022 5:06	-0.07	6/22/2022 3:56	2.21	6/22/2022 4:19	6.40	6/22/2022 5:42	-0.32	6/21/2022 4:30	11.31
6/21/2022 5:07	-0.07	6/22/2022 3:57	2.21	6/22/2022 4:20	6.40	6/22/2022 5:43	-0.29	6/21/2022 4:31	11.26
6/21/2022 5:08	-0.07	6/22/2022 3:58	2.21	6/22/2022 4:21	6.40	6/22/2022 5:44	-0.29	6/21/2022 4:32	11.30
6/21/2022 5:09	-0.05	6/22/2022 3:59	2.21	6/22/2022 4:22	6.40	6/22/2022 5:45	-0.31	6/21/2022 4:33	11.30
6/21/2022 5:10	-0.07	6/22/2022 4:00	2.21	6/22/2022 4:23	6.42	6/22/2022 5:46	-0.30	6/21/2022 4:34	11.30
6/21/2022 5:11	-0.07	6/22/2022 4:01	2.22	6/22/2022 4:24	6.39	6/22/2022 5:47	-0.30	6/21/2022 4:35	11.26
6/21/2022 5:12	-0.07	6/22/2022 4:02	2.22	6/22/2022 4:25	6.39	6/22/2022 5:48	-0.33	6/21/2022 4:36	11.30
6/21/2022 5:13	-0.07	6/22/2022 4:03	2.22	6/22/2022 4:26	6.40	6/22/2022 5:49	-0.30	6/21/2022 4:37	11.30
6/21/2022 5:14	-0.07	6/22/2022 4:04	2.21	6/22/2022 4:27	6.38	6/22/2022 5:50	-0.32	6/21/2022 4:38	11.30
6/21/2022 5:15	-0.07	6/22/2022 4:05	2.22	6/22/2022 4:28	6.37	6/22/2022 5:51	-0.30	6/21/2022 4:39	11.30
6/21/2022 5:16	-0.07	6/22/2022 4:06	2.22	6/22/2022 4:29	6.42	6/22/2022 5:52	-0.29	6/21/2022 4:40	11.32
6/21/2022 5:17	-0.05	6/22/2022 4:07	2.22	6/22/2022 4:30	6.41	6/22/2022 5:53	-0.30	6/21/2022 4:41	11.31
6/21/2022 5:18	-0.07	6/22/2022 4:08	2.22	6/22/2022 4:31	6.40	6/22/2022 5:54	-0.35	6/21/2022 4:42	11.29
6/21/2022 5:19	-0.07	6/22/2022 4:09	2.22	6/22/2022 4:32	6.40	6/22/2022 5:55	-0.30	6/21/2022 4:43	11.32
6/21/2022 5:20	-0.07	6/22/2022 4:10	2.22	6/22/2022 4:33	6.42	6/22/2022 5:56	-0.32	6/21/2022 4:44	11.29
6/21/2022 5:21	-0.07	6/22/2022 4:11	2.22	6/22/2022 4:34	6.40	6/22/2022 5:57	-0.32	6/21/2022 4:45	11.26
6/21/2022 5:22	-0.07	6/22/2022 4:12	2.22	6/22/2022 4:35	6.40	6/22/2022 5:58	-0.27	6/21/2022 4:46	11.30
6/21/2022 5:23	-0.07	6/22/2022 4:13	2.22	6/22/2022 4:36	6.45	6/22/2022 5:59	-0.32	6/21/2022 4:47	11.28
6/21/2022 5:24	-0.07	6/22/2022 4:14	2.22	6/22/2022 4:37	6.44	6/22/2022 6:00	-0.31	6/21/2022 4:48	11.32
6/21/2022 5:25	-0.07	6/22/2022 4:15	2.22	6/22/2022 4:38	6.38	6/22/2022 6:01	-0.33	6/21/2022 4:49	11.28
6/21/2022 5:26	-0.07	6/22/2022 4:16	2.22	6/22/2022 4:39	6.40	6/22/2022 6:02	-0.32	6/21/2022 4:50	11.28
6/21/2022 5:27	-0.06	6/22/2022 4:17	2.22	6/22/2022 4:40	6.41	6/22/2022 6:03	-0.36	6/21/2022 4:51	11.30
6/21/2022 5:28	-0.07	6/22/2022 4:18	2.22	6/22/2022 4:41	6.43	6/22/2022 6:04	-0.34	6/21/2022 4:52	11.28
6/21/2022 5:29	-0.07	6/22/2022 4:19	2.23	6/22/2022 4:42	6.43	6/22/2022 6:05	-0.33	6/21/2022 4:53	11.34
6/21/2022 5:30	-0.07	6/22/2022 4:20	2.23	6/22/2022 4:43	6.40	6/22/2022 6:06	-0.29	6/21/2022 4:54	11.33
6/21/2022 5:31	-0.07	6/22/2022 4:21	2.22	6/22/2022 4:44	6.42	6/22/2022 6:07	-0.31	6/21/2022 4:55	11.29
6/21/2022 5:32	-0.07	6/22/2022 4:22	2.22	6/22/2022 4:45	6.39	6/22/2022 6:08	-0.30	6/21/2022 4:56	11.31
6/21/2022 5:33	-0.07	6/22/2022 4:23	2.23	6/22/2022 4:46	6.42	6/22/2022 6:09	-0.33	6/21/2022 4:57	11.26
6/21/2022 5:34	-0.07	6/22/2022 4:24	2.23	6/22/2022 4:47	6.43	6/22/2022 6:10	-0.30	6/21/2022 4:58	11.31
6/21/2022 5:35	-0.05	6/22/2022 4:25	2.23	6/22/2022 4:48	6.39	6/22/2022 6:11	-0.34	6/21/2022 4:59	11.35
6/21/2022 5:36	-0.07	6/22/2022 4:26	2.23	6/22/2022 4:49	6.44	6/22/2022 6:12	-0.31	6/21/2022 5:00	11.30
6/21/2022 5:37	-0.05	6/22/2022 4:27	2.22	6/22/2022 4:50	6.42	6/22/2022 6:13	-0.27	6/21/2022 5:01	11.37
6/21/2022 5:38	-0.05	6/22/2022 4:28	2.23	6/22/2022 4:51	6.44	6/22/2022 6:14	-0.31	6/21/2022 5:02	11.29
6/21/2022 5:39	-0.07	6/22/2022 4:29	2.23	6/22/2022 4:52	6.41	6/22/2022 6:15	-0.29	6/21/2022 5:03	11.32
6/21/2022 5:40	-0.07	6/22/2022 4:30	2.23	6/22/2022 4:53	6.41	6/22/2022 6:16	-0.35	6/21/2022 5:04	11.28
6/21/2022 5:41	-0.07	6/22/2022 4:31	2.23	6/22/2022 4:54	6.42	6/22/2022 6:17	-0.32	6/21/2022 5:05	11.30
6/21/2022 5:42	-0.07	6/22/2022 4:32	2.23	6/22/2022 4:55	6.41	6/22/2022 6:18	-0.34	6/21/2022 5:06	11.29
6/21/2022 5:43	-0.07	6/22/2022 4:33	2.23	6/22/2022 4:56	6.41	6/22/2022 6:19	-0.34	6/21/2022 5:07	11.34
6/21/2022 5:44	-0.05	6/22/2022 4:34	2.23	6/22/2022 4:57	6.44	6/22/2022 6:20	-0.29	6/21/2022 5:08	11.30
6/21/2022 5:45	-0.07	6/22/2022 4:35	2.23	6/22/2022 4:58	6.44	6/22/2022 6:21	-0.30	6/21/2022 5:09	11.31
6/21/2022 5:46	-0.07	6/22/2022 4:36	2.23	6/22/2022 4:59	6.41	6/22/2022 6:22	-0.36	6/21/2022 5:10	11.27
6/21/2022 5:47	-0.07	6/22/2022 4:37	2.23	6/22/2022 5:00	6.41	6/22/2022 6:23	-0.33	6/21/2022 5:11	11.31
6/21/2022 5:48	-0.07	6/22/2022 4:38	2.23	6/22/2022 5:01	6.45	6/22/2022 6:24	-0.33	6/21/2022 5:12	11.32
6/21/2022 5:49	-0.07	6/22/2022 4:39	2.23	6/22/2022 5:02	6.42	6/22/2022 6:25	-0.32	6/21/2022 5:13	11.27
6/21/2022 5:50	-0.07	6/22/2022 4:40	2.23	6/22/2022 5:03	6.46	6/22/2022 6:26	-0.36	6/21/2022 5:14	11.24
6/21/2022 5:51	-0.07	6/22/2022 4:41	2.23	6/22/2022 5:04	6.43	6/22/2022 6:27	-0.31	6/21/2022 5:15	11.25
6/21/2022 5:52	-0.07	6/22/2022 4:42	2.24	6/22/2022 5:05	6.44	6/22/2022 6:28	-0.34	6/21/2022 5:16	11.32
6/21/2022 5:53	-0.07	6/22/2022 4:43	2.23	6/22/2022 5:06	6.43	6/22/2022 6:29	-0.37	6/21/2022 5:17	11.29
6/21/2022 5:54	-0.07	6/22/2022 4:44	2.23	6/22/2022 5:07	6.42	6/22/2022 6:30	-0.31	6/21/2022 5:18	11.29
6/21/2022 5:55	-0.05	6/22/2022 4:45	2.23	6/22/2022 5:08	6.45	6/22/2022 6:31	-0.29	6/21/2022 5:19	11.30
6/21/2022 5:56	-0.07	6/22/2022 4:46	2.24	6/22/2022 5:09	6.47	6/22/2022 6:32	-0.30	6/21/2022 5:20	11.27
6/21/2022 5:57	-0.05	6/22/2022 4:47	2.24	6/22/2022 5:10	6.42	6/22/2022 6:33	-0.32	6/21/2022 5:21	11.30
6/21/2022 5:58	-0.07	6/22/2022 4:48	2.23	6/22/2022 5:11	6.42	6/22/2022 6:34	-0.27	6/21/2022 5:22	11.28
6/21/2022 5:59	-0.07	6/22/2022 4:49	2.24	6/22/2022 5:12	6.43	6/22/2022 6:35	-0.32	6/21/2022 5:23	11.33
6/21/2022 6:00	-0.07	6/22/2022 4:50	2.24	6/22/2022 5:13	6.44	6/22/2022 6:36	-0.31	6/21/2022 5:24	11.29
6/21/2022 6:01	-0.07	6/22/2022 4:51	2.24	6/22/2022 5:14	6.46	6/22/2022 6:37	-0.31	6/21/2022 5:25	11.29
6/21/2022 6:02	-0.07	6/22/2022 4:52	2.24	6/22/2022 5:15	6.45	6/22/2022 6:38	-0.32	6/21/2022 5:26	11.29
6/21/2022 6:03	-0.05	6/22/2022 4:53	2.24	6/22/2022 5:16	6.47	6/22/2022 6:39	-0.27	6/21/2022 5:27	11.37
6/21/2022 6:04	-0.07	6/22/2022 4:54	2.24	6/22/2022 5:17	6.41	6/22/2022 6:40	-0.26	6/21/2022 5:28	11.31
6/21/2022 6:05	-0.07	6/22/2022 4:55	2.24	6/22/2022 5:18	6.44	6/22/2022 6:41	-0.29	6/21/2022 5:29	11.30
6/21/2022 6:06	-0.07	6/22/2022 4:56	2.24	6/22/2022 5:19	6.42	6/22/2022 6:42	-0.32	6/21/2022 5:30	11.28
6/21/2022 6:07	-0.07	6/22/2022 4:57	2.24	6/22/2022 5:20	6.47	6/22/2022 6:43	-0.31	6/21/2022 5:31	11.33
6/21/2022 6:08	-0.07	6/22/2022 4:58	2.24	6/22/2022 5:21	6.41	6/22/2022 6:44	-0.29	6/21/2022 5:32	11.29

6/21/2022 6:09	-0.05	6/22/2022 4:59	2.24	6/22/2022 5:22	6.45	6/22/2022 6:45	-0.34	6/21/2022 5:33	11.30
6/21/2022 6:10	-0.07	6/22/2022 5:00	2.24	6/22/2022 5:23	6.44	6/22/2022 6:46	-0.32	6/21/2022 5:34	11.32
6/21/2022 6:11	-0.07	6/22/2022 5:01	2.24	6/22/2022 5:24	6.43	6/22/2022 6:47	-0.36	6/21/2022 5:35	11.33
6/21/2022 6:12	-0.06	6/22/2022 5:02	2.24	6/22/2022 5:25	6.44	6/22/2022 6:48	-0.34	6/21/2022 5:36	11.28
6/21/2022 6:13	-0.05	6/22/2022 5:03	2.24	6/22/2022 5:26	6.46	6/22/2022 6:49	-0.37	6/21/2022 5:37	11.29
6/21/2022 6:14	-0.07	6/22/2022 5:04	2.25	6/22/2022 5:27	6.48	6/22/2022 6:50	-0.34	6/21/2022 5:38	11.29
6/21/2022 6:15	-0.07	6/22/2022 5:05	2.24	6/22/2022 5:28	6.47	6/22/2022 6:51	-0.34	6/21/2022 5:39	11.29
6/21/2022 6:16	-0.05	6/22/2022 5:06	2.24	6/22/2022 5:29	6.45	6/22/2022 6:52	-0.28	6/21/2022 5:40	11.32
6/21/2022 6:17	-0.07	6/22/2022 5:07	2.25	6/22/2022 5:30	6.41	6/22/2022 6:53	-0.36	6/21/2022 5:41	11.30
6/21/2022 6:18	-0.07	6/22/2022 5:08	2.25	6/22/2022 5:31	6.43	6/22/2022 6:54	-0.32	6/21/2022 5:42	11.30
6/21/2022 6:19	-0.07	6/22/2022 5:09	2.25	6/22/2022 5:32	6.42	6/22/2022 6:55	-0.33	6/21/2022 5:43	11.34
6/21/2022 6:20	-0.07	6/22/2022 5:10	2.25	6/22/2022 5:33	6.45	6/22/2022 6:56	-0.28	6/21/2022 5:44	11.31
6/21/2022 6:21	-0.07	6/22/2022 5:11	2.25	6/22/2022 5:34	6.44	6/22/2022 6:57	-0.28	6/21/2022 5:45	11.33
6/21/2022 6:22	-0.07	6/22/2022 5:12	2.25	6/22/2022 5:35	6.45	6/22/2022 6:58	-0.30	6/21/2022 5:46	11.32
6/21/2022 6:23	-0.05	6/22/2022 5:13	2.25	6/22/2022 5:36	6.47	6/22/2022 6:59	-0.34	6/21/2022 5:47	11.29
6/21/2022 6:24	-0.05	6/22/2022 5:14	2.25	6/22/2022 5:37	6.49	6/22/2022 7:00	-0.28	6/21/2022 5:48	11.33
6/21/2022 6:25	-0.05	6/22/2022 5:15	2.25	6/22/2022 5:38	6.45	6/22/2022 7:01	-0.30	6/21/2022 5:49	11.34
6/21/2022 6:26	-0.07	6/22/2022 5:16	2.25	6/22/2022 5:39	6.47	6/22/2022 7:02	-0.35	6/21/2022 5:50	11.30
6/21/2022 6:27	-0.07	6/22/2022 5:17	2.25	6/22/2022 5:40	6.47	6/22/2022 7:03	-0.34	6/21/2022 5:51	11.24
6/21/2022 6:28	-0.07	6/22/2022 5:18	2.25	6/22/2022 5:41	6.43	6/22/2022 7:04	-0.32	6/21/2022 5:52	11.31
6/21/2022 6:29	-0.07	6/22/2022 5:19	2.25	6/22/2022 5:42	6.47	6/22/2022 7:05	-0.35	6/21/2022 5:53	11.28
6/21/2022 6:30	-0.05	6/22/2022 5:20	2.25	6/22/2022 5:43	6.49	6/22/2022 7:06	-0.32	6/21/2022 5:54	11.32
6/21/2022 6:31	-0.05	6/22/2022 5:21	2.25	6/22/2022 5:44	6.47	6/22/2022 7:07	-0.34	6/21/2022 5:55	11.32
6/21/2022 6:32	-0.07	6/22/2022 5:22	2.25	6/22/2022 5:45	6.46	6/22/2022 7:08	-0.30	6/21/2022 5:56	11.28
6/21/2022 6:33	-0.07	6/22/2022 5:23	2.25	6/22/2022 5:46	6.49	6/22/2022 7:09	-0.30	6/21/2022 5:57	11.32
6/21/2022 6:34	-0.07	6/22/2022 5:24	2.25	6/22/2022 5:47	6.47	6/22/2022 7:10	-0.33	6/21/2022 5:58	11.35
6/21/2022 6:35	-0.07	6/22/2022 5:25	2.25	6/22/2022 5:48	6.47	6/22/2022 7:11	-0.36	6/21/2022 5:59	11.30
6/21/2022 6:36	-0.06	6/22/2022 5:26	2.25	6/22/2022 5:49	6.47	6/22/2022 7:12	-0.33	6/21/2022 6:00	11.29
6/21/2022 6:37	-0.05	6/22/2022 5:27	2.25	6/22/2022 5:50	6.48	6/22/2022 7:13	-0.34	6/21/2022 6:01	11.34
6/21/2022 6:38	-0.07	6/22/2022 5:28	2.26	6/22/2022 5:51	6.45	6/22/2022 7:14	-0.31	6/21/2022 6:02	11.35
6/21/2022 6:39	-0.07	6/22/2022 5:29	2.26	6/22/2022 5:52	6.46	6/22/2022 7:15	-0.34	6/21/2022 6:03	11.30
6/21/2022 6:40	-0.07	6/22/2022 5:30	2.25	6/22/2022 5:53	6.48	6/22/2022 7:16	-0.32	6/21/2022 6:04	11.30
6/21/2022 6:41	-0.05	6/22/2022 5:31	2.25	6/22/2022 5:54	6.42	6/22/2022 7:17	-0.31	6/21/2022 6:05	11.32
6/21/2022 6:42	-0.07	6/22/2022 5:32	2.25	6/22/2022 5:55	6.49	6/22/2022 7:18	-0.33	6/21/2022 6:06	11.27
6/21/2022 6:43	-0.07	6/22/2022 5:33	2.26	6/22/2022 5:56	6.46	6/22/2022 7:19	-0.31	6/21/2022 6:07	11.36
6/21/2022 6:44	-0.07	6/22/2022 5:34	2.26	6/22/2022 5:57	6.49	6/22/2022 7:20	-0.31	6/21/2022 6:08	11.30
6/21/2022 6:45	-0.07	6/22/2022 5:35	2.25	6/22/2022 5:58	6.45	6/22/2022 7:21	-0.32	6/21/2022 6:09	11.33
6/21/2022 6:46	-0.07	6/22/2022 5:36	2.26	6/22/2022 5:59	6.48	6/22/2022 7:22	-0.29	6/21/2022 6:10	11.32
6/21/2022 6:47	-0.07	6/22/2022 5:37	2.26	6/22/2022 6:00	6.49	6/22/2022 7:23	-0.33	6/21/2022 6:11	11.37
6/21/2022 6:48	-0.07	6/22/2022 5:38	2.26	6/22/2022 6:01	6.46	6/22/2022 7:24	-0.30	6/21/2022 6:12	11.28
6/21/2022 6:49	-0.07	6/22/2022 5:39	2.25	6/22/2022 6:02	6.45	6/22/2022 7:25	-0.31	6/21/2022 6:13	11.31
6/21/2022 6:50	-0.07	6/22/2022 5:40	2.25	6/22/2022 6:03	6.51	6/22/2022 7:26	-0.33	6/21/2022 6:14	11.24
6/21/2022 6:51	-0.07	6/22/2022 5:41	2.26	6/22/2022 6:04	6.48	6/22/2022 7:27	-0.31	6/21/2022 6:15	11.29
6/21/2022 6:52	-0.07	6/22/2022 5:42	2.26	6/22/2022 6:05	6.47	6/22/2022 7:28	-0.33	6/21/2022 6:16	11.28
6/21/2022 6:53	-0.07	6/22/2022 5:43	2.26	6/22/2022 6:06	6.47	6/22/2022 7:29	-0.32	6/21/2022 6:17	11.32
6/21/2022 6:54	-0.07	6/22/2022 5:44	2.26	6/22/2022 6:07	6.46	6/22/2022 7:30	-0.36	6/21/2022 6:18	11.28
6/21/2022 6:55	-0.07	6/22/2022 5:45	2.26	6/22/2022 6:08	6.46	6/22/2022 7:31	-0.27	6/21/2022 6:19	11.24
6/21/2022 6:56	-0.07	6/22/2022 5:46	2.26	6/22/2022 6:09	6.47	6/22/2022 7:32	-0.29	6/21/2022 6:20	11.31
6/21/2022 6:57	-0.07	6/22/2022 5:47	2.26	6/22/2022 6:10	6.46	6/22/2022 7:33	-0.31	6/21/2022 6:21	11.29
6/21/2022 6:58	-0.07	6/22/2022 5:48	2.26	6/22/2022 6:11	6.49	6/22/2022 7:34	-0.33	6/21/2022 6:22	11.30
6/21/2022 6:59	-0.07	6/22/2022 5:49	2.26	6/22/2022 6:12	6.48	6/22/2022 7:35	-0.29	6/21/2022 6:23	11.32
6/21/2022 7:00	-0.05	6/22/2022 5:50	2.26	6/22/2022 6:13	6.49	6/22/2022 7:36	-0.29	6/21/2022 6:24	11.29
6/21/2022 7:01	-0.07	6/22/2022 5:51	2.26	6/22/2022 6:14	6.48	6/22/2022 7:37	-0.31	6/21/2022 6:25	11.27
6/21/2022 7:02	-0.07	6/22/2022 5:52	2.26	6/22/2022 6:15	6.47	6/22/2022 7:38	-0.34	6/21/2022 6:26	11.28
6/21/2022 7:03	-0.05	6/22/2022 5:53	2.26	6/22/2022 6:16	6.48	6/22/2022 7:39	-0.32	6/21/2022 6:27	11.35
6/21/2022 7:04	-0.06	6/22/2022 5:54	2.26	6/22/2022 6:17	6.48	6/22/2022 7:40	-0.33	6/21/2022 6:28	11.27
6/21/2022 7:05	-0.07	6/22/2022 5:55	2.26	6/22/2022 6:18	6.48	6/22/2022 7:41	-0.33	6/21/2022 6:29	11.33
6/21/2022 7:06	-0.07	6/22/2022 5:56	2.26	6/22/2022 6:19	6.48	6/22/2022 7:42	-0.35	6/21/2022 6:30	11.28
6/21/2022 7:07	-0.07	6/22/2022 5:57	2.26	6/22/2022 6:20	6.48	6/22/2022 7:43	-0.30	6/21/2022 6:31	11.35
6/21/2022 7:08	-0.07	6/22/2022 5:58	2.26	6/22/2022 6:21	6.51	6/22/2022 7:44	-0.34	6/21/2022 6:32	11.29
6/21/2022 7:09	-0.07	6/22/2022 5:59	2.26	6/22/2022 6:22	6.51	6/22/2022 7:45	-0.35	6/21/2022 6:33	11.30
6/21/2022 7:10	-0.05	6/22/2022 6:00	2.27	6/22/2022 6:23	6.48	6/22/2022 7:46	-0.33	6/21/2022 6:34	11.37
6/21/2022 7:11	-0.07	6/22/2022 6:01	2.26	6/22/2022 6:24	6.52	6/22/2022 7:47	-0.29	6/21/2022 6:35	11.33
6/21/2022 7:12	-0.07	6/22/2022 6:02	2.27	6/22/2022 6:25	6.47	6/22/2022 7:48	-0.33	6/21/2022 6:36	11.36
6/21/2022 7:13	-0.07	6/22/2022 6:03	2.27	6/22/2022 6:26	6.49	6/22/2022 7:49	-0.35	6/21/2022 6:37	11.34
6/21/2022 7:14	-0.06	6/22/2022 6:04	2.27	6/22/2022 6:27	6.49	6/22/2022 7:50	-0.36	6/21/2022 6:38	11.29
6/21/2022 7:15	-0.07	6/22/2022 6:05	2.27	6/22/2022 6:28	6.47	6/22/2022 7:51	-0.35	6/21/2022 6:39	11.34
6/21/2022 7:16	-0.07	6/22/2022 6:06	2.27	6/22/2022 6:29	6.47	6/22/2022 7:52	-0.31	6/21/2022 6:40	11.35
6/21/2022 7:17	-0.07	6/22/2022 6:07	2.27	6/22/2022 6:30	6.45	6/22/2022 7:53	-0.31	6/21/2022 6:41	11.35
6/21/2022 7:18	-0.06	6/22/2022 6:08	2.27	6/22/2022 6:31	6.50	6/22/2022 7:54	-0.31	6/21/2022 6:42	11.34
6/21/2022 7:19	-0.05	6/22/2022 6:09	2.27	6/22/2022 6:32	6.50	6/22/2022 7:55	-0.31	6/21/2022 6:43	11.28
6/21/2022 7:20	-0.07	6/22/2022 6:10	2.27	6/22/2022 6:33	6.48	6/22/2022 7:56	-0.32	6/21/2022 6:44	11.33
6/21/2022 7:21	-0.07	6/22/2022 6:11	2.27	6/22/2022 6:34	6.50	6/22/2022 7:57	-0.34	6/21/2022 6:45	11.32
6/21/2022 7:22	-0.05	6/22/2022 6:12	2.27	6/22/2022 6:35	6.47	6/22/2022 7:58	-0.37	6/21/2022 6:46	11.30
6/21/2022 7:23	-0.05	6/22/2022 6:13	2.27	6/22/2022 6:36	6.49	6/22/2022 7:59	-0.32	6/21/2022 6:47	11.35
6/21/2022 7:24	-0.07	6/22/2022 6:14	2.27	6/22/2022 6:37	6.49	6/22/2022 8:00	-0.31	6/21/2022 6:48	11.33
6/21/2022 7:25	-0.07	6/22/2022 6:15	2.27	6/22/2022 6:38	6.52	6/22/2022 8:01	-0.32	6/21/2022 6:49	11.31
6/21/2022 7:26	-0.07	6/22/2022 6:16	2.27	6/22/2022 6:39	6.48	6/22/2022 8:02	-0.26	6/21/2022 6:50	11.28
6/21/2022 7:27	-0.07	6/22/2022 6:17	2.27	6/22/2022 6:40	6.49	6/22/2022 8:03	-0.35	6/21/2022 6:51	11.30
6/21/2022 7:28	-0.07	6/22/2022 6:18	2.27	6/22/2022 6:41	6.51	6/22/2022 8:04	-0.32	6/21/2022 6:52	11.30
6/21/2022 7:29	-0.07	6/22/2022 6:19	2.27	6/22/2022 6:42	6.48	6/22/2022 8:05	-0.33	6/21/2022 6:53	11.32
6/21/2022 7:30	-0.07	6/22/2022 6:20	2.27	6/22/2022 6:43	6.47	6/22/2022 8:06	-0.30	6/21/2022 6:54	11.34
6/21/2022 7:31	-0.07	6/22/2022 6:21	2.27	6/22/2022 6:44	6.54	6/22/2022 8:07	-0.29	6/21/2022 6:55	11.31
6/21/2022 7:32	-0.07	6/22/2022 6:22	2.27	6/22/2022 6:45	6.47	6/22/2022 8:08	-0.32	6/21/2022 6:56	11.26
6/21/2022 7:33	-0.07	6/22/2022 6:23	2.27	6/22/2022 6:46	6.50	6/22/2022 8:09	-0.32	6/21/2022 6:57	11.30
6/21/2022 7:34	-0.07	6/22/2022 6:24	2.27	6/22/2022 6:47	6.47	6/22/2022 8:10	-0.30	6/21/2022 6:58	11.30
6/21/2022 7:35	-0.07	6/22/2022 6:25	2.27	6/22/2022 6:48	6.51	6/22/2022 8:11	-0.35	6/21/2022 6:59	11.23
6/21/2022 7:36	-0.07	6/22/2022 6:26	2.27	6/22/2022 6:49	6.49	6/22/2022 8:12	-0.30	6/21/2022 7:00	11.31

6/21/2022 7:37	-0.07	6/22/2022 6:27	2.27	6/22/2022 6:50	6.48	6/22/2022 8:13	-0.38	6/21/2022 7:01	11.31
6/21/2022 7:38	-0.05	6/22/2022 6:28	2.27	6/22/2022 6:51	6.53	6/22/2022 8:14	-0.35	6/21/2022 7:02	11.32
6/21/2022 7:39	-0.07	6/22/2022 6:29	2.27	6/22/2022 6:52	6.47	6/22/2022 8:15	-0.32	6/21/2022 7:03	11.31
6/21/2022 7:40	-0.07	6/22/2022 6:30	2.28	6/22/2022 6:53	6.50	6/22/2022 8:16	-0.34	6/21/2022 7:04	11.32
6/21/2022 7:41	-0.07	6/22/2022 6:31	2.28	6/22/2022 6:54	6.51	6/22/2022 8:17	-0.32	6/21/2022 7:05	11.31
6/21/2022 7:42	-0.07	6/22/2022 6:32	2.28	6/22/2022 6:55	6.48	6/22/2022 8:18	-0.32	6/21/2022 7:06	11.34
6/21/2022 7:43	-0.07	6/22/2022 6:33	2.28	6/22/2022 6:56	6.54	6/22/2022 8:19	-0.28	6/21/2022 7:07	11.28
6/21/2022 7:44	-0.07	6/22/2022 6:34	2.28	6/22/2022 6:57	6.53	6/22/2022 8:20	-0.35	6/21/2022 7:08	11.26
6/21/2022 7:45	-0.07	6/22/2022 6:35	2.28	6/22/2022 6:58	6.48	6/22/2022 8:21	-0.32	6/21/2022 7:09	11.29
6/21/2022 7:46	-0.07	6/22/2022 6:36	2.28	6/22/2022 6:59	6.52	6/22/2022 8:22	-0.34	6/21/2022 7:10	11.35
6/21/2022 7:47	-0.07	6/22/2022 6:37	2.28	6/22/2022 7:00	6.51	6/22/2022 8:23	-0.37	6/21/2022 7:11	11.26
6/21/2022 7:48	-0.07	6/22/2022 6:38	2.28	6/22/2022 7:01	6.53	6/22/2022 8:24	-0.30	6/21/2022 7:12	11.27
6/21/2022 7:49	-0.07	6/22/2022 6:39	2.28	6/22/2022 7:02	6.51	6/22/2022 8:25	-0.32	6/21/2022 7:13	11.33
6/21/2022 7:50	-0.07	6/22/2022 6:40	2.28	6/22/2022 7:03	6.52	6/22/2022 8:26	-0.33	6/21/2022 7:14	11.35
6/21/2022 7:51	-0.07	6/22/2022 6:41	2.28	6/22/2022 7:04	6.48	6/22/2022 8:27	-0.29	6/21/2022 7:15	11.28
6/21/2022 7:52	-0.05	6/22/2022 6:42	2.28	6/22/2022 7:05	6.52	6/22/2022 8:28	-0.29	6/21/2022 7:16	11.33
6/21/2022 7:53	-0.07	6/22/2022 6:43	2.28	6/22/2022 7:06	6.50	6/22/2022 8:29	-0.30	6/21/2022 7:17	11.27
6/21/2022 7:54	-0.05	6/22/2022 6:44	2.28	6/22/2022 7:07	6.55	6/22/2022 8:30	-0.35	6/21/2022 7:18	11.30
6/21/2022 7:55	-0.07	6/22/2022 6:45	2.28	6/22/2022 7:08	6.51	6/22/2022 8:31	-0.34	6/21/2022 7:19	11.31
6/21/2022 7:56	-0.07	6/22/2022 6:46	2.28	6/22/2022 7:09	6.51	6/22/2022 8:32	-0.32	6/21/2022 7:20	11.29
6/21/2022 7:57	-0.07	6/22/2022 6:47	2.29	6/22/2022 7:10	6.51	6/22/2022 8:33	-0.33	6/21/2022 7:21	11.32
6/21/2022 7:58	-0.07	6/22/2022 6:48	2.28	6/22/2022 7:11	6.53	6/22/2022 8:34	-0.31	6/21/2022 7:22	11.28
6/21/2022 7:59	-0.07	6/22/2022 6:49	2.28	6/22/2022 7:12	6.56	6/22/2022 8:35	-0.33	6/21/2022 7:23	11.27
6/21/2022 8:00	-0.06	6/22/2022 6:50	2.28	6/22/2022 7:13	6.51	6/22/2022 8:36	-0.28	6/21/2022 7:24	11.36
6/21/2022 8:01	-0.07	6/22/2022 6:51	2.28	6/22/2022 7:14	6.53	6/22/2022 8:37	-0.31	6/21/2022 7:25	11.30
6/21/2022 8:02	-0.07	6/22/2022 6:52	2.28	6/22/2022 7:15	6.51	6/22/2022 8:38	-0.30	6/21/2022 7:26	11.31
6/21/2022 8:03	-0.07	6/22/2022 6:53	2.28	6/22/2022 7:16	6.53	6/22/2022 8:39	-0.32	6/21/2022 7:27	11.29
6/21/2022 8:04	-0.07	6/22/2022 6:54	2.29	6/22/2022 7:17	6.50	6/22/2022 8:40	-0.31	6/21/2022 7:28	11.29
6/21/2022 8:05	-0.06	6/22/2022 6:55	2.29	6/22/2022 7:18	6.52	6/22/2022 8:41	-0.32	6/21/2022 7:29	11.32
6/21/2022 8:06	-0.07	6/22/2022 6:56	2.29	6/22/2022 7:19	6.52	6/22/2022 8:42	-0.34	6/21/2022 7:30	11.31
6/21/2022 8:07	-0.05	6/22/2022 6:57	2.29	6/22/2022 7:20	6.52	6/22/2022 8:43	-0.35	6/21/2022 7:31	11.28
6/21/2022 8:08	-0.06	6/22/2022 6:58	2.28	6/22/2022 7:21	6.54	6/22/2022 8:44	-0.29	6/21/2022 7:32	11.29
6/21/2022 8:09	-0.07	6/22/2022 6:59	2.29	6/22/2022 7:22	6.53	6/22/2022 8:45	-0.32	6/21/2022 7:33	11.28
6/21/2022 8:10	-0.07	6/22/2022 7:00	2.29	6/22/2022 7:23	6.51	6/22/2022 8:46	-0.34	6/21/2022 7:34	11.30
6/21/2022 8:11	-0.07	6/22/2022 7:01	2.29	6/22/2022 7:24	6.49	6/22/2022 8:47	-0.33	6/21/2022 7:35	11.29
6/21/2022 8:12	-0.07	6/22/2022 7:02	2.29	6/22/2022 7:25	6.50	6/22/2022 8:48	-0.31	6/21/2022 7:36	11.31
6/21/2022 8:13	-0.05	6/22/2022 7:03	2.29	6/22/2022 7:26	6.52	6/22/2022 8:49	-0.32	6/21/2022 7:37	11.34
6/21/2022 8:14	-0.07	6/22/2022 7:04	2.29	6/22/2022 7:27	6.51	6/22/2022 8:50	-0.29	6/21/2022 7:38	11.29
6/21/2022 8:15	-0.07	6/22/2022 7:05	2.29	6/22/2022 7:28	6.56	6/22/2022 8:51	-0.39	6/21/2022 7:39	11.32
6/21/2022 8:16	-0.05	6/22/2022 7:06	2.29	6/22/2022 7:29	6.51	6/22/2022 8:52	-0.32	6/21/2022 7:40	11.28
6/21/2022 8:17	-0.07	6/22/2022 7:07	2.29	6/22/2022 7:30	6.53	6/22/2022 8:53	-0.35	6/21/2022 7:41	11.35
6/21/2022 8:18	-0.07	6/22/2022 7:08	2.29	6/22/2022 7:31	6.52	6/22/2022 8:54	-0.32	6/21/2022 7:42	11.25
6/21/2022 8:19	-0.05	6/22/2022 7:09	2.29	6/22/2022 7:32	6.56	6/22/2022 8:55	-0.33	6/21/2022 7:43	11.28
6/21/2022 8:20	-0.07	6/22/2022 7:10	2.29	6/22/2022 7:33	6.57	6/22/2022 8:56	-0.33	6/21/2022 7:44	11.31
6/21/2022 8:21	-0.07	6/22/2022 7:11	2.29	6/22/2022 7:34	6.53	6/22/2022 8:57	-0.30	6/21/2022 7:45	11.33
6/21/2022 8:22	-0.07	6/22/2022 7:12	2.29	6/22/2022 7:35	6.53	6/22/2022 8:58	-0.31	6/21/2022 7:46	11.33
6/21/2022 8:23	-0.07	6/22/2022 7:13	2.29	6/22/2022 7:36	6.55	6/22/2022 8:59	-0.32	6/21/2022 7:47	11.28
6/21/2022 8:24	-0.05	6/22/2022 7:14	2.29	6/22/2022 7:37	6.54	6/22/2022 9:00	-0.31	6/21/2022 7:48	11.26
6/21/2022 8:25	-0.06	6/22/2022 7:15	2.29	6/22/2022 7:38	6.56	6/22/2022 9:01	-0.31	6/21/2022 7:49	11.27
6/21/2022 8:26	-0.06	6/22/2022 7:16	2.29	6/22/2022 7:39	6.55	6/22/2022 9:02	-0.33	6/21/2022 7:50	11.31
6/21/2022 8:27	-0.06	6/22/2022 7:17	2.29	6/22/2022 7:40	6.55	6/22/2022 9:03	-0.32	6/21/2022 7:51	11.30
6/21/2022 8:28	-0.05	6/22/2022 7:18	2.29	6/22/2022 7:41	6.53	6/22/2022 9:04	-0.31	6/21/2022 7:52	11.26
6/21/2022 8:29	-0.07	6/22/2022 7:19	2.29	6/22/2022 7:42	6.53	6/22/2022 9:05	-0.29	6/21/2022 7:53	11.37
6/21/2022 8:30	-0.07	6/22/2022 7:20	2.29	6/22/2022 7:43	6.56	6/22/2022 9:06	-0.33	6/21/2022 7:54	11.29
6/21/2022 8:31	-0.07	6/22/2022 7:21	2.29	6/22/2022 7:44	6.57	6/22/2022 9:07	-0.33	6/21/2022 7:55	11.30
6/21/2022 8:32	-0.07	6/22/2022 7:22	2.29	6/22/2022 7:45	6.55	6/22/2022 9:08	-0.31	6/21/2022 7:56	11.32
6/21/2022 8:33	-0.07	6/22/2022 7:23	2.29	6/22/2022 7:46	6.54	6/22/2022 9:09	-0.35	6/21/2022 7:57	11.30
6/21/2022 8:34	-0.07	6/22/2022 7:24	2.30	6/22/2022 7:47	6.52	6/22/2022 9:10	-0.34	6/21/2022 7:58	11.29
6/21/2022 8:35	-0.07	6/22/2022 7:25	2.29	6/22/2022 7:48	6.55	6/22/2022 9:11	-0.32	6/21/2022 7:59	11.34
6/21/2022 8:36	-0.07	6/22/2022 7:26	2.30	6/22/2022 7:49	6.51	6/22/2022 9:12	-0.34	6/21/2022 8:00	11.31
6/21/2022 8:37	-0.07	6/22/2022 7:27	2.30	6/22/2022 7:50	6.53	6/22/2022 9:13	-0.30	6/21/2022 8:01	11.31
6/21/2022 8:38	-0.07	6/22/2022 7:28	2.30	6/22/2022 7:51	6.53	6/22/2022 9:14	-0.32	6/21/2022 8:02	11.32
6/21/2022 8:39	-0.07	6/22/2022 7:29	2.30	6/22/2022 7:52	6.57	6/22/2022 9:15	-0.30	6/21/2022 8:03	11.32
6/21/2022 8:40	-0.07	6/22/2022 7:30	2.30	6/22/2022 7:53	6.55	6/22/2022 9:16	-0.32	6/21/2022 8:04	11.34
6/21/2022 8:41	-0.07	6/22/2022 7:31	2.30	6/22/2022 7:54	6.56	6/22/2022 9:17	-0.30	6/21/2022 8:05	11.30
6/21/2022 8:42	-0.07	6/22/2022 7:32	2.30	6/22/2022 7:55	6.55	6/22/2022 9:18	-0.32	6/21/2022 8:06	11.28
6/21/2022 8:43	-0.05	6/22/2022 7:33	2.30	6/22/2022 7:56	6.57	6/22/2022 9:19	-0.32	6/21/2022 8:07	11.31
6/21/2022 8:44	-0.07	6/22/2022 7:34	2.30	6/22/2022 7:57	6.56	6/22/2022 9:20	-0.31	6/21/2022 8:08	11.33
6/21/2022 8:45	-0.07	6/22/2022 7:35	2.30	6/22/2022 7:58	6.56	6/22/2022 9:21	-0.33	6/21/2022 8:09	11.32
6/21/2022 8:46	-0.06	6/22/2022 7:36	2.30	6/22/2022 7:59	6.56	6/22/2022 9:22	-0.33	6/21/2022 8:10	11.32
6/21/2022 8:47	-0.05	6/22/2022 7:37	2.30	6/22/2022 8:00	6.53	6/22/2022 9:23	-0.31	6/21/2022 8:11	11.31
6/21/2022 8:48	-0.07	6/22/2022 7:38	2.30	6/22/2022 8:01	6.57	6/22/2022 9:24	-0.36	6/21/2022 8:12	11.29
6/21/2022 8:49	-0.07	6/22/2022 7:39	2.30	6/22/2022 8:02	6.54	6/22/2022 9:25	-0.29	6/21/2022 8:13	11.32
6/21/2022 8:50	-0.05	6/22/2022 7:40	2.30	6/22/2022 8:03	6.55	6/22/2022 9:26	-0.30	6/21/2022 8:14	11.34
6/21/2022 8:51	-0.07	6/22/2022 7:41	2.31	6/22/2022 8:04	6.56	6/22/2022 9:27	-0.35	6/21/2022 8:15	11.33
6/21/2022 8:52	-0.07	6/22/2022 7:42	2.30	6/22/2022 8:05	6.59	6/22/2022 9:28	-0.33	6/21/2022 8:16	11.27
6/21/2022 8:53	-0.07	6/22/2022 7:43	2.31	6/22/2022 8:06	6.53	6/22/2022 9:29	-0.32	6/21/2022 8:17	11.31
6/21/2022 8:54	-0.07	6/22/2022 7:44	2.30	6/22/2022 8:07	6.54	6/22/2022 9:30	-0.32	6/21/2022 8:18	11.29
6/21/2022 8:55	-0.07	6/22/2022 7:45	2.30	6/22/2022 8:08	6.56	6/22/2022 9:31	-0.30	6/21/2022 8:19	11.32
6/21/2022 8:56	-0.07	6/22/2022 7:46	2.31	6/22/2022 8:09	6.56	6/22/2022 9:32	-0.33	6/21/2022 8:20	11.30
6/21/2022 8:57	-0.05	6/22/2022 7:47	2.31	6/22/2022 8:10	6.52	6/22/2022 9:33	-0.33	6/21/2022 8:21	11.30
6/21/2022 8:58	-0.07	6/22/2022 7:48	2.30	6/22/2022 8:11	6.58	6/22/2022 9:34	-0.30	6/21/2022 8:22	11.29
6/21/2022 8:59	-0.07	6/22/2022 7:49	2.30	6/22/2022 8:12	6.58	6/22/2022 9:35	-0.33	6/21/2022 8:23	11.31
6/21/2022 9:00	-0.06	6/22/2022 7:50	2.30	6/22/2022 8:13	6.56	6/22/2022 9:36	-0.34	6/21/2022 8:24	11.30
6/21/2022 9:01	-0.07	6/22/2022 7:51	2.30	6/22/2022 8:14	6.56	6/22/2022 9:37	-0.30	6/21/2022 8:25	11.32
6/21/2022 9:02	-0.07	6/22/2022 7:52	2.31	6/22/2022 8:15	6.54	6/22/2022 9:38	-0.28	6/21/2022 8:26	11.34
6/21/2022 9:03	-0.07	6/22/2022 7:53	2.30	6/22/2022 8:16	6.55	6/22/2022 9:39	-0.32	6/21/2022 8:27	11.35
6/21/2022 9:04	-0.07	6/22/2022 7:54	2.31	6/22/2022 8:17	6.53	6/22/2022 9:40	-0.33	6/21/2022 8:28	11.34

6/21/2022 9:05	-0.07	6/22/2022 7:55	2.30	6/22/2022 8:18	6.58	6/22/2022 9:41	-0.32	6/21/2022 8:29	11.32
6/21/2022 9:06	-0.07	6/22/2022 7:56	2.30	6/22/2022 8:19	6.58	6/22/2022 9:42	-0.30	6/21/2022 8:30	11.35
6/21/2022 9:07	-0.07	6/22/2022 7:57	2.30	6/22/2022 8:20	6.55	6/22/2022 9:43	-0.28	6/21/2022 8:31	11.29
6/21/2022 9:08	-0.05	6/22/2022 7:58	2.30	6/22/2022 8:21	6.59	6/22/2022 9:44	-0.29	6/21/2022 8:32	11.35
6/21/2022 9:09	-0.07	6/22/2022 7:59	2.31	6/22/2022 8:22	6.55	6/22/2022 9:45	-0.34	6/21/2022 8:33	11.37
6/21/2022 9:10	-0.07	6/22/2022 8:00	2.31	6/22/2022 8:23	6.55	6/22/2022 9:46	-0.30	6/21/2022 8:34	11.32
6/21/2022 9:11	-0.06	6/22/2022 8:01	2.31	6/22/2022 8:24	6.57	6/22/2022 9:47	-0.30	6/21/2022 8:35	11.26
6/21/2022 9:12	-0.05	6/22/2022 8:02	2.31	6/22/2022 8:25	6.56	6/22/2022 9:48	-0.32	6/21/2022 8:36	11.32
6/21/2022 9:13	-0.07	6/22/2022 8:03	2.31	6/22/2022 8:26	6.55	6/22/2022 9:49	-0.32	6/21/2022 8:37	11.28
6/21/2022 9:14	-0.07	6/22/2022 8:04	2.31	6/22/2022 8:27	6.58	6/22/2022 9:50	-0.33	6/21/2022 8:38	11.32
6/21/2022 9:15	-0.07	6/22/2022 8:05	2.31	6/22/2022 8:28	6.58	6/22/2022 9:51	-0.32	6/21/2022 8:39	11.29
6/21/2022 9:16	-0.07	6/22/2022 8:06	2.31	6/22/2022 8:29	6.58	6/22/2022 9:52	-0.32	6/21/2022 8:40	11.30
6/21/2022 9:17	-0.07	6/22/2022 8:07	2.31	6/22/2022 8:30	6.57	6/22/2022 9:53	-0.26	6/21/2022 8:41	11.35
6/21/2022 9:18	-0.07	6/22/2022 8:08	2.31	6/22/2022 8:31	6.59	6/22/2022 9:54	-0.33	6/21/2022 8:42	11.35
6/21/2022 9:19	-0.07	6/22/2022 8:09	2.31	6/22/2022 8:32	6.56	6/22/2022 9:55	-0.33	6/21/2022 8:43	11.28
6/21/2022 9:20	-0.07	6/22/2022 8:10	2.31	6/22/2022 8:33	6.54	6/22/2022 9:56	-0.33	6/21/2022 8:44	11.33
6/21/2022 9:21	-0.05	6/22/2022 8:11	2.31	6/22/2022 8:34	6.58	6/22/2022 9:57	-0.29	6/21/2022 8:45	11.26
6/21/2022 9:22	-0.07	6/22/2022 8:12	2.31	6/22/2022 8:35	6.58	6/22/2022 9:58	-0.31	6/21/2022 8:46	11.33
6/21/2022 9:23	-0.07	6/22/2022 8:13	2.31	6/22/2022 8:36	6.59	6/22/2022 9:59	-0.31	6/21/2022 8:47	11.35
6/21/2022 9:24	-0.07	6/22/2022 8:14	2.31	6/22/2022 8:37	6.57	6/22/2022 10:00	-0.30	6/21/2022 8:48	11.29
6/21/2022 9:25	-0.07	6/22/2022 8:15	2.31	6/22/2022 8:38	6.60	6/22/2022 10:01	-0.30	6/21/2022 8:49	11.28
6/21/2022 9:26	-0.07	6/22/2022 8:16	2.31	6/22/2022 8:39	6.56	6/22/2022 10:02	-0.32	6/21/2022 8:50	11.34
6/21/2022 9:27	-0.07	6/22/2022 8:17	2.31	6/22/2022 8:40	6.56	6/22/2022 10:03	-0.31	6/21/2022 8:51	11.31
6/21/2022 9:28	-0.07	6/22/2022 8:18	2.31	6/22/2022 8:41	6.57	6/22/2022 10:04	-0.28	6/21/2022 8:52	11.30
6/21/2022 9:29	-0.07	6/22/2022 8:19	2.31	6/22/2022 8:42	6.61	6/22/2022 10:05	-0.32	6/21/2022 8:53	11.32
6/21/2022 9:30	-0.06	6/22/2022 8:20	2.32	6/22/2022 8:43	6.57	6/22/2022 10:06	-0.32	6/21/2022 8:54	11.27
6/21/2022 9:31	-0.07	6/22/2022 8:21	2.32	6/22/2022 8:44	6.63	6/22/2022 10:07	-0.31	6/21/2022 8:55	11.32
6/21/2022 9:32	-0.07	6/22/2022 8:22	2.31	6/22/2022 8:45	6.57	6/22/2022 10:08	-0.34	6/21/2022 8:56	11.32
6/21/2022 9:33	-0.07	6/22/2022 8:23	2.31	6/22/2022 8:46	6.57	6/22/2022 10:09	-0.34	6/21/2022 8:57	11.32
6/21/2022 9:34	-0.07	6/22/2022 8:24	2.31	6/22/2022 8:47	6.60	6/22/2022 10:10	-0.33	6/21/2022 8:58	11.33
6/21/2022 9:35	-0.07	6/22/2022 8:25	2.32	6/22/2022 8:48	6.56	6/22/2022 10:11	-0.32	6/21/2022 8:59	11.32
6/21/2022 9:36	-0.07	6/22/2022 8:26	2.32	6/22/2022 8:49	6.58	6/22/2022 10:12	-0.34	6/21/2022 9:00	11.33
6/21/2022 9:37	-0.05	6/22/2022 8:27	2.32	6/22/2022 8:50	6.58	6/22/2022 10:13	-0.30	6/21/2022 9:01	11.35
6/21/2022 9:38	-0.05	6/22/2022 8:28	2.32	6/22/2022 8:51	6.61	6/22/2022 10:14	-0.32	6/21/2022 9:02	11.31
6/21/2022 9:39	-0.05	6/22/2022 8:29	2.31	6/22/2022 8:52	6.57	6/22/2022 10:15	-0.35	6/21/2022 9:03	11.34
6/21/2022 9:40	-0.07	6/22/2022 8:30	2.32	6/22/2022 8:53	6.59	6/22/2022 10:16	-0.32	6/21/2022 9:04	11.32
6/21/2022 9:41	-0.07	6/22/2022 8:31	2.32	6/22/2022 8:54	6.61	6/22/2022 10:17	-0.30	6/21/2022 9:05	11.27
6/21/2022 9:42	-0.07	6/22/2022 8:32	2.32	6/22/2022 8:55	6.58	6/22/2022 10:18	-0.34	6/21/2022 9:06	11.32
6/21/2022 9:43	-0.07	6/22/2022 8:33	2.32	6/22/2022 8:56	6.59	6/22/2022 10:19	-0.34	6/21/2022 9:07	11.34
6/21/2022 9:44	-0.07	6/22/2022 8:34	2.32	6/22/2022 8:57	6.61	6/22/2022 10:20	-0.28	6/21/2022 9:08	11.36
6/21/2022 9:45	-0.07	6/22/2022 8:35	2.32	6/22/2022 8:58	6.61	6/22/2022 10:21	-0.33	6/21/2022 9:09	11.31
6/21/2022 9:46	-0.07	6/22/2022 8:36	2.32	6/22/2022 8:59	6.57	6/22/2022 10:22	-0.37	6/21/2022 9:10	11.32
6/21/2022 9:47	-0.07	6/22/2022 8:37	2.32	6/22/2022 9:00	6.60	6/22/2022 10:23	-0.34	6/21/2022 9:11	11.35
6/21/2022 9:48	-0.07	6/22/2022 8:38	2.32	6/22/2022 9:01	6.60	6/22/2022 10:24	-0.30	6/21/2022 9:12	11.29
6/21/2022 9:49	-0.07	6/22/2022 8:39	2.32	6/22/2022 9:02	6.58	6/22/2022 10:25	-0.33	6/21/2022 9:13	11.35
6/21/2022 9:50	-0.07	6/22/2022 8:40	2.32	6/22/2022 9:03	6.59	6/22/2022 10:26	-0.31	6/21/2022 9:14	11.31
6/21/2022 9:51	-0.06	6/22/2022 8:41	2.32	6/22/2022 9:04	6.63	6/22/2022 10:27	-0.36	6/21/2022 9:15	11.30
6/21/2022 9:52	-0.07	6/22/2022 8:42	2.32	6/22/2022 9:05	6.58	6/22/2022 10:28	-0.32	6/21/2022 9:16	11.32
6/21/2022 9:53	-0.05	6/22/2022 8:43	2.32	6/22/2022 9:06	6.60	6/22/2022 10:29	-0.32	6/21/2022 9:17	11.27
6/21/2022 9:54	-0.07	6/22/2022 8:44	2.32	6/22/2022 9:07	6.60	6/22/2022 10:30	-0.33	6/21/2022 9:18	11.30
6/21/2022 9:55	-0.07	6/22/2022 8:45	2.32	6/22/2022 9:08	6.59	6/22/2022 10:31	-0.33	6/21/2022 9:19	11.33
6/21/2022 9:56	-0.07	6/22/2022 8:46	2.32	6/22/2022 9:09	6.60	6/22/2022 10:32	-0.30	6/21/2022 9:20	11.32
6/21/2022 9:57	-0.06	6/22/2022 8:47	2.32	6/22/2022 9:10	6.61	6/22/2022 10:33	-0.32	6/21/2022 9:21	11.28
6/21/2022 9:58	-0.05	6/22/2022 8:48	2.32	6/22/2022 9:11	6.59	6/22/2022 10:34	-0.34	6/21/2022 9:22	11.32
6/21/2022 9:59	-0.05	6/22/2022 8:49	2.33	6/22/2022 9:12	6.61	6/22/2022 10:35	-0.32	6/21/2022 9:23	11.32
6/21/2022 10:00	-0.07	6/22/2022 8:50	2.33	6/22/2022 9:13	6.60	6/22/2022 10:36	-0.31	6/21/2022 9:24	11.32
6/21/2022 10:01	-0.07	6/22/2022 8:51	2.32	6/22/2022 9:14	6.62	6/22/2022 10:37	-0.32	6/21/2022 9:25	11.31
6/21/2022 10:02	-0.07	6/22/2022 8:52	2.33	6/22/2022 9:15	6.57	6/22/2022 10:38	-0.30	6/21/2022 9:26	11.34
6/21/2022 10:03	-0.07	6/22/2022 8:53	2.33	6/22/2022 9:16	6.62	6/22/2022 10:39	-0.34	6/21/2022 9:27	11.37
6/21/2022 10:04	-0.07	6/22/2022 8:54	2.33	6/22/2022 9:17	6.63	6/22/2022 10:40	-0.34	6/21/2022 9:28	11.30
6/21/2022 10:05	-0.07	6/22/2022 8:55	2.32	6/22/2022 9:18	6.59	6/22/2022 10:41	-0.32	6/21/2022 9:29	11.29
6/21/2022 10:06	-0.07	6/22/2022 8:56	2.33	6/22/2022 9:19	6.60	6/22/2022 10:42	-0.34	6/21/2022 9:30	11.30
6/21/2022 10:07	-0.07	6/22/2022 8:57	2.33	6/22/2022 9:20	6.62	6/22/2022 10:43	-0.35	6/21/2022 9:31	11.35
6/21/2022 10:08	-0.05	6/22/2022 8:58	2.33	6/22/2022 9:21	6.65	6/22/2022 10:44	-0.33	6/21/2022 9:32	11.32
6/21/2022 10:09	-0.07	6/22/2022 8:59	2.33	6/22/2022 9:22	6.62	6/22/2022 10:45	-0.33	6/21/2022 9:33	11.32
6/21/2022 10:10	-0.05	6/22/2022 9:00	2.33	6/22/2022 9:23	6.58	6/22/2022 10:46	-0.30	6/21/2022 9:34	11.33
6/21/2022 10:11	-0.07	6/22/2022 9:01	2.33	6/22/2022 9:24	6.65	6/22/2022 10:47	-0.33	6/21/2022 9:35	11.35
6/21/2022 10:12	-0.05	6/22/2022 9:02	2.33	6/22/2022 9:25	6.64	6/22/2022 10:48	-0.31	6/21/2022 9:36	11.33
6/21/2022 10:13	-0.07	6/22/2022 9:03	2.33	6/22/2022 9:26	6.64	6/22/2022 10:49	-0.32	6/21/2022 9:37	11.35
6/21/2022 10:14	-0.07	6/22/2022 9:04	2.33	6/22/2022 9:27	6.61	6/22/2022 10:50	-0.33	6/21/2022 9:38	11.36
6/21/2022 10:15	-0.07	6/22/2022 9:05	2.33	6/22/2022 9:28	6.60	6/22/2022 10:51	-0.35	6/21/2022 9:39	11.29
6/21/2022 10:16	-0.07	6/22/2022 9:06	2.33	6/22/2022 9:29	6.63	6/22/2022 10:52	-0.34	6/21/2022 9:40	11.29
6/21/2022 10:17	-0.05	6/22/2022 9:07	2.33	6/22/2022 9:30	6.64	6/22/2022 10:53	-0.32	6/21/2022 9:41	11.32
6/21/2022 10:18	-0.07	6/22/2022 9:08	2.33	6/22/2022 9:31	6.60	6/22/2022 10:54	-0.33	6/21/2022 9:42	11.37
6/21/2022 10:19	-0.07	6/22/2022 9:09	2.33	6/22/2022 9:32	6.64	6/22/2022 10:55	-0.29	6/21/2022 9:43	11.28
6/21/2022 10:20	-0.07	6/22/2022 9:10	2.33	6/22/2022 9:33	6.61	6/22/2022 10:56	-0.31	6/21/2022 9:44	11.26
6/21/2022 10:21	-0.07	6/22/2022 9:11	2.33	6/22/2022 9:34	6.64	6/22/2022 10:57	-0.31	6/21/2022 9:45	11.35
6/21/2022 10:22	-0.07	6/22/2022 9:12	2.33	6/22/2022 9:35	6.63	6/22/2022 10:58	-0.29	6/21/2022 9:46	11.32
6/21/2022 10:23	-0.07	6/22/2022 9:13	2.33	6/22/2022 9:36	6.61	6/22/2022 10:59	-0.33	6/21/2022 9:47	11.31
6/21/2022 10:24	-0.07	6/22/2022 9:14	2.33	6/22/2022 9:37	6.61	6/22/2022 11:00	-0.32	6/21/2022 9:48	11.34
6/21/2022 10:25	-0.07	6/22/2022 9:15	2.33	6/22/2022 9:38	6.62	6/22/2022 11:01	-0.29	6/21/2022 9:49	11.33
6/21/2022 10:26	-0.05	6/22/2022 9:16	2.33	6/22/2022 9:39	6.61	6/22/2022 11:02	-0.32	6/21/2022 9:50	11.34
6/21/2022 10:27	-0.07	6/22/2022 9:17	2.33	6/22/2022 9:40	6.63	6/22/2022 11:03	-0.32	6/21/2022 9:51	11.33
6/21/2022 10:28	-0.07	6/22/2022 9:18	2.33	6/22/2022 9:41	6.66	6/22/2022 11:04	-0.33	6/21/2022 9:52	11.29
6/21/2022 10:29	-0.07	6/22/2022 9:19	2.33	6/22/2022 9:42	6.63	6/22/2022 11:05	-0.31	6/21/2022 9:53	11.33
6/21/2022 10:30	-0.06	6/22/2022 9:20	2.34	6/22/2022 9:43	6.62	6/22/2022 11:06	-0.32	6/21/2022 9:54	11.34
6/21/2022 10:31	-0.07	6/22/2022 9:21	2.34	6/22/2022 9:44	6.62	6/22/2022 11:07	-0.26	6/21/2022 9:55	11.29
6/21/2022 10:32	-0.05	6/22/2022 9:22	2.34	6/22/2022 9:45	6.63	6/22/2022 11:08	-0.31	6/21/2022 9:56	11.34

6/21/2022 10:33	-0.07	6/22/2022 9:23	2.34	6/22/2022 9:46	6.62	6/22/2022 11:09	-0.31	6/21/2022 9:57	11.31
6/21/2022 10:34	-0.05	6/22/2022 9:24	2.34	6/22/2022 9:47	6.65	6/22/2022 11:10	-0.32	6/21/2022 9:58	11.33
6/21/2022 10:35	-0.07	6/22/2022 9:25	2.34	6/22/2022 9:48	6.65	6/22/2022 11:11	-0.32	6/21/2022 9:59	11.27
6/21/2022 10:36	-0.05	6/22/2022 9:26	2.34	6/22/2022 9:49	6.60	6/22/2022 11:12	-0.34	6/21/2022 10:00	11.35
6/21/2022 10:37	-0.05	6/22/2022 9:27	2.34	6/22/2022 9:50	6.61	6/22/2022 11:13	-0.31	6/21/2022 10:01	11.33
6/21/2022 10:38	-0.07	6/22/2022 9:28	2.34	6/22/2022 9:51	6.64	6/22/2022 11:14	-0.34	6/21/2022 10:02	11.31
6/21/2022 10:39	-0.07	6/22/2022 9:29	2.34	6/22/2022 9:52	6.63	6/22/2022 11:15	-0.36	6/21/2022 10:03	11.38
6/21/2022 10:40	-0.05	6/22/2022 9:30	2.34	6/22/2022 9:53	6.61	6/22/2022 11:16	-0.35	6/21/2022 10:04	11.28
6/21/2022 10:41	-0.05	6/22/2022 9:31	2.34	6/22/2022 9:54	6.63	6/22/2022 11:17	-0.32	6/21/2022 10:05	11.34
6/21/2022 10:42	-0.07	6/22/2022 9:32	2.34	6/22/2022 9:55	6.63	6/22/2022 11:18	-0.31	6/21/2022 10:06	11.35
6/21/2022 10:43	-0.07	6/22/2022 9:33	2.34	6/22/2022 9:56	6.60	6/22/2022 11:19	-0.34	6/21/2022 10:07	11.37
6/21/2022 10:44	-0.07	6/22/2022 9:34	2.34	6/22/2022 9:57	6.66	6/22/2022 11:20	-0.30	6/21/2022 10:08	11.37
6/21/2022 10:45	-0.07	6/22/2022 9:35	2.34	6/22/2022 9:58	6.64	6/22/2022 11:21	-0.34	6/21/2022 10:09	11.35
6/21/2022 10:46	-0.07	6/22/2022 9:36	2.34	6/22/2022 9:59	6.61	6/22/2022 11:22	-0.31	6/21/2022 10:10	11.36
6/21/2022 10:47	-0.07	6/22/2022 9:37	2.34	6/22/2022 10:00	6.66	6/22/2022 11:23	-0.34	6/21/2022 10:11	11.38
6/21/2022 10:48	-0.07	6/22/2022 9:38	2.34	6/22/2022 10:01	6.59	6/22/2022 11:24	-0.31	6/21/2022 10:12	11.31
6/21/2022 10:49	-0.07	6/22/2022 9:39	2.34	6/22/2022 10:02	6.65	6/22/2022 11:25	-0.33	6/21/2022 10:13	11.37
6/21/2022 10:50	-0.07	6/22/2022 9:40	2.34	6/22/2022 10:03	6.57	6/22/2022 11:26	-0.31	6/21/2022 10:14	11.32
6/21/2022 10:51	-0.07	6/22/2022 9:41	2.34	6/22/2022 10:04	6.67	6/22/2022 11:27	-0.31	6/21/2022 10:15	11.31
6/21/2022 10:52	-0.06	6/22/2022 9:42	2.34	6/22/2022 10:05	6.63	6/22/2022 11:28	-0.34	6/21/2022 10:16	11.35
6/21/2022 10:53	-0.07	6/22/2022 9:43	2.34	6/22/2022 10:06	6.61	6/22/2022 11:29	-0.31	6/21/2022 10:17	11.36
6/21/2022 10:54	-0.07	6/22/2022 9:44	2.34	6/22/2022 10:07	6.63	6/22/2022 11:30	-0.30	6/21/2022 10:18	11.32
6/21/2022 10:55	-0.05	6/22/2022 9:45	2.34	6/22/2022 10:08	6.63	6/22/2022 11:31	-0.32	6/21/2022 10:19	11.37
6/21/2022 10:56	-0.07	6/22/2022 9:46	2.35	6/22/2022 10:09	6.64	6/22/2022 11:32	-0.32	6/21/2022 10:20	11.36
6/21/2022 10:57	-0.07	6/22/2022 9:47	2.34	6/22/2022 10:10	6.62	6/22/2022 11:33	-0.31	6/21/2022 10:21	11.35
6/21/2022 10:58	-0.07	6/22/2022 9:48	2.35	6/22/2022 10:11	6.62	6/22/2022 11:34	-0.29	6/21/2022 10:22	11.30
6/21/2022 10:59	-0.07	6/22/2022 9:49	2.35	6/22/2022 10:12	6.63	6/22/2022 11:35	-0.31	6/21/2022 10:23	11.31
6/21/2022 11:00	-0.07	6/22/2022 9:50	2.34	6/22/2022 10:13	6.64	6/22/2022 11:36	-0.33	6/21/2022 10:24	11.31
6/21/2022 11:01	-0.05	6/22/2022 9:51	2.35	6/22/2022 10:14	6.59	6/22/2022 11:37	-0.32	6/21/2022 10:25	11.38
6/21/2022 11:02	-0.07	6/22/2022 9:52	2.34	6/22/2022 10:15	6.64	6/22/2022 11:38	-0.35	6/21/2022 10:26	11.35
6/21/2022 11:03	-0.06	6/22/2022 9:53	2.34	6/22/2022 10:16	6.65	6/22/2022 11:39	-0.35	6/21/2022 10:27	11.33
6/21/2022 11:04	-0.07	6/22/2022 9:54	2.35	6/22/2022 10:17	6.65	6/22/2022 11:40	-0.31	6/21/2022 10:28	11.33
6/21/2022 11:05	-0.07	6/22/2022 9:55	2.34	6/22/2022 10:18	6.64	6/22/2022 11:41	-0.34	6/21/2022 10:29	11.36
6/21/2022 11:06	-0.07	6/22/2022 9:56	2.35	6/22/2022 10:19	6.62	6/22/2022 11:42	-0.30	6/21/2022 10:30	11.38
6/21/2022 11:07	-0.05	6/22/2022 9:57	2.34	6/22/2022 10:20	6.67	6/22/2022 11:43	-0.34	6/21/2022 10:31	11.37
6/21/2022 11:08	-0.07	6/22/2022 9:58	2.34	6/22/2022 10:21	6.67	6/22/2022 11:44	-0.30	6/21/2022 10:32	11.29
6/21/2022 11:09	-0.05	6/22/2022 9:59	2.35	6/22/2022 10:22	6.64	6/22/2022 11:45	-0.30	6/21/2022 10:33	11.34
6/21/2022 11:10	-0.07	6/22/2022 10:00	2.34	6/22/2022 10:23	6.61	6/22/2022 11:46	-0.35	6/21/2022 10:34	11.32
6/21/2022 11:11	-0.05	6/22/2022 10:01	2.34	6/22/2022 10:24	6.63	6/22/2022 11:47	-0.29	6/21/2022 10:35	11.28
6/21/2022 11:12	-0.05	6/22/2022 10:02	2.35	6/22/2022 10:25	6.64	6/22/2022 11:48	-0.33	6/21/2022 10:36	11.32
6/21/2022 11:13	-0.07	6/22/2022 10:03	2.34	6/22/2022 10:26	6.63	6/22/2022 11:49	-0.34	6/21/2022 10:37	11.38
6/21/2022 11:14	-0.05	6/22/2022 10:04	2.34	6/22/2022 10:27	6.62	6/22/2022 11:50	-0.32	6/21/2022 10:38	11.31
6/21/2022 11:15	-0.07	6/22/2022 10:05	2.35	6/22/2022 10:28	6.65	6/22/2022 11:51	-0.28	6/21/2022 10:39	11.32
6/21/2022 11:16	-0.07	6/22/2022 10:06	2.35	6/22/2022 10:29	6.67	6/22/2022 11:52	-0.35	6/21/2022 10:40	11.33
6/21/2022 11:17	-0.07	6/22/2022 10:07	2.34	6/22/2022 10:30	6.63	6/22/2022 11:53	-0.33	6/21/2022 10:41	11.28
6/21/2022 11:18	-0.05	6/22/2022 10:08	2.34	6/22/2022 10:31	6.66	6/22/2022 11:54	-0.31	6/21/2022 10:42	11.36
6/21/2022 11:19	-0.07	6/22/2022 10:09	2.35	6/22/2022 10:32	6.64	6/22/2022 11:55	-0.31	6/21/2022 10:43	11.31
6/21/2022 11:20	-0.07	6/22/2022 10:10	2.35	6/22/2022 10:33	6.65	6/22/2022 11:56	-0.32	6/21/2022 10:44	11.35
6/21/2022 11:21	-0.07	6/22/2022 10:11	2.35	6/22/2022 10:34	6.65	6/22/2022 11:57	-0.31	6/21/2022 10:45	11.29
6/21/2022 11:22	-0.05	6/22/2022 10:12	2.35	6/22/2022 10:35	6.66	6/22/2022 11:58	-0.32	6/21/2022 10:46	11.31
6/21/2022 11:23	-0.05	6/22/2022 10:13	2.35	6/22/2022 10:36	6.64	6/22/2022 11:59	-0.35	6/21/2022 10:47	11.36
6/21/2022 11:24	-0.07	6/22/2022 10:14	2.35	6/22/2022 10:37	6.65	6/22/2022 12:00	-0.29	6/21/2022 10:48	11.34
6/21/2022 11:25	-0.05	6/22/2022 10:15	2.35	6/22/2022 10:38	6.67	6/22/2022 12:01	-0.29	6/21/2022 10:49	11.33
6/21/2022 11:26	-0.07	6/22/2022 10:16	2.35	6/22/2022 10:39	6.66	6/22/2022 12:02	-0.33	6/21/2022 10:50	11.30
6/21/2022 11:27	-0.07	6/22/2022 10:17	2.35	6/22/2022 10:40	6.64	6/22/2022 12:03	-0.30	6/21/2022 10:51	11.36
6/21/2022 11:28	-0.05	6/22/2022 10:18	2.35	6/22/2022 10:41	6.63	6/22/2022 12:04	-0.31	6/21/2022 10:52	11.34
6/21/2022 11:29	-0.07	6/22/2022 10:19	2.35	6/22/2022 10:42	6.64	6/22/2022 12:05	-0.32	6/21/2022 10:53	11.38
6/21/2022 11:30	-0.07	6/22/2022 10:20	2.35	6/22/2022 10:43	6.67	6/22/2022 12:06	-0.33	6/21/2022 10:54	11.34
6/21/2022 11:31	-0.07	6/22/2022 10:21	2.35	6/22/2022 10:44	6.67	6/22/2022 12:07	-0.32	6/21/2022 10:55	11.35
6/21/2022 11:32	-0.07	6/22/2022 10:22	2.35	6/22/2022 10:45	6.61	6/22/2022 12:08	-0.32	6/21/2022 10:56	11.30
6/21/2022 11:33	-0.07	6/22/2022 10:23	2.35	6/22/2022 10:46	6.67	6/22/2022 12:09	-0.33	6/21/2022 10:57	11.29
6/21/2022 11:34	-0.05	6/22/2022 10:24	2.35	6/22/2022 10:47	6.67	6/22/2022 12:10	-0.32	6/21/2022 10:58	11.34
6/21/2022 11:35	-0.07	6/22/2022 10:25	2.35	6/22/2022 10:48	6.66	6/22/2022 12:11	-0.32	6/21/2022 10:59	11.33
6/21/2022 11:36	-0.07	6/22/2022 10:26	2.35	6/22/2022 10:49	6.64	6/22/2022 12:12	-0.34	6/21/2022 11:00	11.33
6/21/2022 11:37	-0.05	6/22/2022 10:27	2.35	6/22/2022 10:50	6.66	6/22/2022 12:13	-0.35	6/21/2022 11:01	11.32
6/21/2022 11:38	-0.07	6/22/2022 10:28	2.36	6/22/2022 10:51	6.63	6/22/2022 12:14	-0.32	6/21/2022 11:02	11.31
6/21/2022 11:39	-0.07	6/22/2022 10:29	2.35	6/22/2022 10:52	6.66	6/22/2022 12:15	-0.34	6/21/2022 11:03	11.35
6/21/2022 11:40	-0.07	6/22/2022 10:30	2.35	6/22/2022 10:53	6.62	6/22/2022 12:16	-0.31	6/21/2022 11:04	11.34
6/21/2022 11:41	-0.05	6/22/2022 10:31	2.35	6/22/2022 10:54	6.65	6/22/2022 12:17	-0.35	6/21/2022 11:05	11.35
6/21/2022 11:42	-0.07	6/22/2022 10:32	2.36	6/22/2022 10:55	6.69	6/22/2022 12:18	-0.30	6/21/2022 11:06	11.33
6/21/2022 11:43	-0.07	6/22/2022 10:33	2.35	6/22/2022 10:56	6.66	6/22/2022 12:19	-0.33	6/21/2022 11:07	11.30
6/21/2022 11:44	-0.07	6/22/2022 10:34	2.36	6/22/2022 10:57	6.66	6/22/2022 12:20	-0.33	6/21/2022 11:08	11.33
6/21/2022 11:45	-0.07	6/22/2022 10:35	2.35	6/22/2022 10:58	6.65	6/22/2022 12:21	-0.30	6/21/2022 11:09	11.34
6/21/2022 11:46	-0.07	6/22/2022 10:36	2.36	6/22/2022 10:59	6.70	6/22/2022 12:22	-0.30	6/21/2022 11:10	11.36
6/21/2022 11:47	-0.07	6/22/2022 10:37	2.36	6/22/2022 11:00	6.70	6/22/2022 12:23	-0.33	6/21/2022 11:11	11.32
6/21/2022 11:48	-0.07	6/22/2022 10:38	2.35	6/22/2022 11:01	6.67	6/22/2022 12:24	-0.33	6/21/2022 11:12	11.34
6/21/2022 11:49	-0.07	6/22/2022 10:39	2.36	6/22/2022 11:02	6.66	6/22/2022 12:25	-0.32	6/21/2022 11:13	11.34
6/21/2022 11:50	-0.05	6/22/2022 10:40	2.36	6/22/2022 11:03	6.66	6/22/2022 12:26	-0.33	6/21/2022 11:14	11.35
6/21/2022 11:51	-0.07	6/22/2022 10:41	2.36	6/22/2022 11:04	6.65	6/22/2022 12:27	-0.28	6/21/2022 11:15	11.34
6/21/2022 11:52	-0.07	6/22/2022 10:42	2.36	6/22/2022 11:05	6.63	6/22/2022 12:28	-0.32	6/21/2022 11:16	11.30
6/21/2022 11:53	-0.07	6/22/2022 10:43	2.35	6/22/2022 11:06	6.68	6/22/2022 12:29	-0.31	6/21/2022 11:17	11.37
6/21/2022 11:54	-0.07	6/22/2022 10:44	2.36	6/22/2022 11:07	6.68	6/22/2022 12:30	-0.31	6/21/2022 11:18	11.35
6/21/2022 11:55	-0.07	6/22/2022 10:45	2.36	6/22/2022 11:08	6.67	6/22/2022 12:31	-0.30	6/21/2022 11:19	11.34
6/21/2022 11:56	-0.07	6/22/2022 10:46	2.36	6/22/2022 11:09	6.68	6/22/2022 12:32	-0.32	6/21/2022 11:20	11.30
6/21/2022 11:57	-0.07	6/22/2022 10:47	2.36	6/22/2022 11:10	6.69	6/22/2022 12:33	-0.32	6/21/2022 11:21	11.32
6/21/2022 11:58	-0.07	6/22/2022 10:48	2.36	6/22/2022 11:11	6.66	6/22/2022 12:34	-0.31	6/21/2022 11:22	11.33
6/21/2022 11:59	-0.05	6/22/2022 10:49	2.36	6/22/2022 11:12	6.65	6/22/2022 12:35	-0.32	6/21/2022 11:23	11.37
6/21/2022 12:00	-0.07	6/22/2022 10:50	2.36	6/22/2022 11:13	6.68	6/22/2022 12:36	-0.26	6/21/2022 11:24	11.30

6/21/2022 12:01	-0.05	6/22/2022 10:51	2.36	6/22/2022 11:14	6.65	6/22/2022 12:37	-0.33	6/21/2022 11:25	11.30
6/21/2022 12:02	-0.07	6/22/2022 10:52	2.36	6/22/2022 11:15	6.68	6/22/2022 12:38	-0.33	6/21/2022 11:26	11.40
6/21/2022 12:03	-0.07	6/22/2022 10:53	2.36	6/22/2022 11:16	6.67	6/22/2022 12:39	-0.34	6/21/2022 11:27	11.34
6/21/2022 12:04	-0.05	6/22/2022 10:54	2.36	6/22/2022 11:17	6.70	6/22/2022 12:40	-0.27	6/21/2022 11:28	11.30
6/21/2022 12:05	-0.09	6/22/2022 10:55	2.36	6/22/2022 11:18	6.64	6/22/2022 12:41	-0.34	6/21/2022 11:29	11.30
6/21/2022 12:06	-0.08	6/22/2022 10:56	2.36	6/22/2022 11:19	6.69	6/22/2022 12:42	-0.32	6/21/2022 11:30	11.33
6/21/2022 12:07	-0.06	6/22/2022 10:57	2.36	6/22/2022 11:20	6.65	6/22/2022 12:43	-0.35	6/21/2022 11:31	11.32
6/21/2022 12:08	-0.06	6/22/2022 10:58	2.36	6/22/2022 11:21	6.65	6/22/2022 12:44	-0.35	6/21/2022 11:32	11.35
6/21/2022 12:09	-0.04	6/22/2022 10:59	2.36	6/22/2022 11:22	6.66	6/22/2022 12:45	-0.32	6/21/2022 11:33	11.33
6/21/2022 12:10	-0.06	6/22/2022 11:00	2.36	6/22/2022 11:23	6.65	6/22/2022 12:46	-0.33	6/21/2022 11:34	11.35
6/21/2022 12:11	-0.06	6/22/2022 11:01	2.36	6/22/2022 11:24	6.68	6/22/2022 12:47	-0.34	6/21/2022 11:35	11.38
6/21/2022 12:12	-0.06	6/22/2022 11:02	2.36	6/22/2022 11:25	6.68	6/22/2022 12:48	-0.30	6/21/2022 11:36	11.38
6/21/2022 12:13	-0.06	6/22/2022 11:03	2.36	6/22/2022 11:26	6.66	6/22/2022 12:49	-0.28	6/21/2022 11:37	11.37
6/21/2022 12:14	-0.06	6/22/2022 11:04	2.36	6/22/2022 11:27	6.72	6/22/2022 12:50	-0.32	6/21/2022 11:38	11.34
6/21/2022 12:15	-0.05	6/22/2022 11:05	2.36	6/22/2022 11:28	6.66	6/22/2022 12:51	-0.32	6/21/2022 11:39	11.33
6/21/2022 12:16	-0.05	6/22/2022 11:06	2.36	6/22/2022 11:29	6.67	6/22/2022 12:52	-0.28	6/21/2022 11:40	11.35
6/21/2022 12:17	-0.06	6/22/2022 11:07	2.36	6/22/2022 11:30	6.70	6/22/2022 12:53	-0.31	6/21/2022 11:41	11.39
6/21/2022 12:18	-0.06	6/22/2022 11:08	2.36	6/22/2022 11:31	6.69	6/22/2022 12:54	-0.31	6/21/2022 11:42	11.37
6/21/2022 12:19	-0.06	6/22/2022 11:09	2.36	6/22/2022 11:32	6.75	6/22/2022 12:55	-0.32	6/21/2022 11:43	11.36
6/21/2022 12:20	-0.06	6/22/2022 11:10	2.36	6/22/2022 11:33	6.73	6/22/2022 12:56	-0.33	6/21/2022 11:44	11.37
6/21/2022 12:21	-0.05	6/22/2022 11:11	2.36	6/22/2022 11:34	6.67	6/22/2022 12:57	-0.36	6/21/2022 11:45	11.36
6/21/2022 12:22	-0.05	6/22/2022 11:12	2.36	6/22/2022 11:35	6.67	6/22/2022 12:58	-0.30	6/21/2022 11:46	11.38
6/21/2022 12:23	-0.07	6/22/2022 11:13	2.36	6/22/2022 11:36	6.70	6/22/2022 12:59	-0.32	6/21/2022 11:47	11.33
6/21/2022 12:24	-0.07	6/22/2022 11:14	2.36	6/22/2022 11:37	6.72	6/22/2022 13:00	-0.33	6/21/2022 11:48	11.35
6/21/2022 12:25	-0.06	6/22/2022 11:15	2.37	6/22/2022 11:38	6.65	6/22/2022 13:01	-0.30	6/21/2022 11:49	11.37
6/21/2022 12:26	-0.06	6/22/2022 11:16	2.36	6/22/2022 11:39	6.65	6/22/2022 13:02	-0.29	6/21/2022 11:50	11.36
6/21/2022 12:27	-0.05	6/22/2022 11:17	2.37	6/22/2022 11:40	6.72	6/22/2022 13:03	-0.34	6/21/2022 11:51	11.35
6/21/2022 12:28	-0.07	6/22/2022 11:18	2.37	6/22/2022 11:41	6.66	6/22/2022 13:04	-0.30	6/21/2022 11:52	11.31
6/21/2022 12:29	-0.05	6/22/2022 11:19	2.37	6/22/2022 11:42	6.73	6/22/2022 13:05	-0.29	6/21/2022 11:53	11.37
6/21/2022 12:30	-0.06	6/22/2022 11:20	2.37	6/22/2022 11:43	6.64	6/22/2022 13:06	-0.34	6/21/2022 11:54	11.30
6/21/2022 12:31	-0.05	6/22/2022 11:21	2.37	6/22/2022 11:44	6.67	6/22/2022 13:07	-0.35	6/21/2022 11:55	11.34
6/21/2022 12:32	-0.05	6/22/2022 11:22	2.37	6/22/2022 11:45	6.72	6/22/2022 13:08	-0.29	6/21/2022 11:56	11.35
6/21/2022 12:33	-0.06	6/22/2022 11:23	2.37	6/22/2022 11:46	6.69	6/22/2022 13:09	-0.30	6/21/2022 11:57	11.32
6/21/2022 12:34	-0.06	6/22/2022 11:24	2.36	6/22/2022 11:47	6.71	6/22/2022 13:10	-0.35	6/21/2022 11:58	11.32
6/21/2022 12:35	-0.06	6/22/2022 11:25	2.36	6/22/2022 11:48	6.72	6/22/2022 13:11	-0.36	6/21/2022 11:59	11.36
6/21/2022 12:36	-0.04	6/22/2022 11:26	2.37	6/22/2022 11:49	6.67	6/22/2022 13:12	-0.33	6/21/2022 12:00	11.30
6/21/2022 12:37	-0.05	6/22/2022 11:27	2.37	6/22/2022 11:50	6.70	6/22/2022 13:13	-0.32	6/21/2022 12:01	11.37
6/21/2022 12:38	-0.06	6/22/2022 11:28	2.37	6/22/2022 11:51	6.64	6/22/2022 13:14	-0.34	6/21/2022 12:02	11.31
6/21/2022 12:39	-0.04	6/22/2022 11:29	2.37	6/22/2022 11:52	6.69	6/22/2022 13:15	-0.31	6/21/2022 12:03	11.33
6/21/2022 12:40	-0.06	6/22/2022 11:30	2.37	6/22/2022 11:53	6.65	6/22/2022 13:16	-0.34	6/21/2022 12:04	11.31
6/21/2022 12:41	-0.06	6/22/2022 11:31	2.37	6/22/2022 11:54	6.71	6/22/2022 13:17	-0.31	6/21/2022 12:05	11.37
6/21/2022 12:42	-0.04	6/22/2022 11:32	2.37	6/22/2022 11:55	6.71	6/22/2022 13:18	-0.33	6/21/2022 12:06	11.30
6/21/2022 12:43	-0.06	6/22/2022 11:33	2.37	6/22/2022 11:56	6.65	6/22/2022 13:19	-0.35	6/21/2022 12:07	11.33
6/21/2022 12:44	-0.04	6/22/2022 11:34	2.37	6/22/2022 11:57	6.68	6/22/2022 13:20	-0.29	6/21/2022 12:08	11.33
6/21/2022 12:45	-0.06	6/22/2022 11:35	2.37	6/22/2022 11:58	6.69	6/22/2022 13:21	-0.34	6/21/2022 12:09	11.39
6/21/2022 12:46	-0.07	6/22/2022 11:36	2.37	6/22/2022 11:59	6.68	6/22/2022 13:22	-0.36	6/21/2022 12:10	11.36
6/21/2022 12:47	-0.06	6/22/2022 11:37	2.37	6/22/2022 12:00	6.66	6/22/2022 13:23	-0.33	6/21/2022 12:11	11.35
6/21/2022 12:48	-0.06	6/22/2022 11:38	2.37	6/22/2022 12:01	6.69	6/22/2022 13:24	-0.32	6/21/2022 12:12	11.40
6/21/2022 12:49	-0.04	6/22/2022 11:39	2.37	6/22/2022 12:02	6.72	6/22/2022 13:25	-0.34	6/21/2022 12:13	11.39
6/21/2022 12:50	-0.05	6/22/2022 11:40	2.37	6/22/2022 12:03	6.68	6/22/2022 13:26	-0.34	6/21/2022 12:14	11.30
6/21/2022 12:51	-0.06	6/22/2022 11:41	2.37	6/22/2022 12:04	6.69	6/22/2022 13:27	-0.31	6/21/2022 12:15	11.33
6/21/2022 12:52	-0.07	6/22/2022 11:42	2.37	6/22/2022 12:05	6.70	6/22/2022 13:28	-0.31	6/21/2022 12:16	11.38
6/21/2022 12:53	-0.05	6/22/2022 11:43	2.37	6/22/2022 12:06	6.68	6/22/2022 13:29	-0.35	6/21/2022 12:17	11.32
6/21/2022 12:54	-0.06	6/22/2022 11:44	2.37	6/22/2022 12:07	6.67	6/22/2022 13:30	-0.30	6/21/2022 12:18	11.32
6/21/2022 12:55	-0.05	6/22/2022 11:45	2.37	6/22/2022 12:08	6.70	6/22/2022 13:31	-0.32	6/21/2022 12:19	11.36
6/21/2022 12:56	-0.04	6/22/2022 11:46	2.37	6/22/2022 12:09	6.68	6/22/2022 13:32	-0.32	6/21/2022 12:20	11.36
6/21/2022 12:57	-0.06	6/22/2022 11:47	2.37	6/22/2022 12:10	6.70	6/22/2022 13:33	-0.29	6/21/2022 12:21	11.36
6/21/2022 12:58	-0.06	6/22/2022 11:48	2.37	6/22/2022 12:11	6.70	6/22/2022 13:34	-0.36	6/21/2022 12:22	11.33
6/21/2022 12:59	-0.05	6/22/2022 11:49	2.37	6/22/2022 12:12	6.71	6/22/2022 13:35	-0.33	6/21/2022 12:23	11.37
6/21/2022 13:00	-0.06	6/22/2022 11:50	2.37	6/22/2022 12:13	6.66	6/22/2022 13:36	-0.32	6/21/2022 12:24	11.28
6/21/2022 13:01	-0.06	6/22/2022 11:51	2.38	6/22/2022 12:14	6.66	6/22/2022 13:37	-0.36	6/21/2022 12:25	11.38
6/21/2022 13:02	-0.06	6/22/2022 11:52	2.37	6/22/2022 12:15	6.73	6/22/2022 13:38	-0.37	6/21/2022 12:26	11.34
6/21/2022 13:03	-0.07	6/22/2022 11:53	2.37	6/22/2022 12:16	6.70	6/22/2022 13:39	-0.34	6/21/2022 12:27	11.32
6/21/2022 13:04	-0.05	6/22/2022 11:54	2.37	6/22/2022 12:17	6.72	6/22/2022 13:40	-0.32	6/21/2022 12:28	11.41
6/21/2022 13:05	-0.06	6/22/2022 11:55	2.37	6/22/2022 12:18	6.70	6/22/2022 13:41	-0.29	6/21/2022 12:29	11.38
6/21/2022 13:06	-0.06	6/22/2022 11:56	2.37	6/22/2022 12:19	6.70	6/22/2022 13:42	-0.29	6/21/2022 12:30	11.38
6/21/2022 13:07	-0.04	6/22/2022 11:57	2.37	6/22/2022 12:20	6.75	6/22/2022 13:43	-0.30	6/21/2022 12:31	11.34
6/21/2022 13:08	-0.06	6/22/2022 11:58	2.37	6/22/2022 12:21	6.72	6/22/2022 13:44	-0.33	6/21/2022 12:32	11.34
6/21/2022 13:09	-0.06	6/22/2022 11:59	2.37	6/22/2022 12:22	6.70	6/22/2022 13:45	-0.30	6/21/2022 12:33	11.35
6/21/2022 13:10	-0.06	6/22/2022 12:00	2.38	6/22/2022 12:23	6.73	6/22/2022 13:46	-0.33	6/21/2022 12:34	11.31
6/21/2022 13:11	-0.04	6/22/2022 12:01	2.38	6/22/2022 12:24	6.72	6/22/2022 13:47	-0.32	6/21/2022 12:35	11.37
6/21/2022 13:12	-0.05	6/22/2022 12:02	2.37	6/22/2022 12:25	6.69	6/22/2022 13:48	-0.33	6/21/2022 12:36	11.34
6/21/2022 13:13	-0.06	6/22/2022 12:03	2.37	6/22/2022 12:26	6.67	6/22/2022 13:49	-0.33	6/21/2022 12:37	11.34
6/21/2022 13:14	-0.05	6/22/2022 12:04	2.37	6/22/2022 12:27	6.75	6/22/2022 13:50	-0.30	6/21/2022 12:38	11.35
6/21/2022 13:15	-0.06	6/22/2022 12:05	2.37	6/22/2022 12:28	6.68	6/22/2022 13:51	-0.31	6/21/2022 12:39	11.33
6/21/2022 13:16	-0.06	6/22/2022 12:06	2.38	6/22/2022 12:29	6.77	6/22/2022 13:52	-0.31	6/21/2022 12:40	11.34
6/21/2022 13:17	-0.06	6/22/2022 12:07	2.37	6/22/2022 12:30	6.70	6/22/2022 13:53	-0.30	6/21/2022 12:41	11.40
6/21/2022 13:18	-0.06	6/22/2022 12:08	2.38	6/22/2022 12:31	6.73	6/22/2022 13:54	-0.33	6/21/2022 12:42	11.33
6/21/2022 13:19	-0.06	6/22/2022 12:09	2.38	6/22/2022 12:32	6.71	6/22/2022 13:55	-0.35	6/21/2022 12:43	11.32
6/21/2022 13:20	-0.06	6/22/2022 12:10	2.38	6/22/2022 12:33	6.72	6/22/2022 13:56	-0.34	6/21/2022 12:44	11.33
6/21/2022 13:21	-0.04	6/22/2022 12:11	2.38	6/22/2022 12:34	6.70	6/22/2022 13:57	-0.32	6/21/2022 12:45	11.39
6/21/2022 13:22	-0.06	6/22/2022 12:12	2.38	6/22/2022 12:35	6.74	6/22/2022 13:58	-0.33	6/21/2022 12:46	11.33
6/21/2022 13:23	-0.06	6/22/2022 12:13	2.38	6/22/2022 12:36	6.74	6/22/2022 13:59	-0.31	6/21/2022 12:47	11.32
6/21/2022 13:24	-0.06	6/22/2022 12:14	2.38	6/22/2022 12:37	6.74	6/22/2022 14:00	-0.29	6/21/2022 12:48	11.30
6/21/2022 13:25	-0.07	6/22/2022 12:15	2.38	6/22/2022 12:38	6.70	6/22/2022 14:01	-0.32	6/21/2022 12:49	11.32
6/21/2022 13:26	-0.05	6/22/2022 12:16	2.38	6/22/2022 12:39	6.71	6/22/2022 14:02	-0.34	6/21/2022 12:50	11.33
6/21/2022 13:27	-0.06	6/22/2022 12:17	2.38	6/22/2022 12:40	6.71	6/22/2022 14:03	-0.32	6/21/2022 12:51	11.31
6/21/2022 13:28	-0.06	6/22/2022 12:18	2.38	6/22/2022 12:41	6.73	6/22/2022 14:04	-0.31	6/21/2022 12:52	11.39

6/21/2022 13:29	-0.06	6/22/2022 12:19	2.38	6/22/2022 12:42	6.72	6/22/2022 14:05	-0.33	6/21/2022 12:53	11.31
6/21/2022 13:30	-0.05	6/22/2022 12:20	2.38	6/22/2022 12:43	6.73	6/22/2022 14:06	-0.31	6/21/2022 12:54	11.34
6/21/2022 13:31	-0.06	6/22/2022 12:21	2.38	6/22/2022 12:44	6.78	6/22/2022 14:07	-0.33	6/21/2022 12:55	11.36
6/21/2022 13:32	-0.04	6/22/2022 12:22	2.38	6/22/2022 12:45	6.70	6/22/2022 14:08	-0.32	6/21/2022 12:56	11.33
6/21/2022 13:33	-0.06	6/22/2022 12:23	2.38	6/22/2022 12:46	6.70	6/22/2022 14:09	-0.34	6/21/2022 12:57	11.36
6/21/2022 13:34	-0.05	6/22/2022 12:24	2.38	6/22/2022 12:47	6.73	6/22/2022 14:10	-0.35	6/21/2022 12:58	11.35
6/21/2022 13:35	-0.05	6/22/2022 12:25	2.39	6/22/2022 12:48	6.72	6/22/2022 14:11	-0.29	6/21/2022 12:59	11.34
6/21/2022 13:36	-0.06	6/22/2022 12:26	2.38	6/22/2022 12:49	6.76	6/22/2022 14:12	-0.32	6/21/2022 13:00	11.30
6/21/2022 13:37	-0.05	6/22/2022 12:27	2.39	6/22/2022 12:50	6.71	6/22/2022 14:13	-0.33	6/21/2022 13:01	11.33
6/21/2022 13:38	-0.06	6/22/2022 12:28	2.39	6/22/2022 12:51	6.77	6/22/2022 14:14	-0.29	6/21/2022 13:02	11.40
6/21/2022 13:39	-0.04	6/22/2022 12:29	2.39	6/22/2022 12:52	6.72	6/22/2022 14:15	-0.31	6/21/2022 13:03	11.33
6/21/2022 13:40	-0.06	6/22/2022 12:30	2.39	6/22/2022 12:53	6.73	6/22/2022 14:16	-0.33	6/21/2022 13:04	11.29
6/21/2022 13:41	-0.07	6/22/2022 12:31	2.39	6/22/2022 12:54	6.74	6/22/2022 14:17	-0.29	6/21/2022 13:05	11.34
6/21/2022 13:42	-0.06	6/22/2022 12:32	2.39	6/22/2022 12:55	6.72	6/22/2022 14:18	-0.35	6/21/2022 13:06	11.34
6/21/2022 13:43	-0.05	6/22/2022 12:33	2.39	6/22/2022 12:56	6.71	6/22/2022 14:19	-0.31	6/21/2022 13:07	11.34
6/21/2022 13:44	-0.06	6/22/2022 12:34	2.39	6/22/2022 12:57	6.75	6/22/2022 14:20	-0.34	6/21/2022 13:08	11.34
6/21/2022 13:45	-0.06	6/22/2022 12:35	2.39	6/22/2022 12:58	6.79	6/22/2022 14:21	-0.35	6/21/2022 13:09	11.33
6/21/2022 13:46	-0.04	6/22/2022 12:36	2.39	6/22/2022 12:59	6.75	6/22/2022 14:22	-0.35	6/21/2022 13:10	11.34
6/21/2022 13:47	-0.06	6/22/2022 12:37	2.39	6/22/2022 13:00	6.72	6/22/2022 14:23	-0.34	6/21/2022 13:11	11.32
6/21/2022 13:48	-0.06	6/22/2022 12:38	2.39	6/22/2022 13:01	6.76	6/22/2022 14:24	-0.32	6/21/2022 13:12	11.37
6/21/2022 13:49	-0.07	6/22/2022 12:39	2.39	6/22/2022 13:02	6.78	6/22/2022 14:25	-0.33	6/21/2022 13:13	11.37
6/21/2022 13:50	-0.04	6/22/2022 12:40	2.39	6/22/2022 13:03	6.69	6/22/2022 14:26	-0.33	6/21/2022 13:14	11.31
6/21/2022 13:51	-0.06	6/22/2022 12:41	2.39	6/22/2022 13:04	6.75	6/22/2022 14:27	-0.29	6/21/2022 13:15	11.33
6/21/2022 13:52	-0.06	6/22/2022 12:42	2.39	6/22/2022 13:05	6.72	6/22/2022 14:28	-0.34	6/21/2022 13:16	11.32
6/21/2022 13:53	-0.06	6/22/2022 12:43	2.39	6/22/2022 13:06	6.73	6/22/2022 14:29	-0.32	6/21/2022 13:17	11.35
6/21/2022 13:54	-0.06	6/22/2022 12:44	2.39	6/22/2022 13:07	6.75	6/22/2022 14:30	-0.31	6/21/2022 13:18	11.34
6/21/2022 13:55	-0.06	6/22/2022 12:45	2.39	6/22/2022 13:08	6.77	6/22/2022 14:31	-0.32	6/21/2022 13:19	11.31
6/21/2022 13:56	-0.06	6/22/2022 12:46	2.39	6/22/2022 13:09	6.77	6/22/2022 14:32	-0.29	6/21/2022 13:20	11.24
6/21/2022 13:57	-0.06	6/22/2022 12:47	2.40	6/22/2022 13:10	6.74	6/22/2022 14:33	-0.31	6/21/2022 13:21	11.35
6/21/2022 13:58	-0.04	6/22/2022 12:48	2.39	6/22/2022 13:11	6.75	6/22/2022 14:34	-0.32	6/21/2022 13:22	11.34
6/21/2022 13:59	-0.04	6/22/2022 12:49	2.40	6/22/2022 13:12	6.79	6/22/2022 14:35	-0.33	6/21/2022 13:23	11.40
6/21/2022 14:00	-0.04	6/22/2022 12:50	2.39	6/22/2022 13:13	6.74	6/22/2022 14:36	-0.32	6/21/2022 13:24	11.32
6/21/2022 14:01	-0.06	6/22/2022 12:51	2.40	6/22/2022 13:14	6.77	6/22/2022 14:37	-0.30	6/21/2022 13:25	11.29
6/21/2022 14:02	-0.04	6/22/2022 12:52	2.40	6/22/2022 13:15	6.78	6/22/2022 14:38	-0.32	6/21/2022 13:26	11.38
6/21/2022 14:03	-0.06	6/22/2022 12:53	2.39	6/22/2022 13:16	6.72	6/22/2022 14:39	-0.31	6/21/2022 13:27	11.30
6/21/2022 14:04	-0.05	6/22/2022 12:54	2.40	6/22/2022 13:17	6.70	6/22/2022 14:40	-0.27	6/21/2022 13:28	11.33
6/21/2022 14:05	-0.05	6/22/2022 12:55	2.40	6/22/2022 13:18	6.75	6/22/2022 14:41	-0.30	6/21/2022 13:29	11.35
6/21/2022 14:06	-0.06	6/22/2022 12:56	2.40	6/22/2022 13:19	6.78	6/22/2022 14:42	-0.33	6/21/2022 13:30	11.33
6/21/2022 14:07	-0.05	6/22/2022 12:57	2.40	6/22/2022 13:20	6.74	6/22/2022 14:43	-0.30	6/21/2022 13:31	11.31
6/21/2022 14:08	-0.06	6/22/2022 12:58	2.40	6/22/2022 13:21	6.72	6/22/2022 14:44	-0.30	6/21/2022 13:32	11.32
6/21/2022 14:09	-0.06	6/22/2022 12:59	2.40	6/22/2022 13:22	6.77	6/22/2022 14:45	-0.31	6/21/2022 13:33	11.34
6/21/2022 14:10	-0.06	6/22/2022 13:00	2.40	6/22/2022 13:23	6.70	6/22/2022 14:46	-0.27	6/21/2022 13:34	11.29
6/21/2022 14:11	-0.06	6/22/2022 13:01	2.40	6/22/2022 13:24	6.71	6/22/2022 14:47	-0.35	6/21/2022 13:35	11.35
6/21/2022 14:12	-0.05	6/22/2022 13:02	2.41	6/22/2022 13:25	6.77	6/22/2022 14:48	-0.30	6/21/2022 13:36	11.30
6/21/2022 14:13	-0.06	6/22/2022 13:03	2.40	6/22/2022 13:26	6.78	6/22/2022 14:49	-0.34	6/21/2022 13:37	11.37
6/21/2022 14:14	-0.06	6/22/2022 13:04	2.40	6/22/2022 13:27	6.72	6/22/2022 14:50	-0.29	6/21/2022 13:38	11.31
6/21/2022 14:15	-0.06	6/22/2022 13:05	2.40	6/22/2022 13:28	6.72	6/22/2022 14:51	-0.33	6/21/2022 13:39	11.33
6/21/2022 14:16	-0.05	6/22/2022 13:06	2.40	6/22/2022 13:29	6.73	6/22/2022 14:52	-0.32	6/21/2022 13:40	11.35
6/21/2022 14:17	-0.06	6/22/2022 13:07	2.41	6/22/2022 13:30	6.75	6/22/2022 14:53	-0.36	6/21/2022 13:41	11.36
6/21/2022 14:18	-0.06	6/22/2022 13:08	2.40	6/22/2022 13:31	6.75	6/22/2022 14:54	-0.29	6/21/2022 13:42	11.35
6/21/2022 14:19	-0.06	6/22/2022 13:09	2.41	6/22/2022 13:32	6.78	6/22/2022 14:55	-0.33	6/21/2022 13:43	11.34
6/21/2022 14:20	-0.06	6/22/2022 13:10	2.41	6/22/2022 13:33	6.72	6/22/2022 14:56	-0.29	6/21/2022 13:44	11.34
6/21/2022 14:21	-0.06	6/22/2022 13:11	2.41	6/22/2022 13:34	6.75	6/22/2022 14:57	-0.30	6/21/2022 13:45	11.36
6/21/2022 14:22	-0.06	6/22/2022 13:12	2.41	6/22/2022 13:35	6.79	6/22/2022 14:58	-0.32	6/21/2022 13:46	11.40
6/21/2022 14:23	-0.06	6/22/2022 13:13	2.41	6/22/2022 13:36	6.75	6/22/2022 14:59	-0.29	6/21/2022 13:47	11.42
6/21/2022 14:24	-0.06	6/22/2022 13:14	2.41	6/22/2022 13:37	6.78	6/22/2022 15:00	-0.31	6/21/2022 13:48	11.38
6/21/2022 14:25	-0.06	6/22/2022 13:15	2.41	6/22/2022 13:38	6.73	6/22/2022 15:01	-0.35	6/21/2022 13:49	11.37
6/21/2022 14:26	-0.06	6/22/2022 13:16	2.41	6/22/2022 13:39	6.77	6/22/2022 15:02	-0.30	6/21/2022 13:50	11.37
6/21/2022 14:27	-0.04	6/22/2022 13:17	2.41	6/22/2022 13:40	6.74	6/22/2022 15:03	-0.36	6/21/2022 13:51	11.27
6/21/2022 14:28	-0.05	6/22/2022 13:18	2.41	6/22/2022 13:41	6.77	6/22/2022 15:04	-0.32	6/21/2022 13:52	11.32
6/21/2022 14:29	-0.06	6/22/2022 13:19	2.41	6/22/2022 13:42	6.74	6/22/2022 15:05	-0.29	6/21/2022 13:53	11.31
6/21/2022 14:30	-0.06	6/22/2022 13:20	2.41	6/22/2022 13:43	6.78	6/22/2022 15:06	-0.27	6/21/2022 13:54	11.33
6/21/2022 14:31	-0.06	6/22/2022 13:21	2.41	6/22/2022 13:44	6.76	6/22/2022 15:07	-0.32	6/21/2022 13:55	11.34
6/21/2022 14:32	-0.06	6/22/2022 13:22	2.41	6/22/2022 13:45	6.73	6/22/2022 15:08	-0.29	6/21/2022 13:56	11.38
6/21/2022 14:33	-0.06	6/22/2022 13:23	2.41	6/22/2022 13:46	6.74	6/22/2022 15:09	-0.32	6/21/2022 13:57	11.35
6/21/2022 14:34	-0.06	6/22/2022 13:24	2.41	6/22/2022 13:47	6.73	6/22/2022 15:10	-0.32	6/21/2022 13:58	11.34
6/21/2022 14:35	-0.06	6/22/2022 13:25	2.41	6/22/2022 13:48	6.77	6/22/2022 15:11	-0.37	6/21/2022 13:59	11.35
6/21/2022 14:36	-0.04	6/22/2022 13:26	2.41	6/22/2022 13:49	6.73	6/22/2022 15:12	-0.29	6/21/2022 14:00	11.36
6/21/2022 14:37	-0.06	6/22/2022 13:27	2.41	6/22/2022 13:50	6.74	6/22/2022 15:13	-0.30	6/21/2022 14:01	11.34
6/21/2022 14:38	-0.04	6/22/2022 13:28	2.41	6/22/2022 13:51	6.76	6/22/2022 15:14	-0.29	6/21/2022 14:02	11.36
6/21/2022 14:39	-0.06	6/22/2022 13:29	2.41	6/22/2022 13:52	6.79	6/22/2022 15:15	-0.31	6/21/2022 14:03	11.31
6/21/2022 14:40	-0.06	6/22/2022 13:30	2.41	6/22/2022 13:53	6.73	6/22/2022 15:16	-0.34	6/21/2022 14:04	11.36
6/21/2022 14:41	-0.06	6/22/2022 13:31	2.41	6/22/2022 13:54	6.76	6/22/2022 15:17	-0.33	6/21/2022 14:05	11.34
6/21/2022 14:42	-0.06	6/22/2022 13:32	2.41	6/22/2022 13:55	6.74	6/22/2022 15:18	-0.32	6/21/2022 14:06	11.34
6/21/2022 14:43	-0.06	6/22/2022 13:33	2.41	6/22/2022 13:56	6.76	6/22/2022 15:19	-0.35	6/21/2022 14:07	11.36
6/21/2022 14:44	-0.06	6/22/2022 13:34	2.41	6/22/2022 13:57	6.76	6/22/2022 15:20	-0.30	6/21/2022 14:08	11.33
6/21/2022 14:45	-0.06	6/22/2022 13:35	2.41	6/22/2022 13:58	6.74	6/22/2022 15:21	-0.30	6/21/2022 14:09	11.32
6/21/2022 14:46	-0.06	6/22/2022 13:36	2.41	6/22/2022 13:59	6.77	6/22/2022 15:22	-0.32	6/21/2022 14:10	11.38
6/21/2022 14:47	-0.06	6/22/2022 13:37	2.41	6/22/2022 14:00	6.78	6/22/2022 15:23	-0.34	6/21/2022 14:11	11.35
6/21/2022 14:48	-0.06	6/22/2022 13:38	2.41	6/22/2022 14:01	6.79	6/22/2022 15:24	-0.30	6/21/2022 14:12	11.32
6/21/2022 14:49	-0.04	6/22/2022 13:39	2.41	6/22/2022 14:02	6.80	6/22/2022 15:25	-0.32	6/21/2022 14:13	11.34
6/21/2022 14:50	-0.04	6/22/2022 13:40	2.41	6/22/2022 14:03	6.74	6/22/2022 15:26	-0.30	6/21/2022 14:14	11.38
6/21/2022 14:51	-0.06	6/22/2022 13:41	2.41	6/22/2022 14:04	6.75	6/22/2022 15:27	-0.32	6/21/2022 14:15	11.29
6/21/2022 14:52	-0.06	6/22/2022 13:42	2.41	6/22/2022 14:05	6.77	6/22/2022 15:28	-0.31	6/21/2022 14:16	11.36
6/21/2022 14:53	-0.06	6/22/2022 13:43	2.41	6/22/2022 14:06	6.74	6/22/2022 15:29	-0.29	6/21/2022 14:17	11.36
6/21/2022 14:54	-0.06	6/22/2022 13:44	2.41	6/22/2022 14:07	6.79	6/22/2022 15:30	-0.32	6/21/2022 14:18	11.32
6/21/2022 14:55	-0.06	6/22/2022 13:45	2.42	6/22/2022 14:08	6.77	6/22/2022 15:31	-0.33	6/21/2022 14:19	11.39
6/21/2022 14:56	-0.06	6/22/2022 13:46	2.41	6/22/2022 14:09	6.80	6/22/2022 15:32	-0.30	6/21/2022 14:20	11.34

6/21/2022 14:57	-0.04	6/22/2022 13:47	2.41	6/22/2022 14:10	6.76	6/22/2022 15:33	-0.29	6/21/2022 14:21	11.34
6/21/2022 14:58	-0.06	6/22/2022 13:48	2.41	6/22/2022 14:11	6.79	6/22/2022 15:34	-0.28	6/21/2022 14:22	11.32
6/21/2022 14:59	-0.05	6/22/2022 13:49	2.41	6/22/2022 14:12	6.78	6/22/2022 15:35	-0.33	6/21/2022 14:23	11.35
6/21/2022 15:00	-0.06	6/22/2022 13:50	2.41	6/22/2022 14:13	6.81	6/22/2022 15:36	-0.29	6/21/2022 14:24	11.32
6/21/2022 15:01	-0.05	6/22/2022 13:51	2.41	6/22/2022 14:14	6.77	6/22/2022 15:37	-0.33	6/21/2022 14:25	11.36
6/21/2022 15:02	-0.05	6/22/2022 13:52	2.41	6/22/2022 14:15	6.76	6/22/2022 15:38	-0.34	6/21/2022 14:26	11.26
6/21/2022 15:03	-0.04	6/22/2022 13:53	2.41	6/22/2022 14:16	6.77	6/22/2022 15:39	-0.32	6/21/2022 14:27	11.35
6/21/2022 15:04	-0.06	6/22/2022 13:54	2.42	6/22/2022 14:17	6.79	6/22/2022 15:40	-0.33	6/21/2022 14:28	11.29
6/21/2022 15:05	-0.06	6/22/2022 13:55	2.42	6/22/2022 14:18	6.75	6/22/2022 15:41	-0.31	6/21/2022 14:29	11.35
6/21/2022 15:06	-0.04	6/22/2022 13:56	2.42	6/22/2022 14:19	6.73	6/22/2022 15:42	-0.33	6/21/2022 14:30	11.35
6/21/2022 15:07	-0.06	6/22/2022 13:57	2.41	6/22/2022 14:20	6.82	6/22/2022 15:43	-0.36	6/21/2022 14:31	11.39
6/21/2022 15:08	-0.04	6/22/2022 13:58	2.42	6/22/2022 14:21	6.76	6/22/2022 15:44	-0.31	6/21/2022 14:32	11.33
6/21/2022 15:09	-0.06	6/22/2022 13:59	2.42	6/22/2022 14:22	6.78	6/22/2022 15:45	-0.32	6/21/2022 14:33	11.33
6/21/2022 15:10	-0.05	6/22/2022 14:00	2.41	6/22/2022 14:23	6.79	6/22/2022 15:46	-0.31	6/21/2022 14:34	11.35
6/21/2022 15:11	-0.06	6/22/2022 14:01	2.42	6/22/2022 14:24	6.79	6/22/2022 15:47	-0.31	6/21/2022 14:35	11.38
6/21/2022 15:12	-0.06	6/22/2022 14:02	2.42	6/22/2022 14:25	6.80	6/22/2022 15:48	-0.29	6/21/2022 14:36	11.36
6/21/2022 15:13	-0.04	6/22/2022 14:03	2.42	6/22/2022 14:26	6.76	6/22/2022 15:49	-0.32	6/21/2022 14:37	11.32
6/21/2022 15:14	-0.06	6/22/2022 14:04	2.42	6/22/2022 14:27	6.77	6/22/2022 15:50	-0.31	6/21/2022 14:38	11.36
6/21/2022 15:15	-0.04	6/22/2022 14:05	2.42	6/22/2022 14:28	6.81	6/22/2022 15:51	-0.29	6/21/2022 14:39	11.30
6/21/2022 15:16	-0.04	6/22/2022 14:06	2.42	6/22/2022 14:29	6.81	6/22/2022 15:52	-0.34	6/21/2022 14:40	11.38
6/21/2022 15:17	-0.04	6/22/2022 14:07	2.42	6/22/2022 14:30	6.81	6/22/2022 15:53	-0.33	6/21/2022 14:41	11.36
6/21/2022 15:18	-0.06	6/22/2022 14:08	2.42	6/22/2022 14:31	6.80	6/22/2022 15:54	-0.34	6/21/2022 14:42	11.33
6/21/2022 15:19	-0.06	6/22/2022 14:09	2.42	6/22/2022 14:32	6.75	6/22/2022 15:55	-0.35	6/21/2022 14:43	11.34
6/21/2022 15:20	-0.06	6/22/2022 14:10	2.43	6/22/2022 14:33	6.85	6/22/2022 15:56	-0.33	6/21/2022 14:44	11.35
6/21/2022 15:21	-0.05	6/22/2022 14:11	2.42	6/22/2022 14:34	6.84	6/22/2022 15:57	-0.31	6/21/2022 14:45	11.34
6/21/2022 15:22	-0.04	6/22/2022 14:12	2.42	6/22/2022 14:35	6.80	6/22/2022 15:58	-0.32	6/21/2022 14:46	11.38
6/21/2022 15:23	-0.06	6/22/2022 14:13	2.42	6/22/2022 14:36	6.75	6/22/2022 15:59	-0.35	6/21/2022 14:47	11.34
6/21/2022 15:24	-0.05	6/22/2022 14:14	2.42	6/22/2022 14:37	6.78	6/22/2022 16:00	-0.29	6/21/2022 14:48	11.35
6/21/2022 15:25	-0.06	6/22/2022 14:15	2.42	6/22/2022 14:38	6.79	6/22/2022 16:01	-0.33	6/21/2022 14:49	11.36
6/21/2022 15:26	-0.06	6/22/2022 14:16	2.43	6/22/2022 14:39	6.81	6/22/2022 16:02	-0.34	6/21/2022 14:50	11.36
6/21/2022 15:27	-0.05	6/22/2022 14:17	2.42	6/22/2022 14:40	6.81	6/22/2022 16:03	-0.33	6/21/2022 14:51	11.36
6/21/2022 15:28	-0.06	6/22/2022 14:18	2.42	6/22/2022 14:41	6.78	6/22/2022 16:04	-0.32	6/21/2022 14:52	11.33
6/21/2022 15:29	-0.04	6/22/2022 14:19	2.43	6/22/2022 14:42	6.79	6/22/2022 16:05	-0.29	6/21/2022 14:53	11.35
6/21/2022 15:30	-0.06	6/22/2022 14:20	2.43	6/22/2022 14:43	6.80	6/22/2022 16:06	-0.31	6/21/2022 14:54	11.36
6/21/2022 15:31	-0.06	6/22/2022 14:21	2.43	6/22/2022 14:44	6.78	6/22/2022 16:07	-0.34	6/21/2022 14:55	11.36
6/21/2022 15:32	-0.06	6/22/2022 14:22	2.43	6/22/2022 14:45	6.82	6/22/2022 16:08	-0.32	6/21/2022 14:56	11.30
6/21/2022 15:33	-0.04	6/22/2022 14:23	2.43	6/22/2022 14:46	6.81	6/22/2022 16:09	-0.33	6/21/2022 14:57	11.34
6/21/2022 15:34	-0.06	6/22/2022 14:24	2.43	6/22/2022 14:47	6.79	6/22/2022 16:10	-0.32	6/21/2022 14:58	11.37
6/21/2022 15:35	-0.04	6/22/2022 14:25	2.43	6/22/2022 14:48	6.81	6/22/2022 16:11	-0.36	6/21/2022 14:59	11.31
6/21/2022 15:36	-0.06	6/22/2022 14:26	2.43	6/22/2022 14:49	6.82	6/22/2022 16:12	-0.30	6/21/2022 15:00	11.36
6/21/2022 15:37	-0.04	6/22/2022 14:27	2.43	6/22/2022 14:50	6.81	6/22/2022 16:13	-0.32	6/21/2022 15:01	11.34
6/21/2022 15:38	-0.06	6/22/2022 14:28	2.43	6/22/2022 14:51	6.84	6/22/2022 16:14	-0.32	6/21/2022 15:02	11.34
6/21/2022 15:39	-0.06	6/22/2022 14:29	2.43	6/22/2022 14:52	6.81	6/22/2022 16:15	-0.32	6/21/2022 15:03	11.37
6/21/2022 15:40	-0.06	6/22/2022 14:30	2.43	6/22/2022 14:53	6.81	6/22/2022 16:16	-0.32	6/21/2022 15:04	11.36
6/21/2022 15:41	-0.05	6/22/2022 14:31	2.43	6/22/2022 14:54	6.77	6/22/2022 16:17	-0.27	6/21/2022 15:05	11.33
6/21/2022 15:42	-0.04	6/22/2022 14:32	2.43	6/22/2022 14:55	6.80	6/22/2022 16:18	-0.33	6/21/2022 15:06	11.38
6/21/2022 15:43	-0.06	6/22/2022 14:33	2.43	6/22/2022 14:56	6.83	6/22/2022 16:19	-0.35	6/21/2022 15:07	11.35
6/21/2022 15:44	-0.06	6/22/2022 14:34	2.43	6/22/2022 14:57	6.76	6/22/2022 16:20	-0.34	6/21/2022 15:08	11.33
6/21/2022 15:45	-0.06	6/22/2022 14:35	2.44	6/22/2022 14:58	6.81	6/22/2022 16:21	-0.27	6/21/2022 15:09	11.33
6/21/2022 15:46	-0.06	6/22/2022 14:36	2.44	6/22/2022 14:59	6.81	6/22/2022 16:22	-0.30	6/21/2022 15:10	11.31
6/21/2022 15:47	-0.06	6/22/2022 14:37	2.43	6/22/2022 15:00	6.85	6/22/2022 16:23	-0.35	6/21/2022 15:11	11.33
6/21/2022 15:48	-0.06	6/22/2022 14:38	2.44	6/22/2022 15:01	6.80	6/22/2022 16:24	-0.29	6/21/2022 15:12	11.33
6/21/2022 15:49	-0.06	6/22/2022 14:39	2.43	6/22/2022 15:02	6.77	6/22/2022 16:25	-0.31	6/21/2022 15:13	11.35
6/21/2022 15:50	-0.06	6/22/2022 14:40	2.43	6/22/2022 15:03	6.82	6/22/2022 16:26	-0.29	6/21/2022 15:14	11.31
6/21/2022 15:51	-0.07	6/22/2022 14:41	2.44	6/22/2022 15:04	6.79	6/22/2022 16:27	-0.35	6/21/2022 15:15	11.30
6/21/2022 15:52	-0.06	6/22/2022 14:42	2.43	6/22/2022 15:05	6.78	6/22/2022 16:28	-0.33	6/21/2022 15:16	11.40
6/21/2022 15:53	-0.04	6/22/2022 14:43	2.43	6/22/2022 15:06	6.76	6/22/2022 16:29	-0.33	6/21/2022 15:17	11.32
6/21/2022 15:54	-0.06	6/22/2022 14:44	2.44	6/22/2022 15:07	6.81	6/22/2022 16:30	-0.33	6/21/2022 15:18	11.37
6/21/2022 15:55	-0.04	6/22/2022 14:45	2.43	6/22/2022 15:08	6.77	6/22/2022 16:31	-0.34	6/21/2022 15:19	11.33
6/21/2022 15:56	-0.04	6/22/2022 14:46	2.44	6/22/2022 15:09	6.81	6/22/2022 16:32	-0.35	6/21/2022 15:20	11.36
6/21/2022 15:57	-0.06	6/22/2022 14:47	2.44	6/22/2022 15:10	6.80	6/22/2022 16:33	-0.35	6/21/2022 15:21	11.31
6/21/2022 15:58	-0.06	6/22/2022 14:48	2.44	6/22/2022 15:11	6.80	6/22/2022 16:34	-0.32	6/21/2022 15:22	11.30
6/21/2022 15:59	-0.05	6/22/2022 14:49	2.44	6/22/2022 15:12	6.80	6/22/2022 16:35	-0.33	6/21/2022 15:23	11.38
6/21/2022 16:00	-0.06	6/22/2022 14:50	2.44	6/22/2022 15:13	6.77	6/22/2022 16:36	-0.32	6/21/2022 15:24	11.32
6/21/2022 16:01	-0.06	6/22/2022 14:51	2.44	6/22/2022 15:14	6.81	6/22/2022 16:37	-0.30	6/21/2022 15:25	11.35
6/21/2022 16:02	-0.06	6/22/2022 14:52	2.44	6/22/2022 15:15	6.84	6/22/2022 16:38	-0.35	6/21/2022 15:26	11.34
6/21/2022 16:03	-0.06	6/22/2022 14:53	2.44	6/22/2022 15:16	6.84	6/22/2022 16:39	-0.33	6/21/2022 15:27	11.36
6/21/2022 16:04	-0.05	6/22/2022 14:54	2.44	6/22/2022 15:17	6.82	6/22/2022 16:40	-0.32	6/21/2022 15:28	11.38
6/21/2022 16:05	-0.07	6/22/2022 14:55	2.44	6/22/2022 15:18	6.77	6/22/2022 16:41	-0.31	6/21/2022 15:29	11.31
6/21/2022 16:06	-0.05	6/22/2022 14:56	2.44	6/22/2022 15:19	6.81	6/22/2022 16:42	-0.31	6/21/2022 15:30	11.37
6/21/2022 16:07	-0.06	6/22/2022 14:57	2.44	6/22/2022 15:20	6.80	6/22/2022 16:43	-0.32	6/21/2022 15:31	11.32
6/21/2022 16:08	-0.06	6/22/2022 14:58	2.44	6/22/2022 15:21	6.81	6/22/2022 16:44	-0.29	6/21/2022 15:32	11.36
6/21/2022 16:09	-0.06	6/22/2022 14:59	2.44	6/22/2022 15:22	6.82	6/22/2022 16:45	-0.31	6/21/2022 15:33	11.38
6/21/2022 16:10	-0.06	6/22/2022 15:00	2.44	6/22/2022 15:23	6.84	6/22/2022 16:46	-0.29	6/21/2022 15:34	11.31
6/21/2022 16:11	-0.06	6/22/2022 15:01	2.44	6/22/2022 15:24	6.79	6/22/2022 16:47	-0.31	6/21/2022 15:35	11.32
6/21/2022 16:12	-0.04	6/22/2022 15:02	2.44	6/22/2022 15:25	6.85	6/22/2022 16:48	-0.35	6/21/2022 15:36	11.29
6/21/2022 16:13	-0.06	6/22/2022 15:03	2.44	6/22/2022 15:26	6.79	6/22/2022 16:49	-0.31	6/21/2022 15:37	11.34
6/21/2022 16:14	-0.06	6/22/2022 15:04	2.44	6/22/2022 15:27	6.85	6/22/2022 16:50	-0.34	6/21/2022 15:38	11.33
6/21/2022 16:15	-0.04	6/22/2022 15:05	2.44	6/22/2022 15:28	6.87	6/22/2022 16:51	-0.30	6/21/2022 15:39	11.39
6/21/2022 16:16	-0.06	6/22/2022 15:06	2.44	6/22/2022 15:29	6.76	6/22/2022 16:52	-0.30	6/21/2022 15:40	11.32
6/21/2022 16:17	-0.06	6/22/2022 15:07	2.44	6/22/2022 15:30	6.88	6/22/2022 16:53	-0.30	6/21/2022 15:41	11.32
6/21/2022 16:18	-0.06	6/22/2022 15:08	2.44	6/22/2022 15:31	6.85	6/22/2022 16:54	-0.35	6/21/2022 15:42	11.34
6/21/2022 16:19	-0.06	6/22/2022 15:09	2.44	6/22/2022 15:32	6.84	6/22/2022 16:55	-0.34	6/21/2022 15:43	11.35
6/21/2022 16:20	-0.06	6/22/2022 15:10	2.44	6/22/2022 15:33	6.84	6/22/2022 16:56	-0.34	6/21/2022 15:44	11.38
6/21/2022 16:21	-0.06	6/22/2022 15:11	2.44	6/22/2022 15:34	6.82	6/22/2022 16:57	-0.32	6/21/2022 15:45	11.30
6/21/2022 16:22	-0.06	6/22/2022 15:12	2.44	6/22/2022 15:35	6.86	6/22/2022 16:58	-0.30	6/21/2022 15:46	11.37
6/21/2022 16:23	-0.06	6/22/2022 15:13	2.44	6/22/2022 15:36	6.88	6/22/2022 16:59	-0.32	6/21/2022 15:47	11.33
6/21/2022 16:24	-0.05	6/22/2022 15:14	2.44	6/22/2022 15:37	6.85	6/22/2022 17:00	-0.33	6/21/2022 15:48	11.31

6/21/2022 16:25	-0.06	6/22/2022 15:15	2.44	6/22/2022 15:38	6.81	6/22/2022 17:01	-0.31	6/21/2022 15:49	11.44
6/21/2022 16:26	-0.06	6/22/2022 15:16	2.44	6/22/2022 15:39	6.86	6/22/2022 17:02	-0.33	6/21/2022 15:50	11.36
6/21/2022 16:27	-0.06	6/22/2022 15:17	2.44	6/22/2022 15:40	6.81	6/22/2022 17:03	-0.32	6/21/2022 15:51	11.32
6/21/2022 16:28	-0.07	6/22/2022 15:18	2.45	6/22/2022 15:41	6.87	6/22/2022 17:04	-0.28	6/21/2022 15:52	11.37
6/21/2022 16:29	-0.05	6/22/2022 15:19	2.44	6/22/2022 15:42	6.86	6/22/2022 17:05	-0.34	6/21/2022 15:53	11.31
6/21/2022 16:30	-0.04	6/22/2022 15:20	2.45	6/22/2022 15:43	6.81	6/22/2022 17:06	-0.32	6/21/2022 15:54	11.30
6/21/2022 16:31	-0.06	6/22/2022 15:21	2.45	6/22/2022 15:44	6.78	6/22/2022 17:07	-0.32	6/21/2022 15:55	11.33
6/21/2022 16:32	-0.06	6/22/2022 15:22	2.44	6/22/2022 15:45	6.84	6/22/2022 17:08	-0.30	6/21/2022 15:56	11.37
6/21/2022 16:33	-0.04	6/22/2022 15:23	2.45	6/22/2022 15:46	6.87	6/22/2022 17:09	-0.29	6/21/2022 15:57	11.32
6/21/2022 16:34	-0.05	6/22/2022 15:24	2.45	6/22/2022 15:47	6.79	6/22/2022 17:10	-0.33	6/21/2022 15:58	11.35
6/21/2022 16:35	-0.04	6/22/2022 15:25	2.45	6/22/2022 15:48	6.85	6/22/2022 17:11	-0.32	6/21/2022 15:59	11.38
6/21/2022 16:36	-0.06	6/22/2022 15:26	2.45	6/22/2022 15:49	6.86	6/22/2022 17:12	-0.32	6/21/2022 16:00	11.29
6/21/2022 16:37	-0.06	6/22/2022 15:27	2.45	6/22/2022 15:50	6.83	6/22/2022 17:13	-0.28	6/21/2022 16:01	11.33
6/21/2022 16:38	-0.06	6/22/2022 15:28	2.45	6/22/2022 15:51	6.81	6/22/2022 17:14	-0.33	6/21/2022 16:02	11.39
6/21/2022 16:39	-0.06	6/22/2022 15:29	2.45	6/22/2022 15:52	6.82	6/22/2022 17:15	-0.28	6/21/2022 16:03	11.38
6/21/2022 16:40	-0.06	6/22/2022 15:30	2.45	6/22/2022 15:53	6.79	6/22/2022 17:16	-0.35	6/21/2022 16:04	11.38
6/21/2022 16:41	-0.06	6/22/2022 15:31	2.45	6/22/2022 15:54	6.81	6/22/2022 17:17	-0.30	6/21/2022 16:05	11.32
6/21/2022 16:42	-0.06	6/22/2022 15:32	2.45	6/22/2022 15:55	6.83	6/22/2022 17:18	-0.35	6/21/2022 16:06	11.36
6/21/2022 16:43	-0.06	6/22/2022 15:33	2.45	6/22/2022 15:56	6.83	6/22/2022 17:19	-0.32	6/21/2022 16:07	11.38
6/21/2022 16:44	-0.06	6/22/2022 15:34	2.45	6/22/2022 15:57	6.86	6/22/2022 17:20	-0.30	6/21/2022 16:08	11.33
6/21/2022 16:45	-0.06	6/22/2022 15:35	2.45	6/22/2022 15:58	6.83	6/22/2022 17:21	-0.34	6/21/2022 16:09	11.34
6/21/2022 16:46	-0.04	6/22/2022 15:36	2.45	6/22/2022 15:59	6.82	6/22/2022 17:22	-0.35	6/21/2022 16:10	11.31
6/21/2022 16:47	-0.08	6/22/2022 15:37	2.45	6/22/2022 16:00	6.85	6/22/2022 17:23	-0.30	6/21/2022 16:11	11.38
6/21/2022 16:48	-0.08	6/22/2022 15:38	2.46	6/22/2022 16:01	6.78	6/22/2022 17:24	-0.28	6/21/2022 16:12	11.34
6/21/2022 16:49	-0.06	6/22/2022 15:39	2.45	6/22/2022 16:02	6.83	6/22/2022 17:25	-0.30	6/21/2022 16:13	11.36
6/21/2022 16:50	-0.08	6/22/2022 15:40	2.46	6/22/2022 16:03	6.84	6/22/2022 17:26	-0.32	6/21/2022 16:14	11.30
6/21/2022 16:51	-0.08	6/22/2022 15:41	2.46	6/22/2022 16:04	6.87	6/22/2022 17:27	-0.34	6/21/2022 16:15	11.32
6/21/2022 16:52	-0.08	6/22/2022 15:42	2.46	6/22/2022 16:05	6.87	6/22/2022 17:28	-0.34	6/21/2022 16:16	11.33
6/21/2022 16:53	-0.07	6/22/2022 15:43	2.46	6/22/2022 16:06	6.86	6/22/2022 17:29	-0.34	6/21/2022 16:17	11.36
6/21/2022 16:54	-0.08	6/22/2022 15:44	2.46	6/22/2022 16:07	6.87	6/22/2022 17:30	-0.37	6/21/2022 16:18	11.34
6/21/2022 16:55	-0.08	6/22/2022 15:45	2.46	6/22/2022 16:08	6.81	6/22/2022 17:31	-0.30	6/21/2022 16:19	11.32
6/21/2022 16:56	-0.07	6/22/2022 15:46	2.46	6/22/2022 16:09	6.86	6/22/2022 17:32	-0.29	6/21/2022 16:20	11.39
6/21/2022 16:57	-0.08	6/22/2022 15:47	2.46	6/22/2022 16:10	6.82	6/22/2022 17:33	-0.31	6/21/2022 16:21	11.35
6/21/2022 16:58	-0.08	6/22/2022 15:48	2.46	6/22/2022 16:11	6.82	6/22/2022 17:34	-0.33	6/21/2022 16:22	11.29
6/21/2022 16:59	-0.08	6/22/2022 15:49	2.46	6/22/2022 16:12	6.82	6/22/2022 17:35	-0.35	6/21/2022 16:23	11.32
6/21/2022 17:00	-0.08	6/22/2022 15:50	2.46	6/22/2022 16:13	6.87	6/22/2022 17:36	-0.30	6/21/2022 16:24	11.38
6/21/2022 17:01	-0.08	6/22/2022 15:51	2.46	6/22/2022 16:14	6.81	6/22/2022 17:37	-0.34	6/21/2022 16:25	11.39
6/21/2022 17:02	-0.06	6/22/2022 15:52	2.46	6/22/2022 16:15	6.85	6/22/2022 17:38	-0.32	6/21/2022 16:26	11.36
6/21/2022 17:03	-0.08	6/22/2022 15:53	2.46	6/22/2022 16:16	6.85	6/22/2022 17:39	-0.31	6/21/2022 16:27	11.34
6/21/2022 17:04	-0.08	6/22/2022 15:54	2.46	6/22/2022 16:17	6.82	6/22/2022 17:40	-0.30	6/21/2022 16:28	11.35
6/21/2022 17:05	-0.09	6/22/2022 15:55	2.46	6/22/2022 16:18	6.82	6/22/2022 17:41	-0.32	6/21/2022 16:29	11.35
6/21/2022 17:06	-0.08	6/22/2022 15:56	2.46	6/22/2022 16:19	6.87	6/22/2022 17:42	-0.33	6/21/2022 16:30	11.35
6/21/2022 17:07	-0.08	6/22/2022 15:57	2.46	6/22/2022 16:20	6.85	6/22/2022 17:43	-0.28	6/21/2022 16:31	11.34
6/21/2022 17:08	-0.06	6/22/2022 15:58	2.46	6/22/2022 16:21	6.84	6/22/2022 17:44	-0.33	6/21/2022 16:32	11.31
6/21/2022 17:09	-0.06	6/22/2022 15:59	2.46	6/22/2022 16:22	6.83	6/22/2022 17:45	-0.31	6/21/2022 16:33	11.27
6/21/2022 17:10	-0.08	6/22/2022 16:00	2.46	6/22/2022 16:23	6.82	6/22/2022 17:46	-0.32	6/21/2022 16:34	11.39
6/21/2022 17:11	-0.08	6/22/2022 16:01	2.46	6/22/2022 16:24	6.87	6/22/2022 17:47	-0.34	6/21/2022 16:35	11.38
6/21/2022 17:12	-0.08	6/22/2022 16:02	2.46	6/22/2022 16:25	6.84	6/22/2022 17:48	-0.32	6/21/2022 16:36	11.33
6/21/2022 17:13	-0.08	6/22/2022 16:03	2.46	6/22/2022 16:26	6.87	6/22/2022 17:49	-0.35	6/21/2022 16:37	11.29
6/21/2022 17:14	-0.07	6/22/2022 16:04	2.46	6/22/2022 16:27	6.84	6/22/2022 17:50	-0.31	6/21/2022 16:38	11.36
6/21/2022 17:15	-0.08	6/22/2022 16:05	2.46	6/22/2022 16:28	6.83	6/22/2022 17:51	-0.31	6/21/2022 16:39	11.36
6/21/2022 17:16	-0.07	6/22/2022 16:06	2.46	6/22/2022 16:29	6.84	6/22/2022 17:52	-0.32	6/21/2022 16:40	11.31
6/21/2022 17:17	-0.08	6/22/2022 16:07	2.47	6/22/2022 16:30	6.86	6/22/2022 17:53	-0.35	6/21/2022 16:41	11.36
6/21/2022 17:18	-0.07	6/22/2022 16:08	2.46	6/22/2022 16:31	6.79	6/22/2022 17:54	-0.33	6/21/2022 16:42	11.31
6/21/2022 17:19	-0.08	6/22/2022 16:09	2.46	6/22/2022 16:32	6.84	6/22/2022 17:55	-0.29	6/21/2022 16:43	11.33
6/21/2022 17:20	-0.06	6/22/2022 16:10	2.47	6/22/2022 16:33	6.86	6/22/2022 17:56	-0.31	6/21/2022 16:44	11.28
6/21/2022 17:21	-0.07	6/22/2022 16:11	2.46	6/22/2022 16:34	6.83	6/22/2022 17:57	-0.32	6/21/2022 16:45	11.34
6/21/2022 17:22	-0.08	6/22/2022 16:12	2.46	6/22/2022 16:35	6.87	6/22/2022 17:58	-0.31	6/21/2022 16:46	11.38
6/21/2022 17:23	-0.08	6/22/2022 16:13	2.46	6/22/2022 16:36	6.85	6/22/2022 17:59	-0.31	6/21/2022 16:47	11.40
6/21/2022 17:24	-0.08	6/22/2022 16:14	2.46	6/22/2022 16:37	6.85	6/22/2022 18:00	-0.32	6/21/2022 16:48	11.33
6/21/2022 17:25	-0.09	6/22/2022 16:15	2.46	6/22/2022 16:38	6.91	6/22/2022 18:01	-0.30	6/21/2022 16:49	11.32
6/21/2022 17:26	-0.06	6/22/2022 16:16	2.47	6/22/2022 16:39	6.86	6/22/2022 18:02	-0.30	6/21/2022 16:50	11.32
6/21/2022 17:27	-0.08	6/22/2022 16:17	2.47	6/22/2022 16:40	6.84	6/22/2022 18:03	-0.30	6/21/2022 16:51	11.31
6/21/2022 17:28	-0.08	6/22/2022 16:18	2.47	6/22/2022 16:41	6.91	6/22/2022 18:04	-0.30	6/21/2022 16:52	11.36
6/21/2022 17:29	-0.06	6/22/2022 16:19	2.47	6/22/2022 16:42	6.87	6/22/2022 18:05	-0.30	6/21/2022 16:53	11.29
6/21/2022 17:30	-0.08	6/22/2022 16:20	2.47	6/22/2022 16:43	6.82	6/22/2022 18:06	-0.31	6/21/2022 16:54	11.36
6/21/2022 17:31	-0.08	6/22/2022 16:21	2.47	6/22/2022 16:44	6.86	6/22/2022 18:07	-0.29	6/21/2022 16:55	11.28
6/21/2022 17:32	-0.06	6/22/2022 16:22	2.47	6/22/2022 16:45	6.85	6/22/2022 18:08	-0.32	6/21/2022 16:56	11.36
6/21/2022 17:33	-0.08	6/22/2022 16:23	2.47	6/22/2022 16:46	6.88	6/22/2022 18:09	-0.31	6/21/2022 16:57	11.34
6/21/2022 17:34	-0.08	6/22/2022 16:24	2.47	6/22/2022 16:47	6.84	6/22/2022 18:10	-0.37	6/21/2022 16:58	11.31
6/21/2022 17:35	-0.06	6/22/2022 16:25	2.47	6/22/2022 16:48	6.84	6/22/2022 18:11	-0.37	6/21/2022 16:59	11.35
6/21/2022 17:36	-0.08	6/22/2022 16:26	2.47	6/22/2022 16:49	6.82	6/22/2022 18:12	-0.35	6/21/2022 17:00	11.35
6/21/2022 17:37	-0.07	6/22/2022 16:27	2.47	6/22/2022 16:50	6.88	6/22/2022 18:13	-0.32	6/21/2022 17:01	11.37
6/21/2022 17:38	-0.08	6/22/2022 16:28	2.47	6/22/2022 16:51	6.85	6/22/2022 18:14	-0.33	6/21/2022 17:02	11.31
6/21/2022 17:39	-0.06	6/22/2022 16:29	2.47	6/22/2022 16:52	6.88	6/22/2022 18:15	-0.32	6/21/2022 17:03	11.34
6/21/2022 17:40	-0.08	6/22/2022 16:30	2.47	6/22/2022 16:53	6.86	6/22/2022 18:16	-0.32	6/21/2022 17:04	11.33
6/21/2022 17:41	-0.08	6/22/2022 16:31	2.47	6/22/2022 16:54	6.85	6/22/2022 18:17	-0.30	6/21/2022 17:05	11.29
6/21/2022 17:42	-0.08	6/22/2022 16:32	2.47	6/22/2022 16:55	6.88	6/22/2022 18:18	-0.37	6/21/2022 17:06	11.31
6/21/2022 17:43	-0.08	6/22/2022 16:33	2.47	6/22/2022 16:56	6.85	6/22/2022 18:19	-0.34	6/21/2022 17:07	11.32
6/21/2022 17:44	-0.08	6/22/2022 16:34	2.47	6/22/2022 16:57	6.86	6/22/2022 18:20	-0.32	6/21/2022 17:08	11.30
6/21/2022 17:45	-0.08	6/22/2022 16:35	2.47	6/22/2022 16:58	6.85	6/22/2022 18:21	-0.31	6/21/2022 17:09	11.36
6/21/2022 17:46	-0.08	6/22/2022 16:36	2.47	6/22/2022 16:59	6.92	6/22/2022 18:22	-0.33	6/21/2022 17:10	11.35
6/21/2022 17:47	-0.08	6/22/2022 16:37	2.47	6/22/2022 17:00	6.87	6/22/2022 18:23	-0.33	6/21/2022 17:11	11.36
6/21/2022 17:48	-0.07	6/22/2022 16:38	2.47	6/22/2022 17:01	6.87	6/22/2022 18:24	-0.31	6/21/2022 17:12	11.34
6/21/2022 17:49	-0.08	6/22/2022 16:39	2.47	6/22/2022 17:02	6.86	6/22/2022 18:25	-0.35	6/21/2022 17:13	11.33
6/21/2022 17:50	-0.08	6/22/2022 16:40	2.47	6/22/2022 17:03	6.86	6/22/2022 18:26	-0.32	6/21/2022 17:14	11.36
6/21/2022 17:51	-0.07	6/22/2022 16:41	2.47	6/22/2022 17:04	6.83	6/22/2022 18:27	-0.31	6/21/2022 17:15	11.33
6/21/2022 17:52	-0.08	6/22/2022 16:42	2.47	6/22/2022 17:05	6.88	6/22/2022 18:28	-0.29	6/21/2022 17:16	11.30

6/21/2022 17:53	-0.08	6/22/2022 16:43	2.48	6/22/2022 17:06	6.85	6/22/2022 18:29	-0.30	6/21/2022 17:17	11.33
6/21/2022 17:54	-0.08	6/22/2022 16:44	2.47	6/22/2022 17:07	6.85	6/22/2022 18:30	-0.32	6/21/2022 17:18	11.36
6/21/2022 17:55	-0.07	6/22/2022 16:45	2.47	6/22/2022 17:08	6.89	6/22/2022 18:31	-0.29	6/21/2022 17:19	11.31
6/21/2022 17:56	-0.06	6/22/2022 16:46	2.47	6/22/2022 17:09	6.82	6/22/2022 18:32	-0.33	6/21/2022 17:20	11.32
6/21/2022 17:57	-0.08	6/22/2022 16:47	2.47	6/22/2022 17:10	6.88	6/22/2022 18:33	-0.31	6/21/2022 17:21	11.31
6/21/2022 17:58	-0.08	6/22/2022 16:48	2.48	6/22/2022 17:11	6.84	6/22/2022 18:34	-0.34	6/21/2022 17:22	11.34
6/21/2022 17:59	-0.08	6/22/2022 16:49	2.47	6/22/2022 17:12	6.89	6/22/2022 18:35	-0.33	6/21/2022 17:23	11.31
6/21/2022 18:00	-0.07	6/22/2022 16:50	2.48	6/22/2022 17:13	6.84	6/22/2022 18:36	-0.29	6/21/2022 17:24	11.37
6/21/2022 18:01	-0.06	6/22/2022 16:51	2.48	6/22/2022 17:14	6.84	6/22/2022 18:37	-0.34	6/21/2022 17:25	11.36
6/21/2022 18:02	-0.07	6/22/2022 16:52	2.48	6/22/2022 17:15	6.88	6/22/2022 18:38	-0.32	6/21/2022 17:26	11.30
6/21/2022 18:03	-0.08	6/22/2022 16:53	2.48	6/22/2022 17:16	6.88	6/22/2022 18:39	-0.34	6/21/2022 17:27	11.34
6/21/2022 18:04	-0.08	6/22/2022 16:54	2.48	6/22/2022 17:17	6.88	6/22/2022 18:40	-0.34	6/21/2022 17:28	11.35
6/21/2022 18:05	-0.08	6/22/2022 16:55	2.48	6/22/2022 17:18	6.89	6/22/2022 18:41	-0.34	6/21/2022 17:29	11.36
6/21/2022 18:06	-0.08	6/22/2022 16:56	2.48	6/22/2022 17:19	6.87	6/22/2022 18:42	-0.31	6/21/2022 17:30	11.36
6/21/2022 18:07	-0.06	6/22/2022 16:57	2.48	6/22/2022 17:20	6.85	6/22/2022 18:43	-0.32	6/21/2022 17:31	11.35
6/21/2022 18:08	-0.08	6/22/2022 16:58	2.48	6/22/2022 17:21	6.84	6/22/2022 18:44	-0.30	6/21/2022 17:32	11.35
6/21/2022 18:09	-0.08	6/22/2022 16:59	2.48	6/22/2022 17:22	6.91	6/22/2022 18:45	-0.30	6/21/2022 17:33	11.35
6/21/2022 18:10	-0.08	6/22/2022 17:00	2.48	6/22/2022 17:23	6.87	6/22/2022 18:46	-0.32	6/21/2022 17:34	11.28
6/21/2022 18:11	-0.08	6/22/2022 17:01	2.48	6/22/2022 17:24	6.85	6/22/2022 18:47	-0.32	6/21/2022 17:35	11.32
6/21/2022 18:12	-0.08	6/22/2022 17:02	2.48	6/22/2022 17:25	6.89	6/22/2022 18:48	-0.33	6/21/2022 17:36	11.34
6/21/2022 18:13	-0.08	6/22/2022 17:03	2.48	6/22/2022 17:26	6.91	6/22/2022 18:49	-0.32	6/21/2022 17:37	11.35
6/21/2022 18:14	-0.08	6/22/2022 17:04	2.48	6/22/2022 17:27	6.89	6/22/2022 18:50	-0.29	6/21/2022 17:38	11.38
6/21/2022 18:15	-0.07	6/22/2022 17:05	2.48	6/22/2022 17:28	6.89	6/22/2022 18:51	-0.32	6/21/2022 17:39	11.33
6/21/2022 18:16	-0.08	6/22/2022 17:06	2.48	6/22/2022 17:29	6.85	6/22/2022 18:52	-0.33	6/21/2022 17:40	11.33
6/21/2022 18:17	-0.08	6/22/2022 17:07	2.48	6/22/2022 17:30	6.85	6/22/2022 18:53	-0.28	6/21/2022 17:41	11.30
6/21/2022 18:18	-0.08	6/22/2022 17:08	2.48	6/22/2022 17:31	6.85	6/22/2022 18:54	-0.26	6/21/2022 17:42	11.40
6/21/2022 18:19	-0.07	6/22/2022 17:09	2.48	6/22/2022 17:32	6.84	6/22/2022 18:55	-0.35	6/21/2022 17:43	11.30
6/21/2022 18:20	-0.08	6/22/2022 17:10	2.48	6/22/2022 17:33	6.89	6/22/2022 18:56	-0.30	6/21/2022 17:44	11.33
6/21/2022 18:21	-0.07	6/22/2022 17:11	2.48	6/22/2022 17:34	6.87	6/22/2022 18:57	-0.32	6/21/2022 17:45	11.34
6/21/2022 18:22	-0.06	6/22/2022 17:12	2.48	6/22/2022 17:35	6.88	6/22/2022 18:58	-0.30	6/21/2022 17:46	11.31
6/21/2022 18:23	-0.08	6/22/2022 17:13	2.48	6/22/2022 17:36	6.88	6/22/2022 18:59	-0.30	6/21/2022 17:47	11.36
6/21/2022 18:24	-0.08	6/22/2022 17:14	2.49	6/22/2022 17:37	6.88	6/22/2022 19:00	-0.34	6/21/2022 17:48	11.35
6/21/2022 18:25	-0.08	6/22/2022 17:15	2.49	6/22/2022 17:38	6.85	6/22/2022 19:01	-0.35	6/21/2022 17:49	11.34
6/21/2022 18:26	-0.08	6/22/2022 17:16	2.48	6/22/2022 17:39	6.89	6/22/2022 19:02	-0.33	6/21/2022 17:50	11.35
6/21/2022 18:27	-0.08	6/22/2022 17:17	2.49	6/22/2022 17:40	6.88	6/22/2022 19:03	-0.28	6/21/2022 17:51	11.30
6/21/2022 18:28	-0.06	6/22/2022 17:18	2.48	6/22/2022 17:41	6.91	6/22/2022 19:04	-0.31	6/21/2022 17:52	11.33
6/21/2022 18:29	-0.08	6/22/2022 17:19	2.48	6/22/2022 17:42	6.85	6/22/2022 19:05	-0.31	6/21/2022 17:53	11.33
6/21/2022 18:30	-0.06	6/22/2022 17:20	2.49	6/22/2022 17:43	6.88	6/22/2022 19:06	-0.32	6/21/2022 17:54	11.31
6/21/2022 18:31	-0.08	6/22/2022 17:21	2.49	6/22/2022 17:44	6.87	6/22/2022 19:07	-0.31	6/21/2022 17:55	11.36
6/21/2022 18:32	-0.07	6/22/2022 17:22	2.49	6/22/2022 17:45	6.88	6/22/2022 19:08	-0.34	6/21/2022 17:56	11.35
6/21/2022 18:33	-0.08	6/22/2022 17:23	2.49	6/22/2022 17:46	6.91	6/22/2022 19:09	-0.31	6/21/2022 17:57	11.33
6/21/2022 18:34	-0.08	6/22/2022 17:24	2.49	6/22/2022 17:47	6.86	6/22/2022 19:10	-0.33	6/21/2022 17:58	11.33
6/21/2022 18:35	-0.08	6/22/2022 17:25	2.49	6/22/2022 17:48	6.90	6/22/2022 19:11	-0.33	6/21/2022 17:59	11.33
6/21/2022 18:36	-0.08	6/22/2022 17:26	2.49	6/22/2022 17:49	6.88	6/22/2022 19:12	-0.31	6/21/2022 18:00	11.33
6/21/2022 18:37	-0.07	6/22/2022 17:27	2.49	6/22/2022 17:50	6.86	6/22/2022 19:13	-0.30	6/21/2022 18:01	11.34
6/21/2022 18:38	-0.08	6/22/2022 17:28	2.49	6/22/2022 17:51	6.90	6/22/2022 19:14	-0.35	6/21/2022 18:02	11.35
6/21/2022 18:39	-0.07	6/22/2022 17:29	2.49	6/22/2022 17:52	6.86	6/22/2022 19:15	-0.33	6/21/2022 18:03	11.37
6/21/2022 18:40	-0.08	6/22/2022 17:30	2.49	6/22/2022 17:53	6.89	6/22/2022 19:16	-0.33	6/21/2022 18:04	11.32
6/21/2022 18:41	-0.08	6/22/2022 17:31	2.49	6/22/2022 17:54	6.91	6/22/2022 19:17	-0.30	6/21/2022 18:05	11.32
6/21/2022 18:42	-0.06	6/22/2022 17:32	2.49	6/22/2022 17:55	6.88	6/22/2022 19:18	-0.32	6/21/2022 18:06	11.38
6/21/2022 18:43	-0.08	6/22/2022 17:33	2.49	6/22/2022 17:56	6.90	6/22/2022 19:19	-0.32	6/21/2022 18:07	11.38
6/21/2022 18:44	-0.09	6/22/2022 17:34	2.49	6/22/2022 17:57	6.90	6/22/2022 19:20	-0.32	6/21/2022 18:08	11.37
6/21/2022 18:45	-0.07	6/22/2022 17:35	2.49	6/22/2022 17:58	6.88	6/22/2022 19:21	-0.30	6/21/2022 18:09	11.38
6/21/2022 18:46	-0.08	6/22/2022 17:36	2.49	6/22/2022 17:59	6.89	6/22/2022 19:22	-0.32	6/21/2022 18:10	11.32
6/21/2022 18:47	-0.08	6/22/2022 17:37	2.49	6/22/2022 18:00	6.90	6/22/2022 19:23	-0.31	6/21/2022 18:11	11.31
6/21/2022 18:48	-0.09	6/22/2022 17:38	2.49	6/22/2022 18:01	6.93	6/22/2022 19:24	-0.31	6/21/2022 18:12	11.33
6/21/2022 18:49	-0.08	6/22/2022 17:39	2.49	6/22/2022 18:02	6.86	6/22/2022 19:25	-0.34	6/21/2022 18:13	11.33
6/21/2022 18:50	-0.08	6/22/2022 17:40	2.49	6/22/2022 18:03	6.91	6/22/2022 19:26	-0.34	6/21/2022 18:14	11.31
6/21/2022 18:51	-0.07	6/22/2022 17:41	2.49	6/22/2022 18:04	6.92	6/22/2022 19:27	-0.31	6/21/2022 18:15	11.31
6/21/2022 18:52	-0.08	6/22/2022 17:42	2.49	6/22/2022 18:05	6.91	6/22/2022 19:28	-0.32	6/21/2022 18:16	11.34
6/21/2022 18:53	-0.08	6/22/2022 17:43	2.49	6/22/2022 18:06	6.87	6/22/2022 19:29	-0.29	6/21/2022 18:17	11.34
6/21/2022 18:54	-0.08	6/22/2022 17:44	2.49	6/22/2022 18:07	6.91	6/22/2022 19:30	-0.37	6/21/2022 18:18	11.30
6/21/2022 18:55	-0.09	6/22/2022 17:45	2.49	6/22/2022 18:08	6.89	6/22/2022 19:31	-0.33	6/21/2022 18:19	11.35
6/21/2022 18:56	-0.06	6/22/2022 17:46	2.49	6/22/2022 18:09	6.92	6/22/2022 19:32	-0.32	6/21/2022 18:20	11.35
6/21/2022 18:57	-0.06	6/22/2022 17:47	2.49	6/22/2022 18:10	6.91	6/22/2022 19:33	-0.29	6/21/2022 18:21	11.33
6/21/2022 18:58	-0.07	6/22/2022 17:48	2.50	6/22/2022 18:11	6.86	6/22/2022 19:34	-0.34	6/21/2022 18:22	11.35
6/21/2022 18:59	-0.07	6/22/2022 17:49	2.49	6/22/2022 18:12	6.89	6/22/2022 19:35	-0.32	6/21/2022 18:23	11.36
6/21/2022 19:00	-0.09	6/22/2022 17:50	2.50	6/22/2022 18:13	6.90	6/22/2022 19:36	-0.35	6/21/2022 18:24	11.32
6/21/2022 19:01	-0.09	6/22/2022 17:51	2.49	6/22/2022 18:14	6.90	6/22/2022 19:37	-0.33	6/21/2022 18:25	11.36
6/21/2022 19:02	-0.08	6/22/2022 17:52	2.50	6/22/2022 18:15	6.92	6/22/2022 19:38	-0.35	6/21/2022 18:26	11.31
6/21/2022 19:03	-0.07	6/22/2022 17:53	2.50	6/22/2022 18:16	6.89	6/22/2022 19:39	-0.32	6/21/2022 18:27	11.37
6/21/2022 19:04	-0.07	6/22/2022 17:54	2.50	6/22/2022 18:17	6.90	6/22/2022 19:40	-0.33	6/21/2022 18:28	11.37
6/21/2022 19:05	-0.07	6/22/2022 17:55	2.50	6/22/2022 18:18	6.88	6/22/2022 19:41	-0.30	6/21/2022 18:29	11.30
6/21/2022 19:06	-0.07	6/22/2022 17:56	2.50	6/22/2022 18:19	6.88	6/22/2022 19:42	-0.34	6/21/2022 18:30	11.31
6/21/2022 19:07	-0.06	6/22/2022 17:57	2.50	6/22/2022 18:20	6.91	6/22/2022 19:43	-0.32	6/21/2022 18:31	11.30
6/21/2022 19:08	-0.08	6/22/2022 17:58	2.50	6/22/2022 18:21	6.86	6/22/2022 19:44	-0.34	6/21/2022 18:32	11.28
6/21/2022 19:09	-0.09	6/22/2022 17:59	2.50	6/22/2022 18:22	6.93	6/22/2022 19:45	-0.32	6/21/2022 18:33	11.34
6/21/2022 19:10	-0.08	6/22/2022 18:00	2.49	6/22/2022 18:23	6.93	6/22/2022 19:46	-0.33	6/21/2022 18:34	11.35
6/21/2022 19:11	-0.07	6/22/2022 18:01	2.50	6/22/2022 18:24	6.90	6/22/2022 19:47	-0.33	6/21/2022 18:35	11.35
6/21/2022 19:12	-0.08	6/22/2022 18:02	2.50	6/22/2022 18:25	6.92	6/22/2022 19:48	-0.29	6/21/2022 18:36	11.32
6/21/2022 19:13	-0.06	6/22/2022 18:03	2.50	6/22/2022 18:26	6.90	6/22/2022 19:49	-0.30	6/21/2022 18:37	11.36
6/21/2022 19:14	-0.08	6/22/2022 18:04	2.50	6/22/2022 18:27	6.91	6/22/2022 19:50	-0.32	6/21/2022 18:38	11.29
6/21/2022 19:15	-0.09	6/22/2022 18:05	2.50	6/22/2022 18:28	6.89	6/22/2022 19:51	-0.34	6/21/2022 18:39	11.35
6/21/2022 19:16	-0.07	6/22/2022 18:06	2.50	6/22/2022 18:29	6.89	6/22/2022 19:52	-0.32	6/21/2022 18:40	11.28
6/21/2022 19:17	-0.06	6/22/2022 18:07	2.50	6/22/2022 18:30	6.95	6/22/2022 19:53	-0.29	6/21/2022 18:41	11.34
6/21/2022 19:18	-0.08	6/22/2022 18:08	2.50	6/22/2022 18:31	6.88	6/22/2022 19:54	-0.29	6/21/2022 18:42	11.35
6/21/2022 19:19	-0.08	6/22/2022 18:09	2.50	6/22/2022 18:32	6.92	6/22/2022 19:55	-0.33	6/21/2022 18:43	11.38
6/21/2022 19:20	-0.07	6/22/2022 18:10	2.50	6/22/2022 18:33	6.88	6/22/2022 19:56	-0.32	6/21/2022 18:44	11.36

6/21/2022 19:21	-0.06	6/22/2022 18:11	2.50	6/22/2022 18:34	6.91	6/22/2022 19:57	-0.31	6/21/2022 18:45	11.30
6/21/2022 19:22	-0.08	6/22/2022 18:12	2.50	6/22/2022 18:35	6.92	6/22/2022 19:58	-0.30	6/21/2022 18:46	11.32
6/21/2022 19:23	-0.08	6/22/2022 18:13	2.50	6/22/2022 18:36	6.90	6/22/2022 19:59	-0.32	6/21/2022 18:47	11.37
6/21/2022 19:24	-0.06	6/22/2022 18:14	2.50	6/22/2022 18:37	6.92	6/22/2022 20:00	-0.33	6/21/2022 18:48	11.36
6/21/2022 19:25	-0.08	6/22/2022 18:15	2.50	6/22/2022 18:38	6.90	6/22/2022 20:01	-0.29	6/21/2022 18:49	11.34
6/21/2022 19:26	-0.08	6/22/2022 18:16	2.50	6/22/2022 18:39	6.91	6/22/2022 20:02	-0.29	6/21/2022 18:50	11.36
6/21/2022 19:27	-0.09	6/22/2022 18:17	2.50	6/22/2022 18:40	6.90	6/22/2022 20:03	-0.30	6/21/2022 18:51	11.40
6/21/2022 19:28	-0.07	6/22/2022 18:18	2.50	6/22/2022 18:41	6.89	6/22/2022 20:04	-0.33	6/21/2022 18:52	11.33
6/21/2022 19:29	-0.08	6/22/2022 18:19	2.50	6/22/2022 18:42	6.92	6/22/2022 20:05	-0.30	6/21/2022 18:53	11.36
6/21/2022 19:30	-0.08	6/22/2022 18:20	2.50	6/22/2022 18:43	6.94	6/22/2022 20:06	-0.33	6/21/2022 18:54	11.36
6/21/2022 19:31	-0.08	6/22/2022 18:21	2.50	6/22/2022 18:44	6.93	6/22/2022 20:07	-0.30	6/21/2022 18:55	11.33
6/21/2022 19:32	-0.08	6/22/2022 18:22	2.50	6/22/2022 18:45	6.92	6/22/2022 20:08	-0.34	6/21/2022 18:56	11.33
6/21/2022 19:33	-0.08	6/22/2022 18:23	2.50	6/22/2022 18:46	6.93	6/22/2022 20:09	-0.33	6/21/2022 18:57	11.30
6/21/2022 19:34	-0.07	6/22/2022 18:24	2.50	6/22/2022 18:47	6.92	6/22/2022 20:10	-0.31	6/21/2022 18:58	11.39
6/21/2022 19:35	-0.08	6/22/2022 18:25	2.50	6/22/2022 18:48	6.91	6/22/2022 20:11	-0.30	6/21/2022 18:59	11.38
6/21/2022 19:36	-0.08	6/22/2022 18:26	2.50	6/22/2022 18:49	6.92	6/22/2022 20:12	-0.28	6/21/2022 19:00	11.33
6/21/2022 19:37	-0.07	6/22/2022 18:27	2.50	6/22/2022 18:50	6.93	6/22/2022 20:13	-0.30	6/21/2022 19:01	11.34
6/21/2022 19:38	-0.08	6/22/2022 18:28	2.50	6/22/2022 18:51	6.88	6/22/2022 20:14	-0.32	6/21/2022 19:02	11.36
6/21/2022 19:39	-0.08	6/22/2022 18:29	2.50	6/22/2022 18:52	6.91	6/22/2022 20:15	-0.32	6/21/2022 19:03	11.36
6/21/2022 19:40	-0.07	6/22/2022 18:30	2.50	6/22/2022 18:53	6.95	6/22/2022 20:16	-0.35	6/21/2022 19:04	11.36
6/21/2022 19:41	-0.08	6/22/2022 18:31	2.51	6/22/2022 18:54	6.93	6/22/2022 20:17	-0.32	6/21/2022 19:05	11.32
6/21/2022 19:42	-0.08	6/22/2022 18:32	2.51	6/22/2022 18:55	6.88	6/22/2022 20:18	-0.32	6/21/2022 19:06	11.31
6/21/2022 19:43	-0.07	6/22/2022 18:33	2.51	6/22/2022 18:56	6.91	6/22/2022 20:19	-0.32	6/21/2022 19:07	11.30
6/21/2022 19:44	-0.07	6/22/2022 18:34	2.50	6/22/2022 18:57	6.91	6/22/2022 20:20	-0.31	6/21/2022 19:08	11.34
6/21/2022 19:45	-0.07	6/22/2022 18:35	2.51	6/22/2022 18:58	6.94	6/22/2022 20:21	-0.31	6/21/2022 19:09	11.35
6/21/2022 19:46	-0.08	6/22/2022 18:36	2.51	6/22/2022 18:59	6.91	6/22/2022 20:22	-0.29	6/21/2022 19:10	11.33
6/21/2022 19:47	-0.08	6/22/2022 18:37	2.50	6/22/2022 19:00	6.91	6/22/2022 20:23	-0.29	6/21/2022 19:11	11.32
6/21/2022 19:48	-0.06	6/22/2022 18:38	2.51	6/22/2022 19:01	6.90	6/22/2022 20:24	-0.32	6/21/2022 19:12	11.35
6/21/2022 19:49	-0.07	6/22/2022 18:39	2.50	6/22/2022 19:02	6.90	6/22/2022 20:25	-0.31	6/21/2022 19:13	11.34
6/21/2022 19:50	-0.08	6/22/2022 18:40	2.51	6/22/2022 19:03	6.92	6/22/2022 20:26	-0.32	6/21/2022 19:14	11.34
6/21/2022 19:51	-0.07	6/22/2022 18:41	2.51	6/22/2022 19:04	6.93	6/22/2022 20:27	-0.31	6/21/2022 19:15	11.33
6/21/2022 19:52	-0.08	6/22/2022 18:42	2.50	6/22/2022 19:05	6.94	6/22/2022 20:28	-0.34	6/21/2022 19:16	11.33
6/21/2022 19:53	-0.07	6/22/2022 18:43	2.51	6/22/2022 19:06	6.93	6/22/2022 20:29	-0.36	6/21/2022 19:17	11.34
6/21/2022 19:54	-0.06	6/22/2022 18:44	2.51	6/22/2022 19:07	6.95	6/22/2022 20:30	-0.32	6/21/2022 19:18	11.28
6/21/2022 19:55	-0.07	6/22/2022 18:45	2.51	6/22/2022 19:08	6.89	6/22/2022 20:31	-0.34	6/21/2022 19:19	11.32
6/21/2022 19:56	-0.08	6/22/2022 18:46	2.51	6/22/2022 19:09	6.90	6/22/2022 20:32	-0.33	6/21/2022 19:20	11.34
6/21/2022 19:57	-0.08	6/22/2022 18:47	2.51	6/22/2022 19:10	6.92	6/22/2022 20:33	-0.32	6/21/2022 19:21	11.36
6/21/2022 19:58	-0.07	6/22/2022 18:48	2.51	6/22/2022 19:11	6.92	6/22/2022 20:34	-0.32	6/21/2022 19:22	11.36
6/21/2022 19:59	-0.09	6/22/2022 18:49	2.51	6/22/2022 19:12	6.91	6/22/2022 20:35	-0.32	6/21/2022 19:23	11.34
6/21/2022 20:00	-0.07	6/22/2022 18:50	2.51	6/22/2022 19:13	6.96	6/22/2022 20:36	-0.32	6/21/2022 19:24	11.31
6/21/2022 20:01	-0.06	6/22/2022 18:51	2.51	6/22/2022 19:14	6.89	6/22/2022 20:37	-0.31	6/21/2022 19:25	11.37
6/21/2022 20:02	-0.07	6/22/2022 18:52	2.51	6/22/2022 19:15	6.93	6/22/2022 20:38	-0.29	6/21/2022 19:26	11.36
6/21/2022 20:03	-0.08	6/22/2022 18:53	2.51	6/22/2022 19:16	6.91	6/22/2022 20:39	-0.29	6/21/2022 19:27	11.38
6/21/2022 20:04	-0.07	6/22/2022 18:54	2.51	6/22/2022 19:17	6.93	6/22/2022 20:40	-0.32	6/21/2022 19:28	11.34
6/21/2022 20:05	-0.07	6/22/2022 18:55	2.51	6/22/2022 19:18	6.91	6/22/2022 20:41	-0.29	6/21/2022 19:29	11.35
6/21/2022 20:06	-0.08	6/22/2022 18:56	2.51	6/22/2022 19:19	6.97	6/22/2022 20:42	-0.32	6/21/2022 19:30	11.40
6/21/2022 20:07	-0.08	6/22/2022 18:57	2.51	6/22/2022 19:20	6.92	6/22/2022 20:43	-0.34	6/21/2022 19:31	11.35
6/21/2022 20:08	-0.06	6/22/2022 18:58	2.51	6/22/2022 19:21	6.94	6/22/2022 20:44	-0.34	6/21/2022 19:32	11.36
6/21/2022 20:09	-0.08	6/22/2022 18:59	2.51	6/22/2022 19:22	6.92	6/22/2022 20:45	-0.32	6/21/2022 19:33	11.38
6/21/2022 20:10	-0.09	6/22/2022 19:00	2.51	6/22/2022 19:23	6.93	6/22/2022 20:46	-0.29	6/21/2022 19:34	11.38
6/21/2022 20:11	-0.09	6/22/2022 19:01	2.51	6/22/2022 19:24	6.93	6/22/2022 20:47	-0.30	6/21/2022 19:35	11.41
6/21/2022 20:12	-0.08	6/22/2022 19:02	2.51	6/22/2022 19:25	6.92	6/22/2022 20:48	-0.32	6/21/2022 19:36	11.31
6/21/2022 20:13	-0.07	6/22/2022 19:03	2.52	6/22/2022 19:26	6.92	6/22/2022 20:49	-0.33	6/21/2022 19:37	11.35
6/21/2022 20:14	-0.07	6/22/2022 19:04	2.51	6/22/2022 19:27	6.91	6/22/2022 20:50	-0.29	6/21/2022 19:38	11.36
6/21/2022 20:15	-0.08	6/22/2022 19:05	2.51	6/22/2022 19:28	6.92	6/22/2022 20:51	-0.32	6/21/2022 19:39	11.30
6/21/2022 20:16	-0.08	6/22/2022 19:06	2.52	6/22/2022 19:29	6.93	6/22/2022 20:52	-0.34	6/21/2022 19:40	11.39
6/21/2022 20:17	-0.07	6/22/2022 19:07	2.51	6/22/2022 19:30	6.93	6/22/2022 20:53	-0.35	6/21/2022 19:41	11.38
6/21/2022 20:18	-0.08	6/22/2022 19:08	2.51	6/22/2022 19:31	6.92	6/22/2022 20:54	-0.34	6/21/2022 19:42	11.31
6/21/2022 20:19	-0.06	6/22/2022 19:09	2.52	6/22/2022 19:32	6.97	6/22/2022 20:55	-0.28	6/21/2022 19:43	11.34
6/21/2022 20:20	-0.08	6/22/2022 19:10	2.52	6/22/2022 19:33	6.92	6/22/2022 20:56	-0.31	6/21/2022 19:44	11.31
6/21/2022 20:21	-0.08	6/22/2022 19:11	2.51	6/22/2022 19:34	6.93	6/22/2022 20:57	-0.32	6/21/2022 19:45	11.32
6/21/2022 20:22	-0.08	6/22/2022 19:12	2.52	6/22/2022 19:35	6.95	6/22/2022 20:58	-0.31	6/21/2022 19:46	11.36
6/21/2022 20:23	-0.07	6/22/2022 19:13	2.51	6/22/2022 19:36	6.92	6/22/2022 20:59	-0.30	6/21/2022 19:47	11.35
6/21/2022 20:24	-0.06	6/22/2022 19:14	2.52	6/22/2022 19:37	6.93	6/22/2022 21:00	-0.29	6/21/2022 19:48	11.36
6/21/2022 20:25	-0.07	6/22/2022 19:15	2.52	6/22/2022 19:38	6.90	6/22/2022 21:01	-0.35	6/21/2022 19:49	11.37
6/21/2022 20:26	-0.08	6/22/2022 19:16	2.52	6/22/2022 19:39	6.95	6/22/2022 21:02	-0.31	6/21/2022 19:50	11.32
6/21/2022 20:27	-0.08	6/22/2022 19:17	2.52	6/22/2022 19:40	6.92	6/22/2022 21:03	-0.31	6/21/2022 19:51	11.32
6/21/2022 20:28	-0.07	6/22/2022 19:18	2.51	6/22/2022 19:41	6.91	6/22/2022 21:04	-0.30	6/21/2022 19:52	11.32
6/21/2022 20:29	-0.08	6/22/2022 19:19	2.52	6/22/2022 19:42	6.94	6/22/2022 21:05	-0.32	6/21/2022 19:53	11.35
6/21/2022 20:30	-0.08	6/22/2022 19:20	2.51	6/22/2022 19:43	6.92	6/22/2022 21:06	-0.32	6/21/2022 19:54	11.36
6/21/2022 20:31	-0.07	6/22/2022 19:21	2.52	6/22/2022 19:44	6.95	6/22/2022 21:07	-0.36	6/21/2022 19:55	11.37
6/21/2022 20:32	-0.07	6/22/2022 19:22	2.52	6/22/2022 19:45	6.94	6/22/2022 21:08	-0.33	6/21/2022 19:56	11.35
6/21/2022 20:33	-0.08	6/22/2022 19:23	2.52	6/22/2022 19:46	6.93	6/22/2022 21:09	-0.35	6/21/2022 19:57	11.26
6/21/2022 20:34	-0.08	6/22/2022 19:24	2.52	6/22/2022 19:47	6.93	6/22/2022 21:10	-0.28	6/21/2022 19:58	11.32
6/21/2022 20:35	-0.08	6/22/2022 19:25	2.52	6/22/2022 19:48	6.92	6/22/2022 21:11	-0.32	6/21/2022 19:59	11.39
6/21/2022 20:36	-0.08	6/22/2022 19:26	2.52	6/22/2022 19:49	6.94	6/22/2022 21:12	-0.30	6/21/2022 20:00	11.36
6/21/2022 20:37	-0.06	6/22/2022 19:27	2.52	6/22/2022 19:50	6.91	6/22/2022 21:13	-0.31	6/21/2022 20:01	11.35
6/21/2022 20:38	-0.07	6/22/2022 19:28	2.52	6/22/2022 19:51	6.93	6/22/2022 21:14	-0.33	6/21/2022 20:02	11.29
6/21/2022 20:39	-0.08	6/22/2022 19:29	2.52	6/22/2022 19:52	6.94	6/22/2022 21:15	-0.29	6/21/2022 20:03	11.37
6/21/2022 20:40	-0.07	6/22/2022 19:30	2.52	6/22/2022 19:53	6.94	6/22/2022 21:16	-0.32	6/21/2022 20:04	11.37
6/21/2022 20:41	-0.08	6/22/2022 19:31	2.52	6/22/2022 19:54	6.92	6/22/2022 21:17	-0.30	6/21/2022 20:05	11.39
6/21/2022 20:42	-0.08	6/22/2022 19:32	2.51	6/22/2022 19:55	6.95	6/22/2022 21:18	-0.31	6/21/2022 20:06	11.36
6/21/2022 20:43	-0.07	6/22/2022 19:33	2.52	6/22/2022 19:56	6.96	6/22/2022 21:19	-0.30	6/21/2022 20:07	11.35
6/21/2022 20:44	-0.07	6/22/2022 19:34	2.52	6/22/2022 19:57	6.95	6/22/2022 21:20	-0.31	6/21/2022 20:08	11.31
6/21/2022 20:45	-0.08	6/22/2022 19:35	2.52	6/22/2022 19:58	6.95	6/22/2022 21:21	-0.30	6/21/2022 20:09	11.37
6/21/2022 20:46	-0.06	6/22/2022 19:36	2.52	6/22/2022 19:59	6.96	6/22/2022 21:22	-0.30	6/21/2022 20:10	11.33
6/21/2022 20:47	-0.08	6/22/2022 19:37	2.52	6/22/2022 20:00	6.95	6/22/2022 21:23	-0.32	6/21/2022 20:11	11.32
6/21/2022 20:48	-0.07	6/22/2022 19:38	2.52	6/22/2022 20:01	6.96	6/22/2022 21:24	-0.31	6/21/2022 20:12	11.39

6/21/2022 20:49	-0.07	6/22/2022 19:39	2.52	6/22/2022 20:02	6.94	6/22/2022 21:25	-0.31	6/21/2022 20:13	11.39
6/21/2022 20:50	-0.07	6/22/2022 19:40	2.52	6/22/2022 20:03	7.00	6/22/2022 21:26	-0.30	6/21/2022 20:14	11.36
6/21/2022 20:51	-0.08	6/22/2022 19:41	2.52	6/22/2022 20:04	6.98	6/22/2022 21:27	-0.31	6/21/2022 20:15	11.35
6/21/2022 20:52	-0.08	6/22/2022 19:42	2.52	6/22/2022 20:05	6.95	6/22/2022 21:28	-0.36	6/21/2022 20:16	11.32
6/21/2022 20:53	-0.08	6/22/2022 19:43	2.52	6/22/2022 20:06	6.94	6/22/2022 21:29	-0.33	6/21/2022 20:17	11.35
6/21/2022 20:54	-0.08	6/22/2022 19:44	2.52	6/22/2022 20:07	6.96	6/22/2022 21:30	-0.32	6/21/2022 20:18	11.32
6/21/2022 20:55	-0.08	6/22/2022 19:45	2.52	6/22/2022 20:08	6.94	6/22/2022 21:31	-0.31	6/21/2022 20:19	11.31
6/21/2022 20:56	-0.08	6/22/2022 19:46	2.52	6/22/2022 20:09	6.98	6/22/2022 21:32	-0.33	6/21/2022 20:20	11.33
6/21/2022 20:57	-0.08	6/22/2022 19:47	2.52	6/22/2022 20:10	6.95	6/22/2022 21:33	-0.31	6/21/2022 20:21	11.35
6/21/2022 20:58	-0.08	6/22/2022 19:48	2.52	6/22/2022 20:11	6.96	6/22/2022 21:34	-0.32	6/21/2022 20:22	11.29
6/21/2022 20:59	-0.06	6/22/2022 19:49	2.53	6/22/2022 20:12	6.96	6/22/2022 21:35	-0.30	6/21/2022 20:23	11.35
6/21/2022 21:00	-0.08	6/22/2022 19:50	2.52	6/22/2022 20:13	6.97	6/22/2022 21:36	-0.34	6/21/2022 20:24	11.30
6/21/2022 21:01	-0.06	6/22/2022 19:51	2.53	6/22/2022 20:14	6.96	6/22/2022 21:37	-0.30	6/21/2022 20:25	11.33
6/21/2022 21:02	-0.07	6/22/2022 19:52	2.52	6/22/2022 20:15	6.93	6/22/2022 21:38	-0.35	6/21/2022 20:26	11.37
6/21/2022 21:03	-0.08	6/22/2022 19:53	2.52	6/22/2022 20:16	6.97	6/22/2022 21:39	-0.33	6/21/2022 20:27	11.38
6/21/2022 21:04	-0.07	6/22/2022 19:54	2.53	6/22/2022 20:17	6.93	6/22/2022 21:40	-0.33	6/21/2022 20:28	11.36
6/21/2022 21:05	-0.07	6/22/2022 19:55	2.53	6/22/2022 20:18	6.98	6/22/2022 21:41	-0.32	6/21/2022 20:29	11.34
6/21/2022 21:06	-0.06	6/22/2022 19:56	2.53	6/22/2022 20:19	6.96	6/22/2022 21:42	-0.33	6/21/2022 20:30	11.36
6/21/2022 21:07	-0.06	6/22/2022 19:57	2.53	6/22/2022 20:20	6.95	6/22/2022 21:43	-0.30	6/21/2022 20:31	11.38
6/21/2022 21:08	-0.08	6/22/2022 19:58	2.53	6/22/2022 20:21	6.96	6/22/2022 21:44	-0.32	6/21/2022 20:32	11.37
6/21/2022 21:09	-0.07	6/22/2022 19:59	2.53	6/22/2022 20:22	6.99	6/22/2022 21:45	-0.35	6/21/2022 20:33	11.37
6/21/2022 21:10	-0.08	6/22/2022 20:00	2.53	6/22/2022 20:23	6.95	6/22/2022 21:46	-0.29	6/21/2022 20:34	11.35
6/21/2022 21:11	-0.07	6/22/2022 20:01	2.53	6/22/2022 20:24	6.93	6/22/2022 21:47	-0.30	6/21/2022 20:35	11.36
6/21/2022 21:12	-0.08	6/22/2022 20:02	2.53	6/22/2022 20:25	7.00	6/22/2022 21:48	-0.31	6/21/2022 20:36	11.40
6/21/2022 21:13	-0.07	6/22/2022 20:03	2.53	6/22/2022 20:26	6.96	6/22/2022 21:49	-0.31	6/21/2022 20:37	11.37
6/21/2022 21:14	-0.06	6/22/2022 20:04	2.53	6/22/2022 20:27	6.93	6/22/2022 21:50	-0.32	6/21/2022 20:38	11.36
6/21/2022 21:15	-0.07	6/22/2022 20:05	2.53	6/22/2022 20:28	7.00	6/22/2022 21:51	-0.33	6/21/2022 20:39	11.38
6/21/2022 21:16	-0.07	6/22/2022 20:06	2.53	6/22/2022 20:29	6.93	6/22/2022 21:52	-0.33	6/21/2022 20:40	11.34
6/21/2022 21:17	-0.08	6/22/2022 20:07	2.53	6/22/2022 20:30	6.95	6/22/2022 21:53	-0.32	6/21/2022 20:41	11.36
6/21/2022 21:18	-0.08	6/22/2022 20:08	2.53	6/22/2022 20:31	7.01	6/22/2022 21:54	-0.32	6/21/2022 20:42	11.31
6/21/2022 21:19	-0.08	6/22/2022 20:09	2.53	6/22/2022 20:32	6.97	6/22/2022 21:55	-0.34	6/21/2022 20:43	11.34
6/21/2022 21:20	-0.08	6/22/2022 20:10	2.53	6/22/2022 20:33	6.97	6/22/2022 21:56	-0.30	6/21/2022 20:44	11.33
6/21/2022 21:21	-0.08	6/22/2022 20:11	2.53	6/22/2022 20:34	6.97	6/22/2022 21:57	-0.33	6/21/2022 20:45	11.39
6/21/2022 21:22	-0.07	6/22/2022 20:12	2.53	6/22/2022 20:35	7.00	6/22/2022 21:58	-0.30	6/21/2022 20:46	11.35
6/21/2022 21:23	-0.08	6/22/2022 20:13	2.53	6/22/2022 20:36	6.98	6/22/2022 21:59	-0.35	6/21/2022 20:47	11.34
6/21/2022 21:24	-0.08	6/22/2022 20:14	2.53	6/22/2022 20:37	6.95	6/22/2022 22:00	-0.32	6/21/2022 20:48	11.39
6/21/2022 21:25	-0.08	6/22/2022 20:15	2.53	6/22/2022 20:38	6.97	6/22/2022 22:01	-0.35	6/21/2022 20:49	11.39
6/21/2022 21:26	-0.08	6/22/2022 20:16	2.53	6/22/2022 20:39	6.97	6/22/2022 22:02	-0.31	6/21/2022 20:50	11.39
6/21/2022 21:27	-0.08	6/22/2022 20:17	2.53	6/22/2022 20:40	6.94	6/22/2022 22:03	-0.30	6/21/2022 20:51	11.39
6/21/2022 21:28	-0.07	6/22/2022 20:18	2.53	6/22/2022 20:41	6.98	6/22/2022 22:04	-0.30	6/21/2022 20:52	11.40
6/21/2022 21:29	-0.08	6/22/2022 20:19	2.53	6/22/2022 20:42	6.98	6/22/2022 22:05	-0.35	6/21/2022 20:53	11.30
6/21/2022 21:30	-0.09	6/22/2022 20:20	2.53	6/22/2022 20:43	6.97	6/22/2022 22:06	-0.32	6/21/2022 20:54	11.35
6/21/2022 21:31	-0.08	6/22/2022 20:21	2.54	6/22/2022 20:44	6.98	6/22/2022 22:07	-0.34	6/21/2022 20:55	11.34
6/21/2022 21:32	-0.07	6/22/2022 20:22	2.53	6/22/2022 20:45	6.95	6/22/2022 22:08	-0.34	6/21/2022 20:56	11.35
6/21/2022 21:33	-0.06	6/22/2022 20:23	2.54	6/22/2022 20:46	6.96	6/22/2022 22:09	-0.31	6/21/2022 20:57	11.39
6/21/2022 21:34	-0.08	6/22/2022 20:24	2.54	6/22/2022 20:47	6.96	6/22/2022 22:10	-0.31	6/21/2022 20:58	11.38
6/21/2022 21:35	-0.08	6/22/2022 20:25	2.53	6/22/2022 20:48	6.97	6/22/2022 22:11	-0.35	6/21/2022 20:59	11.37
6/21/2022 21:36	-0.06	6/22/2022 20:26	2.54	6/22/2022 20:49	6.95	6/22/2022 22:12	-0.31	6/21/2022 21:00	11.35
6/21/2022 21:37	-0.07	6/22/2022 20:27	2.53	6/22/2022 20:50	6.97	6/22/2022 22:13	-0.31	6/21/2022 21:01	11.37
6/21/2022 21:38	-0.07	6/22/2022 20:28	2.54	6/22/2022 20:51	6.97	6/22/2022 22:14	-0.30	6/21/2022 21:02	11.35
6/21/2022 21:39	-0.08	6/22/2022 20:29	2.53	6/22/2022 20:52	6.99	6/22/2022 22:15	-0.32	6/21/2022 21:03	11.36
6/21/2022 21:40	-0.06	6/22/2022 20:30	2.54	6/22/2022 20:53	6.97	6/22/2022 22:16	-0.35	6/21/2022 21:04	11.32
6/21/2022 21:41	-0.06	6/22/2022 20:31	2.54	6/22/2022 20:54	6.98	6/22/2022 22:17	-0.32	6/21/2022 21:05	11.34
6/21/2022 21:42	-0.08	6/22/2022 20:32	2.54	6/22/2022 20:55	7.00	6/22/2022 22:18	-0.31	6/21/2022 21:06	11.33
6/21/2022 21:43	-0.08	6/22/2022 20:33	2.54	6/22/2022 20:56	6.95	6/22/2022 22:19	-0.31	6/21/2022 21:07	11.37
6/21/2022 21:44	-0.08	6/22/2022 20:34	2.54	6/22/2022 20:57	7.00	6/22/2022 22:20	-0.32	6/21/2022 21:08	11.38
6/21/2022 21:45	-0.08	6/22/2022 20:35	2.54	6/22/2022 20:58	6.98	6/22/2022 22:21	-0.35	6/21/2022 21:09	11.32
6/21/2022 21:46	-0.07	6/22/2022 20:36	2.54	6/22/2022 20:59	6.98	6/22/2022 22:22	-0.33	6/21/2022 21:10	11.34
6/21/2022 21:47	-0.08	6/22/2022 20:37	2.54	6/22/2022 21:00	6.98	6/22/2022 22:23	-0.34	6/21/2022 21:11	11.29
6/21/2022 21:48	-0.07	6/22/2022 20:38	2.54	6/22/2022 21:01	6.98	6/22/2022 22:24	-0.32	6/21/2022 21:12	11.35
6/21/2022 21:49	-0.07	6/22/2022 20:39	2.54	6/22/2022 21:02	6.96	6/22/2022 22:25	-0.31	6/21/2022 21:13	11.32
6/21/2022 21:50	-0.08	6/22/2022 20:40	2.54	6/22/2022 21:03	6.99	6/22/2022 22:26	-0.31	6/21/2022 21:14	11.36
6/21/2022 21:51	-0.08	6/22/2022 20:41	2.54	6/22/2022 21:04	6.97	6/22/2022 22:27	-0.33	6/21/2022 21:15	11.35
6/21/2022 21:52	-0.08	6/22/2022 20:42	2.54	6/22/2022 21:05	6.99	6/22/2022 22:28	-0.34	6/21/2022 21:16	11.35
6/21/2022 21:53	-0.08	6/22/2022 20:43	2.54	6/22/2022 21:06	7.00	6/22/2022 22:29	-0.35	6/21/2022 21:17	11.35
6/21/2022 21:54	-0.08	6/22/2022 20:44	2.54	6/22/2022 21:07	7.00	6/22/2022 22:30	-0.33	6/21/2022 21:18	11.38
6/21/2022 21:55	-0.07	6/22/2022 20:45	2.54	6/22/2022 21:08	6.97	6/22/2022 22:31	-0.34	6/21/2022 21:19	11.36
6/21/2022 21:56	-0.08	6/22/2022 20:46	2.54	6/22/2022 21:09	6.99	6/22/2022 22:32	-0.29	6/21/2022 21:20	11.32
6/21/2022 21:57	-0.08	6/22/2022 20:47	2.54	6/22/2022 21:10	6.98	6/22/2022 22:33	-0.30	6/21/2022 21:21	11.35
6/21/2022 21:58	-0.06	6/22/2022 20:48	2.54	6/22/2022 21:11	6.98	6/22/2022 22:34	-0.30	6/21/2022 21:22	11.37
6/21/2022 21:59	-0.08	6/22/2022 20:49	2.54	6/22/2022 21:12	6.98	6/22/2022 22:35	-0.33	6/21/2022 21:23	11.39
6/21/2022 22:00	-0.08	6/22/2022 20:50	2.54	6/22/2022 21:13	6.93	6/22/2022 22:36	-0.31	6/21/2022 21:24	11.38
6/21/2022 22:01	-0.08	6/22/2022 20:51	2.54	6/22/2022 21:14	7.01	6/22/2022 22:37	-0.31	6/21/2022 21:25	11.36
6/21/2022 22:02	-0.07	6/22/2022 20:52	2.54	6/22/2022 21:15	7.00	6/22/2022 22:38	-0.29	6/21/2022 21:26	11.28
6/21/2022 22:03	-0.08	6/22/2022 20:53	2.54	6/22/2022 21:16	7.01	6/22/2022 22:39	-0.33	6/21/2022 21:27	11.33
6/21/2022 22:04	-0.07	6/22/2022 20:54	2.54	6/22/2022 21:17	6.99	6/22/2022 22:40	-0.29	6/21/2022 21:28	11.35
6/21/2022 22:05	-0.08	6/22/2022 20:55	2.54	6/22/2022 21:18	6.97	6/22/2022 22:41	-0.35	6/21/2022 21:29	11.34
6/21/2022 22:06	-0.07	6/22/2022 20:56	2.54	6/22/2022 21:19	6.97	6/22/2022 22:42	-0.33	6/21/2022 21:30	11.32
6/21/2022 22:07	-0.07	6/22/2022 20:57	2.54	6/22/2022 21:20	7.01	6/22/2022 22:43	-0.32	6/21/2022 21:31	11.35
6/21/2022 22:08	-0.07	6/22/2022 20:58	2.55	6/22/2022 21:21	7.02	6/22/2022 22:44	-0.32	6/21/2022 21:32	11.36
6/21/2022 22:09	-0.06	6/22/2022 20:59	2.54	6/22/2022 21:22	6.96	6/22/2022 22:45	-0.31	6/21/2022 21:33	11.32
6/21/2022 22:10	-0.08	6/22/2022 21:00	2.54	6/22/2022 21:23	7.03	6/22/2022 22:46	-0.31	6/21/2022 21:34	11.33
6/21/2022 22:11	-0.08	6/22/2022 21:01	2.54	6/22/2022 21:24	7.01	6/22/2022 22:47	-0.32	6/21/2022 21:35	11.35
6/21/2022 22:12	-0.08	6/22/2022 21:02	2.55	6/22/2022 21:25	7.01	6/22/2022 22:48	-0.34	6/21/2022 21:36	11.35
6/21/2022 22:13	-0.08	6/22/2022 21:03	2.54	6/22/2022 21:26	7.02	6/22/2022 22:49	-0.32	6/21/2022 21:37	11.37
6/21/2022 22:14	-0.08	6/22/2022 21:04	2.54	6/22/2022 21:27	6.99	6/22/2022 22:50	-0.31	6/21/2022 21:38	11.39
6/21/2022 22:15	-0.08	6/22/2022 21:05	2.54	6/22/2022 21:28	7.02	6/22/2022 22:51	-0.31	6/21/2022 21:39	11.34
6/21/2022 22:16	-0.07	6/22/2022 21:06	2.54	6/22/2022 21:29	6.98	6/22/2022 22:52	-0.34	6/21/2022 21:40	11.37

6/21/2022 22:17	-0.08	6/22/2022 21:07	2.55	6/22/2022 21:30	7.02	6/22/2022 22:53	-0.32	6/21/2022 21:41	11.31
6/21/2022 22:18	-0.08	6/22/2022 21:08	2.55	6/22/2022 21:31	6.99	6/22/2022 22:54	-0.35	6/21/2022 21:42	11.35
6/21/2022 22:19	-0.09	6/22/2022 21:09	2.55	6/22/2022 21:32	7.00	6/22/2022 22:55	-0.31	6/21/2022 21:43	11.34
6/21/2022 22:20	-0.08	6/22/2022 21:10	2.54	6/22/2022 21:33	6.98	6/22/2022 22:56	-0.35	6/21/2022 21:44	11.35
6/21/2022 22:21	-0.08	6/22/2022 21:11	2.54	6/22/2022 21:34	7.02	6/22/2022 22:57	-0.33	6/21/2022 21:45	11.33
6/21/2022 22:22	-0.06	6/22/2022 21:12	2.55	6/22/2022 21:35	6.99	6/22/2022 22:58	-0.32	6/21/2022 21:46	11.37
6/21/2022 22:23	-0.08	6/22/2022 21:13	2.55	6/22/2022 21:36	7.00	6/22/2022 22:59	-0.33	6/21/2022 21:47	11.34
6/21/2022 22:24	-0.08	6/22/2022 21:14	2.55	6/22/2022 21:37	7.00	6/22/2022 23:00	-0.31	6/21/2022 21:48	11.37
6/21/2022 22:25	-0.08	6/22/2022 21:15	2.55	6/22/2022 21:38	6.99	6/22/2022 23:01	-0.35	6/21/2022 21:49	11.37
6/21/2022 22:26	-0.07	6/22/2022 21:16	2.55	6/22/2022 21:39	7.00	6/22/2022 23:02	-0.29	6/21/2022 21:50	11.37
6/21/2022 22:27	-0.06	6/22/2022 21:17	2.55	6/22/2022 21:40	7.03	6/22/2022 23:03	-0.36	6/21/2022 21:51	11.38
6/21/2022 22:28	-0.08	6/22/2022 21:18	2.55	6/22/2022 21:41	7.03	6/22/2022 23:04	-0.33	6/21/2022 21:52	11.34
6/21/2022 22:29	-0.08	6/22/2022 21:19	2.55	6/22/2022 21:42	7.06	6/22/2022 23:05	-0.32	6/21/2022 21:53	11.34
6/21/2022 22:30	-0.07	6/22/2022 21:20	2.55	6/22/2022 21:43	7.01	6/22/2022 23:06	-0.32	6/21/2022 21:54	11.37
6/21/2022 22:31	-0.08	6/22/2022 21:21	2.55	6/22/2022 21:44	7.02	6/22/2022 23:07	-0.31	6/21/2022 21:55	11.34
6/21/2022 22:32	-0.07	6/22/2022 21:22	2.55	6/22/2022 21:45	6.99	6/22/2022 23:08	-0.31	6/21/2022 21:56	11.36
6/21/2022 22:33	-0.08	6/22/2022 21:23	2.55	6/22/2022 21:46	6.96	6/22/2022 23:09	-0.31	6/21/2022 21:57	11.39
6/21/2022 22:34	-0.07	6/22/2022 21:24	2.55	6/22/2022 21:47	6.99	6/22/2022 23:10	-0.37	6/21/2022 21:58	11.36
6/21/2022 22:35	-0.08	6/22/2022 21:25	2.55	6/22/2022 21:48	7.03	6/22/2022 23:11	-0.35	6/21/2022 21:59	11.35
6/21/2022 22:36	-0.08	6/22/2022 21:26	2.55	6/22/2022 21:49	7.01	6/22/2022 23:12	-0.33	6/21/2022 22:00	11.33
6/21/2022 22:37	-0.07	6/22/2022 21:27	2.55	6/22/2022 21:50	7.03	6/22/2022 23:13	-0.31	6/21/2022 22:01	11.36
6/21/2022 22:38	-0.09	6/22/2022 21:28	2.55	6/22/2022 21:51	7.00	6/22/2022 23:14	-0.33	6/21/2022 22:02	11.33
6/21/2022 22:39	-0.08	6/22/2022 21:29	2.55	6/22/2022 21:52	7.01	6/22/2022 23:15	-0.35	6/21/2022 22:03	11.38
6/21/2022 22:40	-0.08	6/22/2022 21:30	2.55	6/22/2022 21:53	7.02	6/22/2022 23:16	-0.32	6/21/2022 22:04	11.37
6/21/2022 22:41	-0.08	6/22/2022 21:31	2.55	6/22/2022 21:54	7.01	6/22/2022 23:17	-0.33	6/21/2022 22:05	11.36
6/21/2022 22:42	-0.08	6/22/2022 21:32	2.55	6/22/2022 21:55	7.02	6/22/2022 23:18	-0.28	6/21/2022 22:06	11.36
6/21/2022 22:43	-0.07	6/22/2022 21:33	2.56	6/22/2022 21:56	7.04	6/22/2022 23:19	-0.33	6/21/2022 22:07	11.40
6/21/2022 22:44	-0.09	6/22/2022 21:34	2.55	6/22/2022 21:57	6.99	6/22/2022 23:20	-0.32	6/21/2022 22:08	11.33
6/21/2022 22:45	-0.08	6/22/2022 21:35	2.56	6/22/2022 21:58	7.01	6/22/2022 23:21	-0.32	6/21/2022 22:09	11.34
6/21/2022 22:46	-0.08	6/22/2022 21:36	2.56	6/22/2022 21:59	7.01	6/22/2022 23:22	-0.34	6/21/2022 22:10	11.31
6/21/2022 22:47	-0.08	6/22/2022 21:37	2.56	6/22/2022 22:00	7.03	6/22/2022 23:23	-0.30	6/21/2022 22:11	11.31
6/21/2022 22:48	-0.08	6/22/2022 21:38	2.55	6/22/2022 22:01	7.02	6/22/2022 23:24	-0.28	6/21/2022 22:12	11.36
6/21/2022 22:49	-0.08	6/22/2022 21:39	2.56	6/22/2022 22:02	7.00	6/22/2022 23:25	-0.30	6/21/2022 22:13	11.38
6/21/2022 22:50	-0.08	6/22/2022 21:40	2.56	6/22/2022 22:03	7.05	6/22/2022 23:26	-0.33	6/21/2022 22:14	11.34
6/21/2022 22:51	-0.06	6/22/2022 21:41	2.55	6/22/2022 22:04	7.03	6/22/2022 23:27	-0.30	6/21/2022 22:15	11.35
6/21/2022 22:52	-0.08	6/22/2022 21:42	2.56	6/22/2022 22:05	7.07	6/22/2022 23:28	-0.31	6/21/2022 22:16	11.31
6/21/2022 22:53	-0.08	6/22/2022 21:43	2.56	6/22/2022 22:06	7.04	6/22/2022 23:29	-0.33	6/21/2022 22:17	11.35
6/21/2022 22:54	-0.07	6/22/2022 21:44	2.56	6/22/2022 22:07	7.05	6/22/2022 23:30	-0.31	6/21/2022 22:18	11.35
6/21/2022 22:55	-0.08	6/22/2022 21:45	2.56	6/22/2022 22:08	6.99	6/22/2022 23:31	-0.33	6/21/2022 22:19	11.37
6/21/2022 22:56	-0.08	6/22/2022 21:46	2.56	6/22/2022 22:09	7.00	6/22/2022 23:32	-0.31	6/21/2022 22:20	11.32
6/21/2022 22:57	-0.08	6/22/2022 21:47	2.56	6/22/2022 22:10	7.02	6/22/2022 23:33	-0.31	6/21/2022 22:21	11.36
6/21/2022 22:58	-0.08	6/22/2022 21:48	2.56	6/22/2022 22:11	7.03	6/22/2022 23:34	-0.31	6/21/2022 22:22	11.33
6/21/2022 22:59	-0.08	6/22/2022 21:49	2.56	6/22/2022 22:12	7.05	6/22/2022 23:35	-0.34	6/21/2022 22:23	11.32
6/21/2022 23:00	-0.07	6/22/2022 21:50	2.56	6/22/2022 22:13	7.03	6/22/2022 23:36	-0.32	6/21/2022 22:24	11.30
6/21/2022 23:01	-0.07	6/22/2022 21:51	2.56	6/22/2022 22:14	7.04	6/22/2022 23:37	-0.33	6/21/2022 22:25	11.31
6/21/2022 23:02	-0.07	6/22/2022 21:52	2.56	6/22/2022 22:15	7.01	6/22/2022 23:38	-0.29	6/21/2022 22:26	11.37
6/21/2022 23:03	-0.08	6/22/2022 21:53	2.56	6/22/2022 22:16	7.04	6/22/2022 23:39	-0.28	6/21/2022 22:27	11.32
6/21/2022 23:04	-0.06	6/22/2022 21:54	2.56	6/22/2022 22:17	7.05	6/22/2022 23:40	-0.30	6/21/2022 22:28	11.35
6/21/2022 23:05	-0.08	6/22/2022 21:55	2.56	6/22/2022 22:18	7.04	6/22/2022 23:41	-0.35	6/21/2022 22:29	11.33
6/21/2022 23:06	-0.08	6/22/2022 21:56	2.56	6/22/2022 22:19	7.04	6/22/2022 23:42	-0.31	6/21/2022 22:30	11.29
6/21/2022 23:07	-0.07	6/22/2022 21:57	2.56	6/22/2022 22:20	7.02	6/22/2022 23:43	-0.29	6/21/2022 22:31	11.36
6/21/2022 23:08	-0.07	6/22/2022 21:58	2.56	6/22/2022 22:21	7.02	6/22/2022 23:44	-0.33	6/21/2022 22:32	11.35
6/21/2022 23:09	-0.07	6/22/2022 21:59	2.56	6/22/2022 22:22	7.02	6/22/2022 23:45	-0.33	6/21/2022 22:33	11.34
6/21/2022 23:10	-0.07	6/22/2022 22:00	2.56	6/22/2022 22:23	7.06	6/22/2022 23:46	-0.35	6/21/2022 22:34	11.32
6/21/2022 23:11	-0.08	6/22/2022 22:01	2.56	6/22/2022 22:24	7.02	6/22/2022 23:47	-0.36	6/21/2022 22:35	11.35
6/21/2022 23:12	-0.07	6/22/2022 22:02	2.56	6/22/2022 22:25	7.02	6/22/2022 23:48	-0.31	6/21/2022 22:36	11.35
6/21/2022 23:13	-0.08	6/22/2022 22:03	2.56	6/22/2022 22:26	7.02	6/22/2022 23:49	-0.36	6/21/2022 22:37	11.35
6/21/2022 23:14	-0.07	6/22/2022 22:04	2.56	6/22/2022 22:27	7.06	6/22/2022 23:50	-0.30	6/21/2022 22:38	11.38
6/21/2022 23:15	-0.08	6/22/2022 22:05	2.56	6/22/2022 22:28	7.05	6/22/2022 23:51	-0.30	6/21/2022 22:39	11.32
6/21/2022 23:16	-0.08	6/22/2022 22:06	2.56	6/22/2022 22:29	7.01	6/22/2022 23:52	-0.33	6/21/2022 22:40	11.31
6/21/2022 23:17	-0.07	6/22/2022 22:07	2.56	6/22/2022 22:30	7.02	6/22/2022 23:53	-0.32	6/21/2022 22:41	11.32
6/21/2022 23:18	-0.08	6/22/2022 22:08	2.56	6/22/2022 22:31	7.01	6/22/2022 23:54	-0.34	6/21/2022 22:42	11.39
6/21/2022 23:19	-0.08	6/22/2022 22:09	2.56	6/22/2022 22:32	7.01	6/22/2022 23:55	-0.33	6/21/2022 22:43	11.37
6/21/2022 23:20	-0.08	6/22/2022 22:10	2.56	6/22/2022 22:33	7.02	6/22/2022 23:56	-0.34	6/21/2022 22:44	11.32
6/21/2022 23:21	-0.08	6/22/2022 22:11	2.57	6/22/2022 22:34	7.05	6/22/2022 23:57	-0.28	6/21/2022 22:45	11.30
6/21/2022 23:22	-0.07	6/22/2022 22:12	2.56	6/22/2022 22:35	7.01	6/22/2022 23:58	-0.33	6/21/2022 22:46	11.32
6/21/2022 23:23	-0.08	6/22/2022 22:13	2.57	6/22/2022 22:36	7.01	6/22/2022 23:59	-0.34	6/21/2022 22:47	11.32
6/21/2022 23:24	-0.07	6/22/2022 22:14	2.56	6/22/2022 22:37	7.04	6/23/2022 0:00	-0.31	6/21/2022 22:48	11.32
6/21/2022 23:25	-0.09	6/22/2022 22:15	2.57	6/22/2022 22:38	7.04	6/23/2022 0:01	-0.32	6/21/2022 22:49	11.38
6/21/2022 23:26	-0.08	6/22/2022 22:16	2.57	6/22/2022 22:39	7.02	6/23/2022 0:02	-0.35	6/21/2022 22:50	11.35
6/21/2022 23:27	-0.09	6/22/2022 22:17	2.56	6/22/2022 22:40	7.03	6/23/2022 0:03	-0.33	6/21/2022 22:51	11.37
6/21/2022 23:28	-0.08	6/22/2022 22:18	2.57	6/22/2022 22:41	7.05	6/23/2022 0:04	-0.32	6/21/2022 22:52	11.31
6/21/2022 23:29	-0.08	6/22/2022 22:19	2.56	6/22/2022 22:42	7.05	6/23/2022 0:05	-0.32	6/21/2022 22:53	11.34
6/21/2022 23:30	-0.08	6/22/2022 22:20	2.57	6/22/2022 22:43	7.03	6/23/2022 0:06	-0.32	6/21/2022 22:54	11.33
6/21/2022 23:31	-0.07	6/22/2022 22:21	2.57	6/22/2022 22:44	7.05	6/23/2022 0:07	-0.35	6/21/2022 22:55	11.31
6/21/2022 23:32	-0.08	6/22/2022 22:22	2.57	6/22/2022 22:45	7.03	6/23/2022 0:08	-0.31	6/21/2022 22:56	11.27
6/21/2022 23:33	-0.08	6/22/2022 22:23	2.57	6/22/2022 22:46	7.02	6/23/2022 0:09	-0.31	6/21/2022 22:57	11.35
6/21/2022 23:34	-0.07	6/22/2022 22:24	2.57	6/22/2022 22:47	7.04	6/23/2022 0:10	-0.33	6/21/2022 22:58	11.37
6/21/2022 23:35	-0.08	6/22/2022 22:25	2.57	6/22/2022 22:48	7.06	6/23/2022 0:11	-0.31	6/21/2022 22:59	11.32
6/21/2022 23:36	-0.07	6/22/2022 22:26	2.57	6/22/2022 22:49	7.02	6/23/2022 0:12	-0.35	6/21/2022 23:00	11.35
6/21/2022 23:37	-0.08	6/22/2022 22:27	2.57	6/22/2022 22:50	7.05	6/23/2022 0:13	-0.30	6/21/2022 23:01	11.32
6/21/2022 23:38	-0.07	6/22/2022 22:28	2.57	6/22/2022 22:51	7.04	6/23/2022 0:14	-0.31	6/21/2022 23:02	11.38
6/21/2022 23:39	-0.08	6/22/2022 22:29	2.57	6/22/2022 22:52	7.07	6/23/2022 0:15	-0.31	6/21/2022 23:03	11.33
6/21/2022 23:40	-0.07	6/22/2022 22:30	2.57	6/22/2022 22:53	7.04	6/23/2022 0:16	-0.30	6/21/2022 23:04	11.37
6/21/2022 23:41	-0.07	6/22/2022 22:31	2.57	6/22/2022 22:54	7.06	6/23/2022 0:17	-0.30	6/21/2022 23:05	11.34
6/21/2022 23:42	-0.07	6/22/2022 22:32	2.57	6/22/2022 22:55	7.02	6/23/2022 0:18	-0.34	6/21/2022 23:06	11.32
6/21/2022 23:43	-0.07	6/22/2022 22:33	2.57	6/22/2022 22:56	7.01	6/23/2022 0:19	-0.33	6/21/2022 23:07	11.30
6/21/2022 23:44	-0.08	6/22/2022 22:34	2.57	6/22/2022 22:57	7.05	6/23/2022 0:20	-0.32	6/21/2022 23:08	11.38

6/21/2022 23:45	-0.08	6/22/2022 22:35	2.57	6/22/2022 22:58	7.08	6/23/2022 0:21	-0.30	6/21/2022 23:09	11.35
6/21/2022 23:46	-0.08	6/22/2022 22:36	2.57	6/22/2022 22:59	7.04	6/23/2022 0:22	-0.30	6/21/2022 23:10	11.30
6/21/2022 23:47	-0.07	6/22/2022 22:37	2.57	6/22/2022 23:00	7.03	6/23/2022 0:23	-0.30	6/21/2022 23:11	11.34
6/21/2022 23:48	-0.08	6/22/2022 22:38	2.58	6/22/2022 23:01	7.05	6/23/2022 0:24	-0.30	6/21/2022 23:12	11.33
6/21/2022 23:49	-0.06	6/22/2022 22:39	2.57	6/22/2022 23:02	7.03	6/23/2022 0:25	-0.30	6/21/2022 23:13	11.29
6/21/2022 23:50	-0.08	6/22/2022 22:40	2.58	6/22/2022 23:03	7.03	6/23/2022 0:26	-0.32	6/21/2022 23:14	11.33
6/21/2022 23:51	-0.08	6/22/2022 22:41	2.57	6/22/2022 23:04	7.06	6/23/2022 0:27	-0.34	6/21/2022 23:15	11.29
6/21/2022 23:52	-0.07	6/22/2022 22:42	2.57	6/22/2022 23:05	7.06	6/23/2022 0:28	-0.32	6/21/2022 23:16	11.31
6/21/2022 23:53	-0.07	6/22/2022 22:43	2.57	6/22/2022 23:06	7.03	6/23/2022 0:29	-0.34	6/21/2022 23:17	11.36
6/21/2022 23:54	-0.07	6/22/2022 22:44	2.57	6/22/2022 23:07	7.08	6/23/2022 0:30	-0.29	6/21/2022 23:18	11.38
6/21/2022 23:55	-0.09	6/22/2022 22:45	2.58	6/22/2022 23:08	7.05	6/23/2022 0:31	-0.32	6/21/2022 23:19	11.35
6/21/2022 23:56	-0.07	6/22/2022 22:46	2.58	6/22/2022 23:09	7.07	6/23/2022 0:32	-0.30	6/21/2022 23:20	11.34
6/21/2022 23:57	-0.08	6/22/2022 22:47	2.57	6/22/2022 23:10	7.03	6/23/2022 0:33	-0.30	6/21/2022 23:21	11.35
6/21/2022 23:58	-0.08	6/22/2022 22:48	2.57	6/22/2022 23:11	7.05	6/23/2022 0:34	-0.34	6/21/2022 23:22	11.36
6/21/2022 23:59	-0.08	6/22/2022 22:49	2.57	6/22/2022 23:12	7.04	6/23/2022 0:35	-0.31	6/21/2022 23:23	11.36
6/22/2022 0:00	-0.08	6/22/2022 22:50	2.57	6/22/2022 23:13	7.03	6/23/2022 0:36	-0.30	6/21/2022 23:24	11.35
6/22/2022 0:01	-0.08	6/22/2022 22:51	2.58	6/22/2022 23:14	7.04	6/23/2022 0:37	-0.30	6/21/2022 23:25	11.33
6/22/2022 0:02	-0.08	6/22/2022 22:52	2.58	6/22/2022 23:15	7.04	6/23/2022 0:38	-0.30	6/21/2022 23:26	11.36
6/22/2022 0:03	-0.06	6/22/2022 22:53	2.58	6/22/2022 23:16	7.06	6/23/2022 0:39	-0.31	6/21/2022 23:27	11.28
6/22/2022 0:04	-0.06	6/22/2022 22:54	2.58	6/22/2022 23:17	7.02	6/23/2022 0:40	-0.32	6/21/2022 23:28	11.35
6/22/2022 0:05	-0.08	6/22/2022 22:55	2.58	6/22/2022 23:18	7.05	6/23/2022 0:41	-0.32	6/21/2022 23:29	11.34
6/22/2022 0:06	-0.07	6/22/2022 22:56	2.58	6/22/2022 23:19	7.03	6/23/2022 0:42	-0.29	6/21/2022 23:30	11.37
6/22/2022 0:07	-0.07	6/22/2022 22:57	2.58	6/22/2022 23:20	7.05	6/23/2022 0:43	-0.35	6/21/2022 23:31	11.36
6/22/2022 0:08	-0.07	6/22/2022 22:58	2.58	6/22/2022 23:21	7.04	6/23/2022 0:44	-0.35	6/21/2022 23:32	11.33
6/22/2022 0:09	-0.07	6/22/2022 22:59	2.58	6/22/2022 23:22	7.06	6/23/2022 0:45	-0.33	6/21/2022 23:33	11.34
6/22/2022 0:10	-0.08	6/22/2022 23:00	2.58	6/22/2022 23:23	7.04	6/23/2022 0:46	-0.33	6/21/2022 23:34	11.35
6/22/2022 0:11	-0.08	6/22/2022 23:01	2.58	6/22/2022 23:24	7.02	6/23/2022 0:47	-0.30	6/21/2022 23:35	11.31
6/22/2022 0:12	-0.07	6/22/2022 23:02	2.58	6/22/2022 23:25	7.06	6/23/2022 0:48	-0.34	6/21/2022 23:36	11.34
6/22/2022 0:13	-0.08	6/22/2022 23:03	2.58	6/22/2022 23:26	7.04	6/23/2022 0:49	-0.32	6/21/2022 23:37	11.33
6/22/2022 0:14	-0.08	6/22/2022 23:04	2.58	6/22/2022 23:27	7.05	6/23/2022 0:50	-0.32	6/21/2022 23:38	11.34
6/22/2022 0:15	-0.08	6/22/2022 23:05	2.58	6/22/2022 23:28	7.06	6/23/2022 0:51	-0.33	6/21/2022 23:39	11.32
6/22/2022 0:16	-0.08	6/22/2022 23:06	2.58	6/22/2022 23:29	7.03	6/23/2022 0:52	-0.32	6/21/2022 23:40	11.32
6/22/2022 0:17	-0.07	6/22/2022 23:07	2.58	6/22/2022 23:30	7.04	6/23/2022 0:53	-0.31	6/21/2022 23:41	11.28
6/22/2022 0:18	-0.08	6/22/2022 23:08	2.58	6/22/2022 23:31	7.06	6/23/2022 0:54	-0.37	6/21/2022 23:42	11.34
6/22/2022 0:19	-0.06	6/22/2022 23:09	2.58	6/22/2022 23:32	7.07	6/23/2022 0:55	-0.31	6/21/2022 23:43	11.40
6/22/2022 0:20	-0.07	6/22/2022 23:10	2.58	6/22/2022 23:33	7.01	6/23/2022 0:56	-0.34	6/21/2022 23:44	11.35
6/22/2022 0:21	-0.07	6/22/2022 23:11	2.58	6/22/2022 23:34	7.05	6/23/2022 0:57	-0.32	6/21/2022 23:45	11.37
6/22/2022 0:22	-0.07	6/22/2022 23:12	2.58	6/22/2022 23:35	7.05	6/23/2022 0:58	-0.30	6/21/2022 23:46	11.32
6/22/2022 0:23	-0.06	6/22/2022 23:13	2.58	6/22/2022 23:36	7.03	6/23/2022 0:59	-0.29	6/21/2022 23:47	11.37
6/22/2022 0:24	-0.07	6/22/2022 23:14	2.58	6/22/2022 23:37	7.03	6/23/2022 1:00	-0.33	6/21/2022 23:48	11.35
6/22/2022 0:25	-0.08	6/22/2022 23:15	2.58	6/22/2022 23:38	7.03	6/23/2022 1:01	-0.29	6/21/2022 23:49	11.33
6/22/2022 0:26	-0.08	6/22/2022 23:16	2.58	6/22/2022 23:39	7.08	6/23/2022 1:02	-0.33	6/21/2022 23:50	11.36
6/22/2022 0:27	-0.09	6/22/2022 23:17	2.58	6/22/2022 23:40	7.06	6/23/2022 1:03	-0.31	6/21/2022 23:51	11.33
6/22/2022 0:28	-0.07	6/22/2022 23:18	2.58	6/22/2022 23:41	7.05	6/23/2022 1:04	-0.30	6/21/2022 23:52	11.32
6/22/2022 0:29	-0.07	6/22/2022 23:19	2.58	6/22/2022 23:42	7.09	6/23/2022 1:05	-0.32	6/21/2022 23:53	11.33
6/22/2022 0:30	-0.09	6/22/2022 23:20	2.58	6/22/2022 23:43	7.06	6/23/2022 1:06	-0.29	6/21/2022 23:54	11.38
6/22/2022 0:31	-0.07	6/22/2022 23:21	2.58	6/22/2022 23:44	7.05	6/23/2022 1:07	-0.37	6/21/2022 23:55	11.35
6/22/2022 0:32	-0.07	6/22/2022 23:22	2.58	6/22/2022 23:45	7.06	6/23/2022 1:08	-0.29	6/21/2022 23:56	11.36
6/22/2022 0:33	-0.07	6/22/2022 23:23	2.58	6/22/2022 23:46	7.05	6/23/2022 1:09	-0.32	6/21/2022 23:57	11.32
6/22/2022 0:34	-0.08	6/22/2022 23:24	2.58	6/22/2022 23:47	7.04	6/23/2022 1:10	-0.32	6/21/2022 23:58	11.34
6/22/2022 0:35	-0.08	6/22/2022 23:25	2.58	6/22/2022 23:48	7.05	6/23/2022 1:11	-0.34	6/21/2022 23:59	11.33
6/22/2022 0:36	-0.06	6/22/2022 23:26	2.58	6/22/2022 23:49	7.04	6/23/2022 1:12	-0.33	6/22/2022 0:00	11.37
6/22/2022 0:37	-0.07	6/22/2022 23:27	2.58	6/22/2022 23:50	7.05	6/23/2022 1:13	-0.32	6/22/2022 0:01	11.33
6/22/2022 0:38	-0.08	6/22/2022 23:28	2.58	6/22/2022 23:51	7.08	6/23/2022 1:14	-0.34	6/22/2022 0:02	11.35
6/22/2022 0:39	-0.06	6/22/2022 23:29	2.58	6/22/2022 23:52	7.06	6/23/2022 1:15	-0.31	6/22/2022 0:03	11.33
6/22/2022 0:40	-0.06	6/22/2022 23:30	2.58	6/22/2022 23:53	7.04	6/23/2022 1:16	-0.32	6/22/2022 0:04	11.36
6/22/2022 0:41	-0.08	6/22/2022 23:31	2.58	6/22/2022 23:54	7.08	6/23/2022 1:17	-0.32	6/22/2022 0:05	11.34
6/22/2022 0:42	-0.08	6/22/2022 23:32	2.58	6/22/2022 23:55	7.06	6/23/2022 1:18	-0.30	6/22/2022 0:06	11.36
6/22/2022 0:43	-0.07	6/22/2022 23:33	2.58	6/22/2022 23:56	7.08	6/23/2022 1:19	-0.33	6/22/2022 0:07	11.36
6/22/2022 0:44	-0.07	6/22/2022 23:34	2.58	6/22/2022 23:57	7.06	6/23/2022 1:20	-0.34	6/22/2022 0:08	11.36
6/22/2022 0:45	-0.08	6/22/2022 23:35	2.59	6/22/2022 23:58	7.05	6/23/2022 1:21	-0.32	6/22/2022 0:09	11.35
6/22/2022 0:46	-0.08	6/22/2022 23:36	2.59	6/22/2022 23:59	7.08	6/23/2022 1:22	-0.34	6/22/2022 0:10	11.36
6/22/2022 0:47	-0.06	6/22/2022 23:37	2.59	6/23/2022 0:00	7.06	6/23/2022 1:23	-0.31	6/22/2022 0:11	11.33
6/22/2022 0:48	-0.07	6/22/2022 23:38	2.58	6/23/2022 0:01	7.04	6/23/2022 1:24	-0.29	6/22/2022 0:12	11.34
6/22/2022 0:49	-0.07	6/22/2022 23:39	2.59	6/23/2022 0:02	7.09	6/23/2022 1:25	-0.34	6/22/2022 0:13	11.35
6/22/2022 0:50	-0.07	6/22/2022 23:40	2.58	6/23/2022 0:03	7.07	6/23/2022 1:26	-0.37	6/22/2022 0:14	11.32
6/22/2022 0:51	-0.08	6/22/2022 23:41	2.58	6/23/2022 0:04	7.08	6/23/2022 1:27	-0.33	6/22/2022 0:15	11.37
6/22/2022 0:52	-0.08	6/22/2022 23:42	2.59	6/23/2022 0:05	7.08	6/23/2022 1:28	-0.35	6/22/2022 0:16	11.37
6/22/2022 0:53	-0.08	6/22/2022 23:43	2.59	6/23/2022 0:06	7.09	6/23/2022 1:29	-0.34	6/22/2022 0:17	11.33
6/22/2022 0:54	-0.08	6/22/2022 23:44	2.58	6/23/2022 0:07	7.07	6/23/2022 1:30	-0.31	6/22/2022 0:18	11.34
6/22/2022 0:55	-0.08	6/22/2022 23:45	2.58	6/23/2022 0:08	7.04	6/23/2022 1:31	-0.32	6/22/2022 0:19	11.33
6/22/2022 0:56	-0.08	6/22/2022 23:46	2.59	6/23/2022 0:09	7.05	6/23/2022 1:32	-0.32	6/22/2022 0:20	11.39
6/22/2022 0:57	-0.08	6/22/2022 23:47	2.59	6/23/2022 0:10	7.06	6/23/2022 1:33	-0.31	6/22/2022 0:21	11.37
6/22/2022 0:58	-0.09	6/22/2022 23:48	2.59	6/23/2022 0:11	7.05	6/23/2022 1:34	-0.33	6/22/2022 0:22	11.31
6/22/2022 0:59	-0.07	6/22/2022 23:49	2.59	6/23/2022 0:12	7.03	6/23/2022 1:35	-0.30	6/22/2022 0:23	11.36
6/22/2022 1:00	-0.07	6/22/2022 23:50	2.59	6/23/2022 0:13	7.03	6/23/2022 1:36	-0.32	6/22/2022 0:24	11.37
6/22/2022 1:01	-0.08	6/22/2022 23:51	2.59	6/23/2022 0:14	7.05	6/23/2022 1:37	-0.35	6/22/2022 0:25	11.38
6/22/2022 1:02	-0.08	6/22/2022 23:52	2.59	6/23/2022 0:15	7.06	6/23/2022 1:38	-0.30	6/22/2022 0:26	11.32
6/22/2022 1:03	-0.08	6/22/2022 23:53	2.59	6/23/2022 0:16	7.06	6/23/2022 1:39	-0.28	6/22/2022 0:27	11.31
6/22/2022 1:04	-0.08	6/22/2022 23:54	2.59	6/23/2022 0:17	7.09	6/23/2022 1:40	-0.29	6/22/2022 0:28	11.40
6/22/2022 1:05	-0.08	6/22/2022 23:55	2.58	6/23/2022 0:18	7.04	6/23/2022 1:41	-0.32	6/22/2022 0:29	11.33
6/22/2022 1:06	-0.06	6/22/2022 23:56	2.59	6/23/2022 0:19	7.07	6/23/2022 1:42	-0.31	6/22/2022 0:30	11.34
6/22/2022 1:07	-0.08	6/22/2022 23:57	2.59	6/23/2022 0:20	7.03	6/23/2022 1:43	-0.35	6/22/2022 0:31	11.33
6/22/2022 1:08	-0.09	6/22/2022 23:58	2.59	6/23/2022 0:21	7.03	6/23/2022 1:44	-0.31	6/22/2022 0:32	11.40
6/22/2022 1:09	-0.07	6/22/2022 23:59	2.59	6/23/2022 0:22	7.07	6/23/2022 1:45	-0.30	6/22/2022 0:33	11.35
6/22/2022 1:10	-0.08	6/23/2022 0:00	2.59	6/23/2022 0:23	7.10	6/23/2022 1:46	-0.33	6/22/2022 0:34	11.34
6/22/2022 1:11	-0.06	6/23/2022 0:01	2.59	6/23/2022 0:24	7.06	6/23/2022 1:47	-0.34	6/22/2022 0:35	11.32
6/22/2022 1:12	-0.07	6/23/2022 0:02	2.59	6/23/2022 0:25	7.05	6/23/2022 1:48	-0.30	6/22/2022 0:36	11.32

6/22/2022 1:13	-0.07	6/23/2022 0:03	2.59	6/23/2022 0:26	7.05	6/23/2022 1:49	-0.29	6/22/2022 0:37	11.35
6/22/2022 1:14	-0.08	6/23/2022 0:04	2.59	6/23/2022 0:27	7.06	6/23/2022 1:50	-0.35	6/22/2022 0:38	11.31
6/22/2022 1:15	-0.08	6/23/2022 0:05	2.59	6/23/2022 0:28	7.08	6/23/2022 1:51	-0.33	6/22/2022 0:39	11.35
6/22/2022 1:16	-0.07	6/23/2022 0:06	2.59	6/23/2022 0:29	7.04	6/23/2022 1:52	-0.32	6/22/2022 0:40	11.35
6/22/2022 1:17	-0.09	6/23/2022 0:07	2.59	6/23/2022 0:30	7.08	6/23/2022 1:53	-0.35	6/22/2022 0:41	11.38
6/22/2022 1:18	-0.06	6/23/2022 0:08	2.59	6/23/2022 0:31	7.04	6/23/2022 1:54	-0.32	6/22/2022 0:42	11.27
6/22/2022 1:19	-0.09	6/23/2022 0:09	2.59	6/23/2022 0:32	7.08	6/23/2022 1:55	-0.35	6/22/2022 0:43	11.35
6/22/2022 1:20	-0.08	6/23/2022 0:10	2.59	6/23/2022 0:33	7.07	6/23/2022 1:56	-0.32	6/22/2022 0:44	11.29
6/22/2022 1:21	-0.08	6/23/2022 0:11	2.59	6/23/2022 0:34	7.07	6/23/2022 1:57	-0.33	6/22/2022 0:45	11.36
6/22/2022 1:22	-0.07	6/23/2022 0:12	2.59	6/23/2022 0:35	7.08	6/23/2022 1:58	-0.32	6/22/2022 0:46	11.39
6/22/2022 1:23	-0.06	6/23/2022 0:13	2.59	6/23/2022 0:36	7.09	6/23/2022 1:59	-0.30	6/22/2022 0:47	11.39
6/22/2022 1:24	-0.08	6/23/2022 0:14	2.58	6/23/2022 0:37	7.08	6/23/2022 2:00	-0.33	6/22/2022 0:48	11.36
6/22/2022 1:25	-0.06	6/23/2022 0:15	2.59	6/23/2022 0:38	7.06	6/23/2022 2:01	-0.35	6/22/2022 0:49	11.35
6/22/2022 1:26	-0.08	6/23/2022 0:16	2.59	6/23/2022 0:39	7.09	6/23/2022 2:02	-0.34	6/22/2022 0:50	11.31
6/22/2022 1:27	-0.08	6/23/2022 0:17	2.59	6/23/2022 0:40	7.05	6/23/2022 2:03	-0.30	6/22/2022 0:51	11.38
6/22/2022 1:28	-0.08	6/23/2022 0:18	2.59	6/23/2022 0:41	7.07	6/23/2022 2:04	-0.34	6/22/2022 0:52	11.31
6/22/2022 1:29	-0.08	6/23/2022 0:19	2.59	6/23/2022 0:42	7.08	6/23/2022 2:05	-0.29	6/22/2022 0:53	11.33
6/22/2022 1:30	-0.08	6/23/2022 0:20	2.59	6/23/2022 0:43	7.10	6/23/2022 2:06	-0.34	6/22/2022 0:54	11.37
6/22/2022 1:31	-0.08	6/23/2022 0:21	2.59	6/23/2022 0:44	7.06	6/23/2022 2:07	-0.38	6/22/2022 0:55	11.36
6/22/2022 1:32	-0.08	6/23/2022 0:22	2.59	6/23/2022 0:45	7.09	6/23/2022 2:08	-0.35	6/22/2022 0:56	11.36
6/22/2022 1:33	-0.08	6/23/2022 0:23	2.59	6/23/2022 0:46	7.07	6/23/2022 2:09	-0.30	6/22/2022 0:57	11.33
6/22/2022 1:34	-0.07	6/23/2022 0:24	2.59	6/23/2022 0:47	7.07	6/23/2022 2:10	-0.30	6/22/2022 0:58	11.31
6/22/2022 1:35	-0.08	6/23/2022 0:25	2.59	6/23/2022 0:48	7.07	6/23/2022 2:11	-0.35	6/22/2022 0:59	11.31
6/22/2022 1:36	-0.08	6/23/2022 0:26	2.59	6/23/2022 0:49	7.07	6/23/2022 2:12	-0.35	6/22/2022 1:00	11.38
6/22/2022 1:37	-0.07	6/23/2022 0:27	2.59	6/23/2022 0:50	7.08	6/23/2022 2:13	-0.33	6/22/2022 1:01	11.32
6/22/2022 1:38	-0.07	6/23/2022 0:28	2.59	6/23/2022 0:51	7.06	6/23/2022 2:14	-0.30	6/22/2022 1:02	11.36
6/22/2022 1:39	-0.06	6/23/2022 0:29	2.59	6/23/2022 0:52	7.06	6/23/2022 2:15	-0.32	6/22/2022 1:03	11.36
6/22/2022 1:40	-0.07	6/23/2022 0:30	2.60	6/23/2022 0:53	7.09	6/23/2022 2:16	-0.30	6/22/2022 1:04	11.33
6/22/2022 1:41	-0.07	6/23/2022 0:31	2.59	6/23/2022 0:54	7.13	6/23/2022 2:17	-0.29	6/22/2022 1:05	11.31
6/22/2022 1:42	-0.08	6/23/2022 0:32	2.59	6/23/2022 0:55	7.09	6/23/2022 2:18	-0.34	6/22/2022 1:06	11.38
6/22/2022 1:43	-0.09	6/23/2022 0:33	2.59	6/23/2022 0:56	7.06	6/23/2022 2:19	-0.34	6/22/2022 1:07	11.30
6/22/2022 1:44	-0.06	6/23/2022 0:34	2.59	6/23/2022 0:57	7.05	6/23/2022 2:20	-0.32	6/22/2022 1:08	11.35
6/22/2022 1:45	-0.08	6/23/2022 0:35	2.59	6/23/2022 0:58	7.09	6/23/2022 2:21	-0.32	6/22/2022 1:09	11.27
6/22/2022 1:46	-0.08	6/23/2022 0:36	2.60	6/23/2022 0:59	7.06	6/23/2022 2:22	-0.33	6/22/2022 1:10	11.32
6/22/2022 1:47	-0.08	6/23/2022 0:37	2.59	6/23/2022 1:00	7.10	6/23/2022 2:23	-0.27	6/22/2022 1:11	11.30
6/22/2022 1:48	-0.07	6/23/2022 0:38	2.59	6/23/2022 1:01	7.10	6/23/2022 2:24	-0.32	6/22/2022 1:12	11.34
6/22/2022 1:49	-0.08	6/23/2022 0:39	2.59	6/23/2022 1:02	7.09	6/23/2022 2:25	-0.32	6/22/2022 1:13	11.33
6/22/2022 1:50	-0.09	6/23/2022 0:40	2.59	6/23/2022 1:03	7.08	6/23/2022 2:26	-0.35	6/22/2022 1:14	11.30
6/22/2022 1:51	-0.08	6/23/2022 0:41	2.60	6/23/2022 1:04	7.13	6/23/2022 2:27	-0.31	6/22/2022 1:15	11.31
6/22/2022 1:52	-0.09	6/23/2022 0:42	2.59	6/23/2022 1:05	7.08	6/23/2022 2:28	-0.36	6/22/2022 1:16	11.37
6/22/2022 1:53	-0.08	6/23/2022 0:43	2.59	6/23/2022 1:06	7.08	6/23/2022 2:29	-0.35	6/22/2022 1:17	11.34
6/22/2022 1:54	-0.07	6/23/2022 0:44	2.59	6/23/2022 1:07	7.06	6/23/2022 2:30	-0.35	6/22/2022 1:18	11.32
6/22/2022 1:55	-0.08	6/23/2022 0:45	2.59	6/23/2022 1:08	7.07	6/23/2022 2:31	-0.39	6/22/2022 1:19	11.30
6/22/2022 1:56	-0.08	6/23/2022 0:46	2.59	6/23/2022 1:09	7.05	6/23/2022 2:32	-0.31	6/22/2022 1:20	11.32
6/22/2022 1:57	-0.06	6/23/2022 0:47	2.60	6/23/2022 1:10	7.11	6/23/2022 2:33	-0.34	6/22/2022 1:21	11.33
6/22/2022 1:58	-0.07	6/23/2022 0:48	2.60	6/23/2022 1:11	7.11	6/23/2022 2:34	-0.36	6/22/2022 1:22	11.38
6/22/2022 1:59	-0.08	6/23/2022 0:49	2.60	6/23/2022 1:12	7.07	6/23/2022 2:35	-0.34	6/22/2022 1:23	11.32
6/22/2022 2:00	-0.08	6/23/2022 0:50	2.59	6/23/2022 1:13	7.09	6/23/2022 2:36	-0.28	6/22/2022 1:24	11.34
6/22/2022 2:01	-0.08	6/23/2022 0:51	2.60	6/23/2022 1:14	7.03	6/23/2022 2:37	-0.35	6/22/2022 1:25	11.36
6/22/2022 2:02	-0.08	6/23/2022 0:52	2.60	6/23/2022 1:15	7.09	6/23/2022 2:38	-0.34	6/22/2022 1:26	11.30
6/22/2022 2:03	-0.08	6/23/2022 0:53	2.60	6/23/2022 1:16	7.09	6/23/2022 2:39	-0.32	6/22/2022 1:27	11.35
6/22/2022 2:04	-0.08	6/23/2022 0:54	2.60	6/23/2022 1:17	7.07	6/23/2022 2:40	-0.30	6/22/2022 1:28	11.32
6/22/2022 2:05	-0.08	6/23/2022 0:55	2.60	6/23/2022 1:18	7.08	6/23/2022 2:41	-0.33	6/22/2022 1:29	11.33
6/22/2022 2:06	-0.07	6/23/2022 0:56	2.60	6/23/2022 1:19	7.11	6/23/2022 2:42	-0.32	6/22/2022 1:30	11.30
6/22/2022 2:07	-0.08	6/23/2022 0:57	2.60	6/23/2022 1:20	7.05	6/23/2022 2:43	-0.37	6/22/2022 1:31	11.31
6/22/2022 2:08	-0.07	6/23/2022 0:58	2.60	6/23/2022 1:21	7.09	6/23/2022 2:44	-0.36	6/22/2022 1:32	11.32
6/22/2022 2:09	-0.08	6/23/2022 0:59	2.60	6/23/2022 1:22	7.08	6/23/2022 2:45	-0.35	6/22/2022 1:33	11.32
6/22/2022 2:10	-0.07	6/23/2022 1:00	2.60	6/23/2022 1:23	7.08	6/23/2022 2:46	-0.37	6/22/2022 1:34	11.33
6/22/2022 2:11	-0.08	6/23/2022 1:01	2.60	6/23/2022 1:24	7.05	6/23/2022 2:47	-0.34	6/22/2022 1:35	11.36
6/22/2022 2:12	-0.07	6/23/2022 1:02	2.60	6/23/2022 1:25	7.10	6/23/2022 2:48	-0.35	6/22/2022 1:36	11.39
6/22/2022 2:13	-0.08	6/23/2022 1:03	2.60	6/23/2022 1:26	7.03	6/23/2022 2:49	-0.33	6/22/2022 1:37	11.35
6/22/2022 2:14	-0.06	6/23/2022 1:04	2.60	6/23/2022 1:27	7.07	6/23/2022 2:50	-0.32	6/22/2022 1:38	11.33
6/22/2022 2:15	-0.06	6/23/2022 1:05	2.60	6/23/2022 1:28	7.12	6/23/2022 2:51	-0.31	6/22/2022 1:39	11.34
6/22/2022 2:16	-0.08	6/23/2022 1:06	2.60	6/23/2022 1:29	7.09	6/23/2022 2:52	-0.34	6/22/2022 1:40	11.33
6/22/2022 2:17	-0.08	6/23/2022 1:07	2.60	6/23/2022 1:30	7.09	6/23/2022 2:53	-0.33	6/22/2022 1:41	11.34
6/22/2022 2:18	-0.08	6/23/2022 1:08	2.60	6/23/2022 1:31	7.07	6/23/2022 2:54	-0.35	6/22/2022 1:42	11.37
6/22/2022 2:19	-0.08	6/23/2022 1:09	2.60	6/23/2022 1:32	7.08	6/23/2022 2:55	-0.29	6/22/2022 1:43	11.38
6/22/2022 2:20	-0.07	6/23/2022 1:10	2.60	6/23/2022 1:33	7.06	6/23/2022 2:56	-0.35	6/22/2022 1:44	11.37
6/22/2022 2:21	-0.08	6/23/2022 1:11	2.60	6/23/2022 1:34	7.09	6/23/2022 2:57	-0.29	6/22/2022 1:45	11.32
6/22/2022 2:22	-0.08	6/23/2022 1:12	2.60	6/23/2022 1:35	7.08	6/23/2022 2:58	-0.33	6/22/2022 1:46	11.33
6/22/2022 2:23	-0.08	6/23/2022 1:13	2.60	6/23/2022 1:36	7.05	6/23/2022 2:59	-0.35	6/22/2022 1:47	11.35
6/22/2022 2:24	-0.07	6/23/2022 1:14	2.60	6/23/2022 1:37	7.10	6/23/2022 3:00	-0.32	6/22/2022 1:48	11.36
6/22/2022 2:25	-0.07	6/23/2022 1:15	2.60	6/23/2022 1:38	7.09	6/23/2022 3:01	-0.35	6/22/2022 1:49	11.35
6/22/2022 2:26	-0.08	6/23/2022 1:16	2.60	6/23/2022 1:39	7.08	6/23/2022 3:02	-0.30	6/22/2022 1:50	11.39
6/22/2022 2:27	-0.07	6/23/2022 1:17	2.60	6/23/2022 1:40	7.10	6/23/2022 3:03	-0.36	6/22/2022 1:51	11.35
6/22/2022 2:28	-0.08	6/23/2022 1:18	2.60	6/23/2022 1:41	7.08	6/23/2022 3:04	-0.32	6/22/2022 1:52	11.31
6/22/2022 2:29	-0.08	6/23/2022 1:19	2.60	6/23/2022 1:42	7.11	6/23/2022 3:05	-0.36	6/22/2022 1:53	11.35
6/22/2022 2:30	-0.09	6/23/2022 1:20	2.60	6/23/2022 1:43	7.10	6/23/2022 3:06	-0.31	6/22/2022 1:54	11.35
6/22/2022 2:31	-0.08	6/23/2022 1:21	2.60	6/23/2022 1:44	7.08	6/23/2022 3:07	-0.35	6/22/2022 1:55	11.36
6/22/2022 2:32	-0.06	6/23/2022 1:22	2.60	6/23/2022 1:45	7.07	6/23/2022 3:08	-0.31	6/22/2022 1:56	11.30
6/22/2022 2:33	-0.07	6/23/2022 1:23	2.60	6/23/2022 1:46	7.08	6/23/2022 3:09	-0.32	6/22/2022 1:57	11.32
6/22/2022 2:34	-0.06	6/23/2022 1:24	2.60	6/23/2022 1:47	7.10	6/23/2022 3:10	-0.35	6/22/2022 1:58	11.36
6/22/2022 2:35	-0.08	6/23/2022 1:25	2.60	6/23/2022 1:48	7.09	6/23/2022 3:11	-0.32	6/22/2022 1:59	11.34
6/22/2022 2:36	-0.06	6/23/2022 1:26	2.60	6/23/2022 1:49	7.08	6/23/2022 3:12	-0.34	6/22/2022 2:00	11.31
6/22/2022 2:37	-0.08	6/23/2022 1:27	2.60	6/23/2022 1:50	7.08	6/23/2022 3:13	-0.33	6/22/2022 2:01	11.31
6/22/2022 2:38	-0.06	6/23/2022 1:28	2.61	6/23/2022 1:51	7.10	6/23/2022 3:14	-0.35	6/22/2022 2:02	11.32
6/22/2022 2:39	-0.09	6/23/2022 1:29	2.60	6/23/2022 1:52	7.13	6/23/2022 3:15	-0.36	6/22/2022 2:03	11.34
6/22/2022 2:40	-0.08	6/23/2022 1:30	2.60	6/23/2022 1:53	7.09	6/23/2022 3:16	-0.36	6/22/2022 2:04	11.34

6/22/2022 2:41	-0.08	6/23/2022 1:31	2.60	6/23/2022 1:54	7.10	6/23/2022 3:17	-0.35	6/22/2022 2:05	11.39
6/22/2022 2:42	-0.08	6/23/2022 1:32	2.60	6/23/2022 1:55	7.10	6/23/2022 3:18	-0.28	6/22/2022 2:06	11.34
6/22/2022 2:43	-0.07	6/23/2022 1:33	2.60	6/23/2022 1:56	7.11	6/23/2022 3:19	-0.35	6/22/2022 2:07	11.34
6/22/2022 2:44	-0.08	6/23/2022 1:34	2.60	6/23/2022 1:57	7.11	6/23/2022 3:20	-0.34	6/22/2022 2:08	11.34
6/22/2022 2:45	-0.07	6/23/2022 1:35	2.60	6/23/2022 1:58	7.10	6/23/2022 3:21	-0.37	6/22/2022 2:09	11.33
6/22/2022 2:46	-0.08	6/23/2022 1:36	2.60	6/23/2022 1:59	7.13	6/23/2022 3:22	-0.32	6/22/2022 2:10	11.34
6/22/2022 2:47	-0.09	6/23/2022 1:37	2.60	6/23/2022 2:00	7.08	6/23/2022 3:23	-0.28	6/22/2022 2:11	11.38
6/22/2022 2:48	-0.08	6/23/2022 1:38	2.60	6/23/2022 2:01	7.09	6/23/2022 3:24	-0.36	6/22/2022 2:12	11.35
6/22/2022 2:49	-0.06	6/23/2022 1:39	2.60	6/23/2022 2:02	7.12	6/23/2022 3:25	-0.34	6/22/2022 2:13	11.37
6/22/2022 2:50	-0.07	6/23/2022 1:40	2.60	6/23/2022 2:03	7.07	6/23/2022 3:26	-0.35	6/22/2022 2:14	11.37
6/22/2022 2:51	-0.08	6/23/2022 1:41	2.60	6/23/2022 2:04	7.07	6/23/2022 3:27	-0.32	6/22/2022 2:15	11.34
6/22/2022 2:52	-0.08	6/23/2022 1:42	2.60	6/23/2022 2:05	7.09	6/23/2022 3:28	-0.33	6/22/2022 2:16	11.33
6/22/2022 2:53	-0.08	6/23/2022 1:43	2.60	6/23/2022 2:06	7.09	6/23/2022 3:29	-0.35	6/22/2022 2:17	11.35
6/22/2022 2:54	-0.08	6/23/2022 1:44	2.60	6/23/2022 2:07	7.12	6/23/2022 3:30	-0.33	6/22/2022 2:18	11.33
6/22/2022 2:55	-0.07	6/23/2022 1:45	2.61	6/23/2022 2:08	7.11	6/23/2022 3:31	-0.27	6/22/2022 2:19	11.31
6/22/2022 2:56	-0.08	6/23/2022 1:46	2.60	6/23/2022 2:09	7.13	6/23/2022 3:32	-0.32	6/22/2022 2:20	11.33
6/22/2022 2:57	-0.07	6/23/2022 1:47	2.60	6/23/2022 2:10	7.11	6/23/2022 3:33	-0.36	6/22/2022 2:21	11.32
6/22/2022 2:58	-0.08	6/23/2022 1:48	2.60	6/23/2022 2:11	7.10	6/23/2022 3:34	-0.33	6/22/2022 2:22	11.34
6/22/2022 2:59	-0.08	6/23/2022 1:49	2.60	6/23/2022 2:12	7.08	6/23/2022 3:35	-0.35	6/22/2022 2:23	11.33
6/22/2022 3:00	-0.08	6/23/2022 1:50	2.61	6/23/2022 2:13	7.14	6/23/2022 3:36	-0.36	6/22/2022 2:24	11.34
6/22/2022 3:01	-0.07	6/23/2022 1:51	2.60	6/23/2022 2:14	7.12	6/23/2022 3:37	-0.35	6/22/2022 2:25	11.35
6/22/2022 3:02	-0.08	6/23/2022 1:52	2.61	6/23/2022 2:15	7.11	6/23/2022 3:38	-0.36	6/22/2022 2:26	11.31
6/22/2022 3:03	-0.07	6/23/2022 1:53	2.61	6/23/2022 2:16	7.10	6/23/2022 3:39	-0.32	6/22/2022 2:27	11.33
6/22/2022 3:04	-0.07	6/23/2022 1:54	2.61	6/23/2022 2:17	7.15	6/23/2022 3:40	-0.29	6/22/2022 2:28	11.37
6/22/2022 3:05	-0.07	6/23/2022 1:55	2.61	6/23/2022 2:18	7.07	6/23/2022 3:41	-0.30	6/22/2022 2:29	11.32
6/22/2022 3:06	-0.07	6/23/2022 1:56	2.61	6/23/2022 2:19	7.10	6/23/2022 3:42	-0.32	6/22/2022 2:30	11.31
6/22/2022 3:07	-0.06	6/23/2022 1:57	2.61	6/23/2022 2:20	7.11	6/23/2022 3:43	-0.36	6/22/2022 2:31	11.33
6/22/2022 3:08	-0.08	6/23/2022 1:58	2.61	6/23/2022 2:21	7.13	6/23/2022 3:44	-0.32	6/22/2022 2:32	11.30
6/22/2022 3:09	-0.08	6/23/2022 1:59	2.61	6/23/2022 2:22	7.07	6/23/2022 3:45	-0.35	6/22/2022 2:33	11.35
6/22/2022 3:10	-0.08	6/23/2022 2:00	2.61	6/23/2022 2:23	7.10	6/23/2022 3:46	-0.33	6/22/2022 2:34	11.39
6/22/2022 3:11	-0.07	6/23/2022 2:01	2.61	6/23/2022 2:24	7.12	6/23/2022 3:47	-0.33	6/22/2022 2:35	11.35
6/22/2022 3:12	-0.07	6/23/2022 2:02	2.60	6/23/2022 2:25	7.10	6/23/2022 3:48	-0.34	6/22/2022 2:36	11.35
6/22/2022 3:13	-0.08	6/23/2022 2:03	2.61	6/23/2022 2:26	7.11	6/23/2022 3:49	-0.34	6/22/2022 2:37	11.36
6/22/2022 3:14	-0.06	6/23/2022 2:04	2.61	6/23/2022 2:27	7.11	6/23/2022 3:50	-0.34	6/22/2022 2:38	11.37
6/22/2022 3:15	-0.08	6/23/2022 2:05	2.61	6/23/2022 2:28	7.10	6/23/2022 3:51	-0.33	6/22/2022 2:39	11.33
6/22/2022 3:16	-0.08	6/23/2022 2:06	2.61	6/23/2022 2:29	7.09	6/23/2022 3:52	-0.38	6/22/2022 2:40	11.37
6/22/2022 3:17	-0.07	6/23/2022 2:07	2.61	6/23/2022 2:30	7.11	6/23/2022 3:53	-0.33	6/22/2022 2:41	11.29
6/22/2022 3:18	-0.08	6/23/2022 2:08	2.61	6/23/2022 2:31	7.10	6/23/2022 3:54	-0.35	6/22/2022 2:42	11.37
6/22/2022 3:19	-0.08	6/23/2022 2:09	2.61	6/23/2022 2:32	7.10	6/23/2022 3:55	-0.37	6/22/2022 2:43	11.31
6/22/2022 3:20	-0.07	6/23/2022 2:10	2.61	6/23/2022 2:33	7.07	6/23/2022 3:56	-0.34	6/22/2022 2:44	11.33
6/22/2022 3:21	-0.07	6/23/2022 2:11	2.61	6/23/2022 2:34	7.11	6/23/2022 3:57	-0.34	6/22/2022 2:45	11.26
6/22/2022 3:22	-0.08	6/23/2022 2:12	2.61	6/23/2022 2:35	7.11	6/23/2022 3:58	-0.31	6/22/2022 2:46	11.37
6/22/2022 3:23	-0.08	6/23/2022 2:13	2.61	6/23/2022 2:36	7.11	6/23/2022 3:59	-0.35	6/22/2022 2:47	11.37
6/22/2022 3:24	-0.07	6/23/2022 2:14	2.61	6/23/2022 2:37	7.11	6/23/2022 4:00	-0.37	6/22/2022 2:48	11.32
6/22/2022 3:25	-0.06	6/23/2022 2:15	2.61	6/23/2022 2:38	7.11	6/23/2022 4:01	-0.35	6/22/2022 2:49	11.33
6/22/2022 3:26	-0.08	6/23/2022 2:16	2.61	6/23/2022 2:39	7.14	6/23/2022 4:02	-0.35	6/22/2022 2:50	11.37
6/22/2022 3:27	-0.08	6/23/2022 2:17	2.61	6/23/2022 2:40	7.09	6/23/2022 4:03	-0.33	6/22/2022 2:51	11.36
6/22/2022 3:28	-0.08	6/23/2022 2:18	2.62	6/23/2022 2:41	7.12	6/23/2022 4:04	-0.33	6/22/2022 2:52	11.33
6/22/2022 3:29	-0.06	6/23/2022 2:19	2.62	6/23/2022 2:42	7.13	6/23/2022 4:05	-0.36	6/22/2022 2:53	11.36
6/22/2022 3:30	-0.08	6/23/2022 2:20	2.61	6/23/2022 2:43	7.09	6/23/2022 4:06	-0.32	6/22/2022 2:54	11.35
6/22/2022 3:31	-0.07	6/23/2022 2:21	2.61	6/23/2022 2:44	7.10	6/23/2022 4:07	-0.35	6/22/2022 2:55	11.38
6/22/2022 3:32	-0.08	6/23/2022 2:22	2.62	6/23/2022 2:45	7.11	6/23/2022 4:08	-0.34	6/22/2022 2:56	11.38
6/22/2022 3:33	-0.08	6/23/2022 2:23	2.61	6/23/2022 2:46	7.13	6/23/2022 4:09	-0.37	6/22/2022 2:57	11.36
6/22/2022 3:34	-0.07	6/23/2022 2:24	2.61	6/23/2022 2:47	7.11	6/23/2022 4:10	-0.36	6/22/2022 2:58	11.36
6/22/2022 3:35	-0.08	6/23/2022 2:25	2.62	6/23/2022 2:48	7.13	6/23/2022 4:11	-0.34	6/22/2022 2:59	11.29
6/22/2022 3:36	-0.07	6/23/2022 2:26	2.62	6/23/2022 2:49	7.16	6/23/2022 4:12	-0.36	6/22/2022 3:00	11.40
6/22/2022 3:37	-0.06	6/23/2022 2:27	2.62	6/23/2022 2:50	7.13	6/23/2022 4:13	-0.32	6/22/2022 3:01	11.36
6/22/2022 3:38	-0.09	6/23/2022 2:28	2.62	6/23/2022 2:51	7.11	6/23/2022 4:14	-0.33	6/22/2022 3:02	11.32
6/22/2022 3:39	-0.07	6/23/2022 2:29	2.62	6/23/2022 2:52	7.10	6/23/2022 4:15	-0.32	6/22/2022 3:03	11.34
6/22/2022 3:40	-0.07	6/23/2022 2:30	2.62	6/23/2022 2:53	7.10	6/23/2022 4:16	-0.34	6/22/2022 3:04	11.39
6/22/2022 3:41	-0.07	6/23/2022 2:31	2.62	6/23/2022 2:54	7.10	6/23/2022 4:17	-0.35	6/22/2022 3:05	11.35
6/22/2022 3:42	-0.08	6/23/2022 2:32	2.62	6/23/2022 2:55	7.10	6/23/2022 4:18	-0.34	6/22/2022 3:06	11.35
6/22/2022 3:43	-0.08	6/23/2022 2:33	2.62	6/23/2022 2:56	7.11	6/23/2022 4:19	-0.34	6/22/2022 3:07	11.33
6/22/2022 3:44	-0.08	6/23/2022 2:34	2.62	6/23/2022 2:57	7.08	6/23/2022 4:20	-0.36	6/22/2022 3:08	11.35
6/22/2022 3:45	-0.09	6/23/2022 2:35	2.62	6/23/2022 2:58	7.10	6/23/2022 4:21	-0.34	6/22/2022 3:09	11.34
6/22/2022 3:46	-0.09	6/23/2022 2:36	2.62	6/23/2022 2:59	7.12	6/23/2022 4:22	-0.31	6/22/2022 3:10	11.38
6/22/2022 3:47	-0.08	6/23/2022 2:37	2.62	6/23/2022 3:00	7.12	6/23/2022 4:23	-0.35	6/22/2022 3:11	11.38
6/22/2022 3:48	-0.08	6/23/2022 2:38	2.62	6/23/2022 3:01	7.12	6/23/2022 4:24	-0.28	6/22/2022 3:12	11.34
6/22/2022 3:49	-0.07	6/23/2022 2:39	2.62	6/23/2022 3:02	7.14	6/23/2022 4:25	-0.32	6/22/2022 3:13	11.34
6/22/2022 3:50	-0.09	6/23/2022 2:40	2.62	6/23/2022 3:03	7.09	6/23/2022 4:26	-0.36	6/22/2022 3:14	11.29
6/22/2022 3:51	-0.09	6/23/2022 2:41	2.61	6/23/2022 3:04	7.12	6/23/2022 4:27	-0.35	6/22/2022 3:15	11.31
6/22/2022 3:52	-0.09	6/23/2022 2:42	2.62	6/23/2022 3:05	7.13	6/23/2022 4:28	-0.37	6/22/2022 3:16	11.34
6/22/2022 3:53	-0.07	6/23/2022 2:43	2.62	6/23/2022 3:06	7.12	6/23/2022 4:29	-0.35	6/22/2022 3:17	11.28
6/22/2022 3:54	-0.08	6/23/2022 2:44	2.62	6/23/2022 3:07	7.15	6/23/2022 4:30	-0.32	6/22/2022 3:18	11.34
6/22/2022 3:55	-0.07	6/23/2022 2:45	2.62	6/23/2022 3:08	7.15	6/23/2022 4:31	-0.36	6/22/2022 3:19	11.33
6/22/2022 3:56	-0.07	6/23/2022 2:46	2.62	6/23/2022 3:09	7.12	6/23/2022 4:32	-0.33	6/22/2022 3:20	11.35
6/22/2022 3:57	-0.06	6/23/2022 2:47	2.62	6/23/2022 3:10	7.11	6/23/2022 4:33	-0.35	6/22/2022 3:21	11.33
6/22/2022 3:58	-0.07	6/23/2022 2:48	2.62	6/23/2022 3:11	7.10	6/23/2022 4:34	-0.35	6/22/2022 3:22	11.36
6/22/2022 3:59	-0.07	6/23/2022 2:49	2.62	6/23/2022 3:12	7.09	6/23/2022 4:35	-0.33	6/22/2022 3:23	11.34
6/22/2022 4:00	-0.07	6/23/2022 2:50	2.62	6/23/2022 3:13	7.09	6/23/2022 4:36	-0.32	6/22/2022 3:24	11.34
6/22/2022 4:01	-0.07	6/23/2022 2:51	2.62	6/23/2022 3:14	7.14	6/23/2022 4:37	-0.36	6/22/2022 3:25	11.35
6/22/2022 4:02	-0.07	6/23/2022 2:52	2.62	6/23/2022 3:15	7.13	6/23/2022 4:38	-0.30	6/22/2022 3:26	11.37
6/22/2022 4:03	-0.07	6/23/2022 2:53	2.62	6/23/2022 3:16	7.12	6/23/2022 4:39	-0.31	6/22/2022 3:27	11.32
6/22/2022 4:04	-0.09	6/23/2022 2:54	2.63	6/23/2022 3:17	7.09	6/23/2022 4:40	-0.33	6/22/2022 3:28	11.35
6/22/2022 4:05	-0.08	6/23/2022 2:55	2.62	6/23/2022 3:18	7.12	6/23/2022 4:41	-0.30	6/22/2022 3:29	11.31
6/22/2022 4:06	-0.09	6/23/2022 2:56	2.62	6/23/2022 3:19	7.09	6/23/2022 4:42	-0.35	6/22/2022 3:30	11.33
6/22/2022 4:07	-0.08	6/23/2022 2:57	2.62	6/23/2022 3:20	7.11	6/23/2022 4:43	-0.37	6/22/2022 3:31	11.39
6/22/2022 4:08	-0.07	6/23/2022 2:58	2.62	6/23/2022 3:21	7.15	6/23/2022 4:44	-0.34	6/22/2022 3:32	11.29

6/22/2022 4:09	-0.07	6/23/2022 2:59	2.63	6/23/2022 3:22	7.13	6/23/2022 4:45	-0.33	6/22/2022 3:33	11.32
6/22/2022 4:10	-0.08	6/23/2022 3:00	2.62	6/23/2022 3:23	7.12	6/23/2022 4:46	-0.34	6/22/2022 3:34	11.34
6/22/2022 4:11	-0.06	6/23/2022 3:01	2.63	6/23/2022 3:24	7.12	6/23/2022 4:47	-0.34	6/22/2022 3:35	11.35
6/22/2022 4:12	-0.07	6/23/2022 3:02	2.63	6/23/2022 3:25	7.13	6/23/2022 4:48	-0.37	6/22/2022 3:36	11.36
6/22/2022 4:13	-0.09	6/23/2022 3:03	2.63	6/23/2022 3:26	7.12	6/23/2022 4:49	-0.33	6/22/2022 3:37	11.32
6/22/2022 4:14	-0.08	6/23/2022 3:04	2.63	6/23/2022 3:27	7.12	6/23/2022 4:50	-0.33	6/22/2022 3:38	11.34
6/22/2022 4:15	-0.08	6/23/2022 3:05	2.63	6/23/2022 3:28	7.15	6/23/2022 4:51	-0.37	6/22/2022 3:39	11.37
6/22/2022 4:16	-0.07	6/23/2022 3:06	2.63	6/23/2022 3:29	7.08	6/23/2022 4:52	-0.35	6/22/2022 3:40	11.32
6/22/2022 4:17	-0.08	6/23/2022 3:07	2.63	6/23/2022 3:30	7.15	6/23/2022 4:53	-0.33	6/22/2022 3:41	11.33
6/22/2022 4:18	-0.06	6/23/2022 3:08	2.63	6/23/2022 3:31	7.13	6/23/2022 4:54	-0.35	6/22/2022 3:42	11.34
6/22/2022 4:19	-0.07	6/23/2022 3:09	2.63	6/23/2022 3:32	7.14	6/23/2022 4:55	-0.35	6/22/2022 3:43	11.37
6/22/2022 4:20	-0.07	6/23/2022 3:10	2.63	6/23/2022 3:33	7.16	6/23/2022 4:56	-0.34	6/22/2022 3:44	11.36
6/22/2022 4:21	-0.07	6/23/2022 3:11	2.63	6/23/2022 3:34	7.15	6/23/2022 4:57	-0.35	6/22/2022 3:45	11.36
6/22/2022 4:22	-0.06	6/23/2022 3:12	2.63	6/23/2022 3:35	7.15	6/23/2022 4:58	-0.31	6/22/2022 3:46	11.36
6/22/2022 4:23	-0.07	6/23/2022 3:13	2.63	6/23/2022 3:36	7.12	6/23/2022 4:59	-0.34	6/22/2022 3:47	11.40
6/22/2022 4:24	-0.08	6/23/2022 3:14	2.63	6/23/2022 3:37	7.13	6/23/2022 5:00	-0.35	6/22/2022 3:48	11.35
6/22/2022 4:25	-0.08	6/23/2022 3:15	2.63	6/23/2022 3:38	7.11	6/23/2022 5:01	-0.33	6/22/2022 3:49	11.34
6/22/2022 4:26	-0.07	6/23/2022 3:16	2.63	6/23/2022 3:39	7.12	6/23/2022 5:02	-0.36	6/22/2022 3:50	11.31
6/22/2022 4:27	-0.09	6/23/2022 3:17	2.63	6/23/2022 3:40	7.13	6/23/2022 5:03	-0.33	6/22/2022 3:51	11.39
6/22/2022 4:28	-0.07	6/23/2022 3:18	2.63	6/23/2022 3:41	7.17	6/23/2022 5:04	-0.39	6/22/2022 3:52	11.34
6/22/2022 4:29	-0.08	6/23/2022 3:19	2.63	6/23/2022 3:42	7.14	6/23/2022 5:05	-0.32	6/22/2022 3:53	11.36
6/22/2022 4:30	-0.08	6/23/2022 3:20	2.63	6/23/2022 3:43	7.14	6/23/2022 5:06	-0.38	6/22/2022 3:54	11.36
6/22/2022 4:31	-0.07	6/23/2022 3:21	2.63	6/23/2022 3:44	7.13	6/23/2022 5:07	-0.35	6/22/2022 3:55	11.33
6/22/2022 4:32	-0.07	6/23/2022 3:22	2.63	6/23/2022 3:45	7.14	6/23/2022 5:08	-0.35	6/22/2022 3:56	11.28
6/22/2022 4:33	-0.07	6/23/2022 3:23	2.63	6/23/2022 3:46	7.16	6/23/2022 5:09	-0.34	6/22/2022 3:57	11.36
6/22/2022 4:34	-0.09	6/23/2022 3:24	2.63	6/23/2022 3:47	7.14	6/23/2022 5:10	-0.32	6/22/2022 3:58	11.31
6/22/2022 4:35	-0.06	6/23/2022 3:25	2.63	6/23/2022 3:48	7.12	6/23/2022 5:11	-0.31	6/22/2022 3:59	11.33
6/22/2022 4:36	-0.08	6/23/2022 3:26	2.63	6/23/2022 3:49	7.14	6/23/2022 5:12	-0.32	6/22/2022 4:00	11.39
6/22/2022 4:37	-0.07	6/23/2022 3:27	2.63	6/23/2022 3:50	7.12	6/23/2022 5:13	-0.32	6/22/2022 4:01	11.34
6/22/2022 4:38	-0.07	6/23/2022 3:28	2.63	6/23/2022 3:51	7.18	6/23/2022 5:14	-0.31	6/22/2022 4:02	11.38
6/22/2022 4:39	-0.09	6/23/2022 3:29	2.63	6/23/2022 3:52	7.16	6/23/2022 5:15	-0.35	6/22/2022 4:03	11.35
6/22/2022 4:40	-0.09	6/23/2022 3:30	2.63	6/23/2022 3:53	7.15	6/23/2022 5:16	-0.36	6/22/2022 4:04	11.32
6/22/2022 4:41	-0.09	6/23/2022 3:31	2.63	6/23/2022 3:54	7.14	6/23/2022 5:17	-0.32	6/22/2022 4:05	11.35
6/22/2022 4:42	-0.09	6/23/2022 3:32	2.63	6/23/2022 3:55	7.12	6/23/2022 5:18	-0.31	6/22/2022 4:06	11.30
6/22/2022 4:43	-0.07	6/23/2022 3:33	2.63	6/23/2022 3:56	7.13	6/23/2022 5:19	-0.33	6/22/2022 4:07	11.34
6/22/2022 4:44	-0.09	6/23/2022 3:34	2.63	6/23/2022 3:57	7.13	6/23/2022 5:20	-0.33	6/22/2022 4:08	11.37
6/22/2022 4:45	-0.07	6/23/2022 3:35	2.64	6/23/2022 3:58	7.12	6/23/2022 5:21	-0.31	6/22/2022 4:09	11.36
6/22/2022 4:46	-0.07	6/23/2022 3:36	2.63	6/23/2022 3:59	7.17	6/23/2022 5:22	-0.34	6/22/2022 4:10	11.36
6/22/2022 4:47	-0.07	6/23/2022 3:37	2.63	6/23/2022 4:00	7.13	6/23/2022 5:23	-0.33	6/22/2022 4:11	11.37
6/22/2022 4:48	-0.09	6/23/2022 3:38	2.63	6/23/2022 4:01	7.14	6/23/2022 5:24	-0.37	6/22/2022 4:12	11.30
6/22/2022 4:49	-0.08	6/23/2022 3:39	2.64	6/23/2022 4:02	7.16	6/23/2022 5:25	-0.34	6/22/2022 4:13	11.32
6/22/2022 4:50	-0.07	6/23/2022 3:40	2.63	6/23/2022 4:03	7.16	6/23/2022 5:26	-0.37	6/22/2022 4:14	11.35
6/22/2022 4:51	-0.08	6/23/2022 3:41	2.63	6/23/2022 4:04	7.12	6/23/2022 5:27	-0.37	6/22/2022 4:15	11.33
6/22/2022 4:52	-0.08	6/23/2022 3:42	2.64	6/23/2022 4:05	7.19	6/23/2022 5:28	-0.36	6/22/2022 4:16	11.31
6/22/2022 4:53	-0.08	6/23/2022 3:43	2.63	6/23/2022 4:06	7.12	6/23/2022 5:29	-0.32	6/22/2022 4:17	11.35
6/22/2022 4:54	-0.08	6/23/2022 3:44	2.64	6/23/2022 4:07	7.16	6/23/2022 5:30	-0.38	6/22/2022 4:18	11.34
6/22/2022 4:55	-0.07	6/23/2022 3:45	2.64	6/23/2022 4:08	7.13	6/23/2022 5:31	-0.35	6/22/2022 4:19	11.34
6/22/2022 4:56	-0.07	6/23/2022 3:46	2.64	6/23/2022 4:09	7.15	6/23/2022 5:32	-0.31	6/22/2022 4:20	11.35
6/22/2022 4:57	-0.08	6/23/2022 3:47	2.63	6/23/2022 4:10	7.12	6/23/2022 5:33	-0.34	6/22/2022 4:21	11.32
6/22/2022 4:58	-0.06	6/23/2022 3:48	2.63	6/23/2022 4:11	7.12	6/23/2022 5:34	-0.35	6/22/2022 4:22	11.34
6/22/2022 4:59	-0.07	6/23/2022 3:49	2.64	6/23/2022 4:12	7.16	6/23/2022 5:35	-0.36	6/22/2022 4:23	11.35
6/22/2022 5:00	-0.08	6/23/2022 3:50	2.64	6/23/2022 4:13	7.18	6/23/2022 5:36	-0.35	6/22/2022 4:24	11.34
6/22/2022 5:01	-0.08	6/23/2022 3:51	2.64	6/23/2022 4:14	7.17	6/23/2022 5:37	-0.35	6/22/2022 4:25	11.37
6/22/2022 5:02	-0.08	6/23/2022 3:52	2.64	6/23/2022 4:15	7.16	6/23/2022 5:38	-0.33	6/22/2022 4:26	11.37
6/22/2022 5:03	-0.07	6/23/2022 3:53	2.64	6/23/2022 4:16	7.15	6/23/2022 5:39	-0.38	6/22/2022 4:27	11.33
6/22/2022 5:04	-0.07	6/23/2022 3:54	2.64	6/23/2022 4:17	7.15	6/23/2022 5:40	-0.34	6/22/2022 4:28	11.37
6/22/2022 5:05	-0.09	6/23/2022 3:55	2.64	6/23/2022 4:18	7.14	6/23/2022 5:41	-0.37	6/22/2022 4:29	11.36
6/22/2022 5:06	-0.07	6/23/2022 3:56	2.64	6/23/2022 4:19	7.15	6/23/2022 5:42	-0.31	6/22/2022 4:30	11.35
6/22/2022 5:07	-0.08	6/23/2022 3:57	2.64	6/23/2022 4:20	7.17	6/23/2022 5:43	-0.34	6/22/2022 4:31	11.38
6/22/2022 5:08	-0.07	6/23/2022 3:58	2.64	6/23/2022 4:21	7.12	6/23/2022 5:44	-0.35	6/22/2022 4:32	11.33
6/22/2022 5:09	-0.08	6/23/2022 3:59	2.64	6/23/2022 4:22	7.12	6/23/2022 5:45	-0.37	6/22/2022 4:33	11.33
6/22/2022 5:10	-0.08	6/23/2022 4:00	2.64	6/23/2022 4:23	7.16	6/23/2022 5:46	-0.33	6/22/2022 4:34	11.33
6/22/2022 5:11	-0.08	6/23/2022 4:01	2.64	6/23/2022 4:24	7.17	6/23/2022 5:47	-0.35	6/22/2022 4:35	11.39
6/22/2022 5:12	-0.07	6/23/2022 4:02	2.64	6/23/2022 4:25	7.18	6/23/2022 5:48	-0.34	6/22/2022 4:36	11.35
6/22/2022 5:13	-0.08	6/23/2022 4:03	2.64	6/23/2022 4:26	7.13	6/23/2022 5:49	-0.35	6/22/2022 4:37	11.36
6/22/2022 5:14	-0.08	6/23/2022 4:04	2.64	6/23/2022 4:27	7.14	6/23/2022 5:50	-0.33	6/22/2022 4:38	11.38
6/22/2022 5:15	-0.08	6/23/2022 4:05	2.64	6/23/2022 4:28	7.19	6/23/2022 5:51	-0.33	6/22/2022 4:39	11.34
6/22/2022 5:16	-0.06	6/23/2022 4:06	2.64	6/23/2022 4:29	7.16	6/23/2022 5:52	-0.38	6/22/2022 4:40	11.34
6/22/2022 5:17	-0.08	6/23/2022 4:07	2.64	6/23/2022 4:30	7.16	6/23/2022 5:53	-0.28	6/22/2022 4:41	11.32
6/22/2022 5:18	-0.08	6/23/2022 4:08	2.64	6/23/2022 4:31	7.13	6/23/2022 5:54	-0.35	6/22/2022 4:42	11.35
6/22/2022 5:19	-0.07	6/23/2022 4:09	2.64	6/23/2022 4:32	7.16	6/23/2022 5:55	-0.32	6/22/2022 4:43	11.36
6/22/2022 5:20	-0.08	6/23/2022 4:10	2.64	6/23/2022 4:33	7.16	6/23/2022 5:56	-0.37	6/22/2022 4:44	11.39
6/22/2022 5:21	-0.08	6/23/2022 4:11	2.64	6/23/2022 4:34	7.19	6/23/2022 5:57	-0.34	6/22/2022 4:45	11.32
6/22/2022 5:22	-0.08	6/23/2022 4:12	2.64	6/23/2022 4:35	7.16	6/23/2022 5:58	-0.34	6/22/2022 4:46	11.32
6/22/2022 5:23	-0.07	6/23/2022 4:13	2.64	6/23/2022 4:36	7.16	6/23/2022 5:59	-0.36	6/22/2022 4:47	11.36
6/22/2022 5:24	-0.09	6/23/2022 4:14	2.64	6/23/2022 4:37	7.14	6/23/2022 6:00	-0.36	6/22/2022 4:48	11.39
6/22/2022 5:25	-0.08	6/23/2022 4:15	2.64	6/23/2022 4:38	7.18	6/23/2022 6:01	-0.32	6/22/2022 4:49	11.34
6/22/2022 5:26	-0.07	6/23/2022 4:16	2.65	6/23/2022 4:39	7.15	6/23/2022 6:02	-0.35	6/22/2022 4:50	11.35
6/22/2022 5:27	-0.08	6/23/2022 4:17	2.64	6/23/2022 4:40	7.15	6/23/2022 6:03	-0.39	6/22/2022 4:51	11.32
6/22/2022 5:28	-0.06	6/23/2022 4:18	2.65	6/23/2022 4:41	7.14	6/23/2022 6:04	-0.33	6/22/2022 4:52	11.37
6/22/2022 5:29	-0.08	6/23/2022 4:19	2.65	6/23/2022 4:42	7.13	6/23/2022 6:05	-0.32	6/22/2022 4:53	11.36
6/22/2022 5:30	-0.08	6/23/2022 4:20	2.65	6/23/2022 4:43	7.17	6/23/2022 6:06	-0.30	6/22/2022 4:54	11.31
6/22/2022 5:31	-0.08	6/23/2022 4:21	2.65	6/23/2022 4:44	7.18	6/23/2022 6:07	-0.34	6/22/2022 4:55	11.34
6/22/2022 5:32	-0.06	6/23/2022 4:22	2.65	6/23/2022 4:45	7.19	6/23/2022 6:08	-0.32	6/22/2022 4:56	11.35
6/22/2022 5:33	-0.07	6/23/2022 4:23	2.65	6/23/2022 4:46	7.16	6/23/2022 6:09	-0.32	6/22/2022 4:57	11.38
6/22/2022 5:34	-0.07	6/23/2022 4:24	2.65	6/23/2022 4:47	7.15	6/23/2022 6:10	-0.34	6/22/2022 4:58	11.38
6/22/2022 5:35	-0.07	6/23/2022 4:25	2.65	6/23/2022 4:48	7.17	6/23/2022 6:11	-0.29	6/22/2022 4:59	11.29
6/22/2022 5:36	-0.08	6/23/2022 4:26	2.65	6/23/2022 4:49	7.15	6/23/2022 6:12	-0.33	6/22/2022 5:00	11.31

6/22/2022 5:37	-0.07	6/23/2022 4:27	2.65	6/23/2022 4:50	7.14	6/23/2022 6:13	-0.32	6/22/2022 5:01	11.35
6/22/2022 5:38	-0.07	6/23/2022 4:28	2.65	6/23/2022 4:51	7.15	6/23/2022 6:14	-0.31	6/22/2022 5:02	11.34
6/22/2022 5:39	-0.08	6/23/2022 4:29	2.65	6/23/2022 4:52	7.17	6/23/2022 6:15	-0.38	6/22/2022 5:03	11.36
6/22/2022 5:40	-0.07	6/23/2022 4:30	2.65	6/23/2022 4:53	7.14	6/23/2022 6:16	-0.36	6/22/2022 5:04	11.34
6/22/2022 5:41	-0.09	6/23/2022 4:31	2.65	6/23/2022 4:54	7.16	6/23/2022 6:17	-0.32	6/22/2022 5:05	11.36
6/22/2022 5:42	-0.08	6/23/2022 4:32	2.65	6/23/2022 4:55	7.17	6/23/2022 6:18	-0.35	6/22/2022 5:06	11.39
6/22/2022 5:43	-0.08	6/23/2022 4:33	2.65	6/23/2022 4:56	7.14	6/23/2022 6:19	-0.35	6/22/2022 5:07	11.32
6/22/2022 5:44	-0.09	6/23/2022 4:34	2.65	6/23/2022 4:57	7.18	6/23/2022 6:20	-0.30	6/22/2022 5:08	11.33
6/22/2022 5:45	-0.08	6/23/2022 4:35	2.65	6/23/2022 4:58	7.15	6/23/2022 6:21	-0.35	6/22/2022 5:09	11.33
6/22/2022 5:46	-0.09	6/23/2022 4:36	2.65	6/23/2022 4:59	7.14	6/23/2022 6:22	-0.36	6/22/2022 5:10	11.33
6/22/2022 5:47	-0.09	6/23/2022 4:37	2.65	6/23/2022 5:00	7.14	6/23/2022 6:23	-0.35	6/22/2022 5:11	11.32
6/22/2022 5:48	-0.08	6/23/2022 4:38	2.65	6/23/2022 5:01	7.14	6/23/2022 6:24	-0.36	6/22/2022 5:12	11.37
6/22/2022 5:49	-0.07	6/23/2022 4:39	2.65	6/23/2022 5:02	7.14	6/23/2022 6:25	-0.35	6/22/2022 5:13	11.40
6/22/2022 5:50	-0.07	6/23/2022 4:40	2.65	6/23/2022 5:03	7.19	6/23/2022 6:26	-0.34	6/22/2022 5:14	11.36
6/22/2022 5:51	-0.07	6/23/2022 4:41	2.65	6/23/2022 5:04	7.18	6/23/2022 6:27	-0.33	6/22/2022 5:15	11.35
6/22/2022 5:52	-0.08	6/23/2022 4:42	2.66	6/23/2022 5:05	7.18	6/23/2022 6:28	-0.37	6/22/2022 5:16	11.36
6/22/2022 5:53	-0.07	6/23/2022 4:43	2.65	6/23/2022 5:06	7.17	6/23/2022 6:29	-0.36	6/22/2022 5:17	11.36
6/22/2022 5:54	-0.07	6/23/2022 4:44	2.66	6/23/2022 5:07	7.14	6/23/2022 6:30	-0.37	6/22/2022 5:18	11.40
6/22/2022 5:55	-0.08	6/23/2022 4:45	2.65	6/23/2022 5:08	7.16	6/23/2022 6:31	-0.31	6/22/2022 5:19	11.32
6/22/2022 5:56	-0.08	6/23/2022 4:46	2.66	6/23/2022 5:09	7.13	6/23/2022 6:32	-0.35	6/22/2022 5:20	11.38
6/22/2022 5:57	-0.08	6/23/2022 4:47	2.66	6/23/2022 5:10	7.17	6/23/2022 6:33	-0.33	6/22/2022 5:21	11.36
6/22/2022 5:58	-0.07	6/23/2022 4:48	2.66	6/23/2022 5:11	7.16	6/23/2022 6:34	-0.39	6/22/2022 5:22	11.39
6/22/2022 5:59	-0.08	6/23/2022 4:49	2.66	6/23/2022 5:12	7.17	6/23/2022 6:35	-0.35	6/22/2022 5:23	11.33
6/22/2022 6:00	-0.07	6/23/2022 4:50	2.66	6/23/2022 5:13	7.18	6/23/2022 6:36	-0.35	6/22/2022 5:24	11.33
6/22/2022 6:01	-0.08	6/23/2022 4:51	2.66	6/23/2022 5:14	7.14	6/23/2022 6:37	-0.31	6/22/2022 5:25	11.34
6/22/2022 6:02	-0.08	6/23/2022 4:52	2.66	6/23/2022 5:15	7.18	6/23/2022 6:38	-0.36	6/22/2022 5:26	11.32
6/22/2022 6:03	-0.06	6/23/2022 4:53	2.66	6/23/2022 5:16	7.18	6/23/2022 6:39	-0.33	6/22/2022 5:27	11.35
6/22/2022 6:04	-0.08	6/23/2022 4:54	2.66	6/23/2022 5:17	7.17	6/23/2022 6:40	-0.34	6/22/2022 5:28	11.37
6/22/2022 6:05	-0.08	6/23/2022 4:55	2.66	6/23/2022 5:18	7.16	6/23/2022 6:41	-0.32	6/22/2022 5:29	11.32
6/22/2022 6:06	-0.06	6/23/2022 4:56	2.66	6/23/2022 5:19	7.17	6/23/2022 6:42	-0.33	6/22/2022 5:30	11.34
6/22/2022 6:07	-0.08	6/23/2022 4:57	2.66	6/23/2022 5:20	7.14	6/23/2022 6:43	-0.33	6/22/2022 5:31	11.35
6/22/2022 6:08	-0.08	6/23/2022 4:58	2.66	6/23/2022 5:21	7.20	6/23/2022 6:44	-0.30	6/22/2022 5:32	11.36
6/22/2022 6:09	-0.07	6/23/2022 4:59	2.66	6/23/2022 5:22	7.17	6/23/2022 6:45	-0.37	6/22/2022 5:33	11.33
6/22/2022 6:10	-0.09	6/23/2022 5:00	2.66	6/23/2022 5:23	7.22	6/23/2022 6:46	-0.35	6/22/2022 5:34	11.35
6/22/2022 6:11	-0.08	6/23/2022 5:01	2.66	6/23/2022 5:24	7.19	6/23/2022 6:47	-0.32	6/22/2022 5:35	11.36
6/22/2022 6:12	-0.08	6/23/2022 5:02	2.66	6/23/2022 5:25	7.15	6/23/2022 6:48	-0.35	6/22/2022 5:36	11.41
6/22/2022 6:13	-0.07	6/23/2022 5:03	2.66	6/23/2022 5:26	7.22	6/23/2022 6:49	-0.33	6/22/2022 5:37	11.34
6/22/2022 6:14	-0.08	6/23/2022 5:04	2.66	6/23/2022 5:27	7.17	6/23/2022 6:50	-0.35	6/22/2022 5:38	11.30
6/22/2022 6:15	-0.08	6/23/2022 5:05	2.66	6/23/2022 5:28	7.19	6/23/2022 6:51	-0.36	6/22/2022 5:39	11.32
6/22/2022 6:16	-0.07	6/23/2022 5:06	2.66	6/23/2022 5:29	7.18	6/23/2022 6:52	-0.32	6/22/2022 5:40	11.40
6/22/2022 6:17	-0.06	6/23/2022 5:07	2.66	6/23/2022 5:30	7.18	6/23/2022 6:53	-0.36	6/22/2022 5:41	11.34
6/22/2022 6:18	-0.07	6/23/2022 5:08	2.66	6/23/2022 5:31	7.16	6/23/2022 6:54	-0.29	6/22/2022 5:42	11.39
6/22/2022 6:19	-0.08	6/23/2022 5:09	2.66	6/23/2022 5:32	7.17	6/23/2022 6:55	-0.32	6/22/2022 5:43	11.37
6/22/2022 6:20	-0.08	6/23/2022 5:10	2.66	6/23/2022 5:33	7.17	6/23/2022 6:56	-0.33	6/22/2022 5:44	11.40
6/22/2022 6:21	-0.08	6/23/2022 5:11	2.66	6/23/2022 5:34	7.20	6/23/2022 6:57	-0.32	6/22/2022 5:45	11.32
6/22/2022 6:22	-0.08	6/23/2022 5:12	2.66	6/23/2022 5:35	7.19	6/23/2022 6:58	-0.35	6/22/2022 5:46	11.37
6/22/2022 6:23	-0.07	6/23/2022 5:13	2.66	6/23/2022 5:36	7.18	6/23/2022 6:59	-0.30	6/22/2022 5:47	11.36
6/22/2022 6:24	-0.08	6/23/2022 5:14	2.66	6/23/2022 5:37	7.16	6/23/2022 7:00	-0.33	6/22/2022 5:48	11.30
6/22/2022 6:25	-0.06	6/23/2022 5:15	2.66	6/23/2022 5:38	7.20	6/23/2022 7:01	-0.32	6/22/2022 5:49	11.33
6/22/2022 6:26	-0.06	6/23/2022 5:16	2.66	6/23/2022 5:39	7.18	6/23/2022 7:02	-0.33	6/22/2022 5:50	11.34
6/22/2022 6:27	-0.07	6/23/2022 5:17	2.66	6/23/2022 5:40	7.19	6/23/2022 7:03	-0.35	6/22/2022 5:51	11.34
6/22/2022 6:28	-0.06	6/23/2022 5:18	2.66	6/23/2022 5:41	7.18	6/23/2022 7:04	-0.36	6/22/2022 5:52	11.35
6/22/2022 6:29	-0.08	6/23/2022 5:19	2.66	6/23/2022 5:42	7.16	6/23/2022 7:05	-0.36	6/22/2022 5:53	11.38
6/22/2022 6:30	-0.08	6/23/2022 5:20	2.66	6/23/2022 5:43	7.19	6/23/2022 7:06	-0.36	6/22/2022 5:54	11.33
6/22/2022 6:31	-0.06	6/23/2022 5:21	2.66	6/23/2022 5:44	7.20	6/23/2022 7:07	-0.37	6/22/2022 5:55	11.35
6/22/2022 6:32	-0.06	6/23/2022 5:22	2.66	6/23/2022 5:45	7.19	6/23/2022 7:08	-0.29	6/22/2022 5:56	11.37
6/22/2022 6:33	-0.08	6/23/2022 5:23	2.66	6/23/2022 5:46	7.22	6/23/2022 7:09	-0.34	6/22/2022 5:57	11.35
6/22/2022 6:34	-0.06	6/23/2022 5:24	2.66	6/23/2022 5:47	7.18	6/23/2022 7:10	-0.34	6/22/2022 5:58	11.41
6/22/2022 6:35	-0.07	6/23/2022 5:25	2.66	6/23/2022 5:48	7.20	6/23/2022 7:11	-0.30	6/22/2022 5:59	11.37
6/22/2022 6:36	-0.07	6/23/2022 5:26	2.66	6/23/2022 5:49	7.20	6/23/2022 7:12	-0.32	6/22/2022 6:00	11.35
6/22/2022 6:37	-0.07	6/23/2022 5:27	2.66	6/23/2022 5:50	7.23	6/23/2022 7:13	-0.33	6/22/2022 6:01	11.36
6/22/2022 6:38	-0.08	6/23/2022 5:28	2.66	6/23/2022 5:51	7.21	6/23/2022 7:14	-0.33	6/22/2022 6:02	11.31
6/22/2022 6:39	-0.08	6/23/2022 5:29	2.66	6/23/2022 5:52	7.17	6/23/2022 7:15	-0.35	6/22/2022 6:03	11.34
6/22/2022 6:40	-0.07	6/23/2022 5:30	2.66	6/23/2022 5:53	7.21	6/23/2022 7:16	-0.33	6/22/2022 6:04	11.33
6/22/2022 6:41	-0.08	6/23/2022 5:31	2.66	6/23/2022 5:54	7.22	6/23/2022 7:17	-0.36	6/22/2022 6:05	11.36
6/22/2022 6:42	-0.07	6/23/2022 5:32	2.66	6/23/2022 5:55	7.20	6/23/2022 7:18	-0.37	6/22/2022 6:06	11.37
6/22/2022 6:43	-0.06	6/23/2022 5:33	2.66	6/23/2022 5:56	7.19	6/23/2022 7:19	-0.35	6/22/2022 6:07	11.31
6/22/2022 6:44	-0.07	6/23/2022 5:34	2.67	6/23/2022 5:57	7.18	6/23/2022 7:20	-0.31	6/22/2022 6:08	11.38
6/22/2022 6:45	-0.07	6/23/2022 5:35	2.67	6/23/2022 5:58	7.18	6/23/2022 7:21	-0.36	6/22/2022 6:09	11.36
6/22/2022 6:46	-0.07	6/23/2022 5:36	2.67	6/23/2022 5:59	7.18	6/23/2022 7:22	-0.35	6/22/2022 6:10	11.34
6/22/2022 6:47	-0.07	6/23/2022 5:37	2.66	6/23/2022 6:00	7.18	6/23/2022 7:23	-0.35	6/22/2022 6:11	11.37
6/22/2022 6:48	-0.07	6/23/2022 5:38	2.67	6/23/2022 6:01	7.17	6/23/2022 7:24	-0.38	6/22/2022 6:12	11.37
6/22/2022 6:49	-0.08	6/23/2022 5:39	2.67	6/23/2022 6:02	7.19	6/23/2022 7:25	-0.35	6/22/2022 6:13	11.30
6/22/2022 6:50	-0.08	6/23/2022 5:40	2.67	6/23/2022 6:03	7.19	6/23/2022 7:26	-0.35	6/22/2022 6:14	11.37
6/22/2022 6:51	-0.08	6/23/2022 5:41	2.67	6/23/2022 6:04	7.21	6/23/2022 7:27	-0.32	6/22/2022 6:15	11.30
6/22/2022 6:52	-0.09	6/23/2022 5:42	2.67	6/23/2022 6:05	7.19	6/23/2022 7:28	-0.35	6/22/2022 6:16	11.33
6/22/2022 6:53	-0.08	6/23/2022 5:43	2.67	6/23/2022 6:06	7.19	6/23/2022 7:29	-0.32	6/22/2022 6:17	11.34
6/22/2022 6:54	-0.08	6/23/2022 5:44	2.67	6/23/2022 6:07	7.23	6/23/2022 7:30	-0.35	6/22/2022 6:18	11.30
6/22/2022 6:55	-0.06	6/23/2022 5:45	2.67	6/23/2022 6:08	7.19	6/23/2022 7:31	-0.33	6/22/2022 6:19	11.35
6/22/2022 6:56	-0.07	6/23/2022 5:46	2.67	6/23/2022 6:09	7.21	6/23/2022 7:32	-0.35	6/22/2022 6:20	11.32
6/22/2022 6:57	-0.08	6/23/2022 5:47	2.67	6/23/2022 6:10	7.21	6/23/2022 7:33	-0.32	6/22/2022 6:21	11.36
6/22/2022 6:58	-0.08	6/23/2022 5:48	2.67	6/23/2022 6:11	7.25	6/23/2022 7:34	-0.32	6/22/2022 6:22	11.33
6/22/2022 6:59	-0.08	6/23/2022 5:49	2.67	6/23/2022 6:12	7.20	6/23/2022 7:35	-0.37	6/22/2022 6:23	11.34
6/22/2022 7:00	-0.08	6/23/2022 5:50	2.67	6/23/2022 6:13	7.21	6/23/2022 7:36	-0.30	6/22/2022 6:24	11.29
6/22/2022 7:01	-0.06	6/23/2022 5:51	2.67	6/23/2022 6:14	7.23	6/23/2022 7:37	-0.34	6/22/2022 6:25	11.43
6/22/2022 7:02	-0.06	6/23/2022 5:52	2.67	6/23/2022 6:15	7.23	6/23/2022 7:38	-0.33	6/22/2022 6:26	11.34
6/22/2022 7:03	-0.08	6/23/2022 5:53	2.67	6/23/2022 6:16	7.23	6/23/2022 7:39	-0.32	6/22/2022 6:27	11.37
6/22/2022 7:04	-0.08	6/23/2022 5:54	2.67	6/23/2022 6:17	7.16	6/23/2022 7:40	-0.30	6/22/2022 6:28	11.34

6/22/2022 7:05	-0.08	6/23/2022 5:55	2.67	6/23/2022 6:18	7.20	6/23/2022 7:41	-0.37	6/22/2022 6:29	11.36
6/22/2022 7:06	-0.09	6/23/2022 5:56	2.67	6/23/2022 6:19	7.17	6/23/2022 7:42	-0.31	6/22/2022 6:30	11.33
6/22/2022 7:07	-0.06	6/23/2022 5:57	2.67	6/23/2022 6:20	7.20	6/23/2022 7:43	-0.33	6/22/2022 6:31	11.36
6/22/2022 7:08	-0.06	6/23/2022 5:58	2.67	6/23/2022 6:21	7.20	6/23/2022 7:44	-0.33	6/22/2022 6:32	11.37
6/22/2022 7:09	-0.08	6/23/2022 5:59	2.67	6/23/2022 6:22	7.24	6/23/2022 7:45	-0.35	6/22/2022 6:33	11.34
6/22/2022 7:10	-0.08	6/23/2022 6:00	2.67	6/23/2022 6:23	7.22	6/23/2022 7:46	-0.34	6/22/2022 6:34	11.33
6/22/2022 7:11	-0.06	6/23/2022 6:01	2.67	6/23/2022 6:24	7.22	6/23/2022 7:47	-0.34	6/22/2022 6:35	11.34
6/22/2022 7:12	-0.08	6/23/2022 6:02	2.67	6/23/2022 6:25	7.24	6/23/2022 7:48	-0.35	6/22/2022 6:36	11.36
6/22/2022 7:13	-0.08	6/23/2022 6:03	2.67	6/23/2022 6:26	7.20	6/23/2022 7:49	-0.32	6/22/2022 6:37	11.38
6/22/2022 7:14	-0.07	6/23/2022 6:04	2.68	6/23/2022 6:27	7.21	6/23/2022 7:50	-0.34	6/22/2022 6:38	11.38
6/22/2022 7:15	-0.07	6/23/2022 6:05	2.67	6/23/2022 6:28	7.22	6/23/2022 7:51	-0.32	6/22/2022 6:39	11.37
6/22/2022 7:16	-0.08	6/23/2022 6:06	2.67	6/23/2022 6:29	7.22	6/23/2022 7:52	-0.35	6/22/2022 6:40	11.38
6/22/2022 7:17	-0.08	6/23/2022 6:07	2.68	6/23/2022 6:30	7.21	6/23/2022 7:53	-0.36	6/22/2022 6:41	11.40
6/22/2022 7:18	-0.07	6/23/2022 6:08	2.67	6/23/2022 6:31	7.20	6/23/2022 7:54	-0.35	6/22/2022 6:42	11.33
6/22/2022 7:19	-0.08	6/23/2022 6:09	2.68	6/23/2022 6:32	7.19	6/23/2022 7:55	-0.32	6/22/2022 6:43	11.33
6/22/2022 7:20	-0.07	6/23/2022 6:10	2.67	6/23/2022 6:33	7.24	6/23/2022 7:56	-0.32	6/22/2022 6:44	11.34
6/22/2022 7:21	-0.08	6/23/2022 6:11	2.67	6/23/2022 6:34	7.20	6/23/2022 7:57	-0.39	6/22/2022 6:45	11.38
6/22/2022 7:22	-0.08	6/23/2022 6:12	2.68	6/23/2022 6:35	7.21	6/23/2022 7:58	-0.30	6/22/2022 6:46	11.36
6/22/2022 7:23	-0.08	6/23/2022 6:13	2.68	6/23/2022 6:36	7.21	6/23/2022 7:59	-0.32	6/22/2022 6:47	11.39
6/22/2022 7:24	-0.07	6/23/2022 6:14	2.68	6/23/2022 6:37	7.20	6/23/2022 8:00	-0.33	6/22/2022 6:48	11.35
6/22/2022 7:25	-0.08	6/23/2022 6:15	2.68	6/23/2022 6:38	7.22	6/23/2022 8:01	-0.34	6/22/2022 6:49	11.34
6/22/2022 7:26	-0.08	6/23/2022 6:16	2.68	6/23/2022 6:39	7.21	6/23/2022 8:02	-0.33	6/22/2022 6:50	11.31
6/22/2022 7:27	-0.08	6/23/2022 6:17	2.68	6/23/2022 6:40	7.21	6/23/2022 8:03	-0.36	6/22/2022 6:51	11.37
6/22/2022 7:28	-0.08	6/23/2022 6:18	2.68	6/23/2022 6:41	7.24	6/23/2022 8:04	-0.35	6/22/2022 6:52	11.35
6/22/2022 7:29	-0.06	6/23/2022 6:19	2.68	6/23/2022 6:42	7.21	6/23/2022 8:05	-0.31	6/22/2022 6:53	11.36
6/22/2022 7:30	-0.08	6/23/2022 6:20	2.68	6/23/2022 6:43	7.21	6/23/2022 8:06	-0.36	6/22/2022 6:54	11.34
6/22/2022 7:31	-0.08	6/23/2022 6:21	2.68	6/23/2022 6:44	7.20	6/23/2022 8:07	-0.32	6/22/2022 6:55	11.40
6/22/2022 7:32	-0.08	6/23/2022 6:22	2.68	6/23/2022 6:45	7.24	6/23/2022 8:08	-0.31	6/22/2022 6:56	11.35
6/22/2022 7:33	-0.08	6/23/2022 6:23	2.68	6/23/2022 6:46	7.26	6/23/2022 8:09	-0.35	6/22/2022 6:57	11.33
6/22/2022 7:34	-0.07	6/23/2022 6:24	2.68	6/23/2022 6:47	7.24	6/23/2022 8:10	-0.35	6/22/2022 6:58	11.40
6/22/2022 7:35	-0.07	6/23/2022 6:25	2.68	6/23/2022 6:48	7.18	6/23/2022 8:11	-0.32	6/22/2022 6:59	11.37
6/22/2022 7:36	-0.07	6/23/2022 6:26	2.68	6/23/2022 6:49	7.20	6/23/2022 8:12	-0.35	6/22/2022 7:00	11.37
6/22/2022 7:37	-0.07	6/23/2022 6:27	2.68	6/23/2022 6:50	7.24	6/23/2022 8:13	-0.31	6/22/2022 7:01	11.35
6/22/2022 7:38	-0.08	6/23/2022 6:28	2.68	6/23/2022 6:51	7.23	6/23/2022 8:14	-0.34	6/22/2022 7:02	11.35
6/22/2022 7:39	-0.08	6/23/2022 6:29	2.68	6/23/2022 6:52	7.20	6/23/2022 8:15	-0.35	6/22/2022 7:03	11.35
6/22/2022 7:40	-0.07	6/23/2022 6:30	2.69	6/23/2022 6:53	7.22	6/23/2022 8:16	-0.35	6/22/2022 7:04	11.40
6/22/2022 7:41	-0.06	6/23/2022 6:31	2.68	6/23/2022 6:54	7.24	6/23/2022 8:17	-0.33	6/22/2022 7:05	11.36
6/22/2022 7:42	-0.08	6/23/2022 6:32	2.69	6/23/2022 6:55	7.25	6/23/2022 8:18	-0.35	6/22/2022 7:06	11.29
6/22/2022 7:43	-0.08	6/23/2022 6:33	2.68	6/23/2022 6:56	7.23	6/23/2022 8:19	-0.35	6/22/2022 7:07	11.37
6/22/2022 7:44	-0.08	6/23/2022 6:34	2.69	6/23/2022 6:57	7.21	6/23/2022 8:20	-0.36	6/22/2022 7:08	11.40
6/22/2022 7:45	-0.07	6/23/2022 6:35	2.69	6/23/2022 6:58	7.20	6/23/2022 8:21	-0.34	6/22/2022 7:09	11.34
6/22/2022 7:46	-0.08	6/23/2022 6:36	2.68	6/23/2022 6:59	7.21	6/23/2022 8:22	-0.31	6/22/2022 7:10	11.35
6/22/2022 7:47	-0.08	6/23/2022 6:37	2.68	6/23/2022 7:00	7.21	6/23/2022 8:23	-0.35	6/22/2022 7:11	11.37
6/22/2022 7:48	-0.08	6/23/2022 6:38	2.69	6/23/2022 7:01	7.21	6/23/2022 8:24	-0.34	6/22/2022 7:12	11.38
6/22/2022 7:49	-0.08	6/23/2022 6:39	2.69	6/23/2022 7:02	7.19	6/23/2022 8:25	-0.37	6/22/2022 7:13	11.39
6/22/2022 7:50	-0.07	6/23/2022 6:40	2.69	6/23/2022 7:03	7.22	6/23/2022 8:26	-0.31	6/22/2022 7:14	11.35
6/22/2022 7:51	-0.08	6/23/2022 6:41	2.69	6/23/2022 7:04	7.22	6/23/2022 8:27	-0.35	6/22/2022 7:15	11.38
6/22/2022 7:52	-0.07	6/23/2022 6:42	2.68	6/23/2022 7:05	7.28	6/23/2022 8:28	-0.34	6/22/2022 7:16	11.42
6/22/2022 7:53	-0.07	6/23/2022 6:43	2.68	6/23/2022 7:06	7.24	6/23/2022 8:29	-0.31	6/22/2022 7:17	11.37
6/22/2022 7:54	-0.08	6/23/2022 6:44	2.68	6/23/2022 7:07	7.20	6/23/2022 8:30	-0.36	6/22/2022 7:18	11.38
6/22/2022 7:55	-0.08	6/23/2022 6:45	2.69	6/23/2022 7:08	7.23	6/23/2022 8:31	-0.31	6/22/2022 7:19	11.35
6/22/2022 7:56	-0.08	6/23/2022 6:46	2.69	6/23/2022 7:09	7.21	6/23/2022 8:32	-0.35	6/22/2022 7:20	11.39
6/22/2022 7:57	-0.08	6/23/2022 6:47	2.69	6/23/2022 7:10	7.24	6/23/2022 8:33	-0.33	6/22/2022 7:21	11.37
6/22/2022 7:58	-0.08	6/23/2022 6:48	2.69	6/23/2022 7:11	7.21	6/23/2022 8:34	-0.37	6/22/2022 7:22	11.35
6/22/2022 7:59	-0.07	6/23/2022 6:49	2.69	6/23/2022 7:12	7.23	6/23/2022 8:35	-0.35	6/22/2022 7:23	11.37
6/22/2022 8:00	-0.07	6/23/2022 6:50	2.69	6/23/2022 7:13	7.22	6/23/2022 8:36	-0.37	6/22/2022 7:24	11.38
6/22/2022 8:01	-0.07	6/23/2022 6:51	2.69	6/23/2022 7:14	7.24	6/23/2022 8:37	-0.33	6/22/2022 7:25	11.36
6/22/2022 8:02	-0.07	6/23/2022 6:52	2.69	6/23/2022 7:15	7.24	6/23/2022 8:38	-0.31	6/22/2022 7:26	11.32
6/22/2022 8:03	-0.06	6/23/2022 6:53	2.69	6/23/2022 7:16	7.21	6/23/2022 8:39	-0.31	6/22/2022 7:27	11.29
6/22/2022 8:04	-0.08	6/23/2022 6:54	2.69	6/23/2022 7:17	7.24	6/23/2022 8:40	-0.32	6/22/2022 7:28	11.35
6/22/2022 8:05	-0.08	6/23/2022 6:55	2.69	6/23/2022 7:18	7.25	6/23/2022 8:41	-0.33	6/22/2022 7:29	11.36
6/22/2022 8:06	-0.06	6/23/2022 6:56	2.69	6/23/2022 7:19	7.22	6/23/2022 8:42	-0.35	6/22/2022 7:30	11.35
6/22/2022 8:07	-0.08	6/23/2022 6:57	2.69	6/23/2022 7:20	7.28	6/23/2022 8:43	-0.34	6/22/2022 7:31	11.34
6/22/2022 8:08	-0.08	6/23/2022 6:58	2.69	6/23/2022 7:21	7.23	6/23/2022 8:44	-0.34	6/22/2022 7:32	11.33
6/22/2022 8:09	-0.07	6/23/2022 6:59	2.69	6/23/2022 7:22	7.21	6/23/2022 8:45	-0.34	6/22/2022 7:33	11.41
6/22/2022 8:10	-0.06	6/23/2022 7:00	2.69	6/23/2022 7:23	7.22	6/23/2022 8:46	-0.30	6/22/2022 7:34	11.39
6/22/2022 8:11	-0.06	6/23/2022 7:01	2.69	6/23/2022 7:24	7.28	6/23/2022 8:47	-0.36	6/22/2022 7:35	11.36
6/22/2022 8:12	-0.08	6/23/2022 7:02	2.69	6/23/2022 7:25	7.25	6/23/2022 8:48	-0.35	6/22/2022 7:36	11.35
6/22/2022 8:13	-0.07	6/23/2022 7:03	2.69	6/23/2022 7:26	7.25	6/23/2022 8:49	-0.35	6/22/2022 7:37	11.34
6/22/2022 8:14	-0.07	6/23/2022 7:04	2.69	6/23/2022 7:27	7.23	6/23/2022 8:50	-0.33	6/22/2022 7:38	11.40
6/22/2022 8:15	-0.08	6/23/2022 7:05	2.69	6/23/2022 7:28	7.24	6/23/2022 8:51	-0.33	6/22/2022 7:39	11.44
6/22/2022 8:16	-0.08	6/23/2022 7:06	2.69	6/23/2022 7:29	7.20	6/23/2022 8:52	-0.35	6/22/2022 7:40	11.40
6/22/2022 8:17	-0.08	6/23/2022 7:07	2.69	6/23/2022 7:30	7.23	6/23/2022 8:53	-0.37	6/22/2022 7:41	11.36
6/22/2022 8:18	-0.08	6/23/2022 7:08	2.69	6/23/2022 7:31	7.25	6/23/2022 8:54	-0.33	6/22/2022 7:42	11.40
6/22/2022 8:19	-0.08	6/23/2022 7:09	2.69	6/23/2022 7:32	7.21	6/23/2022 8:55	-0.33	6/22/2022 7:43	11.36
6/22/2022 8:20	-0.07	6/23/2022 7:10	2.69	6/23/2022 7:33	7.22	6/23/2022 8:56	-0.34	6/22/2022 7:44	11.37
6/22/2022 8:21	-0.08	6/23/2022 7:11	2.69	6/23/2022 7:34	7.22	6/23/2022 8:57	-0.31	6/22/2022 7:45	11.32
6/22/2022 8:22	-0.08	6/23/2022 7:12	2.69	6/23/2022 7:35	7.24	6/23/2022 8:58	-0.31	6/22/2022 7:46	11.34
6/22/2022 8:23	-0.08	6/23/2022 7:13	2.69	6/23/2022 7:36	7.25	6/23/2022 8:59	-0.34	6/22/2022 7:47	11.36
6/22/2022 8:24	-0.07	6/23/2022 7:14	2.70	6/23/2022 7:37	7.28	6/23/2022 9:00	-0.35	6/22/2022 7:48	11.34
6/22/2022 8:25	-0.08	6/23/2022 7:15	2.69	6/23/2022 7:38	7.24	6/23/2022 9:01	-0.34	6/22/2022 7:49	11.34
6/22/2022 8:26	-0.07	6/23/2022 7:16	2.70	6/23/2022 7:39	7.22	6/23/2022 9:02	-0.35	6/22/2022 7:50	11.41
6/22/2022 8:27	-0.08	6/23/2022 7:17	2.70	6/23/2022 7:40	7.23	6/23/2022 9:03	-0.35	6/22/2022 7:51	11.38
6/22/2022 8:28	-0.07	6/23/2022 7:18	2.69	6/23/2022 7:41	7.25	6/23/2022 9:04	-0.33	6/22/2022 7:52	11.35
6/22/2022 8:29	-0.08	6/23/2022 7:19	2.70	6/23/2022 7:42	7.25	6/23/2022 9:05	-0.37	6/22/2022 7:53	11.33
6/22/2022 8:30	-0.07	6/23/2022 7:20	2.69	6/23/2022 7:43	7.25	6/23/2022 9:06	-0.30	6/22/2022 7:54	11.37
6/22/2022 8:31	-0.08	6/23/2022 7:21	2.70	6/23/2022 7:44	7.28	6/23/2022 9:07	-0.31	6/22/2022 7:55	11.35
6/22/2022 8:32	-0.07	6/23/2022 7:22	2.70	6/23/2022 7:45	7.25	6/23/2022 9:08	-0.32	6/22/2022 7:56	11.34

6/22/2022 8:33	-0.06	6/23/2022 7:23	2.70	6/23/2022 7:46	7.26	6/23/2022 9:09	-0.31	6/22/2022 7:57	11.37
6/22/2022 8:34	-0.08	6/23/2022 7:24	2.70	6/23/2022 7:47	7.28	6/23/2022 9:10	-0.36	6/22/2022 7:58	11.40
6/22/2022 8:35	-0.08	6/23/2022 7:25	2.70	6/23/2022 7:48	7.24	6/23/2022 9:11	-0.35	6/22/2022 7:59	11.33
6/22/2022 8:36	-0.08	6/23/2022 7:26	2.70	6/23/2022 7:49	7.25	6/23/2022 9:12	-0.38	6/22/2022 8:00	11.36
6/22/2022 8:37	-0.08	6/23/2022 7:27	2.70	6/23/2022 7:50	7.26	6/23/2022 9:13	-0.33	6/22/2022 8:01	11.36
6/22/2022 8:38	-0.08	6/23/2022 7:28	2.70	6/23/2022 7:51	7.28	6/23/2022 9:14	-0.32	6/22/2022 8:02	11.36
6/22/2022 8:39	-0.07	6/23/2022 7:29	2.70	6/23/2022 7:52	7.25	6/23/2022 9:15	-0.34	6/22/2022 8:03	11.40
6/22/2022 8:40	-0.07	6/23/2022 7:30	2.70	6/23/2022 7:53	7.25	6/23/2022 9:16	-0.33	6/22/2022 8:04	11.38
6/22/2022 8:41	-0.08	6/23/2022 7:31	2.70	6/23/2022 7:54	7.27	6/23/2022 9:17	-0.35	6/22/2022 8:05	11.35
6/22/2022 8:42	-0.08	6/23/2022 7:32	2.70	6/23/2022 7:55	7.27	6/23/2022 9:18	-0.32	6/22/2022 8:06	11.37
6/22/2022 8:43	-0.07	6/23/2022 7:33	2.70	6/23/2022 7:56	7.24	6/23/2022 9:19	-0.35	6/22/2022 8:07	11.35
6/22/2022 8:44	-0.08	6/23/2022 7:34	2.70	6/23/2022 7:57	7.29	6/23/2022 9:20	-0.36	6/22/2022 8:08	11.36
6/22/2022 8:45	-0.08	6/23/2022 7:35	2.70	6/23/2022 7:58	7.28	6/23/2022 9:21	-0.33	6/22/2022 8:09	11.37
6/22/2022 8:46	-0.08	6/23/2022 7:36	2.70	6/23/2022 7:59	7.28	6/23/2022 9:22	-0.33	6/22/2022 8:10	11.36
6/22/2022 8:47	-0.06	6/23/2022 7:37	2.70	6/23/2022 8:00	7.26	6/23/2022 9:23	-0.31	6/22/2022 8:11	11.37
6/22/2022 8:48	-0.08	6/23/2022 7:38	2.70	6/23/2022 8:01	7.27	6/23/2022 9:24	-0.33	6/22/2022 8:12	11.33
6/22/2022 8:49	-0.08	6/23/2022 7:39	2.70	6/23/2022 8:02	7.30	6/23/2022 9:25	-0.31	6/22/2022 8:13	11.38
6/22/2022 8:50	-0.08	6/23/2022 7:40	2.70	6/23/2022 8:03	7.27	6/23/2022 9:26	-0.31	6/22/2022 8:14	11.40
6/22/2022 8:51	-0.09	6/23/2022 7:41	2.70	6/23/2022 8:04	7.26	6/23/2022 9:27	-0.28	6/22/2022 8:15	11.37
6/22/2022 8:52	-0.08	6/23/2022 7:42	2.70	6/23/2022 8:05	7.29	6/23/2022 9:28	-0.38	6/22/2022 8:16	11.38
6/22/2022 8:53	-0.06	6/23/2022 7:43	2.70	6/23/2022 8:06	7.29	6/23/2022 9:29	-0.32	6/22/2022 8:17	11.38
6/22/2022 8:54	-0.08	6/23/2022 7:44	2.71	6/23/2022 8:07	7.25	6/23/2022 9:30	-0.34	6/22/2022 8:18	11.39
6/22/2022 8:55	-0.07	6/23/2022 7:45	2.71	6/23/2022 8:08	7.26	6/23/2022 9:31	-0.37	6/22/2022 8:19	11.37
6/22/2022 8:56	-0.08	6/23/2022 7:46	2.70	6/23/2022 8:09	7.26	6/23/2022 9:32	-0.37	6/22/2022 8:20	11.39
6/22/2022 8:57	-0.08	6/23/2022 7:47	2.70	6/23/2022 8:10	7.29	6/23/2022 9:33	-0.32	6/22/2022 8:21	11.42
6/22/2022 8:58	-0.06	6/23/2022 7:48	2.70	6/23/2022 8:11	7.25	6/23/2022 9:34	-0.38	6/22/2022 8:22	11.40
6/22/2022 8:59	-0.08	6/23/2022 7:49	2.70	6/23/2022 8:12	7.27	6/23/2022 9:35	-0.34	6/22/2022 8:23	11.40
6/22/2022 9:00	-0.08	6/23/2022 7:50	2.71	6/23/2022 8:13	7.28	6/23/2022 9:36	-0.33	6/22/2022 8:24	11.35
6/22/2022 9:01	-0.08	6/23/2022 7:51	2.70	6/23/2022 8:14	7.28	6/23/2022 9:37	-0.35	6/22/2022 8:25	11.30
6/22/2022 9:02	-0.06	6/23/2022 7:52	2.71	6/23/2022 8:15	7.28	6/23/2022 9:38	-0.30	6/22/2022 8:26	11.37
6/22/2022 9:03	-0.06	6/23/2022 7:53	2.71	6/23/2022 8:16	7.29	6/23/2022 9:39	-0.33	6/22/2022 8:27	11.31
6/22/2022 9:04	-0.08	6/23/2022 7:54	2.71	6/23/2022 8:17	7.26	6/23/2022 9:40	-0.33	6/22/2022 8:28	11.33
6/22/2022 9:05	-0.06	6/23/2022 7:55	2.71	6/23/2022 8:18	7.28	6/23/2022 9:41	-0.38	6/22/2022 8:29	11.37
6/22/2022 9:06	-0.07	6/23/2022 7:56	2.70	6/23/2022 8:19	7.29	6/23/2022 9:42	-0.35	6/22/2022 8:30	11.38
6/22/2022 9:07	-0.07	6/23/2022 7:57	2.71	6/23/2022 8:20	7.29	6/23/2022 9:43	-0.37	6/22/2022 8:31	11.33
6/22/2022 9:08	-0.07	6/23/2022 7:58	2.71	6/23/2022 8:21	7.32	6/23/2022 9:44	-0.34	6/22/2022 8:32	11.32
6/22/2022 9:09	-0.08	6/23/2022 7:59	2.71	6/23/2022 8:22	7.30	6/23/2022 9:45	-0.35	6/22/2022 8:33	11.38
6/22/2022 9:10	-0.07	6/23/2022 8:00	2.71	6/23/2022 8:23	7.31	6/23/2022 9:46	-0.33	6/22/2022 8:34	11.33
6/22/2022 9:11	-0.08	6/23/2022 8:01	2.71	6/23/2022 8:24	7.32	6/23/2022 9:47	-0.26	6/22/2022 8:35	11.34
6/22/2022 9:12	-0.08	6/23/2022 8:02	2.71	6/23/2022 8:25	7.29	6/23/2022 9:48	-0.38	6/22/2022 8:36	11.37
6/22/2022 9:13	-0.08	6/23/2022 8:03	2.71	6/23/2022 8:26	7.29	6/23/2022 9:49	-0.35	6/22/2022 8:37	11.37
6/22/2022 9:14	-0.07	6/23/2022 8:04	2.71	6/23/2022 8:27	7.28	6/23/2022 9:50	-0.34	6/22/2022 8:38	11.31
6/22/2022 9:15	-0.08	6/23/2022 8:05	2.71	6/23/2022 8:28	7.25	6/23/2022 9:51	-0.34	6/22/2022 8:39	11.29
6/22/2022 9:16	-0.08	6/23/2022 8:06	2.72	6/23/2022 8:29	7.31	6/23/2022 9:52	-0.35	6/22/2022 8:40	11.40
6/22/2022 9:17	-0.07	6/23/2022 8:07	2.71	6/23/2022 8:30	7.28	6/23/2022 9:53	-0.34	6/22/2022 8:41	11.38
6/22/2022 9:18	-0.07	6/23/2022 8:08	2.71	6/23/2022 8:31	7.31	6/23/2022 9:54	-0.30	6/22/2022 8:42	11.32
6/22/2022 9:19	-0.08	6/23/2022 8:09	2.71	6/23/2022 8:32	7.26	6/23/2022 9:55	-0.36	6/22/2022 8:43	11.38
6/22/2022 9:20	-0.08	6/23/2022 8:10	2.71	6/23/2022 8:33	7.31	6/23/2022 9:56	-0.31	6/22/2022 8:44	11.43
6/22/2022 9:21	-0.08	6/23/2022 8:11	2.71	6/23/2022 8:34	7.30	6/23/2022 9:57	-0.34	6/22/2022 8:45	11.31
6/22/2022 9:22	-0.08	6/23/2022 8:12	2.71	6/23/2022 8:35	7.29	6/23/2022 9:58	-0.35	6/22/2022 8:46	11.35
6/22/2022 9:23	-0.08	6/23/2022 8:13	2.71	6/23/2022 8:36	7.30	6/23/2022 9:59	-0.32	6/22/2022 8:47	11.34
6/22/2022 9:24	-0.06	6/23/2022 8:14	2.71	6/23/2022 8:37	7.33	6/23/2022 10:00	-0.31	6/22/2022 8:48	11.35
6/22/2022 9:25	-0.06	6/23/2022 8:15	2.72	6/23/2022 8:38	7.28	6/23/2022 10:01	-0.34	6/22/2022 8:49	11.34
6/22/2022 9:26	-0.06	6/23/2022 8:16	2.71	6/23/2022 8:39	7.29	6/23/2022 10:02	-0.35	6/22/2022 8:50	11.39
6/22/2022 9:27	-0.06	6/23/2022 8:17	2.71	6/23/2022 8:40	7.31	6/23/2022 10:03	-0.33	6/22/2022 8:51	11.37
6/22/2022 9:28	-0.08	6/23/2022 8:18	2.71	6/23/2022 8:41	7.28	6/23/2022 10:04	-0.29	6/22/2022 8:52	11.36
6/22/2022 9:29	-0.07	6/23/2022 8:19	2.71	6/23/2022 8:42	7.33	6/23/2022 10:05	-0.33	6/22/2022 8:53	11.35
6/22/2022 9:30	-0.06	6/23/2022 8:20	2.71	6/23/2022 8:43	7.31	6/23/2022 10:06	-0.32	6/22/2022 8:54	11.39
6/22/2022 9:31	-0.07	6/23/2022 8:21	2.71	6/23/2022 8:44	7.31	6/23/2022 10:07	-0.37	6/22/2022 8:55	11.37
6/22/2022 9:32	-0.06	6/23/2022 8:22	2.72	6/23/2022 8:45	7.31	6/23/2022 10:08	-0.32	6/22/2022 8:56	11.32
6/22/2022 9:33	-0.07	6/23/2022 8:23	2.72	6/23/2022 8:46	7.34	6/23/2022 10:09	-0.38	6/22/2022 8:57	11.41
6/22/2022 9:34	-0.07	6/23/2022 8:24	2.72	6/23/2022 8:47	7.30	6/23/2022 10:10	-0.33	6/22/2022 8:58	11.34
6/22/2022 9:35	-0.09	6/23/2022 8:25	2.72	6/23/2022 8:48	7.32	6/23/2022 10:11	-0.33	6/22/2022 8:59	11.38
6/22/2022 9:36	-0.06	6/23/2022 8:26	2.72	6/23/2022 8:49	7.31	6/23/2022 10:12	-0.36	6/22/2022 9:00	11.39
6/22/2022 9:37	-0.07	6/23/2022 8:27	2.71	6/23/2022 8:50	7.34	6/23/2022 10:13	-0.36	6/22/2022 9:01	11.41
6/22/2022 9:38	-0.08	6/23/2022 8:28	2.72	6/23/2022 8:51	7.34	6/23/2022 10:14	-0.38	6/22/2022 9:02	11.37
6/22/2022 9:39	-0.07	6/23/2022 8:29	2.72	6/23/2022 8:52	7.29	6/23/2022 10:15	-0.32	6/22/2022 9:03	11.35
6/22/2022 9:40	-0.07	6/23/2022 8:30	2.72	6/23/2022 8:53	7.33	6/23/2022 10:16	-0.31	6/22/2022 9:04	11.32
6/22/2022 9:41	-0.09	6/23/2022 8:31	2.72	6/23/2022 8:54	7.33	6/23/2022 10:17	-0.35	6/22/2022 9:05	11.37
6/22/2022 9:42	-0.07	6/23/2022 8:32	2.72	6/23/2022 8:55	7.33	6/23/2022 10:18	-0.32	6/22/2022 9:06	11.41
6/22/2022 9:43	-0.07	6/23/2022 8:33	2.72	6/23/2022 8:56	7.30	6/23/2022 10:19	-0.28	6/22/2022 9:07	11.41
6/22/2022 9:44	-0.07	6/23/2022 8:34	2.72	6/23/2022 8:57	7.32	6/23/2022 10:20	-0.34	6/22/2022 9:08	11.40
6/22/2022 9:45	-0.08	6/23/2022 8:35	2.72	6/23/2022 8:58	7.32	6/23/2022 10:21	-0.33	6/22/2022 9:09	11.38
6/22/2022 9:46	-0.08	6/23/2022 8:36	2.72	6/23/2022 8:59	7.32	6/23/2022 10:22	-0.36	6/22/2022 9:10	11.38
6/22/2022 9:47	-0.08	6/23/2022 8:37	2.72	6/23/2022 9:00	7.32	6/23/2022 10:23	-0.32	6/22/2022 9:11	11.36
6/22/2022 9:48	-0.06	6/23/2022 8:38	2.72	6/23/2022 9:01	7.31	6/23/2022 10:24	-0.37	6/22/2022 9:12	11.38
6/22/2022 9:49	-0.08	6/23/2022 8:39	2.72	6/23/2022 9:02	7.35	6/23/2022 10:25	-0.34	6/22/2022 9:13	11.38
6/22/2022 9:50	-0.07	6/23/2022 8:40	2.73	6/23/2022 9:03	7.32	6/23/2022 10:26	-0.35	6/22/2022 9:14	11.41
6/22/2022 9:51	-0.07	6/23/2022 8:41	2.72	6/23/2022 9:04	7.34	6/23/2022 10:27	-0.36	6/22/2022 9:15	11.40
6/22/2022 9:52	-0.08	6/23/2022 8:42	2.72	6/23/2022 9:05	7.33	6/23/2022 10:28	-0.33	6/22/2022 9:16	11.40
6/22/2022 9:53	-0.06	6/23/2022 8:43	2.72	6/23/2022 9:06	7.28	6/23/2022 10:29	-0.31	6/22/2022 9:17	11.37
6/22/2022 9:54	-0.07	6/23/2022 8:44	2.72	6/23/2022 9:07	7.33	6/23/2022 10:30	-0.32	6/22/2022 9:18	11.41
6/22/2022 9:55	-0.07	6/23/2022 8:45	2.73	6/23/2022 9:08	7.31	6/23/2022 10:31	-0.31	6/22/2022 9:19	11.37
6/22/2022 9:56	-0.08	6/23/2022 8:46	2.72	6/23/2022 9:09	7.29	6/23/2022 10:32	-0.31	6/22/2022 9:20	11.35
6/22/2022 9:57	-0.06	6/23/2022 8:47	2.73	6/23/2022 9:10	7.31	6/23/2022 10:33	-0.35	6/22/2022 9:21	11.35
6/22/2022 9:58	-0.08	6/23/2022 8:48	2.73	6/23/2022 9:11	7.34	6/23/2022 10:34	-0.34	6/22/2022 9:22	11.42
6/22/2022 9:59	-0.08	6/23/2022 8:49	2.73	6/23/2022 9:12	7.27	6/23/2022 10:35	-0.35	6/22/2022 9:23	11.33
6/22/2022 10:00	-0.07	6/23/2022 8:50	2.72	6/23/2022 9:13	7.32	6/23/2022 10:36	-0.34	6/22/2022 9:24	11.39

6/22/2022 10:01	-0.07	6/23/2022 8:51	2.73	6/23/2022 9:14	7.33	6/23/2022 10:37	-0.34	6/22/2022 9:25	11.38
6/22/2022 10:02	-0.07	6/23/2022 8:52	2.73	6/23/2022 9:15	7.28	6/23/2022 10:38	-0.34	6/22/2022 9:26	11.38
6/22/2022 10:03	-0.06	6/23/2022 8:53	2.73	6/23/2022 9:16	7.30	6/23/2022 10:39	-0.36	6/22/2022 9:27	11.38
6/22/2022 10:04	-0.07	6/23/2022 8:54	2.73	6/23/2022 9:17	7.33	6/23/2022 10:40	-0.35	6/22/2022 9:28	11.37
6/22/2022 10:05	-0.08	6/23/2022 8:55	2.72	6/23/2022 9:18	7.34	6/23/2022 10:41	-0.35	6/22/2022 9:29	11.37
6/22/2022 10:06	-0.07	6/23/2022 8:56	2.73	6/23/2022 9:19	7.33	6/23/2022 10:42	-0.34	6/22/2022 9:30	11.40
6/22/2022 10:07	-0.07	6/23/2022 8:57	2.72	6/23/2022 9:20	7.31	6/23/2022 10:43	-0.35	6/22/2022 9:31	11.43
6/22/2022 10:08	-0.08	6/23/2022 8:58	2.73	6/23/2022 9:21	7.29	6/23/2022 10:44	-0.34	6/22/2022 9:32	11.37
6/22/2022 10:09	-0.07	6/23/2022 8:59	2.73	6/23/2022 9:22	7.36	6/23/2022 10:45	-0.32	6/22/2022 9:33	11.36
6/22/2022 10:10	-0.07	6/23/2022 9:00	2.73	6/23/2022 9:23	7.30	6/23/2022 10:46	-0.35	6/22/2022 9:34	11.38
6/22/2022 10:11	-0.07	6/23/2022 9:01	2.73	6/23/2022 9:24	7.32	6/23/2022 10:47	-0.30	6/22/2022 9:35	11.38
6/22/2022 10:12	-0.08	6/23/2022 9:02	2.73	6/23/2022 9:25	7.33	6/23/2022 10:48	-0.30	6/22/2022 9:36	11.40
6/22/2022 10:13	-0.08	6/23/2022 9:03	2.73	6/23/2022 9:26	7.36	6/23/2022 10:49	-0.29	6/22/2022 9:37	11.37
6/22/2022 10:14	-0.06	6/23/2022 9:04	2.73	6/23/2022 9:27	7.31	6/23/2022 10:50	-0.33	6/22/2022 9:38	11.42
6/22/2022 10:15	-0.06	6/23/2022 9:05	2.73	6/23/2022 9:28	7.34	6/23/2022 10:51	-0.35	6/22/2022 9:39	11.37
6/22/2022 10:16	-0.08	6/23/2022 9:06	2.73	6/23/2022 9:29	7.31	6/23/2022 10:52	-0.34	6/22/2022 9:40	11.35
6/22/2022 10:17	-0.07	6/23/2022 9:07	2.73	6/23/2022 9:30	7.35	6/23/2022 10:53	-0.30	6/22/2022 9:41	11.34
6/22/2022 10:18	-0.08	6/23/2022 9:08	2.73	6/23/2022 9:31	7.34	6/23/2022 10:54	-0.33	6/22/2022 9:42	11.38
6/22/2022 10:19	-0.08	6/23/2022 9:09	2.73	6/23/2022 9:32	7.35	6/23/2022 10:55	-0.37	6/22/2022 9:43	11.39
6/22/2022 10:20	-0.07	6/23/2022 9:10	2.73	6/23/2022 9:33	7.35	6/23/2022 10:56	-0.34	6/22/2022 9:44	11.38
6/22/2022 10:21	-0.07	6/23/2022 9:11	2.73	6/23/2022 9:34	7.36	6/23/2022 10:57	-0.30	6/22/2022 9:45	11.40
6/22/2022 10:22	-0.07	6/23/2022 9:12	2.73	6/23/2022 9:35	7.37	6/23/2022 10:58	-0.33	6/22/2022 9:46	11.36
6/22/2022 10:23	-0.07	6/23/2022 9:13	2.73	6/23/2022 9:36	7.34	6/23/2022 10:59	-0.35	6/22/2022 9:47	11.36
6/22/2022 10:24	-0.07	6/23/2022 9:14	2.73	6/23/2022 9:37	7.34	6/23/2022 11:00	-0.32	6/22/2022 9:48	11.37
6/22/2022 10:25	-0.07	6/23/2022 9:15	2.73	6/23/2022 9:38	7.36	6/23/2022 11:01	-0.33	6/22/2022 9:49	11.36
6/22/2022 10:26	-0.07	6/23/2022 9:16	2.73	6/23/2022 9:39	7.35	6/23/2022 11:02	-0.34	6/22/2022 9:50	11.38
6/22/2022 10:27	-0.08	6/23/2022 9:17	2.73	6/23/2022 9:40	7.38	6/23/2022 11:03	-0.33	6/22/2022 9:51	11.32
6/22/2022 10:28	-0.06	6/23/2022 9:18	2.73	6/23/2022 9:41	7.33	6/23/2022 11:04	-0.34	6/22/2022 9:52	11.36
6/22/2022 10:29	-0.07	6/23/2022 9:19	2.73	6/23/2022 9:42	7.36	6/23/2022 11:05	-0.31	6/22/2022 9:53	11.31
6/22/2022 10:30	-0.07	6/23/2022 9:20	2.74	6/23/2022 9:43	7.32	6/23/2022 11:06	-0.35	6/22/2022 9:54	11.32
6/22/2022 10:31	-0.07	6/23/2022 9:21	2.74	6/23/2022 9:44	7.31	6/23/2022 11:07	-0.30	6/22/2022 9:55	11.34
6/22/2022 10:32	-0.06	6/23/2022 9:22	2.74	6/23/2022 9:45	7.34	6/23/2022 11:08	-0.33	6/22/2022 9:56	11.34
6/22/2022 10:33	-0.09	6/23/2022 9:23	2.74	6/23/2022 9:46	7.33	6/23/2022 11:09	-0.32	6/22/2022 9:57	11.30
6/22/2022 10:34	-0.07	6/23/2022 9:24	2.74	6/23/2022 9:47	7.33	6/23/2022 11:10	-0.34	6/22/2022 9:58	11.38
6/22/2022 10:35	-0.07	6/23/2022 9:25	2.74	6/23/2022 9:48	7.34	6/23/2022 11:11	-0.36	6/22/2022 9:59	11.36
6/22/2022 10:36	-0.06	6/23/2022 9:26	2.73	6/23/2022 9:49	7.33	6/23/2022 11:12	-0.34	6/22/2022 10:00	11.34
6/22/2022 10:37	-0.07	6/23/2022 9:27	2.74	6/23/2022 9:50	7.30	6/23/2022 11:13	-0.33	6/22/2022 10:01	11.34
6/22/2022 10:38	-0.07	6/23/2022 9:28	2.74	6/23/2022 9:51	7.35	6/23/2022 11:14	-0.33	6/22/2022 10:02	11.35
6/22/2022 10:39	-0.07	6/23/2022 9:29	2.73	6/23/2022 9:52	7.33	6/23/2022 11:15	-0.34	6/22/2022 10:03	11.36
6/22/2022 10:40	-0.07	6/23/2022 9:30	2.74	6/23/2022 9:53	7.35	6/23/2022 11:16	-0.32	6/22/2022 10:04	11.36
6/22/2022 10:41	-0.06	6/23/2022 9:31	2.73	6/23/2022 9:54	7.35	6/23/2022 11:17	-0.35	6/22/2022 10:05	11.31
6/22/2022 10:42	-0.07	6/23/2022 9:32	2.73	6/23/2022 9:55	7.35	6/23/2022 11:18	-0.32	6/22/2022 10:06	11.37
6/22/2022 10:43	-0.07	6/23/2022 9:33	2.74	6/23/2022 9:56	7.31	6/23/2022 11:19	-0.27	6/22/2022 10:07	11.39
6/22/2022 10:44	-0.08	6/23/2022 9:34	2.73	6/23/2022 9:57	7.33	6/23/2022 11:20	-0.35	6/22/2022 10:08	11.39
6/22/2022 10:45	-0.07	6/23/2022 9:35	2.74	6/23/2022 9:58	7.33	6/23/2022 11:21	-0.36	6/22/2022 10:09	11.38
6/22/2022 10:46	-0.07	6/23/2022 9:36	2.73	6/23/2022 9:59	7.37	6/23/2022 11:22	-0.34	6/22/2022 10:10	11.39
6/22/2022 10:47	-0.08	6/23/2022 9:37	2.74	6/23/2022 10:00	7.34	6/23/2022 11:23	-0.32	6/22/2022 10:11	11.38
6/22/2022 10:48	-0.08	6/23/2022 9:38	2.74	6/23/2022 10:01	7.31	6/23/2022 11:24	-0.34	6/22/2022 10:12	11.37
6/22/2022 10:49	-0.06	6/23/2022 9:39	2.74	6/23/2022 10:02	7.32	6/23/2022 11:25	-0.32	6/22/2022 10:13	11.32
6/22/2022 10:50	-0.07	6/23/2022 9:40	2.74	6/23/2022 10:03	7.34	6/23/2022 11:26	-0.33	6/22/2022 10:14	11.35
6/22/2022 10:51	-0.09	6/23/2022 9:41	2.74	6/23/2022 10:04	7.35	6/23/2022 11:27	-0.33	6/22/2022 10:15	11.32
6/22/2022 10:52	-0.07	6/23/2022 9:42	2.74	6/23/2022 10:05	7.34	6/23/2022 11:28	-0.33	6/22/2022 10:16	11.36
6/22/2022 10:53	-0.07	6/23/2022 9:43	2.74	6/23/2022 10:06	7.37	6/23/2022 11:29	-0.32	6/22/2022 10:17	11.36
6/22/2022 10:54	-0.06	6/23/2022 9:44	2.74	6/23/2022 10:07	7.35	6/23/2022 11:30	-0.30	6/22/2022 10:18	11.34
6/22/2022 10:55	-0.08	6/23/2022 9:45	2.74	6/23/2022 10:08	7.33	6/23/2022 11:31	-0.33	6/22/2022 10:19	11.39
6/22/2022 10:56	-0.08	6/23/2022 9:46	2.74	6/23/2022 10:09	7.33	6/23/2022 11:32	-0.36	6/22/2022 10:20	11.32
6/22/2022 10:57	-0.07	6/23/2022 9:47	2.74	6/23/2022 10:10	7.35	6/23/2022 11:33	-0.32	6/22/2022 10:21	11.37
6/22/2022 10:58	-0.07	6/23/2022 9:48	2.74	6/23/2022 10:11	7.34	6/23/2022 11:34	-0.33	6/22/2022 10:22	11.38
6/22/2022 10:59	-0.06	6/23/2022 9:49	2.74	6/23/2022 10:12	7.34	6/23/2022 11:35	-0.32	6/22/2022 10:23	11.36
6/22/2022 11:00	-0.06	6/23/2022 9:50	2.74	6/23/2022 10:13	7.31	6/23/2022 11:36	-0.35	6/22/2022 10:24	11.33
6/22/2022 11:01	-0.07	6/23/2022 9:51	2.74	6/23/2022 10:14	7.35	6/23/2022 11:37	-0.35	6/22/2022 10:25	11.37
6/22/2022 11:02	-0.07	6/23/2022 9:52	2.74	6/23/2022 10:15	7.34	6/23/2022 11:38	-0.35	6/22/2022 10:26	11.36
6/22/2022 11:03	-0.06	6/23/2022 9:53	2.74	6/23/2022 10:16	7.35	6/23/2022 11:39	-0.32	6/22/2022 10:27	11.43
6/22/2022 11:04	-0.08	6/23/2022 9:54	2.74	6/23/2022 10:17	7.33	6/23/2022 11:40	-0.33	6/22/2022 10:28	11.34
6/22/2022 11:05	-0.06	6/23/2022 9:55	2.74	6/23/2022 10:18	7.35	6/23/2022 11:41	-0.35	6/22/2022 10:29	11.42
6/22/2022 11:06	-0.06	6/23/2022 9:56	2.74	6/23/2022 10:19	7.34	6/23/2022 11:42	-0.31	6/22/2022 10:30	11.29
6/22/2022 11:07	-0.07	6/23/2022 9:57	2.74	6/23/2022 10:20	7.34	6/23/2022 11:43	-0.34	6/22/2022 10:31	11.36
6/22/2022 11:08	-0.07	6/23/2022 9:58	2.74	6/23/2022 10:21	7.38	6/23/2022 11:44	-0.36	6/22/2022 10:32	11.34
6/22/2022 11:09	-0.06	6/23/2022 9:59	2.74	6/23/2022 10:22	7.38	6/23/2022 11:45	-0.37	6/22/2022 10:33	11.33
6/22/2022 11:10	-0.06	6/23/2022 10:00	2.74	6/23/2022 10:23	7.36	6/23/2022 11:46	-0.33	6/22/2022 10:34	11.37
6/22/2022 11:11	-0.08	6/23/2022 10:01	2.74	6/23/2022 10:24	7.33	6/23/2022 11:47	-0.37	6/22/2022 10:35	11.38
6/22/2022 11:12	-0.07	6/23/2022 10:02	2.74	6/23/2022 10:25	7.34	6/23/2022 11:48	-0.34	6/22/2022 10:36	11.37
6/22/2022 11:13	-0.06	6/23/2022 10:03	2.74	6/23/2022 10:26	7.35	6/23/2022 11:49	-0.34	6/22/2022 10:37	11.34
6/22/2022 11:14	-0.07	6/23/2022 10:04	2.74	6/23/2022 10:27	7.36	6/23/2022 11:50	-0.32	6/22/2022 10:38	11.41
6/22/2022 11:15	-0.08	6/23/2022 10:05	2.74	6/23/2022 10:28	7.33	6/23/2022 11:51	-0.37	6/22/2022 10:39	11.36
6/22/2022 11:16	-0.08	6/23/2022 10:06	2.74	6/23/2022 10:29	7.36	6/23/2022 11:52	-0.36	6/22/2022 10:40	11.40
6/22/2022 11:17	-0.07	6/23/2022 10:07	2.74	6/23/2022 10:30	7.37	6/23/2022 11:53	-0.36	6/22/2022 10:41	11.39
6/22/2022 11:18	-0.09	6/23/2022 10:08	2.74	6/23/2022 10:31	7.32	6/23/2022 11:54	-0.33	6/22/2022 10:42	11.45
6/22/2022 11:19	-0.07	6/23/2022 10:09	2.74	6/23/2022 10:32	7.35	6/23/2022 11:55	-0.33	6/22/2022 10:43	11.38
6/22/2022 11:20	-0.08	6/23/2022 10:10	2.75	6/23/2022 10:33	7.36	6/23/2022 11:56	-0.39	6/22/2022 10:44	11.34
6/22/2022 11:21	-0.08	6/23/2022 10:11	2.74	6/23/2022 10:34	7.34	6/23/2022 11:57	-0.32	6/22/2022 10:45	11.38
6/22/2022 11:22	-0.07	6/23/2022 10:12	2.74	6/23/2022 10:35	7.34	6/23/2022 11:58	-0.30	6/22/2022 10:46	11.35
6/22/2022 11:23	-0.07	6/23/2022 10:13	2.74	6/23/2022 10:36	7.37	6/23/2022 11:59	-0.35	6/22/2022 10:47	11.34
6/22/2022 11:24	-0.08	6/23/2022 10:14	2.75	6/23/2022 10:37	7.36	6/23/2022 12:00	-0.33	6/22/2022 10:48	11.39
6/22/2022 11:25	-0.07	6/23/2022 10:15	2.75	6/23/2022 10:38	7.35	6/23/2022 12:01	-0.35	6/22/2022 10:49	11.36
6/22/2022 11:26	-0.06	6/23/2022 10:16	2.74	6/23/2022 10:39	7.37	6/23/2022 12:02	-0.32	6/22/2022 10:50	11.36
6/22/2022 11:27	-0.06	6/23/2022 10:17	2.75	6/23/2022 10:40	7.38	6/23/2022 12:03	-0.34	6/22/2022 10:51	11.35
6/22/2022 11:28	-0.06	6/23/2022 10:18	2.75	6/23/2022 10:41	7.35	6/23/2022 12:04	-0.37	6/22/2022 10:52	11.37

6/22/2022 11:29	-0.08	6/23/2022 10:19	2.75	6/23/2022 10:42	7.33	6/23/2022 12:05	-0.35	6/22/2022 10:53	11.37
6/22/2022 11:30	-0.08	6/23/2022 10:20	2.75	6/23/2022 10:43	7.34	6/23/2022 12:06	-0.35	6/22/2022 10:54	11.37
6/22/2022 11:31	-0.09	6/23/2022 10:21	2.75	6/23/2022 10:44	7.36	6/23/2022 12:07	-0.32	6/22/2022 10:55	11.41
6/22/2022 11:32	-0.07	6/23/2022 10:22	2.75	6/23/2022 10:45	7.35	6/23/2022 12:08	-0.29	6/22/2022 10:56	11.38
6/22/2022 11:33	-0.06	6/23/2022 10:23	2.75	6/23/2022 10:46	7.33	6/23/2022 12:09	-0.29	6/22/2022 10:57	11.34
6/22/2022 11:34	-0.07	6/23/2022 10:24	2.75	6/23/2022 10:47	7.39	6/23/2022 12:10	-0.33	6/22/2022 10:58	11.35
6/22/2022 11:35	-0.08	6/23/2022 10:25	2.75	6/23/2022 10:48	7.37	6/23/2022 12:11	-0.30	6/22/2022 10:59	11.39
6/22/2022 11:36	-0.07	6/23/2022 10:26	2.75	6/23/2022 10:49	7.32	6/23/2022 12:12	-0.35	6/22/2022 11:00	11.39
6/22/2022 11:37	-0.07	6/23/2022 10:27	2.75	6/23/2022 10:50	7.35	6/23/2022 12:13	-0.31	6/22/2022 11:01	11.34
6/22/2022 11:38	-0.07	6/23/2022 10:28	2.75	6/23/2022 10:51	7.37	6/23/2022 12:14	-0.33	6/22/2022 11:02	11.31
6/22/2022 11:39	-0.08	6/23/2022 10:29	2.75	6/23/2022 10:52	7.33	6/23/2022 12:15	-0.34	6/22/2022 11:03	11.40
6/22/2022 11:40	-0.06	6/23/2022 10:30	2.75	6/23/2022 10:53	7.38	6/23/2022 12:16	-0.36	6/22/2022 11:04	11.39
6/22/2022 11:41	-0.06	6/23/2022 10:31	2.75	6/23/2022 10:54	7.32	6/23/2022 12:17	-0.35	6/22/2022 11:05	11.38
6/22/2022 11:42	-0.07	6/23/2022 10:32	2.75	6/23/2022 10:55	7.35	6/23/2022 12:18	-0.34	6/22/2022 11:06	11.34
6/22/2022 11:43	-0.06	6/23/2022 10:33	2.75	6/23/2022 10:56	7.34	6/23/2022 12:19	-0.32	6/22/2022 11:07	11.40
6/22/2022 11:44	-0.07	6/23/2022 10:34	2.75	6/23/2022 10:57	7.34	6/23/2022 12:20	-0.34	6/22/2022 11:08	11.38
6/22/2022 11:45	-0.08	6/23/2022 10:35	2.75	6/23/2022 10:58	7.34	6/23/2022 12:21	-0.33	6/22/2022 11:09	11.34
6/22/2022 11:46	-0.08	6/23/2022 10:36	2.75	6/23/2022 10:59	7.37	6/23/2022 12:22	-0.34	6/22/2022 11:10	11.37
6/22/2022 11:47	-0.07	6/23/2022 10:37	2.75	6/23/2022 11:00	7.36	6/23/2022 12:23	-0.39	6/22/2022 11:11	11.38
6/22/2022 11:48	-0.08	6/23/2022 10:38	2.75	6/23/2022 11:01	7.35	6/23/2022 12:24	-0.31	6/22/2022 11:12	11.38
6/22/2022 11:49	-0.07	6/23/2022 10:39	2.75	6/23/2022 11:02	7.38	6/23/2022 12:25	-0.31	6/22/2022 11:13	11.41
6/22/2022 11:50	-0.08	6/23/2022 10:40	2.75	6/23/2022 11:03	7.36	6/23/2022 12:26	-0.36	6/22/2022 11:14	11.33
6/22/2022 11:51	-0.09	6/23/2022 10:41	2.75	6/23/2022 11:04	7.35	6/23/2022 12:27	-0.30	6/22/2022 11:15	11.33
6/22/2022 11:52	-0.07	6/23/2022 10:42	2.75	6/23/2022 11:05	7.36	6/23/2022 12:28	-0.33	6/22/2022 11:16	11.35
6/22/2022 11:53	-0.06	6/23/2022 10:43	2.75	6/23/2022 11:06	7.39	6/23/2022 12:29	-0.34	6/22/2022 11:17	11.36
6/22/2022 11:54	-0.08	6/23/2022 10:44	2.75	6/23/2022 11:07	7.39	6/23/2022 12:30	-0.30	6/22/2022 11:18	11.37
6/22/2022 11:55	-0.07	6/23/2022 10:45	2.75	6/23/2022 11:08	7.36	6/23/2022 12:31	-0.31	6/22/2022 11:19	11.36
6/22/2022 11:56	-0.07	6/23/2022 10:46	2.75	6/23/2022 11:09	7.34	6/23/2022 12:32	-0.32	6/22/2022 11:20	11.39
6/22/2022 11:57	-0.08	6/23/2022 10:47	2.75	6/23/2022 11:10	7.35	6/23/2022 12:33	-0.35	6/22/2022 11:21	11.40
6/22/2022 11:58	-0.06	6/23/2022 10:48	2.75	6/23/2022 11:11	7.38	6/23/2022 12:34	-0.35	6/22/2022 11:22	11.34
6/22/2022 11:59	-0.06	6/23/2022 10:49	2.75	6/23/2022 11:12	7.36	6/23/2022 12:35	-0.37	6/22/2022 11:23	11.36
6/22/2022 12:00	-0.07	6/23/2022 10:50	2.75	6/23/2022 11:13	7.36	6/23/2022 12:36	-0.32	6/22/2022 11:24	11.34
6/22/2022 12:01	-0.08	6/23/2022 10:51	2.75	6/23/2022 11:14	7.40	6/23/2022 12:37	-0.36	6/22/2022 11:25	11.40
6/22/2022 12:02	-0.08	6/23/2022 10:52	2.75	6/23/2022 11:15	7.39	6/23/2022 12:38	-0.33	6/22/2022 11:26	11.38
6/22/2022 12:03	-0.07	6/23/2022 10:53	2.75	6/23/2022 11:16	7.39	6/23/2022 12:39	-0.39	6/22/2022 11:27	11.41
6/22/2022 12:04	-0.07	6/23/2022 10:54	2.76	6/23/2022 11:17	7.40	6/23/2022 12:40	-0.32	6/22/2022 11:28	11.34
6/22/2022 12:05	-0.07	6/23/2022 10:55	2.76	6/23/2022 11:18	7.37	6/23/2022 12:41	-0.32	6/22/2022 11:29	11.39
6/22/2022 12:06	-0.07	6/23/2022 10:56	2.76	6/23/2022 11:19	7.40	6/23/2022 12:42	-0.36	6/22/2022 11:30	11.39
6/22/2022 12:07	-0.07	6/23/2022 10:57	2.76	6/23/2022 11:20	7.37	6/23/2022 12:43	-0.30	6/22/2022 11:31	11.36
6/22/2022 12:08	-0.08	6/23/2022 10:58	2.76	6/23/2022 11:21	7.39	6/23/2022 12:44	-0.29	6/22/2022 11:32	11.35
6/22/2022 12:09	-0.07	6/23/2022 10:59	2.76	6/23/2022 11:22	7.40	6/23/2022 12:45	-0.39	6/22/2022 11:33	11.34
6/22/2022 12:10	-0.07	6/23/2022 11:00	2.76	6/23/2022 11:23	7.37	6/23/2022 12:46	-0.33	6/22/2022 11:34	11.38
6/22/2022 12:11	-0.07	6/23/2022 11:01	2.76	6/23/2022 11:24	7.37	6/23/2022 12:47	-0.33	6/22/2022 11:35	11.37
6/22/2022 12:12	-0.06	6/23/2022 11:02	2.76	6/23/2022 11:25	7.38	6/23/2022 12:48	-0.30	6/22/2022 11:36	11.41
6/22/2022 12:13	-0.06	6/23/2022 11:03	2.76	6/23/2022 11:26	7.39	6/23/2022 12:49	-0.32	6/22/2022 11:37	11.35
6/22/2022 12:14	-0.07	6/23/2022 11:04	2.76	6/23/2022 11:27	7.39	6/23/2022 12:50	-0.33	6/22/2022 11:38	11.32
6/22/2022 12:15	-0.07	6/23/2022 11:05	2.76	6/23/2022 11:28	7.38	6/23/2022 12:51	-0.30	6/22/2022 11:39	11.39
6/22/2022 12:16	-0.08	6/23/2022 11:06	2.76	6/23/2022 11:29	7.35	6/23/2022 12:52	-0.34	6/22/2022 11:40	11.39
6/22/2022 12:17	-0.08	6/23/2022 11:07	2.76	6/23/2022 11:30	7.38	6/23/2022 12:53	-0.29	6/22/2022 11:41	11.38
6/22/2022 12:18	-0.08	6/23/2022 11:08	2.76	6/23/2022 11:31	7.40	6/23/2022 12:54	-0.30	6/22/2022 11:42	11.39
6/22/2022 12:19	-0.07	6/23/2022 11:09	2.76	6/23/2022 11:32	7.38	6/23/2022 12:55	-0.32	6/22/2022 11:43	11.38
6/22/2022 12:20	-0.08	6/23/2022 11:10	2.76	6/23/2022 11:33	7.37	6/23/2022 12:56	-0.35	6/22/2022 11:44	11.34
6/22/2022 12:21	-0.08	6/23/2022 11:11	2.76	6/23/2022 11:34	7.39	6/23/2022 12:57	-0.35	6/22/2022 11:45	11.37
6/22/2022 12:22	-0.06	6/23/2022 11:12	2.76	6/23/2022 11:35	7.37	6/23/2022 12:58	-0.35	6/22/2022 11:46	11.38
6/22/2022 12:23	-0.06	6/23/2022 11:13	2.76	6/23/2022 11:36	7.36	6/23/2022 12:59	-0.34	6/22/2022 11:47	11.38
6/22/2022 12:24	-0.06	6/23/2022 11:14	2.76	6/23/2022 11:37	7.41	6/23/2022 13:00	-0.33	6/22/2022 11:48	11.42
6/22/2022 12:25	-0.06	6/23/2022 11:15	2.76	6/23/2022 11:38	7.38	6/23/2022 13:01	-0.35	6/22/2022 11:49	11.41
6/22/2022 12:26	-0.06	6/23/2022 11:16	2.76	6/23/2022 11:39	7.35	6/23/2022 13:02	-0.34	6/22/2022 11:50	11.41
6/22/2022 12:27	-0.06	6/23/2022 11:17	2.76	6/23/2022 11:40	7.38	6/23/2022 13:03	-0.34	6/22/2022 11:51	11.38
6/22/2022 12:28	-0.08	6/23/2022 11:18	2.76	6/23/2022 11:41	7.38	6/23/2022 13:04	-0.34	6/22/2022 11:52	11.36
6/22/2022 12:29	-0.07	6/23/2022 11:19	2.76	6/23/2022 11:42	7.36	6/23/2022 13:05	-0.31	6/22/2022 11:53	11.38
6/22/2022 12:30	-0.08	6/23/2022 11:20	2.76	6/23/2022 11:43	7.41	6/23/2022 13:06	-0.34	6/22/2022 11:54	11.36
6/22/2022 12:31	-0.08	6/23/2022 11:21	2.76	6/23/2022 11:44	7.38	6/23/2022 13:07	-0.36	6/22/2022 11:55	11.35
6/22/2022 12:32	-0.07	6/23/2022 11:22	2.76	6/23/2022 11:45	7.42	6/23/2022 13:08	-0.35	6/22/2022 11:56	11.35
6/22/2022 12:33	-0.07	6/23/2022 11:23	2.77	6/23/2022 11:46	7.38	6/23/2022 13:09	-0.35	6/22/2022 11:57	11.37
6/22/2022 12:34	-0.08	6/23/2022 11:24	2.76	6/23/2022 11:47	7.42	6/23/2022 13:10	-0.37	6/22/2022 11:58	11.39
6/22/2022 12:35	-0.06	6/23/2022 11:25	2.77	6/23/2022 11:48	7.39	6/23/2022 13:11	-0.36	6/22/2022 11:59	11.37
6/22/2022 12:36	-0.07	6/23/2022 11:26	2.76	6/23/2022 11:49	7.40	6/23/2022 13:12	-0.31	6/22/2022 12:00	11.38
6/22/2022 12:37	-0.06	6/23/2022 11:27	2.77	6/23/2022 11:50	7.38	6/23/2022 13:13	-0.35	6/22/2022 12:01	11.36
6/22/2022 12:38	-0.06	6/23/2022 11:28	2.77	6/23/2022 11:51	7.37	6/23/2022 13:14	-0.34	6/22/2022 12:02	11.38
6/22/2022 12:39	-0.06	6/23/2022 11:29	2.76	6/23/2022 11:52	7.38	6/23/2022 13:15	-0.35	6/22/2022 12:03	11.43
6/22/2022 12:40	-0.06	6/23/2022 11:30	2.77	6/23/2022 11:53	7.39	6/23/2022 13:16	-0.35	6/22/2022 12:04	11.41
6/22/2022 12:41	-0.06	6/23/2022 11:31	2.77	6/23/2022 11:54	7.36	6/23/2022 13:17	-0.32	6/22/2022 12:05	11.42
6/22/2022 12:42	-0.07	6/23/2022 11:32	2.77	6/23/2022 11:55	7.37	6/23/2022 13:18	-0.33	6/22/2022 12:06	11.36
6/22/2022 12:43	-0.07	6/23/2022 11:33	2.77	6/23/2022 11:56	7.40	6/23/2022 13:19	-0.38	6/22/2022 12:07	11.43
6/22/2022 12:44	-0.06	6/23/2022 11:34	2.77	6/23/2022 11:57	7.41	6/23/2022 13:20	-0.35	6/22/2022 12:08	11.41
6/22/2022 12:45	-0.08	6/23/2022 11:35	2.77	6/23/2022 11:58	7.42	6/23/2022 13:21	-0.34	6/22/2022 12:09	11.40
6/22/2022 12:46	-0.06	6/23/2022 11:36	2.77	6/23/2022 11:59	7.42	6/23/2022 13:22	-0.33	6/22/2022 12:10	11.36
6/22/2022 12:47	-0.07	6/23/2022 11:37	2.77	6/23/2022 12:00	7.41	6/23/2022 13:23	-0.33	6/22/2022 12:11	11.38
6/22/2022 12:48	-0.07	6/23/2022 11:38	2.76	6/23/2022 12:01	7.37	6/23/2022 13:24	-0.34	6/22/2022 12:12	11.38
6/22/2022 12:49	-0.08	6/23/2022 11:39	2.77	6/23/2022 12:02	7.37	6/23/2022 13:25	-0.36	6/22/2022 12:13	11.39
6/22/2022 12:50	-0.07	6/23/2022 11:40	2.77	6/23/2022 12:03	7.39	6/23/2022 13:26	-0.34	6/22/2022 12:14	11.35
6/22/2022 12:51	-0.08	6/23/2022 11:41	2.77	6/23/2022 12:04	7.39	6/23/2022 13:27	-0.36	6/22/2022 12:15	11.35
6/22/2022 12:52	-0.06	6/23/2022 11:42	2.77	6/23/2022 12:05	7.37	6/23/2022 13:28	-0.35	6/22/2022 12:16	11.43
6/22/2022 12:53	-0.08	6/23/2022 11:43	2.77	6/23/2022 12:06	7.41	6/23/2022 13:29	-0.35	6/22/2022 12:17	11.39
6/22/2022 12:54	-0.07	6/23/2022 11:44	2.77	6/23/2022 12:07	7.40	6/23/2022 13:30	-0.33	6/22/2022 12:18	11.33
6/22/2022 12:55	-0.07	6/23/2022 11:45	2.77	6/23/2022 12:08	7.42	6/23/2022 13:31	-0.37	6/22/2022 12:19	11.38
6/22/2022 12:56	-0.06	6/23/2022 11:46	2.77	6/23/2022 12:09	7.42	6/23/2022 13:32	-0.34	6/22/2022 12:20	11.39

6/22/2022 12:57	-0.09	6/23/2022 11:47	2.77	6/23/2022 12:10	7.36	6/23/2022 13:33	-0.36	6/22/2022 12:21	11.33
6/22/2022 12:58	-0.07	6/23/2022 11:48	2.77	6/23/2022 12:11	7.40	6/23/2022 13:34	-0.35	6/22/2022 12:22	11.37
6/22/2022 12:59	-0.07	6/23/2022 11:49	2.77	6/23/2022 12:12	7.44	6/23/2022 13:35	-0.35	6/22/2022 12:23	11.40
6/22/2022 13:00	-0.07	6/23/2022 11:50	2.77	6/23/2022 12:13	7.38	6/23/2022 13:36	-0.36	6/22/2022 12:24	11.38
6/22/2022 13:01	-0.06	6/23/2022 11:51	2.77	6/23/2022 12:14	7.39	6/23/2022 13:37	-0.36	6/22/2022 12:25	11.39
6/22/2022 13:02	-0.08	6/23/2022 11:52	2.77	6/23/2022 12:15	7.42	6/23/2022 13:38	-0.33	6/22/2022 12:26	11.37
6/22/2022 13:03	-0.08	6/23/2022 11:53	2.77	6/23/2022 12:16	7.40	6/23/2022 13:39	-0.35	6/22/2022 12:27	11.38
6/22/2022 13:04	-0.08	6/23/2022 11:54	2.77	6/23/2022 12:17	7.38	6/23/2022 13:40	-0.36	6/22/2022 12:28	11.40
6/22/2022 13:05	-0.07	6/23/2022 11:55	2.77	6/23/2022 12:18	7.39	6/23/2022 13:41	-0.36	6/22/2022 12:29	11.34
6/22/2022 13:06	-0.08	6/23/2022 11:56	2.77	6/23/2022 12:19	7.38	6/23/2022 13:42	-0.33	6/22/2022 12:30	11.36
6/22/2022 13:07	-0.06	6/23/2022 11:57	2.77	6/23/2022 12:20	7.43	6/23/2022 13:43	-0.31	6/22/2022 12:31	11.38
6/22/2022 13:08	-0.08	6/23/2022 11:58	2.77	6/23/2022 12:21	7.44	6/23/2022 13:44	-0.33	6/22/2022 12:32	11.38
6/22/2022 13:09	-0.06	6/23/2022 11:59	2.78	6/23/2022 12:22	7.46	6/23/2022 13:45	-0.35	6/22/2022 12:33	11.36
6/22/2022 13:10	-0.07	6/23/2022 12:00	2.77	6/23/2022 12:23	7.40	6/23/2022 13:46	-0.34	6/22/2022 12:34	11.37
6/22/2022 13:11	-0.07	6/23/2022 12:01	2.77	6/23/2022 12:24	7.37	6/23/2022 13:47	-0.42	6/22/2022 12:35	11.39
6/22/2022 13:12	-0.08	6/23/2022 12:02	2.77	6/23/2022 12:25	7.38	6/23/2022 13:48	-0.33	6/22/2022 12:36	11.37
6/22/2022 13:13	-0.08	6/23/2022 12:03	2.77	6/23/2022 12:26	7.38	6/23/2022 13:49	-0.34	6/22/2022 12:37	11.37
6/22/2022 13:14	-0.08	6/23/2022 12:04	2.77	6/23/2022 12:27	7.37	6/23/2022 13:50	-0.32	6/22/2022 12:38	11.38
6/22/2022 13:15	-0.08	6/23/2022 12:05	2.77	6/23/2022 12:28	7.39	6/23/2022 13:51	-0.36	6/22/2022 12:39	11.40
6/22/2022 13:16	-0.07	6/23/2022 12:06	2.77	6/23/2022 12:29	7.44	6/23/2022 13:52	-0.36	6/22/2022 12:40	11.38
6/22/2022 13:17	-0.06	6/23/2022 12:07	2.77	6/23/2022 12:30	7.37	6/23/2022 13:53	-0.35	6/22/2022 12:41	11.39
6/22/2022 13:18	-0.08	6/23/2022 12:08	2.77	6/23/2022 12:31	7.37	6/23/2022 13:54	-0.34	6/22/2022 12:42	11.37
6/22/2022 13:19	-0.08	6/23/2022 12:09	2.78	6/23/2022 12:32	7.42	6/23/2022 13:55	-0.33	6/22/2022 12:43	11.43
6/22/2022 13:20	-0.06	6/23/2022 12:10	2.77	6/23/2022 12:33	7.39	6/23/2022 13:56	-0.32	6/22/2022 12:44	11.38
6/22/2022 13:21	-0.08	6/23/2022 12:11	2.77	6/23/2022 12:34	7.34	6/23/2022 13:57	-0.32	6/22/2022 12:45	11.38
6/22/2022 13:22	-0.08	6/23/2022 12:12	2.77	6/23/2022 12:35	7.37	6/23/2022 13:58	-0.34	6/22/2022 12:46	11.41
6/22/2022 13:23	-0.07	6/23/2022 12:13	2.77	6/23/2022 12:36	7.40	6/23/2022 13:59	-0.33	6/22/2022 12:47	11.40
6/22/2022 13:24	-0.09	6/23/2022 12:14	2.77	6/23/2022 12:37	7.40	6/23/2022 14:00	-0.35	6/22/2022 12:48	11.35
6/22/2022 13:25	-0.07	6/23/2022 12:15	2.77	6/23/2022 12:38	7.37	6/23/2022 14:01	-0.39	6/22/2022 12:49	11.40
6/22/2022 13:26	-0.07	6/23/2022 12:16	2.77	6/23/2022 12:39	7.43	6/23/2022 14:02	-0.30	6/22/2022 12:50	11.37
6/22/2022 13:27	-0.06	6/23/2022 12:17	2.78	6/23/2022 12:40	7.41	6/23/2022 14:03	-0.35	6/22/2022 12:51	11.33
6/22/2022 13:28	-0.08	6/23/2022 12:18	2.77	6/23/2022 12:41	7.37	6/23/2022 14:04	-0.36	6/22/2022 12:52	11.33
6/22/2022 13:29	-0.06	6/23/2022 12:19	2.78	6/23/2022 12:42	7.40	6/23/2022 14:05	-0.35	6/22/2022 12:53	11.38
6/22/2022 13:30	-0.07	6/23/2022 12:20	2.77	6/23/2022 12:43	7.41	6/23/2022 14:06	-0.37	6/22/2022 12:54	11.38
6/22/2022 13:31	-0.08	6/23/2022 12:21	2.77	6/23/2022 12:44	7.40	6/23/2022 14:07	-0.33	6/22/2022 12:55	11.40
6/22/2022 13:32	-0.08	6/23/2022 12:22	2.77	6/23/2022 12:45	7.41	6/23/2022 14:08	-0.36	6/22/2022 12:56	11.41
6/22/2022 13:33	-0.08	6/23/2022 12:23	2.77	6/23/2022 12:46	7.45	6/23/2022 14:09	-0.31	6/22/2022 12:57	11.36
6/22/2022 13:34	-0.08	6/23/2022 12:24	2.77	6/23/2022 12:47	7.41	6/23/2022 14:10	-0.31	6/22/2022 12:58	11.43
6/22/2022 13:35	-0.08	6/23/2022 12:25	2.77	6/23/2022 12:48	7.40	6/23/2022 14:11	-0.34	6/22/2022 12:59	11.40
6/22/2022 13:36	-0.08	6/23/2022 12:26	2.77	6/23/2022 12:49	7.43	6/23/2022 14:12	-0.32	6/22/2022 13:00	11.38
6/22/2022 13:37	-0.08	6/23/2022 12:27	2.77	6/23/2022 12:50	7.38	6/23/2022 14:13	-0.32	6/22/2022 13:01	11.41
6/22/2022 13:38	-0.08	6/23/2022 12:28	2.77	6/23/2022 12:51	7.38	6/23/2022 14:14	-0.33	6/22/2022 13:02	11.37
6/22/2022 13:39	-0.06	6/23/2022 12:29	2.77	6/23/2022 12:52	7.36	6/23/2022 14:15	-0.35	6/22/2022 13:03	11.37
6/22/2022 13:40	-0.09	6/23/2022 12:30	2.77	6/23/2022 12:53	7.38	6/23/2022 14:16	-0.34	6/22/2022 13:04	11.36
6/22/2022 13:41	-0.08	6/23/2022 12:31	2.77	6/23/2022 12:54	7.46	6/23/2022 14:17	-0.32	6/22/2022 13:05	11.40
6/22/2022 13:42	-0.08	6/23/2022 12:32	2.77	6/23/2022 12:55	7.44	6/23/2022 14:18	-0.35	6/22/2022 13:06	11.46
6/22/2022 13:43	-0.06	6/23/2022 12:33	2.78	6/23/2022 12:56	7.42	6/23/2022 14:19	-0.33	6/22/2022 13:07	11.40
6/22/2022 13:44	-0.08	6/23/2022 12:34	2.77	6/23/2022 12:57	7.37	6/23/2022 14:20	-0.35	6/22/2022 13:08	11.36
6/22/2022 13:45	-0.08	6/23/2022 12:35	2.77	6/23/2022 12:58	7.41	6/23/2022 14:21	-0.34	6/22/2022 13:09	11.36
6/22/2022 13:46	-0.07	6/23/2022 12:36	2.77	6/23/2022 12:59	7.40	6/23/2022 14:22	-0.32	6/22/2022 13:10	11.39
6/22/2022 13:47	-0.08	6/23/2022 12:37	2.77	6/23/2022 13:00	7.43	6/23/2022 14:23	-0.36	6/22/2022 13:11	11.33
6/22/2022 13:48	-0.06	6/23/2022 12:38	2.77	6/23/2022 13:01	7.43	6/23/2022 14:24	-0.35	6/22/2022 13:12	11.42
6/22/2022 13:49	-0.07	6/23/2022 12:39	2.78	6/23/2022 13:02	7.39	6/23/2022 14:25	-0.34	6/22/2022 13:13	11.39
6/22/2022 13:50	-0.07	6/23/2022 12:40	2.77	6/23/2022 13:03	7.39	6/23/2022 14:26	-0.34	6/22/2022 13:14	11.39
6/22/2022 13:51	-0.08	6/23/2022 12:41	2.77	6/23/2022 13:04	7.39	6/23/2022 14:27	-0.35	6/22/2022 13:15	11.35
6/22/2022 13:52	-0.07	6/23/2022 12:42	2.77	6/23/2022 13:05	7.38	6/23/2022 14:28	-0.36	6/22/2022 13:16	11.37
6/22/2022 13:53	-0.08	6/23/2022 12:43	2.77	6/23/2022 13:06	7.41	6/23/2022 14:29	-0.30	6/22/2022 13:17	11.38
6/22/2022 13:54	-0.06	6/23/2022 12:44	2.77	6/23/2022 13:07	7.41	6/23/2022 14:30	-0.33	6/22/2022 13:18	11.34
6/22/2022 13:55	-0.08	6/23/2022 12:45	2.77	6/23/2022 13:08	7.38	6/23/2022 14:31	-0.33	6/22/2022 13:19	11.38
6/22/2022 13:56	-0.08	6/23/2022 12:46	2.77	6/23/2022 13:09	7.42	6/23/2022 14:32	-0.31	6/22/2022 13:20	11.40
6/22/2022 13:57	-0.08	6/23/2022 12:47	2.77	6/23/2022 13:10	7.46	6/23/2022 14:33	-0.35	6/22/2022 13:21	11.38
6/22/2022 13:58	-0.07	6/23/2022 12:48	2.78	6/23/2022 13:11	7.39	6/23/2022 14:34	-0.33	6/22/2022 13:22	11.36
6/22/2022 13:59	-0.08	6/23/2022 12:49	2.78	6/23/2022 13:12	7.42	6/23/2022 14:35	-0.35	6/22/2022 13:23	11.39
6/22/2022 14:00	-0.08	6/23/2022 12:50	2.77	6/23/2022 13:13	7.45	6/23/2022 14:36	-0.33	6/22/2022 13:24	11.39
6/22/2022 14:01	-0.08	6/23/2022 12:51	2.78	6/23/2022 13:14	7.46	6/23/2022 14:37	-0.39	6/22/2022 13:25	11.38
6/22/2022 14:02	-0.07	6/23/2022 12:52	2.77	6/23/2022 13:15	7.44	6/23/2022 14:38	-0.31	6/22/2022 13:26	11.38
6/22/2022 14:03	-0.08	6/23/2022 12:53	2.78	6/23/2022 13:16	7.42	6/23/2022 14:39	-0.31	6/22/2022 13:27	11.44
6/22/2022 14:04	-0.08	6/23/2022 12:54	2.78	6/23/2022 13:17	7.45	6/23/2022 14:40	-0.37	6/22/2022 13:28	11.43
6/22/2022 14:05	-0.07	6/23/2022 12:55	2.78	6/23/2022 13:18	7.41	6/23/2022 14:41	-0.35	6/22/2022 13:29	11.38
6/22/2022 14:06	-0.07	6/23/2022 12:56	2.78	6/23/2022 13:19	7.45	6/23/2022 14:42	-0.32	6/22/2022 13:30	11.36
6/22/2022 14:07	-0.07	6/23/2022 12:57	2.78	6/23/2022 13:20	7.43	6/23/2022 14:43	-0.37	6/22/2022 13:31	11.42
6/22/2022 14:08	-0.07	6/23/2022 12:58	2.78	6/23/2022 13:21	7.42	6/23/2022 14:44	-0.34	6/22/2022 13:32	11.37
6/22/2022 14:09	-0.09	6/23/2022 12:59	2.78	6/23/2022 13:22	7.42	6/23/2022 14:45	-0.32	6/22/2022 13:33	11.36
6/22/2022 14:10	-0.08	6/23/2022 13:00	2.78	6/23/2022 13:23	7.45	6/23/2022 14:46	-0.32	6/22/2022 13:34	11.41
6/22/2022 14:11	-0.08	6/23/2022 13:01	2.78	6/23/2022 13:24	7.43	6/23/2022 14:47	-0.31	6/22/2022 13:35	11.38
6/22/2022 14:12	-0.06	6/23/2022 13:02	2.78	6/23/2022 13:25	7.41	6/23/2022 14:48	-0.35	6/22/2022 13:36	11.40
6/22/2022 14:13	-0.07	6/23/2022 13:03	2.78	6/23/2022 13:26	7.45	6/23/2022 14:49	-0.34	6/22/2022 13:37	11.37
6/22/2022 14:14	-0.08	6/23/2022 13:04	2.78	6/23/2022 13:27	7.40	6/23/2022 14:50	-0.39	6/22/2022 13:38	11.37
6/22/2022 14:15	-0.08	6/23/2022 13:05	2.78	6/23/2022 13:28	7.40	6/23/2022 14:51	-0.33	6/22/2022 13:39	11.37
6/22/2022 14:16	-0.06	6/23/2022 13:06	2.78	6/23/2022 13:29	7.46	6/23/2022 14:52	-0.32	6/22/2022 13:40	11.37
6/22/2022 14:17	-0.06	6/23/2022 13:07	2.78	6/23/2022 13:30	7.47	6/23/2022 14:53	-0.32	6/22/2022 13:41	11.33
6/22/2022 14:18	-0.06	6/23/2022 13:08	2.78	6/23/2022 13:31	7.44	6/23/2022 14:54	-0.32	6/22/2022 13:42	11.40
6/22/2022 14:19	-0.08	6/23/2022 13:09	2.78	6/23/2022 13:32	7.49	6/23/2022 14:55	-0.34	6/22/2022 13:43	11.38
6/22/2022 14:20	-0.08	6/23/2022 13:10	2.78	6/23/2022 13:33	7.39	6/23/2022 14:56	-0.35	6/22/2022 13:44	11.40
6/22/2022 14:21	-0.08	6/23/2022 13:11	2.78	6/23/2022 13:34	7.43	6/23/2022 14:57	-0.35	6/22/2022 13:45	11.41
6/22/2022 14:22	-0.08	6/23/2022 13:12	2.78	6/23/2022 13:35	7.46	6/23/2022 14:58	-0.36	6/22/2022 13:46	11.40
6/22/2022 14:23	-0.08	6/23/2022 13:13	2.79	6/23/2022 13:36	7.43	6/23/2022 14:59	-0.35	6/22/2022 13:47	11.43
6/22/2022 14:24	-0.07	6/23/2022 13:14	2.78	6/23/2022 13:37	7.45	6/23/2022 15:00	-0.33	6/22/2022 13:48	11.38

6/22/2022 14:25	-0.06	6/23/2022 13:15	2.79	6/23/2022 13:38	7.44	6/23/2022 15:01	-0.35	6/22/2022 13:49	11.42
6/22/2022 14:26	-0.09	6/23/2022 13:16	2.78	6/23/2022 13:39	7.40	6/23/2022 15:02	-0.35	6/22/2022 13:50	11.40
6/22/2022 14:27	-0.08	6/23/2022 13:17	2.79	6/23/2022 13:40	7.42	6/23/2022 15:03	-0.34	6/22/2022 13:51	11.37
6/22/2022 14:28	-0.08	6/23/2022 13:18	2.79	6/23/2022 13:41	7.43	6/23/2022 15:04	-0.28	6/22/2022 13:52	11.40
6/22/2022 14:29	-0.08	6/23/2022 13:19	2.78	6/23/2022 13:42	7.41	6/23/2022 15:05	-0.30	6/22/2022 13:53	11.39
6/22/2022 14:30	-0.08	6/23/2022 13:20	2.79	6/23/2022 13:43	7.42	6/23/2022 15:06	-0.38	6/22/2022 13:54	11.36
6/22/2022 14:31	-0.06	6/23/2022 13:21	2.79	6/23/2022 13:44	7.44	6/23/2022 15:07	-0.34	6/22/2022 13:55	11.39
6/22/2022 14:32	-0.06	6/23/2022 13:22	2.78	6/23/2022 13:45	7.43	6/23/2022 15:08	-0.35	6/22/2022 13:56	11.37
6/22/2022 14:33	-0.07	6/23/2022 13:23	2.79	6/23/2022 13:46	7.42	6/23/2022 15:09	-0.33	6/22/2022 13:57	11.40
6/22/2022 14:34	-0.07	6/23/2022 13:24	2.79	6/23/2022 13:47	7.40	6/23/2022 15:10	-0.35	6/22/2022 13:58	11.42
6/22/2022 14:35	-0.08	6/23/2022 13:25	2.79	6/23/2022 13:48	7.45	6/23/2022 15:11	-0.33	6/22/2022 13:59	11.38
6/22/2022 14:36	-0.06	6/23/2022 13:26	2.79	6/23/2022 13:49	7.43	6/23/2022 15:12	-0.34	6/22/2022 14:00	11.32
6/22/2022 14:37	-0.08	6/23/2022 13:27	2.79	6/23/2022 13:50	7.39	6/23/2022 15:13	-0.33	6/22/2022 14:01	11.40
6/22/2022 14:38	-0.08	6/23/2022 13:28	2.79	6/23/2022 13:51	7.38	6/23/2022 15:14	-0.38	6/22/2022 14:02	11.31
6/22/2022 14:39	-0.08	6/23/2022 13:29	2.79	6/23/2022 13:52	7.42	6/23/2022 15:15	-0.35	6/22/2022 14:03	11.38
6/22/2022 14:40	-0.08	6/23/2022 13:30	2.79	6/23/2022 13:53	7.46	6/23/2022 15:16	-0.35	6/22/2022 14:04	11.39
6/22/2022 14:41	-0.06	6/23/2022 13:31	2.79	6/23/2022 13:54	7.41	6/23/2022 15:17	-0.32	6/22/2022 14:05	11.43
6/22/2022 14:42	-0.08	6/23/2022 13:32	2.79	6/23/2022 13:55	7.45	6/23/2022 15:18	-0.38	6/22/2022 14:06	11.36
6/22/2022 14:43	-0.06	6/23/2022 13:33	2.79	6/23/2022 13:56	7.40	6/23/2022 15:19	-0.34	6/22/2022 14:07	11.36
6/22/2022 14:44	-0.08	6/23/2022 13:34	2.79	6/23/2022 13:57	7.44	6/23/2022 15:20	-0.37	6/22/2022 14:08	11.40
6/22/2022 14:45	-0.08	6/23/2022 13:35	2.79	6/23/2022 13:58	7.46	6/23/2022 15:21	-0.35	6/22/2022 14:09	11.39
6/22/2022 14:46	-0.08	6/23/2022 13:36	2.79	6/23/2022 13:59	7.46	6/23/2022 15:22	-0.35	6/22/2022 14:10	11.36
6/22/2022 14:47	-0.06	6/23/2022 13:37	2.79	6/23/2022 14:00	7.45	6/23/2022 15:23	-0.35	6/22/2022 14:11	11.42
6/22/2022 14:48	-0.08	6/23/2022 13:38	2.79	6/23/2022 14:01	7.43	6/23/2022 15:24	-0.33	6/22/2022 14:12	11.40
6/22/2022 14:49	-0.06	6/23/2022 13:39	2.79	6/23/2022 14:02	7.44	6/23/2022 15:25	-0.34	6/22/2022 14:13	11.37
6/22/2022 14:50	-0.08	6/23/2022 13:40	2.79	6/23/2022 14:03	7.41	6/23/2022 15:26	-0.32	6/22/2022 14:14	11.43
6/22/2022 14:51	-0.07	6/23/2022 13:41	2.79	6/23/2022 14:04	7.41	6/23/2022 15:27	-0.35	6/22/2022 14:15	11.39
6/22/2022 14:52	-0.07	6/23/2022 13:42	2.79	6/23/2022 14:05	7.44	6/23/2022 15:28	-0.32	6/22/2022 14:16	11.38
6/22/2022 14:53	-0.06	6/23/2022 13:43	2.79	6/23/2022 14:06	7.41	6/23/2022 15:29	-0.33	6/22/2022 14:17	11.40
6/22/2022 14:54	-0.08	6/23/2022 13:44	2.79	6/23/2022 14:07	7.44	6/23/2022 15:30	-0.36	6/22/2022 14:18	11.34
6/22/2022 14:55	-0.08	6/23/2022 13:45	2.79	6/23/2022 14:08	7.42	6/23/2022 15:31	-0.37	6/22/2022 14:19	11.41
6/22/2022 14:56	-0.07	6/23/2022 13:46	2.79	6/23/2022 14:09	7.43	6/23/2022 15:32	-0.35	6/22/2022 14:20	11.39
6/22/2022 14:57	-0.08	6/23/2022 13:47	2.79	6/23/2022 14:10	7.46	6/23/2022 15:33	-0.32	6/22/2022 14:21	11.43
6/22/2022 14:58	-0.07	6/23/2022 13:48	2.79	6/23/2022 14:11	7.40	6/23/2022 15:34	-0.33	6/22/2022 14:22	11.40
6/22/2022 14:59	-0.08	6/23/2022 13:49	2.79	6/23/2022 14:12	7.42	6/23/2022 15:35	-0.33	6/22/2022 14:23	11.41
6/22/2022 15:00	-0.06	6/23/2022 13:50	2.79	6/23/2022 14:13	7.41	6/23/2022 15:36	-0.34	6/22/2022 14:24	11.40
6/22/2022 15:01	-0.08	6/23/2022 13:51	2.79	6/23/2022 14:14	7.45	6/23/2022 15:37	-0.35	6/22/2022 14:25	11.39
6/22/2022 15:02	-0.07	6/23/2022 13:52	2.79	6/23/2022 14:15	7.43	6/23/2022 15:38	-0.33	6/22/2022 14:26	11.38
6/22/2022 15:03	-0.07	6/23/2022 13:53	2.79	6/23/2022 14:16	7.44	6/23/2022 15:39	-0.37	6/22/2022 14:27	11.37
6/22/2022 15:04	-0.08	6/23/2022 13:54	2.79	6/23/2022 14:17	7.47	6/23/2022 15:40	-0.32	6/22/2022 14:28	11.40
6/22/2022 15:05	-0.06	6/23/2022 13:55	2.79	6/23/2022 14:18	7.39	6/23/2022 15:41	-0.35	6/22/2022 14:29	11.42
6/22/2022 15:06	-0.07	6/23/2022 13:56	2.79	6/23/2022 14:19	7.42	6/23/2022 15:42	-0.37	6/22/2022 14:30	11.37
6/22/2022 15:07	-0.08	6/23/2022 13:57	2.79	6/23/2022 14:20	7.43	6/23/2022 15:43	-0.36	6/22/2022 14:31	11.42
6/22/2022 15:08	-0.07	6/23/2022 13:58	2.79	6/23/2022 14:21	7.45	6/23/2022 15:44	-0.34	6/22/2022 14:32	11.38
6/22/2022 15:09	-0.07	6/23/2022 13:59	2.79	6/23/2022 14:22	7.40	6/23/2022 15:45	-0.35	6/22/2022 14:33	11.43
6/22/2022 15:10	-0.08	6/23/2022 14:00	2.79	6/23/2022 14:23	7.47	6/23/2022 15:46	-0.35	6/22/2022 14:34	11.40
6/22/2022 15:11	-0.07	6/23/2022 14:01	2.79	6/23/2022 14:24	7.48	6/23/2022 15:47	-0.33	6/22/2022 14:35	11.37
6/22/2022 15:12	-0.08	6/23/2022 14:02	2.79	6/23/2022 14:25	7.44	6/23/2022 15:48	-0.33	6/22/2022 14:36	11.40
6/22/2022 15:13	-0.07	6/23/2022 14:03	2.80	6/23/2022 14:26	7.46	6/23/2022 15:49	-0.34	6/22/2022 14:37	11.37
6/22/2022 15:14	-0.09	6/23/2022 14:04	2.80	6/23/2022 14:27	7.43	6/23/2022 15:50	-0.31	6/22/2022 14:38	11.37
6/22/2022 15:15	-0.07	6/23/2022 14:05	2.79	6/23/2022 14:28	7.47	6/23/2022 15:51	-0.30	6/22/2022 14:39	11.37
6/22/2022 15:16	-0.06	6/23/2022 14:06	2.79	6/23/2022 14:29	7.44	6/23/2022 15:52	-0.31	6/22/2022 14:40	11.42
6/22/2022 15:17	-0.08	6/23/2022 14:07	2.79	6/23/2022 14:30	7.42	6/23/2022 15:53	-0.33	6/22/2022 14:41	11.41
6/22/2022 15:18	-0.06	6/23/2022 14:08	2.79	6/23/2022 14:31	7.46	6/23/2022 15:54	-0.34	6/22/2022 14:42	11.38
6/22/2022 15:19	-0.07	6/23/2022 14:09	2.79	6/23/2022 14:32	7.42	6/23/2022 15:55	-0.31	6/22/2022 14:43	11.38
6/22/2022 15:20	-0.07	6/23/2022 14:10	2.80	6/23/2022 14:33	7.43	6/23/2022 15:56	-0.34	6/22/2022 14:44	11.40
6/22/2022 15:21	-0.07	6/23/2022 14:11	2.79	6/23/2022 14:34	7.45	6/23/2022 15:57	-0.33	6/22/2022 14:45	11.42
6/22/2022 15:22	-0.07	6/23/2022 14:12	2.80	6/23/2022 14:35	7.43	6/23/2022 15:58	-0.32	6/22/2022 14:46	11.40
6/22/2022 15:23	-0.09	6/23/2022 14:13	2.80	6/23/2022 14:36	7.48	6/23/2022 15:59	-0.33	6/22/2022 14:47	11.37
6/22/2022 15:24	-0.06	6/23/2022 14:14	2.79	6/23/2022 14:37	7.46	6/23/2022 16:00	-0.35	6/22/2022 14:48	11.36
6/22/2022 15:25	-0.08	6/23/2022 14:15	2.79	6/23/2022 14:38	7.46	6/23/2022 16:01	-0.34	6/22/2022 14:49	11.37
6/22/2022 15:26	-0.08	6/23/2022 14:16	2.80	6/23/2022 14:39	7.44	6/23/2022 16:02	-0.32	6/22/2022 14:50	11.33
6/22/2022 15:27	-0.06	6/23/2022 14:17	2.80	6/23/2022 14:40	7.42	6/23/2022 16:03	-0.32	6/22/2022 14:51	11.36
6/22/2022 15:28	-0.07	6/23/2022 14:18	2.80	6/23/2022 14:41	7.43	6/23/2022 16:04	-0.33	6/22/2022 14:52	11.39
6/22/2022 15:29	-0.07	6/23/2022 14:19	2.80	6/23/2022 14:42	7.46	6/23/2022 16:05	-0.34	6/22/2022 14:53	11.37
6/22/2022 15:30	-0.08	6/23/2022 14:20	2.80	6/23/2022 14:43	7.42	6/23/2022 16:06	-0.36	6/22/2022 14:54	11.39
6/22/2022 15:31	-0.09	6/23/2022 14:21	2.80	6/23/2022 14:44	7.46	6/23/2022 16:07	-0.37	6/22/2022 14:55	11.38
6/22/2022 15:32	-0.07	6/23/2022 14:22	2.80	6/23/2022 14:45	7.41	6/23/2022 16:08	-0.32	6/22/2022 14:56	11.38
6/22/2022 15:33	-0.08	6/23/2022 14:23	2.80	6/23/2022 14:46	7.49	6/23/2022 16:09	-0.34	6/22/2022 14:57	11.40
6/22/2022 15:34	-0.08	6/23/2022 14:24	2.80	6/23/2022 14:47	7.43	6/23/2022 16:10	-0.30	6/22/2022 14:58	11.36
6/22/2022 15:35	-0.07	6/23/2022 14:25	2.80	6/23/2022 14:48	7.46	6/23/2022 16:11	-0.31	6/22/2022 14:59	11.39
6/22/2022 15:36	-0.08	6/23/2022 14:26	2.80	6/23/2022 14:49	7.41	6/23/2022 16:12	-0.36	6/22/2022 15:00	11.35
6/22/2022 15:37	-0.07	6/23/2022 14:27	2.80	6/23/2022 14:50	7.41	6/23/2022 16:13	-0.34	6/22/2022 15:01	11.44
6/22/2022 15:38	-0.07	6/23/2022 14:28	2.80	6/23/2022 14:51	7.43	6/23/2022 16:14	-0.35	6/22/2022 15:02	11.40
6/22/2022 15:39	-0.07	6/23/2022 14:29	2.80	6/23/2022 14:52	7.46	6/23/2022 16:15	-0.34	6/22/2022 15:03	11.42
6/22/2022 15:40	-0.08	6/23/2022 14:30	2.80	6/23/2022 14:53	7.42	6/23/2022 16:16	-0.34	6/22/2022 15:04	11.40
6/22/2022 15:41	-0.08	6/23/2022 14:31	2.80	6/23/2022 14:54	7.47	6/23/2022 16:17	-0.36	6/22/2022 15:05	11.34
6/22/2022 15:42	-0.08	6/23/2022 14:32	2.80	6/23/2022 14:55	7.44	6/23/2022 16:18	-0.36	6/22/2022 15:06	11.40
6/22/2022 15:43	-0.07	6/23/2022 14:33	2.80	6/23/2022 14:56	7.45	6/23/2022 16:19	-0.33	6/22/2022 15:07	11.35
6/22/2022 15:44	-0.06	6/23/2022 14:34	2.80	6/23/2022 14:57	7.42	6/23/2022 16:20	-0.37	6/22/2022 15:08	11.37
6/22/2022 15:45	-0.07	6/23/2022 14:35	2.80	6/23/2022 14:58	7.45	6/23/2022 16:21	-0.32	6/22/2022 15:09	11.35
6/22/2022 15:46	-0.08	6/23/2022 14:36	2.80	6/23/2022 14:59	7.45	6/23/2022 16:22	-0.37	6/22/2022 15:10	11.38
6/22/2022 15:47	-0.08	6/23/2022 14:37	2.80	6/23/2022 15:00	7.46	6/23/2022 16:23	-0.34	6/22/2022 15:11	11.37
6/22/2022 15:48	-0.07	6/23/2022 14:38	2.80	6/23/2022 15:01	7.44	6/23/2022 16:24	-0.36	6/22/2022 15:12	11.37
6/22/2022 15:49	-0.07	6/23/2022 14:39	2.80	6/23/2022 15:02	7.50	6/23/2022 16:25	-0.34	6/22/2022 15:13	11.40
6/22/2022 15:50	-0.08	6/23/2022 14:40	2.80	6/23/2022 15:03	7.45	6/23/2022 16:26	-0.35	6/22/2022 15:14	11.41
6/22/2022 15:51	-0.06	6/23/2022 14:41	2.80	6/23/2022 15:04	7.41	6/23/2022 16:27	-0.33	6/22/2022 15:15	11.39
6/22/2022 15:52	-0.08	6/23/2022 14:42	2.80	6/23/2022 15:05	7.42	6/23/2022 16:28	-0.34	6/22/2022 15:16	11.34

6/22/2022 15:53	-0.09	6/23/2022 14:43	2.80	6/23/2022 15:06	7.45	6/23/2022 16:29	-0.33	6/22/2022 15:17	11.35
6/22/2022 15:54	-0.07	6/23/2022 14:44	2.80	6/23/2022 15:07	7.43	6/23/2022 16:30	-0.32	6/22/2022 15:18	11.38
6/22/2022 15:55	-0.07	6/23/2022 14:45	2.80	6/23/2022 15:08	7.46	6/23/2022 16:31	-0.37	6/22/2022 15:19	11.38
6/22/2022 15:56	-0.06	6/23/2022 14:46	2.80	6/23/2022 15:09	7.44	6/23/2022 16:32	-0.37	6/22/2022 15:20	11.37
6/22/2022 15:57	-0.09	6/23/2022 14:47	2.80	6/23/2022 15:10	7.40	6/23/2022 16:33	-0.37	6/22/2022 15:21	11.39
6/22/2022 15:58	-0.07	6/23/2022 14:48	2.80	6/23/2022 15:11	7.40	6/23/2022 16:34	-0.37	6/22/2022 15:22	11.38
6/22/2022 15:59	-0.07	6/23/2022 14:49	2.80	6/23/2022 15:12	7.44	6/23/2022 16:35	-0.38	6/22/2022 15:23	11.38
6/22/2022 16:00	-0.07	6/23/2022 14:50	2.80	6/23/2022 15:13	7.47	6/23/2022 16:36	-0.32	6/22/2022 15:24	11.35
6/22/2022 16:01	-0.08	6/23/2022 14:51	2.80	6/23/2022 15:14	7.47	6/23/2022 16:37	-0.33	6/22/2022 15:25	11.37
6/22/2022 16:02	-0.07	6/23/2022 14:52	2.80	6/23/2022 15:15	7.46	6/23/2022 16:38	-0.32	6/22/2022 15:26	11.37
6/22/2022 16:03	-0.07	6/23/2022 14:53	2.80	6/23/2022 15:16	7.41	6/23/2022 16:39	-0.33	6/22/2022 15:27	11.38
6/22/2022 16:04	-0.08	6/23/2022 14:54	2.80	6/23/2022 15:17	7.43	6/23/2022 16:40	-0.34	6/22/2022 15:28	11.38
6/22/2022 16:05	-0.08	6/23/2022 14:55	2.80	6/23/2022 15:18	7.47	6/23/2022 16:41	-0.34	6/22/2022 15:29	11.35
6/22/2022 16:06	-0.07	6/23/2022 14:56	2.81	6/23/2022 15:19	7.45	6/23/2022 16:42	-0.31	6/22/2022 15:30	11.40
6/22/2022 16:07	-0.08	6/23/2022 14:57	2.80	6/23/2022 15:20	7.42	6/23/2022 16:43	-0.35	6/22/2022 15:31	11.38
6/22/2022 16:08	-0.08	6/23/2022 14:58	2.80	6/23/2022 15:21	7.41	6/23/2022 16:44	-0.33	6/22/2022 15:32	11.40
6/22/2022 16:09	-0.08	6/23/2022 14:59	2.80	6/23/2022 15:22	7.45	6/23/2022 16:45	-0.35	6/22/2022 15:33	11.37
6/22/2022 16:10	-0.07	6/23/2022 15:00	2.80	6/23/2022 15:23	7.45	6/23/2022 16:46	-0.32	6/22/2022 15:34	11.41
6/22/2022 16:11	-0.07	6/23/2022 15:01	2.80	6/23/2022 15:24	7.42	6/23/2022 16:47	-0.33	6/22/2022 15:35	11.36
6/22/2022 16:12	-0.07	6/23/2022 15:02	2.80	6/23/2022 15:25	7.44	6/23/2022 16:48	-0.31	6/22/2022 15:36	11.36
6/22/2022 16:13	-0.09	6/23/2022 15:03	2.80	6/23/2022 15:26	7.42	6/23/2022 16:49	-0.32	6/22/2022 15:37	11.41
6/22/2022 16:14	-0.08	6/23/2022 15:04	2.80	6/23/2022 15:27	7.45	6/23/2022 16:50	-0.34	6/22/2022 15:38	11.37
6/22/2022 16:15	-0.08	6/23/2022 15:05	2.80	6/23/2022 15:28	7.38	6/23/2022 16:51	-0.33	6/22/2022 15:39	11.44
6/22/2022 16:16	-0.07	6/23/2022 15:06	2.80	6/23/2022 15:29	7.43	6/23/2022 16:52	-0.32	6/22/2022 15:40	11.40
6/22/2022 16:17	-0.08	6/23/2022 15:07	2.80	6/23/2022 15:30	7.41	6/23/2022 16:53	-0.33	6/22/2022 15:41	11.35
6/22/2022 16:18	-0.07	6/23/2022 15:08	2.80	6/23/2022 15:31	7.41	6/23/2022 16:54	-0.38	6/22/2022 15:42	11.39
6/22/2022 16:19	-0.09	6/23/2022 15:09	2.80	6/23/2022 15:32	7.39	6/23/2022 16:55	-0.34	6/22/2022 15:43	11.45
6/22/2022 16:20	-0.08	6/23/2022 15:10	2.80	6/23/2022 15:33	7.43	6/23/2022 16:56	-0.33	6/22/2022 15:44	11.42
6/22/2022 16:21	-0.08	6/23/2022 15:11	2.80	6/23/2022 15:34	7.44	6/23/2022 16:57	-0.37	6/22/2022 15:45	11.38
6/22/2022 16:22	-0.07	6/23/2022 15:12	2.80	6/23/2022 15:35	7.43	6/23/2022 16:58	-0.32	6/22/2022 15:46	11.37
6/22/2022 16:23	-0.09	6/23/2022 15:13	2.80	6/23/2022 15:36	7.44	6/23/2022 16:59	-0.36	6/22/2022 15:47	11.40
6/22/2022 16:24	-0.07	6/23/2022 15:14	2.80	6/23/2022 15:37	7.41	6/23/2022 17:00	-0.34	6/22/2022 15:48	11.41
6/22/2022 16:25	-0.09	6/23/2022 15:15	2.80	6/23/2022 15:38	7.40	6/23/2022 17:01	-0.34	6/22/2022 15:49	11.41
6/22/2022 16:26	-0.07	6/23/2022 15:16	2.80	6/23/2022 15:39	7.41	6/23/2022 17:02	-0.32	6/22/2022 15:50	11.39
6/22/2022 16:27	-0.07	6/23/2022 15:17	2.80	6/23/2022 15:40	7.42	6/23/2022 17:03	-0.34	6/22/2022 15:51	11.39
6/22/2022 16:28	-0.09	6/23/2022 15:18	2.80	6/23/2022 15:41	7.41	6/23/2022 17:04	-0.34	6/22/2022 15:52	11.39
6/22/2022 16:29	-0.07	6/23/2022 15:19	2.80	6/23/2022 15:42	7.45	6/23/2022 17:05	-0.32	6/22/2022 15:53	11.43
6/22/2022 16:30	-0.07	6/23/2022 15:20	2.80	6/23/2022 15:43	7.43	6/23/2022 17:06	-0.35	6/22/2022 15:54	11.38
6/22/2022 16:31	-0.07	6/23/2022 15:21	2.80	6/23/2022 15:44	7.43	6/23/2022 17:07	-0.36	6/22/2022 15:55	11.47
6/22/2022 16:32	-0.08	6/23/2022 15:22	2.80	6/23/2022 15:45	7.40	6/23/2022 17:08	-0.31	6/22/2022 15:56	11.41
6/22/2022 16:33	-0.07	6/23/2022 15:23	2.80	6/23/2022 15:46	7.42	6/23/2022 17:09	-0.32	6/22/2022 15:57	11.37
6/22/2022 16:34	-0.07	6/23/2022 15:24	2.80	6/23/2022 15:47	7.42	6/23/2022 17:10	-0.36	6/22/2022 15:58	11.37
6/22/2022 16:35	-0.07	6/23/2022 15:25	2.80	6/23/2022 15:48	7.44	6/23/2022 17:11	-0.34	6/22/2022 15:59	11.39
6/22/2022 16:36	-0.09	6/23/2022 15:26	2.80	6/23/2022 15:49	7.44	6/23/2022 17:12	-0.34	6/22/2022 16:00	11.35
6/22/2022 16:37	-0.07	6/23/2022 15:27	2.80	6/23/2022 15:50	7.46	6/23/2022 17:13	-0.35	6/22/2022 16:01	11.43
6/22/2022 16:38	-0.08	6/23/2022 15:28	2.80	6/23/2022 15:51	7.43	6/23/2022 17:14	-0.33	6/22/2022 16:02	11.34
6/22/2022 16:39	-0.07	6/23/2022 15:29	2.80	6/23/2022 15:52	7.47	6/23/2022 17:15	-0.34	6/22/2022 16:03	11.33
6/22/2022 16:40	-0.07	6/23/2022 15:30	2.80	6/23/2022 15:53	7.44	6/23/2022 17:16	-0.30	6/22/2022 16:04	11.38
6/22/2022 16:41	-0.06	6/23/2022 15:31	2.80	6/23/2022 15:54	7.42	6/23/2022 17:17	-0.33	6/22/2022 16:05	11.34
6/22/2022 16:42	-0.08	6/23/2022 15:32	2.80	6/23/2022 15:55	7.40	6/23/2022 17:18	-0.36	6/22/2022 16:06	11.38
6/22/2022 16:43	-0.09	6/23/2022 15:33	2.80	6/23/2022 15:56	7.49	6/23/2022 17:19	-0.35	6/22/2022 16:07	11.38
6/22/2022 16:44	-0.08	6/23/2022 15:34	2.80	6/23/2022 15:57	7.43	6/23/2022 17:20	-0.32	6/22/2022 16:08	11.40
6/22/2022 16:45	-0.06	6/23/2022 15:35	2.80	6/23/2022 15:58	7.41	6/23/2022 17:21	-0.34	6/22/2022 16:09	11.40
6/22/2022 16:46	-0.08	6/23/2022 15:36	2.80	6/23/2022 15:59	7.40	6/23/2022 17:22	-0.30	6/22/2022 16:10	11.39
6/22/2022 16:47	-0.07	6/23/2022 15:37	2.80	6/23/2022 16:00	7.44	6/23/2022 17:23	-0.32	6/22/2022 16:11	11.41
6/22/2022 16:48	-0.08	6/23/2022 15:38	2.80	6/23/2022 16:01	7.44	6/23/2022 17:24	-0.32	6/22/2022 16:12	11.35
6/22/2022 16:49	-0.08	6/23/2022 15:39	2.80	6/23/2022 16:02	7.43	6/23/2022 17:25	-0.32	6/22/2022 16:13	11.38
6/22/2022 16:50	-0.08	6/23/2022 15:40	2.80	6/23/2022 16:03	7.43	6/23/2022 17:26	-0.34	6/22/2022 16:14	11.37
6/22/2022 16:51	-0.08	6/23/2022 15:41	2.80	6/23/2022 16:04	7.48	6/23/2022 17:27	-0.33	6/22/2022 16:15	11.37
6/22/2022 16:52	-0.09	6/23/2022 15:42	2.80	6/23/2022 16:05	7.47	6/23/2022 17:28	-0.32	6/22/2022 16:16	11.45
6/22/2022 16:53	-0.07	6/23/2022 15:43	2.80	6/23/2022 16:06	7.43	6/23/2022 17:29	-0.35	6/22/2022 16:17	11.37
6/22/2022 16:54	-0.07	6/23/2022 15:44	2.80	6/23/2022 16:07	7.47	6/23/2022 17:30	-0.33	6/22/2022 16:18	11.45
6/22/2022 16:55	-0.07	6/23/2022 15:45	2.80	6/23/2022 16:08	7.45	6/23/2022 17:31	-0.31	6/22/2022 16:19	11.38
6/22/2022 16:56	-0.07	6/23/2022 15:46	2.80	6/23/2022 16:09	7.45	6/23/2022 17:32	-0.31	6/22/2022 16:20	11.39
6/22/2022 16:57	-0.07	6/23/2022 15:47	2.80	6/23/2022 16:10	7.48	6/23/2022 17:33	-0.33	6/22/2022 16:21	11.34
6/22/2022 16:58	-0.08	6/23/2022 15:48	2.80	6/23/2022 16:11	7.43	6/23/2022 17:34	-0.35	6/22/2022 16:22	11.40
6/22/2022 16:59	-0.07	6/23/2022 15:49	2.80	6/23/2022 16:12	7.43	6/23/2022 17:35	-0.32	6/22/2022 16:23	11.41
6/22/2022 17:00	-0.06	6/23/2022 15:50	2.80	6/23/2022 16:13	7.46	6/23/2022 17:36	-0.32	6/22/2022 16:24	11.34
6/22/2022 17:01	-0.08	6/23/2022 15:51	2.80	6/23/2022 16:14	7.48	6/23/2022 17:37	-0.33	6/22/2022 16:25	11.43
6/22/2022 17:02	-0.08	6/23/2022 15:52	2.80	6/23/2022 16:15	7.45	6/23/2022 17:38	-0.37	6/22/2022 16:26	11.44
6/22/2022 17:03	-0.06	6/23/2022 15:53	2.80	6/23/2022 16:16	7.47	6/23/2022 17:39	-0.32	6/22/2022 16:27	11.36
6/22/2022 17:04	-0.08	6/23/2022 15:54	2.80	6/23/2022 16:17	7.47	6/23/2022 17:40	-0.37	6/22/2022 16:28	11.40
6/22/2022 17:05	-0.08	6/23/2022 15:55	2.80	6/23/2022 16:18	7.46	6/23/2022 17:41	-0.34	6/22/2022 16:29	11.37
6/22/2022 17:06	-0.08	6/23/2022 15:56	2.80	6/23/2022 16:19	7.47	6/23/2022 17:42	-0.36	6/22/2022 16:30	11.41
6/22/2022 17:07	-0.06	6/23/2022 15:57	2.80	6/23/2022 16:20	7.43	6/23/2022 17:43	-0.35	6/22/2022 16:31	11.40
6/22/2022 17:08	-0.08	6/23/2022 15:58	2.80	6/23/2022 16:21	7.47	6/23/2022 17:44	-0.35	6/22/2022 16:32	11.35
6/22/2022 17:09	-0.08	6/23/2022 15:59	2.81	6/23/2022 16:22	7.46	6/23/2022 17:45	-0.36	6/22/2022 16:33	11.42
6/22/2022 17:10	-0.08	6/23/2022 16:00	2.80	6/23/2022 16:23	7.45	6/23/2022 17:46	-0.34	6/22/2022 16:34	11.40
6/22/2022 17:11	-0.08	6/23/2022 16:01	2.80	6/23/2022 16:24	7.42	6/23/2022 17:47	-0.33	6/22/2022 16:35	11.44
6/22/2022 17:12	-0.06	6/23/2022 16:02	2.80	6/23/2022 16:25	7.47	6/23/2022 17:48	-0.31	6/22/2022 16:36	11.43
6/22/2022 17:13	-0.07	6/23/2022 16:03	2.81	6/23/2022 16:26	7.47	6/23/2022 17:49	-0.35	6/22/2022 16:37	11.38
6/22/2022 17:14	-0.07	6/23/2022 16:04	2.80	6/23/2022 16:27	7.43	6/23/2022 17:50	-0.34	6/22/2022 16:38	11.42
6/22/2022 17:15	-0.08	6/23/2022 16:05	2.81	6/23/2022 16:28	7.45	6/23/2022 17:51	-0.32	6/22/2022 16:39	11.41
6/22/2022 17:16	-0.06	6/23/2022 16:06	2.81	6/23/2022 16:29	7.48	6/23/2022 17:52	-0.36	6/22/2022 16:40	11.41
6/22/2022 17:17	-0.06	6/23/2022 16:07	2.81	6/23/2022 16:30	7.45	6/23/2022 17:53	-0.33	6/22/2022 16:41	11.38
6/22/2022 17:18	-0.08	6/23/2022 16:08	2.81	6/23/2022 16:31	7.42	6/23/2022 17:54	-0.35	6/22/2022 16:42	11.40
6/22/2022 17:19	-0.07	6/23/2022 16:09	2.81	6/23/2022 16:32	7.46	6/23/2022 17:55	-0.31	6/22/2022 16:43	11.36
6/22/2022 17:20	-0.06	6/23/2022 16:10	2.81	6/23/2022 16:33	7.52	6/23/2022 17:56	-0.34	6/22/2022 16:44	11.42

6/22/2022 17:21	-0.06	6/23/2022 16:11	2.81	6/23/2022 16:34	7.41	6/23/2022 17:57	-0.31	6/22/2022 16:45	11.40
6/22/2022 17:22	-0.08	6/23/2022 16:12	2.81	6/23/2022 16:35	7.42	6/23/2022 17:58	-0.35	6/22/2022 16:46	11.36
6/22/2022 17:23	-0.08	6/23/2022 16:13	2.81	6/23/2022 16:36	7.50	6/23/2022 17:59	-0.32	6/22/2022 16:47	11.38
6/22/2022 17:24	-0.08	6/23/2022 16:14	2.81	6/23/2022 16:37	7.46	6/23/2022 18:00	-0.30	6/22/2022 16:48	11.37
6/22/2022 17:25	-0.06	6/23/2022 16:15	2.81	6/23/2022 16:38	7.49	6/23/2022 18:01	-0.34	6/22/2022 16:49	11.39
6/22/2022 17:26	-0.10	6/23/2022 16:16	2.81	6/23/2022 16:39	7.45	6/23/2022 18:02	-0.34	6/22/2022 16:50	11.37
6/22/2022 17:27	-0.07	6/23/2022 16:17	2.81	6/23/2022 16:40	7.48	6/23/2022 18:03	-0.33	6/22/2022 16:51	11.45
6/22/2022 17:28	-0.08	6/23/2022 16:18	2.81	6/23/2022 16:41	7.43	6/23/2022 18:04	-0.34	6/22/2022 16:52	11.41
6/22/2022 17:29	-0.06	6/23/2022 16:19	2.81	6/23/2022 16:42	7.46	6/23/2022 18:05	-0.31	6/22/2022 16:53	11.41
6/22/2022 17:30	-0.08	6/23/2022 16:20	2.81	6/23/2022 16:43	7.49	6/23/2022 18:06	-0.33	6/22/2022 16:54	11.41
6/22/2022 17:31	-0.06	6/23/2022 16:21	2.81	6/23/2022 16:44	7.48	6/23/2022 18:07	-0.35	6/22/2022 16:55	11.38
6/22/2022 17:32	-0.06	6/23/2022 16:22	2.81	6/23/2022 16:45	7.46	6/23/2022 18:08	-0.36	6/22/2022 16:56	11.41
6/22/2022 17:33	-0.08	6/23/2022 16:23	2.81	6/23/2022 16:46	7.48	6/23/2022 18:09	-0.35	6/22/2022 16:57	11.37
6/22/2022 17:34	-0.07	6/23/2022 16:24	2.81	6/23/2022 16:47	7.47	6/23/2022 18:10	-0.37	6/22/2022 16:58	11.38
6/22/2022 17:35	-0.08	6/23/2022 16:25	2.81	6/23/2022 16:48	7.47	6/23/2022 18:11	-0.34	6/22/2022 16:59	11.41
6/22/2022 17:36	-0.09	6/23/2022 16:26	2.82	6/23/2022 16:49	7.47	6/23/2022 18:12	-0.35	6/22/2022 17:00	11.42
6/22/2022 17:37	-0.08	6/23/2022 16:27	2.81	6/23/2022 16:50	7.47	6/23/2022 18:13	-0.31	6/22/2022 17:01	11.43
6/22/2022 17:38	-0.08	6/23/2022 16:28	2.81	6/23/2022 16:51	7.46	6/23/2022 18:14	-0.34	6/22/2022 17:02	11.42
6/22/2022 17:39	-0.06	6/23/2022 16:29	2.81	6/23/2022 16:52	7.49	6/23/2022 18:15	-0.33	6/22/2022 17:03	11.39
6/22/2022 17:40	-0.07	6/23/2022 16:30	2.82	6/23/2022 16:53	7.44	6/23/2022 18:16	-0.31	6/22/2022 17:04	11.40
6/22/2022 17:41	-0.08	6/23/2022 16:31	2.81	6/23/2022 16:54	7.45	6/23/2022 18:17	-0.31	6/22/2022 17:05	11.44
6/22/2022 17:42	-0.08	6/23/2022 16:32	2.81	6/23/2022 16:55	7.50	6/23/2022 18:18	-0.35	6/22/2022 17:06	11.42
6/22/2022 17:43	-0.08	6/23/2022 16:33	2.82	6/23/2022 16:56	7.48	6/23/2022 18:19	-0.34	6/22/2022 17:07	11.44
6/22/2022 17:44	-0.08	6/23/2022 16:34	2.82	6/23/2022 16:57	7.46	6/23/2022 18:20	-0.32	6/22/2022 17:08	11.38
6/22/2022 17:45	-0.07	6/23/2022 16:35	2.81	6/23/2022 16:58	7.49	6/23/2022 18:21	-0.37	6/22/2022 17:09	11.35
6/22/2022 17:46	-0.06	6/23/2022 16:36	2.82	6/23/2022 16:59	7.46	6/23/2022 18:22	-0.33	6/22/2022 17:10	11.41
6/22/2022 17:47	-0.07	6/23/2022 16:37	2.82	6/23/2022 17:00	7.49	6/23/2022 18:23	-0.36	6/22/2022 17:11	11.39
6/22/2022 17:48	-0.08	6/23/2022 16:38	2.81	6/23/2022 17:01	7.46	6/23/2022 18:24	-0.30	6/22/2022 17:12	11.38
6/22/2022 17:49	-0.07	6/23/2022 16:39	2.82	6/23/2022 17:02	7.42	6/23/2022 18:25	-0.31	6/22/2022 17:13	11.41
6/22/2022 17:50	-0.08	6/23/2022 16:40	2.81	6/23/2022 17:03	7.50	6/23/2022 18:26	-0.33	6/22/2022 17:14	11.42
6/22/2022 17:51	-0.06	6/23/2022 16:41	2.82	6/23/2022 17:04	7.49	6/23/2022 18:27	-0.30	6/22/2022 17:15	11.32
6/22/2022 17:52	-0.07	6/23/2022 16:42	2.82	6/23/2022 17:05	7.44	6/23/2022 18:28	-0.32	6/22/2022 17:16	11.40
6/22/2022 17:53	-0.08	6/23/2022 16:43	2.82	6/23/2022 17:06	7.47	6/23/2022 18:29	-0.32	6/22/2022 17:17	11.38
6/22/2022 17:54	-0.07	6/23/2022 16:44	2.82	6/23/2022 17:07	7.46	6/23/2022 18:30	-0.32	6/22/2022 17:18	11.43
6/22/2022 17:55	-0.08	6/23/2022 16:45	2.82	6/23/2022 17:08	7.46	6/23/2022 18:31	-0.32	6/22/2022 17:19	11.35
6/22/2022 17:56	-0.08	6/23/2022 16:46	2.82	6/23/2022 17:09	7.49	6/23/2022 18:32	-0.32	6/22/2022 17:20	11.43
6/22/2022 17:57	-0.07	6/23/2022 16:47	2.82	6/23/2022 17:10	7.48	6/23/2022 18:33	-0.35	6/22/2022 17:21	11.45
6/22/2022 17:58	-0.07	6/23/2022 16:48	2.82	6/23/2022 17:11	7.47	6/23/2022 18:34	-0.37	6/22/2022 17:22	11.45
6/22/2022 17:59	-0.07	6/23/2022 16:49	2.82	6/23/2022 17:12	7.41	6/23/2022 18:35	-0.35	6/22/2022 17:23	11.40
6/22/2022 18:00	-0.06	6/23/2022 16:50	2.82	6/23/2022 17:13	7.48	6/23/2022 18:36	-0.31	6/22/2022 17:24	11.37
6/22/2022 18:01	-0.06	6/23/2022 16:51	2.82	6/23/2022 17:14	7.52	6/23/2022 18:37	-0.35	6/22/2022 17:25	11.37
6/22/2022 18:02	-0.08	6/23/2022 16:52	2.82	6/23/2022 17:15	7.50	6/23/2022 18:38	-0.32	6/22/2022 17:26	11.37
6/22/2022 18:03	-0.08	6/23/2022 16:53	2.82	6/23/2022 17:16	7.48	6/23/2022 18:39	-0.35	6/22/2022 17:27	11.38
6/22/2022 18:04	-0.08	6/23/2022 16:54	2.82	6/23/2022 17:17	7.46	6/23/2022 18:40	-0.38	6/22/2022 17:28	11.36
6/22/2022 18:05	-0.08	6/23/2022 16:55	2.82	6/23/2022 17:18	7.46	6/23/2022 18:41	-0.34	6/22/2022 17:29	11.44
6/22/2022 18:06	-0.08	6/23/2022 16:56	2.82	6/23/2022 17:19	7.44	6/23/2022 18:42	-0.36	6/22/2022 17:30	11.38
6/22/2022 18:07	-0.08	6/23/2022 16:57	2.82	6/23/2022 17:20	7.54	6/23/2022 18:43	-0.29	6/22/2022 17:31	11.39
6/22/2022 18:08	-0.07	6/23/2022 16:58	2.82	6/23/2022 17:21	7.48	6/23/2022 18:44	-0.35	6/22/2022 17:32	11.38
6/22/2022 18:09	-0.08	6/23/2022 16:59	2.82	6/23/2022 17:22	7.45	6/23/2022 18:45	-0.35	6/22/2022 17:33	11.37
6/22/2022 18:10	-0.06	6/23/2022 17:00	2.82	6/23/2022 17:23	7.45	6/23/2022 18:46	-0.33	6/22/2022 17:34	11.40
6/22/2022 18:11	-0.08	6/23/2022 17:01	2.82	6/23/2022 17:24	7.45	6/23/2022 18:47	-0.34	6/22/2022 17:35	11.40
6/22/2022 18:12	-0.06	6/23/2022 17:02	2.82	6/23/2022 17:25	7.46	6/23/2022 18:48	-0.29	6/22/2022 17:36	11.38
6/22/2022 18:13	-0.08	6/23/2022 17:03	2.82	6/23/2022 17:26	7.41	6/23/2022 18:49	-0.31	6/22/2022 17:37	11.35
6/22/2022 18:14	-0.06	6/23/2022 17:04	2.82	6/23/2022 17:27	7.51	6/23/2022 18:50	-0.35	6/22/2022 17:38	11.39
6/22/2022 18:15	-0.08	6/23/2022 17:05	2.82	6/23/2022 17:28	7.47	6/23/2022 18:51	-0.37	6/22/2022 17:39	11.37
6/22/2022 18:16	-0.08	6/23/2022 17:06	2.83	6/23/2022 17:29	7.48	6/23/2022 18:52	-0.32	6/22/2022 17:40	11.37
6/22/2022 18:17	-0.09	6/23/2022 17:07	2.82	6/23/2022 17:30	7.47	6/23/2022 18:53	-0.37	6/22/2022 17:41	11.40
6/22/2022 18:18	-0.09	6/23/2022 17:08	2.83	6/23/2022 17:31	7.44	6/23/2022 18:54	-0.37	6/22/2022 17:42	11.34
6/22/2022 18:19	-0.06	6/23/2022 17:09	2.83	6/23/2022 17:32	7.43	6/23/2022 18:55	-0.29	6/22/2022 17:43	11.37
6/22/2022 18:20	-0.09	6/23/2022 17:10	2.83	6/23/2022 17:33	7.48	6/23/2022 18:56	-0.34	6/22/2022 17:44	11.40
6/22/2022 18:21	-0.08	6/23/2022 17:11	2.83	6/23/2022 17:34	7.49	6/23/2022 18:57	-0.33	6/22/2022 17:45	11.43
6/22/2022 18:22	-0.08	6/23/2022 17:12	2.82	6/23/2022 17:35	7.46	6/23/2022 18:58	-0.32	6/22/2022 17:46	11.34
6/22/2022 18:23	-0.07	6/23/2022 17:13	2.83	6/23/2022 17:36	7.46	6/23/2022 18:59	-0.35	6/22/2022 17:47	11.40
6/22/2022 18:24	-0.08	6/23/2022 17:14	2.83	6/23/2022 17:37	7.50	6/23/2022 19:00	-0.35	6/22/2022 17:48	11.40
6/22/2022 18:25	-0.09	6/23/2022 17:15	2.83	6/23/2022 17:38	7.48	6/23/2022 19:01	-0.34	6/22/2022 17:49	11.40
6/22/2022 18:26	-0.08	6/23/2022 17:16	2.83	6/23/2022 17:39	7.47	6/23/2022 19:02	-0.34	6/22/2022 17:50	11.41
6/22/2022 18:27	-0.08	6/23/2022 17:17	2.83	6/23/2022 17:40	7.46	6/23/2022 19:03	-0.38	6/22/2022 17:51	11.38
6/22/2022 18:28	-0.08	6/23/2022 17:18	2.83	6/23/2022 17:41	7.49	6/23/2022 19:04	-0.37	6/22/2022 17:52	11.43
6/22/2022 18:29	-0.08	6/23/2022 17:19	2.83	6/23/2022 17:42	7.46	6/23/2022 19:05	-0.31	6/22/2022 17:53	11.39
6/22/2022 18:30	-0.08	6/23/2022 17:20	2.83	6/23/2022 17:43	7.50	6/23/2022 19:06	-0.33	6/22/2022 17:54	11.37
6/22/2022 18:31	-0.08	6/23/2022 17:21	2.83	6/23/2022 17:44	7.46	6/23/2022 19:07	-0.34	6/22/2022 17:55	11.36
6/22/2022 18:32	-0.08	6/23/2022 17:22	2.83	6/23/2022 17:45	7.50	6/23/2022 19:08	-0.34	6/22/2022 17:56	11.41
6/22/2022 18:33	-0.08	6/23/2022 17:23	2.83	6/23/2022 17:46	7.47	6/23/2022 19:09	-0.39	6/22/2022 17:57	11.43
6/22/2022 18:34	-0.08	6/23/2022 17:24	2.83	6/23/2022 17:47	7.48	6/23/2022 19:10	-0.37	6/22/2022 17:58	11.38
6/22/2022 18:35	-0.07	6/23/2022 17:25	2.83	6/23/2022 17:48	7.48	6/23/2022 19:11	-0.32	6/22/2022 17:59	11.35
6/22/2022 18:36	-0.06	6/23/2022 17:26	2.83	6/23/2022 17:49	7.50	6/23/2022 19:12	-0.37	6/22/2022 18:00	11.37
6/22/2022 18:37	-0.07	6/23/2022 17:27	2.83	6/23/2022 17:50	7.49	6/23/2022 19:13	-0.35	6/22/2022 18:01	11.40
6/22/2022 18:38	-0.08	6/23/2022 17:28	2.83	6/23/2022 17:51	7.50	6/23/2022 19:14	-0.31	6/22/2022 18:02	11.42
6/22/2022 18:39	-0.09	6/23/2022 17:29	2.83	6/23/2022 17:52	7.47	6/23/2022 19:15	-0.36	6/22/2022 18:03	11.37
6/22/2022 18:40	-0.08	6/23/2022 17:30	2.83	6/23/2022 17:53	7.48	6/23/2022 19:16	-0.36	6/22/2022 18:04	11.45
6/22/2022 18:41	-0.07	6/23/2022 17:31	2.83	6/23/2022 17:54	7.48	6/23/2022 19:17	-0.35	6/22/2022 18:05	11.44
6/22/2022 18:42	-0.08	6/23/2022 17:32	2.83	6/23/2022 17:55	7.47	6/23/2022 19:18	-0.32	6/22/2022 18:06	11.37
6/22/2022 18:43	-0.07	6/23/2022 17:33	2.83	6/23/2022 17:56	7.44	6/23/2022 19:19	-0.36	6/22/2022 18:07	11.39
6/22/2022 18:44	-0.08	6/23/2022 17:34	2.83	6/23/2022 17:57	7.48	6/23/2022 19:20	-0.33	6/22/2022 18:08	11.38
6/22/2022 18:45	-0.06	6/23/2022 17:35	2.84	6/23/2022 17:58	7.48	6/23/2022 19:21	-0.34	6/22/2022 18:09	11.44
6/22/2022 18:46	-0.08	6/23/2022 17:36	2.83	6/23/2022 17:59	7.44	6/23/2022 19:22	-0.37	6/22/2022 18:10	11.37
6/22/2022 18:47	-0.07	6/23/2022 17:37	2.83	6/23/2022 18:00	7.44	6/23/2022 19:23	-0.34	6/22/2022 18:11	11.45
6/22/2022 18:48	-0.09	6/23/2022 17:38	2.83	6/23/2022 18:01	7.43	6/23/2022 19:24	-0.29	6/22/2022 18:12	11.38

6/22/2022 18:49	-0.08	6/23/2022 17:39	2.84	6/23/2022 18:02	7.47	6/23/2022 19:25	-0.32	6/22/2022 18:13	11.37
6/22/2022 18:50	-0.07	6/23/2022 17:40	2.83	6/23/2022 18:03	7.48	6/23/2022 19:26	-0.31	6/22/2022 18:14	11.42
6/22/2022 18:51	-0.08	6/23/2022 17:41	2.83	6/23/2022 18:04	7.44	6/23/2022 19:27	-0.35	6/22/2022 18:15	11.36
6/22/2022 18:52	-0.08	6/23/2022 17:42	2.83	6/23/2022 18:05	7.46	6/23/2022 19:28	-0.39	6/22/2022 18:16	11.39
6/22/2022 18:53	-0.07	6/23/2022 17:43	2.83	6/23/2022 18:06	7.45	6/23/2022 19:29	-0.35	6/22/2022 18:17	11.41
6/22/2022 18:54	-0.08	6/23/2022 17:44	2.83	6/23/2022 18:07	7.48	6/23/2022 19:30	-0.35	6/22/2022 18:18	11.40
6/22/2022 18:55	-0.08	6/23/2022 17:45	2.83	6/23/2022 18:08	7.47	6/23/2022 19:31	-0.33	6/22/2022 18:19	11.43
6/22/2022 18:56	-0.08	6/23/2022 17:46	2.84	6/23/2022 18:09	7.47	6/23/2022 19:32	-0.35	6/22/2022 18:20	11.36
6/22/2022 18:57	-0.08	6/23/2022 17:47	2.84	6/23/2022 18:10	7.42	6/23/2022 19:33	-0.36	6/22/2022 18:21	11.42
6/22/2022 18:58	-0.08	6/23/2022 17:48	2.83	6/23/2022 18:11	7.46	6/23/2022 19:34	-0.39	6/22/2022 18:22	11.41
6/22/2022 18:59	-0.07	6/23/2022 17:49	2.83	6/23/2022 18:12	7.47	6/23/2022 19:35	-0.31	6/22/2022 18:23	11.34
6/22/2022 19:00	-0.07	6/23/2022 17:50	2.84	6/23/2022 18:13	7.49	6/23/2022 19:36	-0.33	6/22/2022 18:24	11.35
6/22/2022 19:01	-0.06	6/23/2022 17:51	2.84	6/23/2022 18:14	7.43	6/23/2022 19:37	-0.37	6/22/2022 18:25	11.40
6/22/2022 19:02	-0.06	6/23/2022 17:52	2.84	6/23/2022 18:15	7.45	6/23/2022 19:38	-0.35	6/22/2022 18:26	11.40
6/22/2022 19:03	-0.07	6/23/2022 17:53	2.84	6/23/2022 18:16	7.47	6/23/2022 19:39	-0.36	6/22/2022 18:27	11.39
6/22/2022 19:04	-0.06	6/23/2022 17:54	2.84	6/23/2022 18:17	7.47	6/23/2022 19:40	-0.31	6/22/2022 18:28	11.39
6/22/2022 19:05	-0.08	6/23/2022 17:55	2.84	6/23/2022 18:18	7.45	6/23/2022 19:41	-0.37	6/22/2022 18:29	11.38
6/22/2022 19:06	-0.06	6/23/2022 17:56	2.84	6/23/2022 18:19	7.47	6/23/2022 19:42	-0.32	6/22/2022 18:30	11.42
6/22/2022 19:07	-0.09	6/23/2022 17:57	2.84	6/23/2022 18:20	7.44	6/23/2022 19:43	-0.37	6/22/2022 18:31	11.42
6/22/2022 19:08	-0.07	6/23/2022 17:58	2.83	6/23/2022 18:21	7.47	6/23/2022 19:44	-0.32	6/22/2022 18:32	11.41
6/22/2022 19:09	-0.07	6/23/2022 17:59	2.84	6/23/2022 18:22	7.42	6/23/2022 19:45	-0.35	6/22/2022 18:33	11.40
6/22/2022 19:10	-0.08	6/23/2022 18:00	2.84	6/23/2022 18:23	7.42	6/23/2022 19:46	-0.32	6/22/2022 18:34	11.44
6/22/2022 19:11	-0.09	6/23/2022 18:01	2.84	6/23/2022 18:24	7.46	6/23/2022 19:47	-0.31	6/22/2022 18:35	11.41
6/22/2022 19:12	-0.08	6/23/2022 18:02	2.83	6/23/2022 18:25	7.45	6/23/2022 19:48	-0.33	6/22/2022 18:36	11.40
6/22/2022 19:13	-0.08	6/23/2022 18:03	2.84	6/23/2022 18:26	7.39	6/23/2022 19:49	-0.38	6/22/2022 18:37	11.40
6/22/2022 19:14	-0.07	6/23/2022 18:04	2.83	6/23/2022 18:27	7.43	6/23/2022 19:50	-0.39	6/22/2022 18:38	11.40
6/22/2022 19:15	-0.07	6/23/2022 18:05	2.84	6/23/2022 18:28	7.48	6/23/2022 19:51	-0.28	6/22/2022 18:39	11.37
6/22/2022 19:16	-0.07	6/23/2022 18:06	2.83	6/23/2022 18:29	7.46	6/23/2022 19:52	-0.37	6/22/2022 18:40	11.36
6/22/2022 19:17	-0.07	6/23/2022 18:07	2.83	6/23/2022 18:30	7.40	6/23/2022 19:53	-0.36	6/22/2022 18:41	11.36
6/22/2022 19:18	-0.07	6/23/2022 18:08	2.83	6/23/2022 18:31	7.41	6/23/2022 19:54	-0.36	6/22/2022 18:42	11.38
6/22/2022 19:19	-0.07	6/23/2022 18:09	2.83	6/23/2022 18:32	7.40	6/23/2022 19:55	-0.35	6/22/2022 18:43	11.40
6/22/2022 19:20	-0.07	6/23/2022 18:10	2.83	6/23/2022 18:33	7.39	6/23/2022 19:56	-0.32	6/22/2022 18:44	11.38
6/22/2022 19:21	-0.06	6/23/2022 18:11	2.83	6/23/2022 18:34	7.41	6/23/2022 19:57	-0.37	6/22/2022 18:45	11.40
6/22/2022 19:22	-0.06	6/23/2022 18:12	2.84	6/23/2022 18:35	7.42	6/23/2022 19:58	-0.34	6/22/2022 18:46	11.37
6/22/2022 19:23	-0.08	6/23/2022 18:13	2.83	6/23/2022 18:36	7.41	6/23/2022 19:59	-0.35	6/22/2022 18:47	11.38
6/22/2022 19:24	-0.08	6/23/2022 18:14	2.84	6/23/2022 18:37	7.37	6/23/2022 20:00	-0.35	6/22/2022 18:48	11.46
6/22/2022 19:25	-0.08	6/23/2022 18:15	2.83	6/23/2022 18:38	7.43	6/23/2022 20:01	-0.33	6/22/2022 18:49	11.40
6/22/2022 19:26	-0.08	6/23/2022 18:16	2.83	6/23/2022 18:39	7.40	6/23/2022 20:02	-0.35	6/22/2022 18:50	11.40
6/22/2022 19:27	-0.08	6/23/2022 18:17	2.83	6/23/2022 18:40	7.42	6/23/2022 20:03	-0.33	6/22/2022 18:51	11.37
6/22/2022 19:28	-0.07	6/23/2022 18:18	2.84	6/23/2022 18:41	7.40	6/23/2022 20:04	-0.37	6/22/2022 18:52	11.41
6/22/2022 19:29	-0.06	6/23/2022 18:19	2.83	6/23/2022 18:42	7.38	6/23/2022 20:05	-0.38	6/22/2022 18:53	11.41
6/22/2022 19:30	-0.07	6/23/2022 18:20	2.83	6/23/2022 18:43	7.44	6/23/2022 20:06	-0.33	6/22/2022 18:54	11.40
6/22/2022 19:31	-0.08	6/23/2022 18:21	2.83	6/23/2022 18:44	7.41	6/23/2022 20:07	-0.32	6/22/2022 18:55	11.46
6/22/2022 19:32	-0.08	6/23/2022 18:22	2.83	6/23/2022 18:45	7.45	6/23/2022 20:08	-0.32	6/22/2022 18:56	11.45
6/22/2022 19:33	-0.08	6/23/2022 18:23	2.83	6/23/2022 18:46	7.38	6/23/2022 20:09	-0.31	6/22/2022 18:57	11.37
6/22/2022 19:34	-0.09	6/23/2022 18:24	2.83	6/23/2022 18:47	7.39	6/23/2022 20:10	-0.35	6/22/2022 18:58	11.40
6/22/2022 19:35	-0.08	6/23/2022 18:25	2.83	6/23/2022 18:48	7.42	6/23/2022 20:11	-0.33	6/22/2022 18:59	11.39
6/22/2022 19:36	-0.08	6/23/2022 18:26	2.83	6/23/2022 18:49	7.38	6/23/2022 20:12	-0.32	6/22/2022 19:00	11.40
6/22/2022 19:37	-0.07	6/23/2022 18:27	2.83	6/23/2022 18:50	7.39	6/23/2022 20:13	-0.37	6/22/2022 19:01	11.35
6/22/2022 19:38	-0.08	6/23/2022 18:28	2.83	6/23/2022 18:51	7.38	6/23/2022 20:14	-0.34	6/22/2022 19:02	11.37
6/22/2022 19:39	-0.08	6/23/2022 18:29	2.83	6/23/2022 18:52	7.43	6/23/2022 20:15	-0.34	6/22/2022 19:03	11.37
6/22/2022 19:40	-0.07	6/23/2022 18:30	2.83	6/23/2022 18:53	7.39	6/23/2022 20:16	-0.37	6/22/2022 19:04	11.41
6/22/2022 19:41	-0.07	6/23/2022 18:31	2.83	6/23/2022 18:54	7.40	6/23/2022 20:17	-0.36	6/22/2022 19:05	11.33
6/22/2022 19:42	-0.07	6/23/2022 18:32	2.83	6/23/2022 18:55	7.39	6/23/2022 20:18	-0.33	6/22/2022 19:06	11.38
6/22/2022 19:43	-0.07	6/23/2022 18:33	2.83	6/23/2022 18:56	7.36	6/23/2022 20:19	-0.35	6/22/2022 19:07	11.46
6/22/2022 19:44	-0.07	6/23/2022 18:34	2.83	6/23/2022 18:57	7.38	6/23/2022 20:20	-0.38	6/22/2022 19:08	11.41
6/22/2022 19:45	-0.07	6/23/2022 18:35	2.83	6/23/2022 18:58	7.36	6/23/2022 20:21	-0.33	6/22/2022 19:09	11.38
6/22/2022 19:46	-0.07	6/23/2022 18:36	2.83	6/23/2022 18:59	7.37	6/23/2022 20:22	-0.34	6/22/2022 19:10	11.40
6/22/2022 19:47	-0.07	6/23/2022 18:37	2.83	6/23/2022 19:00	7.38	6/23/2022 20:23	-0.30	6/22/2022 19:11	11.32
6/22/2022 19:48	-0.08	6/23/2022 18:38	2.83	6/23/2022 19:01	7.38	6/23/2022 20:24	-0.32	6/22/2022 19:12	11.37
6/22/2022 19:49	-0.06	6/23/2022 18:39	2.83	6/23/2022 19:02	7.36	6/23/2022 20:25	-0.34	6/22/2022 19:13	11.40
6/22/2022 19:50	-0.08	6/23/2022 18:40	2.83	6/23/2022 19:03	7.34	6/23/2022 20:26	-0.35	6/22/2022 19:14	11.38
6/22/2022 19:51	-0.08	6/23/2022 18:41	2.83	6/23/2022 19:04	7.38	6/23/2022 20:27	-0.37	6/22/2022 19:15	11.38
6/22/2022 19:52	-0.07	6/23/2022 18:42	2.83	6/23/2022 19:05	7.34	6/23/2022 20:28	-0.32	6/22/2022 19:16	11.39
6/22/2022 19:53	-0.08	6/23/2022 18:43	2.83	6/23/2022 19:06	7.36	6/23/2022 20:29	-0.33	6/22/2022 19:17	11.40
6/22/2022 19:54	-0.08	6/23/2022 18:44	2.83	6/23/2022 19:07	7.37	6/23/2022 20:30	-0.34	6/22/2022 19:18	11.43
6/22/2022 19:55	-0.07	6/23/2022 18:45	2.82	6/23/2022 19:08	7.36	6/23/2022 20:31	-0.34	6/22/2022 19:19	11.39
6/22/2022 19:56	-0.07	6/23/2022 18:46	2.83	6/23/2022 19:09	7.34	6/23/2022 20:32	-0.35	6/22/2022 19:20	11.35
6/22/2022 19:57	-0.08	6/23/2022 18:47	2.83	6/23/2022 19:10	7.33	6/23/2022 20:33	-0.32	6/22/2022 19:21	11.32
6/22/2022 19:58	-0.07	6/23/2022 18:48	2.83	6/23/2022 19:11	7.39	6/23/2022 20:34	-0.34	6/22/2022 19:22	11.35
6/22/2022 19:59	-0.08	6/23/2022 18:49	2.83	6/23/2022 19:12	7.39	6/23/2022 20:35	-0.33	6/22/2022 19:23	11.37
6/22/2022 20:00	-0.08	6/23/2022 18:50	2.83	6/23/2022 19:13	7.32	6/23/2022 20:36	-0.30	6/22/2022 19:24	11.38
6/22/2022 20:01	-0.07	6/23/2022 18:51	2.83	6/23/2022 19:14	7.34	6/23/2022 20:37	-0.35	6/22/2022 19:25	11.40
6/22/2022 20:02	-0.07	6/23/2022 18:52	2.83	6/23/2022 19:15	7.32	6/23/2022 20:38	-0.33	6/22/2022 19:26	11.42
6/22/2022 20:03	-0.08	6/23/2022 18:53	2.82	6/23/2022 19:16	7.29	6/23/2022 20:39	-0.35	6/22/2022 19:27	11.35
6/22/2022 20:04	-0.08	6/23/2022 18:54	2.82	6/23/2022 19:17	7.38	6/23/2022 20:40	-0.33	6/22/2022 19:28	11.40
6/22/2022 20:05	-0.08	6/23/2022 18:55	2.83	6/23/2022 19:18	7.34	6/23/2022 20:41	-0.39	6/22/2022 19:29	11.40
6/22/2022 20:06	-0.07	6/23/2022 18:56	2.83	6/23/2022 19:19	7.35	6/23/2022 20:42	-0.34	6/22/2022 19:30	11.41
6/22/2022 20:07	-0.07	6/23/2022 18:57	2.82	6/23/2022 19:20	7.37	6/23/2022 20:43	-0.33	6/22/2022 19:31	11.42
6/22/2022 20:08	-0.08	6/23/2022 18:58	2.82	6/23/2022 19:21	7.28	6/23/2022 20:44	-0.32	6/22/2022 19:32	11.43
6/22/2022 20:09	-0.09	6/23/2022 18:59	2.82	6/23/2022 19:22	7.35	6/23/2022 20:45	-0.32	6/22/2022 19:33	11.41
6/22/2022 20:10	-0.08	6/23/2022 19:00	2.82	6/23/2022 19:23	7.33	6/23/2022 20:46	-0.33	6/22/2022 19:34	11.36
6/22/2022 20:11	-0.07	6/23/2022 19:01	2.83	6/23/2022 19:24	7.32	6/23/2022 20:47	-0.30	6/22/2022 19:35	11.38
6/22/2022 20:12	-0.08	6/23/2022 19:02	2.83	6/23/2022 19:25	7.33	6/23/2022 20:48	-0.32	6/22/2022 19:36	11.41
6/22/2022 20:13	-0.09	6/23/2022 19:03	2.82	6/23/2022 19:26	7.32	6/23/2022 20:49	-0.37	6/22/2022 19:37	11.42
6/22/2022 20:14	-0.07	6/23/2022 19:04	2.82	6/23/2022 19:27	7.32	6/23/2022 20:50	-0.35	6/22/2022 19:38	11.38
6/22/2022 20:15	-0.08	6/23/2022 19:05	2.82	6/23/2022 19:28	7.29	6/23/2022 20:51	-0.34	6/22/2022 19:39	11.38
6/22/2022 20:16	-0.08	6/23/2022 19:06	2.82	6/23/2022 19:29	7.32	6/23/2022 20:52	-0.32	6/22/2022 19:40	11.37

6/22/2022 20:17	-0.08	6/23/2022 19:07	2.82	6/23/2022 19:30	7.31	6/23/2022 20:53	-0.36	6/22/2022 19:41	11.38
6/22/2022 20:18	-0.09	6/23/2022 19:08	2.82	6/23/2022 19:31	7.30	6/23/2022 20:54	-0.30	6/22/2022 19:42	11.41
6/22/2022 20:19	-0.08	6/23/2022 19:09	2.82	6/23/2022 19:32	7.35	6/23/2022 20:55	-0.35	6/22/2022 19:43	11.37
6/22/2022 20:20	-0.08	6/23/2022 19:10	2.82	6/23/2022 19:33	7.31	6/23/2022 20:56	-0.31	6/22/2022 19:44	11.41
6/22/2022 20:21	-0.06	6/23/2022 19:11	2.82	6/23/2022 19:34	7.31	6/23/2022 20:57	-0.36	6/22/2022 19:45	11.42
6/22/2022 20:22	-0.08	6/23/2022 19:12	2.82	6/23/2022 19:35	7.30	6/23/2022 20:58	-0.33	6/22/2022 19:46	11.42
6/22/2022 20:23	-0.06	6/23/2022 19:13	2.82	6/23/2022 19:36	7.30	6/23/2022 20:59	-0.32	6/22/2022 19:47	11.36
6/22/2022 20:24	-0.09	6/23/2022 19:14	2.82	6/23/2022 19:37	7.31	6/23/2022 21:00	-0.35	6/22/2022 19:48	11.45
6/22/2022 20:25	-0.08	6/23/2022 19:15	2.82	6/23/2022 19:38	7.28	6/23/2022 21:01	-0.33	6/22/2022 19:49	11.37
6/22/2022 20:26	-0.07	6/23/2022 19:16	2.82	6/23/2022 19:39	7.33	6/23/2022 21:02	-0.36	6/22/2022 19:50	11.39
6/22/2022 20:27	-0.09	6/23/2022 19:17	2.82	6/23/2022 19:40	7.30	6/23/2022 21:03	-0.35	6/22/2022 19:51	11.37
6/22/2022 20:28	-0.07	6/23/2022 19:18	2.82	6/23/2022 19:41	7.34	6/23/2022 21:04	-0.33	6/22/2022 19:52	11.40
6/22/2022 20:29	-0.08	6/23/2022 19:19	2.82	6/23/2022 19:42	7.29	6/23/2022 21:05	-0.35	6/22/2022 19:53	11.42
6/22/2022 20:30	-0.07	6/23/2022 19:20	2.81	6/23/2022 19:43	7.30	6/23/2022 21:06	-0.33	6/22/2022 19:54	11.40
6/22/2022 20:31	-0.07	6/23/2022 19:21	2.82	6/23/2022 19:44	7.28	6/23/2022 21:07	-0.35	6/22/2022 19:55	11.44
6/22/2022 20:32	-0.08	6/23/2022 19:22	2.82	6/23/2022 19:45	7.33	6/23/2022 21:08	-0.28	6/22/2022 19:56	11.41
6/22/2022 20:33	-0.07	6/23/2022 19:23	2.82	6/23/2022 19:46	7.29	6/23/2022 21:09	-0.34	6/22/2022 19:57	11.43
6/22/2022 20:34	-0.08	6/23/2022 19:24	2.81	6/23/2022 19:47	7.27	6/23/2022 21:10	-0.36	6/22/2022 19:58	11.36
6/22/2022 20:35	-0.07	6/23/2022 19:25	2.81	6/23/2022 19:48	7.28	6/23/2022 21:11	-0.35	6/22/2022 19:59	11.40
6/22/2022 20:36	-0.08	6/23/2022 19:26	2.81	6/23/2022 19:49	7.29	6/23/2022 21:12	-0.34	6/22/2022 20:00	11.40
6/22/2022 20:37	-0.06	6/23/2022 19:27	2.81	6/23/2022 19:50	7.27	6/23/2022 21:13	-0.31	6/22/2022 20:01	11.38
6/22/2022 20:38	-0.07	6/23/2022 19:28	2.81	6/23/2022 19:51	7.28	6/23/2022 21:14	-0.34	6/22/2022 20:02	11.40
6/22/2022 20:39	-0.08	6/23/2022 19:29	2.81	6/23/2022 19:52	7.29	6/23/2022 21:15	-0.32	6/22/2022 20:03	11.42
6/22/2022 20:40	-0.08	6/23/2022 19:30	2.81	6/23/2022 19:53	7.29	6/23/2022 21:16	-0.35	6/22/2022 20:04	11.39
6/22/2022 20:41	-0.07	6/23/2022 19:31	2.81	6/23/2022 19:54	7.25	6/23/2022 21:17	-0.35	6/22/2022 20:05	11.44
6/22/2022 20:42	-0.07	6/23/2022 19:32	2.81	6/23/2022 19:55	7.29	6/23/2022 21:18	-0.33	6/22/2022 20:06	11.40
6/22/2022 20:43	-0.07	6/23/2022 19:33	2.81	6/23/2022 19:56	7.26	6/23/2022 21:19	-0.30	6/22/2022 20:07	11.39
6/22/2022 20:44	-0.07	6/23/2022 19:34	2.81	6/23/2022 19:57	7.28	6/23/2022 21:20	-0.30	6/22/2022 20:08	11.42
6/22/2022 20:45	-0.07	6/23/2022 19:35	2.81	6/23/2022 19:58	7.21	6/23/2022 21:21	-0.35	6/22/2022 20:09	11.41
6/22/2022 20:46	-0.07	6/23/2022 19:36	2.81	6/23/2022 19:59	7.26	6/23/2022 21:22	-0.34	6/22/2022 20:10	11.46
6/22/2022 20:47	-0.07	6/23/2022 19:37	2.81	6/23/2022 20:00	7.26	6/23/2022 21:23	-0.31	6/22/2022 20:11	11.44
6/22/2022 20:48	-0.07	6/23/2022 19:38	2.81	6/23/2022 20:01	7.23	6/23/2022 21:24	-0.32	6/22/2022 20:12	11.41
6/22/2022 20:49	-0.08	6/23/2022 19:39	2.81	6/23/2022 20:02	7.23	6/23/2022 21:25	-0.33	6/22/2022 20:13	11.36
6/22/2022 20:50	-0.07	6/23/2022 19:40	2.81	6/23/2022 20:03	7.27	6/23/2022 21:26	-0.35	6/22/2022 20:14	11.39
6/22/2022 20:51	-0.08	6/23/2022 19:41	2.81	6/23/2022 20:04	7.23	6/23/2022 21:27	-0.33	6/22/2022 20:15	11.37
6/22/2022 20:52	-0.07	6/23/2022 19:42	2.81	6/23/2022 20:05	7.28	6/23/2022 21:28	-0.35	6/22/2022 20:16	11.44
6/22/2022 20:53	-0.07	6/23/2022 19:43	2.81	6/23/2022 20:06	7.27	6/23/2022 21:29	-0.32	6/22/2022 20:17	11.40
6/22/2022 20:54	-0.06	6/23/2022 19:44	2.81	6/23/2022 20:07	7.26	6/23/2022 21:30	-0.35	6/22/2022 20:18	11.38
6/22/2022 20:55	-0.07	6/23/2022 19:45	2.81	6/23/2022 20:08	7.26	6/23/2022 21:31	-0.30	6/22/2022 20:19	11.44
6/22/2022 20:56	-0.06	6/23/2022 19:46	2.81	6/23/2022 20:09	7.24	6/23/2022 21:32	-0.34	6/22/2022 20:20	11.43
6/22/2022 20:57	-0.08	6/23/2022 19:47	2.81	6/23/2022 20:10	7.27	6/23/2022 21:33	-0.35	6/22/2022 20:21	11.39
6/22/2022 20:58	-0.07	6/23/2022 19:48	2.81	6/23/2022 20:11	7.28	6/23/2022 21:34	-0.30	6/22/2022 20:22	11.41
6/22/2022 20:59	-0.08	6/23/2022 19:49	2.81	6/23/2022 20:12	7.24	6/23/2022 21:35	-0.32	6/22/2022 20:23	11.42
6/22/2022 21:00	-0.08	6/23/2022 19:50	2.81	6/23/2022 20:13	7.27	6/23/2022 21:36	-0.31	6/22/2022 20:24	11.44
6/22/2022 21:01	-0.08	6/23/2022 19:51	2.81	6/23/2022 20:14	7.22	6/23/2022 21:37	-0.34	6/22/2022 20:25	11.38
6/22/2022 21:02	-0.07	6/23/2022 19:52	2.81	6/23/2022 20:15	7.20	6/23/2022 21:38	-0.36	6/22/2022 20:26	11.40
6/22/2022 21:03	-0.08	6/23/2022 19:53	2.81	6/23/2022 20:16	7.21	6/23/2022 21:39	-0.36	6/22/2022 20:27	11.44
6/22/2022 21:04	-0.08	6/23/2022 19:54	2.80	6/23/2022 20:17	7.18	6/23/2022 21:40	-0.32	6/22/2022 20:28	11.41
6/22/2022 21:05	-0.07	6/23/2022 19:55	2.81	6/23/2022 20:18	7.21	6/23/2022 21:41	-0.33	6/22/2022 20:29	11.44
6/22/2022 21:06	-0.08	6/23/2022 19:56	2.80	6/23/2022 20:19	7.27	6/23/2022 21:42	-0.35	6/22/2022 20:30	11.42
6/22/2022 21:07	-0.07	6/23/2022 19:57	2.80	6/23/2022 20:20	7.23	6/23/2022 21:43	-0.35	6/22/2022 20:31	11.42
6/22/2022 21:08	-0.08	6/23/2022 19:58	2.80	6/23/2022 20:21	7.22	6/23/2022 21:44	-0.34	6/22/2022 20:32	11.40
6/22/2022 21:09	-0.08	6/23/2022 19:59	2.81	6/23/2022 20:22	7.22	6/23/2022 21:45	-0.34	6/22/2022 20:33	11.36
6/22/2022 21:10	-0.09	6/23/2022 20:00	2.80	6/23/2022 20:23	7.21	6/23/2022 21:46	-0.33	6/22/2022 20:34	11.43
6/22/2022 21:11	-0.07	6/23/2022 20:01	2.80	6/23/2022 20:24	7.22	6/23/2022 21:47	-0.28	6/22/2022 20:35	11.45
6/22/2022 21:12	-0.08	6/23/2022 20:02	2.80	6/23/2022 20:25	7.22	6/23/2022 21:48	-0.33	6/22/2022 20:36	11.39
6/22/2022 21:13	-0.08	6/23/2022 20:03	2.80	6/23/2022 20:26	7.24	6/23/2022 21:49	-0.35	6/22/2022 20:37	11.36
6/22/2022 21:14	-0.08	6/23/2022 20:04	2.80	6/23/2022 20:27	7.23	6/23/2022 21:50	-0.32	6/22/2022 20:38	11.44
6/22/2022 21:15	-0.07	6/23/2022 20:05	2.80	6/23/2022 20:28	7.26	6/23/2022 21:51	-0.33	6/22/2022 20:39	11.39
6/22/2022 21:16	-0.06	6/23/2022 20:06	2.80	6/23/2022 20:29	7.16	6/23/2022 21:52	-0.37	6/22/2022 20:40	11.36
6/22/2022 21:17	-0.08	6/23/2022 20:07	2.80	6/23/2022 20:30	7.24	6/23/2022 21:53	-0.36	6/22/2022 20:41	11.40
6/22/2022 21:18	-0.08	6/23/2022 20:08	2.80	6/23/2022 20:31	7.22	6/23/2022 21:54	-0.29	6/22/2022 20:42	11.43
6/22/2022 21:19	-0.08	6/23/2022 20:09	2.80	6/23/2022 20:32	7.18	6/23/2022 21:55	-0.29	6/22/2022 20:43	11.35
6/22/2022 21:20	-0.08	6/23/2022 20:10	2.80	6/23/2022 20:33	7.21	6/23/2022 21:56	-0.30	6/22/2022 20:44	11.38
6/22/2022 21:21	-0.07	6/23/2022 20:11	2.80	6/23/2022 20:34	7.19	6/23/2022 21:57	-0.34	6/22/2022 20:45	11.41
6/22/2022 21:22	-0.08	6/23/2022 20:12	2.79	6/23/2022 20:35	7.22	6/23/2022 21:58	-0.37	6/22/2022 20:46	11.36
6/22/2022 21:23	-0.08	6/23/2022 20:13	2.79	6/23/2022 20:36	7.20	6/23/2022 21:59	-0.34	6/22/2022 20:47	11.39
6/22/2022 21:24	-0.07	6/23/2022 20:14	2.79	6/23/2022 20:37	7.23	6/23/2022 22:00	-0.35	6/22/2022 20:48	11.41
6/22/2022 21:25	-0.07	6/23/2022 20:15	2.80	6/23/2022 20:38	7.17	6/23/2022 22:01	-0.35	6/22/2022 20:49	11.41
6/22/2022 21:26	-0.06	6/23/2022 20:16	2.79	6/23/2022 20:39	7.17	6/23/2022 22:02	-0.35	6/22/2022 20:50	11.43
6/22/2022 21:27	-0.06	6/23/2022 20:17	2.79	6/23/2022 20:40	7.18	6/23/2022 22:03	-0.33	6/22/2022 20:51	11.39
6/22/2022 21:28	-0.08	6/23/2022 20:18	2.79	6/23/2022 20:41	7.21	6/23/2022 22:04	-0.31	6/22/2022 20:52	11.38
6/22/2022 21:29	-0.06	6/23/2022 20:19	2.79	6/23/2022 20:42	7.20	6/23/2022 22:05	-0.33	6/22/2022 20:53	11.44
6/22/2022 21:30	-0.06	6/23/2022 20:20	2.79	6/23/2022 20:43	7.16	6/23/2022 22:06	-0.32	6/22/2022 20:54	11.32
6/22/2022 21:31	-0.07	6/23/2022 20:21	2.79	6/23/2022 20:44	7.21	6/23/2022 22:07	-0.35	6/22/2022 20:55	11.38
6/22/2022 21:32	-0.07	6/23/2022 20:22	2.79	6/23/2022 20:45	7.19	6/23/2022 22:08	-0.36	6/22/2022 20:56	11.35
6/22/2022 21:33	-0.08	6/23/2022 20:23	2.79	6/23/2022 20:46	7.16	6/23/2022 22:09	-0.31	6/22/2022 20:57	11.40
6/22/2022 21:34	-0.07	6/23/2022 20:24	2.79	6/23/2022 20:47	7.15	6/23/2022 22:10	-0.34	6/22/2022 20:58	11.43
6/22/2022 21:35	-0.07	6/23/2022 20:25	2.79	6/23/2022 20:48	7.20	6/23/2022 22:11	-0.35	6/22/2022 20:59	11.33
6/22/2022 21:36	-0.06	6/23/2022 20:26	2.79	6/23/2022 20:49	7.16	6/23/2022 22:12	-0.35	6/22/2022 21:00	11.41
6/22/2022 21:37	-0.06	6/23/2022 20:27	2.79	6/23/2022 20:50	7.16	6/23/2022 22:13	-0.32	6/22/2022 21:01	11.41
6/22/2022 21:38	-0.07	6/23/2022 20:28	2.79	6/23/2022 20:51	7.19	6/23/2022 22:14	-0.32	6/22/2022 21:02	11.42
6/22/2022 21:39	-0.07	6/23/2022 20:29	2.79	6/23/2022 20:52	7.23	6/23/2022 22:15	-0.35	6/22/2022 21:03	11.35
6/22/2022 21:40	-0.07	6/23/2022 20:30	2.79	6/23/2022 20:53	7.18	6/23/2022 22:16	-0.31	6/22/2022 21:04	11.39
6/22/2022 21:41	-0.07	6/23/2022 20:31	2.79	6/23/2022 20:54	7.16	6/23/2022 22:17	-0.33	6/22/2022 21:05	11.39
6/22/2022 21:42	-0.07	6/23/2022 20:32	2.79	6/23/2022 20:55	7.17	6/23/2022 22:18	-0.34	6/22/2022 21:06	11.40
6/22/2022 21:43	-0.06	6/23/2022 20:33	2.79	6/23/2022 20:56	7.16	6/23/2022 22:19	-0.38	6/22/2022 21:07	11.43
6/22/2022 21:44	-0.07	6/23/2022 20:34	2.79	6/23/2022 20:57	7.13	6/23/2022 22:20	-0.36	6/22/2022 21:08	11.35

6/22/2022 21:45	-0.08	6/23/2022 20:35	2.79	6/23/2022 20:58	7.18	6/23/2022 22:21	-0.36	6/22/2022 21:09	11.38
6/22/2022 21:46	-0.07	6/23/2022 20:36	2.79	6/23/2022 20:59	7.06	6/23/2022 22:22	-0.30	6/22/2022 21:10	11.42
6/22/2022 21:47	-0.07	6/23/2022 20:37	2.79	6/23/2022 21:00	7.12	6/23/2022 22:23	-0.33	6/22/2022 21:11	11.41
6/22/2022 21:48	-0.07	6/23/2022 20:38	2.79	6/23/2022 21:01	7.14	6/23/2022 22:24	-0.34	6/22/2022 21:12	11.42
6/22/2022 21:49	-0.09	6/23/2022 20:39	2.78	6/23/2022 21:02	7.14	6/23/2022 22:25	-0.30	6/22/2022 21:13	11.43
6/22/2022 21:50	-0.07	6/23/2022 20:40	2.78	6/23/2022 21:03	7.13	6/23/2022 22:26	-0.35	6/22/2022 21:14	11.43
6/22/2022 21:51	-0.07	6/23/2022 20:41	2.78	6/23/2022 21:04	7.11	6/23/2022 22:27	-0.32	6/22/2022 21:15	11.41
6/22/2022 21:52	-0.07	6/23/2022 20:42	2.78	6/23/2022 21:05	7.15	6/23/2022 22:28	-0.32	6/22/2022 21:16	11.35
6/22/2022 21:53	-0.07	6/23/2022 20:43	2.78	6/23/2022 21:06	7.10	6/23/2022 22:29	-0.32	6/22/2022 21:17	11.37
6/22/2022 21:54	-0.08	6/23/2022 20:44	2.78	6/23/2022 21:07	7.13	6/23/2022 22:30	-0.34	6/22/2022 21:18	11.40
6/22/2022 21:55	-0.08	6/23/2022 20:45	2.78	6/23/2022 21:08	7.12	6/23/2022 22:31	-0.33	6/22/2022 21:19	11.40
6/22/2022 21:56	-0.06	6/23/2022 20:46	2.78	6/23/2022 21:09	7.13	6/23/2022 22:32	-0.35	6/22/2022 21:20	11.42
6/22/2022 21:57	-0.09	6/23/2022 20:47	2.78	6/23/2022 21:10	7.12	6/23/2022 22:33	-0.33	6/22/2022 21:21	11.38
6/22/2022 21:58	-0.08	6/23/2022 20:48	2.78	6/23/2022 21:11	7.14	6/23/2022 22:34	-0.30	6/22/2022 21:22	11.39
6/22/2022 21:59	-0.07	6/23/2022 20:49	2.78	6/23/2022 21:12	7.12	6/23/2022 22:35	-0.32	6/22/2022 21:23	11.37
6/22/2022 22:00	-0.07	6/23/2022 20:50	2.77	6/23/2022 21:13	7.13	6/23/2022 22:36	-0.35	6/22/2022 21:24	11.39
6/22/2022 22:01	-0.06	6/23/2022 20:51	2.78	6/23/2022 21:14	7.14	6/23/2022 22:37	-0.37	6/22/2022 21:25	11.35
6/22/2022 22:02	-0.07	6/23/2022 20:52	2.78	6/23/2022 21:15	7.07	6/23/2022 22:38	-0.36	6/22/2022 21:26	11.40
6/22/2022 22:03	-0.09	6/23/2022 20:53	2.77	6/23/2022 21:16	7.15	6/23/2022 22:39	-0.34	6/22/2022 21:27	11.33
6/22/2022 22:04	-0.07	6/23/2022 20:54	2.77	6/23/2022 21:17	7.13	6/23/2022 22:40	-0.33	6/22/2022 21:28	11.31
6/22/2022 22:05	-0.07	6/23/2022 20:55	2.77	6/23/2022 21:18	7.14	6/23/2022 22:41	-0.29	6/22/2022 21:29	11.40
6/22/2022 22:06	-0.08	6/23/2022 20:56	2.77	6/23/2022 21:19	7.07	6/23/2022 22:42	-0.37	6/22/2022 21:30	11.46
6/22/2022 22:07	-0.09	6/23/2022 20:57	2.77	6/23/2022 21:20	7.12	6/23/2022 22:43	-0.32	6/22/2022 21:31	11.37
6/22/2022 22:08	-0.07	6/23/2022 20:58	2.77	6/23/2022 21:21	7.09	6/23/2022 22:44	-0.37	6/22/2022 21:32	11.42
6/22/2022 22:09	-0.08	6/23/2022 20:59	2.77	6/23/2022 21:22	7.09	6/23/2022 22:45	-0.32	6/22/2022 21:33	11.44
6/22/2022 22:10	-0.08	6/23/2022 21:00	2.77	6/23/2022 21:23	7.13	6/23/2022 22:46	-0.35	6/22/2022 21:34	11.39
6/22/2022 22:11	-0.08	6/23/2022 21:01	2.77	6/23/2022 21:24	7.09	6/23/2022 22:47	-0.38	6/22/2022 21:35	11.42
6/22/2022 22:12	-0.08	6/23/2022 21:02	2.77	6/23/2022 21:25	7.10	6/23/2022 22:48	-0.34	6/22/2022 21:36	11.42
6/22/2022 22:13	-0.08	6/23/2022 21:03	2.77	6/23/2022 21:26	7.09	6/23/2022 22:49	-0.35	6/22/2022 21:37	11.42
6/22/2022 22:14	-0.07	6/23/2022 21:04	2.77	6/23/2022 21:27	7.09	6/23/2022 22:50	-0.35	6/22/2022 21:38	11.40
6/22/2022 22:15	-0.06	6/23/2022 21:05	2.77	6/23/2022 21:28	7.08	6/23/2022 22:51	-0.32	6/22/2022 21:39	11.42
6/22/2022 22:16	-0.06	6/23/2022 21:06	2.77	6/23/2022 21:29	7.07	6/23/2022 22:52	-0.35	6/22/2022 21:40	11.39
6/22/2022 22:17	-0.08	6/23/2022 21:07	2.77	6/23/2022 21:30	7.08	6/23/2022 22:53	-0.35	6/22/2022 21:41	11.42
6/22/2022 22:18	-0.08	6/23/2022 21:08	2.77	6/23/2022 21:31	7.08	6/23/2022 22:54	-0.35	6/22/2022 21:42	11.45
6/22/2022 22:19	-0.08	6/23/2022 21:09	2.76	6/23/2022 21:32	7.12	6/23/2022 22:55	-0.31	6/22/2022 21:43	11.36
6/22/2022 22:20	-0.09	6/23/2022 21:10	2.77	6/23/2022 21:33	7.10	6/23/2022 22:56	-0.30	6/22/2022 21:44	11.38
6/22/2022 22:21	-0.08	6/23/2022 21:11	2.77	6/23/2022 21:34	7.06	6/23/2022 22:57	-0.35	6/22/2022 21:45	11.37
6/22/2022 22:22	-0.06	6/23/2022 21:12	2.76	6/23/2022 21:35	7.10	6/23/2022 22:58	-0.33	6/22/2022 21:46	11.39
6/22/2022 22:23	-0.07	6/23/2022 21:13	2.77	6/23/2022 21:36	7.09	6/23/2022 22:59	-0.31	6/22/2022 21:47	11.40
6/22/2022 22:24	-0.08	6/23/2022 21:14	2.77	6/23/2022 21:37	7.03	6/23/2022 23:00	-0.35	6/22/2022 21:48	11.42
6/22/2022 22:25	-0.08	6/23/2022 21:15	2.76	6/23/2022 21:38	7.10	6/23/2022 23:01	-0.35	6/22/2022 21:49	11.39
6/22/2022 22:26	-0.08	6/23/2022 21:16	2.76	6/23/2022 21:39	7.07	6/23/2022 23:02	-0.32	6/22/2022 21:50	11.33
6/22/2022 22:27	-0.06	6/23/2022 21:17	2.76	6/23/2022 21:40	7.04	6/23/2022 23:03	-0.31	6/22/2022 21:51	11.38
6/22/2022 22:28	-0.08	6/23/2022 21:18	2.76	6/23/2022 21:41	7.07	6/23/2022 23:04	-0.36	6/22/2022 21:52	11.41
6/22/2022 22:29	-0.07	6/23/2022 21:19	2.76	6/23/2022 21:42	7.07	6/23/2022 23:05	-0.35	6/22/2022 21:53	11.38
6/22/2022 22:30	-0.07	6/23/2022 21:20	2.76	6/23/2022 21:43	7.04	6/23/2022 23:06	-0.33	6/22/2022 21:54	11.39
6/22/2022 22:31	-0.07	6/23/2022 21:21	2.76	6/23/2022 21:44	7.06	6/23/2022 23:07	-0.33	6/22/2022 21:55	11.36
6/22/2022 22:32	-0.07	6/23/2022 21:22	2.76	6/23/2022 21:45	7.07	6/23/2022 23:08	-0.32	6/22/2022 21:56	11.36
6/22/2022 22:33	-0.06	6/23/2022 21:23	2.76	6/23/2022 21:46	7.07	6/23/2022 23:09	-0.32	6/22/2022 21:57	11.45
6/22/2022 22:34	-0.06	6/23/2022 21:24	2.76	6/23/2022 21:47	7.05	6/23/2022 23:10	-0.38	6/22/2022 21:58	11.42
6/22/2022 22:35	-0.06	6/23/2022 21:25	2.76	6/23/2022 21:48	7.06	6/23/2022 23:11	-0.33	6/22/2022 21:59	11.45
6/22/2022 22:36	-0.08	6/23/2022 21:26	2.76	6/23/2022 21:49	7.01	6/23/2022 23:12	-0.35	6/22/2022 22:00	11.40
6/22/2022 22:37	-0.07	6/23/2022 21:27	2.76	6/23/2022 21:50	7.05	6/23/2022 23:13	-0.37	6/22/2022 22:01	11.43
6/22/2022 22:38	-0.07	6/23/2022 21:28	2.76	6/23/2022 21:51	7.05	6/23/2022 23:14	-0.33	6/22/2022 22:02	11.40
6/22/2022 22:39	-0.06	6/23/2022 21:29	2.75	6/23/2022 21:52	7.05	6/23/2022 23:15	-0.37	6/22/2022 22:03	11.40
6/22/2022 22:40	-0.07	6/23/2022 21:30	2.75	6/23/2022 21:53	7.04	6/23/2022 23:16	-0.35	6/22/2022 22:04	11.44
6/22/2022 22:41	-0.06	6/23/2022 21:31	2.76	6/23/2022 21:54	7.06	6/23/2022 23:17	-0.35	6/22/2022 22:05	11.46
6/22/2022 22:42	-0.06	6/23/2022 21:32	2.75	6/23/2022 21:55	7.04	6/23/2022 23:18	-0.31	6/22/2022 22:06	11.39
6/22/2022 22:43	-0.08	6/23/2022 21:33	2.75	6/23/2022 21:56	7.04	6/23/2022 23:19	-0.32	6/22/2022 22:07	11.40
6/22/2022 22:44	-0.07	6/23/2022 21:34	2.75	6/23/2022 21:57	7.05	6/23/2022 23:20	-0.34	6/22/2022 22:08	11.39
6/22/2022 22:45	-0.06	6/23/2022 21:35	2.75	6/23/2022 21:58	7.08	6/23/2022 23:21	-0.36	6/22/2022 22:09	11.42
6/22/2022 22:46	-0.08	6/23/2022 21:36	2.75	6/23/2022 21:59	7.01	6/23/2022 23:22	-0.35	6/22/2022 22:10	11.41
6/22/2022 22:47	-0.07	6/23/2022 21:37	2.75	6/23/2022 22:00	7.06	6/23/2022 23:23	-0.37	6/22/2022 22:11	11.41
6/22/2022 22:48	-0.09	6/23/2022 21:38	2.75	6/23/2022 22:01	7.05	6/23/2022 23:24	-0.33	6/22/2022 22:12	11.46
6/22/2022 22:49	-0.06	6/23/2022 21:39	2.75	6/23/2022 22:02	7.02	6/23/2022 23:25	-0.34	6/22/2022 22:13	11.41
6/22/2022 22:50	-0.09	6/23/2022 21:40	2.75	6/23/2022 22:03	7.02	6/23/2022 23:26	-0.35	6/22/2022 22:14	11.38
6/22/2022 22:51	-0.08	6/23/2022 21:41	2.75	6/23/2022 22:04	7.05	6/23/2022 23:27	-0.36	6/22/2022 22:15	11.40
6/22/2022 22:52	-0.08	6/23/2022 21:42	2.75	6/23/2022 22:05	7.01	6/23/2022 23:28	-0.35	6/22/2022 22:16	11.37
6/22/2022 22:53	-0.07	6/23/2022 21:43	2.75	6/23/2022 22:06	7.03	6/23/2022 23:29	-0.35	6/22/2022 22:17	11.48
6/22/2022 22:54	-0.08	6/23/2022 21:44	2.74	6/23/2022 22:07	7.00	6/23/2022 23:30	-0.35	6/22/2022 22:18	11.38
6/22/2022 22:55	-0.08	6/23/2022 21:45	2.75	6/23/2022 22:08	7.05	6/23/2022 23:31	-0.37	6/22/2022 22:19	11.46
6/22/2022 22:56	-0.08	6/23/2022 21:46	2.75	6/23/2022 22:09	7.00	6/23/2022 23:32	-0.35	6/22/2022 22:20	11.45
6/22/2022 22:57	-0.08	6/23/2022 21:47	2.74	6/23/2022 22:10	7.04	6/23/2022 23:33	-0.32	6/22/2022 22:21	11.44
6/22/2022 22:58	-0.08	6/23/2022 21:48	2.74	6/23/2022 22:11	7.01	6/23/2022 23:34	-0.38	6/22/2022 22:22	11.40
6/22/2022 22:59	-0.08	6/23/2022 21:49	2.74	6/23/2022 22:12	7.00	6/23/2022 23:35	-0.35	6/22/2022 22:23	11.40
6/22/2022 23:00	-0.08	6/23/2022 21:50	2.74	6/23/2022 22:13	7.03	6/23/2022 23:36	-0.35	6/22/2022 22:24	11.39
6/22/2022 23:01	-0.08	6/23/2022 21:51	2.74	6/23/2022 22:14	6.97	6/23/2022 23:37	-0.31	6/22/2022 22:25	11.39
6/22/2022 23:02	-0.08	6/23/2022 21:52	2.74	6/23/2022 22:15	7.00	6/23/2022 23:38	-0.32	6/22/2022 22:26	11.40
6/22/2022 23:03	-0.07	6/23/2022 21:53	2.74	6/23/2022 22:16	6.99	6/23/2022 23:39	-0.31	6/22/2022 22:27	11.41
6/22/2022 23:04	-0.07	6/23/2022 21:54	2.74	6/23/2022 22:17	6.99	6/23/2022 23:40	-0.37	6/22/2022 22:28	11.42
6/22/2022 23:05	-0.08	6/23/2022 21:55	2.74	6/23/2022 22:18	6.99	6/23/2022 23:41	-0.31	6/22/2022 22:29	11.38
6/22/2022 23:06	-0.08	6/23/2022 21:56	2.74	6/23/2022 22:19	7.01	6/23/2022 23:42	-0.35	6/22/2022 22:30	11.45
6/22/2022 23:07	-0.08	6/23/2022 21:57	2.74	6/23/2022 22:20	6.97	6/23/2022 23:43	-0.33	6/22/2022 22:31	11.41
6/22/2022 23:08	-0.08	6/23/2022 21:58	2.74	6/23/2022 22:21	6.96	6/23/2022 23:44	-0.36	6/22/2022 22:32	11.36
6/22/2022 23:09	-0.08	6/23/2022 21:59	2.74	6/23/2022 22:22	6.97	6/23/2022 23:45	-0.33	6/22/2022 22:33	11.44
6/22/2022 23:10	-0.06	6/23/2022 22:00	2.73	6/23/2022 22:23	6.95	6/23/2022 23:46	-0.34	6/22/2022 22:34	11.39
6/22/2022 23:11	-0.07	6/23/2022 22:01	2.73	6/23/2022 22:24	6.95	6/23/2022 23:47	-0.33	6/22/2022 22:35	11.41
6/22/2022 23:12	-0.09	6/23/2022 22:02	2.73	6/23/2022 22:25	6.99	6/23/2022 23:48	-0.32	6/22/2022 22:36	11.38

6/22/2022 23:13	-0.08	6/23/2022 22:03	2.73	6/23/2022 22:26	6.99	6/23/2022 23:49	-0.33	6/22/2022 22:37	11.38
6/22/2022 23:14	-0.07	6/23/2022 22:04	2.73	6/23/2022 22:27	6.96	6/23/2022 23:50	-0.32	6/22/2022 22:38	11.38
6/22/2022 23:15	-0.08	6/23/2022 22:05	2.73	6/23/2022 22:28	6.98	6/23/2022 23:51	-0.35	6/22/2022 22:39	11.39
6/22/2022 23:16	-0.08	6/23/2022 22:06	2.73	6/23/2022 22:29	6.95	6/23/2022 23:52	-0.34	6/22/2022 22:40	11.42
6/22/2022 23:17	-0.08	6/23/2022 22:07	2.73	6/23/2022 22:30	6.97	6/23/2022 23:53	-0.31	6/22/2022 22:41	11.43
6/22/2022 23:18	-0.08	6/23/2022 22:08	2.73	6/23/2022 22:31	7.01	6/23/2022 23:54	-0.32	6/22/2022 22:42	11.41
6/22/2022 23:19	-0.08	6/23/2022 22:09	2.73	6/23/2022 22:32	6.97	6/23/2022 23:55	-0.34	6/22/2022 22:43	11.41
6/22/2022 23:20	-0.07	6/23/2022 22:10	2.73	6/23/2022 22:33	6.95	6/23/2022 23:56	-0.31	6/22/2022 22:44	11.42
6/22/2022 23:21	-0.08	6/23/2022 22:11	2.73	6/23/2022 22:34	6.95	6/23/2022 23:57	-0.34	6/22/2022 22:45	11.35
6/22/2022 23:22	-0.08	6/23/2022 22:12	2.73	6/23/2022 22:35	6.96	6/23/2022 23:58	-0.37	6/22/2022 22:46	11.42
6/22/2022 23:23	-0.08	6/23/2022 22:13	2.72	6/23/2022 22:36	6.99	6/23/2022 23:59	-0.33	6/22/2022 22:47	11.40
6/22/2022 23:24	-0.08	6/23/2022 22:14	2.72	6/23/2022 22:37	6.94	6/24/2022 0:00	-0.32	6/22/2022 22:48	11.40
6/22/2022 23:25	-0.08	6/23/2022 22:15	2.73	6/23/2022 22:38	6.97	6/24/2022 0:01	-0.36	6/22/2022 22:49	11.39
6/22/2022 23:26	-0.08	6/23/2022 22:16	2.72	6/23/2022 22:39	6.96	6/24/2022 0:02	-0.32	6/22/2022 22:50	11.37
6/22/2022 23:27	-0.08	6/23/2022 22:17	2.73	6/23/2022 22:40	6.93	6/24/2022 0:03	-0.31	6/22/2022 22:51	11.41
6/22/2022 23:28	-0.09	6/23/2022 22:18	2.72	6/23/2022 22:41	6.97	6/24/2022 0:04	-0.40	6/22/2022 22:52	11.45
6/22/2022 23:29	-0.08	6/23/2022 22:19	2.72	6/23/2022 22:42	6.95	6/24/2022 0:05	-0.35	6/22/2022 22:53	11.37
6/22/2022 23:30	-0.07	6/23/2022 22:20	2.72	6/23/2022 22:43	6.97	6/24/2022 0:06	-0.37	6/22/2022 22:54	11.40
6/22/2022 23:31	-0.06	6/23/2022 22:21	2.72	6/23/2022 22:44	6.97	6/24/2022 0:07	-0.34	6/22/2022 22:55	11.38
6/22/2022 23:32	-0.09	6/23/2022 22:22	2.72	6/23/2022 22:45	6.95	6/24/2022 0:08	-0.35	6/22/2022 22:56	11.39
6/22/2022 23:33	-0.08	6/23/2022 22:23	2.72	6/23/2022 22:46	6.98	6/24/2022 0:09	-0.37	6/22/2022 22:57	11.43
6/22/2022 23:34	-0.07	6/23/2022 22:24	2.72	6/23/2022 22:47	6.94	6/24/2022 0:10	-0.32	6/22/2022 22:58	11.39
6/22/2022 23:35	-0.08	6/23/2022 22:25	2.72	6/23/2022 22:48	6.93	6/24/2022 0:11	-0.37	6/22/2022 22:59	11.41
6/22/2022 23:36	-0.08	6/23/2022 22:26	2.72	6/23/2022 22:49	6.98	6/24/2022 0:12	-0.33	6/22/2022 23:00	11.45
6/22/2022 23:37	-0.07	6/23/2022 22:27	2.72	6/23/2022 22:50	6.98	6/24/2022 0:13	-0.37	6/22/2022 23:01	11.42
6/22/2022 23:38	-0.06	6/23/2022 22:28	2.72	6/23/2022 22:51	6.93	6/24/2022 0:14	-0.35	6/22/2022 23:02	11.43
6/22/2022 23:39	-0.07	6/23/2022 22:29	2.72	6/23/2022 22:52	6.97	6/24/2022 0:15	-0.35	6/22/2022 23:03	11.45
6/22/2022 23:40	-0.08	6/23/2022 22:30	2.72	6/23/2022 22:53	6.91	6/24/2022 0:16	-0.32	6/22/2022 23:04	11.35
6/22/2022 23:41	-0.08	6/23/2022 22:31	2.72	6/23/2022 22:54	6.94	6/24/2022 0:17	-0.38	6/22/2022 23:05	11.38
6/22/2022 23:42	-0.08	6/23/2022 22:32	2.71	6/23/2022 22:55	6.96	6/24/2022 0:18	-0.33	6/22/2022 23:06	11.47
6/22/2022 23:43	-0.06	6/23/2022 22:33	2.71	6/23/2022 22:56	6.93	6/24/2022 0:19	-0.32	6/22/2022 23:07	11.38
6/22/2022 23:44	-0.08	6/23/2022 22:34	2.71	6/23/2022 22:57	6.92	6/24/2022 0:20	-0.34	6/22/2022 23:08	11.39
6/22/2022 23:45	-0.08	6/23/2022 22:35	2.71	6/23/2022 22:58	6.92	6/24/2022 0:21	-0.35	6/22/2022 23:09	11.38
6/22/2022 23:46	-0.09	6/23/2022 22:36	2.71	6/23/2022 22:59	6.91	6/24/2022 0:22	-0.34	6/22/2022 23:10	11.41
6/22/2022 23:47	-0.07	6/23/2022 22:37	2.71	6/23/2022 23:00	6.90	6/24/2022 0:23	-0.37	6/22/2022 23:11	11.43
6/22/2022 23:48	-0.08	6/23/2022 22:38	2.71	6/23/2022 23:01	6.91	6/24/2022 0:24	-0.35	6/22/2022 23:12	11.38
6/22/2022 23:49	-0.07	6/23/2022 22:39	2.71	6/23/2022 23:02	6.97	6/24/2022 0:25	-0.34	6/22/2022 23:13	11.45
6/22/2022 23:50	-0.07	6/23/2022 22:40	2.71	6/23/2022 23:03	6.87	6/24/2022 0:26	-0.34	6/22/2022 23:14	11.41
6/22/2022 23:51	-0.07	6/23/2022 22:41	2.71	6/23/2022 23:04	6.90	6/24/2022 0:27	-0.35	6/22/2022 23:15	11.42
6/22/2022 23:52	-0.08	6/23/2022 22:42	2.71	6/23/2022 23:05	6.91	6/24/2022 0:28	-0.37	6/22/2022 23:16	11.42
6/22/2022 23:53	-0.08	6/23/2022 22:43	2.71	6/23/2022 23:06	6.88	6/24/2022 0:29	-0.32	6/22/2022 23:17	11.38
6/22/2022 23:54	-0.08	6/23/2022 22:44	2.71	6/23/2022 23:07	6.90	6/24/2022 0:30	-0.36	6/22/2022 23:18	11.40
6/22/2022 23:55	-0.07	6/23/2022 22:45	2.70	6/23/2022 23:08	6.94	6/24/2022 0:31	-0.35	6/22/2022 23:19	11.36
6/22/2022 23:56	-0.08	6/23/2022 22:46	2.70	6/23/2022 23:09	6.89	6/24/2022 0:32	-0.36	6/22/2022 23:20	11.42
6/22/2022 23:57	-0.08	6/23/2022 22:47	2.70	6/23/2022 23:10	6.88	6/24/2022 0:33	-0.35	6/22/2022 23:21	11.39
6/22/2022 23:58	-0.07	6/23/2022 22:48	2.70	6/23/2022 23:11	6.86	6/24/2022 0:34	-0.33	6/22/2022 23:22	11.43
6/22/2022 23:59	-0.08	6/23/2022 22:49	2.70	6/23/2022 23:12	6.90	6/24/2022 0:35	-0.35	6/22/2022 23:23	11.42
6/23/2022 0:00	-0.08	6/23/2022 22:50	2.70	6/23/2022 23:13	6.90	6/24/2022 0:36	-0.32	6/22/2022 23:24	11.43
6/23/2022 0:01	-0.07	6/23/2022 22:51	2.70	6/23/2022 23:14	6.90	6/24/2022 0:37	-0.35	6/22/2022 23:25	11.41
6/23/2022 0:02	-0.09	6/23/2022 22:52	2.70	6/23/2022 23:15	6.88	6/24/2022 0:38	-0.32	6/22/2022 23:26	11.39
6/23/2022 0:03	-0.07	6/23/2022 22:53	2.70	6/23/2022 23:16	6.91	6/24/2022 0:39	-0.37	6/22/2022 23:27	11.39
6/23/2022 0:04	-0.08	6/23/2022 22:54	2.70	6/23/2022 23:17	6.95	6/24/2022 0:40	-0.35	6/22/2022 23:28	11.37
6/23/2022 0:05	-0.08	6/23/2022 22:55	2.70	6/23/2022 23:18	6.90	6/24/2022 0:41	-0.34	6/22/2022 23:29	11.39
6/23/2022 0:06	-0.08	6/23/2022 22:56	2.70	6/23/2022 23:19	6.89	6/24/2022 0:42	-0.37	6/22/2022 23:30	11.40
6/23/2022 0:07	-0.07	6/23/2022 22:57	2.70	6/23/2022 23:20	6.84	6/24/2022 0:43	-0.32	6/22/2022 23:31	11.37
6/23/2022 0:08	-0.07	6/23/2022 22:58	2.70	6/23/2022 23:21	6.89	6/24/2022 0:44	-0.33	6/22/2022 23:32	11.43
6/23/2022 0:09	-0.07	6/23/2022 22:59	2.70	6/23/2022 23:22	6.91	6/24/2022 0:45	-0.37	6/22/2022 23:33	11.44
6/23/2022 0:10	-0.07	6/23/2022 23:00	2.69	6/23/2022 23:23	6.88	6/24/2022 0:46	-0.34	6/22/2022 23:34	11.42
6/23/2022 0:11	-0.08	6/23/2022 23:01	2.70	6/23/2022 23:24	6.84	6/24/2022 0:47	-0.37	6/22/2022 23:35	11.42
6/23/2022 0:12	-0.08	6/23/2022 23:02	2.69	6/23/2022 23:25	6.85	6/24/2022 0:48	-0.32	6/22/2022 23:36	11.39
6/23/2022 0:13	-0.07	6/23/2022 23:03	2.69	6/23/2022 23:26	6.88	6/24/2022 0:49	-0.33	6/22/2022 23:37	11.40
6/23/2022 0:14	-0.08	6/23/2022 23:04	2.69	6/23/2022 23:27	6.87	6/24/2022 0:50	-0.31	6/22/2022 23:38	11.40
6/23/2022 0:15	-0.08	6/23/2022 23:05	2.69	6/23/2022 23:28	6.87	6/24/2022 0:51	-0.31	6/22/2022 23:39	11.40
6/23/2022 0:16	-0.09	6/23/2022 23:06	2.69	6/23/2022 23:29	6.86	6/24/2022 0:52	-0.32	6/22/2022 23:40	11.39
6/23/2022 0:17	-0.08	6/23/2022 23:07	2.69	6/23/2022 23:30	6.86	6/24/2022 0:53	-0.32	6/22/2022 23:41	11.39
6/23/2022 0:18	-0.08	6/23/2022 23:08	2.69	6/23/2022 23:31	6.85	6/24/2022 0:54	-0.37	6/22/2022 23:42	11.36
6/23/2022 0:19	-0.09	6/23/2022 23:09	2.69	6/23/2022 23:32	6.84	6/24/2022 0:55	-0.34	6/22/2022 23:43	11.42
6/23/2022 0:20	-0.07	6/23/2022 23:10	2.69	6/23/2022 23:33	6.82	6/24/2022 0:56	-0.32	6/22/2022 23:44	11.41
6/23/2022 0:21	-0.07	6/23/2022 23:11	2.69	6/23/2022 23:34	6.85	6/24/2022 0:57	-0.35	6/22/2022 23:45	11.37
6/23/2022 0:22	-0.07	6/23/2022 23:12	2.69	6/23/2022 23:35	6.82	6/24/2022 0:58	-0.35	6/22/2022 23:46	11.38
6/23/2022 0:23	-0.09	6/23/2022 23:13	2.68	6/23/2022 23:36	6.84	6/24/2022 0:59	-0.36	6/22/2022 23:47	11.40
6/23/2022 0:24	-0.08	6/23/2022 23:14	2.69	6/23/2022 23:37	6.88	6/24/2022 1:00	-0.31	6/22/2022 23:48	11.37
6/23/2022 0:25	-0.07	6/23/2022 23:15	2.69	6/23/2022 23:38	6.85	6/24/2022 1:01	-0.31	6/22/2022 23:49	11.41
6/23/2022 0:26	-0.08	6/23/2022 23:16	2.69	6/23/2022 23:39	6.86	6/24/2022 1:02	-0.35	6/22/2022 23:50	11.38
6/23/2022 0:27	-0.08	6/23/2022 23:17	2.69	6/23/2022 23:40	6.83	6/24/2022 1:03	-0.35	6/22/2022 23:51	11.45
6/23/2022 0:28	-0.09	6/23/2022 23:18	2.68	6/23/2022 23:41	6.85	6/24/2022 1:04	-0.33	6/22/2022 23:52	11.43
6/23/2022 0:29	-0.09	6/23/2022 23:19	2.68	6/23/2022 23:42	6.84	6/24/2022 1:05	-0.32	6/22/2022 23:53	11.36
6/23/2022 0:30	-0.08	6/23/2022 23:20	2.68	6/23/2022 23:43	6.84	6/24/2022 1:06	-0.38	6/22/2022 23:54	11.38
6/23/2022 0:31	-0.09	6/23/2022 23:21	2.69	6/23/2022 23:44	6.85	6/24/2022 1:07	-0.33	6/22/2022 23:55	11.34
6/23/2022 0:32	-0.08	6/23/2022 23:22	2.69	6/23/2022 23:45	6.83	6/24/2022 1:08	-0.34	6/22/2022 23:56	11.40
6/23/2022 0:33	-0.08	6/23/2022 23:23	2.68	6/23/2022 23:46	6.84	6/24/2022 1:09	-0.35	6/22/2022 23:57	11.37
6/23/2022 0:34	-0.08	6/23/2022 23:24	2.68	6/23/2022 23:47	6.86	6/24/2022 1:10	-0.34	6/22/2022 23:58	11.42
6/23/2022 0:35	-0.07	6/23/2022 23:25	2.68	6/23/2022 23:48	6.79	6/24/2022 1:11	-0.37	6/22/2022 23:59	11.42
6/23/2022 0:36	-0.08	6/23/2022 23:26	2.68	6/23/2022 23:49	6.84	6/24/2022 1:12	-0.32	6/23/2022 0:00	11.36
6/23/2022 0:37	-0.08	6/23/2022 23:27	2.68	6/23/2022 23:50	6.82	6/24/2022 1:13	-0.38	6/23/2022 0:01	11.39
6/23/2022 0:38	-0.08	6/23/2022 23:28	2.68	6/23/2022 23:51	6.80	6/24/2022 1:14	-0.32	6/23/2022 0:02	11.43
6/23/2022 0:39	-0.08	6/23/2022 23:29	2.68	6/23/2022 23:52	6.85	6/24/2022 1:15	-0.35	6/23/2022 0:03	11.40
6/23/2022 0:40	-0.08	6/23/2022 23:30	2.68	6/23/2022 23:53	6.81	6/24/2022 1:16	-0.33	6/23/2022 0:04	11.39

6/23/2022 0:41	-0.07	6/23/2022 23:31	2.67	6/23/2022 23:54	6.87	6/24/2022 1:17	-0.39	6/23/2022 0:05	11.41
6/23/2022 0:42	-0.08	6/23/2022 23:32	2.68	6/23/2022 23:55	6.81	6/24/2022 1:18	-0.31	6/23/2022 0:06	11.35
6/23/2022 0:43	-0.07	6/23/2022 23:33	2.67	6/23/2022 23:56	6.79	6/24/2022 1:19	-0.33	6/23/2022 0:07	11.37
6/23/2022 0:44	-0.06	6/23/2022 23:34	2.67	6/23/2022 23:57	6.82	6/24/2022 1:20	-0.33	6/23/2022 0:08	11.41
6/23/2022 0:45	-0.08	6/23/2022 23:35	2.67	6/23/2022 23:58	6.77	6/24/2022 1:21	-0.39	6/23/2022 0:09	11.37
6/23/2022 0:46	-0.07	6/23/2022 23:36	2.67	6/23/2022 23:59	6.82	6/24/2022 1:22	-0.31	6/23/2022 0:10	11.38
6/23/2022 0:47	-0.08	6/23/2022 23:37	2.67	6/24/2022 0:00	6.80	6/24/2022 1:23	-0.31	6/23/2022 0:11	11.38
6/23/2022 0:48	-0.07	6/23/2022 23:38	2.67	6/24/2022 0:01	6.80	6/24/2022 1:24	-0.34	6/23/2022 0:12	11.43
6/23/2022 0:49	-0.07	6/23/2022 23:39	2.67	6/24/2022 0:02	6.83	6/24/2022 1:25	-0.35	6/23/2022 0:13	11.40
6/23/2022 0:50	-0.08	6/23/2022 23:40	2.67	6/24/2022 0:03	6.82	6/24/2022 1:26	-0.36	6/23/2022 0:14	11.38
6/23/2022 0:51	-0.06	6/23/2022 23:41	2.67	6/24/2022 0:04	6.82	6/24/2022 1:27	-0.34	6/23/2022 0:15	11.36
6/23/2022 0:52	-0.08	6/23/2022 23:42	2.67	6/24/2022 0:05	6.79	6/24/2022 1:28	-0.32	6/23/2022 0:16	11.38
6/23/2022 0:53	-0.07	6/23/2022 23:43	2.67	6/24/2022 0:06	6.79	6/24/2022 1:29	-0.35	6/23/2022 0:17	11.42
6/23/2022 0:54	-0.08	6/23/2022 23:44	2.67	6/24/2022 0:07	6.79	6/24/2022 1:30	-0.39	6/23/2022 0:18	11.37
6/23/2022 0:55	-0.08	6/23/2022 23:45	2.67	6/24/2022 0:08	6.78	6/24/2022 1:31	-0.33	6/23/2022 0:19	11.40
6/23/2022 0:56	-0.08	6/23/2022 23:46	2.67	6/24/2022 0:09	6.79	6/24/2022 1:32	-0.36	6/23/2022 0:20	11.35
6/23/2022 0:57	-0.08	6/23/2022 23:47	2.67	6/24/2022 0:10	6.79	6/24/2022 1:33	-0.32	6/23/2022 0:21	11.40
6/23/2022 0:58	-0.08	6/23/2022 23:48	2.67	6/24/2022 0:11	6.79	6/24/2022 1:34	-0.37	6/23/2022 0:22	11.42
6/23/2022 0:59	-0.07	6/23/2022 23:49	2.66	6/24/2022 0:12	6.81	6/24/2022 1:35	-0.32	6/23/2022 0:23	11.39
6/23/2022 1:00	-0.09	6/23/2022 23:50	2.66	6/24/2022 0:13	6.78	6/24/2022 1:36	-0.37	6/23/2022 0:24	11.38
6/23/2022 1:01	-0.07	6/23/2022 23:51	2.66	6/24/2022 0:14	6.80	6/24/2022 1:37	-0.35	6/23/2022 0:25	11.40
6/23/2022 1:02	-0.08	6/23/2022 23:52	2.66	6/24/2022 0:15	6.77	6/24/2022 1:38	-0.37	6/23/2022 0:26	11.40
6/23/2022 1:03	-0.09	6/23/2022 23:53	2.66	6/24/2022 0:16	6.79	6/24/2022 1:39	-0.29	6/23/2022 0:27	11.40
6/23/2022 1:04	-0.07	6/23/2022 23:54	2.66	6/24/2022 0:17	6.74	6/24/2022 1:40	-0.33	6/23/2022 0:28	11.40
6/23/2022 1:05	-0.07	6/23/2022 23:55	2.66	6/24/2022 0:18	6.79	6/24/2022 1:41	-0.35	6/23/2022 0:29	11.42
6/23/2022 1:06	-0.07	6/23/2022 23:56	2.66	6/24/2022 0:19	6.80	6/24/2022 1:42	-0.36	6/23/2022 0:30	11.42
6/23/2022 1:07	-0.08	6/23/2022 23:57	2.66	6/24/2022 0:20	6.75	6/24/2022 1:43	-0.32	6/23/2022 0:31	11.38
6/23/2022 1:08	-0.07	6/23/2022 23:58	2.66	6/24/2022 0:21	6.78	6/24/2022 1:44	-0.33	6/23/2022 0:32	11.36
6/23/2022 1:09	-0.08	6/23/2022 23:59	2.66	6/24/2022 0:22	6.78	6/24/2022 1:45	-0.30	6/23/2022 0:33	11.36
6/23/2022 1:10	-0.07	6/24/2022 0:00	2.66	6/24/2022 0:23	6.77	6/24/2022 1:46	-0.34	6/23/2022 0:34	11.35
6/23/2022 1:11	-0.09	6/24/2022 0:01	2.66	6/24/2022 0:24	6.80	6/24/2022 1:47	-0.32	6/23/2022 0:35	11.40
6/23/2022 1:12	-0.07	6/24/2022 0:02	2.66	6/24/2022 0:25	6.79	6/24/2022 1:48	-0.32	6/23/2022 0:36	11.39
6/23/2022 1:13	-0.09	6/24/2022 0:03	2.65	6/24/2022 0:26	6.76	6/24/2022 1:49	-0.34	6/23/2022 0:37	11.38
6/23/2022 1:14	-0.08	6/24/2022 0:04	2.65	6/24/2022 0:27	6.76	6/24/2022 1:50	-0.34	6/23/2022 0:38	11.38
6/23/2022 1:15	-0.08	6/24/2022 0:05	2.65	6/24/2022 0:28	6.76	6/24/2022 1:51	-0.35	6/23/2022 0:39	11.38
6/23/2022 1:16	-0.07	6/24/2022 0:06	2.65	6/24/2022 0:29	6.78	6/24/2022 1:52	-0.32	6/23/2022 0:40	11.39
6/23/2022 1:17	-0.08	6/24/2022 0:07	2.65	6/24/2022 0:30	6.76	6/24/2022 1:53	-0.36	6/23/2022 0:41	11.39
6/23/2022 1:18	-0.09	6/24/2022 0:08	2.65	6/24/2022 0:31	6.75	6/24/2022 1:54	-0.33	6/23/2022 0:42	11.40
6/23/2022 1:19	-0.08	6/24/2022 0:09	2.65	6/24/2022 0:32	6.76	6/24/2022 1:55	-0.39	6/23/2022 0:43	11.36
6/23/2022 1:20	-0.08	6/24/2022 0:10	2.65	6/24/2022 0:33	6.76	6/24/2022 1:56	-0.35	6/23/2022 0:44	11.39
6/23/2022 1:21	-0.08	6/24/2022 0:11	2.65	6/24/2022 0:34	6.72	6/24/2022 1:57	-0.35	6/23/2022 0:45	11.44
6/23/2022 1:22	-0.07	6/24/2022 0:12	2.65	6/24/2022 0:35	6.77	6/24/2022 1:58	-0.32	6/23/2022 0:46	11.42
6/23/2022 1:23	-0.07	6/24/2022 0:13	2.65	6/24/2022 0:36	6.75	6/24/2022 1:59	-0.33	6/23/2022 0:47	11.39
6/23/2022 1:24	-0.08	6/24/2022 0:14	2.65	6/24/2022 0:37	6.76	6/24/2022 2:00	-0.36	6/23/2022 0:48	11.38
6/23/2022 1:25	-0.08	6/24/2022 0:15	2.65	6/24/2022 0:38	6.74	6/24/2022 2:01	-0.38	6/23/2022 0:49	11.38
6/23/2022 1:26	-0.08	6/24/2022 0:16	2.65	6/24/2022 0:39	6.77	6/24/2022 2:02	-0.32	6/23/2022 0:50	11.42
6/23/2022 1:27	-0.09	6/24/2022 0:17	2.64	6/24/2022 0:40	6.71	6/24/2022 2:03	-0.35	6/23/2022 0:51	11.40
6/23/2022 1:28	-0.07	6/24/2022 0:18	2.64	6/24/2022 0:41	6.72	6/24/2022 2:04	-0.33	6/23/2022 0:52	11.38
6/23/2022 1:29	-0.07	6/24/2022 0:19	2.65	6/24/2022 0:42	6.73	6/24/2022 2:05	-0.35	6/23/2022 0:53	11.39
6/23/2022 1:30	-0.07	6/24/2022 0:20	2.65	6/24/2022 0:43	6.73	6/24/2022 2:06	-0.32	6/23/2022 0:54	11.42
6/23/2022 1:31	-0.09	6/24/2022 0:21	2.64	6/24/2022 0:44	6.78	6/24/2022 2:07	-0.32	6/23/2022 0:55	11.37
6/23/2022 1:32	-0.08	6/24/2022 0:22	2.64	6/24/2022 0:45	6.73	6/24/2022 2:08	-0.33	6/23/2022 0:56	11.38
6/23/2022 1:33	-0.07	6/24/2022 0:23	2.64	6/24/2022 0:46	6.76	6/24/2022 2:09	-0.36	6/23/2022 0:57	11.40
6/23/2022 1:34	-0.07	6/24/2022 0:24	2.64	6/24/2022 0:47	6.73	6/24/2022 2:10	-0.36	6/23/2022 0:58	11.37
6/23/2022 1:35	-0.07	6/24/2022 0:25	2.64	6/24/2022 0:48	6.75	6/24/2022 2:11	-0.34	6/23/2022 0:59	11.39
6/23/2022 1:36	-0.08	6/24/2022 0:26	2.64	6/24/2022 0:49	6.73	6/24/2022 2:12	-0.38	6/23/2022 1:00	11.40
6/23/2022 1:37	-0.07	6/24/2022 0:27	2.64	6/24/2022 0:50	6.72	6/24/2022 2:13	-0.35	6/23/2022 1:01	11.42
6/23/2022 1:38	-0.08	6/24/2022 0:28	2.64	6/24/2022 0:51	6.74	6/24/2022 2:14	-0.36	6/23/2022 1:02	11.37
6/23/2022 1:39	-0.07	6/24/2022 0:29	2.64	6/24/2022 0:52	6.71	6/24/2022 2:15	-0.35	6/23/2022 1:03	11.38
6/23/2022 1:40	-0.09	6/24/2022 0:30	2.64	6/24/2022 0:53	6.73	6/24/2022 2:16	-0.37	6/23/2022 1:04	11.41
6/23/2022 1:41	-0.09	6/24/2022 0:31	2.64	6/24/2022 0:54	6.69	6/24/2022 2:17	-0.33	6/23/2022 1:05	11.43
6/23/2022 1:42	-0.07	6/24/2022 0:32	2.64	6/24/2022 0:55	6.70	6/24/2022 2:18	-0.33	6/23/2022 1:06	11.41
6/23/2022 1:43	-0.09	6/24/2022 0:33	2.64	6/24/2022 0:56	6.72	6/24/2022 2:19	-0.38	6/23/2022 1:07	11.34
6/23/2022 1:44	-0.09	6/24/2022 0:34	2.63	6/24/2022 0:57	6.69	6/24/2022 2:20	-0.37	6/23/2022 1:08	11.41
6/23/2022 1:45	-0.07	6/24/2022 0:35	2.63	6/24/2022 0:58	6.70	6/24/2022 2:21	-0.36	6/23/2022 1:09	11.43
6/23/2022 1:46	-0.07	6/24/2022 0:36	2.63	6/24/2022 0:59	6.75	6/24/2022 2:22	-0.35	6/23/2022 1:10	11.40
6/23/2022 1:47	-0.09	6/24/2022 0:37	2.64	6/24/2022 1:00	6.70	6/24/2022 2:23	-0.35	6/23/2022 1:11	11.41
6/23/2022 1:48	-0.09	6/24/2022 0:38	2.63	6/24/2022 1:01	6.71	6/24/2022 2:24	-0.32	6/23/2022 1:12	11.36
6/23/2022 1:49	-0.09	6/24/2022 0:39	2.63	6/24/2022 1:02	6.68	6/24/2022 2:25	-0.32	6/23/2022 1:13	11.40
6/23/2022 1:50	-0.09	6/24/2022 0:40	2.63	6/24/2022 1:03	6.68	6/24/2022 2:26	-0.38	6/23/2022 1:14	11.42
6/23/2022 1:51	-0.07	6/24/2022 0:41	2.63	6/24/2022 1:04	6.68	6/24/2022 2:27	-0.34	6/23/2022 1:15	11.37
6/23/2022 1:52	-0.08	6/24/2022 0:42	2.63	6/24/2022 1:05	6.72	6/24/2022 2:28	-0.36	6/23/2022 1:16	11.38
6/23/2022 1:53	-0.08	6/24/2022 0:43	2.62	6/24/2022 1:06	6.71	6/24/2022 2:29	-0.35	6/23/2022 1:17	11.41
6/23/2022 1:54	-0.08	6/24/2022 0:44	2.63	6/24/2022 1:07	6.73	6/24/2022 2:30	-0.35	6/23/2022 1:18	11.38
6/23/2022 1:55	-0.08	6/24/2022 0:45	2.63	6/24/2022 1:08	6.69	6/24/2022 2:31	-0.33	6/23/2022 1:19	11.37
6/23/2022 1:56	-0.08	6/24/2022 0:46	2.62	6/24/2022 1:09	6.68	6/24/2022 2:32	-0.37	6/23/2022 1:20	11.36
6/23/2022 1:57	-0.08	6/24/2022 0:47	2.63	6/24/2022 1:10	6.65	6/24/2022 2:33	-0.36	6/23/2022 1:21	11.40
6/23/2022 1:58	-0.08	6/24/2022 0:48	2.63	6/24/2022 1:11	6.67	6/24/2022 2:34	-0.32	6/23/2022 1:22	11.41
6/23/2022 1:59	-0.07	6/24/2022 0:49	2.63	6/24/2022 1:12	6.72	6/24/2022 2:35	-0.32	6/23/2022 1:23	11.39
6/23/2022 2:00	-0.07	6/24/2022 0:50	2.63	6/24/2022 1:13	6.68	6/24/2022 2:36	-0.37	6/23/2022 1:24	11.39
6/23/2022 2:01	-0.07	6/24/2022 0:51	2.62	6/24/2022 1:14	6.70	6/24/2022 2:37	-0.36	6/23/2022 1:25	11.39
6/23/2022 2:02	-0.07	6/24/2022 0:52	2.62	6/24/2022 1:15	6.68	6/24/2022 2:38	-0.34	6/23/2022 1:26	11.39
6/23/2022 2:03	-0.08	6/24/2022 0:53	2.62	6/24/2022 1:16	6.67	6/24/2022 2:39	-0.35	6/23/2022 1:27	11.35
6/23/2022 2:04	-0.09	6/24/2022 0:54	2.62	6/24/2022 1:17	6.65	6/24/2022 2:40	-0.40	6/23/2022 1:28	11.39
6/23/2022 2:05	-0.09	6/24/2022 0:55	2.62	6/24/2022 1:18	6.72	6/24/2022 2:41	-0.39	6/23/2022 1:29	11.34
6/23/2022 2:06	-0.08	6/24/2022 0:56	2.62	6/24/2022 1:19	6.66	6/24/2022 2:42	-0.33	6/23/2022 1:30	11.41
6/23/2022 2:07	-0.07	6/24/2022 0:57	2.62	6/24/2022 1:20	6.69	6/24/2022 2:43	-0.36	6/23/2022 1:31	11.45
6/23/2022 2:08	-0.08	6/24/2022 0:58	2.62	6/24/2022 1:21	6.69	6/24/2022 2:44	-0.30	6/23/2022 1:32	11.41

6/23/2022 2:09	-0.09	6/24/2022 0:59	2.62	6/24/2022 1:22	6.68	6/24/2022 2:45	-0.30	6/23/2022 1:33	11.46
6/23/2022 2:10	-0.08	6/24/2022 1:00	2.62	6/24/2022 1:23	6.70	6/24/2022 2:46	-0.31	6/23/2022 1:34	11.43
6/23/2022 2:11	-0.08	6/24/2022 1:01	2.62	6/24/2022 1:24	6.69	6/24/2022 2:47	-0.34	6/23/2022 1:35	11.41
6/23/2022 2:12	-0.08	6/24/2022 1:02	2.62	6/24/2022 1:25	6.71	6/24/2022 2:48	-0.35	6/23/2022 1:36	11.43
6/23/2022 2:13	-0.07	6/24/2022 1:03	2.62	6/24/2022 1:26	6.64	6/24/2022 2:49	-0.32	6/23/2022 1:37	11.40
6/23/2022 2:14	-0.07	6/24/2022 1:04	2.61	6/24/2022 1:27	6.65	6/24/2022 2:50	-0.34	6/23/2022 1:38	11.38
6/23/2022 2:15	-0.08	6/24/2022 1:05	2.62	6/24/2022 1:28	6.64	6/24/2022 2:51	-0.34	6/23/2022 1:39	11.41
6/23/2022 2:16	-0.07	6/24/2022 1:06	2.61	6/24/2022 1:29	6.64	6/24/2022 2:52	-0.33	6/23/2022 1:40	11.39
6/23/2022 2:17	-0.08	6/24/2022 1:07	2.61	6/24/2022 1:30	6.70	6/24/2022 2:53	-0.33	6/23/2022 1:41	11.41
6/23/2022 2:18	-0.08	6/24/2022 1:08	2.61	6/24/2022 1:31	6.67	6/24/2022 2:54	-0.30	6/23/2022 1:42	11.40
6/23/2022 2:19	-0.07	6/24/2022 1:09	2.61	6/24/2022 1:32	6.66	6/24/2022 2:55	-0.35	6/23/2022 1:43	11.36
6/23/2022 2:20	-0.09	6/24/2022 1:10	2.61	6/24/2022 1:33	6.65	6/24/2022 2:56	-0.36	6/23/2022 1:44	11.42
6/23/2022 2:21	-0.07	6/24/2022 1:11	2.61	6/24/2022 1:34	6.66	6/24/2022 2:57	-0.34	6/23/2022 1:45	11.43
6/23/2022 2:22	-0.08	6/24/2022 1:12	2.61	6/24/2022 1:35	6.68	6/24/2022 2:58	-0.33	6/23/2022 1:46	11.42
6/23/2022 2:23	-0.07	6/24/2022 1:13	2.61	6/24/2022 1:36	6.62	6/24/2022 2:59	-0.31	6/23/2022 1:47	11.44
6/23/2022 2:24	-0.07	6/24/2022 1:14	2.61	6/24/2022 1:37	6.69	6/24/2022 3:00	-0.32	6/23/2022 1:48	11.40
6/23/2022 2:25	-0.07	6/24/2022 1:15	2.61	6/24/2022 1:38	6.66	6/24/2022 3:01	-0.32	6/23/2022 1:49	11.45
6/23/2022 2:26	-0.09	6/24/2022 1:16	2.61	6/24/2022 1:39	6.66	6/24/2022 3:02	-0.33	6/23/2022 1:50	11.39
6/23/2022 2:27	-0.08	6/24/2022 1:17	2.61	6/24/2022 1:40	6.66	6/24/2022 3:03	-0.35	6/23/2022 1:51	11.42
6/23/2022 2:28	-0.07	6/24/2022 1:18	2.61	6/24/2022 1:41	6.64	6/24/2022 3:04	-0.34	6/23/2022 1:52	11.38
6/23/2022 2:29	-0.09	6/24/2022 1:19	2.61	6/24/2022 1:42	6.67	6/24/2022 3:05	-0.36	6/23/2022 1:53	11.41
6/23/2022 2:30	-0.08	6/24/2022 1:20	2.61	6/24/2022 1:43	6.63	6/24/2022 3:06	-0.35	6/23/2022 1:54	11.43
6/23/2022 2:31	-0.07	6/24/2022 1:21	2.60	6/24/2022 1:44	6.63	6/24/2022 3:07	-0.36	6/23/2022 1:55	11.37
6/23/2022 2:32	-0.07	6/24/2022 1:22	2.61	6/24/2022 1:45	6.63	6/24/2022 3:08	-0.35	6/23/2022 1:56	11.42
6/23/2022 2:33	-0.07	6/24/2022 1:23	2.60	6/24/2022 1:46	6.66	6/24/2022 3:09	-0.36	6/23/2022 1:57	11.38
6/23/2022 2:34	-0.08	6/24/2022 1:24	2.61	6/24/2022 1:47	6.65	6/24/2022 3:10	-0.35	6/23/2022 1:58	11.37
6/23/2022 2:35	-0.08	6/24/2022 1:25	2.60	6/24/2022 1:48	6.63	6/24/2022 3:11	-0.33	6/23/2022 1:59	11.37
6/23/2022 2:36	-0.09	6/24/2022 1:26	2.60	6/24/2022 1:49	6.61	6/24/2022 3:12	-0.34	6/23/2022 2:00	11.39
6/23/2022 2:37	-0.09	6/24/2022 1:27	2.60	6/24/2022 1:50	6.60	6/24/2022 3:13	-0.36	6/23/2022 2:01	11.38
6/23/2022 2:38	-0.07	6/24/2022 1:28	2.60	6/24/2022 1:51	6.62	6/24/2022 3:14	-0.34	6/23/2022 2:02	11.40
6/23/2022 2:39	-0.08	6/24/2022 1:29	2.60	6/24/2022 1:52	6.62	6/24/2022 3:15	-0.36	6/23/2022 2:03	11.39
6/23/2022 2:40	-0.07	6/24/2022 1:30	2.60	6/24/2022 1:53	6.63	6/24/2022 3:16	-0.31	6/23/2022 2:04	11.34
6/23/2022 2:41	-0.08	6/24/2022 1:31	2.60	6/24/2022 1:54	6.62	6/24/2022 3:17	-0.38	6/23/2022 2:05	11.42
6/23/2022 2:42	-0.08	6/24/2022 1:32	2.60	6/24/2022 1:55	6.60	6/24/2022 3:18	-0.34	6/23/2022 2:06	11.39
6/23/2022 2:43	-0.09	6/24/2022 1:33	2.60	6/24/2022 1:56	6.62	6/24/2022 3:19	-0.34	6/23/2022 2:07	11.40
6/23/2022 2:44	-0.08	6/24/2022 1:34	2.60	6/24/2022 1:57	6.64	6/24/2022 3:20	-0.34	6/23/2022 2:08	11.40
6/23/2022 2:45	-0.08	6/24/2022 1:35	2.60	6/24/2022 1:58	6.60	6/24/2022 3:21	-0.31	6/23/2022 2:09	11.43
6/23/2022 2:46	-0.08	6/24/2022 1:36	2.60	6/24/2022 1:59	6.60	6/24/2022 3:22	-0.36	6/23/2022 2:10	11.40
6/23/2022 2:47	-0.08	6/24/2022 1:37	2.60	6/24/2022 2:00	6.62	6/24/2022 3:23	-0.35	6/23/2022 2:11	11.41
6/23/2022 2:48	-0.08	6/24/2022 1:38	2.60	6/24/2022 2:01	6.58	6/24/2022 3:24	-0.35	6/23/2022 2:12	11.44
6/23/2022 2:49	-0.09	6/24/2022 1:39	2.60	6/24/2022 2:02	6.61	6/24/2022 3:25	-0.35	6/23/2022 2:13	11.42
6/23/2022 2:50	-0.07	6/24/2022 1:40	2.60	6/24/2022 2:03	6.61	6/24/2022 3:26	-0.35	6/23/2022 2:14	11.36
6/23/2022 2:51	-0.09	6/24/2022 1:41	2.59	6/24/2022 2:04	6.62	6/24/2022 3:27	-0.32	6/23/2022 2:15	11.35
6/23/2022 2:52	-0.07	6/24/2022 1:42	2.59	6/24/2022 2:05	6.59	6/24/2022 3:28	-0.34	6/23/2022 2:16	11.38
6/23/2022 2:53	-0.08	6/24/2022 1:43	2.59	6/24/2022 2:06	6.60	6/24/2022 3:29	-0.31	6/23/2022 2:17	11.43
6/23/2022 2:54	-0.08	6/24/2022 1:44	2.59	6/24/2022 2:07	6.59	6/24/2022 3:30	-0.34	6/23/2022 2:18	11.42
6/23/2022 2:55	-0.07	6/24/2022 1:45	2.59	6/24/2022 2:08	6.58	6/24/2022 3:31	-0.35	6/23/2022 2:19	11.44
6/23/2022 2:56	-0.08	6/24/2022 1:46	2.59	6/24/2022 2:09	6.55	6/24/2022 3:32	-0.37	6/23/2022 2:20	11.42
6/23/2022 2:57	-0.07	6/24/2022 1:47	2.59	6/24/2022 2:10	6.59	6/24/2022 3:33	-0.32	6/23/2022 2:21	11.39
6/23/2022 2:58	-0.08	6/24/2022 1:48	2.59	6/24/2022 2:11	6.62	6/24/2022 3:34	-0.35	6/23/2022 2:22	11.42
6/23/2022 2:59	-0.08	6/24/2022 1:49	2.59	6/24/2022 2:12	6.57	6/24/2022 3:35	-0.36	6/23/2022 2:23	11.41
6/23/2022 3:00	-0.08	6/24/2022 1:50	2.59	6/24/2022 2:13	6.63	6/24/2022 3:36	-0.38	6/23/2022 2:24	11.41
6/23/2022 3:01	-0.08	6/24/2022 1:51	2.59	6/24/2022 2:14	6.60	6/24/2022 3:37	-0.32	6/23/2022 2:25	11.40
6/23/2022 3:02	-0.09	6/24/2022 1:52	2.59	6/24/2022 2:15	6.57	6/24/2022 3:38	-0.35	6/23/2022 2:26	11.39
6/23/2022 3:03	-0.09	6/24/2022 1:53	2.58	6/24/2022 2:16	6.55	6/24/2022 3:39	-0.35	6/23/2022 2:27	11.37
6/23/2022 3:04	-0.07	6/24/2022 1:54	2.58	6/24/2022 2:17	6.59	6/24/2022 3:40	-0.38	6/23/2022 2:28	11.40
6/23/2022 3:05	-0.07	6/24/2022 1:55	2.59	6/24/2022 2:18	6.63	6/24/2022 3:41	-0.36	6/23/2022 2:29	11.43
6/23/2022 3:06	-0.08	6/24/2022 1:56	2.58	6/24/2022 2:19	6.62	6/24/2022 3:42	-0.37	6/23/2022 2:30	11.47
6/23/2022 3:07	-0.07	6/24/2022 1:57	2.58	6/24/2022 2:20	6.60	6/24/2022 3:43	-0.36	6/23/2022 2:31	11.45
6/23/2022 3:08	-0.08	6/24/2022 1:58	2.58	6/24/2022 2:21	6.60	6/24/2022 3:44	-0.37	6/23/2022 2:32	11.41
6/23/2022 3:09	-0.08	6/24/2022 1:59	2.58	6/24/2022 2:22	6.59	6/24/2022 3:45	-0.33	6/23/2022 2:33	11.39
6/23/2022 3:10	-0.08	6/24/2022 2:00	2.58	6/24/2022 2:23	6.57	6/24/2022 3:46	-0.34	6/23/2022 2:34	11.41
6/23/2022 3:11	-0.08	6/24/2022 2:01	2.58	6/24/2022 2:24	6.56	6/24/2022 3:47	-0.33	6/23/2022 2:35	11.38
6/23/2022 3:12	-0.07	6/24/2022 2:02	2.58	6/24/2022 2:25	6.62	6/24/2022 3:48	-0.35	6/23/2022 2:36	11.39
6/23/2022 3:13	-0.07	6/24/2022 2:03	2.58	6/24/2022 2:26	6.59	6/24/2022 3:49	-0.35	6/23/2022 2:37	11.39
6/23/2022 3:14	-0.07	6/24/2022 2:04	2.58	6/24/2022 2:27	6.55	6/24/2022 3:50	-0.34	6/23/2022 2:38	11.43
6/23/2022 3:15	-0.08	6/24/2022 2:05	2.58	6/24/2022 2:28	6.58	6/24/2022 3:51	-0.35	6/23/2022 2:39	11.42
6/23/2022 3:16	-0.09	6/24/2022 2:06	2.58	6/24/2022 2:29	6.60	6/24/2022 3:52	-0.33	6/23/2022 2:40	11.38
6/23/2022 3:17	-0.08	6/24/2022 2:07	2.58	6/24/2022 2:30	6.59	6/24/2022 3:53	-0.34	6/23/2022 2:41	11.41
6/23/2022 3:18	-0.09	6/24/2022 2:08	2.58	6/24/2022 2:31	6.56	6/24/2022 3:54	-0.32	6/23/2022 2:42	11.39
6/23/2022 3:19	-0.07	6/24/2022 2:09	2.57	6/24/2022 2:32	6.58	6/24/2022 3:55	-0.35	6/23/2022 2:43	11.42
6/23/2022 3:20	-0.09	6/24/2022 2:10	2.58	6/24/2022 2:33	6.57	6/24/2022 3:56	-0.35	6/23/2022 2:44	11.39
6/23/2022 3:21	-0.09	6/24/2022 2:11	2.58	6/24/2022 2:34	6.57	6/24/2022 3:57	-0.37	6/23/2022 2:45	11.42
6/23/2022 3:22	-0.07	6/24/2022 2:12	2.58	6/24/2022 2:35	6.58	6/24/2022 3:58	-0.33	6/23/2022 2:46	11.44
6/23/2022 3:23	-0.09	6/24/2022 2:13	2.57	6/24/2022 2:36	6.55	6/24/2022 3:59	-0.35	6/23/2022 2:47	11.37
6/23/2022 3:24	-0.07	6/24/2022 2:14	2.58	6/24/2022 2:37	6.57	6/24/2022 4:00	-0.35	6/23/2022 2:48	11.40
6/23/2022 3:25	-0.07	6/24/2022 2:15	2.57	6/24/2022 2:38	6.53	6/24/2022 4:01	-0.33	6/23/2022 2:49	11.42
6/23/2022 3:26	-0.08	6/24/2022 2:16	2.58	6/24/2022 2:39	6.59	6/24/2022 4:02	-0.37	6/23/2022 2:50	11.38
6/23/2022 3:27	-0.09	6/24/2022 2:17	2.57	6/24/2022 2:40	6.55	6/24/2022 4:03	-0.33	6/23/2022 2:51	11.38
6/23/2022 3:28	-0.08	6/24/2022 2:18	2.57	6/24/2022 2:41	6.52	6/24/2022 4:04	-0.37	6/23/2022 2:52	11.41
6/23/2022 3:29	-0.07	6/24/2022 2:19	2.57	6/24/2022 2:42	6.54	6/24/2022 4:05	-0.33	6/23/2022 2:53	11.41
6/23/2022 3:30	-0.07	6/24/2022 2:20	2.57	6/24/2022 2:43	6.53	6/24/2022 4:06	-0.36	6/23/2022 2:54	11.41
6/23/2022 3:31	-0.07	6/24/2022 2:21	2.57	6/24/2022 2:44	6.54	6/24/2022 4:07	-0.36	6/23/2022 2:55	11.40
6/23/2022 3:32	-0.08	6/24/2022 2:22	2.57	6/24/2022 2:45	6.54	6/24/2022 4:08	-0.37	6/23/2022 2:56	11.38
6/23/2022 3:33	-0.07	6/24/2022 2:23	2.57	6/24/2022 2:46	6.53	6/24/2022 4:09	-0.32	6/23/2022 2:57	11.36
6/23/2022 3:34	-0.07	6/24/2022 2:24	2.57	6/24/2022 2:47	6.52	6/24/2022 4:10	-0.31	6/23/2022 2:58	11.41
6/23/2022 3:35	-0.08	6/24/2022 2:25	2.57	6/24/2022 2:48	6.52	6/24/2022 4:11	-0.32	6/23/2022 2:59	11.40
6/23/2022 3:36	-0.08	6/24/2022 2:26	2.57	6/24/2022 2:49	6.52	6/24/2022 4:12	-0.37	6/23/2022 3:00	11.36

6/23/2022 3:37	-0.07	6/24/2022 2:27	2.57	6/24/2022 2:50	6.56	6/24/2022 4:13	-0.30	6/23/2022 3:01	11.44
6/23/2022 3:38	-0.08	6/24/2022 2:28	2.57	6/24/2022 2:51	6.58	6/24/2022 4:14	-0.32	6/23/2022 3:02	11.41
6/23/2022 3:39	-0.07	6/24/2022 2:29	2.57	6/24/2022 2:52	6.51	6/24/2022 4:15	-0.32	6/23/2022 3:03	11.45
6/23/2022 3:40	-0.09	6/24/2022 2:30	2.56	6/24/2022 2:53	6.53	6/24/2022 4:16	-0.31	6/23/2022 3:04	11.42
6/23/2022 3:41	-0.07	6/24/2022 2:31	2.56	6/24/2022 2:54	6.56	6/24/2022 4:17	-0.35	6/23/2022 3:05	11.39
6/23/2022 3:42	-0.07	6/24/2022 2:32	2.57	6/24/2022 2:55	6.59	6/24/2022 4:18	-0.35	6/23/2022 3:06	11.43
6/23/2022 3:43	-0.07	6/24/2022 2:33	2.57	6/24/2022 2:56	6.52	6/24/2022 4:19	-0.36	6/23/2022 3:07	11.41
6/23/2022 3:44	-0.09	6/24/2022 2:34	2.57	6/24/2022 2:57	6.50	6/24/2022 4:20	-0.32	6/23/2022 3:08	11.40
6/23/2022 3:45	-0.09	6/24/2022 2:35	2.56	6/24/2022 2:58	6.52	6/24/2022 4:21	-0.32	6/23/2022 3:09	11.44
6/23/2022 3:46	-0.07	6/24/2022 2:36	2.57	6/24/2022 2:59	6.53	6/24/2022 4:22	-0.35	6/23/2022 3:10	11.40
6/23/2022 3:47	-0.07	6/24/2022 2:37	2.56	6/24/2022 3:00	6.54	6/24/2022 4:23	-0.35	6/23/2022 3:11	11.37
6/23/2022 3:48	-0.09	6/24/2022 2:38	2.56	6/24/2022 3:01	6.53	6/24/2022 4:24	-0.33	6/23/2022 3:12	11.41
6/23/2022 3:49	-0.08	6/24/2022 2:39	2.56	6/24/2022 3:02	6.55	6/24/2022 4:25	-0.35	6/23/2022 3:13	11.39
6/23/2022 3:50	-0.08	6/24/2022 2:40	2.56	6/24/2022 3:03	6.56	6/24/2022 4:26	-0.38	6/23/2022 3:14	11.40
6/23/2022 3:51	-0.07	6/24/2022 2:41	2.56	6/24/2022 3:04	6.54	6/24/2022 4:27	-0.32	6/23/2022 3:15	11.40
6/23/2022 3:52	-0.08	6/24/2022 2:42	2.56	6/24/2022 3:05	6.50	6/24/2022 4:28	-0.34	6/23/2022 3:16	11.44
6/23/2022 3:53	-0.09	6/24/2022 2:43	2.56	6/24/2022 3:06	6.53	6/24/2022 4:29	-0.35	6/23/2022 3:17	11.42
6/23/2022 3:54	-0.07	6/24/2022 2:44	2.56	6/24/2022 3:07	6.51	6/24/2022 4:30	-0.35	6/23/2022 3:18	11.41
6/23/2022 3:55	-0.09	6/24/2022 2:45	2.56	6/24/2022 3:08	6.53	6/24/2022 4:31	-0.38	6/23/2022 3:19	11.35
6/23/2022 3:56	-0.08	6/24/2022 2:46	2.56	6/24/2022 3:09	6.51	6/24/2022 4:32	-0.32	6/23/2022 3:20	11.35
6/23/2022 3:57	-0.09	6/24/2022 2:47	2.56	6/24/2022 3:10	6.55	6/24/2022 4:33	-0.35	6/23/2022 3:21	11.42
6/23/2022 3:58	-0.07	6/24/2022 2:48	2.56	6/24/2022 3:11	6.54	6/24/2022 4:34	-0.35	6/23/2022 3:22	11.36
6/23/2022 3:59	-0.09	6/24/2022 2:49	2.56	6/24/2022 3:12	6.50	6/24/2022 4:35	-0.37	6/23/2022 3:23	11.42
6/23/2022 4:00	-0.07	6/24/2022 2:50	2.56	6/24/2022 3:13	6.51	6/24/2022 4:36	-0.34	6/23/2022 3:24	11.36
6/23/2022 4:01	-0.07	6/24/2022 2:51	2.55	6/24/2022 3:14	6.51	6/24/2022 4:37	-0.38	6/23/2022 3:25	11.34
6/23/2022 4:02	-0.09	6/24/2022 2:52	2.55	6/24/2022 3:15	6.51	6/24/2022 4:38	-0.35	6/23/2022 3:26	11.39
6/23/2022 4:03	-0.08	6/24/2022 2:53	2.56	6/24/2022 3:16	6.52	6/24/2022 4:39	-0.33	6/23/2022 3:27	11.40
6/23/2022 4:04	-0.08	6/24/2022 2:54	2.55	6/24/2022 3:17	6.49	6/24/2022 4:40	-0.31	6/23/2022 3:28	11.36
6/23/2022 4:05	-0.06	6/24/2022 2:55	2.55	6/24/2022 3:18	6.50	6/24/2022 4:41	-0.31	6/23/2022 3:29	11.46
6/23/2022 4:06	-0.08	6/24/2022 2:56	2.55	6/24/2022 3:19	6.53	6/24/2022 4:42	-0.35	6/23/2022 3:30	11.41
6/23/2022 4:07	-0.08	6/24/2022 2:57	2.55	6/24/2022 3:20	6.49	6/24/2022 4:43	-0.35	6/23/2022 3:31	11.40
6/23/2022 4:08	-0.07	6/24/2022 2:58	2.55	6/24/2022 3:21	6.47	6/24/2022 4:44	-0.34	6/23/2022 3:32	11.39
6/23/2022 4:09	-0.09	6/24/2022 2:59	2.55	6/24/2022 3:22	6.50	6/24/2022 4:45	-0.32	6/23/2022 3:33	11.41
6/23/2022 4:10	-0.09	6/24/2022 3:00	2.55	6/24/2022 3:23	6.48	6/24/2022 4:46	-0.32	6/23/2022 3:34	11.42
6/23/2022 4:11	-0.08	6/24/2022 3:01	2.55	6/24/2022 3:24	6.51	6/24/2022 4:47	-0.35	6/23/2022 3:35	11.41
6/23/2022 4:12	-0.09	6/24/2022 3:02	2.55	6/24/2022 3:25	6.49	6/24/2022 4:48	-0.33	6/23/2022 3:36	11.41
6/23/2022 4:13	-0.08	6/24/2022 3:03	2.55	6/24/2022 3:26	6.51	6/24/2022 4:49	-0.32	6/23/2022 3:37	11.42
6/23/2022 4:14	-0.08	6/24/2022 3:04	2.55	6/24/2022 3:27	6.45	6/24/2022 4:50	-0.32	6/23/2022 3:38	11.37
6/23/2022 4:15	-0.08	6/24/2022 3:05	2.55	6/24/2022 3:28	6.49	6/24/2022 4:51	-0.35	6/23/2022 3:39	11.42
6/23/2022 4:16	-0.08	6/24/2022 3:06	2.55	6/24/2022 3:29	6.48	6/24/2022 4:52	-0.32	6/23/2022 3:40	11.38
6/23/2022 4:17	-0.07	6/24/2022 3:07	2.55	6/24/2022 3:30	6.50	6/24/2022 4:53	-0.34	6/23/2022 3:41	11.39
6/23/2022 4:18	-0.09	6/24/2022 3:08	2.55	6/24/2022 3:31	6.48	6/24/2022 4:54	-0.35	6/23/2022 3:42	11.34
6/23/2022 4:19	-0.08	6/24/2022 3:09	2.55	6/24/2022 3:32	6.46	6/24/2022 4:55	-0.35	6/23/2022 3:43	11.36
6/23/2022 4:20	-0.09	6/24/2022 3:10	2.54	6/24/2022 3:33	6.48	6/24/2022 4:56	-0.35	6/23/2022 3:44	11.39
6/23/2022 4:21	-0.07	6/24/2022 3:11	2.55	6/24/2022 3:34	6.47	6/24/2022 4:57	-0.35	6/23/2022 3:45	11.42
6/23/2022 4:22	-0.08	6/24/2022 3:12	2.55	6/24/2022 3:35	6.52	6/24/2022 4:58	-0.32	6/23/2022 3:46	11.40
6/23/2022 4:23	-0.07	6/24/2022 3:13	2.55	6/24/2022 3:36	6.43	6/24/2022 4:59	-0.38	6/23/2022 3:47	11.39
6/23/2022 4:24	-0.08	6/24/2022 3:14	2.54	6/24/2022 3:37	6.51	6/24/2022 5:00	-0.35	6/23/2022 3:48	11.40
6/23/2022 4:25	-0.08	6/24/2022 3:15	2.54	6/24/2022 3:38	6.48	6/24/2022 5:01	-0.36	6/23/2022 3:49	11.40
6/23/2022 4:26	-0.08	6/24/2022 3:16	2.54	6/24/2022 3:39	6.47	6/24/2022 5:02	-0.32	6/23/2022 3:50	11.36
6/23/2022 4:27	-0.08	6/24/2022 3:17	2.54	6/24/2022 3:40	6.47	6/24/2022 5:03	-0.33	6/23/2022 3:51	11.40
6/23/2022 4:28	-0.07	6/24/2022 3:18	2.54	6/24/2022 3:41	6.43	6/24/2022 5:04	-0.33	6/23/2022 3:52	11.42
6/23/2022 4:29	-0.07	6/24/2022 3:19	2.54	6/24/2022 3:42	6.48	6/24/2022 5:05	-0.35	6/23/2022 3:53	11.39
6/23/2022 4:30	-0.08	6/24/2022 3:20	2.54	6/24/2022 3:43	6.47	6/24/2022 5:06	-0.37	6/23/2022 3:54	11.38
6/23/2022 4:31	-0.07	6/24/2022 3:21	2.54	6/24/2022 3:44	6.46	6/24/2022 5:07	-0.38	6/23/2022 3:55	11.38
6/23/2022 4:32	-0.07	6/24/2022 3:22	2.54	6/24/2022 3:45	6.44	6/24/2022 5:08	-0.35	6/23/2022 3:56	11.38
6/23/2022 4:33	-0.07	6/24/2022 3:23	2.54	6/24/2022 3:46	6.44	6/24/2022 5:09	-0.32	6/23/2022 3:57	11.36
6/23/2022 4:34	-0.08	6/24/2022 3:24	2.54	6/24/2022 3:47	6.44	6/24/2022 5:10	-0.34	6/23/2022 3:58	11.39
6/23/2022 4:35	-0.07	6/24/2022 3:25	2.54	6/24/2022 3:48	6.45	6/24/2022 5:11	-0.34	6/23/2022 3:59	11.42
6/23/2022 4:36	-0.07	6/24/2022 3:26	2.54	6/24/2022 3:49	6.48	6/24/2022 5:12	-0.32	6/23/2022 4:00	11.40
6/23/2022 4:37	-0.07	6/24/2022 3:27	2.53	6/24/2022 3:50	6.41	6/24/2022 5:13	-0.32	6/23/2022 4:01	11.40
6/23/2022 4:38	-0.08	6/24/2022 3:28	2.54	6/24/2022 3:51	6.45	6/24/2022 5:14	-0.36	6/23/2022 4:02	11.39
6/23/2022 4:39	-0.08	6/24/2022 3:29	2.53	6/24/2022 3:52	6.45	6/24/2022 5:15	-0.33	6/23/2022 4:03	11.43
6/23/2022 4:40	-0.07	6/24/2022 3:30	2.54	6/24/2022 3:53	6.47	6/24/2022 5:16	-0.34	6/23/2022 4:04	11.44
6/23/2022 4:41	-0.07	6/24/2022 3:31	2.54	6/24/2022 3:54	6.45	6/24/2022 5:17	-0.33	6/23/2022 4:05	11.38
6/23/2022 4:42	-0.07	6/24/2022 3:32	2.54	6/24/2022 3:55	6.49	6/24/2022 5:18	-0.35	6/23/2022 4:06	11.37
6/23/2022 4:43	-0.09	6/24/2022 3:33	2.54	6/24/2022 3:56	6.46	6/24/2022 5:19	-0.36	6/23/2022 4:07	11.38
6/23/2022 4:44	-0.08	6/24/2022 3:34	2.53	6/24/2022 3:57	6.46	6/24/2022 5:20	-0.36	6/23/2022 4:08	11.44
6/23/2022 4:45	-0.07	6/24/2022 3:35	2.53	6/24/2022 3:58	6.42	6/24/2022 5:21	-0.33	6/23/2022 4:09	11.38
6/23/2022 4:46	-0.07	6/24/2022 3:36	2.53	6/24/2022 3:59	6.43	6/24/2022 5:22	-0.37	6/23/2022 4:10	11.43
6/23/2022 4:47	-0.08	6/24/2022 3:37	2.53	6/24/2022 4:00	6.43	6/24/2022 5:23	-0.35	6/23/2022 4:11	11.43
6/23/2022 4:48	-0.08	6/24/2022 3:38	2.53	6/24/2022 4:01	6.43	6/24/2022 5:24	-0.38	6/23/2022 4:12	11.41
6/23/2022 4:49	-0.08	6/24/2022 3:39	2.53	6/24/2022 4:02	6.45	6/24/2022 5:25	-0.33	6/23/2022 4:13	11.45
6/23/2022 4:50	-0.08	6/24/2022 3:40	2.53	6/24/2022 4:03	6.44	6/24/2022 5:26	-0.34	6/23/2022 4:14	11.39
6/23/2022 4:51	-0.07	6/24/2022 3:41	2.53	6/24/2022 4:04	6.42	6/24/2022 5:27	-0.33	6/23/2022 4:15	11.38
6/23/2022 4:52	-0.08	6/24/2022 3:42	2.53	6/24/2022 4:05	6.48	6/24/2022 5:28	-0.34	6/23/2022 4:16	11.43
6/23/2022 4:53	-0.08	6/24/2022 3:43	2.53	6/24/2022 4:06	6.44	6/24/2022 5:29	-0.37	6/23/2022 4:17	11.40
6/23/2022 4:54	-0.08	6/24/2022 3:44	2.53	6/24/2022 4:07	6.38	6/24/2022 5:30	-0.37	6/23/2022 4:18	11.40
6/23/2022 4:55	-0.08	6/24/2022 3:45	2.54	6/24/2022 4:08	6.44	6/24/2022 5:31	-0.32	6/23/2022 4:19	11.41
6/23/2022 4:56	-0.08	6/24/2022 3:46	2.53	6/24/2022 4:09	6.44	6/24/2022 5:32	-0.32	6/23/2022 4:20	11.36
6/23/2022 4:57	-0.09	6/24/2022 3:47	2.53	6/24/2022 4:10	6.43	6/24/2022 5:33	-0.38	6/23/2022 4:21	11.39
6/23/2022 4:58	-0.08	6/24/2022 3:48	2.53	6/24/2022 4:11	6.41	6/24/2022 5:34	-0.33	6/23/2022 4:22	11.43
6/23/2022 4:59	-0.08	6/24/2022 3:49	2.53	6/24/2022 4:12	6.43	6/24/2022 5:35	-0.33	6/23/2022 4:23	11.35
6/23/2022 5:00	-0.07	6/24/2022 3:50	2.53	6/24/2022 4:13	6.43	6/24/2022 5:36	-0.35	6/23/2022 4:24	11.37
6/23/2022 5:01	-0.07	6/24/2022 3:51	2.53	6/24/2022 4:14	6.42	6/24/2022 5:37	-0.32	6/23/2022 4:25	11.37
6/23/2022 5:02	-0.07	6/24/2022 3:52	2.53	6/24/2022 4:15	6.40	6/24/2022 5:38	-0.36	6/23/2022 4:26	11.39
6/23/2022 5:03	-0.07	6/24/2022 3:53	2.53	6/24/2022 4:16	6.39	6/24/2022 5:39	-0.35	6/23/2022 4:27	11.38
6/23/2022 5:04	-0.07	6/24/2022 3:54	2.52	6/24/2022 4:17	6.41	6/24/2022 5:40	-0.35	6/23/2022 4:28	11.41

6/23/2022 5:05	-0.09	6/24/2022 3:55	2.52	6/24/2022 4:18	6.45	6/24/2022 5:41	-0.32	6/23/2022 4:29	11.41
6/23/2022 5:06	-0.08	6/24/2022 3:56	2.52	6/24/2022 4:19	6.44	6/24/2022 5:42	-0.35	6/23/2022 4:30	11.40
6/23/2022 5:07	-0.09	6/24/2022 3:57	2.52	6/24/2022 4:20	6.39	6/24/2022 5:43	-0.36	6/23/2022 4:31	11.38
6/23/2022 5:08	-0.07	6/24/2022 3:58	2.53	6/24/2022 4:21	6.45	6/24/2022 5:44	-0.35	6/23/2022 4:32	11.42
6/23/2022 5:09	-0.08	6/24/2022 3:59	2.52	6/24/2022 4:22	6.40	6/24/2022 5:45	-0.34	6/23/2022 4:33	11.42
6/23/2022 5:10	-0.08	6/24/2022 4:00	2.52	6/24/2022 4:23	6.41	6/24/2022 5:46	-0.31	6/23/2022 4:34	11.45
6/23/2022 5:11	-0.07	6/24/2022 4:01	2.52	6/24/2022 4:24	6.42	6/24/2022 5:47	-0.37	6/23/2022 4:35	11.36
6/23/2022 5:12	-0.08	6/24/2022 4:02	2.52	6/24/2022 4:25	6.40	6/24/2022 5:48	-0.35	6/23/2022 4:36	11.39
6/23/2022 5:13	-0.08	6/24/2022 4:03	2.52	6/24/2022 4:26	6.41	6/24/2022 5:49	-0.35	6/23/2022 4:37	11.43
6/23/2022 5:14	-0.08	6/24/2022 4:04	2.52	6/24/2022 4:27	6.43	6/24/2022 5:50	-0.32	6/23/2022 4:38	11.37
6/23/2022 5:15	-0.08	6/24/2022 4:05	2.52	6/24/2022 4:28	6.41	6/24/2022 5:51	-0.39	6/23/2022 4:39	11.44
6/23/2022 5:16	-0.09	6/24/2022 4:06	2.52	6/24/2022 4:29	6.39	6/24/2022 5:52	-0.32	6/23/2022 4:40	11.43
6/23/2022 5:17	-0.09	6/24/2022 4:07	2.52	6/24/2022 4:30	6.36	6/24/2022 5:53	-0.30	6/23/2022 4:41	11.45
6/23/2022 5:18	-0.08	6/24/2022 4:08	2.52	6/24/2022 4:31	6.37	6/24/2022 5:54	-0.35	6/23/2022 4:42	11.42
6/23/2022 5:19	-0.07	6/24/2022 4:09	2.52	6/24/2022 4:32	6.43	6/24/2022 5:55	-0.34	6/23/2022 4:43	11.39
6/23/2022 5:20	-0.07	6/24/2022 4:10	2.52	6/24/2022 4:33	6.38	6/24/2022 5:56	-0.35	6/23/2022 4:44	11.45
6/23/2022 5:21	-0.07	6/24/2022 4:11	2.52	6/24/2022 4:34	6.41	6/24/2022 5:57	-0.35	6/23/2022 4:45	11.39
6/23/2022 5:22	-0.07	6/24/2022 4:12	2.52	6/24/2022 4:35	6.34	6/24/2022 5:58	-0.34	6/23/2022 4:46	11.36
6/23/2022 5:23	-0.07	6/24/2022 4:13	2.52	6/24/2022 4:36	6.39	6/24/2022 5:59	-0.34	6/23/2022 4:47	11.39
6/23/2022 5:24	-0.09	6/24/2022 4:14	2.51	6/24/2022 4:37	6.42	6/24/2022 6:00	-0.37	6/23/2022 4:48	11.41
6/23/2022 5:25	-0.07	6/24/2022 4:15	2.51	6/24/2022 4:38	6.43	6/24/2022 6:01	-0.32	6/23/2022 4:49	11.44
6/23/2022 5:26	-0.07	6/24/2022 4:16	2.51	6/24/2022 4:39	6.36	6/24/2022 6:02	-0.35	6/23/2022 4:50	11.43
6/23/2022 5:27	-0.09	6/24/2022 4:17	2.51	6/24/2022 4:40	6.39	6/24/2022 6:03	-0.37	6/23/2022 4:51	11.39
6/23/2022 5:28	-0.09	6/24/2022 4:18	2.51	6/24/2022 4:41	6.37	6/24/2022 6:04	-0.29	6/23/2022 4:52	11.43
6/23/2022 5:29	-0.09	6/24/2022 4:19	2.51	6/24/2022 4:42	6.41	6/24/2022 6:05	-0.31	6/23/2022 4:53	11.38
6/23/2022 5:30	-0.09	6/24/2022 4:20	2.51	6/24/2022 4:43	6.38	6/24/2022 6:06	-0.37	6/23/2022 4:54	11.43
6/23/2022 5:31	-0.08	6/24/2022 4:21	2.51	6/24/2022 4:44	6.37	6/24/2022 6:07	-0.35	6/23/2022 4:55	11.38
6/23/2022 5:32	-0.09	6/24/2022 4:22	2.51	6/24/2022 4:45	6.39	6/24/2022 6:08	-0.33	6/23/2022 4:56	11.41
6/23/2022 5:33	-0.07	6/24/2022 4:23	2.51	6/24/2022 4:46	6.39	6/24/2022 6:09	-0.38	6/23/2022 4:57	11.43
6/23/2022 5:34	-0.07	6/24/2022 4:24	2.51	6/24/2022 4:47	6.36	6/24/2022 6:10	-0.33	6/23/2022 4:58	11.34
6/23/2022 5:35	-0.08	6/24/2022 4:25	2.51	6/24/2022 4:48	6.35	6/24/2022 6:11	-0.34	6/23/2022 4:59	11.40
6/23/2022 5:36	-0.07	6/24/2022 4:26	2.51	6/24/2022 4:49	6.37	6/24/2022 6:12	-0.35	6/23/2022 5:00	11.42
6/23/2022 5:37	-0.07	6/24/2022 4:27	2.51	6/24/2022 4:50	6.37	6/24/2022 6:13	-0.34	6/23/2022 5:01	11.44
6/23/2022 5:38	-0.06	6/24/2022 4:28	2.51	6/24/2022 4:51	6.39	6/24/2022 6:14	-0.35	6/23/2022 5:02	11.44
6/23/2022 5:39	-0.07	6/24/2022 4:29	2.51	6/24/2022 4:52	6.36	6/24/2022 6:15	-0.34	6/23/2022 5:03	11.40
6/23/2022 5:40	-0.09	6/24/2022 4:30	2.51	6/24/2022 4:53	6.36	6/24/2022 6:16	-0.38	6/23/2022 5:04	11.41
6/23/2022 5:41	-0.08	6/24/2022 4:31	2.51	6/24/2022 4:54	6.40	6/24/2022 6:17	-0.29	6/23/2022 5:05	11.44
6/23/2022 5:42	-0.09	6/24/2022 4:32	2.51	6/24/2022 4:55	6.35	6/24/2022 6:18	-0.38	6/23/2022 5:06	11.42
6/23/2022 5:43	-0.07	6/24/2022 4:33	2.51	6/24/2022 4:56	6.38	6/24/2022 6:19	-0.37	6/23/2022 5:07	11.46
6/23/2022 5:44	-0.08	6/24/2022 4:34	2.50	6/24/2022 4:57	6.35	6/24/2022 6:20	-0.37	6/23/2022 5:08	11.42
6/23/2022 5:45	-0.07	6/24/2022 4:35	2.50	6/24/2022 4:58	6.37	6/24/2022 6:21	-0.34	6/23/2022 5:09	11.39
6/23/2022 5:46	-0.07	6/24/2022 4:36	2.50	6/24/2022 4:59	6.36	6/24/2022 6:22	-0.34	6/23/2022 5:10	11.40
6/23/2022 5:47	-0.07	6/24/2022 4:37	2.50	6/24/2022 5:00	6.41	6/24/2022 6:23	-0.32	6/23/2022 5:11	11.45
6/23/2022 5:48	-0.08	6/24/2022 4:38	2.50	6/24/2022 5:01	6.36	6/24/2022 6:24	-0.33	6/23/2022 5:12	11.40
6/23/2022 5:49	-0.08	6/24/2022 4:39	2.50	6/24/2022 5:02	6.37	6/24/2022 6:25	-0.35	6/23/2022 5:13	11.39
6/23/2022 5:50	-0.08	6/24/2022 4:40	2.50	6/24/2022 5:03	6.34	6/24/2022 6:26	-0.35	6/23/2022 5:14	11.44
6/23/2022 5:51	-0.07	6/24/2022 4:41	2.50	6/24/2022 5:04	6.37	6/24/2022 6:27	-0.33	6/23/2022 5:15	11.42
6/23/2022 5:52	-0.09	6/24/2022 4:42	2.50	6/24/2022 5:05	6.36	6/24/2022 6:28	-0.31	6/23/2022 5:16	11.42
6/23/2022 5:53	-0.08	6/24/2022 4:43	2.50	6/24/2022 5:06	6.33	6/24/2022 6:29	-0.37	6/23/2022 5:17	11.42
6/23/2022 5:54	-0.08	6/24/2022 4:44	2.50	6/24/2022 5:07	6.36	6/24/2022 6:30	-0.34	6/23/2022 5:18	11.39
6/23/2022 5:55	-0.08	6/24/2022 4:45	2.50	6/24/2022 5:08	6.35	6/24/2022 6:31	-0.33	6/23/2022 5:19	11.43
6/23/2022 5:56	-0.07	6/24/2022 4:46	2.50	6/24/2022 5:09	6.37	6/24/2022 6:32	-0.38	6/23/2022 5:20	11.39
6/23/2022 5:57	-0.08	6/24/2022 4:47	2.50	6/24/2022 5:10	6.32	6/24/2022 6:33	-0.35	6/23/2022 5:21	11.40
6/23/2022 5:58	-0.09	6/24/2022 4:48	2.50	6/24/2022 5:11	6.32	6/24/2022 6:34	-0.37	6/23/2022 5:22	11.40
6/23/2022 5:59	-0.08	6/24/2022 4:49	2.50	6/24/2022 5:12	6.31	6/24/2022 6:35	-0.39	6/23/2022 5:23	11.43
6/23/2022 6:00	-0.08	6/24/2022 4:50	2.50	6/24/2022 5:13	6.31	6/24/2022 6:36	-0.31	6/23/2022 5:24	11.42
6/23/2022 6:01	-0.08	6/24/2022 4:51	2.50	6/24/2022 5:14	6.35	6/24/2022 6:37	-0.36	6/23/2022 5:25	11.41
6/23/2022 6:02	-0.07	6/24/2022 4:52	2.50	6/24/2022 5:15	6.33	6/24/2022 6:38	-0.30	6/23/2022 5:26	11.40
6/23/2022 6:03	-0.07	6/24/2022 4:53	2.49	6/24/2022 5:16	6.33	6/24/2022 6:39	-0.35	6/23/2022 5:27	11.38
6/23/2022 6:04	-0.07	6/24/2022 4:54	2.49	6/24/2022 5:17	6.38	6/24/2022 6:40	-0.34	6/23/2022 5:28	11.40
6/23/2022 6:05	-0.09	6/24/2022 4:55	2.49	6/24/2022 5:18	6.35	6/24/2022 6:41	-0.37	6/23/2022 5:29	11.41
6/23/2022 6:06	-0.09	6/24/2022 4:56	2.49	6/24/2022 5:19	6.34	6/24/2022 6:42	-0.37	6/23/2022 5:30	11.48
6/23/2022 6:07	-0.07	6/24/2022 4:57	2.49	6/24/2022 5:20	6.36	6/24/2022 6:43	-0.37	6/23/2022 5:31	11.40
6/23/2022 6:08	-0.09	6/24/2022 4:58	2.49	6/24/2022 5:21	6.36	6/24/2022 6:44	-0.34	6/23/2022 5:32	11.39
6/23/2022 6:09	-0.09	6/24/2022 4:59	2.49	6/24/2022 5:22	6.36	6/24/2022 6:45	-0.32	6/23/2022 5:33	11.40
6/23/2022 6:10	-0.09	6/24/2022 5:00	2.49	6/24/2022 5:23	6.31	6/24/2022 6:46	-0.32	6/23/2022 5:34	11.43
6/23/2022 6:11	-0.07	6/24/2022 5:01	2.49	6/24/2022 5:24	6.34	6/24/2022 6:47	-0.35	6/23/2022 5:35	11.40
6/23/2022 6:12	-0.09	6/24/2022 5:02	2.49	6/24/2022 5:25	6.34	6/24/2022 6:48	-0.32	6/23/2022 5:36	11.41
6/23/2022 6:13	-0.08	6/24/2022 5:03	2.49	6/24/2022 5:26	6.34	6/24/2022 6:49	-0.38	6/23/2022 5:37	11.44
6/23/2022 6:14	-0.07	6/24/2022 5:04	2.49	6/24/2022 5:27	6.32	6/24/2022 6:50	-0.34	6/23/2022 5:38	11.43
6/23/2022 6:15	-0.08	6/24/2022 5:05	2.49	6/24/2022 5:28	6.31	6/24/2022 6:51	-0.33	6/23/2022 5:39	11.43
6/23/2022 6:16	-0.08	6/24/2022 5:06	2.49	6/24/2022 5:29	6.34	6/24/2022 6:52	-0.37	6/23/2022 5:40	11.40
6/23/2022 6:17	-0.07	6/24/2022 5:07	2.49	6/24/2022 5:30	6.33	6/24/2022 6:53	-0.33	6/23/2022 5:41	11.44
6/23/2022 6:18	-0.08	6/24/2022 5:08	2.49	6/24/2022 5:31	6.34	6/24/2022 6:54	-0.33	6/23/2022 5:42	11.44
6/23/2022 6:19	-0.09	6/24/2022 5:09	2.49	6/24/2022 5:32	6.31	6/24/2022 6:55	-0.31	6/23/2022 5:43	11.39
6/23/2022 6:20	-0.08	6/24/2022 5:10	2.49	6/24/2022 5:33	6.31	6/24/2022 6:56	-0.33	6/23/2022 5:44	11.48
6/23/2022 6:21	-0.08	6/24/2022 5:11	2.49	6/24/2022 5:34	6.36	6/24/2022 6:57	-0.33	6/23/2022 5:45	11.42
6/23/2022 6:22	-0.08	6/24/2022 5:12	2.49	6/24/2022 5:35	6.30	6/24/2022 6:58	-0.32	6/23/2022 5:46	11.35
6/23/2022 6:23	-0.08	6/24/2022 5:13	2.49	6/24/2022 5:36	6.31	6/24/2022 6:59	-0.32	6/23/2022 5:47	11.45
6/23/2022 6:24	-0.08	6/24/2022 5:14	2.49	6/24/2022 5:37	6.32	6/24/2022 7:00	-0.33	6/23/2022 5:48	11.40
6/23/2022 6:25	-0.07	6/24/2022 5:15	2.49	6/24/2022 5:38	6.31	6/24/2022 7:01	-0.33	6/23/2022 5:49	11.38
6/23/2022 6:26	-0.09	6/24/2022 5:16	2.49	6/24/2022 5:39	6.32	6/24/2022 7:02	-0.33	6/23/2022 5:50	11.39
6/23/2022 6:27	-0.07	6/24/2022 5:17	2.49	6/24/2022 5:40	6.28	6/24/2022 7:03	-0.32	6/23/2022 5:51	11.43
6/23/2022 6:28	-0.07	6/24/2022 5:18	2.48	6/24/2022 5:41	6.36	6/24/2022 7:04	-0.33	6/23/2022 5:52	11.44
6/23/2022 6:29	-0.06	6/24/2022 5:19	2.48	6/24/2022 5:42	6.34	6/24/2022 7:05	-0.36	6/23/2022 5:53	11.42
6/23/2022 6:30	-0.07	6/24/2022 5:20	2.48	6/24/2022 5:43	6.30	6/24/2022 7:06	-0.35	6/23/2022 5:54	11.42
6/23/2022 6:31	-0.08	6/24/2022 5:21	2.48	6/24/2022 5:44	6.29	6/24/2022 7:07	-0.35	6/23/2022 5:55	11.39
6/23/2022 6:32	-0.08	6/24/2022 5:22	2.48	6/24/2022 5:45	6.31	6/24/2022 7:08	-0.35	6/23/2022 5:56	11.49

6/23/2022 6:33	-0.08	6/24/2022 5:23	2.48	6/24/2022 5:46	6.29	6/24/2022 7:09	-0.33	6/23/2022 5:57	11.38
6/23/2022 6:34	-0.08	6/24/2022 5:24	2.48	6/24/2022 5:47	6.29	6/24/2022 7:10	-0.32	6/23/2022 5:58	11.37
6/23/2022 6:35	-0.08	6/24/2022 5:25	2.48	6/24/2022 5:48	6.32	6/24/2022 7:11	-0.30	6/23/2022 5:59	11.37
6/23/2022 6:36	-0.08	6/24/2022 5:26	2.48	6/24/2022 5:49	6.30	6/24/2022 7:12	-0.35	6/23/2022 6:00	11.37
6/23/2022 6:37	-0.08	6/24/2022 5:27	2.48	6/24/2022 5:50	6.32	6/24/2022 7:13	-0.34	6/23/2022 6:01	11.42
6/23/2022 6:38	-0.09	6/24/2022 5:28	2.48	6/24/2022 5:51	6.27	6/24/2022 7:14	-0.32	6/23/2022 6:02	11.41
6/23/2022 6:39	-0.09	6/24/2022 5:29	2.48	6/24/2022 5:52	6.31	6/24/2022 7:15	-0.34	6/23/2022 6:03	11.38
6/23/2022 6:40	-0.09	6/24/2022 5:30	2.48	6/24/2022 5:53	6.31	6/24/2022 7:16	-0.34	6/23/2022 6:04	11.40
6/23/2022 6:41	-0.09	6/24/2022 5:31	2.48	6/24/2022 5:54	6.32	6/24/2022 7:17	-0.33	6/23/2022 6:05	11.36
6/23/2022 6:42	-0.08	6/24/2022 5:32	2.48	6/24/2022 5:55	6.29	6/24/2022 7:18	-0.34	6/23/2022 6:06	11.41
6/23/2022 6:43	-0.08	6/24/2022 5:33	2.47	6/24/2022 5:56	6.28	6/24/2022 7:19	-0.30	6/23/2022 6:07	11.41
6/23/2022 6:44	-0.09	6/24/2022 5:34	2.48	6/24/2022 5:57	6.27	6/24/2022 7:20	-0.35	6/23/2022 6:08	11.39
6/23/2022 6:45	-0.08	6/24/2022 5:35	2.48	6/24/2022 5:58	6.29	6/24/2022 7:21	-0.39	6/23/2022 6:09	11.42
6/23/2022 6:46	-0.08	6/24/2022 5:36	2.48	6/24/2022 5:59	6.31	6/24/2022 7:22	-0.36	6/23/2022 6:10	11.42
6/23/2022 6:47	-0.07	6/24/2022 5:37	2.47	6/24/2022 6:00	6.27	6/24/2022 7:23	-0.31	6/23/2022 6:11	11.44
6/23/2022 6:48	-0.09	6/24/2022 5:38	2.47	6/24/2022 6:01	6.26	6/24/2022 7:24	-0.37	6/23/2022 6:12	11.42
6/23/2022 6:49	-0.07	6/24/2022 5:39	2.48	6/24/2022 6:02	6.27	6/24/2022 7:25	-0.32	6/23/2022 6:13	11.42
6/23/2022 6:50	-0.09	6/24/2022 5:40	2.47	6/24/2022 6:03	6.31	6/24/2022 7:26	-0.29	6/23/2022 6:14	11.43
6/23/2022 6:51	-0.08	6/24/2022 5:41	2.48	6/24/2022 6:04	6.27	6/24/2022 7:27	-0.37	6/23/2022 6:15	11.42
6/23/2022 6:52	-0.08	6/24/2022 5:42	2.48	6/24/2022 6:05	6.28	6/24/2022 7:28	-0.36	6/23/2022 6:16	11.36
6/23/2022 6:53	-0.08	6/24/2022 5:43	2.48	6/24/2022 6:06	6.27	6/24/2022 7:29	-0.33	6/23/2022 6:17	11.42
6/23/2022 6:54	-0.09	6/24/2022 5:44	2.47	6/24/2022 6:07	6.27	6/24/2022 7:30	-0.34	6/23/2022 6:18	11.44
6/23/2022 6:55	-0.09	6/24/2022 5:45	2.48	6/24/2022 6:08	6.30	6/24/2022 7:31	-0.33	6/23/2022 6:19	11.40
6/23/2022 6:56	-0.08	6/24/2022 5:46	2.48	6/24/2022 6:09	6.31	6/24/2022 7:32	-0.31	6/23/2022 6:20	11.40
6/23/2022 6:57	-0.09	6/24/2022 5:47	2.47	6/24/2022 6:10	6.27	6/24/2022 7:33	-0.36	6/23/2022 6:21	11.42
6/23/2022 6:58	-0.08	6/24/2022 5:48	2.47	6/24/2022 6:11	6.24	6/24/2022 7:34	-0.37	6/23/2022 6:22	11.40
6/23/2022 6:59	-0.09	6/24/2022 5:49	2.47	6/24/2022 6:12	6.30	6/24/2022 7:35	-0.33	6/23/2022 6:23	11.42
6/23/2022 7:00	-0.09	6/24/2022 5:50	2.47	6/24/2022 6:13	6.27	6/24/2022 7:36	-0.32	6/23/2022 6:24	11.38
6/23/2022 7:01	-0.08	6/24/2022 5:51	2.47	6/24/2022 6:14	6.28	6/24/2022 7:37	-0.34	6/23/2022 6:25	11.40
6/23/2022 7:02	-0.07	6/24/2022 5:52	2.47	6/24/2022 6:15	6.23	6/24/2022 7:38	-0.32	6/23/2022 6:26	11.43
6/23/2022 7:03	-0.08	6/24/2022 5:53	2.47	6/24/2022 6:16	6.27	6/24/2022 7:39	-0.33	6/23/2022 6:27	11.40
6/23/2022 7:04	-0.07	6/24/2022 5:54	2.47	6/24/2022 6:17	6.26	6/24/2022 7:40	-0.39	6/23/2022 6:28	11.45
6/23/2022 7:05	-0.09	6/24/2022 5:55	2.47	6/24/2022 6:18	6.27	6/24/2022 7:41	-0.31	6/23/2022 6:29	11.36
6/23/2022 7:06	-0.09	6/24/2022 5:56	2.47	6/24/2022 6:19	6.29	6/24/2022 7:42	-0.34	6/23/2022 6:30	11.40
6/23/2022 7:07	-0.08	6/24/2022 5:57	2.47	6/24/2022 6:20	6.27	6/24/2022 7:43	-0.32	6/23/2022 6:31	11.37
6/23/2022 7:08	-0.07	6/24/2022 5:58	2.47	6/24/2022 6:21	6.31	6/24/2022 7:44	-0.31	6/23/2022 6:32	11.39
6/23/2022 7:09	-0.07	6/24/2022 5:59	2.47	6/24/2022 6:22	6.29	6/24/2022 7:45	-0.32	6/23/2022 6:33	11.42
6/23/2022 7:10	-0.07	6/24/2022 6:00	2.47	6/24/2022 6:23	6.24	6/24/2022 7:46	-0.32	6/23/2022 6:34	11.37
6/23/2022 7:11	-0.09	6/24/2022 6:01	2.47	6/24/2022 6:24	6.25	6/24/2022 7:47	-0.37	6/23/2022 6:35	11.41
6/23/2022 7:12	-0.09	6/24/2022 6:02	2.46	6/24/2022 6:25	6.29	6/24/2022 7:48	-0.34	6/23/2022 6:36	11.43
6/23/2022 7:13	-0.08	6/24/2022 6:03	2.46	6/24/2022 6:26	6.28	6/24/2022 7:49	-0.35	6/23/2022 6:37	11.42
6/23/2022 7:14	-0.07	6/24/2022 6:04	2.47	6/24/2022 6:27	6.27	6/24/2022 7:50	-0.37	6/23/2022 6:38	11.43
6/23/2022 7:15	-0.08	6/24/2022 6:05	2.46	6/24/2022 6:28	6.26	6/24/2022 7:51	-0.37	6/23/2022 6:39	11.38
6/23/2022 7:16	-0.07	6/24/2022 6:06	2.46	6/24/2022 6:29	6.24	6/24/2022 7:52	-0.37	6/23/2022 6:40	11.39
6/23/2022 7:17	-0.08	6/24/2022 6:07	2.47	6/24/2022 6:30	6.27	6/24/2022 7:53	-0.35	6/23/2022 6:41	11.48
6/23/2022 7:18	-0.09	6/24/2022 6:08	2.46	6/24/2022 6:31	6.27	6/24/2022 7:54	-0.33	6/23/2022 6:42	11.40
6/23/2022 7:19	-0.08	6/24/2022 6:09	2.46	6/24/2022 6:32	6.26	6/24/2022 7:55	-0.37	6/23/2022 6:43	11.41
6/23/2022 7:20	-0.09	6/24/2022 6:10	2.46	6/24/2022 6:33	6.26	6/24/2022 7:56	-0.34	6/23/2022 6:44	11.38
6/23/2022 7:21	-0.08	6/24/2022 6:11	2.46	6/24/2022 6:34	6.24	6/24/2022 7:57	-0.35	6/23/2022 6:45	11.40
6/23/2022 7:22	-0.07	6/24/2022 6:12	2.46	6/24/2022 6:35	6.24	6/24/2022 7:58	-0.35	6/23/2022 6:46	11.41
6/23/2022 7:23	-0.08	6/24/2022 6:13	2.46	6/24/2022 6:36	6.27	6/24/2022 7:59	-0.38	6/23/2022 6:47	11.41
6/23/2022 7:24	-0.07	6/24/2022 6:14	2.46	6/24/2022 6:37	6.23	6/24/2022 8:00	-0.30	6/23/2022 6:48	11.37
6/23/2022 7:25	-0.09	6/24/2022 6:15	2.46	6/24/2022 6:38	6.27	6/24/2022 8:01	-0.35	6/23/2022 6:49	11.42
6/23/2022 7:26	-0.07	6/24/2022 6:16	2.46	6/24/2022 6:39	6.24	6/24/2022 8:02	-0.34	6/23/2022 6:50	11.50
6/23/2022 7:27	-0.07	6/24/2022 6:17	2.46	6/24/2022 6:40	6.27	6/24/2022 8:03	-0.28	6/23/2022 6:51	11.40
6/23/2022 7:28	-0.08	6/24/2022 6:18	2.46	6/24/2022 6:41	6.22	6/24/2022 8:04	-0.32	6/23/2022 6:52	11.48
6/23/2022 7:29	-0.08	6/24/2022 6:19	2.46	6/24/2022 6:42	6.24	6/24/2022 8:05	-0.34	6/23/2022 6:53	11.43
6/23/2022 7:30	-0.07	6/24/2022 6:20	2.46	6/24/2022 6:43	6.25	6/24/2022 8:06	-0.38	6/23/2022 6:54	11.43
6/23/2022 7:31	-0.08	6/24/2022 6:21	2.46	6/24/2022 6:44	6.24	6/24/2022 8:07	-0.37	6/23/2022 6:55	11.42
6/23/2022 7:32	-0.09	6/24/2022 6:22	2.46	6/24/2022 6:45	6.25	6/24/2022 8:08	-0.35	6/23/2022 6:56	11.45
6/23/2022 7:33	-0.09	6/24/2022 6:23	2.46	6/24/2022 6:46	6.22	6/24/2022 8:09	-0.33	6/23/2022 6:57	11.47
6/23/2022 7:34	-0.07	6/24/2022 6:24	2.46	6/24/2022 6:47	6.28	6/24/2022 8:10	-0.35	6/23/2022 6:58	11.44
6/23/2022 7:35	-0.08	6/24/2022 6:25	2.46	6/24/2022 6:48	6.22	6/24/2022 8:11	-0.34	6/23/2022 6:59	11.42
6/23/2022 7:36	-0.07	6/24/2022 6:26	2.46	6/24/2022 6:49	6.22	6/24/2022 8:12	-0.32	6/23/2022 7:00	11.37
6/23/2022 7:37	-0.07	6/24/2022 6:27	2.45	6/24/2022 6:50	6.20	6/24/2022 8:13	-0.37	6/23/2022 7:01	11.46
6/23/2022 7:38	-0.07	6/24/2022 6:28	2.46	6/24/2022 6:51	6.21	6/24/2022 8:14	-0.34	6/23/2022 7:02	11.41
6/23/2022 7:39	-0.09	6/24/2022 6:29	2.46	6/24/2022 6:52	6.24	6/24/2022 8:15	-0.32	6/23/2022 7:03	11.40
6/23/2022 7:40	-0.08	6/24/2022 6:30	2.46	6/24/2022 6:53	6.24	6/24/2022 8:16	-0.34	6/23/2022 7:04	11.43
6/23/2022 7:41	-0.06	6/24/2022 6:31	2.45	6/24/2022 6:54	6.21	6/24/2022 8:17	-0.36	6/23/2022 7:05	11.35
6/23/2022 7:42	-0.07	6/24/2022 6:32	2.45	6/24/2022 6:55	6.25	6/24/2022 8:18	-0.33	6/23/2022 7:06	11.38
6/23/2022 7:43	-0.08	6/24/2022 6:33	2.45	6/24/2022 6:56	6.22	6/24/2022 8:19	-0.38	6/23/2022 7:07	11.44
6/23/2022 7:44	-0.08	6/24/2022 6:34	2.45	6/24/2022 6:57	6.24	6/24/2022 8:20	-0.32	6/23/2022 7:08	11.38
6/23/2022 7:45	-0.09	6/24/2022 6:35	2.45	6/24/2022 6:58	6.18	6/24/2022 8:21	-0.37	6/23/2022 7:09	11.38
6/23/2022 7:46	-0.08	6/24/2022 6:36	2.45	6/24/2022 6:59	6.20	6/24/2022 8:22	-0.35	6/23/2022 7:10	11.41
6/23/2022 7:47	-0.07	6/24/2022 6:37	2.45	6/24/2022 7:00	6.23	6/24/2022 8:23	-0.34	6/23/2022 7:11	11.41
6/23/2022 7:48	-0.07	6/24/2022 6:38	2.45	6/24/2022 7:01	6.24	6/24/2022 8:24	-0.37	6/23/2022 7:12	11.41
6/23/2022 7:49	-0.07	6/24/2022 6:39	2.45	6/24/2022 7:02	6.23	6/24/2022 8:25	-0.37	6/23/2022 7:13	11.41
6/23/2022 7:50	-0.09	6/24/2022 6:40	2.45	6/24/2022 7:03	6.20	6/24/2022 8:26	-0.33	6/23/2022 7:14	11.40
6/23/2022 7:51	-0.08	6/24/2022 6:41	2.45	6/24/2022 7:04	6.22	6/24/2022 8:27	-0.33	6/23/2022 7:15	11.36
6/23/2022 7:52	-0.08	6/24/2022 6:42	2.45	6/24/2022 7:05	6.22	6/24/2022 8:28	-0.33	6/23/2022 7:16	11.39
6/23/2022 7:53	-0.09	6/24/2022 6:43	2.45	6/24/2022 7:06	6.21	6/24/2022 8:29	-0.35	6/23/2022 7:17	11.39
6/23/2022 7:54	-0.08	6/24/2022 6:44	2.45	6/24/2022 7:07	6.23	6/24/2022 8:30	-0.33	6/23/2022 7:18	11.37
6/23/2022 7:55	-0.09	6/24/2022 6:45	2.45	6/24/2022 7:08	6.24	6/24/2022 8:31	-0.35	6/23/2022 7:19	11.40
6/23/2022 7:56	-0.08	6/24/2022 6:46	2.45	6/24/2022 7:09	6.18	6/24/2022 8:32	-0.37	6/23/2022 7:20	11.35
6/23/2022 7:57	-0.07	6/24/2022 6:47	2.45	6/24/2022 7:10	6.22	6/24/2022 8:33	-0.35	6/23/2022 7:21	11.39
6/23/2022 7:58	-0.08	6/24/2022 6:48	2.44	6/24/2022 7:11	6.20	6/24/2022 8:34	-0.32	6/23/2022 7:22	11.36
6/23/2022 7:59	-0.07	6/24/2022 6:49	2.45	6/24/2022 7:12	6.21	6/24/2022 8:35	-0.33	6/23/2022 7:23	11.40
6/23/2022 8:00	-0.08	6/24/2022 6:50	2.45	6/24/2022 7:13	6.21	6/24/2022 8:36	-0.35	6/23/2022 7:24	11.45

6/23/2022 8:01	-0.09	6/24/2022 6:51	2.44	6/24/2022 7:14	6.21	6/24/2022 8:37	-0.36	6/23/2022 7:25	11.45
6/23/2022 8:02	-0.08	6/24/2022 6:52	2.45	6/24/2022 7:15	6.20	6/24/2022 8:38	-0.32	6/23/2022 7:26	11.45
6/23/2022 8:03	-0.09	6/24/2022 6:53	2.44	6/24/2022 7:16	6.16	6/24/2022 8:39	-0.34	6/23/2022 7:27	11.42
6/23/2022 8:04	-0.08	6/24/2022 6:54	2.44	6/24/2022 7:17	6.21	6/24/2022 8:40	-0.37	6/23/2022 7:28	11.43
6/23/2022 8:05	-0.08	6/24/2022 6:55	2.44	6/24/2022 7:18	6.19	6/24/2022 8:41	-0.33	6/23/2022 7:29	11.43
6/23/2022 8:06	-0.08	6/24/2022 6:56	2.44	6/24/2022 7:19	6.20	6/24/2022 8:42	-0.29	6/23/2022 7:30	11.43
6/23/2022 8:07	-0.07	6/24/2022 6:57	2.44	6/24/2022 7:20	6.21	6/24/2022 8:43	-0.38	6/23/2022 7:31	11.41
6/23/2022 8:08	-0.08	6/24/2022 6:58	2.44	6/24/2022 7:21	6.20	6/24/2022 8:44	-0.35	6/23/2022 7:32	11.41
6/23/2022 8:09	-0.09	6/24/2022 6:59	2.44	6/24/2022 7:22	6.18	6/24/2022 8:45	-0.31	6/23/2022 7:33	11.45
6/23/2022 8:10	-0.08	6/24/2022 7:00	2.45	6/24/2022 7:23	6.21	6/24/2022 8:46	-0.35	6/23/2022 7:34	11.39
6/23/2022 8:11	-0.08	6/24/2022 7:01	2.44	6/24/2022 7:24	6.19	6/24/2022 8:47	-0.35	6/23/2022 7:35	11.43
6/23/2022 8:12	-0.09	6/24/2022 7:02	2.44	6/24/2022 7:25	6.18	6/24/2022 8:48	-0.35	6/23/2022 7:36	11.40
6/23/2022 8:13	-0.07	6/24/2022 7:03	2.44	6/24/2022 7:26	6.21	6/24/2022 8:49	-0.37	6/23/2022 7:37	11.48
6/23/2022 8:14	-0.08	6/24/2022 7:04	2.44	6/24/2022 7:27	6.22	6/24/2022 8:50	-0.35	6/23/2022 7:38	11.43
6/23/2022 8:15	-0.07	6/24/2022 7:05	2.45	6/24/2022 7:28	6.17	6/24/2022 8:51	-0.34	6/23/2022 7:39	11.48
6/23/2022 8:16	-0.08	6/24/2022 7:06	2.44	6/24/2022 7:29	6.22	6/24/2022 8:52	-0.36	6/23/2022 7:40	11.44
6/23/2022 8:17	-0.09	6/24/2022 7:07	2.44	6/24/2022 7:30	6.21	6/24/2022 8:53	-0.34	6/23/2022 7:41	11.45
6/23/2022 8:18	-0.08	6/24/2022 7:08	2.44	6/24/2022 7:31	6.18	6/24/2022 8:54	-0.35	6/23/2022 7:42	11.44
6/23/2022 8:19	-0.09	6/24/2022 7:09	2.44	6/24/2022 7:32	6.18	6/24/2022 8:55	-0.32	6/23/2022 7:43	11.40
6/23/2022 8:20	-0.08	6/24/2022 7:10	2.44	6/24/2022 7:33	6.18	6/24/2022 8:56	-0.33	6/23/2022 7:44	11.42
6/23/2022 8:21	-0.07	6/24/2022 7:11	2.43	6/24/2022 7:34	6.19	6/24/2022 8:57	-0.35	6/23/2022 7:45	11.41
6/23/2022 8:22	-0.07	6/24/2022 7:12	2.44	6/24/2022 7:35	6.19	6/24/2022 8:58	-0.32	6/23/2022 7:46	11.42
6/23/2022 8:23	-0.08	6/24/2022 7:13	2.43	6/24/2022 7:36	6.17	6/24/2022 8:59	-0.31	6/23/2022 7:47	11.39
6/23/2022 8:24	-0.07	6/24/2022 7:14	2.43	6/24/2022 7:37	6.18	6/24/2022 9:00	-0.35	6/23/2022 7:48	11.39
6/23/2022 8:25	-0.08	6/24/2022 7:15	2.43	6/24/2022 7:38	6.19	6/24/2022 9:01	-0.32	6/23/2022 7:49	11.44
6/23/2022 8:26	-0.09	6/24/2022 7:16	2.43	6/24/2022 7:39	6.15	6/24/2022 9:02	-0.37	6/23/2022 7:50	11.42
6/23/2022 8:27	-0.08	6/24/2022 7:17	2.43	6/24/2022 7:40	6.17	6/24/2022 9:03	-0.38	6/23/2022 7:51	11.40
6/23/2022 8:28	-0.09	6/24/2022 7:18	2.43	6/24/2022 7:41	6.17	6/24/2022 9:04	-0.33	6/23/2022 7:52	11.42
6/23/2022 8:29	-0.09	6/24/2022 7:19	2.43	6/24/2022 7:42	6.16	6/24/2022 9:05	-0.31	6/23/2022 7:53	11.45
6/23/2022 8:30	-0.08	6/24/2022 7:20	2.43	6/24/2022 7:43	6.19	6/24/2022 9:06	-0.35	6/23/2022 7:54	11.44
6/23/2022 8:31	-0.08	6/24/2022 7:21	2.43	6/24/2022 7:44	6.22	6/24/2022 9:07	-0.35	6/23/2022 7:55	11.40
6/23/2022 8:32	-0.09	6/24/2022 7:22	2.43	6/24/2022 7:45	6.17	6/24/2022 9:08	-0.34	6/23/2022 7:56	11.41
6/23/2022 8:33	-0.09	6/24/2022 7:23	2.43	6/24/2022 7:46	6.16	6/24/2022 9:09	-0.32	6/23/2022 7:57	11.44
6/23/2022 8:34	-0.07	6/24/2022 7:24	2.43	6/24/2022 7:47	6.19	6/24/2022 9:10	-0.31	6/23/2022 7:58	11.44
6/23/2022 8:35	-0.08	6/24/2022 7:25	2.43	6/24/2022 7:48	6.16	6/24/2022 9:11	-0.36	6/23/2022 7:59	11.41
6/23/2022 8:36	-0.08	6/24/2022 7:26	2.43	6/24/2022 7:49	6.16	6/24/2022 9:12	-0.35	6/23/2022 8:00	11.40
6/23/2022 8:37	-0.08	6/24/2022 7:27	2.43	6/24/2022 7:50	6.16	6/24/2022 9:13	-0.27	6/23/2022 8:01	11.44
6/23/2022 8:38	-0.09	6/24/2022 7:28	2.43	6/24/2022 7:51	6.18	6/24/2022 9:14	-0.32	6/23/2022 8:02	11.35
6/23/2022 8:39	-0.08	6/24/2022 7:29	2.42	6/24/2022 7:52	6.19	6/24/2022 9:15	-0.33	6/23/2022 8:03	11.43
6/23/2022 8:40	-0.09	6/24/2022 7:30	2.43	6/24/2022 7:53	6.16	6/24/2022 9:16	-0.39	6/23/2022 8:04	11.38
6/23/2022 8:41	-0.07	6/24/2022 7:31	2.43	6/24/2022 7:54	6.14	6/24/2022 9:17	-0.38	6/23/2022 8:05	11.44
6/23/2022 8:42	-0.08	6/24/2022 7:32	2.43	6/24/2022 7:55	6.16	6/24/2022 9:18	-0.36	6/23/2022 8:06	11.43
6/23/2022 8:43	-0.09	6/24/2022 7:33	2.43	6/24/2022 7:56	6.11	6/24/2022 9:19	-0.34	6/23/2022 8:07	11.43
6/23/2022 8:44	-0.07	6/24/2022 7:34	2.42	6/24/2022 7:57	6.15	6/24/2022 9:20	-0.32	6/23/2022 8:08	11.42
6/23/2022 8:45	-0.08	6/24/2022 7:35	2.43	6/24/2022 7:58	6.18	6/24/2022 9:21	-0.34	6/23/2022 8:09	11.43
6/23/2022 8:46	-0.07	6/24/2022 7:36	2.42	6/24/2022 7:59	6.15	6/24/2022 9:22	-0.35	6/23/2022 8:10	11.45
6/23/2022 8:47	-0.08	6/24/2022 7:37	2.42	6/24/2022 8:00	6.20	6/24/2022 9:23	-0.34	6/23/2022 8:11	11.48
6/23/2022 8:48	-0.09	6/24/2022 7:38	2.42	6/24/2022 8:01	6.13	6/24/2022 9:24	-0.34	6/23/2022 8:12	11.47
6/23/2022 8:49	-0.08	6/24/2022 7:39	2.42	6/24/2022 8:02	6.16	6/24/2022 9:25	-0.35	6/23/2022 8:13	11.41
6/23/2022 8:50	-0.08	6/24/2022 7:40	2.42	6/24/2022 8:03	6.13	6/24/2022 9:26	-0.35	6/23/2022 8:14	11.44
6/23/2022 8:51	-0.08	6/24/2022 7:41	2.42	6/24/2022 8:04	6.15	6/24/2022 9:27	-0.34	6/23/2022 8:15	11.43
6/23/2022 8:52	-0.08	6/24/2022 7:42	2.42	6/24/2022 8:05	6.17	6/24/2022 9:28	-0.39	6/23/2022 8:16	11.42
6/23/2022 8:53	-0.07	6/24/2022 7:43	2.42	6/24/2022 8:06	6.13	6/24/2022 9:29	-0.33	6/23/2022 8:17	11.42
6/23/2022 8:54	-0.08	6/24/2022 7:44	2.42	6/24/2022 8:07	6.15	6/24/2022 9:30	-0.34	6/23/2022 8:18	11.44
6/23/2022 8:55	-0.09	6/24/2022 7:45	2.43	6/24/2022 8:08	6.17	6/24/2022 9:31	-0.38	6/23/2022 8:19	11.41
6/23/2022 8:56	-0.09	6/24/2022 7:46	2.42	6/24/2022 8:09	6.15	6/24/2022 9:32	-0.31	6/23/2022 8:20	11.39
6/23/2022 8:57	-0.08	6/24/2022 7:47	2.42	6/24/2022 8:10	6.16	6/24/2022 9:33	-0.34	6/23/2022 8:21	11.42
6/23/2022 8:58	-0.08	6/24/2022 7:48	2.42	6/24/2022 8:11	6.15	6/24/2022 9:34	-0.33	6/23/2022 8:22	11.36
6/23/2022 8:59	-0.07	6/24/2022 7:49	2.42	6/24/2022 8:12	6.16	6/24/2022 9:35	-0.30	6/23/2022 8:23	11.42
6/23/2022 9:00	-0.07	6/24/2022 7:50	2.42	6/24/2022 8:13	6.14	6/24/2022 9:36	-0.35	6/23/2022 8:24	11.43
6/23/2022 9:01	-0.09	6/24/2022 7:51	2.42	6/24/2022 8:14	6.18	6/24/2022 9:37	-0.37	6/23/2022 8:25	11.41
6/23/2022 9:02	-0.09	6/24/2022 7:52	2.42	6/24/2022 8:15	6.13	6/24/2022 9:38	-0.36	6/23/2022 8:26	11.39
6/23/2022 9:03	-0.08	6/24/2022 7:53	2.42	6/24/2022 8:16	6.15	6/24/2022 9:39	-0.34	6/23/2022 8:27	11.46
6/23/2022 9:04	-0.06	6/24/2022 7:54	2.41	6/24/2022 8:17	6.14	6/24/2022 9:40	-0.33	6/23/2022 8:28	11.43
6/23/2022 9:05	-0.08	6/24/2022 7:55	2.42	6/24/2022 8:18	6.14	6/24/2022 9:41	-0.36	6/23/2022 8:29	11.44
6/23/2022 9:06	-0.07	6/24/2022 7:56	2.42	6/24/2022 8:19	6.13	6/24/2022 9:42	-0.37	6/23/2022 8:30	11.42
6/23/2022 9:07	-0.08	6/24/2022 7:57	2.42	6/24/2022 8:20	6.11	6/24/2022 9:43	-0.30	6/23/2022 8:31	11.40
6/23/2022 9:08	-0.08	6/24/2022 7:58	2.42	6/24/2022 8:21	6.12	6/24/2022 9:44	-0.35	6/23/2022 8:32	11.42
6/23/2022 9:09	-0.09	6/24/2022 7:59	2.41	6/24/2022 8:22	6.14	6/24/2022 9:45	-0.33	6/23/2022 8:33	11.42
6/23/2022 9:10	-0.07	6/24/2022 8:00	2.41	6/24/2022 8:23	6.12	6/24/2022 9:46	-0.35	6/23/2022 8:34	11.40
6/23/2022 9:11	-0.08	6/24/2022 8:01	2.41	6/24/2022 8:24	6.11	6/24/2022 9:47	-0.34	6/23/2022 8:35	11.40
6/23/2022 9:12	-0.08	6/24/2022 8:02	2.41	6/24/2022 8:25	6.11	6/24/2022 9:48	-0.35	6/23/2022 8:36	11.41
6/23/2022 9:13	-0.07	6/24/2022 8:03	2.41	6/24/2022 8:26	6.14	6/24/2022 9:49	-0.35	6/23/2022 8:37	11.43
6/23/2022 9:14	-0.08	6/24/2022 8:04	2.41	6/24/2022 8:27	6.12	6/24/2022 9:50	-0.32	6/23/2022 8:38	11.46
6/23/2022 9:15	-0.08	6/24/2022 8:05	2.41	6/24/2022 8:28	6.12	6/24/2022 9:51	-0.35	6/23/2022 8:39	11.44
6/23/2022 9:16	-0.09	6/24/2022 8:06	2.41	6/24/2022 8:29	6.15	6/24/2022 9:52	-0.37	6/23/2022 8:40	11.45
6/23/2022 9:17	-0.08	6/24/2022 8:07	2.41	6/24/2022 8:30	6.16	6/24/2022 9:53	-0.39	6/23/2022 8:41	11.46
6/23/2022 9:18	-0.08	6/24/2022 8:08	2.41	6/24/2022 8:31	6.16	6/24/2022 9:54	-0.32	6/23/2022 8:42	11.44
6/23/2022 9:19	-0.07	6/24/2022 8:09	2.41	6/24/2022 8:32	6.13	6/24/2022 9:55	-0.30	6/23/2022 8:43	11.45
6/23/2022 9:20	-0.08	6/24/2022 8:10	2.41	6/24/2022 8:33	6.14	6/24/2022 9:56	-0.31	6/23/2022 8:44	11.40
6/23/2022 9:21	-0.07	6/24/2022 8:11	2.41	6/24/2022 8:34	6.13	6/24/2022 9:57	-0.37	6/23/2022 8:45	11.45
6/23/2022 9:22	-0.09	6/24/2022 8:12	2.41	6/24/2022 8:35	6.12	6/24/2022 9:58	-0.36	6/23/2022 8:46	11.44
6/23/2022 9:23	-0.07	6/24/2022 8:13	2.41	6/24/2022 8:36	6.14	6/24/2022 9:59	-0.34	6/23/2022 8:47	11.43
6/23/2022 9:24	-0.07	6/24/2022 8:14	2.41	6/24/2022 8:37	6.10	6/24/2022 10:00	-0.37	6/23/2022 8:48	11.42
6/23/2022 9:25	-0.09	6/24/2022 8:15	2.40	6/24/2022 8:38	6.10	6/24/2022 10:01	-0.35	6/23/2022 8:49	11.44
6/23/2022 9:26	-0.07	6/24/2022 8:16	2.40	6/24/2022 8:39	6.08	6/24/2022 10:02	-0.33	6/23/2022 8:50	11.44
6/23/2022 9:27	-0.08	6/24/2022 8:17	2.40	6/24/2022 8:40	6.10	6/24/2022 10:03	-0.33	6/23/2022 8:51	11.44
6/23/2022 9:28	-0.08	6/24/2022 8:18	2.40	6/24/2022 8:41	6.08	6/24/2022 10:04	-0.36	6/23/2022 8:52	11.45

6/23/2022 9:29	-0.08	6/24/2022 8:19	2.41	6/24/2022 8:42	6.13	6/24/2022 10:05	-0.32	6/23/2022 8:53	11.43
6/23/2022 9:30	-0.09	6/24/2022 8:20	2.40	6/24/2022 8:43	6.12	6/24/2022 10:06	-0.31	6/23/2022 8:54	11.42
6/23/2022 9:31	-0.07	6/24/2022 8:21	2.40	6/24/2022 8:44	6.12	6/24/2022 10:07	-0.37	6/23/2022 8:55	11.44
6/23/2022 9:32	-0.07	6/24/2022 8:22	2.40	6/24/2022 8:45	6.10	6/24/2022 10:08	-0.37	6/23/2022 8:56	11.45
6/23/2022 9:33	-0.09	6/24/2022 8:23	2.40	6/24/2022 8:46	6.12	6/24/2022 10:09	-0.35	6/23/2022 8:57	11.49
6/23/2022 9:34	-0.07	6/24/2022 8:24	2.40	6/24/2022 8:47	6.10	6/24/2022 10:10	-0.32	6/23/2022 8:58	11.43
6/23/2022 9:35	-0.09	6/24/2022 8:25	2.40	6/24/2022 8:48	6.07	6/24/2022 10:11	-0.30	6/23/2022 8:59	11.42
6/23/2022 9:36	-0.07	6/24/2022 8:26	2.40	6/24/2022 8:49	6.11	6/24/2022 10:12	-0.36	6/23/2022 9:00	11.43
6/23/2022 9:37	-0.08	6/24/2022 8:27	2.40	6/24/2022 8:50	6.11	6/24/2022 10:13	-0.34	6/23/2022 9:01	11.43
6/23/2022 9:38	-0.08	6/24/2022 8:28	2.40	6/24/2022 8:51	6.13	6/24/2022 10:14	-0.31	6/23/2022 9:02	11.43
6/23/2022 9:39	-0.08	6/24/2022 8:29	2.40	6/24/2022 8:52	6.11	6/24/2022 10:15	-0.30	6/23/2022 9:03	11.51
6/23/2022 9:40	-0.09	6/24/2022 8:30	2.40	6/24/2022 8:53	6.13	6/24/2022 10:16	-0.35	6/23/2022 9:04	11.46
6/23/2022 9:41	-0.09	6/24/2022 8:31	2.40	6/24/2022 8:54	6.12	6/24/2022 10:17	-0.33	6/23/2022 9:05	11.51
6/23/2022 9:42	-0.08	6/24/2022 8:32	2.40	6/24/2022 8:55	6.09	6/24/2022 10:18	-0.38	6/23/2022 9:06	11.47
6/23/2022 9:43	-0.08	6/24/2022 8:33	2.40	6/24/2022 8:56	6.10	6/24/2022 10:19	-0.35	6/23/2022 9:07	11.46
6/23/2022 9:44	-0.07	6/24/2022 8:34	2.40	6/24/2022 8:57	6.10	6/24/2022 10:20	-0.32	6/23/2022 9:08	11.49
6/23/2022 9:45	-0.09	6/24/2022 8:35	2.40	6/24/2022 8:58	6.10	6/24/2022 10:21	-0.35	6/23/2022 9:09	11.43
6/23/2022 9:46	-0.07	6/24/2022 8:36	2.40	6/24/2022 8:59	6.10	6/24/2022 10:22	-0.33	6/23/2022 9:10	11.48
6/23/2022 9:47	-0.07	6/24/2022 8:37	2.40	6/24/2022 9:00	6.10	6/24/2022 10:23	-0.33	6/23/2022 9:11	11.43
6/23/2022 9:48	-0.07	6/24/2022 8:38	2.39	6/24/2022 9:01	6.08	6/24/2022 10:24	-0.32	6/23/2022 9:12	11.43
6/23/2022 9:49	-0.07	6/24/2022 8:39	2.39	6/24/2022 9:02	6.11	6/24/2022 10:25	-0.30	6/23/2022 9:13	11.42
6/23/2022 9:50	-0.09	6/24/2022 8:40	2.40	6/24/2022 9:03	6.08	6/24/2022 10:26	-0.32	6/23/2022 9:14	11.43
6/23/2022 9:51	-0.09	6/24/2022 8:41	2.39	6/24/2022 9:04	6.11	6/24/2022 10:27	-0.35	6/23/2022 9:15	11.43
6/23/2022 9:52	-0.07	6/24/2022 8:42	2.39	6/24/2022 9:05	6.05	6/24/2022 10:28	-0.33	6/23/2022 9:16	11.45
6/23/2022 9:53	-0.09	6/24/2022 8:43	2.39	6/24/2022 9:06	6.10	6/24/2022 10:29	-0.35	6/23/2022 9:17	11.46
6/23/2022 9:54	-0.07	6/24/2022 8:44	2.39	6/24/2022 9:07	6.06	6/24/2022 10:30	-0.39	6/23/2022 9:18	11.47
6/23/2022 9:55	-0.08	6/24/2022 8:45	2.39	6/24/2022 9:08	6.10	6/24/2022 10:31	-0.32	6/23/2022 9:19	11.45
6/23/2022 9:56	-0.08	6/24/2022 8:46	2.39	6/24/2022 9:09	6.09	6/24/2022 10:32	-0.37	6/23/2022 9:20	11.42
6/23/2022 9:57	-0.08	6/24/2022 8:47	2.39	6/24/2022 9:10	6.09	6/24/2022 10:33	-0.36	6/23/2022 9:21	11.47
6/23/2022 9:58	-0.09	6/24/2022 8:48	2.39	6/24/2022 9:11	6.11	6/24/2022 10:34	-0.33	6/23/2022 9:22	11.48
6/23/2022 9:59	-0.09	6/24/2022 8:49	2.39	6/24/2022 9:12	6.08	6/24/2022 10:35	-0.38	6/23/2022 9:23	11.46
6/23/2022 10:00	-0.09	6/24/2022 8:50	2.39	6/24/2022 9:13	6.09	6/24/2022 10:36	-0.31	6/23/2022 9:24	11.41
6/23/2022 10:01	-0.09	6/24/2022 8:51	2.39	6/24/2022 9:14	6.06	6/24/2022 10:37	-0.35	6/23/2022 9:25	11.42
6/23/2022 10:02	-0.09	6/24/2022 8:52	2.39	6/24/2022 9:15	6.05	6/24/2022 10:38	-0.37	6/23/2022 9:26	11.47
6/23/2022 10:03	-0.08	6/24/2022 8:53	2.39	6/24/2022 9:16	6.04	6/24/2022 10:39	-0.30	6/23/2022 9:27	11.49
6/23/2022 10:04	-0.07	6/24/2022 8:54	2.39	6/24/2022 9:17	6.07	6/24/2022 10:40	-0.33	6/23/2022 9:28	11.44
6/23/2022 10:05	-0.07	6/24/2022 8:55	2.39	6/24/2022 9:18	6.08	6/24/2022 10:41	-0.35	6/23/2022 9:29	11.41
6/23/2022 10:06	-0.08	6/24/2022 8:56	2.39	6/24/2022 9:19	6.07	6/24/2022 10:42	-0.34	6/23/2022 9:30	11.41
6/23/2022 10:07	-0.09	6/24/2022 8:57	2.39	6/24/2022 9:20	6.11	6/24/2022 10:43	-0.31	6/23/2022 9:31	11.43
6/23/2022 10:08	-0.07	6/24/2022 8:58	2.38	6/24/2022 9:21	6.07	6/24/2022 10:44	-0.35	6/23/2022 9:32	11.48
6/23/2022 10:09	-0.08	6/24/2022 8:59	2.38	6/24/2022 9:22	6.07	6/24/2022 10:45	-0.30	6/23/2022 9:33	11.44
6/23/2022 10:10	-0.09	6/24/2022 9:00	2.39	6/24/2022 9:23	6.09	6/24/2022 10:46	-0.36	6/23/2022 9:34	11.45
6/23/2022 10:11	-0.08	6/24/2022 9:01	2.38	6/24/2022 9:24	6.08	6/24/2022 10:47	-0.39	6/23/2022 9:35	11.44
6/23/2022 10:12	-0.09	6/24/2022 9:02	2.38	6/24/2022 9:25	6.04	6/24/2022 10:48	-0.30	6/23/2022 9:36	11.43
6/23/2022 10:13	-0.09	6/24/2022 9:03	2.38	6/24/2022 9:26	6.08	6/24/2022 10:49	-0.36	6/23/2022 9:37	11.49
6/23/2022 10:14	-0.09	6/24/2022 9:04	2.38	6/24/2022 9:27	6.07	6/24/2022 10:50	-0.32	6/23/2022 9:38	11.47
6/23/2022 10:15	-0.09	6/24/2022 9:05	2.38	6/24/2022 9:28	6.06	6/24/2022 10:51	-0.35	6/23/2022 9:39	11.45
6/23/2022 10:16	-0.07	6/24/2022 9:06	2.38	6/24/2022 9:29	6.06	6/24/2022 10:52	-0.32	6/23/2022 9:40	11.47
6/23/2022 10:17	-0.07	6/24/2022 9:07	2.38	6/24/2022 9:30	6.09	6/24/2022 10:53	-0.37	6/23/2022 9:41	11.47
6/23/2022 10:18	-0.08	6/24/2022 9:08	2.38	6/24/2022 9:31	6.01	6/24/2022 10:54	-0.33	6/23/2022 9:42	11.42
6/23/2022 10:19	-0.09	6/24/2022 9:09	2.38	6/24/2022 9:32	6.05	6/24/2022 10:55	-0.34	6/23/2022 9:43	11.44
6/23/2022 10:20	-0.09	6/24/2022 9:10	2.38	6/24/2022 9:33	6.08	6/24/2022 10:56	-0.33	6/23/2022 9:44	11.43
6/23/2022 10:21	-0.09	6/24/2022 9:11	2.38	6/24/2022 9:34	6.01	6/24/2022 10:57	-0.37	6/23/2022 9:45	11.49
6/23/2022 10:22	-0.09	6/24/2022 9:12	2.38	6/24/2022 9:35	6.13	6/24/2022 10:58	-0.35	6/23/2022 9:46	11.43
6/23/2022 10:23	-0.07	6/24/2022 9:13	2.38	6/24/2022 9:36	6.01	6/24/2022 10:59	-0.31	6/23/2022 9:47	11.41
6/23/2022 10:24	-0.09	6/24/2022 9:14	2.38	6/24/2022 9:37	6.03	6/24/2022 11:00	-0.33	6/23/2022 9:48	11.44
6/23/2022 10:25	-0.08	6/24/2022 9:15	2.37	6/24/2022 9:38	6.03	6/24/2022 11:01	-0.36	6/23/2022 9:49	11.50
6/23/2022 10:26	-0.09	6/24/2022 9:16	2.38	6/24/2022 9:39	6.02	6/24/2022 11:02	-0.34	6/23/2022 9:50	11.42
6/23/2022 10:27	-0.07	6/24/2022 9:17	2.38	6/24/2022 9:40	6.10	6/24/2022 11:03	-0.35	6/23/2022 9:51	11.46
6/23/2022 10:28	-0.09	6/24/2022 9:18	2.37	6/24/2022 9:41	6.06	6/24/2022 11:04	-0.34	6/23/2022 9:52	11.44
6/23/2022 10:29	-0.09	6/24/2022 9:19	2.38	6/24/2022 9:42	6.05	6/24/2022 11:05	-0.33	6/23/2022 9:53	11.46
6/23/2022 10:30	-0.09	6/24/2022 9:20	2.37	6/24/2022 9:43	6.09	6/24/2022 11:06	-0.31	6/23/2022 9:54	11.46
6/23/2022 10:31	-0.09	6/24/2022 9:21	2.37	6/24/2022 9:44	6.05	6/24/2022 11:07	-0.28	6/23/2022 9:55	11.44
6/23/2022 10:32	-0.08	6/24/2022 9:22	2.37	6/24/2022 9:45	6.12	6/24/2022 11:08	-0.32	6/23/2022 9:56	11.42
6/23/2022 10:33	-0.08	6/24/2022 9:23	2.37	6/24/2022 9:46	6.03	6/24/2022 11:09	-0.36	6/23/2022 9:57	11.41
6/23/2022 10:34	-0.09	6/24/2022 9:24	2.37	6/24/2022 9:47	6.03	6/24/2022 11:10	-0.35	6/23/2022 9:58	11.44
6/23/2022 10:35	-0.08	6/24/2022 9:25	2.37	6/24/2022 9:48	6.05	6/24/2022 11:11	-0.32	6/23/2022 9:59	11.41
6/23/2022 10:36	-0.07	6/24/2022 9:26	2.37	6/24/2022 9:49	6.10	6/24/2022 11:12	-0.34	6/23/2022 10:00	11.39
6/23/2022 10:37	-0.09	6/24/2022 9:27	2.35	6/24/2022 9:50	6.06	6/24/2022 11:13	-0.29	6/23/2022 10:01	11.42
6/23/2022 10:38	-0.09	6/24/2022 9:28	2.37	6/24/2022 9:51	6.11	6/24/2022 11:14	-0.35	6/23/2022 10:02	11.44
6/23/2022 10:39	-0.08	6/24/2022 9:29	2.37	6/24/2022 9:52	6.03	6/24/2022 11:15	-0.32	6/23/2022 10:03	11.45
6/23/2022 10:40	-0.07	6/24/2022 9:30	2.37	6/24/2022 9:53	6.07	6/24/2022 11:16	-0.32	6/23/2022 10:04	11.41
6/23/2022 10:41	-0.07	6/24/2022 9:31	2.37	6/24/2022 9:54	6.02	6/24/2022 11:17	-0.34	6/23/2022 10:05	11.40
6/23/2022 10:42	-0.08	6/24/2022 9:32	2.37	6/24/2022 9:55	6.09	6/24/2022 11:18	-0.31	6/23/2022 10:06	11.43
6/23/2022 10:43	-0.07	6/24/2022 9:33	2.37	6/24/2022 9:56	6.08	6/24/2022 11:19	-0.36	6/23/2022 10:07	11.42
6/23/2022 10:44	-0.08	6/24/2022 9:34	2.36	6/24/2022 9:57	6.03	6/24/2022 11:20	-0.36	6/23/2022 10:08	11.41
6/23/2022 10:45	-0.07	6/24/2022 9:35	2.37	6/24/2022 9:58	6.03	6/24/2022 11:21	-0.32	6/23/2022 10:09	11.41
6/23/2022 10:46	-0.07	6/24/2022 9:36	2.36	6/24/2022 9:59	6.03	6/24/2022 11:22	-0.30	6/23/2022 10:10	11.44
6/23/2022 10:47	-0.09	6/24/2022 9:37	2.36	6/24/2022 10:00	6.06	6/24/2022 11:23	-0.34	6/23/2022 10:11	11.43
6/23/2022 10:48	-0.09	6/24/2022 9:38	2.36	6/24/2022 10:01	6.05	6/24/2022 11:24	-0.35	6/23/2022 10:12	11.41
6/23/2022 10:49	-0.09	6/24/2022 9:39	2.36	6/24/2022 10:02	6.01	6/24/2022 11:25	-0.36	6/23/2022 10:13	11.47
6/23/2022 10:50	-0.09	6/24/2022 9:40	2.36	6/24/2022 10:03	6.09	6/24/2022 11:26	-0.34	6/23/2022 10:14	11.45
6/23/2022 10:51	-0.09	6/24/2022 9:41	2.36	6/24/2022 10:04	6.04	6/24/2022 11:27	-0.32	6/23/2022 10:15	11.43
6/23/2022 10:52	-0.07	6/24/2022 9:42	2.36	6/24/2022 10:05	6.03	6/24/2022 11:28	-0.35	6/23/2022 10:16	11.40
6/23/2022 10:53	-0.09	6/24/2022 9:43	2.37	6/24/2022 10:06	6.06	6/24/2022 11:29	-0.32	6/23/2022 10:17	11.42
6/23/2022 10:54	-0.08	6/24/2022 9:44	2.36	6/24/2022 10:07	5.99	6/24/2022 11:30	-0.31	6/23/2022 10:18	11.40
6/23/2022 10:55	-0.09	6/24/2022 9:45	2.36	6/24/2022 10:08	6.04	6/24/2022 11:31	-0.34	6/23/2022 10:19	11.47
6/23/2022 10:56	-0.08	6/24/2022 9:46	2.36	6/24/2022 10:09	6.02	6/24/2022 11:32	-0.38	6/23/2022 10:20	11.42

6/23/2022 10:57	-0.07	6/24/2022 9:47	2.36	6/24/2022 10:10	5.96	6/24/2022 11:33	-0.34	6/23/2022 10:21	11.42
6/23/2022 10:58	-0.08	6/24/2022 9:48	2.36	6/24/2022 10:11	6.07	6/24/2022 11:34	-0.35	6/23/2022 10:22	11.44
6/23/2022 10:59	-0.07	6/24/2022 9:49	2.36	6/24/2022 10:12	6.02	6/24/2022 11:35	-0.33	6/23/2022 10:23	11.46
6/23/2022 11:00	-0.09	6/24/2022 9:50	2.36	6/24/2022 10:13	5.99	6/24/2022 11:36	-0.35	6/23/2022 10:24	11.41
6/23/2022 11:01	-0.07	6/24/2022 9:51	2.36	6/24/2022 10:14	6.05	6/24/2022 11:37	-0.35	6/23/2022 10:25	11.43
6/23/2022 11:02	-0.09	6/24/2022 9:52	2.36	6/24/2022 10:15	5.97	6/24/2022 11:38	-0.34	6/23/2022 10:26	11.43
6/23/2022 11:03	-0.09	6/24/2022 9:53	2.35	6/24/2022 10:16	6.01	6/24/2022 11:39	-0.38	6/23/2022 10:27	11.40
6/23/2022 11:04	-0.08	6/24/2022 9:54	2.36	6/24/2022 10:17	6.01	6/24/2022 11:40	-0.34	6/23/2022 10:28	11.47
6/23/2022 11:05	-0.07	6/24/2022 9:55	2.35	6/24/2022 10:18	6.00	6/24/2022 11:41	-0.32	6/23/2022 10:29	11.45
6/23/2022 11:06	-0.09	6/24/2022 9:56	2.36	6/24/2022 10:19	6.04	6/24/2022 11:42	-0.38	6/23/2022 10:30	11.43
6/23/2022 11:07	-0.08	6/24/2022 9:57	2.35	6/24/2022 10:20	6.01	6/24/2022 11:43	-0.35	6/23/2022 10:31	11.42
6/23/2022 11:08	-0.09	6/24/2022 9:58	2.35	6/24/2022 10:21	6.02	6/24/2022 11:44	-0.34	6/23/2022 10:32	11.41
6/23/2022 11:09	-0.07	6/24/2022 9:59	2.35	6/24/2022 10:22	6.05	6/24/2022 11:45	-0.36	6/23/2022 10:33	11.47
6/23/2022 11:10	-0.07	6/24/2022 10:00	2.35	6/24/2022 10:23	6.04	6/24/2022 11:46	-0.33	6/23/2022 10:34	11.44
6/23/2022 11:11	-0.07	6/24/2022 10:01	2.35	6/24/2022 10:24	6.00	6/24/2022 11:47	-0.31	6/23/2022 10:35	11.48
6/23/2022 11:12	-0.09	6/24/2022 10:02	2.35	6/24/2022 10:25	6.03	6/24/2022 11:48	-0.36	6/23/2022 10:36	11.43
6/23/2022 11:13	-0.07	6/24/2022 10:03	2.35	6/24/2022 10:26	6.05	6/24/2022 11:49	-0.32	6/23/2022 10:37	11.49
6/23/2022 11:14	-0.09	6/24/2022 10:04	2.35	6/24/2022 10:27	6.00	6/24/2022 11:50	-0.36	6/23/2022 10:38	11.42
6/23/2022 11:15	-0.07	6/24/2022 10:05	2.35	6/24/2022 10:28	6.00	6/24/2022 11:51	-0.35	6/23/2022 10:39	11.43
6/23/2022 11:16	-0.07	6/24/2022 10:06	2.35	6/24/2022 10:29	6.08	6/24/2022 11:52	-0.37	6/23/2022 10:40	11.41
6/23/2022 11:17	-0.07	6/24/2022 10:07	2.35	6/24/2022 10:30	5.98	6/24/2022 11:53	-0.36	6/23/2022 10:41	11.42
6/23/2022 11:18	-0.09	6/24/2022 10:08	2.35	6/24/2022 10:31	6.03	6/24/2022 11:54	-0.34	6/23/2022 10:42	11.45
6/23/2022 11:19	-0.07	6/24/2022 10:09	2.35	6/24/2022 10:32	5.96	6/24/2022 11:55	-0.35	6/23/2022 10:43	11.38
6/23/2022 11:20	-0.07	6/24/2022 10:10	2.35	6/24/2022 10:33	6.03	6/24/2022 11:56	-0.38	6/23/2022 10:44	11.44
6/23/2022 11:21	-0.08	6/24/2022 10:11	2.35	6/24/2022 10:34	5.99	6/24/2022 11:57	-0.34	6/23/2022 10:45	11.43
6/23/2022 11:22	-0.09	6/24/2022 10:12	2.35	6/24/2022 10:35	6.02	6/24/2022 11:58	-0.32	6/23/2022 10:46	11.46
6/23/2022 11:23	-0.09	6/24/2022 10:13	2.34	6/24/2022 10:36	6.03	6/24/2022 11:59	-0.34	6/23/2022 10:47	11.44
6/23/2022 11:24	-0.09	6/24/2022 10:14	2.35	6/24/2022 10:37	6.03	6/24/2022 12:00	-0.34	6/23/2022 10:48	11.44
6/23/2022 11:25	-0.08	6/24/2022 10:15	2.35	6/24/2022 10:38	6.04	6/24/2022 12:01	-0.34	6/23/2022 10:49	11.45
6/23/2022 11:26	-0.07	6/24/2022 10:16	2.35	6/24/2022 10:39	6.02	6/24/2022 12:02	-0.33	6/23/2022 10:50	11.44
6/23/2022 11:27	-0.08	6/24/2022 10:17	2.34	6/24/2022 10:40	5.99	6/24/2022 12:03	-0.35	6/23/2022 10:51	11.39
6/23/2022 11:28	-0.08	6/24/2022 10:18	2.34	6/24/2022 10:41	6.02	6/24/2022 12:04	-0.33	6/23/2022 10:52	11.45
6/23/2022 11:29	-0.08	6/24/2022 10:19	2.34	6/24/2022 10:42	5.93	6/24/2022 12:05	-0.31	6/23/2022 10:53	11.43
6/23/2022 11:30	-0.07	6/24/2022 10:20	2.34	6/24/2022 10:43	6.00	6/24/2022 12:06	-0.35	6/23/2022 10:54	11.46
6/23/2022 11:31	-0.09	6/24/2022 10:21	2.34	6/24/2022 10:44	6.05	6/24/2022 12:07	-0.33	6/23/2022 10:55	11.41
6/23/2022 11:32	-0.08	6/24/2022 10:22	2.34	6/24/2022 10:45	6.04	6/24/2022 12:08	-0.34	6/23/2022 10:56	11.43
6/23/2022 11:33	-0.07	6/24/2022 10:23	2.34	6/24/2022 10:46	6.01	6/24/2022 12:09	-0.34	6/23/2022 10:57	11.42
6/23/2022 11:34	-0.07	6/24/2022 10:24	2.34	6/24/2022 10:47	6.01	6/24/2022 12:10	-0.32	6/23/2022 10:58	11.43
6/23/2022 11:35	-0.08	6/24/2022 10:25	2.34	6/24/2022 10:48	6.00	6/24/2022 12:11	-0.32	6/23/2022 10:59	11.45
6/23/2022 11:36	-0.08	6/24/2022 10:26	2.34	6/24/2022 10:49	6.02	6/24/2022 12:12	-0.32	6/23/2022 11:00	11.42
6/23/2022 11:37	-0.07	6/24/2022 10:27	2.34	6/24/2022 10:50	5.96	6/24/2022 12:13	-0.38	6/23/2022 11:01	11.42
6/23/2022 11:38	-0.09	6/24/2022 10:28	2.34	6/24/2022 10:51	5.99	6/24/2022 12:14	-0.35	6/23/2022 11:02	11.47
6/23/2022 11:39	-0.08	6/24/2022 10:29	2.34	6/24/2022 10:52	5.99	6/24/2022 12:15	-0.34	6/23/2022 11:03	11.43
6/23/2022 11:40	-0.07	6/24/2022 10:30	2.34	6/24/2022 10:53	5.97	6/24/2022 12:16	-0.34	6/23/2022 11:04	11.47
6/23/2022 11:41	-0.08	6/24/2022 10:31	2.34	6/24/2022 10:54	5.95	6/24/2022 12:17	-0.34	6/23/2022 11:05	11.41
6/23/2022 11:42	-0.07	6/24/2022 10:32	2.33	6/24/2022 10:55	6.00	6/24/2022 12:18	-0.37	6/23/2022 11:06	11.42
6/23/2022 11:43	-0.09	6/24/2022 10:33	2.34	6/24/2022 10:56	6.01	6/24/2022 12:19	-0.36	6/23/2022 11:07	11.40
6/23/2022 11:44	-0.07	6/24/2022 10:34	2.33	6/24/2022 10:57	5.97	6/24/2022 12:20	-0.34	6/23/2022 11:08	11.43
6/23/2022 11:45	-0.07	6/24/2022 10:35	2.33	6/24/2022 10:58	5.97	6/24/2022 12:21	-0.33	6/23/2022 11:09	11.41
6/23/2022 11:46	-0.09	6/24/2022 10:36	2.33	6/24/2022 10:59	6.03	6/24/2022 12:22	-0.35	6/23/2022 11:10	11.41
6/23/2022 11:47	-0.09	6/24/2022 10:37	2.33	6/24/2022 11:00	6.00	6/24/2022 12:23	-0.32	6/23/2022 11:11	11.45
6/23/2022 11:48	-0.08	6/24/2022 10:38	2.33	6/24/2022 11:01	6.03	6/24/2022 12:24	-0.37	6/23/2022 11:12	11.41
6/23/2022 11:49	-0.08	6/24/2022 10:39	2.33	6/24/2022 11:02	6.05	6/24/2022 12:25	-0.31	6/23/2022 11:13	11.44
6/23/2022 11:50	-0.09	6/24/2022 10:40	2.33	6/24/2022 11:03	5.96	6/24/2022 12:26	-0.35	6/23/2022 11:14	11.41
6/23/2022 11:51	-0.07	6/24/2022 10:41	2.33	6/24/2022 11:04	5.97	6/24/2022 12:27	-0.37	6/23/2022 11:15	11.45
6/23/2022 11:52	-0.07	6/24/2022 10:42	2.33	6/24/2022 11:05	6.01	6/24/2022 12:28	-0.33	6/23/2022 11:16	11.40
6/23/2022 11:53	-0.08	6/24/2022 10:43	2.33	6/24/2022 11:06	5.93	6/24/2022 12:29	-0.33	6/23/2022 11:17	11.45
6/23/2022 11:54	-0.09	6/24/2022 10:44	2.33	6/24/2022 11:07	5.97	6/24/2022 12:30	-0.33	6/23/2022 11:18	11.44
6/23/2022 11:55	-0.09	6/24/2022 10:45	2.33	6/24/2022 11:08	5.94	6/24/2022 12:31	-0.35	6/23/2022 11:19	11.46
6/23/2022 11:56	-0.09	6/24/2022 10:46	2.33	6/24/2022 11:09	5.94	6/24/2022 12:32	-0.35	6/23/2022 11:20	11.44
6/23/2022 11:57	-0.07	6/24/2022 10:47	2.33	6/24/2022 11:10	6.00	6/24/2022 12:33	-0.34	6/23/2022 11:21	11.45
6/23/2022 11:58	-0.07	6/24/2022 10:48	2.33	6/24/2022 11:11	5.99	6/24/2022 12:34	-0.38	6/23/2022 11:22	11.49
6/23/2022 11:59	-0.07	6/24/2022 10:49	2.33	6/24/2022 11:12	6.02	6/24/2022 12:35	-0.39	6/23/2022 11:23	11.45
6/23/2022 12:00	-0.08	6/24/2022 10:50	2.32	6/24/2022 11:13	5.95	6/24/2022 12:36	-0.32	6/23/2022 11:24	11.45
6/23/2022 12:01	-0.09	6/24/2022 10:51	2.32	6/24/2022 11:14	5.98	6/24/2022 12:37	-0.35	6/23/2022 11:25	11.43
6/23/2022 12:02	-0.09	6/24/2022 10:52	2.33	6/24/2022 11:15	5.96	6/24/2022 12:38	-0.33	6/23/2022 11:26	11.38
6/23/2022 12:03	-0.09	6/24/2022 10:53	2.32	6/24/2022 11:16	5.94	6/24/2022 12:39	-0.34	6/23/2022 11:27	11.44
6/23/2022 12:04	-0.08	6/24/2022 10:54	2.32	6/24/2022 11:17	5.94	6/24/2022 12:40	-0.31	6/23/2022 11:28	11.38
6/23/2022 12:05	-0.08	6/24/2022 10:55	2.32	6/24/2022 11:18	6.00	6/24/2022 12:41	-0.30	6/23/2022 11:29	11.41
6/23/2022 12:06	-0.09	6/24/2022 10:56	2.32	6/24/2022 11:19	6.00	6/24/2022 12:42	-0.30	6/23/2022 11:30	11.41
6/23/2022 12:07	-0.09	6/24/2022 10:57	2.32	6/24/2022 11:20	5.98	6/24/2022 12:43	-0.36	6/23/2022 11:31	11.43
6/23/2022 12:08	-0.07	6/24/2022 10:58	2.32	6/24/2022 11:21	5.93	6/24/2022 12:44	-0.38	6/23/2022 11:32	11.40
6/23/2022 12:09	-0.09	6/24/2022 10:59	2.32	6/24/2022 11:22	5.95	6/24/2022 12:45	-0.29	6/23/2022 11:33	11.40
6/23/2022 12:10	-0.07	6/24/2022 11:00	2.32	6/24/2022 11:23	5.97	6/24/2022 12:46	-0.36	6/23/2022 11:34	11.41
6/23/2022 12:11	-0.07	6/24/2022 11:01	2.32	6/24/2022 11:24	5.96	6/24/2022 12:47	-0.34	6/23/2022 11:35	11.41
6/23/2022 12:12	-0.09	6/24/2022 11:02	2.32	6/24/2022 11:25	5.95	6/24/2022 12:48	-0.38	6/23/2022 11:36	11.44
6/23/2022 12:13	-0.07	6/24/2022 11:03	2.32	6/24/2022 11:26	5.95	6/24/2022 12:49	-0.33	6/23/2022 11:37	11.43
6/23/2022 12:14	-0.07	6/24/2022 11:04	2.32	6/24/2022 11:27	5.94	6/24/2022 12:50	-0.32	6/23/2022 11:38	11.45
6/23/2022 12:15	-0.08	6/24/2022 11:05	2.31	6/24/2022 11:28	5.99	6/24/2022 12:51	-0.33	6/23/2022 11:39	11.45
6/23/2022 12:16	-0.08	6/24/2022 11:06	2.31	6/24/2022 11:29	5.91	6/24/2022 12:52	-0.35	6/23/2022 11:40	11.43
6/23/2022 12:17	-0.08	6/24/2022 11:07	2.31	6/24/2022 11:30	5.91	6/24/2022 12:53	-0.36	6/23/2022 11:41	11.42
6/23/2022 12:18	-0.09	6/24/2022 11:08	2.31	6/24/2022 11:31	5.96	6/24/2022 12:54	-0.28	6/23/2022 11:42	11.42
6/23/2022 12:19	-0.09	6/24/2022 11:09	2.31	6/24/2022 11:32	5.96	6/24/2022 12:55	-0.34	6/23/2022 11:43	11.45
6/23/2022 12:20	-0.09	6/24/2022 11:10	2.32	6/24/2022 11:33	5.91	6/24/2022 12:56	-0.32	6/23/2022 11:44	11.40
6/23/2022 12:21	-0.09	6/24/2022 11:11	2.31	6/24/2022 11:34	6.02	6/24/2022 12:57	-0.30	6/23/2022 11:45	11.45
6/23/2022 12:22	-0.07	6/24/2022 11:12	2.31	6/24/2022 11:35	5.93	6/24/2022 12:58	-0.35	6/23/2022 11:46	11.48
6/23/2022 12:23	-0.07	6/24/2022 11:13	2.31	6/24/2022 11:36	5.91	6/24/2022 12:59	-0.33	6/23/2022 11:47	11.40
6/23/2022 12:24	-0.09	6/24/2022 11:14	2.31	6/24/2022 11:37	5.93	6/24/2022 13:00	-0.35	6/23/2022 11:48	11.41

6/23/2022 12:25	-0.08	6/24/2022 11:15	2.31	6/24/2022 11:38	5.91	6/24/2022 13:01	-0.32	6/23/2022 11:49	11.43
6/23/2022 12:26	-0.09	6/24/2022 11:16	2.31	6/24/2022 11:39	5.99	6/24/2022 13:02	-0.34	6/23/2022 11:50	11.42
6/23/2022 12:27	-0.07	6/24/2022 11:17	2.31	6/24/2022 11:40	5.94	6/24/2022 13:03	-0.35	6/23/2022 11:51	11.46
6/23/2022 12:28	-0.09	6/24/2022 11:18	2.31	6/24/2022 11:41	5.94	6/24/2022 13:04	-0.36	6/23/2022 11:52	11.44
6/23/2022 12:29	-0.07	6/24/2022 11:19	2.31	6/24/2022 11:42	5.99	6/24/2022 13:05	-0.35	6/23/2022 11:53	11.40
6/23/2022 12:30	-0.08	6/24/2022 11:20	2.31	6/24/2022 11:43	5.95	6/24/2022 13:06	-0.37	6/23/2022 11:54	11.42
6/23/2022 12:31	-0.09	6/24/2022 11:21	2.31	6/24/2022 11:44	5.98	6/24/2022 13:07	-0.30	6/23/2022 11:55	11.42
6/23/2022 12:32	-0.09	6/24/2022 11:22	2.31	6/24/2022 11:45	5.93	6/24/2022 13:08	-0.37	6/23/2022 11:56	11.43
6/23/2022 12:33	-0.09	6/24/2022 11:23	2.30	6/24/2022 11:46	5.93	6/24/2022 13:09	-0.34	6/23/2022 11:57	11.45
6/23/2022 12:34	-0.09	6/24/2022 11:24	2.30	6/24/2022 11:47	5.93	6/24/2022 13:10	-0.34	6/23/2022 11:58	11.43
6/23/2022 12:35	-0.07	6/24/2022 11:25	2.30	6/24/2022 11:48	5.98	6/24/2022 13:11	-0.37	6/23/2022 11:59	11.42
6/23/2022 12:36	-0.09	6/24/2022 11:26	2.31	6/24/2022 11:49	5.94	6/24/2022 13:12	-0.35	6/23/2022 12:00	11.44
6/23/2022 12:37	-0.07	6/24/2022 11:27	2.30	6/24/2022 11:50	5.93	6/24/2022 13:13	-0.37	6/23/2022 12:01	11.42
6/23/2022 12:38	-0.08	6/24/2022 11:28	2.30	6/24/2022 11:51	5.96	6/24/2022 13:14	-0.34	6/23/2022 12:02	11.44
6/23/2022 12:39	-0.09	6/24/2022 11:29	2.30	6/24/2022 11:52	5.98	6/24/2022 13:15	-0.35	6/23/2022 12:03	11.43
6/23/2022 12:40	-0.09	6/24/2022 11:30	2.30	6/24/2022 11:53	5.97	6/24/2022 13:16	-0.35	6/23/2022 12:04	11.40
6/23/2022 12:41	-0.07	6/24/2022 11:31	2.30	6/24/2022 11:54	5.97	6/24/2022 13:17	-0.33	6/23/2022 12:05	11.43
6/23/2022 12:42	-0.07	6/24/2022 11:32	2.30	6/24/2022 11:55	5.97	6/24/2022 13:18	-0.34	6/23/2022 12:06	11.45
6/23/2022 12:43	-0.09	6/24/2022 11:33	2.30	6/24/2022 11:56	5.94	6/24/2022 13:19	-0.37	6/23/2022 12:07	11.46
6/23/2022 12:44	-0.07	6/24/2022 11:34	2.30	6/24/2022 11:57	5.94	6/24/2022 13:20	-0.32	6/23/2022 12:08	11.41
6/23/2022 12:45	-0.09	6/24/2022 11:35	2.30	6/24/2022 11:58	5.95	6/24/2022 13:21	-0.34	6/23/2022 12:09	11.41
6/23/2022 12:46	-0.07	6/24/2022 11:36	2.30	6/24/2022 11:59	5.99	6/24/2022 13:22	-0.32	6/23/2022 12:10	11.45
6/23/2022 12:47	-0.09	6/24/2022 11:37	2.30	6/24/2022 12:00	5.93	6/24/2022 13:23	-0.33	6/23/2022 12:11	11.43
6/23/2022 12:48	-0.08	6/24/2022 11:38	2.30	6/24/2022 12:01	5.90	6/24/2022 13:24	-0.35	6/23/2022 12:12	11.38
6/23/2022 12:49	-0.07	6/24/2022 11:39	2.29	6/24/2022 12:02	5.98	6/24/2022 13:25	-0.33	6/23/2022 12:13	11.42
6/23/2022 12:50	-0.07	6/24/2022 11:40	2.30	6/24/2022 12:03	5.90	6/24/2022 13:26	-0.38	6/23/2022 12:14	11.45
6/23/2022 12:51	-0.09	6/24/2022 11:41	2.29	6/24/2022 12:04	5.89	6/24/2022 13:27	-0.38	6/23/2022 12:15	11.39
6/23/2022 12:52	-0.09	6/24/2022 11:42	2.29	6/24/2022 12:05	5.96	6/24/2022 13:28	-0.35	6/23/2022 12:16	11.43
6/23/2022 12:53	-0.09	6/24/2022 11:43	2.29	6/24/2022 12:06	5.91	6/24/2022 13:29	-0.31	6/23/2022 12:17	11.41
6/23/2022 12:54	-0.07	6/24/2022 11:44	2.29	6/24/2022 12:07	5.90	6/24/2022 13:30	-0.32	6/23/2022 12:18	11.41
6/23/2022 12:55	-0.07	6/24/2022 11:45	2.29	6/24/2022 12:08	5.91	6/24/2022 13:31	-0.33	6/23/2022 12:19	11.47
6/23/2022 12:56	-0.09	6/24/2022 11:46	2.29	6/24/2022 12:09	5.94	6/24/2022 13:32	-0.32	6/23/2022 12:20	11.44
6/23/2022 12:57	-0.07	6/24/2022 11:47	2.29	6/24/2022 12:10	5.97	6/24/2022 13:33	-0.33	6/23/2022 12:21	11.43
6/23/2022 12:58	-0.09	6/24/2022 11:48	2.29	6/24/2022 12:11	5.93	6/24/2022 13:34	-0.35	6/23/2022 12:22	11.46
6/23/2022 12:59	-0.09	6/24/2022 11:49	2.29	6/24/2022 12:12	5.90	6/24/2022 13:35	-0.32	6/23/2022 12:23	11.42
6/23/2022 13:00	-0.09	6/24/2022 11:50	2.29	6/24/2022 12:13	5.94	6/24/2022 13:36	-0.35	6/23/2022 12:24	11.42
6/23/2022 13:01	-0.07	6/24/2022 11:51	2.29	6/24/2022 12:14	5.87	6/24/2022 13:37	-0.34	6/23/2022 12:25	11.48
6/23/2022 13:02	-0.09	6/24/2022 11:52	2.29	6/24/2022 12:15	5.86	6/24/2022 13:38	-0.35	6/23/2022 12:26	11.44
6/23/2022 13:03	-0.08	6/24/2022 11:53	2.29	6/24/2022 12:16	5.93	6/24/2022 13:39	-0.33	6/23/2022 12:27	11.44
6/23/2022 13:04	-0.09	6/24/2022 11:54	2.29	6/24/2022 12:17	5.96	6/24/2022 13:40	-0.34	6/23/2022 12:28	11.44
6/23/2022 13:05	-0.09	6/24/2022 11:55	2.29	6/24/2022 12:18	5.93	6/24/2022 13:41	-0.32	6/23/2022 12:29	11.44
6/23/2022 13:06	-0.09	6/24/2022 11:56	2.29	6/24/2022 12:19	5.96	6/24/2022 13:42	-0.30	6/23/2022 12:30	11.36
6/23/2022 13:07	-0.09	6/24/2022 11:57	2.28	6/24/2022 12:20	5.88	6/24/2022 13:43	-0.37	6/23/2022 12:31	11.43
6/23/2022 13:08	-0.07	6/24/2022 11:58	2.29	6/24/2022 12:21	5.95	6/24/2022 13:44	-0.32	6/23/2022 12:32	11.44
6/23/2022 13:09	-0.07	6/24/2022 11:59	2.29	6/24/2022 12:22	5.97	6/24/2022 13:45	-0.34	6/23/2022 12:33	11.45
6/23/2022 13:10	-0.07	6/24/2022 12:00	2.28	6/24/2022 12:23	5.88	6/24/2022 13:46	-0.33	6/23/2022 12:34	11.50
6/23/2022 13:11	-0.09	6/24/2022 12:01	2.28	6/24/2022 12:24	5.85	6/24/2022 13:47	-0.32	6/23/2022 12:35	11.40
6/23/2022 13:12	-0.09	6/24/2022 12:02	2.28	6/24/2022 12:25	5.94	6/24/2022 13:48	-0.33	6/23/2022 12:36	11.41
6/23/2022 13:13	-0.09	6/24/2022 12:03	2.28	6/24/2022 12:26	5.94	6/24/2022 13:49	-0.31	6/23/2022 12:37	11.43
6/23/2022 13:14	-0.07	6/24/2022 12:04	2.28	6/24/2022 12:27	5.89	6/24/2022 13:50	-0.35	6/23/2022 12:38	11.42
6/23/2022 13:15	-0.08	6/24/2022 12:05	2.28	6/24/2022 12:28	5.90	6/24/2022 13:51	-0.33	6/23/2022 12:39	11.48
6/23/2022 13:16	-0.07	6/24/2022 12:06	2.28	6/24/2022 12:29	5.94	6/24/2022 13:52	-0.34	6/23/2022 12:40	11.47
6/23/2022 13:17	-0.09	6/24/2022 12:07	2.28	6/24/2022 12:30	5.90	6/24/2022 13:53	-0.38	6/23/2022 12:41	11.43
6/23/2022 13:18	-0.07	6/24/2022 12:08	2.28	6/24/2022 12:31	5.88	6/24/2022 13:54	-0.34	6/23/2022 12:42	11.41
6/23/2022 13:19	-0.07	6/24/2022 12:09	2.28	6/24/2022 12:32	5.97	6/24/2022 13:55	-0.35	6/23/2022 12:43	11.45
6/23/2022 13:20	-0.07	6/24/2022 12:10	2.28	6/24/2022 12:33	5.89	6/24/2022 13:56	-0.32	6/23/2022 12:44	11.39
6/23/2022 13:21	-0.08	6/24/2022 12:11	2.28	6/24/2022 12:34	5.92	6/24/2022 13:57	-0.38	6/23/2022 12:45	11.42
6/23/2022 13:22	-0.09	6/24/2022 12:12	2.28	6/24/2022 12:35	5.93	6/24/2022 13:58	-0.34	6/23/2022 12:46	11.44
6/23/2022 13:23	-0.07	6/24/2022 12:13	2.27	6/24/2022 12:36	5.83	6/24/2022 13:59	-0.33	6/23/2022 12:47	11.44
6/23/2022 13:24	-0.08	6/24/2022 12:14	2.27	6/24/2022 12:37	5.92	6/24/2022 14:00	-0.33	6/23/2022 12:48	11.46
6/23/2022 13:25	-0.08	6/24/2022 12:15	2.28	6/24/2022 12:38	5.88	6/24/2022 14:01	-0.32	6/23/2022 12:49	11.46
6/23/2022 13:26	-0.08	6/24/2022 12:16	2.28	6/24/2022 12:39	5.83	6/24/2022 14:02	-0.37	6/23/2022 12:50	11.45
6/23/2022 13:27	-0.07	6/24/2022 12:17	2.27	6/24/2022 12:40	5.91	6/24/2022 14:03	-0.37	6/23/2022 12:51	11.46
6/23/2022 13:28	-0.07	6/24/2022 12:18	2.27	6/24/2022 12:41	5.91	6/24/2022 14:04	-0.35	6/23/2022 12:52	11.43
6/23/2022 13:29	-0.09	6/24/2022 12:19	2.27	6/24/2022 12:42	5.92	6/24/2022 14:05	-0.35	6/23/2022 12:53	11.45
6/23/2022 13:30	-0.09	6/24/2022 12:20	2.27	6/24/2022 12:43	5.86	6/24/2022 14:06	-0.32	6/23/2022 12:54	11.41
6/23/2022 13:31	-0.08	6/24/2022 12:21	2.27	6/24/2022 12:44	5.92	6/24/2022 14:07	-0.36	6/23/2022 12:55	11.43
6/23/2022 13:32	-0.08	6/24/2022 12:22	2.27	6/24/2022 12:45	5.87	6/24/2022 14:08	-0.33	6/23/2022 12:56	11.45
6/23/2022 13:33	-0.09	6/24/2022 12:23	2.27	6/24/2022 12:46	5.90	6/24/2022 14:09	-0.34	6/23/2022 12:57	11.44
6/23/2022 13:34	-0.08	6/24/2022 12:24	2.27	6/24/2022 12:47	5.86	6/24/2022 14:10	-0.37	6/23/2022 12:58	11.45
6/23/2022 13:35	-0.09	6/24/2022 12:25	2.27	6/24/2022 12:48	5.90	6/24/2022 14:11	-0.32	6/23/2022 12:59	11.43
6/23/2022 13:36	-0.07	6/24/2022 12:26	2.27	6/24/2022 12:49	5.90	6/24/2022 14:12	-0.35	6/23/2022 13:00	11.43
6/23/2022 13:37	-0.09	6/24/2022 12:27	2.27	6/24/2022 12:50	5.88	6/24/2022 14:13	-0.36	6/23/2022 13:01	11.43
6/23/2022 13:38	-0.09	6/24/2022 12:28	2.27	6/24/2022 12:51	5.91	6/24/2022 14:14	-0.35	6/23/2022 13:02	11.42
6/23/2022 13:39	-0.07	6/24/2022 12:29	2.26	6/24/2022 12:52	5.90	6/24/2022 14:15	-0.35	6/23/2022 13:03	11.40
6/23/2022 13:40	-0.09	6/24/2022 12:30	2.27	6/24/2022 12:53	5.86	6/24/2022 14:16	-0.35	6/23/2022 13:04	11.44
6/23/2022 13:41	-0.09	6/24/2022 12:31	2.27	6/24/2022 12:54	5.84	6/24/2022 14:17	-0.32	6/23/2022 13:05	11.42
6/23/2022 13:42	-0.09	6/24/2022 12:32	2.27	6/24/2022 12:55	5.93	6/24/2022 14:18	-0.35	6/23/2022 13:06	11.44
6/23/2022 13:43	-0.08	6/24/2022 12:33	2.26	6/24/2022 12:56	5.84	6/24/2022 14:19	-0.35	6/23/2022 13:07	11.41
6/23/2022 13:44	-0.08	6/24/2022 12:34	2.26	6/24/2022 12:57	5.85	6/24/2022 14:20	-0.37	6/23/2022 13:08	11.35
6/23/2022 13:45	-0.09	6/24/2022 12:35	2.26	6/24/2022 12:58	5.86	6/24/2022 14:21	-0.34	6/23/2022 13:09	11.49
6/23/2022 13:46	-0.07	6/24/2022 12:36	2.26	6/24/2022 12:59	5.87	6/24/2022 14:22	-0.36	6/23/2022 13:10	11.41
6/23/2022 13:47	-0.09	6/24/2022 12:37	2.26	6/24/2022 13:00	5.82	6/24/2022 14:23	-0.37	6/23/2022 13:11	11.48
6/23/2022 13:48	-0.07	6/24/2022 12:38	2.26	6/24/2022 13:01	5.87	6/24/2022 14:24	-0.33	6/23/2022 13:12	11.44
6/23/2022 13:49	-0.09	6/24/2022 12:39	2.26	6/24/2022 13:02	5.88	6/24/2022 14:25	-0.36	6/23/2022 13:13	11.41
6/23/2022 13:50	-0.09	6/24/2022 12:40	2.26	6/24/2022 13:03	5.85	6/24/2022 14:26	-0.32	6/23/2022 13:14	11.40
6/23/2022 13:51	-0.08	6/24/2022 12:41	2.26	6/24/2022 13:04	5.88	6/24/2022 14:27	-0.37	6/23/2022 13:15	11.44
6/23/2022 13:52	-0.09	6/24/2022 12:42	2.26	6/24/2022 13:05	5.87	6/24/2022 14:28	-0.36	6/23/2022 13:16	11.44

6/23/2022 13:53	-0.09	6/24/2022 12:43	2.26	6/24/2022 13:06	5.85	6/24/2022 14:29	-0.33	6/23/2022 13:17	11.48
6/23/2022 13:54	-0.09	6/24/2022 12:44	2.26	6/24/2022 13:07	5.81	6/24/2022 14:30	-0.33	6/23/2022 13:18	11.46
6/23/2022 13:55	-0.07	6/24/2022 12:45	2.26	6/24/2022 13:08	5.85	6/24/2022 14:31	-0.32	6/23/2022 13:19	11.47
6/23/2022 13:56	-0.09	6/24/2022 12:46	2.25	6/24/2022 13:09	5.87	6/24/2022 14:32	-0.32	6/23/2022 13:20	11.42
6/23/2022 13:57	-0.09	6/24/2022 12:47	2.26	6/24/2022 13:10	5.89	6/24/2022 14:33	-0.36	6/23/2022 13:21	11.44
6/23/2022 13:58	-0.09	6/24/2022 12:48	2.25	6/24/2022 13:11	5.86	6/24/2022 14:34	-0.35	6/23/2022 13:22	11.42
6/23/2022 13:59	-0.08	6/24/2022 12:49	2.26	6/24/2022 13:12	5.82	6/24/2022 14:35	-0.36	6/23/2022 13:23	11.45
6/23/2022 14:00	-0.07	6/24/2022 12:50	2.26	6/24/2022 13:13	5.83	6/24/2022 14:36	-0.37	6/23/2022 13:24	11.44
6/23/2022 14:01	-0.08	6/24/2022 12:51	2.25	6/24/2022 13:14	5.86	6/24/2022 14:37	-0.32	6/23/2022 13:25	11.41
6/23/2022 14:02	-0.09	6/24/2022 12:52	2.25	6/24/2022 13:15	5.87	6/24/2022 14:38	-0.34	6/23/2022 13:26	11.44
6/23/2022 14:03	-0.07	6/24/2022 12:53	2.25	6/24/2022 13:16	5.84	6/24/2022 14:39	-0.40	6/23/2022 13:27	11.43
6/23/2022 14:04	-0.07	6/24/2022 12:54	2.25	6/24/2022 13:17	5.85	6/24/2022 14:40	-0.36	6/23/2022 13:28	11.42
6/23/2022 14:05	-0.09	6/24/2022 12:55	2.25	6/24/2022 13:18	5.86	6/24/2022 14:41	-0.35	6/23/2022 13:29	11.43
6/23/2022 14:06	-0.07	6/24/2022 12:56	2.25	6/24/2022 13:19	5.88	6/24/2022 14:42	-0.33	6/23/2022 13:30	11.47
6/23/2022 14:07	-0.07	6/24/2022 12:57	2.25	6/24/2022 13:20	5.89	6/24/2022 14:43	-0.32	6/23/2022 13:31	11.44
6/23/2022 14:08	-0.09	6/24/2022 12:58	2.25	6/24/2022 13:21	5.82	6/24/2022 14:44	-0.33	6/23/2022 13:32	11.42
6/23/2022 14:09	-0.09	6/24/2022 12:59	2.25	6/24/2022 13:22	5.82	6/24/2022 14:45	-0.33	6/23/2022 13:33	11.40
6/23/2022 14:10	-0.09	6/24/2022 13:00	2.25	6/24/2022 13:23	5.83	6/24/2022 14:46	-0.36	6/23/2022 13:34	11.41
6/23/2022 14:11	-0.07	6/24/2022 13:01	2.25	6/24/2022 13:24	5.85	6/24/2022 14:47	-0.35	6/23/2022 13:35	11.41
6/23/2022 14:12	-0.07	6/24/2022 13:02	2.25	6/24/2022 13:25	5.86	6/24/2022 14:48	-0.33	6/23/2022 13:36	11.42
6/23/2022 14:13	-0.09	6/24/2022 13:03	2.25	6/24/2022 13:26	5.86	6/24/2022 14:49	-0.35	6/23/2022 13:37	11.44
6/23/2022 14:14	-0.09	6/24/2022 13:04	2.25	6/24/2022 13:27	5.83	6/24/2022 14:50	-0.35	6/23/2022 13:38	11.44
6/23/2022 14:15	-0.09	6/24/2022 13:05	2.24	6/24/2022 13:28	5.85	6/24/2022 14:51	-0.31	6/23/2022 13:39	11.45
6/23/2022 14:16	-0.09	6/24/2022 13:06	2.24	6/24/2022 13:29	5.84	6/24/2022 14:52	-0.35	6/23/2022 13:40	11.44
6/23/2022 14:17	-0.07	6/24/2022 13:07	2.24	6/24/2022 13:30	5.84	6/24/2022 14:53	-0.37	6/23/2022 13:41	11.45
6/23/2022 14:18	-0.08	6/24/2022 13:08	2.24	6/24/2022 13:31	5.89	6/24/2022 14:54	-0.35	6/23/2022 13:42	11.39
6/23/2022 14:19	-0.09	6/24/2022 13:09	2.24	6/24/2022 13:32	5.80	6/24/2022 14:55	-0.35	6/23/2022 13:43	11.47
6/23/2022 14:20	-0.07	6/24/2022 13:10	2.24	6/24/2022 13:33	5.82	6/24/2022 14:56	-0.34	6/23/2022 13:44	11.46
6/23/2022 14:21	-0.09	6/24/2022 13:11	2.24	6/24/2022 13:34	5.85	6/24/2022 14:57	-0.31	6/23/2022 13:45	11.38
6/23/2022 14:22	-0.09	6/24/2022 13:12	2.24	6/24/2022 13:35	5.77	6/24/2022 14:58	-0.31	6/23/2022 13:46	11.48
6/23/2022 14:23	-0.08	6/24/2022 13:13	2.24	6/24/2022 13:36	5.82	6/24/2022 14:59	-0.39	6/23/2022 13:47	11.40
6/23/2022 14:24	-0.09	6/24/2022 13:14	2.24	6/24/2022 13:37	5.83	6/24/2022 15:00	-0.39	6/23/2022 13:48	11.44
6/23/2022 14:25	-0.07	6/24/2022 13:15	2.24	6/24/2022 13:38	5.93	6/24/2022 15:01	-0.35	6/23/2022 13:49	11.48
6/23/2022 14:26	-0.07	6/24/2022 13:16	2.23	6/24/2022 13:39	5.84	6/24/2022 15:02	-0.32	6/23/2022 13:50	11.45
6/23/2022 14:27	-0.09	6/24/2022 13:17	2.24	6/24/2022 13:40	5.85	6/24/2022 15:03	-0.30	6/23/2022 13:51	11.45
6/23/2022 14:28	-0.09	6/24/2022 13:18	2.24	6/24/2022 13:41	5.81	6/24/2022 15:04	-0.32	6/23/2022 13:52	11.45
6/23/2022 14:29	-0.08	6/24/2022 13:19	2.23	6/24/2022 13:42	5.84	6/24/2022 15:05	-0.33	6/23/2022 13:53	11.45
6/23/2022 14:30	-0.09	6/24/2022 13:20	2.23	6/24/2022 13:43	5.86	6/24/2022 15:06	-0.33	6/23/2022 13:54	11.49
6/23/2022 14:31	-0.09	6/24/2022 13:21	2.23	6/24/2022 13:44	5.83	6/24/2022 15:07	-0.35	6/23/2022 13:55	11.44
6/23/2022 14:32	-0.08	6/24/2022 13:22	2.23	6/24/2022 13:45	5.84	6/24/2022 15:08	-0.35	6/23/2022 13:56	11.46
6/23/2022 14:33	-0.09	6/24/2022 13:23	2.24	6/24/2022 13:46	5.86	6/24/2022 15:09	-0.34	6/23/2022 13:57	11.45
6/23/2022 14:34	-0.07	6/24/2022 13:24	2.23	6/24/2022 13:47	5.86	6/24/2022 15:10	-0.36	6/23/2022 13:58	11.41
6/23/2022 14:35	-0.07	6/24/2022 13:25	2.23	6/24/2022 13:48	5.86	6/24/2022 15:11	-0.33	6/23/2022 13:59	11.45
6/23/2022 14:36	-0.09	6/24/2022 13:26	2.23	6/24/2022 13:49	5.85	6/24/2022 15:12	-0.36	6/23/2022 14:00	11.47
6/23/2022 14:37	-0.07	6/24/2022 13:27	2.23	6/24/2022 13:50	5.84	6/24/2022 15:13	-0.34	6/23/2022 14:01	11.44
6/23/2022 14:38	-0.07	6/24/2022 13:28	2.23	6/24/2022 13:51	5.86	6/24/2022 15:14	-0.33	6/23/2022 14:02	11.46
6/23/2022 14:39	-0.09	6/24/2022 13:29	2.23	6/24/2022 13:52	5.83	6/24/2022 15:15	-0.32	6/23/2022 14:03	11.42
6/23/2022 14:40	-0.09	6/24/2022 13:30	2.23	6/24/2022 13:53	5.83	6/24/2022 15:16	-0.33	6/23/2022 14:04	11.44
6/23/2022 14:41	-0.09	6/24/2022 13:31	2.23	6/24/2022 13:54	5.86	6/24/2022 15:17	-0.33	6/23/2022 14:05	11.47
6/23/2022 14:42	-0.09	6/24/2022 13:32	2.23	6/24/2022 13:55	5.84	6/24/2022 15:18	-0.33	6/23/2022 14:06	11.43
6/23/2022 14:43	-0.09	6/24/2022 13:33	2.23	6/24/2022 13:56	5.84	6/24/2022 15:19	-0.34	6/23/2022 14:07	11.46
6/23/2022 14:44	-0.07	6/24/2022 13:34	2.23	6/24/2022 13:57	5.85	6/24/2022 15:20	-0.39	6/23/2022 14:08	11.42
6/23/2022 14:45	-0.07	6/24/2022 13:35	2.23	6/24/2022 13:58	5.88	6/24/2022 15:21	-0.31	6/23/2022 14:09	11.43
6/23/2022 14:46	-0.09	6/24/2022 13:36	2.23	6/24/2022 13:59	5.82	6/24/2022 15:22	-0.34	6/23/2022 14:10	11.48
6/23/2022 14:47	-0.09	6/24/2022 13:37	2.23	6/24/2022 14:00	5.82	6/24/2022 15:23	-0.36	6/23/2022 14:11	11.49
6/23/2022 14:48	-0.09	6/24/2022 13:38	2.22	6/24/2022 14:01	5.76	6/24/2022 15:24	-0.32	6/23/2022 14:12	11.41
6/23/2022 14:49	-0.07	6/24/2022 13:39	2.22	6/24/2022 14:02	5.79	6/24/2022 15:25	-0.33	6/23/2022 14:13	11.47
6/23/2022 14:50	-0.09	6/24/2022 13:40	2.22	6/24/2022 14:03	5.81	6/24/2022 15:26	-0.37	6/23/2022 14:14	11.49
6/23/2022 14:51	-0.09	6/24/2022 13:41	2.22	6/24/2022 14:04	5.77	6/24/2022 15:27	-0.34	6/23/2022 14:15	11.43
6/23/2022 14:52	-0.09	6/24/2022 13:42	2.22	6/24/2022 14:05	5.78	6/24/2022 15:28	-0.32	6/23/2022 14:16	11.44
6/23/2022 14:53	-0.07	6/24/2022 13:43	2.22	6/24/2022 14:06	5.77	6/24/2022 15:29	-0.35	6/23/2022 14:17	11.43
6/23/2022 14:54	-0.09	6/24/2022 13:44	2.22	6/24/2022 14:07	5.80	6/24/2022 15:30	-0.31	6/23/2022 14:18	11.44
6/23/2022 14:55	-0.08	6/24/2022 13:45	2.22	6/24/2022 14:08	5.79	6/24/2022 15:31	-0.35	6/23/2022 14:19	11.41
6/23/2022 14:56	-0.08	6/24/2022 13:46	2.22	6/24/2022 14:09	5.81	6/24/2022 15:32	-0.35	6/23/2022 14:20	11.42
6/23/2022 14:57	-0.07	6/24/2022 13:47	2.22	6/24/2022 14:10	5.78	6/24/2022 15:33	-0.36	6/23/2022 14:21	11.47
6/23/2022 14:58	-0.09	6/24/2022 13:48	2.22	6/24/2022 14:11	5.77	6/24/2022 15:34	-0.34	6/23/2022 14:22	11.42
6/23/2022 14:59	-0.09	6/24/2022 13:49	2.22	6/24/2022 14:12	5.77	6/24/2022 15:35	-0.35	6/23/2022 14:23	11.40
6/23/2022 15:00	-0.07	6/24/2022 13:50	2.22	6/24/2022 14:13	5.75	6/24/2022 15:36	-0.37	6/23/2022 14:24	11.40
6/23/2022 15:01	-0.07	6/24/2022 13:51	2.22	6/24/2022 14:14	5.79	6/24/2022 15:37	-0.31	6/23/2022 14:25	11.40
6/23/2022 15:02	-0.07	6/24/2022 13:52	2.22	6/24/2022 14:15	5.75	6/24/2022 15:38	-0.35	6/23/2022 14:26	11.48
6/23/2022 15:03	-0.09	6/24/2022 13:53	2.22	6/24/2022 14:16	5.77	6/24/2022 15:39	-0.37	6/23/2022 14:27	11.45
6/23/2022 15:04	-0.09	6/24/2022 13:54	2.22	6/24/2022 14:17	5.75	6/24/2022 15:40	-0.32	6/23/2022 14:28	11.46
6/23/2022 15:05	-0.08	6/24/2022 13:55	2.22	6/24/2022 14:18	5.80	6/24/2022 15:41	-0.31	6/23/2022 14:29	11.50
6/23/2022 15:06	-0.08	6/24/2022 13:56	2.21	6/24/2022 14:19	5.78	6/24/2022 15:42	-0.36	6/23/2022 14:30	11.43
6/23/2022 15:07	-0.09	6/24/2022 13:57	2.22	6/24/2022 14:20	5.79	6/24/2022 15:43	-0.33	6/23/2022 14:31	11.45
6/23/2022 15:08	-0.07	6/24/2022 13:58	2.21	6/24/2022 14:21	5.74	6/24/2022 15:44	-0.33	6/23/2022 14:32	11.44
6/23/2022 15:09	-0.07	6/24/2022 13:59	2.21	6/24/2022 14:22	5.78	6/24/2022 15:45	-0.28	6/23/2022 14:33	11.46
6/23/2022 15:10	-0.09	6/24/2022 14:00	2.21	6/24/2022 14:23	5.78	6/24/2022 15:46	-0.32	6/23/2022 14:34	11.45
6/23/2022 15:11	-0.09	6/24/2022 14:01	2.21	6/24/2022 14:24	5.81	6/24/2022 15:47	-0.33	6/23/2022 14:35	11.47
6/23/2022 15:12	-0.09	6/24/2022 14:02	2.21	6/24/2022 14:25	5.76	6/24/2022 15:48	-0.33	6/23/2022 14:36	11.46
6/23/2022 15:13	-0.09	6/24/2022 14:03	2.21	6/24/2022 14:26	5.83	6/24/2022 15:49	-0.32	6/23/2022 14:37	11.43
6/23/2022 15:14	-0.09	6/24/2022 14:04	2.21	6/24/2022 14:27	5.81	6/24/2022 15:50	-0.32	6/23/2022 14:38	11.41
6/23/2022 15:15	-0.09	6/24/2022 14:05	2.21	6/24/2022 14:28	5.81	6/24/2022 15:51	-0.37	6/23/2022 14:39	11.47
6/23/2022 15:16	-0.08	6/24/2022 14:06	2.21	6/24/2022 14:29	5.78	6/24/2022 15:52	-0.31	6/23/2022 14:40	11.46
6/23/2022 15:17	-0.08	6/24/2022 14:07	2.21	6/24/2022 14:30	5.81	6/24/2022 15:53	-0.33	6/23/2022 14:41	11.42
6/23/2022 15:18	-0.09	6/24/2022 14:08	2.20	6/24/2022 14:31	5.76	6/24/2022 15:54	-0.31	6/23/2022 14:42	11.43
6/23/2022 15:19	-0.08	6/24/2022 14:09	2.21	6/24/2022 14:32	5.79	6/24/2022 15:55	-0.36	6/23/2022 14:43	11.48
6/23/2022 15:20	-0.07	6/24/2022 14:10	2.21	6/24/2022 14:33	5.80	6/24/2022 15:56	-0.30	6/23/2022 14:44	11.42

6/23/2022 15:21	-0.07	6/24/2022 14:11	2.21	6/24/2022 14:34	5.76	6/24/2022 15:57	-0.31	6/23/2022 14:45	11.45
6/23/2022 15:22	-0.07	6/24/2022 14:12	2.20	6/24/2022 14:35	5.78	6/24/2022 15:58	-0.38	6/23/2022 14:46	11.42
6/23/2022 15:23	-0.08	6/24/2022 14:13	2.21	6/24/2022 14:36	5.74	6/24/2022 15:59	-0.33	6/23/2022 14:47	11.42
6/23/2022 15:24	-0.07	6/24/2022 14:14	2.20	6/24/2022 14:37	5.75	6/24/2022 16:00	-0.37	6/23/2022 14:48	11.45
6/23/2022 15:25	-0.09	6/24/2022 14:15	2.20	6/24/2022 14:38	5.76	6/24/2022 16:01	-0.33	6/23/2022 14:49	11.43
6/23/2022 15:26	-0.07	6/24/2022 14:16	2.20	6/24/2022 14:39	5.76	6/24/2022 16:02	-0.36	6/23/2022 14:50	11.45
6/23/2022 15:27	-0.09	6/24/2022 14:17	2.20	6/24/2022 14:40	5.72	6/24/2022 16:03	-0.34	6/23/2022 14:51	11.46
6/23/2022 15:28	-0.09	6/24/2022 14:18	2.20	6/24/2022 14:41	5.81	6/24/2022 16:04	-0.37	6/23/2022 14:52	11.44
6/23/2022 15:29	-0.08	6/24/2022 14:19	2.20	6/24/2022 14:42	5.75	6/24/2022 16:05	-0.31	6/23/2022 14:53	11.42
6/23/2022 15:30	-0.09	6/24/2022 14:20	2.20	6/24/2022 14:43	5.79	6/24/2022 16:06	-0.32	6/23/2022 14:54	11.48
6/23/2022 15:31	-0.09	6/24/2022 14:21	2.20	6/24/2022 14:44	5.80	6/24/2022 16:07	-0.35	6/23/2022 14:55	11.44
6/23/2022 15:32	-0.07	6/24/2022 14:22	2.20	6/24/2022 14:45	5.76	6/24/2022 16:08	-0.36	6/23/2022 14:56	11.40
6/23/2022 15:33	-0.09	6/24/2022 14:23	2.20	6/24/2022 14:46	5.77	6/24/2022 16:09	-0.32	6/23/2022 14:57	11.38
6/23/2022 15:34	-0.07	6/24/2022 14:24	2.20	6/24/2022 14:47	5.79	6/24/2022 16:10	-0.35	6/23/2022 14:58	11.51
6/23/2022 15:35	-0.08	6/24/2022 14:25	2.20	6/24/2022 14:48	5.79	6/24/2022 16:11	-0.32	6/23/2022 14:59	11.46
6/23/2022 15:36	-0.07	6/24/2022 14:26	2.20	6/24/2022 14:49	5.78	6/24/2022 16:12	-0.35	6/23/2022 15:00	11.42
6/23/2022 15:37	-0.07	6/24/2022 14:27	2.20	6/24/2022 14:50	5.73	6/24/2022 16:13	-0.32	6/23/2022 15:01	11.46
6/23/2022 15:38	-0.09	6/24/2022 14:28	2.20	6/24/2022 14:51	5.76	6/24/2022 16:14	-0.29	6/23/2022 15:02	11.42
6/23/2022 15:39	-0.07	6/24/2022 14:29	2.19	6/24/2022 14:52	5.77	6/24/2022 16:15	-0.34	6/23/2022 15:03	11.41
6/23/2022 15:40	-0.07	6/24/2022 14:30	2.20	6/24/2022 14:53	5.76	6/24/2022 16:16	-0.32	6/23/2022 15:04	11.42
6/23/2022 15:41	-0.09	6/24/2022 14:31	2.19	6/24/2022 14:54	5.73	6/24/2022 16:17	-0.35	6/23/2022 15:05	11.40
6/23/2022 15:42	-0.07	6/24/2022 14:32	2.20	6/24/2022 14:55	5.78	6/24/2022 16:18	-0.34	6/23/2022 15:06	11.40
6/23/2022 15:43	-0.09	6/24/2022 14:33	2.20	6/24/2022 14:56	5.81	6/24/2022 16:19	-0.33	6/23/2022 15:07	11.41
6/23/2022 15:44	-0.09	6/24/2022 14:34	2.19	6/24/2022 14:57	5.78	6/24/2022 16:20	-0.31	6/23/2022 15:08	11.47
6/23/2022 15:45	-0.09	6/24/2022 14:35	2.19	6/24/2022 14:58	5.72	6/24/2022 16:21	-0.31	6/23/2022 15:09	11.42
6/23/2022 15:46	-0.09	6/24/2022 14:36	2.19	6/24/2022 14:59	5.79	6/24/2022 16:22	-0.35	6/23/2022 15:10	11.44
6/23/2022 15:47	-0.09	6/24/2022 14:37	2.19	6/24/2022 15:00	5.71	6/24/2022 16:23	-0.35	6/23/2022 15:11	11.43
6/23/2022 15:48	-0.09	6/24/2022 14:38	2.19	6/24/2022 15:01	5.75	6/24/2022 16:24	-0.31	6/23/2022 15:12	11.47
6/23/2022 15:49	-0.09	6/24/2022 14:39	2.19	6/24/2022 15:02	5.75	6/24/2022 16:25	-0.30	6/23/2022 15:13	11.43
6/23/2022 15:50	-0.09	6/24/2022 14:40	2.19	6/24/2022 15:03	5.74	6/24/2022 16:26	-0.35	6/23/2022 15:14	11.47
6/23/2022 15:51	-0.07	6/24/2022 14:41	2.19	6/24/2022 15:04	5.72	6/24/2022 16:27	-0.37	6/23/2022 15:15	11.43
6/23/2022 15:52	-0.07	6/24/2022 14:42	2.19	6/24/2022 15:05	5.75	6/24/2022 16:28	-0.31	6/23/2022 15:16	11.49
6/23/2022 15:53	-0.09	6/24/2022 14:43	2.19	6/24/2022 15:06	5.74	6/24/2022 16:29	-0.32	6/23/2022 15:17	11.45
6/23/2022 15:54	-0.07	6/24/2022 14:44	2.19	6/24/2022 15:07	5.76	6/24/2022 16:30	-0.33	6/23/2022 15:18	11.40
6/23/2022 15:55	-0.09	6/24/2022 14:45	2.19	6/24/2022 15:08	5.74	6/24/2022 16:31	-0.35	6/23/2022 15:19	11.44
6/23/2022 15:56	-0.07	6/24/2022 14:46	2.19	6/24/2022 15:09	5.77	6/24/2022 16:32	-0.29	6/23/2022 15:20	11.43
6/23/2022 15:57	-0.07	6/24/2022 14:47	2.19	6/24/2022 15:10	5.74	6/24/2022 16:33	-0.30	6/23/2022 15:21	11.41
6/23/2022 15:58	-0.07	6/24/2022 14:48	2.18	6/24/2022 15:11	5.77	6/24/2022 16:34	-0.33	6/23/2022 15:22	11.44
6/23/2022 15:59	-0.09	6/24/2022 14:49	2.19	6/24/2022 15:12	5.75	6/24/2022 16:35	-0.34	6/23/2022 15:23	11.41
6/23/2022 16:00	-0.09	6/24/2022 14:50	2.18	6/24/2022 15:13	5.71	6/24/2022 16:36	-0.34	6/23/2022 15:24	11.44
6/23/2022 16:01	-0.09	6/24/2022 14:51	2.18	6/24/2022 15:14	5.73	6/24/2022 16:37	-0.36	6/23/2022 15:25	11.45
6/23/2022 16:02	-0.07	6/24/2022 14:52	2.19	6/24/2022 15:15	5.77	6/24/2022 16:38	-0.32	6/23/2022 15:26	11.43
6/23/2022 16:03	-0.07	6/24/2022 14:53	2.18	6/24/2022 15:16	5.75	6/24/2022 16:39	-0.35	6/23/2022 15:27	11.36
6/23/2022 16:04	-0.09	6/24/2022 14:54	2.18	6/24/2022 15:17	5.70	6/24/2022 16:40	-0.35	6/23/2022 15:28	11.41
6/23/2022 16:05	-0.09	6/24/2022 14:55	2.18	6/24/2022 15:18	5.80	6/24/2022 16:41	-0.32	6/23/2022 15:29	11.43
6/23/2022 16:06	-0.08	6/24/2022 14:56	2.18	6/24/2022 15:19	5.72	6/24/2022 16:42	-0.34	6/23/2022 15:30	11.42
6/23/2022 16:07	-0.09	6/24/2022 14:57	2.18	6/24/2022 15:20	5.73	6/24/2022 16:43	-0.32	6/23/2022 15:31	11.42
6/23/2022 16:08	-0.08	6/24/2022 14:58	2.18	6/24/2022 15:21	5.69	6/24/2022 16:44	-0.38	6/23/2022 15:32	11.42
6/23/2022 16:09	-0.07	6/24/2022 14:59	2.18	6/24/2022 15:22	5.73	6/24/2022 16:45	-0.32	6/23/2022 15:33	11.45
6/23/2022 16:10	-0.09	6/24/2022 15:00	2.18	6/24/2022 15:23	5.72	6/24/2022 16:46	-0.32	6/23/2022 15:34	11.46
6/23/2022 16:11	-0.09	6/24/2022 15:01	2.18	6/24/2022 15:24	5.70	6/24/2022 16:47	-0.33	6/23/2022 15:35	11.46
6/23/2022 16:12	-0.07	6/24/2022 15:02	2.18	6/24/2022 15:25	5.69	6/24/2022 16:48	-0.37	6/23/2022 15:36	11.39
6/23/2022 16:13	-0.07	6/24/2022 15:03	2.18	6/24/2022 15:26	5.75	6/24/2022 16:49	-0.37	6/23/2022 15:37	11.44
6/23/2022 16:14	-0.07	6/24/2022 15:04	2.18	6/24/2022 15:27	5.76	6/24/2022 16:50	-0.30	6/23/2022 15:38	11.47
6/23/2022 16:15	-0.09	6/24/2022 15:05	2.18	6/24/2022 15:28	5.69	6/24/2022 16:51	-0.32	6/23/2022 15:39	11.43
6/23/2022 16:16	-0.09	6/24/2022 15:06	2.17	6/24/2022 15:29	5.71	6/24/2022 16:52	-0.34	6/23/2022 15:40	11.40
6/23/2022 16:17	-0.09	6/24/2022 15:07	2.18	6/24/2022 15:30	5.77	6/24/2022 16:53	-0.37	6/23/2022 15:41	11.41
6/23/2022 16:18	-0.09	6/24/2022 15:08	2.17	6/24/2022 15:31	5.73	6/24/2022 16:54	-0.37	6/23/2022 15:42	11.43
6/23/2022 16:19	-0.07	6/24/2022 15:09	2.18	6/24/2022 15:32	5.70	6/24/2022 16:55	-0.35	6/23/2022 15:43	11.43
6/23/2022 16:20	-0.07	6/24/2022 15:10	2.18	6/24/2022 15:33	5.76	6/24/2022 16:56	-0.32	6/23/2022 15:44	11.45
6/23/2022 16:21	-0.09	6/24/2022 15:11	2.17	6/24/2022 15:34	5.67	6/24/2022 16:57	-0.33	6/23/2022 15:45	11.41
6/23/2022 16:22	-0.09	6/24/2022 15:12	2.17	6/24/2022 15:35	5.75	6/24/2022 16:58	-0.35	6/23/2022 15:46	11.44
6/23/2022 16:23	-0.09	6/24/2022 15:13	2.17	6/24/2022 15:36	5.72	6/24/2022 16:59	-0.34	6/23/2022 15:47	11.45
6/23/2022 16:24	-0.08	6/24/2022 15:14	2.17	6/24/2022 15:37	5.74	6/24/2022 17:00	-0.33	6/23/2022 15:48	11.48
6/23/2022 16:25	-0.09	6/24/2022 15:15	2.17	6/24/2022 15:38	5.75	6/24/2022 17:01	-0.37	6/23/2022 15:49	11.43
6/23/2022 16:26	-0.07	6/24/2022 15:16	2.17	6/24/2022 15:39	5.66	6/24/2022 17:02	-0.31	6/23/2022 15:50	11.43
6/23/2022 16:27	-0.08	6/24/2022 15:17	2.17	6/24/2022 15:40	5.73	6/24/2022 17:03	-0.32	6/23/2022 15:51	11.44
6/23/2022 16:28	-0.09	6/24/2022 15:18	2.17	6/24/2022 15:41	5.74	6/24/2022 17:04	-0.36	6/23/2022 15:52	11.41
6/23/2022 16:29	-0.07	6/24/2022 15:19	2.17	6/24/2022 15:42	5.71	6/24/2022 17:05	-0.33	6/23/2022 15:53	11.48
6/23/2022 16:30	-0.07	6/24/2022 15:20	2.17	6/24/2022 15:43	5.70	6/24/2022 17:06	-0.38	6/23/2022 15:54	11.44
6/23/2022 16:31	-0.08	6/24/2022 15:21	2.17	6/24/2022 15:44	5.71	6/24/2022 17:07	-0.34	6/23/2022 15:55	11.43
6/23/2022 16:32	-0.07	6/24/2022 15:22	2.17	6/24/2022 15:45	5.66	6/24/2022 17:08	-0.36	6/23/2022 15:56	11.48
6/23/2022 16:33	-0.09	6/24/2022 15:23	2.17	6/24/2022 15:46	5.70	6/24/2022 17:09	-0.38	6/23/2022 15:57	11.44
6/23/2022 16:34	-0.08	6/24/2022 15:24	2.17	6/24/2022 15:47	5.75	6/24/2022 17:10	-0.35	6/23/2022 15:58	11.47
6/23/2022 16:35	-0.09	6/24/2022 15:25	2.17	6/24/2022 15:48	5.69	6/24/2022 17:11	-0.29	6/23/2022 15:59	11.43
6/23/2022 16:36	-0.09	6/24/2022 15:26	2.17	6/24/2022 15:49	5.73	6/24/2022 17:12	-0.29	6/23/2022 16:00	11.46
6/23/2022 16:37	-0.09	6/24/2022 15:27	2.16	6/24/2022 15:50	5.67	6/24/2022 17:13	-0.34	6/23/2022 16:01	11.41
6/23/2022 16:38	-0.09	6/24/2022 15:28	2.17	6/24/2022 15:51	5.69	6/24/2022 17:14	-0.35	6/23/2022 16:02	11.42
6/23/2022 16:39	-0.08	6/24/2022 15:29	2.17	6/24/2022 15:52	5.72	6/24/2022 17:15	-0.32	6/23/2022 16:03	11.46
6/23/2022 16:40	-0.08	6/24/2022 15:30	2.17	6/24/2022 15:53	5.71	6/24/2022 17:16	-0.34	6/23/2022 16:04	11.39
6/23/2022 16:41	-0.09	6/24/2022 15:31	2.17	6/24/2022 15:54	5.71	6/24/2022 17:17	-0.37	6/23/2022 16:05	11.39
6/23/2022 16:42	-0.09	6/24/2022 15:32	2.16	6/24/2022 15:55	5.70	6/24/2022 17:18	-0.35	6/23/2022 16:06	11.41
6/23/2022 16:43	-0.07	6/24/2022 15:33	2.16	6/24/2022 15:56	5.67	6/24/2022 17:19	-0.31	6/23/2022 16:07	11.47
6/23/2022 16:44	-0.07	6/24/2022 15:34	2.16	6/24/2022 15:57	5.71	6/24/2022 17:20	-0.33	6/23/2022 16:08	11.42
6/23/2022 16:45	-0.07	6/24/2022 15:35	2.16	6/24/2022 15:58	5.75	6/24/2022 17:21	-0.35	6/23/2022 16:09	11.42
6/23/2022 16:46	-0.09	6/24/2022 15:36	2.16	6/24/2022 15:59	5.67	6/24/2022 17:22	-0.32	6/23/2022 16:10	11.45
6/23/2022 16:47	-0.09	6/24/2022 15:37	2.16	6/24/2022 16:00	5.72	6/24/2022 17:23	-0.35	6/23/2022 16:11	11.44
6/23/2022 16:48	-0.09	6/24/2022 15:38	2.16	6/24/2022 16:01	5.72	6/24/2022 17:24	-0.38	6/23/2022 16:12	11.43

6/23/2022 16:49	-0.09	6/24/2022 15:39	2.16	6/24/2022 16:02	5.70	6/24/2022 17:25	-0.31	6/23/2022 16:13	11.47
6/23/2022 16:50	-0.08	6/24/2022 15:40	2.16	6/24/2022 16:03	5.73	6/24/2022 17:26	-0.37	6/23/2022 16:14	11.51
6/23/2022 16:51	-0.08	6/24/2022 15:41	2.16	6/24/2022 16:04	5.71	6/24/2022 17:27	-0.30	6/23/2022 16:15	11.42
6/23/2022 16:52	-0.09	6/24/2022 15:42	2.16	6/24/2022 16:05	5.70	6/24/2022 17:28	-0.37	6/23/2022 16:16	11.49
6/23/2022 16:53	-0.07	6/24/2022 15:43	2.16	6/24/2022 16:06	5.73	6/24/2022 17:29	-0.37	6/23/2022 16:17	11.45
6/23/2022 16:54	-0.07	6/24/2022 15:44	2.16	6/24/2022 16:07	5.67	6/24/2022 17:30	-0.35	6/23/2022 16:18	11.45
6/23/2022 16:55	-0.08	6/24/2022 15:45	2.16	6/24/2022 16:08	5.65	6/24/2022 17:31	-0.33	6/23/2022 16:19	11.45
6/23/2022 16:56	-0.07	6/24/2022 15:46	2.15	6/24/2022 16:09	5.71	6/24/2022 17:32	-0.36	6/23/2022 16:20	11.43
6/23/2022 16:57	-0.07	6/24/2022 15:47	2.16	6/24/2022 16:10	5.71	6/24/2022 17:33	-0.34	6/23/2022 16:21	11.44
6/23/2022 16:58	-0.09	6/24/2022 15:48	2.16	6/24/2022 16:11	5.64	6/24/2022 17:34	-0.34	6/23/2022 16:22	11.44
6/23/2022 16:59	-0.07	6/24/2022 15:49	2.15	6/24/2022 16:12	5.69	6/24/2022 17:35	-0.34	6/23/2022 16:23	11.44
6/23/2022 17:00	-0.07	6/24/2022 15:50	2.16	6/24/2022 16:13	5.68	6/24/2022 17:36	-0.37	6/23/2022 16:24	11.45
6/23/2022 17:01	-0.09	6/24/2022 15:51	2.16	6/24/2022 16:14	5.70	6/24/2022 17:37	-0.35	6/23/2022 16:25	11.48
6/23/2022 17:02	-0.07	6/24/2022 15:52	2.15	6/24/2022 16:15	5.70	6/24/2022 17:38	-0.31	6/23/2022 16:26	11.40
6/23/2022 17:03	-0.07	6/24/2022 15:53	2.16	6/24/2022 16:16	5.74	6/24/2022 17:39	-0.30	6/23/2022 16:27	11.46
6/23/2022 17:04	-0.08	6/24/2022 15:54	2.15	6/24/2022 16:17	5.68	6/24/2022 17:40	-0.36	6/23/2022 16:28	11.44
6/23/2022 17:05	-0.07	6/24/2022 15:55	2.16	6/24/2022 16:18	5.67	6/24/2022 17:41	-0.33	6/23/2022 16:29	11.46
6/23/2022 17:06	-0.09	6/24/2022 15:56	2.15	6/24/2022 16:19	5.69	6/24/2022 17:42	-0.29	6/23/2022 16:30	11.45
6/23/2022 17:07	-0.07	6/24/2022 15:57	2.15	6/24/2022 16:20	5.74	6/24/2022 17:43	-0.34	6/23/2022 16:31	11.41
6/23/2022 17:08	-0.09	6/24/2022 15:58	2.15	6/24/2022 16:21	5.67	6/24/2022 17:44	-0.35	6/23/2022 16:32	11.45
6/23/2022 17:09	-0.07	6/24/2022 15:59	2.15	6/24/2022 16:22	5.65	6/24/2022 17:45	-0.32	6/23/2022 16:33	11.41
6/23/2022 17:10	-0.09	6/24/2022 16:00	2.15	6/24/2022 16:23	5.67	6/24/2022 17:46	-0.34	6/23/2022 16:34	11.46
6/23/2022 17:11	-0.08	6/24/2022 16:01	2.15	6/24/2022 16:24	5.70	6/24/2022 17:47	-0.34	6/23/2022 16:35	11.44
6/23/2022 17:12	-0.09	6/24/2022 16:02	2.15	6/24/2022 16:25	5.66	6/24/2022 17:48	-0.33	6/23/2022 16:36	11.43
6/23/2022 17:13	-0.09	6/24/2022 16:03	2.15	6/24/2022 16:26	5.68	6/24/2022 17:49	-0.31	6/23/2022 16:37	11.46
6/23/2022 17:14	-0.09	6/24/2022 16:04	2.15	6/24/2022 16:27	5.66	6/24/2022 17:50	-0.35	6/23/2022 16:38	11.40
6/23/2022 17:15	-0.07	6/24/2022 16:05	2.15	6/24/2022 16:28	5.69	6/24/2022 17:51	-0.34	6/23/2022 16:39	11.40
6/23/2022 17:16	-0.08	6/24/2022 16:06	2.15	6/24/2022 16:29	5.67	6/24/2022 17:52	-0.36	6/23/2022 16:40	11.41
6/23/2022 17:17	-0.09	6/24/2022 16:07	2.15	6/24/2022 16:30	5.66	6/24/2022 17:53	-0.36	6/23/2022 16:41	11.45
6/23/2022 17:18	-0.07	6/24/2022 16:08	2.15	6/24/2022 16:31	5.67	6/24/2022 17:54	-0.32	6/23/2022 16:42	11.46
6/23/2022 17:19	-0.07	6/24/2022 16:09	2.15	6/24/2022 16:32	5.68	6/24/2022 17:55	-0.36	6/23/2022 16:43	11.48
6/23/2022 17:20	-0.07	6/24/2022 16:10	2.15	6/24/2022 16:33	5.69	6/24/2022 17:56	-0.35	6/23/2022 16:44	11.40
6/23/2022 17:21	-0.09	6/24/2022 16:11	2.15	6/24/2022 16:34	5.71	6/24/2022 17:57	-0.33	6/23/2022 16:45	11.43
6/23/2022 17:22	-0.09	6/24/2022 16:12	2.15	6/24/2022 16:35	5.65	6/24/2022 17:58	-0.35	6/23/2022 16:46	11.48
6/23/2022 17:23	-0.07	6/24/2022 16:13	2.15	6/24/2022 16:36	5.70	6/24/2022 17:59	-0.36	6/23/2022 16:47	11.40
6/23/2022 17:24	-0.07	6/24/2022 16:14	2.14	6/24/2022 16:37	5.69	6/24/2022 18:00	-0.33	6/23/2022 16:48	11.37
6/23/2022 17:25	-0.09	6/24/2022 16:15	2.15	6/24/2022 16:38	5.67	6/24/2022 18:01	-0.37	6/23/2022 16:49	11.40
6/23/2022 17:26	-0.07	6/24/2022 16:16	2.15	6/24/2022 16:39	5.65	6/24/2022 18:02	-0.34	6/23/2022 16:50	11.40
6/23/2022 17:27	-0.08	6/24/2022 16:17	2.14	6/24/2022 16:40	5.66	6/24/2022 18:03	-0.38	6/23/2022 16:51	11.43
6/23/2022 17:28	-0.08	6/24/2022 16:18	2.14	6/24/2022 16:41	5.67	6/24/2022 18:04	-0.35	6/23/2022 16:52	11.38
6/23/2022 17:29	-0.09	6/24/2022 16:19	2.14	6/24/2022 16:42	5.70	6/24/2022 18:05	-0.33	6/23/2022 16:53	11.44
6/23/2022 17:30	-0.09	6/24/2022 16:20	2.14	6/24/2022 16:43	5.69	6/24/2022 18:06	-0.34	6/23/2022 16:54	11.41
6/23/2022 17:31	-0.08	6/24/2022 16:21	2.14	6/24/2022 16:44	5.63	6/24/2022 18:07	-0.33	6/23/2022 16:55	11.41
6/23/2022 17:32	-0.09	6/24/2022 16:22	2.14	6/24/2022 16:45	5.65	6/24/2022 18:08	-0.35	6/23/2022 16:56	11.42
6/23/2022 17:33	-0.09	6/24/2022 16:23	2.14	6/24/2022 16:46	5.67	6/24/2022 18:09	-0.32	6/23/2022 16:57	11.46
6/23/2022 17:34	-0.08	6/24/2022 16:24	2.14	6/24/2022 16:47	5.66	6/24/2022 18:10	-0.34	6/23/2022 16:58	11.43
6/23/2022 17:35	-0.09	6/24/2022 16:25	2.14	6/24/2022 16:48	5.68	6/24/2022 18:11	-0.34	6/23/2022 16:59	11.37
6/23/2022 17:36	-0.07	6/24/2022 16:26	2.14	6/24/2022 16:49	5.67	6/24/2022 18:12	-0.31	6/23/2022 17:00	11.44
6/23/2022 17:37	-0.07	6/24/2022 16:27	2.14	6/24/2022 16:50	5.67	6/24/2022 18:13	-0.35	6/23/2022 17:01	11.41
6/23/2022 17:38	-0.07	6/24/2022 16:28	2.14	6/24/2022 16:51	5.64	6/24/2022 18:14	-0.30	6/23/2022 17:02	11.40
6/23/2022 17:39	-0.07	6/24/2022 16:29	2.14	6/24/2022 16:52	5.67	6/24/2022 18:15	-0.33	6/23/2022 17:03	11.44
6/23/2022 17:40	-0.09	6/24/2022 16:30	2.14	6/24/2022 16:53	5.64	6/24/2022 18:16	-0.33	6/23/2022 17:04	11.46
6/23/2022 17:41	-0.09	6/24/2022 16:31	2.14	6/24/2022 16:54	5.63	6/24/2022 18:17	-0.33	6/23/2022 17:05	11.48
6/23/2022 17:42	-0.07	6/24/2022 16:32	2.14	6/24/2022 16:55	5.70	6/24/2022 18:18	-0.35	6/23/2022 17:06	11.44
6/23/2022 17:43	-0.07	6/24/2022 16:33	2.14	6/24/2022 16:56	5.67	6/24/2022 18:19	-0.32	6/23/2022 17:07	11.42
6/23/2022 17:44	-0.07	6/24/2022 16:34	2.14	6/24/2022 16:57	5.64	6/24/2022 18:20	-0.36	6/23/2022 17:08	11.41
6/23/2022 17:45	-0.09	6/24/2022 16:35	2.14	6/24/2022 16:58	5.68	6/24/2022 18:21	-0.33	6/23/2022 17:09	11.45
6/23/2022 17:46	-0.08	6/24/2022 16:36	2.14	6/24/2022 16:59	5.66	6/24/2022 18:22	-0.37	6/23/2022 17:10	11.42
6/23/2022 17:47	-0.09	6/24/2022 16:37	2.14	6/24/2022 17:00	5.70	6/24/2022 18:23	-0.35	6/23/2022 17:11	11.43
6/23/2022 17:48	-0.07	6/24/2022 16:38	2.14	6/24/2022 17:01	5.68	6/24/2022 18:24	-0.35	6/23/2022 17:12	11.44
6/23/2022 17:49	-0.09	6/24/2022 16:39	2.16	6/24/2022 17:02	5.64	6/24/2022 18:25	-0.33	6/23/2022 17:13	11.41
6/23/2022 17:50	-0.07	6/24/2022 16:40	2.13	6/24/2022 17:03	5.63	6/24/2022 18:26	-0.33	6/23/2022 17:14	11.43
6/23/2022 17:51	-0.08	6/24/2022 16:41	2.14	6/24/2022 17:04	5.65	6/24/2022 18:27	-0.32	6/23/2022 17:15	11.43
6/23/2022 17:52	-0.09	6/24/2022 16:42	2.14	6/24/2022 17:05	5.64	6/24/2022 18:28	-0.31	6/23/2022 17:16	11.41
6/23/2022 17:53	-0.09	6/24/2022 16:43	2.14	6/24/2022 17:06	5.65	6/24/2022 18:29	-0.35	6/23/2022 17:17	11.43
6/23/2022 17:54	-0.08	6/24/2022 16:44	2.13	6/24/2022 17:07	5.69	6/24/2022 18:30	-0.31	6/23/2022 17:18	11.46
6/23/2022 17:55	-0.09	6/24/2022 16:45	2.14	6/24/2022 17:08	5.64	6/24/2022 18:31	-0.37	6/23/2022 17:19	11.43
6/23/2022 17:56	-0.07	6/24/2022 16:46	2.14	6/24/2022 17:09	5.62	6/24/2022 18:32	-0.36	6/23/2022 17:20	11.44
6/23/2022 17:57	-0.09	6/24/2022 16:47	2.13	6/24/2022 17:10	5.66	6/24/2022 18:33	-0.32	6/23/2022 17:21	11.43
6/23/2022 17:58	-0.07	6/24/2022 16:48	2.16	6/24/2022 17:11	5.64	6/24/2022 18:34	-0.33	6/23/2022 17:22	11.40
6/23/2022 17:59	-0.07	6/24/2022 16:49	2.14	6/24/2022 17:12	5.64	6/24/2022 18:35	-0.36	6/23/2022 17:23	11.45
6/23/2022 18:00	-0.09	6/24/2022 16:50	2.13	6/24/2022 17:13	5.62	6/24/2022 18:36	-0.36	6/23/2022 17:24	11.45
6/23/2022 18:01	-0.09	6/24/2022 16:51	2.14	6/24/2022 17:14	5.66	6/24/2022 18:37	-0.36	6/23/2022 17:25	11.46
6/23/2022 18:02	-0.07	6/24/2022 16:52	2.13	6/24/2022 17:15	5.62	6/24/2022 18:38	-0.32	6/23/2022 17:26	11.46
6/23/2022 18:03	-0.09	6/24/2022 16:53	2.13	6/24/2022 17:16	5.59	6/24/2022 18:39	-0.34	6/23/2022 17:27	11.47
6/23/2022 18:04	-0.09	6/24/2022 16:54	2.13	6/24/2022 17:17	5.65	6/24/2022 18:40	-0.29	6/23/2022 17:28	11.42
6/23/2022 18:05	-0.09	6/24/2022 16:55	2.13	6/24/2022 17:18	5.64	6/24/2022 18:41	-0.36	6/23/2022 17:29	11.48
6/23/2022 18:06	-0.09	6/24/2022 16:56	2.13	6/24/2022 17:19	5.62	6/24/2022 18:42	-0.31	6/23/2022 17:30	11.42
6/23/2022 18:07	-0.07	6/24/2022 16:57	2.13	6/24/2022 17:20	5.64	6/24/2022 18:43	-0.36	6/23/2022 17:31	11.44
6/23/2022 18:08	-0.09	6/24/2022 16:58	2.13	6/24/2022 17:21	5.59	6/24/2022 18:44	-0.33	6/23/2022 17:32	11.46
6/23/2022 18:09	-0.09	6/24/2022 16:59	2.13	6/24/2022 17:22	5.62	6/24/2022 18:45	-0.34	6/23/2022 17:33	11.40
6/23/2022 18:10	-0.09	6/24/2022 17:00	2.13	6/24/2022 17:23	5.66	6/24/2022 18:46	-0.37	6/23/2022 17:34	11.47
6/23/2022 18:11	-0.07	6/24/2022 17:01	2.13	6/24/2022 17:24	5.65	6/24/2022 18:47	-0.32	6/23/2022 17:35	11.41
6/23/2022 18:12	-0.07	6/24/2022 17:02	2.13	6/24/2022 17:25	5.64	6/24/2022 18:48	-0.32	6/23/2022 17:36	11.43
6/23/2022 18:13	-0.09	6/24/2022 17:03	2.13	6/24/2022 17:26	5.66	6/24/2022 18:49	-0.32	6/23/2022 17:37	11.45
6/23/2022 18:14	-0.07	6/24/2022 17:04	2.13	6/24/2022 17:27	5.65	6/24/2022 18:50	-0.35	6/23/2022 17:38	11.45
6/23/2022 18:15	-0.09	6/24/2022 17:05	2.13	6/24/2022 17:28	5.61	6/24/2022 18:51	-0.39	6/23/2022 17:39	11.39
6/23/2022 18:16	-0.09	6/24/2022 17:06	2.13	6/24/2022 17:29	5.60	6/24/2022 18:52	-0.36	6/23/2022 17:40	11.41

6/23/2022 18:17	-0.09	6/24/2022 17:07	2.13	6/24/2022 17:30	5.67	6/24/2022 18:53	-0.34	6/23/2022 17:41	11.42
6/23/2022 18:18	-0.09	6/24/2022 17:08	2.13	6/24/2022 17:31	5.62	6/24/2022 18:54	-0.33	6/23/2022 17:42	11.39
6/23/2022 18:19	-0.09	6/24/2022 17:09	2.13	6/24/2022 17:32	5.64	6/24/2022 18:55	-0.36	6/23/2022 17:43	11.40
6/23/2022 18:20	-0.07	6/24/2022 17:10	2.12	6/24/2022 17:33	5.62	6/24/2022 18:56	-0.30	6/23/2022 17:44	11.43
6/23/2022 18:21	-0.09	6/24/2022 17:11	2.13	6/24/2022 17:34	5.68	6/24/2022 18:57	-0.31	6/23/2022 17:45	11.46
6/23/2022 18:22	-0.07	6/24/2022 17:12	2.12	6/24/2022 17:35	5.60	6/24/2022 18:58	-0.35	6/23/2022 17:46	11.40
6/23/2022 18:23	-0.09	6/24/2022 17:13	2.12	6/24/2022 17:36	5.58	6/24/2022 18:59	-0.32	6/23/2022 17:47	11.40
6/23/2022 18:24	-0.09	6/24/2022 17:14	2.13	6/24/2022 17:37	5.65	6/24/2022 19:00	-0.35	6/23/2022 17:48	11.43
6/23/2022 18:25	-0.09	6/24/2022 17:15	2.13	6/24/2022 17:38	5.62	6/24/2022 19:01	-0.33	6/23/2022 17:49	11.44
6/23/2022 18:26	-0.08	6/24/2022 17:16	2.12	6/24/2022 17:39	5.63	6/24/2022 19:02	-0.33	6/23/2022 17:50	11.40
6/23/2022 18:27	-0.09	6/24/2022 17:17	2.13	6/24/2022 17:40	5.61	6/24/2022 19:03	-0.36	6/23/2022 17:51	11.40
6/23/2022 18:28	-0.09	6/24/2022 17:18	2.12	6/24/2022 17:41	5.65	6/24/2022 19:04	-0.32	6/23/2022 17:52	11.43
6/23/2022 18:29	-0.07	6/24/2022 17:19	2.12	6/24/2022 17:42	5.60	6/24/2022 19:05	-0.37	6/23/2022 17:53	11.46
6/23/2022 18:30	-0.09	6/24/2022 17:20	2.12	6/24/2022 17:43	5.58	6/24/2022 19:06	-0.29	6/23/2022 17:54	11.43
6/23/2022 18:31	-0.09	6/24/2022 17:21	2.12	6/24/2022 17:44	5.62	6/24/2022 19:07	-0.33	6/23/2022 17:55	11.45
6/23/2022 18:32	-0.07	6/24/2022 17:22	2.12	6/24/2022 17:45	5.60	6/24/2022 19:08	-0.34	6/23/2022 17:56	11.46
6/23/2022 18:33	-0.09	6/24/2022 17:23	2.12	6/24/2022 17:46	5.61	6/24/2022 19:09	-0.36	6/23/2022 17:57	11.44
6/23/2022 18:34	-0.07	6/24/2022 17:24	2.12	6/24/2022 17:47	5.67	6/24/2022 19:10	-0.37	6/23/2022 17:58	11.40
6/23/2022 18:35	-0.09	6/24/2022 17:25	2.12	6/24/2022 17:48	5.61	6/24/2022 19:11	-0.35	6/23/2022 17:59	11.43
6/23/2022 18:36	-0.07	6/24/2022 17:26	2.12	6/24/2022 17:49	5.67	6/24/2022 19:12	-0.32	6/23/2022 18:00	11.44
6/23/2022 18:37	-0.07	6/24/2022 17:27	2.12	6/24/2022 17:50	5.61	6/24/2022 19:13	-0.30	6/23/2022 18:01	11.44
6/23/2022 18:38	-0.07	6/24/2022 17:28	2.12	6/24/2022 17:51	5.63	6/24/2022 19:14	-0.31	6/23/2022 18:02	11.46
6/23/2022 18:39	-0.09	6/24/2022 17:29	2.12	6/24/2022 17:52	5.62	6/24/2022 19:15	-0.35	6/23/2022 18:03	11.46
6/23/2022 18:40	-0.09	6/24/2022 17:30	2.12	6/24/2022 17:53	5.64	6/24/2022 19:16	-0.31	6/23/2022 18:04	11.43
6/23/2022 18:41	-0.07	6/24/2022 17:31	2.12	6/24/2022 17:54	5.66	6/24/2022 19:17	-0.35	6/23/2022 18:05	11.49
6/23/2022 18:42	-0.07	6/24/2022 17:32	2.12	6/24/2022 17:55	5.60	6/24/2022 19:18	-0.35	6/23/2022 18:06	11.50
6/23/2022 18:43	-0.07	6/24/2022 17:33	2.12	6/24/2022 17:56	5.65	6/24/2022 19:19	-0.35	6/23/2022 18:07	11.49
6/23/2022 18:44	-0.07	6/24/2022 17:34	2.12	6/24/2022 17:57	5.62	6/24/2022 19:20	-0.35	6/23/2022 18:08	11.46
6/23/2022 18:45	-0.07	6/24/2022 17:35	2.12	6/24/2022 17:58	5.63	6/24/2022 19:21	-0.35	6/23/2022 18:09	11.45
6/23/2022 18:46	-0.07	6/24/2022 17:36	2.12	6/24/2022 17:59	5.61	6/24/2022 19:22	-0.34	6/23/2022 18:10	11.40
6/23/2022 18:47	-0.09	6/24/2022 17:37	2.12	6/24/2022 18:00	5.65	6/24/2022 19:23	-0.34	6/23/2022 18:11	11.43
6/23/2022 18:48	-0.07	6/24/2022 17:38	2.12	6/24/2022 18:01	5.57	6/24/2022 19:24	-0.35	6/23/2022 18:12	11.49
6/23/2022 18:49	-0.07	6/24/2022 17:39	2.12	6/24/2022 18:02	5.59	6/24/2022 19:25	-0.32	6/23/2022 18:13	11.48
6/23/2022 18:50	-0.08	6/24/2022 17:40	2.12	6/24/2022 18:03	5.62	6/24/2022 19:26	-0.32	6/23/2022 18:14	11.44
6/23/2022 18:51	-0.09	6/24/2022 17:41	2.12	6/24/2022 18:04	5.63	6/24/2022 19:27	-0.34	6/23/2022 18:15	11.45
6/23/2022 18:52	-0.09	6/24/2022 17:42	2.12	6/24/2022 18:05	5.59	6/24/2022 19:28	-0.31	6/23/2022 18:16	11.40
6/23/2022 18:53	-0.09	6/24/2022 17:43	2.12	6/24/2022 18:06	5.62	6/24/2022 19:29	-0.36	6/23/2022 18:17	11.44
6/23/2022 18:54	-0.07	6/24/2022 17:44	2.12	6/24/2022 18:07	5.66	6/24/2022 19:30	-0.36	6/23/2022 18:18	11.43
6/23/2022 18:55	-0.09	6/24/2022 17:45	2.11	6/24/2022 18:08	5.58	6/24/2022 19:31	-0.33	6/23/2022 18:19	11.46
6/23/2022 18:56	-0.07	6/24/2022 17:46	2.12	6/24/2022 18:09	5.62	6/24/2022 19:32	-0.40	6/23/2022 18:20	11.42
6/23/2022 18:57	-0.07	6/24/2022 17:47	2.11	6/24/2022 18:10	5.64	6/24/2022 19:33	-0.37	6/23/2022 18:21	11.40
6/23/2022 18:58	-0.07	6/24/2022 17:48	2.12	6/24/2022 18:11	5.59	6/24/2022 19:34	-0.33	6/23/2022 18:22	11.46
6/23/2022 18:59	-0.08	6/24/2022 17:49	2.11	6/24/2022 18:12	5.60	6/24/2022 19:35	-0.34	6/23/2022 18:23	11.44
6/23/2022 19:00	-0.09	6/24/2022 17:50	2.11	6/24/2022 18:13	5.58	6/24/2022 19:36	-0.41	6/23/2022 18:24	11.46
6/23/2022 19:01	-0.07	6/24/2022 17:51	2.11	6/24/2022 18:14	5.65	6/24/2022 19:37	-0.33	6/23/2022 18:25	11.47
6/23/2022 19:02	-0.09	6/24/2022 17:52	2.12	6/24/2022 18:15	5.61	6/24/2022 19:38	-0.34	6/23/2022 18:26	11.48
6/23/2022 19:03	-0.07	6/24/2022 17:53	2.11	6/24/2022 18:16	5.61	6/24/2022 19:39	-0.33	6/23/2022 18:27	11.49
6/23/2022 19:04	-0.08	6/24/2022 17:54	2.11	6/24/2022 18:17	5.60	6/24/2022 19:40	-0.35	6/23/2022 18:28	11.41
6/23/2022 19:05	-0.07	6/24/2022 17:55	2.11	6/24/2022 18:18	5.63	6/24/2022 19:41	-0.36	6/23/2022 18:29	11.46
6/23/2022 19:06	-0.07	6/24/2022 17:56	2.11	6/24/2022 18:19	5.65	6/24/2022 19:42	-0.36	6/23/2022 18:30	11.42
6/23/2022 19:07	-0.07	6/24/2022 17:57	2.11	6/24/2022 18:20	5.60	6/24/2022 19:43	-0.34	6/23/2022 18:31	11.50
6/23/2022 19:08	-0.07	6/24/2022 17:58	2.11	6/24/2022 18:21	5.59	6/24/2022 19:44	-0.33	6/23/2022 18:32	11.48
6/23/2022 19:09	-0.09	6/24/2022 17:59	2.11	6/24/2022 18:22	5.58	6/24/2022 19:45	-0.35	6/23/2022 18:33	11.40
6/23/2022 19:10	-0.07	6/24/2022 18:00	2.11	6/24/2022 18:23	5.58	6/24/2022 19:46	-0.34	6/23/2022 18:34	11.42
6/23/2022 19:11	-0.07	6/24/2022 18:01	2.11	6/24/2022 18:24	5.61	6/24/2022 19:47	-0.35	6/23/2022 18:35	11.44
6/23/2022 19:12	-0.09	6/24/2022 18:02	2.11	6/24/2022 18:25	5.60	6/24/2022 19:48	-0.39	6/23/2022 18:36	11.40
6/23/2022 19:13	-0.07	6/24/2022 18:03	2.11	6/24/2022 18:26	5.63	6/24/2022 19:49	-0.37	6/23/2022 18:37	11.37
6/23/2022 19:14	-0.07	6/24/2022 18:04	2.11	6/24/2022 18:27	5.61	6/24/2022 19:50	-0.34	6/23/2022 18:38	11.49
6/23/2022 19:15	-0.09	6/24/2022 18:05	2.11	6/24/2022 18:28	5.61	6/24/2022 19:51	-0.35	6/23/2022 18:39	11.47
6/23/2022 19:16	-0.07	6/24/2022 18:06	2.11	6/24/2022 18:29	5.60	6/24/2022 19:52	-0.35	6/23/2022 18:40	11.44
6/23/2022 19:17	-0.09	6/24/2022 18:07	2.11	6/24/2022 18:30	5.57	6/24/2022 19:53	-0.33	6/23/2022 18:41	11.43
6/23/2022 19:18	-0.09	6/24/2022 18:08	2.11	6/24/2022 18:31	5.59	6/24/2022 19:54	-0.34	6/23/2022 18:42	11.47
6/23/2022 19:19	-0.09	6/24/2022 18:09	2.11	6/24/2022 18:32	5.61	6/24/2022 19:55	-0.34	6/23/2022 18:43	11.50
6/23/2022 19:20	-0.09	6/24/2022 18:10	2.11	6/24/2022 18:33	5.65	6/24/2022 19:56	-0.35	6/23/2022 18:44	11.45
6/23/2022 19:21	-0.09	6/24/2022 18:11	2.11	6/24/2022 18:34	5.61	6/24/2022 19:57	-0.36	6/23/2022 18:45	11.43
6/23/2022 19:22	-0.07	6/24/2022 18:12	2.11	6/24/2022 18:35	5.60	6/24/2022 19:58	-0.34	6/23/2022 18:46	11.46
6/23/2022 19:23	-0.09	6/24/2022 18:13	2.11	6/24/2022 18:36	5.60	6/24/2022 19:59	-0.38	6/23/2022 18:47	11.45
6/23/2022 19:24	-0.09	6/24/2022 18:14	2.11	6/24/2022 18:37	5.56	6/24/2022 20:00	-0.35	6/23/2022 18:48	11.44
6/23/2022 19:25	-0.09	6/24/2022 18:15	2.11	6/24/2022 18:38	5.63	6/24/2022 20:01	-0.30	6/23/2022 18:49	11.48
6/23/2022 19:26	-0.09	6/24/2022 18:16	2.11	6/24/2022 18:39	5.57	6/24/2022 20:02	-0.36	6/23/2022 18:50	11.43
6/23/2022 19:27	-0.07	6/24/2022 18:17	2.11	6/24/2022 18:40	5.59	6/24/2022 20:03	-0.35	6/23/2022 18:51	11.46
6/23/2022 19:28	-0.07	6/24/2022 18:18	2.11	6/24/2022 18:41	5.62	6/24/2022 20:04	-0.35	6/23/2022 18:52	11.46
6/23/2022 19:29	-0.09	6/24/2022 18:19	2.11	6/24/2022 18:42	5.59	6/24/2022 20:05	-0.33	6/23/2022 18:53	11.44
6/23/2022 19:30	-0.07	6/24/2022 18:20	2.11	6/24/2022 18:43	5.60	6/24/2022 20:06	-0.36	6/23/2022 18:54	11.39
6/23/2022 19:31	-0.07	6/24/2022 18:21	2.11	6/24/2022 18:44	5.60	6/24/2022 20:07	-0.35	6/23/2022 18:55	11.42
6/23/2022 19:32	-0.09	6/24/2022 18:22	2.10	6/24/2022 18:45	5.57	6/24/2022 20:08	-0.38	6/23/2022 18:56	11.47
6/23/2022 19:33	-0.07	6/24/2022 18:23	2.11	6/24/2022 18:46	5.60	6/24/2022 20:09	-0.35	6/23/2022 18:57	11.43
6/23/2022 19:34	-0.09	6/24/2022 18:24	2.10	6/24/2022 18:47	5.59	6/24/2022 20:10	-0.32	6/23/2022 18:58	11.43
6/23/2022 19:35	-0.09	6/24/2022 18:25	2.11	6/24/2022 18:48	5.59	6/24/2022 20:11	-0.33	6/23/2022 18:59	11.47
6/23/2022 19:36	-0.09	6/24/2022 18:26	2.11	6/24/2022 18:49	5.61	6/24/2022 20:12	-0.37	6/23/2022 19:00	11.43
6/23/2022 19:37	-0.09	6/24/2022 18:27	2.11	6/24/2022 18:50	5.57	6/24/2022 20:13	-0.36	6/23/2022 19:01	11.50
6/23/2022 19:38	-0.07	6/24/2022 18:28	2.10	6/24/2022 18:51	5.59	6/24/2022 20:14	-0.34	6/23/2022 19:02	11.50
6/23/2022 19:39	-0.09	6/24/2022 18:29	2.11	6/24/2022 18:52	5.60	6/24/2022 20:15	-0.33	6/23/2022 19:03	11.46
6/23/2022 19:40	-0.09	6/24/2022 18:30	2.10	6/24/2022 18:53	5.55	6/24/2022 20:16	-0.33	6/23/2022 19:04	11.43
6/23/2022 19:41	-0.07	6/24/2022 18:31	2.10	6/24/2022 18:54	5.61	6/24/2022 20:17	-0.37	6/23/2022 19:05	11.45
6/23/2022 19:42	-0.09	6/24/2022 18:32	2.11	6/24/2022 18:55	5.56	6/24/2022 20:18	-0.35	6/23/2022 19:06	11.48
6/23/2022 19:43	-0.09	6/24/2022 18:33	2.10	6/24/2022 18:56	5.59	6/24/2022 20:19	-0.35	6/23/2022 19:07	11.46
6/23/2022 19:44	-0.09	6/24/2022 18:34	2.11	6/24/2022 18:57	5.61	6/24/2022 20:20	-0.35	6/23/2022 19:08	11.51

6/23/2022 19:45	-0.07	6/24/2022 18:35	2.10	6/24/2022 18:58	5.57	6/24/2022 20:21	-0.35	6/23/2022 19:09	11.49
6/23/2022 19:46	-0.09	6/24/2022 18:36	2.10	6/24/2022 18:59	5.60	6/24/2022 20:22	-0.36	6/23/2022 19:10	11.41
6/23/2022 19:47	-0.09	6/24/2022 18:37	2.10	6/24/2022 19:00	5.55	6/24/2022 20:23	-0.32	6/23/2022 19:11	11.36
6/23/2022 19:48	-0.09	6/24/2022 18:38	2.11	6/24/2022 19:01	5.56	6/24/2022 20:24	-0.30	6/23/2022 19:12	11.50
6/23/2022 19:49	-0.07	6/24/2022 18:39	2.11	6/24/2022 19:02	5.59	6/24/2022 20:25	-0.35	6/23/2022 19:13	11.44
6/23/2022 19:50	-0.07	6/24/2022 18:40	2.10	6/24/2022 19:03	5.55	6/24/2022 20:26	-0.35	6/23/2022 19:14	11.49
6/23/2022 19:51	-0.09	6/24/2022 18:41	2.10	6/24/2022 19:04	5.61	6/24/2022 20:27	-0.35	6/23/2022 19:15	11.44
6/23/2022 19:52	-0.09	6/24/2022 18:42	2.10	6/24/2022 19:05	5.54	6/24/2022 20:28	-0.34	6/23/2022 19:16	11.46
6/23/2022 19:53	-0.07	6/24/2022 18:43	2.10	6/24/2022 19:06	5.58	6/24/2022 20:29	-0.38	6/23/2022 19:17	11.41
6/23/2022 19:54	-0.09	6/24/2022 18:44	2.10	6/24/2022 19:07	5.60	6/24/2022 20:30	-0.34	6/23/2022 19:18	11.48
6/23/2022 19:55	-0.07	6/24/2022 18:45	2.10	6/24/2022 19:08	5.61	6/24/2022 20:31	-0.34	6/23/2022 19:19	11.50
6/23/2022 19:56	-0.07	6/24/2022 18:46	2.11	6/24/2022 19:09	5.60	6/24/2022 20:32	-0.32	6/23/2022 19:20	11.46
6/23/2022 19:57	-0.07	6/24/2022 18:47	2.10	6/24/2022 19:10	5.60	6/24/2022 20:33	-0.34	6/23/2022 19:21	11.47
6/23/2022 19:58	-0.09	6/24/2022 18:48	2.10	6/24/2022 19:11	5.60	6/24/2022 20:34	-0.36	6/23/2022 19:22	11.45
6/23/2022 19:59	-0.07	6/24/2022 18:49	2.10	6/24/2022 19:12	5.58	6/24/2022 20:35	-0.32	6/23/2022 19:23	11.46
6/23/2022 20:00	-0.09	6/24/2022 18:50	2.10	6/24/2022 19:13	5.57	6/24/2022 20:36	-0.38	6/23/2022 19:24	11.46
6/23/2022 20:01	-0.09	6/24/2022 18:51	2.10	6/24/2022 19:14	5.56	6/24/2022 20:37	-0.33	6/23/2022 19:25	11.49
6/23/2022 20:02	-0.07	6/24/2022 18:52	2.10	6/24/2022 19:15	5.58	6/24/2022 20:38	-0.36	6/23/2022 19:26	11.43
6/23/2022 20:03	-0.07	6/24/2022 18:53	2.10	6/24/2022 19:16	5.58	6/24/2022 20:39	-0.35	6/23/2022 19:27	11.45
6/23/2022 20:04	-0.09	6/24/2022 18:54	2.10	6/24/2022 19:17	5.59	6/24/2022 20:40	-0.36	6/23/2022 19:28	11.43
6/23/2022 20:05	-0.07	6/24/2022 18:55	2.10	6/24/2022 19:18	5.58	6/24/2022 20:41	-0.35	6/23/2022 19:29	11.49
6/23/2022 20:06	-0.09	6/24/2022 18:56	2.10	6/24/2022 19:19	5.56	6/24/2022 20:42	-0.33	6/23/2022 19:30	11.49
6/23/2022 20:07	-0.07	6/24/2022 18:57	2.10	6/24/2022 19:20	5.58	6/24/2022 20:43	-0.39	6/23/2022 19:31	11.50
6/23/2022 20:08	-0.09	6/24/2022 18:58	2.10	6/24/2022 19:21	5.56	6/24/2022 20:44	-0.32	6/23/2022 19:32	11.35
6/23/2022 20:09	-0.07	6/24/2022 18:59	2.10	6/24/2022 19:22	5.55	6/24/2022 20:45	-0.35	6/23/2022 19:33	11.44
6/23/2022 20:10	-0.09	6/24/2022 19:00	2.10	6/24/2022 19:23	5.57	6/24/2022 20:46	-0.35	6/23/2022 19:34	11.46
6/23/2022 20:11	-0.07	6/24/2022 19:01	2.10	6/24/2022 19:24	5.54	6/24/2022 20:47	-0.31	6/23/2022 19:35	11.43
6/23/2022 20:12	-0.09	6/24/2022 19:02	2.10	6/24/2022 19:25	5.58	6/24/2022 20:48	-0.35	6/23/2022 19:36	11.53
6/23/2022 20:13	-0.09	6/24/2022 19:03	2.10	6/24/2022 19:26	5.56	6/24/2022 20:49	-0.37	6/23/2022 19:37	11.46
6/23/2022 20:14	-0.09	6/24/2022 19:04	2.10	6/24/2022 19:27	5.56	6/24/2022 20:50	-0.32	6/23/2022 19:38	11.42
6/23/2022 20:15	-0.09	6/24/2022 19:05	2.10	6/24/2022 19:28	5.56	6/24/2022 20:51	-0.35	6/23/2022 19:39	11.44
6/23/2022 20:16	-0.07	6/24/2022 19:06	2.10	6/24/2022 19:29	5.56	6/24/2022 20:52	-0.34	6/23/2022 19:40	11.43
6/23/2022 20:17	-0.07	6/24/2022 19:07	2.09	6/24/2022 19:30	5.53	6/24/2022 20:53	-0.37	6/23/2022 19:41	11.45
6/23/2022 20:18	-0.09	6/24/2022 19:08	2.10	6/24/2022 19:31	5.56	6/24/2022 20:54	-0.35	6/23/2022 19:42	11.45
6/23/2022 20:19	-0.09	6/24/2022 19:09	2.10	6/24/2022 19:32	5.56	6/24/2022 20:55	-0.39	6/23/2022 19:43	11.47
6/23/2022 20:20	-0.07	6/24/2022 19:10	2.10	6/24/2022 19:33	5.53	6/24/2022 20:56	-0.33	6/23/2022 19:44	11.46
6/23/2022 20:21	-0.07	6/24/2022 19:11	2.10	6/24/2022 19:34	5.57	6/24/2022 20:57	-0.32	6/23/2022 19:45	11.44
6/23/2022 20:22	-0.09	6/24/2022 19:12	2.10	6/24/2022 19:35	5.59	6/24/2022 20:58	-0.38	6/23/2022 19:46	11.41
6/23/2022 20:23	-0.09	6/24/2022 19:13	2.09	6/24/2022 19:36	5.55	6/24/2022 20:59	-0.35	6/23/2022 19:47	11.46
6/23/2022 20:24	-0.07	6/24/2022 19:14	2.09	6/24/2022 19:37	5.56	6/24/2022 21:00	-0.32	6/23/2022 19:48	11.48
6/23/2022 20:25	-0.09	6/24/2022 19:15	2.10	6/24/2022 19:38	5.58	6/24/2022 21:01	-0.33	6/23/2022 19:49	11.47
6/23/2022 20:26	-0.07	6/24/2022 19:16	2.09	6/24/2022 19:39	5.55	6/24/2022 21:02	-0.37	6/23/2022 19:50	11.42
6/23/2022 20:27	-0.09	6/24/2022 19:17	2.09	6/24/2022 19:40	5.61	6/24/2022 21:03	-0.34	6/23/2022 19:51	11.42
6/23/2022 20:28	-0.09	6/24/2022 19:18	2.09	6/24/2022 19:41	5.57	6/24/2022 21:04	-0.32	6/23/2022 19:52	11.45
6/23/2022 20:29	-0.09	6/24/2022 19:19	2.09	6/24/2022 19:42	5.56	6/24/2022 21:05	-0.35	6/23/2022 19:53	11.42
6/23/2022 20:30	-0.09	6/24/2022 19:20	2.09	6/24/2022 19:43	5.55	6/24/2022 21:06	-0.36	6/23/2022 19:54	11.46
6/23/2022 20:31	-0.08	6/24/2022 19:21	2.09	6/24/2022 19:44	5.59	6/24/2022 21:07	-0.38	6/23/2022 19:55	11.43
6/23/2022 20:32	-0.09	6/24/2022 19:22	2.09	6/24/2022 19:45	5.56	6/24/2022 21:08	-0.32	6/23/2022 19:56	11.45
6/23/2022 20:33	-0.09	6/24/2022 19:23	2.09	6/24/2022 19:46	5.53	6/24/2022 21:09	-0.36	6/23/2022 19:57	11.41
6/23/2022 20:34	-0.09	6/24/2022 19:24	2.10	6/24/2022 19:47	5.54	6/24/2022 21:10	-0.32	6/23/2022 19:58	11.45
6/23/2022 20:35	-0.09	6/24/2022 19:25	2.09	6/24/2022 19:48	5.57	6/24/2022 21:11	-0.38	6/23/2022 19:59	11.45
6/23/2022 20:36	-0.07	6/24/2022 19:26	2.10	6/24/2022 19:49	5.57	6/24/2022 21:12	-0.37	6/23/2022 20:00	11.42
6/23/2022 20:37	-0.09	6/24/2022 19:27	2.09	6/24/2022 19:50	5.56	6/24/2022 21:13	-0.34	6/23/2022 20:01	11.43
6/23/2022 20:38	-0.07	6/24/2022 19:28	2.09	6/24/2022 19:51	5.59	6/24/2022 21:14	-0.32	6/23/2022 20:02	11.44
6/23/2022 20:39	-0.08	6/24/2022 19:29	2.09	6/24/2022 19:52	5.56	6/24/2022 21:15	-0.35	6/23/2022 20:03	11.47
6/23/2022 20:40	-0.09	6/24/2022 19:30	2.09	6/24/2022 19:53	5.54	6/24/2022 21:16	-0.36	6/23/2022 20:04	11.42
6/23/2022 20:41	-0.07	6/24/2022 19:31	2.09	6/24/2022 19:54	5.58	6/24/2022 21:17	-0.35	6/23/2022 20:05	11.43
6/23/2022 20:42	-0.07	6/24/2022 19:32	2.09	6/24/2022 19:55	5.58	6/24/2022 21:18	-0.36	6/23/2022 20:06	11.42
6/23/2022 20:43	-0.09	6/24/2022 19:33	2.09	6/24/2022 19:56	5.55	6/24/2022 21:19	-0.32	6/23/2022 20:07	11.43
6/23/2022 20:44	-0.09	6/24/2022 19:34	2.09	6/24/2022 19:57	5.55	6/24/2022 21:20	-0.38	6/23/2022 20:08	11.41
6/23/2022 20:45	-0.09	6/24/2022 19:35	2.09	6/24/2022 19:58	5.57	6/24/2022 21:21	-0.35	6/23/2022 20:09	11.49
6/23/2022 20:46	-0.07	6/24/2022 19:36	2.09	6/24/2022 19:59	5.55	6/24/2022 21:22	-0.35	6/23/2022 20:10	11.44
6/23/2022 20:47	-0.09	6/24/2022 19:37	2.09	6/24/2022 20:00	5.52	6/24/2022 21:23	-0.35	6/23/2022 20:11	11.47
6/23/2022 20:48	-0.09	6/24/2022 19:38	2.09	6/24/2022 20:01	5.58	6/24/2022 21:24	-0.34	6/23/2022 20:12	11.44
6/23/2022 20:49	-0.09	6/24/2022 19:39	2.09	6/24/2022 20:02	5.58	6/24/2022 21:25	-0.38	6/23/2022 20:13	11.46
6/23/2022 20:50	-0.07	6/24/2022 19:40	2.09	6/24/2022 20:03	5.55	6/24/2022 21:26	-0.33	6/23/2022 20:14	11.47
6/23/2022 20:51	-0.08	6/24/2022 19:41	2.09	6/24/2022 20:04	5.55	6/24/2022 21:27	-0.34	6/23/2022 20:15	11.44
6/23/2022 20:52	-0.09	6/24/2022 19:42	2.09	6/24/2022 20:05	5.57	6/24/2022 21:28	-0.30	6/23/2022 20:16	11.40
6/23/2022 20:53	-0.09	6/24/2022 19:43	2.09	6/24/2022 20:06	5.57	6/24/2022 21:29	-0.32	6/23/2022 20:17	11.44
6/23/2022 20:54	-0.09	6/24/2022 19:44	2.09	6/24/2022 20:07	5.54	6/24/2022 21:30	-0.35	6/23/2022 20:18	11.46
6/23/2022 20:55	-0.09	6/24/2022 19:45	2.09	6/24/2022 20:08	5.61	6/24/2022 21:31	-0.38	6/23/2022 20:19	11.42
6/23/2022 20:56	-0.09	6/24/2022 19:46	2.09	6/24/2022 20:09	5.54	6/24/2022 21:32	-0.33	6/23/2022 20:20	11.47
6/23/2022 20:57	-0.07	6/24/2022 19:47	2.08	6/24/2022 20:10	5.55	6/24/2022 21:33	-0.34	6/23/2022 20:21	11.44
6/23/2022 20:58	-0.09	6/24/2022 19:48	2.09	6/24/2022 20:11	5.54	6/24/2022 21:34	-0.30	6/23/2022 20:22	11.48
6/23/2022 20:59	-0.07	6/24/2022 19:49	2.09	6/24/2022 20:12	5.56	6/24/2022 21:35	-0.33	6/23/2022 20:23	11.47
6/23/2022 21:00	-0.09	6/24/2022 19:50	2.09	6/24/2022 20:13	5.55	6/24/2022 21:36	-0.32	6/23/2022 20:24	11.47
6/23/2022 21:01	-0.07	6/24/2022 19:51	2.09	6/24/2022 20:14	5.59	6/24/2022 21:37	-0.38	6/23/2022 20:25	11.41
6/23/2022 21:02	-0.07	6/24/2022 19:52	2.09	6/24/2022 20:15	5.54	6/24/2022 21:38	-0.32	6/23/2022 20:26	11.46
6/23/2022 21:03	-0.07	6/24/2022 19:53	2.09	6/24/2022 20:16	5.54	6/24/2022 21:39	-0.32	6/23/2022 20:27	11.44
6/23/2022 21:04	-0.07	6/24/2022 19:54	2.09	6/24/2022 20:17	5.56	6/24/2022 21:40	-0.35	6/23/2022 20:28	11.49
6/23/2022 21:05	-0.09	6/24/2022 19:55	2.09	6/24/2022 20:18	5.54	6/24/2022 21:41	-0.33	6/23/2022 20:29	11.44
6/23/2022 21:06	-0.07	6/24/2022 19:56	2.09	6/24/2022 20:19	5.56	6/24/2022 21:42	-0.34	6/23/2022 20:30	11.48
6/23/2022 21:07	-0.09	6/24/2022 19:57	2.09	6/24/2022 20:20	5.56	6/24/2022 21:43	-0.39	6/23/2022 20:31	11.45
6/23/2022 21:08	-0.09	6/24/2022 19:58	2.09	6/24/2022 20:21	5.55	6/24/2022 21:44	-0.35	6/23/2022 20:32	11.42
6/23/2022 21:09	-0.07	6/24/2022 19:59	2.08	6/24/2022 20:22	5.56	6/24/2022 21:45	-0.35	6/23/2022 20:33	11.44
6/23/2022 21:10	-0.09	6/24/2022 20:00	2.08	6/24/2022 20:23	5.56	6/24/2022 21:46	-0.32	6/23/2022 20:34	11.47
6/23/2022 21:11	-0.07	6/24/2022 20:01	2.08	6/24/2022 20:24	5.54	6/24/2022 21:47	-0.30	6/23/2022 20:35	11.44
6/23/2022 21:12	-0.09	6/24/2022 20:02	2.09	6/24/2022 20:25	5.57	6/24/2022 21:48	-0.37	6/23/2022 20:36	11.40

6/23/2022 21:13	-0.07	6/24/2022 20:03	2.09	6/24/2022 20:26	5.57	6/24/2022 21:49	-0.37	6/23/2022 20:37	11.44
6/23/2022 21:14	-0.09	6/24/2022 20:04	2.09	6/24/2022 20:27	5.58	6/24/2022 21:50	-0.39	6/23/2022 20:38	11.41
6/23/2022 21:15	-0.09	6/24/2022 20:05	2.08	6/24/2022 20:28	5.55	6/24/2022 21:51	-0.37	6/23/2022 20:39	11.45
6/23/2022 21:16	-0.07	6/24/2022 20:06	2.08	6/24/2022 20:29	5.57	6/24/2022 21:52	-0.33	6/23/2022 20:40	11.46
6/23/2022 21:17	-0.09	6/24/2022 20:07	2.08	6/24/2022 20:30	5.56	6/24/2022 21:53	-0.34	6/23/2022 20:41	11.46
6/23/2022 21:18	-0.09	6/24/2022 20:08	2.08	6/24/2022 20:31	5.55	6/24/2022 21:54	-0.30	6/23/2022 20:42	11.41
6/23/2022 21:19	-0.09	6/24/2022 20:09	2.08	6/24/2022 20:32	5.50	6/24/2022 21:55	-0.36	6/23/2022 20:43	11.43
6/23/2022 21:20	-0.09	6/24/2022 20:10	2.08	6/24/2022 20:33	5.53	6/24/2022 21:56	-0.36	6/23/2022 20:44	11.47
6/23/2022 21:21	-0.09	6/24/2022 20:11	2.08	6/24/2022 20:34	5.52	6/24/2022 21:57	-0.37	6/23/2022 20:45	11.47
6/23/2022 21:22	-0.09	6/24/2022 20:12	2.08	6/24/2022 20:35	5.53	6/24/2022 21:58	-0.37	6/23/2022 20:46	11.48
6/23/2022 21:23	-0.09	6/24/2022 20:13	2.09	6/24/2022 20:36	5.56	6/24/2022 21:59	-0.35	6/23/2022 20:47	11.46
6/23/2022 21:24	-0.07	6/24/2022 20:14	2.08	6/24/2022 20:37	5.52	6/24/2022 22:00	-0.35	6/23/2022 20:48	11.45
6/23/2022 21:25	-0.07	6/24/2022 20:15	2.08	6/24/2022 20:38	5.54	6/24/2022 22:01	-0.30	6/23/2022 20:49	11.45
6/23/2022 21:26	-0.07	6/24/2022 20:16	2.08	6/24/2022 20:39	5.58	6/24/2022 22:02	-0.36	6/23/2022 20:50	11.42
6/23/2022 21:27	-0.07	6/24/2022 20:17	2.08	6/24/2022 20:40	5.55	6/24/2022 22:03	-0.34	6/23/2022 20:51	11.47
6/23/2022 21:28	-0.07	6/24/2022 20:18	2.08	6/24/2022 20:41	5.56	6/24/2022 22:04	-0.33	6/23/2022 20:52	11.47
6/23/2022 21:29	-0.09	6/24/2022 20:19	2.08	6/24/2022 20:42	5.55	6/24/2022 22:05	-0.33	6/23/2022 20:53	11.51
6/23/2022 21:30	-0.09	6/24/2022 20:20	2.08	6/24/2022 20:43	5.55	6/24/2022 22:06	-0.39	6/23/2022 20:54	11.46
6/23/2022 21:31	-0.08	6/24/2022 20:21	2.08	6/24/2022 20:44	5.55	6/24/2022 22:07	-0.31	6/23/2022 20:55	11.45
6/23/2022 21:32	-0.09	6/24/2022 20:22	2.08	6/24/2022 20:45	5.53	6/24/2022 22:08	-0.31	6/23/2022 20:56	11.44
6/23/2022 21:33	-0.09	6/24/2022 20:23	2.08	6/24/2022 20:46	5.59	6/24/2022 22:09	-0.36	6/23/2022 20:57	11.41
6/23/2022 21:34	-0.09	6/24/2022 20:24	2.08	6/24/2022 20:47	5.53	6/24/2022 22:10	-0.33	6/23/2022 20:58	11.42
6/23/2022 21:35	-0.09	6/24/2022 20:25	2.08	6/24/2022 20:48	5.57	6/24/2022 22:11	-0.36	6/23/2022 20:59	11.49
6/23/2022 21:36	-0.09	6/24/2022 20:26	2.08	6/24/2022 20:49	5.56	6/24/2022 22:12	-0.35	6/23/2022 21:00	11.42
6/23/2022 21:37	-0.07	6/24/2022 20:27	2.08	6/24/2022 20:50	5.58	6/24/2022 22:13	-0.35	6/23/2022 21:01	11.42
6/23/2022 21:38	-0.09	6/24/2022 20:28	2.08	6/24/2022 20:51	5.51	6/24/2022 22:14	-0.36	6/23/2022 21:02	11.45
6/23/2022 21:39	-0.07	6/24/2022 20:29	2.08	6/24/2022 20:52	5.52	6/24/2022 22:15	-0.36	6/23/2022 21:03	11.45
6/23/2022 21:40	-0.09	6/24/2022 20:30	2.08	6/24/2022 20:53	5.54	6/24/2022 22:16	-0.33	6/23/2022 21:04	11.48
6/23/2022 21:41	-0.09	6/24/2022 20:31	2.08	6/24/2022 20:54	5.55	6/24/2022 22:17	-0.35	6/23/2022 21:05	11.41
6/23/2022 21:42	-0.09	6/24/2022 20:32	2.08	6/24/2022 20:55	5.55	6/24/2022 22:18	-0.33	6/23/2022 21:06	11.49
6/23/2022 21:43	-0.08	6/24/2022 20:33	2.08	6/24/2022 20:56	5.55	6/24/2022 22:19	-0.31	6/23/2022 21:07	11.42
6/23/2022 21:44	-0.09	6/24/2022 20:34	2.08	6/24/2022 20:57	5.53	6/24/2022 22:20	-0.33	6/23/2022 21:08	11.45
6/23/2022 21:45	-0.09	6/24/2022 20:35	2.08	6/24/2022 20:58	5.56	6/24/2022 22:21	-0.36	6/23/2022 21:09	11.44
6/23/2022 21:46	-0.09	6/24/2022 20:36	2.08	6/24/2022 20:59	5.53	6/24/2022 22:22	-0.35	6/23/2022 21:10	11.49
6/23/2022 21:47	-0.09	6/24/2022 20:37	2.08	6/24/2022 21:00	5.56	6/24/2022 22:23	-0.35	6/23/2022 21:11	11.44
6/23/2022 21:48	-0.09	6/24/2022 20:38	2.08	6/24/2022 21:01	5.53	6/24/2022 22:24	-0.32	6/23/2022 21:12	11.45
6/23/2022 21:49	-0.09	6/24/2022 20:39	2.08	6/24/2022 21:02	5.56	6/24/2022 22:25	-0.36	6/23/2022 21:13	11.45
6/23/2022 21:50	-0.09	6/24/2022 20:40	2.08	6/24/2022 21:03	5.54	6/24/2022 22:26	-0.37	6/23/2022 21:14	11.46
6/23/2022 21:51	-0.07	6/24/2022 20:41	2.08	6/24/2022 21:04	5.51	6/24/2022 22:27	-0.34	6/23/2022 21:15	11.47
6/23/2022 21:52	-0.07	6/24/2022 20:42	2.07	6/24/2022 21:05	5.55	6/24/2022 22:28	-0.35	6/23/2022 21:16	11.41
6/23/2022 21:53	-0.09	6/24/2022 20:43	2.08	6/24/2022 21:06	5.52	6/24/2022 22:29	-0.38	6/23/2022 21:17	11.47
6/23/2022 21:54	-0.09	6/24/2022 20:44	2.07	6/24/2022 21:07	5.56	6/24/2022 22:30	-0.34	6/23/2022 21:18	11.47
6/23/2022 21:55	-0.09	6/24/2022 20:45	2.08	6/24/2022 21:08	5.52	6/24/2022 22:31	-0.36	6/23/2022 21:19	11.46
6/23/2022 21:56	-0.09	6/24/2022 20:46	2.07	6/24/2022 21:09	5.49	6/24/2022 22:32	-0.31	6/23/2022 21:20	11.43
6/23/2022 21:57	-0.09	6/24/2022 20:47	2.07	6/24/2022 21:10	5.54	6/24/2022 22:33	-0.34	6/23/2022 21:21	11.45
6/23/2022 21:58	-0.07	6/24/2022 20:48	2.07	6/24/2022 21:11	5.51	6/24/2022 22:34	-0.37	6/23/2022 21:22	11.45
6/23/2022 21:59	-0.08	6/24/2022 20:49	2.08	6/24/2022 21:12	5.50	6/24/2022 22:35	-0.35	6/23/2022 21:23	11.44
6/23/2022 22:00	-0.09	6/24/2022 20:50	2.07	6/24/2022 21:13	5.51	6/24/2022 22:36	-0.37	6/23/2022 21:24	11.47
6/23/2022 22:01	-0.09	6/24/2022 20:51	2.07	6/24/2022 21:14	5.53	6/24/2022 22:37	-0.35	6/23/2022 21:25	11.46
6/23/2022 22:02	-0.09	6/24/2022 20:52	2.07	6/24/2022 21:15	5.52	6/24/2022 22:38	-0.34	6/23/2022 21:26	11.47
6/23/2022 22:03	-0.08	6/24/2022 20:53	2.07	6/24/2022 21:16	5.55	6/24/2022 22:39	-0.36	6/23/2022 21:27	11.50
6/23/2022 22:04	-0.09	6/24/2022 20:54	2.07	6/24/2022 21:17	5.52	6/24/2022 22:40	-0.36	6/23/2022 21:28	11.49
6/23/2022 22:05	-0.09	6/24/2022 20:55	2.07	6/24/2022 21:18	5.55	6/24/2022 22:41	-0.36	6/23/2022 21:29	11.48
6/23/2022 22:06	-0.09	6/24/2022 20:56	2.07	6/24/2022 21:19	5.53	6/24/2022 22:42	-0.35	6/23/2022 21:30	11.43
6/23/2022 22:07	-0.09	6/24/2022 20:57	2.07	6/24/2022 21:20	5.56	6/24/2022 22:43	-0.39	6/23/2022 21:31	11.44
6/23/2022 22:08	-0.09	6/24/2022 20:58	2.07	6/24/2022 21:21	5.51	6/24/2022 22:44	-0.37	6/23/2022 21:32	11.45
6/23/2022 22:09	-0.09	6/24/2022 20:59	2.07	6/24/2022 21:22	5.53	6/24/2022 22:45	-0.35	6/23/2022 21:33	11.50
6/23/2022 22:10	-0.07	6/24/2022 21:00	2.07	6/24/2022 21:23	5.49	6/24/2022 22:46	-0.37	6/23/2022 21:34	11.39
6/23/2022 22:11	-0.07	6/24/2022 21:01	2.07	6/24/2022 21:24	5.58	6/24/2022 22:47	-0.31	6/23/2022 21:35	11.47
6/23/2022 22:12	-0.09	6/24/2022 21:02	2.07	6/24/2022 21:25	5.52	6/24/2022 22:48	-0.31	6/23/2022 21:36	11.45
6/23/2022 22:13	-0.09	6/24/2022 21:03	2.07	6/24/2022 21:26	5.52	6/24/2022 22:49	-0.33	6/23/2022 21:37	11.47
6/23/2022 22:14	-0.09	6/24/2022 21:04	2.07	6/24/2022 21:27	5.50	6/24/2022 22:50	-0.38	6/23/2022 21:38	11.50
6/23/2022 22:15	-0.09	6/24/2022 21:05	2.07	6/24/2022 21:28	5.52	6/24/2022 22:51	-0.36	6/23/2022 21:39	11.46
6/23/2022 22:16	-0.09	6/24/2022 21:06	2.07	6/24/2022 21:29	5.50	6/24/2022 22:52	-0.34	6/23/2022 21:40	11.40
6/23/2022 22:17	-0.09	6/24/2022 21:07	2.07	6/24/2022 21:30	5.50	6/24/2022 22:53	-0.36	6/23/2022 21:41	11.44
6/23/2022 22:18	-0.07	6/24/2022 21:08	2.07	6/24/2022 21:31	5.49	6/24/2022 22:54	-0.37	6/23/2022 21:42	11.47
6/23/2022 22:19	-0.07	6/24/2022 21:09	2.07	6/24/2022 21:32	5.51	6/24/2022 22:55	-0.35	6/23/2022 21:43	11.44
6/23/2022 22:20	-0.09	6/24/2022 21:10	2.07	6/24/2022 21:33	5.49	6/24/2022 22:56	-0.35	6/23/2022 21:44	11.46
6/23/2022 22:21	-0.08	6/24/2022 21:11	2.07	6/24/2022 21:34	5.52	6/24/2022 22:57	-0.33	6/23/2022 21:45	11.45
6/23/2022 22:22	-0.07	6/24/2022 21:12	2.07	6/24/2022 21:35	5.49	6/24/2022 22:58	-0.32	6/23/2022 21:46	11.46
6/23/2022 22:23	-0.09	6/24/2022 21:13	2.07	6/24/2022 21:36	5.53	6/24/2022 22:59	-0.35	6/23/2022 21:47	11.46
6/23/2022 22:24	-0.08	6/24/2022 21:14	2.07	6/24/2022 21:37	5.53	6/24/2022 23:00	-0.33	6/23/2022 21:48	11.41
6/23/2022 22:25	-0.09	6/24/2022 21:15	2.07	6/24/2022 21:38	5.49	6/24/2022 23:01	-0.32	6/23/2022 21:49	11.50
6/23/2022 22:26	-0.07	6/24/2022 21:16	2.07	6/24/2022 21:39	5.52	6/24/2022 23:02	-0.35	6/23/2022 21:50	11.47
6/23/2022 22:27	-0.07	6/24/2022 21:17	2.07	6/24/2022 21:40	5.55	6/24/2022 23:03	-0.37	6/23/2022 21:51	11.44
6/23/2022 22:28	-0.07	6/24/2022 21:18	2.07	6/24/2022 21:41	5.56	6/24/2022 23:04	-0.36	6/23/2022 21:52	11.47
6/23/2022 22:29	-0.09	6/24/2022 21:19	2.06	6/24/2022 21:42	5.52	6/24/2022 23:05	-0.33	6/23/2022 21:53	11.39
6/23/2022 22:30	-0.09	6/24/2022 21:20	2.07	6/24/2022 21:43	5.49	6/24/2022 23:06	-0.36	6/23/2022 21:54	11.42
6/23/2022 22:31	-0.07	6/24/2022 21:21	2.06	6/24/2022 21:44	5.49	6/24/2022 23:07	-0.34	6/23/2022 21:55	11.44
6/23/2022 22:32	-0.09	6/24/2022 21:22	2.06	6/24/2022 21:45	5.54	6/24/2022 23:08	-0.33	6/23/2022 21:56	11.41
6/23/2022 22:33	-0.08	6/24/2022 21:23	2.07	6/24/2022 21:46	5.48	6/24/2022 23:09	-0.35	6/23/2022 21:57	11.44
6/23/2022 22:34	-0.08	6/24/2022 21:24	2.06	6/24/2022 21:47	5.51	6/24/2022 23:10	-0.37	6/23/2022 21:58	11.47
6/23/2022 22:35	-0.07	6/24/2022 21:25	2.06	6/24/2022 21:48	5.52	6/24/2022 23:11	-0.34	6/23/2022 21:59	11.42
6/23/2022 22:36	-0.09	6/24/2022 21:26	2.06	6/24/2022 21:49	5.49	6/24/2022 23:12	-0.31	6/23/2022 22:00	11.48
6/23/2022 22:37	-0.07	6/24/2022 21:27	2.06	6/24/2022 21:50	5.50	6/24/2022 23:13	-0.33	6/23/2022 22:01	11.48
6/23/2022 22:38	-0.08	6/24/2022 21:28	2.06	6/24/2022 21:51	5.55	6/24/2022 23:14	-0.32	6/23/2022 22:02	11.45
6/23/2022 22:39	-0.09	6/24/2022 21:29	2.07	6/24/2022 21:52	5.50	6/24/2022 23:15	-0.33	6/23/2022 22:03	11.42
6/23/2022 22:40	-0.09	6/24/2022 21:30	2.06	6/24/2022 21:53	5.49	6/24/2022 23:16	-0.36	6/23/2022 22:04	11.47

6/23/2022 22:41	-0.09	6/24/2022 21:31	2.06	6/24/2022 21:54	5.54	6/24/2022 23:17	-0.38	6/23/2022 22:05	11.42
6/23/2022 22:42	-0.08	6/24/2022 21:32	2.06	6/24/2022 21:55	5.50	6/24/2022 23:18	-0.34	6/23/2022 22:06	11.42
6/23/2022 22:43	-0.08	6/24/2022 21:33	2.06	6/24/2022 21:56	5.50	6/24/2022 23:19	-0.36	6/23/2022 22:07	11.46
6/23/2022 22:44	-0.09	6/24/2022 21:34	2.06	6/24/2022 21:57	5.52	6/24/2022 23:20	-0.31	6/23/2022 22:08	11.47
6/23/2022 22:45	-0.09	6/24/2022 21:35	2.06	6/24/2022 21:58	5.46	6/24/2022 23:21	-0.33	6/23/2022 22:09	11.46
6/23/2022 22:46	-0.07	6/24/2022 21:36	2.06	6/24/2022 21:59	5.51	6/24/2022 23:22	-0.37	6/23/2022 22:10	11.42
6/23/2022 22:47	-0.09	6/24/2022 21:37	2.06	6/24/2022 22:00	5.51	6/24/2022 23:23	-0.36	6/23/2022 22:11	11.45
6/23/2022 22:48	-0.09	6/24/2022 21:38	2.06	6/24/2022 22:01	5.51	6/24/2022 23:24	-0.36	6/23/2022 22:12	11.42
6/23/2022 22:49	-0.09	6/24/2022 21:39	2.06	6/24/2022 22:02	5.53	6/24/2022 23:25	-0.39	6/23/2022 22:13	11.40
6/23/2022 22:50	-0.09	6/24/2022 21:40	2.06	6/24/2022 22:03	5.52	6/24/2022 23:26	-0.39	6/23/2022 22:14	11.47
6/23/2022 22:51	-0.09	6/24/2022 21:41	2.06	6/24/2022 22:04	5.50	6/24/2022 23:27	-0.35	6/23/2022 22:15	11.48
6/23/2022 22:52	-0.09	6/24/2022 21:42	2.06	6/24/2022 22:05	5.49	6/24/2022 23:28	-0.35	6/23/2022 22:16	11.43
6/23/2022 22:53	-0.09	6/24/2022 21:43	2.06	6/24/2022 22:06	5.53	6/24/2022 23:29	-0.35	6/23/2022 22:17	11.42
6/23/2022 22:54	-0.09	6/24/2022 21:44	2.06	6/24/2022 22:07	5.54	6/24/2022 23:30	-0.36	6/23/2022 22:18	11.46
6/23/2022 22:55	-0.07	6/24/2022 21:45	2.06	6/24/2022 22:08	5.48	6/24/2022 23:31	-0.34	6/23/2022 22:19	11.44
6/23/2022 22:56	-0.08	6/24/2022 21:46	2.06	6/24/2022 22:09	5.51	6/24/2022 23:32	-0.34	6/23/2022 22:20	11.41
6/23/2022 22:57	-0.09	6/24/2022 21:47	2.06	6/24/2022 22:10	5.50	6/24/2022 23:33	-0.35	6/23/2022 22:21	11.48
6/23/2022 22:58	-0.08	6/24/2022 21:48	2.05	6/24/2022 22:11	5.50	6/24/2022 23:34	-0.39	6/23/2022 22:22	11.43
6/23/2022 22:59	-0.08	6/24/2022 21:49	2.06	6/24/2022 22:12	5.48	6/24/2022 23:35	-0.30	6/23/2022 22:23	11.47
6/23/2022 23:00	-0.08	6/24/2022 21:50	2.06	6/24/2022 22:13	5.50	6/24/2022 23:36	-0.34	6/23/2022 22:24	11.48
6/23/2022 23:01	-0.09	6/24/2022 21:51	2.06	6/24/2022 22:14	5.47	6/24/2022 23:37	-0.37	6/23/2022 22:25	11.47
6/23/2022 23:02	-0.09	6/24/2022 21:52	2.06	6/24/2022 22:15	5.48	6/24/2022 23:38	-0.35	6/23/2022 22:26	11.43
6/23/2022 23:03	-0.07	6/24/2022 21:53	2.06	6/24/2022 22:16	5.50	6/24/2022 23:39	-0.37	6/23/2022 22:27	11.50
6/23/2022 23:04	-0.09	6/24/2022 21:54	2.05	6/24/2022 22:17	5.48	6/24/2022 23:40	-0.36	6/23/2022 22:28	11.47
6/23/2022 23:05	-0.07	6/24/2022 21:55	2.06	6/24/2022 22:18	5.46	6/24/2022 23:41	-0.37	6/23/2022 22:29	11.49
6/23/2022 23:06	-0.09	6/24/2022 21:56	2.06	6/24/2022 22:19	5.55	6/24/2022 23:42	-0.33	6/23/2022 22:30	11.44
6/23/2022 23:07	-0.08	6/24/2022 21:57	2.05	6/24/2022 22:20	5.48	6/24/2022 23:43	-0.33	6/23/2022 22:31	11.47
6/23/2022 23:08	-0.09	6/24/2022 21:58	2.05	6/24/2022 22:21	5.50	6/24/2022 23:44	-0.38	6/23/2022 22:32	11.51
6/23/2022 23:09	-0.08	6/24/2022 21:59	2.06	6/24/2022 22:22	5.53	6/24/2022 23:45	-0.37	6/23/2022 22:33	11.49
6/23/2022 23:10	-0.09	6/24/2022 22:00	2.05	6/24/2022 22:23	5.49	6/24/2022 23:46	-0.38	6/23/2022 22:34	11.45
6/23/2022 23:11	-0.08	6/24/2022 22:01	2.05	6/24/2022 22:24	5.48	6/24/2022 23:47	-0.37	6/23/2022 22:35	11.51
6/23/2022 23:12	-0.09	6/24/2022 22:02	2.06	6/24/2022 22:25	5.50	6/24/2022 23:48	-0.31	6/23/2022 22:36	11.50
6/23/2022 23:13	-0.09	6/24/2022 22:03	2.05	6/24/2022 22:26	5.52	6/24/2022 23:49	-0.37	6/23/2022 22:37	11.48
6/23/2022 23:14	-0.08	6/24/2022 22:04	2.05	6/24/2022 22:27	5.53	6/24/2022 23:50	-0.37	6/23/2022 22:38	11.43
6/23/2022 23:15	-0.09	6/24/2022 22:05	2.05	6/24/2022 22:28	5.49	6/24/2022 23:51	-0.37	6/23/2022 22:39	11.47
6/23/2022 23:16	-0.08	6/24/2022 22:06	2.05	6/24/2022 22:29	5.49	6/24/2022 23:52	-0.35	6/23/2022 22:40	11.47
6/23/2022 23:17	-0.07	6/24/2022 22:07	2.06	6/24/2022 22:30	5.48	6/24/2022 23:53	-0.37	6/23/2022 22:41	11.49
6/23/2022 23:18	-0.08	6/24/2022 22:08	2.05	6/24/2022 22:31	5.49	6/24/2022 23:54	-0.35	6/23/2022 22:42	11.48
6/23/2022 23:19	-0.08	6/24/2022 22:09	2.05	6/24/2022 22:32	5.48	6/24/2022 23:55	-0.34	6/23/2022 22:43	11.46
6/23/2022 23:20	-0.09	6/24/2022 22:10	2.05	6/24/2022 22:33	5.49	6/24/2022 23:56	-0.33	6/23/2022 22:44	11.39
6/23/2022 23:21	-0.09	6/24/2022 22:11	2.05	6/24/2022 22:34	5.49	6/24/2022 23:57	-0.35	6/23/2022 22:45	11.47
6/23/2022 23:22	-0.07	6/24/2022 22:12	2.05	6/24/2022 22:35	5.49	6/24/2022 23:58	-0.36	6/23/2022 22:46	11.47
6/23/2022 23:23	-0.09	6/24/2022 22:13	2.05	6/24/2022 22:36	5.47	6/24/2022 23:59	-0.29	6/23/2022 22:47	11.46
6/23/2022 23:24	-0.08	6/24/2022 22:14	2.05	6/24/2022 22:37	5.51	6/25/2022 0:00	-0.36	6/23/2022 22:48	11.47
6/23/2022 23:25	-0.09	6/24/2022 22:15	2.05	6/24/2022 22:38	5.49	6/25/2022 0:01	-0.37	6/23/2022 22:49	11.42
6/23/2022 23:26	-0.09	6/24/2022 22:16	2.05	6/24/2022 22:39	5.47	6/25/2022 0:02	-0.36	6/23/2022 22:50	11.47
6/23/2022 23:27	-0.09	6/24/2022 22:17	2.05	6/24/2022 22:40	5.50	6/25/2022 0:03	-0.34	6/23/2022 22:51	11.46
6/23/2022 23:28	-0.08	6/24/2022 22:18	2.05	6/24/2022 22:41	5.51	6/25/2022 0:04	-0.36	6/23/2022 22:52	11.46
6/23/2022 23:29	-0.09	6/24/2022 22:19	2.05	6/24/2022 22:42	5.48	6/25/2022 0:05	-0.41	6/23/2022 22:53	11.49
6/23/2022 23:30	-0.09	6/24/2022 22:20	2.05	6/24/2022 22:43	5.50	6/25/2022 0:06	-0.34	6/23/2022 22:54	11.44
6/23/2022 23:31	-0.08	6/24/2022 22:21	2.05	6/24/2022 22:44	5.48	6/25/2022 0:07	-0.33	6/23/2022 22:55	11.47
6/23/2022 23:32	-0.08	6/24/2022 22:22	2.05	6/24/2022 22:45	5.51	6/25/2022 0:08	-0.32	6/23/2022 22:56	11.45
6/23/2022 23:33	-0.09	6/24/2022 22:23	2.05	6/24/2022 22:46	5.48	6/25/2022 0:09	-0.36	6/23/2022 22:57	11.49
6/23/2022 23:34	-0.09	6/24/2022 22:24	2.05	6/24/2022 22:47	5.47	6/25/2022 0:10	-0.33	6/23/2022 22:58	11.49
6/23/2022 23:35	-0.07	6/24/2022 22:25	2.05	6/24/2022 22:48	5.50	6/25/2022 0:11	-0.37	6/23/2022 22:59	11.44
6/23/2022 23:36	-0.08	6/24/2022 22:26	2.05	6/24/2022 22:49	5.47	6/25/2022 0:12	-0.31	6/23/2022 23:00	11.42
6/23/2022 23:37	-0.08	6/24/2022 22:27	2.05	6/24/2022 22:50	5.46	6/25/2022 0:13	-0.34	6/23/2022 23:01	11.45
6/23/2022 23:38	-0.09	6/24/2022 22:28	2.05	6/24/2022 22:51	5.51	6/25/2022 0:14	-0.33	6/23/2022 23:02	11.50
6/23/2022 23:39	-0.09	6/24/2022 22:29	2.05	6/24/2022 22:52	5.46	6/25/2022 0:15	-0.33	6/23/2022 23:03	11.44
6/23/2022 23:40	-0.09	6/24/2022 22:30	2.05	6/24/2022 22:53	5.51	6/25/2022 0:16	-0.31	6/23/2022 23:04	11.39
6/23/2022 23:41	-0.09	6/24/2022 22:31	2.05	6/24/2022 22:54	5.51	6/25/2022 0:17	-0.33	6/23/2022 23:05	11.42
6/23/2022 23:42	-0.09	6/24/2022 22:32	2.05	6/24/2022 22:55	5.48	6/25/2022 0:18	-0.34	6/23/2022 23:06	11.46
6/23/2022 23:43	-0.09	6/24/2022 22:33	2.05	6/24/2022 22:56	5.49	6/25/2022 0:19	-0.33	6/23/2022 23:07	11.48
6/23/2022 23:44	-0.08	6/24/2022 22:34	2.05	6/24/2022 22:57	5.47	6/25/2022 0:20	-0.33	6/23/2022 23:08	11.48
6/23/2022 23:45	-0.08	6/24/2022 22:35	2.05	6/24/2022 22:58	5.48	6/25/2022 0:21	-0.34	6/23/2022 23:09	11.42
6/23/2022 23:46	-0.09	6/24/2022 22:36	2.04	6/24/2022 22:59	5.47	6/25/2022 0:22	-0.33	6/23/2022 23:10	11.48
6/23/2022 23:47	-0.08	6/24/2022 22:37	2.04	6/24/2022 23:00	5.50	6/25/2022 0:23	-0.37	6/23/2022 23:11	11.43
6/23/2022 23:48	-0.08	6/24/2022 22:38	2.05	6/24/2022 23:01	5.49	6/25/2022 0:24	-0.35	6/23/2022 23:12	11.44
6/23/2022 23:49	-0.07	6/24/2022 22:39	2.05	6/24/2022 23:02	5.48	6/25/2022 0:25	-0.35	6/23/2022 23:13	11.47
6/23/2022 23:50	-0.08	6/24/2022 22:40	2.04	6/24/2022 23:03	5.43	6/25/2022 0:26	-0.35	6/23/2022 23:14	11.48
6/23/2022 23:51	-0.09	6/24/2022 22:41	2.05	6/24/2022 23:04	5.46	6/25/2022 0:27	-0.35	6/23/2022 23:15	11.47
6/23/2022 23:52	-0.10	6/24/2022 22:42	2.05	6/24/2022 23:05	5.47	6/25/2022 0:28	-0.35	6/23/2022 23:16	11.45
6/23/2022 23:53	-0.07	6/24/2022 22:43	2.04	6/24/2022 23:06	5.48	6/25/2022 0:29	-0.35	6/23/2022 23:17	11.46
6/23/2022 23:54	-0.08	6/24/2022 22:44	2.04	6/24/2022 23:07	5.47	6/25/2022 0:30	-0.38	6/23/2022 23:18	11.52
6/23/2022 23:55	-0.09	6/24/2022 22:45	2.04	6/24/2022 23:08	5.48	6/25/2022 0:31	-0.34	6/23/2022 23:19	11.44
6/23/2022 23:56	-0.10	6/24/2022 22:46	2.04	6/24/2022 23:09	5.50	6/25/2022 0:32	-0.30	6/23/2022 23:20	11.47
6/23/2022 23:57	-0.10	6/24/2022 22:47	2.05	6/24/2022 23:10	5.44	6/25/2022 0:33	-0.34	6/23/2022 23:21	11.46
6/23/2022 23:58	-0.10	6/24/2022 22:48	2.04	6/24/2022 23:11	5.49	6/25/2022 0:34	-0.32	6/23/2022 23:22	11.54
6/23/2022 23:59	-0.08	6/24/2022 22:49	2.04	6/24/2022 23:12	5.51	6/25/2022 0:35	-0.38	6/23/2022 23:23	11.46
6/24/2022 0:00	-0.09	6/24/2022 22:50	2.04	6/24/2022 23:13	5.46	6/25/2022 0:36	-0.33	6/23/2022 23:24	11.50
6/24/2022 0:01	-0.09	6/24/2022 22:51	2.04	6/24/2022 23:14	5.47	6/25/2022 0:37	-0.35	6/23/2022 23:25	11.49
6/24/2022 0:02	-0.08	6/24/2022 22:52	2.04	6/24/2022 23:15	5.46	6/25/2022 0:38	-0.35	6/23/2022 23:26	11.47
6/24/2022 0:03	-0.09	6/24/2022 22:53	2.04	6/24/2022 23:16	5.45	6/25/2022 0:39	-0.34	6/23/2022 23:27	11.46
6/24/2022 0:04	-0.07	6/24/2022 22:54	2.04	6/24/2022 23:17	5.42	6/25/2022 0:40	-0.33	6/23/2022 23:28	11.41
6/24/2022 0:05	-0.09	6/24/2022 22:55	2.04	6/24/2022 23:18	5.48	6/25/2022 0:41	-0.33	6/23/2022 23:29	11.47
6/24/2022 0:06	-0.08	6/24/2022 22:56	2.04	6/24/2022 23:19	5.44	6/25/2022 0:42	-0.36	6/23/2022 23:30	11.46
6/24/2022 0:07	-0.09	6/24/2022 22:57	2.04	6/24/2022 23:20	5.45	6/25/2022 0:43	-0.35	6/23/2022 23:31	11.47
6/24/2022 0:08	-0.08	6/24/2022 22:58	2.04	6/24/2022 23:21	5.48	6/25/2022 0:44	-0.36	6/23/2022 23:32	11.45

6/24/2022 0:09	-0.09	6/24/2022 22:59	2.04	6/24/2022 23:22	5.51	6/25/2022 0:45	-0.34	6/23/2022 23:33	11.43
6/24/2022 0:10	-0.10	6/24/2022 23:00	2.03	6/24/2022 23:23	5.51	6/25/2022 0:46	-0.33	6/23/2022 23:34	11.44
6/24/2022 0:11	-0.09	6/24/2022 23:01	2.04	6/24/2022 23:24	5.48	6/25/2022 0:47	-0.35	6/23/2022 23:35	11.51
6/24/2022 0:12	-0.08	6/24/2022 23:02	2.04	6/24/2022 23:25	5.47	6/25/2022 0:48	-0.33	6/23/2022 23:36	11.49
6/24/2022 0:13	-0.08	6/24/2022 23:03	2.04	6/24/2022 23:26	5.46	6/25/2022 0:49	-0.34	6/23/2022 23:37	11.48
6/24/2022 0:14	-0.08	6/24/2022 23:04	2.04	6/24/2022 23:27	5.46	6/25/2022 0:50	-0.35	6/23/2022 23:38	11.46
6/24/2022 0:15	-0.07	6/24/2022 23:05	2.03	6/24/2022 23:28	5.45	6/25/2022 0:51	-0.35	6/23/2022 23:39	11.44
6/24/2022 0:16	-0.09	6/24/2022 23:06	2.03	6/24/2022 23:29	5.43	6/25/2022 0:52	-0.32	6/23/2022 23:40	11.48
6/24/2022 0:17	-0.09	6/24/2022 23:07	2.03	6/24/2022 23:30	5.45	6/25/2022 0:53	-0.35	6/23/2022 23:41	11.47
6/24/2022 0:18	-0.09	6/24/2022 23:08	2.03	6/24/2022 23:31	5.49	6/25/2022 0:54	-0.34	6/23/2022 23:42	11.49
6/24/2022 0:19	-0.10	6/24/2022 23:09	2.04	6/24/2022 23:32	5.42	6/25/2022 0:55	-0.36	6/23/2022 23:43	11.46
6/24/2022 0:20	-0.09	6/24/2022 23:10	2.03	6/24/2022 23:33	5.49	6/25/2022 0:56	-0.38	6/23/2022 23:44	11.46
6/24/2022 0:21	-0.09	6/24/2022 23:11	2.03	6/24/2022 23:34	5.49	6/25/2022 0:57	-0.31	6/23/2022 23:45	11.45
6/24/2022 0:22	-0.09	6/24/2022 23:12	2.03	6/24/2022 23:35	5.50	6/25/2022 0:58	-0.34	6/23/2022 23:46	11.43
6/24/2022 0:23	-0.09	6/24/2022 23:13	2.03	6/24/2022 23:36	5.48	6/25/2022 0:59	-0.33	6/23/2022 23:47	11.42
6/24/2022 0:24	-0.07	6/24/2022 23:14	2.03	6/24/2022 23:37	5.47	6/25/2022 1:00	-0.35	6/23/2022 23:48	11.50
6/24/2022 0:25	-0.08	6/24/2022 23:15	2.03	6/24/2022 23:38	5.47	6/25/2022 1:01	-0.34	6/23/2022 23:49	11.48
6/24/2022 0:26	-0.08	6/24/2022 23:16	2.03	6/24/2022 23:39	5.44	6/25/2022 1:02	-0.37	6/23/2022 23:50	11.41
6/24/2022 0:27	-0.08	6/24/2022 23:17	2.04	6/24/2022 23:40	5.45	6/25/2022 1:03	-0.34	6/23/2022 23:51	11.46
6/24/2022 0:28	-0.09	6/24/2022 23:18	2.03	6/24/2022 23:41	5.46	6/25/2022 1:04	-0.36	6/23/2022 23:52	11.43
6/24/2022 0:29	-0.10	6/24/2022 23:19	2.03	6/24/2022 23:42	5.46	6/25/2022 1:05	-0.35	6/23/2022 23:53	11.47
6/24/2022 0:30	-0.08	6/24/2022 23:20	2.03	6/24/2022 23:43	5.44	6/25/2022 1:06	-0.35	6/23/2022 23:54	11.41
6/24/2022 0:31	-0.10	6/24/2022 23:21	2.03	6/24/2022 23:44	5.44	6/25/2022 1:07	-0.33	6/23/2022 23:55	11.48
6/24/2022 0:32	-0.09	6/24/2022 23:22	2.03	6/24/2022 23:45	5.45	6/25/2022 1:08	-0.32	6/23/2022 23:56	11.48
6/24/2022 0:33	-0.09	6/24/2022 23:23	2.03	6/24/2022 23:46	5.46	6/25/2022 1:09	-0.35	6/23/2022 23:57	11.46
6/24/2022 0:34	-0.10	6/24/2022 23:24	2.03	6/24/2022 23:47	5.48	6/25/2022 1:10	-0.31	6/23/2022 23:58	11.50
6/24/2022 0:35	-0.08	6/24/2022 23:25	2.03	6/24/2022 23:48	5.44	6/25/2022 1:11	-0.37	6/23/2022 23:59	11.43
6/24/2022 0:36	-0.08	6/24/2022 23:26	2.03	6/24/2022 23:49	5.45	6/25/2022 1:12	-0.35	6/24/2022 0:00	11.45
6/24/2022 0:37	-0.09	6/24/2022 23:27	2.03	6/24/2022 23:50	5.45	6/25/2022 1:13	-0.33	6/24/2022 0:01	11.44
6/24/2022 0:38	-0.10	6/24/2022 23:28	2.03	6/24/2022 23:51	5.46	6/25/2022 1:14	-0.36	6/24/2022 0:02	11.48
6/24/2022 0:39	-0.08	6/24/2022 23:29	2.03	6/24/2022 23:52	5.45	6/25/2022 1:15	-0.33	6/24/2022 0:03	11.47
6/24/2022 0:40	-0.08	6/24/2022 23:30	2.02	6/24/2022 23:53	5.46	6/25/2022 1:16	-0.37	6/24/2022 0:04	11.47
6/24/2022 0:41	-0.09	6/24/2022 23:31	2.03	6/24/2022 23:54	5.43	6/25/2022 1:17	-0.32	6/24/2022 0:05	11.47
6/24/2022 0:42	-0.09	6/24/2022 23:32	2.03	6/24/2022 23:55	5.45	6/25/2022 1:18	-0.32	6/24/2022 0:06	11.47
6/24/2022 0:43	-0.08	6/24/2022 23:33	2.03	6/24/2022 23:56	5.45	6/25/2022 1:19	-0.34	6/24/2022 0:07	11.46
6/24/2022 0:44	-0.08	6/24/2022 23:34	2.02	6/24/2022 23:57	5.47	6/25/2022 1:20	-0.37	6/24/2022 0:08	11.44
6/24/2022 0:45	-0.09	6/24/2022 23:35	2.02	6/24/2022 23:58	5.44	6/25/2022 1:21	-0.34	6/24/2022 0:09	11.48
6/24/2022 0:46	-0.08	6/24/2022 23:36	2.03	6/24/2022 23:59	5.42	6/25/2022 1:22	-0.34	6/24/2022 0:10	11.47
6/24/2022 0:47	-0.09	6/24/2022 23:37	2.02	6/25/2022 0:00	5.43	6/25/2022 1:23	-0.34	6/24/2022 0:11	11.49
6/24/2022 0:48	-0.08	6/24/2022 23:38	2.02	6/25/2022 0:01	5.42	6/25/2022 1:24	-0.40	6/24/2022 0:12	11.46
6/24/2022 0:49	-0.08	6/24/2022 23:39	2.02	6/25/2022 0:02	5.43	6/25/2022 1:25	-0.33	6/24/2022 0:13	11.47
6/24/2022 0:50	-0.10	6/24/2022 23:40	2.02	6/25/2022 0:03	5.45	6/25/2022 1:26	-0.35	6/24/2022 0:14	11.44
6/24/2022 0:51	-0.08	6/24/2022 23:41	2.03	6/25/2022 0:04	5.41	6/25/2022 1:27	-0.34	6/24/2022 0:15	11.45
6/24/2022 0:52	-0.08	6/24/2022 23:42	2.02	6/25/2022 0:05	5.45	6/25/2022 1:28	-0.34	6/24/2022 0:16	11.43
6/24/2022 0:53	-0.08	6/24/2022 23:43	2.02	6/25/2022 0:06	5.44	6/25/2022 1:29	-0.36	6/24/2022 0:17	11.52
6/24/2022 0:54	-0.08	6/24/2022 23:44	2.02	6/25/2022 0:07	5.40	6/25/2022 1:30	-0.40	6/24/2022 0:18	11.48
6/24/2022 0:55	-0.08	6/24/2022 23:45	2.02	6/25/2022 0:08	5.46	6/25/2022 1:31	-0.36	6/24/2022 0:19	11.48
6/24/2022 0:56	-0.08	6/24/2022 23:46	2.02	6/25/2022 0:09	5.41	6/25/2022 1:32	-0.38	6/24/2022 0:20	11.46
6/24/2022 0:57	-0.08	6/24/2022 23:47	2.02	6/25/2022 0:10	5.44	6/25/2022 1:33	-0.35	6/24/2022 0:21	11.49
6/24/2022 0:58	-0.09	6/24/2022 23:48	2.02	6/25/2022 0:11	5.44	6/25/2022 1:34	-0.39	6/24/2022 0:22	11.48
6/24/2022 0:59	-0.08	6/24/2022 23:49	2.02	6/25/2022 0:12	5.44	6/25/2022 1:35	-0.35	6/24/2022 0:23	11.51
6/24/2022 1:00	-0.08	6/24/2022 23:50	2.02	6/25/2022 0:13	5.44	6/25/2022 1:36	-0.35	6/24/2022 0:24	11.46
6/24/2022 1:01	-0.08	6/24/2022 23:51	2.02	6/25/2022 0:14	5.43	6/25/2022 1:37	-0.34	6/24/2022 0:25	11.49
6/24/2022 1:02	-0.08	6/24/2022 23:52	2.02	6/25/2022 0:15	5.44	6/25/2022 1:38	-0.33	6/24/2022 0:26	11.43
6/24/2022 1:03	-0.09	6/24/2022 23:53	2.02	6/25/2022 0:16	5.44	6/25/2022 1:39	-0.38	6/24/2022 0:27	11.51
6/24/2022 1:04	-0.09	6/24/2022 23:54	2.02	6/25/2022 0:17	5.43	6/25/2022 1:40	-0.37	6/24/2022 0:28	11.50
6/24/2022 1:05	-0.09	6/24/2022 23:55	2.01	6/25/2022 0:18	5.42	6/25/2022 1:41	-0.35	6/24/2022 0:29	11.47
6/24/2022 1:06	-0.08	6/24/2022 23:56	2.02	6/25/2022 0:19	5.44	6/25/2022 1:42	-0.33	6/24/2022 0:30	11.47
6/24/2022 1:07	-0.08	6/24/2022 23:57	2.02	6/25/2022 0:20	5.42	6/25/2022 1:43	-0.38	6/24/2022 0:31	11.45
6/24/2022 1:08	-0.08	6/24/2022 23:58	2.02	6/25/2022 0:21	5.40	6/25/2022 1:44	-0.35	6/24/2022 0:32	11.48
6/24/2022 1:09	-0.08	6/24/2022 23:59	2.01	6/25/2022 0:22	5.46	6/25/2022 1:45	-0.40	6/24/2022 0:33	11.46
6/24/2022 1:10	-0.08	6/25/2022 0:00	2.01	6/25/2022 0:23	5.43	6/25/2022 1:46	-0.36	6/24/2022 0:34	11.51
6/24/2022 1:11	-0.08	6/25/2022 0:01	2.01	6/25/2022 0:24	5.41	6/25/2022 1:47	-0.34	6/24/2022 0:35	11.45
6/24/2022 1:12	-0.09	6/25/2022 0:02	2.02	6/25/2022 0:25	5.42	6/25/2022 1:48	-0.33	6/24/2022 0:36	11.51
6/24/2022 1:13	-0.08	6/25/2022 0:03	2.01	6/25/2022 0:26	5.42	6/25/2022 1:49	-0.29	6/24/2022 0:37	11.47
6/24/2022 1:14	-0.09	6/25/2022 0:04	2.01	6/25/2022 0:27	5.40	6/25/2022 1:50	-0.36	6/24/2022 0:38	11.45
6/24/2022 1:15	-0.08	6/25/2022 0:05	2.02	6/25/2022 0:28	5.45	6/25/2022 1:51	-0.35	6/24/2022 0:39	11.47
6/24/2022 1:16	-0.08	6/25/2022 0:06	2.01	6/25/2022 0:29	5.39	6/25/2022 1:52	-0.34	6/24/2022 0:40	11.44
6/24/2022 1:17	-0.08	6/25/2022 0:07	2.01	6/25/2022 0:30	5.42	6/25/2022 1:53	-0.31	6/24/2022 0:41	11.49
6/24/2022 1:18	-0.08	6/25/2022 0:08	2.01	6/25/2022 0:31	5.43	6/25/2022 1:54	-0.36	6/24/2022 0:42	11.48
6/24/2022 1:19	-0.08	6/25/2022 0:09	2.01	6/25/2022 0:32	5.45	6/25/2022 1:55	-0.33	6/24/2022 0:43	11.49
6/24/2022 1:20	-0.10	6/25/2022 0:10	2.01	6/25/2022 0:33	5.40	6/25/2022 1:56	-0.35	6/24/2022 0:44	11.49
6/24/2022 1:21	-0.08	6/25/2022 0:11	2.01	6/25/2022 0:34	5.45	6/25/2022 1:57	-0.38	6/24/2022 0:45	11.45
6/24/2022 1:22	-0.08	6/25/2022 0:12	2.01	6/25/2022 0:35	5.42	6/25/2022 1:58	-0.37	6/24/2022 0:46	11.47
6/24/2022 1:23	-0.08	6/25/2022 0:13	2.01	6/25/2022 0:36	5.44	6/25/2022 1:59	-0.35	6/24/2022 0:47	11.49
6/24/2022 1:24	-0.08	6/25/2022 0:14	2.01	6/25/2022 0:37	5.40	6/25/2022 2:00	-0.34	6/24/2022 0:48	11.46
6/24/2022 1:25	-0.10	6/25/2022 0:15	2.01	6/25/2022 0:38	5.40	6/25/2022 2:01	-0.36	6/24/2022 0:49	11.46
6/24/2022 1:26	-0.08	6/25/2022 0:16	2.01	6/25/2022 0:39	5.44	6/25/2022 2:02	-0.37	6/24/2022 0:50	11.50
6/24/2022 1:27	-0.10	6/25/2022 0:17	2.01	6/25/2022 0:40	5.44	6/25/2022 2:03	-0.36	6/24/2022 0:51	11.47
6/24/2022 1:28	-0.10	6/25/2022 0:18	2.01	6/25/2022 0:41	5.37	6/25/2022 2:04	-0.38	6/24/2022 0:52	11.45
6/24/2022 1:29	-0.10	6/25/2022 0:19	2.01	6/25/2022 0:42	5.40	6/25/2022 2:05	-0.36	6/24/2022 0:53	11.46
6/24/2022 1:30	-0.08	6/25/2022 0:20	2.01	6/25/2022 0:43	5.39	6/25/2022 2:06	-0.35	6/24/2022 0:54	11.46
6/24/2022 1:31	-0.08	6/25/2022 0:21	2.01	6/25/2022 0:44	5.43	6/25/2022 2:07	-0.35	6/24/2022 0:55	11.50
6/24/2022 1:32	-0.08	6/25/2022 0:22	2.01	6/25/2022 0:45	5.41	6/25/2022 2:08	-0.38	6/24/2022 0:56	11.48
6/24/2022 1:33	-0.09	6/25/2022 0:23	2.01	6/25/2022 0:46	5.38	6/25/2022 2:09	-0.37	6/24/2022 0:57	11.46
6/24/2022 1:34	-0.09	6/25/2022 0:24	2.01	6/25/2022 0:47	5.43	6/25/2022 2:10	-0.36	6/24/2022 0:58	11.42
6/24/2022 1:35	-0.08	6/25/2022 0:25	2.01	6/25/2022 0:48	5.40	6/25/2022 2:11	-0.37	6/24/2022 0:59	11.43
6/24/2022 1:36	-0.08	6/25/2022 0:26	2.01	6/25/2022 0:49	5.44	6/25/2022 2:12	-0.33	6/24/2022 1:00	11.45

6/24/2022 1:37	-0.08	6/25/2022 0:27	2.00	6/25/2022 0:50	5.42	6/25/2022 2:13	-0.32	6/24/2022 1:01	11.49
6/24/2022 1:38	-0.10	6/25/2022 0:28	2.00	6/25/2022 0:51	5.42	6/25/2022 2:14	-0.38	6/24/2022 1:02	11.47
6/24/2022 1:39	-0.10	6/25/2022 0:29	2.01	6/25/2022 0:52	5.43	6/25/2022 2:15	-0.31	6/24/2022 1:03	11.47
6/24/2022 1:40	-0.10	6/25/2022 0:30	2.00	6/25/2022 0:53	5.40	6/25/2022 2:16	-0.35	6/24/2022 1:04	11.44
6/24/2022 1:41	-0.10	6/25/2022 0:31	2.00	6/25/2022 0:54	5.39	6/25/2022 2:17	-0.34	6/24/2022 1:05	11.49
6/24/2022 1:42	-0.09	6/25/2022 0:32	2.00	6/25/2022 0:55	5.42	6/25/2022 2:18	-0.33	6/24/2022 1:06	11.45
6/24/2022 1:43	-0.10	6/25/2022 0:33	2.00	6/25/2022 0:56	5.43	6/25/2022 2:19	-0.35	6/24/2022 1:07	11.47
6/24/2022 1:44	-0.08	6/25/2022 0:34	2.01	6/25/2022 0:57	5.40	6/25/2022 2:20	-0.34	6/24/2022 1:08	11.49
6/24/2022 1:45	-0.10	6/25/2022 0:35	2.00	6/25/2022 0:58	5.41	6/25/2022 2:21	-0.32	6/24/2022 1:09	11.48
6/24/2022 1:46	-0.08	6/25/2022 0:36	2.00	6/25/2022 0:59	5.42	6/25/2022 2:22	-0.36	6/24/2022 1:10	11.48
6/24/2022 1:47	-0.10	6/25/2022 0:37	2.00	6/25/2022 1:00	5.39	6/25/2022 2:23	-0.33	6/24/2022 1:11	11.48
6/24/2022 1:48	-0.10	6/25/2022 0:38	2.00	6/25/2022 1:01	5.40	6/25/2022 2:24	-0.33	6/24/2022 1:12	11.41
6/24/2022 1:49	-0.10	6/25/2022 0:39	2.00	6/25/2022 1:02	5.41	6/25/2022 2:25	-0.37	6/24/2022 1:13	11.51
6/24/2022 1:50	-0.10	6/25/2022 0:40	2.00	6/25/2022 1:03	5.42	6/25/2022 2:26	-0.33	6/24/2022 1:14	11.49
6/24/2022 1:51	-0.10	6/25/2022 0:41	2.00	6/25/2022 1:04	5.42	6/25/2022 2:27	-0.38	6/24/2022 1:15	11.43
6/24/2022 1:52	-0.10	6/25/2022 0:42	2.00	6/25/2022 1:05	5.36	6/25/2022 2:28	-0.32	6/24/2022 1:16	11.50
6/24/2022 1:53	-0.10	6/25/2022 0:43	2.00	6/25/2022 1:06	5.46	6/25/2022 2:29	-0.33	6/24/2022 1:17	11.42
6/24/2022 1:54	-0.09	6/25/2022 0:44	2.00	6/25/2022 1:07	5.42	6/25/2022 2:30	-0.33	6/24/2022 1:18	11.50
6/24/2022 1:55	-0.08	6/25/2022 0:45	2.00	6/25/2022 1:08	5.42	6/25/2022 2:31	-0.38	6/24/2022 1:19	11.48
6/24/2022 1:56	-0.09	6/25/2022 0:46	2.00	6/25/2022 1:09	5.41	6/25/2022 2:32	-0.38	6/24/2022 1:20	11.44
6/24/2022 1:57	-0.10	6/25/2022 0:47	2.00	6/25/2022 1:10	5.39	6/25/2022 2:33	-0.33	6/24/2022 1:21	11.46
6/24/2022 1:58	-0.10	6/25/2022 0:48	2.00	6/25/2022 1:11	5.42	6/25/2022 2:34	-0.37	6/24/2022 1:22	11.47
6/24/2022 1:59	-0.10	6/25/2022 0:49	2.00	6/25/2022 1:12	5.37	6/25/2022 2:35	-0.38	6/24/2022 1:23	11.47
6/24/2022 2:00	-0.08	6/25/2022 0:50	2.00	6/25/2022 1:13	5.42	6/25/2022 2:36	-0.37	6/24/2022 1:24	11.47
6/24/2022 2:01	-0.08	6/25/2022 0:51	2.00	6/25/2022 1:14	5.42	6/25/2022 2:37	-0.34	6/24/2022 1:25	11.45
6/24/2022 2:02	-0.08	6/25/2022 0:52	2.00	6/25/2022 1:15	5.39	6/25/2022 2:38	-0.38	6/24/2022 1:26	11.43
6/24/2022 2:03	-0.08	6/25/2022 0:53	2.00	6/25/2022 1:16	5.37	6/25/2022 2:39	-0.33	6/24/2022 1:27	11.44
6/24/2022 2:04	-0.08	6/25/2022 0:54	2.00	6/25/2022 1:17	5.40	6/25/2022 2:40	-0.38	6/24/2022 1:28	11.45
6/24/2022 2:05	-0.08	6/25/2022 0:55	2.00	6/25/2022 1:18	5.38	6/25/2022 2:41	-0.35	6/24/2022 1:29	11.46
6/24/2022 2:06	-0.08	6/25/2022 0:56	2.00	6/25/2022 1:19	5.43	6/25/2022 2:42	-0.35	6/24/2022 1:30	11.51
6/24/2022 2:07	-0.08	6/25/2022 0:57	1.99	6/25/2022 1:20	5.41	6/25/2022 2:43	-0.35	6/24/2022 1:31	11.51
6/24/2022 2:08	-0.08	6/25/2022 0:58	1.99	6/25/2022 1:21	5.40	6/25/2022 2:44	-0.35	6/24/2022 1:32	11.48
6/24/2022 2:09	-0.09	6/25/2022 0:59	1.99	6/25/2022 1:22	5.42	6/25/2022 2:45	-0.37	6/24/2022 1:33	11.47
6/24/2022 2:10	-0.10	6/25/2022 1:00	2.00	6/25/2022 1:23	5.41	6/25/2022 2:46	-0.37	6/24/2022 1:34	11.51
6/24/2022 2:11	-0.08	6/25/2022 1:01	1.99	6/25/2022 1:24	5.38	6/25/2022 2:47	-0.38	6/24/2022 1:35	11.47
6/24/2022 2:12	-0.09	6/25/2022 1:02	1.99	6/25/2022 1:25	5.39	6/25/2022 2:48	-0.32	6/24/2022 1:36	11.45
6/24/2022 2:13	-0.08	6/25/2022 1:03	1.99	6/25/2022 1:26	5.40	6/25/2022 2:49	-0.34	6/24/2022 1:37	11.46
6/24/2022 2:14	-0.08	6/25/2022 1:04	2.00	6/25/2022 1:27	5.37	6/25/2022 2:50	-0.34	6/24/2022 1:38	11.50
6/24/2022 2:15	-0.08	6/25/2022 1:05	1.99	6/25/2022 1:28	5.37	6/25/2022 2:51	-0.34	6/24/2022 1:39	11.46
6/24/2022 2:16	-0.08	6/25/2022 1:06	1.99	6/25/2022 1:29	5.37	6/25/2022 2:52	-0.32	6/24/2022 1:40	11.44
6/24/2022 2:17	-0.10	6/25/2022 1:07	1.99	6/25/2022 1:30	5.40	6/25/2022 2:53	-0.35	6/24/2022 1:41	11.44
6/24/2022 2:18	-0.08	6/25/2022 1:08	1.99	6/25/2022 1:31	5.40	6/25/2022 2:54	-0.34	6/24/2022 1:42	11.46
6/24/2022 2:19	-0.10	6/25/2022 1:09	1.99	6/25/2022 1:32	5.39	6/25/2022 2:55	-0.32	6/24/2022 1:43	11.48
6/24/2022 2:20	-0.10	6/25/2022 1:10	1.99	6/25/2022 1:33	5.39	6/25/2022 2:56	-0.38	6/24/2022 1:44	11.48
6/24/2022 2:21	-0.10	6/25/2022 1:11	1.99	6/25/2022 1:34	5.37	6/25/2022 2:57	-0.35	6/24/2022 1:45	11.50
6/24/2022 2:22	-0.08	6/25/2022 1:12	1.99	6/25/2022 1:35	5.40	6/25/2022 2:58	-0.35	6/24/2022 1:46	11.42
6/24/2022 2:23	-0.09	6/25/2022 1:13	1.99	6/25/2022 1:36	5.39	6/25/2022 2:59	-0.34	6/24/2022 1:47	11.46
6/24/2022 2:24	-0.07	6/25/2022 1:14	1.99	6/25/2022 1:37	5.37	6/25/2022 3:00	-0.40	6/24/2022 1:48	11.45
6/24/2022 2:25	-0.08	6/25/2022 1:15	1.99	6/25/2022 1:38	5.38	6/25/2022 3:01	-0.35	6/24/2022 1:49	11.46
6/24/2022 2:26	-0.09	6/25/2022 1:16	1.99	6/25/2022 1:39	5.39	6/25/2022 3:02	-0.36	6/24/2022 1:50	11.45
6/24/2022 2:27	-0.09	6/25/2022 1:17	1.99	6/25/2022 1:40	5.37	6/25/2022 3:03	-0.40	6/24/2022 1:51	11.43
6/24/2022 2:28	-0.10	6/25/2022 1:18	1.99	6/25/2022 1:41	5.39	6/25/2022 3:04	-0.37	6/24/2022 1:52	11.47
6/24/2022 2:29	-0.08	6/25/2022 1:19	1.99	6/25/2022 1:42	5.39	6/25/2022 3:05	-0.32	6/24/2022 1:53	11.47
6/24/2022 2:30	-0.08	6/25/2022 1:20	1.99	6/25/2022 1:43	5.37	6/25/2022 3:06	-0.37	6/24/2022 1:54	11.45
6/24/2022 2:31	-0.09	6/25/2022 1:21	1.99	6/25/2022 1:44	5.37	6/25/2022 3:07	-0.33	6/24/2022 1:55	11.44
6/24/2022 2:32	-0.08	6/25/2022 1:22	1.99	6/25/2022 1:45	5.39	6/25/2022 3:08	-0.37	6/24/2022 1:56	11.46
6/24/2022 2:33	-0.10	6/25/2022 1:23	1.99	6/25/2022 1:46	5.34	6/25/2022 3:09	-0.36	6/24/2022 1:57	11.49
6/24/2022 2:34	-0.10	6/25/2022 1:24	1.98	6/25/2022 1:47	5.40	6/25/2022 3:10	-0.35	6/24/2022 1:58	11.50
6/24/2022 2:35	-0.10	6/25/2022 1:25	1.98	6/25/2022 1:48	5.39	6/25/2022 3:11	-0.35	6/24/2022 1:59	11.44
6/24/2022 2:36	-0.10	6/25/2022 1:26	1.98	6/25/2022 1:49	5.37	6/25/2022 3:12	-0.33	6/24/2022 2:00	11.44
6/24/2022 2:37	-0.08	6/25/2022 1:27	1.99	6/25/2022 1:50	5.38	6/25/2022 3:13	-0.30	6/24/2022 2:01	11.45
6/24/2022 2:38	-0.10	6/25/2022 1:28	1.98	6/25/2022 1:51	5.39	6/25/2022 3:14	-0.35	6/24/2022 2:02	11.42
6/24/2022 2:39	-0.08	6/25/2022 1:29	1.98	6/25/2022 1:52	5.36	6/25/2022 3:15	-0.32	6/24/2022 2:03	11.44
6/24/2022 2:40	-0.10	6/25/2022 1:30	1.98	6/25/2022 1:53	5.39	6/25/2022 3:16	-0.41	6/24/2022 2:04	11.50
6/24/2022 2:41	-0.09	6/25/2022 1:31	1.98	6/25/2022 1:54	5.37	6/25/2022 3:17	-0.36	6/24/2022 2:05	11.47
6/24/2022 2:42	-0.09	6/25/2022 1:32	1.98	6/25/2022 1:55	5.41	6/25/2022 3:18	-0.33	6/24/2022 2:06	11.48
6/24/2022 2:43	-0.10	6/25/2022 1:33	1.98	6/25/2022 1:56	5.38	6/25/2022 3:19	-0.36	6/24/2022 2:07	11.48
6/24/2022 2:44	-0.10	6/25/2022 1:34	1.98	6/25/2022 1:57	5.37	6/25/2022 3:20	-0.37	6/24/2022 2:08	11.45
6/24/2022 2:45	-0.10	6/25/2022 1:35	1.98	6/25/2022 1:58	5.40	6/25/2022 3:21	-0.36	6/24/2022 2:09	11.46
6/24/2022 2:46	-0.09	6/25/2022 1:36	1.98	6/25/2022 1:59	5.35	6/25/2022 3:22	-0.35	6/24/2022 2:10	11.46
6/24/2022 2:47	-0.10	6/25/2022 1:37	1.98	6/25/2022 2:00	5.44	6/25/2022 3:23	-0.34	6/24/2022 2:11	11.48
6/24/2022 2:48	-0.10	6/25/2022 1:38	1.98	6/25/2022 2:01	5.37	6/25/2022 3:24	-0.32	6/24/2022 2:12	11.49
6/24/2022 2:49	-0.10	6/25/2022 1:39	1.98	6/25/2022 2:02	5.34	6/25/2022 3:25	-0.34	6/24/2022 2:13	11.48
6/24/2022 2:50	-0.08	6/25/2022 1:40	1.98	6/25/2022 2:03	5.36	6/25/2022 3:26	-0.32	6/24/2022 2:14	11.47
6/24/2022 2:51	-0.09	6/25/2022 1:41	1.98	6/25/2022 2:04	5.40	6/25/2022 3:27	-0.37	6/24/2022 2:15	11.46
6/24/2022 2:52	-0.08	6/25/2022 1:42	1.98	6/25/2022 2:05	5.37	6/25/2022 3:28	-0.33	6/24/2022 2:16	11.48
6/24/2022 2:53	-0.08	6/25/2022 1:43	1.98	6/25/2022 2:06	5.36	6/25/2022 3:29	-0.35	6/24/2022 2:17	11.47
6/24/2022 2:54	-0.08	6/25/2022 1:44	1.97	6/25/2022 2:07	5.39	6/25/2022 3:30	-0.35	6/24/2022 2:18	11.43
6/24/2022 2:55	-0.08	6/25/2022 1:45	1.98	6/25/2022 2:08	5.38	6/25/2022 3:31	-0.36	6/24/2022 2:19	11.44
6/24/2022 2:56	-0.10	6/25/2022 1:46	1.98	6/25/2022 2:09	5.39	6/25/2022 3:32	-0.36	6/24/2022 2:20	11.47
6/24/2022 2:57	-0.08	6/25/2022 1:47	1.97	6/25/2022 2:10	5.39	6/25/2022 3:33	-0.35	6/24/2022 2:21	11.48
6/24/2022 2:58	-0.10	6/25/2022 1:48	1.98	6/25/2022 2:11	5.40	6/25/2022 3:34	-0.37	6/24/2022 2:22	11.44
6/24/2022 2:59	-0.08	6/25/2022 1:49	1.98	6/25/2022 2:12	5.39	6/25/2022 3:35	-0.36	6/24/2022 2:23	11.45
6/24/2022 3:00	-0.10	6/25/2022 1:50	1.97	6/25/2022 2:13	5.39	6/25/2022 3:36	-0.35	6/24/2022 2:24	11.43
6/24/2022 3:01	-0.10	6/25/2022 1:51	1.97	6/25/2022 2:14	5.38	6/25/2022 3:37	-0.37	6/24/2022 2:25	11.44
6/24/2022 3:02	-0.08	6/25/2022 1:52	1.98	6/25/2022 2:15	5.37	6/25/2022 3:38	-0.34	6/24/2022 2:26	11.45
6/24/2022 3:03	-0.08	6/25/2022 1:53	1.97	6/25/2022 2:16	5.35	6/25/2022 3:39	-0.34	6/24/2022 2:27	11.45
6/24/2022 3:04	-0.10	6/25/2022 1:54	1.98	6/25/2022 2:17	5.41	6/25/2022 3:40	-0.35	6/24/2022 2:28	11.43

6/24/2022 3:05	-0.08	6/25/2022 1:55	1.97	6/25/2022 2:18	5.39	6/25/2022 3:41	-0.35	6/24/2022 2:29	11.50
6/24/2022 3:06	-0.08	6/25/2022 1:56	1.98	6/25/2022 2:19	5.38	6/25/2022 3:42	-0.35	6/24/2022 2:30	11.44
6/24/2022 3:07	-0.08	6/25/2022 1:57	1.97	6/25/2022 2:20	5.38	6/25/2022 3:43	-0.39	6/24/2022 2:31	11.49
6/24/2022 3:08	-0.08	6/25/2022 1:58	1.97	6/25/2022 2:21	5.38	6/25/2022 3:44	-0.31	6/24/2022 2:32	11.48
6/24/2022 3:09	-0.08	6/25/2022 1:59	1.98	6/25/2022 2:22	5.37	6/25/2022 3:45	-0.35	6/24/2022 2:33	11.46
6/24/2022 3:10	-0.08	6/25/2022 2:00	1.98	6/25/2022 2:23	5.37	6/25/2022 3:46	-0.36	6/24/2022 2:34	11.44
6/24/2022 3:11	-0.08	6/25/2022 2:01	1.97	6/25/2022 2:24	5.35	6/25/2022 3:47	-0.36	6/24/2022 2:35	11.46
6/24/2022 3:12	-0.08	6/25/2022 2:02	1.97	6/25/2022 2:25	5.38	6/25/2022 3:48	-0.37	6/24/2022 2:36	11.42
6/24/2022 3:13	-0.10	6/25/2022 2:03	1.97	6/25/2022 2:26	5.35	6/25/2022 3:49	-0.37	6/24/2022 2:37	11.44
6/24/2022 3:14	-0.10	6/25/2022 2:04	1.97	6/25/2022 2:27	5.34	6/25/2022 3:50	-0.35	6/24/2022 2:38	11.43
6/24/2022 3:15	-0.10	6/25/2022 2:05	1.97	6/25/2022 2:28	5.37	6/25/2022 3:51	-0.33	6/24/2022 2:39	11.44
6/24/2022 3:16	-0.10	6/25/2022 2:06	1.97	6/25/2022 2:29	5.32	6/25/2022 3:52	-0.36	6/24/2022 2:40	11.44
6/24/2022 3:17	-0.10	6/25/2022 2:07	1.97	6/25/2022 2:30	5.37	6/25/2022 3:53	-0.36	6/24/2022 2:41	11.43
6/24/2022 3:18	-0.10	6/25/2022 2:08	1.97	6/25/2022 2:31	5.34	6/25/2022 3:54	-0.37	6/24/2022 2:42	11.49
6/24/2022 3:19	-0.08	6/25/2022 2:09	1.97	6/25/2022 2:32	5.33	6/25/2022 3:55	-0.35	6/24/2022 2:43	11.44
6/24/2022 3:20	-0.08	6/25/2022 2:10	1.97	6/25/2022 2:33	5.37	6/25/2022 3:56	-0.38	6/24/2022 2:44	11.48
6/24/2022 3:21	-0.09	6/25/2022 2:11	1.97	6/25/2022 2:34	5.34	6/25/2022 3:57	-0.36	6/24/2022 2:45	11.45
6/24/2022 3:22	-0.10	6/25/2022 2:12	1.99	6/25/2022 2:35	5.34	6/25/2022 3:58	-0.35	6/24/2022 2:46	11.52
6/24/2022 3:23	-0.08	6/25/2022 2:13	1.97	6/25/2022 2:36	5.38	6/25/2022 3:59	-0.33	6/24/2022 2:47	11.50
6/24/2022 3:24	-0.08	6/25/2022 2:14	1.97	6/25/2022 2:37	5.39	6/25/2022 4:00	-0.36	6/24/2022 2:48	11.43
6/24/2022 3:25	-0.08	6/25/2022 2:15	1.97	6/25/2022 2:38	5.38	6/25/2022 4:01	-0.35	6/24/2022 2:49	11.46
6/24/2022 3:26	-0.10	6/25/2022 2:16	1.97	6/25/2022 2:39	5.35	6/25/2022 4:02	-0.35	6/24/2022 2:50	11.46
6/24/2022 3:27	-0.08	6/25/2022 2:17	1.97	6/25/2022 2:40	5.36	6/25/2022 4:03	-0.34	6/24/2022 2:51	11.47
6/24/2022 3:28	-0.08	6/25/2022 2:18	1.97	6/25/2022 2:41	5.35	6/25/2022 4:04	-0.37	6/24/2022 2:52	11.46
6/24/2022 3:29	-0.08	6/25/2022 2:19	1.97	6/25/2022 2:42	5.40	6/25/2022 4:05	-0.33	6/24/2022 2:53	11.43
6/24/2022 3:30	-0.09	6/25/2022 2:20	1.96	6/25/2022 2:43	5.35	6/25/2022 4:06	-0.40	6/24/2022 2:54	11.50
6/24/2022 3:31	-0.08	6/25/2022 2:21	1.97	6/25/2022 2:44	5.39	6/25/2022 4:07	-0.31	6/24/2022 2:55	11.43
6/24/2022 3:32	-0.08	6/25/2022 2:22	1.97	6/25/2022 2:45	5.41	6/25/2022 4:08	-0.38	6/24/2022 2:56	11.46
6/24/2022 3:33	-0.08	6/25/2022 2:23	1.97	6/25/2022 2:46	5.36	6/25/2022 4:09	-0.35	6/24/2022 2:57	11.46
6/24/2022 3:34	-0.10	6/25/2022 2:24	1.97	6/25/2022 2:47	5.34	6/25/2022 4:10	-0.32	6/24/2022 2:58	11.53
6/24/2022 3:35	-0.10	6/25/2022 2:25	1.97	6/25/2022 2:48	5.34	6/25/2022 4:11	-0.37	6/24/2022 2:59	11.47
6/24/2022 3:36	-0.08	6/25/2022 2:26	1.97	6/25/2022 2:49	5.38	6/25/2022 4:12	-0.35	6/24/2022 3:00	11.54
6/24/2022 3:37	-0.08	6/25/2022 2:27	1.97	6/25/2022 2:50	5.35	6/25/2022 4:13	-0.36	6/24/2022 3:01	11.50
6/24/2022 3:38	-0.08	6/25/2022 2:28	1.97	6/25/2022 2:51	5.38	6/25/2022 4:14	-0.37	6/24/2022 3:02	11.46
6/24/2022 3:39	-0.10	6/25/2022 2:29	1.97	6/25/2022 2:52	5.37	6/25/2022 4:15	-0.33	6/24/2022 3:03	11.47
6/24/2022 3:40	-0.10	6/25/2022 2:30	1.97	6/25/2022 2:53	5.35	6/25/2022 4:16	-0.33	6/24/2022 3:04	11.46
6/24/2022 3:41	-0.10	6/25/2022 2:31	1.96	6/25/2022 2:54	5.32	6/25/2022 4:17	-0.33	6/24/2022 3:05	11.48
6/24/2022 3:42	-0.08	6/25/2022 2:32	1.96	6/25/2022 2:55	5.36	6/25/2022 4:18	-0.32	6/24/2022 3:06	11.48
6/24/2022 3:43	-0.10	6/25/2022 2:33	1.97	6/25/2022 2:56	5.36	6/25/2022 4:19	-0.38	6/24/2022 3:07	11.47
6/24/2022 3:44	-0.10	6/25/2022 2:34	1.97	6/25/2022 2:57	5.38	6/25/2022 4:20	-0.31	6/24/2022 3:08	11.48
6/24/2022 3:45	-0.10	6/25/2022 2:35	1.96	6/25/2022 2:58	5.31	6/25/2022 4:21	-0.38	6/24/2022 3:09	11.50
6/24/2022 3:46	-0.08	6/25/2022 2:36	1.96	6/25/2022 2:59	5.35	6/25/2022 4:22	-0.33	6/24/2022 3:10	11.45
6/24/2022 3:47	-0.10	6/25/2022 2:37	1.96	6/25/2022 3:00	5.32	6/25/2022 4:23	-0.33	6/24/2022 3:11	11.51
6/24/2022 3:48	-0.10	6/25/2022 2:38	1.97	6/25/2022 3:01	5.35	6/25/2022 4:24	-0.34	6/24/2022 3:12	11.47
6/24/2022 3:49	-0.08	6/25/2022 2:39	1.96	6/25/2022 3:02	5.36	6/25/2022 4:25	-0.32	6/24/2022 3:13	11.48
6/24/2022 3:50	-0.08	6/25/2022 2:40	1.96	6/25/2022 3:03	5.34	6/25/2022 4:26	-0.34	6/24/2022 3:14	11.45
6/24/2022 3:51	-0.10	6/25/2022 2:41	1.96	6/25/2022 3:04	5.34	6/25/2022 4:27	-0.33	6/24/2022 3:15	11.49
6/24/2022 3:52	-0.09	6/25/2022 2:42	1.96	6/25/2022 3:05	5.34	6/25/2022 4:28	-0.33	6/24/2022 3:16	11.49
6/24/2022 3:53	-0.08	6/25/2022 2:43	1.96	6/25/2022 3:06	5.32	6/25/2022 4:29	-0.31	6/24/2022 3:17	11.43
6/24/2022 3:54	-0.09	6/25/2022 2:44	1.97	6/25/2022 3:07	5.38	6/25/2022 4:30	-0.35	6/24/2022 3:18	11.50
6/24/2022 3:55	-0.10	6/25/2022 2:45	1.97	6/25/2022 3:08	5.34	6/25/2022 4:31	-0.38	6/24/2022 3:19	11.48
6/24/2022 3:56	-0.08	6/25/2022 2:46	1.96	6/25/2022 3:09	5.32	6/25/2022 4:32	-0.33	6/24/2022 3:20	11.47
6/24/2022 3:57	-0.08	6/25/2022 2:47	1.97	6/25/2022 3:10	5.30	6/25/2022 4:33	-0.33	6/24/2022 3:21	11.45
6/24/2022 3:58	-0.08	6/25/2022 2:48	1.96	6/25/2022 3:11	5.36	6/25/2022 4:34	-0.36	6/24/2022 3:22	11.48
6/24/2022 3:59	-0.10	6/25/2022 2:49	1.96	6/25/2022 3:12	5.35	6/25/2022 4:35	-0.35	6/24/2022 3:23	11.44
6/24/2022 4:00	-0.08	6/25/2022 2:50	1.96	6/25/2022 3:13	5.38	6/25/2022 4:36	-0.35	6/24/2022 3:24	11.49
6/24/2022 4:01	-0.10	6/25/2022 2:51	1.96	6/25/2022 3:14	5.33	6/25/2022 4:37	-0.30	6/24/2022 3:25	11.49
6/24/2022 4:02	-0.08	6/25/2022 2:52	1.96	6/25/2022 3:15	5.35	6/25/2022 4:38	-0.32	6/24/2022 3:26	11.46
6/24/2022 4:03	-0.10	6/25/2022 2:53	1.96	6/25/2022 3:16	5.34	6/25/2022 4:39	-0.34	6/24/2022 3:27	11.49
6/24/2022 4:04	-0.08	6/25/2022 2:54	1.96	6/25/2022 3:17	5.35	6/25/2022 4:40	-0.33	6/24/2022 3:28	11.48
6/24/2022 4:05	-0.08	6/25/2022 2:55	1.96	6/25/2022 3:18	5.34	6/25/2022 4:41	-0.35	6/24/2022 3:29	11.48
6/24/2022 4:06	-0.10	6/25/2022 2:56	1.96	6/25/2022 3:19	5.34	6/25/2022 4:42	-0.35	6/24/2022 3:30	11.45
6/24/2022 4:07	-0.10	6/25/2022 2:57	1.96	6/25/2022 3:20	5.36	6/25/2022 4:43	-0.31	6/24/2022 3:31	11.51
6/24/2022 4:08	-0.10	6/25/2022 2:58	1.96	6/25/2022 3:21	5.37	6/25/2022 4:44	-0.33	6/24/2022 3:32	11.52
6/24/2022 4:09	-0.10	6/25/2022 2:59	1.96	6/25/2022 3:22	5.32	6/25/2022 4:45	-0.31	6/24/2022 3:33	11.51
6/24/2022 4:10	-0.08	6/25/2022 3:00	1.96	6/25/2022 3:23	5.37	6/25/2022 4:46	-0.37	6/24/2022 3:34	11.50
6/24/2022 4:11	-0.08	6/25/2022 3:01	1.96	6/25/2022 3:24	5.34	6/25/2022 4:47	-0.39	6/24/2022 3:35	11.53
6/24/2022 4:12	-0.08	6/25/2022 3:02	1.96	6/25/2022 3:25	5.34	6/25/2022 4:48	-0.35	6/24/2022 3:36	11.50
6/24/2022 4:13	-0.08	6/25/2022 3:03	1.96	6/25/2022 3:26	5.36	6/25/2022 4:49	-0.37	6/24/2022 3:37	11.49
6/24/2022 4:14	-0.08	6/25/2022 3:04	1.96	6/25/2022 3:27	5.36	6/25/2022 4:50	-0.34	6/24/2022 3:38	11.43
6/24/2022 4:15	-0.08	6/25/2022 3:05	1.96	6/25/2022 3:28	5.33	6/25/2022 4:51	-0.34	6/24/2022 3:39	11.46
6/24/2022 4:16	-0.09	6/25/2022 3:06	1.96	6/25/2022 3:29	5.35	6/25/2022 4:52	-0.33	6/24/2022 3:40	11.43
6/24/2022 4:17	-0.08	6/25/2022 3:07	1.96	6/25/2022 3:30	5.35	6/25/2022 4:53	-0.35	6/24/2022 3:41	11.47
6/24/2022 4:18	-0.09	6/25/2022 3:08	1.96	6/25/2022 3:31	5.33	6/25/2022 4:54	-0.37	6/24/2022 3:42	11.45
6/24/2022 4:19	-0.10	6/25/2022 3:09	1.96	6/25/2022 3:32	5.36	6/25/2022 4:55	-0.35	6/24/2022 3:43	11.51
6/24/2022 4:20	-0.08	6/25/2022 3:10	1.96	6/25/2022 3:33	5.35	6/25/2022 4:56	-0.37	6/24/2022 3:44	11.47
6/24/2022 4:21	-0.10	6/25/2022 3:11	1.96	6/25/2022 3:34	5.36	6/25/2022 4:57	-0.35	6/24/2022 3:45	11.41
6/24/2022 4:22	-0.10	6/25/2022 3:12	1.96	6/25/2022 3:35	5.32	6/25/2022 4:58	-0.35	6/24/2022 3:46	11.48
6/24/2022 4:23	-0.08	6/25/2022 3:13	1.96	6/25/2022 3:36	5.37	6/25/2022 4:59	-0.38	6/24/2022 3:47	11.48
6/24/2022 4:24	-0.08	6/25/2022 3:14	1.96	6/25/2022 3:37	5.33	6/25/2022 5:00	-0.36	6/24/2022 3:48	11.43
6/24/2022 4:25	-0.10	6/25/2022 3:15	1.96	6/25/2022 3:38	5.31	6/25/2022 5:01	-0.38	6/24/2022 3:49	11.46
6/24/2022 4:26	-0.10	6/25/2022 3:16	1.96	6/25/2022 3:39	5.33	6/25/2022 5:02	-0.38	6/24/2022 3:50	11.47
6/24/2022 4:27	-0.08	6/25/2022 3:17	1.96	6/25/2022 3:40	5.35	6/25/2022 5:03	-0.38	6/24/2022 3:51	11.48
6/24/2022 4:28	-0.08	6/25/2022 3:18	1.96	6/25/2022 3:41	5.36	6/25/2022 5:04	-0.35	6/24/2022 3:52	11.45
6/24/2022 4:29	-0.10	6/25/2022 3:19	1.96	6/25/2022 3:42	5.33	6/25/2022 5:05	-0.32	6/24/2022 3:53	11.47
6/24/2022 4:30	-0.08	6/25/2022 3:20	1.96	6/25/2022 3:43	5.35	6/25/2022 5:06	-0.35	6/24/2022 3:54	11.44
6/24/2022 4:31	-0.10	6/25/2022 3:21	1.96	6/25/2022 3:44	5.30	6/25/2022 5:07	-0.34	6/24/2022 3:55	11.47
6/24/2022 4:32	-0.08	6/25/2022 3:22	1.96	6/25/2022 3:45	5.31	6/25/2022 5:08	-0.32	6/24/2022 3:56	11.49

6/24/2022 4:33	-0.08	6/25/2022 3:23	1.96	6/25/2022 3:46	5.33	6/25/2022 5:09	-0.35	6/24/2022 3:57	11.49
6/24/2022 4:34	-0.10	6/25/2022 3:24	1.95	6/25/2022 3:47	5.35	6/25/2022 5:10	-0.31	6/24/2022 3:58	11.47
6/24/2022 4:35	-0.08	6/25/2022 3:25	1.95	6/25/2022 3:48	5.34	6/25/2022 5:11	-0.35	6/24/2022 3:59	11.49
6/24/2022 4:36	-0.08	6/25/2022 3:26	1.95	6/25/2022 3:49	5.34	6/25/2022 5:12	-0.35	6/24/2022 4:00	11.52
6/24/2022 4:37	-0.10	6/25/2022 3:27	1.95	6/25/2022 3:50	5.30	6/25/2022 5:13	-0.35	6/24/2022 4:01	11.52
6/24/2022 4:38	-0.10	6/25/2022 3:28	1.95	6/25/2022 3:51	5.31	6/25/2022 5:14	-0.32	6/24/2022 4:02	11.41
6/24/2022 4:39	-0.10	6/25/2022 3:29	1.95	6/25/2022 3:52	5.31	6/25/2022 5:15	-0.32	6/24/2022 4:03	11.44
6/24/2022 4:40	-0.08	6/25/2022 3:30	1.95	6/25/2022 3:53	5.30	6/25/2022 5:16	-0.35	6/24/2022 4:04	11.42
6/24/2022 4:41	-0.10	6/25/2022 3:31	1.95	6/25/2022 3:54	5.33	6/25/2022 5:17	-0.32	6/24/2022 4:05	11.46
6/24/2022 4:42	-0.08	6/25/2022 3:32	1.95	6/25/2022 3:55	5.33	6/25/2022 5:18	-0.40	6/24/2022 4:06	11.44
6/24/2022 4:43	-0.08	6/25/2022 3:33	1.95	6/25/2022 3:56	5.33	6/25/2022 5:19	-0.37	6/24/2022 4:07	11.47
6/24/2022 4:44	-0.08	6/25/2022 3:34	1.95	6/25/2022 3:57	5.36	6/25/2022 5:20	-0.36	6/24/2022 4:08	11.44
6/24/2022 4:45	-0.08	6/25/2022 3:35	1.95	6/25/2022 3:58	5.33	6/25/2022 5:21	-0.36	6/24/2022 4:09	11.49
6/24/2022 4:46	-0.08	6/25/2022 3:36	1.95	6/25/2022 3:59	5.32	6/25/2022 5:22	-0.36	6/24/2022 4:10	11.46
6/24/2022 4:47	-0.10	6/25/2022 3:37	1.95	6/25/2022 4:00	5.33	6/25/2022 5:23	-0.34	6/24/2022 4:11	11.48
6/24/2022 4:48	-0.10	6/25/2022 3:38	1.95	6/25/2022 4:01	5.34	6/25/2022 5:24	-0.39	6/24/2022 4:12	11.45
6/24/2022 4:49	-0.10	6/25/2022 3:39	1.95	6/25/2022 4:02	5.33	6/25/2022 5:25	-0.37	6/24/2022 4:13	11.48
6/24/2022 4:50	-0.10	6/25/2022 3:40	1.95	6/25/2022 4:03	5.35	6/25/2022 5:26	-0.33	6/24/2022 4:14	11.42
6/24/2022 4:51	-0.10	6/25/2022 3:41	1.95	6/25/2022 4:04	5.33	6/25/2022 5:27	-0.33	6/24/2022 4:15	11.49
6/24/2022 4:52	-0.08	6/25/2022 3:42	1.95	6/25/2022 4:05	5.30	6/25/2022 5:28	-0.37	6/24/2022 4:16	11.47
6/24/2022 4:53	-0.09	6/25/2022 3:43	1.95	6/25/2022 4:06	5.33	6/25/2022 5:29	-0.35	6/24/2022 4:17	11.44
6/24/2022 4:54	-0.10	6/25/2022 3:44	1.95	6/25/2022 4:07	5.34	6/25/2022 5:30	-0.34	6/24/2022 4:18	11.48
6/24/2022 4:55	-0.10	6/25/2022 3:45	1.95	6/25/2022 4:08	5.35	6/25/2022 5:31	-0.36	6/24/2022 4:19	11.43
6/24/2022 4:56	-0.10	6/25/2022 3:46	1.95	6/25/2022 4:09	5.30	6/25/2022 5:32	-0.37	6/24/2022 4:20	11.43
6/24/2022 4:57	-0.10	6/25/2022 3:47	1.95	6/25/2022 4:10	5.34	6/25/2022 5:33	-0.39	6/24/2022 4:21	11.47
6/24/2022 4:58	-0.10	6/25/2022 3:48	1.95	6/25/2022 4:11	5.34	6/25/2022 5:34	-0.34	6/24/2022 4:22	11.49
6/24/2022 4:59	-0.10	6/25/2022 3:49	1.95	6/25/2022 4:12	5.32	6/25/2022 5:35	-0.37	6/24/2022 4:23	11.49
6/24/2022 5:00	-0.08	6/25/2022 3:50	1.95	6/25/2022 4:13	5.34	6/25/2022 5:36	-0.38	6/24/2022 4:24	11.48
6/24/2022 5:01	-0.08	6/25/2022 3:51	1.95	6/25/2022 4:14	5.34	6/25/2022 5:37	-0.38	6/24/2022 4:25	11.47
6/24/2022 5:02	-0.10	6/25/2022 3:52	1.95	6/25/2022 4:15	5.31	6/25/2022 5:38	-0.33	6/24/2022 4:26	11.46
6/24/2022 5:03	-0.09	6/25/2022 3:53	1.95	6/25/2022 4:16	5.33	6/25/2022 5:39	-0.34	6/24/2022 4:27	11.44
6/24/2022 5:04	-0.10	6/25/2022 3:54	1.95	6/25/2022 4:17	5.34	6/25/2022 5:40	-0.33	6/24/2022 4:28	11.43
6/24/2022 5:05	-0.10	6/25/2022 3:55	1.95	6/25/2022 4:18	5.33	6/25/2022 5:41	-0.32	6/24/2022 4:29	11.49
6/24/2022 5:06	-0.10	6/25/2022 3:56	1.95	6/25/2022 4:19	5.30	6/25/2022 5:42	-0.35	6/24/2022 4:30	11.45
6/24/2022 5:07	-0.10	6/25/2022 3:57	1.95	6/25/2022 4:20	5.33	6/25/2022 5:43	-0.40	6/24/2022 4:31	11.44
6/24/2022 5:08	-0.08	6/25/2022 3:58	1.95	6/25/2022 4:21	5.32	6/25/2022 5:44	-0.32	6/24/2022 4:32	11.49
6/24/2022 5:09	-0.10	6/25/2022 3:59	1.95	6/25/2022 4:22	5.33	6/25/2022 5:45	-0.39	6/24/2022 4:33	11.53
6/24/2022 5:10	-0.08	6/25/2022 4:00	1.95	6/25/2022 4:23	5.32	6/25/2022 5:46	-0.39	6/24/2022 4:34	11.47
6/24/2022 5:11	-0.10	6/25/2022 4:01	1.95	6/25/2022 4:24	5.32	6/25/2022 5:47	-0.35	6/24/2022 4:35	11.47
6/24/2022 5:12	-0.08	6/25/2022 4:02	1.95	6/25/2022 4:25	5.29	6/25/2022 5:48	-0.36	6/24/2022 4:36	11.40
6/24/2022 5:13	-0.10	6/25/2022 4:03	1.95	6/25/2022 4:26	5.32	6/25/2022 5:49	-0.31	6/24/2022 4:37	11.46
6/24/2022 5:14	-0.10	6/25/2022 4:04	1.95	6/25/2022 4:27	5.32	6/25/2022 5:50	-0.35	6/24/2022 4:38	11.48
6/24/2022 5:15	-0.10	6/25/2022 4:05	1.95	6/25/2022 4:28	5.34	6/25/2022 5:51	-0.36	6/24/2022 4:39	11.49
6/24/2022 5:16	-0.10	6/25/2022 4:06	1.95	6/25/2022 4:29	5.32	6/25/2022 5:52	-0.37	6/24/2022 4:40	11.47
6/24/2022 5:17	-0.10	6/25/2022 4:07	1.95	6/25/2022 4:30	5.29	6/25/2022 5:53	-0.35	6/24/2022 4:41	11.44
6/24/2022 5:18	-0.10	6/25/2022 4:08	1.95	6/25/2022 4:31	5.35	6/25/2022 5:54	-0.33	6/24/2022 4:42	11.46
6/24/2022 5:19	-0.08	6/25/2022 4:09	1.95	6/25/2022 4:32	5.28	6/25/2022 5:55	-0.34	6/24/2022 4:43	11.43
6/24/2022 5:20	-0.08	6/25/2022 4:10	1.95	6/25/2022 4:33	5.32	6/25/2022 5:56	-0.38	6/24/2022 4:44	11.47
6/24/2022 5:21	-0.08	6/25/2022 4:11	1.95	6/25/2022 4:34	5.30	6/25/2022 5:57	-0.37	6/24/2022 4:45	11.48
6/24/2022 5:22	-0.10	6/25/2022 4:12	1.95	6/25/2022 4:35	5.30	6/25/2022 5:58	-0.36	6/24/2022 4:46	11.47
6/24/2022 5:23	-0.10	6/25/2022 4:13	1.95	6/25/2022 4:36	5.31	6/25/2022 5:59	-0.33	6/24/2022 4:47	11.46
6/24/2022 5:24	-0.10	6/25/2022 4:14	1.95	6/25/2022 4:37	5.31	6/25/2022 6:00	-0.35	6/24/2022 4:48	11.46
6/24/2022 5:25	-0.10	6/25/2022 4:15	1.95	6/25/2022 4:38	5.34	6/25/2022 6:01	-0.34	6/24/2022 4:49	11.43
6/24/2022 5:26	-0.09	6/25/2022 4:16	1.95	6/25/2022 4:39	5.29	6/25/2022 6:02	-0.37	6/24/2022 4:50	11.49
6/24/2022 5:27	-0.10	6/25/2022 4:17	1.95	6/25/2022 4:40	5.33	6/25/2022 6:03	-0.36	6/24/2022 4:51	11.46
6/24/2022 5:28	-0.08	6/25/2022 4:18	1.95	6/25/2022 4:41	5.31	6/25/2022 6:04	-0.40	6/24/2022 4:52	11.44
6/24/2022 5:29	-0.10	6/25/2022 4:19	1.95	6/25/2022 4:42	5.31	6/25/2022 6:05	-0.37	6/24/2022 4:53	11.46
6/24/2022 5:30	-0.08	6/25/2022 4:20	1.95	6/25/2022 4:43	5.29	6/25/2022 6:06	-0.36	6/24/2022 4:54	11.43
6/24/2022 5:31	-0.10	6/25/2022 4:21	1.95	6/25/2022 4:44	5.32	6/25/2022 6:07	-0.30	6/24/2022 4:55	11.44
6/24/2022 5:32	-0.08	6/25/2022 4:22	1.95	6/25/2022 4:45	5.31	6/25/2022 6:08	-0.35	6/24/2022 4:56	11.46
6/24/2022 5:33	-0.08	6/25/2022 4:23	1.95	6/25/2022 4:46	5.30	6/25/2022 6:09	-0.37	6/24/2022 4:57	11.47
6/24/2022 5:34	-0.10	6/25/2022 4:24	1.95	6/25/2022 4:47	5.35	6/25/2022 6:10	-0.37	6/24/2022 4:58	11.47
6/24/2022 5:35	-0.10	6/25/2022 4:25	1.95	6/25/2022 4:48	5.27	6/25/2022 6:11	-0.35	6/24/2022 4:59	11.44
6/24/2022 5:36	-0.10	6/25/2022 4:26	1.95	6/25/2022 4:49	5.34	6/25/2022 6:12	-0.31	6/24/2022 5:00	11.50
6/24/2022 5:37	-0.10	6/25/2022 4:27	1.95	6/25/2022 4:50	5.29	6/25/2022 6:13	-0.35	6/24/2022 5:01	11.44
6/24/2022 5:38	-0.09	6/25/2022 4:28	1.94	6/25/2022 4:51	5.32	6/25/2022 6:14	-0.32	6/24/2022 5:02	11.47
6/24/2022 5:39	-0.08	6/25/2022 4:29	1.95	6/25/2022 4:52	5.29	6/25/2022 6:15	-0.32	6/24/2022 5:03	11.52
6/24/2022 5:40	-0.08	6/25/2022 4:30	1.95	6/25/2022 4:53	5.31	6/25/2022 6:16	-0.37	6/24/2022 5:04	11.48
6/24/2022 5:41	-0.10	6/25/2022 4:31	1.94	6/25/2022 4:54	5.30	6/25/2022 6:17	-0.35	6/24/2022 5:05	11.49
6/24/2022 5:42	-0.10	6/25/2022 4:32	1.94	6/25/2022 4:55	5.30	6/25/2022 6:18	-0.36	6/24/2022 5:06	11.45
6/24/2022 5:43	-0.08	6/25/2022 4:33	1.94	6/25/2022 4:56	5.32	6/25/2022 6:19	-0.36	6/24/2022 5:07	11.47
6/24/2022 5:44	-0.10	6/25/2022 4:34	1.95	6/25/2022 4:57	5.32	6/25/2022 6:20	-0.36	6/24/2022 5:08	11.46
6/24/2022 5:45	-0.10	6/25/2022 4:35	1.95	6/25/2022 4:58	5.31	6/25/2022 6:21	-0.37	6/24/2022 5:09	11.48
6/24/2022 5:46	-0.10	6/25/2022 4:36	1.95	6/25/2022 4:59	5.29	6/25/2022 6:22	-0.34	6/24/2022 5:10	11.47
6/24/2022 5:47	-0.08	6/25/2022 4:37	1.94	6/25/2022 5:00	5.31	6/25/2022 6:23	-0.40	6/24/2022 5:11	11.44
6/24/2022 5:48	-0.10	6/25/2022 4:38	1.94	6/25/2022 5:01	5.30	6/25/2022 6:24	-0.32	6/24/2022 5:12	11.45
6/24/2022 5:49	-0.08	6/25/2022 4:39	1.95	6/25/2022 5:02	5.31	6/25/2022 6:25	-0.35	6/24/2022 5:13	11.47
6/24/2022 5:50	-0.10	6/25/2022 4:40	1.94	6/25/2022 5:03	5.33	6/25/2022 6:26	-0.32	6/24/2022 5:14	11.43
6/24/2022 5:51	-0.10	6/25/2022 4:41	1.94	6/25/2022 5:04	5.31	6/25/2022 6:27	-0.35	6/24/2022 5:15	11.48
6/24/2022 5:52	-0.10	6/25/2022 4:42	1.95	6/25/2022 5:05	5.35	6/25/2022 6:28	-0.38	6/24/2022 5:16	11.49
6/24/2022 5:53	-0.08	6/25/2022 4:43	1.94	6/25/2022 5:06	5.32	6/25/2022 6:29	-0.36	6/24/2022 5:17	11.46
6/24/2022 5:54	-0.08	6/25/2022 4:44	1.94	6/25/2022 5:07	5.32	6/25/2022 6:30	-0.39	6/24/2022 5:18	11.49
6/24/2022 5:55	-0.10	6/25/2022 4:45	1.94	6/25/2022 5:08	5.29	6/25/2022 6:31	-0.33	6/24/2022 5:19	11.46
6/24/2022 5:56	-0.10	6/25/2022 4:46	1.94	6/25/2022 5:09	5.31	6/25/2022 6:32	-0.34	6/24/2022 5:20	11.46
6/24/2022 5:57	-0.10	6/25/2022 4:47	1.94	6/25/2022 5:10	5.32	6/25/2022 6:33	-0.38	6/24/2022 5:21	11.45
6/24/2022 5:58	-0.08	6/25/2022 4:48	1.94	6/25/2022 5:11	5.31	6/25/2022 6:34	-0.34	6/24/2022 5:22	11.47
6/24/2022 5:59	-0.08	6/25/2022 4:49	1.94	6/25/2022 5:12	5.28	6/25/2022 6:35	-0.35	6/24/2022 5:23	11.46
6/24/2022 6:00	-0.10	6/25/2022 4:50	1.94	6/25/2022 5:13	5.32	6/25/2022 6:36	-0.30	6/24/2022 5:24	11.45

6/24/2022 6:01	-0.08	6/25/2022 4:51	1.95	6/25/2022 5:14	5.34	6/25/2022 6:37	-0.34	6/24/2022 5:25	11.48
6/24/2022 6:02	-0.08	6/25/2022 4:52	1.94	6/25/2022 5:15	5.31	6/25/2022 6:38	-0.33	6/24/2022 5:26	11.48
6/24/2022 6:03	-0.10	6/25/2022 4:53	1.94	6/25/2022 5:16	5.29	6/25/2022 6:39	-0.31	6/24/2022 5:27	11.46
6/24/2022 6:04	-0.10	6/25/2022 4:54	1.94	6/25/2022 5:17	5.31	6/25/2022 6:40	-0.35	6/24/2022 5:28	11.47
6/24/2022 6:05	-0.08	6/25/2022 4:55	1.94	6/25/2022 5:18	5.28	6/25/2022 6:41	-0.34	6/24/2022 5:29	11.52
6/24/2022 6:06	-0.08	6/25/2022 4:56	1.94	6/25/2022 5:19	5.34	6/25/2022 6:42	-0.35	6/24/2022 5:30	11.47
6/24/2022 6:07	-0.10	6/25/2022 4:57	1.94	6/25/2022 5:20	5.31	6/25/2022 6:43	-0.35	6/24/2022 5:31	11.42
6/24/2022 6:08	-0.10	6/25/2022 4:58	1.94	6/25/2022 5:21	5.30	6/25/2022 6:44	-0.35	6/24/2022 5:32	11.48
6/24/2022 6:09	-0.08	6/25/2022 4:59	1.94	6/25/2022 5:22	5.29	6/25/2022 6:45	-0.33	6/24/2022 5:33	11.44
6/24/2022 6:10	-0.08	6/25/2022 5:00	1.94	6/25/2022 5:23	5.32	6/25/2022 6:46	-0.36	6/24/2022 5:34	11.44
6/24/2022 6:11	-0.08	6/25/2022 5:01	1.94	6/25/2022 5:24	5.31	6/25/2022 6:47	-0.37	6/24/2022 5:35	11.46
6/24/2022 6:12	-0.08	6/25/2022 5:02	1.94	6/25/2022 5:25	5.29	6/25/2022 6:48	-0.38	6/24/2022 5:36	11.49
6/24/2022 6:13	-0.08	6/25/2022 5:03	1.94	6/25/2022 5:26	5.28	6/25/2022 6:49	-0.34	6/24/2022 5:37	11.50
6/24/2022 6:14	-0.08	6/25/2022 5:04	1.94	6/25/2022 5:27	5.33	6/25/2022 6:50	-0.35	6/24/2022 5:38	11.46
6/24/2022 6:15	-0.08	6/25/2022 5:05	1.94	6/25/2022 5:28	5.31	6/25/2022 6:51	-0.34	6/24/2022 5:39	11.44
6/24/2022 6:16	-0.10	6/25/2022 5:06	1.94	6/25/2022 5:29	5.31	6/25/2022 6:52	-0.33	6/24/2022 5:40	11.48
6/24/2022 6:17	-0.10	6/25/2022 5:07	1.94	6/25/2022 5:30	5.35	6/25/2022 6:53	-0.35	6/24/2022 5:41	11.43
6/24/2022 6:18	-0.10	6/25/2022 5:08	1.94	6/25/2022 5:31	5.32	6/25/2022 6:54	-0.37	6/24/2022 5:42	11.42
6/24/2022 6:19	-0.10	6/25/2022 5:09	1.94	6/25/2022 5:32	5.31	6/25/2022 6:55	-0.33	6/24/2022 5:43	11.49
6/24/2022 6:20	-0.10	6/25/2022 5:10	1.94	6/25/2022 5:33	5.29	6/25/2022 6:56	-0.38	6/24/2022 5:44	11.47
6/24/2022 6:21	-0.08	6/25/2022 5:11	1.94	6/25/2022 5:34	5.29	6/25/2022 6:57	-0.36	6/24/2022 5:45	11.51
6/24/2022 6:22	-0.10	6/25/2022 5:12	1.94	6/25/2022 5:35	5.29	6/25/2022 6:58	-0.39	6/24/2022 5:46	11.46
6/24/2022 6:23	-0.08	6/25/2022 5:13	1.94	6/25/2022 5:36	5.36	6/25/2022 6:59	-0.37	6/24/2022 5:47	11.52
6/24/2022 6:24	-0.10	6/25/2022 5:14	1.94	6/25/2022 5:37	5.27	6/25/2022 7:00	-0.35	6/24/2022 5:48	11.47
6/24/2022 6:25	-0.09	6/25/2022 5:15	1.94	6/25/2022 5:38	5.30	6/25/2022 7:01	-0.35	6/24/2022 5:49	11.41
6/24/2022 6:26	-0.08	6/25/2022 5:16	1.94	6/25/2022 5:39	5.30	6/25/2022 7:02	-0.31	6/24/2022 5:50	11.47
6/24/2022 6:27	-0.10	6/25/2022 5:17	1.94	6/25/2022 5:40	5.33	6/25/2022 7:03	-0.34	6/24/2022 5:51	11.53
6/24/2022 6:28	-0.10	6/25/2022 5:18	1.94	6/25/2022 5:41	5.28	6/25/2022 7:04	-0.34	6/24/2022 5:52	11.51
6/24/2022 6:29	-0.10	6/25/2022 5:19	1.94	6/25/2022 5:42	5.30	6/25/2022 7:05	-0.37	6/24/2022 5:53	11.47
6/24/2022 6:30	-0.10	6/25/2022 5:20	1.94	6/25/2022 5:43	5.32	6/25/2022 7:06	-0.31	6/24/2022 5:54	11.47
6/24/2022 6:31	-0.10	6/25/2022 5:21	1.94	6/25/2022 5:44	5.26	6/25/2022 7:07	-0.34	6/24/2022 5:55	11.46
6/24/2022 6:32	-0.10	6/25/2022 5:22	1.94	6/25/2022 5:45	5.27	6/25/2022 7:08	-0.33	6/24/2022 5:56	11.43
6/24/2022 6:33	-0.08	6/25/2022 5:23	1.94	6/25/2022 5:46	5.30	6/25/2022 7:09	-0.30	6/24/2022 5:57	11.44
6/24/2022 6:34	-0.10	6/25/2022 5:24	1.94	6/25/2022 5:47	5.31	6/25/2022 7:10	-0.35	6/24/2022 5:58	11.47
6/24/2022 6:35	-0.10	6/25/2022 5:25	1.94	6/25/2022 5:48	5.32	6/25/2022 7:11	-0.32	6/24/2022 5:59	11.42
6/24/2022 6:36	-0.08	6/25/2022 5:26	1.94	6/25/2022 5:49	5.28	6/25/2022 7:12	-0.34	6/24/2022 6:00	11.47
6/24/2022 6:37	-0.10	6/25/2022 5:27	1.94	6/25/2022 5:50	5.31	6/25/2022 7:13	-0.30	6/24/2022 6:01	11.48
6/24/2022 6:38	-0.10	6/25/2022 5:28	1.94	6/25/2022 5:51	5.33	6/25/2022 7:14	-0.32	6/24/2022 6:02	11.48
6/24/2022 6:39	-0.08	6/25/2022 5:29	1.94	6/25/2022 5:52	5.29	6/25/2022 7:15	-0.33	6/24/2022 6:03	11.50
6/24/2022 6:40	-0.08	6/25/2022 5:30	1.94	6/25/2022 5:53	5.30	6/25/2022 7:16	-0.31	6/24/2022 6:04	11.46
6/24/2022 6:41	-0.08	6/25/2022 5:31	1.94	6/25/2022 5:54	5.30	6/25/2022 7:17	-0.31	6/24/2022 6:05	11.48
6/24/2022 6:42	-0.09	6/25/2022 5:32	1.94	6/25/2022 5:55	5.28	6/25/2022 7:18	-0.31	6/24/2022 6:06	11.47
6/24/2022 6:43	-0.10	6/25/2022 5:33	1.94	6/25/2022 5:56	5.30	6/25/2022 7:19	-0.34	6/24/2022 6:07	11.44
6/24/2022 6:44	-0.10	6/25/2022 5:34	1.94	6/25/2022 5:57	5.29	6/25/2022 7:20	-0.33	6/24/2022 6:08	11.49
6/24/2022 6:45	-0.10	6/25/2022 5:35	1.94	6/25/2022 5:58	5.30	6/25/2022 7:21	-0.39	6/24/2022 6:09	11.49
6/24/2022 6:46	-0.08	6/25/2022 5:36	1.94	6/25/2022 5:59	5.28	6/25/2022 7:22	-0.35	6/24/2022 6:10	11.45
6/24/2022 6:47	-0.10	6/25/2022 5:37	1.94	6/25/2022 6:00	5.31	6/25/2022 7:23	-0.36	6/24/2022 6:11	11.51
6/24/2022 6:48	-0.08	6/25/2022 5:38	1.94	6/25/2022 6:01	5.32	6/25/2022 7:24	-0.34	6/24/2022 6:12	11.48
6/24/2022 6:49	-0.10	6/25/2022 5:39	1.94	6/25/2022 6:02	5.29	6/25/2022 7:25	-0.33	6/24/2022 6:13	11.49
6/24/2022 6:50	-0.10	6/25/2022 5:40	1.94	6/25/2022 6:03	5.29	6/25/2022 7:26	-0.33	6/24/2022 6:14	11.47
6/24/2022 6:51	-0.08	6/25/2022 5:41	1.94	6/25/2022 6:04	5.32	6/25/2022 7:27	-0.32	6/24/2022 6:15	11.49
6/24/2022 6:52	-0.10	6/25/2022 5:42	1.94	6/25/2022 6:05	5.33	6/25/2022 7:28	-0.36	6/24/2022 6:16	11.46
6/24/2022 6:53	-0.10	6/25/2022 5:43	1.94	6/25/2022 6:06	5.29	6/25/2022 7:29	-0.37	6/24/2022 6:17	11.46
6/24/2022 6:54	-0.08	6/25/2022 5:44	1.94	6/25/2022 6:07	5.31	6/25/2022 7:30	-0.35	6/24/2022 6:18	11.46
6/24/2022 6:55	-0.08	6/25/2022 5:45	1.94	6/25/2022 6:08	5.28	6/25/2022 7:31	-0.34	6/24/2022 6:19	11.53
6/24/2022 6:56	-0.10	6/25/2022 5:46	1.94	6/25/2022 6:09	5.27	6/25/2022 7:32	-0.35	6/24/2022 6:20	11.48
6/24/2022 6:57	-0.10	6/25/2022 5:47	1.94	6/25/2022 6:10	5.29	6/25/2022 7:33	-0.33	6/24/2022 6:21	11.46
6/24/2022 6:58	-0.10	6/25/2022 5:48	1.94	6/25/2022 6:11	5.29	6/25/2022 7:34	-0.36	6/24/2022 6:22	11.51
6/24/2022 6:59	-0.08	6/25/2022 5:49	1.94	6/25/2022 6:12	5.28	6/25/2022 7:35	-0.33	6/24/2022 6:23	11.49
6/24/2022 7:00	-0.08	6/25/2022 5:50	1.95	6/25/2022 6:13	5.30	6/25/2022 7:36	-0.36	6/24/2022 6:24	11.46
6/24/2022 7:01	-0.08	6/25/2022 5:51	1.94	6/25/2022 6:14	5.33	6/25/2022 7:37	-0.36	6/24/2022 6:25	11.50
6/24/2022 7:02	-0.10	6/25/2022 5:52	1.94	6/25/2022 6:15	5.33	6/25/2022 7:38	-0.34	6/24/2022 6:26	11.47
6/24/2022 7:03	-0.10	6/25/2022 5:53	1.94	6/25/2022 6:16	5.32	6/25/2022 7:39	-0.34	6/24/2022 6:27	11.49
6/24/2022 7:04	-0.08	6/25/2022 5:54	1.94	6/25/2022 6:17	5.32	6/25/2022 7:40	-0.32	6/24/2022 6:28	11.51
6/24/2022 7:05	-0.10	6/25/2022 5:55	1.94	6/25/2022 6:18	5.31	6/25/2022 7:41	-0.33	6/24/2022 6:29	11.48
6/24/2022 7:06	-0.08	6/25/2022 5:56	1.94	6/25/2022 6:19	5.29	6/25/2022 7:42	-0.35	6/24/2022 6:30	11.51
6/24/2022 7:07	-0.08	6/25/2022 5:57	1.94	6/25/2022 6:20	5.28	6/25/2022 7:43	-0.34	6/24/2022 6:31	11.45
6/24/2022 7:08	-0.08	6/25/2022 5:58	1.94	6/25/2022 6:21	5.31	6/25/2022 7:44	-0.34	6/24/2022 6:32	11.50
6/24/2022 7:09	-0.08	6/25/2022 5:59	1.94	6/25/2022 6:22	5.28	6/25/2022 7:45	-0.40	6/24/2022 6:33	11.49
6/24/2022 7:10	-0.10	6/25/2022 6:00	1.94	6/25/2022 6:23	5.29	6/25/2022 7:46	-0.37	6/24/2022 6:34	11.50
6/24/2022 7:11	-0.10	6/25/2022 6:01	1.94	6/25/2022 6:24	5.30	6/25/2022 7:47	-0.33	6/24/2022 6:35	11.51
6/24/2022 7:12	-0.10	6/25/2022 6:02	1.94	6/25/2022 6:25	5.29	6/25/2022 7:48	-0.31	6/24/2022 6:36	11.58
6/24/2022 7:13	-0.10	6/25/2022 6:03	1.94	6/25/2022 6:26	5.26	6/25/2022 7:49	-0.37	6/24/2022 6:37	11.48
6/24/2022 7:14	-0.10	6/25/2022 6:04	1.94	6/25/2022 6:27	5.29	6/25/2022 7:50	-0.36	6/24/2022 6:38	11.46
6/24/2022 7:15	-0.08	6/25/2022 6:05	1.94	6/25/2022 6:28	5.30	6/25/2022 7:51	-0.36	6/24/2022 6:39	11.45
6/24/2022 7:16	-0.08	6/25/2022 6:06	1.94	6/25/2022 6:29	5.29	6/25/2022 7:52	-0.38	6/24/2022 6:40	11.51
6/24/2022 7:17	-0.10	6/25/2022 6:07	1.94	6/25/2022 6:30	5.32	6/25/2022 7:53	-0.35	6/24/2022 6:41	11.46
6/24/2022 7:18	-0.08	6/25/2022 6:08	1.94	6/25/2022 6:31	5.28	6/25/2022 7:54	-0.36	6/24/2022 6:42	11.51
6/24/2022 7:19	-0.10	6/25/2022 6:09	1.94	6/25/2022 6:32	5.29	6/25/2022 7:55	-0.33	6/24/2022 6:43	11.48
6/24/2022 7:20	-0.08	6/25/2022 6:10	1.94	6/25/2022 6:33	5.32	6/25/2022 7:56	-0.33	6/24/2022 6:44	11.51
6/24/2022 7:21	-0.08	6/25/2022 6:11	1.94	6/25/2022 6:34	5.30	6/25/2022 7:57	-0.32	6/24/2022 6:45	11.53
6/24/2022 7:22	-0.08	6/25/2022 6:12	1.94	6/25/2022 6:35	5.26	6/25/2022 7:58	-0.38	6/24/2022 6:46	11.49
6/24/2022 7:23	-0.08	6/25/2022 6:13	1.94	6/25/2022 6:36	5.29	6/25/2022 7:59	-0.32	6/24/2022 6:47	11.53
6/24/2022 7:24	-0.10	6/25/2022 6:14	1.94	6/25/2022 6:37	5.27	6/25/2022 8:00	-0.31	6/24/2022 6:48	11.46
6/24/2022 7:25	-0.08	6/25/2022 6:15	1.94	6/25/2022 6:38	5.29	6/25/2022 8:01	-0.34	6/24/2022 6:49	11.46
6/24/2022 7:26	-0.08	6/25/2022 6:16	1.94	6/25/2022 6:39	5.31	6/25/2022 8:02	-0.33	6/24/2022 6:50	11.52
6/24/2022 7:27	-0.09	6/25/2022 6:17	1.94	6/25/2022 6:40	5.28	6/25/2022 8:03	-0.33	6/24/2022 6:51	11.49
6/24/2022 7:28	-0.10	6/25/2022 6:18	1.94	6/25/2022 6:41	5.26	6/25/2022 8:04	-0.36	6/24/2022 6:52	11.53

6/24/2022 7:29	-0.08	6/25/2022 6:19	1.94	6/25/2022 6:42	5.28	6/25/2022 8:05	-0.36	6/24/2022 6:53	11.51
6/24/2022 7:30	-0.10	6/25/2022 6:20	1.94	6/25/2022 6:43	5.28	6/25/2022 8:06	-0.31	6/24/2022 6:54	11.53
6/24/2022 7:31	-0.08	6/25/2022 6:21	1.95	6/25/2022 6:44	5.31	6/25/2022 8:07	-0.36	6/24/2022 6:55	11.49
6/24/2022 7:32	-0.10	6/25/2022 6:22	1.94	6/25/2022 6:45	5.25	6/25/2022 8:08	-0.33	6/24/2022 6:56	11.45
6/24/2022 7:33	-0.10	6/25/2022 6:23	1.94	6/25/2022 6:46	5.29	6/25/2022 8:09	-0.34	6/24/2022 6:57	11.52
6/24/2022 7:34	-0.08	6/25/2022 6:24	1.94	6/25/2022 6:47	5.31	6/25/2022 8:10	-0.30	6/24/2022 6:58	11.53
6/24/2022 7:35	-0.10	6/25/2022 6:25	1.94	6/25/2022 6:48	5.27	6/25/2022 8:11	-0.34	6/24/2022 6:59	11.53
6/24/2022 7:36	-0.08	6/25/2022 6:26	1.94	6/25/2022 6:49	5.31	6/25/2022 8:12	-0.35	6/24/2022 7:00	11.50
6/24/2022 7:37	-0.08	6/25/2022 6:27	1.94	6/25/2022 6:50	5.29	6/25/2022 8:13	-0.38	6/24/2022 7:01	11.50
6/24/2022 7:38	-0.10	6/25/2022 6:28	1.94	6/25/2022 6:51	5.27	6/25/2022 8:14	-0.35	6/24/2022 7:02	11.49
6/24/2022 7:39	-0.08	6/25/2022 6:29	1.94	6/25/2022 6:52	5.30	6/25/2022 8:15	-0.34	6/24/2022 7:03	11.53
6/24/2022 7:40	-0.10	6/25/2022 6:30	1.94	6/25/2022 6:53	5.31	6/25/2022 8:16	-0.34	6/24/2022 7:04	11.50
6/24/2022 7:41	-0.08	6/25/2022 6:31	1.94	6/25/2022 6:54	5.26	6/25/2022 8:17	-0.34	6/24/2022 7:05	11.53
6/24/2022 7:42	-0.08	6/25/2022 6:32	1.94	6/25/2022 6:55	5.28	6/25/2022 8:18	-0.37	6/24/2022 7:06	11.48
6/24/2022 7:43	-0.10	6/25/2022 6:33	1.94	6/25/2022 6:56	5.27	6/25/2022 8:19	-0.36	6/24/2022 7:07	11.50
6/24/2022 7:44	-0.08	6/25/2022 6:34	1.94	6/25/2022 6:57	5.30	6/25/2022 8:20	-0.34	6/24/2022 7:08	11.47
6/24/2022 7:45	-0.08	6/25/2022 6:35	1.94	6/25/2022 6:58	5.28	6/25/2022 8:21	-0.39	6/24/2022 7:09	11.49
6/24/2022 7:46	-0.08	6/25/2022 6:36	1.94	6/25/2022 6:59	5.29	6/25/2022 8:22	-0.35	6/24/2022 7:10	11.50
6/24/2022 7:47	-0.08	6/25/2022 6:37	1.94	6/25/2022 7:00	5.28	6/25/2022 8:23	-0.35	6/24/2022 7:11	11.49
6/24/2022 7:48	-0.08	6/25/2022 6:38	1.94	6/25/2022 7:01	5.28	6/25/2022 8:24	-0.33	6/24/2022 7:12	11.48
6/24/2022 7:49	-0.10	6/25/2022 6:39	1.94	6/25/2022 7:02	5.30	6/25/2022 8:25	-0.30	6/24/2022 7:13	11.53
6/24/2022 7:50	-0.08	6/25/2022 6:40	1.94	6/25/2022 7:03	5.28	6/25/2022 8:26	-0.38	6/24/2022 7:14	11.50
6/24/2022 7:51	-0.10	6/25/2022 6:41	1.94	6/25/2022 7:04	5.28	6/25/2022 8:27	-0.33	6/24/2022 7:15	11.48
6/24/2022 7:52	-0.10	6/25/2022 6:42	1.94	6/25/2022 7:05	5.30	6/25/2022 8:28	-0.37	6/24/2022 7:16	11.53
6/24/2022 7:53	-0.08	6/25/2022 6:43	1.94	6/25/2022 7:06	5.28	6/25/2022 8:29	-0.35	6/24/2022 7:17	11.56
6/24/2022 7:54	-0.08	6/25/2022 6:44	1.94	6/25/2022 7:07	5.28	6/25/2022 8:30	-0.33	6/24/2022 7:18	11.47
6/24/2022 7:55	-0.10	6/25/2022 6:45	1.94	6/25/2022 7:08	5.30	6/25/2022 8:31	-0.35	6/24/2022 7:19	11.50
6/24/2022 7:56	-0.10	6/25/2022 6:46	1.94	6/25/2022 7:09	5.29	6/25/2022 8:32	-0.33	6/24/2022 7:20	11.47
6/24/2022 7:57	-0.08	6/25/2022 6:47	1.94	6/25/2022 7:10	5.26	6/25/2022 8:33	-0.35	6/24/2022 7:21	11.53
6/24/2022 7:58	-0.10	6/25/2022 6:48	1.94	6/25/2022 7:11	5.29	6/25/2022 8:34	-0.33	6/24/2022 7:22	11.46
6/24/2022 7:59	-0.10	6/25/2022 6:49	1.94	6/25/2022 7:12	5.28	6/25/2022 8:35	-0.34	6/24/2022 7:23	11.51
6/24/2022 8:00	-0.10	6/25/2022 6:50	1.94	6/25/2022 7:13	5.29	6/25/2022 8:36	-0.33	6/24/2022 7:24	11.51
6/24/2022 8:01	-0.08	6/25/2022 6:51	1.94	6/25/2022 7:14	5.29	6/25/2022 8:37	-0.34	6/24/2022 7:25	11.49
6/24/2022 8:02	-0.10	6/25/2022 6:52	1.94	6/25/2022 7:15	5.29	6/25/2022 8:38	-0.34	6/24/2022 7:26	11.45
6/24/2022 8:03	-0.08	6/25/2022 6:53	1.94	6/25/2022 7:16	5.29	6/25/2022 8:39	-0.36	6/24/2022 7:27	11.46
6/24/2022 8:04	-0.10	6/25/2022 6:54	1.94	6/25/2022 7:17	5.27	6/25/2022 8:40	-0.39	6/24/2022 7:28	11.50
6/24/2022 8:05	-0.10	6/25/2022 6:55	1.94	6/25/2022 7:18	5.26	6/25/2022 8:41	-0.36	6/24/2022 7:29	11.57
6/24/2022 8:06	-0.08	6/25/2022 6:56	1.94	6/25/2022 7:19	5.27	6/25/2022 8:42	-0.34	6/24/2022 7:30	11.50
6/24/2022 8:07	-0.10	6/25/2022 6:57	1.94	6/25/2022 7:20	5.30	6/25/2022 8:43	-0.34	6/24/2022 7:31	11.44
6/24/2022 8:08	-0.10	6/25/2022 6:58	1.94	6/25/2022 7:21	5.29	6/25/2022 8:44	-0.29	6/24/2022 7:32	11.48
6/24/2022 8:09	-0.08	6/25/2022 6:59	1.94	6/25/2022 7:22	5.28	6/25/2022 8:45	-0.36	6/24/2022 7:33	11.48
6/24/2022 8:10	-0.10	6/25/2022 7:00	1.94	6/25/2022 7:23	5.31	6/25/2022 8:46	-0.36	6/24/2022 7:34	11.52
6/24/2022 8:11	-0.08	6/25/2022 7:01	1.94	6/25/2022 7:24	5.27	6/25/2022 8:47	-0.39	6/24/2022 7:35	11.49
6/24/2022 8:12	-0.10	6/25/2022 7:02	1.94	6/25/2022 7:25	5.25	6/25/2022 8:48	-0.38	6/24/2022 7:36	11.55
6/24/2022 8:13	-0.10	6/25/2022 7:03	1.94	6/25/2022 7:26	5.29	6/25/2022 8:49	-0.33	6/24/2022 7:37	11.52
6/24/2022 8:14	-0.09	6/25/2022 7:04	1.94	6/25/2022 7:27	5.29	6/25/2022 8:50	-0.36	6/24/2022 7:38	11.50
6/24/2022 8:15	-0.08	6/25/2022 7:05	1.94	6/25/2022 7:28	5.26	6/25/2022 8:51	-0.36	6/24/2022 7:39	11.51
6/24/2022 8:16	-0.10	6/25/2022 7:06	1.94	6/25/2022 7:29	5.29	6/25/2022 8:52	-0.35	6/24/2022 7:40	11.48
6/24/2022 8:17	-0.08	6/25/2022 7:07	1.94	6/25/2022 7:30	5.32	6/25/2022 8:53	-0.36	6/24/2022 7:41	11.50
6/24/2022 8:18	-0.08	6/25/2022 7:08	1.94	6/25/2022 7:31	5.28	6/25/2022 8:54	-0.36	6/24/2022 7:42	11.49
6/24/2022 8:19	-0.08	6/25/2022 7:09	1.94	6/25/2022 7:32	5.27	6/25/2022 8:55	-0.35	6/24/2022 7:43	11.49
6/24/2022 8:20	-0.10	6/25/2022 7:10	1.94	6/25/2022 7:33	5.29	6/25/2022 8:56	-0.33	6/24/2022 7:44	11.53
6/24/2022 8:21	-0.08	6/25/2022 7:11	1.94	6/25/2022 7:34	5.24	6/25/2022 8:57	-0.33	6/24/2022 7:45	11.50
6/24/2022 8:22	-0.08	6/25/2022 7:12	1.94	6/25/2022 7:35	5.32	6/25/2022 8:58	-0.39	6/24/2022 7:46	11.51
6/24/2022 8:23	-0.08	6/25/2022 7:13	1.94	6/25/2022 7:36	5.28	6/25/2022 8:59	-0.32	6/24/2022 7:47	11.51
6/24/2022 8:24	-0.08	6/25/2022 7:14	1.94	6/25/2022 7:37	5.25	6/25/2022 9:00	-0.36	6/24/2022 7:48	11.49
6/24/2022 8:25	-0.10	6/25/2022 7:15	1.94	6/25/2022 7:38	5.27	6/25/2022 9:01	-0.38	6/24/2022 7:49	11.49
6/24/2022 8:26	-0.08	6/25/2022 7:16	1.94	6/25/2022 7:39	5.28	6/25/2022 9:02	-0.32	6/24/2022 7:50	11.51
6/24/2022 8:27	-0.09	6/25/2022 7:17	1.94	6/25/2022 7:40	5.29	6/25/2022 9:03	-0.35	6/24/2022 7:51	11.50
6/24/2022 8:28	-0.08	6/25/2022 7:18	1.94	6/25/2022 7:41	5.23	6/25/2022 9:04	-0.41	6/24/2022 7:52	11.53
6/24/2022 8:29	-0.08	6/25/2022 7:19	1.94	6/25/2022 7:42	5.29	6/25/2022 9:05	-0.34	6/24/2022 7:53	11.54
6/24/2022 8:30	-0.10	6/25/2022 7:20	1.94	6/25/2022 7:43	5.29	6/25/2022 9:06	-0.32	6/24/2022 7:54	11.53
6/24/2022 8:31	-0.10	6/25/2022 7:21	1.94	6/25/2022 7:44	5.31	6/25/2022 9:07	-0.35	6/24/2022 7:55	11.50
6/24/2022 8:32	-0.10	6/25/2022 7:22	1.94	6/25/2022 7:45	5.30	6/25/2022 9:08	-0.33	6/24/2022 7:56	11.47
6/24/2022 8:33	-0.10	6/25/2022 7:23	1.94	6/25/2022 7:46	5.24	6/25/2022 9:09	-0.39	6/24/2022 7:57	11.47
6/24/2022 8:34	-0.08	6/25/2022 7:24	1.94	6/25/2022 7:47	5.28	6/25/2022 9:10	-0.37	6/24/2022 7:58	11.48
6/24/2022 8:35	-0.08	6/25/2022 7:25	1.94	6/25/2022 7:48	5.25	6/25/2022 9:11	-0.35	6/24/2022 7:59	11.50
6/24/2022 8:36	-0.08	6/25/2022 7:26	1.94	6/25/2022 7:49	5.27	6/25/2022 9:12	-0.37	6/24/2022 8:00	11.47
6/24/2022 8:37	-0.08	6/25/2022 7:27	1.94	6/25/2022 7:50	5.31	6/25/2022 9:13	-0.35	6/24/2022 8:01	11.48
6/24/2022 8:38	-0.10	6/25/2022 7:28	1.94	6/25/2022 7:51	5.29	6/25/2022 9:14	-0.39	6/24/2022 8:02	11.52
6/24/2022 8:39	-0.10	6/25/2022 7:29	1.94	6/25/2022 7:52	5.26	6/25/2022 9:15	-0.34	6/24/2022 8:03	11.52
6/24/2022 8:40	-0.08	6/25/2022 7:30	1.94	6/25/2022 7:53	5.30	6/25/2022 9:16	-0.35	6/24/2022 8:04	11.56
6/24/2022 8:41	-0.08	6/25/2022 7:31	1.94	6/25/2022 7:54	5.29	6/25/2022 9:17	-0.35	6/24/2022 8:05	11.55
6/24/2022 8:42	-0.10	6/25/2022 7:32	1.94	6/25/2022 7:55	5.29	6/25/2022 9:18	-0.36	6/24/2022 8:06	11.53
6/24/2022 8:43	-0.10	6/25/2022 7:33	1.94	6/25/2022 7:56	5.29	6/25/2022 9:19	-0.32	6/24/2022 8:07	11.54
6/24/2022 8:44	-0.10	6/25/2022 7:34	1.93	6/25/2022 7:57	5.31	6/25/2022 9:20	-0.34	6/24/2022 8:08	11.47
6/24/2022 8:45	-0.10	6/25/2022 7:35	1.94	6/25/2022 7:58	5.29	6/25/2022 9:21	-0.32	6/24/2022 8:09	11.50
6/24/2022 8:46	-0.10	6/25/2022 7:36	1.94	6/25/2022 7:59	5.27	6/25/2022 9:22	-0.36	6/24/2022 8:10	11.49
6/24/2022 8:47	-0.10	6/25/2022 7:37	1.94	6/25/2022 8:00	5.28	6/25/2022 9:23	-0.35	6/24/2022 8:11	11.44
6/24/2022 8:48	-0.08	6/25/2022 7:38	1.94	6/25/2022 8:01	5.26	6/25/2022 9:24	-0.35	6/24/2022 8:12	11.49
6/24/2022 8:49	-0.10	6/25/2022 7:39	1.94	6/25/2022 8:02	5.27	6/25/2022 9:25	-0.35	6/24/2022 8:13	11.50
6/24/2022 8:50	-0.08	6/25/2022 7:40	1.94	6/25/2022 8:03	5.28	6/25/2022 9:26	-0.34	6/24/2022 8:14	11.51
6/24/2022 8:51	-0.10	6/25/2022 7:41	1.94	6/25/2022 8:04	5.29	6/25/2022 9:27	-0.33	6/24/2022 8:15	11.53
6/24/2022 8:52	-0.08	6/25/2022 7:42	1.94	6/25/2022 8:05	5.30	6/25/2022 9:28	-0.31	6/24/2022 8:16	11.49
6/24/2022 8:53	-0.10	6/25/2022 7:43	1.94	6/25/2022 8:06	5.27	6/25/2022 9:29	-0.37	6/24/2022 8:17	11.53
6/24/2022 8:54	-0.10	6/25/2022 7:44	1.94	6/25/2022 8:07	5.29	6/25/2022 9:30	-0.32	6/24/2022 8:18	11.51
6/24/2022 8:55	-0.10	6/25/2022 7:45	1.94	6/25/2022 8:08	5.26	6/25/2022 9:31	-0.33	6/24/2022 8:19	11.50
6/24/2022 8:56	-0.10	6/25/2022 7:46	1.94	6/25/2022 8:09	5.29	6/25/2022 9:32	-0.35	6/24/2022 8:20	11.51

6/24/2022 8:57	-0.10	6/25/2022 7:47	1.94	6/25/2022 8:10	5.26	6/25/2022 9:33	-0.40	6/24/2022 8:21	11.53
6/24/2022 8:58	-0.08	6/25/2022 7:48	1.94	6/25/2022 8:11	5.25	6/25/2022 9:34	-0.39	6/24/2022 8:22	11.52
6/24/2022 8:59	-0.08	6/25/2022 7:49	1.94	6/25/2022 8:12	5.28	6/25/2022 9:35	-0.37	6/24/2022 8:23	11.52
6/24/2022 9:00	-0.10	6/25/2022 7:50	1.94	6/25/2022 8:13	5.25	6/25/2022 9:36	-0.36	6/24/2022 8:24	11.52
6/24/2022 9:01	-0.10	6/25/2022 7:51	1.94	6/25/2022 8:14	5.26	6/25/2022 9:37	-0.37	6/24/2022 8:25	11.54
6/24/2022 9:02	-0.10	6/25/2022 7:52	1.94	6/25/2022 8:15	5.28	6/25/2022 9:38	-0.35	6/24/2022 8:26	11.49
6/24/2022 9:03	-0.08	6/25/2022 7:53	1.94	6/25/2022 8:16	5.28	6/25/2022 9:39	-0.34	6/24/2022 8:27	11.57
6/24/2022 9:04	-0.10	6/25/2022 7:54	1.94	6/25/2022 8:17	5.28	6/25/2022 9:40	-0.33	6/24/2022 8:28	11.50
6/24/2022 9:05	-0.08	6/25/2022 7:55	1.94	6/25/2022 8:18	5.28	6/25/2022 9:41	-0.33	6/24/2022 8:29	11.50
6/24/2022 9:06	-0.10	6/25/2022 7:56	1.94	6/25/2022 8:19	5.27	6/25/2022 9:42	-0.30	6/24/2022 8:30	11.49
6/24/2022 9:07	-0.08	6/25/2022 7:57	1.94	6/25/2022 8:20	5.30	6/25/2022 9:43	-0.33	6/24/2022 8:31	11.53
6/24/2022 9:08	-0.10	6/25/2022 7:58	1.94	6/25/2022 8:21	5.31	6/25/2022 9:44	-0.34	6/24/2022 8:32	11.52
6/24/2022 9:09	-0.10	6/25/2022 7:59	1.94	6/25/2022 8:22	5.26	6/25/2022 9:45	-0.35	6/24/2022 8:33	11.51
6/24/2022 9:10	-0.10	6/25/2022 8:00	1.94	6/25/2022 8:23	5.25	6/25/2022 9:46	-0.32	6/24/2022 8:34	11.54
6/24/2022 9:11	-0.10	6/25/2022 8:01	1.94	6/25/2022 8:24	5.25	6/25/2022 9:47	-0.29	6/24/2022 8:35	11.55
6/24/2022 9:12	-0.10	6/25/2022 8:02	1.94	6/25/2022 8:25	5.25	6/25/2022 9:48	-0.33	6/24/2022 8:36	11.52
6/24/2022 9:13	-0.10	6/25/2022 8:03	1.94	6/25/2022 8:26	5.29	6/25/2022 9:49	-0.37	6/24/2022 8:37	11.47
6/24/2022 9:14	-0.08	6/25/2022 8:04	1.94	6/25/2022 8:27	5.23	6/25/2022 9:50	-0.32	6/24/2022 8:38	11.54
6/24/2022 9:15	-0.10	6/25/2022 8:05	1.94	6/25/2022 8:28	5.26	6/25/2022 9:51	-0.33	6/24/2022 8:39	11.54
6/24/2022 9:16	-0.10	6/25/2022 8:06	1.96	6/25/2022 8:29	5.25	6/25/2022 9:52	-0.39	6/24/2022 8:40	11.51
6/24/2022 9:17	-0.09	6/25/2022 8:07	1.94	6/25/2022 8:30	5.24	6/25/2022 9:53	-0.34	6/24/2022 8:41	11.53
6/24/2022 9:18	-0.08	6/25/2022 8:08	1.94	6/25/2022 8:31	5.27	6/25/2022 9:54	-0.36	6/24/2022 8:42	11.51
6/24/2022 9:19	-0.09	6/25/2022 8:09	1.94	6/25/2022 8:32	5.28	6/25/2022 9:55	-0.37	6/24/2022 8:43	11.51
6/24/2022 9:20	-0.08	6/25/2022 8:10	1.94	6/25/2022 8:33	5.27	6/25/2022 9:56	-0.31	6/24/2022 8:44	11.47
6/24/2022 9:21	-0.10	6/25/2022 8:11	1.94	6/25/2022 8:34	5.26	6/25/2022 9:57	-0.35	6/24/2022 8:45	11.54
6/24/2022 9:22	-0.10	6/25/2022 8:12	1.94	6/25/2022 8:35	5.28	6/25/2022 9:58	-0.35	6/24/2022 8:46	11.51
6/24/2022 9:23	-0.09	6/25/2022 8:13	1.94	6/25/2022 8:36	5.27	6/25/2022 9:59	-0.34	6/24/2022 8:47	11.54
6/24/2022 9:24	-0.10	6/25/2022 8:14	1.94	6/25/2022 8:37	5.29	6/25/2022 10:00	-0.36	6/24/2022 8:48	11.53
6/24/2022 9:25	-0.09	6/25/2022 8:15	1.94	6/25/2022 8:38	5.27	6/25/2022 10:01	-0.37	6/24/2022 8:49	11.50
6/24/2022 9:26	-0.08	6/25/2022 8:16	1.94	6/25/2022 8:39	5.25	6/25/2022 10:02	-0.37	6/24/2022 8:50	11.49
6/24/2022 9:27	-0.10	6/25/2022 8:17	1.94	6/25/2022 8:40	5.27	6/25/2022 10:03	-0.35	6/24/2022 8:51	11.56
6/24/2022 9:28	-0.10	6/25/2022 8:18	1.94	6/25/2022 8:41	5.28	6/25/2022 10:04	-0.33	6/24/2022 8:52	11.52
6/24/2022 9:29	-0.10	6/25/2022 8:19	1.94	6/25/2022 8:42	5.28	6/25/2022 10:05	-0.35	6/24/2022 8:53	11.49
6/24/2022 9:30	-0.08	6/25/2022 8:20	1.94	6/25/2022 8:43	5.24	6/25/2022 10:06	-0.36	6/24/2022 8:54	11.54
6/24/2022 9:31	-0.10	6/25/2022 8:21	1.94	6/25/2022 8:44	5.26	6/25/2022 10:07	-0.29	6/24/2022 8:55	11.56
6/24/2022 9:32	-0.11	6/25/2022 8:22	1.94	6/25/2022 8:45	5.28	6/25/2022 10:08	-0.34	6/24/2022 8:56	11.46
6/24/2022 9:33	-0.09	6/25/2022 8:23	1.94	6/25/2022 8:46	5.28	6/25/2022 10:09	-0.39	6/24/2022 8:57	11.51
6/24/2022 9:34	-0.10	6/25/2022 8:24	1.94	6/25/2022 8:47	5.29	6/25/2022 10:10	-0.34	6/24/2022 8:58	11.50
6/24/2022 9:35	-0.09	6/25/2022 8:25	1.94	6/25/2022 8:48	5.27	6/25/2022 10:11	-0.35	6/24/2022 8:59	11.50
6/24/2022 9:36	-0.11	6/25/2022 8:26	1.94	6/25/2022 8:49	5.30	6/25/2022 10:12	-0.37	6/24/2022 9:00	11.48
6/24/2022 9:37	-0.09	6/25/2022 8:27	1.94	6/25/2022 8:50	5.25	6/25/2022 10:13	-0.37	6/24/2022 9:01	11.53
6/24/2022 9:38	-0.11	6/25/2022 8:28	1.94	6/25/2022 8:51	5.27	6/25/2022 10:14	-0.36	6/24/2022 9:02	11.56
6/24/2022 9:39	-0.11	6/25/2022 8:29	1.94	6/25/2022 8:52	5.29	6/25/2022 10:15	-0.35	6/24/2022 9:03	11.51
6/24/2022 9:40	-0.09	6/25/2022 8:30	1.94	6/25/2022 8:53	5.26	6/25/2022 10:16	-0.39	6/24/2022 9:04	11.51
6/24/2022 9:41	-0.11	6/25/2022 8:31	1.94	6/25/2022 8:54	5.28	6/25/2022 10:17	-0.37	6/24/2022 9:10	11.42
6/24/2022 9:42	-0.09	6/25/2022 8:32	1.94	6/25/2022 8:55	5.26	6/25/2022 10:18	-0.37	6/24/2022 9:11	11.43
6/24/2022 9:43	-0.10	6/25/2022 8:33	1.94	6/25/2022 8:56	5.23	6/25/2022 10:19	-0.35	6/24/2022 9:12	11.52
6/24/2022 9:44	-0.11	6/25/2022 8:34	1.94	6/25/2022 8:57	5.24	6/25/2022 10:20	-0.38	6/24/2022 9:13	11.45
6/24/2022 9:45	-0.11	6/25/2022 8:35	1.94	6/25/2022 8:58	5.32	6/25/2022 10:21	-0.35	6/24/2022 9:14	11.49
6/24/2022 9:46	-0.11	6/25/2022 8:36	1.94	6/25/2022 8:59	5.28	6/25/2022 10:22	-0.38	6/24/2022 9:15	11.43
6/24/2022 9:47	-0.09	6/25/2022 8:37	1.94	6/25/2022 9:00	5.25	6/25/2022 10:23	-0.32	6/24/2022 9:16	11.47
6/24/2022 9:48	-0.11	6/25/2022 8:38	1.94	6/25/2022 9:01	5.26	6/25/2022 10:24	-0.35	6/24/2022 9:17	11.47
6/24/2022 9:49	-0.09	6/25/2022 8:39	1.94	6/25/2022 9:02	5.28	6/25/2022 10:25	-0.37	6/24/2022 9:18	11.50
6/24/2022 9:50	-0.11	6/25/2022 8:40	1.94	6/25/2022 9:03	5.23	6/25/2022 10:26	-0.34	6/24/2022 9:19	11.54
6/24/2022 9:51	-0.10	6/25/2022 8:41	1.94	6/25/2022 9:04	5.24	6/25/2022 10:27	-0.31	6/24/2022 9:20	11.49
6/24/2022 9:52	-0.09	6/25/2022 8:42	1.94	6/25/2022 9:05	5.25	6/25/2022 10:28	-0.32	6/24/2022 9:21	11.49
6/24/2022 9:53	-0.11	6/25/2022 8:43	1.94	6/25/2022 9:06	5.27	6/25/2022 10:29	-0.37	6/24/2022 9:22	11.53
6/24/2022 9:54	-0.10	6/25/2022 8:44	1.93	6/25/2022 9:07	5.25	6/25/2022 10:30	-0.34	6/24/2022 9:23	11.48
6/24/2022 9:55	-0.10	6/25/2022 8:45	1.94	6/25/2022 9:08	5.22	6/25/2022 10:31	-0.36	6/24/2022 9:24	11.45
6/24/2022 9:56	-0.11	6/25/2022 8:46	1.94	6/25/2022 9:09	5.29	6/25/2022 10:32	-0.35	6/24/2022 9:25	11.49
6/24/2022 9:57	-0.09	6/25/2022 8:47	1.93	6/25/2022 9:10	5.25	6/25/2022 10:33	-0.35	6/24/2022 9:26	11.45
6/24/2022 9:58	-0.10	6/25/2022 8:48	1.93	6/25/2022 9:11	5.27	6/25/2022 10:34	-0.34	6/24/2022 9:27	11.47
6/24/2022 9:59	-0.11	6/25/2022 8:49	1.94	6/25/2022 9:12	5.25	6/25/2022 10:35	-0.34	6/24/2022 9:28	11.46
6/24/2022 10:00	-0.09	6/25/2022 8:50	1.94	6/25/2022 9:13	5.27	6/25/2022 10:36	-0.39	6/24/2022 9:29	11.49
6/24/2022 10:01	-0.10	6/25/2022 8:51	1.93	6/25/2022 9:14	5.22	6/25/2022 10:37	-0.35	6/24/2022 9:30	11.50
6/24/2022 10:02	-0.10	6/25/2022 8:52	1.94	6/25/2022 9:15	5.25	6/25/2022 10:38	-0.33	6/24/2022 9:31	11.51
6/24/2022 10:03	-0.09	6/25/2022 8:53	1.94	6/25/2022 9:16	5.24	6/25/2022 10:39	-0.31	6/24/2022 9:32	11.40
6/24/2022 10:04	-0.10	6/25/2022 8:54	1.94	6/25/2022 9:17	5.26	6/25/2022 10:40	-0.35	6/24/2022 9:33	11.45
6/24/2022 10:05	-0.10	6/25/2022 8:55	1.94	6/25/2022 9:18	5.27	6/25/2022 10:41	-0.35	6/24/2022 9:34	11.43
6/24/2022 10:06	-0.11	6/25/2022 8:56	1.94	6/25/2022 9:19	5.28	6/25/2022 10:42	-0.32	6/24/2022 9:35	11.50
6/24/2022 10:07	-0.09	6/25/2022 8:57	1.93	6/25/2022 9:20	5.24	6/25/2022 10:43	-0.35	6/24/2022 9:36	11.50
6/24/2022 10:08	-0.11	6/25/2022 8:58	1.94	6/25/2022 9:21	5.24	6/25/2022 10:44	-0.35	6/24/2022 9:37	11.43
6/24/2022 10:09	-0.11	6/25/2022 8:59	1.94	6/25/2022 9:22	5.28	6/25/2022 10:45	-0.35	6/24/2022 9:38	11.43
6/24/2022 10:10	-0.10	6/25/2022 9:00	1.94	6/25/2022 9:23	5.25	6/25/2022 10:46	-0.34	6/24/2022 9:39	11.56
6/24/2022 10:11	-0.09	6/25/2022 9:01	1.93	6/25/2022 9:24	5.23	6/25/2022 10:47	-0.33	6/24/2022 9:40	11.41
6/24/2022 10:12	-0.11	6/25/2022 9:02	1.94	6/25/2022 9:25	5.26	6/25/2022 10:48	-0.33	6/24/2022 9:41	11.48
6/24/2022 10:13	-0.11	6/25/2022 9:03	1.93	6/25/2022 9:26	5.20	6/25/2022 10:49	-0.35	6/24/2022 9:42	11.52
6/24/2022 10:14	-0.11	6/25/2022 9:04	1.93	6/25/2022 9:27	5.26	6/25/2022 10:50	-0.35	6/24/2022 9:43	11.49
6/24/2022 10:15	-0.10	6/25/2022 9:05	1.93	6/25/2022 9:28	5.25	6/25/2022 10:51	-0.30	6/24/2022 9:44	11.51
6/24/2022 10:16	-0.11	6/25/2022 9:06	1.93	6/25/2022 9:29	5.24	6/25/2022 10:52	-0.37	6/24/2022 9:45	11.52
6/24/2022 10:17	-0.09	6/25/2022 9:07	1.94	6/25/2022 9:30	5.24	6/25/2022 10:53	-0.38	6/24/2022 9:46	11.45
6/24/2022 10:18	-0.11	6/25/2022 9:08	1.93	6/25/2022 9:31	5.27	6/25/2022 10:54	-0.33	6/24/2022 9:47	11.44
6/24/2022 10:19	-0.09	6/25/2022 9:09	1.93	6/25/2022 9:32	5.29	6/25/2022 10:55	-0.35	6/24/2022 9:48	11.49
6/24/2022 10:20	-0.09	6/25/2022 9:10	1.94	6/25/2022 9:33	5.25	6/25/2022 10:56	-0.36	6/24/2022 9:49	11.45
6/24/2022 10:21	-0.11	6/25/2022 9:11	1.93	6/25/2022 9:34	5.26	6/25/2022 10:57	-0.35	6/24/2022 9:50	11.44
6/24/2022 10:22	-0.11	6/25/2022 9:12	1.93	6/25/2022 9:35	5.27	6/25/2022 10:58	-0.35	6/24/2022 9:51	11.47
6/24/2022 10:23	-0.11	6/25/2022 9:13	1.93	6/25/2022 9:36	5.28	6/25/2022 10:59	-0.31	6/24/2022 9:52	11.44
6/24/2022 10:24	-0.10	6/25/2022 9:14	1.93	6/25/2022 9:37	5.25	6/25/2022 11:00	-0.39	6/24/2022 9:53	11.46

6/24/2022 10:25	-0.11	6/25/2022 9:15	1.93	6/25/2022 9:38	5.24	6/25/2022 11:01	-0.35	6/24/2022 9:54	11.45
6/24/2022 10:26	-0.10	6/25/2022 9:16	1.93	6/25/2022 9:39	5.24	6/25/2022 11:02	-0.38	6/24/2022 9:55	11.46
6/24/2022 10:27	-0.09	6/25/2022 9:17	1.93	6/25/2022 9:40	5.22	6/25/2022 11:03	-0.34	6/24/2022 9:56	11.43
6/24/2022 10:28	-0.11	6/25/2022 9:18	1.93	6/25/2022 9:41	5.23	6/25/2022 11:04	-0.38	6/24/2022 9:57	11.42
6/24/2022 10:29	-0.10	6/25/2022 9:19	1.93	6/25/2022 9:42	5.23	6/25/2022 11:05	-0.36	6/24/2022 9:58	11.50
6/24/2022 10:30	-0.09	6/25/2022 9:20	1.93	6/25/2022 9:43	5.27	6/25/2022 11:06	-0.36	6/24/2022 9:59	11.47
6/24/2022 10:31	-0.11	6/25/2022 9:21	1.93	6/25/2022 9:44	5.26	6/25/2022 11:07	-0.37	6/24/2022 10:00	11.50
6/24/2022 10:32	-0.11	6/25/2022 9:22	1.93	6/25/2022 9:45	5.21	6/25/2022 11:08	-0.39	6/24/2022 10:01	11.49
6/24/2022 10:33	-0.11	6/25/2022 9:23	1.93	6/25/2022 9:46	5.23	6/25/2022 11:09	-0.35	6/24/2022 10:02	11.48
6/24/2022 10:34	-0.09	6/25/2022 9:24	1.93	6/25/2022 9:47	5.26	6/25/2022 11:10	-0.34	6/24/2022 10:03	11.45
6/24/2022 10:35	-0.09	6/25/2022 9:25	1.93	6/25/2022 9:48	5.24	6/25/2022 11:11	-0.33	6/24/2022 10:04	11.43
6/24/2022 10:36	-0.11	6/25/2022 9:26	1.93	6/25/2022 9:49	5.24	6/25/2022 11:12	-0.40	6/24/2022 10:05	11.43
6/24/2022 10:37	-0.09	6/25/2022 9:27	1.93	6/25/2022 9:50	5.24	6/25/2022 11:13	-0.33	6/24/2022 10:06	11.46
6/24/2022 10:38	-0.11	6/25/2022 9:28	1.93	6/25/2022 9:51	5.21	6/25/2022 11:14	-0.33	6/24/2022 10:07	11.46
6/24/2022 10:39	-0.09	6/25/2022 9:29	1.93	6/25/2022 9:52	5.25	6/25/2022 11:15	-0.35	6/24/2022 10:08	11.42
6/24/2022 10:40	-0.09	6/25/2022 9:30	1.93	6/25/2022 9:53	5.25	6/25/2022 11:16	-0.37	6/24/2022 10:09	11.44
6/24/2022 10:41	-0.09	6/25/2022 9:31	1.93	6/25/2022 9:54	5.28	6/25/2022 11:17	-0.38	6/24/2022 10:10	11.46
6/24/2022 10:42	-0.09	6/25/2022 9:32	1.93	6/25/2022 9:55	5.24	6/25/2022 11:18	-0.39	6/24/2022 10:11	11.44
6/24/2022 10:43	-0.11	6/25/2022 9:33	1.93	6/25/2022 9:56	5.24	6/25/2022 11:19	-0.33	6/24/2022 10:12	11.51
6/24/2022 10:44	-0.11	6/25/2022 9:34	1.93	6/25/2022 9:57	5.26	6/25/2022 11:20	-0.35	6/24/2022 10:13	11.47
6/24/2022 10:45	-0.11	6/25/2022 9:35	1.93	6/25/2022 9:58	5.26	6/25/2022 11:21	-0.37	6/24/2022 10:14	11.50
6/24/2022 10:46	-0.11	6/25/2022 9:36	1.93	6/25/2022 9:59	5.22	6/25/2022 11:22	-0.36	6/24/2022 10:15	11.47
6/24/2022 10:47	-0.10	6/25/2022 9:37	1.93	6/25/2022 10:00	5.23	6/25/2022 11:23	-0.38	6/24/2022 10:16	11.48
6/24/2022 10:48	-0.11	6/25/2022 9:38	1.93	6/25/2022 10:01	5.23	6/25/2022 11:24	-0.34	6/24/2022 10:17	11.49
6/24/2022 10:49	-0.09	6/25/2022 9:39	1.93	6/25/2022 10:02	5.21	6/25/2022 11:25	-0.33	6/24/2022 10:18	11.47
6/24/2022 10:50	-0.10	6/25/2022 9:40	1.93	6/25/2022 10:03	5.25	6/25/2022 11:26	-0.37	6/24/2022 10:19	11.52
6/24/2022 10:51	-0.10	6/25/2022 9:41	1.93	6/25/2022 10:04	5.24	6/25/2022 11:27	-0.33	6/24/2022 10:20	11.49
6/24/2022 10:52	-0.09	6/25/2022 9:42	1.93	6/25/2022 10:05	5.22	6/25/2022 11:28	-0.35	6/24/2022 10:21	11.49
6/24/2022 10:53	-0.09	6/25/2022 9:43	1.93	6/25/2022 10:06	5.21	6/25/2022 11:29	-0.37	6/24/2022 10:22	11.47
6/24/2022 10:54	-0.11	6/25/2022 9:44	1.93	6/25/2022 10:07	5.25	6/25/2022 11:30	-0.34	6/24/2022 10:23	11.47
6/24/2022 10:55	-0.09	6/25/2022 9:45	1.92	6/25/2022 10:08	5.23	6/25/2022 11:31	-0.37	6/24/2022 10:24	11.49
6/24/2022 10:56	-0.11	6/25/2022 9:46	1.92	6/25/2022 10:09	5.23	6/25/2022 11:32	-0.35	6/24/2022 10:25	11.48
6/24/2022 10:57	-0.09	6/25/2022 9:47	1.93	6/25/2022 10:10	5.20	6/25/2022 11:33	-0.35	6/24/2022 10:26	11.50
6/24/2022 10:58	-0.11	6/25/2022 9:48	1.92	6/25/2022 10:11	5.25	6/25/2022 11:34	-0.35	6/24/2022 10:27	11.50
6/24/2022 10:59	-0.11	6/25/2022 9:49	1.92	6/25/2022 10:12	5.24	6/25/2022 11:35	-0.37	6/24/2022 10:28	11.46
6/24/2022 11:00	-0.11	6/25/2022 9:50	1.93	6/25/2022 10:13	5.22	6/25/2022 11:36	-0.32	6/24/2022 10:29	11.44
6/24/2022 11:01	-0.11	6/25/2022 9:51	1.92	6/25/2022 10:14	5.24	6/25/2022 11:37	-0.34	6/24/2022 10:30	11.46
6/24/2022 11:02	-0.11	6/25/2022 9:52	1.92	6/25/2022 10:15	5.22	6/25/2022 11:38	-0.35	6/24/2022 10:31	11.50
6/24/2022 11:03	-0.10	6/25/2022 9:53	1.92	6/25/2022 10:16	5.24	6/25/2022 11:39	-0.37	6/24/2022 10:32	11.46
6/24/2022 11:04	-0.11	6/25/2022 9:54	1.92	6/25/2022 10:17	5.23	6/25/2022 11:40	-0.33	6/24/2022 10:33	11.54
6/24/2022 11:05	-0.11	6/25/2022 9:55	1.93	6/25/2022 10:18	5.23	6/25/2022 11:41	-0.32	6/24/2022 10:34	11.46
6/24/2022 11:06	-0.11	6/25/2022 9:56	1.92	6/25/2022 10:19	5.24	6/25/2022 11:42	-0.35	6/24/2022 10:35	11.53
6/24/2022 11:07	-0.11	6/25/2022 9:57	1.92	6/25/2022 10:20	5.21	6/25/2022 11:43	-0.38	6/24/2022 10:36	11.44
6/24/2022 11:08	-0.09	6/25/2022 9:58	1.92	6/25/2022 10:21	5.19	6/25/2022 11:44	-0.33	6/24/2022 10:37	11.52
6/24/2022 11:09	-0.11	6/25/2022 9:59	1.92	6/25/2022 10:22	5.24	6/25/2022 11:45	-0.37	6/24/2022 10:38	11.47
6/24/2022 11:10	-0.11	6/25/2022 10:00	1.92	6/25/2022 10:23	5.22	6/25/2022 11:46	-0.37	6/24/2022 10:39	11.49
6/24/2022 11:11	-0.09	6/25/2022 10:01	1.92	6/25/2022 10:24	5.24	6/25/2022 11:47	-0.38	6/24/2022 10:40	11.45
6/24/2022 11:12	-0.11	6/25/2022 10:02	1.92	6/25/2022 10:25	5.22	6/25/2022 11:48	-0.35	6/24/2022 10:41	11.55
6/24/2022 11:13	-0.11	6/25/2022 10:03	1.92	6/25/2022 10:26	5.23	6/25/2022 11:49	-0.37	6/24/2022 10:42	11.45
6/24/2022 11:14	-0.11	6/25/2022 10:04	1.92	6/25/2022 10:27	5.23	6/25/2022 11:50	-0.32	6/24/2022 10:43	11.47
6/24/2022 11:15	-0.09	6/25/2022 10:05	1.92	6/25/2022 10:28	5.21	6/25/2022 11:51	-0.33	6/24/2022 10:44	11.47
6/24/2022 11:16	-0.11	6/25/2022 10:06	1.92	6/25/2022 10:29	5.22	6/25/2022 11:52	-0.36	6/24/2022 10:45	11.44
6/24/2022 11:17	-0.11	6/25/2022 10:07	1.92	6/25/2022 10:30	5.21	6/25/2022 11:53	-0.37	6/24/2022 10:46	11.49
6/24/2022 11:18	-0.11	6/25/2022 10:08	1.91	6/25/2022 10:31	5.21	6/25/2022 11:54	-0.34	6/24/2022 10:47	11.48
6/24/2022 11:19	-0.11	6/25/2022 10:09	1.92	6/25/2022 10:32	5.26	6/25/2022 11:55	-0.37	6/24/2022 10:48	11.49
6/24/2022 11:20	-0.09	6/25/2022 10:10	1.92	6/25/2022 10:33	5.25	6/25/2022 11:56	-0.37	6/24/2022 10:49	11.46
6/24/2022 11:21	-0.11	6/25/2022 10:11	1.92	6/25/2022 10:34	5.22	6/25/2022 11:57	-0.33	6/24/2022 10:50	11.46
6/24/2022 11:22	-0.11	6/25/2022 10:12	1.92	6/25/2022 10:35	5.20	6/25/2022 11:58	-0.38	6/24/2022 10:51	11.48
6/24/2022 11:23	-0.09	6/25/2022 10:13	1.92	6/25/2022 10:36	5.22	6/25/2022 11:59	-0.35	6/24/2022 10:52	11.50
6/24/2022 11:24	-0.11	6/25/2022 10:14	1.92	6/25/2022 10:37	5.23	6/25/2022 12:00	-0.35	6/24/2022 10:53	11.49
6/24/2022 11:25	-0.09	6/25/2022 10:15	1.92	6/25/2022 10:38	5.23	6/25/2022 12:01	-0.33	6/24/2022 10:54	11.46
6/24/2022 11:26	-0.11	6/25/2022 10:16	1.92	6/25/2022 10:39	5.23	6/25/2022 12:02	-0.37	6/24/2022 10:55	11.53
6/24/2022 11:27	-0.09	6/25/2022 10:17	1.92	6/25/2022 10:40	5.23	6/25/2022 12:03	-0.35	6/24/2022 10:56	11.54
6/24/2022 11:28	-0.09	6/25/2022 10:18	1.92	6/25/2022 10:41	5.25	6/25/2022 12:04	-0.36	6/24/2022 10:57	11.47
6/24/2022 11:29	-0.10	6/25/2022 10:19	1.92	6/25/2022 10:42	5.25	6/25/2022 12:05	-0.36	6/24/2022 10:58	11.43
6/24/2022 11:30	-0.10	6/25/2022 10:20	1.92	6/25/2022 10:43	5.25	6/25/2022 12:06	-0.35	6/24/2022 10:59	11.50
6/24/2022 11:31	-0.09	6/25/2022 10:21	1.92	6/25/2022 10:44	5.22	6/25/2022 12:07	-0.34	6/24/2022 11:00	11.47
6/24/2022 11:32	-0.09	6/25/2022 10:22	1.91	6/25/2022 10:45	5.21	6/25/2022 12:08	-0.32	6/24/2022 11:01	11.51
6/24/2022 11:33	-0.09	6/25/2022 10:23	1.92	6/25/2022 10:46	5.22	6/25/2022 12:09	-0.35	6/24/2022 11:02	11.49
6/24/2022 11:34	-0.11	6/25/2022 10:24	1.92	6/25/2022 10:47	5.21	6/25/2022 12:10	-0.34	6/24/2022 11:03	11.47
6/24/2022 11:35	-0.11	6/25/2022 10:25	1.92	6/25/2022 10:48	5.24	6/25/2022 12:11	-0.37	6/24/2022 11:04	11.40
6/24/2022 11:36	-0.11	6/25/2022 10:26	1.91	6/25/2022 10:49	5.24	6/25/2022 12:12	-0.37	6/24/2022 11:05	11.42
6/24/2022 11:37	-0.11	6/25/2022 10:27	1.91	6/25/2022 10:50	5.25	6/25/2022 12:13	-0.34	6/24/2022 11:06	11.38
6/24/2022 11:38	-0.11	6/25/2022 10:28	1.91	6/25/2022 10:51	5.20	6/25/2022 12:14	-0.38	6/24/2022 11:07	11.47
6/24/2022 11:39	-0.09	6/25/2022 10:29	1.91	6/25/2022 10:52	5.24	6/25/2022 12:15	-0.39	6/24/2022 11:08	11.43
6/24/2022 11:40	-0.09	6/25/2022 10:30	1.91	6/25/2022 10:53	5.18	6/25/2022 12:16	-0.33	6/24/2022 11:09	11.50
6/24/2022 11:41	-0.11	6/25/2022 10:31	1.91	6/25/2022 10:54	5.23	6/25/2022 12:17	-0.35	6/24/2022 11:10	11.47
6/24/2022 11:42	-0.09	6/25/2022 10:32	1.91	6/25/2022 10:55	5.21	6/25/2022 12:18	-0.36	6/24/2022 11:11	11.48
6/24/2022 11:43	-0.10	6/25/2022 10:33	1.91	6/25/2022 10:56	5.24	6/25/2022 12:19	-0.35	6/24/2022 11:12	11.48
6/24/2022 11:44	-0.10	6/25/2022 10:34	1.91	6/25/2022 10:57	5.23	6/25/2022 12:20	-0.35	6/24/2022 11:13	11.50
6/24/2022 11:45	-0.11	6/25/2022 10:35	1.91	6/25/2022 10:58	5.23	6/25/2022 12:21	-0.37	6/24/2022 11:14	11.49
6/24/2022 11:46	-0.11	6/25/2022 10:36	1.91	6/25/2022 10:59	5.23	6/25/2022 12:22	-0.37	6/24/2022 11:15	11.43
6/24/2022 11:47	-0.09	6/25/2022 10:37	1.91	6/25/2022 11:00	5.20	6/25/2022 12:23	-0.31	6/24/2022 11:16	11.47
6/24/2022 11:48	-0.11	6/25/2022 10:38	1.91	6/25/2022 11:01	5.24	6/25/2022 12:24	-0.36	6/24/2022 11:17	11.47
6/24/2022 11:49	-0.10	6/25/2022 10:39	1.91	6/25/2022 11:02	5.18	6/25/2022 12:25	-0.36	6/24/2022 11:18	11.46
6/24/2022 11:50	-0.11	6/25/2022 10:40	1.91	6/25/2022 11:03	5.21	6/25/2022 12:26	-0.35	6/24/2022 11:19	11.44
6/24/2022 11:51	-0.09	6/25/2022 10:41	1.90	6/25/2022 11:04	5.24	6/25/2022 12:27	-0.38	6/24/2022 11:20	11.46
6/24/2022 11:52	-0.11	6/25/2022 10:42	1.91	6/25/2022 11:05	5.23	6/25/2022 12:28	-0.30	6/24/2022 11:21	11.52

6/24/2022 11:53	-0.10	6/25/2022 10:43	1.91	6/25/2022 11:06	5.20	6/25/2022 12:29	-0.36	6/24/2022 11:22	11.46
6/24/2022 11:54	-0.11	6/25/2022 10:44	1.93	6/25/2022 11:07	5.19	6/25/2022 12:30	-0.32	6/24/2022 11:23	11.46
6/24/2022 11:55	-0.09	6/25/2022 10:45	1.91	6/25/2022 11:08	5.22	6/25/2022 12:31	-0.35	6/24/2022 11:24	11.48
6/24/2022 11:56	-0.09	6/25/2022 10:46	1.91	6/25/2022 11:09	5.20	6/25/2022 12:32	-0.37	6/24/2022 11:25	11.49
6/24/2022 11:57	-0.09	6/25/2022 10:47	1.91	6/25/2022 11:10	5.22	6/25/2022 12:33	-0.33	6/24/2022 11:26	11.48
6/24/2022 11:58	-0.09	6/25/2022 10:48	1.91	6/25/2022 11:11	5.18	6/25/2022 12:34	-0.35	6/24/2022 11:27	11.47
6/24/2022 11:59	-0.11	6/25/2022 10:49	1.90	6/25/2022 11:12	5.22	6/25/2022 12:35	-0.36	6/24/2022 11:28	11.45
6/24/2022 12:00	-0.09	6/25/2022 10:50	1.90	6/25/2022 11:13	5.21	6/25/2022 12:36	-0.35	6/24/2022 11:29	11.51
6/24/2022 12:01	-0.09	6/25/2022 10:51	1.91	6/25/2022 11:14	5.19	6/25/2022 12:37	-0.36	6/24/2022 11:30	11.49
6/24/2022 12:02	-0.11	6/25/2022 10:52	1.91	6/25/2022 11:15	5.19	6/25/2022 12:38	-0.37	6/24/2022 11:31	11.43
6/24/2022 12:03	-0.10	6/25/2022 10:53	1.90	6/25/2022 11:16	5.24	6/25/2022 12:39	-0.37	6/24/2022 11:32	11.48
6/24/2022 12:04	-0.09	6/25/2022 10:54	1.90	6/25/2022 11:17	5.19	6/25/2022 12:40	-0.34	6/24/2022 11:33	11.53
6/24/2022 12:05	-0.11	6/25/2022 10:55	1.90	6/25/2022 11:18	5.24	6/25/2022 12:41	-0.33	6/24/2022 11:34	11.52
6/24/2022 12:06	-0.09	6/25/2022 10:56	1.90	6/25/2022 11:19	5.19	6/25/2022 12:42	-0.38	6/24/2022 11:35	11.45
6/24/2022 12:07	-0.09	6/25/2022 10:57	1.90	6/25/2022 11:20	5.23	6/25/2022 12:43	-0.36	6/24/2022 11:36	11.50
6/24/2022 12:08	-0.11	6/25/2022 10:58	1.90	6/25/2022 11:21	5.18	6/25/2022 12:44	-0.34	6/24/2022 11:37	11.47
6/24/2022 12:09	-0.09	6/25/2022 10:59	1.90	6/25/2022 11:22	5.20	6/25/2022 12:45	-0.37	6/24/2022 11:38	11.48
6/24/2022 12:10	-0.09	6/25/2022 11:00	1.90	6/25/2022 11:23	5.16	6/25/2022 12:46	-0.36	6/24/2022 11:39	11.49
6/24/2022 12:11	-0.09	6/25/2022 11:01	1.90	6/25/2022 11:24	5.21	6/25/2022 12:47	-0.33	6/24/2022 11:40	11.49
6/24/2022 12:12	-0.11	6/25/2022 11:02	1.90	6/25/2022 11:25	5.22	6/25/2022 12:48	-0.40	6/24/2022 11:41	11.46
6/24/2022 12:13	-0.11	6/25/2022 11:03	1.91	6/25/2022 11:26	5.21	6/25/2022 12:49	-0.33	6/24/2022 11:42	11.52
6/24/2022 12:14	-0.11	6/25/2022 11:04	1.90	6/25/2022 11:27	5.18	6/25/2022 12:50	-0.36	6/24/2022 11:43	11.50
6/24/2022 12:15	-0.11	6/25/2022 11:05	1.90	6/25/2022 11:28	5.23	6/25/2022 12:51	-0.37	6/24/2022 11:44	11.48
6/24/2022 12:16	-0.11	6/25/2022 11:06	1.90	6/25/2022 11:29	5.20	6/25/2022 12:52	-0.38	6/24/2022 11:45	11.52
6/24/2022 12:17	-0.11	6/25/2022 11:07	1.90	6/25/2022 11:30	5.23	6/25/2022 12:53	-0.35	6/24/2022 11:46	11.48
6/24/2022 12:18	-0.09	6/25/2022 11:08	1.90	6/25/2022 11:31	5.21	6/25/2022 12:54	-0.35	6/24/2022 11:47	11.45
6/24/2022 12:19	-0.09	6/25/2022 11:09	1.90	6/25/2022 11:32	5.22	6/25/2022 12:55	-0.36	6/24/2022 11:48	11.48
6/24/2022 12:20	-0.11	6/25/2022 11:10	1.90	6/25/2022 11:33	5.22	6/25/2022 12:56	-0.28	6/24/2022 11:49	11.49
6/24/2022 12:21	-0.09	6/25/2022 11:11	1.90	6/25/2022 11:34	5.19	6/25/2022 12:57	-0.32	6/24/2022 11:50	11.52
6/24/2022 12:22	-0.09	6/25/2022 11:12	1.90	6/25/2022 11:35	5.20	6/25/2022 12:58	-0.38	6/24/2022 11:51	11.46
6/24/2022 12:23	-0.11	6/25/2022 11:13	1.90	6/25/2022 11:36	5.21	6/25/2022 12:59	-0.37	6/24/2022 11:52	11.47
6/24/2022 12:24	-0.11	6/25/2022 11:14	1.90	6/25/2022 11:37	5.22	6/25/2022 13:00	-0.33	6/24/2022 11:53	11.48
6/24/2022 12:25	-0.11	6/25/2022 11:15	1.90	6/25/2022 11:38	5.17	6/25/2022 13:01	-0.35	6/24/2022 11:54	11.47
6/24/2022 12:26	-0.11	6/25/2022 11:16	1.90	6/25/2022 11:39	5.21	6/25/2022 13:02	-0.32	6/24/2022 11:55	11.51
6/24/2022 12:27	-0.09	6/25/2022 11:17	1.90	6/25/2022 11:40	5.24	6/25/2022 13:03	-0.35	6/24/2022 11:56	11.46
6/24/2022 12:28	-0.09	6/25/2022 11:18	1.90	6/25/2022 11:41	5.19	6/25/2022 13:04	-0.34	6/24/2022 11:57	11.52
6/24/2022 12:29	-0.10	6/25/2022 11:19	1.90	6/25/2022 11:42	5.19	6/25/2022 13:05	-0.33	6/24/2022 11:58	11.47
6/24/2022 12:30	-0.11	6/25/2022 11:20	1.90	6/25/2022 11:43	5.22	6/25/2022 13:06	-0.37	6/24/2022 11:59	11.52
6/24/2022 12:31	-0.09	6/25/2022 11:21	1.90	6/25/2022 11:44	5.22	6/25/2022 13:07	-0.35	6/24/2022 12:00	11.47
6/24/2022 12:32	-0.11	6/25/2022 11:22	1.90	6/25/2022 11:45	5.20	6/25/2022 13:08	-0.33	6/24/2022 12:01	11.47
6/24/2022 12:33	-0.11	6/25/2022 11:23	1.90	6/25/2022 11:46	5.21	6/25/2022 13:09	-0.32	6/24/2022 12:02	11.48
6/24/2022 12:34	-0.11	6/25/2022 11:24	1.90	6/25/2022 11:47	5.20	6/25/2022 13:10	-0.37	6/24/2022 12:03	11.51
6/24/2022 12:35	-0.09	6/25/2022 11:25	1.90	6/25/2022 11:48	5.22	6/25/2022 13:11	-0.35	6/24/2022 12:04	11.46
6/24/2022 12:36	-0.09	6/25/2022 11:26	1.89	6/25/2022 11:49	5.20	6/25/2022 13:12	-0.35	6/24/2022 12:05	11.45
6/24/2022 12:37	-0.10	6/25/2022 11:27	1.89	6/25/2022 11:50	5.21	6/25/2022 13:13	-0.34	6/24/2022 12:06	11.50
6/24/2022 12:38	-0.11	6/25/2022 11:28	1.89	6/25/2022 11:51	5.21	6/25/2022 13:14	-0.36	6/24/2022 12:07	11.46
6/24/2022 12:39	-0.09	6/25/2022 11:29	1.89	6/25/2022 11:52	5.18	6/25/2022 13:15	-0.38	6/24/2022 12:08	11.44
6/24/2022 12:40	-0.11	6/25/2022 11:30	1.89	6/25/2022 11:53	5.20	6/25/2022 13:16	-0.38	6/24/2022 12:09	11.49
6/24/2022 12:41	-0.09	6/25/2022 11:31	1.89	6/25/2022 11:54	5.20	6/25/2022 13:17	-0.38	6/24/2022 12:10	11.55
6/24/2022 12:42	-0.09	6/25/2022 11:32	1.89	6/25/2022 11:55	5.20	6/25/2022 13:18	-0.33	6/24/2022 12:11	11.47
6/24/2022 12:43	-0.09	6/25/2022 11:33	1.89	6/25/2022 11:56	5.18	6/25/2022 13:19	-0.34	6/24/2022 12:12	11.48
6/24/2022 12:44	-0.11	6/25/2022 11:34	1.89	6/25/2022 11:57	5.23	6/25/2022 13:20	-0.30	6/24/2022 12:13	11.50
6/24/2022 12:45	-0.09	6/25/2022 11:35	1.89	6/25/2022 11:58	5.19	6/25/2022 13:21	-0.32	6/24/2022 12:14	11.50
6/24/2022 12:46	-0.11	6/25/2022 11:36	1.89	6/25/2022 11:59	5.22	6/25/2022 13:22	-0.37	6/24/2022 12:15	11.47
6/24/2022 12:47	-0.09	6/25/2022 11:37	1.89	6/25/2022 12:00	5.21	6/25/2022 13:23	-0.40	6/24/2022 12:16	11.47
6/24/2022 12:48	-0.09	6/25/2022 11:38	1.89	6/25/2022 12:01	5.19	6/25/2022 13:24	-0.35	6/24/2022 12:17	11.48
6/24/2022 12:49	-0.11	6/25/2022 11:39	1.89	6/25/2022 12:02	5.18	6/25/2022 13:25	-0.33	6/24/2022 12:18	11.53
6/24/2022 12:50	-0.09	6/25/2022 11:40	1.89	6/25/2022 12:03	5.19	6/25/2022 13:26	-0.34	6/24/2022 12:19	11.49
6/24/2022 12:51	-0.11	6/25/2022 11:41	1.89	6/25/2022 12:04	5.21	6/25/2022 13:27	-0.39	6/24/2022 12:20	11.50
6/24/2022 12:52	-0.11	6/25/2022 11:42	1.89	6/25/2022 12:05	5.16	6/25/2022 13:28	-0.37	6/24/2022 12:21	11.49
6/24/2022 12:53	-0.09	6/25/2022 11:43	1.89	6/25/2022 12:06	5.18	6/25/2022 13:29	-0.36	6/24/2022 12:22	11.52
6/24/2022 12:54	-0.09	6/25/2022 11:44	1.89	6/25/2022 12:07	5.15	6/25/2022 13:30	-0.39	6/24/2022 12:23	11.45
6/24/2022 12:55	-0.09	6/25/2022 11:45	1.89	6/25/2022 12:08	5.18	6/25/2022 13:31	-0.36	6/24/2022 12:24	11.49
6/24/2022 12:56	-0.09	6/25/2022 11:46	1.88	6/25/2022 12:09	5.19	6/25/2022 13:32	-0.34	6/24/2022 12:25	11.43
6/24/2022 12:57	-0.09	6/25/2022 11:47	1.89	6/25/2022 12:10	5.19	6/25/2022 13:33	-0.37	6/24/2022 12:26	11.46
6/24/2022 12:58	-0.09	6/25/2022 11:48	1.88	6/25/2022 12:11	5.17	6/25/2022 13:34	-0.35	6/24/2022 12:27	11.47
6/24/2022 12:59	-0.11	6/25/2022 11:49	1.88	6/25/2022 12:12	5.21	6/25/2022 13:35	-0.36	6/24/2022 12:28	11.53
6/24/2022 13:00	-0.11	6/25/2022 11:50	1.89	6/25/2022 12:13	5.23	6/25/2022 13:36	-0.34	6/24/2022 12:29	11.48
6/24/2022 13:01	-0.09	6/25/2022 11:51	1.88	6/25/2022 12:14	5.18	6/25/2022 13:37	-0.32	6/24/2022 12:30	11.46
6/24/2022 13:02	-0.11	6/25/2022 11:52	1.88	6/25/2022 12:15	5.15	6/25/2022 13:38	-0.33	6/24/2022 12:31	11.52
6/24/2022 13:03	-0.11	6/25/2022 11:53	1.88	6/25/2022 12:16	5.19	6/25/2022 13:39	-0.35	6/24/2022 12:32	11.44
6/24/2022 13:04	-0.11	6/25/2022 11:54	1.89	6/25/2022 12:17	5.20	6/25/2022 13:40	-0.36	6/24/2022 12:33	11.55
6/24/2022 13:05	-0.11	6/25/2022 11:55	1.88	6/25/2022 12:18	5.14	6/25/2022 13:41	-0.34	6/24/2022 12:34	11.47
6/24/2022 13:06	-0.09	6/25/2022 11:56	1.88	6/25/2022 12:19	5.17	6/25/2022 13:42	-0.38	6/24/2022 12:35	11.50
6/24/2022 13:07	-0.11	6/25/2022 11:57	1.89	6/25/2022 12:20	5.20	6/25/2022 13:43	-0.39	6/24/2022 12:36	11.46
6/24/2022 13:08	-0.11	6/25/2022 11:58	1.88	6/25/2022 12:21	5.22	6/25/2022 13:44	-0.34	6/24/2022 12:37	11.48
6/24/2022 13:09	-0.09	6/25/2022 11:59	1.88	6/25/2022 12:22	5.20	6/25/2022 13:45	-0.35	6/24/2022 12:38	11.48
6/24/2022 13:10	-0.11	6/25/2022 12:00	1.88	6/25/2022 12:23	5.19	6/25/2022 13:46	-0.34	6/24/2022 12:39	11.46
6/24/2022 13:11	-0.09	6/25/2022 12:01	1.89	6/25/2022 12:24	5.20	6/25/2022 13:47	-0.39	6/24/2022 12:40	11.45
6/24/2022 13:12	-0.09	6/25/2022 12:02	1.88	6/25/2022 12:25	5.18	6/25/2022 13:48	-0.37	6/24/2022 12:41	11.45
6/24/2022 13:13	-0.11	6/25/2022 12:03	1.88	6/25/2022 12:26	5.18	6/25/2022 13:49	-0.35	6/24/2022 12:42	11.48
6/24/2022 13:14	-0.11	6/25/2022 12:04	1.88	6/25/2022 12:27	5.20	6/25/2022 13:50	-0.36	6/24/2022 12:43	11.48
6/24/2022 13:15	-0.09	6/25/2022 12:05	1.88	6/25/2022 12:28	5.16	6/25/2022 13:51	-0.31	6/24/2022 12:44	11.49
6/24/2022 13:16	-0.11	6/25/2022 12:06	1.88	6/25/2022 12:29	5.14	6/25/2022 13:52	-0.36	6/24/2022 12:45	11.52
6/24/2022 13:17	-0.11	6/25/2022 12:07	1.88	6/25/2022 12:30	5.20	6/25/2022 13:53	-0.35	6/24/2022 12:46	11.50
6/24/2022 13:18	-0.09	6/25/2022 12:08	1.88	6/25/2022 12:31	5.18	6/25/2022 13:54	-0.35	6/24/2022 12:47	11.52
6/24/2022 13:19	-0.11	6/25/2022 12:09	1.88	6/25/2022 12:32	5.18	6/25/2022 13:55	-0.33	6/24/2022 12:48	11.50
6/24/2022 13:20	-0.11	6/25/2022 12:10	1.88	6/25/2022 12:33	5.19	6/25/2022 13:56	-0.37	6/24/2022 12:49	11.46

6/24/2022 13:21	-0.11	6/25/2022 12:11	1.87	6/25/2022 12:34	5.15	6/25/2022 13:57	-0.36	6/24/2022 12:50	11.48
6/24/2022 13:22	-0.11	6/25/2022 12:12	1.88	6/25/2022 12:35	5.16	6/25/2022 13:58	-0.37	6/24/2022 12:51	11.45
6/24/2022 13:23	-0.09	6/25/2022 12:13	1.88	6/25/2022 12:36	5.16	6/25/2022 13:59	-0.33	6/24/2022 12:52	11.45
6/24/2022 13:24	-0.09	6/25/2022 12:14	1.87	6/25/2022 12:37	5.19	6/25/2022 14:00	-0.32	6/24/2022 12:53	11.41
6/24/2022 13:25	-0.11	6/25/2022 12:15	1.87	6/25/2022 12:38	5.16	6/25/2022 14:01	-0.39	6/24/2022 12:54	11.52
6/24/2022 13:26	-0.11	6/25/2022 12:16	1.87	6/25/2022 12:39	5.19	6/25/2022 14:02	-0.35	6/24/2022 12:55	11.46
6/24/2022 13:27	-0.11	6/25/2022 12:17	1.87	6/25/2022 12:40	5.18	6/25/2022 14:03	-0.35	6/24/2022 12:56	11.48
6/24/2022 13:28	-0.09	6/25/2022 12:18	1.88	6/25/2022 12:41	5.18	6/25/2022 14:04	-0.35	6/24/2022 12:57	11.44
6/24/2022 13:29	-0.09	6/25/2022 12:19	1.88	6/25/2022 12:42	5.20	6/25/2022 14:05	-0.35	6/24/2022 12:58	11.48
6/24/2022 13:30	-0.11	6/25/2022 12:20	1.88	6/25/2022 12:43	5.16	6/25/2022 14:06	-0.35	6/24/2022 12:59	11.50
6/24/2022 13:31	-0.11	6/25/2022 12:21	1.87	6/25/2022 12:44	5.20	6/25/2022 14:07	-0.36	6/24/2022 13:00	11.47
6/24/2022 13:32	-0.11	6/25/2022 12:22	1.88	6/25/2022 12:45	5.18	6/25/2022 14:08	-0.37	6/24/2022 13:01	11.47
6/24/2022 13:33	-0.10	6/25/2022 12:23	1.88	6/25/2022 12:46	5.17	6/25/2022 14:09	-0.35	6/24/2022 13:02	11.46
6/24/2022 13:34	-0.09	6/25/2022 12:24	1.87	6/25/2022 12:47	5.18	6/25/2022 14:10	-0.34	6/24/2022 13:03	11.47
6/24/2022 13:35	-0.09	6/25/2022 12:25	1.87	6/25/2022 12:48	5.16	6/25/2022 14:11	-0.39	6/24/2022 13:04	11.48
6/24/2022 13:36	-0.09	6/25/2022 12:26	1.88	6/25/2022 12:49	5.15	6/25/2022 14:12	-0.35	6/24/2022 13:05	11.46
6/24/2022 13:37	-0.09	6/25/2022 12:27	1.87	6/25/2022 12:50	5.19	6/25/2022 14:13	-0.37	6/24/2022 13:06	11.52
6/24/2022 13:38	-0.11	6/25/2022 12:28	1.87	6/25/2022 12:51	5.18	6/25/2022 14:14	-0.36	6/24/2022 13:07	11.48
6/24/2022 13:39	-0.10	6/25/2022 12:29	1.87	6/25/2022 12:52	5.17	6/25/2022 14:15	-0.31	6/24/2022 13:08	11.49
6/24/2022 13:40	-0.11	6/25/2022 12:30	1.87	6/25/2022 12:53	5.18	6/25/2022 14:16	-0.33	6/24/2022 13:09	11.50
6/24/2022 13:41	-0.11	6/25/2022 12:31	1.87	6/25/2022 12:54	5.15	6/25/2022 14:17	-0.35	6/24/2022 13:10	11.50
6/24/2022 13:42	-0.11	6/25/2022 12:32	1.87	6/25/2022 12:55	5.19	6/25/2022 14:18	-0.33	6/24/2022 13:11	11.50
6/24/2022 13:43	-0.09	6/25/2022 12:33	1.87	6/25/2022 12:56	5.18	6/25/2022 14:19	-0.35	6/24/2022 13:12	11.51
6/24/2022 13:44	-0.09	6/25/2022 12:34	1.87	6/25/2022 12:57	5.17	6/25/2022 14:20	-0.32	6/24/2022 13:13	11.47
6/24/2022 13:45	-0.11	6/25/2022 12:35	1.87	6/25/2022 12:58	5.18	6/25/2022 14:21	-0.35	6/24/2022 13:14	11.49
6/24/2022 13:46	-0.09	6/25/2022 12:36	1.87	6/25/2022 12:59	5.18	6/25/2022 14:22	-0.39	6/24/2022 13:15	11.53
6/24/2022 13:47	-0.11	6/25/2022 12:37	1.87	6/25/2022 13:00	5.16	6/25/2022 14:23	-0.35	6/24/2022 13:16	11.51
6/24/2022 13:48	-0.09	6/25/2022 12:38	1.87	6/25/2022 13:01	5.16	6/25/2022 14:24	-0.35	6/24/2022 13:17	11.50
6/24/2022 13:49	-0.11	6/25/2022 12:39	1.87	6/25/2022 13:02	5.15	6/25/2022 14:25	-0.38	6/24/2022 13:18	11.57
6/24/2022 13:50	-0.11	6/25/2022 12:40	1.87	6/25/2022 13:03	5.16	6/25/2022 14:26	-0.32	6/24/2022 13:19	11.52
6/24/2022 13:51	-0.11	6/25/2022 12:41	1.87	6/25/2022 13:04	5.14	6/25/2022 14:27	-0.32	6/24/2022 13:20	11.47
6/24/2022 13:52	-0.11	6/25/2022 12:42	1.87	6/25/2022 13:05	5.17	6/25/2022 14:28	-0.33	6/24/2022 13:21	11.52
6/24/2022 13:53	-0.09	6/25/2022 12:43	1.87	6/25/2022 13:06	5.14	6/25/2022 14:29	-0.35	6/24/2022 13:22	11.47
6/24/2022 13:54	-0.10	6/25/2022 12:44	1.87	6/25/2022 13:07	5.18	6/25/2022 14:30	-0.32	6/24/2022 13:23	11.49
6/24/2022 13:55	-0.09	6/25/2022 12:45	1.87	6/25/2022 13:08	5.15	6/25/2022 14:31	-0.35	6/24/2022 13:24	11.49
6/24/2022 13:56	-0.09	6/25/2022 12:46	1.86	6/25/2022 13:09	5.17	6/25/2022 14:32	-0.36	6/24/2022 13:25	11.48
6/24/2022 13:57	-0.09	6/25/2022 12:47	1.86	6/25/2022 13:10	5.17	6/25/2022 14:33	-0.34	6/24/2022 13:26	11.51
6/24/2022 13:58	-0.11	6/25/2022 12:48	1.86	6/25/2022 13:11	5.17	6/25/2022 14:34	-0.35	6/24/2022 13:27	11.51
6/24/2022 13:59	-0.09	6/25/2022 12:49	1.86	6/25/2022 13:12	5.16	6/25/2022 14:35	-0.36	6/24/2022 13:28	11.46
6/24/2022 14:00	-0.09	6/25/2022 12:50	1.87	6/25/2022 13:13	5.19	6/25/2022 14:36	-0.35	6/24/2022 13:29	11.47
6/24/2022 14:01	-0.09	6/25/2022 12:51	1.86	6/25/2022 13:14	5.17	6/25/2022 14:37	-0.35	6/24/2022 13:30	11.50
6/24/2022 14:02	-0.09	6/25/2022 12:52	1.86	6/25/2022 13:15	5.12	6/25/2022 14:38	-0.33	6/24/2022 13:31	11.47
6/24/2022 14:03	-0.11	6/25/2022 12:53	1.86	6/25/2022 13:16	5.14	6/25/2022 14:39	-0.38	6/24/2022 13:32	11.47
6/24/2022 14:04	-0.11	6/25/2022 12:54	1.86	6/25/2022 13:17	5.15	6/25/2022 14:40	-0.34	6/24/2022 13:33	11.51
6/24/2022 14:05	-0.10	6/25/2022 12:55	1.86	6/25/2022 13:18	5.16	6/25/2022 14:41	-0.35	6/24/2022 13:34	11.47
6/24/2022 14:06	-0.11	6/25/2022 12:56	1.86	6/25/2022 13:19	5.16	6/25/2022 14:42	-0.35	6/24/2022 13:35	11.55
6/24/2022 14:07	-0.09	6/25/2022 12:57	1.86	6/25/2022 13:20	5.15	6/25/2022 14:43	-0.35	6/24/2022 13:36	11.47
6/24/2022 14:08	-0.09	6/25/2022 12:58	1.86	6/25/2022 13:21	5.17	6/25/2022 14:44	-0.35	6/24/2022 13:37	11.51
6/24/2022 14:09	-0.11	6/25/2022 12:59	1.86	6/25/2022 13:22	5.13	6/25/2022 14:45	-0.36	6/24/2022 13:38	11.48
6/24/2022 14:10	-0.09	6/25/2022 13:00	1.86	6/25/2022 13:23	5.18	6/25/2022 14:46	-0.34	6/24/2022 13:39	11.50
6/24/2022 14:11	-0.11	6/25/2022 13:01	1.86	6/25/2022 13:24	5.15	6/25/2022 14:47	-0.32	6/24/2022 13:40	11.51
6/24/2022 14:12	-0.11	6/25/2022 13:02	1.86	6/25/2022 13:25	5.16	6/25/2022 14:48	-0.35	6/24/2022 13:41	11.48
6/24/2022 14:13	-0.09	6/25/2022 13:03	1.86	6/25/2022 13:26	5.17	6/25/2022 14:49	-0.33	6/24/2022 13:42	11.49
6/24/2022 14:14	-0.11	6/25/2022 13:04	1.86	6/25/2022 13:27	5.14	6/25/2022 14:50	-0.40	6/24/2022 13:43	11.47
6/24/2022 14:15	-0.09	6/25/2022 13:05	1.86	6/25/2022 13:28	5.15	6/25/2022 14:51	-0.37	6/24/2022 13:44	11.53
6/24/2022 14:16	-0.11	6/25/2022 13:06	1.86	6/25/2022 13:29	5.16	6/25/2022 14:52	-0.37	6/24/2022 13:45	11.48
6/24/2022 14:17	-0.09	6/25/2022 13:07	1.86	6/25/2022 13:30	5.13	6/25/2022 14:53	-0.35	6/24/2022 13:46	11.50
6/24/2022 14:18	-0.09	6/25/2022 13:08	1.86	6/25/2022 13:31	5.15	6/25/2022 14:54	-0.30	6/24/2022 13:47	11.50
6/24/2022 14:19	-0.09	6/25/2022 13:09	1.86	6/25/2022 13:32	5.13	6/25/2022 14:55	-0.35	6/24/2022 13:48	11.46
6/24/2022 14:20	-0.10	6/25/2022 13:10	1.88	6/25/2022 13:33	5.18	6/25/2022 14:56	-0.37	6/24/2022 13:49	11.49
6/24/2022 14:21	-0.11	6/25/2022 13:11	1.86	6/25/2022 13:34	5.17	6/25/2022 14:57	-0.33	6/24/2022 13:50	11.50
6/24/2022 14:22	-0.11	6/25/2022 13:12	1.86	6/25/2022 13:35	5.18	6/25/2022 14:58	-0.33	6/24/2022 13:51	11.48
6/24/2022 14:23	-0.09	6/25/2022 13:13	1.86	6/25/2022 13:36	5.17	6/25/2022 14:59	-0.35	6/24/2022 13:52	11.47
6/24/2022 14:24	-0.11	6/25/2022 13:14	1.86	6/25/2022 13:37	5.14	6/25/2022 15:00	-0.35	6/24/2022 13:53	11.46
6/24/2022 14:25	-0.11	6/25/2022 13:15	1.86	6/25/2022 13:38	5.14	6/25/2022 15:01	-0.34	6/24/2022 13:54	11.51
6/24/2022 14:26	-0.09	6/25/2022 13:16	1.86	6/25/2022 13:39	5.14	6/25/2022 15:02	-0.36	6/24/2022 13:55	11.48
6/24/2022 14:27	-0.09	6/25/2022 13:17	1.86	6/25/2022 13:40	5.15	6/25/2022 15:03	-0.32	6/24/2022 13:56	11.43
6/24/2022 14:28	-0.09	6/25/2022 13:18	1.86	6/25/2022 13:41	5.16	6/25/2022 15:04	-0.35	6/24/2022 13:57	11.49
6/24/2022 14:29	-0.09	6/25/2022 13:19	1.86	6/25/2022 13:42	5.17	6/25/2022 15:05	-0.34	6/24/2022 13:58	11.47
6/24/2022 14:30	-0.09	6/25/2022 13:20	1.86	6/25/2022 13:43	5.15	6/25/2022 15:06	-0.36	6/24/2022 13:59	11.49
6/24/2022 14:31	-0.09	6/25/2022 13:21	1.86	6/25/2022 13:44	5.14	6/25/2022 15:07	-0.34	6/24/2022 14:00	11.52
6/24/2022 14:32	-0.11	6/25/2022 13:22	1.85	6/25/2022 13:45	5.17	6/25/2022 15:08	-0.33	6/24/2022 14:01	11.48
6/24/2022 14:33	-0.09	6/25/2022 13:23	1.85	6/25/2022 13:46	5.14	6/25/2022 15:09	-0.32	6/24/2022 14:02	11.46
6/24/2022 14:34	-0.11	6/25/2022 13:24	1.85	6/25/2022 13:47	5.13	6/25/2022 15:10	-0.38	6/24/2022 14:03	11.47
6/24/2022 14:35	-0.09	6/25/2022 13:25	1.85	6/25/2022 13:48	5.13	6/25/2022 15:11	-0.32	6/24/2022 14:04	11.49
6/24/2022 14:36	-0.11	6/25/2022 13:26	1.86	6/25/2022 13:49	5.18	6/25/2022 15:12	-0.35	6/24/2022 14:05	11.50
6/24/2022 14:37	-0.10	6/25/2022 13:27	1.85	6/25/2022 13:50	5.16	6/25/2022 15:13	-0.35	6/24/2022 14:06	11.51
6/24/2022 14:38	-0.09	6/25/2022 13:28	1.85	6/25/2022 13:51	5.14	6/25/2022 15:14	-0.36	6/24/2022 14:07	11.53
6/24/2022 14:39	-0.11	6/25/2022 13:29	1.85	6/25/2022 13:52	5.15	6/25/2022 15:15	-0.37	6/24/2022 14:08	11.50
6/24/2022 14:40	-0.09	6/25/2022 13:30	1.85	6/25/2022 13:53	5.16	6/25/2022 15:16	-0.35	6/24/2022 14:09	11.49
6/24/2022 14:41	-0.11	6/25/2022 13:31	1.85	6/25/2022 13:54	5.14	6/25/2022 15:17	-0.33	6/24/2022 14:10	11.53
6/24/2022 14:42	-0.09	6/25/2022 13:32	1.85	6/25/2022 13:55	5.14	6/25/2022 15:18	-0.35	6/24/2022 14:11	11.42
6/24/2022 14:43	-0.09	6/25/2022 13:33	1.85	6/25/2022 13:56	5.09	6/25/2022 15:19	-0.35	6/24/2022 14:12	11.49
6/24/2022 14:44	-0.09	6/25/2022 13:34	1.85	6/25/2022 13:57	5.11	6/25/2022 15:20	-0.37	6/24/2022 14:13	11.49
6/24/2022 14:45	-0.09	6/25/2022 13:35	1.87	6/25/2022 13:58	5.14	6/25/2022 15:21	-0.40	6/24/2022 14:14	11.48
6/24/2022 14:46	-0.09	6/25/2022 13:36	1.85	6/25/2022 13:59	5.16	6/25/2022 15:22	-0.34	6/24/2022 14:15	11.47
6/24/2022 14:47	-0.11	6/25/2022 13:37	1.85	6/25/2022 14:00	5.16	6/25/2022 15:23	-0.33	6/24/2022 14:16	11.53
6/24/2022 14:48	-0.09	6/25/2022 13:38	1.85	6/25/2022 14:01	5.14	6/25/2022 15:24	-0.35	6/24/2022 14:17	11.47

6/24/2022 14:49	-0.11	6/25/2022 13:39	1.85	6/25/2022 14:02	5.14	6/25/2022 15:25	-0.37	6/24/2022 14:18	11.52
6/24/2022 14:50	-0.11	6/25/2022 13:40	1.85	6/25/2022 14:03	5.16	6/25/2022 15:26	-0.39	6/24/2022 14:19	11.50
6/24/2022 14:51	-0.09	6/25/2022 13:41	1.85	6/25/2022 14:04	5.15	6/25/2022 15:27	-0.35	6/24/2022 14:20	11.53
6/24/2022 14:52	-0.11	6/25/2022 13:42	1.85	6/25/2022 14:05	5.13	6/25/2022 15:28	-0.36	6/24/2022 14:21	11.53
6/24/2022 14:53	-0.11	6/25/2022 13:43	1.85	6/25/2022 14:06	5.15	6/25/2022 15:29	-0.35	6/24/2022 14:22	11.53
6/24/2022 14:54	-0.09	6/25/2022 13:44	1.85	6/25/2022 14:07	5.16	6/25/2022 15:30	-0.34	6/24/2022 14:23	11.46
6/24/2022 14:55	-0.09	6/25/2022 13:45	1.85	6/25/2022 14:08	5.13	6/25/2022 15:31	-0.35	6/24/2022 14:24	11.51
6/24/2022 14:56	-0.09	6/25/2022 13:46	1.85	6/25/2022 14:09	5.13	6/25/2022 15:32	-0.36	6/24/2022 14:25	11.48
6/24/2022 14:57	-0.11	6/25/2022 13:47	1.85	6/25/2022 14:10	5.12	6/25/2022 15:33	-0.36	6/24/2022 14:26	11.44
6/24/2022 14:58	-0.11	6/25/2022 13:48	1.85	6/25/2022 14:11	5.12	6/25/2022 15:34	-0.35	6/24/2022 14:27	11.44
6/24/2022 14:59	-0.09	6/25/2022 13:49	1.85	6/25/2022 14:12	5.14	6/25/2022 15:35	-0.36	6/24/2022 14:28	11.48
6/24/2022 15:00	-0.11	6/25/2022 13:50	1.85	6/25/2022 14:13	5.14	6/25/2022 15:36	-0.35	6/24/2022 14:29	11.53
6/24/2022 15:01	-0.09	6/25/2022 13:51	1.85	6/25/2022 14:14	5.12	6/25/2022 15:37	-0.34	6/24/2022 14:30	11.42
6/24/2022 15:02	-0.11	6/25/2022 13:52	1.84	6/25/2022 14:15	5.15	6/25/2022 15:38	-0.35	6/24/2022 14:31	11.49
6/24/2022 15:03	-0.11	6/25/2022 13:53	1.85	6/25/2022 14:16	5.16	6/25/2022 15:39	-0.36	6/24/2022 14:32	11.45
6/24/2022 15:04	-0.11	6/25/2022 13:54	1.85	6/25/2022 14:17	5.16	6/25/2022 15:40	-0.35	6/24/2022 14:33	11.52
6/24/2022 15:05	-0.11	6/25/2022 13:55	1.84	6/25/2022 14:18	5.14	6/25/2022 15:41	-0.32	6/24/2022 14:34	11.45
6/24/2022 15:06	-0.11	6/25/2022 13:56	1.84	6/25/2022 14:19	5.14	6/25/2022 15:42	-0.34	6/24/2022 14:35	11.47
6/24/2022 15:07	-0.09	6/25/2022 13:57	1.84	6/25/2022 14:20	5.13	6/25/2022 15:43	-0.35	6/24/2022 14:36	11.44
6/24/2022 15:08	-0.09	6/25/2022 13:58	1.84	6/25/2022 14:21	5.15	6/25/2022 15:44	-0.37	6/24/2022 14:37	11.44
6/24/2022 15:09	-0.09	6/25/2022 13:59	1.85	6/25/2022 14:22	5.09	6/25/2022 15:45	-0.36	6/24/2022 14:38	11.45
6/24/2022 15:10	-0.11	6/25/2022 14:00	1.84	6/25/2022 14:23	5.17	6/25/2022 15:46	-0.35	6/24/2022 14:39	11.45
6/24/2022 15:11	-0.09	6/25/2022 14:01	1.84	6/25/2022 14:24	5.09	6/25/2022 15:47	-0.37	6/24/2022 14:40	11.51
6/24/2022 15:12	-0.09	6/25/2022 14:02	1.84	6/25/2022 14:25	5.13	6/25/2022 15:48	-0.37	6/24/2022 14:41	11.47
6/24/2022 15:13	-0.09	6/25/2022 14:03	1.84	6/25/2022 14:26	5.13	6/25/2022 15:49	-0.39	6/24/2022 14:42	11.45
6/24/2022 15:14	-0.11	6/25/2022 14:04	1.84	6/25/2022 14:27	5.11	6/25/2022 15:50	-0.35	6/24/2022 14:43	11.49
6/24/2022 15:15	-0.11	6/25/2022 14:05	1.84	6/25/2022 14:28	5.15	6/25/2022 15:51	-0.36	6/24/2022 14:44	11.46
6/24/2022 15:16	-0.09	6/25/2022 14:06	1.84	6/25/2022 14:29	5.14	6/25/2022 15:52	-0.36	6/24/2022 14:45	11.54
6/24/2022 15:17	-0.09	6/25/2022 14:07	1.84	6/25/2022 14:30	5.15	6/25/2022 15:53	-0.39	6/24/2022 14:46	11.47
6/24/2022 15:18	-0.11	6/25/2022 14:08	1.84	6/25/2022 14:31	5.12	6/25/2022 15:54	-0.38	6/24/2022 14:47	11.49
6/24/2022 15:19	-0.09	6/25/2022 14:09	1.84	6/25/2022 14:32	5.12	6/25/2022 15:55	-0.35	6/24/2022 14:48	11.48
6/24/2022 15:20	-0.11	6/25/2022 14:10	1.84	6/25/2022 14:33	5.13	6/25/2022 15:56	-0.33	6/24/2022 14:49	11.51
6/24/2022 15:21	-0.11	6/25/2022 14:11	1.84	6/25/2022 14:34	5.13	6/25/2022 15:57	-0.35	6/24/2022 14:50	11.48
6/24/2022 15:22	-0.09	6/25/2022 14:12	1.84	6/25/2022 14:35	5.10	6/25/2022 15:58	-0.37	6/24/2022 14:51	11.48
6/24/2022 15:23	-0.09	6/25/2022 14:13	1.84	6/25/2022 14:36	5.14	6/25/2022 15:59	-0.34	6/24/2022 14:52	11.52
6/24/2022 15:24	-0.09	6/25/2022 14:14	1.84	6/25/2022 14:37	5.16	6/25/2022 16:00	-0.34	6/24/2022 14:53	11.48
6/24/2022 15:25	-0.09	6/25/2022 14:15	1.84	6/25/2022 14:38	5.14	6/25/2022 16:01	-0.40	6/24/2022 14:54	11.48
6/24/2022 15:26	-0.11	6/25/2022 14:16	1.84	6/25/2022 14:39	5.09	6/25/2022 16:02	-0.33	6/24/2022 14:55	11.47
6/24/2022 15:27	-0.09	6/25/2022 14:17	1.84	6/25/2022 14:40	5.13	6/25/2022 16:03	-0.34	6/24/2022 14:56	11.46
6/24/2022 15:28	-0.11	6/25/2022 14:18	1.83	6/25/2022 14:41	5.15	6/25/2022 16:04	-0.37	6/24/2022 14:57	11.49
6/24/2022 15:29	-0.09	6/25/2022 14:19	1.84	6/25/2022 14:42	5.10	6/25/2022 16:05	-0.36	6/24/2022 14:58	11.51
6/24/2022 15:30	-0.09	6/25/2022 14:20	1.83	6/25/2022 14:43	5.13	6/25/2022 16:06	-0.35	6/24/2022 14:59	11.47
6/24/2022 15:31	-0.09	6/25/2022 14:21	1.83	6/25/2022 14:44	5.13	6/25/2022 16:07	-0.33	6/24/2022 15:00	11.50
6/24/2022 15:32	-0.09	6/25/2022 14:22	1.84	6/25/2022 14:45	5.12	6/25/2022 16:08	-0.31	6/24/2022 15:01	11.47
6/24/2022 15:33	-0.09	6/25/2022 14:23	1.83	6/25/2022 14:46	5.15	6/25/2022 16:09	-0.34	6/24/2022 15:02	11.51
6/24/2022 15:34	-0.11	6/25/2022 14:24	1.83	6/25/2022 14:47	5.14	6/25/2022 16:10	-0.31	6/24/2022 15:03	11.50
6/24/2022 15:35	-0.09	6/25/2022 14:25	1.84	6/25/2022 14:48	5.15	6/25/2022 16:11	-0.32	6/24/2022 15:04	11.49
6/24/2022 15:36	-0.09	6/25/2022 14:26	1.83	6/25/2022 14:49	5.10	6/25/2022 16:12	-0.33	6/24/2022 15:05	11.42
6/24/2022 15:37	-0.10	6/25/2022 14:27	1.83	6/25/2022 14:50	5.13	6/25/2022 16:13	-0.37	6/24/2022 15:06	11.43
6/24/2022 15:38	-0.09	6/25/2022 14:28	1.83	6/25/2022 14:51	5.12	6/25/2022 16:14	-0.36	6/24/2022 15:07	11.45
6/24/2022 15:39	-0.09	6/25/2022 14:29	1.83	6/25/2022 14:52	5.15	6/25/2022 16:15	-0.33	6/24/2022 15:08	11.46
6/24/2022 15:40	-0.11	6/25/2022 14:30	1.83	6/25/2022 14:53	5.11	6/25/2022 16:16	-0.36	6/24/2022 15:09	11.47
6/24/2022 15:41	-0.11	6/25/2022 14:31	1.83	6/25/2022 14:54	5.14	6/25/2022 16:17	-0.35	6/24/2022 15:10	11.52
6/24/2022 15:42	-0.09	6/25/2022 14:32	1.83	6/25/2022 14:55	5.10	6/25/2022 16:18	-0.37	6/24/2022 15:11	11.46
6/24/2022 15:43	-0.09	6/25/2022 14:33	1.83	6/25/2022 14:56	5.12	6/25/2022 16:19	-0.33	6/24/2022 15:12	11.50
6/24/2022 15:44	-0.09	6/25/2022 14:34	1.83	6/25/2022 14:57	5.12	6/25/2022 16:20	-0.35	6/24/2022 15:13	11.48
6/24/2022 15:45	-0.09	6/25/2022 14:35	1.83	6/25/2022 14:58	5.10	6/25/2022 16:21	-0.33	6/24/2022 15:14	11.44
6/24/2022 15:46	-0.11	6/25/2022 14:36	1.83	6/25/2022 14:59	5.11	6/25/2022 16:22	-0.33	6/24/2022 15:15	11.47
6/24/2022 15:47	-0.09	6/25/2022 14:37	1.83	6/25/2022 15:00	5.11	6/25/2022 16:23	-0.32	6/24/2022 15:16	11.51
6/24/2022 15:48	-0.09	6/25/2022 14:38	1.83	6/25/2022 15:01	5.10	6/25/2022 16:24	-0.39	6/24/2022 15:17	11.49
6/24/2022 15:49	-0.09	6/25/2022 14:39	1.83	6/25/2022 15:02	5.09	6/25/2022 16:25	-0.34	6/24/2022 15:18	11.46
6/24/2022 15:50	-0.09	6/25/2022 14:40	1.83	6/25/2022 15:03	5.06	6/25/2022 16:26	-0.35	6/24/2022 15:19	11.46
6/24/2022 15:51	-0.09	6/25/2022 14:41	1.83	6/25/2022 15:04	5.09	6/25/2022 16:27	-0.34	6/24/2022 15:20	11.51
6/24/2022 15:52	-0.09	6/25/2022 14:42	1.83	6/25/2022 15:05	5.15	6/25/2022 16:28	-0.37	6/24/2022 15:21	11.45
6/24/2022 15:53	-0.09	6/25/2022 14:43	1.83	6/25/2022 15:06	5.12	6/25/2022 16:29	-0.37	6/24/2022 15:22	11.44
6/24/2022 15:54	-0.09	6/25/2022 14:44	1.83	6/25/2022 15:07	5.09	6/25/2022 16:30	-0.35	6/24/2022 15:23	11.48
6/24/2022 15:55	-0.09	6/25/2022 14:45	1.83	6/25/2022 15:08	5.09	6/25/2022 16:31	-0.35	6/24/2022 15:24	11.47
6/24/2022 15:56	-0.09	6/25/2022 14:46	1.83	6/25/2022 15:09	5.12	6/25/2022 16:32	-0.35	6/24/2022 15:25	11.52
6/24/2022 15:57	-0.11	6/25/2022 14:47	1.82	6/25/2022 15:10	5.11	6/25/2022 16:33	-0.35	6/24/2022 15:26	11.47
6/24/2022 15:58	-0.09	6/25/2022 14:48	1.83	6/25/2022 15:11	5.14	6/25/2022 16:34	-0.34	6/24/2022 15:27	11.49
6/24/2022 15:59	-0.09	6/25/2022 14:49	1.83	6/25/2022 15:12	5.12	6/25/2022 16:35	-0.33	6/24/2022 15:28	11.50
6/24/2022 16:00	-0.09	6/25/2022 14:50	1.83	6/25/2022 15:13	5.11	6/25/2022 16:36	-0.38	6/24/2022 15:29	11.50
6/24/2022 16:01	-0.11	6/25/2022 14:51	1.83	6/25/2022 15:14	5.09	6/25/2022 16:37	-0.30	6/24/2022 15:30	11.53
6/24/2022 16:02	-0.09	6/25/2022 14:52	1.83	6/25/2022 15:15	5.10	6/25/2022 16:38	-0.37	6/24/2022 15:31	11.51
6/24/2022 16:03	-0.09	6/25/2022 14:53	1.83	6/25/2022 15:16	5.10	6/25/2022 16:39	-0.37	6/24/2022 15:32	11.46
6/24/2022 16:04	-0.09	6/25/2022 14:54	1.83	6/25/2022 15:17	5.11	6/25/2022 16:40	-0.37	6/24/2022 15:33	11.50
6/24/2022 16:05	-0.11	6/25/2022 14:55	1.82	6/25/2022 15:18	5.10	6/25/2022 16:41	-0.33	6/24/2022 15:34	11.52
6/24/2022 16:06	-0.11	6/25/2022 14:56	1.83	6/25/2022 15:19	5.12	6/25/2022 16:42	-0.35	6/24/2022 15:35	11.47
6/24/2022 16:07	-0.09	6/25/2022 14:57	1.83	6/25/2022 15:20	5.13	6/25/2022 16:43	-0.36	6/24/2022 15:36	11.48
6/24/2022 16:08	-0.11	6/25/2022 14:58	1.82	6/25/2022 15:21	5.09	6/25/2022 16:44	-0.37	6/24/2022 15:37	11.52
6/24/2022 16:09	-0.11	6/25/2022 14:59	1.82	6/25/2022 15:22	5.11	6/25/2022 16:45	-0.35	6/24/2022 15:38	11.47
6/24/2022 16:10	-0.09	6/25/2022 15:00	1.82	6/25/2022 15:23	5.10	6/25/2022 16:46	-0.33	6/24/2022 15:39	11.48
6/24/2022 16:11	-0.09	6/25/2022 15:01	1.83	6/25/2022 15:24	5.14	6/25/2022 16:47	-0.34	6/24/2022 15:40	11.51
6/24/2022 16:12	-0.09	6/25/2022 15:02	1.83	6/25/2022 15:25	5.09	6/25/2022 16:48	-0.38	6/24/2022 15:41	11.49
6/24/2022 16:13	-0.09	6/25/2022 15:03	1.83	6/25/2022 15:26	5.07	6/25/2022 16:49	-0.34	6/24/2022 15:42	11.46
6/24/2022 16:14	-0.11	6/25/2022 15:04	1.82	6/25/2022 15:27	5.09	6/25/2022 16:50	-0.35	6/24/2022 15:43	11.51
6/24/2022 16:15	-0.11	6/25/2022 15:05	1.82	6/25/2022 15:28	5.12	6/25/2022 16:51	-0.35	6/24/2022 15:44	11.51
6/24/2022 16:16	-0.11	6/25/2022 15:06	1.82	6/25/2022 15:29	5.11	6/25/2022 16:52	-0.35	6/24/2022 15:45	11.52

6/24/2022 16:17	-0.11	6/25/2022 15:07	1.82	6/25/2022 15:30	5.11	6/25/2022 16:53	-0.36	6/24/2022 15:46	11.46
6/24/2022 16:18	-0.11	6/25/2022 15:08	1.82	6/25/2022 15:31	5.13	6/25/2022 16:54	-0.34	6/24/2022 15:47	11.49
6/24/2022 16:19	-0.09	6/25/2022 15:09	1.82	6/25/2022 15:32	5.10	6/25/2022 16:55	-0.34	6/24/2022 15:48	11.44
6/24/2022 16:20	-0.09	6/25/2022 15:10	1.82	6/25/2022 15:33	5.14	6/25/2022 16:56	-0.35	6/24/2022 15:49	11.51
6/24/2022 16:21	-0.09	6/25/2022 15:11	1.83	6/25/2022 15:34	5.10	6/25/2022 16:57	-0.36	6/24/2022 15:50	11.51
6/24/2022 16:22	-0.09	6/25/2022 15:12	1.82	6/25/2022 15:35	5.12	6/25/2022 16:58	-0.39	6/24/2022 15:51	11.43
6/24/2022 16:23	-0.09	6/25/2022 15:13	1.82	6/25/2022 15:36	5.09	6/25/2022 16:59	-0.37	6/24/2022 15:52	11.48
6/24/2022 16:24	-0.09	6/25/2022 15:14	1.82	6/25/2022 15:37	5.13	6/25/2022 17:00	-0.35	6/24/2022 15:53	11.51
6/24/2022 16:25	-0.11	6/25/2022 15:15	1.82	6/25/2022 15:38	5.10	6/25/2022 17:01	-0.34	6/24/2022 15:54	11.52
6/24/2022 16:26	-0.09	6/25/2022 15:16	1.82	6/25/2022 15:39	5.08	6/25/2022 17:02	-0.35	6/24/2022 15:55	11.50
6/24/2022 16:27	-0.11	6/25/2022 15:17	1.82	6/25/2022 15:40	5.09	6/25/2022 17:03	-0.32	6/24/2022 15:56	11.49
6/24/2022 16:28	-0.11	6/25/2022 15:18	1.82	6/25/2022 15:41	5.06	6/25/2022 17:04	-0.37	6/24/2022 15:57	11.49
6/24/2022 16:29	-0.11	6/25/2022 15:19	1.82	6/25/2022 15:42	5.10	6/25/2022 17:05	-0.38	6/24/2022 15:58	11.50
6/24/2022 16:30	-0.09	6/25/2022 15:20	1.82	6/25/2022 15:43	5.11	6/25/2022 17:06	-0.35	6/24/2022 15:59	11.46
6/24/2022 16:31	-0.09	6/25/2022 15:21	1.82	6/25/2022 15:44	5.09	6/25/2022 17:07	-0.33	6/24/2022 16:00	11.48
6/24/2022 16:32	-0.11	6/25/2022 15:22	1.82	6/25/2022 15:45	5.12	6/25/2022 17:08	-0.40	6/24/2022 16:01	11.50
6/24/2022 16:33	-0.11	6/25/2022 15:23	1.82	6/25/2022 15:46	5.10	6/25/2022 17:09	-0.34	6/24/2022 16:02	11.48
6/24/2022 16:34	-0.09	6/25/2022 15:24	1.82	6/25/2022 15:47	5.13	6/25/2022 17:10	-0.33	6/24/2022 16:03	11.51
6/24/2022 16:35	-0.11	6/25/2022 15:25	1.82	6/25/2022 15:48	5.08	6/25/2022 17:11	-0.35	6/24/2022 16:04	11.50
6/24/2022 16:36	-0.10	6/25/2022 15:26	1.82	6/25/2022 15:49	5.09	6/25/2022 17:12	-0.42	6/24/2022 16:05	11.48
6/24/2022 16:37	-0.11	6/25/2022 15:27	1.82	6/25/2022 15:50	5.11	6/25/2022 17:13	-0.34	6/24/2022 16:06	11.49
6/24/2022 16:38	-0.09	6/25/2022 15:28	1.82	6/25/2022 15:51	5.08	6/25/2022 17:14	-0.35	6/24/2022 16:07	11.51
6/24/2022 16:39	-0.09	6/25/2022 15:29	1.82	6/25/2022 15:52	5.12	6/25/2022 17:15	-0.33	6/24/2022 16:08	11.50
6/24/2022 16:40	-0.11	6/25/2022 15:30	1.82	6/25/2022 15:53	5.10	6/25/2022 17:16	-0.30	6/24/2022 16:09	11.52
6/24/2022 16:41	-0.11	6/25/2022 15:31	1.82	6/25/2022 15:54	5.07	6/25/2022 17:17	-0.35	6/24/2022 16:10	11.52
6/24/2022 16:42	-0.09	6/25/2022 15:32	1.82	6/25/2022 15:55	5.10	6/25/2022 17:18	-0.33	6/24/2022 16:11	11.53
6/24/2022 16:43	-0.09	6/25/2022 15:33	1.82	6/25/2022 15:56	5.07	6/25/2022 17:19	-0.35	6/24/2022 16:12	11.51
6/24/2022 16:44	-0.09	6/25/2022 15:34	1.82	6/25/2022 15:57	5.11	6/25/2022 17:20	-0.32	6/24/2022 16:13	11.47
6/24/2022 16:45	-0.09	6/25/2022 15:35	1.82	6/25/2022 15:58	5.11	6/25/2022 17:21	-0.32	6/24/2022 16:14	11.49
6/24/2022 16:46	-0.11	6/25/2022 15:36	1.82	6/25/2022 15:59	5.09	6/25/2022 17:22	-0.34	6/24/2022 16:15	11.46
6/24/2022 16:47	-0.11	6/25/2022 15:37	1.81	6/25/2022 16:00	5.10	6/25/2022 17:23	-0.39	6/24/2022 16:16	11.51
6/24/2022 16:48	-0.11	6/25/2022 15:38	1.82	6/25/2022 16:01	5.07	6/25/2022 17:24	-0.37	6/24/2022 16:17	11.52
6/24/2022 16:49	-0.11	6/25/2022 15:39	1.82	6/25/2022 16:02	5.12	6/25/2022 17:25	-0.36	6/24/2022 16:18	11.52
6/24/2022 16:50	-0.09	6/25/2022 15:40	1.81	6/25/2022 16:03	5.09	6/25/2022 17:26	-0.34	6/24/2022 16:19	11.46
6/24/2022 16:51	-0.09	6/25/2022 15:41	1.81	6/25/2022 16:04	5.10	6/25/2022 17:27	-0.35	6/24/2022 16:20	11.52
6/24/2022 16:52	-0.11	6/25/2022 15:42	1.82	6/25/2022 16:05	5.12	6/25/2022 17:28	-0.35	6/24/2022 16:21	11.52
6/24/2022 16:53	-0.11	6/25/2022 15:43	1.82	6/25/2022 16:06	5.09	6/25/2022 17:29	-0.34	6/24/2022 16:22	11.51
6/24/2022 16:54	-0.11	6/25/2022 15:44	1.82	6/25/2022 16:07	5.11	6/25/2022 17:30	-0.35	6/24/2022 16:23	11.44
6/24/2022 16:55	-0.11	6/25/2022 15:45	1.81	6/25/2022 16:08	5.10	6/25/2022 17:31	-0.33	6/24/2022 16:24	11.46
6/24/2022 16:56	-0.11	6/25/2022 15:46	1.81	6/25/2022 16:09	5.07	6/25/2022 17:32	-0.34	6/24/2022 16:25	11.50
6/24/2022 16:57	-0.09	6/25/2022 15:47	1.81	6/25/2022 16:10	5.09	6/25/2022 17:33	-0.37	6/24/2022 16:26	11.49
6/24/2022 16:58	-0.09	6/25/2022 15:48	1.81	6/25/2022 16:11	5.10	6/25/2022 17:34	-0.35	6/24/2022 16:27	11.51
6/24/2022 16:59	-0.11	6/25/2022 15:49	1.81	6/25/2022 16:12	5.08	6/25/2022 17:35	-0.35	6/24/2022 16:28	11.46
6/24/2022 17:00	-0.09	6/25/2022 15:50	1.82	6/25/2022 16:13	5.09	6/25/2022 17:36	-0.36	6/24/2022 16:29	11.51
6/24/2022 17:01	-0.11	6/25/2022 15:51	1.81	6/25/2022 16:14	5.09	6/25/2022 17:37	-0.32	6/24/2022 16:30	11.45
6/24/2022 17:02	-0.09	6/25/2022 15:52	1.81	6/25/2022 16:15	5.06	6/25/2022 17:38	-0.37	6/24/2022 16:31	11.49
6/24/2022 17:03	-0.09	6/25/2022 15:53	1.81	6/25/2022 16:16	5.09	6/25/2022 17:39	-0.35	6/24/2022 16:32	11.48
6/24/2022 17:04	-0.11	6/25/2022 15:54	1.81	6/25/2022 16:17	5.07	6/25/2022 17:40	-0.37	6/24/2022 16:33	11.46
6/24/2022 17:05	-0.09	6/25/2022 15:55	1.81	6/25/2022 16:18	5.07	6/25/2022 17:41	-0.35	6/24/2022 16:34	11.47
6/24/2022 17:06	-0.09	6/25/2022 15:56	1.81	6/25/2022 16:19	5.10	6/25/2022 17:42	-0.32	6/24/2022 16:35	11.54
6/24/2022 17:07	-0.11	6/25/2022 15:57	1.81	6/25/2022 16:20	5.11	6/25/2022 17:43	-0.38	6/24/2022 16:36	11.51
6/24/2022 17:08	-0.11	6/25/2022 15:58	1.81	6/25/2022 16:21	5.11	6/25/2022 17:44	-0.36	6/24/2022 16:37	11.52
6/24/2022 17:09	-0.09	6/25/2022 15:59	1.81	6/25/2022 16:22	5.08	6/25/2022 17:45	-0.36	6/24/2022 16:38	11.40
6/24/2022 17:10	-0.11	6/25/2022 16:00	1.81	6/25/2022 16:23	5.07	6/25/2022 17:46	-0.30	6/24/2022 16:39	11.51
6/24/2022 17:11	-0.11	6/25/2022 16:01	1.81	6/25/2022 16:24	5.07	6/25/2022 17:47	-0.35	6/24/2022 16:40	11.49
6/24/2022 17:12	-0.11	6/25/2022 16:02	1.82	6/25/2022 16:25	5.06	6/25/2022 17:48	-0.33	6/24/2022 16:41	11.49
6/24/2022 17:13	-0.11	6/25/2022 16:03	1.81	6/25/2022 16:26	5.09	6/25/2022 17:49	-0.32	6/24/2022 16:42	11.50
6/24/2022 17:14	-0.11	6/25/2022 16:04	1.81	6/25/2022 16:27	5.11	6/25/2022 17:50	-0.30	6/24/2022 16:43	11.49
6/24/2022 17:15	-0.11	6/25/2022 16:05	1.81	6/25/2022 16:28	5.09	6/25/2022 17:51	-0.36	6/24/2022 16:44	11.47
6/24/2022 17:16	-0.09	6/25/2022 16:06	1.81	6/25/2022 16:29	5.09	6/25/2022 17:52	-0.37	6/24/2022 16:45	11.46
6/24/2022 17:17	-0.09	6/25/2022 16:07	1.81	6/25/2022 16:30	5.08	6/25/2022 17:53	-0.36	6/24/2022 16:46	11.54
6/24/2022 17:18	-0.09	6/25/2022 16:08	1.81	6/25/2022 16:31	5.05	6/25/2022 17:54	-0.32	6/24/2022 16:47	11.48
6/24/2022 17:19	-0.11	6/25/2022 16:09	1.81	6/25/2022 16:32	5.06	6/25/2022 17:55	-0.35	6/24/2022 16:48	11.48
6/24/2022 17:20	-0.11	6/25/2022 16:10	1.81	6/25/2022 16:33	5.08	6/25/2022 17:56	-0.29	6/24/2022 16:49	11.51
6/24/2022 17:21	-0.11	6/25/2022 16:11	1.81	6/25/2022 16:34	5.04	6/25/2022 17:57	-0.37	6/24/2022 16:50	11.49
6/24/2022 17:22	-0.09	6/25/2022 16:12	1.81	6/25/2022 16:35	5.04	6/25/2022 17:58	-0.36	6/24/2022 16:51	11.49
6/24/2022 17:23	-0.09	6/25/2022 16:13	1.81	6/25/2022 16:36	5.09	6/25/2022 17:59	-0.37	6/24/2022 16:52	11.48
6/24/2022 17:24	-0.09	6/25/2022 16:14	1.81	6/25/2022 16:37	5.08	6/25/2022 18:00	-0.35	6/24/2022 16:53	11.47
6/24/2022 17:25	-0.10	6/25/2022 16:15	1.81	6/25/2022 16:38	5.05	6/25/2022 18:01	-0.34	6/24/2022 16:54	11.50
6/24/2022 17:26	-0.11	6/25/2022 16:16	1.81	6/25/2022 16:39	5.03	6/25/2022 18:02	-0.33	6/24/2022 16:55	11.49
6/24/2022 17:27	-0.11	6/25/2022 16:17	1.81	6/25/2022 16:40	5.04	6/25/2022 18:03	-0.36	6/24/2022 16:56	11.51
6/24/2022 17:28	-0.09	6/25/2022 16:18	1.80	6/25/2022 16:41	5.05	6/25/2022 18:04	-0.37	6/24/2022 16:57	11.48
6/24/2022 17:29	-0.09	6/25/2022 16:19	1.81	6/25/2022 16:42	5.08	6/25/2022 18:05	-0.33	6/24/2022 16:58	11.48
6/24/2022 17:30	-0.09	6/25/2022 16:20	1.81	6/25/2022 16:43	5.09	6/25/2022 18:06	-0.39	6/24/2022 16:59	11.50
6/24/2022 17:31	-0.09	6/25/2022 16:21	1.81	6/25/2022 16:44	5.12	6/25/2022 18:07	-0.38	6/24/2022 17:00	11.50
6/24/2022 17:32	-0.09	6/25/2022 16:22	1.81	6/25/2022 16:45	5.10	6/25/2022 18:08	-0.37	6/24/2022 17:01	11.49
6/24/2022 17:33	-0.11	6/25/2022 16:23	1.81	6/25/2022 16:46	5.13	6/25/2022 18:09	-0.36	6/24/2022 17:02	11.50
6/24/2022 17:34	-0.11	6/25/2022 16:24	1.81	6/25/2022 16:47	5.07	6/25/2022 18:10	-0.37	6/24/2022 17:03	11.51
6/24/2022 17:35	-0.09	6/25/2022 16:25	1.81	6/25/2022 16:48	5.12	6/25/2022 18:11	-0.36	6/24/2022 17:04	11.49
6/24/2022 17:36	-0.11	6/25/2022 16:26	1.81	6/25/2022 16:49	5.09	6/25/2022 18:12	-0.32	6/24/2022 17:05	11.49
6/24/2022 17:37	-0.11	6/25/2022 16:27	1.80	6/25/2022 16:50	5.05	6/25/2022 18:13	-0.34	6/24/2022 17:06	11.47
6/24/2022 17:38	-0.11	6/25/2022 16:28	1.81	6/25/2022 16:51	5.08	6/25/2022 18:14	-0.36	6/24/2022 17:07	11.52
6/24/2022 17:39	-0.10	6/25/2022 16:29	1.80	6/25/2022 16:52	5.06	6/25/2022 18:15	-0.33	6/24/2022 17:08	11.49
6/24/2022 17:40	-0.11	6/25/2022 16:30	1.80	6/25/2022 16:53	5.05	6/25/2022 18:16	-0.36	6/24/2022 17:09	11.46
6/24/2022 17:41	-0.10	6/25/2022 16:31	1.81	6/25/2022 16:54	5.08	6/25/2022 18:17	-0.36	6/24/2022 17:10	11.51
6/24/2022 17:42	-0.11	6/25/2022 16:32	1.81	6/25/2022 16:55	5.08	6/25/2022 18:18	-0.39	6/24/2022 17:11	11.50
6/24/2022 17:43	-0.11	6/25/2022 16:33	1.80	6/25/2022 16:56	5.06	6/25/2022 18:19	-0.32	6/24/2022 17:12	11.50
6/24/2022 17:44	-0.09	6/25/2022 16:34	1.80	6/25/2022 16:57	5.07	6/25/2022 18:20	-0.34	6/24/2022 17:13	11.50

6/24/2022 17:45	-0.11	6/25/2022 16:35	1.80	6/25/2022 16:58	5.05	6/25/2022 18:21	-0.34	6/24/2022 17:14	11.46
6/24/2022 17:46	-0.11	6/25/2022 16:36	1.80	6/25/2022 16:59	5.07	6/25/2022 18:22	-0.36	6/24/2022 17:15	11.47
6/24/2022 17:47	-0.09	6/25/2022 16:37	1.80	6/25/2022 17:00	5.08	6/25/2022 18:23	-0.36	6/24/2022 17:16	11.46
6/24/2022 17:48	-0.09	6/25/2022 16:38	1.80	6/25/2022 17:01	5.05	6/25/2022 18:24	-0.35	6/24/2022 17:17	11.50
6/24/2022 17:49	-0.11	6/25/2022 16:39	1.80	6/25/2022 17:02	5.07	6/25/2022 18:25	-0.39	6/24/2022 17:18	11.49
6/24/2022 17:50	-0.09	6/25/2022 16:40	1.80	6/25/2022 17:03	5.10	6/25/2022 18:26	-0.35	6/24/2022 17:19	11.51
6/24/2022 17:51	-0.09	6/25/2022 16:41	1.80	6/25/2022 17:04	5.08	6/25/2022 18:27	-0.37	6/24/2022 17:20	11.53
6/24/2022 17:52	-0.09	6/25/2022 16:42	1.80	6/25/2022 17:05	5.08	6/25/2022 18:28	-0.34	6/24/2022 17:21	11.49
6/24/2022 17:53	-0.09	6/25/2022 16:43	1.80	6/25/2022 17:06	5.11	6/25/2022 18:29	-0.34	6/24/2022 17:22	11.49
6/24/2022 17:54	-0.09	6/25/2022 16:44	1.80	6/25/2022 17:07	5.07	6/25/2022 18:30	-0.35	6/24/2022 17:23	11.49
6/24/2022 17:55	-0.09	6/25/2022 16:45	1.80	6/25/2022 17:08	5.06	6/25/2022 18:31	-0.36	6/24/2022 17:24	11.49
6/24/2022 17:56	-0.09	6/25/2022 16:46	1.80	6/25/2022 17:09	5.07	6/25/2022 18:32	-0.36	6/24/2022 17:25	11.50
6/24/2022 17:57	-0.11	6/25/2022 16:47	1.80	6/25/2022 17:10	5.06	6/25/2022 18:33	-0.34	6/24/2022 17:26	11.54
6/24/2022 17:58	-0.09	6/25/2022 16:48	1.81	6/25/2022 17:11	5.06	6/25/2022 18:34	-0.35	6/24/2022 17:27	11.51
6/24/2022 17:59	-0.11	6/25/2022 16:49	1.80	6/25/2022 17:12	5.06	6/25/2022 18:35	-0.36	6/24/2022 17:28	11.49
6/24/2022 18:00	-0.11	6/25/2022 16:50	1.80	6/25/2022 17:13	5.05	6/25/2022 18:36	-0.35	6/24/2022 17:29	11.47
6/24/2022 18:01	-0.09	6/25/2022 16:51	1.80	6/25/2022 17:14	5.08	6/25/2022 18:37	-0.35	6/24/2022 17:30	11.53
6/24/2022 18:02	-0.10	6/25/2022 16:52	1.80	6/25/2022 17:15	5.07	6/25/2022 18:38	-0.38	6/24/2022 17:31	11.50
6/24/2022 18:03	-0.09	6/25/2022 16:53	1.80	6/25/2022 17:16	5.07	6/25/2022 18:39	-0.34	6/24/2022 17:32	11.54
6/24/2022 18:04	-0.11	6/25/2022 16:54	1.80	6/25/2022 17:17	5.09	6/25/2022 18:40	-0.34	6/24/2022 17:33	11.48
6/24/2022 18:05	-0.09	6/25/2022 16:55	1.80	6/25/2022 17:18	5.06	6/25/2022 18:41	-0.33	6/24/2022 17:34	11.45
6/24/2022 18:06	-0.09	6/25/2022 16:56	1.80	6/25/2022 17:19	5.09	6/25/2022 18:42	-0.33	6/24/2022 17:35	11.46
6/24/2022 18:07	-0.11	6/25/2022 16:57	1.80	6/25/2022 17:20	5.05	6/25/2022 18:43	-0.37	6/24/2022 17:36	11.43
6/24/2022 18:08	-0.11	6/25/2022 16:58	1.80	6/25/2022 17:21	5.06	6/25/2022 18:44	-0.35	6/24/2022 17:37	11.50
6/24/2022 18:09	-0.11	6/25/2022 16:59	1.80	6/25/2022 17:22	5.07	6/25/2022 18:45	-0.38	6/24/2022 17:38	11.45
6/24/2022 18:10	-0.09	6/25/2022 17:00	1.80	6/25/2022 17:23	5.07	6/25/2022 18:46	-0.35	6/24/2022 17:39	11.48
6/24/2022 18:11	-0.09	6/25/2022 17:01	1.80	6/25/2022 17:24	5.06	6/25/2022 18:47	-0.39	6/24/2022 17:40	11.52
6/24/2022 18:12	-0.10	6/25/2022 17:02	1.80	6/25/2022 17:25	5.06	6/25/2022 18:48	-0.34	6/24/2022 17:41	11.50
6/24/2022 18:13	-0.09	6/25/2022 17:03	1.80	6/25/2022 17:26	5.03	6/25/2022 18:49	-0.35	6/24/2022 17:42	11.48
6/24/2022 18:14	-0.11	6/25/2022 17:04	1.80	6/25/2022 17:27	5.08	6/25/2022 18:50	-0.34	6/24/2022 17:43	11.45
6/24/2022 18:15	-0.09	6/25/2022 17:05	1.80	6/25/2022 17:28	5.04	6/25/2022 18:51	-0.34	6/24/2022 17:44	11.50
6/24/2022 18:16	-0.11	6/25/2022 17:06	1.80	6/25/2022 17:29	5.04	6/25/2022 18:52	-0.34	6/24/2022 17:45	11.44
6/24/2022 18:17	-0.11	6/25/2022 17:07	1.80	6/25/2022 17:30	5.09	6/25/2022 18:53	-0.31	6/24/2022 17:46	11.45
6/24/2022 18:18	-0.10	6/25/2022 17:08	1.80	6/25/2022 17:31	5.07	6/25/2022 18:54	-0.36	6/24/2022 17:47	11.46
6/24/2022 18:19	-0.11	6/25/2022 17:09	1.80	6/25/2022 17:32	5.03	6/25/2022 18:55	-0.37	6/24/2022 17:48	11.52
6/24/2022 18:20	-0.09	6/25/2022 17:10	1.80	6/25/2022 17:33	5.08	6/25/2022 18:56	-0.37	6/24/2022 17:49	11.50
6/24/2022 18:21	-0.09	6/25/2022 17:11	1.80	6/25/2022 17:34	5.04	6/25/2022 18:57	-0.39	6/24/2022 17:50	11.50
6/24/2022 18:22	-0.09	6/25/2022 17:12	1.80	6/25/2022 17:35	5.04	6/25/2022 18:58	-0.36	6/24/2022 17:51	11.46
6/24/2022 18:23	-0.09	6/25/2022 17:13	1.80	6/25/2022 17:36	5.06	6/25/2022 18:59	-0.34	6/24/2022 17:52	11.48
6/24/2022 18:24	-0.09	6/25/2022 17:14	1.80	6/25/2022 17:37	5.03	6/25/2022 19:00	-0.37	6/24/2022 17:53	11.51
6/24/2022 18:25	-0.09	6/25/2022 17:15	1.80	6/25/2022 17:38	5.05	6/25/2022 19:01	-0.34	6/24/2022 17:54	11.48
6/24/2022 18:26	-0.11	6/25/2022 17:16	1.80	6/25/2022 17:39	5.07	6/25/2022 19:02	-0.33	6/24/2022 17:55	11.45
6/24/2022 18:27	-0.11	6/25/2022 17:17	1.80	6/25/2022 17:40	5.07	6/25/2022 19:03	-0.34	6/24/2022 17:56	11.50
6/24/2022 18:28	-0.10	6/25/2022 17:18	1.80	6/25/2022 17:41	5.07	6/25/2022 19:04	-0.37	6/24/2022 17:57	11.50
6/24/2022 18:29	-0.11	6/25/2022 17:19	1.80	6/25/2022 17:42	5.05	6/25/2022 19:05	-0.38	6/24/2022 17:58	11.53
6/24/2022 18:30	-0.09	6/25/2022 17:20	1.79	6/25/2022 17:43	5.07	6/25/2022 19:06	-0.35	6/24/2022 17:59	11.46
6/24/2022 18:31	-0.09	6/25/2022 17:21	1.80	6/25/2022 17:44	5.09	6/25/2022 19:07	-0.34	6/24/2022 18:00	11.48
6/24/2022 18:32	-0.11	6/25/2022 17:22	1.80	6/25/2022 17:45	5.10	6/25/2022 19:08	-0.35	6/24/2022 18:01	11.53
6/24/2022 18:33	-0.09	6/25/2022 17:23	1.80	6/25/2022 17:46	5.06	6/25/2022 19:09	-0.36	6/24/2022 18:02	11.50
6/24/2022 18:34	-0.09	6/25/2022 17:24	1.80	6/25/2022 17:47	5.05	6/25/2022 19:10	-0.38	6/24/2022 18:03	11.50
6/24/2022 18:35	-0.11	6/25/2022 17:25	1.80	6/25/2022 17:48	5.08	6/25/2022 19:11	-0.32	6/24/2022 18:04	11.45
6/24/2022 18:36	-0.11	6/25/2022 17:26	1.80	6/25/2022 17:49	5.07	6/25/2022 19:12	-0.36	6/24/2022 18:05	11.52
6/24/2022 18:37	-0.09	6/25/2022 17:27	1.80	6/25/2022 17:50	5.07	6/25/2022 19:13	-0.35	6/24/2022 18:06	11.51
6/24/2022 18:38	-0.09	6/25/2022 17:28	1.80	6/25/2022 17:51	5.05	6/25/2022 19:14	-0.34	6/24/2022 18:07	11.51
6/24/2022 18:39	-0.09	6/25/2022 17:29	1.80	6/25/2022 17:52	5.05	6/25/2022 19:15	-0.35	6/24/2022 18:08	11.46
6/24/2022 18:40	-0.09	6/25/2022 17:30	1.80	6/25/2022 17:53	5.03	6/25/2022 19:16	-0.37	6/24/2022 18:09	11.48
6/24/2022 18:41	-0.09	6/25/2022 17:31	1.80	6/25/2022 17:54	5.06	6/25/2022 19:17	-0.35	6/24/2022 18:10	11.49
6/24/2022 18:42	-0.09	6/25/2022 17:32	1.80	6/25/2022 17:55	5.08	6/25/2022 19:18	-0.37	6/24/2022 18:11	11.49
6/24/2022 18:43	-0.09	6/25/2022 17:33	1.80	6/25/2022 17:56	5.08	6/25/2022 19:19	-0.38	6/24/2022 18:12	11.49
6/24/2022 18:44	-0.09	6/25/2022 17:34	1.80	6/25/2022 17:57	5.06	6/25/2022 19:20	-0.36	6/24/2022 18:13	11.45
6/24/2022 18:45	-0.09	6/25/2022 17:35	1.79	6/25/2022 17:58	5.03	6/25/2022 19:21	-0.36	6/24/2022 18:14	11.45
6/24/2022 18:46	-0.11	6/25/2022 17:36	1.79	6/25/2022 17:59	5.04	6/25/2022 19:22	-0.35	6/24/2022 18:15	11.52
6/24/2022 18:47	-0.11	6/25/2022 17:37	1.79	6/25/2022 18:00	5.05	6/25/2022 19:23	-0.33	6/24/2022 18:16	11.47
6/24/2022 18:48	-0.09	6/25/2022 17:38	1.80	6/25/2022 18:01	5.05	6/25/2022 19:24	-0.35	6/24/2022 18:17	11.53
6/24/2022 18:49	-0.09	6/25/2022 17:39	1.80	6/25/2022 18:02	5.08	6/25/2022 19:25	-0.32	6/24/2022 18:18	11.51
6/24/2022 18:50	-0.11	6/25/2022 17:40	1.80	6/25/2022 18:03	5.06	6/25/2022 19:26	-0.35	6/24/2022 18:19	11.51
6/24/2022 18:51	-0.09	6/25/2022 17:41	1.79	6/25/2022 18:04	5.05	6/25/2022 19:27	-0.36	6/24/2022 18:20	11.52
6/24/2022 18:52	-0.11	6/25/2022 17:42	1.80	6/25/2022 18:05	5.04	6/25/2022 19:28	-0.35	6/24/2022 18:21	11.53
6/24/2022 18:53	-0.09	6/25/2022 17:43	1.80	6/25/2022 18:06	5.04	6/25/2022 19:29	-0.38	6/24/2022 18:22	11.50
6/24/2022 18:54	-0.09	6/25/2022 17:44	1.79	6/25/2022 18:07	5.03	6/25/2022 19:30	-0.36	6/24/2022 18:23	11.50
6/24/2022 18:55	-0.09	6/25/2022 17:45	1.79	6/25/2022 18:08	5.04	6/25/2022 19:31	-0.34	6/24/2022 18:24	11.46
6/24/2022 18:56	-0.09	6/25/2022 17:46	1.79	6/25/2022 18:09	5.06	6/25/2022 19:32	-0.37	6/24/2022 18:25	11.48
6/24/2022 18:57	-0.09	6/25/2022 17:47	1.80	6/25/2022 18:10	5.05	6/25/2022 19:33	-0.35	6/24/2022 18:26	11.50
6/24/2022 18:58	-0.11	6/25/2022 17:48	1.80	6/25/2022 18:11	5.07	6/25/2022 19:34	-0.33	6/24/2022 18:27	11.47
6/24/2022 18:59	-0.09	6/25/2022 17:49	1.79	6/25/2022 18:12	5.07	6/25/2022 19:35	-0.35	6/24/2022 18:28	11.47
6/24/2022 19:00	-0.09	6/25/2022 17:50	1.79	6/25/2022 18:13	5.05	6/25/2022 19:36	-0.36	6/24/2022 18:29	11.52
6/24/2022 19:01	-0.09	6/25/2022 17:51	1.79	6/25/2022 18:14	5.04	6/25/2022 19:37	-0.33	6/24/2022 18:30	11.47
6/24/2022 19:02	-0.09	6/25/2022 17:52	1.79	6/25/2022 18:15	5.06	6/25/2022 19:38	-0.39	6/24/2022 18:31	11.50
6/24/2022 19:03	-0.09	6/25/2022 17:53	1.79	6/25/2022 18:16	5.07	6/25/2022 19:39	-0.32	6/24/2022 18:32	11.48
6/24/2022 19:04	-0.09	6/25/2022 17:54	1.80	6/25/2022 18:17	5.03	6/25/2022 19:40	-0.33	6/24/2022 18:33	11.52
6/24/2022 19:05	-0.09	6/25/2022 17:55	1.79	6/25/2022 18:18	5.09	6/25/2022 19:41	-0.35	6/24/2022 18:34	11.46
6/24/2022 19:06	-0.09	6/25/2022 17:56	1.79	6/25/2022 18:19	5.05	6/25/2022 19:42	-0.34	6/24/2022 18:35	11.50
6/24/2022 19:07	-0.09	6/25/2022 17:57	1.79	6/25/2022 18:20	5.08	6/25/2022 19:43	-0.34	6/24/2022 18:36	11.50
6/24/2022 19:08	-0.11	6/25/2022 17:58	1.79	6/25/2022 18:21	5.02	6/25/2022 19:44	-0.37	6/24/2022 18:37	11.51
6/24/2022 19:09	-0.11	6/25/2022 17:59	1.79	6/25/2022 18:22	5.06	6/25/2022 19:45	-0.33	6/24/2022 18:38	11.41
6/24/2022 19:10	-0.09	6/25/2022 18:00	1.79	6/25/2022 18:23	5.04	6/25/2022 19:46	-0.35	6/24/2022 18:39	11.52
6/24/2022 19:11	-0.11	6/25/2022 18:01	1.79	6/25/2022 18:24	5.03	6/25/2022 19:47	-0.39	6/24/2022 18:40	11.48
6/24/2022 19:12	-0.09	6/25/2022 18:02	1.79	6/25/2022 18:25	5.05	6/25/2022 19:48	-0.37	6/24/2022 18:41	11.44

6/24/2022 19:13	-0.11	6/25/2022 18:03	1.79	6/25/2022 18:26	5.05	6/25/2022 19:49	-0.40	6/24/2022 18:42	11.45
6/24/2022 19:14	-0.09	6/25/2022 18:04	1.79	6/25/2022 18:27	5.04	6/25/2022 19:50	-0.36	6/24/2022 18:43	11.44
6/24/2022 19:15	-0.09	6/25/2022 18:05	1.79	6/25/2022 18:28	5.06	6/25/2022 19:51	-0.34	6/24/2022 18:44	11.47
6/24/2022 19:16	-0.10	6/25/2022 18:06	1.79	6/25/2022 18:29	5.05	6/25/2022 19:52	-0.33	6/24/2022 18:45	11.48
6/24/2022 19:17	-0.09	6/25/2022 18:07	1.80	6/25/2022 18:30	5.02	6/25/2022 19:53	-0.36	6/24/2022 18:46	11.53
6/24/2022 19:18	-0.09	6/25/2022 18:08	1.79	6/25/2022 18:31	5.05	6/25/2022 19:54	-0.37	6/24/2022 18:47	11.48
6/24/2022 19:19	-0.10	6/25/2022 18:09	1.79	6/25/2022 18:32	5.04	6/25/2022 19:55	-0.34	6/24/2022 18:48	11.44
6/24/2022 19:20	-0.09	6/25/2022 18:10	1.79	6/25/2022 18:33	5.04	6/25/2022 19:56	-0.34	6/24/2022 18:49	11.50
6/24/2022 19:21	-0.09	6/25/2022 18:11	1.79	6/25/2022 18:34	5.03	6/25/2022 19:57	-0.35	6/24/2022 18:50	11.49
6/24/2022 19:22	-0.09	6/25/2022 18:12	1.80	6/25/2022 18:35	5.02	6/25/2022 19:58	-0.35	6/24/2022 18:51	11.46
6/24/2022 19:23	-0.09	6/25/2022 18:13	1.79	6/25/2022 18:36	5.05	6/25/2022 19:59	-0.35	6/24/2022 18:52	11.52
6/24/2022 19:24	-0.11	6/25/2022 18:14	1.79	6/25/2022 18:37	5.04	6/25/2022 20:00	-0.38	6/24/2022 18:53	11.48
6/24/2022 19:25	-0.09	6/25/2022 18:15	1.79	6/25/2022 18:38	5.06	6/25/2022 20:01	-0.36	6/24/2022 18:54	11.45
6/24/2022 19:26	-0.09	6/25/2022 18:16	1.79	6/25/2022 18:39	5.05	6/25/2022 20:02	-0.37	6/24/2022 18:55	11.45
6/24/2022 19:27	-0.11	6/25/2022 18:17	1.79	6/25/2022 18:40	5.04	6/25/2022 20:03	-0.34	6/24/2022 18:56	11.44
6/24/2022 19:28	-0.09	6/25/2022 18:18	1.79	6/25/2022 18:41	5.03	6/25/2022 20:04	-0.37	6/24/2022 18:57	11.51
6/24/2022 19:29	-0.09	6/25/2022 18:19	1.79	6/25/2022 18:42	5.04	6/25/2022 20:05	-0.37	6/24/2022 18:58	11.51
6/24/2022 19:30	-0.11	6/25/2022 18:20	1.79	6/25/2022 18:43	5.04	6/25/2022 20:06	-0.35	6/24/2022 18:59	11.48
6/24/2022 19:31	-0.09	6/25/2022 18:21	1.79	6/25/2022 18:44	5.04	6/25/2022 20:07	-0.37	6/24/2022 19:00	11.47
6/24/2022 19:32	-0.09	6/25/2022 18:22	1.79	6/25/2022 18:45	5.04	6/25/2022 20:08	-0.36	6/24/2022 19:01	11.46
6/24/2022 19:33	-0.09	6/25/2022 18:23	1.79	6/25/2022 18:46	5.06	6/25/2022 20:09	-0.38	6/24/2022 19:02	11.47
6/24/2022 19:34	-0.09	6/25/2022 18:24	1.79	6/25/2022 18:47	5.05	6/25/2022 20:10	-0.36	6/24/2022 19:03	11.53
6/24/2022 19:35	-0.09	6/25/2022 18:25	1.79	6/25/2022 18:48	5.00	6/25/2022 20:11	-0.35	6/24/2022 19:04	11.48
6/24/2022 19:36	-0.09	6/25/2022 18:26	1.79	6/25/2022 18:49	5.01	6/25/2022 20:12	-0.35	6/24/2022 19:05	11.50
6/24/2022 19:37	-0.11	6/25/2022 18:27	1.79	6/25/2022 18:50	5.04	6/25/2022 20:13	-0.35	6/24/2022 19:06	11.49
6/24/2022 19:38	-0.11	6/25/2022 18:28	1.79	6/25/2022 18:51	5.05	6/25/2022 20:14	-0.35	6/24/2022 19:07	11.48
6/24/2022 19:39	-0.11	6/25/2022 18:29	1.79	6/25/2022 18:52	5.03	6/25/2022 20:15	-0.35	6/24/2022 19:08	11.52
6/24/2022 19:40	-0.11	6/25/2022 18:30	1.79	6/25/2022 18:53	5.03	6/25/2022 20:16	-0.37	6/24/2022 19:09	11.43
6/24/2022 19:41	-0.11	6/25/2022 18:31	1.79	6/25/2022 18:54	5.04	6/25/2022 20:17	-0.34	6/24/2022 19:10	11.45
6/24/2022 19:42	-0.10	6/25/2022 18:32	1.79	6/25/2022 18:55	5.05	6/25/2022 20:18	-0.35	6/24/2022 19:11	11.43
6/24/2022 19:43	-0.09	6/25/2022 18:33	1.79	6/25/2022 18:56	5.01	6/25/2022 20:19	-0.37	6/24/2022 19:12	11.52
6/24/2022 19:44	-0.11	6/25/2022 18:34	1.79	6/25/2022 18:57	5.04	6/25/2022 20:20	-0.33	6/24/2022 19:13	11.45
6/24/2022 19:45	-0.11	6/25/2022 18:35	1.79	6/25/2022 18:58	5.04	6/25/2022 20:21	-0.35	6/24/2022 19:14	11.46
6/24/2022 19:46	-0.11	6/25/2022 18:36	1.79	6/25/2022 18:59	5.08	6/25/2022 20:22	-0.34	6/24/2022 19:15	11.48
6/24/2022 19:47	-0.11	6/25/2022 18:37	1.79	6/25/2022 19:00	5.04	6/25/2022 20:23	-0.34	6/24/2022 19:16	11.43
6/24/2022 19:48	-0.10	6/25/2022 18:38	1.79	6/25/2022 19:01	5.07	6/25/2022 20:24	-0.31	6/24/2022 19:17	11.43
6/24/2022 19:49	-0.10	6/25/2022 18:39	1.79	6/25/2022 19:02	5.07	6/25/2022 20:25	-0.34	6/24/2022 19:18	11.44
6/24/2022 19:50	-0.11	6/25/2022 18:40	1.79	6/25/2022 19:03	5.07	6/25/2022 20:26	-0.35	6/24/2022 19:19	11.50
6/24/2022 19:51	-0.10	6/25/2022 18:41	1.79	6/25/2022 19:04	5.06	6/25/2022 20:27	-0.35	6/24/2022 19:20	11.53
6/24/2022 19:52	-0.09	6/25/2022 18:42	1.79	6/25/2022 19:05	5.04	6/25/2022 20:28	-0.37	6/24/2022 19:21	11.50
6/24/2022 19:53	-0.11	6/25/2022 18:43	1.79	6/25/2022 19:06	5.06	6/25/2022 20:29	-0.42	6/24/2022 19:22	11.50
6/24/2022 19:54	-0.11	6/25/2022 18:44	1.79	6/25/2022 19:07	5.06	6/25/2022 20:30	-0.37	6/24/2022 19:23	11.48
6/24/2022 19:55	-0.09	6/25/2022 18:45	1.79	6/25/2022 19:08	5.00	6/25/2022 20:31	-0.37	6/24/2022 19:24	11.46
6/24/2022 19:56	-0.11	6/25/2022 18:46	1.79	6/25/2022 19:09	5.05	6/25/2022 20:32	-0.42	6/24/2022 19:25	11.46
6/24/2022 19:57	-0.09	6/25/2022 18:47	1.79	6/25/2022 19:10	5.04	6/25/2022 20:33	-0.36	6/24/2022 19:26	11.46
6/24/2022 19:58	-0.11	6/25/2022 18:48	1.79	6/25/2022 19:11	5.04	6/25/2022 20:34	-0.37	6/24/2022 19:27	11.48
6/24/2022 19:59	-0.09	6/25/2022 18:49	1.79	6/25/2022 19:12	5.05	6/25/2022 20:35	-0.38	6/24/2022 19:28	11.50
6/24/2022 20:00	-0.11	6/25/2022 18:50	1.79	6/25/2022 19:13	5.05	6/25/2022 20:36	-0.35	6/24/2022 19:29	11.46
6/24/2022 20:01	-0.09	6/25/2022 18:51	1.79	6/25/2022 19:14	5.05	6/25/2022 20:37	-0.38	6/24/2022 19:30	11.48
6/24/2022 20:02	-0.11	6/25/2022 18:52	1.79	6/25/2022 19:15	5.02	6/25/2022 20:38	-0.32	6/24/2022 19:31	11.44
6/24/2022 20:03	-0.10	6/25/2022 18:53	1.79	6/25/2022 19:16	5.06	6/25/2022 20:39	-0.36	6/24/2022 19:32	11.48
6/24/2022 20:04	-0.11	6/25/2022 18:54	1.79	6/25/2022 19:17	5.03	6/25/2022 20:40	-0.37	6/24/2022 19:33	11.45
6/24/2022 20:05	-0.09	6/25/2022 18:55	1.79	6/25/2022 19:18	5.07	6/25/2022 20:41	-0.36	6/24/2022 19:34	11.45
6/24/2022 20:06	-0.09	6/25/2022 18:56	1.79	6/25/2022 19:19	5.05	6/25/2022 20:42	-0.36	6/24/2022 19:35	11.46
6/24/2022 20:07	-0.10	6/25/2022 18:57	1.79	6/25/2022 19:20	5.03	6/25/2022 20:43	-0.34	6/24/2022 19:36	11.47
6/24/2022 20:08	-0.11	6/25/2022 18:58	1.79	6/25/2022 19:21	5.02	6/25/2022 20:44	-0.33	6/24/2022 19:37	11.45
6/24/2022 20:09	-0.11	6/25/2022 18:59	1.79	6/25/2022 19:22	5.03	6/25/2022 20:45	-0.33	6/24/2022 19:38	11.48
6/24/2022 20:10	-0.09	6/25/2022 19:00	1.79	6/25/2022 19:23	5.05	6/25/2022 20:46	-0.37	6/24/2022 19:39	11.47
6/24/2022 20:11	-0.11	6/25/2022 19:01	1.79	6/25/2022 19:24	5.04	6/25/2022 20:47	-0.35	6/24/2022 19:40	11.47
6/24/2022 20:12	-0.09	6/25/2022 19:02	1.78	6/25/2022 19:25	5.02	6/25/2022 20:48	-0.31	6/24/2022 19:41	11.47
6/24/2022 20:13	-0.11	6/25/2022 19:03	1.79	6/25/2022 19:26	5.04	6/25/2022 20:49	-0.35	6/24/2022 19:42	11.49
6/24/2022 20:14	-0.09	6/25/2022 19:04	1.78	6/25/2022 19:27	5.03	6/25/2022 20:50	-0.34	6/24/2022 19:43	11.47
6/24/2022 20:15	-0.09	6/25/2022 19:05	1.79	6/25/2022 19:28	5.00	6/25/2022 20:51	-0.35	6/24/2022 19:44	11.46
6/24/2022 20:16	-0.09	6/25/2022 19:06	1.81	6/25/2022 19:29	5.02	6/25/2022 20:52	-0.37	6/24/2022 19:45	11.46
6/24/2022 20:17	-0.11	6/25/2022 19:07	1.79	6/25/2022 19:30	5.07	6/25/2022 20:53	-0.38	6/24/2022 19:46	11.47
6/24/2022 20:18	-0.09	6/25/2022 19:08	1.79	6/25/2022 19:31	5.03	6/25/2022 20:54	-0.36	6/24/2022 19:47	11.46
6/24/2022 20:19	-0.11	6/25/2022 19:09	1.78	6/25/2022 19:32	5.06	6/25/2022 20:55	-0.32	6/24/2022 19:48	11.48
6/24/2022 20:20	-0.09	6/25/2022 19:10	1.79	6/25/2022 19:33	5.04	6/25/2022 20:56	-0.31	6/24/2022 19:49	11.49
6/24/2022 20:21	-0.09	6/25/2022 19:11	1.78	6/25/2022 19:34	5.05	6/25/2022 20:57	-0.36	6/24/2022 19:50	11.45
6/24/2022 20:22	-0.11	6/25/2022 19:12	1.79	6/25/2022 19:35	5.02	6/25/2022 20:58	-0.36	6/24/2022 19:51	11.50
6/24/2022 20:23	-0.09	6/25/2022 19:13	1.79	6/25/2022 19:36	5.01	6/25/2022 20:59	-0.36	6/24/2022 19:52	11.51
6/24/2022 20:24	-0.11	6/25/2022 19:14	1.78	6/25/2022 19:37	5.05	6/25/2022 21:00	-0.35	6/24/2022 19:53	11.46
6/24/2022 20:25	-0.11	6/25/2022 19:15	1.78	6/25/2022 19:38	5.03	6/25/2022 21:01	-0.37	6/24/2022 19:54	11.49
6/24/2022 20:26	-0.11	6/25/2022 19:16	1.78	6/25/2022 19:39	5.00	6/25/2022 21:02	-0.36	6/24/2022 19:55	11.48
6/24/2022 20:27	-0.11	6/25/2022 19:17	1.78	6/25/2022 19:40	5.05	6/25/2022 21:03	-0.35	6/24/2022 19:56	11.47
6/24/2022 20:28	-0.11	6/25/2022 19:18	1.78	6/25/2022 19:41	5.05	6/25/2022 21:04	-0.37	6/24/2022 19:57	11.50
6/24/2022 20:29	-0.10	6/25/2022 19:19	1.78	6/25/2022 19:42	5.06	6/25/2022 21:05	-0.37	6/24/2022 19:58	11.49
6/24/2022 20:30	-0.10	6/25/2022 19:20	1.78	6/25/2022 19:43	5.01	6/25/2022 21:06	-0.38	6/24/2022 19:59	11.46
6/24/2022 20:31	-0.09	6/25/2022 19:21	1.78	6/25/2022 19:44	5.03	6/25/2022 21:07	-0.39	6/24/2022 20:00	11.50
6/24/2022 20:32	-0.10	6/25/2022 19:22	1.79	6/25/2022 19:45	5.05	6/25/2022 21:08	-0.39	6/24/2022 20:01	11.47
6/24/2022 20:33	-0.11	6/25/2022 19:23	1.78	6/25/2022 19:46	5.05	6/25/2022 21:09	-0.30	6/24/2022 20:02	11.54
6/24/2022 20:34	-0.11	6/25/2022 19:24	1.78	6/25/2022 19:47	5.01	6/25/2022 21:10	-0.37	6/24/2022 20:03	11.48
6/24/2022 20:35	-0.09	6/25/2022 19:25	1.78	6/25/2022 19:48	5.02	6/25/2022 21:11	-0.37	6/24/2022 20:04	11.51
6/24/2022 20:36	-0.11	6/25/2022 19:26	1.79	6/25/2022 19:49	5.04	6/25/2022 21:12	-0.34	6/24/2022 20:05	11.50
6/24/2022 20:37	-0.11	6/25/2022 19:27	1.78	6/25/2022 19:50	5.05	6/25/2022 21:13	-0.36	6/24/2022 20:06	11.49
6/24/2022 20:38	-0.11	6/25/2022 19:28	1.78	6/25/2022 19:51	5.04	6/25/2022 21:14	-0.34	6/24/2022 20:07	11.54
6/24/2022 20:39	-0.09	6/25/2022 19:29	1.78	6/25/2022 19:52	5.03	6/25/2022 21:15	-0.37	6/24/2022 20:08	11.49
6/24/2022 20:40	-0.09	6/25/2022 19:30	1.81	6/25/2022 19:53	5.02	6/25/2022 21:16	-0.35	6/24/2022 20:09	11.47

6/24/2022 20:41	-0.09	6/25/2022 19:31	1.78	6/25/2022 19:54	5.04	6/25/2022 21:17	-0.37	6/24/2022 20:10	11.45
6/24/2022 20:42	-0.11	6/25/2022 19:32	1.79	6/25/2022 19:55	5.03	6/25/2022 21:18	-0.36	6/24/2022 20:11	11.49
6/24/2022 20:43	-0.11	6/25/2022 19:33	1.78	6/25/2022 19:56	4.98	6/25/2022 21:19	-0.36	6/24/2022 20:12	11.49
6/24/2022 20:44	-0.09	6/25/2022 19:34	1.78	6/25/2022 19:57	5.05	6/25/2022 21:20	-0.38	6/24/2022 20:13	11.51
6/24/2022 20:45	-0.09	6/25/2022 19:35	1.78	6/25/2022 19:58	5.02	6/25/2022 21:21	-0.35	6/24/2022 20:14	11.46
6/24/2022 20:46	-0.11	6/25/2022 19:36	1.78	6/25/2022 19:59	5.04	6/25/2022 21:22	-0.33	6/24/2022 20:15	11.52
6/24/2022 20:47	-0.11	6/25/2022 19:37	1.78	6/25/2022 20:00	5.03	6/25/2022 21:23	-0.38	6/24/2022 20:16	11.51
6/24/2022 20:48	-0.11	6/25/2022 19:38	1.78	6/25/2022 20:01	5.02	6/25/2022 21:24	-0.37	6/24/2022 20:17	11.50
6/24/2022 20:49	-0.09	6/25/2022 19:39	1.78	6/25/2022 20:02	5.03	6/25/2022 21:25	-0.32	6/24/2022 20:18	11.48
6/24/2022 20:50	-0.11	6/25/2022 19:40	1.79	6/25/2022 20:03	5.01	6/25/2022 21:26	-0.35	6/24/2022 20:19	11.52
6/24/2022 20:51	-0.09	6/25/2022 19:41	1.78	6/25/2022 20:04	5.03	6/25/2022 21:27	-0.37	6/24/2022 20:20	11.47
6/24/2022 20:52	-0.11	6/25/2022 19:42	1.78	6/25/2022 20:05	5.04	6/25/2022 21:28	-0.34	6/24/2022 20:21	11.47
6/24/2022 20:53	-0.09	6/25/2022 19:43	1.78	6/25/2022 20:06	5.05	6/25/2022 21:29	-0.33	6/24/2022 20:22	11.49
6/24/2022 20:54	-0.11	6/25/2022 19:44	1.78	6/25/2022 20:07	5.04	6/25/2022 21:30	-0.34	6/24/2022 20:23	11.48
6/24/2022 20:55	-0.11	6/25/2022 19:45	1.78	6/25/2022 20:08	5.04	6/25/2022 21:31	-0.32	6/24/2022 20:24	11.49
6/24/2022 20:56	-0.11	6/25/2022 19:46	1.78	6/25/2022 20:09	5.03	6/25/2022 21:32	-0.38	6/24/2022 20:25	11.48
6/24/2022 20:57	-0.09	6/25/2022 19:47	1.78	6/25/2022 20:10	5.02	6/25/2022 21:33	-0.36	6/24/2022 20:26	11.50
6/24/2022 20:58	-0.11	6/25/2022 19:48	1.78	6/25/2022 20:11	5.03	6/25/2022 21:34	-0.36	6/24/2022 20:27	11.51
6/24/2022 20:59	-0.11	6/25/2022 19:49	1.78	6/25/2022 20:12	5.06	6/25/2022 21:35	-0.35	6/24/2022 20:28	11.46
6/24/2022 21:00	-0.09	6/25/2022 19:50	1.78	6/25/2022 20:13	5.05	6/25/2022 21:36	-0.33	6/24/2022 20:29	11.50
6/24/2022 21:01	-0.11	6/25/2022 19:51	1.78	6/25/2022 20:14	5.02	6/25/2022 21:37	-0.38	6/24/2022 20:30	11.47
6/24/2022 21:02	-0.09	6/25/2022 19:52	1.78	6/25/2022 20:15	5.05	6/25/2022 21:38	-0.38	6/24/2022 20:31	11.51
6/24/2022 21:03	-0.11	6/25/2022 19:53	1.78	6/25/2022 20:16	5.02	6/25/2022 21:39	-0.36	6/24/2022 20:32	11.47
6/24/2022 21:04	-0.11	6/25/2022 19:54	1.78	6/25/2022 20:17	5.01	6/25/2022 21:40	-0.37	6/24/2022 20:33	11.53
6/24/2022 21:05	-0.09	6/25/2022 19:55	1.78	6/25/2022 20:18	5.03	6/25/2022 21:41	-0.37	6/24/2022 20:34	11.44
6/24/2022 21:06	-0.09	6/25/2022 19:56	1.78	6/25/2022 20:19	5.04	6/25/2022 21:42	-0.29	6/24/2022 20:35	11.47
6/24/2022 21:07	-0.09	6/25/2022 19:57	1.78	6/25/2022 20:20	5.04	6/25/2022 21:43	-0.31	6/24/2022 20:36	11.47
6/24/2022 21:08	-0.11	6/25/2022 19:58	1.78	6/25/2022 20:21	5.03	6/25/2022 21:44	-0.34	6/24/2022 20:37	11.49
6/24/2022 21:09	-0.09	6/25/2022 19:59	1.78	6/25/2022 20:22	5.03	6/25/2022 21:45	-0.37	6/24/2022 20:38	11.47
6/24/2022 21:10	-0.09	6/25/2022 20:00	1.78	6/25/2022 20:23	5.03	6/25/2022 21:46	-0.35	6/24/2022 20:39	11.50
6/24/2022 21:11	-0.10	6/25/2022 20:01	1.78	6/25/2022 20:24	5.03	6/25/2022 21:47	-0.37	6/24/2022 20:40	11.50
6/24/2022 21:12	-0.11	6/25/2022 20:02	1.78	6/25/2022 20:25	5.02	6/25/2022 21:48	-0.36	6/24/2022 20:41	11.45
6/24/2022 21:13	-0.11	6/25/2022 20:03	1.78	6/25/2022 20:26	5.03	6/25/2022 21:49	-0.38	6/24/2022 20:42	11.48
6/24/2022 21:14	-0.11	6/25/2022 20:04	1.78	6/25/2022 20:27	5.04	6/25/2022 21:50	-0.32	6/24/2022 20:43	11.51
6/24/2022 21:15	-0.09	6/25/2022 20:05	1.78	6/25/2022 20:28	5.02	6/25/2022 21:51	-0.35	6/24/2022 20:44	11.49
6/24/2022 21:16	-0.09	6/25/2022 20:06	1.78	6/25/2022 20:29	5.01	6/25/2022 21:52	-0.33	6/24/2022 20:45	11.45
6/24/2022 21:17	-0.09	6/25/2022 20:07	1.78	6/25/2022 20:30	5.03	6/25/2022 21:53	-0.33	6/24/2022 20:46	11.47
6/24/2022 21:18	-0.09	6/25/2022 20:08	1.78	6/25/2022 20:31	5.02	6/25/2022 21:54	-0.35	6/24/2022 20:47	11.48
6/24/2022 21:19	-0.11	6/25/2022 20:09	1.78	6/25/2022 20:32	5.02	6/25/2022 21:55	-0.32	6/24/2022 20:48	11.51
6/24/2022 21:20	-0.09	6/25/2022 20:10	1.78	6/25/2022 20:33	5.04	6/25/2022 21:56	-0.35	6/24/2022 20:49	11.43
6/24/2022 21:21	-0.11	6/25/2022 20:11	1.78	6/25/2022 20:34	5.05	6/25/2022 21:57	-0.37	6/24/2022 20:50	11.46
6/24/2022 21:22	-0.09	6/25/2022 20:12	1.78	6/25/2022 20:35	5.03	6/25/2022 21:58	-0.35	6/24/2022 20:51	11.45
6/24/2022 21:23	-0.09	6/25/2022 20:13	1.78	6/25/2022 20:36	5.04	6/25/2022 21:59	-0.34	6/24/2022 20:52	11.46
6/24/2022 21:24	-0.10	6/25/2022 20:14	1.78	6/25/2022 20:37	5.01	6/25/2022 22:00	-0.34	6/24/2022 20:53	11.47
6/24/2022 21:25	-0.09	6/25/2022 20:15	1.78	6/25/2022 20:38	5.04	6/25/2022 22:01	-0.37	6/24/2022 20:54	11.53
6/24/2022 21:26	-0.09	6/25/2022 20:16	1.80	6/25/2022 20:39	5.02	6/25/2022 22:02	-0.36	6/24/2022 20:55	11.49
6/24/2022 21:27	-0.10	6/25/2022 20:17	1.78	6/25/2022 20:40	4.99	6/25/2022 22:03	-0.37	6/24/2022 20:56	11.45
6/24/2022 21:28	-0.09	6/25/2022 20:18	1.78	6/25/2022 20:41	5.02	6/25/2022 22:04	-0.39	6/24/2022 20:57	11.48
6/24/2022 21:29	-0.11	6/25/2022 20:19	1.78	6/25/2022 20:42	5.04	6/25/2022 22:05	-0.37	6/24/2022 20:58	11.47
6/24/2022 21:30	-0.11	6/25/2022 20:20	1.78	6/25/2022 20:43	5.00	6/25/2022 22:06	-0.36	6/24/2022 20:59	11.51
6/24/2022 21:31	-0.11	6/25/2022 20:21	1.78	6/25/2022 20:44	5.00	6/25/2022 22:07	-0.33	6/24/2022 21:00	11.51
6/24/2022 21:32	-0.09	6/25/2022 20:22	1.78	6/25/2022 20:45	5.03	6/25/2022 22:08	-0.35	6/24/2022 21:01	11.46
6/24/2022 21:33	-0.11	6/25/2022 20:23	1.78	6/25/2022 20:46	5.01	6/25/2022 22:09	-0.33	6/24/2022 21:02	11.49
6/24/2022 21:34	-0.11	6/25/2022 20:24	1.78	6/25/2022 20:47	5.02	6/25/2022 22:10	-0.37	6/24/2022 21:03	11.49
6/24/2022 21:35	-0.09	6/25/2022 20:25	1.78	6/25/2022 20:48	5.02	6/25/2022 22:11	-0.33	6/24/2022 21:04	11.52
6/24/2022 21:36	-0.11	6/25/2022 20:26	1.78	6/25/2022 20:49	5.02	6/25/2022 22:12	-0.40	6/24/2022 21:05	11.48
6/24/2022 21:37	-0.11	6/25/2022 20:27	1.78	6/25/2022 20:50	5.00	6/25/2022 22:13	-0.34	6/24/2022 21:06	11.52
6/24/2022 21:38	-0.11	6/25/2022 20:28	1.78	6/25/2022 20:51	5.02	6/25/2022 22:14	-0.37	6/24/2022 21:07	11.46
6/24/2022 21:39	-0.09	6/25/2022 20:29	1.78	6/25/2022 20:52	5.00	6/25/2022 22:15	-0.36	6/24/2022 21:08	11.49
6/24/2022 21:40	-0.11	6/25/2022 20:30	1.78	6/25/2022 20:53	5.03	6/25/2022 22:16	-0.38	6/24/2022 21:09	11.51
6/24/2022 21:41	-0.10	6/25/2022 20:31	1.78	6/25/2022 20:54	5.03	6/25/2022 22:17	-0.34	6/24/2022 21:10	11.48
6/24/2022 21:42	-0.11	6/25/2022 20:32	1.78	6/25/2022 20:55	5.03	6/25/2022 22:18	-0.33	6/24/2022 21:11	11.47
6/24/2022 21:43	-0.11	6/25/2022 20:33	1.78	6/25/2022 20:56	5.01	6/25/2022 22:19	-0.34	6/24/2022 21:12	11.47
6/24/2022 21:44	-0.11	6/25/2022 20:34	1.78	6/25/2022 20:57	5.02	6/25/2022 22:20	-0.35	6/24/2022 21:13	11.51
6/24/2022 21:45	-0.09	6/25/2022 20:35	1.78	6/25/2022 20:58	5.00	6/25/2022 22:21	-0.36	6/24/2022 21:14	11.43
6/24/2022 21:46	-0.11	6/25/2022 20:36	1.78	6/25/2022 20:59	5.02	6/25/2022 22:22	-0.37	6/24/2022 21:15	11.46
6/24/2022 21:47	-0.09	6/25/2022 20:37	1.78	6/25/2022 21:00	5.03	6/25/2022 22:23	-0.36	6/24/2022 21:16	11.50
6/24/2022 21:48	-0.09	6/25/2022 20:38	1.78	6/25/2022 21:01	4.99	6/25/2022 22:24	-0.38	6/24/2022 21:17	11.44
6/24/2022 21:49	-0.11	6/25/2022 20:39	1.78	6/25/2022 21:02	5.03	6/25/2022 22:25	-0.39	6/24/2022 21:18	11.48
6/24/2022 21:50	-0.09	6/25/2022 20:40	1.77	6/25/2022 21:03	5.01	6/25/2022 22:26	-0.39	6/24/2022 21:19	11.50
6/24/2022 21:51	-0.10	6/25/2022 20:41	1.78	6/25/2022 21:04	5.02	6/25/2022 22:27	-0.37	6/24/2022 21:20	11.50
6/24/2022 21:52	-0.11	6/25/2022 20:42	1.78	6/25/2022 21:05	5.02	6/25/2022 22:28	-0.37	6/24/2022 21:21	11.50
6/24/2022 21:53	-0.11	6/25/2022 20:43	1.78	6/25/2022 21:06	5.00	6/25/2022 22:29	-0.38	6/24/2022 21:22	11.48
6/24/2022 21:54	-0.09	6/25/2022 20:44	1.78	6/25/2022 21:07	5.02	6/25/2022 22:30	-0.39	6/24/2022 21:23	11.46
6/24/2022 21:55	-0.11	6/25/2022 20:45	1.78	6/25/2022 21:08	5.03	6/25/2022 22:31	-0.33	6/24/2022 21:24	11.51
6/24/2022 21:56	-0.11	6/25/2022 20:46	1.80	6/25/2022 21:09	5.03	6/25/2022 22:32	-0.36	6/24/2022 21:25	11.45
6/24/2022 21:57	-0.11	6/25/2022 20:47	1.78	6/25/2022 21:10	5.00	6/25/2022 22:33	-0.33	6/24/2022 21:26	11.52
6/24/2022 21:58	-0.11	6/25/2022 20:48	1.78	6/25/2022 21:11	5.04	6/25/2022 22:34	-0.35	6/24/2022 21:27	11.49
6/24/2022 21:59	-0.09	6/25/2022 20:49	1.78	6/25/2022 21:12	5.01	6/25/2022 22:35	-0.37	6/24/2022 21:28	11.43
6/24/2022 22:00	-0.11	6/25/2022 20:50	1.78	6/25/2022 21:13	4.98	6/25/2022 22:36	-0.37	6/24/2022 21:29	11.51
6/24/2022 22:01	-0.11	6/25/2022 20:51	1.77	6/25/2022 21:14	5.01	6/25/2022 22:37	-0.38	6/24/2022 21:30	11.48
6/24/2022 22:02	-0.09	6/25/2022 20:52	1.78	6/25/2022 21:15	5.02	6/25/2022 22:38	-0.36	6/24/2022 21:31	11.51
6/24/2022 22:03	-0.11	6/25/2022 20:53	1.77	6/25/2022 21:16	5.00	6/25/2022 22:39	-0.31	6/24/2022 21:32	11.48
6/24/2022 22:04	-0.11	6/25/2022 20:54	1.77	6/25/2022 21:17	4.99	6/25/2022 22:40	-0.36	6/24/2022 21:33	11.46
6/24/2022 22:05	-0.10	6/25/2022 20:55	1.78	6/25/2022 21:18	4.99	6/25/2022 22:41	-0.35	6/24/2022 21:34	11.50
6/24/2022 22:06	-0.09	6/25/2022 20:56	1.77	6/25/2022 21:19	5.04	6/25/2022 22:42	-0.38	6/24/2022 21:35	11.47
6/24/2022 22:07	-0.11	6/25/2022 20:57	1.78	6/25/2022 21:20	5.02	6/25/2022 22:43	-0.35	6/24/2022 21:36	11.45
6/24/2022 22:08	-0.09	6/25/2022 20:58	1.78	6/25/2022 21:21	5.04	6/25/2022 22:44	-0.36	6/24/2022 21:37	11.50

6/24/2022 22:09	-0.10	6/25/2022 20:59	1.78	6/25/2022 21:22	5.03	6/25/2022 22:45	-0.31	6/24/2022 21:38	11.48
6/24/2022 22:10	-0.11	6/25/2022 21:00	1.78	6/25/2022 21:23	5.04	6/25/2022 22:46	-0.37	6/24/2022 21:39	11.51
6/24/2022 22:11	-0.11	6/25/2022 21:01	1.78	6/25/2022 21:24	4.99	6/25/2022 22:47	-0.35	6/24/2022 21:40	11.48
6/24/2022 22:12	-0.10	6/25/2022 21:02	1.77	6/25/2022 21:25	5.00	6/25/2022 22:48	-0.36	6/24/2022 21:41	11.48
6/24/2022 22:13	-0.11	6/25/2022 21:03	1.78	6/25/2022 21:26	5.04	6/25/2022 22:49	-0.35	6/24/2022 21:42	11.47
6/24/2022 22:14	-0.11	6/25/2022 21:04	1.77	6/25/2022 21:27	5.01	6/25/2022 22:50	-0.38	6/24/2022 21:43	11.50
6/24/2022 22:15	-0.11	6/25/2022 21:05	1.78	6/25/2022 21:28	5.04	6/25/2022 22:51	-0.33	6/24/2022 21:44	11.47
6/24/2022 22:16	-0.11	6/25/2022 21:06	1.77	6/25/2022 21:29	5.01	6/25/2022 22:52	-0.40	6/24/2022 21:45	11.51
6/24/2022 22:17	-0.09	6/25/2022 21:07	1.77	6/25/2022 21:30	5.00	6/25/2022 22:53	-0.34	6/24/2022 21:46	11.51
6/24/2022 22:18	-0.11	6/25/2022 21:08	1.77	6/25/2022 21:31	5.02	6/25/2022 22:54	-0.40	6/24/2022 21:47	11.45
6/24/2022 22:19	-0.11	6/25/2022 21:09	1.77	6/25/2022 21:32	5.04	6/25/2022 22:55	-0.39	6/24/2022 21:48	11.43
6/24/2022 22:20	-0.11	6/25/2022 21:10	1.77	6/25/2022 21:33	5.02	6/25/2022 22:56	-0.35	6/24/2022 21:49	11.43
6/24/2022 22:21	-0.11	6/25/2022 21:11	1.78	6/25/2022 21:34	4.99	6/25/2022 22:57	-0.37	6/24/2022 21:50	11.48
6/24/2022 22:22	-0.11	6/25/2022 21:12	1.78	6/25/2022 21:35	5.03	6/25/2022 22:58	-0.36	6/24/2022 21:51	11.48
6/24/2022 22:23	-0.09	6/25/2022 21:13	1.77	6/25/2022 21:36	5.04	6/25/2022 22:59	-0.34	6/24/2022 21:52	11.50
6/24/2022 22:24	-0.10	6/25/2022 21:14	1.78	6/25/2022 21:37	5.01	6/25/2022 23:00	-0.39	6/24/2022 21:53	11.46
6/24/2022 22:25	-0.09	6/25/2022 21:15	1.77	6/25/2022 21:38	5.00	6/25/2022 23:01	-0.35	6/24/2022 21:54	11.38
6/24/2022 22:26	-0.09	6/25/2022 21:16	1.77	6/25/2022 21:39	5.00	6/25/2022 23:02	-0.36	6/24/2022 21:55	11.46
6/24/2022 22:27	-0.09	6/25/2022 21:17	1.77	6/25/2022 21:40	4.99	6/25/2022 23:03	-0.37	6/24/2022 21:56	11.49
6/24/2022 22:28	-0.10	6/25/2022 21:18	1.77	6/25/2022 21:41	5.00	6/25/2022 23:04	-0.38	6/24/2022 21:57	11.49
6/24/2022 22:29	-0.09	6/25/2022 21:19	1.78	6/25/2022 21:42	4.99	6/25/2022 23:05	-0.35	6/24/2022 21:58	11.46
6/24/2022 22:30	-0.09	6/25/2022 21:20	1.77	6/25/2022 21:43	5.02	6/25/2022 23:06	-0.36	6/24/2022 21:59	11.46
6/24/2022 22:31	-0.11	6/25/2022 21:21	1.78	6/25/2022 21:44	5.01	6/25/2022 23:07	-0.35	6/24/2022 22:00	11.46
6/24/2022 22:32	-0.09	6/25/2022 21:22	1.77	6/25/2022 21:45	5.03	6/25/2022 23:08	-0.34	6/24/2022 22:01	11.53
6/24/2022 22:33	-0.11	6/25/2022 21:23	1.78	6/25/2022 21:46	5.01	6/25/2022 23:09	-0.36	6/24/2022 22:02	11.52
6/24/2022 22:34	-0.09	6/25/2022 21:24	1.78	6/25/2022 21:47	5.02	6/25/2022 23:10	-0.36	6/24/2022 22:03	11.50
6/24/2022 22:35	-0.09	6/25/2022 21:25	1.77	6/25/2022 21:48	5.02	6/25/2022 23:11	-0.33	6/24/2022 22:04	11.53
6/24/2022 22:36	-0.11	6/25/2022 21:26	1.77	6/25/2022 21:49	5.00	6/25/2022 23:12	-0.37	6/24/2022 22:05	11.47
6/24/2022 22:37	-0.11	6/25/2022 21:27	1.77	6/25/2022 21:50	4.99	6/25/2022 23:13	-0.37	6/24/2022 22:06	11.48
6/24/2022 22:38	-0.11	6/25/2022 21:28	1.77	6/25/2022 21:51	5.03	6/25/2022 23:14	-0.37	6/24/2022 22:07	11.51
6/24/2022 22:39	-0.09	6/25/2022 21:29	1.77	6/25/2022 21:52	5.01	6/25/2022 23:15	-0.37	6/24/2022 22:08	11.52
6/24/2022 22:40	-0.11	6/25/2022 21:30	1.78	6/25/2022 21:53	4.99	6/25/2022 23:16	-0.33	6/24/2022 22:09	11.45
6/24/2022 22:41	-0.09	6/25/2022 21:31	1.77	6/25/2022 21:54	5.02	6/25/2022 23:17	-0.35	6/24/2022 22:10	11.49
6/24/2022 22:42	-0.10	6/25/2022 21:32	1.77	6/25/2022 21:55	4.97	6/25/2022 23:18	-0.36	6/24/2022 22:11	11.47
6/24/2022 22:43	-0.10	6/25/2022 21:33	1.77	6/25/2022 21:56	5.00	6/25/2022 23:19	-0.37	6/24/2022 22:12	11.50
6/24/2022 22:44	-0.11	6/25/2022 21:34	1.77	6/25/2022 21:57	5.02	6/25/2022 23:20	-0.35	6/24/2022 22:13	11.50
6/24/2022 22:45	-0.11	6/25/2022 21:35	1.77	6/25/2022 21:58	5.00	6/25/2022 23:21	-0.33	6/24/2022 22:14	11.46
6/24/2022 22:46	-0.09	6/25/2022 21:36	1.77	6/25/2022 21:59	5.05	6/25/2022 23:22	-0.36	6/24/2022 22:15	11.47
6/24/2022 22:47	-0.09	6/25/2022 21:37	1.77	6/25/2022 22:00	5.02	6/25/2022 23:23	-0.37	6/24/2022 22:16	11.52
6/24/2022 22:48	-0.09	6/25/2022 21:38	1.77	6/25/2022 22:01	4.99	6/25/2022 23:24	-0.36	6/24/2022 22:17	11.53
6/24/2022 22:49	-0.09	6/25/2022 21:39	1.77	6/25/2022 22:02	5.01	6/25/2022 23:25	-0.31	6/24/2022 22:18	11.49
6/24/2022 22:50	-0.09	6/25/2022 21:40	1.77	6/25/2022 22:03	4.99	6/25/2022 23:26	-0.34	6/24/2022 22:19	11.52
6/24/2022 22:51	-0.09	6/25/2022 21:41	1.77	6/25/2022 22:04	4.99	6/25/2022 23:27	-0.35	6/24/2022 22:20	11.50
6/24/2022 22:52	-0.09	6/25/2022 21:42	1.77	6/25/2022 22:05	5.00	6/25/2022 23:28	-0.35	6/24/2022 22:21	11.48
6/24/2022 22:53	-0.10	6/25/2022 21:43	1.78	6/25/2022 22:06	4.99	6/25/2022 23:29	-0.35	6/24/2022 22:22	11.45
6/24/2022 22:54	-0.10	6/25/2022 21:44	1.78	6/25/2022 22:07	5.01	6/25/2022 23:30	-0.35	6/24/2022 22:23	11.49
6/24/2022 22:55	-0.11	6/25/2022 21:45	1.77	6/25/2022 22:08	5.02	6/25/2022 23:31	-0.38	6/24/2022 22:24	11.53
6/24/2022 22:56	-0.10	6/25/2022 21:46	1.77	6/25/2022 22:09	5.04	6/25/2022 23:32	-0.37	6/24/2022 22:25	11.52
6/24/2022 22:57	-0.11	6/25/2022 21:47	1.77	6/25/2022 22:10	5.01	6/25/2022 23:33	-0.36	6/24/2022 22:26	11.48
6/24/2022 22:58	-0.11	6/25/2022 21:48	1.77	6/25/2022 22:11	5.01	6/25/2022 23:34	-0.34	6/24/2022 22:27	11.49
6/24/2022 22:59	-0.09	6/25/2022 21:49	1.77	6/25/2022 22:12	5.01	6/25/2022 23:35	-0.35	6/24/2022 22:28	11.47
6/24/2022 23:00	-0.09	6/25/2022 21:50	1.77	6/25/2022 22:13	5.00	6/25/2022 23:36	-0.35	6/24/2022 22:29	11.49
6/24/2022 23:01	-0.10	6/25/2022 21:51	1.77	6/25/2022 22:14	5.03	6/25/2022 23:37	-0.32	6/24/2022 22:30	11.48
6/24/2022 23:02	-0.11	6/25/2022 21:52	1.77	6/25/2022 22:15	4.99	6/25/2022 23:38	-0.35	6/24/2022 22:31	11.45
6/24/2022 23:03	-0.10	6/25/2022 21:53	1.77	6/25/2022 22:16	5.04	6/25/2022 23:39	-0.35	6/24/2022 22:32	11.52
6/24/2022 23:04	-0.11	6/25/2022 21:54	1.77	6/25/2022 22:17	5.00	6/25/2022 23:40	-0.35	6/24/2022 22:33	11.50
6/24/2022 23:05	-0.11	6/25/2022 21:55	1.77	6/25/2022 22:18	4.99	6/25/2022 23:41	-0.35	6/24/2022 22:34	11.50
6/24/2022 23:06	-0.11	6/25/2022 21:56	1.77	6/25/2022 22:19	4.99	6/25/2022 23:42	-0.37	6/24/2022 22:35	11.48
6/24/2022 23:07	-0.11	6/25/2022 21:57	1.77	6/25/2022 22:20	5.03	6/25/2022 23:43	-0.35	6/24/2022 22:36	11.51
6/24/2022 23:08	-0.11	6/25/2022 21:58	1.77	6/25/2022 22:21	5.03	6/25/2022 23:44	-0.33	6/24/2022 22:37	11.45
6/24/2022 23:09	-0.11	6/25/2022 21:59	1.77	6/25/2022 22:22	5.03	6/25/2022 23:45	-0.33	6/24/2022 22:38	11.50
6/24/2022 23:10	-0.09	6/25/2022 22:00	1.77	6/25/2022 22:23	4.98	6/25/2022 23:46	-0.32	6/24/2022 22:39	11.46
6/24/2022 23:11	-0.09	6/25/2022 22:01	1.77	6/25/2022 22:24	5.02	6/25/2022 23:47	-0.35	6/24/2022 22:40	11.49
6/24/2022 23:12	-0.09	6/25/2022 22:02	1.77	6/25/2022 22:25	5.05	6/25/2022 23:48	-0.35	6/24/2022 22:41	11.53
6/24/2022 23:13	-0.10	6/25/2022 22:03	1.77	6/25/2022 22:26	5.00	6/25/2022 23:49	-0.36	6/24/2022 22:42	11.50
6/24/2022 23:14	-0.10	6/25/2022 22:04	1.77	6/25/2022 22:27	4.98	6/25/2022 23:50	-0.36	6/24/2022 22:43	11.50
6/24/2022 23:15	-0.10	6/25/2022 22:05	1.77	6/25/2022 22:28	4.99	6/25/2022 23:51	-0.37	6/24/2022 22:44	11.49
6/24/2022 23:16	-0.10	6/25/2022 22:06	1.77	6/25/2022 22:29	5.00	6/25/2022 23:52	-0.40	6/24/2022 22:45	11.48
6/24/2022 23:17	-0.09	6/25/2022 22:07	1.77	6/25/2022 22:30	5.05	6/25/2022 23:53	-0.35	6/24/2022 22:46	11.49
6/24/2022 23:18	-0.09	6/25/2022 22:08	1.77	6/25/2022 22:31	5.01	6/25/2022 23:54	-0.31	6/24/2022 22:47	11.49
6/24/2022 23:19	-0.11	6/25/2022 22:09	1.77	6/25/2022 22:32	5.01	6/25/2022 23:55	-0.34	6/24/2022 22:48	11.52
6/24/2022 23:20	-0.11	6/25/2022 22:10	1.77	6/25/2022 22:33	5.01	6/25/2022 23:56	-0.34	6/24/2022 22:49	11.51
6/24/2022 23:21	-0.10	6/25/2022 22:11	1.77	6/25/2022 22:34	5.03	6/25/2022 23:57	-0.32	6/24/2022 22:50	11.51
6/24/2022 23:22	-0.11	6/25/2022 22:12	1.77	6/25/2022 22:35	5.00	6/25/2022 23:58	-0.35	6/24/2022 22:51	11.49
6/24/2022 23:23	-0.10	6/25/2022 22:13	1.79	6/25/2022 22:36	5.03	6/25/2022 23:59	-0.33	6/24/2022 22:52	11.45
6/24/2022 23:24	-0.11	6/25/2022 22:14	1.77	6/25/2022 22:37	5.00	6/26/2022 0:00	-0.35	6/24/2022 22:53	11.48
6/24/2022 23:25	-0.10	6/25/2022 22:15	1.77	6/25/2022 22:38	5.00	6/26/2022 0:01	-0.35	6/24/2022 22:54	11.44
6/24/2022 23:26	-0.09	6/25/2022 22:16	1.77	6/25/2022 22:39	4.98	6/26/2022 0:02	-0.38	6/24/2022 22:55	11.51
6/24/2022 23:27	-0.09	6/25/2022 22:17	1.77	6/25/2022 22:40	5.00	6/26/2022 0:03	-0.34	6/24/2022 22:56	11.49
6/24/2022 23:28	-0.09	6/25/2022 22:18	1.77	6/25/2022 22:41	5.02	6/26/2022 0:04	-0.35	6/24/2022 22:57	11.49
6/24/2022 23:29	-0.11	6/25/2022 22:19	1.77	6/25/2022 22:42	5.00	6/26/2022 0:05	-0.32	6/24/2022 22:58	11.51
6/24/2022 23:30	-0.09	6/25/2022 22:20	1.77	6/25/2022 22:43	4.99	6/26/2022 0:06	-0.35	6/24/2022 22:59	11.48
6/24/2022 23:31	-0.11	6/25/2022 22:21	1.79	6/25/2022 22:44	5.02	6/26/2022 0:07	-0.36	6/24/2022 23:00	11.52
6/24/2022 23:32	-0.11	6/25/2022 22:22	1.77	6/25/2022 22:45	5.03	6/26/2022 0:08	-0.35	6/24/2022 23:01	11.50
6/24/2022 23:33	-0.10	6/25/2022 22:23	1.77	6/25/2022 22:46	5.02	6/26/2022 0:09	-0.37	6/24/2022 23:02	11.51
6/24/2022 23:34	-0.09	6/25/2022 22:24	1.77	6/25/2022 22:47	5.02	6/26/2022 0:10	-0.39	6/24/2022 23:03	11.48
6/24/2022 23:35	-0.09	6/25/2022 22:25	1.77	6/25/2022 22:48	4.99	6/26/2022 0:11	-0.32	6/24/2022 23:04	11.50
6/24/2022 23:36	-0.10	6/25/2022 22:26	1.77	6/25/2022 22:49	4.99	6/26/2022 0:12	-0.34	6/24/2022 23:05	11.50

6/24/2022 23:37	-0.09	6/25/2022 22:27	1.77	6/25/2022 22:50	5.01	6/26/2022 0:13	-0.38	6/24/2022 23:06	11.50
6/24/2022 23:38	-0.09	6/25/2022 22:28	1.77	6/25/2022 22:51	5.03	6/26/2022 0:14	-0.35	6/24/2022 23:07	11.52
6/24/2022 23:39	-0.09	6/25/2022 22:29	1.77	6/25/2022 22:52	5.01	6/26/2022 0:15	-0.30	6/24/2022 23:08	11.51
6/24/2022 23:40	-0.09	6/25/2022 22:30	1.77	6/25/2022 22:53	5.00	6/26/2022 0:16	-0.38	6/24/2022 23:09	11.50
6/24/2022 23:41	-0.11	6/25/2022 22:31	1.77	6/25/2022 22:54	5.02	6/26/2022 0:17	-0.37	6/24/2022 23:10	11.44
6/24/2022 23:42	-0.10	6/25/2022 22:32	1.77	6/25/2022 22:55	4.99	6/26/2022 0:18	-0.35	6/24/2022 23:11	11.55
6/24/2022 23:43	-0.10	6/25/2022 22:33	1.77	6/25/2022 22:56	4.99	6/26/2022 0:19	-0.33	6/24/2022 23:12	11.55
6/24/2022 23:44	-0.10	6/25/2022 22:34	1.77	6/25/2022 22:57	4.97	6/26/2022 0:20	-0.36	6/24/2022 23:13	11.50
6/24/2022 23:45	-0.09	6/25/2022 22:35	1.77	6/25/2022 22:58	4.98	6/26/2022 0:21	-0.34	6/24/2022 23:14	11.49
6/24/2022 23:46	-0.10	6/25/2022 22:36	1.77	6/25/2022 22:59	5.00	6/26/2022 0:22	-0.36	6/24/2022 23:15	11.48
6/24/2022 23:47	-0.09	6/25/2022 22:37	1.77	6/25/2022 23:00	5.03	6/26/2022 0:23	-0.37	6/24/2022 23:16	11.50
6/24/2022 23:48	-0.09	6/25/2022 22:38	1.79	6/25/2022 23:01	5.02	6/26/2022 0:24	-0.36	6/24/2022 23:17	11.50
6/24/2022 23:49	-0.11	6/25/2022 22:39	1.77	6/25/2022 23:02	5.02	6/26/2022 0:25	-0.31	6/24/2022 23:18	11.49
6/24/2022 23:50	-0.09	6/25/2022 22:40	1.77	6/25/2022 23:03	5.00	6/26/2022 0:26	-0.35	6/24/2022 23:19	11.53
6/24/2022 23:51	-0.10	6/25/2022 22:41	1.77	6/25/2022 23:04	5.00	6/26/2022 0:27	-0.34	6/24/2022 23:20	11.49
6/24/2022 23:52	-0.10	6/25/2022 22:42	1.77	6/25/2022 23:05	4.99	6/26/2022 0:28	-0.33	6/24/2022 23:21	11.51
6/24/2022 23:53	-0.10	6/25/2022 22:43	1.77	6/25/2022 23:06	5.01	6/26/2022 0:29	-0.37	6/24/2022 23:22	11.46
6/24/2022 23:54	-0.09	6/25/2022 22:44	1.77	6/25/2022 23:07	4.99	6/26/2022 0:30	-0.34	6/24/2022 23:23	11.49
6/24/2022 23:55	-0.09	6/25/2022 22:45	1.77	6/25/2022 23:08	5.02	6/26/2022 0:31	-0.35	6/24/2022 23:24	11.48
6/24/2022 23:56	-0.10	6/25/2022 22:46	1.77	6/25/2022 23:09	5.02	6/26/2022 0:32	-0.35	6/24/2022 23:25	11.49
6/24/2022 23:57	-0.09	6/25/2022 22:47	1.77	6/25/2022 23:10	5.00	6/26/2022 0:33	-0.38	6/24/2022 23:26	11.46
6/24/2022 23:58	-0.11	6/25/2022 22:48	1.77	6/25/2022 23:11	4.98	6/26/2022 0:34	-0.33	6/24/2022 23:27	11.48
6/24/2022 23:59	-0.11	6/25/2022 22:49	1.77	6/25/2022 23:12	5.01	6/26/2022 0:35	-0.36	6/24/2022 23:28	11.45
6/25/2022 0:00	-0.10	6/25/2022 22:50	1.77	6/25/2022 23:13	5.00	6/26/2022 0:36	-0.33	6/24/2022 23:29	11.46
6/25/2022 0:01	-0.11	6/25/2022 22:51	1.77	6/25/2022 23:14	5.01	6/26/2022 0:37	-0.35	6/24/2022 23:30	11.51
6/25/2022 0:02	-0.11	6/25/2022 22:52	1.77	6/25/2022 23:15	4.99	6/26/2022 0:38	-0.39	6/24/2022 23:31	11.49
6/25/2022 0:03	-0.10	6/25/2022 22:53	1.76	6/25/2022 23:16	5.01	6/26/2022 0:39	-0.33	6/24/2022 23:32	11.48
6/25/2022 0:04	-0.10	6/25/2022 22:54	1.76	6/25/2022 23:17	4.97	6/26/2022 0:40	-0.36	6/24/2022 23:33	11.50
6/25/2022 0:05	-0.09	6/25/2022 22:55	1.76	6/25/2022 23:18	4.99	6/26/2022 0:41	-0.36	6/24/2022 23:34	11.47
6/25/2022 0:06	-0.10	6/25/2022 22:56	1.77	6/25/2022 23:19	5.01	6/26/2022 0:42	-0.35	6/24/2022 23:35	11.51
6/25/2022 0:07	-0.11	6/25/2022 22:57	1.76	6/25/2022 23:20	4.99	6/26/2022 0:43	-0.37	6/24/2022 23:36	11.52
6/25/2022 0:08	-0.10	6/25/2022 22:58	1.76	6/25/2022 23:21	5.00	6/26/2022 0:44	-0.37	6/24/2022 23:37	11.53
6/25/2022 0:09	-0.09	6/25/2022 22:59	1.77	6/25/2022 23:22	5.01	6/26/2022 0:45	-0.35	6/24/2022 23:38	11.49
6/25/2022 0:10	-0.09	6/25/2022 23:00	1.77	6/25/2022 23:23	4.97	6/26/2022 0:46	-0.35	6/24/2022 23:39	11.49
6/25/2022 0:11	-0.09	6/25/2022 23:01	1.77	6/25/2022 23:24	5.01	6/26/2022 0:47	-0.36	6/24/2022 23:40	11.49
6/25/2022 0:12	-0.09	6/25/2022 23:02	1.77	6/25/2022 23:25	4.96	6/26/2022 0:48	-0.35	6/24/2022 23:41	11.48
6/25/2022 0:13	-0.09	6/25/2022 23:03	1.77	6/25/2022 23:26	4.97	6/26/2022 0:49	-0.35	6/24/2022 23:42	11.48
6/25/2022 0:14	-0.10	6/25/2022 23:04	1.76	6/25/2022 23:27	5.01	6/26/2022 0:50	-0.37	6/24/2022 23:43	11.51
6/25/2022 0:15	-0.11	6/25/2022 23:05	1.76	6/25/2022 23:28	5.01	6/26/2022 0:51	-0.36	6/24/2022 23:44	11.49
6/25/2022 0:16	-0.10	6/25/2022 23:06	1.76	6/25/2022 23:29	5.01	6/26/2022 0:52	-0.34	6/24/2022 23:45	11.53
6/25/2022 0:17	-0.10	6/25/2022 23:07	1.76	6/25/2022 23:30	5.01	6/26/2022 0:53	-0.32	6/24/2022 23:46	11.49
6/25/2022 0:18	-0.09	6/25/2022 23:08	1.76	6/25/2022 23:31	4.99	6/26/2022 0:54	-0.36	6/24/2022 23:47	11.53
6/25/2022 0:19	-0.09	6/25/2022 23:09	1.76	6/25/2022 23:32	5.02	6/26/2022 0:55	-0.38	6/24/2022 23:48	11.48
6/25/2022 0:20	-0.11	6/25/2022 23:10	1.76	6/25/2022 23:33	4.99	6/26/2022 0:56	-0.33	6/24/2022 23:49	11.51
6/25/2022 0:21	-0.11	6/25/2022 23:11	1.76	6/25/2022 23:34	5.03	6/26/2022 0:57	-0.35	6/24/2022 23:50	11.40
6/25/2022 0:22	-0.10	6/25/2022 23:12	1.76	6/25/2022 23:35	5.01	6/26/2022 0:58	-0.38	6/24/2022 23:51	11.45
6/25/2022 0:23	-0.09	6/25/2022 23:13	1.76	6/25/2022 23:36	5.00	6/26/2022 0:59	-0.35	6/24/2022 23:52	11.47
6/25/2022 0:24	-0.09	6/25/2022 23:14	1.76	6/25/2022 23:37	4.99	6/26/2022 1:00	-0.40	6/24/2022 23:53	11.49
6/25/2022 0:25	-0.10	6/25/2022 23:15	1.76	6/25/2022 23:38	4.98	6/26/2022 1:01	-0.36	6/24/2022 23:54	11.46
6/25/2022 0:26	-0.09	6/25/2022 23:16	1.76	6/25/2022 23:39	5.01	6/26/2022 1:02	-0.38	6/24/2022 23:55	11.48
6/25/2022 0:27	-0.10	6/25/2022 23:17	1.76	6/25/2022 23:40	4.98	6/26/2022 1:03	-0.33	6/24/2022 23:56	11.51
6/25/2022 0:28	-0.11	6/25/2022 23:18	1.76	6/25/2022 23:41	4.98	6/26/2022 1:04	-0.35	6/24/2022 23:57	11.45
6/25/2022 0:29	-0.11	6/25/2022 23:19	1.76	6/25/2022 23:42	5.02	6/26/2022 1:05	-0.36	6/24/2022 23:58	11.49
6/25/2022 0:30	-0.11	6/25/2022 23:20	1.76	6/25/2022 23:43	5.01	6/26/2022 1:06	-0.33	6/24/2022 23:59	11.50
6/25/2022 0:31	-0.11	6/25/2022 23:21	1.76	6/25/2022 23:44	5.01	6/26/2022 1:07	-0.35	6/25/2022 0:00	11.47
6/25/2022 0:32	-0.09	6/25/2022 23:22	1.77	6/25/2022 23:45	5.01	6/26/2022 1:08	-0.32	6/25/2022 0:01	11.51
6/25/2022 0:33	-0.09	6/25/2022 23:23	1.76	6/25/2022 23:46	4.98	6/26/2022 1:09	-0.37	6/25/2022 0:02	11.48
6/25/2022 0:34	-0.09	6/25/2022 23:24	1.76	6/25/2022 23:47	4.99	6/26/2022 1:10	-0.35	6/25/2022 0:03	11.48
6/25/2022 0:35	-0.09	6/25/2022 23:25	1.76	6/25/2022 23:48	5.00	6/26/2022 1:11	-0.35	6/25/2022 0:04	11.45
6/25/2022 0:36	-0.11	6/25/2022 23:26	1.76	6/25/2022 23:49	5.03	6/26/2022 1:12	-0.38	6/25/2022 0:05	11.48
6/25/2022 0:37	-0.09	6/25/2022 23:27	1.76	6/25/2022 23:50	5.00	6/26/2022 1:13	-0.33	6/25/2022 0:06	11.46
6/25/2022 0:38	-0.10	6/25/2022 23:28	1.76	6/25/2022 23:51	4.98	6/26/2022 1:14	-0.34	6/25/2022 0:07	11.47
6/25/2022 0:39	-0.11	6/25/2022 23:29	1.76	6/25/2022 23:52	5.03	6/26/2022 1:15	-0.36	6/25/2022 0:08	11.46
6/25/2022 0:40	-0.11	6/25/2022 23:30	1.76	6/25/2022 23:53	4.99	6/26/2022 1:16	-0.33	6/25/2022 0:09	11.51
6/25/2022 0:41	-0.10	6/25/2022 23:31	1.76	6/25/2022 23:54	5.00	6/26/2022 1:17	-0.39	6/25/2022 0:10	11.49
6/25/2022 0:42	-0.09	6/25/2022 23:32	1.76	6/25/2022 23:55	5.00	6/26/2022 1:18	-0.38	6/25/2022 0:11	11.45
6/25/2022 0:43	-0.10	6/25/2022 23:33	1.76	6/25/2022 23:56	4.99	6/26/2022 1:19	-0.34	6/25/2022 0:12	11.50
6/25/2022 0:44	-0.09	6/25/2022 23:34	1.76	6/25/2022 23:57	4.99	6/26/2022 1:20	-0.36	6/25/2022 0:13	11.53
6/25/2022 0:45	-0.11	6/25/2022 23:35	1.76	6/25/2022 23:58	5.00	6/26/2022 1:21	-0.35	6/25/2022 0:14	11.46
6/25/2022 0:46	-0.09	6/25/2022 23:36	1.76	6/25/2022 23:59	5.01	6/26/2022 1:22	-0.38	6/25/2022 0:15	11.47
6/25/2022 0:47	-0.10	6/25/2022 23:37	1.76	6/26/2022 0:00	4.99	6/26/2022 1:23	-0.35	6/25/2022 0:16	11.45
6/25/2022 0:48	-0.10	6/25/2022 23:38	1.76	6/26/2022 0:01	5.00	6/26/2022 1:24	-0.33	6/25/2022 0:17	11.47
6/25/2022 0:49	-0.09	6/25/2022 23:39	1.76	6/26/2022 0:02	4.99	6/26/2022 1:25	-0.37	6/25/2022 0:18	11.48
6/25/2022 0:50	-0.09	6/25/2022 23:40	1.76	6/26/2022 0:03	5.00	6/26/2022 1:26	-0.37	6/25/2022 0:19	11.45
6/25/2022 0:51	-0.11	6/25/2022 23:41	1.76	6/26/2022 0:04	5.00	6/26/2022 1:27	-0.36	6/25/2022 0:20	11.46
6/25/2022 0:52	-0.10	6/25/2022 23:42	1.76	6/26/2022 0:05	4.99	6/26/2022 1:28	-0.34	6/25/2022 0:21	11.49
6/25/2022 0:53	-0.11	6/25/2022 23:43	1.76	6/26/2022 0:06	5.05	6/26/2022 1:29	-0.36	6/25/2022 0:22	11.42
6/25/2022 0:54	-0.09	6/25/2022 23:44	1.76	6/26/2022 0:07	5.00	6/26/2022 1:30	-0.37	6/25/2022 0:23	11.53
6/25/2022 0:55	-0.09	6/25/2022 23:45	1.76	6/26/2022 0:08	4.98	6/26/2022 1:31	-0.39	6/25/2022 0:24	11.44
6/25/2022 0:56	-0.11	6/25/2022 23:46	1.76	6/26/2022 0:09	5.00	6/26/2022 1:32	-0.40	6/25/2022 0:25	11.50
6/25/2022 0:57	-0.09	6/25/2022 23:47	1.76	6/26/2022 0:10	4.98	6/26/2022 1:33	-0.35	6/25/2022 0:26	11.49
6/25/2022 0:58	-0.11	6/25/2022 23:48	1.76	6/26/2022 0:11	4.99	6/26/2022 1:34	-0.39	6/25/2022 0:27	11.43
6/25/2022 0:59	-0.09	6/25/2022 23:49	1.76	6/26/2022 0:12	5.02	6/26/2022 1:35	-0.37	6/25/2022 0:28	11.45
6/25/2022 1:00	-0.09	6/25/2022 23:50	1.76	6/26/2022 0:13	4.97	6/26/2022 1:36	-0.35	6/25/2022 0:29	11.49
6/25/2022 1:01	-0.11	6/25/2022 23:51	1.76	6/26/2022 0:14	5.01	6/26/2022 1:37	-0.38	6/25/2022 0:30	11.47
6/25/2022 1:02	-0.10	6/25/2022 23:52	1.76	6/26/2022 0:15	5.00	6/26/2022 1:38	-0.35	6/25/2022 0:31	11.50
6/25/2022 1:03	-0.09	6/25/2022 23:53	1.76	6/26/2022 0:16	4.98	6/26/2022 1:39	-0.35	6/25/2022 0:32	11.49
6/25/2022 1:04	-0.11	6/25/2022 23:54	1.76	6/26/2022 0:17	4.97	6/26/2022 1:40	-0.37	6/25/2022 0:33	11.49

6/25/2022 1:05	-0.11	6/25/2022 23:55	1.76	6/26/2022 0:18	5.00	6/26/2022 1:41	-0.30	6/25/2022 0:34	11.52
6/25/2022 1:06	-0.09	6/25/2022 23:56	1.78	6/26/2022 0:19	4.98	6/26/2022 1:42	-0.34	6/25/2022 0:35	11.54
6/25/2022 1:07	-0.09	6/25/2022 23:57	1.75	6/26/2022 0:20	5.01	6/26/2022 1:43	-0.34	6/25/2022 0:36	11.48
6/25/2022 1:08	-0.10	6/25/2022 23:58	1.76	6/26/2022 0:21	5.02	6/26/2022 1:44	-0.32	6/25/2022 0:37	11.51
6/25/2022 1:09	-0.10	6/25/2022 23:59	1.75	6/26/2022 0:22	4.99	6/26/2022 1:45	-0.39	6/25/2022 0:38	11.48
6/25/2022 1:10	-0.09	6/26/2022 0:00	1.76	6/26/2022 0:23	4.98	6/26/2022 1:46	-0.38	6/25/2022 0:39	11.50
6/25/2022 1:11	-0.10	6/26/2022 0:01	1.76	6/26/2022 0:24	4.98	6/26/2022 1:47	-0.37	6/25/2022 0:40	11.49
6/25/2022 1:12	-0.10	6/26/2022 0:02	1.76	6/26/2022 0:25	4.99	6/26/2022 1:48	-0.35	6/25/2022 0:41	11.51
6/25/2022 1:13	-0.10	6/26/2022 0:03	1.76	6/26/2022 0:26	4.99	6/26/2022 1:49	-0.38	6/25/2022 0:42	11.51
6/25/2022 1:14	-0.11	6/26/2022 0:04	1.75	6/26/2022 0:27	4.98	6/26/2022 1:50	-0.32	6/25/2022 0:43	11.44
6/25/2022 1:15	-0.11	6/26/2022 0:05	1.75	6/26/2022 0:28	5.00	6/26/2022 1:51	-0.35	6/25/2022 0:44	11.52
6/25/2022 1:16	-0.11	6/26/2022 0:06	1.75	6/26/2022 0:29	5.00	6/26/2022 1:52	-0.35	6/25/2022 0:45	11.53
6/25/2022 1:17	-0.10	6/26/2022 0:07	1.75	6/26/2022 0:30	4.98	6/26/2022 1:53	-0.40	6/25/2022 0:46	11.45
6/25/2022 1:18	-0.09	6/26/2022 0:08	1.75	6/26/2022 0:31	4.96	6/26/2022 1:54	-0.35	6/25/2022 0:47	11.53
6/25/2022 1:19	-0.09	6/26/2022 0:09	1.75	6/26/2022 0:32	5.00	6/26/2022 1:55	-0.39	6/25/2022 0:48	11.46
6/25/2022 1:20	-0.11	6/26/2022 0:10	1.76	6/26/2022 0:33	4.98	6/26/2022 1:56	-0.37	6/25/2022 0:49	11.51
6/25/2022 1:21	-0.10	6/26/2022 0:11	1.75	6/26/2022 0:34	4.96	6/26/2022 1:57	-0.39	6/25/2022 0:50	11.50
6/25/2022 1:22	-0.09	6/26/2022 0:12	1.76	6/26/2022 0:35	4.99	6/26/2022 1:58	-0.34	6/25/2022 0:51	11.53
6/25/2022 1:23	-0.10	6/26/2022 0:13	1.78	6/26/2022 0:36	4.97	6/26/2022 1:59	-0.35	6/25/2022 0:52	11.49
6/25/2022 1:24	-0.10	6/26/2022 0:14	1.75	6/26/2022 0:37	4.98	6/26/2022 2:00	-0.38	6/25/2022 0:53	11.48
6/25/2022 1:25	-0.10	6/26/2022 0:15	1.75	6/26/2022 0:38	4.99	6/26/2022 2:01	-0.35	6/25/2022 0:54	11.49
6/25/2022 1:26	-0.10	6/26/2022 0:16	1.75	6/26/2022 0:39	4.96	6/26/2022 2:02	-0.34	6/25/2022 0:55	11.50
6/25/2022 1:27	-0.11	6/26/2022 0:17	1.75	6/26/2022 0:40	4.99	6/26/2022 2:03	-0.34	6/25/2022 0:56	11.50
6/25/2022 1:28	-0.09	6/26/2022 0:18	1.75	6/26/2022 0:41	4.96	6/26/2022 2:04	-0.35	6/25/2022 0:57	11.46
6/25/2022 1:29	-0.10	6/26/2022 0:19	1.75	6/26/2022 0:42	5.01	6/26/2022 2:05	-0.36	6/25/2022 0:58	11.49
6/25/2022 1:30	-0.10	6/26/2022 0:20	1.75	6/26/2022 0:43	4.99	6/26/2022 2:06	-0.35	6/25/2022 0:59	11.49
6/25/2022 1:31	-0.10	6/26/2022 0:21	1.75	6/26/2022 0:44	4.96	6/26/2022 2:07	-0.35	6/25/2022 1:00	11.47
6/25/2022 1:32	-0.11	6/26/2022 0:22	1.75	6/26/2022 0:45	4.99	6/26/2022 2:08	-0.32	6/25/2022 1:01	11.47
6/25/2022 1:33	-0.09	6/26/2022 0:23	1.75	6/26/2022 0:46	4.98	6/26/2022 2:09	-0.35	6/25/2022 1:02	11.52
6/25/2022 1:34	-0.11	6/26/2022 0:24	1.75	6/26/2022 0:47	4.99	6/26/2022 2:10	-0.38	6/25/2022 1:03	11.46
6/25/2022 1:35	-0.10	6/26/2022 0:25	1.75	6/26/2022 0:48	4.96	6/26/2022 2:11	-0.34	6/25/2022 1:04	11.46
6/25/2022 1:36	-0.11	6/26/2022 0:26	1.75	6/26/2022 0:49	5.00	6/26/2022 2:12	-0.35	6/25/2022 1:05	11.49
6/25/2022 1:37	-0.09	6/26/2022 0:27	1.75	6/26/2022 0:50	4.99	6/26/2022 2:13	-0.35	6/25/2022 1:06	11.49
6/25/2022 1:38	-0.11	6/26/2022 0:28	1.77	6/26/2022 0:51	4.98	6/26/2022 2:14	-0.37	6/25/2022 1:07	11.52
6/25/2022 1:39	-0.11	6/26/2022 0:29	1.75	6/26/2022 0:52	4.96	6/26/2022 2:15	-0.38	6/25/2022 1:08	11.47
6/25/2022 1:40	-0.09	6/26/2022 0:30	1.75	6/26/2022 0:53	5.00	6/26/2022 2:16	-0.35	6/25/2022 1:09	11.53
6/25/2022 1:41	-0.09	6/26/2022 0:31	1.74	6/26/2022 0:54	4.97	6/26/2022 2:17	-0.34	6/25/2022 1:10	11.51
6/25/2022 1:42	-0.09	6/26/2022 0:32	1.75	6/26/2022 0:55	4.99	6/26/2022 2:18	-0.34	6/25/2022 1:11	11.52
6/25/2022 1:43	-0.10	6/26/2022 0:33	1.75	6/26/2022 0:56	5.00	6/26/2022 2:19	-0.32	6/25/2022 1:12	11.44
6/25/2022 1:44	-0.09	6/26/2022 0:34	1.75	6/26/2022 0:57	4.99	6/26/2022 2:20	-0.37	6/25/2022 1:13	11.45
6/25/2022 1:45	-0.11	6/26/2022 0:35	1.74	6/26/2022 0:58	4.97	6/26/2022 2:21	-0.37	6/25/2022 1:14	11.49
6/25/2022 1:46	-0.10	6/26/2022 0:36	1.77	6/26/2022 0:59	5.01	6/26/2022 2:22	-0.36	6/25/2022 1:15	11.53
6/25/2022 1:47	-0.10	6/26/2022 0:37	1.74	6/26/2022 1:00	5.01	6/26/2022 2:23	-0.35	6/25/2022 1:16	11.52
6/25/2022 1:48	-0.10	6/26/2022 0:38	1.74	6/26/2022 1:01	4.96	6/26/2022 2:24	-0.38	6/25/2022 1:17	11.53
6/25/2022 1:49	-0.10	6/26/2022 0:39	1.75	6/26/2022 1:02	4.99	6/26/2022 2:25	-0.38	6/25/2022 1:18	11.51
6/25/2022 1:50	-0.09	6/26/2022 0:40	1.74	6/26/2022 1:03	4.99	6/26/2022 2:26	-0.36	6/25/2022 1:19	11.48
6/25/2022 1:51	-0.10	6/26/2022 0:41	1.74	6/26/2022 1:04	4.97	6/26/2022 2:27	-0.35	6/25/2022 1:20	11.52
6/25/2022 1:52	-0.11	6/26/2022 0:42	1.74	6/26/2022 1:05	4.99	6/26/2022 2:28	-0.38	6/25/2022 1:21	11.44
6/25/2022 1:53	-0.09	6/26/2022 0:43	1.74	6/26/2022 1:06	4.94	6/26/2022 2:29	-0.35	6/25/2022 1:22	11.47
6/25/2022 1:54	-0.10	6/26/2022 0:44	1.76	6/26/2022 1:07	4.95	6/26/2022 2:30	-0.38	6/25/2022 1:23	11.53
6/25/2022 1:55	-0.09	6/26/2022 0:45	1.74	6/26/2022 1:08	4.98	6/26/2022 2:31	-0.35	6/25/2022 1:24	11.47
6/25/2022 1:56	-0.09	6/26/2022 0:46	1.75	6/26/2022 1:09	5.01	6/26/2022 2:32	-0.31	6/25/2022 1:25	11.51
6/25/2022 1:57	-0.09	6/26/2022 0:47	1.74	6/26/2022 1:10	4.96	6/26/2022 2:33	-0.37	6/25/2022 1:26	11.50
6/25/2022 1:58	-0.11	6/26/2022 0:48	1.74	6/26/2022 1:11	4.98	6/26/2022 2:34	-0.32	6/25/2022 1:27	11.52
6/25/2022 1:59	-0.10	6/26/2022 0:49	1.74	6/26/2022 1:12	4.98	6/26/2022 2:35	-0.34	6/25/2022 1:28	11.54
6/25/2022 2:00	-0.11	6/26/2022 0:50	1.77	6/26/2022 1:13	4.96	6/26/2022 2:36	-0.33	6/25/2022 1:29	11.51
6/25/2022 2:01	-0.11	6/26/2022 0:51	1.74	6/26/2022 1:14	4.99	6/26/2022 2:37	-0.35	6/25/2022 1:30	11.50
6/25/2022 2:02	-0.11	6/26/2022 0:52	1.74	6/26/2022 1:15	5.00	6/26/2022 2:38	-0.37	6/25/2022 1:31	11.53
6/25/2022 2:03	-0.10	6/26/2022 0:53	1.74	6/26/2022 1:16	4.95	6/26/2022 2:39	-0.36	6/25/2022 1:32	11.53
6/25/2022 2:04	-0.09	6/26/2022 0:54	1.74	6/26/2022 1:17	4.97	6/26/2022 2:40	-0.36	6/25/2022 1:33	11.53
6/25/2022 2:05	-0.09	6/26/2022 0:55	1.74	6/26/2022 1:18	5.00	6/26/2022 2:41	-0.39	6/25/2022 1:34	11.46
6/25/2022 2:06	-0.11	6/26/2022 0:56	1.75	6/26/2022 1:19	4.94	6/26/2022 2:42	-0.36	6/25/2022 1:35	11.47
6/25/2022 2:07	-0.09	6/26/2022 0:57	1.77	6/26/2022 1:20	4.98	6/26/2022 2:43	-0.36	6/25/2022 1:36	11.49
6/25/2022 2:08	-0.10	6/26/2022 0:58	1.74	6/26/2022 1:21	4.99	6/26/2022 2:44	-0.37	6/25/2022 1:37	11.45
6/25/2022 2:09	-0.11	6/26/2022 0:59	1.74	6/26/2022 1:22	4.97	6/26/2022 2:45	-0.38	6/25/2022 1:38	11.48
6/25/2022 2:10	-0.09	6/26/2022 1:00	1.74	6/26/2022 1:23	4.98	6/26/2022 2:46	-0.32	6/25/2022 1:39	11.49
6/25/2022 2:11	-0.11	6/26/2022 1:01	1.74	6/26/2022 1:24	4.96	6/26/2022 2:47	-0.34	6/25/2022 1:40	11.45
6/25/2022 2:12	-0.10	6/26/2022 1:02	1.74	6/26/2022 1:25	4.98	6/26/2022 2:48	-0.32	6/25/2022 1:41	11.52
6/25/2022 2:13	-0.10	6/26/2022 1:03	1.74	6/26/2022 1:26	4.99	6/26/2022 2:49	-0.35	6/25/2022 1:42	11.49
6/25/2022 2:14	-0.10	6/26/2022 1:04	1.74	6/26/2022 1:27	4.97	6/26/2022 2:50	-0.34	6/25/2022 1:43	11.50
6/25/2022 2:15	-0.11	6/26/2022 1:05	1.74	6/26/2022 1:28	4.99	6/26/2022 2:51	-0.36	6/25/2022 1:44	11.49
6/25/2022 2:16	-0.11	6/26/2022 1:06	1.74	6/26/2022 1:29	4.98	6/26/2022 2:52	-0.35	6/25/2022 1:45	11.45
6/25/2022 2:17	-0.09	6/26/2022 1:07	1.74	6/26/2022 1:30	4.98	6/26/2022 2:53	-0.37	6/25/2022 1:46	11.49
6/25/2022 2:18	-0.10	6/26/2022 1:08	1.74	6/26/2022 1:31	4.94	6/26/2022 2:54	-0.32	6/25/2022 1:47	11.48
6/25/2022 2:19	-0.11	6/26/2022 1:09	1.74	6/26/2022 1:32	4.97	6/26/2022 2:55	-0.33	6/25/2022 1:48	11.45
6/25/2022 2:20	-0.09	6/26/2022 1:10	1.74	6/26/2022 1:33	4.97	6/26/2022 2:56	-0.34	6/25/2022 1:49	11.53
6/25/2022 2:21	-0.09	6/26/2022 1:11	1.74	6/26/2022 1:34	4.98	6/26/2022 2:57	-0.32	6/25/2022 1:50	11.51
6/25/2022 2:22	-0.09	6/26/2022 1:12	1.74	6/26/2022 1:35	5.00	6/26/2022 2:58	-0.35	6/25/2022 1:51	11.50
6/25/2022 2:23	-0.11	6/26/2022 1:13	1.74	6/26/2022 1:36	4.98	6/26/2022 2:59	-0.33	6/25/2022 1:52	11.52
6/25/2022 2:24	-0.10	6/26/2022 1:14	1.74	6/26/2022 1:37	4.97	6/26/2022 3:00	-0.38	6/25/2022 1:53	11.52
6/25/2022 2:25	-0.09	6/26/2022 1:15	1.74	6/26/2022 1:38	4.97	6/26/2022 3:01	-0.34	6/25/2022 1:54	11.50
6/25/2022 2:26	-0.09	6/26/2022 1:16	1.76	6/26/2022 1:39	4.98	6/26/2022 3:02	-0.35	6/25/2022 1:55	11.51
6/25/2022 2:27	-0.11	6/26/2022 1:17	1.74	6/26/2022 1:40	4.93	6/26/2022 3:03	-0.35	6/25/2022 1:56	11.49
6/25/2022 2:28	-0.09	6/26/2022 1:18	1.74	6/26/2022 1:41	4.94	6/26/2022 3:04	-0.35	6/25/2022 1:57	11.54
6/25/2022 2:29	-0.11	6/26/2022 1:19	1.74	6/26/2022 1:42	4.96	6/26/2022 3:05	-0.35	6/25/2022 1:58	11.49
6/25/2022 2:30	-0.10	6/26/2022 1:20	1.74	6/26/2022 1:43	4.96	6/26/2022 3:06	-0.36	6/25/2022 1:59	11.51
6/25/2022 2:31	-0.10	6/26/2022 1:21	1.76	6/26/2022 1:44	4.94	6/26/2022 3:07	-0.34	6/25/2022 2:00	11.51
6/25/2022 2:32	-0.09	6/26/2022 1:22	1.74	6/26/2022 1:45	4.98	6/26/2022 3:08	-0.39	6/25/2022 2:01	11.51

6/25/2022 2:33	-0.10	6/26/2022 1:23	1.74	6/26/2022 1:46	4.98	6/26/2022 3:09	-0.34	6/25/2022 2:02	11.46
6/25/2022 2:34	-0.09	6/26/2022 1:24	1.74	6/26/2022 1:47	4.95	6/26/2022 3:10	-0.36	6/25/2022 2:03	11.49
6/25/2022 2:35	-0.10	6/26/2022 1:25	1.74	6/26/2022 1:48	4.97	6/26/2022 3:11	-0.37	6/25/2022 2:04	11.49
6/25/2022 2:36	-0.10	6/26/2022 1:26	1.74	6/26/2022 1:49	4.98	6/26/2022 3:12	-0.37	6/25/2022 2:05	11.49
6/25/2022 2:37	-0.10	6/26/2022 1:27	1.74	6/26/2022 1:50	5.00	6/26/2022 3:13	-0.39	6/25/2022 2:06	11.49
6/25/2022 2:38	-0.10	6/26/2022 1:28	1.74	6/26/2022 1:51	4.96	6/26/2022 3:14	-0.37	6/25/2022 2:07	11.51
6/25/2022 2:39	-0.10	6/26/2022 1:29	1.74	6/26/2022 1:52	4.95	6/26/2022 3:15	-0.35	6/25/2022 2:08	11.49
6/25/2022 2:40	-0.09	6/26/2022 1:30	1.74	6/26/2022 1:53	4.98	6/26/2022 3:16	-0.35	6/25/2022 2:09	11.53
6/25/2022 2:41	-0.09	6/26/2022 1:31	1.76	6/26/2022 1:54	4.96	6/26/2022 3:17	-0.35	6/25/2022 2:10	11.47
6/25/2022 2:42	-0.09	6/26/2022 1:32	1.74	6/26/2022 1:55	4.97	6/26/2022 3:18	-0.35	6/25/2022 2:11	11.49
6/25/2022 2:43	-0.11	6/26/2022 1:33	1.73	6/26/2022 1:56	4.98	6/26/2022 3:19	-0.36	6/25/2022 2:12	11.49
6/25/2022 2:44	-0.09	6/26/2022 1:34	1.74	6/26/2022 1:57	4.94	6/26/2022 3:20	-0.37	6/25/2022 2:13	11.46
6/25/2022 2:45	-0.11	6/26/2022 1:35	1.74	6/26/2022 1:58	4.95	6/26/2022 3:21	-0.33	6/25/2022 2:14	11.49
6/25/2022 2:46	-0.09	6/26/2022 1:36	1.73	6/26/2022 1:59	4.97	6/26/2022 3:22	-0.37	6/25/2022 2:15	11.49
6/25/2022 2:47	-0.10	6/26/2022 1:37	1.74	6/26/2022 2:00	4.97	6/26/2022 3:23	-0.34	6/25/2022 2:16	11.49
6/25/2022 2:48	-0.09	6/26/2022 1:38	1.74	6/26/2022 2:01	4.97	6/26/2022 3:24	-0.39	6/25/2022 2:17	11.51
6/25/2022 2:49	-0.11	6/26/2022 1:39	1.74	6/26/2022 2:02	4.97	6/26/2022 3:25	-0.37	6/25/2022 2:18	11.48
6/25/2022 2:50	-0.11	6/26/2022 1:40	1.73	6/26/2022 2:03	4.99	6/26/2022 3:26	-0.35	6/25/2022 2:19	11.49
6/25/2022 2:51	-0.11	6/26/2022 1:41	1.74	6/26/2022 2:04	4.96	6/26/2022 3:27	-0.35	6/25/2022 2:20	11.51
6/25/2022 2:52	-0.10	6/26/2022 1:42	1.74	6/26/2022 2:05	4.99	6/26/2022 3:28	-0.35	6/25/2022 2:21	11.55
6/25/2022 2:53	-0.10	6/26/2022 1:43	1.73	6/26/2022 2:06	4.94	6/26/2022 3:29	-0.34	6/25/2022 2:22	11.54
6/25/2022 2:54	-0.10	6/26/2022 1:44	1.74	6/26/2022 2:07	4.94	6/26/2022 3:30	-0.35	6/25/2022 2:23	11.48
6/25/2022 2:55	-0.09	6/26/2022 1:45	1.74	6/26/2022 2:08	4.93	6/26/2022 3:31	-0.39	6/25/2022 2:24	11.54
6/25/2022 2:56	-0.09	6/26/2022 1:46	1.74	6/26/2022 2:09	4.97	6/26/2022 3:32	-0.39	6/25/2022 2:25	11.49
6/25/2022 2:57	-0.11	6/26/2022 1:47	1.73	6/26/2022 2:10	4.97	6/26/2022 3:33	-0.36	6/25/2022 2:26	11.52
6/25/2022 2:58	-0.10	6/26/2022 1:48	1.73	6/26/2022 2:11	4.93	6/26/2022 3:34	-0.32	6/25/2022 2:27	11.48
6/25/2022 2:59	-0.09	6/26/2022 1:49	1.73	6/26/2022 2:12	4.98	6/26/2022 3:35	-0.38	6/25/2022 2:28	11.54
6/25/2022 3:00	-0.09	6/26/2022 1:50	1.73	6/26/2022 2:13	4.96	6/26/2022 3:36	-0.32	6/25/2022 2:29	11.46
6/25/2022 3:01	-0.09	6/26/2022 1:51	1.73	6/26/2022 2:14	4.93	6/26/2022 3:37	-0.39	6/25/2022 2:30	11.49
6/25/2022 3:02	-0.11	6/26/2022 1:52	1.73	6/26/2022 2:15	4.94	6/26/2022 3:38	-0.37	6/25/2022 2:31	11.45
6/25/2022 3:03	-0.10	6/26/2022 1:53	1.73	6/26/2022 2:16	4.94	6/26/2022 3:39	-0.34	6/25/2022 2:32	11.47
6/25/2022 3:04	-0.11	6/26/2022 1:54	1.73	6/26/2022 2:17	4.94	6/26/2022 3:40	-0.36	6/25/2022 2:33	11.53
6/25/2022 3:05	-0.11	6/26/2022 1:55	1.73	6/26/2022 2:18	4.94	6/26/2022 3:41	-0.39	6/25/2022 2:34	11.52
6/25/2022 3:06	-0.10	6/26/2022 1:56	1.75	6/26/2022 2:19	4.94	6/26/2022 3:42	-0.33	6/25/2022 2:35	11.49
6/25/2022 3:07	-0.10	6/26/2022 1:57	1.73	6/26/2022 2:20	4.94	6/26/2022 3:43	-0.35	6/25/2022 2:36	11.50
6/25/2022 3:08	-0.09	6/26/2022 1:58	1.73	6/26/2022 2:21	4.96	6/26/2022 3:44	-0.31	6/25/2022 2:37	11.45
6/25/2022 3:09	-0.09	6/26/2022 1:59	1.73	6/26/2022 2:22	4.98	6/26/2022 3:45	-0.37	6/25/2022 2:38	11.48
6/25/2022 3:10	-0.11	6/26/2022 2:00	1.73	6/26/2022 2:23	4.94	6/26/2022 3:46	-0.37	6/25/2022 2:39	11.55
6/25/2022 3:11	-0.10	6/26/2022 2:01	1.73	6/26/2022 2:24	4.97	6/26/2022 3:47	-0.35	6/25/2022 2:40	11.51
6/25/2022 3:12	-0.11	6/26/2022 2:02	1.73	6/26/2022 2:25	4.95	6/26/2022 3:48	-0.39	6/25/2022 2:41	11.51
6/25/2022 3:13	-0.10	6/26/2022 2:03	1.73	6/26/2022 2:26	4.96	6/26/2022 3:49	-0.38	6/25/2022 2:42	11.51
6/25/2022 3:14	-0.11	6/26/2022 2:04	1.73	6/26/2022 2:27	4.91	6/26/2022 3:50	-0.35	6/25/2022 2:43	11.53
6/25/2022 3:15	-0.11	6/26/2022 2:05	1.73	6/26/2022 2:28	4.95	6/26/2022 3:51	-0.40	6/25/2022 2:44	11.51
6/25/2022 3:16	-0.09	6/26/2022 2:06	1.75	6/26/2022 2:29	4.98	6/26/2022 3:52	-0.33	6/25/2022 2:45	11.56
6/25/2022 3:17	-0.10	6/26/2022 2:07	1.73	6/26/2022 2:30	4.94	6/26/2022 3:53	-0.35	6/25/2022 2:46	11.50
6/25/2022 3:18	-0.10	6/26/2022 2:08	1.74	6/26/2022 2:31	4.94	6/26/2022 3:54	-0.37	6/25/2022 2:47	11.54
6/25/2022 3:19	-0.09	6/26/2022 2:09	1.73	6/26/2022 2:32	4.96	6/26/2022 3:55	-0.35	6/25/2022 2:48	11.52
6/25/2022 3:20	-0.10	6/26/2022 2:10	1.73	6/26/2022 2:33	4.95	6/26/2022 3:56	-0.35	6/25/2022 2:49	11.53
6/25/2022 3:21	-0.10	6/26/2022 2:11	1.73	6/26/2022 2:34	4.95	6/26/2022 3:57	-0.37	6/25/2022 2:50	11.53
6/25/2022 3:22	-0.09	6/26/2022 2:12	1.73	6/26/2022 2:35	4.96	6/26/2022 3:58	-0.34	6/25/2022 2:51	11.51
6/25/2022 3:23	-0.09	6/26/2022 2:13	1.73	6/26/2022 2:36	4.94	6/26/2022 3:59	-0.39	6/25/2022 2:52	11.49
6/25/2022 3:24	-0.10	6/26/2022 2:14	1.73	6/26/2022 2:37	4.95	6/26/2022 4:00	-0.32	6/25/2022 2:53	11.54
6/25/2022 3:25	-0.10	6/26/2022 2:15	1.73	6/26/2022 2:38	4.94	6/26/2022 4:01	-0.37	6/25/2022 2:54	11.51
6/25/2022 3:26	-0.10	6/26/2022 2:16	1.73	6/26/2022 2:39	4.94	6/26/2022 4:02	-0.38	6/25/2022 2:55	11.56
6/25/2022 3:27	-0.10	6/26/2022 2:17	1.73	6/26/2022 2:40	4.96	6/26/2022 4:03	-0.37	6/25/2022 2:56	11.54
6/25/2022 3:28	-0.09	6/26/2022 2:18	1.73	6/26/2022 2:41	4.96	6/26/2022 4:04	-0.38	6/25/2022 2:57	11.50
6/25/2022 3:29	-0.09	6/26/2022 2:19	1.73	6/26/2022 2:42	4.95	6/26/2022 4:05	-0.35	6/25/2022 2:58	11.49
6/25/2022 3:30	-0.10	6/26/2022 2:20	1.72	6/26/2022 2:43	4.94	6/26/2022 4:06	-0.40	6/25/2022 2:59	11.50
6/25/2022 3:31	-0.10	6/26/2022 2:21	1.72	6/26/2022 2:44	4.94	6/26/2022 4:07	-0.39	6/25/2022 3:00	11.48
6/25/2022 3:32	-0.10	6/26/2022 2:22	1.73	6/26/2022 2:45	4.95	6/26/2022 4:08	-0.34	6/25/2022 3:01	11.59
6/25/2022 3:33	-0.10	6/26/2022 2:23	1.73	6/26/2022 2:46	4.94	6/26/2022 4:09	-0.36	6/25/2022 3:02	11.51
6/25/2022 3:34	-0.09	6/26/2022 2:24	1.73	6/26/2022 2:47	4.92	6/26/2022 4:10	-0.35	6/25/2022 3:03	11.52
6/25/2022 3:35	-0.09	6/26/2022 2:25	1.73	6/26/2022 2:48	4.94	6/26/2022 4:11	-0.36	6/25/2022 3:04	11.49
6/25/2022 3:36	-0.11	6/26/2022 2:26	1.73	6/26/2022 2:49	4.95	6/26/2022 4:12	-0.37	6/25/2022 3:05	11.51
6/25/2022 3:37	-0.10	6/26/2022 2:27	1.73	6/26/2022 2:50	4.97	6/26/2022 4:13	-0.35	6/25/2022 3:06	11.51
6/25/2022 3:38	-0.10	6/26/2022 2:28	1.73	6/26/2022 2:51	4.95	6/26/2022 4:14	-0.29	6/25/2022 3:07	11.52
6/25/2022 3:39	-0.10	6/26/2022 2:29	1.73	6/26/2022 2:52	4.93	6/26/2022 4:15	-0.35	6/25/2022 3:08	11.55
6/25/2022 3:40	-0.11	6/26/2022 2:30	1.72	6/26/2022 2:53	4.96	6/26/2022 4:16	-0.38	6/25/2022 3:09	11.50
6/25/2022 3:41	-0.10	6/26/2022 2:31	1.73	6/26/2022 2:54	4.92	6/26/2022 4:17	-0.33	6/25/2022 3:10	11.52
6/25/2022 3:42	-0.10	6/26/2022 2:32	1.73	6/26/2022 2:55	4.95	6/26/2022 4:18	-0.38	6/25/2022 3:11	11.53
6/25/2022 3:43	-0.11	6/26/2022 2:33	1.73	6/26/2022 2:56	4.89	6/26/2022 4:19	-0.32	6/25/2022 3:12	11.54
6/25/2022 3:44	-0.10	6/26/2022 2:34	1.73	6/26/2022 2:57	4.95	6/26/2022 4:20	-0.34	6/25/2022 3:13	11.50
6/25/2022 3:45	-0.10	6/26/2022 2:35	1.73	6/26/2022 2:58	4.94	6/26/2022 4:21	-0.34	6/25/2022 3:14	11.54
6/25/2022 3:46	-0.09	6/26/2022 2:36	1.72	6/26/2022 2:59	4.95	6/26/2022 4:22	-0.35	6/25/2022 3:15	11.51
6/25/2022 3:47	-0.11	6/26/2022 2:37	1.72	6/26/2022 3:00	4.95	6/26/2022 4:23	-0.37	6/25/2022 3:16	11.50
6/25/2022 3:48	-0.09	6/26/2022 2:38	1.73	6/26/2022 3:01	4.94	6/26/2022 4:24	-0.35	6/25/2022 3:17	11.49
6/25/2022 3:49	-0.09	6/26/2022 2:39	1.73	6/26/2022 3:02	4.94	6/26/2022 4:25	-0.36	6/25/2022 3:18	11.54
6/25/2022 3:50	-0.09	6/26/2022 2:40	1.73	6/26/2022 3:03	4.92	6/26/2022 4:26	-0.35	6/25/2022 3:19	11.53
6/25/2022 3:51	-0.10	6/26/2022 2:41	1.75	6/26/2022 3:04	4.95	6/26/2022 4:27	-0.30	6/25/2022 3:20	11.52
6/25/2022 3:52	-0.11	6/26/2022 2:42	1.73	6/26/2022 3:05	4.93	6/26/2022 4:28	-0.32	6/25/2022 3:21	11.49
6/25/2022 3:53	-0.10	6/26/2022 2:43	1.73	6/26/2022 3:06	4.92	6/26/2022 4:29	-0.39	6/25/2022 3:22	11.50
6/25/2022 3:54	-0.09	6/26/2022 2:44	1.72	6/26/2022 3:07	4.96	6/26/2022 4:30	-0.35	6/25/2022 3:23	11.51
6/25/2022 3:55	-0.09	6/26/2022 2:45	1.72	6/26/2022 3:08	4.91	6/26/2022 4:31	-0.37	6/25/2022 3:24	11.50
6/25/2022 3:56	-0.11	6/26/2022 2:46	1.72	6/26/2022 3:09	4.95	6/26/2022 4:32	-0.36	6/25/2022 3:25	11.50
6/25/2022 3:57	-0.11	6/26/2022 2:47	1.72	6/26/2022 3:10	4.91	6/26/2022 4:33	-0.36	6/25/2022 3:26	11.54
6/25/2022 3:58	-0.09	6/26/2022 2:48	1.72	6/26/2022 3:11	4.96	6/26/2022 4:34	-0.33	6/25/2022 3:27	11.49
6/25/2022 3:59	-0.09	6/26/2022 2:49	1.72	6/26/2022 3:12	4.95	6/26/2022 4:35	-0.35	6/25/2022 3:28	11.53
6/25/2022 4:00	-0.10	6/26/2022 2:50	1.72	6/26/2022 3:13	4.92	6/26/2022 4:36	-0.37	6/25/2022 3:29	11.48

6/25/2022 4:01	-0.11	6/26/2022 2:51	1.72	6/26/2022 3:14	4.94	6/26/2022 4:37	-0.34	6/25/2022 3:30	11.45
6/25/2022 4:02	-0.10	6/26/2022 2:52	1.72	6/26/2022 3:15	4.94	6/26/2022 4:38	-0.36	6/25/2022 3:31	11.55
6/25/2022 4:03	-0.09	6/26/2022 2:53	1.72	6/26/2022 3:16	4.92	6/26/2022 4:39	-0.34	6/25/2022 3:32	11.44
6/25/2022 4:04	-0.11	6/26/2022 2:54	1.72	6/26/2022 3:17	4.93	6/26/2022 4:40	-0.37	6/25/2022 3:33	11.52
6/25/2022 4:05	-0.10	6/26/2022 2:55	1.72	6/26/2022 3:18	4.95	6/26/2022 4:41	-0.37	6/25/2022 3:34	11.48
6/25/2022 4:06	-0.09	6/26/2022 2:56	1.72	6/26/2022 3:19	4.92	6/26/2022 4:42	-0.39	6/25/2022 3:35	11.53
6/25/2022 4:07	-0.10	6/26/2022 2:57	1.72	6/26/2022 3:20	4.94	6/26/2022 4:43	-0.30	6/25/2022 3:36	11.51
6/25/2022 4:08	-0.10	6/26/2022 2:58	1.72	6/26/2022 3:21	4.92	6/26/2022 4:44	-0.33	6/25/2022 3:37	11.55
6/25/2022 4:09	-0.10	6/26/2022 2:59	1.72	6/26/2022 3:22	4.93	6/26/2022 4:45	-0.37	6/25/2022 3:38	11.51
6/25/2022 4:10	-0.11	6/26/2022 3:00	1.72	6/26/2022 3:23	4.96	6/26/2022 4:46	-0.39	6/25/2022 3:39	11.56
6/25/2022 4:11	-0.09	6/26/2022 3:01	1.72	6/26/2022 3:24	4.94	6/26/2022 4:47	-0.33	6/25/2022 3:40	11.48
6/25/2022 4:12	-0.09	6/26/2022 3:02	1.72	6/26/2022 3:25	4.95	6/26/2022 4:48	-0.37	6/25/2022 3:41	11.50
6/25/2022 4:13	-0.09	6/26/2022 3:03	1.72	6/26/2022 3:26	4.94	6/26/2022 4:49	-0.31	6/25/2022 3:42	11.46
6/25/2022 4:14	-0.09	6/26/2022 3:04	1.72	6/26/2022 3:27	4.90	6/26/2022 4:50	-0.38	6/25/2022 3:43	11.48
6/25/2022 4:15	-0.09	6/26/2022 3:05	1.72	6/26/2022 3:28	4.92	6/26/2022 4:51	-0.37	6/25/2022 3:44	11.51
6/25/2022 4:16	-0.12	6/26/2022 3:06	1.72	6/26/2022 3:29	4.94	6/26/2022 4:52	-0.34	6/25/2022 3:45	11.49
6/25/2022 4:17	-0.12	6/26/2022 3:07	1.72	6/26/2022 3:30	4.94	6/26/2022 4:53	-0.36	6/25/2022 3:46	11.50
6/25/2022 4:18	-0.11	6/26/2022 3:08	1.72	6/26/2022 3:31	4.92	6/26/2022 4:54	-0.37	6/25/2022 3:47	11.48
6/25/2022 4:19	-0.11	6/26/2022 3:09	1.72	6/26/2022 3:32	4.94	6/26/2022 4:55	-0.38	6/25/2022 3:48	11.46
6/25/2022 4:20	-0.10	6/26/2022 3:10	1.71	6/26/2022 3:33	4.93	6/26/2022 4:56	-0.36	6/25/2022 3:49	11.51
6/25/2022 4:21	-0.11	6/26/2022 3:11	1.72	6/26/2022 3:34	4.95	6/26/2022 4:57	-0.35	6/25/2022 3:50	11.51
6/25/2022 4:22	-0.09	6/26/2022 3:12	1.72	6/26/2022 3:35	4.93	6/26/2022 4:58	-0.35	6/25/2022 3:51	11.46
6/25/2022 4:23	-0.11	6/26/2022 3:13	1.72	6/26/2022 3:36	4.97	6/26/2022 4:59	-0.40	6/25/2022 3:52	11.51
6/25/2022 4:24	-0.11	6/26/2022 3:14	1.72	6/26/2022 3:37	4.90	6/26/2022 5:00	-0.39	6/25/2022 3:53	11.48
6/25/2022 4:25	-0.11	6/26/2022 3:15	1.72	6/26/2022 3:38	4.95	6/26/2022 5:01	-0.33	6/25/2022 3:54	11.48
6/25/2022 4:26	-0.10	6/26/2022 3:16	1.72	6/26/2022 3:39	4.91	6/26/2022 5:02	-0.34	6/25/2022 3:55	11.54
6/25/2022 4:27	-0.11	6/26/2022 3:17	1.72	6/26/2022 3:40	4.93	6/26/2022 5:03	-0.32	6/25/2022 3:56	11.53
6/25/2022 4:28	-0.10	6/26/2022 3:18	1.72	6/26/2022 3:41	4.93	6/26/2022 5:04	-0.33	6/25/2022 3:57	11.52
6/25/2022 4:29	-0.10	6/26/2022 3:19	1.72	6/26/2022 3:42	4.94	6/26/2022 5:05	-0.37	6/25/2022 3:58	11.51
6/25/2022 4:30	-0.10	6/26/2022 3:20	1.72	6/26/2022 3:43	4.91	6/26/2022 5:06	-0.37	6/25/2022 3:59	11.51
6/25/2022 4:31	-0.09	6/26/2022 3:21	1.72	6/26/2022 3:44	4.91	6/26/2022 5:07	-0.39	6/25/2022 4:00	11.51
6/25/2022 4:32	-0.11	6/26/2022 3:22	1.72	6/26/2022 3:45	4.97	6/26/2022 5:08	-0.37	6/25/2022 4:01	11.52
6/25/2022 4:33	-0.10	6/26/2022 3:23	1.74	6/26/2022 3:46	4.92	6/26/2022 5:09	-0.36	6/25/2022 4:02	11.49
6/25/2022 4:34	-0.11	6/26/2022 3:24	1.74	6/26/2022 3:47	4.93	6/26/2022 5:10	-0.34	6/25/2022 4:03	11.50
6/25/2022 4:35	-0.09	6/26/2022 3:25	1.74	6/26/2022 3:48	4.93	6/26/2022 5:11	-0.37	6/25/2022 4:04	11.46
6/25/2022 4:36	-0.09	6/26/2022 3:26	1.72	6/26/2022 3:49	4.93	6/26/2022 5:12	-0.35	6/25/2022 4:05	11.53
6/25/2022 4:37	-0.10	6/26/2022 3:27	1.72	6/26/2022 3:50	4.93	6/26/2022 5:13	-0.33	6/25/2022 4:06	11.47
6/25/2022 4:38	-0.10	6/26/2022 3:28	1.72	6/26/2022 3:51	4.96	6/26/2022 5:14	-0.37	6/25/2022 4:07	11.53
6/25/2022 4:39	-0.09	6/26/2022 3:29	1.72	6/26/2022 3:52	4.90	6/26/2022 5:15	-0.36	6/25/2022 4:08	11.49
6/25/2022 4:40	-0.11	6/26/2022 3:30	1.72	6/26/2022 3:53	4.95	6/26/2022 5:16	-0.38	6/25/2022 4:09	11.51
6/25/2022 4:41	-0.10	6/26/2022 3:31	1.72	6/26/2022 3:54	4.91	6/26/2022 5:17	-0.35	6/25/2022 4:10	11.50
6/25/2022 4:42	-0.11	6/26/2022 3:32	1.72	6/26/2022 3:55	4.90	6/26/2022 5:18	-0.37	6/25/2022 4:11	11.52
6/25/2022 4:43	-0.09	6/26/2022 3:33	1.72	6/26/2022 3:56	4.92	6/26/2022 5:19	-0.35	6/25/2022 4:12	11.50
6/25/2022 4:44	-0.09	6/26/2022 3:34	1.72	6/26/2022 3:57	4.92	6/26/2022 5:20	-0.39	6/25/2022 4:13	11.47
6/25/2022 4:45	-0.11	6/26/2022 3:35	1.72	6/26/2022 3:58	4.93	6/26/2022 5:21	-0.40	6/25/2022 4:14	11.49
6/25/2022 4:46	-0.10	6/26/2022 3:36	1.71	6/26/2022 3:59	4.94	6/26/2022 5:22	-0.36	6/25/2022 4:15	11.49
6/25/2022 4:47	-0.09	6/26/2022 3:37	1.71	6/26/2022 4:00	4.93	6/26/2022 5:23	-0.33	6/25/2022 4:16	11.51
6/25/2022 4:48	-0.10	6/26/2022 3:38	1.72	6/26/2022 4:01	4.93	6/26/2022 5:24	-0.36	6/25/2022 4:17	11.49
6/25/2022 4:49	-0.09	6/26/2022 3:39	1.71	6/26/2022 4:02	4.94	6/26/2022 5:25	-0.33	6/25/2022 4:18	11.47
6/25/2022 4:50	-0.11	6/26/2022 3:40	1.73	6/26/2022 4:03	4.92	6/26/2022 5:26	-0.37	6/25/2022 4:19	11.53
6/25/2022 4:51	-0.12	6/26/2022 3:41	1.71	6/26/2022 4:04	4.95	6/26/2022 5:27	-0.35	6/25/2022 4:20	11.43
6/25/2022 4:52	-0.10	6/26/2022 3:42	1.71	6/26/2022 4:05	4.92	6/26/2022 5:28	-0.37	6/25/2022 4:21	11.53
6/25/2022 4:53	-0.10	6/26/2022 3:43	1.71	6/26/2022 4:06	4.93	6/26/2022 5:29	-0.37	6/25/2022 4:22	11.50
6/25/2022 4:54	-0.11	6/26/2022 3:44	1.71	6/26/2022 4:07	4.94	6/26/2022 5:30	-0.38	6/25/2022 4:23	11.53
6/25/2022 4:55	-0.09	6/26/2022 3:45	1.71	6/26/2022 4:08	4.93	6/26/2022 5:31	-0.39	6/25/2022 4:24	11.48
6/25/2022 4:56	-0.09	6/26/2022 3:46	1.71	6/26/2022 4:09	4.91	6/26/2022 5:32	-0.31	6/25/2022 4:25	11.45
6/25/2022 4:57	-0.10	6/26/2022 3:47	1.72	6/26/2022 4:10	4.92	6/26/2022 5:33	-0.35	6/25/2022 4:26	11.58
6/25/2022 4:58	-0.11	6/26/2022 3:48	1.71	6/26/2022 4:11	4.93	6/26/2022 5:34	-0.34	6/25/2022 4:27	11.51
6/25/2022 4:59	-0.11	6/26/2022 3:49	1.71	6/26/2022 4:12	4.90	6/26/2022 5:35	-0.39	6/25/2022 4:28	11.50
6/25/2022 5:00	-0.09	6/26/2022 3:50	1.71	6/26/2022 4:13	4.90	6/26/2022 5:36	-0.37	6/25/2022 4:29	11.47
6/25/2022 5:01	-0.10	6/26/2022 3:51	1.71	6/26/2022 4:14	4.93	6/26/2022 5:37	-0.34	6/25/2022 4:30	11.53
6/25/2022 5:02	-0.09	6/26/2022 3:52	1.71	6/26/2022 4:15	4.92	6/26/2022 5:38	-0.36	6/25/2022 4:31	11.51
6/25/2022 5:03	-0.11	6/26/2022 3:53	1.71	6/26/2022 4:16	4.91	6/26/2022 5:39	-0.37	6/25/2022 4:32	11.52
6/25/2022 5:04	-0.09	6/26/2022 3:54	1.74	6/26/2022 4:17	4.91	6/26/2022 5:40	-0.37	6/25/2022 4:33	11.52
6/25/2022 5:05	-0.11	6/26/2022 3:55	1.73	6/26/2022 4:18	4.92	6/26/2022 5:41	-0.38	6/25/2022 4:34	11.50
6/25/2022 5:06	-0.09	6/26/2022 3:56	1.71	6/26/2022 4:19	4.97	6/26/2022 5:42	-0.37	6/25/2022 4:35	11.46
6/25/2022 5:07	-0.11	6/26/2022 3:57	1.71	6/26/2022 4:20	4.92	6/26/2022 5:43	-0.38	6/25/2022 4:36	11.51
6/25/2022 5:08	-0.09	6/26/2022 3:58	1.71	6/26/2022 4:21	4.90	6/26/2022 5:44	-0.31	6/25/2022 4:37	11.50
6/25/2022 5:09	-0.09	6/26/2022 3:59	1.73	6/26/2022 4:22	4.92	6/26/2022 5:45	-0.36	6/25/2022 4:38	11.55
6/25/2022 5:10	-0.12	6/26/2022 4:00	1.71	6/26/2022 4:23	4.93	6/26/2022 5:46	-0.37	6/25/2022 4:39	11.51
6/25/2022 5:11	-0.11	6/26/2022 4:01	1.71	6/26/2022 4:24	4.92	6/26/2022 5:47	-0.32	6/25/2022 4:40	11.49
6/25/2022 5:12	-0.11	6/26/2022 4:02	1.71	6/26/2022 4:25	4.92	6/26/2022 5:48	-0.37	6/25/2022 4:41	11.53
6/25/2022 5:13	-0.10	6/26/2022 4:03	1.71	6/26/2022 4:26	4.91	6/26/2022 5:49	-0.37	6/25/2022 4:42	11.47
6/25/2022 5:14	-0.09	6/26/2022 4:04	1.73	6/26/2022 4:27	4.91	6/26/2022 5:50	-0.36	6/25/2022 4:43	11.49
6/25/2022 5:15	-0.11	6/26/2022 4:05	1.71	6/26/2022 4:28	4.95	6/26/2022 5:51	-0.39	6/25/2022 4:44	11.49
6/25/2022 5:16	-0.10	6/26/2022 4:06	1.71	6/26/2022 4:29	4.93	6/26/2022 5:52	-0.37	6/25/2022 4:45	11.52
6/25/2022 5:17	-0.10	6/26/2022 4:07	1.73	6/26/2022 4:30	4.92	6/26/2022 5:53	-0.30	6/25/2022 4:46	11.48
6/25/2022 5:18	-0.09	6/26/2022 4:08	1.71	6/26/2022 4:31	4.91	6/26/2022 5:54	-0.34	6/25/2022 4:47	11.55
6/25/2022 5:19	-0.09	6/26/2022 4:09	1.71	6/26/2022 4:32	4.91	6/26/2022 5:55	-0.37	6/25/2022 4:48	11.48
6/25/2022 5:20	-0.11	6/26/2022 4:10	1.73	6/26/2022 4:33	4.92	6/26/2022 5:56	-0.35	6/25/2022 4:49	11.46
6/25/2022 5:21	-0.10	6/26/2022 4:11	1.71	6/26/2022 4:34	4.90	6/26/2022 5:57	-0.35	6/25/2022 4:50	11.49
6/25/2022 5:22	-0.10	6/26/2022 4:12	1.73	6/26/2022 4:35	4.92	6/26/2022 5:58	-0.33	6/25/2022 4:51	11.54
6/25/2022 5:23	-0.10	6/26/2022 4:13	1.73	6/26/2022 4:36	4.92	6/26/2022 5:59	-0.35	6/25/2022 4:52	11.51
6/25/2022 5:24	-0.10	6/26/2022 4:14	1.73	6/26/2022 4:37	4.94	6/26/2022 6:00	-0.35	6/25/2022 4:53	11.53
6/25/2022 5:25	-0.11	6/26/2022 4:15	1.71	6/26/2022 4:38	4.95	6/26/2022 6:01	-0.39	6/25/2022 4:54	11.56
6/25/2022 5:26	-0.09	6/26/2022 4:16	1.71	6/26/2022 4:39	4.89	6/26/2022 6:02	-0.36	6/25/2022 4:55	11.55
6/25/2022 5:27	-0.11	6/26/2022 4:17	1.71	6/26/2022 4:40	4.91	6/26/2022 6:03	-0.36	6/25/2022 4:56	11.51
6/25/2022 5:28	-0.10	6/26/2022 4:18	1.71	6/26/2022 4:41	4.91	6/26/2022 6:04	-0.37	6/25/2022 4:57	11.53

6/25/2022 5:29	-0.11	6/26/2022 4:19	1.71	6/26/2022 4:42	4.93	6/26/2022 6:05	-0.36	6/25/2022 4:58	11.52
6/25/2022 5:30	-0.11	6/26/2022 4:20	1.71	6/26/2022 4:43	4.93	6/26/2022 6:06	-0.38	6/25/2022 4:59	11.54
6/25/2022 5:31	-0.10	6/26/2022 4:21	1.73	6/26/2022 4:44	4.92	6/26/2022 6:07	-0.38	6/25/2022 5:00	11.54
6/25/2022 5:32	-0.11	6/26/2022 4:22	1.71	6/26/2022 4:45	4.94	6/26/2022 6:08	-0.33	6/25/2022 5:01	11.48
6/25/2022 5:33	-0.10	6/26/2022 4:23	1.71	6/26/2022 4:46	4.91	6/26/2022 6:09	-0.36	6/25/2022 5:02	11.51
6/25/2022 5:34	-0.11	6/26/2022 4:24	1.71	6/26/2022 4:47	4.93	6/26/2022 6:10	-0.37	6/25/2022 5:03	11.51
6/25/2022 5:35	-0.10	6/26/2022 4:25	1.71	6/26/2022 4:48	4.91	6/26/2022 6:11	-0.35	6/25/2022 5:04	11.55
6/25/2022 5:36	-0.11	6/26/2022 4:26	1.71	6/26/2022 4:49	4.89	6/26/2022 6:12	-0.34	6/25/2022 5:05	11.55
6/25/2022 5:37	-0.11	6/26/2022 4:27	1.71	6/26/2022 4:50	4.93	6/26/2022 6:13	-0.38	6/25/2022 5:06	11.55
6/25/2022 5:38	-0.09	6/26/2022 4:28	1.71	6/26/2022 4:51	4.93	6/26/2022 6:14	-0.38	6/25/2022 5:07	11.49
6/25/2022 5:39	-0.10	6/26/2022 4:29	1.71	6/26/2022 4:52	4.94	6/26/2022 6:15	-0.35	6/25/2022 5:08	11.52
6/25/2022 5:40	-0.09	6/26/2022 4:30	1.71	6/26/2022 4:53	4.91	6/26/2022 6:16	-0.35	6/25/2022 5:09	11.54
6/25/2022 5:41	-0.10	6/26/2022 4:31	1.71	6/26/2022 4:54	4.91	6/26/2022 6:17	-0.39	6/25/2022 5:10	11.51
6/25/2022 5:42	-0.11	6/26/2022 4:32	1.71	6/26/2022 4:55	4.93	6/26/2022 6:18	-0.41	6/25/2022 5:11	11.47
6/25/2022 5:43	-0.09	6/26/2022 4:33	1.71	6/26/2022 4:56	4.93	6/26/2022 6:19	-0.33	6/25/2022 5:12	11.48
6/25/2022 5:44	-0.10	6/26/2022 4:34	1.71	6/26/2022 4:57	4.90	6/26/2022 6:20	-0.32	6/25/2022 5:13	11.47
6/25/2022 5:45	-0.11	6/26/2022 4:35	1.71	6/26/2022 4:58	4.97	6/26/2022 6:21	-0.37	6/25/2022 5:14	11.57
6/25/2022 5:46	-0.10	6/26/2022 4:36	1.71	6/26/2022 4:59	4.93	6/26/2022 6:22	-0.35	6/25/2022 5:15	11.50
6/25/2022 5:47	-0.09	6/26/2022 4:37	1.71	6/26/2022 5:00	4.92	6/26/2022 6:23	-0.35	6/25/2022 5:16	11.57
6/25/2022 5:48	-0.10	6/26/2022 4:38	1.71	6/26/2022 5:01	4.95	6/26/2022 6:24	-0.39	6/25/2022 5:17	11.54
6/25/2022 5:49	-0.10	6/26/2022 4:39	1.71	6/26/2022 5:02	4.89	6/26/2022 6:25	-0.31	6/25/2022 5:18	11.55
6/25/2022 5:50	-0.09	6/26/2022 4:40	1.71	6/26/2022 5:03	4.94	6/26/2022 6:26	-0.36	6/25/2022 5:19	11.48
6/25/2022 5:51	-0.11	6/26/2022 4:41	1.73	6/26/2022 5:04	4.95	6/26/2022 6:27	-0.37	6/25/2022 5:20	11.54
6/25/2022 5:52	-0.09	6/26/2022 4:42	1.71	6/26/2022 5:05	4.92	6/26/2022 6:28	-0.36	6/25/2022 5:21	11.49
6/25/2022 5:53	-0.09	6/26/2022 4:43	1.71	6/26/2022 5:06	4.90	6/26/2022 6:29	-0.34	6/25/2022 5:22	11.51
6/25/2022 5:54	-0.09	6/26/2022 4:44	1.71	6/26/2022 5:07	4.94	6/26/2022 6:30	-0.40	6/25/2022 5:23	11.47
6/25/2022 5:55	-0.11	6/26/2022 4:45	1.71	6/26/2022 5:08	4.92	6/26/2022 6:31	-0.38	6/25/2022 5:24	11.48
6/25/2022 5:56	-0.11	6/26/2022 4:46	1.71	6/26/2022 5:09	4.91	6/26/2022 6:32	-0.37	6/25/2022 5:25	11.52
6/25/2022 5:57	-0.10	6/26/2022 4:47	1.71	6/26/2022 5:10	4.92	6/26/2022 6:33	-0.33	6/25/2022 5:26	11.51
6/25/2022 5:58	-0.10	6/26/2022 4:48	1.71	6/26/2022 5:11	4.88	6/26/2022 6:34	-0.36	6/25/2022 5:27	11.52
6/25/2022 5:59	-0.10	6/26/2022 4:49	1.71	6/26/2022 5:12	4.91	6/26/2022 6:35	-0.33	6/25/2022 5:28	11.54
6/25/2022 6:00	-0.11	6/26/2022 4:50	1.71	6/26/2022 5:13	4.93	6/26/2022 6:36	-0.37	6/25/2022 5:29	11.51
6/25/2022 6:01	-0.10	6/26/2022 4:51	1.71	6/26/2022 5:14	4.95	6/26/2022 6:37	-0.36	6/25/2022 5:30	11.56
6/25/2022 6:02	-0.09	6/26/2022 4:52	1.71	6/26/2022 5:15	4.88	6/26/2022 6:38	-0.35	6/25/2022 5:31	11.56
6/25/2022 6:03	-0.11	6/26/2022 4:53	1.71	6/26/2022 5:16	4.93	6/26/2022 6:39	-0.33	6/25/2022 5:32	11.53
6/25/2022 6:04	-0.11	6/26/2022 4:54	1.71	6/26/2022 5:17	4.90	6/26/2022 6:40	-0.37	6/25/2022 5:33	11.52
6/25/2022 6:05	-0.10	6/26/2022 4:55	1.71	6/26/2022 5:18	4.92	6/26/2022 6:41	-0.38	6/25/2022 5:34	11.53
6/25/2022 6:06	-0.10	6/26/2022 4:56	1.71	6/26/2022 5:19	4.92	6/26/2022 6:42	-0.35	6/25/2022 5:35	11.55
6/25/2022 6:07	-0.11	6/26/2022 4:57	1.71	6/26/2022 5:20	4.91	6/26/2022 6:43	-0.39	6/25/2022 5:36	11.57
6/25/2022 6:08	-0.09	6/26/2022 4:58	1.72	6/26/2022 5:21	4.88	6/26/2022 6:44	-0.34	6/25/2022 5:37	11.49
6/25/2022 6:09	-0.09	6/26/2022 4:59	1.71	6/26/2022 5:22	4.91	6/26/2022 6:45	-0.36	6/25/2022 5:38	11.49
6/25/2022 6:10	-0.10	6/26/2022 5:00	1.71	6/26/2022 5:23	4.94	6/26/2022 6:46	-0.36	6/25/2022 5:39	11.56
6/25/2022 6:11	-0.11	6/26/2022 5:01	1.71	6/26/2022 5:24	4.92	6/26/2022 6:47	-0.39	6/25/2022 5:40	11.53
6/25/2022 6:12	-0.10	6/26/2022 5:02	1.71	6/26/2022 5:25	4.88	6/26/2022 6:48	-0.35	6/25/2022 5:41	11.50
6/25/2022 6:13	-0.11	6/26/2022 5:03	1.71	6/26/2022 5:26	4.92	6/26/2022 6:49	-0.38	6/25/2022 5:42	11.56
6/25/2022 6:14	-0.10	6/26/2022 5:04	1.73	6/26/2022 5:27	4.92	6/26/2022 6:50	-0.39	6/25/2022 5:43	11.58
6/25/2022 6:15	-0.11	6/26/2022 5:05	1.71	6/26/2022 5:28	4.92	6/26/2022 6:51	-0.35	6/25/2022 5:44	11.56
6/25/2022 6:16	-0.09	6/26/2022 5:06	1.71	6/26/2022 5:29	4.91	6/26/2022 6:52	-0.37	6/25/2022 5:45	11.49
6/25/2022 6:17	-0.09	6/26/2022 5:07	1.71	6/26/2022 5:30	4.92	6/26/2022 6:53	-0.35	6/25/2022 5:46	11.55
6/25/2022 6:18	-0.10	6/26/2022 5:08	1.71	6/26/2022 5:31	4.92	6/26/2022 6:54	-0.33	6/25/2022 5:47	11.55
6/25/2022 6:19	-0.09	6/26/2022 5:09	1.71	6/26/2022 5:32	4.92	6/26/2022 6:55	-0.39	6/25/2022 5:48	11.53
6/25/2022 6:20	-0.09	6/26/2022 5:10	1.71	6/26/2022 5:33	4.93	6/26/2022 6:56	-0.38	6/25/2022 5:49	11.49
6/25/2022 6:21	-0.11	6/26/2022 5:11	1.71	6/26/2022 5:34	4.91	6/26/2022 6:57	-0.36	6/25/2022 5:50	11.52
6/25/2022 6:22	-0.10	6/26/2022 5:12	1.71	6/26/2022 5:35	4.93	6/26/2022 6:58	-0.33	6/25/2022 5:51	11.49
6/25/2022 6:23	-0.10	6/26/2022 5:13	1.71	6/26/2022 5:36	4.93	6/26/2022 6:59	-0.37	6/25/2022 5:52	11.49
6/25/2022 6:24	-0.11	6/26/2022 5:14	1.71	6/26/2022 5:37	4.94	6/26/2022 7:00	-0.37	6/25/2022 5:53	11.55
6/25/2022 6:25	-0.10	6/26/2022 5:15	1.71	6/26/2022 5:38	4.92	6/26/2022 7:01	-0.33	6/25/2022 5:54	11.50
6/25/2022 6:26	-0.10	6/26/2022 5:16	1.71	6/26/2022 5:39	4.93	6/26/2022 7:02	-0.37	6/25/2022 5:55	11.55
6/25/2022 6:27	-0.11	6/26/2022 5:17	1.71	6/26/2022 5:40	4.91	6/26/2022 7:03	-0.33	6/25/2022 5:56	11.52
6/25/2022 6:28	-0.12	6/26/2022 5:18	1.71	6/26/2022 5:41	4.90	6/26/2022 7:04	-0.37	6/25/2022 5:57	11.51
6/25/2022 6:29	-0.10	6/26/2022 5:19	1.73	6/26/2022 5:42	4.91	6/26/2022 7:05	-0.34	6/25/2022 5:58	11.55
6/25/2022 6:30	-0.09	6/26/2022 5:20	1.71	6/26/2022 5:43	4.94	6/26/2022 7:06	-0.35	6/25/2022 5:59	11.50
6/25/2022 6:31	-0.10	6/26/2022 5:21	1.71	6/26/2022 5:44	4.93	6/26/2022 7:07	-0.35	6/25/2022 6:00	11.50
6/25/2022 6:32	-0.11	6/26/2022 5:22	1.71	6/26/2022 5:45	4.90	6/26/2022 7:08	-0.38	6/25/2022 6:01	11.53
6/25/2022 6:33	-0.11	6/26/2022 5:23	1.71	6/26/2022 5:46	4.90	6/26/2022 7:09	-0.32	6/25/2022 6:02	11.55
6/25/2022 6:34	-0.11	6/26/2022 5:24	1.72	6/26/2022 5:47	4.92	6/26/2022 7:10	-0.35	6/25/2022 6:03	11.53
6/25/2022 6:35	-0.10	6/26/2022 5:25	1.71	6/26/2022 5:48	4.95	6/26/2022 7:11	-0.37	6/25/2022 6:04	11.47
6/25/2022 6:36	-0.10	6/26/2022 5:26	1.71	6/26/2022 5:49	4.90	6/26/2022 7:12	-0.38	6/25/2022 6:05	11.47
6/25/2022 6:37	-0.10	6/26/2022 5:27	1.72	6/26/2022 5:50	4.91	6/26/2022 7:13	-0.34	6/25/2022 6:06	11.53
6/25/2022 6:38	-0.11	6/26/2022 5:28	1.71	6/26/2022 5:51	4.92	6/26/2022 7:14	-0.31	6/25/2022 6:07	11.51
6/25/2022 6:39	-0.11	6/26/2022 5:29	1.71	6/26/2022 5:52	4.90	6/26/2022 7:15	-0.35	6/25/2022 6:08	11.56
6/25/2022 6:40	-0.10	6/26/2022 5:30	1.72	6/26/2022 5:53	4.94	6/26/2022 7:16	-0.35	6/25/2022 6:09	11.50
6/25/2022 6:41	-0.09	6/26/2022 5:31	1.71	6/26/2022 5:54	4.92	6/26/2022 7:17	-0.36	6/25/2022 6:10	11.51
6/25/2022 6:42	-0.10	6/26/2022 5:32	1.71	6/26/2022 5:55	4.91	6/26/2022 7:18	-0.37	6/25/2022 6:11	11.55
6/25/2022 6:43	-0.09	6/26/2022 5:33	1.72	6/26/2022 5:56	4.91	6/26/2022 7:19	-0.33	6/25/2022 6:12	11.51
6/25/2022 6:44	-0.11	6/26/2022 5:34	1.72	6/26/2022 5:57	4.92	6/26/2022 7:20	-0.36	6/25/2022 6:13	11.53
6/25/2022 6:45	-0.09	6/26/2022 5:35	1.71	6/26/2022 5:58	4.91	6/26/2022 7:21	-0.35	6/25/2022 6:14	11.51
6/25/2022 6:46	-0.11	6/26/2022 5:36	1.71	6/26/2022 5:59	4.91	6/26/2022 7:22	-0.36	6/25/2022 6:15	11.49
6/25/2022 6:47	-0.11	6/26/2022 5:37	1.71	6/26/2022 6:00	4.91	6/26/2022 7:23	-0.35	6/25/2022 6:16	11.51
6/25/2022 6:48	-0.10	6/26/2022 5:38	1.71	6/26/2022 6:01	4.90	6/26/2022 7:24	-0.38	6/25/2022 6:17	11.51
6/25/2022 6:49	-0.11	6/26/2022 5:39	1.72	6/26/2022 6:02	4.91	6/26/2022 7:25	-0.34	6/25/2022 6:18	11.50
6/25/2022 6:50	-0.10	6/26/2022 5:40	1.72	6/26/2022 6:03	4.94	6/26/2022 7:26	-0.37	6/25/2022 6:19	11.48
6/25/2022 6:51	-0.11	6/26/2022 5:41	1.71	6/26/2022 6:04	4.89	6/26/2022 7:27	-0.31	6/25/2022 6:20	11.52
6/25/2022 6:52	-0.11	6/26/2022 5:42	1.71	6/26/2022 6:05	4.92	6/26/2022 7:28	-0.39	6/25/2022 6:21	11.48
6/25/2022 6:53	-0.11	6/26/2022 5:43	1.72	6/26/2022 6:06	4.91	6/26/2022 7:29	-0.34	6/25/2022 6:22	11.59
6/25/2022 6:54	-0.11	6/26/2022 5:44	1.71	6/26/2022 6:07	4.89	6/26/2022 7:30	-0.33	6/25/2022 6:23	11.49
6/25/2022 6:55	-0.11	6/26/2022 5:45	1.71	6/26/2022 6:08	4.91	6/26/2022 7:31	-0.35	6/25/2022 6:24	11.53
6/25/2022 6:56	-0.10	6/26/2022 5:46	1.72	6/26/2022 6:09	4.94	6/26/2022 7:32	-0.39	6/25/2022 6:25	11.53

6/25/2022 6:57	-0.09	6/26/2022 5:47	1.72	6/26/2022 6:10	4.92	6/26/2022 7:33	-0.38	6/25/2022 6:26	11.55
6/25/2022 6:58	-0.11	6/26/2022 5:48	1.71	6/26/2022 6:11	4.88	6/26/2022 7:34	-0.35	6/25/2022 6:27	11.54
6/25/2022 6:59	-0.09	6/26/2022 5:49	1.72	6/26/2022 6:12	4.91	6/26/2022 7:35	-0.33	6/25/2022 6:28	11.53
6/25/2022 7:00	-0.10	6/26/2022 5:50	1.71	6/26/2022 6:13	4.92	6/26/2022 7:36	-0.32	6/25/2022 6:29	11.53
6/25/2022 7:01	-0.09	6/26/2022 5:51	1.72	6/26/2022 6:14	4.90	6/26/2022 7:37	-0.34	6/25/2022 6:30	11.51
6/25/2022 7:02	-0.11	6/26/2022 5:52	1.71	6/26/2022 6:15	4.95	6/26/2022 7:38	-0.33	6/25/2022 6:31	11.54
6/25/2022 7:03	-0.11	6/26/2022 5:53	1.72	6/26/2022 6:16	4.88	6/26/2022 7:39	-0.38	6/25/2022 6:32	11.56
6/25/2022 7:04	-0.11	6/26/2022 5:54	1.72	6/26/2022 6:17	4.92	6/26/2022 7:40	-0.33	6/25/2022 6:33	11.54
6/25/2022 7:05	-0.11	6/26/2022 5:55	1.72	6/26/2022 6:18	4.91	6/26/2022 7:41	-0.34	6/25/2022 6:34	11.57
6/25/2022 7:06	-0.09	6/26/2022 5:56	1.72	6/26/2022 6:19	4.93	6/26/2022 7:42	-0.35	6/25/2022 6:35	11.50
6/25/2022 7:07	-0.11	6/26/2022 5:57	1.73	6/26/2022 6:20	4.93	6/26/2022 7:43	-0.36	6/25/2022 6:36	11.52
6/25/2022 7:08	-0.11	6/26/2022 5:58	1.72	6/26/2022 6:21	4.88	6/26/2022 7:44	-0.35	6/25/2022 6:37	11.55
6/25/2022 7:09	-0.11	6/26/2022 5:59	1.74	6/26/2022 6:22	4.95	6/26/2022 7:45	-0.38	6/25/2022 6:38	11.53
6/25/2022 7:10	-0.09	6/26/2022 6:00	1.72	6/26/2022 6:23	4.92	6/26/2022 7:46	-0.37	6/25/2022 6:39	11.55
6/25/2022 7:11	-0.12	6/26/2022 6:01	1.71	6/26/2022 6:24	4.92	6/26/2022 7:47	-0.38	6/25/2022 6:40	11.51
6/25/2022 7:12	-0.10	6/26/2022 6:02	1.71	6/26/2022 6:25	4.91	6/26/2022 7:48	-0.33	6/25/2022 6:41	11.49
6/25/2022 7:13	-0.11	6/26/2022 6:03	1.74	6/26/2022 6:26	4.92	6/26/2022 7:49	-0.37	6/25/2022 6:42	11.56
6/25/2022 7:14	-0.11	6/26/2022 6:04	1.74	6/26/2022 6:27	4.88	6/26/2022 7:50	-0.39	6/25/2022 6:43	11.53
6/25/2022 7:15	-0.09	6/26/2022 6:05	1.71	6/26/2022 6:28	4.89	6/26/2022 7:51	-0.35	6/25/2022 6:44	11.58
6/25/2022 7:16	-0.11	6/26/2022 6:06	1.72	6/26/2022 6:29	4.91	6/26/2022 7:52	-0.35	6/25/2022 6:45	11.50
6/25/2022 7:17	-0.11	6/26/2022 6:07	1.71	6/26/2022 6:30	4.91	6/26/2022 7:53	-0.31	6/25/2022 6:46	11.54
6/25/2022 7:18	-0.10	6/26/2022 6:08	1.72	6/26/2022 6:31	4.89	6/26/2022 7:54	-0.36	6/25/2022 6:47	11.56
6/25/2022 7:19	-0.09	6/26/2022 6:09	1.71	6/26/2022 6:32	4.87	6/26/2022 7:55	-0.35	6/25/2022 6:48	11.51
6/25/2022 7:20	-0.09	6/26/2022 6:10	1.71	6/26/2022 6:33	4.94	6/26/2022 7:56	-0.35	6/25/2022 6:49	11.53
6/25/2022 7:21	-0.11	6/26/2022 6:11	1.72	6/26/2022 6:34	4.94	6/26/2022 7:57	-0.37	6/25/2022 6:50	11.58
6/25/2022 7:22	-0.09	6/26/2022 6:12	1.71	6/26/2022 6:35	4.90	6/26/2022 7:58	-0.33	6/25/2022 6:51	11.53
6/25/2022 7:23	-0.09	6/26/2022 6:13	1.72	6/26/2022 6:36	4.90	6/26/2022 7:59	-0.38	6/25/2022 6:52	11.55
6/25/2022 7:24	-0.09	6/26/2022 6:14	1.72	6/26/2022 6:37	4.90	6/26/2022 8:00	-0.32	6/25/2022 6:53	11.55
6/25/2022 7:25	-0.11	6/26/2022 6:15	1.72	6/26/2022 6:38	4.89	6/26/2022 8:01	-0.37	6/25/2022 6:54	11.59
6/25/2022 7:26	-0.11	6/26/2022 6:16	1.71	6/26/2022 6:39	4.92	6/26/2022 8:02	-0.32	6/25/2022 6:55	11.55
6/25/2022 7:27	-0.11	6/26/2022 6:17	1.72	6/26/2022 6:40	4.89	6/26/2022 8:03	-0.39	6/25/2022 6:56	11.50
6/25/2022 7:28	-0.09	6/26/2022 6:18	1.72	6/26/2022 6:41	4.89	6/26/2022 8:04	-0.36	6/25/2022 6:57	11.51
6/25/2022 7:29	-0.11	6/26/2022 6:19	1.72	6/26/2022 6:42	4.93	6/26/2022 8:05	-0.39	6/25/2022 6:58	11.55
6/25/2022 7:30	-0.11	6/26/2022 6:20	1.71	6/26/2022 6:43	4.88	6/26/2022 8:06	-0.37	6/25/2022 6:59	11.54
6/25/2022 7:31	-0.10	6/26/2022 6:21	1.72	6/26/2022 6:44	4.90	6/26/2022 8:07	-0.36	6/25/2022 7:00	11.55
6/25/2022 7:32	-0.11	6/26/2022 6:22	1.72	6/26/2022 6:45	4.92	6/26/2022 8:08	-0.33	6/25/2022 7:01	11.53
6/25/2022 7:33	-0.11	6/26/2022 6:23	1.72	6/26/2022 6:46	4.91	6/26/2022 8:09	-0.33	6/25/2022 7:02	11.54
6/25/2022 7:34	-0.11	6/26/2022 6:24	1.72	6/26/2022 6:47	4.93	6/26/2022 8:10	-0.36	6/25/2022 7:03	11.55
6/25/2022 7:35	-0.09	6/26/2022 6:25	1.72	6/26/2022 6:48	4.91	6/26/2022 8:11	-0.35	6/25/2022 7:04	11.56
6/25/2022 7:36	-0.10	6/26/2022 6:26	1.72	6/26/2022 6:49	4.93	6/26/2022 8:12	-0.37	6/25/2022 7:05	11.54
6/25/2022 7:37	-0.09	6/26/2022 6:27	1.72	6/26/2022 6:50	4.88	6/26/2022 8:13	-0.30	6/25/2022 7:06	11.49
6/25/2022 7:38	-0.11	6/26/2022 6:28	1.72	6/26/2022 6:51	4.92	6/26/2022 8:14	-0.36	6/25/2022 7:07	11.57
6/25/2022 7:39	-0.11	6/26/2022 6:29	1.72	6/26/2022 6:52	4.92	6/26/2022 8:15	-0.38	6/25/2022 7:08	11.57
6/25/2022 7:40	-0.09	6/26/2022 6:30	1.72	6/26/2022 6:53	4.91	6/26/2022 8:16	-0.37	6/25/2022 7:09	11.51
6/25/2022 7:41	-0.09	6/26/2022 6:31	1.72	6/26/2022 6:54	4.88	6/26/2022 8:17	-0.35	6/25/2022 7:10	11.57
6/25/2022 7:42	-0.10	6/26/2022 6:32	1.72	6/26/2022 6:55	4.91	6/26/2022 8:18	-0.34	6/25/2022 7:11	11.56
6/25/2022 7:43	-0.09	6/26/2022 6:33	1.72	6/26/2022 6:56	4.91	6/26/2022 8:19	-0.33	6/25/2022 7:12	11.53
6/25/2022 7:44	-0.12	6/26/2022 6:34	1.72	6/26/2022 6:57	4.88	6/26/2022 8:20	-0.37	6/25/2022 7:13	11.55
6/25/2022 7:45	-0.11	6/26/2022 6:35	1.74	6/26/2022 6:58	4.91	6/26/2022 8:21	-0.36	6/25/2022 7:14	11.51
6/25/2022 7:46	-0.09	6/26/2022 6:36	1.72	6/26/2022 6:59	4.89	6/26/2022 8:22	-0.38	6/25/2022 7:15	11.60
6/25/2022 7:47	-0.11	6/26/2022 6:37	1.72	6/26/2022 7:00	4.89	6/26/2022 8:23	-0.37	6/25/2022 7:16	11.52
6/25/2022 7:48	-0.10	6/26/2022 6:38	1.72	6/26/2022 7:01	4.91	6/26/2022 8:24	-0.38	6/25/2022 7:17	11.51
6/25/2022 7:49	-0.09	6/26/2022 6:39	1.72	6/26/2022 7:02	4.95	6/26/2022 8:25	-0.34	6/25/2022 7:18	11.51
6/25/2022 7:50	-0.09	6/26/2022 6:40	1.72	6/26/2022 7:03	4.92	6/26/2022 8:26	-0.35	6/25/2022 7:19	11.53
6/25/2022 7:51	-0.10	6/26/2022 6:41	1.72	6/26/2022 7:04	4.91	6/26/2022 8:27	-0.36	6/25/2022 7:20	11.54
6/25/2022 7:52	-0.10	6/26/2022 6:42	1.72	6/26/2022 7:05	4.92	6/26/2022 8:28	-0.32	6/25/2022 7:21	11.56
6/25/2022 7:53	-0.10	6/26/2022 6:43	1.72	6/26/2022 7:06	4.92	6/26/2022 8:29	-0.35	6/25/2022 7:22	11.56
6/25/2022 7:54	-0.09	6/26/2022 6:44	1.72	6/26/2022 7:07	4.95	6/26/2022 8:30	-0.36	6/25/2022 7:23	11.57
6/25/2022 7:55	-0.11	6/26/2022 6:45	1.72	6/26/2022 7:08	4.92	6/26/2022 8:31	-0.40	6/25/2022 7:24	11.56
6/25/2022 7:56	-0.10	6/26/2022 6:46	1.72	6/26/2022 7:09	4.92	6/26/2022 8:32	-0.36	6/25/2022 7:25	11.56
6/25/2022 7:57	-0.11	6/26/2022 6:47	1.72	6/26/2022 7:10	4.96	6/26/2022 8:33	-0.37	6/25/2022 7:26	11.57
6/25/2022 7:58	-0.09	6/26/2022 6:48	1.72	6/26/2022 7:11	4.88	6/26/2022 8:34	-0.33	6/25/2022 7:27	11.59
6/25/2022 7:59	-0.09	6/26/2022 6:49	1.72	6/26/2022 7:12	4.91	6/26/2022 8:35	-0.32	6/25/2022 7:28	11.57
6/25/2022 8:00	-0.10	6/26/2022 6:50	1.74	6/26/2022 7:13	4.91	6/26/2022 8:36	-0.37	6/25/2022 7:29	11.55
6/25/2022 8:01	-0.11	6/26/2022 6:51	1.75	6/26/2022 7:14	4.92	6/26/2022 8:37	-0.38	6/25/2022 7:30	11.58
6/25/2022 8:02	-0.11	6/26/2022 6:52	1.72	6/26/2022 7:15	4.90	6/26/2022 8:38	-0.33	6/25/2022 7:31	11.54
6/25/2022 8:03	-0.11	6/26/2022 6:53	1.72	6/26/2022 7:16	4.93	6/26/2022 8:39	-0.38	6/25/2022 7:32	11.55
6/25/2022 8:04	-0.10	6/26/2022 6:54	1.72	6/26/2022 7:17	4.90	6/26/2022 8:40	-0.41	6/25/2022 7:33	11.55
6/25/2022 8:05	-0.09	6/26/2022 6:55	1.72	6/26/2022 7:18	4.91	6/26/2022 8:41	-0.36	6/25/2022 7:34	11.54
6/25/2022 8:06	-0.11	6/26/2022 6:56	1.72	6/26/2022 7:19	4.90	6/26/2022 8:42	-0.36	6/25/2022 7:35	11.54
6/25/2022 8:07	-0.10	6/26/2022 6:57	1.72	6/26/2022 7:20	4.93	6/26/2022 8:43	-0.33	6/25/2022 7:36	11.53
6/25/2022 8:08	-0.10	6/26/2022 6:58	1.72	6/26/2022 7:21	4.90	6/26/2022 8:44	-0.38	6/25/2022 7:37	11.54
6/25/2022 8:09	-0.10	6/26/2022 6:59	1.72	6/26/2022 7:22	4.94	6/26/2022 8:45	-0.40	6/25/2022 7:38	11.59
6/25/2022 8:10	-0.09	6/26/2022 7:00	1.72	6/26/2022 7:23	4.90	6/26/2022 8:46	-0.37	6/25/2022 7:39	11.57
6/25/2022 8:11	-0.09	6/26/2022 7:01	1.72	6/26/2022 7:24	4.92	6/26/2022 8:47	-0.37	6/25/2022 7:40	11.52
6/25/2022 8:12	-0.11	6/26/2022 7:02	1.73	6/26/2022 7:25	4.95	6/26/2022 8:48	-0.39	6/25/2022 7:41	11.53
6/25/2022 8:13	-0.09	6/26/2022 7:03	1.75	6/26/2022 7:26	4.91	6/26/2022 8:49	-0.39	6/25/2022 7:42	11.54
6/25/2022 8:14	-0.09	6/26/2022 7:04	1.73	6/26/2022 7:27	4.90	6/26/2022 8:50	-0.34	6/25/2022 7:43	11.57
6/25/2022 8:15	-0.09	6/26/2022 7:05	1.72	6/26/2022 7:28	4.91	6/26/2022 8:51	-0.36	6/25/2022 7:44	11.51
6/25/2022 8:16	-0.11	6/26/2022 7:06	1.72	6/26/2022 7:29	4.92	6/26/2022 8:52	-0.35	6/25/2022 7:45	11.50
6/25/2022 8:17	-0.11	6/26/2022 7:07	1.72	6/26/2022 7:30	4.91	6/26/2022 8:53	-0.36	6/25/2022 7:46	11.53
6/25/2022 8:18	-0.10	6/26/2022 7:08	1.72	6/26/2022 7:31	4.91	6/26/2022 8:54	-0.35	6/25/2022 7:47	11.53
6/25/2022 8:19	-0.11	6/26/2022 7:09	1.72	6/26/2022 7:32	4.89	6/26/2022 8:55	-0.35	6/25/2022 7:48	11.54
6/25/2022 8:20	-0.10	6/26/2022 7:10	1.72	6/26/2022 7:33	4.91	6/26/2022 8:56	-0.35	6/25/2022 7:49	11.53
6/25/2022 8:21	-0.10	6/26/2022 7:11	1.72	6/26/2022 7:34	4.92	6/26/2022 8:57	-0.33	6/25/2022 7:50	11.55
6/25/2022 8:22	-0.10	6/26/2022 7:12	1.72	6/26/2022 7:35	4.94	6/26/2022 8:58	-0.38	6/25/2022 7:51	11.53
6/25/2022 8:23	-0.09	6/26/2022 7:13	1.72	6/26/2022 7:36	4.93	6/26/2022 8:59	-0.36	6/25/2022 7:52	11.54
6/25/2022 8:24	-0.11	6/26/2022 7:14	1.73	6/26/2022 7:37	4.91	6/26/2022 9:00	-0.38	6/25/2022 7:53	11.53

6/25/2022 8:25	-0.09	6/26/2022 7:15	1.72	6/26/2022 7:38	4.95	6/26/2022 9:01	-0.35	6/25/2022 7:54	11.51
6/25/2022 8:26	-0.11	6/26/2022 7:16	1.72	6/26/2022 7:39	4.93	6/26/2022 9:02	-0.38	6/25/2022 7:55	11.56
6/25/2022 8:27	-0.10	6/26/2022 7:17	1.72	6/26/2022 7:40	4.93	6/26/2022 9:03	-0.34	6/25/2022 7:56	11.56
6/25/2022 8:28	-0.10	6/26/2022 7:18	1.73	6/26/2022 7:41	4.92	6/26/2022 9:04	-0.34	6/25/2022 7:57	11.53
6/25/2022 8:29	-0.11	6/26/2022 7:19	1.72	6/26/2022 7:42	4.92	6/26/2022 9:05	-0.37	6/25/2022 7:58	11.59
6/25/2022 8:30	-0.11	6/26/2022 7:20	1.73	6/26/2022 7:43	4.91	6/26/2022 9:06	-0.36	6/25/2022 7:59	11.51
6/25/2022 8:31	-0.11	6/26/2022 7:21	1.72	6/26/2022 7:44	4.89	6/26/2022 9:07	-0.35	6/25/2022 8:00	11.58
6/25/2022 8:32	-0.11	6/26/2022 7:22	1.73	6/26/2022 7:45	4.92	6/26/2022 9:08	-0.39	6/25/2022 8:01	11.55
6/25/2022 8:33	-0.10	6/26/2022 7:23	1.73	6/26/2022 7:46	4.93	6/26/2022 9:09	-0.37	6/25/2022 8:02	11.52
6/25/2022 8:34	-0.10	6/26/2022 7:24	1.73	6/26/2022 7:47	4.89	6/26/2022 9:10	-0.37	6/25/2022 8:03	11.54
6/25/2022 8:35	-0.11	6/26/2022 7:25	1.73	6/26/2022 7:48	4.93	6/26/2022 9:11	-0.38	6/25/2022 8:04	11.56
6/25/2022 8:36	-0.10	6/26/2022 7:26	1.73	6/26/2022 7:49	4.93	6/26/2022 9:12	-0.36	6/25/2022 8:05	11.57
6/25/2022 8:37	-0.11	6/26/2022 7:27	1.73	6/26/2022 7:50	4.91	6/26/2022 9:13	-0.35	6/25/2022 8:06	11.54
6/25/2022 8:38	-0.10	6/26/2022 7:28	1.73	6/26/2022 7:51	4.89	6/26/2022 9:14	-0.37	6/25/2022 8:07	11.53
6/25/2022 8:39	-0.11	6/26/2022 7:29	1.73	6/26/2022 7:52	4.91	6/26/2022 9:15	-0.36	6/25/2022 8:08	11.52
6/25/2022 8:40	-0.10	6/26/2022 7:30	1.73	6/26/2022 7:53	4.91	6/26/2022 9:16	-0.34	6/25/2022 8:09	11.49
6/25/2022 8:41	-0.11	6/26/2022 7:31	1.73	6/26/2022 7:54	4.92	6/26/2022 9:17	-0.40	6/25/2022 8:10	11.51
6/25/2022 8:42	-0.11	6/26/2022 7:32	1.73	6/26/2022 7:55	4.90	6/26/2022 9:18	-0.35	6/25/2022 8:11	11.52
6/25/2022 8:43	-0.10	6/26/2022 7:33	1.73	6/26/2022 7:56	4.97	6/26/2022 9:19	-0.34	6/25/2022 8:12	11.58
6/25/2022 8:44	-0.11	6/26/2022 7:34	1.73	6/26/2022 7:57	4.93	6/26/2022 9:20	-0.33	6/25/2022 8:13	11.56
6/25/2022 8:45	-0.11	6/26/2022 7:35	1.72	6/26/2022 7:58	4.92	6/26/2022 9:21	-0.31	6/25/2022 8:14	11.56
6/25/2022 8:46	-0.09	6/26/2022 7:36	1.73	6/26/2022 7:59	4.90	6/26/2022 9:22	-0.36	6/25/2022 8:15	11.52
6/25/2022 8:47	-0.10	6/26/2022 7:37	1.75	6/26/2022 8:00	4.90	6/26/2022 9:23	-0.37	6/25/2022 8:16	11.50
6/25/2022 8:48	-0.09	6/26/2022 7:38	1.73	6/26/2022 8:01	4.93	6/26/2022 9:24	-0.35	6/25/2022 8:17	11.55
6/25/2022 8:49	-0.09	6/26/2022 7:39	1.73	6/26/2022 8:02	4.89	6/26/2022 9:25	-0.38	6/25/2022 8:18	11.55
6/25/2022 8:50	-0.10	6/26/2022 7:40	1.73	6/26/2022 8:03	4.91	6/26/2022 9:26	-0.39	6/25/2022 8:19	11.56
6/25/2022 8:51	-0.11	6/26/2022 7:41	1.73	6/26/2022 8:04	4.93	6/26/2022 9:27	-0.36	6/25/2022 8:20	11.56
6/25/2022 8:52	-0.11	6/26/2022 7:42	1.73	6/26/2022 8:05	4.92	6/26/2022 9:28	-0.35	6/25/2022 8:21	11.56
6/25/2022 8:53	-0.11	6/26/2022 7:43	1.73	6/26/2022 8:06	4.90	6/26/2022 9:29	-0.33	6/25/2022 8:22	11.52
6/25/2022 8:54	-0.10	6/26/2022 7:44	1.73	6/26/2022 8:07	4.95	6/26/2022 9:30	-0.34	6/25/2022 8:23	11.54
6/25/2022 8:55	-0.11	6/26/2022 7:45	1.73	6/26/2022 8:08	4.90	6/26/2022 9:31	-0.35	6/25/2022 8:24	11.52
6/25/2022 8:56	-0.11	6/26/2022 7:46	1.75	6/26/2022 8:09	4.91	6/26/2022 9:32	-0.37	6/25/2022 8:25	11.50
6/25/2022 8:57	-0.11	6/26/2022 7:47	1.73	6/26/2022 8:10	4.91	6/26/2022 9:33	-0.39	6/25/2022 8:26	11.57
6/25/2022 8:58	-0.11	6/26/2022 7:48	1.73	6/26/2022 8:11	4.93	6/26/2022 9:34	-0.32	6/25/2022 8:27	11.52
6/25/2022 8:59	-0.09	6/26/2022 7:49	1.73	6/26/2022 8:12	4.91	6/26/2022 9:35	-0.35	6/25/2022 8:28	11.53
6/25/2022 9:00	-0.09	6/26/2022 7:50	1.73	6/26/2022 8:13	4.89	6/26/2022 9:36	-0.37	6/25/2022 8:29	11.52
6/25/2022 9:01	-0.09	6/26/2022 7:51	1.73	6/26/2022 8:14	4.94	6/26/2022 9:37	-0.35	6/25/2022 8:30	11.57
6/25/2022 9:02	-0.10	6/26/2022 7:52	1.73	6/26/2022 8:15	4.89	6/26/2022 9:38	-0.34	6/25/2022 8:31	11.49
6/25/2022 9:03	-0.11	6/26/2022 7:53	1.73	6/26/2022 8:16	4.92	6/26/2022 9:39	-0.37	6/25/2022 8:32	11.56
6/25/2022 9:04	-0.11	6/26/2022 7:54	1.73	6/26/2022 8:17	4.90	6/26/2022 9:40	-0.36	6/25/2022 8:33	11.55
6/25/2022 9:05	-0.10	6/26/2022 7:55	1.73	6/26/2022 8:18	4.92	6/26/2022 9:41	-0.35	6/25/2022 8:34	11.55
6/25/2022 9:06	-0.11	6/26/2022 7:56	1.73	6/26/2022 8:19	4.89	6/26/2022 9:42	-0.35	6/25/2022 8:35	11.50
6/25/2022 9:07	-0.11	6/26/2022 7:57	1.73	6/26/2022 8:20	4.92	6/26/2022 9:43	-0.33	6/25/2022 8:36	11.52
6/25/2022 9:08	-0.11	6/26/2022 7:58	1.73	6/26/2022 8:21	4.94	6/26/2022 9:44	-0.33	6/25/2022 8:37	11.52
6/25/2022 9:09	-0.11	6/26/2022 7:59	1.73	6/26/2022 8:22	4.92	6/26/2022 9:45	-0.35	6/25/2022 8:38	11.53
6/25/2022 9:10	-0.09	6/26/2022 8:00	1.73	6/26/2022 8:23	4.89	6/26/2022 9:46	-0.36	6/25/2022 8:39	11.53
6/25/2022 9:11	-0.11	6/26/2022 8:01	1.73	6/26/2022 8:24	4.92	6/26/2022 9:47	-0.35	6/25/2022 8:40	11.55
6/25/2022 9:12	-0.11	6/26/2022 8:02	1.75	6/26/2022 8:25	4.93	6/26/2022 9:48	-0.36	6/25/2022 8:41	11.55
6/25/2022 9:13	-0.11	6/26/2022 8:03	1.73	6/26/2022 8:26	4.89	6/26/2022 9:49	-0.35	6/25/2022 8:42	11.50
6/25/2022 9:14	-0.11	6/26/2022 8:04	1.73	6/26/2022 8:27	4.90	6/26/2022 9:50	-0.36	6/25/2022 8:43	11.52
6/25/2022 9:15	-0.10	6/26/2022 8:05	1.73	6/26/2022 8:28	4.90	6/26/2022 9:51	-0.38	6/25/2022 8:44	11.55
6/25/2022 9:16	-0.11	6/26/2022 8:06	1.73	6/26/2022 8:29	4.93	6/26/2022 9:52	-0.39	6/25/2022 8:45	11.57
6/25/2022 9:17	-0.11	6/26/2022 8:07	1.73	6/26/2022 8:30	4.92	6/26/2022 9:53	-0.31	6/25/2022 8:46	11.55
6/25/2022 9:18	-0.09	6/26/2022 8:08	1.73	6/26/2022 8:31	4.91	6/26/2022 9:54	-0.32	6/25/2022 8:47	11.56
6/25/2022 9:19	-0.11	6/26/2022 8:09	1.73	6/26/2022 8:32	4.91	6/26/2022 9:55	-0.36	6/25/2022 8:48	11.51
6/25/2022 9:20	-0.11	6/26/2022 8:10	1.75	6/26/2022 8:33	4.94	6/26/2022 9:56	-0.33	6/25/2022 8:49	11.51
6/25/2022 9:21	-0.11	6/26/2022 8:11	1.73	6/26/2022 8:34	4.92	6/26/2022 9:57	-0.35	6/25/2022 8:50	11.57
6/25/2022 9:22	-0.11	6/26/2022 8:12	1.73	6/26/2022 8:35	4.91	6/26/2022 9:58	-0.34	6/25/2022 8:51	11.53
6/25/2022 9:23	-0.10	6/26/2022 8:13	1.73	6/26/2022 8:36	4.91	6/26/2022 9:59	-0.39	6/25/2022 8:52	11.50
6/25/2022 9:24	-0.10	6/26/2022 8:14	1.73	6/26/2022 8:37	4.90	6/26/2022 10:00	-0.36	6/25/2022 8:53	11.52
6/25/2022 9:25	-0.09	6/26/2022 8:15	1.73	6/26/2022 8:38	4.91	6/26/2022 10:01	-0.34	6/25/2022 8:54	11.55
6/25/2022 9:26	-0.09	6/26/2022 8:16	1.73	6/26/2022 8:39	4.94	6/26/2022 10:02	-0.38	6/25/2022 8:55	11.54
6/25/2022 9:27	-0.10	6/26/2022 8:17	1.73	6/26/2022 8:40	4.88	6/26/2022 10:03	-0.38	6/25/2022 8:56	11.57
6/25/2022 9:28	-0.11	6/26/2022 8:18	1.73	6/26/2022 8:41	4.92	6/26/2022 10:04	-0.39	6/25/2022 8:57	11.52
6/25/2022 9:29	-0.11	6/26/2022 8:19	1.73	6/26/2022 8:42	4.93	6/26/2022 10:05	-0.35	6/25/2022 8:58	11.56
6/25/2022 9:30	-0.10	6/26/2022 8:20	1.73	6/26/2022 8:43	4.92	6/26/2022 10:06	-0.37	6/25/2022 8:59	11.56
6/25/2022 9:31	-0.10	6/26/2022 8:21	1.73	6/26/2022 8:44	4.93	6/26/2022 10:07	-0.39	6/25/2022 9:00	11.53
6/25/2022 9:32	-0.11	6/26/2022 8:22	1.73	6/26/2022 8:45	4.92	6/26/2022 10:08	-0.33	6/25/2022 9:01	11.51
6/25/2022 9:33	-0.11	6/26/2022 8:23	1.73	6/26/2022 8:46	4.89	6/26/2022 10:09	-0.37	6/25/2022 9:02	11.58
6/25/2022 9:34	-0.11	6/26/2022 8:24	1.73	6/26/2022 8:47	4.92	6/26/2022 10:10	-0.37	6/25/2022 9:03	11.56
6/25/2022 9:35	-0.12	6/26/2022 8:25	1.75	6/26/2022 8:48	4.92	6/26/2022 10:11	-0.35	6/25/2022 9:04	11.55
6/25/2022 9:36	-0.11	6/26/2022 8:26	1.73	6/26/2022 8:49	4.92	6/26/2022 10:12	-0.33	6/25/2022 9:05	11.59
6/25/2022 9:37	-0.11	6/26/2022 8:27	1.73	6/26/2022 8:50	4.91	6/26/2022 10:13	-0.32	6/25/2022 9:06	11.52
6/25/2022 9:38	-0.12	6/26/2022 8:28	1.73	6/26/2022 8:51	4.90	6/26/2022 10:14	-0.37	6/25/2022 9:07	11.55
6/25/2022 9:39	-0.10	6/26/2022 8:29	1.73	6/26/2022 8:52	4.90	6/26/2022 10:15	-0.35	6/25/2022 9:08	11.52
6/25/2022 9:40	-0.10	6/26/2022 8:30	1.73	6/26/2022 8:53	4.93	6/26/2022 10:16	-0.38	6/25/2022 9:09	11.58
6/25/2022 9:41	-0.11	6/26/2022 8:31	1.73	6/26/2022 8:54	4.91	6/26/2022 10:17	-0.34	6/25/2022 9:10	11.55
6/25/2022 9:42	-0.11	6/26/2022 8:32	1.75	6/26/2022 8:55	4.93	6/26/2022 10:18	-0.34	6/25/2022 9:11	11.58
6/25/2022 9:43	-0.11	6/26/2022 8:33	1.73	6/26/2022 8:56	4.91	6/26/2022 10:19	-0.40	6/25/2022 9:12	11.54
6/25/2022 9:44	-0.11	6/26/2022 8:34	1.73	6/26/2022 8:57	4.88	6/26/2022 10:20	-0.39	6/25/2022 9:13	11.54
6/25/2022 9:45	-0.11	6/26/2022 8:35	1.73	6/26/2022 8:58	4.93	6/26/2022 10:21	-0.36	6/25/2022 9:14	11.50
6/25/2022 9:46	-0.11	6/26/2022 8:36	1.76	6/26/2022 8:59	4.92	6/26/2022 10:22	-0.36	6/25/2022 9:15	11.55
6/25/2022 9:47	-0.10	6/26/2022 8:37	1.74	6/26/2022 9:00	4.94	6/26/2022 10:23	-0.37	6/25/2022 9:16	11.53
6/25/2022 9:48	-0.10	6/26/2022 8:38	1.73	6/26/2022 9:01	4.90	6/26/2022 10:24	-0.36	6/25/2022 9:17	11.51
6/25/2022 9:49	-0.09	6/26/2022 8:39	1.73	6/26/2022 9:02	4.89	6/26/2022 10:25	-0.38	6/25/2022 9:18	11.53
6/25/2022 9:50	-0.11	6/26/2022 8:40	1.73	6/26/2022 9:03	4.90	6/26/2022 10:26	-0.39	6/25/2022 9:19	11.51
6/25/2022 9:51	-0.11	6/26/2022 8:41	1.73	6/26/2022 9:04	4.91	6/26/2022 10:27	-0.34	6/25/2022 9:20	11.58
6/25/2022 9:52	-0.09	6/26/2022 8:42	1.73	6/26/2022 9:05	4.92	6/26/2022 10:28	-0.35	6/25/2022 9:21	11.56

6/25/2022 9:53	-0.11	6/26/2022 8:43	1.73	6/26/2022 9:06	4.91	6/26/2022 10:29	-0.33	6/25/2022 9:22	11.56
6/25/2022 9:54	-0.10	6/26/2022 8:44	1.73	6/26/2022 9:07	4.91	6/26/2022 10:30	-0.38	6/25/2022 9:23	11.55
6/25/2022 9:55	-0.10	6/26/2022 8:45	1.75	6/26/2022 9:08	4.92	6/26/2022 10:31	-0.36	6/25/2022 9:24	11.51
6/25/2022 9:56	-0.11	6/26/2022 8:46	1.73	6/26/2022 9:09	4.92	6/26/2022 10:32	-0.39	6/25/2022 9:25	11.54
6/25/2022 9:57	-0.11	6/26/2022 8:47	1.73	6/26/2022 9:10	4.93	6/26/2022 10:33	-0.32	6/25/2022 9:26	11.54
6/25/2022 9:58	-0.09	6/26/2022 8:48	1.73	6/26/2022 9:11	4.90	6/26/2022 10:34	-0.37	6/25/2022 9:27	11.52
6/25/2022 9:59	-0.10	6/26/2022 8:49	1.73	6/26/2022 9:12	4.92	6/26/2022 10:35	-0.35	6/25/2022 9:28	11.55
6/25/2022 10:00	-0.11	6/26/2022 8:50	1.75	6/26/2022 9:13	4.91	6/26/2022 10:36	-0.34	6/25/2022 9:29	11.59
6/25/2022 10:01	-0.11	6/26/2022 8:51	1.73	6/26/2022 9:14	4.92	6/26/2022 10:37	-0.37	6/25/2022 9:30	11.54
6/25/2022 10:02	-0.11	6/26/2022 8:52	1.73	6/26/2022 9:15	4.92	6/26/2022 10:38	-0.39	6/25/2022 9:31	11.48
6/25/2022 10:03	-0.10	6/26/2022 8:53	1.73	6/26/2022 9:16	4.92	6/26/2022 10:39	-0.36	6/25/2022 9:32	11.55
6/25/2022 10:04	-0.10	6/26/2022 8:54	1.73	6/26/2022 9:17	4.91	6/26/2022 10:40	-0.35	6/25/2022 9:33	11.54
6/25/2022 10:05	-0.09	6/26/2022 8:55	1.73	6/26/2022 9:18	4.91	6/26/2022 10:41	-0.35	6/25/2022 9:34	11.57
6/25/2022 10:06	-0.09	6/26/2022 8:56	1.73	6/26/2022 9:19	4.88	6/26/2022 10:42	-0.35	6/25/2022 9:35	11.54
6/25/2022 10:07	-0.11	6/26/2022 8:57	1.73	6/26/2022 9:20	4.90	6/26/2022 10:43	-0.33	6/25/2022 9:36	11.52
6/25/2022 10:08	-0.10	6/26/2022 8:58	1.73	6/26/2022 9:21	4.93	6/26/2022 10:44	-0.37	6/25/2022 9:37	11.52
6/25/2022 10:09	-0.09	6/26/2022 8:59	1.73	6/26/2022 9:22	4.93	6/26/2022 10:45	-0.36	6/25/2022 9:38	11.51
6/25/2022 10:10	-0.11	6/26/2022 9:00	1.75	6/26/2022 9:23	4.92	6/26/2022 10:46	-0.37	6/25/2022 9:39	11.59
6/25/2022 10:11	-0.11	6/26/2022 9:01	1.73	6/26/2022 9:24	4.92	6/26/2022 10:47	-0.30	6/25/2022 9:40	11.57
6/25/2022 10:12	-0.11	6/26/2022 9:02	1.73	6/26/2022 9:25	4.94	6/26/2022 10:48	-0.36	6/25/2022 9:41	11.54
6/25/2022 10:13	-0.10	6/26/2022 9:03	1.73	6/26/2022 9:26	4.88	6/26/2022 10:49	-0.34	6/25/2022 9:42	11.50
6/25/2022 10:14	-0.10	6/26/2022 9:04	1.73	6/26/2022 9:27	4.88	6/26/2022 10:50	-0.39	6/25/2022 9:43	11.54
6/25/2022 10:15	-0.11	6/26/2022 9:05	1.73	6/26/2022 9:28	4.89	6/26/2022 10:51	-0.37	6/25/2022 9:44	11.53
6/25/2022 10:16	-0.09	6/26/2022 9:06	1.73	6/26/2022 9:29	4.89	6/26/2022 10:52	-0.35	6/25/2022 9:45	11.61
6/25/2022 10:17	-0.09	6/26/2022 9:07	1.73	6/26/2022 9:30	4.91	6/26/2022 10:53	-0.37	6/25/2022 9:46	11.49
6/25/2022 10:18	-0.11	6/26/2022 9:08	1.73	6/26/2022 9:31	4.94	6/26/2022 10:54	-0.34	6/25/2022 9:47	11.54
6/25/2022 10:19	-0.11	6/26/2022 9:09	1.73	6/26/2022 9:32	4.92	6/26/2022 10:55	-0.34	6/25/2022 9:48	11.57
6/25/2022 10:20	-0.11	6/26/2022 9:10	1.73	6/26/2022 9:33	4.91	6/26/2022 10:56	-0.35	6/25/2022 9:49	11.53
6/25/2022 10:21	-0.11	6/26/2022 9:11	1.73	6/26/2022 9:34	4.93	6/26/2022 10:57	-0.34	6/25/2022 9:50	11.56
6/25/2022 10:22	-0.10	6/26/2022 9:12	1.73	6/26/2022 9:35	4.91	6/26/2022 10:58	-0.32	6/25/2022 9:51	11.52
6/25/2022 10:23	-0.09	6/26/2022 9:13	1.73	6/26/2022 9:36	4.91	6/26/2022 10:59	-0.35	6/25/2022 9:52	11.52
6/25/2022 10:24	-0.11	6/26/2022 9:14	1.73	6/26/2022 9:37	4.93	6/26/2022 11:00	-0.37	6/25/2022 9:53	11.57
6/25/2022 10:25	-0.11	6/26/2022 9:15	1.73	6/26/2022 9:38	4.90	6/26/2022 11:01	-0.33	6/25/2022 9:54	11.58
6/25/2022 10:26	-0.11	6/26/2022 9:16	1.73	6/26/2022 9:39	4.89	6/26/2022 11:02	-0.35	6/25/2022 9:55	11.50
6/25/2022 10:27	-0.10	6/26/2022 9:17	1.73	6/26/2022 9:40	4.90	6/26/2022 11:03	-0.34	6/25/2022 9:56	11.53
6/25/2022 10:28	-0.12	6/26/2022 9:18	1.73	6/26/2022 9:41	4.90	6/26/2022 11:04	-0.35	6/25/2022 9:57	11.53
6/25/2022 10:29	-0.11	6/26/2022 9:19	1.73	6/26/2022 9:42	4.87	6/26/2022 11:05	-0.36	6/25/2022 9:58	11.53
6/25/2022 10:30	-0.11	6/26/2022 9:20	1.73	6/26/2022 9:43	4.90	6/26/2022 11:06	-0.35	6/25/2022 9:59	11.59
6/25/2022 10:31	-0.11	6/26/2022 9:21	1.73	6/26/2022 9:44	4.92	6/26/2022 11:07	-0.36	6/25/2022 10:00	11.55
6/25/2022 10:32	-0.11	6/26/2022 9:22	1.73	6/26/2022 9:45	4.90	6/26/2022 11:08	-0.34	6/25/2022 10:01	11.58
6/25/2022 10:33	-0.11	6/26/2022 9:23	1.75	6/26/2022 9:46	4.89	6/26/2022 11:09	-0.35	6/25/2022 10:02	11.53
6/25/2022 10:34	-0.11	6/26/2022 9:24	1.73	6/26/2022 9:47	4.91	6/26/2022 11:10	-0.34	6/25/2022 10:03	11.57
6/25/2022 10:35	-0.09	6/26/2022 9:25	1.73	6/26/2022 9:48	4.86	6/26/2022 11:11	-0.37	6/25/2022 10:04	11.57
6/25/2022 10:36	-0.10	6/26/2022 9:26	1.73	6/26/2022 9:49	4.87	6/26/2022 11:12	-0.33	6/25/2022 10:05	11.54
6/25/2022 10:37	-0.11	6/26/2022 9:27	1.73	6/26/2022 9:50	4.90	6/26/2022 11:13	-0.31	6/25/2022 10:06	11.56
6/25/2022 10:38	-0.09	6/26/2022 9:28	1.73	6/26/2022 9:51	4.92	6/26/2022 11:14	-0.36	6/25/2022 10:07	11.53
6/25/2022 10:39	-0.11	6/26/2022 9:29	1.73	6/26/2022 9:52	4.89	6/26/2022 11:15	-0.37	6/25/2022 10:08	11.54
6/25/2022 10:40	-0.11	6/26/2022 9:30	1.73	6/26/2022 9:53	4.91	6/26/2022 11:16	-0.32	6/25/2022 10:09	11.51
6/25/2022 10:41	-0.10	6/26/2022 9:31	1.73	6/26/2022 9:54	4.91	6/26/2022 11:17	-0.34	6/25/2022 10:10	11.54
6/25/2022 10:42	-0.11	6/26/2022 9:32	1.73	6/26/2022 9:55	4.91	6/26/2022 11:18	-0.33	6/25/2022 10:11	11.58
6/25/2022 10:43	-0.11	6/26/2022 9:33	1.73	6/26/2022 9:56	4.89	6/26/2022 11:19	-0.35	6/25/2022 10:12	11.56
6/25/2022 10:44	-0.11	6/26/2022 9:34	1.73	6/26/2022 9:57	4.89	6/26/2022 11:20	-0.33	6/25/2022 10:13	11.56
6/25/2022 10:45	-0.10	6/26/2022 9:35	1.73	6/26/2022 9:58	4.90	6/26/2022 11:21	-0.34	6/25/2022 10:14	11.54
6/25/2022 10:46	-0.11	6/26/2022 9:36	1.73	6/26/2022 9:59	4.89	6/26/2022 11:22	-0.35	6/25/2022 10:15	11.56
6/25/2022 10:47	-0.09	6/26/2022 9:37	1.73	6/26/2022 10:00	4.90	6/26/2022 11:23	-0.34	6/25/2022 10:16	11.56
6/25/2022 10:48	-0.11	6/26/2022 9:38	1.73	6/26/2022 10:01	4.92	6/26/2022 11:24	-0.34	6/25/2022 10:17	11.56
6/25/2022 10:49	-0.10	6/26/2022 9:39	1.73	6/26/2022 10:02	4.87	6/26/2022 11:25	-0.37	6/25/2022 10:18	11.52
6/25/2022 10:50	-0.11	6/26/2022 9:40	1.73	6/26/2022 10:03	4.90	6/26/2022 11:26	-0.35	6/25/2022 10:19	11.48
6/25/2022 10:51	-0.11	6/26/2022 9:41	1.73	6/26/2022 10:04	4.89	6/26/2022 11:27	-0.35	6/25/2022 10:20	11.55
6/25/2022 10:52	-0.10	6/26/2022 9:42	1.73	6/26/2022 10:05	4.90	6/26/2022 11:28	-0.38	6/25/2022 10:21	11.55
6/25/2022 10:53	-0.09	6/26/2022 9:43	1.73	6/26/2022 10:06	4.94	6/26/2022 11:29	-0.37	6/25/2022 10:22	11.50
6/25/2022 10:54	-0.11	6/26/2022 9:44	1.73	6/26/2022 10:07	4.89	6/26/2022 11:30	-0.33	6/25/2022 10:23	11.53
6/25/2022 10:55	-0.11	6/26/2022 9:45	1.73	6/26/2022 10:08	4.89	6/26/2022 11:31	-0.40	6/25/2022 10:24	11.54
6/25/2022 10:56	-0.10	6/26/2022 9:46	1.73	6/26/2022 10:09	4.91	6/26/2022 11:32	-0.37	6/25/2022 10:25	11.51
6/25/2022 10:57	-0.12	6/26/2022 9:47	1.73	6/26/2022 10:10	4.93	6/26/2022 11:33	-0.37	6/25/2022 10:26	11.50
6/25/2022 10:58	-0.11	6/26/2022 9:48	1.73	6/26/2022 10:11	4.92	6/26/2022 11:34	-0.38	6/25/2022 10:27	11.55
6/25/2022 10:59	-0.11	6/26/2022 9:49	1.72	6/26/2022 10:12	4.90	6/26/2022 11:35	-0.37	6/25/2022 10:28	11.54
6/25/2022 11:00	-0.10	6/26/2022 9:50	1.72	6/26/2022 10:13	4.89	6/26/2022 11:36	-0.31	6/25/2022 10:29	11.55
6/25/2022 11:01	-0.11	6/26/2022 9:51	1.73	6/26/2022 10:14	4.89	6/26/2022 11:37	-0.38	6/25/2022 10:30	11.56
6/25/2022 11:02	-0.11	6/26/2022 9:52	1.72	6/26/2022 10:15	4.89	6/26/2022 11:38	-0.34	6/25/2022 10:31	11.50
6/25/2022 11:03	-0.12	6/26/2022 9:53	1.73	6/26/2022 10:16	4.87	6/26/2022 11:39	-0.34	6/25/2022 10:32	11.55
6/25/2022 11:04	-0.12	6/26/2022 9:54	1.72	6/26/2022 10:17	4.93	6/26/2022 11:40	-0.36	6/25/2022 10:33	11.51
6/25/2022 11:05	-0.11	6/26/2022 9:55	1.72	6/26/2022 10:18	4.87	6/26/2022 11:41	-0.33	6/25/2022 10:34	11.51
6/25/2022 11:06	-0.11	6/26/2022 9:56	1.73	6/26/2022 10:19	4.92	6/26/2022 11:42	-0.33	6/25/2022 10:35	11.52
6/25/2022 11:07	-0.11	6/26/2022 9:57	1.72	6/26/2022 10:20	4.88	6/26/2022 11:43	-0.35	6/25/2022 10:36	11.56
6/25/2022 11:08	-0.10	6/26/2022 9:58	1.72	6/26/2022 10:21	4.87	6/26/2022 11:44	-0.33	6/25/2022 10:37	11.54
6/25/2022 11:09	-0.10	6/26/2022 9:59	1.72	6/26/2022 10:22	4.87	6/26/2022 11:45	-0.34	6/25/2022 10:38	11.57
6/25/2022 11:10	-0.12	6/26/2022 10:00	1.72	6/26/2022 10:23	4.92	6/26/2022 11:46	-0.34	6/25/2022 10:39	11.56
6/25/2022 11:11	-0.11	6/26/2022 10:01	1.72	6/26/2022 10:24	4.87	6/26/2022 11:47	-0.34	6/25/2022 10:40	11.58
6/25/2022 11:12	-0.10	6/26/2022 10:02	1.72	6/26/2022 10:25	4.86	6/26/2022 11:48	-0.35	6/25/2022 10:41	11.59
6/25/2022 11:13	-0.11	6/26/2022 10:03	1.72	6/26/2022 10:26	4.87	6/26/2022 11:49	-0.34	6/25/2022 10:42	11.54
6/25/2022 11:14	-0.12	6/26/2022 10:04	1.72	6/26/2022 10:27	4.91	6/26/2022 11:50	-0.31	6/25/2022 10:43	11.54
6/25/2022 11:15	-0.12	6/26/2022 10:05	1.72	6/26/2022 10:28	4.86	6/26/2022 11:51	-0.34	6/25/2022 10:44	11.59
6/25/2022 11:16	-0.09	6/26/2022 10:06	1.72	6/26/2022 10:29	4.86	6/26/2022 11:52	-0.36	6/25/2022 10:45	11.52
6/25/2022 11:17	-0.11	6/26/2022 10:07	1.72	6/26/2022 10:30	4.90	6/26/2022 11:53	-0.35	6/25/2022 10:46	11.59
6/25/2022 11:18	-0.11	6/26/2022 10:08	1.72	6/26/2022 10:31	4.89	6/26/2022 11:54	-0.35	6/25/2022 10:47	11.58
6/25/2022 11:19	-0.10	6/26/2022 10:09	1.72	6/26/2022 10:32	4.88	6/26/2022 11:55	-0.34	6/25/2022 10:48	11.53
6/25/2022 11:20	-0.10	6/26/2022 10:10	1.72	6/26/2022 10:33	4.92	6/26/2022 11:56	-0.34	6/25/2022 10:49	11.56

6/25/2022 11:21	-0.11	6/26/2022 10:11	1.72	6/26/2022 10:34	4.91	6/26/2022 11:57	-0.36	6/25/2022 10:50	11.52
6/25/2022 11:22	-0.09	6/26/2022 10:12	1.72	6/26/2022 10:35	4.90	6/26/2022 11:58	-0.39	6/25/2022 10:51	11.56
6/25/2022 11:23	-0.11	6/26/2022 10:13	1.72	6/26/2022 10:36	4.91	6/26/2022 11:59	-0.32	6/25/2022 10:52	11.49
6/25/2022 11:24	-0.10	6/26/2022 10:14	1.72	6/26/2022 10:37	4.89	6/26/2022 12:00	-0.35	6/25/2022 10:53	11.53
6/25/2022 11:25	-0.11	6/26/2022 10:15	1.72	6/26/2022 10:38	4.88	6/26/2022 12:01	-0.33	6/25/2022 10:54	11.55
6/25/2022 11:26	-0.10	6/26/2022 10:16	1.74	6/26/2022 10:39	4.90	6/26/2022 12:02	-0.35	6/25/2022 10:55	11.58
6/25/2022 11:27	-0.10	6/26/2022 10:17	1.72	6/26/2022 10:40	4.86	6/26/2022 12:03	-0.36	6/25/2022 10:56	11.55
6/25/2022 11:28	-0.10	6/26/2022 10:18	1.72	6/26/2022 10:41	4.90	6/26/2022 12:04	-0.30	6/25/2022 10:57	11.56
6/25/2022 11:29	-0.10	6/26/2022 10:19	1.72	6/26/2022 10:42	4.89	6/26/2022 12:05	-0.35	6/25/2022 10:58	11.56
6/25/2022 11:30	-0.11	6/26/2022 10:20	1.72	6/26/2022 10:43	4.88	6/26/2022 12:06	-0.35	6/25/2022 10:59	11.51
6/25/2022 11:31	-0.10	6/26/2022 10:21	1.72	6/26/2022 10:44	4.88	6/26/2022 12:07	-0.34	6/25/2022 11:00	11.60
6/25/2022 11:32	-0.10	6/26/2022 10:22	1.72	6/26/2022 10:45	4.87	6/26/2022 12:08	-0.35	6/25/2022 11:01	11.56
6/25/2022 11:33	-0.09	6/26/2022 10:23	1.72	6/26/2022 10:46	4.83	6/26/2022 12:09	-0.34	6/25/2022 11:02	11.54
6/25/2022 11:34	-0.10	6/26/2022 10:24	1.72	6/26/2022 10:47	4.88	6/26/2022 12:10	-0.33	6/25/2022 11:03	11.51
6/25/2022 11:35	-0.09	6/26/2022 10:25	1.72	6/26/2022 10:48	4.89	6/26/2022 12:11	-0.32	6/25/2022 11:04	11.57
6/25/2022 11:36	-0.10	6/26/2022 10:26	1.74	6/26/2022 10:49	4.86	6/26/2022 12:12	-0.35	6/25/2022 11:05	11.52
6/25/2022 11:37	-0.11	6/26/2022 10:27	1.71	6/26/2022 10:50	4.89	6/26/2022 12:13	-0.34	6/25/2022 11:06	11.57
6/25/2022 11:38	-0.11	6/26/2022 10:28	1.71	6/26/2022 10:51	4.86	6/26/2022 12:14	-0.36	6/25/2022 11:07	11.51
6/25/2022 11:39	-0.10	6/26/2022 10:29	1.72	6/26/2022 10:52	4.87	6/26/2022 12:15	-0.34	6/25/2022 11:08	11.57
6/25/2022 11:40	-0.12	6/26/2022 10:30	1.72	6/26/2022 10:53	4.91	6/26/2022 12:16	-0.34	6/25/2022 11:09	11.58
6/25/2022 11:41	-0.11	6/26/2022 10:31	1.72	6/26/2022 10:54	4.84	6/26/2022 12:17	-0.38	6/25/2022 11:10	11.51
6/25/2022 11:42	-0.10	6/26/2022 10:32	1.71	6/26/2022 10:55	4.90	6/26/2022 12:18	-0.36	6/25/2022 11:11	11.58
6/25/2022 11:43	-0.11	6/26/2022 10:33	1.72	6/26/2022 10:56	4.87	6/26/2022 12:19	-0.31	6/25/2022 11:12	11.56
6/25/2022 11:44	-0.12	6/26/2022 10:34	1.71	6/26/2022 10:57	4.84	6/26/2022 12:20	-0.37	6/25/2022 11:13	11.58
6/25/2022 11:45	-0.11	6/26/2022 10:35	1.72	6/26/2022 10:58	4.84	6/26/2022 12:21	-0.34	6/25/2022 11:14	11.56
6/25/2022 11:46	-0.09	6/26/2022 10:36	1.71	6/26/2022 10:59	4.85	6/26/2022 12:22	-0.34	6/25/2022 11:15	11.55
6/25/2022 11:47	-0.10	6/26/2022 10:37	1.71	6/26/2022 11:00	4.87	6/26/2022 12:23	-0.35	6/25/2022 11:16	11.54
6/25/2022 11:48	-0.09	6/26/2022 10:38	1.72	6/26/2022 11:01	4.91	6/26/2022 12:24	-0.34	6/25/2022 11:17	11.50
6/25/2022 11:49	-0.12	6/26/2022 10:39	1.71	6/26/2022 11:02	4.89	6/26/2022 12:25	-0.37	6/25/2022 11:18	11.56
6/25/2022 11:50	-0.12	6/26/2022 10:40	1.71	6/26/2022 11:03	4.86	6/26/2022 12:26	-0.34	6/25/2022 11:19	11.54
6/25/2022 11:51	-0.12	6/26/2022 10:41	1.71	6/26/2022 11:04	4.89	6/26/2022 12:27	-0.35	6/25/2022 11:20	11.58
6/25/2022 11:52	-0.11	6/26/2022 10:42	1.71	6/26/2022 11:05	4.86	6/26/2022 12:28	-0.33	6/25/2022 11:21	11.62
6/25/2022 11:53	-0.09	6/26/2022 10:43	1.71	6/26/2022 11:06	4.90	6/26/2022 12:29	-0.39	6/25/2022 11:22	11.54
6/25/2022 11:54	-0.10	6/26/2022 10:44	1.71	6/26/2022 11:07	4.86	6/26/2022 12:30	-0.35	6/25/2022 11:23	11.56
6/25/2022 11:55	-0.11	6/26/2022 10:45	1.71	6/26/2022 11:08	4.93	6/26/2022 12:31	-0.35	6/25/2022 11:24	11.61
6/25/2022 11:56	-0.11	6/26/2022 10:46	1.71	6/26/2022 11:09	4.86	6/26/2022 12:32	-0.36	6/25/2022 11:25	11.56
6/25/2022 11:57	-0.11	6/26/2022 10:47	1.71	6/26/2022 11:10	4.89	6/26/2022 12:33	-0.34	6/25/2022 11:26	11.50
6/25/2022 11:58	-0.10	6/26/2022 10:48	1.71	6/26/2022 11:11	4.88	6/26/2022 12:34	-0.40	6/25/2022 11:27	11.59
6/25/2022 11:59	-0.11	6/26/2022 10:49	1.71	6/26/2022 11:12	4.89	6/26/2022 12:35	-0.36	6/25/2022 11:28	11.58
6/25/2022 12:00	-0.10	6/26/2022 10:50	1.72	6/26/2022 11:13	4.85	6/26/2022 12:36	-0.36	6/25/2022 11:29	11.56
6/25/2022 12:01	-0.11	6/26/2022 10:51	1.71	6/26/2022 11:14	4.86	6/26/2022 12:37	-0.39	6/25/2022 11:30	11.55
6/25/2022 12:02	-0.12	6/26/2022 10:52	1.71	6/26/2022 11:15	4.88	6/26/2022 12:38	-0.35	6/25/2022 11:31	11.61
6/25/2022 12:03	-0.12	6/26/2022 10:53	1.71	6/26/2022 11:16	4.88	6/26/2022 12:39	-0.38	6/25/2022 11:32	11.55
6/25/2022 12:04	-0.11	6/26/2022 10:54	1.71	6/26/2022 11:17	4.89	6/26/2022 12:40	-0.33	6/25/2022 11:33	11.57
6/25/2022 12:05	-0.12	6/26/2022 10:55	1.71	6/26/2022 11:18	4.83	6/26/2022 12:41	-0.34	6/25/2022 11:34	11.56
6/25/2022 12:06	-0.12	6/26/2022 10:56	1.71	6/26/2022 11:19	4.90	6/26/2022 12:42	-0.35	6/25/2022 11:35	11.58
6/25/2022 12:07	-0.11	6/26/2022 10:57	1.71	6/26/2022 11:20	4.86	6/26/2022 12:43	-0.38	6/25/2022 11:36	11.60
6/25/2022 12:08	-0.10	6/26/2022 10:58	1.71	6/26/2022 11:21	4.86	6/26/2022 12:44	-0.39	6/25/2022 11:37	11.56
6/25/2022 12:09	-0.12	6/26/2022 10:59	1.71	6/26/2022 11:22	4.88	6/26/2022 12:45	-0.36	6/25/2022 11:38	11.54
6/25/2022 12:10	-0.11	6/26/2022 11:00	1.71	6/26/2022 11:23	4.90	6/26/2022 12:46	-0.37	6/25/2022 11:39	11.62
6/25/2022 12:11	-0.09	6/26/2022 11:01	1.71	6/26/2022 11:24	4.89	6/26/2022 12:47	-0.35	6/25/2022 11:40	11.55
6/25/2022 12:12	-0.10	6/26/2022 11:02	1.71	6/26/2022 11:25	4.90	6/26/2022 12:48	-0.38	6/25/2022 11:41	11.57
6/25/2022 12:13	-0.10	6/26/2022 11:03	1.71	6/26/2022 11:26	4.90	6/26/2022 12:49	-0.37	6/25/2022 11:42	11.59
6/25/2022 12:14	-0.11	6/26/2022 11:04	1.71	6/26/2022 11:27	4.84	6/26/2022 12:50	-0.37	6/25/2022 11:43	11.53
6/25/2022 12:15	-0.11	6/26/2022 11:05	1.71	6/26/2022 11:28	4.87	6/26/2022 12:51	-0.41	6/25/2022 11:44	11.61
6/25/2022 12:16	-0.11	6/26/2022 11:06	1.70	6/26/2022 11:29	4.86	6/26/2022 12:52	-0.33	6/25/2022 11:45	11.53
6/25/2022 12:17	-0.10	6/26/2022 11:07	1.71	6/26/2022 11:30	4.86	6/26/2022 12:53	-0.33	6/25/2022 11:46	11.58
6/25/2022 12:18	-0.12	6/26/2022 11:08	1.73	6/26/2022 11:31	4.84	6/26/2022 12:54	-0.35	6/25/2022 11:47	11.60
6/25/2022 12:19	-0.11	6/26/2022 11:09	1.70	6/26/2022 11:32	4.88	6/26/2022 12:55	-0.34	6/25/2022 11:48	11.56
6/25/2022 12:20	-0.11	6/26/2022 11:10	1.71	6/26/2022 11:33	4.85	6/26/2022 12:56	-0.32	6/25/2022 11:49	11.58
6/25/2022 12:21	-0.11	6/26/2022 11:11	1.70	6/26/2022 11:34	4.88	6/26/2022 12:57	-0.37	6/25/2022 11:50	11.51
6/25/2022 12:22	-0.12	6/26/2022 11:12	1.70	6/26/2022 11:35	4.86	6/26/2022 12:58	-0.36	6/25/2022 11:51	11.55
6/25/2022 12:23	-0.09	6/26/2022 11:13	1.70	6/26/2022 11:36	4.87	6/26/2022 12:59	-0.35	6/25/2022 11:52	11.55
6/25/2022 12:24	-0.10	6/26/2022 11:14	1.70	6/26/2022 11:37	4.84	6/26/2022 13:00	-0.33	6/25/2022 11:53	11.54
6/25/2022 12:25	-0.11	6/26/2022 11:15	1.70	6/26/2022 11:38	4.91	6/26/2022 13:01	-0.33	6/25/2022 11:54	11.53
6/25/2022 12:26	-0.10	6/26/2022 11:16	1.70	6/26/2022 11:39	4.87	6/26/2022 13:02	-0.33	6/25/2022 11:55	11.57
6/25/2022 12:27	-0.11	6/26/2022 11:17	1.70	6/26/2022 11:40	4.85	6/26/2022 13:03	-0.35	6/25/2022 11:56	11.54
6/25/2022 12:28	-0.11	6/26/2022 11:18	1.72	6/26/2022 11:41	4.89	6/26/2022 13:04	-0.37	6/25/2022 11:57	11.51
6/25/2022 12:29	-0.10	6/26/2022 11:19	1.70	6/26/2022 11:42	4.85	6/26/2022 13:05	-0.33	6/25/2022 11:58	11.53
6/25/2022 12:30	-0.11	6/26/2022 11:20	1.70	6/26/2022 11:43	4.87	6/26/2022 13:06	-0.35	6/25/2022 11:59	11.59
6/25/2022 12:31	-0.11	6/26/2022 11:21	1.70	6/26/2022 11:44	4.89	6/26/2022 13:07	-0.32	6/25/2022 12:00	11.56
6/25/2022 12:32	-0.11	6/26/2022 11:22	1.70	6/26/2022 11:45	4.85	6/26/2022 13:08	-0.33	6/25/2022 12:01	11.60
6/25/2022 12:33	-0.11	6/26/2022 11:23	1.72	6/26/2022 11:46	4.85	6/26/2022 13:09	-0.35	6/25/2022 12:02	11.56
6/25/2022 12:34	-0.11	6/26/2022 11:24	1.70	6/26/2022 11:47	4.86	6/26/2022 13:10	-0.35	6/25/2022 12:03	11.55
6/25/2022 12:35	-0.11	6/26/2022 11:25	1.70	6/26/2022 11:48	4.86	6/26/2022 13:11	-0.36	6/25/2022 12:04	11.55
6/25/2022 12:36	-0.11	6/26/2022 11:26	1.72	6/26/2022 11:49	4.83	6/26/2022 13:12	-0.37	6/25/2022 12:05	11.54
6/25/2022 12:37	-0.11	6/26/2022 11:27	1.70	6/26/2022 11:50	4.87	6/26/2022 13:13	-0.37	6/25/2022 12:06	11.57
6/25/2022 12:38	-0.11	6/26/2022 11:28	1.72	6/26/2022 11:51	4.87	6/26/2022 13:14	-0.40	6/25/2022 12:07	11.57
6/25/2022 12:39	-0.11	6/26/2022 11:29	1.70	6/26/2022 11:52	4.86	6/26/2022 13:15	-0.35	6/25/2022 12:08	11.55
6/25/2022 12:40	-0.10	6/26/2022 11:30	1.70	6/26/2022 11:53	4.91	6/26/2022 13:16	-0.34	6/25/2022 12:09	11.58
6/25/2022 12:41	-0.11	6/26/2022 11:31	1.70	6/26/2022 11:54	4.86	6/26/2022 13:17	-0.33	6/25/2022 12:10	11.62
6/25/2022 12:42	-0.10	6/26/2022 11:32	1.70	6/26/2022 11:55	4.86	6/26/2022 13:18	-0.36	6/25/2022 12:11	11.59
6/25/2022 12:43	-0.10	6/26/2022 11:33	1.72	6/26/2022 11:56	4.85	6/26/2022 13:19	-0.37	6/25/2022 12:12	11.58
6/25/2022 12:44	-0.11	6/26/2022 11:34	1.69	6/26/2022 11:57	4.86	6/26/2022 13:20	-0.38	6/25/2022 12:13	11.56
6/25/2022 12:45	-0.11	6/26/2022 11:35	1.69	6/26/2022 11:58	4.84	6/26/2022 13:21	-0.40	6/25/2022 12:14	11.59
6/25/2022 12:46	-0.10	6/26/2022 11:36	1.70	6/26/2022 11:59	4.86	6/26/2022 13:22	-0.36	6/25/2022 12:15	11.55
6/25/2022 12:47	-0.11	6/26/2022 11:37	1.70	6/26/2022 12:00	4.85	6/26/2022 13:23	-0.33	6/25/2022 12:16	11.59
6/25/2022 12:48	-0.10	6/26/2022 11:38	1.69	6/26/2022 12:01	4.85	6/26/2022 13:24	-0.36	6/25/2022 12:17	11.59

6/25/2022 12:49	-0.11	6/26/2022 11:39	1.70	6/26/2022 12:02	4.82	6/26/2022 13:25	-0.34	6/25/2022 12:18	11.56
6/25/2022 12:50	-0.10	6/26/2022 11:40	1.70	6/26/2022 12:03	4.87	6/26/2022 13:26	-0.35	6/25/2022 12:19	11.57
6/25/2022 12:51	-0.11	6/26/2022 11:41	1.69	6/26/2022 12:04	4.85	6/26/2022 13:27	-0.37	6/25/2022 12:20	11.54
6/25/2022 12:52	-0.10	6/26/2022 11:42	1.70	6/26/2022 12:05	4.88	6/26/2022 13:28	-0.37	6/25/2022 12:21	11.53
6/25/2022 12:53	-0.12	6/26/2022 11:43	1.70	6/26/2022 12:06	4.87	6/26/2022 13:29	-0.36	6/25/2022 12:22	11.53
6/25/2022 12:54	-0.10	6/26/2022 11:44	1.69	6/26/2022 12:07	4.86	6/26/2022 13:30	-0.34	6/25/2022 12:23	11.55
6/25/2022 12:55	-0.10	6/26/2022 11:45	1.69	6/26/2022 12:08	4.86	6/26/2022 13:31	-0.35	6/25/2022 12:24	11.55
6/25/2022 12:56	-0.10	6/26/2022 11:46	1.69	6/26/2022 12:09	4.87	6/26/2022 13:32	-0.37	6/25/2022 12:25	11.58
6/25/2022 12:57	-0.11	6/26/2022 11:47	1.69	6/26/2022 12:10	4.84	6/26/2022 13:33	-0.35	6/25/2022 12:26	11.52
6/25/2022 12:58	-0.10	6/26/2022 11:48	1.69	6/26/2022 12:11	4.85	6/26/2022 13:34	-0.36	6/25/2022 12:27	11.61
6/25/2022 12:59	-0.10	6/26/2022 11:49	1.69	6/26/2022 12:12	4.87	6/26/2022 13:35	-0.36	6/25/2022 12:28	11.55
6/25/2022 13:00	-0.10	6/26/2022 11:50	1.69	6/26/2022 12:13	4.88	6/26/2022 13:36	-0.34	6/25/2022 12:29	11.57
6/25/2022 13:01	-0.09	6/26/2022 11:51	1.69	6/26/2022 12:14	4.85	6/26/2022 13:37	-0.33	6/25/2022 12:30	11.59
6/25/2022 13:02	-0.11	6/26/2022 11:52	1.69	6/26/2022 12:15	4.86	6/26/2022 13:38	-0.38	6/25/2022 12:31	11.56
6/25/2022 13:03	-0.11	6/26/2022 11:53	1.69	6/26/2022 12:16	4.84	6/26/2022 13:39	-0.35	6/25/2022 12:32	11.60
6/25/2022 13:04	-0.11	6/26/2022 11:54	1.69	6/26/2022 12:17	4.86	6/26/2022 13:40	-0.35	6/25/2022 12:33	11.59
6/25/2022 13:05	-0.09	6/26/2022 11:55	1.69	6/26/2022 12:18	4.87	6/26/2022 13:41	-0.36	6/25/2022 12:34	11.57
6/25/2022 13:06	-0.11	6/26/2022 11:56	1.69	6/26/2022 12:19	4.83	6/26/2022 13:42	-0.35	6/25/2022 12:35	11.56
6/25/2022 13:07	-0.11	6/26/2022 11:57	1.69	6/26/2022 12:20	4.82	6/26/2022 13:43	-0.34	6/25/2022 12:36	11.58
6/25/2022 13:08	-0.10	6/26/2022 11:58	1.69	6/26/2022 12:21	4.86	6/26/2022 13:44	-0.35	6/25/2022 12:37	11.55
6/25/2022 13:09	-0.10	6/26/2022 11:59	1.69	6/26/2022 12:22	4.86	6/26/2022 13:45	-0.32	6/25/2022 12:38	11.58
6/25/2022 13:10	-0.10	6/26/2022 12:00	1.68	6/26/2022 12:23	4.88	6/26/2022 13:46	-0.35	6/25/2022 12:39	11.57
6/25/2022 13:11	-0.11	6/26/2022 12:01	1.69	6/26/2022 12:24	4.87	6/26/2022 13:47	-0.37	6/25/2022 12:40	11.57
6/25/2022 13:12	-0.12	6/26/2022 12:02	1.69	6/26/2022 12:25	4.86	6/26/2022 13:48	-0.38	6/25/2022 12:41	11.59
6/25/2022 13:13	-0.11	6/26/2022 12:03	1.69	6/26/2022 12:26	4.86	6/26/2022 13:49	-0.35	6/25/2022 12:42	11.54
6/25/2022 13:14	-0.11	6/26/2022 12:04	1.69	6/26/2022 12:27	4.85	6/26/2022 13:50	-0.36	6/25/2022 12:43	11.58
6/25/2022 13:15	-0.11	6/26/2022 12:05	1.68	6/26/2022 12:28	4.82	6/26/2022 13:51	-0.37	6/25/2022 12:44	11.57
6/25/2022 13:16	-0.11	6/26/2022 12:06	1.68	6/26/2022 12:29	4.82	6/26/2022 13:52	-0.40	6/25/2022 12:45	11.55
6/25/2022 13:17	-0.10	6/26/2022 12:07	1.69	6/26/2022 12:30	4.84	6/26/2022 13:53	-0.33	6/25/2022 12:46	11.55
6/25/2022 13:18	-0.11	6/26/2022 12:08	1.69	6/26/2022 12:31	4.82	6/26/2022 13:54	-0.34	6/25/2022 12:47	11.56
6/25/2022 13:19	-0.11	6/26/2022 12:09	1.69	6/26/2022 12:32	4.83	6/26/2022 13:55	-0.34	6/25/2022 12:48	11.56
6/25/2022 13:20	-0.11	6/26/2022 12:10	1.69	6/26/2022 12:33	4.84	6/26/2022 13:56	-0.39	6/25/2022 12:49	11.59
6/25/2022 13:21	-0.11	6/26/2022 12:11	1.68	6/26/2022 12:34	4.84	6/26/2022 13:57	-0.38	6/25/2022 12:50	11.52
6/25/2022 13:22	-0.11	6/26/2022 12:12	1.68	6/26/2022 12:35	4.87	6/26/2022 13:58	-0.36	6/25/2022 12:51	11.59
6/25/2022 13:23	-0.10	6/26/2022 12:13	1.68	6/26/2022 12:36	4.85	6/26/2022 13:59	-0.35	6/25/2022 12:52	11.55
6/25/2022 13:24	-0.11	6/26/2022 12:14	1.68	6/26/2022 12:37	4.82	6/26/2022 14:00	-0.34	6/25/2022 12:53	11.57
6/25/2022 13:25	-0.12	6/26/2022 12:15	1.70	6/26/2022 12:38	4.84	6/26/2022 14:01	-0.36	6/25/2022 12:54	11.52
6/25/2022 13:26	-0.10	6/26/2022 12:16	1.68	6/26/2022 12:39	4.86	6/26/2022 14:02	-0.34	6/25/2022 12:55	11.54
6/25/2022 13:27	-0.11	6/26/2022 12:17	1.70	6/26/2022 12:40	4.82	6/26/2022 14:03	-0.39	6/25/2022 12:56	11.58
6/25/2022 13:28	-0.11	6/26/2022 12:18	1.68	6/26/2022 12:41	4.85	6/26/2022 14:04	-0.32	6/25/2022 12:57	11.50
6/25/2022 13:29	-0.11	6/26/2022 12:19	1.68	6/26/2022 12:42	4.81	6/26/2022 14:05	-0.31	6/25/2022 12:58	11.56
6/25/2022 13:30	-0.11	6/26/2022 12:20	1.70	6/26/2022 12:43	4.82	6/26/2022 14:06	-0.36	6/25/2022 12:59	11.56
6/25/2022 13:31	-0.10	6/26/2022 12:21	1.68	6/26/2022 12:44	4.88	6/26/2022 14:07	-0.36	6/25/2022 13:00	11.50
6/25/2022 13:32	-0.11	6/26/2022 12:22	1.68	6/26/2022 12:45	4.86	6/26/2022 14:08	-0.33	6/25/2022 13:01	11.52
6/25/2022 13:33	-0.11	6/26/2022 12:23	1.68	6/26/2022 12:46	4.84	6/26/2022 14:09	-0.37	6/25/2022 13:02	11.54
6/25/2022 13:34	-0.10	6/26/2022 12:24	1.70	6/26/2022 12:47	4.87	6/26/2022 14:10	-0.34	6/25/2022 13:03	11.56
6/25/2022 13:35	-0.10	6/26/2022 12:25	1.68	6/26/2022 12:48	4.84	6/26/2022 14:11	-0.36	6/25/2022 13:04	11.53
6/25/2022 13:36	-0.10	6/26/2022 12:26	1.68	6/26/2022 12:49	4.85	6/26/2022 14:12	-0.37	6/25/2022 13:05	11.55
6/25/2022 13:37	-0.10	6/26/2022 12:27	1.68	6/26/2022 12:50	4.86	6/26/2022 14:13	-0.35	6/25/2022 13:06	11.58
6/25/2022 13:38	-0.11	6/26/2022 12:28	1.68	6/26/2022 12:51	4.85	6/26/2022 14:14	-0.32	6/25/2022 13:07	11.61
6/25/2022 13:39	-0.12	6/26/2022 12:29	1.68	6/26/2022 12:52	4.84	6/26/2022 14:15	-0.35	6/25/2022 13:08	11.55
6/25/2022 13:40	-0.11	6/26/2022 12:30	1.68	6/26/2022 12:53	4.84	6/26/2022 14:16	-0.39	6/25/2022 13:09	11.52
6/25/2022 13:41	-0.11	6/26/2022 12:31	1.70	6/26/2022 12:54	4.84	6/26/2022 14:17	-0.35	6/25/2022 13:10	11.59
6/25/2022 13:42	-0.12	6/26/2022 12:32	1.68	6/26/2022 12:55	4.83	6/26/2022 14:18	-0.35	6/25/2022 13:11	11.51
6/25/2022 13:43	-0.10	6/26/2022 12:33	1.67	6/26/2022 12:56	4.86	6/26/2022 14:19	-0.38	6/25/2022 13:12	11.58
6/25/2022 13:44	-0.11	6/26/2022 12:34	1.68	6/26/2022 12:57	4.86	6/26/2022 14:20	-0.39	6/25/2022 13:13	11.55
6/25/2022 13:45	-0.10	6/26/2022 12:35	1.67	6/26/2022 12:58	4.86	6/26/2022 14:21	-0.39	6/25/2022 13:14	11.55
6/25/2022 13:46	-0.11	6/26/2022 12:36	1.68	6/26/2022 12:59	4.84	6/26/2022 14:22	-0.35	6/25/2022 13:15	11.54
6/25/2022 13:47	-0.10	6/26/2022 12:37	1.67	6/26/2022 13:00	4.85	6/26/2022 14:23	-0.33	6/25/2022 13:16	11.51
6/25/2022 13:48	-0.09	6/26/2022 12:38	1.67	6/26/2022 13:01	4.86	6/26/2022 14:24	-0.37	6/25/2022 13:17	11.58
6/25/2022 13:49	-0.11	6/26/2022 12:39	1.67	6/26/2022 13:02	4.83	6/26/2022 14:25	-0.38	6/25/2022 13:18	11.57
6/25/2022 13:50	-0.11	6/26/2022 12:40	1.67	6/26/2022 13:03	4.84	6/26/2022 14:26	-0.38	6/25/2022 13:19	11.60
6/25/2022 13:51	-0.11	6/26/2022 12:41	1.67	6/26/2022 13:04	4.83	6/26/2022 14:27	-0.38	6/25/2022 13:20	11.54
6/25/2022 13:52	-0.12	6/26/2022 12:42	1.69	6/26/2022 13:05	4.82	6/26/2022 14:28	-0.35	6/25/2022 13:21	11.56
6/25/2022 13:53	-0.12	6/26/2022 12:43	1.67	6/26/2022 13:06	4.83	6/26/2022 14:29	-0.36	6/25/2022 13:22	11.55
6/25/2022 13:54	-0.11	6/26/2022 12:44	1.67	6/26/2022 13:07	4.84	6/26/2022 14:30	-0.38	6/25/2022 13:23	11.55
6/25/2022 13:55	-0.12	6/26/2022 12:45	1.67	6/26/2022 13:08	4.83	6/26/2022 14:31	-0.37	6/25/2022 13:24	11.57
6/25/2022 13:56	-0.12	6/26/2022 12:46	1.67	6/26/2022 13:09	4.84	6/26/2022 14:32	-0.35	6/25/2022 13:25	11.56
6/25/2022 13:57	-0.10	6/26/2022 12:47	1.70	6/26/2022 13:10	4.82	6/26/2022 14:33	-0.33	6/25/2022 13:26	11.59
6/25/2022 13:58	-0.10	6/26/2022 12:48	1.69	6/26/2022 13:11	4.88	6/26/2022 14:34	-0.37	6/25/2022 13:27	11.51
6/25/2022 13:59	-0.12	6/26/2022 12:49	1.69	6/26/2022 13:12	4.85	6/26/2022 14:35	-0.35	6/25/2022 13:28	11.52
6/25/2022 14:00	-0.09	6/26/2022 12:50	1.68	6/26/2022 13:13	4.80	6/26/2022 14:36	-0.37	6/25/2022 13:29	11.53
6/25/2022 14:01	-0.12	6/26/2022 12:51	1.67	6/26/2022 13:14	4.84	6/26/2022 14:37	-0.35	6/25/2022 13:30	11.51
6/25/2022 14:02	-0.11	6/26/2022 12:52	1.69	6/26/2022 13:15	4.81	6/26/2022 14:38	-0.39	6/25/2022 13:31	11.50
6/25/2022 14:03	-0.11	6/26/2022 12:53	1.67	6/26/2022 13:16	4.80	6/26/2022 14:39	-0.36	6/25/2022 13:32	11.56
6/25/2022 14:04	-0.11	6/26/2022 12:54	1.66	6/26/2022 13:17	4.82	6/26/2022 14:40	-0.39	6/25/2022 13:33	11.55
6/25/2022 14:05	-0.12	6/26/2022 12:55	1.67	6/26/2022 13:18	4.86	6/26/2022 14:41	-0.35	6/25/2022 13:34	11.57
6/25/2022 14:06	-0.12	6/26/2022 12:56	1.67	6/26/2022 13:19	4.85	6/26/2022 14:42	-0.38	6/25/2022 13:35	11.55
6/25/2022 14:07	-0.10	6/26/2022 12:57	1.67	6/26/2022 13:20	4.83	6/26/2022 14:43	-0.34	6/25/2022 13:36	11.55
6/25/2022 14:08	-0.10	6/26/2022 12:58	1.67	6/26/2022 13:21	4.83	6/26/2022 14:44	-0.35	6/25/2022 13:37	11.51
6/25/2022 14:09	-0.11	6/26/2022 12:59	1.67	6/26/2022 13:22	4.82	6/26/2022 14:45	-0.35	6/25/2022 13:38	11.56
6/25/2022 14:10	-0.11	6/26/2022 13:00	1.66	6/26/2022 13:23	4.85	6/26/2022 14:46	-0.35	6/25/2022 13:39	11.57
6/25/2022 14:11	-0.10	6/26/2022 13:01	1.66	6/26/2022 13:24	4.83	6/26/2022 14:47	-0.38	6/25/2022 13:40	11.57
6/25/2022 14:12	-0.10	6/26/2022 13:02	1.66	6/26/2022 13:25	4.84	6/26/2022 14:48	-0.37	6/25/2022 13:41	11.54
6/25/2022 14:13	-0.10	6/26/2022 13:03	1.66	6/26/2022 13:26	4.84	6/26/2022 14:49	-0.35	6/25/2022 13:42	11.58
6/25/2022 14:14	-0.11	6/26/2022 13:04	1.67	6/26/2022 13:27	4.82	6/26/2022 14:50	-0.33	6/25/2022 13:43	11.55
6/25/2022 14:15	-0.12	6/26/2022 13:05	1.66	6/26/2022 13:28	4.82	6/26/2022 14:51	-0.33	6/25/2022 13:44	11.54
6/25/2022 14:16	-0.11	6/26/2022 13:06	1.66	6/26/2022 13:29	4.83	6/26/2022 14:52	-0.38	6/25/2022 13:45	11.53

6/25/2022 14:17	-0.10	6/26/2022 13:07	1.66	6/26/2022 13:30	4.82	6/26/2022 14:53	-0.34	6/25/2022 13:46	11.57
6/25/2022 14:18	-0.10	6/26/2022 13:08	1.66	6/26/2022 13:31	4.86	6/26/2022 14:54	-0.33	6/25/2022 13:47	11.59
6/25/2022 14:19	-0.10	6/26/2022 13:09	1.66	6/26/2022 13:32	4.82	6/26/2022 14:55	-0.35	6/25/2022 13:48	11.55
6/25/2022 14:20	-0.11	6/26/2022 13:10	1.66	6/26/2022 13:33	4.81	6/26/2022 14:56	-0.40	6/25/2022 13:49	11.56
6/25/2022 14:21	-0.11	6/26/2022 13:11	1.66	6/26/2022 13:34	4.83	6/26/2022 14:57	-0.32	6/25/2022 13:50	11.59
6/25/2022 14:22	-0.12	6/26/2022 13:12	1.66	6/26/2022 13:35	4.81	6/26/2022 14:58	-0.38	6/25/2022 13:51	11.52
6/25/2022 14:23	-0.12	6/26/2022 13:13	1.66	6/26/2022 13:36	4.81	6/26/2022 14:59	-0.38	6/25/2022 13:52	11.54
6/25/2022 14:24	-0.10	6/26/2022 13:14	1.66	6/26/2022 13:37	4.82	6/26/2022 15:00	-0.37	6/25/2022 13:53	11.57
6/25/2022 14:25	-0.12	6/26/2022 13:15	1.66	6/26/2022 13:38	4.82	6/26/2022 15:01	-0.32	6/25/2022 13:54	11.53
6/25/2022 14:26	-0.09	6/26/2022 13:16	1.68	6/26/2022 13:39	4.81	6/26/2022 15:02	-0.34	6/25/2022 13:55	11.57
6/25/2022 14:27	-0.10	6/26/2022 13:17	1.66	6/26/2022 13:40	4.83	6/26/2022 15:03	-0.40	6/25/2022 13:56	11.50
6/25/2022 14:28	-0.10	6/26/2022 13:18	1.68	6/26/2022 13:41	4.82	6/26/2022 15:04	-0.34	6/25/2022 13:57	11.54
6/25/2022 14:29	-0.12	6/26/2022 13:19	1.66	6/26/2022 13:42	4.81	6/26/2022 15:05	-0.40	6/25/2022 13:58	11.54
6/25/2022 14:30	-0.10	6/26/2022 13:20	1.68	6/26/2022 13:43	4.83	6/26/2022 15:06	-0.35	6/25/2022 13:59	11.57
6/25/2022 14:31	-0.11	6/26/2022 13:21	1.66	6/26/2022 13:44	4.82	6/26/2022 15:07	-0.35	6/25/2022 14:00	11.54
6/25/2022 14:32	-0.10	6/26/2022 13:22	1.66	6/26/2022 13:45	4.81	6/26/2022 15:08	-0.35	6/25/2022 14:01	11.55
6/25/2022 14:33	-0.11	6/26/2022 13:23	1.66	6/26/2022 13:46	4.82	6/26/2022 15:09	-0.34	6/25/2022 14:02	11.57
6/25/2022 14:34	-0.10	6/26/2022 13:24	1.66	6/26/2022 13:47	4.82	6/26/2022 15:10	-0.40	6/25/2022 14:03	11.58
6/25/2022 14:35	-0.10	6/26/2022 13:25	1.66	6/26/2022 13:48	4.84	6/26/2022 15:11	-0.36	6/25/2022 14:04	11.57
6/25/2022 14:36	-0.10	6/26/2022 13:26	1.66	6/26/2022 13:49	4.82	6/26/2022 15:12	-0.35	6/25/2022 14:05	11.52
6/25/2022 14:37	-0.11	6/26/2022 13:27	1.66	6/26/2022 13:50	4.84	6/26/2022 15:13	-0.36	6/25/2022 14:06	11.54
6/25/2022 14:38	-0.09	6/26/2022 13:28	1.66	6/26/2022 13:51	4.84	6/26/2022 15:14	-0.36	6/25/2022 14:07	11.53
6/25/2022 14:39	-0.10	6/26/2022 13:29	1.65	6/26/2022 13:52	4.81	6/26/2022 15:15	-0.37	6/25/2022 14:08	11.56
6/25/2022 14:40	-0.11	6/26/2022 13:30	1.65	6/26/2022 13:53	4.82	6/26/2022 15:16	-0.37	6/25/2022 14:09	11.56
6/25/2022 14:41	-0.11	6/26/2022 13:31	1.66	6/26/2022 13:54	4.82	6/26/2022 15:17	-0.39	6/25/2022 14:10	11.58
6/25/2022 14:42	-0.10	6/26/2022 13:32	1.65	6/26/2022 13:55	4.81	6/26/2022 15:18	-0.39	6/25/2022 14:11	11.63
6/25/2022 14:43	-0.11	6/26/2022 13:33	1.65	6/26/2022 13:56	4.81	6/26/2022 15:19	-0.33	6/25/2022 14:12	11.59
6/25/2022 14:44	-0.12	6/26/2022 13:34	1.65	6/26/2022 13:57	4.80	6/26/2022 15:20	-0.33	6/25/2022 14:13	11.54
6/25/2022 14:45	-0.11	6/26/2022 13:35	1.66	6/26/2022 13:58	4.80	6/26/2022 15:21	-0.34	6/25/2022 14:14	11.55
6/25/2022 14:46	-0.12	6/26/2022 13:36	1.65	6/26/2022 13:59	4.82	6/26/2022 15:22	-0.34	6/25/2022 14:15	11.51
6/25/2022 14:47	-0.11	6/26/2022 13:37	1.65	6/26/2022 14:00	4.80	6/26/2022 15:23	-0.35	6/25/2022 14:16	11.59
6/25/2022 14:48	-0.11	6/26/2022 13:38	1.68	6/26/2022 14:01	4.79	6/26/2022 15:24	-0.34	6/25/2022 14:17	11.56
6/25/2022 14:49	-0.11	6/26/2022 13:39	1.65	6/26/2022 14:02	4.80	6/26/2022 15:25	-0.36	6/25/2022 14:18	11.58
6/25/2022 14:50	-0.10	6/26/2022 13:40	1.65	6/26/2022 14:03	4.82	6/26/2022 15:26	-0.37	6/25/2022 14:19	11.56
6/25/2022 14:51	-0.09	6/26/2022 13:41	1.65	6/26/2022 14:04	4.79	6/26/2022 15:27	-0.31	6/25/2022 14:20	11.58
6/25/2022 14:52	-0.10	6/26/2022 13:42	1.65	6/26/2022 14:05	4.80	6/26/2022 15:28	-0.34	6/25/2022 14:21	11.60
6/25/2022 14:53	-0.11	6/26/2022 13:43	1.65	6/26/2022 14:06	4.80	6/26/2022 15:29	-0.36	6/25/2022 14:22	11.61
6/25/2022 14:54	-0.10	6/26/2022 13:44	1.67	6/26/2022 14:07	4.80	6/26/2022 15:30	-0.37	6/25/2022 14:23	11.55
6/25/2022 14:55	-0.10	6/26/2022 13:45	1.67	6/26/2022 14:08	4.80	6/26/2022 15:31	-0.34	6/25/2022 14:24	11.58
6/25/2022 14:56	-0.12	6/26/2022 13:46	1.65	6/26/2022 14:09	4.81	6/26/2022 15:32	-0.33	6/25/2022 14:25	11.55
6/25/2022 14:57	-0.10	6/26/2022 13:47	1.65	6/26/2022 14:10	4.80	6/26/2022 15:33	-0.38	6/25/2022 14:26	11.55
6/25/2022 14:58	-0.12	6/26/2022 13:48	1.65	6/26/2022 14:11	4.80	6/26/2022 15:34	-0.37	6/25/2022 14:27	11.60
6/25/2022 14:59	-0.11	6/26/2022 13:49	1.65	6/26/2022 14:12	4.85	6/26/2022 15:35	-0.36	6/25/2022 14:28	11.55
6/25/2022 15:00	-0.11	6/26/2022 13:50	1.64	6/26/2022 14:13	4.81	6/26/2022 15:36	-0.35	6/25/2022 14:29	11.54
6/25/2022 15:01	-0.10	6/26/2022 13:51	1.65	6/26/2022 14:14	4.80	6/26/2022 15:37	-0.35	6/25/2022 14:30	11.52
6/25/2022 15:02	-0.11	6/26/2022 13:52	1.65	6/26/2022 14:15	4.80	6/26/2022 15:38	-0.35	6/25/2022 14:31	11.56
6/25/2022 15:03	-0.11	6/26/2022 13:53	1.64	6/26/2022 14:16	4.78	6/26/2022 15:39	-0.38	6/25/2022 14:32	11.59
6/25/2022 15:04	-0.12	6/26/2022 13:54	1.64	6/26/2022 14:17	4.82	6/26/2022 15:40	-0.35	6/25/2022 14:33	11.52
6/25/2022 15:05	-0.12	6/26/2022 13:55	1.64	6/26/2022 14:18	4.80	6/26/2022 15:41	-0.35	6/25/2022 14:34	11.58
6/25/2022 15:06	-0.11	6/26/2022 13:56	1.64	6/26/2022 14:19	4.80	6/26/2022 15:42	-0.33	6/25/2022 14:35	11.56
6/25/2022 15:07	-0.10	6/26/2022 13:57	1.64	6/26/2022 14:20	4.76	6/26/2022 15:43	-0.35	6/25/2022 14:36	11.55
6/25/2022 15:08	-0.12	6/26/2022 13:58	1.64	6/26/2022 14:21	4.79	6/26/2022 15:44	-0.36	6/25/2022 14:37	11.53
6/25/2022 15:09	-0.12	6/26/2022 13:59	1.64	6/26/2022 14:22	4.80	6/26/2022 15:45	-0.38	6/25/2022 14:38	11.61
6/25/2022 15:10	-0.10	6/26/2022 14:00	1.64	6/26/2022 14:23	4.77	6/26/2022 15:46	-0.37	6/25/2022 14:39	11.56
6/25/2022 15:11	-0.11	6/26/2022 14:01	1.64	6/26/2022 14:24	4.78	6/26/2022 15:47	-0.38	6/25/2022 14:40	11.56
6/25/2022 15:12	-0.12	6/26/2022 14:02	1.66	6/26/2022 14:25	4.79	6/26/2022 15:48	-0.40	6/25/2022 14:41	11.60
6/25/2022 15:13	-0.10	6/26/2022 14:03	1.64	6/26/2022 14:26	4.80	6/26/2022 15:49	-0.37	6/25/2022 14:42	11.56
6/25/2022 15:14	-0.10	6/26/2022 14:04	1.64	6/26/2022 14:27	4.78	6/26/2022 15:50	-0.35	6/25/2022 14:43	11.58
6/25/2022 15:15	-0.10	6/26/2022 14:05	1.64	6/26/2022 14:28	4.80	6/26/2022 15:51	-0.39	6/25/2022 14:44	11.57
6/25/2022 15:16	-0.11	6/26/2022 14:06	1.64	6/26/2022 14:29	4.78	6/26/2022 15:52	-0.34	6/25/2022 14:45	11.59
6/25/2022 15:17	-0.09	6/26/2022 14:07	1.64	6/26/2022 14:30	4.79	6/26/2022 15:53	-0.32	6/25/2022 14:46	11.53
6/25/2022 15:18	-0.12	6/26/2022 14:08	1.64	6/26/2022 14:31	4.78	6/26/2022 15:54	-0.37	6/25/2022 14:47	11.56
6/25/2022 15:19	-0.11	6/26/2022 14:09	1.64	6/26/2022 14:32	4.78	6/26/2022 15:55	-0.33	6/25/2022 14:48	11.55
6/25/2022 15:20	-0.10	6/26/2022 14:10	1.64	6/26/2022 14:33	4.79	6/26/2022 15:56	-0.39	6/25/2022 14:49	11.54
6/25/2022 15:21	-0.10	6/26/2022 14:11	1.64	6/26/2022 14:34	4.81	6/26/2022 15:57	-0.35	6/25/2022 14:50	11.53
6/25/2022 15:22	-0.10	6/26/2022 14:12	1.64	6/26/2022 14:35	4.78	6/26/2022 15:58	-0.35	6/25/2022 14:51	11.54
6/25/2022 15:23	-0.10	6/26/2022 14:13	1.63	6/26/2022 14:36	4.81	6/26/2022 15:59	-0.34	6/25/2022 14:52	11.55
6/25/2022 15:24	-0.12	6/26/2022 14:14	1.64	6/26/2022 14:37	4.80	6/26/2022 16:00	-0.35	6/25/2022 14:53	11.55
6/25/2022 15:25	-0.11	6/26/2022 14:15	1.63	6/26/2022 14:38	4.77	6/26/2022 16:01	-0.34	6/25/2022 14:54	11.62
6/25/2022 15:26	-0.11	6/26/2022 14:16	1.64	6/26/2022 14:39	4.76	6/26/2022 16:02	-0.38	6/25/2022 14:55	11.59
6/25/2022 15:27	-0.12	6/26/2022 14:17	1.63	6/26/2022 14:40	4.81	6/26/2022 16:03	-0.36	6/25/2022 14:56	11.58
6/25/2022 15:28	-0.11	6/26/2022 14:18	1.63	6/26/2022 14:41	4.78	6/26/2022 16:04	-0.33	6/25/2022 14:57	11.56
6/25/2022 15:29	-0.12	6/26/2022 14:19	1.63	6/26/2022 14:42	4.80	6/26/2022 16:05	-0.37	6/25/2022 14:58	11.59
6/25/2022 15:30	-0.12	6/26/2022 14:20	1.63	6/26/2022 14:43	4.79	6/26/2022 16:06	-0.33	6/25/2022 14:59	11.60
6/25/2022 15:31	-0.11	6/26/2022 14:21	1.63	6/26/2022 14:44	4.74	6/26/2022 16:07	-0.33	6/25/2022 15:00	11.59
6/25/2022 15:32	-0.10	6/26/2022 14:22	1.63	6/26/2022 14:45	4.75	6/26/2022 16:08	-0.36	6/25/2022 15:01	11.57
6/25/2022 15:33	-0.10	6/26/2022 14:23	1.63	6/26/2022 14:46	4.79	6/26/2022 16:09	-0.32	6/25/2022 15:02	11.60
6/25/2022 15:34	-0.11	6/26/2022 14:24	1.63	6/26/2022 14:47	4.82	6/26/2022 16:10	-0.34	6/25/2022 15:03	11.57
6/25/2022 15:35	-0.12	6/26/2022 14:25	1.63	6/26/2022 14:48	4.82	6/26/2022 16:11	-0.38	6/25/2022 15:04	11.54
6/25/2022 15:36	-0.12	6/26/2022 14:26	1.63	6/26/2022 14:49	4.79	6/26/2022 16:12	-0.39	6/25/2022 15:05	11.48
6/25/2022 15:37	-0.12	6/26/2022 14:27	1.63	6/26/2022 14:50	4.78	6/26/2022 16:13	-0.40	6/25/2022 15:06	11.57
6/25/2022 15:38	-0.12	6/26/2022 14:28	1.63	6/26/2022 14:51	4.79	6/26/2022 16:14	-0.33	6/25/2022 15:07	11.54
6/25/2022 15:39	-0.11	6/26/2022 14:29	1.63	6/26/2022 14:52	4.78	6/26/2022 16:15	-0.37	6/25/2022 15:08	11.57
6/25/2022 15:40	-0.11	6/26/2022 14:30	1.63	6/26/2022 14:53	4.77	6/26/2022 16:16	-0.35	6/25/2022 15:09	11.55
6/25/2022 15:41	-0.11	6/26/2022 14:31	1.65	6/26/2022 14:54	4.76	6/26/2022 16:17	-0.37	6/25/2022 15:10	11.54
6/25/2022 15:42	-0.12	6/26/2022 14:32	1.63	6/26/2022 14:55	4.78	6/26/2022 16:18	-0.36	6/25/2022 15:11	11.59
6/25/2022 15:43	-0.11	6/26/2022 14:33	1.63	6/26/2022 14:56	4.78	6/26/2022 16:19	-0.38	6/25/2022 15:12	11.58
6/25/2022 15:44	-0.10	6/26/2022 14:34	1.63	6/26/2022 14:57	4.79	6/26/2022 16:20	-0.35	6/25/2022 15:13	11.54

6/25/2022 15:45	-0.11	6/26/2022 14:35	1.65	6/26/2022 14:58	4.75	6/26/2022 16:21	-0.36	6/25/2022 15:14	11.52
6/25/2022 15:46	-0.12	6/26/2022 14:36	1.63	6/26/2022 14:59	4.77	6/26/2022 16:22	-0.35	6/25/2022 15:15	11.61
6/25/2022 15:47	-0.09	6/26/2022 14:37	1.63	6/26/2022 15:00	4.76	6/26/2022 16:23	-0.38	6/25/2022 15:16	11.58
6/25/2022 15:48	-0.11	6/26/2022 14:38	1.62	6/26/2022 15:01	4.80	6/26/2022 16:24	-0.35	6/25/2022 15:17	11.61
6/25/2022 15:49	-0.11	6/26/2022 14:39	1.64	6/26/2022 15:02	4.79	6/26/2022 16:25	-0.38	6/25/2022 15:18	11.56
6/25/2022 15:50	-0.10	6/26/2022 14:40	1.64	6/26/2022 15:03	4.79	6/26/2022 16:26	-0.33	6/25/2022 15:19	11.55
6/25/2022 15:51	-0.10	6/26/2022 14:41	1.62	6/26/2022 15:04	4.80	6/26/2022 16:27	-0.38	6/25/2022 15:20	11.57
6/25/2022 15:52	-0.10	6/26/2022 14:42	1.62	6/26/2022 15:05	4.81	6/26/2022 16:28	-0.33	6/25/2022 15:21	11.59
6/25/2022 15:53	-0.11	6/26/2022 14:43	1.62	6/26/2022 15:06	4.80	6/26/2022 16:29	-0.34	6/25/2022 15:22	11.55
6/25/2022 15:54	-0.11	6/26/2022 14:44	1.62	6/26/2022 15:07	4.79	6/26/2022 16:30	-0.38	6/25/2022 15:23	11.55
6/25/2022 15:55	-0.12	6/26/2022 14:45	1.62	6/26/2022 15:08	4.79	6/26/2022 16:31	-0.37	6/25/2022 15:24	11.62
6/25/2022 15:56	-0.10	6/26/2022 14:46	1.62	6/26/2022 15:09	4.79	6/26/2022 16:32	-0.34	6/25/2022 15:25	11.59
6/25/2022 15:57	-0.12	6/26/2022 14:47	1.62	6/26/2022 15:10	4.83	6/26/2022 16:33	-0.37	6/25/2022 15:26	11.50
6/25/2022 15:58	-0.12	6/26/2022 14:48	1.62	6/26/2022 15:11	4.77	6/26/2022 16:34	-0.38	6/25/2022 15:27	11.51
6/25/2022 15:59	-0.10	6/26/2022 14:49	1.62	6/26/2022 15:12	4.74	6/26/2022 16:35	-0.36	6/25/2022 15:28	11.60
6/25/2022 16:00	-0.12	6/26/2022 14:50	1.62	6/26/2022 15:13	4.73	6/26/2022 16:36	-0.36	6/25/2022 15:29	11.57
6/25/2022 16:01	-0.12	6/26/2022 14:51	1.62	6/26/2022 15:14	4.77	6/26/2022 16:37	-0.34	6/25/2022 15:30	11.63
6/25/2022 16:02	-0.12	6/26/2022 14:52	1.62	6/26/2022 15:15	4.77	6/26/2022 16:38	-0.32	6/25/2022 15:31	11.57
6/25/2022 16:03	-0.09	6/26/2022 14:53	1.62	6/26/2022 15:16	4.78	6/26/2022 16:39	-0.37	6/25/2022 15:32	11.54
6/25/2022 16:04	-0.11	6/26/2022 14:54	1.62	6/26/2022 15:17	4.78	6/26/2022 16:40	-0.38	6/25/2022 15:33	11.58
6/25/2022 16:05	-0.11	6/26/2022 14:55	1.62	6/26/2022 15:18	4.74	6/26/2022 16:41	-0.37	6/25/2022 15:34	11.55
6/25/2022 16:06	-0.10	6/26/2022 14:56	1.62	6/26/2022 15:19	4.78	6/26/2022 16:42	-0.30	6/25/2022 15:35	11.55
6/25/2022 16:07	-0.11	6/26/2022 14:57	1.61	6/26/2022 15:20	4.80	6/26/2022 16:43	-0.36	6/25/2022 15:36	11.59
6/25/2022 16:08	-0.10	6/26/2022 14:58	1.64	6/26/2022 15:21	4.80	6/26/2022 16:44	-0.36	6/25/2022 15:37	11.54
6/25/2022 16:09	-0.10	6/26/2022 14:59	1.62	6/26/2022 15:22	4.78	6/26/2022 16:45	-0.36	6/25/2022 15:38	11.59
6/25/2022 16:10	-0.11	6/26/2022 15:00	1.62	6/26/2022 15:23	4.81	6/26/2022 16:46	-0.39	6/25/2022 15:39	11.53
6/25/2022 16:11	-0.10	6/26/2022 15:01	1.61	6/26/2022 15:24	4.77	6/26/2022 16:47	-0.36	6/25/2022 15:40	11.53
6/25/2022 16:12	-0.12	6/26/2022 15:02	1.62	6/26/2022 15:25	4.76	6/26/2022 16:48	-0.34	6/25/2022 15:41	11.52
6/25/2022 16:13	-0.10	6/26/2022 15:03	1.62	6/26/2022 15:26	4.81	6/26/2022 16:49	-0.35	6/25/2022 15:42	11.61
6/25/2022 16:14	-0.10	6/26/2022 15:04	1.62	6/26/2022 15:27	4.77	6/26/2022 16:50	-0.36	6/25/2022 15:43	11.54
6/25/2022 16:15	-0.12	6/26/2022 15:05	1.61	6/26/2022 15:28	4.77	6/26/2022 16:51	-0.38	6/25/2022 15:44	11.55
6/25/2022 16:16	-0.10	6/26/2022 15:06	1.62	6/26/2022 15:29	4.76	6/26/2022 16:52	-0.39	6/25/2022 15:45	11.56
6/25/2022 16:17	-0.10	6/26/2022 15:07	1.61	6/26/2022 15:30	4.78	6/26/2022 16:53	-0.32	6/25/2022 15:46	11.54
6/25/2022 16:18	-0.10	6/26/2022 15:08	1.62	6/26/2022 15:31	4.77	6/26/2022 16:54	-0.35	6/25/2022 15:47	11.55
6/25/2022 16:19	-0.11	6/26/2022 15:09	1.61	6/26/2022 15:32	4.76	6/26/2022 16:55	-0.33	6/25/2022 15:48	11.61
6/25/2022 16:20	-0.10	6/26/2022 15:10	1.62	6/26/2022 15:33	4.77	6/26/2022 16:56	-0.38	6/25/2022 15:49	11.54
6/25/2022 16:21	-0.10	6/26/2022 15:11	1.62	6/26/2022 15:34	4.80	6/26/2022 16:57	-0.37	6/25/2022 15:50	11.57
6/25/2022 16:22	-0.11	6/26/2022 15:12	1.61	6/26/2022 15:35	4.78	6/26/2022 16:58	-0.37	6/25/2022 15:51	11.56
6/25/2022 16:23	-0.11	6/26/2022 15:13	1.61	6/26/2022 15:36	4.78	6/26/2022 16:59	-0.36	6/25/2022 15:52	11.57
6/25/2022 16:24	-0.10	6/26/2022 15:14	1.61	6/26/2022 15:37	4.78	6/26/2022 17:00	-0.36	6/25/2022 15:53	11.59
6/25/2022 16:25	-0.11	6/26/2022 15:15	1.61	6/26/2022 15:38	4.75	6/26/2022 17:01	-0.39	6/25/2022 15:54	11.58
6/25/2022 16:26	-0.12	6/26/2022 15:16	1.61	6/26/2022 15:39	4.77	6/26/2022 17:02	-0.39	6/25/2022 15:55	11.60
6/25/2022 16:27	-0.11	6/26/2022 15:17	1.63	6/26/2022 15:40	4.75	6/26/2022 17:03	-0.37	6/25/2022 15:56	11.60
6/25/2022 16:28	-0.11	6/26/2022 15:18	1.61	6/26/2022 15:41	4.77	6/26/2022 17:04	-0.35	6/25/2022 15:57	11.58
6/25/2022 16:29	-0.11	6/26/2022 15:19	1.61	6/26/2022 15:42	4.80	6/26/2022 17:05	-0.40	6/25/2022 15:58	11.62
6/25/2022 16:30	-0.10	6/26/2022 15:20	1.61	6/26/2022 15:43	4.78	6/26/2022 17:06	-0.37	6/25/2022 15:59	11.53
6/25/2022 16:31	-0.11	6/26/2022 15:21	1.63	6/26/2022 15:44	4.76	6/26/2022 17:07	-0.38	6/25/2022 16:00	11.52
6/25/2022 16:32	-0.11	6/26/2022 15:22	1.61	6/26/2022 15:45	4.76	6/26/2022 17:08	-0.37	6/25/2022 16:01	11.57
6/25/2022 16:33	-0.11	6/26/2022 15:23	1.61	6/26/2022 15:46	4.75	6/26/2022 17:09	-0.33	6/25/2022 16:02	11.62
6/25/2022 16:34	-0.10	6/26/2022 15:24	1.61	6/26/2022 15:47	4.77	6/26/2022 17:10	-0.37	6/25/2022 16:03	11.57
6/25/2022 16:35	-0.10	6/26/2022 15:25	1.61	6/26/2022 15:48	4.76	6/26/2022 17:11	-0.35	6/25/2022 16:04	11.58
6/25/2022 16:36	-0.09	6/26/2022 15:26	1.61	6/26/2022 15:49	4.77	6/26/2022 17:12	-0.33	6/25/2022 16:05	11.56
6/25/2022 16:37	-0.11	6/26/2022 15:27	1.61	6/26/2022 15:50	4.79	6/26/2022 17:13	-0.37	6/25/2022 16:06	11.58
6/25/2022 16:38	-0.12	6/26/2022 15:28	1.61	6/26/2022 15:51	4.76	6/26/2022 17:14	-0.34	6/25/2022 16:07	11.54
6/25/2022 16:39	-0.10	6/26/2022 15:29	1.61	6/26/2022 15:52	4.76	6/26/2022 17:15	-0.34	6/25/2022 16:08	11.56
6/25/2022 16:40	-0.11	6/26/2022 15:30	1.61	6/26/2022 15:53	4.75	6/26/2022 17:16	-0.34	6/25/2022 16:09	11.53
6/25/2022 16:41	-0.11	6/26/2022 15:31	1.61	6/26/2022 15:54	4.77	6/26/2022 17:17	-0.37	6/25/2022 16:10	11.56
6/25/2022 16:42	-0.11	6/26/2022 15:32	1.61	6/26/2022 15:55	4.76	6/26/2022 17:18	-0.38	6/25/2022 16:11	11.61
6/25/2022 16:43	-0.12	6/26/2022 15:33	1.61	6/26/2022 15:56	4.83	6/26/2022 17:19	-0.31	6/25/2022 16:12	11.51
6/25/2022 16:44	-0.12	6/26/2022 15:34	1.61	6/26/2022 15:57	4.77	6/26/2022 17:20	-0.36	6/25/2022 16:13	11.51
6/25/2022 16:45	-0.12	6/26/2022 15:35	1.61	6/26/2022 15:58	4.77	6/26/2022 17:21	-0.37	6/25/2022 16:14	11.57
6/25/2022 16:46	-0.10	6/26/2022 15:36	1.60	6/26/2022 15:59	4.77	6/26/2022 17:22	-0.32	6/25/2022 16:15	11.56
6/25/2022 16:47	-0.11	6/26/2022 15:37	1.61	6/26/2022 16:00	4.74	6/26/2022 17:23	-0.35	6/25/2022 16:16	11.55
6/25/2022 16:48	-0.11	6/26/2022 15:38	1.61	6/26/2022 16:01	4.76	6/26/2022 17:24	-0.37	6/25/2022 16:17	11.52
6/25/2022 16:49	-0.11	6/26/2022 15:39	1.61	6/26/2022 16:02	4.75	6/26/2022 17:25	-0.39	6/25/2022 16:18	11.60
6/25/2022 16:50	-0.11	6/26/2022 15:40	1.61	6/26/2022 16:03	4.76	6/26/2022 17:26	-0.35	6/25/2022 16:19	11.54
6/25/2022 16:51	-0.10	6/26/2022 15:41	1.61	6/26/2022 16:04	4.74	6/26/2022 17:27	-0.38	6/25/2022 16:20	11.58
6/25/2022 16:52	-0.10	6/26/2022 15:42	1.61	6/26/2022 16:05	4.75	6/26/2022 17:28	-0.33	6/25/2022 16:21	11.55
6/25/2022 16:53	-0.11	6/26/2022 15:43	1.61	6/26/2022 16:06	4.78	6/26/2022 17:29	-0.38	6/25/2022 16:22	11.53
6/25/2022 16:54	-0.10	6/26/2022 15:44	1.61	6/26/2022 16:07	4.80	6/26/2022 17:30	-0.34	6/25/2022 16:23	11.61
6/25/2022 16:55	-0.11	6/26/2022 15:45	1.63	6/26/2022 16:08	4.75	6/26/2022 17:31	-0.38	6/25/2022 16:24	11.57
6/25/2022 16:56	-0.11	6/26/2022 15:46	1.63	6/26/2022 16:09	4.77	6/26/2022 17:32	-0.34	6/25/2022 16:25	11.56
6/25/2022 16:57	-0.12	6/26/2022 15:47	1.61	6/26/2022 16:10	4.77	6/26/2022 17:33	-0.35	6/25/2022 16:26	11.54
6/25/2022 16:58	-0.10	6/26/2022 15:48	1.60	6/26/2022 16:11	4.74	6/26/2022 17:34	-0.33	6/25/2022 16:27	11.59
6/25/2022 16:59	-0.10	6/26/2022 15:49	1.61	6/26/2022 16:12	4.76	6/26/2022 17:35	-0.40	6/25/2022 16:28	11.58
6/25/2022 17:00	-0.10	6/26/2022 15:50	1.61	6/26/2022 16:13	4.77	6/26/2022 17:36	-0.33	6/25/2022 16:29	11.55
6/25/2022 17:01	-0.11	6/26/2022 15:51	1.62	6/26/2022 16:14	4.74	6/26/2022 17:37	-0.33	6/25/2022 16:30	11.59
6/25/2022 17:02	-0.12	6/26/2022 15:52	1.61	6/26/2022 16:15	4.73	6/26/2022 17:38	-0.34	6/25/2022 16:31	11.57
6/25/2022 17:03	-0.11	6/26/2022 15:53	1.61	6/26/2022 16:16	4.77	6/26/2022 17:39	-0.37	6/25/2022 16:32	11.59
6/25/2022 17:04	-0.12	6/26/2022 15:54	1.60	6/26/2022 16:17	4.77	6/26/2022 17:40	-0.35	6/25/2022 16:33	11.55
6/25/2022 17:05	-0.11	6/26/2022 15:55	1.63	6/26/2022 16:18	4.74	6/26/2022 17:41	-0.37	6/25/2022 16:34	11.57
6/25/2022 17:06	-0.12	6/26/2022 15:56	1.61	6/26/2022 16:19	4.77	6/26/2022 17:42	-0.40	6/25/2022 16:35	11.56
6/25/2022 17:07	-0.11	6/26/2022 15:57	1.61	6/26/2022 16:20	4.77	6/26/2022 17:43	-0.32	6/25/2022 16:36	11.58
6/25/2022 17:08	-0.11	6/26/2022 15:58	1.60	6/26/2022 16:21	4.80	6/26/2022 17:44	-0.34	6/25/2022 16:37	11.58
6/25/2022 17:09	-0.10	6/26/2022 15:59	1.63	6/26/2022 16:22	4.78	6/26/2022 17:45	-0.39	6/25/2022 16:38	11.58
6/25/2022 17:10	-0.10	6/26/2022 16:00	1.61	6/26/2022 16:23	4.77	6/26/2022 17:46	-0.34	6/25/2022 16:39	11.58
6/25/2022 17:11	-0.11	6/26/2022 16:01	1.63	6/26/2022 16:24	4.74	6/26/2022 17:47	-0.35	6/25/2022 16:40	11.59
6/25/2022 17:12	-0.11	6/26/2022 16:02	1.61	6/26/2022 16:25	4.76	6/26/2022 17:48	-0.33	6/25/2022 16:41	11.60

6/25/2022 17:13	-0.11	6/26/2022 16:03	1.61	6/26/2022 16:26	4.78	6/26/2022 17:49	-0.35	6/25/2022 16:42	11.53
6/25/2022 17:14	-0.10	6/26/2022 16:04	1.61	6/26/2022 16:27	4.78	6/26/2022 17:50	-0.32	6/25/2022 16:43	11.57
6/25/2022 17:15	-0.10	6/26/2022 16:05	1.62	6/26/2022 16:28	4.76	6/26/2022 17:51	-0.32	6/25/2022 16:44	11.54
6/25/2022 17:16	-0.12	6/26/2022 16:06	1.61	6/26/2022 16:29	4.75	6/26/2022 17:52	-0.35	6/25/2022 16:45	11.58
6/25/2022 17:17	-0.12	6/26/2022 16:07	1.63	6/26/2022 16:30	4.75	6/26/2022 17:53	-0.36	6/25/2022 16:46	11.58
6/25/2022 17:18	-0.12	6/26/2022 16:08	1.62	6/26/2022 16:31	4.76	6/26/2022 17:54	-0.39	6/25/2022 16:47	11.58
6/25/2022 17:19	-0.10	6/26/2022 16:09	1.63	6/26/2022 16:32	4.77	6/26/2022 17:55	-0.36	6/25/2022 16:48	11.56
6/25/2022 17:20	-0.12	6/26/2022 16:10	1.60	6/26/2022 16:33	4.76	6/26/2022 17:56	-0.35	6/25/2022 16:49	11.59
6/25/2022 17:21	-0.12	6/26/2022 16:11	1.60	6/26/2022 16:34	4.75	6/26/2022 17:57	-0.34	6/25/2022 16:50	11.52
6/25/2022 17:22	-0.12	6/26/2022 16:12	1.60	6/26/2022 16:35	4.78	6/26/2022 17:58	-0.33	6/25/2022 16:51	11.60
6/25/2022 17:23	-0.12	6/26/2022 16:13	1.60	6/26/2022 16:36	4.75	6/26/2022 17:59	-0.35	6/25/2022 16:52	11.59
6/25/2022 17:24	-0.11	6/26/2022 16:14	1.60	6/26/2022 16:37	4.78	6/26/2022 18:00	-0.37	6/25/2022 16:53	11.54
6/25/2022 17:25	-0.12	6/26/2022 16:15	1.60	6/26/2022 16:38	4.75	6/26/2022 18:01	-0.33	6/25/2022 16:54	11.53
6/25/2022 17:26	-0.10	6/26/2022 16:16	1.63	6/26/2022 16:39	4.74	6/26/2022 18:02	-0.39	6/25/2022 16:55	11.50
6/25/2022 17:27	-0.11	6/26/2022 16:17	1.60	6/26/2022 16:40	4.74	6/26/2022 18:03	-0.35	6/25/2022 16:56	11.57
6/25/2022 17:28	-0.10	6/26/2022 16:18	1.60	6/26/2022 16:41	4.75	6/26/2022 18:04	-0.36	6/25/2022 16:57	11.54
6/25/2022 17:29	-0.12	6/26/2022 16:19	1.62	6/26/2022 16:42	4.77	6/26/2022 18:05	-0.38	6/25/2022 16:58	11.55
6/25/2022 17:30	-0.09	6/26/2022 16:20	1.62	6/26/2022 16:43	4.76	6/26/2022 18:06	-0.34	6/25/2022 16:59	11.50
6/25/2022 17:31	-0.10	6/26/2022 16:21	1.61	6/26/2022 16:44	4.75	6/26/2022 18:07	-0.33	6/25/2022 17:00	11.54
6/25/2022 17:32	-0.11	6/26/2022 16:22	1.62	6/26/2022 16:45	4.77	6/26/2022 18:08	-0.34	6/25/2022 17:01	11.54
6/25/2022 17:33	-0.11	6/26/2022 16:23	1.62	6/26/2022 16:46	4.73	6/26/2022 18:09	-0.36	6/25/2022 17:02	11.56
6/25/2022 17:34	-0.11	6/26/2022 16:24	1.60	6/26/2022 16:47	4.77	6/26/2022 18:10	-0.35	6/25/2022 17:03	11.58
6/25/2022 17:35	-0.10	6/26/2022 16:25	1.61	6/26/2022 16:48	4.71	6/26/2022 18:11	-0.35	6/25/2022 17:04	11.56
6/25/2022 17:36	-0.11	6/26/2022 16:26	1.62	6/26/2022 16:49	4.76	6/26/2022 18:12	-0.37	6/25/2022 17:05	11.56
6/25/2022 17:37	-0.12	6/26/2022 16:27	1.60	6/26/2022 16:50	4.75	6/26/2022 18:13	-0.36	6/25/2022 17:06	11.61
6/25/2022 17:38	-0.10	6/26/2022 16:28	1.60	6/26/2022 16:51	4.76	6/26/2022 18:14	-0.40	6/25/2022 17:07	11.61
6/25/2022 17:39	-0.10	6/26/2022 16:29	1.60	6/26/2022 16:52	4.77	6/26/2022 18:15	-0.37	6/25/2022 17:08	11.54
6/25/2022 17:40	-0.09	6/26/2022 16:30	1.60	6/26/2022 16:53	4.74	6/26/2022 18:16	-0.34	6/25/2022 17:09	11.62
6/25/2022 17:41	-0.11	6/26/2022 16:31	1.63	6/26/2022 16:54	4.79	6/26/2022 18:17	-0.39	6/25/2022 17:10	11.56
6/25/2022 17:42	-0.10	6/26/2022 16:32	1.60	6/26/2022 16:55	4.72	6/26/2022 18:18	-0.33	6/25/2022 17:11	11.54
6/25/2022 17:43	-0.10	6/26/2022 16:33	1.60	6/26/2022 16:56	4.77	6/26/2022 18:19	-0.37	6/25/2022 17:12	11.57
6/25/2022 17:44	-0.10	6/26/2022 16:34	1.62	6/26/2022 16:57	4.74	6/26/2022 18:20	-0.33	6/25/2022 17:13	11.55
6/25/2022 17:45	-0.11	6/26/2022 16:35	1.60	6/26/2022 16:58	4.75	6/26/2022 18:21	-0.34	6/25/2022 17:14	11.58
6/25/2022 17:46	-0.10	6/26/2022 16:36	1.62	6/26/2022 16:59	4.74	6/26/2022 18:22	-0.39	6/25/2022 17:15	11.54
6/25/2022 17:47	-0.12	6/26/2022 16:37	1.60	6/26/2022 17:00	4.74	6/26/2022 18:23	-0.37	6/25/2022 17:16	11.58
6/25/2022 17:48	-0.11	6/26/2022 16:38	1.62	6/26/2022 17:01	4.75	6/26/2022 18:24	-0.35	6/25/2022 17:17	11.54
6/25/2022 17:49	-0.11	6/26/2022 16:39	1.60	6/26/2022 17:02	4.76	6/26/2022 18:25	-0.36	6/25/2022 17:18	11.55
6/25/2022 17:50	-0.11	6/26/2022 16:40	1.60	6/26/2022 17:03	4.78	6/26/2022 18:26	-0.35	6/25/2022 17:19	11.58
6/25/2022 17:51	-0.11	6/26/2022 16:41	1.60	6/26/2022 17:04	4.74	6/26/2022 18:27	-0.31	6/25/2022 17:20	11.60
6/25/2022 17:52	-0.11	6/26/2022 16:42	1.60	6/26/2022 17:05	4.75	6/26/2022 18:28	-0.35	6/25/2022 17:21	11.58
6/25/2022 17:53	-0.11	6/26/2022 16:43	1.60	6/26/2022 17:06	4.73	6/26/2022 18:29	-0.39	6/25/2022 17:22	11.55
6/25/2022 17:54	-0.10	6/26/2022 16:44	1.60	6/26/2022 17:07	4.75	6/26/2022 18:30	-0.36	6/25/2022 17:23	11.61
6/25/2022 17:55	-0.12	6/26/2022 16:45	1.60	6/26/2022 17:08	4.74	6/26/2022 18:31	-0.35	6/25/2022 17:24	11.57
6/25/2022 17:56	-0.10	6/26/2022 16:46	1.60	6/26/2022 17:09	4.78	6/26/2022 18:32	-0.35	6/25/2022 17:25	11.58
6/25/2022 17:57	-0.12	6/26/2022 16:47	1.60	6/26/2022 17:10	4.73	6/26/2022 18:33	-0.30	6/25/2022 17:26	11.59
6/25/2022 17:58	-0.12	6/26/2022 16:48	1.60	6/26/2022 17:11	4.77	6/26/2022 18:34	-0.32	6/25/2022 17:27	11.53
6/25/2022 17:59	-0.12	6/26/2022 16:49	1.62	6/26/2022 17:12	4.76	6/26/2022 18:35	-0.36	6/25/2022 17:28	11.59
6/25/2022 18:00	-0.10	6/26/2022 16:50	1.60	6/26/2022 17:13	4.74	6/26/2022 18:36	-0.35	6/25/2022 17:29	11.50
6/25/2022 18:01	-0.10	6/26/2022 16:51	1.60	6/26/2022 17:14	4.76	6/26/2022 18:37	-0.30	6/25/2022 17:30	11.55
6/25/2022 18:02	-0.11	6/26/2022 16:52	1.60	6/26/2022 17:15	4.74	6/26/2022 18:38	-0.35	6/25/2022 17:31	11.51
6/25/2022 18:03	-0.11	6/26/2022 16:53	1.62	6/26/2022 17:16	4.75	6/26/2022 18:39	-0.32	6/25/2022 17:32	11.58
6/25/2022 18:04	-0.11	6/26/2022 16:54	1.60	6/26/2022 17:17	4.78	6/26/2022 18:40	-0.36	6/25/2022 17:33	11.62
6/25/2022 18:05	-0.10	6/26/2022 16:55	1.60	6/26/2022 17:18	4.73	6/26/2022 18:41	-0.32	6/25/2022 17:34	11.56
6/25/2022 18:06	-0.11	6/26/2022 16:56	1.60	6/26/2022 17:19	4.75	6/26/2022 18:42	-0.35	6/25/2022 17:35	11.62
6/25/2022 18:07	-0.12	6/26/2022 16:57	1.60	6/26/2022 17:20	4.76	6/26/2022 18:43	-0.38	6/25/2022 17:36	11.57
6/25/2022 18:08	-0.10	6/26/2022 16:58	1.60	6/26/2022 17:21	4.72	6/26/2022 18:44	-0.39	6/25/2022 17:37	11.56
6/25/2022 18:09	-0.10	6/26/2022 16:59	1.60	6/26/2022 17:22	4.72	6/26/2022 18:45	-0.33	6/25/2022 17:38	11.51
6/25/2022 18:10	-0.10	6/26/2022 17:00	1.59	6/26/2022 17:23	4.77	6/26/2022 18:46	-0.34	6/25/2022 17:39	11.58
6/25/2022 18:11	-0.10	6/26/2022 17:01	1.60	6/26/2022 17:24	4.75	6/26/2022 18:47	-0.35	6/25/2022 17:40	11.62
6/25/2022 18:12	-0.10	6/26/2022 17:02	1.60	6/26/2022 17:25	4.75	6/26/2022 18:48	-0.40	6/25/2022 17:41	11.59
6/25/2022 18:13	-0.10	6/26/2022 17:03	1.60	6/26/2022 17:26	4.77	6/26/2022 18:49	-0.37	6/25/2022 17:42	11.50
6/25/2022 18:14	-0.10	6/26/2022 17:04	1.60	6/26/2022 17:27	4.73	6/26/2022 18:50	-0.31	6/25/2022 17:43	11.54
6/25/2022 18:15	-0.10	6/26/2022 17:05	1.60	6/26/2022 17:28	4.73	6/26/2022 18:51	-0.35	6/25/2022 17:44	11.55
6/25/2022 18:16	-0.10	6/26/2022 17:06	1.60	6/26/2022 17:29	4.72	6/26/2022 18:52	-0.35	6/25/2022 17:45	11.54
6/25/2022 18:17	-0.12	6/26/2022 17:07	1.60	6/26/2022 17:30	4.78	6/26/2022 18:53	-0.38	6/25/2022 17:46	11.59
6/25/2022 18:18	-0.11	6/26/2022 17:08	1.60	6/26/2022 17:31	4.77	6/26/2022 18:54	-0.33	6/25/2022 17:47	11.54
6/25/2022 18:19	-0.12	6/26/2022 17:09	1.59	6/26/2022 17:32	4.75	6/26/2022 18:55	-0.34	6/25/2022 17:48	11.56
6/25/2022 18:20	-0.12	6/26/2022 17:10	1.60	6/26/2022 17:33	4.74	6/26/2022 18:56	-0.37	6/25/2022 17:49	11.62
6/25/2022 18:21	-0.11	6/26/2022 17:11	1.60	6/26/2022 17:34	4.77	6/26/2022 18:57	-0.35	6/25/2022 17:50	11.55
6/25/2022 18:22	-0.12	6/26/2022 17:12	1.60	6/26/2022 17:35	4.77	6/26/2022 18:58	-0.35	6/25/2022 17:51	11.52
6/25/2022 18:23	-0.12	6/26/2022 17:13	1.60	6/26/2022 17:36	4.76	6/26/2022 18:59	-0.34	6/25/2022 17:52	11.59
6/25/2022 18:24	-0.12	6/26/2022 17:14	1.60	6/26/2022 17:37	4.74	6/26/2022 19:00	-0.35	6/25/2022 17:53	11.52
6/25/2022 18:25	-0.11	6/26/2022 17:15	1.59	6/26/2022 17:38	4.75	6/26/2022 19:01	-0.35	6/25/2022 17:54	11.62
6/25/2022 18:26	-0.10	6/26/2022 17:16	1.60	6/26/2022 17:39	4.74	6/26/2022 19:02	-0.35	6/25/2022 17:55	11.49
6/25/2022 18:27	-0.12	6/26/2022 17:17	1.59	6/26/2022 17:40	4.72	6/26/2022 19:03	-0.33	6/25/2022 17:56	11.53
6/25/2022 18:28	-0.10	6/26/2022 17:18	1.60	6/26/2022 17:41	4.75	6/26/2022 19:04	-0.34	6/25/2022 17:57	11.55
6/25/2022 18:29	-0.11	6/26/2022 17:19	1.59	6/26/2022 17:42	4.75	6/26/2022 19:05	-0.36	6/25/2022 17:58	11.60
6/25/2022 18:30	-0.11	6/26/2022 17:20	1.60	6/26/2022 17:43	4.74	6/26/2022 19:06	-0.37	6/25/2022 17:59	11.52
6/25/2022 18:31	-0.11	6/26/2022 17:21	1.60	6/26/2022 17:44	4.71	6/26/2022 19:07	-0.40	6/25/2022 18:00	11.54
6/25/2022 18:32	-0.11	6/26/2022 17:22	1.60	6/26/2022 17:45	4.76	6/26/2022 19:08	-0.35	6/25/2022 18:01	11.54
6/25/2022 18:33	-0.12	6/26/2022 17:23	1.60	6/26/2022 17:46	4.73	6/26/2022 19:09	-0.35	6/25/2022 18:02	11.56
6/25/2022 18:34	-0.10	6/26/2022 17:24	1.60	6/26/2022 17:47	4.75	6/26/2022 19:10	-0.36	6/25/2022 18:03	11.56
6/25/2022 18:35	-0.10	6/26/2022 17:25	1.62	6/26/2022 17:48	4.76	6/26/2022 19:11	-0.34	6/25/2022 18:04	11.55
6/25/2022 18:36	-0.12	6/26/2022 17:26	1.60	6/26/2022 17:49	4.73	6/26/2022 19:12	-0.37	6/25/2022 18:05	11.56
6/25/2022 18:37	-0.11	6/26/2022 17:27	1.59	6/26/2022 17:50	4.73	6/26/2022 19:13	-0.33	6/25/2022 18:06	11.56
6/25/2022 18:38	-0.12	6/26/2022 17:28	1.59	6/26/2022 17:51	4.73	6/26/2022 19:14	-0.38	6/25/2022 18:07	11.59
6/25/2022 18:39	-0.11	6/26/2022 17:29	1.59	6/26/2022 17:52	4.73	6/26/2022 19:15	-0.36	6/25/2022 18:08	11.56
6/25/2022 18:40	-0.11	6/26/2022 17:30	1.59	6/26/2022 17:53	4.75	6/26/2022 19:16	-0.33	6/25/2022 18:09	11.53

6/25/2022 18:41	-0.12	6/26/2022 17:31	1.59	6/26/2022 17:54	4.71	6/26/2022 19:17	-0.35	6/25/2022 18:10	11.58
6/25/2022 18:42	-0.11	6/26/2022 17:32	1.61	6/26/2022 17:55	4.72	6/26/2022 19:18	-0.37	6/25/2022 18:11	11.58
6/25/2022 18:43	-0.10	6/26/2022 17:33	1.59	6/26/2022 17:56	4.73	6/26/2022 19:19	-0.36	6/25/2022 18:12	11.58
6/25/2022 18:44	-0.10	6/26/2022 17:34	1.59	6/26/2022 17:57	4.76	6/26/2022 19:20	-0.34	6/25/2022 18:13	11.60
6/25/2022 18:45	-0.10	6/26/2022 17:35	1.59	6/26/2022 17:58	4.74	6/26/2022 19:21	-0.40	6/25/2022 18:14	11.55
6/25/2022 18:46	-0.12	6/26/2022 17:36	1.59	6/26/2022 17:59	4.74	6/26/2022 19:22	-0.35	6/25/2022 18:15	11.62
6/25/2022 18:47	-0.10	6/26/2022 17:37	1.59	6/26/2022 18:00	4.74	6/26/2022 19:23	-0.34	6/25/2022 18:16	11.50
6/25/2022 18:48	-0.11	6/26/2022 17:38	1.60	6/26/2022 18:01	4.75	6/26/2022 19:24	-0.36	6/25/2022 18:17	11.58
6/25/2022 18:49	-0.11	6/26/2022 17:39	1.59	6/26/2022 18:02	4.78	6/26/2022 19:25	-0.35	6/25/2022 18:18	11.55
6/25/2022 18:50	-0.09	6/26/2022 17:40	1.59	6/26/2022 18:03	4.74	6/26/2022 19:26	-0.35	6/25/2022 18:19	11.57
6/25/2022 18:51	-0.11	6/26/2022 17:41	1.62	6/26/2022 18:04	4.70	6/26/2022 19:27	-0.34	6/25/2022 18:20	11.58
6/25/2022 18:52	-0.10	6/26/2022 17:42	1.59	6/26/2022 18:05	4.74	6/26/2022 19:28	-0.33	6/25/2022 18:21	11.57
6/25/2022 18:53	-0.10	6/26/2022 17:43	1.59	6/26/2022 18:06	4.74	6/26/2022 19:29	-0.34	6/25/2022 18:22	11.59
6/25/2022 18:54	-0.10	6/26/2022 17:44	1.59	6/26/2022 18:07	4.77	6/26/2022 19:30	-0.31	6/25/2022 18:23	11.58
6/25/2022 18:55	-0.11	6/26/2022 17:45	1.59	6/26/2022 18:08	4.72	6/26/2022 19:31	-0.32	6/25/2022 18:24	11.55
6/25/2022 18:56	-0.11	6/26/2022 17:46	1.59	6/26/2022 18:09	4.74	6/26/2022 19:32	-0.37	6/25/2022 18:25	11.58
6/25/2022 18:57	-0.11	6/26/2022 17:47	1.59	6/26/2022 18:10	4.77	6/26/2022 19:33	-0.34	6/25/2022 18:26	11.56
6/25/2022 18:58	-0.10	6/26/2022 17:48	1.59	6/26/2022 18:11	4.78	6/26/2022 19:34	-0.33	6/25/2022 18:27	11.59
6/25/2022 18:59	-0.11	6/26/2022 17:49	1.59	6/26/2022 18:12	4.72	6/26/2022 19:35	-0.39	6/25/2022 18:28	11.54
6/25/2022 19:00	-0.11	6/26/2022 17:50	1.60	6/26/2022 18:13	4.73	6/26/2022 19:36	-0.36	6/25/2022 18:29	11.57
6/25/2022 19:01	-0.10	6/26/2022 17:51	1.59	6/26/2022 18:14	4.73	6/26/2022 19:37	-0.37	6/25/2022 18:30	11.57
6/25/2022 19:02	-0.11	6/26/2022 17:52	1.59	6/26/2022 18:15	4.74	6/26/2022 19:38	-0.34	6/25/2022 18:31	11.63
6/25/2022 19:03	-0.12	6/26/2022 17:53	1.59	6/26/2022 18:16	4.72	6/26/2022 19:39	-0.40	6/25/2022 18:32	11.59
6/25/2022 19:04	-0.12	6/26/2022 17:54	1.59	6/26/2022 18:17	4.74	6/26/2022 19:40	-0.35	6/25/2022 18:33	11.55
6/25/2022 19:05	-0.12	6/26/2022 17:55	1.59	6/26/2022 18:18	4.73	6/26/2022 19:41	-0.37	6/25/2022 18:34	11.57
6/25/2022 19:06	-0.10	6/26/2022 17:56	1.59	6/26/2022 18:19	4.71	6/26/2022 19:42	-0.33	6/25/2022 18:35	11.58
6/25/2022 19:07	-0.10	6/26/2022 17:57	1.59	6/26/2022 18:20	4.74	6/26/2022 19:43	-0.34	6/25/2022 18:36	11.59
6/25/2022 19:08	-0.11	6/26/2022 17:58	1.59	6/26/2022 18:21	4.73	6/26/2022 19:44	-0.38	6/25/2022 18:37	11.57
6/25/2022 19:09	-0.10	6/26/2022 17:59	1.59	6/26/2022 18:22	4.75	6/26/2022 19:45	-0.36	6/25/2022 18:38	11.58
6/25/2022 19:10	-0.11	6/26/2022 18:00	1.60	6/26/2022 18:23	4.76	6/26/2022 19:46	-0.40	6/25/2022 18:39	11.55
6/25/2022 19:11	-0.11	6/26/2022 18:01	1.61	6/26/2022 18:24	4.75	6/26/2022 19:47	-0.39	6/25/2022 18:40	11.57
6/25/2022 19:12	-0.12	6/26/2022 18:02	1.59	6/26/2022 18:25	4.74	6/26/2022 19:48	-0.34	6/25/2022 18:41	11.57
6/25/2022 19:13	-0.10	6/26/2022 18:03	1.59	6/26/2022 18:26	4.73	6/26/2022 19:49	-0.30	6/25/2022 18:42	11.57
6/25/2022 19:14	-0.10	6/26/2022 18:04	1.59	6/26/2022 18:27	4.75	6/26/2022 19:50	-0.36	6/25/2022 18:43	11.61
6/25/2022 19:15	-0.11	6/26/2022 18:05	1.59	6/26/2022 18:28	4.76	6/26/2022 19:51	-0.42	6/25/2022 18:44	11.57
6/25/2022 19:16	-0.11	6/26/2022 18:06	1.60	6/26/2022 18:29	4.73	6/26/2022 19:52	-0.36	6/25/2022 18:45	11.58
6/25/2022 19:17	-0.11	6/26/2022 18:07	1.59	6/26/2022 18:30	4.73	6/26/2022 19:53	-0.31	6/25/2022 18:46	11.54
6/25/2022 19:18	-0.11	6/26/2022 18:08	1.59	6/26/2022 18:31	4.78	6/26/2022 19:54	-0.36	6/25/2022 18:47	11.56
6/25/2022 19:19	-0.11	6/26/2022 18:09	1.59	6/26/2022 18:32	4.74	6/26/2022 19:55	-0.36	6/25/2022 18:48	11.55
6/25/2022 19:20	-0.11	6/26/2022 18:10	1.59	6/26/2022 18:33	4.72	6/26/2022 19:56	-0.33	6/25/2022 18:49	11.58
6/25/2022 19:21	-0.10	6/26/2022 18:11	1.59	6/26/2022 18:34	4.76	6/26/2022 19:57	-0.35	6/25/2022 18:50	11.54
6/25/2022 19:22	-0.11	6/26/2022 18:12	1.59	6/26/2022 18:35	4.75	6/26/2022 19:58	-0.37	6/25/2022 18:51	11.58
6/25/2022 19:23	-0.11	6/26/2022 18:13	1.59	6/26/2022 18:36	4.75	6/26/2022 19:59	-0.35	6/25/2022 18:52	11.57
6/25/2022 19:24	-0.12	6/26/2022 18:14	1.59	6/26/2022 18:37	4.71	6/26/2022 20:00	-0.37	6/25/2022 18:53	11.54
6/25/2022 19:25	-0.11	6/26/2022 18:15	1.59	6/26/2022 18:38	4.72	6/26/2022 20:01	-0.37	6/25/2022 18:54	11.54
6/25/2022 19:26	-0.11	6/26/2022 18:16	1.59	6/26/2022 18:39	4.73	6/26/2022 20:02	-0.32	6/25/2022 18:55	11.58
6/25/2022 19:27	-0.10	6/26/2022 18:17	1.59	6/26/2022 18:40	4.75	6/26/2022 20:03	-0.35	6/25/2022 18:56	11.53
6/25/2022 19:28	-0.11	6/26/2022 18:18	1.59	6/26/2022 18:41	4.75	6/26/2022 20:04	-0.37	6/25/2022 18:57	11.60
6/25/2022 19:29	-0.12	6/26/2022 18:19	1.59	6/26/2022 18:42	4.73	6/26/2022 20:05	-0.35	6/25/2022 18:58	11.54
6/25/2022 19:30	-0.11	6/26/2022 18:20	1.59	6/26/2022 18:43	4.75	6/26/2022 20:06	-0.33	6/25/2022 18:59	11.54
6/25/2022 19:31	-0.10	6/26/2022 18:21	1.59	6/26/2022 18:44	4.74	6/26/2022 20:07	-0.34	6/25/2022 19:00	11.65
6/25/2022 19:32	-0.10	6/26/2022 18:22	1.59	6/26/2022 18:45	4.77	6/26/2022 20:08	-0.37	6/25/2022 19:01	11.56
6/25/2022 19:33	-0.11	6/26/2022 18:23	1.59	6/26/2022 18:46	4.73	6/26/2022 20:09	-0.35	6/25/2022 19:02	11.54
6/25/2022 19:34	-0.11	6/26/2022 18:24	1.59	6/26/2022 18:47	4.74	6/26/2022 20:10	-0.34	6/25/2022 19:03	11.58
6/25/2022 19:35	-0.12	6/26/2022 18:25	1.59	6/26/2022 18:48	4.74	6/26/2022 20:11	-0.33	6/25/2022 19:04	11.59
6/25/2022 19:36	-0.10	6/26/2022 18:26	1.59	6/26/2022 18:49	4.73	6/26/2022 20:12	-0.31	6/25/2022 19:05	11.57
6/25/2022 19:37	-0.11	6/26/2022 18:27	1.59	6/26/2022 18:50	4.72	6/26/2022 20:13	-0.36	6/25/2022 19:06	11.57
6/25/2022 19:38	-0.11	6/26/2022 18:28	1.59	6/26/2022 18:51	4.72	6/26/2022 20:14	-0.36	6/25/2022 19:07	11.56
6/25/2022 19:39	-0.10	6/26/2022 18:29	1.59	6/26/2022 18:52	4.75	6/26/2022 20:15	-0.37	6/25/2022 19:08	11.50
6/25/2022 19:40	-0.10	6/26/2022 18:30	1.59	6/26/2022 18:53	4.75	6/26/2022 20:16	-0.34	6/25/2022 19:09	11.59
6/25/2022 19:41	-0.11	6/26/2022 18:31	1.59	6/26/2022 18:54	4.74	6/26/2022 20:17	-0.34	6/25/2022 19:10	11.56
6/25/2022 19:42	-0.11	6/26/2022 18:32	1.62	6/26/2022 18:55	4.73	6/26/2022 20:18	-0.35	6/25/2022 19:11	11.60
6/25/2022 19:43	-0.11	6/26/2022 18:33	1.59	6/26/2022 18:56	4.71	6/26/2022 20:19	-0.35	6/25/2022 19:12	11.62
6/25/2022 19:44	-0.10	6/26/2022 18:34	1.60	6/26/2022 18:57	4.72	6/26/2022 20:20	-0.36	6/25/2022 19:13	11.56
6/25/2022 19:45	-0.09	6/26/2022 18:35	1.59	6/26/2022 18:58	4.70	6/26/2022 20:21	-0.34	6/25/2022 19:14	11.55
6/25/2022 19:46	-0.11	6/26/2022 18:36	1.59	6/26/2022 18:59	4.70	6/26/2022 20:22	-0.36	6/25/2022 19:15	11.59
6/25/2022 19:47	-0.11	6/26/2022 18:37	1.59	6/26/2022 19:00	4.72	6/26/2022 20:23	-0.40	6/25/2022 19:16	11.57
6/25/2022 19:48	-0.10	6/26/2022 18:38	1.59	6/26/2022 19:01	4.73	6/26/2022 20:24	-0.36	6/25/2022 19:17	11.54
6/25/2022 19:49	-0.12	6/26/2022 18:39	1.59	6/26/2022 19:02	4.75	6/26/2022 20:25	-0.35	6/25/2022 19:18	11.51
6/25/2022 19:50	-0.12	6/26/2022 18:40	1.59	6/26/2022 19:03	4.75	6/26/2022 20:26	-0.35	6/25/2022 19:19	11.56
6/25/2022 19:51	-0.11	6/26/2022 18:41	1.59	6/26/2022 19:04	4.73	6/26/2022 20:27	-0.36	6/25/2022 19:20	11.58
6/25/2022 19:52	-0.12	6/26/2022 18:42	1.59	6/26/2022 19:05	4.74	6/26/2022 20:28	-0.37	6/25/2022 19:21	11.60
6/25/2022 19:53	-0.12	6/26/2022 18:43	1.59	6/26/2022 19:06	4.73	6/26/2022 20:29	-0.41	6/25/2022 19:22	11.58
6/25/2022 19:54	-0.11	6/26/2022 18:44	1.59	6/26/2022 19:07	4.73	6/26/2022 20:30	-0.35	6/25/2022 19:23	11.53
6/25/2022 19:55	-0.11	6/26/2022 18:45	1.59	6/26/2022 19:08	4.73	6/26/2022 20:31	-0.34	6/25/2022 19:24	11.53
6/25/2022 19:56	-0.12	6/26/2022 18:46	1.59	6/26/2022 19:09	4.77	6/26/2022 20:32	-0.37	6/25/2022 19:25	11.56
6/25/2022 19:57	-0.10	6/26/2022 18:47	1.59	6/26/2022 19:10	4.74	6/26/2022 20:33	-0.35	6/25/2022 19:26	11.56
6/25/2022 19:58	-0.10	6/26/2022 18:48	1.59	6/26/2022 19:11	4.74	6/26/2022 20:34	-0.35	6/25/2022 19:27	11.59
6/25/2022 19:59	-0.11	6/26/2022 18:49	1.59	6/26/2022 19:12	4.78	6/26/2022 20:35	-0.37	6/25/2022 19:28	11.52
6/25/2022 20:00	-0.11	6/26/2022 18:50	1.59	6/26/2022 19:13	4.75	6/26/2022 20:36	-0.35	6/25/2022 19:29	11.58
6/25/2022 20:01	-0.10	6/26/2022 18:51	1.59	6/26/2022 19:14	4.71	6/26/2022 20:37	-0.32	6/25/2022 19:30	11.57
6/25/2022 20:02	-0.10	6/26/2022 18:52	1.59	6/26/2022 19:15	4.75	6/26/2022 20:38	-0.35	6/25/2022 19:31	11.54
6/25/2022 20:03	-0.11	6/26/2022 18:53	1.59	6/26/2022 19:16	4.74	6/26/2022 20:39	-0.37	6/25/2022 19:32	11.56
6/25/2022 20:04	-0.10	6/26/2022 18:54	1.59	6/26/2022 19:17	4.73	6/26/2022 20:40	-0.36	6/25/2022 19:33	11.61
6/25/2022 20:05	-0.11	6/26/2022 18:55	1.59	6/26/2022 19:18	4.74	6/26/2022 20:41	-0.35	6/25/2022 19:34	11.54
6/25/2022 20:06	-0.11	6/26/2022 18:56	1.59	6/26/2022 19:19	4.73	6/26/2022 20:42	-0.37	6/25/2022 19:35	11.55
6/25/2022 20:07	-0.11	6/26/2022 18:57	1.59	6/26/2022 19:20	4.74	6/26/2022 20:43	-0.36	6/25/2022 19:36	11.54
6/25/2022 20:08	-0.10	6/26/2022 18:58	1.59	6/26/2022 19:21	4.71	6/26/2022 20:44	-0.34	6/25/2022 19:37	11.58

6/25/2022 20:09	-0.10	6/26/2022 18:59	1.59	6/26/2022 19:22	4.76	6/26/2022 20:45	-0.35	6/25/2022 19:38	11.57
6/25/2022 20:10	-0.11	6/26/2022 19:00	1.62	6/26/2022 19:23	4.74	6/26/2022 20:46	-0.31	6/25/2022 19:39	11.56
6/25/2022 20:11	-0.11	6/26/2022 19:01	1.59	6/26/2022 19:24	4.73	6/26/2022 20:47	-0.36	6/25/2022 19:40	11.61
6/25/2022 20:12	-0.12	6/26/2022 19:02	1.59	6/26/2022 19:25	4.74	6/26/2022 20:48	-0.32	6/25/2022 19:41	11.53
6/25/2022 20:13	-0.11	6/26/2022 19:03	1.59	6/26/2022 19:26	4.72	6/26/2022 20:49	-0.35	6/25/2022 19:42	11.57
6/25/2022 20:14	-0.11	6/26/2022 19:04	1.59	6/26/2022 19:27	4.72	6/26/2022 20:50	-0.38	6/25/2022 19:43	11.55
6/25/2022 20:15	-0.10	6/26/2022 19:05	1.59	6/26/2022 19:28	4.76	6/26/2022 20:51	-0.36	6/25/2022 19:44	11.51
6/25/2022 20:16	-0.10	6/26/2022 19:06	1.61	6/26/2022 19:29	4.70	6/26/2022 20:52	-0.35	6/25/2022 19:45	11.53
6/25/2022 20:17	-0.10	6/26/2022 19:07	1.59	6/26/2022 19:30	4.73	6/26/2022 20:53	-0.38	6/25/2022 19:46	11.51
6/25/2022 20:18	-0.10	6/26/2022 19:08	1.59	6/26/2022 19:31	4.74	6/26/2022 20:54	-0.36	6/25/2022 19:47	11.56
6/25/2022 20:19	-0.11	6/26/2022 19:09	1.60	6/26/2022 19:32	4.73	6/26/2022 20:55	-0.31	6/25/2022 19:48	11.55
6/25/2022 20:20	-0.11	6/26/2022 19:10	1.59	6/26/2022 19:33	4.74	6/26/2022 20:56	-0.36	6/25/2022 19:49	11.53
6/25/2022 20:21	-0.10	6/26/2022 19:11	1.62	6/26/2022 19:34	4.74	6/26/2022 20:57	-0.34	6/25/2022 19:50	11.56
6/25/2022 20:22	-0.12	6/26/2022 19:12	1.59	6/26/2022 19:35	4.74	6/26/2022 20:58	-0.35	6/25/2022 19:51	11.56
6/25/2022 20:23	-0.10	6/26/2022 19:13	1.61	6/26/2022 19:36	4.73	6/26/2022 20:59	-0.39	6/25/2022 19:52	11.56
6/25/2022 20:24	-0.10	6/26/2022 19:14	1.59	6/26/2022 19:37	4.74	6/26/2022 21:00	-0.35	6/25/2022 19:53	11.51
6/25/2022 20:25	-0.10	6/26/2022 19:15	1.59	6/26/2022 19:38	4.76	6/26/2022 21:01	-0.32	6/25/2022 19:54	11.56
6/25/2022 20:26	-0.10	6/26/2022 19:16	1.59	6/26/2022 19:39	4.72	6/26/2022 21:02	-0.35	6/25/2022 19:55	11.56
6/25/2022 20:27	-0.11	6/26/2022 19:17	1.59	6/26/2022 19:40	4.76	6/26/2022 21:03	-0.36	6/25/2022 19:56	11.56
6/25/2022 20:28	-0.11	6/26/2022 19:18	1.59	6/26/2022 19:41	4.75	6/26/2022 21:04	-0.33	6/25/2022 19:57	11.57
6/25/2022 20:29	-0.10	6/26/2022 19:19	1.59	6/26/2022 19:42	4.74	6/26/2022 21:05	-0.38	6/25/2022 19:58	11.54
6/25/2022 20:30	-0.11	6/26/2022 19:20	1.59	6/26/2022 19:43	4.70	6/26/2022 21:06	-0.40	6/25/2022 19:59	11.53
6/25/2022 20:31	-0.11	6/26/2022 19:21	1.60	6/26/2022 19:44	4.75	6/26/2022 21:07	-0.31	6/25/2022 20:00	11.56
6/25/2022 20:32	-0.11	6/26/2022 19:22	1.59	6/26/2022 19:45	4.74	6/26/2022 21:08	-0.34	6/25/2022 20:01	11.54
6/25/2022 20:33	-0.10	6/26/2022 19:23	1.59	6/26/2022 19:46	4.72	6/26/2022 21:09	-0.33	6/25/2022 20:02	11.53
6/25/2022 20:34	-0.10	6/26/2022 19:24	1.59	6/26/2022 19:47	4.71	6/26/2022 21:10	-0.37	6/25/2022 20:03	11.51
6/25/2022 20:35	-0.11	6/26/2022 19:25	1.59	6/26/2022 19:48	4.74	6/26/2022 21:11	-0.40	6/25/2022 20:04	11.56
6/25/2022 20:36	-0.10	6/26/2022 19:26	1.59	6/26/2022 19:49	4.73	6/26/2022 21:12	-0.35	6/25/2022 20:05	11.56
6/25/2022 20:37	-0.11	6/26/2022 19:27	1.59	6/26/2022 19:50	4.73	6/26/2022 21:13	-0.31	6/25/2022 20:06	11.54
6/25/2022 20:38	-0.10	6/26/2022 19:28	1.59	6/26/2022 19:51	4.72	6/26/2022 21:14	-0.32	6/25/2022 20:07	11.54
6/25/2022 20:39	-0.11	6/26/2022 19:29	1.59	6/26/2022 19:52	4.75	6/26/2022 21:15	-0.34	6/25/2022 20:08	11.58
6/25/2022 20:40	-0.10	6/26/2022 19:30	1.59	6/26/2022 19:53	4.75	6/26/2022 21:16	-0.35	6/25/2022 20:09	11.51
6/25/2022 20:41	-0.11	6/26/2022 19:31	1.59	6/26/2022 19:54	4.72	6/26/2022 21:17	-0.36	6/25/2022 20:10	11.53
6/25/2022 20:42	-0.10	6/26/2022 19:32	1.59	6/26/2022 19:55	4.73	6/26/2022 21:18	-0.33	6/25/2022 20:11	11.55
6/25/2022 20:43	-0.10	6/26/2022 19:33	1.59	6/26/2022 19:56	4.74	6/26/2022 21:19	-0.35	6/25/2022 20:12	11.52
6/25/2022 20:44	-0.10	6/26/2022 19:34	1.59	6/26/2022 19:57	4.74	6/26/2022 21:20	-0.34	6/25/2022 20:13	11.55
6/25/2022 20:45	-0.10	6/26/2022 19:35	1.61	6/26/2022 19:58	4.71	6/26/2022 21:21	-0.34	6/25/2022 20:14	11.54
6/25/2022 20:46	-0.10	6/26/2022 19:36	1.59	6/26/2022 19:59	4.76	6/26/2022 21:22	-0.32	6/25/2022 20:15	11.52
6/25/2022 20:47	-0.12	6/26/2022 19:37	1.59	6/26/2022 20:00	4.72	6/26/2022 21:23	-0.37	6/25/2022 20:16	11.52
6/25/2022 20:48	-0.11	6/26/2022 19:38	1.59	6/26/2022 20:01	4.74	6/26/2022 21:24	-0.35	6/25/2022 20:17	11.57
6/25/2022 20:49	-0.10	6/26/2022 19:39	1.61	6/26/2022 20:02	4.78	6/26/2022 21:25	-0.38	6/25/2022 20:18	11.50
6/25/2022 20:50	-0.09	6/26/2022 19:40	1.59	6/26/2022 20:03	4.74	6/26/2022 21:26	-0.34	6/25/2022 20:19	11.61
6/25/2022 20:51	-0.11	6/26/2022 19:41	1.59	6/26/2022 20:04	4.74	6/26/2022 21:27	-0.36	6/25/2022 20:20	11.59
6/25/2022 20:52	-0.10	6/26/2022 19:42	1.59	6/26/2022 20:05	4.73	6/26/2022 21:28	-0.37	6/25/2022 20:21	11.60
6/25/2022 20:53	-0.10	6/26/2022 19:43	1.59	6/26/2022 20:06	4.72	6/26/2022 21:29	-0.30	6/25/2022 20:22	11.61
6/25/2022 20:54	-0.11	6/26/2022 19:44	1.60	6/26/2022 20:07	4.73	6/26/2022 21:30	-0.31	6/25/2022 20:23	11.55
6/25/2022 20:55	-0.12	6/26/2022 19:45	1.59	6/26/2022 20:08	4.70	6/26/2022 21:31	-0.35	6/25/2022 20:24	11.58
6/25/2022 20:56	-0.10	6/26/2022 19:46	1.59	6/26/2022 20:09	4.74	6/26/2022 21:32	-0.36	6/25/2022 20:25	11.54
6/25/2022 20:57	-0.11	6/26/2022 19:47	1.60	6/26/2022 20:10	4.71	6/26/2022 21:33	-0.35	6/25/2022 20:26	11.52
6/25/2022 20:58	-0.11	6/26/2022 19:48	1.59	6/26/2022 20:11	4.75	6/26/2022 21:34	-0.35	6/25/2022 20:27	11.54
6/25/2022 20:59	-0.10	6/26/2022 19:49	1.59	6/26/2022 20:12	4.79	6/26/2022 21:35	-0.36	6/25/2022 20:28	11.53
6/25/2022 21:00	-0.11	6/26/2022 19:50	1.59	6/26/2022 20:13	4.73	6/26/2022 21:36	-0.37	6/25/2022 20:29	11.51
6/25/2022 21:01	-0.10	6/26/2022 19:51	1.59	6/26/2022 20:14	4.75	6/26/2022 21:37	-0.39	6/25/2022 20:30	11.52
6/25/2022 21:02	-0.10	6/26/2022 19:52	1.59	6/26/2022 20:15	4.71	6/26/2022 21:38	-0.32	6/25/2022 20:31	11.58
6/25/2022 21:03	-0.10	6/26/2022 19:53	1.60	6/26/2022 20:16	4.72	6/26/2022 21:39	-0.36	6/25/2022 20:32	11.53
6/25/2022 21:04	-0.11	6/26/2022 19:54	1.61	6/26/2022 20:17	4.72	6/26/2022 21:40	-0.34	6/25/2022 20:33	11.60
6/25/2022 21:05	-0.10	6/26/2022 19:55	1.59	6/26/2022 20:18	4.77	6/26/2022 21:41	-0.35	6/25/2022 20:34	11.54
6/25/2022 21:06	-0.12	6/26/2022 19:56	1.60	6/26/2022 20:19	4.74	6/26/2022 21:42	-0.35	6/25/2022 20:35	11.56
6/25/2022 21:07	-0.10	6/26/2022 19:57	1.59	6/26/2022 20:20	4.73	6/26/2022 21:43	-0.35	6/25/2022 20:36	11.50
6/25/2022 21:08	-0.11	6/26/2022 19:58	1.60	6/26/2022 20:21	4.75	6/26/2022 21:44	-0.35	6/25/2022 20:37	11.53
6/25/2022 21:09	-0.11	6/26/2022 19:59	1.62	6/26/2022 20:22	4.72	6/26/2022 21:45	-0.35	6/25/2022 20:38	11.56
6/25/2022 21:10	-0.10	6/26/2022 20:00	1.59	6/26/2022 20:23	4.73	6/26/2022 21:46	-0.35	6/25/2022 20:39	11.53
6/25/2022 21:11	-0.11	6/26/2022 20:01	1.62	6/26/2022 20:24	4.76	6/26/2022 21:47	-0.33	6/25/2022 20:40	11.54
6/25/2022 21:12	-0.11	6/26/2022 20:02	1.59	6/26/2022 20:25	4.77	6/26/2022 21:48	-0.34	6/25/2022 20:41	11.59
6/25/2022 21:13	-0.10	6/26/2022 20:03	1.62	6/26/2022 20:26	4.73	6/26/2022 21:49	-0.33	6/25/2022 20:42	11.55
6/25/2022 21:14	-0.10	6/26/2022 20:04	1.59	6/26/2022 20:27	4.73	6/26/2022 21:50	-0.39	6/25/2022 20:43	11.54
6/25/2022 21:15	-0.10	6/26/2022 20:05	1.61	6/26/2022 20:28	4.72	6/26/2022 21:51	-0.38	6/25/2022 20:44	11.63
6/25/2022 21:16	-0.11	6/26/2022 20:06	1.62	6/26/2022 20:29	4.76	6/26/2022 21:52	-0.32	6/25/2022 20:45	11.56
6/25/2022 21:17	-0.11	6/26/2022 20:07	1.59	6/26/2022 20:30	4.75	6/26/2022 21:53	-0.35	6/25/2022 20:46	11.57
6/25/2022 21:18	-0.09	6/26/2022 20:08	1.59	6/26/2022 20:31	4.74	6/26/2022 21:54	-0.36	6/25/2022 20:47	11.54
6/25/2022 21:19	-0.10	6/26/2022 20:09	1.59	6/26/2022 20:32	4.74	6/26/2022 21:55	-0.36	6/25/2022 20:48	11.53
6/25/2022 21:20	-0.10	6/26/2022 20:10	1.59	6/26/2022 20:33	4.72	6/26/2022 21:56	-0.34	6/25/2022 20:49	11.55
6/25/2022 21:21	-0.10	6/26/2022 20:11	1.59	6/26/2022 20:34	4.75	6/26/2022 21:57	-0.35	6/25/2022 20:50	11.54
6/25/2022 21:22	-0.10	6/26/2022 20:12	1.59	6/26/2022 20:35	4.73	6/26/2022 21:58	-0.35	6/25/2022 20:51	11.60
6/25/2022 21:23	-0.11	6/26/2022 20:13	1.61	6/26/2022 20:36	4.75	6/26/2022 21:59	-0.35	6/25/2022 20:52	11.54
6/25/2022 21:24	-0.10	6/26/2022 20:14	1.62	6/26/2022 20:37	4.73	6/26/2022 22:00	-0.36	6/25/2022 20:53	11.57
6/25/2022 21:25	-0.10	6/26/2022 20:15	1.62	6/26/2022 20:38	4.73	6/26/2022 22:01	-0.36	6/25/2022 20:54	11.58
6/25/2022 21:26	-0.10	6/26/2022 20:16	1.62	6/26/2022 20:39	4.72	6/26/2022 22:02	-0.34	6/25/2022 20:55	11.56
6/25/2022 21:27	-0.11	6/26/2022 20:17	1.60	6/26/2022 20:40	4.73	6/26/2022 22:03	-0.35	6/25/2022 20:56	11.58
6/25/2022 21:28	-0.10	6/26/2022 20:18	1.59	6/26/2022 20:41	4.72	6/26/2022 22:04	-0.37	6/25/2022 20:57	11.53
6/25/2022 21:29	-0.11	6/26/2022 20:19	1.60	6/26/2022 20:42	4.75	6/26/2022 22:05	-0.37	6/25/2022 20:58	11.57
6/25/2022 21:30	-0.11	6/26/2022 20:20	1.60	6/26/2022 20:43	4.73	6/26/2022 22:06	-0.37	6/25/2022 20:59	11.52
6/25/2022 21:31	-0.12	6/26/2022 20:21	1.60	6/26/2022 20:44	4.73	6/26/2022 22:07	-0.35	6/25/2022 21:00	11.56
6/25/2022 21:32	-0.10	6/26/2022 20:22	1.59	6/26/2022 20:45	4.71	6/26/2022 22:08	-0.34	6/25/2022 21:01	11.57
6/25/2022 21:33	-0.10	6/26/2022 20:23	1.59	6/26/2022 20:46	4.73	6/26/2022 22:09	-0.35	6/25/2022 21:02	11.56
6/25/2022 21:34	-0.10	6/26/2022 20:24	1.60	6/26/2022 20:47	4.73	6/26/2022 22:10	-0.35	6/25/2022 21:03	11.53
6/25/2022 21:35	-0.10	6/26/2022 20:25	1.60	6/26/2022 20:48	4.72	6/26/2022 22:11	-0.34	6/25/2022 21:04	11.52
6/25/2022 21:36	-0.11	6/26/2022 20:26	1.59	6/26/2022 20:49	4.73	6/26/2022 22:12	-0.35	6/25/2022 21:05	11.52

6/25/2022 21:37	-0.10	6/26/2022 20:27	1.61	6/26/2022 20:50	4.72	6/26/2022 22:13	-0.39	6/25/2022 21:06	11.52
6/25/2022 21:38	-0.10	6/26/2022 20:28	1.60	6/26/2022 20:51	4.75	6/26/2022 22:14	-0.39	6/25/2022 21:07	11.55
6/25/2022 21:39	-0.12	6/26/2022 20:29	1.60	6/26/2022 20:52	4.76	6/26/2022 22:15	-0.40	6/25/2022 21:08	11.50
6/25/2022 21:40	-0.12	6/26/2022 20:30	1.59	6/26/2022 20:53	4.72	6/26/2022 22:16	-0.33	6/25/2022 21:09	11.54
6/25/2022 21:41	-0.11	6/26/2022 20:31	1.60	6/26/2022 20:54	4.73	6/26/2022 22:17	-0.32	6/25/2022 21:10	11.58
6/25/2022 21:42	-0.12	6/26/2022 20:32	1.60	6/26/2022 20:55	4.76	6/26/2022 22:18	-0.32	6/25/2022 21:11	11.54
6/25/2022 21:43	-0.11	6/26/2022 20:33	1.59	6/26/2022 20:56	4.73	6/26/2022 22:19	-0.38	6/25/2022 21:12	11.59
6/25/2022 21:44	-0.11	6/26/2022 20:34	1.59	6/26/2022 20:57	4.74	6/26/2022 22:20	-0.35	6/25/2022 21:13	11.52
6/25/2022 21:45	-0.11	6/26/2022 20:35	1.60	6/26/2022 20:58	4.75	6/26/2022 22:21	-0.35	6/25/2022 21:14	11.55
6/25/2022 21:46	-0.10	6/26/2022 20:36	1.60	6/26/2022 20:59	4.76	6/26/2022 22:22	-0.35	6/25/2022 21:15	11.55
6/25/2022 21:47	-0.10	6/26/2022 20:37	1.60	6/26/2022 21:00	4.77	6/26/2022 22:23	-0.35	6/25/2022 21:16	11.57
6/25/2022 21:48	-0.10	6/26/2022 20:38	1.60	6/26/2022 21:01	4.72	6/26/2022 22:24	-0.35	6/25/2022 21:17	11.56
6/25/2022 21:49	-0.09	6/26/2022 20:39	1.59	6/26/2022 21:02	4.70	6/26/2022 22:25	-0.33	6/25/2022 21:18	11.56
6/25/2022 21:50	-0.10	6/26/2022 20:40	1.60	6/26/2022 21:03	4.73	6/26/2022 22:26	-0.33	6/25/2022 21:19	11.54
6/25/2022 21:51	-0.10	6/26/2022 20:41	1.60	6/26/2022 21:04	4.69	6/26/2022 22:27	-0.37	6/25/2022 21:20	11.58
6/25/2022 21:52	-0.11	6/26/2022 20:42	1.59	6/26/2022 21:05	4.75	6/26/2022 22:28	-0.34	6/25/2022 21:21	11.56
6/25/2022 21:53	-0.09	6/26/2022 20:43	1.62	6/26/2022 21:06	4.73	6/26/2022 22:29	-0.35	6/25/2022 21:22	11.51
6/25/2022 21:54	-0.10	6/26/2022 20:44	1.59	6/26/2022 21:07	4.75	6/26/2022 22:30	-0.35	6/25/2022 21:23	11.58
6/25/2022 21:55	-0.11	6/26/2022 20:45	1.59	6/26/2022 21:08	4.70	6/26/2022 22:31	-0.37	6/25/2022 21:24	11.59
6/25/2022 21:56	-0.11	6/26/2022 20:46	1.62	6/26/2022 21:09	4.75	6/26/2022 22:32	-0.37	6/25/2022 21:25	11.56
6/25/2022 21:57	-0.10	6/26/2022 20:47	1.60	6/26/2022 21:10	4.76	6/26/2022 22:33	-0.35	6/25/2022 21:26	11.50
6/25/2022 21:58	-0.10	6/26/2022 20:48	1.60	6/26/2022 21:11	4.75	6/26/2022 22:34	-0.34	6/25/2022 21:27	11.54
6/25/2022 21:59	-0.10	6/26/2022 20:49	1.60	6/26/2022 21:12	4.72	6/26/2022 22:35	-0.31	6/25/2022 21:28	11.59
6/25/2022 22:00	-0.11	6/26/2022 20:50	1.60	6/26/2022 21:13	4.72	6/26/2022 22:36	-0.39	6/25/2022 21:29	11.55
6/25/2022 22:01	-0.10	6/26/2022 20:51	1.59	6/26/2022 21:14	4.75	6/26/2022 22:37	-0.37	6/25/2022 21:30	11.53
6/25/2022 22:02	-0.12	6/26/2022 20:52	1.60	6/26/2022 21:15	4.75	6/26/2022 22:38	-0.35	6/25/2022 21:31	11.55
6/25/2022 22:03	-0.10	6/26/2022 20:53	1.60	6/26/2022 21:16	4.71	6/26/2022 22:39	-0.36	6/25/2022 21:32	11.60
6/25/2022 22:04	-0.10	6/26/2022 20:54	1.60	6/26/2022 21:17	4.74	6/26/2022 22:40	-0.34	6/25/2022 21:33	11.55
6/25/2022 22:05	-0.10	6/26/2022 20:55	1.60	6/26/2022 21:18	4.74	6/26/2022 22:41	-0.36	6/25/2022 21:34	11.57
6/25/2022 22:06	-0.10	6/26/2022 20:56	1.60	6/26/2022 21:19	4.69	6/26/2022 22:42	-0.34	6/25/2022 21:35	11.56
6/25/2022 22:07	-0.10	6/26/2022 20:57	1.60	6/26/2022 21:20	4.71	6/26/2022 22:43	-0.38	6/25/2022 21:36	11.55
6/25/2022 22:08	-0.10	6/26/2022 20:58	1.60	6/26/2022 21:21	4.72	6/26/2022 22:44	-0.37	6/25/2022 21:37	11.58
6/25/2022 22:09	-0.10	6/26/2022 20:59	1.60	6/26/2022 21:22	4.76	6/26/2022 22:45	-0.41	6/25/2022 21:38	11.59
6/25/2022 22:10	-0.10	6/26/2022 21:00	1.59	6/26/2022 21:23	4.75	6/26/2022 22:46	-0.36	6/25/2022 21:39	11.56
6/25/2022 22:11	-0.12	6/26/2022 21:01	1.60	6/26/2022 21:24	4.73	6/26/2022 22:47	-0.34	6/25/2022 21:40	11.55
6/25/2022 22:12	-0.10	6/26/2022 21:02	1.60	6/26/2022 21:25	4.76	6/26/2022 22:48	-0.37	6/25/2022 21:41	11.59
6/25/2022 22:13	-0.10	6/26/2022 21:03	1.60	6/26/2022 21:26	4.74	6/26/2022 22:49	-0.35	6/25/2022 21:42	11.56
6/25/2022 22:14	-0.11	6/26/2022 21:04	1.60	6/26/2022 21:27	4.72	6/26/2022 22:50	-0.36	6/25/2022 21:43	11.55
6/25/2022 22:15	-0.12	6/26/2022 21:05	1.59	6/26/2022 21:28	4.71	6/26/2022 22:51	-0.34	6/25/2022 21:44	11.56
6/25/2022 22:16	-0.12	6/26/2022 21:06	1.60	6/26/2022 21:29	4.77	6/26/2022 22:52	-0.35	6/25/2022 21:45	11.58
6/25/2022 22:17	-0.11	6/26/2022 21:07	1.60	6/26/2022 21:30	4.73	6/26/2022 22:53	-0.39	6/25/2022 21:46	11.54
6/25/2022 22:18	-0.11	6/26/2022 21:08	1.60	6/26/2022 21:31	4.73	6/26/2022 22:54	-0.37	6/25/2022 21:47	11.55
6/25/2022 22:19	-0.10	6/26/2022 21:09	1.60	6/26/2022 21:32	4.75	6/26/2022 22:55	-0.36	6/25/2022 21:48	11.58
6/25/2022 22:20	-0.10	6/26/2022 21:10	1.59	6/26/2022 21:33	4.72	6/26/2022 22:56	-0.36	6/25/2022 21:49	11.58
6/25/2022 22:21	-0.10	6/26/2022 21:11	1.59	6/26/2022 21:34	4.74	6/26/2022 22:57	-0.35	6/25/2022 21:50	11.55
6/25/2022 22:22	-0.10	6/26/2022 21:12	1.59	6/26/2022 21:35	4.73	6/26/2022 22:58	-0.36	6/25/2022 21:51	11.55
6/25/2022 22:23	-0.10	6/26/2022 21:13	1.60	6/26/2022 21:36	4.72	6/26/2022 22:59	-0.35	6/25/2022 21:52	11.57
6/25/2022 22:24	-0.11	6/26/2022 21:14	1.60	6/26/2022 21:37	4.71	6/26/2022 23:00	-0.35	6/25/2022 21:53	11.57
6/25/2022 22:25	-0.11	6/26/2022 21:15	1.60	6/26/2022 21:38	4.75	6/26/2022 23:01	-0.38	6/25/2022 21:54	11.55
6/25/2022 22:26	-0.10	6/26/2022 21:16	1.60	6/26/2022 21:39	4.74	6/26/2022 23:02	-0.31	6/25/2022 21:55	11.53
6/25/2022 22:27	-0.11	6/26/2022 21:17	1.59	6/26/2022 21:40	4.72	6/26/2022 23:03	-0.35	6/25/2022 21:56	11.53
6/25/2022 22:28	-0.10	6/26/2022 21:18	1.59	6/26/2022 21:41	4.74	6/26/2022 23:04	-0.35	6/25/2022 21:57	11.52
6/25/2022 22:29	-0.12	6/26/2022 21:19	1.60	6/26/2022 21:42	4.72	6/26/2022 23:05	-0.37	6/25/2022 21:58	11.58
6/25/2022 22:30	-0.10	6/26/2022 21:20	1.59	6/26/2022 21:43	4.70	6/26/2022 23:06	-0.34	6/25/2022 21:59	11.53
6/25/2022 22:31	-0.10	6/26/2022 21:21	1.60	6/26/2022 21:44	4.72	6/26/2022 23:07	-0.39	6/25/2022 22:00	11.58
6/25/2022 22:32	-0.10	6/26/2022 21:22	1.60	6/26/2022 21:45	4.75	6/26/2022 23:08	-0.35	6/25/2022 22:01	11.58
6/25/2022 22:33	-0.12	6/26/2022 21:23	1.62	6/26/2022 21:46	4.73	6/26/2022 23:09	-0.32	6/25/2022 22:02	11.57
6/25/2022 22:34	-0.11	6/26/2022 21:24	1.60	6/26/2022 21:47	4.75	6/26/2022 23:10	-0.35	6/25/2022 22:03	11.56
6/25/2022 22:35	-0.12	6/26/2022 21:25	1.60	6/26/2022 21:48	4.73	6/26/2022 23:11	-0.33	6/25/2022 22:04	11.56
6/25/2022 22:36	-0.10	6/26/2022 21:26	1.59	6/26/2022 21:49	4.75	6/26/2022 23:12	-0.34	6/25/2022 22:05	11.58
6/25/2022 22:37	-0.11	6/26/2022 21:27	1.59	6/26/2022 21:50	4.77	6/26/2022 23:13	-0.31	6/25/2022 22:06	11.58
6/25/2022 22:38	-0.10	6/26/2022 21:28	1.60	6/26/2022 21:51	4.72	6/26/2022 23:14	-0.35	6/25/2022 22:07	11.57
6/25/2022 22:39	-0.11	6/26/2022 21:29	1.59	6/26/2022 21:52	4.72	6/26/2022 23:15	-0.38	6/25/2022 22:08	11.54
6/25/2022 22:40	-0.12	6/26/2022 21:30	1.59	6/26/2022 21:53	4.72	6/26/2022 23:16	-0.34	6/25/2022 22:09	11.53
6/25/2022 22:41	-0.10	6/26/2022 21:31	1.60	6/26/2022 21:54	4.73	6/26/2022 23:17	-0.34	6/25/2022 22:10	11.59
6/25/2022 22:42	-0.11	6/26/2022 21:32	1.60	6/26/2022 21:55	4.73	6/26/2022 23:18	-0.37	6/25/2022 22:11	11.56
6/25/2022 22:43	-0.10	6/26/2022 21:33	1.60	6/26/2022 21:56	4.72	6/26/2022 23:19	-0.35	6/25/2022 22:12	11.56
6/25/2022 22:44	-0.11	6/26/2022 21:34	1.60	6/26/2022 21:57	4.72	6/26/2022 23:20	-0.36	6/25/2022 22:13	11.58
6/25/2022 22:45	-0.11	6/26/2022 21:35	1.59	6/26/2022 21:58	4.73	6/26/2022 23:21	-0.32	6/25/2022 22:14	11.58
6/25/2022 22:46	-0.09	6/26/2022 21:36	1.59	6/26/2022 21:59	4.73	6/26/2022 23:22	-0.35	6/25/2022 22:15	11.55
6/25/2022 22:47	-0.09	6/26/2022 21:37	1.59	6/26/2022 22:00	4.73	6/26/2022 23:23	-0.39	6/25/2022 22:16	11.56
6/25/2022 22:48	-0.10	6/26/2022 21:38	1.60	6/26/2022 22:01	4.76	6/26/2022 23:24	-0.36	6/25/2022 22:17	11.60
6/25/2022 22:49	-0.10	6/26/2022 21:39	1.60	6/26/2022 22:02	4.75	6/26/2022 23:25	-0.35	6/25/2022 22:18	11.55
6/25/2022 22:50	-0.10	6/26/2022 21:40	1.60	6/26/2022 22:03	4.72	6/26/2022 23:26	-0.36	6/25/2022 22:19	11.57
6/25/2022 22:51	-0.10	6/26/2022 21:41	1.60	6/26/2022 22:04	4.74	6/26/2022 23:27	-0.33	6/25/2022 22:20	11.55
6/25/2022 22:52	-0.11	6/26/2022 21:42	1.62	6/26/2022 22:05	4.72	6/26/2022 23:28	-0.35	6/25/2022 22:21	11.58
6/25/2022 22:53	-0.10	6/26/2022 21:43	1.62	6/26/2022 22:06	4.72	6/26/2022 23:29	-0.37	6/25/2022 22:22	11.53
6/25/2022 22:54	-0.10	6/26/2022 21:44	1.62	6/26/2022 22:07	4.72	6/26/2022 23:30	-0.38	6/25/2022 22:23	11.54
6/25/2022 22:55	-0.11	6/26/2022 21:45	1.60	6/26/2022 22:08	4.72	6/26/2022 23:31	-0.37	6/25/2022 22:24	11.57
6/25/2022 22:56	-0.11	6/26/2022 21:46	1.60	6/26/2022 22:09	4.72	6/26/2022 23:32	-0.31	6/25/2022 22:25	11.58
6/25/2022 22:57	-0.10	6/26/2022 21:47	1.60	6/26/2022 22:10	4.75	6/26/2022 23:33	-0.36	6/25/2022 22:26	11.58
6/25/2022 22:58	-0.10	6/26/2022 21:48	1.60	6/26/2022 22:11	4.73	6/26/2022 23:34	-0.35	6/25/2022 22:27	11.65
6/25/2022 22:59	-0.11	6/26/2022 21:49	1.60	6/26/2022 22:12	4.74	6/26/2022 23:35	-0.35	6/25/2022 22:28	11.59
6/25/2022 23:00	-0.10	6/26/2022 21:50	1.60	6/26/2022 22:13	4.75	6/26/2022 23:36	-0.33	6/25/2022 22:29	11.56
6/25/2022 23:01	-0.12	6/26/2022 21:51	1.60	6/26/2022 22:14	4.75	6/26/2022 23:37	-0.35	6/25/2022 22:30	11.55
6/25/2022 23:02	-0.10	6/26/2022 21:52	1.60	6/26/2022 22:15	4.71	6/26/2022 23:38	-0.38	6/25/2022 22:31	11.58
6/25/2022 23:03	-0.10	6/26/2022 21:53	1.60	6/26/2022 22:16	4.73	6/26/2022 23:39	-0.40	6/25/2022 22:32	11.58
6/25/2022 23:04	-0.10	6/26/2022 21:54	1.60	6/26/2022 22:17	4.77	6/26/2022 23:40	-0.37	6/25/2022 22:33	11.60

6/25/2022 23:05	-0.10	6/26/2022 21:55	1.60	6/26/2022 22:18	4.76	6/26/2022 23:41	-0.31	6/25/2022 22:34	11.60
6/25/2022 23:06	-0.10	6/26/2022 21:56	1.60	6/26/2022 22:19	4.72	6/26/2022 23:42	-0.36	6/25/2022 22:35	11.58
6/25/2022 23:07	-0.10	6/26/2022 21:57	1.60	6/26/2022 22:20	4.72	6/26/2022 23:43	-0.36	6/25/2022 22:36	11.53
6/25/2022 23:08	-0.12	6/26/2022 21:58	1.60	6/26/2022 22:21	4.70	6/26/2022 23:44	-0.35	6/25/2022 22:37	11.59
6/25/2022 23:09	-0.10	6/26/2022 21:59	1.60	6/26/2022 22:22	4.75	6/26/2022 23:45	-0.37	6/25/2022 22:38	11.55
6/25/2022 23:10	-0.12	6/26/2022 22:00	1.60	6/26/2022 22:23	4.73	6/26/2022 23:46	-0.32	6/25/2022 22:39	11.59
6/25/2022 23:11	-0.12	6/26/2022 22:01	1.60	6/26/2022 22:24	4.74	6/26/2022 23:47	-0.32	6/25/2022 22:40	11.53
6/25/2022 23:12	-0.12	6/26/2022 22:02	1.60	6/26/2022 22:25	4.74	6/26/2022 23:48	-0.35	6/25/2022 22:41	11.59
6/25/2022 23:13	-0.10	6/26/2022 22:03	1.60	6/26/2022 22:26	4.71	6/26/2022 23:49	-0.35	6/25/2022 22:42	11.57
6/25/2022 23:14	-0.12	6/26/2022 22:04	1.60	6/26/2022 22:27	4.72	6/26/2022 23:50	-0.37	6/25/2022 22:43	11.57
6/25/2022 23:15	-0.12	6/26/2022 22:05	1.60	6/26/2022 22:28	4.75	6/26/2022 23:51	-0.41	6/25/2022 22:44	11.57
6/25/2022 23:16	-0.10	6/26/2022 22:06	1.60	6/26/2022 22:29	4.72	6/26/2022 23:52	-0.36	6/25/2022 22:45	11.62
6/25/2022 23:17	-0.12	6/26/2022 22:07	1.60	6/26/2022 22:30	4.72	6/26/2022 23:53	-0.32	6/25/2022 22:46	11.59
6/25/2022 23:18	-0.10	6/26/2022 22:08	1.60	6/26/2022 22:31	4.72	6/26/2022 23:54	-0.37	6/25/2022 22:47	11.59
6/25/2022 23:19	-0.11	6/26/2022 22:09	1.60	6/26/2022 22:32	4.70	6/26/2022 23:55	-0.35	6/25/2022 22:48	11.52
6/25/2022 23:20	-0.10	6/26/2022 22:10	1.60	6/26/2022 22:33	4.72	6/26/2022 23:56	-0.34	6/25/2022 22:49	11.54
6/25/2022 23:21	-0.12	6/26/2022 22:11	1.62	6/26/2022 22:34	4.74	6/26/2022 23:57	-0.36	6/25/2022 22:50	11.52
6/25/2022 23:22	-0.12	6/26/2022 22:12	1.60	6/26/2022 22:35	4.73	6/26/2022 23:58	-0.32	6/25/2022 22:51	11.58
6/25/2022 23:23	-0.11	6/26/2022 22:13	1.60	6/26/2022 22:36	4.75	6/26/2022 23:59	-0.31	6/25/2022 22:52	11.55
6/25/2022 23:24	-0.12	6/26/2022 22:14	1.60	6/26/2022 22:37	4.75	6/27/2022 0:00	-0.35	6/25/2022 22:53	11.53
6/25/2022 23:25	-0.11	6/26/2022 22:15	1.60	6/26/2022 22:38	4.72	6/27/2022 0:01	-0.33	6/25/2022 22:54	11.58
6/25/2022 23:26	-0.12	6/26/2022 22:16	1.59	6/26/2022 22:39	4.74	6/27/2022 0:02	-0.35	6/25/2022 22:55	11.59
6/25/2022 23:27	-0.12	6/26/2022 22:17	1.60	6/26/2022 22:40	4.75	6/27/2022 0:03	-0.32	6/25/2022 22:56	11.54
6/25/2022 23:28	-0.12	6/26/2022 22:18	1.62	6/26/2022 22:41	4.76	6/27/2022 0:04	-0.32	6/25/2022 22:57	11.61
6/25/2022 23:29	-0.10	6/26/2022 22:19	1.60	6/26/2022 22:42	4.73	6/27/2022 0:05	-0.38	6/25/2022 22:58	11.57
6/25/2022 23:30	-0.12	6/26/2022 22:20	1.60	6/26/2022 22:43	4.75	6/27/2022 0:06	-0.36	6/25/2022 22:59	11.57
6/25/2022 23:31	-0.10	6/26/2022 22:21	1.60	6/26/2022 22:44	4.73	6/27/2022 0:07	-0.38	6/25/2022 23:00	11.56
6/25/2022 23:32	-0.12	6/26/2022 22:22	1.60	6/26/2022 22:45	4.71	6/27/2022 0:08	-0.33	6/25/2022 23:01	11.57
6/25/2022 23:33	-0.10	6/26/2022 22:23	1.59	6/26/2022 22:46	4.74	6/27/2022 0:09	-0.33	6/25/2022 23:02	11.52
6/25/2022 23:34	-0.11	6/26/2022 22:24	1.60	6/26/2022 22:47	4.74	6/27/2022 0:10	-0.30	6/25/2022 23:03	11.54
6/25/2022 23:35	-0.11	6/26/2022 22:25	1.60	6/26/2022 22:48	4.74	6/27/2022 0:11	-0.30	6/25/2022 23:04	11.56
6/25/2022 23:36	-0.10	6/26/2022 22:26	1.60	6/26/2022 22:49	4.79	6/27/2022 0:12	-0.34	6/25/2022 23:05	11.56
6/25/2022 23:37	-0.12	6/26/2022 22:27	1.60	6/26/2022 22:50	4.70	6/27/2022 0:13	-0.32	6/25/2022 23:06	11.56
6/25/2022 23:38	-0.12	6/26/2022 22:28	1.60	6/26/2022 22:51	4.75	6/27/2022 0:14	-0.37	6/25/2022 23:07	11.56
6/25/2022 23:39	-0.12	6/26/2022 22:29	1.60	6/26/2022 22:52	4.72	6/27/2022 0:15	-0.35	6/25/2022 23:08	11.57
6/25/2022 23:40	-0.12	6/26/2022 22:30	1.60	6/26/2022 22:53	4.71	6/27/2022 0:16	-0.38	6/25/2022 23:09	11.57
6/25/2022 23:41	-0.11	6/26/2022 22:31	1.59	6/26/2022 22:54	4.70	6/27/2022 0:17	-0.39	6/25/2022 23:10	11.55
6/25/2022 23:42	-0.10	6/26/2022 22:32	1.60	6/26/2022 22:55	4.75	6/27/2022 0:18	-0.38	6/25/2022 23:11	11.54
6/25/2022 23:43	-0.11	6/26/2022 22:33	1.60	6/26/2022 22:56	4.74	6/27/2022 0:19	-0.34	6/25/2022 23:12	11.53
6/25/2022 23:44	-0.10	6/26/2022 22:34	1.60	6/26/2022 22:57	4.75	6/27/2022 0:20	-0.39	6/25/2022 23:13	11.55
6/25/2022 23:45	-0.09	6/26/2022 22:35	1.62	6/26/2022 22:58	4.74	6/27/2022 0:21	-0.37	6/25/2022 23:14	11.52
6/25/2022 23:46	-0.10	6/26/2022 22:36	1.59	6/26/2022 22:59	4.71	6/27/2022 0:22	-0.37	6/25/2022 23:15	11.59
6/25/2022 23:47	-0.12	6/26/2022 22:37	1.59	6/26/2022 23:00	4.73	6/27/2022 0:23	-0.39	6/25/2022 23:16	11.52
6/25/2022 23:48	-0.10	6/26/2022 22:38	1.59	6/26/2022 23:01	4.69	6/27/2022 0:24	-0.37	6/25/2022 23:17	11.53
6/25/2022 23:49	-0.10	6/26/2022 22:39	1.60	6/26/2022 23:02	4.74	6/27/2022 0:25	-0.31	6/25/2022 23:18	11.55
6/25/2022 23:50	-0.12	6/26/2022 22:40	1.60	6/26/2022 23:03	4.71	6/27/2022 0:26	-0.35	6/25/2022 23:19	11.54
6/25/2022 23:51	-0.10	6/26/2022 22:41	1.60	6/26/2022 23:04	4.72	6/27/2022 0:27	-0.35	6/25/2022 23:20	11.57
6/25/2022 23:52	-0.09	6/26/2022 22:42	1.60	6/26/2022 23:05	4.71	6/27/2022 0:28	-0.32	6/25/2022 23:21	11.57
6/25/2022 23:53	-0.12	6/26/2022 22:43	1.62	6/26/2022 23:06	4.72	6/27/2022 0:29	-0.38	6/25/2022 23:22	11.58
6/25/2022 23:54	-0.10	6/26/2022 22:44	1.59	6/26/2022 23:07	4.71	6/27/2022 0:30	-0.37	6/25/2022 23:23	11.53
6/25/2022 23:55	-0.11	6/26/2022 22:45	1.60	6/26/2022 23:08	4.71	6/27/2022 0:31	-0.34	6/25/2022 23:24	11.56
6/25/2022 23:56	-0.10	6/26/2022 22:46	1.59	6/26/2022 23:09	4.73	6/27/2022 0:32	-0.36	6/25/2022 23:25	11.58
6/25/2022 23:57	-0.12	6/26/2022 22:47	1.59	6/26/2022 23:10	4.74	6/27/2022 0:33	-0.35	6/25/2022 23:26	11.56
6/25/2022 23:58	-0.10	6/26/2022 22:48	1.60	6/26/2022 23:11	4.75	6/27/2022 0:34	-0.34	6/25/2022 23:27	11.55
6/25/2022 23:59	-0.11	6/26/2022 22:49	1.59	6/26/2022 23:12	4.73	6/27/2022 0:35	-0.37	6/25/2022 23:28	11.53
6/26/2022 0:00	-0.10	6/26/2022 22:50	1.60	6/26/2022 23:13	4.70	6/27/2022 0:36	-0.38	6/25/2022 23:29	11.57
6/26/2022 0:01	-0.10	6/26/2022 22:51	1.59	6/26/2022 23:14	4.70	6/27/2022 0:37	-0.34	6/25/2022 23:30	11.61
6/26/2022 0:02	-0.10	6/26/2022 22:52	1.59	6/26/2022 23:15	4.73	6/27/2022 0:38	-0.35	6/25/2022 23:31	11.55
6/26/2022 0:03	-0.11	6/26/2022 22:53	1.59	6/26/2022 23:16	4.72	6/27/2022 0:39	-0.35	6/25/2022 23:32	11.58
6/26/2022 0:04	-0.11	6/26/2022 22:54	1.59	6/26/2022 23:17	4.74	6/27/2022 0:40	-0.35	6/25/2022 23:33	11.55
6/26/2022 0:05	-0.11	6/26/2022 22:55	1.59	6/26/2022 23:18	4.75	6/27/2022 0:41	-0.42	6/25/2022 23:34	11.53
6/26/2022 0:06	-0.10	6/26/2022 22:56	1.59	6/26/2022 23:19	4.72	6/27/2022 0:42	-0.35	6/25/2022 23:35	11.54
6/26/2022 0:07	-0.11	6/26/2022 22:57	1.62	6/26/2022 23:20	4.77	6/27/2022 0:43	-0.37	6/25/2022 23:36	11.54
6/26/2022 0:08	-0.11	6/26/2022 22:58	1.59	6/26/2022 23:21	4.70	6/27/2022 0:44	-0.34	6/25/2022 23:37	11.55
6/26/2022 0:09	-0.10	6/26/2022 22:59	1.59	6/26/2022 23:22	4.73	6/27/2022 0:45	-0.34	6/25/2022 23:38	11.58
6/26/2022 0:10	-0.11	6/26/2022 23:00	1.59	6/26/2022 23:23	4.74	6/27/2022 0:46	-0.33	6/25/2022 23:39	11.56
6/26/2022 0:11	-0.10	6/26/2022 23:01	1.59	6/26/2022 23:24	4.73	6/27/2022 0:47	-0.36	6/25/2022 23:40	11.58
6/26/2022 0:12	-0.10	6/26/2022 23:02	1.59	6/26/2022 23:25	4.72	6/27/2022 0:48	-0.38	6/25/2022 23:41	11.54
6/26/2022 0:13	-0.10	6/26/2022 23:03	1.59	6/26/2022 23:26	4.71	6/27/2022 0:49	-0.35	6/25/2022 23:42	11.53
6/26/2022 0:14	-0.12	6/26/2022 23:04	1.59	6/26/2022 23:27	4.72	6/27/2022 0:50	-0.33	6/25/2022 23:43	11.58
6/26/2022 0:15	-0.11	6/26/2022 23:05	1.59	6/26/2022 23:28	4.73	6/27/2022 0:51	-0.35	6/25/2022 23:44	11.61
6/26/2022 0:16	-0.10	6/26/2022 23:06	1.59	6/26/2022 23:29	4.74	6/27/2022 0:52	-0.33	6/25/2022 23:45	11.64
6/26/2022 0:17	-0.10	6/26/2022 23:07	1.59	6/26/2022 23:30	4.73	6/27/2022 0:53	-0.35	6/25/2022 23:46	11.55
6/26/2022 0:18	-0.12	6/26/2022 23:08	1.59	6/26/2022 23:31	4.73	6/27/2022 0:54	-0.37	6/25/2022 23:47	11.55
6/26/2022 0:19	-0.12	6/26/2022 23:09	1.59	6/26/2022 23:32	4.71	6/27/2022 0:55	-0.40	6/25/2022 23:48	11.54
6/26/2022 0:20	-0.10	6/26/2022 23:10	1.59	6/26/2022 23:33	4.75	6/27/2022 0:56	-0.34	6/25/2022 23:49	11.55
6/26/2022 0:21	-0.10	6/26/2022 23:11	1.59	6/26/2022 23:34	4.74	6/27/2022 0:57	-0.36	6/25/2022 23:50	11.61
6/26/2022 0:22	-0.10	6/26/2022 23:12	1.59	6/26/2022 23:35	4.75	6/27/2022 0:58	-0.33	6/25/2022 23:51	11.57
6/26/2022 0:23	-0.11	6/26/2022 23:13	1.59	6/26/2022 23:36	4.74	6/27/2022 0:59	-0.37	6/25/2022 23:52	11.55
6/26/2022 0:24	-0.11	6/26/2022 23:14	1.59	6/26/2022 23:37	4.70	6/27/2022 1:00	-0.36	6/25/2022 23:53	11.57
6/26/2022 0:25	-0.11	6/26/2022 23:15	1.59	6/26/2022 23:38	4.70	6/27/2022 1:01	-0.34	6/25/2022 23:54	11.63
6/26/2022 0:26	-0.12	6/26/2022 23:16	1.61	6/26/2022 23:39	4.72	6/27/2022 1:02	-0.33	6/25/2022 23:55	11.60
6/26/2022 0:27	-0.10	6/26/2022 23:17	1.59	6/26/2022 23:40	4.71	6/27/2022 1:03	-0.36	6/25/2022 23:56	11.58
6/26/2022 0:28	-0.09	6/26/2022 23:18	1.59	6/26/2022 23:41	4.72	6/27/2022 1:04	-0.38	6/25/2022 23:57	11.57
6/26/2022 0:29	-0.12	6/26/2022 23:19	1.59	6/26/2022 23:42	4.72	6/27/2022 1:05	-0.33	6/25/2022 23:58	11.55
6/26/2022 0:30	-0.10	6/26/2022 23:20	1.59	6/26/2022 23:43	4.71	6/27/2022 1:06	-0.34	6/25/2022 23:59	11.53
6/26/2022 0:31	-0.12	6/26/2022 23:21	1.59	6/26/2022 23:44	4.69	6/27/2022 1:07	-0.35	6/26/2022 0:00	11.53
6/26/2022 0:32	-0.11	6/26/2022 23:22	1.59	6/26/2022 23:45	4.67	6/27/2022 1:08	-0.35	6/26/2022 0:01	11.57

6/26/2022 0:33	-0.12	6/26/2022 23:23	1.61	6/26/2022 23:46	4.73	6/27/2022 1:09	-0.34	6/26/2022 0:02	11.56
6/26/2022 0:34	-0.11	6/26/2022 23:24	1.59	6/26/2022 23:47	4.70	6/27/2022 1:10	-0.31	6/26/2022 0:03	11.58
6/26/2022 0:35	-0.12	6/26/2022 23:25	1.59	6/26/2022 23:48	4.73	6/27/2022 1:11	-0.35	6/26/2022 0:04	11.55
6/26/2022 0:36	-0.11	6/26/2022 23:26	1.61	6/26/2022 23:49	4.73	6/27/2022 1:12	-0.38	6/26/2022 0:05	11.58
6/26/2022 0:37	-0.12	6/26/2022 23:27	1.59	6/26/2022 23:50	4.72	6/27/2022 1:13	-0.36	6/26/2022 0:06	11.51
6/26/2022 0:38	-0.12	6/26/2022 23:28	1.59	6/26/2022 23:51	4.70	6/27/2022 1:14	-0.35	6/26/2022 0:07	11.56
6/26/2022 0:39	-0.12	6/26/2022 23:29	1.59	6/26/2022 23:52	4.70	6/27/2022 1:15	-0.34	6/26/2022 0:08	11.59
6/26/2022 0:40	-0.12	6/26/2022 23:30	1.59	6/26/2022 23:53	4.72	6/27/2022 1:16	-0.36	6/26/2022 0:09	11.58
6/26/2022 0:41	-0.12	6/26/2022 23:31	1.59	6/26/2022 23:54	4.73	6/27/2022 1:17	-0.35	6/26/2022 0:10	11.56
6/26/2022 0:42	-0.10	6/26/2022 23:32	1.59	6/26/2022 23:55	4.73	6/27/2022 1:18	-0.36	6/26/2022 0:11	11.56
6/26/2022 0:43	-0.12	6/26/2022 23:33	1.61	6/26/2022 23:56	4.77	6/27/2022 1:19	-0.38	6/26/2022 0:12	11.53
6/26/2022 0:44	-0.12	6/26/2022 23:34	1.59	6/26/2022 23:57	4.70	6/27/2022 1:20	-0.33	6/26/2022 0:13	11.55
6/26/2022 0:45	-0.12	6/26/2022 23:35	1.58	6/26/2022 23:58	4.72	6/27/2022 1:21	-0.38	6/26/2022 0:14	11.56
6/26/2022 0:46	-0.12	6/26/2022 23:36	1.59	6/26/2022 23:59	4.70	6/27/2022 1:22	-0.35	6/26/2022 0:15	11.55
6/26/2022 0:47	-0.12	6/26/2022 23:37	1.59	6/27/2022 0:00	4.74	6/27/2022 1:23	-0.35	6/26/2022 0:16	11.60
6/26/2022 0:48	-0.10	6/26/2022 23:38	1.59	6/27/2022 0:01	4.69	6/27/2022 1:24	-0.33	6/26/2022 0:17	11.55
6/26/2022 0:49	-0.10	6/26/2022 23:39	1.59	6/27/2022 0:02	4.69	6/27/2022 1:25	-0.35	6/26/2022 0:18	11.56
6/26/2022 0:50	-0.11	6/26/2022 23:40	1.59	6/27/2022 0:03	4.73	6/27/2022 1:26	-0.34	6/26/2022 0:19	11.58
6/26/2022 0:51	-0.10	6/26/2022 23:41	1.59	6/27/2022 0:04	4.74	6/27/2022 1:27	-0.32	6/26/2022 0:20	11.54
6/26/2022 0:52	-0.10	6/26/2022 23:42	1.59	6/27/2022 0:05	4.70	6/27/2022 1:28	-0.37	6/26/2022 0:21	11.56
6/26/2022 0:53	-0.11	6/26/2022 23:43	1.61	6/27/2022 0:06	4.72	6/27/2022 1:29	-0.37	6/26/2022 0:22	11.62
6/26/2022 0:54	-0.12	6/26/2022 23:44	1.59	6/27/2022 0:07	4.70	6/27/2022 1:30	-0.33	6/26/2022 0:23	11.55
6/26/2022 0:55	-0.10	6/26/2022 23:45	1.59	6/27/2022 0:08	4.71	6/27/2022 1:31	-0.37	6/26/2022 0:24	11.62
6/26/2022 0:56	-0.10	6/26/2022 23:46	1.59	6/27/2022 0:09	4.72	6/27/2022 1:32	-0.34	6/26/2022 0:25	11.56
6/26/2022 0:57	-0.10	6/26/2022 23:47	1.59	6/27/2022 0:10	4.76	6/27/2022 1:33	-0.35	6/26/2022 0:26	11.59
6/26/2022 0:58	-0.12	6/26/2022 23:48	1.59	6/27/2022 0:11	4.71	6/27/2022 1:34	-0.36	6/26/2022 0:27	11.56
6/26/2022 0:59	-0.11	6/26/2022 23:49	1.59	6/27/2022 0:12	4.69	6/27/2022 1:35	-0.33	6/26/2022 0:28	11.59
6/26/2022 1:00	-0.12	6/26/2022 23:50	1.58	6/27/2022 0:13	4.71	6/27/2022 1:36	-0.36	6/26/2022 0:29	11.56
6/26/2022 1:01	-0.10	6/26/2022 23:51	1.59	6/27/2022 0:14	4.69	6/27/2022 1:37	-0.37	6/26/2022 0:30	11.57
6/26/2022 1:02	-0.10	6/26/2022 23:52	1.58	6/27/2022 0:15	4.71	6/27/2022 1:38	-0.34	6/26/2022 0:31	11.59
6/26/2022 1:03	-0.12	6/26/2022 23:53	1.59	6/27/2022 0:16	4.73	6/27/2022 1:39	-0.34	6/26/2022 0:32	11.55
6/26/2022 1:04	-0.11	6/26/2022 23:54	1.59	6/27/2022 0:17	4.71	6/27/2022 1:40	-0.35	6/26/2022 0:33	11.56
6/26/2022 1:05	-0.11	6/26/2022 23:55	1.58	6/27/2022 0:18	4.73	6/27/2022 1:41	-0.35	6/26/2022 0:34	11.55
6/26/2022 1:06	-0.10	6/26/2022 23:56	1.61	6/27/2022 0:19	4.72	6/27/2022 1:42	-0.34	6/26/2022 0:35	11.57
6/26/2022 1:07	-0.10	6/26/2022 23:57	1.59	6/27/2022 0:20	4.76	6/27/2022 1:43	-0.34	6/26/2022 0:36	11.55
6/26/2022 1:08	-0.10	6/26/2022 23:58	1.61	6/27/2022 0:21	4.75	6/27/2022 1:44	-0.39	6/26/2022 0:37	11.54
6/26/2022 1:09	-0.11	6/26/2022 23:59	1.59	6/27/2022 0:22	4.73	6/27/2022 1:45	-0.36	6/26/2022 0:38	11.52
6/26/2022 1:10	-0.11	6/27/2022 0:00	1.58	6/27/2022 0:23	4.69	6/27/2022 1:46	-0.36	6/26/2022 0:39	11.52
6/26/2022 1:11	-0.12	6/27/2022 0:01	1.59	6/27/2022 0:24	4.73	6/27/2022 1:47	-0.40	6/26/2022 0:40	11.56
6/26/2022 1:12	-0.10	6/27/2022 0:02	1.58	6/27/2022 0:25	4.73	6/27/2022 1:48	-0.34	6/26/2022 0:41	11.52
6/26/2022 1:13	-0.11	6/27/2022 0:03	1.58	6/27/2022 0:26	4.73	6/27/2022 1:49	-0.37	6/26/2022 0:42	11.52
6/26/2022 1:14	-0.11	6/27/2022 0:04	1.58	6/27/2022 0:27	4.71	6/27/2022 1:50	-0.35	6/26/2022 0:43	11.55
6/26/2022 1:15	-0.11	6/27/2022 0:05	1.61	6/27/2022 0:28	4.71	6/27/2022 1:51	-0.34	6/26/2022 0:44	11.56
6/26/2022 1:16	-0.12	6/27/2022 0:06	1.58	6/27/2022 0:29	4.72	6/27/2022 1:52	-0.35	6/26/2022 0:45	11.61
6/26/2022 1:17	-0.11	6/27/2022 0:07	1.60	6/27/2022 0:30	4.73	6/27/2022 1:53	-0.38	6/26/2022 0:46	11.55
6/26/2022 1:18	-0.12	6/27/2022 0:08	1.58	6/27/2022 0:31	4.72	6/27/2022 1:54	-0.36	6/26/2022 0:47	11.60
6/26/2022 1:19	-0.12	6/27/2022 0:09	1.58	6/27/2022 0:32	4.73	6/27/2022 1:55	-0.37	6/26/2022 0:48	11.60
6/26/2022 1:20	-0.10	6/27/2022 0:10	1.58	6/27/2022 0:33	4.72	6/27/2022 1:56	-0.35	6/26/2022 0:49	11.60
6/26/2022 1:21	-0.12	6/27/2022 0:11	1.59	6/27/2022 0:34	4.71	6/27/2022 1:57	-0.39	6/26/2022 0:50	11.61
6/26/2022 1:22	-0.10	6/27/2022 0:12	1.58	6/27/2022 0:35	4.71	6/27/2022 1:58	-0.37	6/26/2022 0:51	11.56
6/26/2022 1:23	-0.10	6/27/2022 0:13	1.58	6/27/2022 0:36	4.67	6/27/2022 1:59	-0.37	6/26/2022 0:52	11.54
6/26/2022 1:24	-0.12	6/27/2022 0:14	1.60	6/27/2022 0:37	4.69	6/27/2022 2:00	-0.35	6/26/2022 0:53	11.51
6/26/2022 1:25	-0.10	6/27/2022 0:15	1.58	6/27/2022 0:38	4.70	6/27/2022 2:01	-0.33	6/26/2022 0:54	11.61
6/26/2022 1:26	-0.10	6/27/2022 0:16	1.61	6/27/2022 0:39	4.70	6/27/2022 2:02	-0.34	6/26/2022 0:55	11.58
6/26/2022 1:27	-0.12	6/27/2022 0:17	1.61	6/27/2022 0:40	4.74	6/27/2022 2:03	-0.36	6/26/2022 0:56	11.53
6/26/2022 1:28	-0.12	6/27/2022 0:18	1.60	6/27/2022 0:41	4.71	6/27/2022 2:04	-0.37	6/26/2022 0:57	11.58
6/26/2022 1:29	-0.10	6/27/2022 0:19	1.58	6/27/2022 0:42	4.71	6/27/2022 2:05	-0.30	6/26/2022 0:58	11.56
6/26/2022 1:30	-0.10	6/27/2022 0:20	1.58	6/27/2022 0:43	4.68	6/27/2022 2:06	-0.35	6/26/2022 0:59	11.54
6/26/2022 1:31	-0.10	6/27/2022 0:21	1.58	6/27/2022 0:44	4.73	6/27/2022 2:07	-0.38	6/26/2022 1:00	11.58
6/26/2022 1:32	-0.12	6/27/2022 0:22	1.58	6/27/2022 0:45	4.71	6/27/2022 2:08	-0.36	6/26/2022 1:01	11.56
6/26/2022 1:33	-0.10	6/27/2022 0:23	1.58	6/27/2022 0:46	4.70	6/27/2022 2:09	-0.35	6/26/2022 1:02	11.56
6/26/2022 1:34	-0.10	6/27/2022 0:24	1.60	6/27/2022 0:47	4.70	6/27/2022 2:10	-0.37	6/26/2022 1:03	11.56
6/26/2022 1:35	-0.10	6/27/2022 0:25	1.58	6/27/2022 0:48	4.68	6/27/2022 2:11	-0.40	6/26/2022 1:04	11.54
6/26/2022 1:36	-0.12	6/27/2022 0:26	1.58	6/27/2022 0:49	4.73	6/27/2022 2:12	-0.36	6/26/2022 1:05	11.63
6/26/2022 1:37	-0.10	6/27/2022 0:27	1.58	6/27/2022 0:50	4.71	6/27/2022 2:13	-0.36	6/26/2022 1:06	11.57
6/26/2022 1:38	-0.12	6/27/2022 0:28	1.57	6/27/2022 0:51	4.74	6/27/2022 2:14	-0.33	6/26/2022 1:07	11.56
6/26/2022 1:39	-0.10	6/27/2022 0:29	1.60	6/27/2022 0:52	4.70	6/27/2022 2:15	-0.32	6/26/2022 1:08	11.59
6/26/2022 1:40	-0.10	6/27/2022 0:30	1.58	6/27/2022 0:53	4.70	6/27/2022 2:16	-0.37	6/26/2022 1:09	11.51
6/26/2022 1:41	-0.10	6/27/2022 0:31	1.58	6/27/2022 0:54	4.70	6/27/2022 2:17	-0.34	6/26/2022 1:10	11.57
6/26/2022 1:42	-0.12	6/27/2022 0:32	1.60	6/27/2022 0:55	4.68	6/27/2022 2:18	-0.35	6/26/2022 1:11	11.60
6/26/2022 1:43	-0.10	6/27/2022 0:33	1.58	6/27/2022 0:56	4.71	6/27/2022 2:19	-0.30	6/26/2022 1:12	11.53
6/26/2022 1:44	-0.10	6/27/2022 0:34	1.58	6/27/2022 0:57	4.70	6/27/2022 2:20	-0.38	6/26/2022 1:13	11.62
6/26/2022 1:45	-0.11	6/27/2022 0:35	1.58	6/27/2022 0:58	4.72	6/27/2022 2:21	-0.35	6/26/2022 1:14	11.57
6/26/2022 1:46	-0.10	6/27/2022 0:36	1.58	6/27/2022 0:59	4.70	6/27/2022 2:22	-0.33	6/26/2022 1:15	11.54
6/26/2022 1:47	-0.10	6/27/2022 0:37	1.58	6/27/2022 1:00	4.72	6/27/2022 2:23	-0.32	6/26/2022 1:16	11.56
6/26/2022 1:48	-0.10	6/27/2022 0:38	1.58	6/27/2022 1:01	4.69	6/27/2022 2:24	-0.30	6/26/2022 1:17	11.61
6/26/2022 1:49	-0.11	6/27/2022 0:39	1.58	6/27/2022 1:02	4.71	6/27/2022 2:25	-0.37	6/26/2022 1:18	11.56
6/26/2022 1:50	-0.11	6/27/2022 0:40	1.58	6/27/2022 1:03	4.73	6/27/2022 2:26	-0.39	6/26/2022 1:19	11.57
6/26/2022 1:51	-0.12	6/27/2022 0:41	1.58	6/27/2022 1:04	4.73	6/27/2022 2:27	-0.32	6/26/2022 1:20	11.50
6/26/2022 1:52	-0.10	6/27/2022 0:42	1.60	6/27/2022 1:05	4.72	6/27/2022 2:28	-0.36	6/26/2022 1:21	11.58
6/26/2022 1:53	-0.12	6/27/2022 0:43	1.58	6/27/2022 1:06	4.73	6/27/2022 2:29	-0.35	6/26/2022 1:22	11.55
6/26/2022 1:54	-0.12	6/27/2022 0:44	1.58	6/27/2022 1:07	4.74	6/27/2022 2:30	-0.32	6/26/2022 1:23	11.54
6/26/2022 1:55	-0.10	6/27/2022 0:45	1.58	6/27/2022 1:08	4.72	6/27/2022 2:31	-0.36	6/26/2022 1:24	11.58
6/26/2022 1:56	-0.11	6/27/2022 0:46	1.58	6/27/2022 1:09	4.74	6/27/2022 2:32	-0.38	6/26/2022 1:25	11.59
6/26/2022 1:57	-0.10	6/27/2022 0:47	1.58	6/27/2022 1:10	4.70	6/27/2022 2:33	-0.36	6/26/2022 1:26	11.59
6/26/2022 1:58	-0.11	6/27/2022 0:48	1.58	6/27/2022 1:11	4.71	6/27/2022 2:34	-0.39	6/26/2022 1:27	11.54
6/26/2022 1:59	-0.11	6/27/2022 0:49	1.60	6/27/2022 1:12	4.71	6/27/2022 2:35	-0.35	6/26/2022 1:28	11.52
6/26/2022 2:00	-0.10	6/27/2022 0:50	1.58	6/27/2022 1:13	4.70	6/27/2022 2:36	-0.34	6/26/2022 1:29	11.61

6/26/2022 2:01	-0.12	6/27/2022 0:51	1.58	6/27/2022 1:14	4.70	6/27/2022 2:37	-0.35	6/26/2022 1:30	11.56
6/26/2022 2:02	-0.11	6/27/2022 0:52	1.60	6/27/2022 1:15	4.69	6/27/2022 2:38	-0.37	6/26/2022 1:31	11.58
6/26/2022 2:03	-0.12	6/27/2022 0:53	1.60	6/27/2022 1:16	4.67	6/27/2022 2:39	-0.34	6/26/2022 1:32	11.56
6/26/2022 2:04	-0.11	6/27/2022 0:54	1.57	6/27/2022 1:17	4.72	6/27/2022 2:40	-0.36	6/26/2022 1:33	11.56
6/26/2022 2:05	-0.10	6/27/2022 0:55	1.58	6/27/2022 1:18	4.73	6/27/2022 2:41	-0.32	6/26/2022 1:34	11.54
6/26/2022 2:06	-0.10	6/27/2022 0:56	1.58	6/27/2022 1:19	4.73	6/27/2022 2:42	-0.34	6/26/2022 1:35	11.56
6/26/2022 2:07	-0.11	6/27/2022 0:57	1.58	6/27/2022 1:20	4.71	6/27/2022 2:43	-0.32	6/26/2022 1:36	11.57
6/26/2022 2:08	-0.10	6/27/2022 0:58	1.58	6/27/2022 1:21	4.72	6/27/2022 2:44	-0.35	6/26/2022 1:37	11.51
6/26/2022 2:09	-0.11	6/27/2022 0:59	1.58	6/27/2022 1:22	4.72	6/27/2022 2:45	-0.32	6/26/2022 1:38	11.52
6/26/2022 2:10	-0.11	6/27/2022 1:00	1.57	6/27/2022 1:23	4.71	6/27/2022 2:46	-0.35	6/26/2022 1:39	11.62
6/26/2022 2:11	-0.12	6/27/2022 1:01	1.58	6/27/2022 1:24	4.74	6/27/2022 2:47	-0.37	6/26/2022 1:40	11.51
6/26/2022 2:12	-0.10	6/27/2022 1:02	1.57	6/27/2022 1:25	4.71	6/27/2022 2:48	-0.34	6/26/2022 1:41	11.56
6/26/2022 2:13	-0.12	6/27/2022 1:03	1.57	6/27/2022 1:26	4.70	6/27/2022 2:49	-0.35	6/26/2022 1:42	11.51
6/26/2022 2:14	-0.10	6/27/2022 1:04	1.57	6/27/2022 1:27	4.74	6/27/2022 2:50	-0.35	6/26/2022 1:43	11.55
6/26/2022 2:15	-0.10	6/27/2022 1:05	1.57	6/27/2022 1:28	4.74	6/27/2022 2:51	-0.38	6/26/2022 1:44	11.57
6/26/2022 2:16	-0.11	6/27/2022 1:06	1.58	6/27/2022 1:29	4.69	6/27/2022 2:52	-0.37	6/26/2022 1:45	11.58
6/26/2022 2:17	-0.12	6/27/2022 1:07	1.57	6/27/2022 1:30	4.71	6/27/2022 2:53	-0.33	6/26/2022 1:46	11.57
6/26/2022 2:18	-0.10	6/27/2022 1:08	1.57	6/27/2022 1:31	4.70	6/27/2022 2:54	-0.35	6/26/2022 1:47	11.58
6/26/2022 2:19	-0.10	6/27/2022 1:09	1.57	6/27/2022 1:32	4.69	6/27/2022 2:55	-0.35	6/26/2022 1:48	11.57
6/26/2022 2:20	-0.10	6/27/2022 1:10	1.57	6/27/2022 1:33	4.71	6/27/2022 2:56	-0.35	6/26/2022 1:49	11.59
6/26/2022 2:21	-0.12	6/27/2022 1:11	1.57	6/27/2022 1:34	4.73	6/27/2022 2:57	-0.37	6/26/2022 1:50	11.55
6/26/2022 2:22	-0.10	6/27/2022 1:12	1.57	6/27/2022 1:35	4.72	6/27/2022 2:58	-0.31	6/26/2022 1:51	11.54
6/26/2022 2:23	-0.11	6/27/2022 1:13	1.57	6/27/2022 1:36	4.73	6/27/2022 2:59	-0.33	6/26/2022 1:52	11.59
6/26/2022 2:24	-0.10	6/27/2022 1:14	1.57	6/27/2022 1:37	4.72	6/27/2022 3:00	-0.39	6/26/2022 1:53	11.61
6/26/2022 2:25	-0.10	6/27/2022 1:15	1.57	6/27/2022 1:38	4.73	6/27/2022 3:01	-0.37	6/26/2022 1:54	11.53
6/26/2022 2:26	-0.11	6/27/2022 1:16	1.57	6/27/2022 1:39	4.71	6/27/2022 3:02	-0.35	6/26/2022 1:55	11.61
6/26/2022 2:27	-0.11	6/27/2022 1:17	1.57	6/27/2022 1:40	4.69	6/27/2022 3:03	-0.37	6/26/2022 1:56	11.59
6/26/2022 2:28	-0.12	6/27/2022 1:18	1.57	6/27/2022 1:41	4.69	6/27/2022 3:04	-0.37	6/26/2022 1:57	11.54
6/26/2022 2:29	-0.10	6/27/2022 1:19	1.57	6/27/2022 1:42	4.73	6/27/2022 3:05	-0.33	6/26/2022 1:58	11.53
6/26/2022 2:30	-0.10	6/27/2022 1:20	1.57	6/27/2022 1:43	4.70	6/27/2022 3:06	-0.35	6/26/2022 1:59	11.57
6/26/2022 2:31	-0.11	6/27/2022 1:21	1.57	6/27/2022 1:44	4.72	6/27/2022 3:07	-0.37	6/26/2022 2:00	11.60
6/26/2022 2:32	-0.11	6/27/2022 1:22	1.57	6/27/2022 1:45	4.72	6/27/2022 3:08	-0.29	6/26/2022 2:01	11.58
6/26/2022 2:33	-0.12	6/27/2022 1:23	1.57	6/27/2022 1:46	4.71	6/27/2022 3:09	-0.35	6/26/2022 2:02	11.61
6/26/2022 2:34	-0.10	6/27/2022 1:24	1.57	6/27/2022 1:47	4.69	6/27/2022 3:10	-0.39	6/26/2022 2:03	11.57
6/26/2022 2:35	-0.11	6/27/2022 1:25	1.57	6/27/2022 1:48	4.69	6/27/2022 3:11	-0.38	6/26/2022 2:04	11.55
6/26/2022 2:36	-0.12	6/27/2022 1:26	1.57	6/27/2022 1:49	4.70	6/27/2022 3:12	-0.34	6/26/2022 2:05	11.61
6/26/2022 2:37	-0.10	6/27/2022 1:27	1.57	6/27/2022 1:50	4.69	6/27/2022 3:13	-0.37	6/26/2022 2:06	11.51
6/26/2022 2:38	-0.10	6/27/2022 1:28	1.57	6/27/2022 1:51	4.70	6/27/2022 3:14	-0.33	6/26/2022 2:07	11.55
6/26/2022 2:39	-0.11	6/27/2022 1:29	1.57	6/27/2022 1:52	4.71	6/27/2022 3:15	-0.35	6/26/2022 2:08	11.59
6/26/2022 2:40	-0.10	6/27/2022 1:30	1.59	6/27/2022 1:53	4.74	6/27/2022 3:16	-0.37	6/26/2022 2:09	11.58
6/26/2022 2:41	-0.10	6/27/2022 1:31	1.57	6/27/2022 1:54	4.70	6/27/2022 3:17	-0.37	6/26/2022 2:10	11.61
6/26/2022 2:42	-0.11	6/27/2022 1:32	1.57	6/27/2022 1:55	4.70	6/27/2022 3:18	-0.39	6/26/2022 2:11	11.51
6/26/2022 2:43	-0.11	6/27/2022 1:33	1.57	6/27/2022 1:56	4.70	6/27/2022 3:19	-0.37	6/26/2022 2:12	11.54
6/26/2022 2:44	-0.11	6/27/2022 1:34	1.57	6/27/2022 1:57	4.73	6/27/2022 3:20	-0.30	6/26/2022 2:13	11.60
6/26/2022 2:45	-0.10	6/27/2022 1:35	1.57	6/27/2022 1:58	4.75	6/27/2022 3:21	-0.36	6/26/2022 2:14	11.58
6/26/2022 2:46	-0.10	6/27/2022 1:36	1.57	6/27/2022 1:59	4.72	6/27/2022 3:22	-0.35	6/26/2022 2:15	11.58
6/26/2022 2:47	-0.11	6/27/2022 1:37	1.57	6/27/2022 2:00	4.65	6/27/2022 3:23	-0.33	6/26/2022 2:16	11.52
6/26/2022 2:48	-0.10	6/27/2022 1:38	1.57	6/27/2022 2:01	4.71	6/27/2022 3:24	-0.34	6/26/2022 2:17	11.57
6/26/2022 2:49	-0.10	6/27/2022 1:39	1.57	6/27/2022 2:02	4.72	6/27/2022 3:25	-0.36	6/26/2022 2:18	11.53
6/26/2022 2:50	-0.10	6/27/2022 1:40	1.57	6/27/2022 2:03	4.75	6/27/2022 3:26	-0.35	6/26/2022 2:19	11.56
6/26/2022 2:51	-0.12	6/27/2022 1:41	1.57	6/27/2022 2:04	4.69	6/27/2022 3:27	-0.35	6/26/2022 2:20	11.58
6/26/2022 2:52	-0.10	6/27/2022 1:42	1.57	6/27/2022 2:05	4.70	6/27/2022 3:28	-0.35	6/26/2022 2:21	11.63
6/26/2022 2:53	-0.10	6/27/2022 1:43	1.57	6/27/2022 2:06	4.70	6/27/2022 3:29	-0.37	6/26/2022 2:22	11.59
6/26/2022 2:54	-0.12	6/27/2022 1:44	1.57	6/27/2022 2:07	4.74	6/27/2022 3:30	-0.39	6/26/2022 2:23	11.55
6/26/2022 2:55	-0.12	6/27/2022 1:45	1.57	6/27/2022 2:08	4.71	6/27/2022 3:31	-0.35	6/26/2022 2:24	11.59
6/26/2022 2:56	-0.10	6/27/2022 1:46	1.57	6/27/2022 2:09	4.69	6/27/2022 3:32	-0.35	6/26/2022 2:25	11.60
6/26/2022 2:57	-0.10	6/27/2022 1:47	1.57	6/27/2022 2:10	4.69	6/27/2022 3:33	-0.35	6/26/2022 2:26	11.54
6/26/2022 2:58	-0.10	6/27/2022 1:48	1.57	6/27/2022 2:11	4.70	6/27/2022 3:34	-0.33	6/26/2022 2:27	11.56
6/26/2022 2:59	-0.11	6/27/2022 1:49	1.59	6/27/2022 2:12	4.71	6/27/2022 3:35	-0.36	6/26/2022 2:28	11.60
6/26/2022 3:00	-0.11	6/27/2022 1:50	1.57	6/27/2022 2:13	4.69	6/27/2022 3:36	-0.35	6/26/2022 2:29	11.57
6/26/2022 3:01	-0.11	6/27/2022 1:51	1.57	6/27/2022 2:14	4.67	6/27/2022 3:37	-0.37	6/26/2022 2:30	11.52
6/26/2022 3:02	-0.10	6/27/2022 1:52	1.57	6/27/2022 2:15	4.70	6/27/2022 3:38	-0.38	6/26/2022 2:31	11.56
6/26/2022 3:03	-0.11	6/27/2022 1:53	1.57	6/27/2022 2:16	4.70	6/27/2022 3:39	-0.35	6/26/2022 2:32	11.56
6/26/2022 3:04	-0.12	6/27/2022 1:54	1.57	6/27/2022 2:17	4.71	6/27/2022 3:40	-0.36	6/26/2022 2:33	11.60
6/26/2022 3:05	-0.10	6/27/2022 1:55	1.57	6/27/2022 2:18	4.70	6/27/2022 3:41	-0.35	6/26/2022 2:34	11.60
6/26/2022 3:06	-0.12	6/27/2022 1:56	1.57	6/27/2022 2:19	4.67	6/27/2022 3:42	-0.40	6/26/2022 2:35	11.57
6/26/2022 3:07	-0.10	6/27/2022 1:57	1.57	6/27/2022 2:20	4.70	6/27/2022 3:43	-0.36	6/26/2022 2:36	11.54
6/26/2022 3:08	-0.10	6/27/2022 1:58	1.57	6/27/2022 2:21	4.73	6/27/2022 3:44	-0.34	6/26/2022 2:37	11.59
6/26/2022 3:09	-0.10	6/27/2022 1:59	1.57	6/27/2022 2:22	4.70	6/27/2022 3:45	-0.35	6/26/2022 2:38	11.61
6/26/2022 3:10	-0.10	6/27/2022 2:00	1.57	6/27/2022 2:23	4.73	6/27/2022 3:46	-0.37	6/26/2022 2:39	11.59
6/26/2022 3:11	-0.11	6/27/2022 2:01	1.57	6/27/2022 2:24	4.72	6/27/2022 3:47	-0.33	6/26/2022 2:40	11.56
6/26/2022 3:12	-0.10	6/27/2022 2:02	1.57	6/27/2022 2:25	4.71	6/27/2022 3:48	-0.39	6/26/2022 2:41	11.57
6/26/2022 3:13	-0.11	6/27/2022 2:03	1.57	6/27/2022 2:26	4.70	6/27/2022 3:49	-0.38	6/26/2022 2:42	11.62
6/26/2022 3:14	-0.10	6/27/2022 2:04	1.56	6/27/2022 2:27	4.74	6/27/2022 3:50	-0.33	6/26/2022 2:43	11.59
6/26/2022 3:15	-0.12	6/27/2022 2:05	1.56	6/27/2022 2:28	4.72	6/27/2022 3:51	-0.34	6/26/2022 2:44	11.54
6/26/2022 3:16	-0.11	6/27/2022 2:06	1.57	6/27/2022 2:29	4.68	6/27/2022 3:52	-0.34	6/26/2022 2:45	11.52
6/26/2022 3:17	-0.10	6/27/2022 2:07	1.57	6/27/2022 2:30	4.70	6/27/2022 3:53	-0.33	6/26/2022 2:46	11.54
6/26/2022 3:18	-0.11	6/27/2022 2:08	1.57	6/27/2022 2:31	4.71	6/27/2022 3:54	-0.33	6/26/2022 2:47	11.52
6/26/2022 3:19	-0.10	6/27/2022 2:09	1.59	6/27/2022 2:32	4.70	6/27/2022 3:55	-0.32	6/26/2022 2:48	11.53
6/26/2022 3:20	-0.12	6/27/2022 2:10	1.59	6/27/2022 2:33	4.68	6/27/2022 3:56	-0.39	6/26/2022 2:49	11.58
6/26/2022 3:21	-0.10	6/27/2022 2:11	1.57	6/27/2022 2:34	4.70	6/27/2022 3:57	-0.39	6/26/2022 2:50	11.59
6/26/2022 3:22	-0.10	6/27/2022 2:12	1.57	6/27/2022 2:35	4.69	6/27/2022 3:58	-0.33	6/26/2022 2:51	11.56
6/26/2022 3:23	-0.12	6/27/2022 2:13	1.57	6/27/2022 2:36	4.68	6/27/2022 3:59	-0.35	6/26/2022 2:52	11.59
6/26/2022 3:24	-0.10	6/27/2022 2:14	1.57	6/27/2022 2:37	4.70	6/27/2022 4:00	-0.33	6/26/2022 2:53	11.61
6/26/2022 3:25	-0.11	6/27/2022 2:15	1.57	6/27/2022 2:38	4.69	6/27/2022 4:01	-0.34	6/26/2022 2:54	11.54
6/26/2022 3:26	-0.11	6/27/2022 2:16	1.57	6/27/2022 2:39	4.72	6/27/2022 4:02	-0.30	6/26/2022 2:55	11.56
6/26/2022 3:27	-0.10	6/27/2022 2:17	1.57	6/27/2022 2:40	4.71	6/27/2022 4:03	-0.35	6/26/2022 2:56	11.51
6/26/2022 3:28	-0.10	6/27/2022 2:18	1.57	6/27/2022 2:41	4.72	6/27/2022 4:04	-0.33	6/26/2022 2:57	11.56

6/26/2022 3:29	-0.10	6/27/2022 2:19	1.57	6/27/2022 2:42	4.69	6/27/2022 4:05	-0.37	6/26/2022 2:58	11.56
6/26/2022 3:30	-0.10	6/27/2022 2:20	1.56	6/27/2022 2:43	4.72	6/27/2022 4:06	-0.36	6/26/2022 2:59	11.56
6/26/2022 3:31	-0.12	6/27/2022 2:21	1.59	6/27/2022 2:44	4.72	6/27/2022 4:07	-0.37	6/26/2022 3:00	11.52
6/26/2022 3:32	-0.10	6/27/2022 2:22	1.56	6/27/2022 2:45	4.75	6/27/2022 4:08	-0.39	6/26/2022 3:01	11.55
6/26/2022 3:33	-0.12	6/27/2022 2:23	1.56	6/27/2022 2:46	4.69	6/27/2022 4:09	-0.33	6/26/2022 3:02	11.58
6/26/2022 3:34	-0.10	6/27/2022 2:24	1.56	6/27/2022 2:47	4.70	6/27/2022 4:10	-0.36	6/26/2022 3:03	11.54
6/26/2022 3:35	-0.12	6/27/2022 2:25	1.56	6/27/2022 2:48	4.71	6/27/2022 4:11	-0.33	6/26/2022 3:04	11.58
6/26/2022 3:36	-0.11	6/27/2022 2:26	1.57	6/27/2022 2:49	4.73	6/27/2022 4:12	-0.34	6/26/2022 3:05	11.60
6/26/2022 3:37	-0.10	6/27/2022 2:27	1.57	6/27/2022 2:50	4.74	6/27/2022 4:13	-0.33	6/26/2022 3:06	11.53
6/26/2022 3:38	-0.10	6/27/2022 2:28	1.56	6/27/2022 2:51	4.71	6/27/2022 4:14	-0.37	6/26/2022 3:07	11.53
6/26/2022 3:39	-0.10	6/27/2022 2:29	1.59	6/27/2022 2:52	4.71	6/27/2022 4:15	-0.33	6/26/2022 3:08	11.59
6/26/2022 3:40	-0.12	6/27/2022 2:30	1.56	6/27/2022 2:53	4.69	6/27/2022 4:16	-0.35	6/26/2022 3:09	11.57
6/26/2022 3:41	-0.10	6/27/2022 2:31	1.56	6/27/2022 2:54	4.72	6/27/2022 4:17	-0.38	6/26/2022 3:10	11.62
6/26/2022 3:42	-0.12	6/27/2022 2:32	1.58	6/27/2022 2:55	4.70	6/27/2022 4:18	-0.38	6/26/2022 3:11	11.58
6/26/2022 3:43	-0.09	6/27/2022 2:33	1.56	6/27/2022 2:56	4.70	6/27/2022 4:19	-0.34	6/26/2022 3:12	11.59
6/26/2022 3:44	-0.10	6/27/2022 2:34	1.56	6/27/2022 2:57	4.68	6/27/2022 4:20	-0.36	6/26/2022 3:13	11.55
6/26/2022 3:45	-0.10	6/27/2022 2:35	1.56	6/27/2022 2:58	4.68	6/27/2022 4:21	-0.31	6/26/2022 3:14	11.58
6/26/2022 3:46	-0.10	6/27/2022 2:36	1.56	6/27/2022 2:59	4.69	6/27/2022 4:22	-0.39	6/26/2022 3:15	11.57
6/26/2022 3:47	-0.10	6/27/2022 2:37	1.56	6/27/2022 3:00	4.69	6/27/2022 4:23	-0.39	6/26/2022 3:16	11.56
6/26/2022 3:48	-0.10	6/27/2022 2:38	1.57	6/27/2022 3:01	4.68	6/27/2022 4:24	-0.37	6/26/2022 3:17	11.64
6/26/2022 3:49	-0.10	6/27/2022 2:39	1.56	6/27/2022 3:02	4.71	6/27/2022 4:25	-0.35	6/26/2022 3:18	11.57
6/26/2022 3:50	-0.10	6/27/2022 2:40	1.56	6/27/2022 3:03	4.70	6/27/2022 4:26	-0.37	6/26/2022 3:19	11.60
6/26/2022 3:51	-0.11	6/27/2022 2:41	1.57	6/27/2022 3:04	4.68	6/27/2022 4:27	-0.36	6/26/2022 3:20	11.57
6/26/2022 3:52	-0.10	6/27/2022 2:42	1.56	6/27/2022 3:05	4.68	6/27/2022 4:28	-0.37	6/26/2022 3:21	11.56
6/26/2022 3:53	-0.11	6/27/2022 2:43	1.56	6/27/2022 3:06	4.71	6/27/2022 4:29	-0.41	6/26/2022 3:22	11.56
6/26/2022 3:54	-0.10	6/27/2022 2:44	1.56	6/27/2022 3:07	4.69	6/27/2022 4:30	-0.37	6/26/2022 3:23	11.56
6/26/2022 3:55	-0.10	6/27/2022 2:45	1.56	6/27/2022 3:08	4.72	6/27/2022 4:31	-0.31	6/26/2022 3:24	11.55
6/26/2022 3:56	-0.10	6/27/2022 2:46	1.57	6/27/2022 3:09	4.72	6/27/2022 4:32	-0.36	6/26/2022 3:25	11.57
6/26/2022 3:57	-0.10	6/27/2022 2:47	1.56	6/27/2022 3:10	4.73	6/27/2022 4:33	-0.36	6/26/2022 3:26	11.61
6/26/2022 3:58	-0.12	6/27/2022 2:48	1.56	6/27/2022 3:11	4.70	6/27/2022 4:34	-0.42	6/26/2022 3:27	11.60
6/26/2022 3:59	-0.12	6/27/2022 2:49	1.56	6/27/2022 3:12	4.67	6/27/2022 4:35	-0.35	6/26/2022 3:28	11.61
6/26/2022 4:00	-0.10	6/27/2022 2:50	1.56	6/27/2022 3:13	4.67	6/27/2022 4:36	-0.36	6/26/2022 3:29	11.54
6/26/2022 4:01	-0.10	6/27/2022 2:51	1.58	6/27/2022 3:14	4.66	6/27/2022 4:37	-0.40	6/26/2022 3:30	11.57
6/26/2022 4:02	-0.11	6/27/2022 2:52	1.56	6/27/2022 3:15	4.71	6/27/2022 4:38	-0.38	6/26/2022 3:31	11.57
6/26/2022 4:03	-0.10	6/27/2022 2:53	1.57	6/27/2022 3:16	4.68	6/27/2022 4:39	-0.38	6/26/2022 3:32	11.56
6/26/2022 4:04	-0.12	6/27/2022 2:54	1.56	6/27/2022 3:17	4.69	6/27/2022 4:40	-0.34	6/26/2022 3:33	11.56
6/26/2022 4:05	-0.11	6/27/2022 2:55	1.56	6/27/2022 3:18	4.72	6/27/2022 4:41	-0.36	6/26/2022 3:34	11.58
6/26/2022 4:06	-0.12	6/27/2022 2:56	1.57	6/27/2022 3:19	4.67	6/27/2022 4:42	-0.37	6/26/2022 3:35	11.56
6/26/2022 4:07	-0.12	6/27/2022 2:57	1.59	6/27/2022 3:20	4.71	6/27/2022 4:43	-0.38	6/26/2022 3:36	11.52
6/26/2022 4:08	-0.11	6/27/2022 2:58	1.56	6/27/2022 3:21	4.68	6/27/2022 4:44	-0.34	6/26/2022 3:37	11.57
6/26/2022 4:09	-0.10	6/27/2022 2:59	1.56	6/27/2022 3:22	4.71	6/27/2022 4:45	-0.39	6/26/2022 3:38	11.52
6/26/2022 4:10	-0.10	6/27/2022 3:00	1.56	6/27/2022 3:23	4.67	6/27/2022 4:46	-0.33	6/26/2022 3:39	11.57
6/26/2022 4:11	-0.12	6/27/2022 3:01	1.56	6/27/2022 3:24	4.70	6/27/2022 4:47	-0.32	6/26/2022 3:40	11.56
6/26/2022 4:12	-0.12	6/27/2022 3:02	1.56	6/27/2022 3:25	4.69	6/27/2022 4:48	-0.35	6/26/2022 3:41	11.56
6/26/2022 4:13	-0.12	6/27/2022 3:03	1.56	6/27/2022 3:26	4.66	6/27/2022 4:49	-0.34	6/26/2022 3:42	11.52
6/26/2022 4:14	-0.10	6/27/2022 3:04	1.56	6/27/2022 3:27	4.71	6/27/2022 4:50	-0.39	6/26/2022 3:43	11.55
6/26/2022 4:15	-0.11	6/27/2022 3:05	1.56	6/27/2022 3:28	4.67	6/27/2022 4:51	-0.33	6/26/2022 3:44	11.59
6/26/2022 4:16	-0.10	6/27/2022 3:06	1.56	6/27/2022 3:29	4.71	6/27/2022 4:52	-0.37	6/26/2022 3:45	11.57
6/26/2022 4:17	-0.12	6/27/2022 3:07	1.56	6/27/2022 3:30	4.71	6/27/2022 4:53	-0.36	6/26/2022 3:46	11.54
6/26/2022 4:18	-0.12	6/27/2022 3:08	1.56	6/27/2022 3:31	4.71	6/27/2022 4:54	-0.33	6/26/2022 3:47	11.58
6/26/2022 4:19	-0.10	6/27/2022 3:09	1.56	6/27/2022 3:32	4.67	6/27/2022 4:55	-0.35	6/26/2022 3:48	11.58
6/26/2022 4:20	-0.12	6/27/2022 3:10	1.56	6/27/2022 3:33	4.69	6/27/2022 4:56	-0.35	6/26/2022 3:49	11.60
6/26/2022 4:21	-0.12	6/27/2022 3:11	1.56	6/27/2022 3:34	4.66	6/27/2022 4:57	-0.35	6/26/2022 3:50	11.59
6/26/2022 4:22	-0.10	6/27/2022 3:12	1.58	6/27/2022 3:35	4.71	6/27/2022 4:58	-0.39	6/26/2022 3:51	11.54
6/26/2022 4:23	-0.12	6/27/2022 3:13	1.56	6/27/2022 3:36	4.70	6/27/2022 4:59	-0.35	6/26/2022 3:52	11.59
6/26/2022 4:24	-0.10	6/27/2022 3:14	1.58	6/27/2022 3:37	4.68	6/27/2022 5:00	-0.38	6/26/2022 3:53	11.52
6/26/2022 4:25	-0.11	6/27/2022 3:15	1.56	6/27/2022 3:38	4.68	6/27/2022 5:01	-0.37	6/26/2022 3:54	11.55
6/26/2022 4:26	-0.11	6/27/2022 3:16	1.56	6/27/2022 3:39	4.70	6/27/2022 5:02	-0.33	6/26/2022 3:55	11.58
6/26/2022 4:27	-0.10	6/27/2022 3:17	1.56	6/27/2022 3:40	4.65	6/27/2022 5:03	-0.38	6/26/2022 3:56	11.58
6/26/2022 4:28	-0.10	6/27/2022 3:18	1.56	6/27/2022 3:41	4.67	6/27/2022 5:04	-0.37	6/26/2022 3:57	11.58
6/26/2022 4:29	-0.10	6/27/2022 3:19	1.56	6/27/2022 3:42	4.72	6/27/2022 5:05	-0.39	6/26/2022 3:58	11.57
6/26/2022 4:30	-0.12	6/27/2022 3:20	1.58	6/27/2022 3:43	4.66	6/27/2022 5:06	-0.35	6/26/2022 3:59	11.52
6/26/2022 4:31	-0.10	6/27/2022 3:21	1.56	6/27/2022 3:44	4.67	6/27/2022 5:07	-0.35	6/26/2022 4:00	11.57
6/26/2022 4:32	-0.11	6/27/2022 3:22	1.58	6/27/2022 3:45	4.67	6/27/2022 5:08	-0.36	6/26/2022 4:01	11.60
6/26/2022 4:33	-0.12	6/27/2022 3:23	1.56	6/27/2022 3:46	4.63	6/27/2022 5:09	-0.34	6/26/2022 4:02	11.54
6/26/2022 4:34	-0.10	6/27/2022 3:24	1.56	6/27/2022 3:47	4.69	6/27/2022 5:10	-0.35	6/26/2022 4:03	11.58
6/26/2022 4:35	-0.11	6/27/2022 3:25	1.56	6/27/2022 3:48	4.69	6/27/2022 5:11	-0.38	6/26/2022 4:04	11.56
6/26/2022 4:36	-0.12	6/27/2022 3:26	1.56	6/27/2022 3:49	4.69	6/27/2022 5:12	-0.36	6/26/2022 4:05	11.53
6/26/2022 4:37	-0.11	6/27/2022 3:27	1.58	6/27/2022 3:50	4.69	6/27/2022 5:13	-0.35	6/26/2022 4:06	11.57
6/26/2022 4:38	-0.10	6/27/2022 3:28	1.56	6/27/2022 3:51	4.68	6/27/2022 5:14	-0.34	6/26/2022 4:07	11.52
6/26/2022 4:39	-0.12	6/27/2022 3:29	1.56	6/27/2022 3:52	4.67	6/27/2022 5:15	-0.38	6/26/2022 4:08	11.54
6/26/2022 4:40	-0.12	6/27/2022 3:30	1.55	6/27/2022 3:53	4.68	6/27/2022 5:16	-0.33	6/26/2022 4:09	11.58
6/26/2022 4:41	-0.10	6/27/2022 3:31	1.56	6/27/2022 3:54	4.69	6/27/2022 5:17	-0.37	6/26/2022 4:10	11.61
6/26/2022 4:42	-0.11	6/27/2022 3:32	1.55	6/27/2022 3:55	4.68	6/27/2022 5:18	-0.36	6/26/2022 4:11	11.58
6/26/2022 4:43	-0.11	6/27/2022 3:33	1.56	6/27/2022 3:56	4.68	6/27/2022 5:19	-0.32	6/26/2022 4:12	11.57
6/26/2022 4:44	-0.10	6/27/2022 3:34	1.58	6/27/2022 3:57	4.69	6/27/2022 5:20	-0.35	6/26/2022 4:13	11.59
6/26/2022 4:45	-0.10	6/27/2022 3:35	1.56	6/27/2022 3:58	4.68	6/27/2022 5:21	-0.31	6/26/2022 4:14	11.56
6/26/2022 4:46	-0.12	6/27/2022 3:36	1.55	6/27/2022 3:59	4.67	6/27/2022 5:22	-0.35	6/26/2022 4:15	11.59
6/26/2022 4:47	-0.10	6/27/2022 3:37	1.58	6/27/2022 4:00	4.66	6/27/2022 5:23	-0.40	6/26/2022 4:16	11.52
6/26/2022 4:48	-0.10	6/27/2022 3:38	1.55	6/27/2022 4:01	4.66	6/27/2022 5:24	-0.38	6/26/2022 4:17	11.57
6/26/2022 4:49	-0.11	6/27/2022 3:39	1.56	6/27/2022 4:02	4.67	6/27/2022 5:25	-0.37	6/26/2022 4:18	11.57
6/26/2022 4:50	-0.12	6/27/2022 3:40	1.55	6/27/2022 4:03	4.62	6/27/2022 5:26	-0.37	6/26/2022 4:19	11.59
6/26/2022 4:51	-0.10	6/27/2022 3:41	1.58	6/27/2022 4:04	4.69	6/27/2022 5:27	-0.39	6/26/2022 4:20	11.55
6/26/2022 4:52	-0.10	6/27/2022 3:42	1.58	6/27/2022 4:05	4.71	6/27/2022 5:28	-0.36	6/26/2022 4:21	11.54
6/26/2022 4:53	-0.12	6/27/2022 3:43	1.56	6/27/2022 4:06	4.70	6/27/2022 5:29	-0.40	6/26/2022 4:22	11.58
6/26/2022 4:54	-0.11	6/27/2022 3:44	1.55	6/27/2022 4:07	4.68	6/27/2022 5:30	-0.39	6/26/2022 4:23	11.56
6/26/2022 4:55	-0.11	6/27/2022 3:45	1.55	6/27/2022 4:08	4.67	6/27/2022 5:31	-0.39	6/26/2022 4:24	11.53
6/26/2022 4:56	-0.10	6/27/2022 3:46	1.58	6/27/2022 4:09	4.69	6/27/2022 5:32	-0.35	6/26/2022 4:25	11.56

6/26/2022 4:57	-0.11	6/27/2022 3:47	1.55	6/27/2022 4:10	4.67	6/27/2022 5:33	-0.36	6/26/2022 4:26	11.51
6/26/2022 4:58	-0.10	6/27/2022 3:48	1.55	6/27/2022 4:11	4.71	6/27/2022 5:34	-0.32	6/26/2022 4:27	11.59
6/26/2022 4:59	-0.10	6/27/2022 3:49	1.55	6/27/2022 4:12	4.68	6/27/2022 5:35	-0.39	6/26/2022 4:28	11.61
6/26/2022 5:00	-0.11	6/27/2022 3:50	1.55	6/27/2022 4:13	4.69	6/27/2022 5:36	-0.37	6/26/2022 4:29	11.54
6/26/2022 5:01	-0.10	6/27/2022 3:51	1.55	6/27/2022 4:14	4.66	6/27/2022 5:37	-0.37	6/26/2022 4:30	11.54
6/26/2022 5:02	-0.11	6/27/2022 3:52	1.55	6/27/2022 4:15	4.67	6/27/2022 5:38	-0.34	6/26/2022 4:31	11.62
6/26/2022 5:03	-0.10	6/27/2022 3:53	1.57	6/27/2022 4:16	4.65	6/27/2022 5:39	-0.32	6/26/2022 4:32	11.55
6/26/2022 5:04	-0.10	6/27/2022 3:54	1.55	6/27/2022 4:17	4.68	6/27/2022 5:40	-0.35	6/26/2022 4:33	11.57
6/26/2022 5:05	-0.10	6/27/2022 3:55	1.57	6/27/2022 4:18	4.67	6/27/2022 5:41	-0.36	6/26/2022 4:34	11.57
6/26/2022 5:06	-0.10	6/27/2022 3:56	1.58	6/27/2022 4:19	4.66	6/27/2022 5:42	-0.37	6/26/2022 4:35	11.58
6/26/2022 5:07	-0.12	6/27/2022 3:57	1.57	6/27/2022 4:20	4.70	6/27/2022 5:43	-0.34	6/26/2022 4:36	11.58
6/26/2022 5:08	-0.10	6/27/2022 3:58	1.55	6/27/2022 4:21	4.65	6/27/2022 5:44	-0.39	6/26/2022 4:37	11.58
6/26/2022 5:09	-0.11	6/27/2022 3:59	1.55	6/27/2022 4:22	4.68	6/27/2022 5:45	-0.35	6/26/2022 4:38	11.53
6/26/2022 5:10	-0.11	6/27/2022 4:00	1.57	6/27/2022 4:23	4.69	6/27/2022 5:46	-0.37	6/26/2022 4:39	11.58
6/26/2022 5:11	-0.10	6/27/2022 4:01	1.57	6/27/2022 4:24	4.70	6/27/2022 5:47	-0.31	6/26/2022 4:40	11.59
6/26/2022 5:12	-0.10	6/27/2022 4:02	1.57	6/27/2022 4:25	4.68	6/27/2022 5:48	-0.36	6/26/2022 4:41	11.58
6/26/2022 5:13	-0.11	6/27/2022 4:03	1.57	6/27/2022 4:26	4.71	6/27/2022 5:49	-0.37	6/26/2022 4:42	11.57
6/26/2022 5:14	-0.10	6/27/2022 4:04	1.57	6/27/2022 4:27	4.67	6/27/2022 5:50	-0.35	6/26/2022 4:43	11.58
6/26/2022 5:15	-0.10	6/27/2022 4:05	1.55	6/27/2022 4:28	4.70	6/27/2022 5:51	-0.39	6/26/2022 4:44	11.58
6/26/2022 5:16	-0.12	6/27/2022 4:06	1.55	6/27/2022 4:29	4.66	6/27/2022 5:52	-0.39	6/26/2022 4:45	11.57
6/26/2022 5:17	-0.12	6/27/2022 4:07	1.57	6/27/2022 4:30	4.67	6/27/2022 5:53	-0.39	6/26/2022 4:46	11.58
6/26/2022 5:18	-0.12	6/27/2022 4:08	1.55	6/27/2022 4:31	4.69	6/27/2022 5:54	-0.36	6/26/2022 4:47	11.59
6/26/2022 5:19	-0.10	6/27/2022 4:09	1.55	6/27/2022 4:32	4.71	6/27/2022 5:55	-0.40	6/26/2022 4:48	11.56
6/26/2022 5:20	-0.12	6/27/2022 4:10	1.55	6/27/2022 4:33	4.65	6/27/2022 5:56	-0.35	6/26/2022 4:49	11.56
6/26/2022 5:21	-0.12	6/27/2022 4:11	1.55	6/27/2022 4:34	4.66	6/27/2022 5:57	-0.30	6/26/2022 4:50	11.54
6/26/2022 5:22	-0.12	6/27/2022 4:12	1.55	6/27/2022 4:35	4.65	6/27/2022 5:58	-0.32	6/26/2022 4:51	11.56
6/26/2022 5:23	-0.12	6/27/2022 4:13	1.57	6/27/2022 4:36	4.66	6/27/2022 5:59	-0.34	6/26/2022 4:52	11.60
6/26/2022 5:24	-0.10	6/27/2022 4:14	1.55	6/27/2022 4:37	4.68	6/27/2022 6:00	-0.35	6/26/2022 4:53	11.59
6/26/2022 5:25	-0.10	6/27/2022 4:15	1.55	6/27/2022 4:38	4.65	6/27/2022 6:01	-0.34	6/26/2022 4:54	11.55
6/26/2022 5:26	-0.10	6/27/2022 4:16	1.55	6/27/2022 4:39	4.67	6/27/2022 6:02	-0.40	6/26/2022 4:55	11.59
6/26/2022 5:27	-0.10	6/27/2022 4:17	1.57	6/27/2022 4:40	4.67	6/27/2022 6:03	-0.38	6/26/2022 4:56	11.58
6/26/2022 5:28	-0.11	6/27/2022 4:18	1.55	6/27/2022 4:41	4.64	6/27/2022 6:04	-0.36	6/26/2022 4:57	11.59
6/26/2022 5:29	-0.10	6/27/2022 4:19	1.57	6/27/2022 4:42	4.65	6/27/2022 6:05	-0.37	6/26/2022 4:58	11.63
6/26/2022 5:30	-0.09	6/27/2022 4:20	1.57	6/27/2022 4:43	4.66	6/27/2022 6:06	-0.38	6/26/2022 4:59	11.55
6/26/2022 5:31	-0.10	6/27/2022 4:21	1.57	6/27/2022 4:44	4.67	6/27/2022 6:07	-0.36	6/26/2022 5:00	11.56
6/26/2022 5:32	-0.12	6/27/2022 4:22	1.55	6/27/2022 4:45	4.66	6/27/2022 6:08	-0.35	6/26/2022 5:01	11.59
6/26/2022 5:33	-0.10	6/27/2022 4:23	1.55	6/27/2022 4:46	4.63	6/27/2022 6:09	-0.37	6/26/2022 5:02	11.62
6/26/2022 5:34	-0.10	6/27/2022 4:24	1.55	6/27/2022 4:47	4.65	6/27/2022 6:10	-0.37	6/26/2022 5:03	11.61
6/26/2022 5:35	-0.11	6/27/2022 4:25	1.55	6/27/2022 4:48	4.66	6/27/2022 6:11	-0.36	6/26/2022 5:04	11.64
6/26/2022 5:36	-0.12	6/27/2022 4:26	1.55	6/27/2022 4:49	4.65	6/27/2022 6:12	-0.36	6/26/2022 5:05	11.57
6/26/2022 5:37	-0.10	6/27/2022 4:27	1.55	6/27/2022 4:50	4.68	6/27/2022 6:13	-0.36	6/26/2022 5:06	11.57
6/26/2022 5:38	-0.10	6/27/2022 4:28	1.55	6/27/2022 4:51	4.66	6/27/2022 6:14	-0.36	6/26/2022 5:07	11.63
6/26/2022 5:39	-0.12	6/27/2022 4:29	1.55	6/27/2022 4:52	4.62	6/27/2022 6:15	-0.35	6/26/2022 5:08	11.62
6/26/2022 5:40	-0.12	6/27/2022 4:30	1.55	6/27/2022 4:53	4.64	6/27/2022 6:16	-0.36	6/26/2022 5:09	11.58
6/26/2022 5:41	-0.11	6/27/2022 4:31	1.55	6/27/2022 4:54	4.67	6/27/2022 6:17	-0.38	6/26/2022 5:10	11.60
6/26/2022 5:42	-0.12	6/27/2022 4:32	1.57	6/27/2022 4:55	4.63	6/27/2022 6:18	-0.39	6/26/2022 5:11	11.58
6/26/2022 5:43	-0.10	6/27/2022 4:33	1.55	6/27/2022 4:56	4.71	6/27/2022 6:19	-0.31	6/26/2022 5:12	11.60
6/26/2022 5:44	-0.10	6/27/2022 4:34	1.54	6/27/2022 4:57	4.68	6/27/2022 6:20	-0.37	6/26/2022 5:13	11.60
6/26/2022 5:45	-0.10	6/27/2022 4:35	1.55	6/27/2022 4:58	4.69	6/27/2022 6:21	-0.37	6/26/2022 5:14	11.62
6/26/2022 5:46	-0.10	6/27/2022 4:36	1.55	6/27/2022 4:59	4.67	6/27/2022 6:22	-0.38	6/26/2022 5:15	11.57
6/26/2022 5:47	-0.12	6/27/2022 4:37	1.55	6/27/2022 5:00	4.64	6/27/2022 6:23	-0.37	6/26/2022 5:16	11.58
6/26/2022 5:48	-0.12	6/27/2022 4:38	1.55	6/27/2022 5:01	4.67	6/27/2022 6:24	-0.35	6/26/2022 5:17	11.60
6/26/2022 5:49	-0.10	6/27/2022 4:39	1.55	6/27/2022 5:02	4.69	6/27/2022 6:25	-0.34	6/26/2022 5:18	11.59
6/26/2022 5:50	-0.10	6/27/2022 4:40	1.55	6/27/2022 5:03	4.63	6/27/2022 6:26	-0.33	6/26/2022 5:19	11.58
6/26/2022 5:51	-0.12	6/27/2022 4:41	1.55	6/27/2022 5:04	4.68	6/27/2022 6:27	-0.35	6/26/2022 5:20	11.56
6/26/2022 5:52	-0.12	6/27/2022 4:42	1.55	6/27/2022 5:05	4.66	6/27/2022 6:28	-0.38	6/26/2022 5:21	11.59
6/26/2022 5:53	-0.10	6/27/2022 4:43	1.57	6/27/2022 5:06	4.65	6/27/2022 6:29	-0.35	6/26/2022 5:22	11.56
6/26/2022 5:54	-0.10	6/27/2022 4:44	1.57	6/27/2022 5:07	4.69	6/27/2022 6:30	-0.33	6/26/2022 5:23	11.56
6/26/2022 5:55	-0.10	6/27/2022 4:45	1.55	6/27/2022 5:08	4.64	6/27/2022 6:31	-0.37	6/26/2022 5:24	11.54
6/26/2022 5:56	-0.12	6/27/2022 4:46	1.55	6/27/2022 5:09	4.69	6/27/2022 6:32	-0.33	6/26/2022 5:25	11.57
6/26/2022 5:57	-0.10	6/27/2022 4:47	1.55	6/27/2022 5:10	4.66	6/27/2022 6:33	-0.38	6/26/2022 5:26	11.57
6/26/2022 5:58	-0.10	6/27/2022 4:48	1.55	6/27/2022 5:11	4.66	6/27/2022 6:34	-0.35	6/26/2022 5:27	11.57
6/26/2022 5:59	-0.10	6/27/2022 4:49	1.57	6/27/2022 5:12	4.65	6/27/2022 6:35	-0.35	6/26/2022 5:28	11.56
6/26/2022 6:00	-0.10	6/27/2022 4:50	1.57	6/27/2022 5:13	4.66	6/27/2022 6:36	-0.33	6/26/2022 5:29	11.61
6/26/2022 6:01	-0.10	6/27/2022 4:51	1.57	6/27/2022 5:14	4.67	6/27/2022 6:37	-0.36	6/26/2022 5:30	11.63
6/26/2022 6:02	-0.11	6/27/2022 4:52	1.54	6/27/2022 5:15	4.66	6/27/2022 6:38	-0.37	6/26/2022 5:31	11.54
6/26/2022 6:03	-0.11	6/27/2022 4:53	1.57	6/27/2022 5:16	4.69	6/27/2022 6:39	-0.37	6/26/2022 5:32	11.53
6/26/2022 6:04	-0.10	6/27/2022 4:54	1.55	6/27/2022 5:17	4.65	6/27/2022 6:40	-0.37	6/26/2022 5:33	11.57
6/26/2022 6:05	-0.12	6/27/2022 4:55	1.54	6/27/2022 5:18	4.67	6/27/2022 6:41	-0.36	6/26/2022 5:34	11.57
6/26/2022 6:06	-0.11	6/27/2022 4:56	1.57	6/27/2022 5:19	4.68	6/27/2022 6:42	-0.34	6/26/2022 5:35	11.57
6/26/2022 6:07	-0.12	6/27/2022 4:57	1.54	6/27/2022 5:20	4.69	6/27/2022 6:43	-0.35	6/26/2022 5:36	11.62
6/26/2022 6:08	-0.10	6/27/2022 4:58	1.54	6/27/2022 5:21	4.63	6/27/2022 6:44	-0.34	6/26/2022 5:37	11.60
6/26/2022 6:09	-0.11	6/27/2022 4:59	1.54	6/27/2022 5:22	4.64	6/27/2022 6:45	-0.39	6/26/2022 5:38	11.62
6/26/2022 6:10	-0.12	6/27/2022 5:00	1.54	6/27/2022 5:23	4.64	6/27/2022 6:46	-0.34	6/26/2022 5:39	11.60
6/26/2022 6:11	-0.12	6/27/2022 5:01	1.54	6/27/2022 5:24	4.64	6/27/2022 6:47	-0.35	6/26/2022 5:40	11.58
6/26/2022 6:12	-0.12	6/27/2022 5:02	1.54	6/27/2022 5:25	4.65	6/27/2022 6:48	-0.38	6/26/2022 5:41	11.54
6/26/2022 6:13	-0.10	6/27/2022 5:03	1.54	6/27/2022 5:26	4.69	6/27/2022 6:49	-0.35	6/26/2022 5:42	11.54
6/26/2022 6:14	-0.10	6/27/2022 5:04	1.54	6/27/2022 5:27	4.66	6/27/2022 6:50	-0.35	6/26/2022 5:43	11.53
6/26/2022 6:15	-0.11	6/27/2022 5:05	1.54	6/27/2022 5:28	4.66	6/27/2022 6:51	-0.35	6/26/2022 5:44	11.58
6/26/2022 6:16	-0.12	6/27/2022 5:06	1.54	6/27/2022 5:29	4.64	6/27/2022 6:52	-0.33	6/26/2022 5:45	11.57
6/26/2022 6:17	-0.12	6/27/2022 5:07	1.54	6/27/2022 5:30	4.66	6/27/2022 6:53	-0.37	6/26/2022 5:46	11.58
6/26/2022 6:18	-0.12	6/27/2022 5:08	1.57	6/27/2022 5:31	4.66	6/27/2022 6:54	-0.35	6/26/2022 5:47	11.58
6/26/2022 6:19	-0.11	6/27/2022 5:09	1.56	6/27/2022 5:32	4.63	6/27/2022 6:55	-0.35	6/26/2022 5:48	11.58
6/26/2022 6:20	-0.12	6/27/2022 5:10	1.54	6/27/2022 5:33	4.66	6/27/2022 6:56	-0.37	6/26/2022 5:49	11.58
6/26/2022 6:21	-0.12	6/27/2022 5:11	1.55	6/27/2022 5:34	4.68	6/27/2022 6:57	-0.36	6/26/2022 5:50	11.57
6/26/2022 6:22	-0.10	6/27/2022 5:12	1.54	6/27/2022 5:35	4.66	6/27/2022 6:58	-0.36	6/26/2022 5:51	11.59
6/26/2022 6:23	-0.10	6/27/2022 5:13	1.54	6/27/2022 5:36	4.65	6/27/2022 6:59	-0.36	6/26/2022 5:52	11.60
6/26/2022 6:24	-0.12	6/27/2022 5:14	1.55	6/27/2022 5:37	4.65	6/27/2022 7:00	-0.34	6/26/2022 5:53	11.59

6/26/2022 6:25	-0.10	6/27/2022 5:15	1.54	6/27/2022 5:38	4.63	6/27/2022 7:01	-0.35	6/26/2022 5:54	11.65
6/26/2022 6:26	-0.10	6/27/2022 5:16	1.54	6/27/2022 5:39	4.68	6/27/2022 7:02	-0.30	6/26/2022 5:55	11.53
6/26/2022 6:27	-0.10	6/27/2022 5:17	1.54	6/27/2022 5:40	4.67	6/27/2022 7:03	-0.34	6/26/2022 5:56	11.59
6/26/2022 6:28	-0.12	6/27/2022 5:18	1.54	6/27/2022 5:41	4.65	6/27/2022 7:04	-0.39	6/26/2022 5:57	11.59
6/26/2022 6:29	-0.10	6/27/2022 5:19	1.54	6/27/2022 5:42	4.69	6/27/2022 7:05	-0.37	6/26/2022 5:58	11.55
6/26/2022 6:30	-0.11	6/27/2022 5:20	1.54	6/27/2022 5:43	4.65	6/27/2022 7:06	-0.33	6/26/2022 5:59	11.58
6/26/2022 6:31	-0.12	6/27/2022 5:21	1.55	6/27/2022 5:44	4.68	6/27/2022 7:07	-0.35	6/26/2022 6:00	11.58
6/26/2022 6:32	-0.11	6/27/2022 5:22	1.55	6/27/2022 5:45	4.67	6/27/2022 7:08	-0.38	6/26/2022 6:01	11.62
6/26/2022 6:33	-0.11	6/27/2022 5:23	1.54	6/27/2022 5:46	4.64	6/27/2022 7:09	-0.35	6/26/2022 6:02	11.62
6/26/2022 6:34	-0.11	6/27/2022 5:24	1.54	6/27/2022 5:47	4.62	6/27/2022 7:10	-0.36	6/26/2022 6:03	11.57
6/26/2022 6:35	-0.10	6/27/2022 5:25	1.54	6/27/2022 5:48	4.68	6/27/2022 7:11	-0.35	6/26/2022 6:04	11.65
6/26/2022 6:36	-0.10	6/27/2022 5:26	1.54	6/27/2022 5:49	4.65	6/27/2022 7:12	-0.37	6/26/2022 6:05	11.58
6/26/2022 6:37	-0.11	6/27/2022 5:27	1.54	6/27/2022 5:50	4.65	6/27/2022 7:13	-0.38	6/26/2022 6:06	11.56
6/26/2022 6:38	-0.12	6/27/2022 5:28	1.54	6/27/2022 5:51	4.64	6/27/2022 7:14	-0.33	6/26/2022 6:07	11.63
6/26/2022 6:39	-0.10	6/27/2022 5:29	1.55	6/27/2022 5:52	4.69	6/27/2022 7:15	-0.32	6/26/2022 6:08	11.60
6/26/2022 6:40	-0.12	6/27/2022 5:30	1.54	6/27/2022 5:53	4.63	6/27/2022 7:16	-0.35	6/26/2022 6:09	11.56
6/26/2022 6:41	-0.12	6/27/2022 5:31	1.55	6/27/2022 5:54	4.63	6/27/2022 7:17	-0.36	6/26/2022 6:10	11.59
6/26/2022 6:42	-0.10	6/27/2022 5:32	1.54	6/27/2022 5:55	4.62	6/27/2022 7:18	-0.36	6/26/2022 6:11	11.57
6/26/2022 6:43	-0.12	6/27/2022 5:33	1.54	6/27/2022 5:56	4.66	6/27/2022 7:19	-0.35	6/26/2022 6:12	11.55
6/26/2022 6:44	-0.10	6/27/2022 5:34	1.54	6/27/2022 5:57	4.64	6/27/2022 7:20	-0.35	6/26/2022 6:13	11.59
6/26/2022 6:45	-0.11	6/27/2022 5:35	1.54	6/27/2022 5:58	4.65	6/27/2022 7:21	-0.39	6/26/2022 6:14	11.58
6/26/2022 6:46	-0.10	6/27/2022 5:36	1.54	6/27/2022 5:59	4.65	6/27/2022 7:22	-0.36	6/26/2022 6:15	11.60
6/26/2022 6:47	-0.10	6/27/2022 5:37	1.54	6/27/2022 6:00	4.67	6/27/2022 7:23	-0.39	6/26/2022 6:16	11.59
6/26/2022 6:48	-0.10	6/27/2022 5:38	1.56	6/27/2022 6:01	4.66	6/27/2022 7:24	-0.35	6/26/2022 6:17	11.55
6/26/2022 6:49	-0.10	6/27/2022 5:39	1.55	6/27/2022 6:02	4.63	6/27/2022 7:25	-0.31	6/26/2022 6:18	11.60
6/26/2022 6:50	-0.12	6/27/2022 5:40	1.56	6/27/2022 6:03	4.66	6/27/2022 7:26	-0.33	6/26/2022 6:19	11.57
6/26/2022 6:51	-0.10	6/27/2022 5:41	1.55	6/27/2022 6:04	4.64	6/27/2022 7:27	-0.39	6/26/2022 6:20	11.63
6/26/2022 6:52	-0.11	6/27/2022 5:42	1.55	6/27/2022 6:05	4.63	6/27/2022 7:28	-0.33	6/26/2022 6:21	11.58
6/26/2022 6:53	-0.11	6/27/2022 5:43	1.54	6/27/2022 6:06	4.66	6/27/2022 7:29	-0.37	6/26/2022 6:22	11.62
6/26/2022 6:54	-0.12	6/27/2022 5:44	1.54	6/27/2022 6:07	4.67	6/27/2022 7:30	-0.36	6/26/2022 6:23	11.55
6/26/2022 6:55	-0.11	6/27/2022 5:45	1.55	6/27/2022 6:08	4.65	6/27/2022 7:31	-0.32	6/26/2022 6:24	11.54
6/26/2022 6:56	-0.12	6/27/2022 5:46	1.54	6/27/2022 6:09	4.63	6/27/2022 7:32	-0.39	6/26/2022 6:25	11.57
6/26/2022 6:57	-0.11	6/27/2022 5:47	1.55	6/27/2022 6:10	4.69	6/27/2022 7:33	-0.32	6/26/2022 6:26	11.58
6/26/2022 6:58	-0.10	6/27/2022 5:48	1.54	6/27/2022 6:11	4.66	6/27/2022 7:34	-0.38	6/26/2022 6:27	11.59
6/26/2022 6:59	-0.10	6/27/2022 5:49	1.55	6/27/2022 6:12	4.67	6/27/2022 7:35	-0.34	6/26/2022 6:28	11.61
6/26/2022 7:00	-0.12	6/27/2022 5:50	1.55	6/27/2022 6:13	4.63	6/27/2022 7:36	-0.34	6/26/2022 6:29	11.55
6/26/2022 7:01	-0.10	6/27/2022 5:51	1.54	6/27/2022 6:14	4.65	6/27/2022 7:37	-0.35	6/26/2022 6:30	11.57
6/26/2022 7:02	-0.11	6/27/2022 5:52	1.54	6/27/2022 6:15	4.65	6/27/2022 7:38	-0.31	6/26/2022 6:31	11.61
6/26/2022 7:03	-0.12	6/27/2022 5:53	1.54	6/27/2022 6:16	4.67	6/27/2022 7:39	-0.35	6/26/2022 6:32	11.60
6/26/2022 7:04	-0.11	6/27/2022 5:54	1.55	6/27/2022 6:17	4.65	6/27/2022 7:40	-0.36	6/26/2022 6:33	11.59
6/26/2022 7:05	-0.11	6/27/2022 5:55	1.54	6/27/2022 6:18	4.67	6/27/2022 7:41	-0.35	6/26/2022 6:34	11.60
6/26/2022 7:06	-0.11	6/27/2022 5:56	1.54	6/27/2022 6:19	4.66	6/27/2022 7:42	-0.33	6/26/2022 6:35	11.56
6/26/2022 7:07	-0.10	6/27/2022 5:57	1.55	6/27/2022 6:20	4.67	6/27/2022 7:43	-0.33	6/26/2022 6:36	11.62
6/26/2022 7:08	-0.10	6/27/2022 5:58	1.55	6/27/2022 6:21	4.66	6/27/2022 7:44	-0.32	6/26/2022 6:37	11.58
6/26/2022 7:09	-0.11	6/27/2022 5:59	1.55	6/27/2022 6:22	4.65	6/27/2022 7:45	-0.35	6/26/2022 6:38	11.59
6/26/2022 7:10	-0.10	6/27/2022 6:00	1.55	6/27/2022 6:23	4.64	6/27/2022 7:46	-0.35	6/26/2022 6:39	11.59
6/26/2022 7:11	-0.12	6/27/2022 6:01	1.55	6/27/2022 6:24	4.66	6/27/2022 7:47	-0.38	6/26/2022 6:40	11.59
6/26/2022 7:12	-0.10	6/27/2022 6:02	1.55	6/27/2022 6:25	4.65	6/27/2022 7:48	-0.38	6/26/2022 6:41	11.59
6/26/2022 7:13	-0.12	6/27/2022 6:03	1.57	6/27/2022 6:26	4.69	6/27/2022 7:49	-0.40	6/26/2022 6:42	11.64
6/26/2022 7:14	-0.10	6/27/2022 6:04	1.55	6/27/2022 6:27	4.66	6/27/2022 7:50	-0.35	6/26/2022 6:43	11.58
6/26/2022 7:15	-0.10	6/27/2022 6:05	1.55	6/27/2022 6:28	4.67	6/27/2022 7:51	-0.39	6/26/2022 6:44	11.64
6/26/2022 7:16	-0.10	6/27/2022 6:06	1.54	6/27/2022 6:29	4.66	6/27/2022 7:52	-0.36	6/26/2022 6:45	11.57
6/26/2022 7:17	-0.11	6/27/2022 6:07	1.54	6/27/2022 6:30	4.66	6/27/2022 7:53	-0.35	6/26/2022 6:46	11.63
6/26/2022 7:18	-0.11	6/27/2022 6:08	1.54	6/27/2022 6:31	4.66	6/27/2022 7:54	-0.35	6/26/2022 6:47	11.53
6/26/2022 7:19	-0.12	6/27/2022 6:09	1.55	6/27/2022 6:32	4.67	6/27/2022 7:55	-0.37	6/26/2022 6:48	11.60
6/26/2022 7:20	-0.09	6/27/2022 6:10	1.55	6/27/2022 6:33	4.64	6/27/2022 7:56	-0.39	6/26/2022 6:49	11.59
6/26/2022 7:21	-0.10	6/27/2022 6:11	1.55	6/27/2022 6:34	4.65	6/27/2022 7:57	-0.35	6/26/2022 6:50	11.56
6/26/2022 7:22	-0.10	6/27/2022 6:12	1.55	6/27/2022 6:35	4.67	6/27/2022 7:58	-0.35	6/26/2022 6:51	11.59
6/26/2022 7:23	-0.10	6/27/2022 6:13	1.55	6/27/2022 6:36	4.64	6/27/2022 7:59	-0.32	6/26/2022 6:52	11.62
6/26/2022 7:24	-0.12	6/27/2022 6:14	1.54	6/27/2022 6:37	4.68	6/27/2022 8:00	-0.38	6/26/2022 6:53	11.57
6/26/2022 7:25	-0.10	6/27/2022 6:15	1.55	6/27/2022 6:38	4.65	6/27/2022 8:01	-0.34	6/26/2022 6:54	11.60
6/26/2022 7:26	-0.10	6/27/2022 6:16	1.55	6/27/2022 6:39	4.66	6/27/2022 8:02	-0.32	6/26/2022 6:55	11.62
6/26/2022 7:27	-0.11	6/27/2022 6:17	1.55	6/27/2022 6:40	4.65	6/27/2022 8:03	-0.37	6/26/2022 6:56	11.62
6/26/2022 7:28	-0.12	6/27/2022 6:18	1.55	6/27/2022 6:41	4.67	6/27/2022 8:04	-0.35	6/26/2022 6:57	11.59
6/26/2022 7:29	-0.11	6/27/2022 6:19	1.55	6/27/2022 6:42	4.66	6/27/2022 8:05	-0.33	6/26/2022 6:58	11.58
6/26/2022 7:30	-0.11	6/27/2022 6:20	1.55	6/27/2022 6:43	4.65	6/27/2022 8:06	-0.37	6/26/2022 6:59	11.59
6/26/2022 7:31	-0.10	6/27/2022 6:21	1.55	6/27/2022 6:44	4.68	6/27/2022 8:07	-0.37	6/26/2022 7:00	11.59
6/26/2022 7:32	-0.10	6/27/2022 6:22	1.55	6/27/2022 6:45	4.67	6/27/2022 8:08	-0.37	6/26/2022 7:01	11.65
6/26/2022 7:33	-0.11	6/27/2022 6:23	1.55	6/27/2022 6:46	4.65	6/27/2022 8:09	-0.33	6/26/2022 7:02	11.63
6/26/2022 7:34	-0.10	6/27/2022 6:24	1.55	6/27/2022 6:47	4.67	6/27/2022 8:10	-0.37	6/26/2022 7:03	11.57
6/26/2022 7:35	-0.11	6/27/2022 6:25	1.55	6/27/2022 6:48	4.64	6/27/2022 8:11	-0.39	6/26/2022 7:04	11.61
6/26/2022 7:36	-0.11	6/27/2022 6:26	1.55	6/27/2022 6:49	4.66	6/27/2022 8:12	-0.37	6/26/2022 7:05	11.64
6/26/2022 7:37	-0.10	6/27/2022 6:27	1.55	6/27/2022 6:50	4.65	6/27/2022 8:13	-0.37	6/26/2022 7:06	11.61
6/26/2022 7:38	-0.10	6/27/2022 6:28	1.55	6/27/2022 6:51	4.65	6/27/2022 8:14	-0.35	6/26/2022 7:07	11.61
6/26/2022 7:39	-0.10	6/27/2022 6:29	1.55	6/27/2022 6:52	4.64	6/27/2022 8:15	-0.32	6/26/2022 7:08	11.63
6/26/2022 7:40	-0.12	6/27/2022 6:30	1.55	6/27/2022 6:53	4.68	6/27/2022 8:16	-0.37	6/26/2022 7:09	11.63
6/26/2022 7:41	-0.11	6/27/2022 6:31	1.55	6/27/2022 6:54	4.65	6/27/2022 8:17	-0.38	6/26/2022 7:10	11.62
6/26/2022 7:42	-0.10	6/27/2022 6:32	1.55	6/27/2022 6:55	4.61	6/27/2022 8:18	-0.37	6/26/2022 7:11	11.56
6/26/2022 7:43	-0.10	6/27/2022 6:33	1.57	6/27/2022 6:56	4.62	6/27/2022 8:19	-0.35	6/26/2022 7:12	11.61
6/26/2022 7:44	-0.12	6/27/2022 6:34	1.55	6/27/2022 6:57	4.68	6/27/2022 8:20	-0.37	6/26/2022 7:13	11.57
6/26/2022 7:45	-0.10	6/27/2022 6:35	1.55	6/27/2022 6:58	4.69	6/27/2022 8:21	-0.34	6/26/2022 7:14	11.57
6/26/2022 7:46	-0.12	6/27/2022 6:36	1.55	6/27/2022 6:59	4.66	6/27/2022 8:22	-0.33	6/26/2022 7:15	11.58
6/26/2022 7:47	-0.11	6/27/2022 6:37	1.55	6/27/2022 7:00	4.69	6/27/2022 8:23	-0.35	6/26/2022 7:16	11.64
6/26/2022 7:48	-0.10	6/27/2022 6:38	1.55	6/27/2022 7:01	4.63	6/27/2022 8:24	-0.34	6/26/2022 7:17	11.60
6/26/2022 7:49	-0.11	6/27/2022 6:39	1.55	6/27/2022 7:02	4.68	6/27/2022 8:25	-0.30	6/26/2022 7:18	11.62
6/26/2022 7:50	-0.12	6/27/2022 6:40	1.55	6/27/2022 7:03	4.66	6/27/2022 8:26	-0.34	6/26/2022 7:19	11.60
6/26/2022 7:51	-0.10	6/27/2022 6:41	1.55	6/27/2022 7:04	4.65	6/27/2022 8:27	-0.36	6/26/2022 7:20	11.61
6/26/2022 7:52	-0.11	6/27/2022 6:42	1.55	6/27/2022 7:05	4.66	6/27/2022 8:28	-0.36	6/26/2022 7:21	11.58

6/26/2022 7:53	-0.12	6/27/2022 6:43	1.55	6/27/2022 7:06	4.65	6/27/2022 8:29	-0.38	6/26/2022 7:22	11.62
6/26/2022 7:54	-0.12	6/27/2022 6:44	1.55	6/27/2022 7:07	4.66	6/27/2022 8:30	-0.37	6/26/2022 7:23	11.54
6/26/2022 7:55	-0.11	6/27/2022 6:45	1.55	6/27/2022 7:08	4.66	6/27/2022 8:31	-0.37	6/26/2022 7:24	11.57
6/26/2022 7:56	-0.12	6/27/2022 6:46	1.55	6/27/2022 7:09	4.69	6/27/2022 8:32	-0.38	6/26/2022 7:25	11.63
6/26/2022 7:57	-0.12	6/27/2022 6:47	1.55	6/27/2022 7:10	4.66	6/27/2022 8:33	-0.36	6/26/2022 7:26	11.64
6/26/2022 7:58	-0.12	6/27/2022 6:48	1.55	6/27/2022 7:11	4.65	6/27/2022 8:34	-0.33	6/26/2022 7:27	11.52
6/26/2022 7:59	-0.12	6/27/2022 6:49	1.55	6/27/2022 7:12	4.66	6/27/2022 8:35	-0.34	6/26/2022 7:28	11.60
6/26/2022 8:00	-0.11	6/27/2022 6:50	1.55	6/27/2022 7:13	4.67	6/27/2022 8:36	-0.35	6/26/2022 7:29	11.62
6/26/2022 8:01	-0.12	6/27/2022 6:51	1.55	6/27/2022 7:14	4.66	6/27/2022 8:37	-0.33	6/26/2022 7:30	11.61
6/26/2022 8:02	-0.11	6/27/2022 6:52	1.55	6/27/2022 7:15	4.66	6/27/2022 8:38	-0.37	6/26/2022 7:31	11.58
6/26/2022 8:03	-0.10	6/27/2022 6:53	1.55	6/27/2022 7:16	4.66	6/27/2022 8:39	-0.38	6/26/2022 7:32	11.55
6/26/2022 8:04	-0.11	6/27/2022 6:54	1.55	6/27/2022 7:17	4.65	6/27/2022 8:40	-0.34	6/26/2022 7:33	11.59
6/26/2022 8:05	-0.10	6/27/2022 6:55	1.55	6/27/2022 7:18	4.67	6/27/2022 8:41	-0.32	6/26/2022 7:34	11.57
6/26/2022 8:06	-0.10	6/27/2022 6:56	1.55	6/27/2022 7:19	4.65	6/27/2022 8:42	-0.36	6/26/2022 7:35	11.57
6/26/2022 8:07	-0.09	6/27/2022 6:57	1.55	6/27/2022 7:20	4.68	6/27/2022 8:43	-0.35	6/26/2022 7:36	11.62
6/26/2022 8:08	-0.11	6/27/2022 6:58	1.55	6/27/2022 7:21	4.65	6/27/2022 8:44	-0.36	6/26/2022 7:37	11.57
6/26/2022 8:09	-0.12	6/27/2022 6:59	1.55	6/27/2022 7:22	4.65	6/27/2022 8:45	-0.36	6/26/2022 7:38	11.61
6/26/2022 8:10	-0.11	6/27/2022 7:00	1.55	6/27/2022 7:23	4.65	6/27/2022 8:46	-0.34	6/26/2022 7:39	11.63
6/26/2022 8:11	-0.10	6/27/2022 7:01	1.55	6/27/2022 7:24	4.66	6/27/2022 8:47	-0.32	6/26/2022 7:40	11.65
6/26/2022 8:12	-0.10	6/27/2022 7:02	1.55	6/27/2022 7:25	4.65	6/27/2022 8:48	-0.33	6/26/2022 7:41	11.60
6/26/2022 8:13	-0.10	6/27/2022 7:03	1.57	6/27/2022 7:26	4.69	6/27/2022 8:49	-0.35	6/26/2022 7:42	11.55
6/26/2022 8:14	-0.12	6/27/2022 7:04	1.55	6/27/2022 7:27	4.62	6/27/2022 8:50	-0.37	6/26/2022 7:43	11.61
6/26/2022 8:15	-0.12	6/27/2022 7:05	1.55	6/27/2022 7:28	4.68	6/27/2022 8:51	-0.35	6/26/2022 7:44	11.55
6/26/2022 8:16	-0.11	6/27/2022 7:06	1.57	6/27/2022 7:29	4.73	6/27/2022 8:52	-0.38	6/26/2022 7:45	11.58
6/26/2022 8:17	-0.10	6/27/2022 7:07	1.55	6/27/2022 7:30	4.69	6/27/2022 8:53	-0.36	6/26/2022 7:46	11.61
6/26/2022 8:18	-0.10	6/27/2022 7:08	1.57	6/27/2022 7:31	4.69	6/27/2022 8:54	-0.35	6/26/2022 7:47	11.58
6/26/2022 8:19	-0.10	6/27/2022 7:09	1.55	6/27/2022 7:32	4.62	6/27/2022 8:55	-0.37	6/26/2022 7:48	11.58
6/26/2022 8:20	-0.11	6/27/2022 7:10	1.55	6/27/2022 7:33	4.64	6/27/2022 8:56	-0.33	6/26/2022 7:49	11.66
6/26/2022 8:21	-0.11	6/27/2022 7:11	1.55	6/27/2022 7:34	4.66	6/27/2022 8:57	-0.36	6/26/2022 7:50	11.63
6/26/2022 8:22	-0.10	6/27/2022 7:12	1.55	6/27/2022 7:35	4.65	6/27/2022 8:58	-0.33	6/26/2022 7:51	11.65
6/26/2022 8:23	-0.11	6/27/2022 7:13	1.57	6/27/2022 7:36	4.67	6/27/2022 8:59	-0.34	6/26/2022 7:52	11.61
6/26/2022 8:24	-0.10	6/27/2022 7:14	1.55	6/27/2022 7:37	4.68	6/27/2022 9:00	-0.34	6/26/2022 7:53	11.66
6/26/2022 8:25	-0.10	6/27/2022 7:15	1.55	6/27/2022 7:38	4.65	6/27/2022 9:01	-0.35	6/26/2022 7:54	11.65
6/26/2022 8:26	-0.10	6/27/2022 7:16	1.55	6/27/2022 7:39	4.67	6/27/2022 9:02	-0.35	6/26/2022 7:55	11.57
6/26/2022 8:27	-0.10	6/27/2022 7:17	1.55	6/27/2022 7:40	4.70	6/27/2022 9:03	-0.36	6/26/2022 7:56	11.55
6/26/2022 8:28	-0.10	6/27/2022 7:18	1.57	6/27/2022 7:41	4.67	6/27/2022 9:04	-0.35	6/26/2022 7:57	11.61
6/26/2022 8:29	-0.12	6/27/2022 7:19	1.55	6/27/2022 7:42	4.67	6/27/2022 9:05	-0.36	6/26/2022 7:58	11.62
6/26/2022 8:30	-0.12	6/27/2022 7:20	1.55	6/27/2022 7:43	4.68	6/27/2022 9:06	-0.39	6/26/2022 7:59	11.63
6/26/2022 8:31	-0.12	6/27/2022 7:21	1.58	6/27/2022 7:44	4.66	6/27/2022 9:07	-0.37	6/26/2022 8:00	11.63
6/26/2022 8:32	-0.11	6/27/2022 7:22	1.55	6/27/2022 7:45	4.67	6/27/2022 9:08	-0.39	6/26/2022 8:01	11.61
6/26/2022 8:33	-0.10	6/27/2022 7:23	1.55	6/27/2022 7:46	4.69	6/27/2022 9:09	-0.36	6/26/2022 8:02	11.62
6/26/2022 8:34	-0.12	6/27/2022 7:24	1.55	6/27/2022 7:47	4.63	6/27/2022 9:10	-0.35	6/26/2022 8:03	11.57
6/26/2022 8:35	-0.12	6/27/2022 7:25	1.55	6/27/2022 7:48	4.70	6/27/2022 9:11	-0.37	6/26/2022 8:04	11.63
6/26/2022 8:36	-0.10	6/27/2022 7:26	1.55	6/27/2022 7:49	4.74	6/27/2022 9:12	-0.34	6/26/2022 8:05	11.60
6/26/2022 8:37	-0.12	6/27/2022 7:27	1.55	6/27/2022 7:50	4.67	6/27/2022 9:13	-0.32	6/26/2022 8:06	11.61
6/26/2022 8:38	-0.12	6/27/2022 7:28	1.57	6/27/2022 7:51	4.66	6/27/2022 9:14	-0.35	6/26/2022 8:07	11.59
6/26/2022 8:39	-0.12	6/27/2022 7:29	1.55	6/27/2022 7:52	4.67	6/27/2022 9:15	-0.33	6/26/2022 8:08	11.61
6/26/2022 8:40	-0.10	6/27/2022 7:30	1.55	6/27/2022 7:53	4.66	6/27/2022 9:16	-0.34	6/26/2022 8:09	11.59
6/26/2022 8:41	-0.10	6/27/2022 7:31	1.56	6/27/2022 7:54	4.65	6/27/2022 9:17	-0.35	6/26/2022 8:10	11.56
6/26/2022 8:42	-0.10	6/27/2022 7:32	1.55	6/27/2022 7:55	4.67	6/27/2022 9:18	-0.38	6/26/2022 8:11	11.60
6/26/2022 8:43	-0.10	6/27/2022 7:33	1.55	6/27/2022 7:56	4.65	6/27/2022 9:19	-0.32	6/26/2022 8:12	11.64
6/26/2022 8:44	-0.12	6/27/2022 7:34	1.55	6/27/2022 7:57	4.67	6/27/2022 9:20	-0.43	6/26/2022 8:13	11.61
6/26/2022 8:45	-0.10	6/27/2022 7:35	1.55	6/27/2022 7:58	4.68	6/27/2022 9:21	-0.39	6/26/2022 8:14	11.58
6/26/2022 8:46	-0.10	6/27/2022 7:36	1.55	6/27/2022 7:59	4.65	6/27/2022 9:22	-0.32	6/26/2022 8:15	11.60
6/26/2022 8:47	-0.10	6/27/2022 7:37	1.55	6/27/2022 8:00	4.66	6/27/2022 9:23	-0.39	6/26/2022 8:16	11.58
6/26/2022 8:48	-0.11	6/27/2022 7:38	1.55	6/27/2022 8:01	4.69	6/27/2022 9:24	-0.33	6/26/2022 8:17	11.62
6/26/2022 8:49	-0.10	6/27/2022 7:39	1.55	6/27/2022 8:02	4.71	6/27/2022 9:25	-0.39	6/26/2022 8:18	11.57
6/26/2022 8:50	-0.10	6/27/2022 7:40	1.55	6/27/2022 8:03	4.69	6/27/2022 9:26	-0.36	6/26/2022 8:19	11.61
6/26/2022 8:51	-0.10	6/27/2022 7:41	1.55	6/27/2022 8:04	4.66	6/27/2022 9:27	-0.38	6/26/2022 8:20	11.63
6/26/2022 8:52	-0.10	6/27/2022 7:42	1.56	6/27/2022 8:05	4.70	6/27/2022 9:28	-0.34	6/26/2022 8:21	11.58
6/26/2022 8:53	-0.10	6/27/2022 7:43	1.56	6/27/2022 8:06	4.67	6/27/2022 9:29	-0.35	6/26/2022 8:22	11.60
6/26/2022 8:54	-0.12	6/27/2022 7:44	1.56	6/27/2022 8:07	4.68	6/27/2022 9:30	-0.36	6/26/2022 8:23	11.60
6/26/2022 8:55	-0.10	6/27/2022 7:45	1.56	6/27/2022 8:08	4.71	6/27/2022 9:31	-0.37	6/26/2022 8:24	11.59
6/26/2022 8:56	-0.11	6/27/2022 7:46	1.58	6/27/2022 8:09	4.68	6/27/2022 9:32	-0.36	6/26/2022 8:25	11.60
6/26/2022 8:57	-0.10	6/27/2022 7:47	1.58	6/27/2022 8:10	4.67	6/27/2022 9:33	-0.35	6/26/2022 8:26	11.58
6/26/2022 8:58	-0.09	6/27/2022 7:48	1.58	6/27/2022 8:11	4.67	6/27/2022 9:34	-0.33	6/26/2022 8:27	11.57
6/26/2022 8:59	-0.10	6/27/2022 7:49	1.55	6/27/2022 8:12	4.70	6/27/2022 9:35	-0.35	6/26/2022 8:28	11.65
6/26/2022 9:00	-0.11	6/27/2022 7:50	1.56	6/27/2022 8:13	4.67	6/27/2022 9:36	-0.31	6/26/2022 8:29	11.60
6/26/2022 9:01	-0.10	6/27/2022 7:51	1.55	6/27/2022 8:14	4.66	6/27/2022 9:37	-0.38	6/26/2022 8:30	11.61
6/26/2022 9:02	-0.12	6/27/2022 7:52	1.56	6/27/2022 8:15	4.70	6/27/2022 9:38	-0.35	6/26/2022 8:31	11.59
6/26/2022 9:03	-0.11	6/27/2022 7:53	1.56	6/27/2022 8:16	4.67	6/27/2022 9:39	-0.35	6/26/2022 8:32	11.57
6/26/2022 9:04	-0.10	6/27/2022 7:54	1.56	6/27/2022 8:17	4.71	6/27/2022 9:40	-0.32	6/26/2022 8:33	11.59
6/26/2022 9:05	-0.12	6/27/2022 7:55	1.58	6/27/2022 8:18	4.69	6/27/2022 9:41	-0.37	6/26/2022 8:34	11.63
6/26/2022 9:06	-0.12	6/27/2022 7:56	1.55	6/27/2022 8:19	4.68	6/27/2022 9:42	-0.37	6/26/2022 8:35	11.56
6/26/2022 9:07	-0.10	6/27/2022 7:57	1.56	6/27/2022 8:20	4.69	6/27/2022 9:43	-0.35	6/26/2022 8:36	11.62
6/26/2022 9:08	-0.11	6/27/2022 7:58	1.55	6/27/2022 8:21	4.67	6/27/2022 9:44	-0.34	6/26/2022 8:37	11.58
6/26/2022 9:09	-0.10	6/27/2022 7:59	1.56	6/27/2022 8:22	4.67	6/27/2022 9:45	-0.37	6/26/2022 8:38	11.61
6/26/2022 9:10	-0.10	6/27/2022 8:00	1.58	6/27/2022 8:23	4.69	6/27/2022 9:46	-0.39	6/26/2022 8:39	11.60
6/26/2022 9:11	-0.12	6/27/2022 8:01	1.58	6/27/2022 8:24	4.69	6/27/2022 9:47	-0.34	6/26/2022 8:40	11.58
6/26/2022 9:12	-0.10	6/27/2022 8:02	1.56	6/27/2022 8:25	4.71	6/27/2022 9:48	-0.34	6/26/2022 8:41	11.59
6/26/2022 9:13	-0.11	6/27/2022 8:03	1.56	6/27/2022 8:26	4.67	6/27/2022 9:49	-0.32	6/26/2022 8:42	11.62
6/26/2022 9:14	-0.11	6/27/2022 8:04	1.58	6/27/2022 8:27	4.71	6/27/2022 9:50	-0.31	6/26/2022 8:43	11.65
6/26/2022 9:15	-0.11	6/27/2022 8:05	1.58	6/27/2022 8:28	4.72	6/27/2022 9:51	-0.34	6/26/2022 8:44	11.58
6/26/2022 9:16	-0.10	6/27/2022 8:06	1.56	6/27/2022 8:29	4.68	6/27/2022 9:52	-0.34	6/26/2022 8:45	11.60
6/26/2022 9:17	-0.11	6/27/2022 8:07	1.56	6/27/2022 8:30	4.69	6/27/2022 9:53	-0.34	6/26/2022 8:46	11.64
6/26/2022 9:18	-0.11	6/27/2022 8:08	1.58	6/27/2022 8:31	4.70	6/27/2022 9:54	-0.37	6/26/2022 8:47	11.62
6/26/2022 9:19	-0.10	6/27/2022 8:09	1.56	6/27/2022 8:32	4.71	6/27/2022 9:55	-0.35	6/26/2022 8:48	11.58
6/26/2022 9:20	-0.10	6/27/2022 8:10	1.58	6/27/2022 8:33	4.69	6/27/2022 9:56	-0.32	6/26/2022 8:49	11.65

6/26/2022 9:21	-0.11	6/27/2022 8:11	1.56	6/27/2022 8:34	4.72	6/27/2022 9:57	-0.36	6/26/2022 8:50	11.57
6/26/2022 9:22	-0.12	6/27/2022 8:12	1.56	6/27/2022 8:35	4.68	6/27/2022 9:58	-0.36	6/26/2022 8:51	11.60
6/26/2022 9:23	-0.10	6/27/2022 8:13	1.56	6/27/2022 8:36	4.69	6/27/2022 9:59	-0.35	6/26/2022 8:52	11.64
6/26/2022 9:24	-0.10	6/27/2022 8:14	1.56	6/27/2022 8:37	4.70	6/27/2022 10:00	-0.33	6/26/2022 8:53	11.57
6/26/2022 9:25	-0.10	6/27/2022 8:15	1.56	6/27/2022 8:38	4.69	6/27/2022 10:01	-0.37	6/26/2022 8:54	11.62
6/26/2022 9:26	-0.12	6/27/2022 8:16	1.56	6/27/2022 8:39	4.68	6/27/2022 10:02	-0.36	6/26/2022 8:55	11.60
6/26/2022 9:27	-0.12	6/27/2022 8:17	1.56	6/27/2022 8:40	4.70	6/27/2022 10:03	-0.37	6/26/2022 8:56	11.59
6/26/2022 9:28	-0.10	6/27/2022 8:18	1.56	6/27/2022 8:41	4.71	6/27/2022 10:04	-0.34	6/26/2022 8:57	11.58
6/26/2022 9:29	-0.11	6/27/2022 8:19	1.56	6/27/2022 8:42	4.70	6/27/2022 10:05	-0.32	6/26/2022 8:58	11.59
6/26/2022 9:30	-0.12	6/27/2022 8:20	1.56	6/27/2022 8:43	4.68	6/27/2022 10:06	-0.36	6/26/2022 8:59	11.63
6/26/2022 9:31	-0.11	6/27/2022 8:21	1.56	6/27/2022 8:44	4.71	6/27/2022 10:07	-0.36	6/26/2022 9:00	11.59
6/26/2022 9:32	-0.12	6/27/2022 8:22	1.56	6/27/2022 8:45	4.69	6/27/2022 10:08	-0.33	6/26/2022 9:01	11.55
6/26/2022 9:33	-0.10	6/27/2022 8:23	1.56	6/27/2022 8:46	4.70	6/27/2022 10:09	-0.34	6/26/2022 9:02	11.56
6/26/2022 9:34	-0.12	6/27/2022 8:24	1.56	6/27/2022 8:47	4.70	6/27/2022 10:10	-0.34	6/26/2022 9:03	11.63
6/26/2022 9:35	-0.12	6/27/2022 8:25	1.58	6/27/2022 8:48	4.70	6/27/2022 10:11	-0.38	6/26/2022 9:04	11.62
6/26/2022 9:36	-0.11	6/27/2022 8:26	1.58	6/27/2022 8:49	4.68	6/27/2022 10:12	-0.39	6/26/2022 9:05	11.55
6/26/2022 9:37	-0.10	6/27/2022 8:27	1.56	6/27/2022 8:50	4.71	6/27/2022 10:13	-0.33	6/26/2022 9:06	11.60
6/26/2022 9:38	-0.12	6/27/2022 8:28	1.56	6/27/2022 8:51	4.73	6/27/2022 10:14	-0.35	6/26/2022 9:07	11.59
6/26/2022 9:39	-0.10	6/27/2022 8:29	1.56	6/27/2022 8:52	4.69	6/27/2022 10:15	-0.35	6/26/2022 9:08	11.61
6/26/2022 9:40	-0.12	6/27/2022 8:30	1.56	6/27/2022 8:53	4.71	6/27/2022 10:16	-0.37	6/26/2022 9:09	11.59
6/26/2022 9:41	-0.12	6/27/2022 8:31	1.56	6/27/2022 8:54	4.70	6/27/2022 10:17	-0.40	6/26/2022 9:10	11.61
6/26/2022 9:42	-0.12	6/27/2022 8:32	1.56	6/27/2022 8:55	4.70	6/27/2022 10:18	-0.36	6/26/2022 9:11	11.54
6/26/2022 9:43	-0.10	6/27/2022 8:33	1.58	6/27/2022 8:56	4.71	6/27/2022 10:19	-0.36	6/26/2022 9:12	11.63
6/26/2022 9:44	-0.10	6/27/2022 8:34	1.57	6/27/2022 8:57	4.69	6/27/2022 10:20	-0.37	6/26/2022 9:13	11.63
6/26/2022 9:45	-0.12	6/27/2022 8:35	1.56	6/27/2022 8:58	4.68	6/27/2022 10:21	-0.31	6/26/2022 9:14	11.61
6/26/2022 9:46	-0.12	6/27/2022 8:36	1.56	6/27/2022 8:59	4.72	6/27/2022 10:22	-0.34	6/26/2022 9:15	11.62
6/26/2022 9:47	-0.12	6/27/2022 8:37	1.56	6/27/2022 9:00	4.69	6/27/2022 10:23	-0.32	6/26/2022 9:16	11.61
6/26/2022 9:48	-0.11	6/27/2022 8:38	1.58	6/27/2022 9:01	4.68	6/27/2022 10:24	-0.35	6/26/2022 9:17	11.57
6/26/2022 9:49	-0.11	6/27/2022 8:39	1.56	6/27/2022 9:02	4.70	6/27/2022 10:25	-0.34	6/26/2022 9:18	11.60
6/26/2022 9:50	-0.12	6/27/2022 8:40	1.56	6/27/2022 9:03	4.69	6/27/2022 10:26	-0.33	6/26/2022 9:19	11.61
6/26/2022 9:51	-0.12	6/27/2022 8:41	1.57	6/27/2022 9:04	4.73	6/27/2022 10:27	-0.33	6/26/2022 9:20	11.60
6/26/2022 9:52	-0.09	6/27/2022 8:42	1.56	6/27/2022 9:05	4.71	6/27/2022 10:28	-0.32	6/26/2022 9:21	11.59
6/26/2022 9:53	-0.10	6/27/2022 8:43	1.56	6/27/2022 9:06	4.70	6/27/2022 10:29	-0.35	6/26/2022 9:22	11.62
6/26/2022 9:54	-0.12	6/27/2022 8:44	1.57	6/27/2022 9:07	4.70	6/27/2022 10:30	-0.38	6/26/2022 9:23	11.62
6/26/2022 9:55	-0.10	6/27/2022 8:45	1.57	6/27/2022 9:08	4.70	6/27/2022 10:31	-0.36	6/26/2022 9:24	11.62
6/26/2022 9:56	-0.12	6/27/2022 8:46	1.57	6/27/2022 9:09	4.67	6/27/2022 10:32	-0.35	6/26/2022 9:25	11.57
6/26/2022 9:57	-0.12	6/27/2022 8:47	1.59	6/27/2022 9:10	4.67	6/27/2022 10:33	-0.37	6/26/2022 9:26	11.64
6/26/2022 9:58	-0.12	6/27/2022 8:48	1.57	6/27/2022 9:11	4.70	6/27/2022 10:34	-0.35	6/26/2022 9:27	11.66
6/26/2022 9:59	-0.12	6/27/2022 8:49	1.56	6/27/2022 9:12	4.71	6/27/2022 10:35	-0.37	6/26/2022 9:28	11.56
6/26/2022 10:00	-0.10	6/27/2022 8:50	1.59	6/27/2022 9:13	4.72	6/27/2022 10:36	-0.35	6/26/2022 9:29	11.57
6/26/2022 10:01	-0.12	6/27/2022 8:51	1.57	6/27/2022 9:14	4.67	6/27/2022 10:37	-0.36	6/26/2022 9:30	11.62
6/26/2022 10:02	-0.12	6/27/2022 8:52	1.56	6/27/2022 9:15	4.69	6/27/2022 10:38	-0.38	6/26/2022 9:31	11.61
6/26/2022 10:03	-0.12	6/27/2022 8:53	1.57	6/27/2022 9:16	4.69	6/27/2022 10:39	-0.34	6/26/2022 9:32	11.64
6/26/2022 10:04	-0.10	6/27/2022 8:54	1.57	6/27/2022 9:17	4.72	6/27/2022 10:40	-0.38	6/26/2022 9:33	11.61
6/26/2022 10:05	-0.10	6/27/2022 8:55	1.57	6/27/2022 9:18	4.72	6/27/2022 10:41	-0.32	6/26/2022 9:34	11.61
6/26/2022 10:06	-0.12	6/27/2022 8:56	1.57	6/27/2022 9:19	4.71	6/27/2022 10:42	-0.35	6/26/2022 9:35	11.61
6/26/2022 10:07	-0.11	6/27/2022 8:57	1.57	6/27/2022 9:20	4.70	6/27/2022 10:43	-0.35	6/26/2022 9:36	11.64
6/26/2022 10:08	-0.12	6/27/2022 8:58	1.57	6/27/2022 9:21	4.70	6/27/2022 10:44	-0.35	6/26/2022 9:37	11.59
6/26/2022 10:09	-0.12	6/27/2022 8:59	1.57	6/27/2022 9:22	4.69	6/27/2022 10:45	-0.36	6/26/2022 9:38	11.60
6/26/2022 10:10	-0.10	6/27/2022 9:00	1.57	6/27/2022 9:23	4.71	6/27/2022 10:46	-0.34	6/26/2022 9:39	11.57
6/26/2022 10:11	-0.12	6/27/2022 9:01	1.57	6/27/2022 9:24	4.67	6/27/2022 10:47	-0.32	6/26/2022 9:40	11.62
6/26/2022 10:12	-0.12	6/27/2022 9:02	1.59	6/27/2022 9:25	4.71	6/27/2022 10:48	-0.35	6/26/2022 9:41	11.62
6/26/2022 10:13	-0.10	6/27/2022 9:03	1.57	6/27/2022 9:26	4.69	6/27/2022 10:49	-0.32	6/26/2022 9:42	11.65
6/26/2022 10:14	-0.12	6/27/2022 9:04	1.57	6/27/2022 9:27	4.72	6/27/2022 10:50	-0.36	6/26/2022 9:43	11.64
6/26/2022 10:15	-0.10	6/27/2022 9:05	1.57	6/27/2022 9:28	4.69	6/27/2022 10:51	-0.35	6/26/2022 9:44	11.59
6/26/2022 10:16	-0.10	6/27/2022 9:06	1.57	6/27/2022 9:29	4.70	6/27/2022 10:52	-0.32	6/26/2022 9:45	11.59
6/26/2022 10:17	-0.12	6/27/2022 9:07	1.57	6/27/2022 9:30	4.71	6/27/2022 10:53	-0.38	6/26/2022 9:46	11.55
6/26/2022 10:18	-0.10	6/27/2022 9:08	1.58	6/27/2022 9:31	4.68	6/27/2022 10:54	-0.35	6/26/2022 9:47	11.64
6/26/2022 10:19	-0.10	6/27/2022 9:09	1.57	6/27/2022 9:32	4.69	6/27/2022 10:55	-0.35	6/26/2022 9:48	11.57
6/26/2022 10:20	-0.10	6/27/2022 9:10	1.57	6/27/2022 9:33	4.73	6/27/2022 10:56	-0.35	6/26/2022 9:49	11.61
6/26/2022 10:21	-0.11	6/27/2022 9:11	1.57	6/27/2022 9:34	4.66	6/27/2022 10:57	-0.35	6/26/2022 9:50	11.61
6/26/2022 10:22	-0.10	6/27/2022 9:12	1.57	6/27/2022 9:35	4.73	6/27/2022 10:58	-0.35	6/26/2022 9:51	11.61
6/26/2022 10:23	-0.12	6/27/2022 9:13	1.57	6/27/2022 9:36	4.69	6/27/2022 10:59	-0.38	6/26/2022 9:52	11.62
6/26/2022 10:24	-0.11	6/27/2022 9:14	1.57	6/27/2022 9:37	4.69	6/27/2022 11:00	-0.35	6/26/2022 9:53	11.62
6/26/2022 10:25	-0.12	6/27/2022 9:15	1.57	6/27/2022 9:38	4.68	6/27/2022 11:01	-0.35	6/26/2022 9:54	11.64
6/26/2022 10:26	-0.12	6/27/2022 9:16	1.57	6/27/2022 9:39	4.70	6/27/2022 11:02	-0.30	6/26/2022 9:55	11.63
6/26/2022 10:27	-0.09	6/27/2022 9:17	1.57	6/27/2022 9:40	4.69	6/27/2022 11:03	-0.36	6/26/2022 9:56	11.61
6/26/2022 10:28	-0.12	6/27/2022 9:18	1.57	6/27/2022 9:41	4.67	6/27/2022 11:04	-0.36	6/26/2022 9:57	11.61
6/26/2022 10:29	-0.11	6/27/2022 9:19	1.57	6/27/2022 9:42	4.69	6/27/2022 11:05	-0.38	6/26/2022 9:58	11.61
6/26/2022 10:30	-0.11	6/27/2022 9:20	1.57	6/27/2022 9:43	4.69	6/27/2022 11:06	-0.36	6/26/2022 9:59	11.62
6/26/2022 10:31	-0.10	6/27/2022 9:21	1.57	6/27/2022 9:44	4.72	6/27/2022 11:07	-0.36	6/26/2022 10:00	11.60
6/26/2022 10:32	-0.10	6/27/2022 9:22	1.57	6/27/2022 9:45	4.69	6/27/2022 11:08	-0.37	6/26/2022 10:01	11.60
6/26/2022 10:33	-0.10	6/27/2022 9:23	1.57	6/27/2022 9:46	4.72	6/27/2022 11:09	-0.37	6/26/2022 10:02	11.61
6/26/2022 10:34	-0.10	6/27/2022 9:24	1.57	6/27/2022 9:47	4.73	6/27/2022 11:10	-0.35	6/26/2022 10:03	11.59
6/26/2022 10:35	-0.10	6/27/2022 9:25	1.57	6/27/2022 9:48	4.69	6/27/2022 11:11	-0.39	6/26/2022 10:04	11.64
6/26/2022 10:36	-0.12	6/27/2022 9:26	1.57	6/27/2022 9:49	4.70	6/27/2022 11:12	-0.33	6/26/2022 10:05	11.59
6/26/2022 10:37	-0.10	6/27/2022 9:27	1.57	6/27/2022 9:50	4.67	6/27/2022 11:13	-0.33	6/26/2022 10:06	11.60
6/26/2022 10:38	-0.10	6/27/2022 9:28	1.57	6/27/2022 9:51	4.71	6/27/2022 11:14	-0.35	6/26/2022 10:07	11.56
6/26/2022 10:39	-0.12	6/27/2022 9:29	1.57	6/27/2022 9:52	4.68	6/27/2022 11:15	-0.33	6/26/2022 10:08	11.58
6/26/2022 10:40	-0.12	6/27/2022 9:30	1.57	6/27/2022 9:53	4.64	6/27/2022 11:16	-0.40	6/26/2022 10:09	11.62
6/26/2022 10:41	-0.10	6/27/2022 9:31	1.57	6/27/2022 9:54	4.72	6/27/2022 11:17	-0.32	6/26/2022 10:10	11.65
6/26/2022 10:42	-0.12	6/27/2022 9:32	1.57	6/27/2022 9:55	4.71	6/27/2022 11:18	-0.35	6/26/2022 10:11	11.58
6/26/2022 10:43	-0.10	6/27/2022 9:33	1.57	6/27/2022 9:56	4.71	6/27/2022 11:19	-0.36	6/26/2022 10:12	11.62
6/26/2022 10:44	-0.10	6/27/2022 9:34	1.57	6/27/2022 9:57	4.69	6/27/2022 11:20	-0.30	6/26/2022 10:13	11.67
6/26/2022 10:45	-0.10	6/27/2022 9:35	1.59	6/27/2022 9:58	4.67	6/27/2022 11:21	-0.34	6/26/2022 10:14	11.60
6/26/2022 10:46	-0.12	6/27/2022 9:36	1.57	6/27/2022 9:59	4.70	6/27/2022 11:22	-0.34	6/26/2022 10:15	11.61
6/26/2022 10:47	-0.10	6/27/2022 9:37	1.57	6/27/2022 10:00	4.70	6/27/2022 11:23	-0.33	6/26/2022 10:16	11.57
6/26/2022 10:48	-0.11	6/27/2022 9:38	1.57	6/27/2022 10:01	4.70	6/27/2022 11:24	-0.33	6/26/2022 10:17	11.63

6/26/2022 10:49	-0.12	6/27/2022 9:39	1.57	6/27/2022 10:02	4.67	6/27/2022 11:25	-0.31	6/26/2022 10:18	11.59
6/26/2022 10:50	-0.12	6/27/2022 9:40	1.57	6/27/2022 10:03	4.68	6/27/2022 11:26	-0.34	6/26/2022 10:19	11.62
6/26/2022 10:51	-0.11	6/27/2022 9:41	1.59	6/27/2022 10:04	4.69	6/27/2022 11:27	-0.34	6/26/2022 10:20	11.65
6/26/2022 10:52	-0.10	6/27/2022 9:42	1.57	6/27/2022 10:05	4.69	6/27/2022 11:28	-0.36	6/26/2022 10:21	11.58
6/26/2022 10:53	-0.10	6/27/2022 9:43	1.57	6/27/2022 10:06	4.74	6/27/2022 11:29	-0.37	6/26/2022 10:22	11.63
6/26/2022 10:54	-0.11	6/27/2022 9:44	1.57	6/27/2022 10:07	4.70	6/27/2022 11:30	-0.37	6/26/2022 10:23	11.63
6/26/2022 10:55	-0.11	6/27/2022 9:45	1.60	6/27/2022 10:08	4.70	6/27/2022 11:31	-0.34	6/26/2022 10:24	11.68
6/26/2022 10:56	-0.11	6/27/2022 9:46	1.59	6/27/2022 10:09	4.67	6/27/2022 11:32	-0.35	6/26/2022 10:25	11.63
6/26/2022 10:57	-0.11	6/27/2022 9:47	1.57	6/27/2022 10:10	4.68	6/27/2022 11:33	-0.34	6/26/2022 10:26	11.63
6/26/2022 10:58	-0.10	6/27/2022 9:48	1.57	6/27/2022 10:11	4.68	6/27/2022 11:34	-0.36	6/26/2022 10:27	11.65
6/26/2022 10:59	-0.11	6/27/2022 9:49	1.57	6/27/2022 10:12	4.68	6/27/2022 11:35	-0.36	6/26/2022 10:28	11.59
6/26/2022 11:00	-0.11	6/27/2022 9:50	1.57	6/27/2022 10:13	4.67	6/27/2022 11:36	-0.33	6/26/2022 10:29	11.60
6/26/2022 11:01	-0.10	6/27/2022 9:51	1.57	6/27/2022 10:14	4.71	6/27/2022 11:37	-0.36	6/26/2022 10:30	11.60
6/26/2022 11:02	-0.10	6/27/2022 9:52	1.57	6/27/2022 10:15	4.69	6/27/2022 11:38	-0.29	6/26/2022 10:31	11.63
6/26/2022 11:03	-0.10	6/27/2022 9:53	1.57	6/27/2022 10:16	4.71	6/27/2022 11:39	-0.37	6/26/2022 10:32	11.65
6/26/2022 11:04	-0.12	6/27/2022 9:54	1.59	6/27/2022 10:17	4.70	6/27/2022 11:40	-0.35	6/26/2022 10:33	11.58
6/26/2022 11:05	-0.10	6/27/2022 9:55	1.57	6/27/2022 10:18	4.70	6/27/2022 11:41	-0.33	6/26/2022 10:34	11.64
6/26/2022 11:06	-0.12	6/27/2022 9:56	1.57	6/27/2022 10:19	4.70	6/27/2022 11:42	-0.32	6/26/2022 10:35	11.66
6/26/2022 11:07	-0.10	6/27/2022 9:57	1.57	6/27/2022 10:20	4.69	6/27/2022 11:43	-0.37	6/26/2022 10:36	11.62
6/26/2022 11:08	-0.10	6/27/2022 9:58	1.57	6/27/2022 10:21	4.68	6/27/2022 11:44	-0.39	6/26/2022 10:37	11.63
6/26/2022 11:09	-0.12	6/27/2022 9:59	1.57	6/27/2022 10:22	4.72	6/27/2022 11:45	-0.38	6/26/2022 10:38	11.63
6/26/2022 11:10	-0.09	6/27/2022 10:00	1.57	6/27/2022 10:23	4.70	6/27/2022 11:46	-0.34	6/26/2022 10:39	11.63
6/26/2022 11:11	-0.10	6/27/2022 10:01	1.57	6/27/2022 10:24	4.69	6/27/2022 11:47	-0.35	6/26/2022 10:40	11.58
6/26/2022 11:12	-0.12	6/27/2022 10:02	1.57	6/27/2022 10:25	4.68	6/27/2022 11:48	-0.36	6/26/2022 10:41	11.61
6/26/2022 11:13	-0.10	6/27/2022 10:03	1.57	6/27/2022 10:26	4.71	6/27/2022 11:49	-0.35	6/26/2022 10:42	11.62
6/26/2022 11:14	-0.11	6/27/2022 10:04	1.57	6/27/2022 10:27	4.68	6/27/2022 11:50	-0.34	6/26/2022 10:43	11.60
6/26/2022 11:15	-0.10	6/27/2022 10:05	1.57	6/27/2022 10:28	4.68	6/27/2022 11:51	-0.33	6/26/2022 10:44	11.61
6/26/2022 11:16	-0.10	6/27/2022 10:06	1.57	6/27/2022 10:29	4.69	6/27/2022 11:52	-0.33	6/26/2022 10:45	11.63
6/26/2022 11:17	-0.12	6/27/2022 10:07	1.57	6/27/2022 10:30	4.67	6/27/2022 11:53	-0.39	6/26/2022 10:46	11.63
6/26/2022 11:18	-0.12	6/27/2022 10:08	1.57	6/27/2022 10:31	4.67	6/27/2022 11:54	-0.34	6/26/2022 10:47	11.66
6/26/2022 11:19	-0.12	6/27/2022 10:09	1.57	6/27/2022 10:32	4.70	6/27/2022 11:55	-0.38	6/26/2022 10:48	11.57
6/26/2022 11:20	-0.10	6/27/2022 10:10	1.57	6/27/2022 10:33	4.71	6/27/2022 11:56	-0.34	6/26/2022 10:49	11.61
6/26/2022 11:21	-0.10	6/27/2022 10:11	1.57	6/27/2022 10:34	4.71	6/27/2022 11:57	-0.35	6/26/2022 10:50	11.58
6/26/2022 11:22	-0.11	6/27/2022 10:12	1.57	6/27/2022 10:35	4.69	6/27/2022 11:58	-0.35	6/26/2022 10:51	11.60
6/26/2022 11:23	-0.11	6/27/2022 10:13	1.57	6/27/2022 10:36	4.70	6/27/2022 11:59	-0.38	6/26/2022 10:52	11.60
6/26/2022 11:24	-0.12	6/27/2022 10:14	1.59	6/27/2022 10:37	4.73	6/27/2022 12:00	-0.37	6/26/2022 10:53	11.60
6/26/2022 11:25	-0.10	6/27/2022 10:15	1.57	6/27/2022 10:38	4.67	6/27/2022 12:01	-0.31	6/26/2022 10:54	11.63
6/26/2022 11:26	-0.12	6/27/2022 10:16	1.59	6/27/2022 10:39	4.66	6/27/2022 12:02	-0.32	6/26/2022 10:55	11.62
6/26/2022 11:27	-0.10	6/27/2022 10:17	1.57	6/27/2022 10:40	4.67	6/27/2022 12:03	-0.34	6/26/2022 10:56	11.60
6/26/2022 11:28	-0.10	6/27/2022 10:18	1.57	6/27/2022 10:41	4.69	6/27/2022 12:04	-0.32	6/26/2022 10:57	11.61
6/26/2022 11:29	-0.10	6/27/2022 10:19	1.57	6/27/2022 10:42	4.69	6/27/2022 12:05	-0.39	6/26/2022 10:58	11.64
6/26/2022 11:30	-0.10	6/27/2022 10:20	1.57	6/27/2022 10:43	4.71	6/27/2022 12:06	-0.37	6/26/2022 10:59	11.60
6/26/2022 11:31	-0.09	6/27/2022 10:21	1.57	6/27/2022 10:44	4.71	6/27/2022 12:07	-0.35	6/26/2022 11:00	11.61
6/26/2022 11:32	-0.12	6/27/2022 10:22	1.57	6/27/2022 10:45	4.71	6/27/2022 12:08	-0.34	6/26/2022 11:01	11.62
6/26/2022 11:33	-0.12	6/27/2022 10:23	1.57	6/27/2022 10:46	4.66	6/27/2022 12:09	-0.37	6/26/2022 11:02	11.56
6/26/2022 11:34	-0.10	6/27/2022 10:24	1.59	6/27/2022 10:47	4.69	6/27/2022 12:10	-0.35	6/26/2022 11:03	11.62
6/26/2022 11:35	-0.11	6/27/2022 10:25	1.59	6/27/2022 10:48	4.68	6/27/2022 12:11	-0.35	6/26/2022 11:04	11.60
6/26/2022 11:36	-0.10	6/27/2022 10:26	1.59	6/27/2022 10:49	4.70	6/27/2022 12:12	-0.30	6/26/2022 11:05	11.58
6/26/2022 11:37	-0.11	6/27/2022 10:27	1.56	6/27/2022 10:50	4.69	6/27/2022 12:13	-0.38	6/26/2022 11:06	11.62
6/26/2022 11:38	-0.12	6/27/2022 10:28	1.57	6/27/2022 10:51	4.67	6/27/2022 12:14	-0.37	6/26/2022 11:07	11.60
6/26/2022 11:39	-0.10	6/27/2022 10:29	1.57	6/27/2022 10:52	4.71	6/27/2022 12:15	-0.32	6/26/2022 11:08	11.59
6/26/2022 11:40	-0.12	6/27/2022 10:30	1.57	6/27/2022 10:53	4.69	6/27/2022 12:16	-0.30	6/26/2022 11:09	11.61
6/26/2022 11:41	-0.10	6/27/2022 10:31	1.57	6/27/2022 10:54	4.72	6/27/2022 12:17	-0.33	6/26/2022 11:10	11.63
6/26/2022 11:42	-0.10	6/27/2022 10:32	1.56	6/27/2022 10:55	4.67	6/27/2022 12:18	-0.36	6/26/2022 11:11	11.61
6/26/2022 11:43	-0.12	6/27/2022 10:33	1.57	6/27/2022 10:56	4.69	6/27/2022 12:19	-0.35	6/26/2022 11:12	11.61
6/26/2022 11:44	-0.12	6/27/2022 10:34	1.57	6/27/2022 10:57	4.66	6/27/2022 12:20	-0.35	6/26/2022 11:13	11.64
6/26/2022 11:45	-0.12	6/27/2022 10:35	1.57	6/27/2022 10:58	4.69	6/27/2022 12:21	-0.33	6/26/2022 11:14	11.63
6/26/2022 11:46	-0.11	6/27/2022 10:36	1.56	6/27/2022 10:59	4.70	6/27/2022 12:22	-0.34	6/26/2022 11:15	11.61
6/26/2022 11:47	-0.11	6/27/2022 10:37	1.59	6/27/2022 11:00	4.69	6/27/2022 12:23	-0.39	6/26/2022 11:16	11.64
6/26/2022 11:48	-0.11	6/27/2022 10:38	1.57	6/27/2022 11:01	4.68	6/27/2022 12:24	-0.38	6/26/2022 11:17	11.60
6/26/2022 11:49	-0.11	6/27/2022 10:39	1.57	6/27/2022 11:02	4.68	6/27/2022 12:25	-0.33	6/26/2022 11:18	11.66
6/26/2022 11:50	-0.11	6/27/2022 10:40	1.57	6/27/2022 11:03	4.71	6/27/2022 12:26	-0.34	6/26/2022 11:19	11.64
6/26/2022 11:51	-0.11	6/27/2022 10:41	1.57	6/27/2022 11:04	4.69	6/27/2022 12:27	-0.34	6/26/2022 11:20	11.64
6/26/2022 11:52	-0.12	6/27/2022 10:42	1.57	6/27/2022 11:05	4.67	6/27/2022 12:28	-0.37	6/26/2022 11:21	11.68
6/26/2022 11:53	-0.10	6/27/2022 10:43	1.56	6/27/2022 11:06	4.68	6/27/2022 12:29	-0.32	6/26/2022 11:22	11.61
6/26/2022 11:54	-0.12	6/27/2022 10:44	1.57	6/27/2022 11:07	4.68	6/27/2022 12:30	-0.37	6/26/2022 11:23	11.62
6/26/2022 11:55	-0.11	6/27/2022 10:45	1.56	6/27/2022 11:08	4.69	6/27/2022 12:31	-0.32	6/26/2022 11:24	11.64
6/26/2022 11:56	-0.12	6/27/2022 10:46	1.56	6/27/2022 11:09	4.69	6/27/2022 12:32	-0.35	6/26/2022 11:25	11.57
6/26/2022 11:57	-0.11	6/27/2022 10:47	1.56	6/27/2022 11:10	4.69	6/27/2022 12:33	-0.35	6/26/2022 11:26	11.66
6/26/2022 11:58	-0.12	6/27/2022 10:48	1.57	6/27/2022 11:11	4.68	6/27/2022 12:34	-0.33	6/26/2022 11:27	11.60
6/26/2022 11:59	-0.12	6/27/2022 10:49	1.56	6/27/2022 11:12	4.69	6/27/2022 12:35	-0.32	6/26/2022 11:28	11.62
6/26/2022 12:00	-0.11	6/27/2022 10:50	1.59	6/27/2022 11:13	4.69	6/27/2022 12:36	-0.37	6/26/2022 11:29	11.63
6/26/2022 12:01	-0.12	6/27/2022 10:51	1.56	6/27/2022 11:14	4.68	6/27/2022 12:37	-0.36	6/26/2022 11:30	11.65
6/26/2022 12:02	-0.10	6/27/2022 10:52	1.56	6/27/2022 11:15	4.70	6/27/2022 12:38	-0.33	6/26/2022 11:31	11.62
6/26/2022 12:03	-0.12	6/27/2022 10:53	1.56	6/27/2022 11:16	4.67	6/27/2022 12:39	-0.33	6/26/2022 11:32	11.65
6/26/2022 12:04	-0.10	6/27/2022 10:54	1.56	6/27/2022 11:17	4.72	6/27/2022 12:40	-0.34	6/26/2022 11:33	11.64
6/26/2022 12:05	-0.10	6/27/2022 10:55	1.56	6/27/2022 11:18	4.69	6/27/2022 12:41	-0.42	6/26/2022 11:34	11.60
6/26/2022 12:06	-0.10	6/27/2022 10:56	1.56	6/27/2022 11:19	4.69	6/27/2022 12:42	-0.36	6/26/2022 11:35	11.61
6/26/2022 12:07	-0.11	6/27/2022 10:57	1.56	6/27/2022 11:20	4.69	6/27/2022 12:43	-0.35	6/26/2022 11:36	11.63
6/26/2022 12:08	-0.12	6/27/2022 10:58	1.56	6/27/2022 11:21	4.70	6/27/2022 12:44	-0.33	6/26/2022 11:37	11.63
6/26/2022 12:09	-0.10	6/27/2022 10:59	1.56	6/27/2022 11:22	4.69	6/27/2022 12:45	-0.36	6/26/2022 11:38	11.62
6/26/2022 12:10	-0.11	6/27/2022 11:00	1.59	6/27/2022 11:23	4.68	6/27/2022 12:46	-0.33	6/26/2022 11:39	11.61
6/26/2022 12:11	-0.12	6/27/2022 11:01	1.56	6/27/2022 11:24	4.70	6/27/2022 12:47	-0.36	6/26/2022 11:40	11.58
6/26/2022 12:12	-0.11	6/27/2022 11:02	1.56	6/27/2022 11:25	4.68	6/27/2022 12:48	-0.35	6/26/2022 11:41	11.58
6/26/2022 12:13	-0.11	6/27/2022 11:03	1.56	6/27/2022 11:26	4.66	6/27/2022 12:49	-0.35	6/26/2022 11:42	11.64
6/26/2022 12:14	-0.11	6/27/2022 11:04	1.59	6/27/2022 11:27	4.65	6/27/2022 12:50	-0.35	6/26/2022 11:43	11.60
6/26/2022 12:15	-0.11	6/27/2022 11:05	1.56	6/27/2022 11:28	4.70	6/27/2022 12:51	-0.35	6/26/2022 11:44	11.65
6/26/2022 12:16	-0.10	6/27/2022 11:06	1.56	6/27/2022 11:29	4.69	6/27/2022 12:52	-0.37	6/26/2022 11:45	11.59

6/26/2022 12:17	-0.10	6/27/2022 11:07	1.58	6/27/2022 11:30	4.69	6/27/2022 12:53	-0.32	6/26/2022 11:46	11.64
6/26/2022 12:18	-0.12	6/27/2022 11:08	1.56	6/27/2022 11:31	4.69	6/27/2022 12:54	-0.36	6/26/2022 11:47	11.57
6/26/2022 12:19	-0.10	6/27/2022 11:09	1.58	6/27/2022 11:32	4.71	6/27/2022 12:55	-0.37	6/26/2022 11:48	11.60
6/26/2022 12:20	-0.10	6/27/2022 11:10	1.56	6/27/2022 11:33	4.71	6/27/2022 12:56	-0.36	6/26/2022 11:49	11.58
6/26/2022 12:21	-0.10	6/27/2022 11:11	1.56	6/27/2022 11:34	4.70	6/27/2022 12:57	-0.33	6/26/2022 11:50	11.65
6/26/2022 12:22	-0.11	6/27/2022 11:12	1.56	6/27/2022 11:35	4.67	6/27/2022 12:58	-0.33	6/26/2022 11:51	11.57
6/26/2022 12:23	-0.11	6/27/2022 11:13	1.56	6/27/2022 11:36	4.68	6/27/2022 12:59	-0.33	6/26/2022 11:52	11.67
6/26/2022 12:24	-0.10	6/27/2022 11:14	1.56	6/27/2022 11:37	4.68	6/27/2022 13:00	-0.36	6/26/2022 11:53	11.63
6/26/2022 12:25	-0.12	6/27/2022 11:15	1.56	6/27/2022 11:38	4.66	6/27/2022 13:01	-0.35	6/26/2022 11:54	11.65
6/26/2022 12:26	-0.11	6/27/2022 11:16	1.56	6/27/2022 11:39	4.68	6/27/2022 13:02	-0.40	6/26/2022 11:55	11.62
6/26/2022 12:27	-0.12	6/27/2022 11:17	1.57	6/27/2022 11:40	4.69	6/27/2022 13:03	-0.35	6/26/2022 11:56	11.66
6/26/2022 12:28	-0.10	6/27/2022 11:18	1.56	6/27/2022 11:41	4.68	6/27/2022 13:04	-0.34	6/26/2022 11:57	11.60
6/26/2022 12:29	-0.12	6/27/2022 11:19	1.56	6/27/2022 11:42	4.70	6/27/2022 13:05	-0.37	6/26/2022 11:58	11.66
6/26/2022 12:30	-0.12	6/27/2022 11:20	1.56	6/27/2022 11:43	4.71	6/27/2022 13:06	-0.33	6/26/2022 11:59	11.67
6/26/2022 12:31	-0.10	6/27/2022 11:21	1.59	6/27/2022 11:44	4.68	6/27/2022 13:07	-0.37	6/26/2022 12:00	11.60
6/26/2022 12:32	-0.10	6/27/2022 11:22	1.56	6/27/2022 11:45	4.69	6/27/2022 13:08	-0.32	6/26/2022 12:01	11.63
6/26/2022 12:33	-0.12	6/27/2022 11:23	1.58	6/27/2022 11:46	4.67	6/27/2022 13:09	-0.36	6/26/2022 12:02	11.64
6/26/2022 12:34	-0.10	6/27/2022 11:24	1.56	6/27/2022 11:47	4.74	6/27/2022 13:10	-0.37	6/26/2022 12:03	11.61
6/26/2022 12:35	-0.11	6/27/2022 11:25	1.56	6/27/2022 11:48	4.68	6/27/2022 13:11	-0.32	6/26/2022 12:04	11.65
6/26/2022 12:36	-0.11	6/27/2022 11:26	1.56	6/27/2022 11:49	4.71	6/27/2022 13:12	-0.36	6/26/2022 12:05	11.62
6/26/2022 12:37	-0.11	6/27/2022 11:27	1.56	6/27/2022 11:50	4.65	6/27/2022 13:13	-0.33	6/26/2022 12:06	11.62
6/26/2022 12:38	-0.10	6/27/2022 11:28	1.58	6/27/2022 11:51	4.70	6/27/2022 13:14	-0.39	6/26/2022 12:07	11.66
6/26/2022 12:39	-0.12	6/27/2022 11:29	1.59	6/27/2022 11:52	4.71	6/27/2022 13:15	-0.35	6/26/2022 12:08	11.64
6/26/2022 12:40	-0.10	6/27/2022 11:30	1.56	6/27/2022 11:53	4.71	6/27/2022 13:16	-0.37	6/26/2022 12:09	11.66
6/26/2022 12:41	-0.12	6/27/2022 11:31	1.56	6/27/2022 11:54	4.69	6/27/2022 13:17	-0.35	6/26/2022 12:10	11.62
6/26/2022 12:42	-0.12	6/27/2022 11:32	1.56	6/27/2022 11:55	4.70	6/27/2022 13:18	-0.31	6/26/2022 12:11	11.60
6/26/2022 12:43	-0.11	6/27/2022 11:33	1.56	6/27/2022 11:56	4.67	6/27/2022 13:19	-0.35	6/26/2022 12:12	11.63
6/26/2022 12:44	-0.12	6/27/2022 11:34	1.56	6/27/2022 11:57	4.68	6/27/2022 13:20	-0.38	6/26/2022 12:13	11.67
6/26/2022 12:45	-0.10	6/27/2022 11:35	1.56	6/27/2022 11:58	4.69	6/27/2022 13:21	-0.35	6/26/2022 12:14	11.65
6/26/2022 12:46	-0.12	6/27/2022 11:36	1.58	6/27/2022 11:59	4.70	6/27/2022 13:22	-0.33	6/26/2022 12:15	11.58
6/26/2022 12:47	-0.10	6/27/2022 11:37	1.56	6/27/2022 12:00	4.72	6/27/2022 13:23	-0.35	6/26/2022 12:16	11.64
6/26/2022 12:48	-0.10	6/27/2022 11:38	1.56	6/27/2022 12:01	4.70	6/27/2022 13:24	-0.33	6/26/2022 12:17	11.60
6/26/2022 12:49	-0.10	6/27/2022 11:39	1.56	6/27/2022 12:02	4.71	6/27/2022 13:25	-0.32	6/26/2022 12:18	11.63
6/26/2022 12:50	-0.12	6/27/2022 11:40	1.56	6/27/2022 12:03	4.67	6/27/2022 13:26	-0.35	6/26/2022 12:19	11.58
6/26/2022 12:51	-0.10	6/27/2022 11:41	1.56	6/27/2022 12:04	4.71	6/27/2022 13:27	-0.32	6/26/2022 12:20	11.58
6/26/2022 12:52	-0.12	6/27/2022 11:42	1.56	6/27/2022 12:05	4.67	6/27/2022 13:28	-0.37	6/26/2022 12:21	11.61
6/26/2022 12:53	-0.10	6/27/2022 11:43	1.56	6/27/2022 12:06	4.73	6/27/2022 13:29	-0.36	6/26/2022 12:22	11.62
6/26/2022 12:54	-0.10	6/27/2022 11:44	1.56	6/27/2022 12:07	4.68	6/27/2022 13:30	-0.35	6/26/2022 12:23	11.62
6/26/2022 12:55	-0.10	6/27/2022 11:45	1.56	6/27/2022 12:08	4.70	6/27/2022 13:31	-0.35	6/26/2022 12:24	11.64
6/26/2022 12:56	-0.10	6/27/2022 11:46	1.56	6/27/2022 12:09	4.67	6/27/2022 13:32	-0.35	6/26/2022 12:25	11.61
6/26/2022 12:57	-0.12	6/27/2022 11:47	1.56	6/27/2022 12:10	4.70	6/27/2022 13:33	-0.33	6/26/2022 12:26	11.65
6/26/2022 12:58	-0.11	6/27/2022 11:48	1.56	6/27/2022 12:11	4.71	6/27/2022 13:34	-0.34	6/26/2022 12:27	11.57
6/26/2022 12:59	-0.12	6/27/2022 11:49	1.56	6/27/2022 12:12	4.66	6/27/2022 13:35	-0.34	6/26/2022 12:28	11.64
6/26/2022 13:00	-0.10	6/27/2022 11:50	1.56	6/27/2022 12:13	4.70	6/27/2022 13:36	-0.37	6/26/2022 12:29	11.61
6/26/2022 13:01	-0.12	6/27/2022 11:51	1.56	6/27/2022 12:14	4.66	6/27/2022 13:37	-0.34	6/26/2022 12:30	11.61
6/26/2022 13:02	-0.12	6/27/2022 11:52	1.56	6/27/2022 12:15	4.69	6/27/2022 13:38	-0.37	6/26/2022 12:31	11.58
6/26/2022 13:03	-0.10	6/27/2022 11:53	1.56	6/27/2022 12:16	4.70	6/27/2022 13:39	-0.37	6/26/2022 12:32	11.58
6/26/2022 13:04	-0.12	6/27/2022 11:54	1.56	6/27/2022 12:17	4.66	6/27/2022 13:40	-0.36	6/26/2022 12:33	11.62
6/26/2022 13:05	-0.12	6/27/2022 11:55	1.56	6/27/2022 12:18	4.66	6/27/2022 13:41	-0.33	6/26/2022 12:34	11.61
6/26/2022 13:06	-0.12	6/27/2022 11:56	1.56	6/27/2022 12:19	4.65	6/27/2022 13:42	-0.37	6/26/2022 12:35	11.62
6/26/2022 13:07	-0.12	6/27/2022 11:57	1.56	6/27/2022 12:20	4.70	6/27/2022 13:43	-0.33	6/26/2022 12:36	11.60
6/26/2022 13:08	-0.11	6/27/2022 11:58	1.56	6/27/2022 12:21	4.69	6/27/2022 13:44	-0.35	6/26/2022 12:37	11.61
6/26/2022 13:09	-0.11	6/27/2022 11:59	1.56	6/27/2022 12:22	4.68	6/27/2022 13:45	-0.37	6/26/2022 12:38	11.64
6/26/2022 13:10	-0.10	6/27/2022 12:00	1.56	6/27/2022 12:23	4.70	6/27/2022 13:46	-0.37	6/26/2022 12:39	11.60
6/26/2022 13:11	-0.12	6/27/2022 12:01	1.56	6/27/2022 12:24	4.70	6/27/2022 13:47	-0.35	6/26/2022 12:40	11.65
6/26/2022 13:12	-0.12	6/27/2022 12:02	1.56	6/27/2022 12:25	4.67	6/27/2022 13:48	-0.37	6/26/2022 12:41	11.59
6/26/2022 13:13	-0.12	6/27/2022 12:03	1.56	6/27/2022 12:26	4.69	6/27/2022 13:49	-0.36	6/26/2022 12:42	11.61
6/26/2022 13:14	-0.12	6/27/2022 12:04	1.58	6/27/2022 12:27	4.70	6/27/2022 13:50	-0.37	6/26/2022 12:43	11.59
6/26/2022 13:15	-0.09	6/27/2022 12:05	1.56	6/27/2022 12:28	4.69	6/27/2022 13:51	-0.35	6/26/2022 12:44	11.59
6/26/2022 13:16	-0.10	6/27/2022 12:06	1.56	6/27/2022 12:29	4.68	6/27/2022 13:52	-0.33	6/26/2022 12:45	11.62
6/26/2022 13:17	-0.12	6/27/2022 12:07	1.56	6/27/2022 12:30	4.68	6/27/2022 13:53	-0.35	6/26/2022 12:46	11.60
6/26/2022 13:18	-0.10	6/27/2022 12:08	1.56	6/27/2022 12:31	4.68	6/27/2022 13:54	-0.29	6/26/2022 12:47	11.61
6/26/2022 13:19	-0.10	6/27/2022 12:09	1.56	6/27/2022 12:32	4.71	6/27/2022 13:55	-0.35	6/26/2022 12:48	11.60
6/26/2022 13:20	-0.11	6/27/2022 12:10	1.56	6/27/2022 12:33	4.68	6/27/2022 13:56	-0.33	6/26/2022 12:49	11.58
6/26/2022 13:21	-0.12	6/27/2022 12:11	1.56	6/27/2022 12:34	4.68	6/27/2022 13:57	-0.37	6/26/2022 12:50	11.61
6/26/2022 13:22	-0.12	6/27/2022 12:12	1.56	6/27/2022 12:35	4.66	6/27/2022 13:58	-0.36	6/26/2022 12:51	11.63
6/26/2022 13:23	-0.12	6/27/2022 12:13	1.56	6/27/2022 12:36	4.70	6/27/2022 13:59	-0.35	6/26/2022 12:52	11.60
6/26/2022 13:24	-0.10	6/27/2022 12:14	1.56	6/27/2022 12:37	4.68	6/27/2022 14:00	-0.38	6/26/2022 12:53	11.59
6/26/2022 13:25	-0.11	6/27/2022 12:15	1.58	6/27/2022 12:38	4.68	6/27/2022 14:01	-0.34	6/26/2022 12:54	11.65
6/26/2022 13:26	-0.12	6/27/2022 12:16	1.56	6/27/2022 12:39	4.68	6/27/2022 14:02	-0.36	6/26/2022 12:55	11.61
6/26/2022 13:27	-0.10	6/27/2022 12:17	1.58	6/27/2022 12:40	4.68	6/27/2022 14:03	-0.35	6/26/2022 12:56	11.62
6/26/2022 13:28	-0.10	6/27/2022 12:18	1.58	6/27/2022 12:41	4.67	6/27/2022 14:04	-0.37	6/26/2022 12:57	11.61
6/26/2022 13:29	-0.12	6/27/2022 12:19	1.56	6/27/2022 12:42	4.67	6/27/2022 14:05	-0.35	6/26/2022 12:58	11.58
6/26/2022 13:30	-0.10	6/27/2022 12:20	1.58	6/27/2022 12:43	4.65	6/27/2022 14:06	-0.35	6/26/2022 12:59	11.64
6/26/2022 13:31	-0.10	6/27/2022 12:21	1.56	6/27/2022 12:44	4.69	6/27/2022 14:07	-0.33	6/26/2022 13:00	11.63
6/26/2022 13:32	-0.11	6/27/2022 12:22	1.58	6/27/2022 12:45	4.69	6/27/2022 14:08	-0.38	6/26/2022 13:01	11.56
6/26/2022 13:33	-0.09	6/27/2022 12:23	1.58	6/27/2022 12:46	4.70	6/27/2022 14:09	-0.35	6/26/2022 13:02	11.65
6/26/2022 13:34	-0.12	6/27/2022 12:24	1.56	6/27/2022 12:47	4.68	6/27/2022 14:10	-0.38	6/26/2022 13:03	11.60
6/26/2022 13:35	-0.10	6/27/2022 12:25	1.55	6/27/2022 12:48	4.70	6/27/2022 14:11	-0.38	6/26/2022 13:04	11.60
6/26/2022 13:36	-0.12	6/27/2022 12:26	1.55	6/27/2022 12:49	4.69	6/27/2022 14:12	-0.36	6/26/2022 13:05	11.60
6/26/2022 13:37	-0.10	6/27/2022 12:27	1.56	6/27/2022 12:50	4.69	6/27/2022 14:13	-0.32	6/26/2022 13:06	11.58
6/26/2022 13:38	-0.10	6/27/2022 12:28	1.55	6/27/2022 12:51	4.68	6/27/2022 14:14	-0.37	6/26/2022 13:07	11.61
6/26/2022 13:39	-0.11	6/27/2022 12:29	1.56	6/27/2022 12:52	4.68	6/27/2022 14:15	-0.34	6/26/2022 13:08	11.63
6/26/2022 13:40	-0.10	6/27/2022 12:30	1.55	6/27/2022 12:53	4.71	6/27/2022 14:16	-0.34	6/26/2022 13:09	11.59
6/26/2022 13:41	-0.10	6/27/2022 12:31	1.58	6/27/2022 12:54	4.67	6/27/2022 14:17	-0.36	6/26/2022 13:10	11.61
6/26/2022 13:42	-0.12	6/27/2022 12:32	1.55	6/27/2022 12:55	4.66	6/27/2022 14:18	-0.38	6/26/2022 13:11	11.60
6/26/2022 13:43	-0.11	6/27/2022 12:33	1.57	6/27/2022 12:56	4.69	6/27/2022 14:19	-0.36	6/26/2022 13:12	11.59
6/26/2022 13:44	-0.10	6/27/2022 12:34	1.57	6/27/2022 12:57	4.68	6/27/2022 14:20	-0.36	6/26/2022 13:13	11.63

6/26/2022 13:45	-0.12	6/27/2022 12:35	1.58	6/27/2022 12:58	4.65	6/27/2022 14:21	-0.34	6/26/2022 13:14	11.61
6/26/2022 13:46	-0.10	6/27/2022 12:36	1.56	6/27/2022 12:59	4.67	6/27/2022 14:22	-0.38	6/26/2022 13:15	11.57
6/26/2022 13:47	-0.10	6/27/2022 12:37	1.58	6/27/2022 13:00	4.69	6/27/2022 14:23	-0.33	6/26/2022 13:16	11.63
6/26/2022 13:48	-0.10	6/27/2022 12:38	1.55	6/27/2022 13:01	4.69	6/27/2022 14:24	-0.37	6/26/2022 13:17	11.65
6/26/2022 13:49	-0.10	6/27/2022 12:39	1.55	6/27/2022 13:02	4.70	6/27/2022 14:25	-0.33	6/26/2022 13:18	11.59
6/26/2022 13:50	-0.10	6/27/2022 12:40	1.55	6/27/2022 13:03	4.70	6/27/2022 14:26	-0.32	6/26/2022 13:19	11.62
6/26/2022 13:51	-0.12	6/27/2022 12:41	1.57	6/27/2022 13:04	4.63	6/27/2022 14:27	-0.36	6/26/2022 13:20	11.60
6/26/2022 13:52	-0.11	6/27/2022 12:42	1.56	6/27/2022 13:05	4.67	6/27/2022 14:28	-0.38	6/26/2022 13:21	11.60
6/26/2022 13:53	-0.12	6/27/2022 12:43	1.55	6/27/2022 13:06	4.65	6/27/2022 14:29	-0.34	6/26/2022 13:22	11.60
6/26/2022 13:54	-0.12	6/27/2022 12:44	1.55	6/27/2022 13:07	4.65	6/27/2022 14:30	-0.33	6/26/2022 13:23	11.62
6/26/2022 13:55	-0.12	6/27/2022 12:45	1.55	6/27/2022 13:08	4.69	6/27/2022 14:31	-0.35	6/26/2022 13:24	11.58
6/26/2022 13:56	-0.10	6/27/2022 12:46	1.55	6/27/2022 13:09	4.68	6/27/2022 14:32	-0.32	6/26/2022 13:25	11.57
6/26/2022 13:57	-0.12	6/27/2022 12:47	1.57	6/27/2022 13:10	4.68	6/27/2022 14:33	-0.35	6/26/2022 13:26	11.66
6/26/2022 13:58	-0.12	6/27/2022 12:48	1.55	6/27/2022 13:11	4.69	6/27/2022 14:34	-0.36	6/26/2022 13:27	11.60
6/26/2022 13:59	-0.12	6/27/2022 12:49	1.55	6/27/2022 13:12	4.69	6/27/2022 14:35	-0.34	6/26/2022 13:28	11.65
6/26/2022 14:00	-0.10	6/27/2022 12:50	1.55	6/27/2022 13:13	4.70	6/27/2022 14:36	-0.35	6/26/2022 13:29	11.59
6/26/2022 14:01	-0.10	6/27/2022 12:51	1.57	6/27/2022 13:14	4.67	6/27/2022 14:37	-0.37	6/26/2022 13:30	11.59
6/26/2022 14:02	-0.12	6/27/2022 12:52	1.55	6/27/2022 13:15	4.65	6/27/2022 14:38	-0.34	6/26/2022 13:31	11.62
6/26/2022 14:03	-0.11	6/27/2022 12:53	1.55	6/27/2022 13:16	4.68	6/27/2022 14:39	-0.32	6/26/2022 13:32	11.61
6/26/2022 14:04	-0.12	6/27/2022 12:54	1.55	6/27/2022 13:17	4.67	6/27/2022 14:40	-0.38	6/26/2022 13:33	11.60
6/26/2022 14:05	-0.11	6/27/2022 12:55	1.55	6/27/2022 13:18	4.68	6/27/2022 14:41	-0.33	6/26/2022 13:34	11.60
6/26/2022 14:06	-0.10	6/27/2022 12:56	1.55	6/27/2022 13:19	4.73	6/27/2022 14:42	-0.37	6/26/2022 13:35	11.58
6/26/2022 14:07	-0.10	6/27/2022 12:57	1.55	6/27/2022 13:20	4.64	6/27/2022 14:43	-0.37	6/26/2022 13:36	11.60
6/26/2022 14:08	-0.10	6/27/2022 12:58	1.55	6/27/2022 13:21	4.67	6/27/2022 14:44	-0.37	6/26/2022 13:37	11.62
6/26/2022 14:09	-0.12	6/27/2022 12:59	1.55	6/27/2022 13:22	4.70	6/27/2022 14:45	-0.37	6/26/2022 13:38	11.60
6/26/2022 14:10	-0.12	6/27/2022 13:00	1.55	6/27/2022 13:23	4.72	6/27/2022 14:46	-0.33	6/26/2022 13:39	11.61
6/26/2022 14:11	-0.10	6/27/2022 13:01	1.57	6/27/2022 13:24	4.68	6/27/2022 14:47	-0.36	6/26/2022 13:40	11.65
6/26/2022 14:12	-0.10	6/27/2022 13:02	1.55	6/27/2022 13:25	4.65	6/27/2022 14:48	-0.35	6/26/2022 13:41	11.62
6/26/2022 14:13	-0.12	6/27/2022 13:03	1.55	6/27/2022 13:26	4.68	6/27/2022 14:49	-0.35	6/26/2022 13:42	11.62
6/26/2022 14:14	-0.11	6/27/2022 13:04	1.55	6/27/2022 13:27	4.69	6/27/2022 14:50	-0.36	6/26/2022 13:43	11.63
6/26/2022 14:15	-0.10	6/27/2022 13:05	1.57	6/27/2022 13:28	4.69	6/27/2022 14:51	-0.37	6/26/2022 13:44	11.58
6/26/2022 14:16	-0.10	6/27/2022 13:06	1.55	6/27/2022 13:29	4.66	6/27/2022 14:52	-0.36	6/26/2022 13:45	11.64
6/26/2022 14:17	-0.12	6/27/2022 13:07	1.55	6/27/2022 13:30	4.65	6/27/2022 14:53	-0.37	6/26/2022 13:46	11.57
6/26/2022 14:18	-0.12	6/27/2022 13:08	1.55	6/27/2022 13:31	4.68	6/27/2022 14:54	-0.31	6/26/2022 13:47	11.58
6/26/2022 14:19	-0.12	6/27/2022 13:09	1.55	6/27/2022 13:32	4.68	6/27/2022 14:55	-0.35	6/26/2022 13:48	11.59
6/26/2022 14:20	-0.10	6/27/2022 13:10	1.54	6/27/2022 13:33	4.68	6/27/2022 14:56	-0.34	6/26/2022 13:49	11.61
6/26/2022 14:21	-0.12	6/27/2022 13:11	1.55	6/27/2022 13:34	4.68	6/27/2022 14:57	-0.38	6/26/2022 13:50	11.63
6/26/2022 14:22	-0.10	6/27/2022 13:12	1.54	6/27/2022 13:35	4.67	6/27/2022 14:58	-0.38	6/26/2022 13:51	11.61
6/26/2022 14:23	-0.10	6/27/2022 13:13	1.55	6/27/2022 13:36	4.66	6/27/2022 14:59	-0.33	6/26/2022 13:52	11.60
6/26/2022 14:24	-0.10	6/27/2022 13:14	1.55	6/27/2022 13:37	4.72	6/27/2022 15:00	-0.36	6/26/2022 13:53	11.64
6/26/2022 14:25	-0.10	6/27/2022 13:15	1.55	6/27/2022 13:38	4.68	6/27/2022 15:01	-0.32	6/26/2022 13:54	11.62
6/26/2022 14:26	-0.10	6/27/2022 13:16	1.54	6/27/2022 13:39	4.67	6/27/2022 15:02	-0.39	6/26/2022 13:55	11.60
6/26/2022 14:27	-0.12	6/27/2022 13:17	1.54	6/27/2022 13:40	4.67	6/27/2022 15:03	-0.37	6/26/2022 13:56	11.65
6/26/2022 14:28	-0.12	6/27/2022 13:18	1.57	6/27/2022 13:41	4.66	6/27/2022 15:04	-0.33	6/26/2022 13:57	11.64
6/26/2022 14:29	-0.12	6/27/2022 13:19	1.55	6/27/2022 13:42	4.68	6/27/2022 15:05	-0.34	6/26/2022 13:58	11.58
6/26/2022 14:30	-0.10	6/27/2022 13:20	1.54	6/27/2022 13:43	4.67	6/27/2022 15:06	-0.36	6/26/2022 13:59	11.60
6/26/2022 14:31	-0.12	6/27/2022 13:21	1.54	6/27/2022 13:44	4.67	6/27/2022 15:07	-0.36	6/26/2022 14:00	11.67
6/26/2022 14:32	-0.10	6/27/2022 13:22	1.55	6/27/2022 13:45	4.67	6/27/2022 15:08	-0.37	6/26/2022 14:01	11.59
6/26/2022 14:33	-0.10	6/27/2022 13:23	1.55	6/27/2022 13:46	4.67	6/27/2022 15:09	-0.37	6/26/2022 14:02	11.64
6/26/2022 14:34	-0.11	6/27/2022 13:24	1.54	6/27/2022 13:47	4.69	6/27/2022 15:10	-0.37	6/26/2022 14:03	11.61
6/26/2022 14:35	-0.10	6/27/2022 13:25	1.54	6/27/2022 13:48	4.66	6/27/2022 15:11	-0.36	6/26/2022 14:04	11.63
6/26/2022 14:36	-0.10	6/27/2022 13:26	1.54	6/27/2022 13:49	4.67	6/27/2022 15:12	-0.34	6/26/2022 14:05	11.62
6/26/2022 14:37	-0.10	6/27/2022 13:27	1.57	6/27/2022 13:50	4.66	6/27/2022 15:13	-0.33	6/26/2022 14:06	11.59
6/26/2022 14:38	-0.10	6/27/2022 13:28	1.54	6/27/2022 13:51	4.64	6/27/2022 15:14	-0.36	6/26/2022 14:07	11.63
6/26/2022 14:39	-0.12	6/27/2022 13:29	1.55	6/27/2022 13:52	4.66	6/27/2022 15:15	-0.32	6/26/2022 14:08	11.62
6/26/2022 14:40	-0.12	6/27/2022 13:30	1.54	6/27/2022 13:53	4.66	6/27/2022 15:16	-0.34	6/26/2022 14:09	11.61
6/26/2022 14:41	-0.10	6/27/2022 13:31	1.54	6/27/2022 13:54	4.65	6/27/2022 15:17	-0.33	6/26/2022 14:10	11.59
6/26/2022 14:42	-0.12	6/27/2022 13:32	1.54	6/27/2022 13:55	4.64	6/27/2022 15:18	-0.35	6/26/2022 14:11	11.61
6/26/2022 14:43	-0.10	6/27/2022 13:33	1.54	6/27/2022 13:56	4.65	6/27/2022 15:19	-0.34	6/26/2022 14:12	11.60
6/26/2022 14:44	-0.12	6/27/2022 13:34	1.54	6/27/2022 13:57	4.69	6/27/2022 15:20	-0.35	6/26/2022 14:13	11.61
6/26/2022 14:45	-0.10	6/27/2022 13:35	1.54	6/27/2022 13:58	4.63	6/27/2022 15:21	-0.33	6/26/2022 14:14	11.64
6/26/2022 14:46	-0.10	6/27/2022 13:36	1.56	6/27/2022 13:59	4.65	6/27/2022 15:22	-0.36	6/26/2022 14:15	11.63
6/26/2022 14:47	-0.10	6/27/2022 13:37	1.54	6/27/2022 14:00	4.67	6/27/2022 15:23	-0.38	6/26/2022 14:16	11.64
6/26/2022 14:48	-0.10	6/27/2022 13:38	1.56	6/27/2022 14:01	4.68	6/27/2022 15:24	-0.33	6/26/2022 14:17	11.62
6/26/2022 14:49	-0.12	6/27/2022 13:39	1.54	6/27/2022 14:02	4.66	6/27/2022 15:25	-0.35	6/26/2022 14:18	11.66
6/26/2022 14:50	-0.12	6/27/2022 13:40	1.54	6/27/2022 14:03	4.66	6/27/2022 15:26	-0.35	6/26/2022 14:19	11.61
6/26/2022 14:51	-0.12	6/27/2022 13:41	1.54	6/27/2022 14:04	4.65	6/27/2022 15:27	-0.37	6/26/2022 14:20	11.60
6/26/2022 14:52	-0.10	6/27/2022 13:42	1.54	6/27/2022 14:05	4.65	6/27/2022 15:28	-0.37	6/26/2022 14:21	11.61
6/26/2022 14:53	-0.12	6/27/2022 13:43	1.54	6/27/2022 14:06	4.68	6/27/2022 15:29	-0.30	6/26/2022 14:22	11.60
6/26/2022 14:54	-0.10	6/27/2022 13:44	1.54	6/27/2022 14:07	4.67	6/27/2022 15:30	-0.33	6/26/2022 14:23	11.65
6/26/2022 14:55	-0.12	6/27/2022 13:45	1.54	6/27/2022 14:08	4.69	6/27/2022 15:31	-0.37	6/26/2022 14:24	11.58
6/26/2022 14:56	-0.12	6/27/2022 13:46	1.54	6/27/2022 14:09	4.65	6/27/2022 15:32	-0.32	6/26/2022 14:25	11.62
6/26/2022 14:57	-0.10	6/27/2022 13:47	1.54	6/27/2022 14:10	4.67	6/27/2022 15:33	-0.38	6/26/2022 14:26	11.59
6/26/2022 14:58	-0.12	6/27/2022 13:48	1.54	6/27/2022 14:11	4.66	6/27/2022 15:34	-0.37	6/26/2022 14:27	11.62
6/26/2022 14:59	-0.12	6/27/2022 13:49	1.54	6/27/2022 14:12	4.65	6/27/2022 15:35	-0.33	6/26/2022 14:28	11.60
6/26/2022 15:00	-0.12	6/27/2022 13:50	1.54	6/27/2022 14:13	4.63	6/27/2022 15:36	-0.36	6/26/2022 14:29	11.63
6/26/2022 15:01	-0.12	6/27/2022 13:51	1.54	6/27/2022 14:14	4.67	6/27/2022 15:37	-0.40	6/26/2022 14:30	11.62
6/26/2022 15:02	-0.10	6/27/2022 13:52	1.53	6/27/2022 14:15	4.66	6/27/2022 15:38	-0.37	6/26/2022 14:31	11.62
6/26/2022 15:03	-0.12	6/27/2022 13:53	1.54	6/27/2022 14:16	4.64	6/27/2022 15:39	-0.33	6/26/2022 14:32	11.65
6/26/2022 15:04	-0.10	6/27/2022 13:54	1.54	6/27/2022 14:17	4.67	6/27/2022 15:40	-0.34	6/26/2022 14:33	11.60
6/26/2022 15:05	-0.12	6/27/2022 13:55	1.53	6/27/2022 14:18	4.65	6/27/2022 15:41	-0.35	6/26/2022 14:34	11.64
6/26/2022 15:06	-0.10	6/27/2022 13:56	1.54	6/27/2022 14:19	4.65	6/27/2022 15:42	-0.39	6/26/2022 14:35	11.62
6/26/2022 15:07	-0.12	6/27/2022 13:57	1.54	6/27/2022 14:20	4.68	6/27/2022 15:43	-0.35	6/26/2022 14:36	11.60
6/26/2022 15:08	-0.12	6/27/2022 13:58	1.53	6/27/2022 14:21	4.67	6/27/2022 15:44	-0.34	6/26/2022 14:37	11.60
6/26/2022 15:09	-0.10	6/27/2022 13:59	1.53	6/27/2022 14:22	4.66	6/27/2022 15:45	-0.36	6/26/2022 14:38	11.59
6/26/2022 15:10	-0.10	6/27/2022 14:00	1.53	6/27/2022 14:23	4.65	6/27/2022 15:46	-0.32	6/26/2022 14:39	11.62
6/26/2022 15:11	-0.12	6/27/2022 14:01	1.53	6/27/2022 14:24	4.67	6/27/2022 15:47	-0.38	6/26/2022 14:40	11.61
6/26/2022 15:12	-0.12	6/27/2022 14:02	1.53	6/27/2022 14:25	4.66	6/27/2022 15:48	-0.34	6/26/2022 14:41	11.61

6/26/2022 15:13	-0.12	6/27/2022 14:03	1.53	6/27/2022 14:26	4.68	6/27/2022 15:49	-0.34	6/26/2022 14:42	11.55
6/26/2022 15:14	-0.12	6/27/2022 14:04	1.53	6/27/2022 14:27	4.66	6/27/2022 15:50	-0.34	6/26/2022 14:43	11.67
6/26/2022 15:15	-0.12	6/27/2022 14:05	1.53	6/27/2022 14:28	4.67	6/27/2022 15:51	-0.36	6/26/2022 14:44	11.61
6/26/2022 15:16	-0.10	6/27/2022 14:06	1.53	6/27/2022 14:29	4.64	6/27/2022 15:52	-0.31	6/26/2022 14:45	11.59
6/26/2022 15:17	-0.11	6/27/2022 14:07	1.54	6/27/2022 14:30	4.62	6/27/2022 15:53	-0.35	6/26/2022 14:46	11.63
6/26/2022 15:18	-0.12	6/27/2022 14:08	1.54	6/27/2022 14:31	4.64	6/27/2022 15:54	-0.32	6/26/2022 14:47	11.61
6/26/2022 15:19	-0.12	6/27/2022 14:09	1.53	6/27/2022 14:32	4.65	6/27/2022 15:55	-0.36	6/26/2022 14:48	11.64
6/26/2022 15:20	-0.12	6/27/2022 14:10	1.53	6/27/2022 14:33	4.66	6/27/2022 15:56	-0.37	6/26/2022 14:49	11.66
6/26/2022 15:21	-0.12	6/27/2022 14:11	1.55	6/27/2022 14:34	4.65	6/27/2022 15:57	-0.37	6/26/2022 14:50	11.64
6/26/2022 15:22	-0.12	6/27/2022 14:12	1.53	6/27/2022 14:35	4.64	6/27/2022 15:58	-0.36	6/26/2022 14:51	11.62
6/26/2022 15:23	-0.10	6/27/2022 14:13	1.53	6/27/2022 14:36	4.67	6/27/2022 15:59	-0.32	6/26/2022 14:52	11.62
6/26/2022 15:24	-0.12	6/27/2022 14:14	1.53	6/27/2022 14:37	4.60	6/27/2022 16:00	-0.36	6/26/2022 14:53	11.61
6/26/2022 15:25	-0.11	6/27/2022 14:15	1.53	6/27/2022 14:38	4.67	6/27/2022 16:01	-0.35	6/26/2022 14:54	11.60
6/26/2022 15:26	-0.10	6/27/2022 14:16	1.53	6/27/2022 14:39	4.66	6/27/2022 16:02	-0.38	6/26/2022 14:55	11.66
6/26/2022 15:27	-0.12	6/27/2022 14:17	1.53	6/27/2022 14:40	4.64	6/27/2022 16:03	-0.34	6/26/2022 14:56	11.60
6/26/2022 15:28	-0.10	6/27/2022 14:18	1.53	6/27/2022 14:41	4.63	6/27/2022 16:04	-0.37	6/26/2022 14:57	11.66
6/26/2022 15:29	-0.10	6/27/2022 14:19	1.53	6/27/2022 14:42	4.66	6/27/2022 16:05	-0.34	6/26/2022 14:58	11.59
6/26/2022 15:30	-0.10	6/27/2022 14:20	1.53	6/27/2022 14:43	4.66	6/27/2022 16:06	-0.38	6/26/2022 14:59	11.64
6/26/2022 15:31	-0.12	6/27/2022 14:21	1.53	6/27/2022 14:44	4.67	6/27/2022 16:07	-0.37	6/26/2022 15:00	11.64
6/26/2022 15:32	-0.12	6/27/2022 14:22	1.55	6/27/2022 14:45	4.67	6/27/2022 16:08	-0.35	6/26/2022 15:01	11.66
6/26/2022 15:33	-0.12	6/27/2022 14:23	1.53	6/27/2022 14:46	4.62	6/27/2022 16:09	-0.34	6/26/2022 15:02	11.64
6/26/2022 15:34	-0.12	6/27/2022 14:24	1.53	6/27/2022 14:47	4.64	6/27/2022 16:10	-0.39	6/26/2022 15:03	11.59
6/26/2022 15:35	-0.12	6/27/2022 14:25	1.53	6/27/2022 14:48	4.67	6/27/2022 16:11	-0.38	6/26/2022 15:04	11.63
6/26/2022 15:36	-0.12	6/27/2022 14:26	1.53	6/27/2022 14:49	4.64	6/27/2022 16:12	-0.38	6/26/2022 15:05	11.58
6/26/2022 15:37	-0.10	6/27/2022 14:27	1.53	6/27/2022 14:50	4.66	6/27/2022 16:13	-0.34	6/26/2022 15:06	11.63
6/26/2022 15:38	-0.10	6/27/2022 14:28	1.53	6/27/2022 14:51	4.62	6/27/2022 16:14	-0.34	6/26/2022 15:07	11.62
6/26/2022 15:39	-0.10	6/27/2022 14:29	1.53	6/27/2022 14:52	4.63	6/27/2022 16:15	-0.31	6/26/2022 15:08	11.62
6/26/2022 15:40	-0.10	6/27/2022 14:30	1.53	6/27/2022 14:53	4.65	6/27/2022 16:16	-0.37	6/26/2022 15:09	11.63
6/26/2022 15:41	-0.10	6/27/2022 14:31	1.53	6/27/2022 14:54	4.67	6/27/2022 16:17	-0.37	6/26/2022 15:10	11.63
6/26/2022 15:42	-0.10	6/27/2022 14:32	1.53	6/27/2022 14:55	4.62	6/27/2022 16:18	-0.39	6/26/2022 15:11	11.58
6/26/2022 15:43	-0.12	6/27/2022 14:33	1.55	6/27/2022 14:56	4.64	6/27/2022 16:19	-0.36	6/26/2022 15:12	11.59
6/26/2022 15:44	-0.12	6/27/2022 14:34	1.53	6/27/2022 14:57	4.68	6/27/2022 16:20	-0.37	6/26/2022 15:13	11.59
6/26/2022 15:45	-0.12	6/27/2022 14:35	1.53	6/27/2022 14:58	4.67	6/27/2022 16:21	-0.42	6/26/2022 15:14	11.64
6/26/2022 15:46	-0.12	6/27/2022 14:36	1.53	6/27/2022 14:59	4.64	6/27/2022 16:22	-0.35	6/26/2022 15:15	11.59
6/26/2022 15:47	-0.10	6/27/2022 14:37	1.52	6/27/2022 15:00	4.64	6/27/2022 16:23	-0.35	6/26/2022 15:16	11.63
6/26/2022 15:48	-0.10	6/27/2022 14:38	1.53	6/27/2022 15:01	4.67	6/27/2022 16:24	-0.36	6/26/2022 15:17	11.60
6/26/2022 15:49	-0.10	6/27/2022 14:39	1.53	6/27/2022 15:02	4.66	6/27/2022 16:25	-0.37	6/26/2022 15:18	11.58
6/26/2022 15:50	-0.11	6/27/2022 14:40	1.53	6/27/2022 15:03	4.68	6/27/2022 16:26	-0.38	6/26/2022 15:19	11.59
6/26/2022 15:51	-0.12	6/27/2022 14:41	1.53	6/27/2022 15:04	4.66	6/27/2022 16:27	-0.33	6/26/2022 15:20	11.62
6/26/2022 15:52	-0.10	6/27/2022 14:42	1.52	6/27/2022 15:05	4.64	6/27/2022 16:28	-0.35	6/26/2022 15:21	11.69
6/26/2022 15:53	-0.10	6/27/2022 14:43	1.52	6/27/2022 15:06	4.64	6/27/2022 16:29	-0.35	6/26/2022 15:22	11.66
6/26/2022 15:54	-0.10	6/27/2022 14:44	1.53	6/27/2022 15:07	4.63	6/27/2022 16:30	-0.37	6/26/2022 15:23	11.63
6/26/2022 15:55	-0.10	6/27/2022 14:45	1.53	6/27/2022 15:08	4.67	6/27/2022 16:31	-0.31	6/26/2022 15:24	11.59
6/26/2022 15:56	-0.12	6/27/2022 14:46	1.52	6/27/2022 15:09	4.61	6/27/2022 16:32	-0.35	6/26/2022 15:25	11.63
6/26/2022 15:57	-0.10	6/27/2022 14:47	1.53	6/27/2022 15:10	4.65	6/27/2022 16:33	-0.35	6/26/2022 15:26	11.63
6/26/2022 15:58	-0.10	6/27/2022 14:48	1.53	6/27/2022 15:11	4.66	6/27/2022 16:34	-0.40	6/26/2022 15:27	11.63
6/26/2022 15:59	-0.12	6/27/2022 14:49	1.52	6/27/2022 15:12	4.61	6/27/2022 16:35	-0.33	6/26/2022 15:28	11.60
6/26/2022 16:00	-0.10	6/27/2022 14:50	1.53	6/27/2022 15:13	4.67	6/27/2022 16:36	-0.37	6/26/2022 15:29	11.61
6/26/2022 16:01	-0.10	6/27/2022 14:51	1.53	6/27/2022 15:14	4.64	6/27/2022 16:37	-0.34	6/26/2022 15:30	11.64
6/26/2022 16:02	-0.10	6/27/2022 14:52	1.52	6/27/2022 15:15	4.65	6/27/2022 16:38	-0.32	6/26/2022 15:31	11.62
6/26/2022 16:03	-0.10	6/27/2022 14:53	1.52	6/27/2022 15:16	4.65	6/27/2022 16:39	-0.33	6/26/2022 15:32	11.63
6/26/2022 16:04	-0.12	6/27/2022 14:54	1.52	6/27/2022 15:17	4.66	6/27/2022 16:40	-0.34	6/26/2022 15:33	11.58
6/26/2022 16:05	-0.12	6/27/2022 14:55	1.52	6/27/2022 15:18	4.63	6/27/2022 16:41	-0.42	6/26/2022 15:34	11.63
6/26/2022 16:06	-0.12	6/27/2022 14:56	1.52	6/27/2022 15:19	4.62	6/27/2022 16:42	-0.35	6/26/2022 15:35	11.59
6/26/2022 16:07	-0.12	6/27/2022 14:57	1.52	6/27/2022 15:20	4.64	6/27/2022 16:43	-0.35	6/26/2022 15:36	11.59
6/26/2022 16:08	-0.12	6/27/2022 14:58	1.54	6/27/2022 15:21	4.64	6/27/2022 16:44	-0.35	6/26/2022 15:37	11.58
6/26/2022 16:09	-0.10	6/27/2022 14:59	1.52	6/27/2022 15:22	4.64	6/27/2022 16:45	-0.35	6/26/2022 15:38	11.62
6/26/2022 16:10	-0.10	6/27/2022 15:00	1.52	6/27/2022 15:23	4.63	6/27/2022 16:46	-0.38	6/26/2022 15:39	11.62
6/26/2022 16:11	-0.12	6/27/2022 15:01	1.52	6/27/2022 15:24	4.66	6/27/2022 16:47	-0.35	6/26/2022 15:40	11.62
6/26/2022 16:12	-0.10	6/27/2022 15:02	1.54	6/27/2022 15:25	4.67	6/27/2022 16:48	-0.38	6/26/2022 15:41	11.63
6/26/2022 16:13	-0.10	6/27/2022 15:03	1.52	6/27/2022 15:26	4.64	6/27/2022 16:49	-0.39	6/26/2022 15:42	11.63
6/26/2022 16:14	-0.10	6/27/2022 15:04	1.52	6/27/2022 15:27	4.64	6/27/2022 16:50	-0.33	6/26/2022 15:43	11.63
6/26/2022 16:15	-0.10	6/27/2022 15:05	1.52	6/27/2022 15:28	4.64	6/27/2022 16:51	-0.32	6/26/2022 15:44	11.64
6/26/2022 16:16	-0.12	6/27/2022 15:06	1.54	6/27/2022 15:29	4.67	6/27/2022 16:52	-0.35	6/26/2022 15:45	11.58
6/26/2022 16:17	-0.10	6/27/2022 15:07	1.52	6/27/2022 15:30	4.64	6/27/2022 16:53	-0.37	6/26/2022 15:46	11.66
6/26/2022 16:18	-0.10	6/27/2022 15:08	1.52	6/27/2022 15:31	4.64	6/27/2022 16:54	-0.36	6/26/2022 15:47	11.61
6/26/2022 16:19	-0.10	6/27/2022 15:09	1.52	6/27/2022 15:32	4.65	6/27/2022 16:55	-0.32	6/26/2022 15:48	11.59
6/26/2022 16:20	-0.10	6/27/2022 15:10	1.54	6/27/2022 15:33	4.61	6/27/2022 16:56	-0.36	6/26/2022 15:49	11.61
6/26/2022 16:21	-0.10	6/27/2022 15:11	1.52	6/27/2022 15:34	4.65	6/27/2022 16:57	-0.34	6/26/2022 15:50	11.62
6/26/2022 16:22	-0.11	6/27/2022 15:12	1.52	6/27/2022 15:35	4.64	6/27/2022 16:58	-0.39	6/26/2022 15:51	11.63
6/26/2022 16:23	-0.10	6/27/2022 15:13	1.52	6/27/2022 15:36	4.66	6/27/2022 16:59	-0.35	6/26/2022 15:52	11.65
6/26/2022 16:24	-0.10	6/27/2022 15:14	1.54	6/27/2022 15:37	4.64	6/27/2022 17:00	-0.36	6/26/2022 15:53	11.65
6/26/2022 16:25	-0.10	6/27/2022 15:15	1.52	6/27/2022 15:38	4.64	6/27/2022 17:01	-0.38	6/26/2022 15:54	11.57
6/26/2022 16:26	-0.11	6/27/2022 15:16	1.54	6/27/2022 15:39	4.64	6/27/2022 17:02	-0.35	6/26/2022 15:55	11.62
6/26/2022 16:27	-0.10	6/27/2022 15:17	1.52	6/27/2022 15:40	4.66	6/27/2022 17:03	-0.35	6/26/2022 15:56	11.65
6/26/2022 16:28	-0.11	6/27/2022 15:18	1.52	6/27/2022 15:41	4.66	6/27/2022 17:04	-0.36	6/26/2022 15:57	11.59
6/26/2022 16:29	-0.10	6/27/2022 15:19	1.52	6/27/2022 15:42	4.63	6/27/2022 17:05	-0.34	6/26/2022 15:58	11.64
6/26/2022 16:30	-0.11	6/27/2022 15:20	1.52	6/27/2022 15:43	4.64	6/27/2022 17:06	-0.39	6/26/2022 15:59	11.55
6/26/2022 16:31	-0.10	6/27/2022 15:21	1.52	6/27/2022 15:44	4.62	6/27/2022 17:07	-0.34	6/26/2022 16:00	11.60
6/26/2022 16:32	-0.10	6/27/2022 15:22	1.54	6/27/2022 15:45	4.64	6/27/2022 17:08	-0.38	6/26/2022 16:01	11.65
6/26/2022 16:33	-0.10	6/27/2022 15:23	1.52	6/27/2022 15:46	4.64	6/27/2022 17:09	-0.33	6/26/2022 16:02	11.58
6/26/2022 16:34	-0.10	6/27/2022 15:24	1.52	6/27/2022 15:47	4.63	6/27/2022 17:10	-0.36	6/26/2022 16:03	11.58
6/26/2022 16:35	-0.10	6/27/2022 15:25	1.52	6/27/2022 15:48	4.64	6/27/2022 17:11	-0.37	6/26/2022 16:04	11.57
6/26/2022 16:36	-0.12	6/27/2022 15:26	1.54	6/27/2022 15:49	4.66	6/27/2022 17:12	-0.36	6/26/2022 16:05	11.63
6/26/2022 16:37	-0.12	6/27/2022 15:27	1.52	6/27/2022 15:50	4.61	6/27/2022 17:13	-0.36	6/26/2022 16:06	11.61
6/26/2022 16:38	-0.10	6/27/2022 15:28	1.52	6/27/2022 15:51	4.68	6/27/2022 17:14	-0.33	6/26/2022 16:07	11.58
6/26/2022 16:39	-0.10	6/27/2022 15:29	1.52	6/27/2022 15:52	4.64	6/27/2022 17:15	-0.35	6/26/2022 16:08	11.59
6/26/2022 16:40	-0.10	6/27/2022 15:30	1.52	6/27/2022 15:53	4.63	6/27/2022 17:16	-0.34	6/26/2022 16:09	11.58

6/26/2022 16:41	-0.10	6/27/2022 15:31	1.51	6/27/2022 15:54	4.63	6/27/2022 17:17	-0.39	6/26/2022 16:10	11.59
6/26/2022 16:42	-0.10	6/27/2022 15:32	1.51	6/27/2022 15:55	4.61	6/27/2022 17:18	-0.32	6/26/2022 16:11	11.65
6/26/2022 16:43	-0.12	6/27/2022 15:33	1.51	6/27/2022 15:56	4.65	6/27/2022 17:19	-0.37	6/26/2022 16:12	11.60
6/26/2022 16:44	-0.10	6/27/2022 15:34	1.51	6/27/2022 15:57	4.64	6/27/2022 17:20	-0.37	6/26/2022 16:13	11.64
6/26/2022 16:45	-0.12	6/27/2022 15:35	1.52	6/27/2022 15:58	4.68	6/27/2022 17:21	-0.35	6/26/2022 16:14	11.59
6/26/2022 16:46	-0.10	6/27/2022 15:36	1.52	6/27/2022 15:59	4.63	6/27/2022 17:22	-0.33	6/26/2022 16:15	11.59
6/26/2022 16:47	-0.10	6/27/2022 15:37	1.51	6/27/2022 16:00	4.65	6/27/2022 17:23	-0.39	6/26/2022 16:16	11.64
6/26/2022 16:48	-0.12	6/27/2022 15:38	1.51	6/27/2022 16:01	4.64	6/27/2022 17:24	-0.37	6/26/2022 16:17	11.63
6/26/2022 16:49	-0.10	6/27/2022 15:39	1.54	6/27/2022 16:02	4.65	6/27/2022 17:25	-0.35	6/26/2022 16:18	11.59
6/26/2022 16:50	-0.12	6/27/2022 15:40	1.52	6/27/2022 16:03	4.65	6/27/2022 17:26	-0.36	6/26/2022 16:19	11.64
6/26/2022 16:51	-0.12	6/27/2022 15:41	1.52	6/27/2022 16:04	4.62	6/27/2022 17:27	-0.36	6/26/2022 16:20	11.63
6/26/2022 16:52	-0.11	6/27/2022 15:42	1.51	6/27/2022 16:05	4.64	6/27/2022 17:28	-0.36	6/26/2022 16:21	11.59
6/26/2022 16:53	-0.10	6/27/2022 15:43	1.54	6/27/2022 16:06	4.66	6/27/2022 17:29	-0.32	6/26/2022 16:22	11.61
6/26/2022 16:54	-0.10	6/27/2022 15:44	1.51	6/27/2022 16:07	4.67	6/27/2022 17:30	-0.40	6/26/2022 16:23	11.60
6/26/2022 16:55	-0.12	6/27/2022 15:45	1.52	6/27/2022 16:08	4.65	6/27/2022 17:31	-0.34	6/26/2022 16:24	11.65
6/26/2022 16:56	-0.12	6/27/2022 15:46	1.52	6/27/2022 16:09	4.66	6/27/2022 17:32	-0.35	6/26/2022 16:25	11.65
6/26/2022 16:57	-0.12	6/27/2022 15:47	1.54	6/27/2022 16:10	4.64	6/27/2022 17:33	-0.37	6/26/2022 16:26	11.57
6/26/2022 16:58	-0.10	6/27/2022 15:48	1.51	6/27/2022 16:11	4.64	6/27/2022 17:34	-0.37	6/26/2022 16:27	11.59
6/26/2022 16:59	-0.10	6/27/2022 15:49	1.51	6/27/2022 16:12	4.67	6/27/2022 17:35	-0.33	6/26/2022 16:28	11.58
6/26/2022 17:00	-0.12	6/27/2022 15:50	1.51	6/27/2022 16:13	4.63	6/27/2022 17:36	-0.33	6/26/2022 16:29	11.59
6/26/2022 17:01	-0.10	6/27/2022 15:51	1.51	6/27/2022 16:14	4.64	6/27/2022 17:37	-0.35	6/26/2022 16:30	11.65
6/26/2022 17:02	-0.10	6/27/2022 15:52	1.51	6/27/2022 16:15	4.64	6/27/2022 17:38	-0.35	6/26/2022 16:31	11.60
6/26/2022 17:03	-0.10	6/27/2022 15:53	1.52	6/27/2022 16:16	4.62	6/27/2022 17:39	-0.37	6/26/2022 16:32	11.57
6/26/2022 17:04	-0.12	6/27/2022 15:54	1.54	6/27/2022 16:17	4.62	6/27/2022 17:40	-0.37	6/26/2022 16:33	11.62
6/26/2022 17:05	-0.10	6/27/2022 15:55	1.51	6/27/2022 16:18	4.64	6/27/2022 17:41	-0.35	6/26/2022 16:34	11.62
6/26/2022 17:06	-0.10	6/27/2022 15:56	1.52	6/27/2022 16:19	4.65	6/27/2022 17:42	-0.37	6/26/2022 16:35	11.63
6/26/2022 17:07	-0.12	6/27/2022 15:57	1.52	6/27/2022 16:20	4.66	6/27/2022 17:43	-0.37	6/26/2022 16:36	11.61
6/26/2022 17:08	-0.10	6/27/2022 15:58	1.51	6/27/2022 16:21	4.64	6/27/2022 17:44	-0.37	6/26/2022 16:37	11.62
6/26/2022 17:09	-0.11	6/27/2022 15:59	1.51	6/27/2022 16:22	4.65	6/27/2022 17:45	-0.33	6/26/2022 16:38	11.64
6/26/2022 17:10	-0.10	6/27/2022 16:00	1.52	6/27/2022 16:23	4.66	6/27/2022 17:46	-0.34	6/26/2022 16:39	11.57
6/26/2022 17:11	-0.12	6/27/2022 16:01	1.54	6/27/2022 16:24	4.63	6/27/2022 17:47	-0.33	6/26/2022 16:40	11.59
6/26/2022 17:12	-0.10	6/27/2022 16:02	1.51	6/27/2022 16:25	4.62	6/27/2022 17:48	-0.37	6/26/2022 16:41	11.62
6/26/2022 17:13	-0.12	6/27/2022 16:03	1.54	6/27/2022 16:26	4.63	6/27/2022 17:49	-0.36	6/26/2022 16:42	11.59
6/26/2022 17:14	-0.10	6/27/2022 16:04	1.54	6/27/2022 16:27	4.62	6/27/2022 17:50	-0.43	6/26/2022 16:43	11.60
6/26/2022 17:15	-0.11	6/27/2022 16:05	1.51	6/27/2022 16:28	4.64	6/27/2022 17:51	-0.30	6/26/2022 16:44	11.56
6/26/2022 17:16	-0.11	6/27/2022 16:06	1.51	6/27/2022 16:29	4.64	6/27/2022 17:52	-0.36	6/26/2022 16:45	11.61
6/26/2022 17:17	-0.12	6/27/2022 16:07	1.51	6/27/2022 16:30	4.61	6/27/2022 17:53	-0.33	6/26/2022 16:46	11.61
6/26/2022 17:18	-0.10	6/27/2022 16:08	1.54	6/27/2022 16:31	4.64	6/27/2022 17:54	-0.38	6/26/2022 16:47	11.60
6/26/2022 17:19	-0.10	6/27/2022 16:09	1.51	6/27/2022 16:32	4.63	6/27/2022 17:55	-0.33	6/26/2022 16:48	11.57
6/26/2022 17:20	-0.10	6/27/2022 16:10	1.51	6/27/2022 16:33	4.65	6/27/2022 17:56	-0.36	6/26/2022 16:49	11.59
6/26/2022 17:21	-0.10	6/27/2022 16:11	1.51	6/27/2022 16:34	4.66	6/27/2022 17:57	-0.36	6/26/2022 16:50	11.63
6/26/2022 17:22	-0.11	6/27/2022 16:12	1.53	6/27/2022 16:35	4.63	6/27/2022 17:58	-0.39	6/26/2022 16:51	11.62
6/26/2022 17:23	-0.12	6/27/2022 16:13	1.51	6/27/2022 16:36	4.67	6/27/2022 17:59	-0.35	6/26/2022 16:52	11.62
6/26/2022 17:24	-0.10	6/27/2022 16:14	1.51	6/27/2022 16:37	4.64	6/27/2022 18:00	-0.33	6/26/2022 16:53	11.66
6/26/2022 17:25	-0.12	6/27/2022 16:15	1.51	6/27/2022 16:38	4.63	6/27/2022 18:01	-0.37	6/26/2022 16:54	11.64
6/26/2022 17:26	-0.10	6/27/2022 16:16	1.51	6/27/2022 16:39	4.62	6/27/2022 18:02	-0.39	6/26/2022 16:55	11.62
6/26/2022 17:27	-0.10	6/27/2022 16:17	1.53	6/27/2022 16:40	4.64	6/27/2022 18:03	-0.36	6/26/2022 16:56	11.60
6/26/2022 17:28	-0.10	6/27/2022 16:18	1.51	6/27/2022 16:41	4.64	6/27/2022 18:04	-0.35	6/26/2022 16:57	11.62
6/26/2022 17:29	-0.10	6/27/2022 16:19	1.53	6/27/2022 16:42	4.64	6/27/2022 18:05	-0.37	6/26/2022 16:58	11.67
6/26/2022 17:30	-0.12	6/27/2022 16:20	1.53	6/27/2022 16:43	4.63	6/27/2022 18:06	-0.36	6/26/2022 16:59	11.56
6/26/2022 17:31	-0.12	6/27/2022 16:21	1.51	6/27/2022 16:44	4.68	6/27/2022 18:07	-0.39	6/26/2022 17:00	11.59
6/26/2022 17:32	-0.12	6/27/2022 16:22	1.51	6/27/2022 16:45	4.64	6/27/2022 18:08	-0.34	6/26/2022 17:01	11.54
6/26/2022 17:33	-0.10	6/27/2022 16:23	1.53	6/27/2022 16:46	4.62	6/27/2022 18:09	-0.37	6/26/2022 17:02	11.61
6/26/2022 17:34	-0.10	6/27/2022 16:24	1.53	6/27/2022 16:47	4.63	6/27/2022 18:10	-0.37	6/26/2022 17:03	11.60
6/26/2022 17:35	-0.12	6/27/2022 16:25	1.51	6/27/2022 16:48	4.64	6/27/2022 18:11	-0.32	6/26/2022 17:04	11.60
6/26/2022 17:36	-0.12	6/27/2022 16:26	1.51	6/27/2022 16:49	4.62	6/27/2022 18:12	-0.35	6/26/2022 17:05	11.60
6/26/2022 17:37	-0.12	6/27/2022 16:27	1.51	6/27/2022 16:50	4.64	6/27/2022 18:13	-0.33	6/26/2022 17:06	11.64
6/26/2022 17:38	-0.10	6/27/2022 16:28	1.51	6/27/2022 16:51	4.62	6/27/2022 18:14	-0.36	6/26/2022 17:07	11.63
6/26/2022 17:39	-0.10	6/27/2022 16:29	1.51	6/27/2022 16:52	4.62	6/27/2022 18:15	-0.34	6/26/2022 17:08	11.59
6/26/2022 17:40	-0.12	6/27/2022 16:30	1.51	6/27/2022 16:53	4.60	6/27/2022 18:16	-0.37	6/26/2022 17:09	11.60
6/26/2022 17:41	-0.10	6/27/2022 16:31	1.53	6/27/2022 16:54	4.63	6/27/2022 18:17	-0.34	6/26/2022 17:10	11.63
6/26/2022 17:42	-0.10	6/27/2022 16:32	1.51	6/27/2022 16:55	4.66	6/27/2022 18:18	-0.32	6/26/2022 17:11	11.61
6/26/2022 17:43	-0.10	6/27/2022 16:33	1.51	6/27/2022 16:56	4.64	6/27/2022 18:19	-0.32	6/26/2022 17:12	11.62
6/26/2022 17:44	-0.10	6/27/2022 16:34	1.53	6/27/2022 16:57	4.60	6/27/2022 18:20	-0.39	6/26/2022 17:13	11.59
6/26/2022 17:45	-0.10	6/27/2022 16:35	1.51	6/27/2022 16:58	4.63	6/27/2022 18:21	-0.31	6/26/2022 17:14	11.62
6/26/2022 17:46	-0.12	6/27/2022 16:36	1.51	6/27/2022 16:59	4.63	6/27/2022 18:22	-0.37	6/26/2022 17:15	11.60
6/26/2022 17:47	-0.10	6/27/2022 16:37	1.53	6/27/2022 17:00	4.65	6/27/2022 18:23	-0.39	6/26/2022 17:16	11.60
6/26/2022 17:48	-0.12	6/27/2022 16:38	1.51	6/27/2022 17:01	4.60	6/27/2022 18:24	-0.36	6/26/2022 17:17	11.61
6/26/2022 17:49	-0.10	6/27/2022 16:39	1.51	6/27/2022 17:02	4.63	6/27/2022 18:25	-0.34	6/26/2022 17:18	11.62
6/26/2022 17:50	-0.10	6/27/2022 16:40	1.53	6/27/2022 17:03	4.63	6/27/2022 18:26	-0.36	6/26/2022 17:19	11.55
6/26/2022 17:51	-0.10	6/27/2022 16:41	1.53	6/27/2022 17:04	4.63	6/27/2022 18:27	-0.38	6/26/2022 17:20	11.65
6/26/2022 17:52	-0.10	6/27/2022 16:42	1.53	6/27/2022 17:05	4.61	6/27/2022 18:28	-0.35	6/26/2022 17:21	11.62
6/26/2022 17:53	-0.10	6/27/2022 16:43	1.51	6/27/2022 17:06	4.65	6/27/2022 18:29	-0.35	6/26/2022 17:22	11.59
6/26/2022 17:54	-0.12	6/27/2022 16:44	1.53	6/27/2022 17:07	4.61	6/27/2022 18:30	-0.35	6/26/2022 17:23	11.62
6/26/2022 17:55	-0.12	6/27/2022 16:45	1.51	6/27/2022 17:08	4.64	6/27/2022 18:31	-0.39	6/26/2022 17:24	11.65
6/26/2022 17:56	-0.12	6/27/2022 16:46	1.51	6/27/2022 17:09	4.67	6/27/2022 18:32	-0.37	6/26/2022 17:25	11.62
6/26/2022 17:57	-0.10	6/27/2022 16:47	1.51	6/27/2022 17:10	4.63	6/27/2022 18:33	-0.35	6/26/2022 17:26	11.61
6/26/2022 17:58	-0.12	6/27/2022 16:48	1.53	6/27/2022 17:11	4.59	6/27/2022 18:34	-0.40	6/26/2022 17:27	11.59
6/26/2022 17:59	-0.10	6/27/2022 16:49	1.51	6/27/2022 17:12	4.62	6/27/2022 18:35	-0.40	6/26/2022 17:28	11.59
6/26/2022 18:00	-0.10	6/27/2022 16:50	1.51	6/27/2022 17:13	4.66	6/27/2022 18:36	-0.38	6/26/2022 17:29	11.62
6/26/2022 18:01	-0.10	6/27/2022 16:51	1.51	6/27/2022 17:14	4.63	6/27/2022 18:37	-0.34	6/26/2022 17:30	11.57
6/26/2022 18:02	-0.10	6/27/2022 16:52	1.51	6/27/2022 17:15	4.66	6/27/2022 18:38	-0.37	6/26/2022 17:31	11.62
6/26/2022 18:03	-0.10	6/27/2022 16:53	1.53	6/27/2022 17:16	4.64	6/27/2022 18:39	-0.36	6/26/2022 17:32	11.59
6/26/2022 18:04	-0.12	6/27/2022 16:54	1.51	6/27/2022 17:17	4.62	6/27/2022 18:40	-0.34	6/26/2022 17:33	11.60
6/26/2022 18:05	-0.12	6/27/2022 16:55	1.51	6/27/2022 17:18	4.63	6/27/2022 18:41	-0.36	6/26/2022 17:34	11.59
6/26/2022 18:06	-0.10	6/27/2022 16:56	1.51	6/27/2022 17:19	4.62	6/27/2022 18:42	-0.37	6/26/2022 17:35	11.62
6/26/2022 18:07	-0.10	6/27/2022 16:57	1.51	6/27/2022 17:20	4.65	6/27/2022 18:43	-0.33	6/26/2022 17:36	11.63
6/26/2022 18:08	-0.10	6/27/2022 16:58	1.53	6/27/2022 17:21	4.61	6/27/2022 18:44	-0.33	6/26/2022 17:37	11.60

6/26/2022 18:09	-0.12	6/27/2022 16:59	1.51	6/27/2022 17:22	4.63	6/27/2022 18:45	-0.35	6/26/2022 17:38	11.68
6/26/2022 18:10	-0.10	6/27/2022 17:00	1.51	6/27/2022 17:23	4.63	6/27/2022 18:46	-0.36	6/26/2022 17:39	11.65
6/26/2022 18:11	-0.10	6/27/2022 17:01	1.51	6/27/2022 17:24	4.62	6/27/2022 18:47	-0.35	6/26/2022 17:40	11.61
6/26/2022 18:12	-0.10	6/27/2022 17:02	1.51	6/27/2022 17:25	4.65	6/27/2022 18:48	-0.32	6/26/2022 17:41	11.62
6/26/2022 18:13	-0.10	6/27/2022 17:03	1.53	6/27/2022 17:26	4.63	6/27/2022 18:49	-0.38	6/26/2022 17:42	11.64
6/26/2022 18:14	-0.10	6/27/2022 17:04	1.51	6/27/2022 17:27	4.62	6/27/2022 18:50	-0.36	6/26/2022 17:43	11.64
6/26/2022 18:15	-0.10	6/27/2022 17:05	1.51	6/27/2022 17:28	4.60	6/27/2022 18:51	-0.35	6/26/2022 17:44	11.60
6/26/2022 18:16	-0.10	6/27/2022 17:06	1.51	6/27/2022 17:29	4.65	6/27/2022 18:52	-0.37	6/26/2022 17:45	11.66
6/26/2022 18:17	-0.10	6/27/2022 17:07	1.51	6/27/2022 17:30	4.68	6/27/2022 18:53	-0.35	6/26/2022 17:46	11.54
6/26/2022 18:18	-0.10	6/27/2022 17:08	1.51	6/27/2022 17:31	4.64	6/27/2022 18:54	-0.33	6/26/2022 17:47	11.62
6/26/2022 18:19	-0.10	6/27/2022 17:09	1.51	6/27/2022 17:32	4.62	6/27/2022 18:55	-0.34	6/26/2022 17:48	11.64
6/26/2022 18:20	-0.10	6/27/2022 17:10	1.51	6/27/2022 17:33	4.65	6/27/2022 18:56	-0.35	6/26/2022 17:49	11.65
6/26/2022 18:21	-0.10	6/27/2022 17:11	1.51	6/27/2022 17:34	4.65	6/27/2022 18:57	-0.34	6/26/2022 17:50	11.65
6/26/2022 18:22	-0.10	6/27/2022 17:12	1.51	6/27/2022 17:35	4.63	6/27/2022 18:58	-0.35	6/26/2022 17:51	11.64
6/26/2022 18:23	-0.11	6/27/2022 17:13	1.51	6/27/2022 17:36	4.68	6/27/2022 18:59	-0.35	6/26/2022 17:52	11.56
6/26/2022 18:24	-0.10	6/27/2022 17:14	1.51	6/27/2022 17:37	4.64	6/27/2022 19:00	-0.36	6/26/2022 17:53	11.63
6/26/2022 18:25	-0.10	6/27/2022 17:15	1.51	6/27/2022 17:38	4.61	6/27/2022 19:01	-0.38	6/26/2022 17:54	11.66
6/26/2022 18:26	-0.10	6/27/2022 17:16	1.51	6/27/2022 17:39	4.64	6/27/2022 19:02	-0.37	6/26/2022 17:55	11.61
6/26/2022 18:27	-0.10	6/27/2022 17:17	1.51	6/27/2022 17:40	4.64	6/27/2022 19:03	-0.40	6/26/2022 17:56	11.62
6/26/2022 18:28	-0.10	6/27/2022 17:18	1.51	6/27/2022 17:41	4.65	6/27/2022 19:04	-0.34	6/26/2022 17:57	11.63
6/26/2022 18:29	-0.12	6/27/2022 17:19	1.51	6/27/2022 17:42	4.65	6/27/2022 19:05	-0.35	6/26/2022 17:58	11.65
6/26/2022 18:30	-0.12	6/27/2022 17:20	1.51	6/27/2022 17:43	4.63	6/27/2022 19:06	-0.39	6/26/2022 17:59	11.68
6/26/2022 18:31	-0.10	6/27/2022 17:21	1.51	6/27/2022 17:44	4.64	6/27/2022 19:07	-0.35	6/26/2022 18:00	11.65
6/26/2022 18:32	-0.10	6/27/2022 17:22	1.51	6/27/2022 17:45	4.66	6/27/2022 19:08	-0.37	6/26/2022 18:01	11.63
6/26/2022 18:33	-0.10	6/27/2022 17:23	1.51	6/27/2022 17:46	4.61	6/27/2022 19:09	-0.37	6/26/2022 18:02	11.64
6/26/2022 18:34	-0.12	6/27/2022 17:24	1.51	6/27/2022 17:47	4.65	6/27/2022 19:10	-0.36	6/26/2022 18:03	11.61
6/26/2022 18:35	-0.10	6/27/2022 17:25	1.51	6/27/2022 17:48	4.63	6/27/2022 19:11	-0.36	6/26/2022 18:04	11.62
6/26/2022 18:36	-0.10	6/27/2022 17:26	1.51	6/27/2022 17:49	4.63	6/27/2022 19:12	-0.35	6/26/2022 18:05	11.65
6/26/2022 18:37	-0.10	6/27/2022 17:27	1.51	6/27/2022 17:50	4.62	6/27/2022 19:13	-0.40	6/26/2022 18:06	11.61
6/26/2022 18:38	-0.10	6/27/2022 17:28	1.51	6/27/2022 17:51	4.62	6/27/2022 19:14	-0.34	6/26/2022 18:07	11.61
6/26/2022 18:39	-0.10	6/27/2022 17:29	1.51	6/27/2022 17:52	4.62	6/27/2022 19:15	-0.37	6/26/2022 18:08	11.61
6/26/2022 18:40	-0.10	6/27/2022 17:30	1.51	6/27/2022 17:53	4.62	6/27/2022 19:16	-0.37	6/26/2022 18:09	11.64
6/26/2022 18:41	-0.12	6/27/2022 17:31	1.51	6/27/2022 17:54	4.61	6/27/2022 19:17	-0.36	6/26/2022 18:10	11.61
6/26/2022 18:42	-0.12	6/27/2022 17:32	1.53	6/27/2022 17:55	4.63	6/27/2022 19:18	-0.33	6/26/2022 18:11	11.65
6/26/2022 18:43	-0.10	6/27/2022 17:33	1.51	6/27/2022 17:56	4.66	6/27/2022 19:19	-0.37	6/26/2022 18:12	11.64
6/26/2022 18:44	-0.10	6/27/2022 17:34	1.51	6/27/2022 17:57	4.62	6/27/2022 19:20	-0.35	6/26/2022 18:13	11.64
6/26/2022 18:45	-0.10	6/27/2022 17:35	1.51	6/27/2022 17:58	4.65	6/27/2022 19:21	-0.35	6/26/2022 18:14	11.60
6/26/2022 18:46	-0.10	6/27/2022 17:36	1.51	6/27/2022 17:59	4.63	6/27/2022 19:22	-0.30	6/26/2022 18:15	11.61
6/26/2022 18:47	-0.12	6/27/2022 17:37	1.51	6/27/2022 18:00	4.64	6/27/2022 19:23	-0.39	6/26/2022 18:16	11.68
6/26/2022 18:48	-0.12	6/27/2022 17:38	1.51	6/27/2022 18:01	4.63	6/27/2022 19:24	-0.35	6/26/2022 18:17	11.61
6/26/2022 18:49	-0.10	6/27/2022 17:39	1.51	6/27/2022 18:02	4.65	6/27/2022 19:25	-0.34	6/26/2022 18:18	11.63
6/26/2022 18:50	-0.10	6/27/2022 17:40	1.51	6/27/2022 18:03	4.63	6/27/2022 19:26	-0.33	6/26/2022 18:19	11.64
6/26/2022 18:51	-0.12	6/27/2022 17:41	1.51	6/27/2022 18:04	4.63	6/27/2022 19:27	-0.34	6/26/2022 18:20	11.59
6/26/2022 18:52	-0.10	6/27/2022 17:42	1.51	6/27/2022 18:05	4.67	6/27/2022 19:28	-0.37	6/26/2022 18:21	11.64
6/26/2022 18:53	-0.12	6/27/2022 17:43	1.53	6/27/2022 18:06	4.66	6/27/2022 19:29	-0.35	6/26/2022 18:22	11.64
6/26/2022 18:54	-0.10	6/27/2022 17:44	1.51	6/27/2022 18:07	4.61	6/27/2022 19:30	-0.33	6/26/2022 18:23	11.64
6/26/2022 18:55	-0.12	6/27/2022 17:45	1.51	6/27/2022 18:08	4.62	6/27/2022 19:31	-0.35	6/26/2022 18:24	11.66
6/26/2022 18:56	-0.12	6/27/2022 17:46	1.51	6/27/2022 18:09	4.62	6/27/2022 19:32	-0.35	6/26/2022 18:25	11.61
6/26/2022 18:57	-0.12	6/27/2022 17:47	1.51	6/27/2022 18:10	4.66	6/27/2022 19:33	-0.32	6/26/2022 18:26	11.62
6/26/2022 18:58	-0.10	6/27/2022 17:48	1.51	6/27/2022 18:11	4.66	6/27/2022 19:34	-0.38	6/26/2022 18:27	11.62
6/26/2022 18:59	-0.10	6/27/2022 17:49	1.51	6/27/2022 18:12	4.61	6/27/2022 19:35	-0.39	6/26/2022 18:28	11.64
6/26/2022 19:00	-0.10	6/27/2022 17:50	1.51	6/27/2022 18:13	4.65	6/27/2022 19:36	-0.35	6/26/2022 18:29	11.60
6/26/2022 19:01	-0.10	6/27/2022 17:51	1.51	6/27/2022 18:14	4.62	6/27/2022 19:37	-0.39	6/26/2022 18:30	11.59
6/26/2022 19:02	-0.11	6/27/2022 17:52	1.51	6/27/2022 18:15	4.64	6/27/2022 19:38	-0.37	6/26/2022 18:31	11.67
6/26/2022 19:03	-0.12	6/27/2022 17:53	1.51	6/27/2022 18:16	4.64	6/27/2022 19:39	-0.37	6/26/2022 18:32	11.66
6/26/2022 19:04	-0.12	6/27/2022 17:54	1.51	6/27/2022 18:17	4.62	6/27/2022 19:40	-0.33	6/26/2022 18:33	11.65
6/26/2022 19:05	-0.10	6/27/2022 17:55	1.51	6/27/2022 18:18	4.63	6/27/2022 19:41	-0.39	6/26/2022 18:34	11.63
6/26/2022 19:06	-0.12	6/27/2022 17:56	1.51	6/27/2022 18:19	4.64	6/27/2022 19:42	-0.37	6/26/2022 18:35	11.62
6/26/2022 19:07	-0.10	6/27/2022 17:57	1.51	6/27/2022 18:20	4.64	6/27/2022 19:43	-0.32	6/26/2022 18:36	11.65
6/26/2022 19:08	-0.10	6/27/2022 17:58	1.51	6/27/2022 18:21	4.63	6/27/2022 19:44	-0.34	6/26/2022 18:37	11.62
6/26/2022 19:09	-0.10	6/27/2022 17:59	1.51	6/27/2022 18:22	4.65	6/27/2022 19:45	-0.38	6/26/2022 18:38	11.58
6/26/2022 19:10	-0.12	6/27/2022 18:00	1.51	6/27/2022 18:23	4.63	6/27/2022 19:46	-0.34	6/26/2022 18:39	11.62
6/26/2022 19:11	-0.10	6/27/2022 18:01	1.51	6/27/2022 18:24	4.64	6/27/2022 19:47	-0.37	6/26/2022 18:40	11.61
6/26/2022 19:12	-0.12	6/27/2022 18:02	1.51	6/27/2022 18:25	4.68	6/27/2022 19:48	-0.37	6/26/2022 18:41	11.65
6/26/2022 19:13	-0.12	6/27/2022 18:03	1.51	6/27/2022 18:26	4.66	6/27/2022 19:49	-0.38	6/26/2022 18:42	11.62
6/26/2022 19:14	-0.12	6/27/2022 18:04	1.51	6/27/2022 18:27	4.62	6/27/2022 19:50	-0.40	6/26/2022 18:43	11.62
6/26/2022 19:15	-0.10	6/27/2022 18:05	1.52	6/27/2022 18:28	4.65	6/27/2022 19:51	-0.35	6/26/2022 18:44	11.66
6/26/2022 19:16	-0.12	6/27/2022 18:06	1.51	6/27/2022 18:29	4.60	6/27/2022 19:52	-0.35	6/26/2022 18:45	11.62
6/26/2022 19:17	-0.10	6/27/2022 18:07	1.51	6/27/2022 18:30	4.64	6/27/2022 19:53	-0.37	6/26/2022 18:46	11.60
6/26/2022 19:18	-0.10	6/27/2022 18:08	1.53	6/27/2022 18:31	4.64	6/27/2022 19:54	-0.35	6/26/2022 18:47	11.64
6/26/2022 19:19	-0.12	6/27/2022 18:09	1.51	6/27/2022 18:32	4.62	6/27/2022 19:55	-0.36	6/26/2022 18:48	11.60
6/26/2022 19:20	-0.10	6/27/2022 18:10	1.51	6/27/2022 18:33	4.64	6/27/2022 19:56	-0.31	6/26/2022 18:49	11.62
6/26/2022 19:21	-0.10	6/27/2022 18:11	1.51	6/27/2022 18:34	4.60	6/27/2022 19:57	-0.35	6/26/2022 18:50	11.63
6/26/2022 19:22	-0.10	6/27/2022 18:12	1.54	6/27/2022 18:35	4.64	6/27/2022 19:58	-0.37	6/26/2022 18:51	11.66
6/26/2022 19:23	-0.10	6/27/2022 18:13	1.54	6/27/2022 18:36	4.65	6/27/2022 19:59	-0.34	6/26/2022 18:52	11.55
6/26/2022 19:24	-0.12	6/27/2022 18:14	1.51	6/27/2022 18:37	4.61	6/27/2022 20:00	-0.35	6/26/2022 18:53	11.60
6/26/2022 19:25	-0.12	6/27/2022 18:15	1.53	6/27/2022 18:38	4.63	6/27/2022 20:01	-0.34	6/26/2022 18:54	11.62
6/26/2022 19:26	-0.10	6/27/2022 18:16	1.52	6/27/2022 18:39	4.65	6/27/2022 20:02	-0.35	6/26/2022 18:55	11.61
6/26/2022 19:27	-0.12	6/27/2022 18:17	1.54	6/27/2022 18:40	4.64	6/27/2022 20:03	-0.35	6/26/2022 18:56	11.64
6/26/2022 19:28	-0.12	6/27/2022 18:18	1.52	6/27/2022 18:41	4.63	6/27/2022 20:04	-0.39	6/26/2022 18:57	11.56
6/26/2022 19:29	-0.12	6/27/2022 18:19	1.51	6/27/2022 18:42	4.65	6/27/2022 20:05	-0.36	6/26/2022 18:58	11.62
6/26/2022 19:30	-0.10	6/27/2022 18:20	1.52	6/27/2022 18:43	4.64	6/27/2022 20:06	-0.32	6/26/2022 18:59	11.61
6/26/2022 19:31	-0.12	6/27/2022 18:21	1.51	6/27/2022 18:44	4.63	6/27/2022 20:07	-0.37	6/26/2022 19:00	11.59
6/26/2022 19:32	-0.12	6/27/2022 18:22	1.51	6/27/2022 18:45	4.64	6/27/2022 20:08	-0.39	6/26/2022 19:01	11.66
6/26/2022 19:33	-0.12	6/27/2022 18:23	1.52	6/27/2022 18:46	4.62	6/27/2022 20:09	-0.34	6/26/2022 19:02	11.63
6/26/2022 19:34	-0.10	6/27/2022 18:24	1.54	6/27/2022 18:47	4.62	6/27/2022 20:10	-0.35	6/26/2022 19:03	11.64
6/26/2022 19:35	-0.12	6/27/2022 18:25	1.52	6/27/2022 18:48	4.64	6/27/2022 20:11	-0.33	6/26/2022 19:04	11.63
6/26/2022 19:36	-0.10	6/27/2022 18:26	1.53	6/27/2022 18:49	4.61	6/27/2022 20:12	-0.34	6/26/2022 19:05	11.58

6/26/2022 19:37	-0.10	6/27/2022 18:27	1.51	6/27/2022 18:50	4.64	6/27/2022 20:13	-0.38	6/26/2022 19:06	11.57
6/26/2022 19:38	-0.10	6/27/2022 18:28	1.54	6/27/2022 18:51	4.62	6/27/2022 20:14	-0.35	6/26/2022 19:07	11.60
6/26/2022 19:39	-0.10	6/27/2022 18:29	1.54	6/27/2022 18:52	4.66	6/27/2022 20:15	-0.35	6/26/2022 19:08	11.62
6/26/2022 19:40	-0.10	6/27/2022 18:30	1.52	6/27/2022 18:53	4.63	6/27/2022 20:16	-0.32	6/26/2022 19:09	11.65
6/26/2022 19:41	-0.10	6/27/2022 18:31	1.52	6/27/2022 18:54	4.66	6/27/2022 20:17	-0.33	6/26/2022 19:10	11.64
6/26/2022 19:42	-0.10	6/27/2022 18:32	1.54	6/27/2022 18:55	4.63	6/27/2022 20:18	-0.33	6/26/2022 19:11	11.62
6/26/2022 19:43	-0.12	6/27/2022 18:33	1.54	6/27/2022 18:56	4.63	6/27/2022 20:19	-0.37	6/26/2022 19:12	11.59
6/26/2022 19:44	-0.10	6/27/2022 18:34	1.51	6/27/2022 18:57	4.65	6/27/2022 20:20	-0.36	6/26/2022 19:13	11.60
6/26/2022 19:45	-0.10	6/27/2022 18:35	1.52	6/27/2022 18:58	4.59	6/27/2022 20:21	-0.39	6/26/2022 19:14	11.59
6/26/2022 19:46	-0.12	6/27/2022 18:36	1.52	6/27/2022 18:59	4.61	6/27/2022 20:22	-0.35	6/26/2022 19:15	11.62
6/26/2022 19:47	-0.12	6/27/2022 18:37	1.52	6/27/2022 19:00	4.65	6/27/2022 20:23	-0.36	6/26/2022 19:16	11.63
6/26/2022 19:48	-0.12	6/27/2022 18:38	1.51	6/27/2022 19:01	4.61	6/27/2022 20:24	-0.37	6/26/2022 19:17	11.67
6/26/2022 19:49	-0.12	6/27/2022 18:39	1.52	6/27/2022 19:02	4.63	6/27/2022 20:25	-0.34	6/26/2022 19:18	11.63
6/26/2022 19:50	-0.12	6/27/2022 18:40	1.52	6/27/2022 19:03	4.63	6/27/2022 20:26	-0.33	6/26/2022 19:19	11.60
6/26/2022 19:51	-0.12	6/27/2022 18:41	1.52	6/27/2022 19:04	4.61	6/27/2022 20:27	-0.35	6/26/2022 19:20	11.65
6/26/2022 19:52	-0.12	6/27/2022 18:42	1.52	6/27/2022 19:05	4.63	6/27/2022 20:28	-0.36	6/26/2022 19:21	11.66
6/26/2022 19:53	-0.12	6/27/2022 18:43	1.52	6/27/2022 19:06	4.64	6/27/2022 20:29	-0.35	6/26/2022 19:22	11.63
6/26/2022 19:54	-0.12	6/27/2022 18:44	1.52	6/27/2022 19:07	4.67	6/27/2022 20:30	-0.32	6/26/2022 19:23	11.63
6/26/2022 19:55	-0.10	6/27/2022 18:45	1.54	6/27/2022 19:08	4.63	6/27/2022 20:31	-0.34	6/26/2022 19:24	11.60
6/26/2022 19:56	-0.12	6/27/2022 18:46	1.52	6/27/2022 19:09	4.63	6/27/2022 20:32	-0.33	6/26/2022 19:25	11.59
6/26/2022 19:57	-0.12	6/27/2022 18:47	1.54	6/27/2022 19:10	4.62	6/27/2022 20:33	-0.37	6/26/2022 19:26	11.62
6/26/2022 19:58	-0.12	6/27/2022 18:48	1.52	6/27/2022 19:11	4.64	6/27/2022 20:34	-0.41	6/26/2022 19:27	11.57
6/26/2022 19:59	-0.10	6/27/2022 18:49	1.52	6/27/2022 19:12	4.60	6/27/2022 20:35	-0.33	6/26/2022 19:28	11.65
6/26/2022 20:00	-0.12	6/27/2022 18:50	1.54	6/27/2022 19:13	4.62	6/27/2022 20:36	-0.38	6/26/2022 19:29	11.61
6/26/2022 20:01	-0.10	6/27/2022 18:51	1.52	6/27/2022 19:14	4.65	6/27/2022 20:37	-0.35	6/26/2022 19:30	11.66
6/26/2022 20:02	-0.10	6/27/2022 18:52	1.54	6/27/2022 19:15	4.68	6/27/2022 20:38	-0.32	6/26/2022 19:31	11.60
6/26/2022 20:03	-0.10	6/27/2022 18:53	1.52	6/27/2022 19:16	4.64	6/27/2022 20:39	-0.34	6/26/2022 19:32	11.65
6/26/2022 20:04	-0.12	6/27/2022 18:54	1.52	6/27/2022 19:17	4.67	6/27/2022 20:40	-0.37	6/26/2022 19:33	11.62
6/26/2022 20:05	-0.10	6/27/2022 18:55	1.54	6/27/2022 19:18	4.64	6/27/2022 20:41	-0.40	6/26/2022 19:34	11.60
6/26/2022 20:06	-0.12	6/27/2022 18:56	1.52	6/27/2022 19:19	4.62	6/27/2022 20:42	-0.36	6/26/2022 19:35	11.68
6/26/2022 20:07	-0.12	6/27/2022 18:57	1.52	6/27/2022 19:20	4.60	6/27/2022 20:43	-0.36	6/26/2022 19:36	11.67
6/26/2022 20:08	-0.10	6/27/2022 18:58	1.54	6/27/2022 19:21	4.65	6/27/2022 20:44	-0.39	6/26/2022 19:37	11.60
6/26/2022 20:09	-0.10	6/27/2022 18:59	1.52	6/27/2022 19:22	4.63	6/27/2022 20:45	-0.34	6/26/2022 19:38	11.68
6/26/2022 20:10	-0.12	6/27/2022 19:00	1.54	6/27/2022 19:23	4.65	6/27/2022 20:46	-0.35	6/26/2022 19:39	11.65
6/26/2022 20:11	-0.10	6/27/2022 19:01	1.52	6/27/2022 19:24	4.66	6/27/2022 20:47	-0.33	6/26/2022 19:40	11.61
6/26/2022 20:12	-0.10	6/27/2022 19:02	1.52	6/27/2022 19:25	4.66	6/27/2022 20:48	-0.33	6/26/2022 19:41	11.61
6/26/2022 20:13	-0.10	6/27/2022 19:03	1.54	6/27/2022 19:26	4.64	6/27/2022 20:49	-0.35	6/26/2022 19:42	11.67
6/26/2022 20:14	-0.12	6/27/2022 19:04	1.52	6/27/2022 19:27	4.62	6/27/2022 20:50	-0.35	6/26/2022 19:43	11.62
6/26/2022 20:15	-0.10	6/27/2022 19:05	1.52	6/27/2022 19:28	4.66	6/27/2022 20:51	-0.34	6/26/2022 19:44	11.58
6/26/2022 20:16	-0.10	6/27/2022 19:06	1.52	6/27/2022 19:29	4.64	6/27/2022 20:52	-0.38	6/26/2022 19:45	11.57
6/26/2022 20:17	-0.12	6/27/2022 19:07	1.52	6/27/2022 19:30	4.65	6/27/2022 20:53	-0.39	6/26/2022 19:46	11.66
6/26/2022 20:18	-0.10	6/27/2022 19:08	1.54	6/27/2022 19:31	4.64	6/27/2022 20:54	-0.39	6/26/2022 19:47	11.60
6/26/2022 20:19	-0.12	6/27/2022 19:09	1.52	6/27/2022 19:32	4.62	6/27/2022 20:55	-0.37	6/26/2022 19:48	11.59
6/26/2022 20:20	-0.10	6/27/2022 19:10	1.52	6/27/2022 19:33	4.66	6/27/2022 20:56	-0.39	6/26/2022 19:49	11.66
6/26/2022 20:21	-0.12	6/27/2022 19:11	1.52	6/27/2022 19:34	4.65	6/27/2022 20:57	-0.34	6/26/2022 19:50	11.65
6/26/2022 20:22	-0.10	6/27/2022 19:12	1.54	6/27/2022 19:35	4.62	6/27/2022 20:58	-0.38	6/26/2022 19:51	11.65
6/26/2022 20:23	-0.12	6/27/2022 19:13	1.52	6/27/2022 19:36	4.67	6/27/2022 20:59	-0.38	6/26/2022 19:52	11.59
6/26/2022 20:24	-0.12	6/27/2022 19:14	1.52	6/27/2022 19:37	4.61	6/27/2022 21:00	-0.34	6/26/2022 19:53	11.61
6/26/2022 20:25	-0.10	6/27/2022 19:15	1.52	6/27/2022 19:38	4.62	6/27/2022 21:01	-0.34	6/26/2022 19:54	11.64
6/26/2022 20:26	-0.12	6/27/2022 19:16	1.53	6/27/2022 19:39	4.64	6/27/2022 21:02	-0.32	6/26/2022 19:55	11.57
6/26/2022 20:27	-0.10	6/27/2022 19:17	1.52	6/27/2022 19:40	4.66	6/27/2022 21:03	-0.30	6/26/2022 19:56	11.66
6/26/2022 20:28	-0.12	6/27/2022 19:18	1.52	6/27/2022 19:41	4.64	6/27/2022 21:04	-0.35	6/26/2022 19:57	11.61
6/26/2022 20:29	-0.12	6/27/2022 19:19	1.52	6/27/2022 19:42	4.61	6/27/2022 21:05	-0.32	6/26/2022 19:58	11.67
6/26/2022 20:30	-0.12	6/27/2022 19:20	1.54	6/27/2022 19:43	4.62	6/27/2022 21:06	-0.36	6/26/2022 19:59	11.61
6/26/2022 20:31	-0.10	6/27/2022 19:21	1.52	6/27/2022 19:44	4.67	6/27/2022 21:07	-0.40	6/26/2022 20:00	11.63
6/26/2022 20:32	-0.10	6/27/2022 19:22	1.52	6/27/2022 19:45	4.64	6/27/2022 21:08	-0.39	6/26/2022 20:01	11.65
6/26/2022 20:33	-0.12	6/27/2022 19:23	1.52	6/27/2022 19:46	4.65	6/27/2022 21:09	-0.36	6/26/2022 20:02	11.61
6/26/2022 20:34	-0.12	6/27/2022 19:24	1.52	6/27/2022 19:47	4.67	6/27/2022 21:10	-0.36	6/26/2022 20:03	11.58
6/26/2022 20:35	-0.10	6/27/2022 19:25	1.53	6/27/2022 19:48	4.63	6/27/2022 21:11	-0.36	6/26/2022 20:04	11.63
6/26/2022 20:36	-0.10	6/27/2022 19:26	1.54	6/27/2022 19:49	4.62	6/27/2022 21:12	-0.38	6/26/2022 20:05	11.65
6/26/2022 20:37	-0.11	6/27/2022 19:27	1.52	6/27/2022 19:50	4.66	6/27/2022 21:13	-0.36	6/26/2022 20:06	11.67
6/26/2022 20:38	-0.10	6/27/2022 19:28	1.52	6/27/2022 19:51	4.66	6/27/2022 21:14	-0.38	6/26/2022 20:07	11.61
6/26/2022 20:39	-0.12	6/27/2022 19:29	1.52	6/27/2022 19:52	4.65	6/27/2022 21:15	-0.34	6/26/2022 20:08	11.62
6/26/2022 20:40	-0.12	6/27/2022 19:30	1.52	6/27/2022 19:53	4.64	6/27/2022 21:16	-0.40	6/26/2022 20:09	11.62
6/26/2022 20:41	-0.10	6/27/2022 19:31	1.53	6/27/2022 19:54	4.65	6/27/2022 21:17	-0.37	6/26/2022 20:10	11.63
6/26/2022 20:42	-0.12	6/27/2022 19:32	1.53	6/27/2022 19:55	4.64	6/27/2022 21:18	-0.35	6/26/2022 20:11	11.65
6/26/2022 20:43	-0.12	6/27/2022 19:33	1.55	6/27/2022 19:56	4.65	6/27/2022 21:19	-0.38	6/26/2022 20:12	11.58
6/26/2022 20:44	-0.12	6/27/2022 19:34	1.52	6/27/2022 19:57	4.66	6/27/2022 21:20	-0.32	6/26/2022 20:13	11.65
6/26/2022 20:45	-0.12	6/27/2022 19:35	1.53	6/27/2022 19:58	4.64	6/27/2022 21:21	-0.36	6/26/2022 20:14	11.66
6/26/2022 20:46	-0.12	6/27/2022 19:36	1.52	6/27/2022 19:59	4.68	6/27/2022 21:22	-0.40	6/26/2022 20:15	11.62
6/26/2022 20:47	-0.12	6/27/2022 19:37	1.53	6/27/2022 20:00	4.67	6/27/2022 21:23	-0.34	6/26/2022 20:16	11.65
6/26/2022 20:48	-0.10	6/27/2022 19:38	1.53	6/27/2022 20:01	4.62	6/27/2022 21:24	-0.35	6/26/2022 20:17	11.63
6/26/2022 20:49	-0.12	6/27/2022 19:39	1.53	6/27/2022 20:02	4.66	6/27/2022 21:25	-0.36	6/26/2022 20:18	11.65
6/26/2022 20:50	-0.12	6/27/2022 19:40	1.53	6/27/2022 20:03	4.68	6/27/2022 21:26	-0.40	6/26/2022 20:19	11.66
6/26/2022 20:51	-0.12	6/27/2022 19:41	1.53	6/27/2022 20:04	4.63	6/27/2022 21:27	-0.37	6/26/2022 20:20	11.65
6/26/2022 20:52	-0.10	6/27/2022 19:42	1.53	6/27/2022 20:05	4.65	6/27/2022 21:28	-0.36	6/26/2022 20:21	11.68
6/26/2022 20:53	-0.12	6/27/2022 19:43	1.53	6/27/2022 20:06	4.65	6/27/2022 21:29	-0.35	6/26/2022 20:22	11.61
6/26/2022 20:54	-0.12	6/27/2022 19:44	1.53	6/27/2022 20:07	4.62	6/27/2022 21:30	-0.33	6/26/2022 20:23	11.62
6/26/2022 20:55	-0.10	6/27/2022 19:45	1.52	6/27/2022 20:08	4.62	6/27/2022 21:31	-0.34	6/26/2022 20:24	11.62
6/26/2022 20:56	-0.12	6/27/2022 19:46	1.53	6/27/2022 20:09	4.62	6/27/2022 21:32	-0.38	6/26/2022 20:25	11.63
6/26/2022 20:57	-0.12	6/27/2022 19:47	1.55	6/27/2022 20:10	4.66	6/27/2022 21:33	-0.36	6/26/2022 20:26	11.65
6/26/2022 20:58	-0.10	6/27/2022 19:48	1.53	6/27/2022 20:11	4.67	6/27/2022 21:34	-0.37	6/26/2022 20:27	11.64
6/26/2022 20:59	-0.12	6/27/2022 19:49	1.53	6/27/2022 20:12	4.64	6/27/2022 21:35	-0.39	6/26/2022 20:28	11.65
6/26/2022 21:00	-0.10	6/27/2022 19:50	1.53	6/27/2022 20:13	4.65	6/27/2022 21:36	-0.36	6/26/2022 20:29	11.62
6/26/2022 21:01	-0.12	6/27/2022 19:51	1.53	6/27/2022 20:14	4.67	6/27/2022 21:37	-0.39	6/26/2022 20:30	11.65
6/26/2022 21:02	-0.12	6/27/2022 19:52	1.53	6/27/2022 20:15	4.65	6/27/2022 21:38	-0.34	6/26/2022 20:31	11.65
6/26/2022 21:03	-0.10	6/27/2022 19:53	1.52	6/27/2022 20:16	4.64	6/27/2022 21:39	-0.38	6/26/2022 20:32	11.60
6/26/2022 21:04	-0.12	6/27/2022 19:54	1.53	6/27/2022 20:17	4.66	6/27/2022 21:40	-0.38	6/26/2022 20:33	11.63

6/26/2022 21:05	-0.12	6/27/2022 19:55	1.53	6/27/2022 20:18	4.63	6/27/2022 21:41	-0.33	6/26/2022 20:34	11.65
6/26/2022 21:06	-0.12	6/27/2022 19:56	1.53	6/27/2022 20:19	4.63	6/27/2022 21:42	-0.33	6/26/2022 20:35	11.65
6/26/2022 21:07	-0.10	6/27/2022 19:57	1.53	6/27/2022 20:20	4.64	6/27/2022 21:43	-0.36	6/26/2022 20:36	11.59
6/26/2022 21:08	-0.10	6/27/2022 19:58	1.53	6/27/2022 20:21	4.66	6/27/2022 21:44	-0.35	6/26/2022 20:37	11.62
6/26/2022 21:09	-0.12	6/27/2022 19:59	1.53	6/27/2022 20:22	4.66	6/27/2022 21:45	-0.37	6/26/2022 20:38	11.63
6/26/2022 21:10	-0.10	6/27/2022 20:00	1.55	6/27/2022 20:23	4.65	6/27/2022 21:46	-0.35	6/26/2022 20:39	11.58
6/26/2022 21:11	-0.12	6/27/2022 20:01	1.55	6/27/2022 20:24	4.64	6/27/2022 21:47	-0.34	6/26/2022 20:40	11.63
6/26/2022 21:12	-0.12	6/27/2022 20:02	1.55	6/27/2022 20:25	4.66	6/27/2022 21:48	-0.39	6/26/2022 20:41	11.63
6/26/2022 21:13	-0.12	6/27/2022 20:03	1.53	6/27/2022 20:26	4.64	6/27/2022 21:49	-0.35	6/26/2022 20:42	11.62
6/26/2022 21:14	-0.12	6/27/2022 20:04	1.53	6/27/2022 20:27	4.64	6/27/2022 21:50	-0.37	6/26/2022 20:43	11.61
6/26/2022 21:15	-0.12	6/27/2022 20:05	1.53	6/27/2022 20:28	4.64	6/27/2022 21:51	-0.37	6/26/2022 20:44	11.63
6/26/2022 21:16	-0.12	6/27/2022 20:06	1.53	6/27/2022 20:29	4.66	6/27/2022 21:52	-0.35	6/26/2022 20:45	11.64
6/26/2022 21:17	-0.10	6/27/2022 20:07	1.53	6/27/2022 20:30	4.63	6/27/2022 21:53	-0.39	6/26/2022 20:46	11.63
6/26/2022 21:18	-0.12	6/27/2022 20:08	1.53	6/27/2022 20:31	4.65	6/27/2022 21:54	-0.36	6/26/2022 20:47	11.60
6/26/2022 21:19	-0.12	6/27/2022 20:09	1.55	6/27/2022 20:32	4.63	6/27/2022 21:55	-0.33	6/26/2022 20:48	11.65
6/26/2022 21:20	-0.12	6/27/2022 20:10	1.53	6/27/2022 20:33	4.66	6/27/2022 21:56	-0.40	6/26/2022 20:49	11.66
6/26/2022 21:21	-0.12	6/27/2022 20:11	1.53	6/27/2022 20:34	4.67	6/27/2022 21:57	-0.37	6/26/2022 20:50	11.61
6/26/2022 21:22	-0.12	6/27/2022 20:12	1.53	6/27/2022 20:35	4.62	6/27/2022 21:58	-0.38	6/26/2022 20:51	11.64
6/26/2022 21:23	-0.12	6/27/2022 20:13	1.53	6/27/2022 20:36	4.66	6/27/2022 21:59	-0.33	6/26/2022 20:52	11.66
6/26/2022 21:24	-0.10	6/27/2022 20:14	1.53	6/27/2022 20:37	4.64	6/27/2022 22:00	-0.39	6/26/2022 20:53	11.59
6/26/2022 21:25	-0.12	6/27/2022 20:15	1.55	6/27/2022 20:38	4.65	6/27/2022 22:01	-0.37	6/26/2022 20:54	11.58
6/26/2022 21:26	-0.10	6/27/2022 20:16	1.56	6/27/2022 20:39	4.64	6/27/2022 22:02	-0.36	6/26/2022 20:55	11.63
6/26/2022 21:27	-0.12	6/27/2022 20:17	1.56	6/27/2022 20:40	4.67	6/27/2022 22:03	-0.35	6/26/2022 20:56	11.67
6/26/2022 21:28	-0.10	6/27/2022 20:18	1.55	6/27/2022 20:41	4.65	6/27/2022 22:04	-0.40	6/26/2022 20:57	11.62
6/26/2022 21:29	-0.12	6/27/2022 20:19	1.53	6/27/2022 20:42	4.63	6/27/2022 22:05	-0.34	6/26/2022 20:58	11.63
6/26/2022 21:30	-0.10	6/27/2022 20:20	1.53	6/27/2022 20:43	4.65	6/27/2022 22:06	-0.35	6/26/2022 20:59	11.61
6/26/2022 21:31	-0.12	6/27/2022 20:21	1.53	6/27/2022 20:44	4.65	6/27/2022 22:07	-0.35	6/26/2022 21:00	11.65
6/26/2022 21:32	-0.12	6/27/2022 20:22	1.53	6/27/2022 20:45	4.64	6/27/2022 22:08	-0.32	6/26/2022 21:01	11.62
6/26/2022 21:33	-0.10	6/27/2022 20:23	1.53	6/27/2022 20:46	4.66	6/27/2022 22:09	-0.38	6/26/2022 21:02	11.64
6/26/2022 21:34	-0.12	6/27/2022 20:24	1.53	6/27/2022 20:47	4.65	6/27/2022 22:10	-0.32	6/26/2022 21:03	11.58
6/26/2022 21:35	-0.12	6/27/2022 20:25	1.53	6/27/2022 20:48	4.67	6/27/2022 22:11	-0.35	6/26/2022 21:04	11.64
6/26/2022 21:36	-0.10	6/27/2022 20:26	1.53	6/27/2022 20:49	4.68	6/27/2022 22:12	-0.35	6/26/2022 21:05	11.64
6/26/2022 21:37	-0.12	6/27/2022 20:27	1.53	6/27/2022 20:50	4.64	6/27/2022 22:13	-0.34	6/26/2022 21:06	11.62
6/26/2022 21:38	-0.12	6/27/2022 20:28	1.53	6/27/2022 20:51	4.64	6/27/2022 22:14	-0.35	6/26/2022 21:07	11.64
6/26/2022 21:39	-0.10	6/27/2022 20:29	1.54	6/27/2022 20:52	4.65	6/27/2022 22:15	-0.33	6/26/2022 21:08	11.63
6/26/2022 21:40	-0.10	6/27/2022 20:30	1.56	6/27/2022 20:53	4.66	6/27/2022 22:16	-0.34	6/26/2022 21:09	11.64
6/26/2022 21:41	-0.10	6/27/2022 20:31	1.53	6/27/2022 20:54	4.62	6/27/2022 22:17	-0.37	6/26/2022 21:10	11.65
6/26/2022 21:42	-0.12	6/27/2022 20:32	1.56	6/27/2022 20:55	4.65	6/27/2022 22:18	-0.33	6/26/2022 21:11	11.59
6/26/2022 21:43	-0.10	6/27/2022 20:33	1.54	6/27/2022 20:56	4.67	6/27/2022 22:19	-0.33	6/26/2022 21:12	11.62
6/26/2022 21:44	-0.10	6/27/2022 20:34	1.54	6/27/2022 20:57	4.68	6/27/2022 22:20	-0.33	6/26/2022 21:13	11.65
6/26/2022 21:45	-0.10	6/27/2022 20:35	1.54	6/27/2022 20:58	4.69	6/27/2022 22:21	-0.32	6/26/2022 21:14	11.64
6/26/2022 21:46	-0.12	6/27/2022 20:36	1.54	6/27/2022 20:59	4.66	6/27/2022 22:22	-0.37	6/26/2022 21:15	11.66
6/26/2022 21:47	-0.10	6/27/2022 20:37	1.53	6/27/2022 21:00	4.65	6/27/2022 22:23	-0.37	6/26/2022 21:16	11.62
6/26/2022 21:48	-0.12	6/27/2022 20:38	1.54	6/27/2022 21:01	4.66	6/27/2022 22:24	-0.32	6/26/2022 21:17	11.63
6/26/2022 21:49	-0.10	6/27/2022 20:39	1.53	6/27/2022 21:02	4.65	6/27/2022 22:25	-0.41	6/26/2022 21:18	11.65
6/26/2022 21:50	-0.12	6/27/2022 20:40	1.54	6/27/2022 21:03	4.64	6/27/2022 22:26	-0.36	6/26/2022 21:19	11.66
6/26/2022 21:51	-0.12	6/27/2022 20:41	1.54	6/27/2022 21:04	4.65	6/27/2022 22:27	-0.37	6/26/2022 21:20	11.67
6/26/2022 21:52	-0.12	6/27/2022 20:42	1.54	6/27/2022 21:05	4.67	6/27/2022 22:28	-0.38	6/26/2022 21:21	11.62
6/26/2022 21:53	-0.10	6/27/2022 20:43	1.56	6/27/2022 21:06	4.66	6/27/2022 22:29	-0.35	6/26/2022 21:22	11.68
6/26/2022 21:54	-0.12	6/27/2022 20:44	1.56	6/27/2022 21:07	4.66	6/27/2022 22:30	-0.34	6/26/2022 21:23	11.66
6/26/2022 21:55	-0.10	6/27/2022 20:45	1.54	6/27/2022 21:08	4.65	6/27/2022 22:31	-0.33	6/26/2022 21:24	11.63
6/26/2022 21:56	-0.12	6/27/2022 20:46	1.54	6/27/2022 21:09	4.64	6/27/2022 22:32	-0.35	6/26/2022 21:25	11.62
6/26/2022 21:57	-0.10	6/27/2022 20:47	1.54	6/27/2022 21:10	4.65	6/27/2022 22:33	-0.37	6/26/2022 21:26	11.64
6/26/2022 21:58	-0.10	6/27/2022 20:48	1.54	6/27/2022 21:11	4.69	6/27/2022 22:34	-0.33	6/26/2022 21:27	11.65
6/26/2022 21:59	-0.10	6/27/2022 20:49	1.54	6/27/2022 21:12	4.65	6/27/2022 22:35	-0.35	6/26/2022 21:28	11.60
6/26/2022 22:00	-0.12	6/27/2022 20:50	1.54	6/27/2022 21:13	4.68	6/27/2022 22:36	-0.38	6/26/2022 21:29	11.67
6/26/2022 22:01	-0.10	6/27/2022 20:51	1.54	6/27/2022 21:14	4.63	6/27/2022 22:37	-0.35	6/26/2022 21:30	11.65
6/26/2022 22:02	-0.12	6/27/2022 20:52	1.54	6/27/2022 21:15	4.65	6/27/2022 22:38	-0.36	6/26/2022 21:31	11.65
6/26/2022 22:03	-0.10	6/27/2022 20:53	1.54	6/27/2022 21:16	4.63	6/27/2022 22:39	-0.34	6/26/2022 21:32	11.66
6/26/2022 22:04	-0.12	6/27/2022 20:54	1.54	6/27/2022 21:17	4.65	6/27/2022 22:40	-0.36	6/26/2022 21:33	11.63
6/26/2022 22:05	-0.12	6/27/2022 20:55	1.54	6/27/2022 21:18	4.64	6/27/2022 22:41	-0.32	6/26/2022 21:34	11.69
6/26/2022 22:06	-0.10	6/27/2022 20:56	1.54	6/27/2022 21:19	4.66	6/27/2022 22:42	-0.38	6/26/2022 21:35	11.61
6/26/2022 22:07	-0.10	6/27/2022 20:57	1.54	6/27/2022 21:20	4.66	6/27/2022 22:43	-0.39	6/26/2022 21:36	11.62
6/26/2022 22:08	-0.10	6/27/2022 20:58	1.54	6/27/2022 21:21	4.69	6/27/2022 22:44	-0.35	6/26/2022 21:37	11.64
6/26/2022 22:09	-0.12	6/27/2022 20:59	1.54	6/27/2022 21:22	4.66	6/27/2022 22:45	-0.37	6/26/2022 21:38	11.68
6/26/2022 22:10	-0.10	6/27/2022 21:00	1.54	6/27/2022 21:23	4.66	6/27/2022 22:46	-0.35	6/26/2022 21:39	11.63
6/26/2022 22:11	-0.10	6/27/2022 21:01	1.54	6/27/2022 21:24	4.67	6/27/2022 22:47	-0.34	6/26/2022 21:40	11.65
6/26/2022 22:12	-0.10	6/27/2022 21:02	1.54	6/27/2022 21:25	4.66	6/27/2022 22:48	-0.35	6/26/2022 21:41	11.59
6/26/2022 22:13	-0.10	6/27/2022 21:03	1.54	6/27/2022 21:26	4.67	6/27/2022 22:49	-0.38	6/26/2022 21:42	11.62
6/26/2022 22:14	-0.12	6/27/2022 21:04	1.54	6/27/2022 21:27	4.64	6/27/2022 22:50	-0.36	6/26/2022 21:43	11.63
6/26/2022 22:15	-0.12	6/27/2022 21:05	1.54	6/27/2022 21:28	4.65	6/27/2022 22:51	-0.36	6/26/2022 21:44	11.61
6/26/2022 22:16	-0.12	6/27/2022 21:06	1.54	6/27/2022 21:29	4.65	6/27/2022 22:52	-0.38	6/26/2022 21:45	11.56
6/26/2022 22:17	-0.12	6/27/2022 21:07	1.57	6/27/2022 21:30	4.67	6/27/2022 22:53	-0.36	6/26/2022 21:46	11.68
6/26/2022 22:18	-0.12	6/27/2022 21:08	1.54	6/27/2022 21:31	4.67	6/27/2022 22:54	-0.38	6/26/2022 21:47	11.61
6/26/2022 22:19	-0.12	6/27/2022 21:09	1.55	6/27/2022 21:32	4.66	6/27/2022 22:55	-0.33	6/26/2022 21:48	11.62
6/26/2022 22:20	-0.12	6/27/2022 21:10	1.54	6/27/2022 21:33	4.66	6/27/2022 22:56	-0.37	6/26/2022 21:49	11.63
6/26/2022 22:21	-0.10	6/27/2022 21:11	1.56	6/27/2022 21:34	4.65	6/27/2022 22:57	-0.36	6/26/2022 21:50	11.62
6/26/2022 22:22	-0.12	6/27/2022 21:12	1.54	6/27/2022 21:35	4.65	6/27/2022 22:58	-0.37	6/26/2022 21:51	11.61
6/26/2022 22:23	-0.12	6/27/2022 21:13	1.54	6/27/2022 21:36	4.66	6/27/2022 22:59	-0.35	6/26/2022 21:52	11.62
6/26/2022 22:24	-0.12	6/27/2022 21:14	1.54	6/27/2022 21:37	4.68	6/27/2022 23:00	-0.36	6/26/2022 21:53	11.63
6/26/2022 22:25	-0.10	6/27/2022 21:15	1.55	6/27/2022 21:38	4.70	6/27/2022 23:01	-0.37	6/26/2022 21:54	11.59
6/26/2022 22:26	-0.10	6/27/2022 21:16	1.54	6/27/2022 21:39	4.64	6/27/2022 23:02	-0.36	6/26/2022 21:55	11.64
6/26/2022 22:27	-0.12	6/27/2022 21:17	1.54	6/27/2022 21:40	4.70	6/27/2022 23:03	-0.37	6/26/2022 21:56	11.61
6/26/2022 22:28	-0.10	6/27/2022 21:18	1.54	6/27/2022 21:41	4.70	6/27/2022 23:04	-0.35	6/26/2022 21:57	11.55
6/26/2022 22:29	-0.12	6/27/2022 21:19	1.54	6/27/2022 21:42	4.67	6/27/2022 23:05	-0.35	6/26/2022 21:58	11.60
6/26/2022 22:30	-0.12	6/27/2022 21:20	1.55	6/27/2022 21:43	4.70	6/27/2022 23:06	-0.33	6/26/2022 21:59	11.61
6/26/2022 22:31	-0.12	6/27/2022 21:21	1.55	6/27/2022 21:44	4.67	6/27/2022 23:07	-0.39	6/26/2022 22:00	11.62
6/26/2022 22:32	-0.10	6/27/2022 21:22	1.55	6/27/2022 21:45	4.68	6/27/2022 23:08	-0.39	6/26/2022 22:01	11.65

6/26/2022 22:33	-0.10	6/27/2022 21:23	1.55	6/27/2022 21:46	4.67	6/27/2022 23:09	-0.36	6/26/2022 22:02	11.66
6/26/2022 22:34	-0.12	6/27/2022 21:24	1.54	6/27/2022 21:47	4.65	6/27/2022 23:10	-0.35	6/26/2022 22:03	11.63
6/26/2022 22:35	-0.10	6/27/2022 21:25	1.54	6/27/2022 21:48	4.66	6/27/2022 23:11	-0.33	6/26/2022 22:04	11.63
6/26/2022 22:36	-0.12	6/27/2022 21:26	1.57	6/27/2022 21:49	4.67	6/27/2022 23:12	-0.32	6/26/2022 22:05	11.63
6/26/2022 22:37	-0.12	6/27/2022 21:27	1.55	6/27/2022 21:50	4.68	6/27/2022 23:13	-0.33	6/26/2022 22:06	11.60
6/26/2022 22:38	-0.12	6/27/2022 21:28	1.55	6/27/2022 21:51	4.66	6/27/2022 23:14	-0.35	6/26/2022 22:07	11.55
6/26/2022 22:39	-0.12	6/27/2022 21:29	1.55	6/27/2022 21:52	4.68	6/27/2022 23:15	-0.34	6/26/2022 22:08	11.60
6/26/2022 22:40	-0.12	6/27/2022 21:30	1.55	6/27/2022 21:53	4.67	6/27/2022 23:16	-0.33	6/26/2022 22:09	11.62
6/26/2022 22:41	-0.12	6/27/2022 21:31	1.55	6/27/2022 21:54	4.70	6/27/2022 23:17	-0.36	6/26/2022 22:10	11.64
6/26/2022 22:42	-0.10	6/27/2022 21:32	1.55	6/27/2022 21:55	4.66	6/27/2022 23:18	-0.32	6/26/2022 22:11	11.59
6/26/2022 22:43	-0.12	6/27/2022 21:33	1.55	6/27/2022 21:56	4.68	6/27/2022 23:19	-0.35	6/26/2022 22:12	11.68
6/26/2022 22:44	-0.11	6/27/2022 21:34	1.55	6/27/2022 21:57	4.65	6/27/2022 23:20	-0.33	6/26/2022 22:13	11.66
6/26/2022 22:45	-0.12	6/27/2022 21:35	1.55	6/27/2022 21:58	4.68	6/27/2022 23:21	-0.35	6/26/2022 22:14	11.66
6/26/2022 22:46	-0.12	6/27/2022 21:36	1.55	6/27/2022 21:59	4.66	6/27/2022 23:22	-0.32	6/26/2022 22:15	11.66
6/26/2022 22:47	-0.10	6/27/2022 21:37	1.55	6/27/2022 22:00	4.66	6/27/2022 23:23	-0.36	6/26/2022 22:16	11.59
6/26/2022 22:48	-0.10	6/27/2022 21:38	1.55	6/27/2022 22:01	4.68	6/27/2022 23:24	-0.36	6/26/2022 22:17	11.67
6/26/2022 22:49	-0.10	6/27/2022 21:39	1.55	6/27/2022 22:02	4.66	6/27/2022 23:25	-0.38	6/26/2022 22:18	11.68
6/26/2022 22:50	-0.12	6/27/2022 21:40	1.57	6/27/2022 22:03	4.65	6/27/2022 23:26	-0.36	6/26/2022 22:19	11.66
6/26/2022 22:51	-0.10	6/27/2022 21:41	1.55	6/27/2022 22:04	4.67	6/27/2022 23:27	-0.35	6/26/2022 22:20	11.58
6/26/2022 22:52	-0.10	6/27/2022 21:42	1.54	6/27/2022 22:05	4.69	6/27/2022 23:28	-0.36	6/26/2022 22:21	11.65
6/26/2022 22:53	-0.10	6/27/2022 21:43	1.55	6/27/2022 22:06	4.69	6/27/2022 23:29	-0.38	6/26/2022 22:22	11.58
6/26/2022 22:54	-0.10	6/27/2022 21:44	1.55	6/27/2022 22:07	4.70	6/27/2022 23:30	-0.36	6/26/2022 22:23	11.66
6/26/2022 22:55	-0.12	6/27/2022 21:45	1.55	6/27/2022 22:08	4.66	6/27/2022 23:31	-0.33	6/26/2022 22:24	11.63
6/26/2022 22:56	-0.12	6/27/2022 21:46	1.55	6/27/2022 22:09	4.68	6/27/2022 23:32	-0.36	6/26/2022 22:25	11.57
6/26/2022 22:57	-0.10	6/27/2022 21:47	1.55	6/27/2022 22:10	4.66	6/27/2022 23:33	-0.39	6/26/2022 22:26	11.65
6/26/2022 22:58	-0.12	6/27/2022 21:48	1.55	6/27/2022 22:11	4.67	6/27/2022 23:34	-0.34	6/26/2022 22:27	11.62
6/26/2022 22:59	-0.10	6/27/2022 21:49	1.55	6/27/2022 22:12	4.70	6/27/2022 23:35	-0.38	6/26/2022 22:28	11.64
6/26/2022 23:00	-0.10	6/27/2022 21:50	1.55	6/27/2022 22:13	4.67	6/27/2022 23:36	-0.35	6/26/2022 22:29	11.67
6/26/2022 23:01	-0.12	6/27/2022 21:51	1.55	6/27/2022 22:14	4.70	6/27/2022 23:37	-0.37	6/26/2022 22:30	11.65
6/26/2022 23:02	-0.10	6/27/2022 21:52	1.57	6/27/2022 22:15	4.67	6/27/2022 23:38	-0.35	6/26/2022 22:31	11.64
6/26/2022 23:03	-0.12	6/27/2022 21:53	1.55	6/27/2022 22:16	4.67	6/27/2022 23:39	-0.38	6/26/2022 22:32	11.63
6/26/2022 23:04	-0.10	6/27/2022 21:54	1.55	6/27/2022 22:17	4.68	6/27/2022 23:40	-0.35	6/26/2022 22:33	11.67
6/26/2022 23:05	-0.10	6/27/2022 21:55	1.55	6/27/2022 22:18	4.66	6/27/2022 23:41	-0.35	6/26/2022 22:34	11.60
6/26/2022 23:06	-0.12	6/27/2022 21:56	1.55	6/27/2022 22:19	4.68	6/27/2022 23:42	-0.38	6/26/2022 22:35	11.62
6/26/2022 23:07	-0.10	6/27/2022 21:57	1.55	6/27/2022 22:20	4.67	6/27/2022 23:43	-0.40	6/26/2022 22:36	11.64
6/26/2022 23:08	-0.10	6/27/2022 21:58	1.55	6/27/2022 22:21	4.68	6/27/2022 23:44	-0.36	6/26/2022 22:37	11.65
6/26/2022 23:09	-0.10	6/27/2022 21:59	1.56	6/27/2022 22:22	4.70	6/27/2022 23:45	-0.37	6/26/2022 22:38	11.64
6/26/2022 23:10	-0.12	6/27/2022 22:00	1.55	6/27/2022 22:23	4.66	6/27/2022 23:46	-0.38	6/26/2022 22:39	11.64
6/26/2022 23:11	-0.12	6/27/2022 22:01	1.55	6/27/2022 22:24	4.67	6/27/2022 23:47	-0.36	6/26/2022 22:40	11.60
6/26/2022 23:12	-0.12	6/27/2022 22:02	1.55	6/27/2022 22:25	4.69	6/27/2022 23:48	-0.37	6/26/2022 22:41	11.62
6/26/2022 23:13	-0.10	6/27/2022 22:03	1.55	6/27/2022 22:26	4.67	6/27/2022 23:49	-0.39	6/26/2022 22:42	11.59
6/26/2022 23:14	-0.12	6/27/2022 22:04	1.55	6/27/2022 22:27	4.65	6/27/2022 23:50	-0.35	6/26/2022 22:43	11.58
6/26/2022 23:15	-0.12	6/27/2022 22:05	1.55	6/27/2022 22:28	4.66	6/27/2022 23:51	-0.37	6/26/2022 22:44	11.62
6/26/2022 23:16	-0.12	6/27/2022 22:06	1.55	6/27/2022 22:29	4.67	6/27/2022 23:52	-0.34	6/26/2022 22:45	11.63
6/26/2022 23:17	-0.12	6/27/2022 22:07	1.57	6/27/2022 22:30	4.63	6/27/2022 23:53	-0.38	6/26/2022 22:46	11.59
6/26/2022 23:18	-0.12	6/27/2022 22:08	1.57	6/27/2022 22:31	4.67	6/27/2022 23:54	-0.32	6/26/2022 22:47	11.67
6/26/2022 23:19	-0.12	6/27/2022 22:09	1.55	6/27/2022 22:32	4.70	6/27/2022 23:55	-0.38	6/26/2022 22:48	11.63
6/26/2022 23:20	-0.12	6/27/2022 22:10	1.55	6/27/2022 22:33	4.69	6/27/2022 23:56	-0.41	6/26/2022 22:49	11.67
6/26/2022 23:21	-0.12	6/27/2022 22:11	1.55	6/27/2022 22:34	4.70	6/27/2022 23:57	-0.34	6/26/2022 22:50	11.62
6/26/2022 23:22	-0.12	6/27/2022 22:12	1.58	6/27/2022 22:35	4.63	6/27/2022 23:58	-0.36	6/26/2022 22:51	11.64
6/26/2022 23:23	-0.10	6/27/2022 22:13	1.56	6/27/2022 22:36	4.68	6/27/2022 23:59	-0.34	6/26/2022 22:52	11.64
6/26/2022 23:24	-0.10	6/27/2022 22:14	1.55	6/27/2022 22:37	4.68	6/28/2022 0:00	-0.38	6/26/2022 22:53	11.62
6/26/2022 23:25	-0.12	6/27/2022 22:15	1.58	6/27/2022 22:38	4.67	6/28/2022 0:01	-0.34	6/26/2022 22:54	11.63
6/26/2022 23:26	-0.10	6/27/2022 22:16	1.56	6/27/2022 22:39	4.70	6/28/2022 0:02	-0.31	6/26/2022 22:55	11.66
6/26/2022 23:27	-0.10	6/27/2022 22:17	1.55	6/27/2022 22:40	4.66	6/28/2022 0:03	-0.35	6/26/2022 22:56	11.65
6/26/2022 23:28	-0.10	6/27/2022 22:18	1.56	6/27/2022 22:41	4.68	6/28/2022 0:04	-0.35	6/26/2022 22:57	11.64
6/26/2022 23:29	-0.12	6/27/2022 22:19	1.56	6/27/2022 22:42	4.67	6/28/2022 0:05	-0.38	6/26/2022 22:58	11.62
6/26/2022 23:30	-0.12	6/27/2022 22:20	1.57	6/27/2022 22:43	4.66	6/28/2022 0:06	-0.41	6/26/2022 22:59	11.63
6/26/2022 23:31	-0.10	6/27/2022 22:21	1.55	6/27/2022 22:44	4.65	6/28/2022 0:07	-0.35	6/26/2022 23:00	11.66
6/26/2022 23:32	-0.10	6/27/2022 22:22	1.56	6/27/2022 22:45	4.70	6/28/2022 0:08	-0.35	6/26/2022 23:01	11.64
6/26/2022 23:33	-0.12	6/27/2022 22:23	1.55	6/27/2022 22:46	4.70	6/28/2022 0:09	-0.35	6/26/2022 23:02	11.59
6/26/2022 23:34	-0.12	6/27/2022 22:24	1.56	6/27/2022 22:47	4.70	6/28/2022 0:10	-0.35	6/26/2022 23:03	11.66
6/26/2022 23:35	-0.10	6/27/2022 22:25	1.55	6/27/2022 22:48	4.65	6/28/2022 0:11	-0.36	6/26/2022 23:04	11.63
6/26/2022 23:36	-0.12	6/27/2022 22:26	1.55	6/27/2022 22:49	4.68	6/28/2022 0:12	-0.39	6/26/2022 23:05	11.63
6/26/2022 23:37	-0.12	6/27/2022 22:27	1.55	6/27/2022 22:50	4.71	6/28/2022 0:13	-0.34	6/26/2022 23:06	11.66
6/26/2022 23:38	-0.12	6/27/2022 22:28	1.58	6/27/2022 22:51	4.66	6/28/2022 0:14	-0.36	6/26/2022 23:07	11.66
6/26/2022 23:39	-0.12	6/27/2022 22:29	1.55	6/27/2022 22:52	4.69	6/28/2022 0:15	-0.38	6/26/2022 23:08	11.60
6/26/2022 23:40	-0.12	6/27/2022 22:30	1.56	6/27/2022 22:53	4.68	6/28/2022 0:16	-0.39	6/26/2022 23:09	11.65
6/26/2022 23:41	-0.12	6/27/2022 22:31	1.56	6/27/2022 22:54	4.69	6/28/2022 0:17	-0.39	6/26/2022 23:10	11.63
6/26/2022 23:42	-0.10	6/27/2022 22:32	1.55	6/27/2022 22:55	4.68	6/28/2022 0:18	-0.39	6/26/2022 23:11	11.65
6/26/2022 23:43	-0.12	6/27/2022 22:33	1.56	6/27/2022 22:56	4.67	6/28/2022 0:19	-0.35	6/26/2022 23:12	11.64
6/26/2022 23:44	-0.10	6/27/2022 22:34	1.57	6/27/2022 22:57	4.65	6/28/2022 0:20	-0.35	6/26/2022 23:13	11.61
6/26/2022 23:45	-0.12	6/27/2022 22:35	1.58	6/27/2022 22:58	4.67	6/28/2022 0:21	-0.35	6/26/2022 23:14	11.64
6/26/2022 23:46	-0.12	6/27/2022 22:36	1.58	6/27/2022 22:59	4.65	6/28/2022 0:22	-0.33	6/26/2022 23:15	11.64
6/26/2022 23:47	-0.12	6/27/2022 22:37	1.56	6/27/2022 23:00	4.70	6/28/2022 0:23	-0.38	6/26/2022 23:16	11.65
6/26/2022 23:48	-0.10	6/27/2022 22:38	1.56	6/27/2022 23:01	4.69	6/28/2022 0:24	-0.38	6/26/2022 23:17	11.64
6/26/2022 23:49	-0.10	6/27/2022 22:39	1.56	6/27/2022 23:02	4.67	6/28/2022 0:25	-0.39	6/26/2022 23:18	11.59
6/26/2022 23:50	-0.12	6/27/2022 22:40	1.57	6/27/2022 23:03	4.66	6/28/2022 0:26	-0.35	6/26/2022 23:19	11.63
6/26/2022 23:51	-0.12	6/27/2022 22:41	1.55	6/27/2022 23:04	4.69	6/28/2022 0:27	-0.42	6/26/2022 23:20	11.58
6/26/2022 23:52	-0.12	6/27/2022 22:42	1.56	6/27/2022 23:05	4.70	6/28/2022 0:28	-0.39	6/26/2022 23:21	11.65
6/26/2022 23:53	-0.10	6/27/2022 22:43	1.58	6/27/2022 23:06	4.71	6/28/2022 0:29	-0.37	6/26/2022 23:22	11.65
6/26/2022 23:54	-0.12	6/27/2022 22:44	1.56	6/27/2022 23:07	4.67	6/28/2022 0:30	-0.33	6/26/2022 23:23	11.66
6/26/2022 23:55	-0.12	6/27/2022 22:45	1.56	6/27/2022 23:08	4.71	6/28/2022 0:31	-0.35	6/26/2022 23:24	11.60
6/26/2022 23:56	-0.12	6/27/2022 22:46	1.55	6/27/2022 23:09	4.67	6/28/2022 0:32	-0.35	6/26/2022 23:25	11.64
6/26/2022 23:57	-0.12	6/27/2022 22:47	1.56	6/27/2022 23:10	4.71	6/28/2022 0:33	-0.36	6/26/2022 23:26	11.62
6/26/2022 23:58	-0.12	6/27/2022 22:48	1.55	6/27/2022 23:11	4.66	6/28/2022 0:34	-0.36	6/26/2022 23:27	11.66
6/26/2022 23:59	-0.12	6/27/2022 22:49	1.55	6/27/2022 23:12	4.66	6/28/2022 0:35	-0.36	6/26/2022 23:28	11.63
6/27/2022 0:00	-0.12	6/27/2022 22:50	1.58	6/27/2022 23:13	4.69	6/28/2022 0:36	-0.35	6/26/2022 23:29	11.64

6/27/2022 0:01	-0.12	6/27/2022 22:51	1.58	6/27/2022 23:14	4.68	6/28/2022 0:37	-0.36	6/26/2022 23:30	11.62
6/27/2022 0:02	-0.12	6/27/2022 22:52	1.56	6/27/2022 23:15	4.67	6/28/2022 0:38	-0.37	6/26/2022 23:31	11.69
6/27/2022 0:03	-0.10	6/27/2022 22:53	1.55	6/27/2022 23:16	4.65	6/28/2022 0:39	-0.38	6/26/2022 23:32	11.64
6/27/2022 0:04	-0.12	6/27/2022 22:54	1.55	6/27/2022 23:17	4.69	6/28/2022 0:40	-0.33	6/26/2022 23:33	11.64
6/27/2022 0:05	-0.10	6/27/2022 22:55	1.56	6/27/2022 23:18	4.68	6/28/2022 0:41	-0.38	6/26/2022 23:34	11.65
6/27/2022 0:06	-0.10	6/27/2022 22:56	1.55	6/27/2022 23:19	4.66	6/28/2022 0:42	-0.35	6/26/2022 23:35	11.64
6/27/2022 0:07	-0.10	6/27/2022 22:57	1.56	6/27/2022 23:20	4.68	6/28/2022 0:43	-0.40	6/26/2022 23:36	11.69
6/27/2022 0:08	-0.12	6/27/2022 22:58	1.57	6/27/2022 23:21	4.69	6/28/2022 0:44	-0.37	6/26/2022 23:37	11.65
6/27/2022 0:09	-0.10	6/27/2022 22:59	1.56	6/27/2022 23:22	4.71	6/28/2022 0:45	-0.39	6/26/2022 23:38	11.61
6/27/2022 0:10	-0.10	6/27/2022 23:00	1.58	6/27/2022 23:23	4.65	6/28/2022 0:46	-0.39	6/26/2022 23:39	11.65
6/27/2022 0:11	-0.12	6/27/2022 23:01	1.55	6/27/2022 23:24	4.68	6/28/2022 0:47	-0.33	6/26/2022 23:40	11.65
6/27/2022 0:12	-0.12	6/27/2022 23:02	1.55	6/27/2022 23:25	4.68	6/28/2022 0:48	-0.36	6/26/2022 23:41	11.64
6/27/2022 0:13	-0.12	6/27/2022 23:03	1.57	6/27/2022 23:26	4.69	6/28/2022 0:49	-0.39	6/26/2022 23:42	11.62
6/27/2022 0:14	-0.12	6/27/2022 23:04	1.57	6/27/2022 23:27	4.67	6/28/2022 0:50	-0.36	6/26/2022 23:43	11.64
6/27/2022 0:15	-0.12	6/27/2022 23:05	1.55	6/27/2022 23:28	4.67	6/28/2022 0:51	-0.37	6/26/2022 23:44	11.59
6/27/2022 0:16	-0.12	6/27/2022 23:06	1.55	6/27/2022 23:29	4.66	6/28/2022 0:52	-0.36	6/26/2022 23:45	11.62
6/27/2022 0:17	-0.10	6/27/2022 23:07	1.55	6/27/2022 23:30	4.69	6/28/2022 0:53	-0.34	6/26/2022 23:46	11.66
6/27/2022 0:18	-0.10	6/27/2022 23:08	1.55	6/27/2022 23:31	4.70	6/28/2022 0:54	-0.36	6/26/2022 23:47	11.63
6/27/2022 0:19	-0.12	6/27/2022 23:09	1.55	6/27/2022 23:32	4.68	6/28/2022 0:55	-0.35	6/26/2022 23:48	11.62
6/27/2022 0:20	-0.12	6/27/2022 23:10	1.56	6/27/2022 23:33	4.68	6/28/2022 0:56	-0.35	6/26/2022 23:49	11.65
6/27/2022 0:21	-0.12	6/27/2022 23:11	1.57	6/27/2022 23:34	4.71	6/28/2022 0:57	-0.36	6/26/2022 23:50	11.59
6/27/2022 0:22	-0.12	6/27/2022 23:12	1.55	6/27/2022 23:35	4.67	6/28/2022 0:58	-0.31	6/26/2022 23:51	11.61
6/27/2022 0:23	-0.12	6/27/2022 23:13	1.56	6/27/2022 23:36	4.69	6/28/2022 0:59	-0.36	6/26/2022 23:52	11.62
6/27/2022 0:24	-0.10	6/27/2022 23:14	1.55	6/27/2022 23:37	4.64	6/28/2022 1:00	-0.35	6/26/2022 23:53	11.64
6/27/2022 0:25	-0.12	6/27/2022 23:15	1.57	6/27/2022 23:38	4.69	6/28/2022 1:01	-0.37	6/26/2022 23:54	11.62
6/27/2022 0:26	-0.12	6/27/2022 23:16	1.55	6/27/2022 23:39	4.70	6/28/2022 1:02	-0.38	6/26/2022 23:55	11.65
6/27/2022 0:27	-0.12	6/27/2022 23:17	1.55	6/27/2022 23:40	4.70	6/28/2022 1:03	-0.39	6/26/2022 23:56	11.67
6/27/2022 0:28	-0.12	6/27/2022 23:18	1.56	6/27/2022 23:41	4.67	6/28/2022 1:04	-0.35	6/26/2022 23:57	11.62
6/27/2022 0:29	-0.11	6/27/2022 23:19	1.55	6/27/2022 23:42	4.71	6/28/2022 1:05	-0.34	6/26/2022 23:58	11.64
6/27/2022 0:30	-0.12	6/27/2022 23:20	1.58	6/27/2022 23:43	4.71	6/28/2022 1:06	-0.37	6/26/2022 23:59	11.61
6/27/2022 0:31	-0.12	6/27/2022 23:21	1.57	6/27/2022 23:44	4.69	6/28/2022 1:07	-0.36	6/27/2022 0:00	11.59
6/27/2022 0:32	-0.12	6/27/2022 23:22	1.55	6/27/2022 23:45	4.68	6/28/2022 1:08	-0.39	6/27/2022 0:01	11.64
6/27/2022 0:33	-0.12	6/27/2022 23:23	1.56	6/27/2022 23:46	4.68	6/28/2022 1:09	-0.35	6/27/2022 0:02	11.61
6/27/2022 0:34	-0.12	6/27/2022 23:24	1.56	6/27/2022 23:47	4.66	6/28/2022 1:10	-0.33	6/27/2022 0:03	11.63
6/27/2022 0:35	-0.10	6/27/2022 23:25	1.58	6/27/2022 23:48	4.66	6/28/2022 1:11	-0.32	6/27/2022 0:04	11.65
6/27/2022 0:36	-0.12	6/27/2022 23:26	1.56	6/27/2022 23:49	4.69	6/28/2022 1:12	-0.35	6/27/2022 0:05	11.58
6/27/2022 0:37	-0.10	6/27/2022 23:27	1.55	6/27/2022 23:50	4.68	6/28/2022 1:13	-0.34	6/27/2022 0:06	11.68
6/27/2022 0:38	-0.10	6/27/2022 23:28	1.55	6/27/2022 23:51	4.64	6/28/2022 1:14	-0.33	6/27/2022 0:07	11.67
6/27/2022 0:39	-0.12	6/27/2022 23:29	1.56	6/27/2022 23:52	4.70	6/28/2022 1:15	-0.35	6/27/2022 0:08	11.66
6/27/2022 0:40	-0.12	6/27/2022 23:30	1.56	6/27/2022 23:53	4.73	6/28/2022 1:16	-0.35	6/27/2022 0:09	11.66
6/27/2022 0:41	-0.12	6/27/2022 23:31	1.58	6/27/2022 23:54	4.66	6/28/2022 1:17	-0.37	6/27/2022 0:10	11.66
6/27/2022 0:42	-0.10	6/27/2022 23:32	1.56	6/27/2022 23:55	4.66	6/28/2022 1:18	-0.35	6/27/2022 0:11	11.66
6/27/2022 0:43	-0.12	6/27/2022 23:33	1.56	6/27/2022 23:56	4.69	6/28/2022 1:19	-0.37	6/27/2022 0:12	11.67
6/27/2022 0:44	-0.11	6/27/2022 23:34	1.55	6/27/2022 23:57	4.68	6/28/2022 1:20	-0.32	6/27/2022 0:13	11.68
6/27/2022 0:45	-0.10	6/27/2022 23:35	1.56	6/27/2022 23:58	4.67	6/28/2022 1:21	-0.37	6/27/2022 0:14	11.64
6/27/2022 0:46	-0.12	6/27/2022 23:36	1.55	6/27/2022 23:59	4.69	6/28/2022 1:22	-0.34	6/27/2022 0:15	11.70
6/27/2022 0:47	-0.12	6/27/2022 23:37	1.55	6/28/2022 0:00	4.67	6/28/2022 1:23	-0.35	6/27/2022 0:16	11.67
6/27/2022 0:48	-0.12	6/27/2022 23:38	1.56	6/28/2022 0:01	4.69	6/28/2022 1:24	-0.35	6/27/2022 0:17	11.65
6/27/2022 0:49	-0.10	6/27/2022 23:39	1.56	6/28/2022 0:02	4.67	6/28/2022 1:25	-0.39	6/27/2022 0:18	11.68
6/27/2022 0:50	-0.10	6/27/2022 23:40	1.56	6/28/2022 0:03	4.66	6/28/2022 1:26	-0.39	6/27/2022 0:19	11.62
6/27/2022 0:51	-0.11	6/27/2022 23:41	1.56	6/28/2022 0:04	4.69	6/28/2022 1:27	-0.37	6/27/2022 0:20	11.66
6/27/2022 0:52	-0.12	6/27/2022 23:42	1.58	6/28/2022 0:05	4.66	6/28/2022 1:28	-0.37	6/27/2022 0:21	11.62
6/27/2022 0:53	-0.12	6/27/2022 23:43	1.55	6/28/2022 0:06	4.69	6/28/2022 1:29	-0.33	6/27/2022 0:22	11.64
6/27/2022 0:54	-0.10	6/27/2022 23:44	1.58	6/28/2022 0:07	4.67	6/28/2022 1:30	-0.39	6/27/2022 0:23	11.63
6/27/2022 0:55	-0.10	6/27/2022 23:45	1.56	6/28/2022 0:08	4.69	6/28/2022 1:31	-0.36	6/27/2022 0:24	11.64
6/27/2022 0:56	-0.12	6/27/2022 23:46	1.56	6/28/2022 0:09	4.67	6/28/2022 1:32	-0.34	6/27/2022 0:25	11.68
6/27/2022 0:57	-0.12	6/27/2022 23:47	1.56	6/28/2022 0:10	4.67	6/28/2022 1:33	-0.34	6/27/2022 0:26	11.62
6/27/2022 0:58	-0.10	6/27/2022 23:48	1.55	6/28/2022 0:11	4.66	6/28/2022 1:34	-0.33	6/27/2022 0:27	11.68
6/27/2022 0:59	-0.12	6/27/2022 23:49	1.56	6/28/2022 0:12	4.72	6/28/2022 1:35	-0.42	6/27/2022 0:28	11.61
6/27/2022 1:00	-0.12	6/27/2022 23:50	1.55	6/28/2022 0:13	4.69	6/28/2022 1:36	-0.35	6/27/2022 0:29	11.67
6/27/2022 1:01	-0.12	6/27/2022 23:51	1.55	6/28/2022 0:14	4.69	6/28/2022 1:37	-0.37	6/27/2022 0:30	11.61
6/27/2022 1:02	-0.10	6/27/2022 23:52	1.58	6/28/2022 0:15	4.68	6/28/2022 1:38	-0.36	6/27/2022 0:31	11.60
6/27/2022 1:03	-0.12	6/27/2022 23:53	1.56	6/28/2022 0:16	4.67	6/28/2022 1:39	-0.34	6/27/2022 0:32	11.70
6/27/2022 1:04	-0.12	6/27/2022 23:54	1.56	6/28/2022 0:17	4.68	6/28/2022 1:40	-0.36	6/27/2022 0:33	11.69
6/27/2022 1:05	-0.10	6/27/2022 23:55	1.58	6/28/2022 0:18	4.70	6/28/2022 1:41	-0.40	6/27/2022 0:34	11.65
6/27/2022 1:06	-0.12	6/27/2022 23:56	1.58	6/28/2022 0:19	4.73	6/28/2022 1:42	-0.35	6/27/2022 0:35	11.59
6/27/2022 1:07	-0.10	6/27/2022 23:57	1.55	6/28/2022 0:20	4.68	6/28/2022 1:43	-0.35	6/27/2022 0:36	11.69
6/27/2022 1:08	-0.10	6/27/2022 23:58	1.56	6/28/2022 0:21	4.64	6/28/2022 1:44	-0.35	6/27/2022 0:37	11.62
6/27/2022 1:09	-0.10	6/27/2022 23:59	1.58	6/28/2022 0:22	4.67	6/28/2022 1:45	-0.36	6/27/2022 0:38	11.65
6/27/2022 1:10	-0.12	6/28/2022 0:00	1.58	6/28/2022 0:23	4.69	6/28/2022 1:46	-0.38	6/27/2022 0:39	11.61
6/27/2022 1:11	-0.10	6/28/2022 0:01	1.58	6/28/2022 0:24	4.67	6/28/2022 1:47	-0.37	6/27/2022 0:40	11.61
6/27/2022 1:12	-0.10	6/28/2022 0:02	1.56	6/28/2022 0:25	4.70	6/28/2022 1:48	-0.37	6/27/2022 0:41	11.63
6/27/2022 1:13	-0.12	6/28/2022 0:03	1.56	6/28/2022 0:26	4.68	6/28/2022 1:49	-0.35	6/27/2022 0:42	11.64
6/27/2022 1:14	-0.10	6/28/2022 0:04	1.55	6/28/2022 0:27	4.69	6/28/2022 1:50	-0.35	6/27/2022 0:43	11.61
6/27/2022 1:15	-0.11	6/28/2022 0:05	1.56	6/28/2022 0:28	4.66	6/28/2022 1:51	-0.39	6/27/2022 0:44	11.68
6/27/2022 1:16	-0.12	6/28/2022 0:06	1.55	6/28/2022 0:29	4.71	6/28/2022 1:52	-0.35	6/27/2022 0:45	11.61
6/27/2022 1:17	-0.12	6/28/2022 0:07	1.58	6/28/2022 0:30	4.71	6/28/2022 1:53	-0.35	6/27/2022 0:46	11.68
6/27/2022 1:18	-0.12	6/28/2022 0:08	1.58	6/28/2022 0:31	4.70	6/28/2022 1:54	-0.39	6/27/2022 0:47	11.63
6/27/2022 1:19	-0.12	6/28/2022 0:09	1.58	6/28/2022 0:32	4.71	6/28/2022 1:55	-0.37	6/27/2022 0:48	11.62
6/27/2022 1:20	-0.12	6/28/2022 0:10	1.58	6/28/2022 0:33	4.68	6/28/2022 1:56	-0.40	6/27/2022 0:49	11.65
6/27/2022 1:21	-0.12	6/28/2022 0:11	1.55	6/28/2022 0:34	4.72	6/28/2022 1:57	-0.35	6/27/2022 0:50	11.65
6/27/2022 1:22	-0.10	6/28/2022 0:12	1.58	6/28/2022 0:35	4.67	6/28/2022 1:58	-0.36	6/27/2022 0:51	11.61
6/27/2022 1:23	-0.12	6/28/2022 0:13	1.56	6/28/2022 0:36	4.67	6/28/2022 1:59	-0.35	6/27/2022 0:52	11.66
6/27/2022 1:24	-0.12	6/28/2022 0:14	1.56	6/28/2022 0:37	4.70	6/28/2022 2:00	-0.38	6/27/2022 0:53	11.60
6/27/2022 1:25	-0.12	6/28/2022 0:15	1.56	6/28/2022 0:38	4.70	6/28/2022 2:01	-0.36	6/27/2022 0:54	11.68
6/27/2022 1:26	-0.10	6/28/2022 0:16	1.58	6/28/2022 0:39	4.66	6/28/2022 2:02	-0.33	6/27/2022 0:55	11.64
6/27/2022 1:27	-0.12	6/28/2022 0:17	1.58	6/28/2022 0:40	4.67	6/28/2022 2:03	-0.32	6/27/2022 0:56	11.64
6/27/2022 1:28	-0.12	6/28/2022 0:18	1.58	6/28/2022 0:41	4.67	6/28/2022 2:04	-0.36	6/27/2022 0:57	11.62

6/27/2022 1:29	-0.12	6/28/2022 0:19	1.56	6/28/2022 0:42	4.69	6/28/2022 2:05	-0.37	6/27/2022 0:58	11.59
6/27/2022 1:30	-0.12	6/28/2022 0:20	1.58	6/28/2022 0:43	4.69	6/28/2022 2:06	-0.34	6/27/2022 0:59	11.60
6/27/2022 1:31	-0.12	6/28/2022 0:21	1.56	6/28/2022 0:44	4.72	6/28/2022 2:07	-0.35	6/27/2022 1:00	11.65
6/27/2022 1:32	-0.10	6/28/2022 0:22	1.56	6/28/2022 0:45	4.68	6/28/2022 2:08	-0.35	6/27/2022 1:01	11.67
6/27/2022 1:33	-0.10	6/28/2022 0:23	1.56	6/28/2022 0:46	4.73	6/28/2022 2:09	-0.36	6/27/2022 1:02	11.61
6/27/2022 1:34	-0.12	6/28/2022 0:24	1.56	6/28/2022 0:47	4.69	6/28/2022 2:10	-0.34	6/27/2022 1:03	11.67
6/27/2022 1:35	-0.12	6/28/2022 0:25	1.55	6/28/2022 0:48	4.68	6/28/2022 2:11	-0.34	6/27/2022 1:04	11.60
6/27/2022 1:36	-0.12	6/28/2022 0:26	1.56	6/28/2022 0:49	4.68	6/28/2022 2:12	-0.35	6/27/2022 1:05	11.63
6/27/2022 1:37	-0.12	6/28/2022 0:27	1.58	6/28/2022 0:50	4.69	6/28/2022 2:13	-0.38	6/27/2022 1:06	11.62
6/27/2022 1:38	-0.12	6/28/2022 0:28	1.58	6/28/2022 0:51	4.70	6/28/2022 2:14	-0.37	6/27/2022 1:07	11.66
6/27/2022 1:39	-0.12	6/28/2022 0:29	1.56	6/28/2022 0:52	4.68	6/28/2022 2:15	-0.32	6/27/2022 1:08	11.62
6/27/2022 1:40	-0.12	6/28/2022 0:30	1.56	6/28/2022 0:53	4.68	6/28/2022 2:16	-0.40	6/27/2022 1:09	11.65
6/27/2022 1:41	-0.12	6/28/2022 0:31	1.56	6/28/2022 0:54	4.67	6/28/2022 2:17	-0.32	6/27/2022 1:10	11.63
6/27/2022 1:42	-0.12	6/28/2022 0:32	1.58	6/28/2022 0:55	4.68	6/28/2022 2:18	-0.35	6/27/2022 1:11	11.65
6/27/2022 1:43	-0.12	6/28/2022 0:33	1.56	6/28/2022 0:56	4.71	6/28/2022 2:19	-0.34	6/27/2022 1:12	11.64
6/27/2022 1:44	-0.12	6/28/2022 0:34	1.56	6/28/2022 0:57	4.67	6/28/2022 2:20	-0.38	6/27/2022 1:13	11.65
6/27/2022 1:45	-0.12	6/28/2022 0:35	1.58	6/28/2022 0:58	4.66	6/28/2022 2:21	-0.37	6/27/2022 1:14	11.63
6/27/2022 1:46	-0.10	6/28/2022 0:36	1.58	6/28/2022 0:59	4.67	6/28/2022 2:22	-0.38	6/27/2022 1:15	11.63
6/27/2022 1:47	-0.10	6/28/2022 0:37	1.58	6/28/2022 1:00	4.70	6/28/2022 2:23	-0.35	6/27/2022 1:16	11.63
6/27/2022 1:48	-0.12	6/28/2022 0:38	1.56	6/28/2022 1:01	4.65	6/28/2022 2:24	-0.39	6/27/2022 1:17	11.64
6/27/2022 1:49	-0.12	6/28/2022 0:39	1.56	6/28/2022 1:02	4.68	6/28/2022 2:25	-0.39	6/27/2022 1:18	11.60
6/27/2022 1:50	-0.10	6/28/2022 0:40	1.55	6/28/2022 1:03	4.65	6/28/2022 2:26	-0.35	6/27/2022 1:19	11.60
6/27/2022 1:51	-0.12	6/28/2022 0:41	1.56	6/28/2022 1:04	4.72	6/28/2022 2:27	-0.35	6/27/2022 1:20	11.63
6/27/2022 1:52	-0.12	6/28/2022 0:42	1.56	6/28/2022 1:05	4.67	6/28/2022 2:28	-0.35	6/27/2022 1:21	11.66
6/27/2022 1:53	-0.12	6/28/2022 0:43	1.56	6/28/2022 1:06	4.68	6/28/2022 2:29	-0.32	6/27/2022 1:22	11.65
6/27/2022 1:54	-0.10	6/28/2022 0:44	1.58	6/28/2022 1:07	4.67	6/28/2022 2:30	-0.37	6/27/2022 1:23	11.70
6/27/2022 1:55	-0.10	6/28/2022 0:45	1.56	6/28/2022 1:08	4.67	6/28/2022 2:31	-0.35	6/27/2022 1:24	11.67
6/27/2022 1:56	-0.12	6/28/2022 0:46	1.56	6/28/2022 1:09	4.67	6/28/2022 2:32	-0.34	6/27/2022 1:25	11.66
6/27/2022 1:57	-0.10	6/28/2022 0:47	1.55	6/28/2022 1:10	4.67	6/28/2022 2:33	-0.38	6/27/2022 1:26	11.61
6/27/2022 1:58	-0.10	6/28/2022 0:48	1.56	6/28/2022 1:11	4.66	6/28/2022 2:34	-0.38	6/27/2022 1:27	11.66
6/27/2022 1:59	-0.12	6/28/2022 0:49	1.56	6/28/2022 1:12	4.66	6/28/2022 2:35	-0.35	6/27/2022 1:28	11.61
6/27/2022 2:00	-0.12	6/28/2022 0:50	1.56	6/28/2022 1:13	4.67	6/28/2022 2:36	-0.35	6/27/2022 1:29	11.63
6/27/2022 2:01	-0.12	6/28/2022 0:51	1.56	6/28/2022 1:14	4.68	6/28/2022 2:37	-0.40	6/27/2022 1:30	11.63
6/27/2022 2:02	-0.12	6/28/2022 0:52	1.56	6/28/2022 1:15	4.72	6/28/2022 2:38	-0.39	6/27/2022 1:31	11.68
6/27/2022 2:03	-0.12	6/28/2022 0:53	1.56	6/28/2022 1:16	4.68	6/28/2022 2:39	-0.38	6/27/2022 1:32	11.64
6/27/2022 2:04	-0.10	6/28/2022 0:54	1.56	6/28/2022 1:17	4.71	6/28/2022 2:40	-0.36	6/27/2022 1:33	11.63
6/27/2022 2:05	-0.12	6/28/2022 0:55	1.56	6/28/2022 1:18	4.67	6/28/2022 2:41	-0.38	6/27/2022 1:34	11.67
6/27/2022 2:06	-0.12	6/28/2022 0:56	1.58	6/28/2022 1:19	4.68	6/28/2022 2:42	-0.39	6/27/2022 1:35	11.57
6/27/2022 2:07	-0.10	6/28/2022 0:57	1.56	6/28/2022 1:20	4.68	6/28/2022 2:43	-0.40	6/27/2022 1:36	11.66
6/27/2022 2:08	-0.12	6/28/2022 0:58	1.56	6/28/2022 1:21	4.69	6/28/2022 2:44	-0.34	6/27/2022 1:37	11.63
6/27/2022 2:09	-0.10	6/28/2022 0:59	1.58	6/28/2022 1:22	4.70	6/28/2022 2:45	-0.41	6/27/2022 1:38	11.61
6/27/2022 2:10	-0.12	6/28/2022 1:00	1.56	6/28/2022 1:23	4.70	6/28/2022 2:46	-0.40	6/27/2022 1:39	11.65
6/27/2022 2:11	-0.12	6/28/2022 1:01	1.56	6/28/2022 1:24	4.70	6/28/2022 2:47	-0.36	6/27/2022 1:40	11.71
6/27/2022 2:12	-0.10	6/28/2022 1:02	1.56	6/28/2022 1:25	4.68	6/28/2022 2:48	-0.35	6/27/2022 1:41	11.60
6/27/2022 2:13	-0.10	6/28/2022 1:03	1.56	6/28/2022 1:26	4.69	6/28/2022 2:49	-0.37	6/27/2022 1:42	11.62
6/27/2022 2:14	-0.12	6/28/2022 1:04	1.56	6/28/2022 1:27	4.65	6/28/2022 2:50	-0.35	6/27/2022 1:43	11.63
6/27/2022 2:15	-0.12	6/28/2022 1:05	1.56	6/28/2022 1:28	4.70	6/28/2022 2:51	-0.39	6/27/2022 1:44	11.62
6/27/2022 2:16	-0.10	6/28/2022 1:06	1.56	6/28/2022 1:29	4.67	6/28/2022 2:52	-0.35	6/27/2022 1:45	11.68
6/27/2022 2:17	-0.10	6/28/2022 1:07	1.56	6/28/2022 1:30	4.68	6/28/2022 2:53	-0.36	6/27/2022 1:46	11.63
6/27/2022 2:18	-0.12	6/28/2022 1:08	1.58	6/28/2022 1:31	4.70	6/28/2022 2:54	-0.33	6/27/2022 1:47	11.61
6/27/2022 2:19	-0.10	6/28/2022 1:09	1.56	6/28/2022 1:32	4.69	6/28/2022 2:55	-0.41	6/27/2022 1:48	11.68
6/27/2022 2:20	-0.10	6/28/2022 1:10	1.56	6/28/2022 1:33	4.68	6/28/2022 2:56	-0.37	6/27/2022 1:49	11.60
6/27/2022 2:21	-0.12	6/28/2022 1:11	1.56	6/28/2022 1:34	4.67	6/28/2022 2:57	-0.39	6/27/2022 1:50	11.66
6/27/2022 2:22	-0.10	6/28/2022 1:12	1.56	6/28/2022 1:35	4.68	6/28/2022 2:58	-0.34	6/27/2022 1:51	11.67
6/27/2022 2:23	-0.12	6/28/2022 1:13	1.56	6/28/2022 1:36	4.69	6/28/2022 2:59	-0.38	6/27/2022 1:52	11.64
6/27/2022 2:24	-0.10	6/28/2022 1:14	1.56	6/28/2022 1:37	4.69	6/28/2022 3:00	-0.36	6/27/2022 1:53	11.60
6/27/2022 2:25	-0.12	6/28/2022 1:15	1.55	6/28/2022 1:38	4.70	6/28/2022 3:01	-0.36	6/27/2022 1:54	11.69
6/27/2022 2:26	-0.10	6/28/2022 1:16	1.56	6/28/2022 1:39	4.69	6/28/2022 3:02	-0.38	6/27/2022 1:55	11.61
6/27/2022 2:27	-0.12	6/28/2022 1:17	1.56	6/28/2022 1:40	4.72	6/28/2022 3:03	-0.38	6/27/2022 1:56	11.64
6/27/2022 2:28	-0.10	6/28/2022 1:18	1.56	6/28/2022 1:41	4.67	6/28/2022 3:04	-0.35	6/27/2022 1:57	11.60
6/27/2022 2:29	-0.12	6/28/2022 1:19	1.56	6/28/2022 1:42	4.66	6/28/2022 3:05	-0.36	6/27/2022 1:58	11.64
6/27/2022 2:30	-0.12	6/28/2022 1:20	1.56	6/28/2022 1:43	4.70	6/28/2022 3:06	-0.38	6/27/2022 1:59	11.66
6/27/2022 2:31	-0.12	6/28/2022 1:21	1.56	6/28/2022 1:44	4.69	6/28/2022 3:07	-0.35	6/27/2022 2:00	11.65
6/27/2022 2:32	-0.10	6/28/2022 1:22	1.56	6/28/2022 1:45	4.72	6/28/2022 3:08	-0.35	6/27/2022 2:01	11.63
6/27/2022 2:33	-0.10	6/28/2022 1:23	1.56	6/28/2022 1:46	4.64	6/28/2022 3:09	-0.35	6/27/2022 2:02	11.58
6/27/2022 2:34	-0.12	6/28/2022 1:24	1.56	6/28/2022 1:47	4.69	6/28/2022 3:10	-0.36	6/27/2022 2:03	11.60
6/27/2022 2:35	-0.12	6/28/2022 1:25	1.56	6/28/2022 1:48	4.68	6/28/2022 3:11	-0.38	6/27/2022 2:04	11.65
6/27/2022 2:36	-0.12	6/28/2022 1:26	1.56	6/28/2022 1:49	4.67	6/28/2022 3:12	-0.34	6/27/2022 2:05	11.62
6/27/2022 2:37	-0.10	6/28/2022 1:27	1.56	6/28/2022 1:50	4.72	6/28/2022 3:13	-0.35	6/27/2022 2:06	11.61
6/27/2022 2:38	-0.10	6/28/2022 1:28	1.56	6/28/2022 1:51	4.70	6/28/2022 3:14	-0.35	6/27/2022 2:07	11.63
6/27/2022 2:39	-0.12	6/28/2022 1:29	1.56	6/28/2022 1:52	4.69	6/28/2022 3:15	-0.38	6/27/2022 2:08	11.70
6/27/2022 2:40	-0.12	6/28/2022 1:30	1.56	6/28/2022 1:53	4.67	6/28/2022 3:16	-0.34	6/27/2022 2:09	11.61
6/27/2022 2:41	-0.12	6/28/2022 1:31	1.56	6/28/2022 1:54	4.69	6/28/2022 3:17	-0.37	6/27/2022 2:10	11.62
6/27/2022 2:42	-0.10	6/28/2022 1:32	1.56	6/28/2022 1:55	4.67	6/28/2022 3:18	-0.38	6/27/2022 2:11	11.56
6/27/2022 2:43	-0.12	6/28/2022 1:33	1.56	6/28/2022 1:56	4.68	6/28/2022 3:19	-0.37	6/27/2022 2:12	11.66
6/27/2022 2:44	-0.12	6/28/2022 1:34	1.58	6/28/2022 1:57	4.65	6/28/2022 3:20	-0.36	6/27/2022 2:13	11.61
6/27/2022 2:45	-0.10	6/28/2022 1:35	1.55	6/28/2022 1:58	4.69	6/28/2022 3:21	-0.37	6/27/2022 2:14	11.66
6/27/2022 2:46	-0.10	6/28/2022 1:36	1.58	6/28/2022 1:59	4.68	6/28/2022 3:22	-0.39	6/27/2022 2:15	11.61
6/27/2022 2:47	-0.10	6/28/2022 1:37	1.56	6/28/2022 2:00	4.71	6/28/2022 3:23	-0.37	6/27/2022 2:16	11.65
6/27/2022 2:48	-0.12	6/28/2022 1:38	1.56	6/28/2022 2:01	4.70	6/28/2022 3:24	-0.34	6/27/2022 2:17	11.66
6/27/2022 2:49	-0.12	6/28/2022 1:39	1.56	6/28/2022 2:02	4.69	6/28/2022 3:25	-0.35	6/27/2022 2:18	11.62
6/27/2022 2:50	-0.10	6/28/2022 1:40	1.58	6/28/2022 2:03	4.67	6/28/2022 3:26	-0.34	6/27/2022 2:19	11.65
6/27/2022 2:51	-0.12	6/28/2022 1:41	1.58	6/28/2022 2:04	4.68	6/28/2022 3:27	-0.37	6/27/2022 2:20	11.60
6/27/2022 2:52	-0.10	6/28/2022 1:42	1.56	6/28/2022 2:05	4.69	6/28/2022 3:28	-0.33	6/27/2022 2:21	11.65
6/27/2022 2:53	-0.12	6/28/2022 1:43	1.56	6/28/2022 2:06	4.67	6/28/2022 3:29	-0.34	6/27/2022 2:22	11.66
6/27/2022 2:54	-0.12	6/28/2022 1:44	1.56	6/28/2022 2:07	4.69	6/28/2022 3:30	-0.40	6/27/2022 2:23	11.67
6/27/2022 2:55	-0.10	6/28/2022 1:45	1.56	6/28/2022 2:08	4.68	6/28/2022 3:31	-0.38	6/27/2022 2:24	11.63
6/27/2022 2:56	-0.10	6/28/2022 1:46	1.57	6/28/2022 2:09	4.68	6/28/2022 3:32	-0.32	6/27/2022 2:25	11.67

6/27/2022 2:57	-0.10	6/28/2022 1:47	1.57	6/28/2022 2:10	4.69	6/28/2022 3:33	-0.37	6/27/2022 2:26	11.62
6/27/2022 2:58	-0.10	6/28/2022 1:48	1.58	6/28/2022 2:11	4.69	6/28/2022 3:34	-0.36	6/27/2022 2:27	11.63
6/27/2022 2:59	-0.10	6/28/2022 1:49	1.56	6/28/2022 2:12	4.68	6/28/2022 3:35	-0.35	6/27/2022 2:28	11.65
6/27/2022 3:00	-0.12	6/28/2022 1:50	1.56	6/28/2022 2:13	4.72	6/28/2022 3:36	-0.35	6/27/2022 2:29	11.67
6/27/2022 3:01	-0.12	6/28/2022 1:51	1.55	6/28/2022 2:14	4.71	6/28/2022 3:37	-0.37	6/27/2022 2:30	11.62
6/27/2022 3:02	-0.12	6/28/2022 1:52	1.56	6/28/2022 2:15	4.71	6/28/2022 3:38	-0.35	6/27/2022 2:31	11.63
6/27/2022 3:03	-0.12	6/28/2022 1:53	1.56	6/28/2022 2:16	4.67	6/28/2022 3:39	-0.40	6/27/2022 2:32	11.64
6/27/2022 3:04	-0.10	6/28/2022 1:54	1.56	6/28/2022 2:17	4.66	6/28/2022 3:40	-0.38	6/27/2022 2:33	11.65
6/27/2022 3:05	-0.10	6/28/2022 1:55	1.56	6/28/2022 2:18	4.67	6/28/2022 3:41	-0.34	6/27/2022 2:34	11.61
6/27/2022 3:06	-0.12	6/28/2022 1:56	1.58	6/28/2022 2:19	4.67	6/28/2022 3:42	-0.36	6/27/2022 2:35	11.68
6/27/2022 3:07	-0.10	6/28/2022 1:57	1.58	6/28/2022 2:20	4.68	6/28/2022 3:43	-0.34	6/27/2022 2:36	11.66
6/27/2022 3:08	-0.10	6/28/2022 1:58	1.56	6/28/2022 2:21	4.69	6/28/2022 3:44	-0.38	6/27/2022 2:37	11.64
6/27/2022 3:09	-0.10	6/28/2022 1:59	1.56	6/28/2022 2:22	4.69	6/28/2022 3:45	-0.34	6/27/2022 2:38	11.63
6/27/2022 3:10	-0.10	6/28/2022 2:00	1.56	6/28/2022 2:23	4.70	6/28/2022 3:46	-0.34	6/27/2022 2:39	11.62
6/27/2022 3:11	-0.10	6/28/2022 2:01	1.55	6/28/2022 2:24	4.68	6/28/2022 3:47	-0.35	6/27/2022 2:40	11.65
6/27/2022 3:12	-0.12	6/28/2022 2:02	1.56	6/28/2022 2:25	4.68	6/28/2022 3:48	-0.37	6/27/2022 2:41	11.61
6/27/2022 3:13	-0.10	6/28/2022 2:03	1.55	6/28/2022 2:26	4.69	6/28/2022 3:49	-0.37	6/27/2022 2:42	11.64
6/27/2022 3:14	-0.12	6/28/2022 2:04	1.56	6/28/2022 2:27	4.68	6/28/2022 3:50	-0.35	6/27/2022 2:43	11.63
6/27/2022 3:15	-0.10	6/28/2022 2:05	1.58	6/28/2022 2:28	4.72	6/28/2022 3:51	-0.37	6/27/2022 2:44	11.66
6/27/2022 3:16	-0.10	6/28/2022 2:06	1.56	6/28/2022 2:29	4.72	6/28/2022 3:52	-0.36	6/27/2022 2:45	11.64
6/27/2022 3:17	-0.10	6/28/2022 2:07	1.56	6/28/2022 2:30	4.68	6/28/2022 3:53	-0.38	6/27/2022 2:46	11.62
6/27/2022 3:18	-0.10	6/28/2022 2:08	1.56	6/28/2022 2:31	4.68	6/28/2022 3:54	-0.36	6/27/2022 2:47	11.62
6/27/2022 3:19	-0.12	6/28/2022 2:09	1.56	6/28/2022 2:32	4.71	6/28/2022 3:55	-0.34	6/27/2022 2:48	11.64
6/27/2022 3:20	-0.10	6/28/2022 2:10	1.56	6/28/2022 2:33	4.68	6/28/2022 3:56	-0.31	6/27/2022 2:49	11.64
6/27/2022 3:21	-0.10	6/28/2022 2:11	1.58	6/28/2022 2:34	4.69	6/28/2022 3:57	-0.36	6/27/2022 2:50	11.63
6/27/2022 3:22	-0.10	6/28/2022 2:12	1.56	6/28/2022 2:35	4.70	6/28/2022 3:58	-0.37	6/27/2022 2:51	11.65
6/27/2022 3:23	-0.10	6/28/2022 2:13	1.58	6/28/2022 2:36	4.71	6/28/2022 3:59	-0.31	6/27/2022 2:52	11.61
6/27/2022 3:24	-0.11	6/28/2022 2:14	1.55	6/28/2022 2:37	4.64	6/28/2022 4:00	-0.39	6/27/2022 2:53	11.62
6/27/2022 3:25	-0.12	6/28/2022 2:15	1.56	6/28/2022 2:38	4.72	6/28/2022 4:01	-0.37	6/27/2022 2:54	11.64
6/27/2022 3:26	-0.12	6/28/2022 2:16	1.56	6/28/2022 2:39	4.70	6/28/2022 4:02	-0.38	6/27/2022 2:55	11.63
6/27/2022 3:27	-0.12	6/28/2022 2:17	1.56	6/28/2022 2:40	4.65	6/28/2022 4:03	-0.39	6/27/2022 2:56	11.61
6/27/2022 3:28	-0.10	6/28/2022 2:18	1.55	6/28/2022 2:41	4.70	6/28/2022 4:04	-0.35	6/27/2022 2:57	11.66
6/27/2022 3:29	-0.10	6/28/2022 2:19	1.55	6/28/2022 2:42	4.67	6/28/2022 4:05	-0.35	6/27/2022 2:58	11.71
6/27/2022 3:30	-0.12	6/28/2022 2:20	1.56	6/28/2022 2:43	4.71	6/28/2022 4:06	-0.40	6/27/2022 2:59	11.63
6/27/2022 3:31	-0.12	6/28/2022 2:21	1.56	6/28/2022 2:44	4.70	6/28/2022 4:07	-0.35	6/27/2022 3:00	11.64
6/27/2022 3:32	-0.12	6/28/2022 2:22	1.56	6/28/2022 2:45	4.70	6/28/2022 4:08	-0.38	6/27/2022 3:01	11.62
6/27/2022 3:33	-0.10	6/28/2022 2:23	1.56	6/28/2022 2:46	4.67	6/28/2022 4:09	-0.36	6/27/2022 3:02	11.66
6/27/2022 3:34	-0.12	6/28/2022 2:24	1.56	6/28/2022 2:47	4.68	6/28/2022 4:10	-0.37	6/27/2022 3:03	11.63
6/27/2022 3:35	-0.10	6/28/2022 2:25	1.56	6/28/2022 2:48	4.69	6/28/2022 4:11	-0.36	6/27/2022 3:04	11.68
6/27/2022 3:36	-0.10	6/28/2022 2:26	1.55	6/28/2022 2:49	4.68	6/28/2022 4:12	-0.36	6/27/2022 3:05	11.67
6/27/2022 3:37	-0.10	6/28/2022 2:27	1.56	6/28/2022 2:50	4.65	6/28/2022 4:13	-0.36	6/27/2022 3:06	11.64
6/27/2022 3:38	-0.10	6/28/2022 2:28	1.56	6/28/2022 2:51	4.66	6/28/2022 4:14	-0.40	6/27/2022 3:07	11.69
6/27/2022 3:39	-0.12	6/28/2022 2:29	1.56	6/28/2022 2:52	4.65	6/28/2022 4:15	-0.42	6/27/2022 3:08	11.62
6/27/2022 3:40	-0.10	6/28/2022 2:30	1.56	6/28/2022 2:53	4.69	6/28/2022 4:16	-0.37	6/27/2022 3:09	11.68
6/27/2022 3:41	-0.10	6/28/2022 2:31	1.56	6/28/2022 2:54	4.68	6/28/2022 4:17	-0.40	6/27/2022 3:10	11.68
6/27/2022 3:42	-0.12	6/28/2022 2:32	1.55	6/28/2022 2:55	4.68	6/28/2022 4:18	-0.34	6/27/2022 3:11	11.66
6/27/2022 3:43	-0.10	6/28/2022 2:33	1.55	6/28/2022 2:56	4.68	6/28/2022 4:19	-0.39	6/27/2022 3:12	11.64
6/27/2022 3:44	-0.12	6/28/2022 2:34	1.56	6/28/2022 2:57	4.71	6/28/2022 4:20	-0.39	6/27/2022 3:13	11.64
6/27/2022 3:45	-0.10	6/28/2022 2:35	1.56	6/28/2022 2:58	4.71	6/28/2022 4:21	-0.38	6/27/2022 3:14	11.63
6/27/2022 3:46	-0.10	6/28/2022 2:36	1.56	6/28/2022 2:59	4.67	6/28/2022 4:22	-0.36	6/27/2022 3:15	11.68
6/27/2022 3:47	-0.12	6/28/2022 2:37	1.56	6/28/2022 3:00	4.67	6/28/2022 4:23	-0.37	6/27/2022 3:16	11.62
6/27/2022 3:48	-0.10	6/28/2022 2:38	1.55	6/28/2022 3:01	4.68	6/28/2022 4:24	-0.34	6/27/2022 3:17	11.61
6/27/2022 3:49	-0.12	6/28/2022 2:39	1.58	6/28/2022 3:02	4.69	6/28/2022 4:25	-0.36	6/27/2022 3:18	11.67
6/27/2022 3:50	-0.12	6/28/2022 2:40	1.55	6/28/2022 3:03	4.72	6/28/2022 4:26	-0.38	6/27/2022 3:19	11.59
6/27/2022 3:51	-0.10	6/28/2022 2:41	1.56	6/28/2022 3:04	4.69	6/28/2022 4:27	-0.36	6/27/2022 3:20	11.64
6/27/2022 3:52	-0.12	6/28/2022 2:42	1.56	6/28/2022 3:05	4.67	6/28/2022 4:28	-0.39	6/27/2022 3:21	11.66
6/27/2022 3:53	-0.10	6/28/2022 2:43	1.58	6/28/2022 3:06	4.65	6/28/2022 4:29	-0.37	6/27/2022 3:22	11.60
6/27/2022 3:54	-0.12	6/28/2022 2:44	1.56	6/28/2022 3:07	4.70	6/28/2022 4:30	-0.35	6/27/2022 3:23	11.63
6/27/2022 3:55	-0.10	6/28/2022 2:45	1.56	6/28/2022 3:08	4.67	6/28/2022 4:31	-0.34	6/27/2022 3:24	11.64
6/27/2022 3:56	-0.12	6/28/2022 2:46	1.56	6/28/2022 3:09	4.66	6/28/2022 4:32	-0.36	6/27/2022 3:25	11.64
6/27/2022 3:57	-0.12	6/28/2022 2:47	1.56	6/28/2022 3:10	4.70	6/28/2022 4:33	-0.34	6/27/2022 3:26	11.64
6/27/2022 3:58	-0.12	6/28/2022 2:48	1.58	6/28/2022 3:11	4.66	6/28/2022 4:34	-0.37	6/27/2022 3:27	11.68
6/27/2022 3:59	-0.10	6/28/2022 2:49	1.56	6/28/2022 3:12	4.70	6/28/2022 4:35	-0.32	6/27/2022 3:28	11.61
6/27/2022 4:00	-0.10	6/28/2022 2:50	1.55	6/28/2022 3:13	4.67	6/28/2022 4:36	-0.38	6/27/2022 3:29	11.61
6/27/2022 4:01	-0.10	6/28/2022 2:51	1.56	6/28/2022 3:14	4.73	6/28/2022 4:37	-0.38	6/27/2022 3:30	11.63
6/27/2022 4:02	-0.10	6/28/2022 2:52	1.55	6/28/2022 3:15	4.70	6/28/2022 4:38	-0.38	6/27/2022 3:31	11.66
6/27/2022 4:03	-0.12	6/28/2022 2:53	1.56	6/28/2022 3:16	4.66	6/28/2022 4:39	-0.36	6/27/2022 3:32	11.65
6/27/2022 4:04	-0.12	6/28/2022 2:54	1.56	6/28/2022 3:17	4.68	6/28/2022 4:40	-0.35	6/27/2022 3:33	11.64
6/27/2022 4:05	-0.12	6/28/2022 2:55	1.55	6/28/2022 3:18	4.68	6/28/2022 4:41	-0.40	6/27/2022 3:34	11.60
6/27/2022 4:06	-0.12	6/28/2022 2:56	1.56	6/28/2022 3:19	4.68	6/28/2022 4:42	-0.38	6/27/2022 3:35	11.66
6/27/2022 4:07	-0.10	6/28/2022 2:57	1.56	6/28/2022 3:20	4.67	6/28/2022 4:43	-0.38	6/27/2022 3:36	11.61
6/27/2022 4:08	-0.10	6/28/2022 2:58	1.56	6/28/2022 3:21	4.69	6/28/2022 4:44	-0.38	6/27/2022 3:37	11.64
6/27/2022 4:09	-0.10	6/28/2022 2:59	1.58	6/28/2022 3:22	4.69	6/28/2022 4:45	-0.36	6/27/2022 3:38	11.64
6/27/2022 4:10	-0.10	6/28/2022 3:00	1.55	6/28/2022 3:23	4.67	6/28/2022 4:46	-0.37	6/27/2022 3:39	11.64
6/27/2022 4:11	-0.12	6/28/2022 3:01	1.56	6/28/2022 3:24	4.68	6/28/2022 4:47	-0.34	6/27/2022 3:40	11.66
6/27/2022 4:12	-0.10	6/28/2022 3:02	1.56	6/28/2022 3:25	4.68	6/28/2022 4:48	-0.37	6/27/2022 3:41	11.68
6/27/2022 4:13	-0.10	6/28/2022 3:03	1.55	6/28/2022 3:26	4.67	6/28/2022 4:49	-0.37	6/27/2022 3:42	11.65
6/27/2022 4:14	-0.12	6/28/2022 3:04	1.56	6/28/2022 3:27	4.68	6/28/2022 4:50	-0.38	6/27/2022 3:43	11.65
6/27/2022 4:15	-0.11	6/28/2022 3:05	1.55	6/28/2022 3:28	4.67	6/28/2022 4:51	-0.36	6/27/2022 3:44	11.64
6/27/2022 4:16	-0.12	6/28/2022 3:06	1.57	6/28/2022 3:29	4.68	6/28/2022 4:52	-0.31	6/27/2022 3:45	11.63
6/27/2022 4:17	-0.10	6/28/2022 3:07	1.58	6/28/2022 3:30	4.69	6/28/2022 4:53	-0.41	6/27/2022 3:46	11.61
6/27/2022 4:18	-0.12	6/28/2022 3:08	1.55	6/28/2022 3:31	4.68	6/28/2022 4:54	-0.34	6/27/2022 3:47	11.63
6/27/2022 4:19	-0.10	6/28/2022 3:09	1.55	6/28/2022 3:32	4.67	6/28/2022 4:55	-0.37	6/27/2022 3:48	11.63
6/27/2022 4:20	-0.10	6/28/2022 3:10	1.55	6/28/2022 3:33	4.68	6/28/2022 4:56	-0.34	6/27/2022 3:49	11.60
6/27/2022 4:21	-0.10	6/28/2022 3:11	1.55	6/28/2022 3:34	4.70	6/28/2022 4:57	-0.40	6/27/2022 3:50	11.59
6/27/2022 4:22	-0.10	6/28/2022 3:12	1.55	6/28/2022 3:35	4.68	6/28/2022 4:58	-0.38	6/27/2022 3:51	11.57
6/27/2022 4:23	-0.12	6/28/2022 3:13	1.55	6/28/2022 3:36	4.67	6/28/2022 4:59	-0.38	6/27/2022 3:52	11.64
6/27/2022 4:24	-0.10	6/28/2022 3:14	1.55	6/28/2022 3:37	4.69	6/28/2022 5:00	-0.38	6/27/2022 3:53	11.64

6/27/2022 4:25	-0.10	6/28/2022 3:15	1.56	6/28/2022 3:38	4.67	6/28/2022 5:01	-0.36	6/27/2022 3:54	11.61
6/27/2022 4:26	-0.10	6/28/2022 3:16	1.57	6/28/2022 3:39	4.71	6/28/2022 5:02	-0.37	6/27/2022 3:55	11.62
6/27/2022 4:27	-0.12	6/28/2022 3:17	1.55	6/28/2022 3:40	4.70	6/28/2022 5:03	-0.38	6/27/2022 3:56	11.59
6/27/2022 4:28	-0.12	6/28/2022 3:18	1.55	6/28/2022 3:41	4.69	6/28/2022 5:04	-0.37	6/27/2022 3:57	11.62
6/27/2022 4:29	-0.12	6/28/2022 3:19	1.55	6/28/2022 3:42	4.69	6/28/2022 5:05	-0.36	6/27/2022 3:58	11.66
6/27/2022 4:30	-0.12	6/28/2022 3:20	1.55	6/28/2022 3:43	4.69	6/28/2022 5:06	-0.37	6/27/2022 3:59	11.58
6/27/2022 4:31	-0.10	6/28/2022 3:21	1.55	6/28/2022 3:44	4.67	6/28/2022 5:07	-0.41	6/27/2022 4:00	11.67
6/27/2022 4:32	-0.10	6/28/2022 3:22	1.55	6/28/2022 3:45	4.69	6/28/2022 5:08	-0.35	6/27/2022 4:01	11.68
6/27/2022 4:33	-0.12	6/28/2022 3:23	1.55	6/28/2022 3:46	4.67	6/28/2022 5:09	-0.37	6/27/2022 4:02	11.64
6/27/2022 4:34	-0.12	6/28/2022 3:24	1.55	6/28/2022 3:47	4.67	6/28/2022 5:10	-0.37	6/27/2022 4:03	11.64
6/27/2022 4:35	-0.12	6/28/2022 3:25	1.56	6/28/2022 3:48	4.66	6/28/2022 5:11	-0.38	6/27/2022 4:04	11.64
6/27/2022 4:36	-0.10	6/28/2022 3:26	1.55	6/28/2022 3:49	4.67	6/28/2022 5:12	-0.35	6/27/2022 4:05	11.66
6/27/2022 4:37	-0.12	6/28/2022 3:27	1.56	6/28/2022 3:50	4.67	6/28/2022 5:13	-0.36	6/27/2022 4:06	11.64
6/27/2022 4:38	-0.10	6/28/2022 3:28	1.55	6/28/2022 3:51	4.67	6/28/2022 5:14	-0.38	6/27/2022 4:07	11.67
6/27/2022 4:39	-0.10	6/28/2022 3:29	1.55	6/28/2022 3:52	4.69	6/28/2022 5:15	-0.37	6/27/2022 4:08	11.68
6/27/2022 4:40	-0.10	6/28/2022 3:30	1.55	6/28/2022 3:53	4.68	6/28/2022 5:16	-0.37	6/27/2022 4:09	11.63
6/27/2022 4:41	-0.11	6/28/2022 3:31	1.56	6/28/2022 3:54	4.68	6/28/2022 5:17	-0.36	6/27/2022 4:10	11.66
6/27/2022 4:42	-0.10	6/28/2022 3:32	1.56	6/28/2022 3:55	4.65	6/28/2022 5:18	-0.35	6/27/2022 4:11	11.60
6/27/2022 4:43	-0.12	6/28/2022 3:33	1.56	6/28/2022 3:56	4.70	6/28/2022 5:19	-0.38	6/27/2022 4:12	11.63
6/27/2022 4:44	-0.12	6/28/2022 3:34	1.55	6/28/2022 3:57	4.67	6/28/2022 5:20	-0.34	6/27/2022 4:13	11.66
6/27/2022 4:45	-0.10	6/28/2022 3:35	1.56	6/28/2022 3:58	4.72	6/28/2022 5:21	-0.37	6/27/2022 4:14	11.66
6/27/2022 4:46	-0.12	6/28/2022 3:36	1.55	6/28/2022 3:59	4.66	6/28/2022 5:22	-0.37	6/27/2022 4:15	11.64
6/27/2022 4:47	-0.12	6/28/2022 3:37	1.55	6/28/2022 4:00	4.67	6/28/2022 5:23	-0.35	6/27/2022 4:16	11.60
6/27/2022 4:48	-0.10	6/28/2022 3:38	1.55	6/28/2022 4:01	4.66	6/28/2022 5:24	-0.38	6/27/2022 4:17	11.63
6/27/2022 4:49	-0.10	6/28/2022 3:39	1.55	6/28/2022 4:02	4.67	6/28/2022 5:25	-0.36	6/27/2022 4:18	11.69
6/27/2022 4:50	-0.10	6/28/2022 3:40	1.55	6/28/2022 4:03	4.70	6/28/2022 5:26	-0.36	6/27/2022 4:19	11.67
6/27/2022 4:51	-0.11	6/28/2022 3:41	1.57	6/28/2022 4:04	4.67	6/28/2022 5:27	-0.33	6/27/2022 4:20	11.69
6/27/2022 4:52	-0.12	6/28/2022 3:42	1.55	6/28/2022 4:05	4.66	6/28/2022 5:28	-0.37	6/27/2022 4:21	11.67
6/27/2022 4:53	-0.12	6/28/2022 3:43	1.57	6/28/2022 4:06	4.69	6/28/2022 5:29	-0.35	6/27/2022 4:22	11.62
6/27/2022 4:54	-0.10	6/28/2022 3:44	1.55	6/28/2022 4:07	4.65	6/28/2022 5:30	-0.35	6/27/2022 4:23	11.68
6/27/2022 4:55	-0.10	6/28/2022 3:45	1.56	6/28/2022 4:08	4.69	6/28/2022 5:31	-0.37	6/27/2022 4:24	11.65
6/27/2022 4:56	-0.10	6/28/2022 3:46	1.55	6/28/2022 4:09	4.71	6/28/2022 5:32	-0.36	6/27/2022 4:25	11.66
6/27/2022 4:57	-0.10	6/28/2022 3:47	1.55	6/28/2022 4:10	4.70	6/28/2022 5:33	-0.37	6/27/2022 4:26	11.67
6/27/2022 4:58	-0.12	6/28/2022 3:48	1.57	6/28/2022 4:11	4.67	6/28/2022 5:34	-0.36	6/27/2022 4:27	11.62
6/27/2022 4:59	-0.10	6/28/2022 3:49	1.55	6/28/2022 4:12	4.67	6/28/2022 5:35	-0.38	6/27/2022 4:28	11.65
6/27/2022 5:00	-0.12	6/28/2022 3:50	1.55	6/28/2022 4:13	4.69	6/28/2022 5:36	-0.35	6/27/2022 4:29	11.69
6/27/2022 5:01	-0.12	6/28/2022 3:51	1.55	6/28/2022 4:14	4.66	6/28/2022 5:37	-0.38	6/27/2022 4:30	11.67
6/27/2022 5:02	-0.12	6/28/2022 3:52	1.55	6/28/2022 4:15	4.71	6/28/2022 5:38	-0.37	6/27/2022 4:31	11.64
6/27/2022 5:03	-0.10	6/28/2022 3:53	1.55	6/28/2022 4:16	4.68	6/28/2022 5:39	-0.33	6/27/2022 4:32	11.61
6/27/2022 5:04	-0.10	6/28/2022 3:54	1.55	6/28/2022 4:17	4.67	6/28/2022 5:40	-0.36	6/27/2022 4:33	11.58
6/27/2022 5:05	-0.12	6/28/2022 3:55	1.55	6/28/2022 4:18	4.68	6/28/2022 5:41	-0.40	6/27/2022 4:34	11.66
6/27/2022 5:06	-0.10	6/28/2022 3:56	1.55	6/28/2022 4:19	4.70	6/28/2022 5:42	-0.38	6/27/2022 4:35	11.65
6/27/2022 5:07	-0.12	6/28/2022 3:57	1.55	6/28/2022 4:20	4.69	6/28/2022 5:43	-0.37	6/27/2022 4:36	11.65
6/27/2022 5:08	-0.10	6/28/2022 3:58	1.55	6/28/2022 4:21	4.65	6/28/2022 5:44	-0.38	6/27/2022 4:37	11.60
6/27/2022 5:09	-0.10	6/28/2022 3:59	1.58	6/28/2022 4:22	4.69	6/28/2022 5:45	-0.37	6/27/2022 4:38	11.66
6/27/2022 5:10	-0.10	6/28/2022 4:00	1.55	6/28/2022 4:23	4.69	6/28/2022 5:46	-0.34	6/27/2022 4:39	11.64
6/27/2022 5:11	-0.12	6/28/2022 4:01	1.57	6/28/2022 4:24	4.69	6/28/2022 5:47	-0.33	6/27/2022 4:40	11.66
6/27/2022 5:12	-0.11	6/28/2022 4:02	1.55	6/28/2022 4:25	4.66	6/28/2022 5:48	-0.38	6/27/2022 4:41	11.63
6/27/2022 5:13	-0.12	6/28/2022 4:03	1.57	6/28/2022 4:26	4.66	6/28/2022 5:49	-0.36	6/27/2022 4:42	11.67
6/27/2022 5:14	-0.10	6/28/2022 4:04	1.55	6/28/2022 4:27	4.68	6/28/2022 5:50	-0.38	6/27/2022 4:43	11.65
6/27/2022 5:15	-0.10	6/28/2022 4:05	1.57	6/28/2022 4:28	4.69	6/28/2022 5:51	-0.32	6/27/2022 4:44	11.68
6/27/2022 5:16	-0.11	6/28/2022 4:06	1.57	6/28/2022 4:29	4.69	6/28/2022 5:52	-0.39	6/27/2022 4:45	11.69
6/27/2022 5:17	-0.12	6/28/2022 4:07	1.55	6/28/2022 4:30	4.68	6/28/2022 5:53	-0.36	6/27/2022 4:46	11.67
6/27/2022 5:18	-0.12	6/28/2022 4:08	1.57	6/28/2022 4:31	4.66	6/28/2022 5:54	-0.37	6/27/2022 4:47	11.66
6/27/2022 5:19	-0.10	6/28/2022 4:09	1.58	6/28/2022 4:32	4.69	6/28/2022 5:55	-0.36	6/27/2022 4:48	11.65
6/27/2022 5:20	-0.10	6/28/2022 4:10	1.57	6/28/2022 4:33	4.67	6/28/2022 5:56	-0.36	6/27/2022 4:49	11.64
6/27/2022 5:21	-0.11	6/28/2022 4:11	1.55	6/28/2022 4:34	4.66	6/28/2022 5:57	-0.37	6/27/2022 4:50	11.66
6/27/2022 5:22	-0.10	6/28/2022 4:12	1.57	6/28/2022 4:35	4.68	6/28/2022 5:58	-0.39	6/27/2022 4:51	11.63
6/27/2022 5:23	-0.10	6/28/2022 4:13	1.55	6/28/2022 4:36	4.66	6/28/2022 5:59	-0.39	6/27/2022 4:52	11.62
6/27/2022 5:24	-0.10	6/28/2022 4:14	1.55	6/28/2022 4:37	4.68	6/28/2022 6:00	-0.37	6/27/2022 4:53	11.65
6/27/2022 5:25	-0.12	6/28/2022 4:15	1.57	6/28/2022 4:38	4.65	6/28/2022 6:01	-0.35	6/27/2022 4:54	11.66
6/27/2022 5:26	-0.12	6/28/2022 4:16	1.57	6/28/2022 4:39	4.70	6/28/2022 6:02	-0.36	6/27/2022 4:55	11.63
6/27/2022 5:27	-0.12	6/28/2022 4:17	1.55	6/28/2022 4:40	4.69	6/28/2022 6:03	-0.38	6/27/2022 4:56	11.64
6/27/2022 5:28	-0.10	6/28/2022 4:18	1.55	6/28/2022 4:41	4.69	6/28/2022 6:04	-0.39	6/27/2022 4:57	11.65
6/27/2022 5:29	-0.10	6/28/2022 4:19	1.55	6/28/2022 4:42	4.71	6/28/2022 6:05	-0.35	6/27/2022 4:58	11.61
6/27/2022 5:30	-0.10	6/28/2022 4:20	1.55	6/28/2022 4:43	4.68	6/28/2022 6:06	-0.37	6/27/2022 4:59	11.57
6/27/2022 5:31	-0.10	6/28/2022 4:21	1.55	6/28/2022 4:44	4.69	6/28/2022 6:07	-0.35	6/27/2022 5:00	11.62
6/27/2022 5:32	-0.12	6/28/2022 4:22	1.55	6/28/2022 4:45	4.68	6/28/2022 6:08	-0.37	6/27/2022 5:01	11.67
6/27/2022 5:33	-0.12	6/28/2022 4:23	1.55	6/28/2022 4:46	4.69	6/28/2022 6:09	-0.38	6/27/2022 5:02	11.62
6/27/2022 5:34	-0.10	6/28/2022 4:24	1.55	6/28/2022 4:47	4.65	6/28/2022 6:10	-0.33	6/27/2022 5:03	11.67
6/27/2022 5:35	-0.10	6/28/2022 4:25	1.58	6/28/2022 4:48	4.73	6/28/2022 6:11	-0.38	6/27/2022 5:04	11.65
6/27/2022 5:36	-0.10	6/28/2022 4:26	1.55	6/28/2022 4:49	4.68	6/28/2022 6:12	-0.36	6/27/2022 5:05	11.66
6/27/2022 5:37	-0.10	6/28/2022 4:27	1.55	6/28/2022 4:50	4.69	6/28/2022 6:13	-0.38	6/27/2022 5:06	11.59
6/27/2022 5:38	-0.10	6/28/2022 4:28	1.55	6/28/2022 4:51	4.69	6/28/2022 6:14	-0.36	6/27/2022 5:07	11.65
6/27/2022 5:39	-0.12	6/28/2022 4:29	1.55	6/28/2022 4:52	4.67	6/28/2022 6:15	-0.32	6/27/2022 5:08	11.66
6/27/2022 5:40	-0.10	6/28/2022 4:30	1.55	6/28/2022 4:53	4.67	6/28/2022 6:16	-0.43	6/27/2022 5:09	11.68
6/27/2022 5:41	-0.10	6/28/2022 4:31	1.57	6/28/2022 4:54	4.70	6/28/2022 6:17	-0.39	6/27/2022 5:10	11.61
6/27/2022 5:42	-0.12	6/28/2022 4:32	1.55	6/28/2022 4:55	4.67	6/28/2022 6:18	-0.37	6/27/2022 5:11	11.68
6/27/2022 5:43	-0.12	6/28/2022 4:33	1.57	6/28/2022 4:56	4.67	6/28/2022 6:19	-0.36	6/27/2022 5:12	11.64
6/27/2022 5:44	-0.10	6/28/2022 4:34	1.55	6/28/2022 4:57	4.67	6/28/2022 6:20	-0.38	6/27/2022 5:13	11.65
6/27/2022 5:45	-0.12	6/28/2022 4:35	1.58	6/28/2022 4:58	4.66	6/28/2022 6:21	-0.33	6/27/2022 5:14	11.67
6/27/2022 5:46	-0.10	6/28/2022 4:36	1.55	6/28/2022 4:59	4.69	6/28/2022 6:22	-0.41	6/27/2022 5:15	11.65
6/27/2022 5:47	-0.10	6/28/2022 4:37	1.55	6/28/2022 5:00	4.65	6/28/2022 6:23	-0.40	6/27/2022 5:16	11.63
6/27/2022 5:48	-0.12	6/28/2022 4:38	1.55	6/28/2022 5:01	4.67	6/28/2022 6:24	-0.34	6/27/2022 5:17	11.68
6/27/2022 5:49	-0.12	6/28/2022 4:39	1.55	6/28/2022 5:02	4.66	6/28/2022 6:25	-0.34	6/27/2022 5:18	11.66
6/27/2022 5:50	-0.10	6/28/2022 4:40	1.55	6/28/2022 5:03	4.66	6/28/2022 6:26	-0.37	6/27/2022 5:19	11.61
6/27/2022 5:51	-0.12	6/28/2022 4:41	1.56	6/28/2022 5:04	4.69	6/28/2022 6:27	-0.37	6/27/2022 5:20	11.67
6/27/2022 5:52	-0.12	6/28/2022 4:42	1.57	6/28/2022 5:05	4.68	6/28/2022 6:28	-0.35	6/27/2022 5:21	11.62

6/27/2022 5:53	-0.10	6/28/2022 4:43	1.58	6/28/2022 5:06	4.71	6/28/2022 6:29	-0.38	6/27/2022 5:22	11.64
6/27/2022 5:54	-0.11	6/28/2022 4:44	1.55	6/28/2022 5:07	4.69	6/28/2022 6:30	-0.38	6/27/2022 5:23	11.59
6/27/2022 5:55	-0.10	6/28/2022 4:45	1.56	6/28/2022 5:08	4.66	6/28/2022 6:31	-0.33	6/27/2022 5:24	11.61
6/27/2022 5:56	-0.12	6/28/2022 4:46	1.56	6/28/2022 5:09	4.68	6/28/2022 6:32	-0.35	6/27/2022 5:25	11.62
6/27/2022 5:57	-0.12	6/28/2022 4:47	1.55	6/28/2022 5:10	4.66	6/28/2022 6:33	-0.37	6/27/2022 5:26	11.64
6/27/2022 5:58	-0.10	6/28/2022 4:48	1.57	6/28/2022 5:11	4.65	6/28/2022 6:34	-0.34	6/27/2022 5:27	11.66
6/27/2022 5:59	-0.10	6/28/2022 4:49	1.57	6/28/2022 5:12	4.68	6/28/2022 6:35	-0.38	6/27/2022 5:28	11.63
6/27/2022 6:00	-0.10	6/28/2022 4:50	1.55	6/28/2022 5:13	4.70	6/28/2022 6:36	-0.36	6/27/2022 5:29	11.64
6/27/2022 6:01	-0.10	6/28/2022 4:51	1.57	6/28/2022 5:14	4.67	6/28/2022 6:37	-0.35	6/27/2022 5:30	11.63
6/27/2022 6:02	-0.10	6/28/2022 4:52	1.55	6/28/2022 5:15	4.65	6/28/2022 6:38	-0.31	6/27/2022 5:31	11.69
6/27/2022 6:03	-0.10	6/28/2022 4:53	1.55	6/28/2022 5:16	4.65	6/28/2022 6:39	-0.33	6/27/2022 5:32	11.67
6/27/2022 6:04	-0.10	6/28/2022 4:54	1.55	6/28/2022 5:17	4.70	6/28/2022 6:40	-0.35	6/27/2022 5:33	11.61
6/27/2022 6:05	-0.10	6/28/2022 4:55	1.56	6/28/2022 5:18	4.67	6/28/2022 6:41	-0.38	6/27/2022 5:34	11.67
6/27/2022 6:06	-0.11	6/28/2022 4:56	1.58	6/28/2022 5:19	4.68	6/28/2022 6:42	-0.37	6/27/2022 5:35	11.61
6/27/2022 6:07	-0.10	6/28/2022 4:57	1.55	6/28/2022 5:20	4.71	6/28/2022 6:43	-0.35	6/27/2022 5:36	11.61
6/27/2022 6:08	-0.10	6/28/2022 4:58	1.57	6/28/2022 5:21	4.68	6/28/2022 6:44	-0.33	6/27/2022 5:37	11.66
6/27/2022 6:09	-0.10	6/28/2022 4:59	1.55	6/28/2022 5:22	4.69	6/28/2022 6:45	-0.37	6/27/2022 5:38	11.59
6/27/2022 6:10	-0.10	6/28/2022 5:00	1.55	6/28/2022 5:23	4.68	6/28/2022 6:46	-0.39	6/27/2022 5:39	11.62
6/27/2022 6:11	-0.12	6/28/2022 5:01	1.58	6/28/2022 5:24	4.70	6/28/2022 6:47	-0.39	6/27/2022 5:40	11.64
6/27/2022 6:12	-0.12	6/28/2022 5:02	1.57	6/28/2022 5:25	4.67	6/28/2022 6:48	-0.35	6/27/2022 5:41	11.64
6/27/2022 6:13	-0.10	6/28/2022 5:03	1.55	6/28/2022 5:26	4.66	6/28/2022 6:49	-0.35	6/27/2022 5:42	11.70
6/27/2022 6:14	-0.10	6/28/2022 5:04	1.56	6/28/2022 5:27	4.71	6/28/2022 6:50	-0.38	6/27/2022 5:43	11.64
6/27/2022 6:15	-0.12	6/28/2022 5:05	1.58	6/28/2022 5:28	4.68	6/28/2022 6:51	-0.33	6/27/2022 5:44	11.61
6/27/2022 6:16	-0.10	6/28/2022 5:06	1.55	6/28/2022 5:29	4.70	6/28/2022 6:52	-0.39	6/27/2022 5:45	11.62
6/27/2022 6:17	-0.10	6/28/2022 5:07	1.56	6/28/2022 5:30	4.67	6/28/2022 6:53	-0.35	6/27/2022 5:46	11.64
6/27/2022 6:18	-0.12	6/28/2022 5:08	1.56	6/28/2022 5:31	4.69	6/28/2022 6:54	-0.33	6/27/2022 5:47	11.63
6/27/2022 6:19	-0.12	6/28/2022 5:09	1.55	6/28/2022 5:32	4.69	6/28/2022 6:55	-0.31	6/27/2022 5:48	11.64
6/27/2022 6:20	-0.10	6/28/2022 5:10	1.56	6/28/2022 5:33	4.68	6/28/2022 6:56	-0.34	6/27/2022 5:49	11.60
6/27/2022 6:21	-0.10	6/28/2022 5:11	1.56	6/28/2022 5:34	4.66	6/28/2022 6:57	-0.37	6/27/2022 5:50	11.65
6/27/2022 6:22	-0.10	6/28/2022 5:12	1.56	6/28/2022 5:35	4.66	6/28/2022 6:58	-0.36	6/27/2022 5:51	11.66
6/27/2022 6:23	-0.12	6/28/2022 5:13	1.56	6/28/2022 5:36	4.68	6/28/2022 6:59	-0.36	6/27/2022 5:52	11.63
6/27/2022 6:24	-0.10	6/28/2022 5:14	1.56	6/28/2022 5:37	4.69	6/28/2022 7:00	-0.33	6/27/2022 5:53	11.59
6/27/2022 6:25	-0.10	6/28/2022 5:15	1.56	6/28/2022 5:38	4.66	6/28/2022 7:01	-0.38	6/27/2022 5:54	11.66
6/27/2022 6:26	-0.10	6/28/2022 5:16	1.56	6/28/2022 5:39	4.70	6/28/2022 7:02	-0.35	6/27/2022 5:55	11.64
6/27/2022 6:27	-0.10	6/28/2022 5:17	1.56	6/28/2022 5:40	4.69	6/28/2022 7:03	-0.34	6/27/2022 5:56	11.62
6/27/2022 6:28	-0.10	6/28/2022 5:18	1.56	6/28/2022 5:41	4.68	6/28/2022 7:04	-0.37	6/27/2022 5:57	11.61
6/27/2022 6:29	-0.10	6/28/2022 5:19	1.56	6/28/2022 5:42	4.67	6/28/2022 7:05	-0.37	6/27/2022 5:58	11.62
6/27/2022 6:30	-0.10	6/28/2022 5:20	1.56	6/28/2022 5:43	4.65	6/28/2022 7:06	-0.37	6/27/2022 5:59	11.69
6/27/2022 6:31	-0.12	6/28/2022 5:21	1.56	6/28/2022 5:44	4.69	6/28/2022 7:07	-0.37	6/27/2022 6:00	11.65
6/27/2022 6:32	-0.10	6/28/2022 5:22	1.56	6/28/2022 5:45	4.71	6/28/2022 7:08	-0.32	6/27/2022 6:01	11.59
6/27/2022 6:33	-0.11	6/28/2022 5:23	1.56	6/28/2022 5:46	4.67	6/28/2022 7:09	-0.37	6/27/2022 6:02	11.65
6/27/2022 6:34	-0.12	6/28/2022 5:24	1.56	6/28/2022 5:47	4.68	6/28/2022 7:10	-0.36	6/27/2022 6:03	11.65
6/27/2022 6:35	-0.10	6/28/2022 5:25	1.56	6/28/2022 5:48	4.71	6/28/2022 7:11	-0.36	6/27/2022 6:04	11.66
6/27/2022 6:36	-0.12	6/28/2022 5:26	1.56	6/28/2022 5:49	4.67	6/28/2022 7:12	-0.35	6/27/2022 6:05	11.64
6/27/2022 6:37	-0.12	6/28/2022 5:27	1.56	6/28/2022 5:50	4.72	6/28/2022 7:13	-0.37	6/27/2022 6:06	11.69
6/27/2022 6:38	-0.10	6/28/2022 5:28	1.56	6/28/2022 5:51	4.69	6/28/2022 7:14	-0.40	6/27/2022 6:07	11.62
6/27/2022 6:39	-0.10	6/28/2022 5:29	1.56	6/28/2022 5:52	4.68	6/28/2022 7:15	-0.34	6/27/2022 6:08	11.61
6/27/2022 6:40	-0.10	6/28/2022 5:30	1.56	6/28/2022 5:53	4.71	6/28/2022 7:16	-0.40	6/27/2022 6:09	11.66
6/27/2022 6:41	-0.10	6/28/2022 5:31	1.56	6/28/2022 5:54	4.70	6/28/2022 7:17	-0.37	6/27/2022 6:10	11.66
6/27/2022 6:42	-0.10	6/28/2022 5:32	1.56	6/28/2022 5:55	4.69	6/28/2022 7:18	-0.35	6/27/2022 6:11	11.69
6/27/2022 6:43	-0.11	6/28/2022 5:33	1.56	6/28/2022 5:56	4.67	6/28/2022 7:19	-0.38	6/27/2022 6:12	11.65
6/27/2022 6:44	-0.10	6/28/2022 5:34	1.58	6/28/2022 5:57	4.64	6/28/2022 7:20	-0.35	6/27/2022 6:13	11.66
6/27/2022 6:45	-0.12	6/28/2022 5:35	1.58	6/28/2022 5:58	4.68	6/28/2022 7:21	-0.35	6/27/2022 6:14	11.63
6/27/2022 6:46	-0.12	6/28/2022 5:36	1.58	6/28/2022 5:59	4.68	6/28/2022 7:22	-0.39	6/27/2022 6:15	11.61
6/27/2022 6:47	-0.12	6/28/2022 5:37	1.58	6/28/2022 6:00	4.69	6/28/2022 7:23	-0.39	6/27/2022 6:16	11.64
6/27/2022 6:48	-0.10	6/28/2022 5:38	1.56	6/28/2022 6:01	4.71	6/28/2022 7:24	-0.31	6/27/2022 6:17	11.58
6/27/2022 6:49	-0.10	6/28/2022 5:39	1.56	6/28/2022 6:02	4.67	6/28/2022 7:25	-0.40	6/27/2022 6:18	11.64
6/27/2022 6:50	-0.10	6/28/2022 5:40	1.56	6/28/2022 6:03	4.68	6/28/2022 7:26	-0.33	6/27/2022 6:19	11.68
6/27/2022 6:51	-0.10	6/28/2022 5:41	1.56	6/28/2022 6:04	4.67	6/28/2022 7:27	-0.37	6/27/2022 6:20	11.68
6/27/2022 6:52	-0.10	6/28/2022 5:42	1.56	6/28/2022 6:05	4.69	6/28/2022 7:28	-0.36	6/27/2022 6:21	11.59
6/27/2022 6:53	-0.10	6/28/2022 5:43	1.56	6/28/2022 6:06	4.69	6/28/2022 7:29	-0.35	6/27/2022 6:22	11.59
6/27/2022 6:54	-0.10	6/28/2022 5:44	1.56	6/28/2022 6:07	4.67	6/28/2022 7:30	-0.38	6/27/2022 6:23	11.67
6/27/2022 6:55	-0.10	6/28/2022 5:45	1.56	6/28/2022 6:08	4.70	6/28/2022 7:31	-0.37	6/27/2022 6:24	11.66
6/27/2022 6:56	-0.12	6/28/2022 5:46	1.56	6/28/2022 6:09	4.67	6/28/2022 7:32	-0.34	6/27/2022 6:25	11.57
6/27/2022 6:57	-0.12	6/28/2022 5:47	1.57	6/28/2022 6:10	4.68	6/28/2022 7:33	-0.35	6/27/2022 6:26	11.62
6/27/2022 6:58	-0.10	6/28/2022 5:48	1.59	6/28/2022 6:11	4.67	6/28/2022 7:34	-0.39	6/27/2022 6:27	11.60
6/27/2022 6:59	-0.12	6/28/2022 5:49	1.56	6/28/2022 6:12	4.70	6/28/2022 7:35	-0.42	6/27/2022 6:28	11.65
6/27/2022 7:00	-0.10	6/28/2022 5:50	1.56	6/28/2022 6:13	4.68	6/28/2022 7:36	-0.36	6/27/2022 6:29	11.66
6/27/2022 7:01	-0.12	6/28/2022 5:51	1.56	6/28/2022 6:14	4.70	6/28/2022 7:37	-0.32	6/27/2022 6:30	11.65
6/27/2022 7:02	-0.10	6/28/2022 5:52	1.56	6/28/2022 6:15	4.64	6/28/2022 7:38	-0.36	6/27/2022 6:31	11.69
6/27/2022 7:03	-0.10	6/28/2022 5:53	1.56	6/28/2022 6:16	4.66	6/28/2022 7:39	-0.38	6/27/2022 6:32	11.65
6/27/2022 7:04	-0.12	6/28/2022 5:54	1.57	6/28/2022 6:17	4.69	6/28/2022 7:40	-0.39	6/27/2022 6:33	11.65
6/27/2022 7:05	-0.10	6/28/2022 5:55	1.57	6/28/2022 6:18	4.71	6/28/2022 7:41	-0.32	6/27/2022 6:34	11.61
6/27/2022 7:06	-0.12	6/28/2022 5:56	1.56	6/28/2022 6:19	4.72	6/28/2022 7:42	-0.35	6/27/2022 6:35	11.60
6/27/2022 7:07	-0.12	6/28/2022 5:57	1.57	6/28/2022 6:20	4.68	6/28/2022 7:43	-0.36	6/27/2022 6:36	11.68
6/27/2022 7:08	-0.10	6/28/2022 5:58	1.56	6/28/2022 6:21	4.69	6/28/2022 7:44	-0.38	6/27/2022 6:37	11.67
6/27/2022 7:09	-0.12	6/28/2022 5:59	1.56	6/28/2022 6:22	4.73	6/28/2022 7:45	-0.36	6/27/2022 6:38	11.64
6/27/2022 7:10	-0.12	6/28/2022 6:00	1.57	6/28/2022 6:23	4.70	6/28/2022 7:46	-0.38	6/27/2022 6:39	11.66
6/27/2022 7:11	-0.12	6/28/2022 6:01	1.58	6/28/2022 6:24	4.68	6/28/2022 7:47	-0.37	6/27/2022 6:40	11.67
6/27/2022 7:12	-0.10	6/28/2022 6:02	1.57	6/28/2022 6:25	4.69	6/28/2022 7:48	-0.35	6/27/2022 6:41	11.67
6/27/2022 7:13	-0.12	6/28/2022 6:03	1.59	6/28/2022 6:26	4.72	6/28/2022 7:49	-0.38	6/27/2022 6:42	11.63
6/27/2022 7:14	-0.12	6/28/2022 6:04	1.56	6/28/2022 6:27	4.70	6/28/2022 7:50	-0.36	6/27/2022 6:43	11.60
6/27/2022 7:15	-0.12	6/28/2022 6:05	1.56	6/28/2022 6:28	4.67	6/28/2022 7:51	-0.35	6/27/2022 6:44	11.66
6/27/2022 7:16	-0.12	6/28/2022 6:06	1.57	6/28/2022 6:29	4.71	6/28/2022 7:52	-0.35	6/27/2022 6:45	11.65
6/27/2022 7:17	-0.11	6/28/2022 6:07	1.57	6/28/2022 6:30	4.72	6/28/2022 7:53	-0.37	6/27/2022 6:46	11.69
6/27/2022 7:18	-0.12	6/28/2022 6:08	1.57	6/28/2022 6:31	4.75	6/28/2022 7:54	-0.36	6/27/2022 6:47	11.67
6/27/2022 7:19	-0.10	6/28/2022 6:09	1.57	6/28/2022 6:32	4.73	6/28/2022 7:55	-0.37	6/27/2022 6:48	11.69
6/27/2022 7:20	-0.10	6/28/2022 6:10	1.57	6/28/2022 6:33	4.70	6/28/2022 7:56	-0.37	6/27/2022 6:49	11.62

6/27/2022 7:21	-0.10	6/28/2022 6:11	1.57	6/28/2022 6:34	4.69	6/28/2022 7:57	-0.35	6/27/2022 6:50	11.63
6/27/2022 7:22	-0.10	6/28/2022 6:12	1.57	6/28/2022 6:35	4.68	6/28/2022 7:58	-0.36	6/27/2022 6:51	11.68
6/27/2022 7:23	-0.12	6/28/2022 6:13	1.57	6/28/2022 6:36	4.71	6/28/2022 7:59	-0.37	6/27/2022 6:52	11.69
6/27/2022 7:24	-0.12	6/28/2022 6:14	1.59	6/28/2022 6:37	4.71	6/28/2022 8:00	-0.35	6/27/2022 6:53	11.61
6/27/2022 7:25	-0.12	6/28/2022 6:15	1.59	6/28/2022 6:38	4.70	6/28/2022 8:01	-0.37	6/27/2022 6:54	11.67
6/27/2022 7:26	-0.10	6/28/2022 6:16	1.57	6/28/2022 6:39	4.70	6/28/2022 8:02	-0.36	6/27/2022 6:55	11.64
6/27/2022 7:27	-0.12	6/28/2022 6:17	1.57	6/28/2022 6:40	4.69	6/28/2022 8:03	-0.35	6/27/2022 6:56	11.69
6/27/2022 7:28	-0.12	6/28/2022 6:18	1.57	6/28/2022 6:41	4.71	6/28/2022 8:04	-0.33	6/27/2022 6:57	11.62
6/27/2022 7:29	-0.12	6/28/2022 6:19	1.57	6/28/2022 6:42	4.66	6/28/2022 8:05	-0.37	6/27/2022 6:58	11.58
6/27/2022 7:30	-0.10	6/28/2022 6:20	1.57	6/28/2022 6:43	4.69	6/28/2022 8:06	-0.38	6/27/2022 6:59	11.65
6/27/2022 7:31	-0.10	6/28/2022 6:21	1.57	6/28/2022 6:44	4.69	6/28/2022 8:07	-0.34	6/27/2022 7:00	11.65
6/27/2022 7:32	-0.12	6/28/2022 6:22	1.57	6/28/2022 6:45	4.73	6/28/2022 8:08	-0.35	6/27/2022 7:01	11.65
6/27/2022 7:33	-0.12	6/28/2022 6:23	1.57	6/28/2022 6:46	4.70	6/28/2022 8:09	-0.34	6/27/2022 7:02	11.70
6/27/2022 7:34	-0.10	6/28/2022 6:24	1.59	6/28/2022 6:47	4.69	6/28/2022 8:10	-0.35	6/27/2022 7:03	11.66
6/27/2022 7:35	-0.12	6/28/2022 6:25	1.58	6/28/2022 6:48	4.70	6/28/2022 8:11	-0.34	6/27/2022 7:04	11.63
6/27/2022 7:36	-0.10	6/28/2022 6:26	1.57	6/28/2022 6:49	4.69	6/28/2022 8:12	-0.39	6/27/2022 7:05	11.63
6/27/2022 7:37	-0.10	6/28/2022 6:27	1.57	6/28/2022 6:50	4.70	6/28/2022 8:13	-0.35	6/27/2022 7:06	11.68
6/27/2022 7:38	-0.12	6/28/2022 6:28	1.57	6/28/2022 6:51	4.71	6/28/2022 8:14	-0.37	6/27/2022 7:07	11.70
6/27/2022 7:39	-0.12	6/28/2022 6:29	1.57	6/28/2022 6:52	4.70	6/28/2022 8:15	-0.38	6/27/2022 7:08	11.63
6/27/2022 7:40	-0.10	6/28/2022 6:30	1.57	6/28/2022 6:53	4.70	6/28/2022 8:16	-0.35	6/27/2022 7:09	11.70
6/27/2022 7:41	-0.10	6/28/2022 6:31	1.57	6/28/2022 6:54	4.68	6/28/2022 8:17	-0.31	6/27/2022 7:10	11.65
6/27/2022 7:42	-0.12	6/28/2022 6:32	1.59	6/28/2022 6:55	4.71	6/28/2022 8:18	-0.40	6/27/2022 7:11	11.67
6/27/2022 7:43	-0.12	6/28/2022 6:33	1.57	6/28/2022 6:56	4.71	6/28/2022 8:19	-0.37	6/27/2022 7:12	11.66
6/27/2022 7:44	-0.10	6/28/2022 6:34	1.57	6/28/2022 6:57	4.71	6/28/2022 8:20	-0.35	6/27/2022 7:13	11.69
6/27/2022 7:45	-0.10	6/28/2022 6:35	1.57	6/28/2022 6:58	4.71	6/28/2022 8:21	-0.35	6/27/2022 7:14	11.60
6/27/2022 7:46	-0.10	6/28/2022 6:36	1.57	6/28/2022 6:59	4.68	6/28/2022 8:22	-0.35	6/27/2022 7:15	11.63
6/27/2022 7:47	-0.10	6/28/2022 6:37	1.57	6/28/2022 7:00	4.69	6/28/2022 8:23	-0.35	6/27/2022 7:16	11.64
6/27/2022 7:48	-0.10	6/28/2022 6:38	1.57	6/28/2022 7:01	4.70	6/28/2022 8:24	-0.39	6/27/2022 7:17	11.66
6/27/2022 7:49	-0.10	6/28/2022 6:39	1.57	6/28/2022 7:02	4.72	6/28/2022 8:25	-0.37	6/27/2022 7:18	11.66
6/27/2022 7:50	-0.12	6/28/2022 6:40	1.58	6/28/2022 7:03	4.69	6/28/2022 8:26	-0.35	6/27/2022 7:19	11.62
6/27/2022 7:51	-0.12	6/28/2022 6:41	1.58	6/28/2022 7:04	4.67	6/28/2022 8:27	-0.37	6/27/2022 7:20	11.63
6/27/2022 7:52	-0.10	6/28/2022 6:42	1.57	6/28/2022 7:05	4.76	6/28/2022 8:28	-0.36	6/27/2022 7:21	11.64
6/27/2022 7:53	-0.12	6/28/2022 6:43	1.58	6/28/2022 7:06	4.71	6/28/2022 8:29	-0.35	6/27/2022 7:22	11.59
6/27/2022 7:54	-0.10	6/28/2022 6:44	1.58	6/28/2022 7:07	4.70	6/28/2022 8:30	-0.37	6/27/2022 7:23	11.64
6/27/2022 7:55	-0.10	6/28/2022 6:45	1.57	6/28/2022 7:08	4.69	6/28/2022 8:31	-0.37	6/27/2022 7:24	11.61
6/27/2022 7:56	-0.10	6/28/2022 6:46	1.58	6/28/2022 7:09	4.71	6/28/2022 8:32	-0.39	6/27/2022 7:25	11.67
6/27/2022 7:57	-0.12	6/28/2022 6:47	1.58	6/28/2022 7:10	4.70	6/28/2022 8:33	-0.36	6/27/2022 7:26	11.65
6/27/2022 7:58	-0.10	6/28/2022 6:48	1.58	6/28/2022 7:11	4.69	6/28/2022 8:34	-0.37	6/27/2022 7:27	11.65
6/27/2022 7:59	-0.10	6/28/2022 6:49	1.58	6/28/2022 7:12	4.73	6/28/2022 8:35	-0.38	6/27/2022 7:28	11.64
6/27/2022 8:00	-0.10	6/28/2022 6:50	1.58	6/28/2022 7:13	4.70	6/28/2022 8:36	-0.36	6/27/2022 7:29	11.67
6/27/2022 8:01	-0.10	6/28/2022 6:51	1.58	6/28/2022 7:14	4.70	6/28/2022 8:37	-0.37	6/27/2022 7:30	11.61
6/27/2022 8:02	-0.10	6/28/2022 6:52	1.58	6/28/2022 7:15	4.72	6/28/2022 8:38	-0.40	6/27/2022 7:31	11.65
6/27/2022 8:03	-0.10	6/28/2022 6:53	1.58	6/28/2022 7:16	4.69	6/28/2022 8:39	-0.39	6/27/2022 7:32	11.63
6/27/2022 8:04	-0.12	6/28/2022 6:54	1.58	6/28/2022 7:17	4.70	6/28/2022 8:40	-0.38	6/27/2022 7:33	11.61
6/27/2022 8:05	-0.10	6/28/2022 6:55	1.58	6/28/2022 7:18	4.70	6/28/2022 8:41	-0.35	6/27/2022 7:34	11.65
6/27/2022 8:06	-0.12	6/28/2022 6:56	1.57	6/28/2022 7:19	4.69	6/28/2022 8:42	-0.34	6/27/2022 7:35	11.63
6/27/2022 8:07	-0.11	6/28/2022 6:57	1.58	6/28/2022 7:20	4.70	6/28/2022 8:43	-0.34	6/27/2022 7:36	11.65
6/27/2022 8:08	-0.10	6/28/2022 6:58	1.58	6/28/2022 7:21	4.68	6/28/2022 8:44	-0.35	6/27/2022 7:37	11.66
6/27/2022 8:09	-0.12	6/28/2022 6:59	1.58	6/28/2022 7:22	4.74	6/28/2022 8:45	-0.35	6/27/2022 7:38	11.65
6/27/2022 8:10	-0.10	6/28/2022 7:00	1.58	6/28/2022 7:23	4.74	6/28/2022 8:46	-0.39	6/27/2022 7:39	11.67
6/27/2022 8:11	-0.10	6/28/2022 7:01	1.58	6/28/2022 7:24	4.69	6/28/2022 8:47	-0.38	6/27/2022 7:40	11.63
6/27/2022 8:12	-0.12	6/28/2022 7:02	1.58	6/28/2022 7:25	4.73	6/28/2022 8:48	-0.38	6/27/2022 7:41	11.65
6/27/2022 8:13	-0.12	6/28/2022 7:03	1.57	6/28/2022 7:26	4.72	6/28/2022 8:49	-0.37	6/27/2022 7:42	11.65
6/27/2022 8:14	-0.10	6/28/2022 7:04	1.58	6/28/2022 7:27	4.72	6/28/2022 8:50	-0.38	6/27/2022 7:43	11.62
6/27/2022 8:15	-0.10	6/28/2022 7:05	1.58	6/28/2022 7:28	4.70	6/28/2022 8:51	-0.37	6/27/2022 7:44	11.66
6/27/2022 8:16	-0.12	6/28/2022 7:06	1.58	6/28/2022 7:29	4.70	6/28/2022 8:52	-0.40	6/27/2022 7:45	11.65
6/27/2022 8:17	-0.10	6/28/2022 7:07	1.60	6/28/2022 7:30	4.71	6/28/2022 8:53	-0.36	6/27/2022 7:46	11.62
6/27/2022 8:18	-0.10	6/28/2022 7:08	1.58	6/28/2022 7:31	4.71	6/28/2022 8:54	-0.38	6/27/2022 7:47	11.63
6/27/2022 8:19	-0.10	6/28/2022 7:09	1.58	6/28/2022 7:32	4.67	6/28/2022 8:55	-0.42	6/27/2022 7:48	11.66
6/27/2022 8:20	-0.12	6/28/2022 7:10	1.58	6/28/2022 7:33	4.70	6/28/2022 8:56	-0.35	6/27/2022 7:49	11.68
6/27/2022 8:21	-0.10	6/28/2022 7:11	1.58	6/28/2022 7:34	4.71	6/28/2022 8:57	-0.36	6/27/2022 7:50	11.66
6/27/2022 8:22	-0.12	6/28/2022 7:12	1.58	6/28/2022 7:35	4.71	6/28/2022 8:58	-0.36	6/27/2022 7:51	11.66
6/27/2022 8:23	-0.12	6/28/2022 7:13	1.58	6/28/2022 7:36	4.68	6/28/2022 8:59	-0.37	6/27/2022 7:52	11.62
6/27/2022 8:24	-0.10	6/28/2022 7:14	1.58	6/28/2022 7:37	4.72	6/28/2022 9:00	-0.35	6/27/2022 7:53	11.63
6/27/2022 8:25	-0.12	6/28/2022 7:15	1.58	6/28/2022 7:38	4.72	6/28/2022 9:01	-0.36	6/27/2022 7:54	11.64
6/27/2022 8:26	-0.12	6/28/2022 7:16	1.58	6/28/2022 7:39	4.70	6/28/2022 9:02	-0.38	6/27/2022 7:55	11.63
6/27/2022 8:27	-0.10	6/28/2022 7:17	1.58	6/28/2022 7:40	4.69	6/28/2022 9:03	-0.37	6/27/2022 7:56	11.67
6/27/2022 8:28	-0.10	6/28/2022 7:18	1.58	6/28/2022 7:41	4.70	6/28/2022 9:04	-0.36	6/27/2022 7:57	11.67
6/27/2022 8:29	-0.10	6/28/2022 7:19	1.58	6/28/2022 7:42	4.72	6/28/2022 9:05	-0.35	6/27/2022 7:58	11.68
6/27/2022 8:30	-0.12	6/28/2022 7:20	1.58	6/28/2022 7:43	4.71	6/28/2022 9:06	-0.37	6/27/2022 7:59	11.66
6/27/2022 8:31	-0.10	6/28/2022 7:21	1.58	6/28/2022 7:44	4.72	6/28/2022 9:07	-0.37	6/27/2022 8:00	11.70
6/27/2022 8:32	-0.10	6/28/2022 7:22	1.61	6/28/2022 7:45	4.70	6/28/2022 9:08	-0.37	6/27/2022 8:01	11.64
6/27/2022 8:33	-0.10	6/28/2022 7:23	1.58	6/28/2022 7:46	4.71	6/28/2022 9:09	-0.37	6/27/2022 8:02	11.68
6/27/2022 8:34	-0.10	6/28/2022 7:24	1.58	6/28/2022 7:47	4.70	6/28/2022 9:10	-0.37	6/27/2022 8:03	11.62
6/27/2022 8:35	-0.12	6/28/2022 7:25	1.58	6/28/2022 7:48	4.72	6/28/2022 9:11	-0.36	6/27/2022 8:04	11.62
6/27/2022 8:36	-0.10	6/28/2022 7:26	1.58	6/28/2022 7:49	4.69	6/28/2022 9:12	-0.38	6/27/2022 8:05	11.68
6/27/2022 8:37	-0.10	6/28/2022 7:27	1.58	6/28/2022 7:50	4.73	6/28/2022 9:13	-0.37	6/27/2022 8:06	11.66
6/27/2022 8:38	-0.10	6/28/2022 7:28	1.58	6/28/2022 7:51	4.72	6/28/2022 9:14	-0.35	6/27/2022 8:07	11.66
6/27/2022 8:39	-0.10	6/28/2022 7:29	1.61	6/28/2022 7:52	4.73	6/28/2022 9:15	-0.38	6/27/2022 8:08	11.64
6/27/2022 8:40	-0.10	6/28/2022 7:30	1.58	6/28/2022 7:53	4.73	6/28/2022 9:16	-0.33	6/27/2022 8:09	11.62
6/27/2022 8:41	-0.12	6/28/2022 7:31	1.58	6/28/2022 7:54	4.75	6/28/2022 9:17	-0.35	6/27/2022 8:10	11.70
6/27/2022 8:42	-0.11	6/28/2022 7:32	1.58	6/28/2022 7:55	4.71	6/28/2022 9:18	-0.39	6/27/2022 8:11	11.69
6/27/2022 8:43	-0.10	6/28/2022 7:33	1.58	6/28/2022 7:56	4.72	6/28/2022 9:19	-0.33	6/27/2022 8:12	11.65
6/27/2022 8:44	-0.12	6/28/2022 7:34	1.61	6/28/2022 7:57	4.74	6/28/2022 9:20	-0.36	6/27/2022 8:13	11.64
6/27/2022 8:45	-0.12	6/28/2022 7:35	1.58	6/28/2022 7:58	4.69	6/28/2022 9:21	-0.35	6/27/2022 8:14	11.64
6/27/2022 8:46	-0.10	6/28/2022 7:36	1.58	6/28/2022 7:59	4.77	6/28/2022 9:22	-0.34	6/27/2022 8:15	11.66
6/27/2022 8:47	-0.10	6/28/2022 7:37	1.59	6/28/2022 8:00	4.74	6/28/2022 9:23	-0.37	6/27/2022 8:16	11.64
6/27/2022 8:48	-0.12	6/28/2022 7:38	1.59	6/28/2022 8:01	4.73	6/28/2022 9:24	-0.33	6/27/2022 8:17	11.70

6/27/2022 8:49	-0.10	6/28/2022 7:39	1.58	6/28/2022 8:02	4.71	6/28/2022 9:25	-0.36	6/27/2022 8:18	11.65
6/27/2022 8:50	-0.10	6/28/2022 7:40	1.59	6/28/2022 8:03	4.74	6/28/2022 9:26	-0.35	6/27/2022 8:19	11.66
6/27/2022 8:51	-0.10	6/28/2022 7:41	1.59	6/28/2022 8:04	4.70	6/28/2022 9:27	-0.39	6/27/2022 8:20	11.66
6/27/2022 8:52	-0.10	6/28/2022 7:42	1.59	6/28/2022 8:05	4.69	6/28/2022 9:28	-0.33	6/27/2022 8:21	11.62
6/27/2022 8:53	-0.10	6/28/2022 7:43	1.59	6/28/2022 8:06	4.75	6/28/2022 9:29	-0.35	6/27/2022 8:22	11.67
6/27/2022 8:54	-0.12	6/28/2022 7:44	1.59	6/28/2022 8:07	4.71	6/28/2022 9:30	-0.37	6/27/2022 8:23	11.69
6/27/2022 8:55	-0.10	6/28/2022 7:45	1.59	6/28/2022 8:08	4.72	6/28/2022 9:31	-0.39	6/27/2022 8:24	11.63
6/27/2022 8:56	-0.10	6/28/2022 7:46	1.59	6/28/2022 8:09	4.73	6/28/2022 9:32	-0.39	6/27/2022 8:25	11.64
6/27/2022 8:57	-0.10	6/28/2022 7:47	1.59	6/28/2022 8:10	4.73	6/28/2022 9:33	-0.35	6/27/2022 8:26	11.63
6/27/2022 8:58	-0.10	6/28/2022 7:48	1.59	6/28/2022 8:11	4.72	6/28/2022 9:34	-0.36	6/27/2022 8:27	11.64
6/27/2022 8:59	-0.11	6/28/2022 7:49	1.59	6/28/2022 8:12	4.73	6/28/2022 9:35	-0.37	6/27/2022 8:28	11.65
6/27/2022 9:00	-0.12	6/28/2022 7:50	1.59	6/28/2022 8:13	4.74	6/28/2022 9:36	-0.34	6/27/2022 8:29	11.64
6/27/2022 9:01	-0.12	6/28/2022 7:51	1.61	6/28/2022 8:14	4.73	6/28/2022 9:37	-0.37	6/27/2022 8:30	11.65
6/27/2022 9:02	-0.10	6/28/2022 7:52	1.59	6/28/2022 8:15	4.71	6/28/2022 9:38	-0.34	6/27/2022 8:31	11.71
6/27/2022 9:03	-0.12	6/28/2022 7:53	1.59	6/28/2022 8:16	4.69	6/28/2022 9:39	-0.35	6/27/2022 8:32	11.69
6/27/2022 9:04	-0.12	6/28/2022 7:54	1.59	6/28/2022 8:17	4.71	6/28/2022 9:40	-0.36	6/27/2022 8:33	11.70
6/27/2022 9:05	-0.10	6/28/2022 7:55	1.59	6/28/2022 8:18	4.71	6/28/2022 9:41	-0.33	6/27/2022 8:34	11.69
6/27/2022 9:06	-0.10	6/28/2022 7:56	1.61	6/28/2022 8:19	4.71	6/28/2022 9:42	-0.35	6/27/2022 8:35	11.70
6/27/2022 9:07	-0.10	6/28/2022 7:57	1.61	6/28/2022 8:20	4.74	6/28/2022 9:43	-0.37	6/27/2022 8:36	11.69
6/27/2022 9:08	-0.12	6/28/2022 7:58	1.59	6/28/2022 8:21	4.74	6/28/2022 9:44	-0.40	6/27/2022 8:37	11.70
6/27/2022 9:09	-0.10	6/28/2022 7:59	1.59	6/28/2022 8:22	4.70	6/28/2022 9:45	-0.32	6/27/2022 8:38	11.68
6/27/2022 9:10	-0.10	6/28/2022 8:00	1.59	6/28/2022 8:23	4.69	6/28/2022 9:46	-0.38	6/27/2022 8:39	11.67
6/27/2022 9:11	-0.10	6/28/2022 8:01	1.61	6/28/2022 8:24	4.73	6/28/2022 9:47	-0.36	6/27/2022 8:40	11.65
6/27/2022 9:12	-0.11	6/28/2022 8:02	1.59	6/28/2022 8:25	4.70	6/28/2022 9:48	-0.35	6/27/2022 8:41	11.65
6/27/2022 9:13	-0.10	6/28/2022 8:03	1.61	6/28/2022 8:26	4.74	6/28/2022 9:49	-0.35	6/27/2022 8:42	11.67
6/27/2022 9:14	-0.10	6/28/2022 8:04	1.59	6/28/2022 8:27	4.71	6/28/2022 9:50	-0.36	6/27/2022 8:43	11.65
6/27/2022 9:15	-0.10	6/28/2022 8:05	1.59	6/28/2022 8:28	4.69	6/28/2022 9:51	-0.36	6/27/2022 8:44	11.67
6/27/2022 9:16	-0.10	6/28/2022 8:06	1.61	6/28/2022 8:29	4.73	6/28/2022 9:52	-0.38	6/27/2022 8:45	11.67
6/27/2022 9:17	-0.12	6/28/2022 8:07	1.61	6/28/2022 8:30	4.72	6/28/2022 9:53	-0.37	6/27/2022 8:46	11.67
6/27/2022 9:18	-0.10	6/28/2022 8:08	1.59	6/28/2022 8:31	4.70	6/28/2022 9:54	-0.37	6/27/2022 8:47	11.66
6/27/2022 9:19	-0.10	6/28/2022 8:09	1.60	6/28/2022 8:32	4.74	6/28/2022 9:55	-0.34	6/27/2022 8:48	11.67
6/27/2022 9:20	-0.10	6/28/2022 8:10	1.59	6/28/2022 8:33	4.72	6/28/2022 9:56	-0.32	6/27/2022 8:49	11.67
6/27/2022 9:21	-0.10	6/28/2022 8:11	1.59	6/28/2022 8:34	4.72	6/28/2022 9:57	-0.36	6/27/2022 8:50	11.68
6/27/2022 9:22	-0.10	6/28/2022 8:12	1.59	6/28/2022 8:35	4.71	6/28/2022 9:58	-0.37	6/27/2022 8:51	11.65
6/27/2022 9:23	-0.10	6/28/2022 8:13	1.60	6/28/2022 8:36	4.78	6/28/2022 9:59	-0.38	6/27/2022 8:52	11.64
6/27/2022 9:24	-0.12	6/28/2022 8:14	1.59	6/28/2022 8:37	4.71	6/28/2022 10:00	-0.33	6/27/2022 8:53	11.69
6/27/2022 9:25	-0.10	6/28/2022 8:15	1.60	6/28/2022 8:38	4.72	6/28/2022 10:01	-0.35	6/27/2022 8:54	11.67
6/27/2022 9:26	-0.10	6/28/2022 8:16	1.62	6/28/2022 8:39	4.73	6/28/2022 10:02	-0.34	6/27/2022 8:55	11.64
6/27/2022 9:27	-0.12	6/28/2022 8:17	1.59	6/28/2022 8:40	4.73	6/28/2022 10:03	-0.38	6/27/2022 8:56	11.73
6/27/2022 9:28	-0.12	6/28/2022 8:18	1.62	6/28/2022 8:41	4.71	6/28/2022 10:04	-0.37	6/27/2022 8:57	11.63
6/27/2022 9:29	-0.10	6/28/2022 8:19	1.62	6/28/2022 8:42	4.73	6/28/2022 10:05	-0.36	6/27/2022 8:58	11.64
6/27/2022 9:30	-0.10	6/28/2022 8:20	1.62	6/28/2022 8:43	4.75	6/28/2022 10:06	-0.33	6/27/2022 8:59	11.62
6/27/2022 9:31	-0.12	6/28/2022 8:21	1.60	6/28/2022 8:44	4.72	6/28/2022 10:07	-0.36	6/27/2022 9:00	11.64
6/27/2022 9:32	-0.10	6/28/2022 8:22	1.59	6/28/2022 8:45	4.68	6/28/2022 10:08	-0.32	6/27/2022 9:01	11.66
6/27/2022 9:33	-0.10	6/28/2022 8:23	1.60	6/28/2022 8:46	4.73	6/28/2022 10:09	-0.34	6/27/2022 9:02	11.64
6/27/2022 9:34	-0.10	6/28/2022 8:24	1.60	6/28/2022 8:47	4.71	6/28/2022 10:10	-0.32	6/27/2022 9:03	11.68
6/27/2022 9:35	-0.10	6/28/2022 8:25	1.62	6/28/2022 8:48	4.73	6/28/2022 10:11	-0.36	6/27/2022 9:04	11.63
6/27/2022 9:36	-0.12	6/28/2022 8:26	1.60	6/28/2022 8:49	4.72	6/28/2022 10:12	-0.38	6/27/2022 9:05	11.70
6/27/2022 9:37	-0.10	6/28/2022 8:27	1.60	6/28/2022 8:50	4.70	6/28/2022 10:13	-0.37	6/27/2022 9:06	11.63
6/27/2022 9:38	-0.10	6/28/2022 8:28	1.59	6/28/2022 8:51	4.68	6/28/2022 10:14	-0.34	6/27/2022 9:07	11.65
6/27/2022 9:39	-0.10	6/28/2022 8:29	1.60	6/28/2022 8:52	4.72	6/28/2022 10:15	-0.36	6/27/2022 9:08	11.66
6/27/2022 9:40	-0.10	6/28/2022 8:30	1.60	6/28/2022 8:53	4.71	6/28/2022 10:16	-0.37	6/27/2022 9:09	11.66
6/27/2022 9:41	-0.10	6/28/2022 8:31	1.60	6/28/2022 8:54	4.73	6/28/2022 10:17	-0.32	6/27/2022 9:10	11.67
6/27/2022 9:42	-0.12	6/28/2022 8:32	1.60	6/28/2022 8:55	4.70	6/28/2022 10:18	-0.37	6/27/2022 9:11	11.66
6/27/2022 9:43	-0.10	6/28/2022 8:33	1.60	6/28/2022 8:56	4.71	6/28/2022 10:19	-0.36	6/27/2022 9:12	11.66
6/27/2022 9:44	-0.12	6/28/2022 8:34	1.60	6/28/2022 8:57	4.72	6/28/2022 10:20	-0.35	6/27/2022 9:13	11.62
6/27/2022 9:45	-0.10	6/28/2022 8:35	1.60	6/28/2022 8:58	4.73	6/28/2022 10:21	-0.37	6/27/2022 9:14	11.60
6/27/2022 9:46	-0.10	6/28/2022 8:36	1.62	6/28/2022 8:59	4.71	6/28/2022 10:22	-0.36	6/27/2022 9:15	11.64
6/27/2022 9:47	-0.12	6/28/2022 8:37	1.60	6/28/2022 9:00	4.71	6/28/2022 10:23	-0.40	6/27/2022 9:16	11.63
6/27/2022 9:48	-0.12	6/28/2022 8:38	1.62	6/28/2022 9:01	4.71	6/28/2022 10:24	-0.39	6/27/2022 9:17	11.66
6/27/2022 9:49	-0.10	6/28/2022 8:39	1.60	6/28/2022 9:02	4.71	6/28/2022 10:25	-0.34	6/27/2022 9:18	11.68
6/27/2022 9:50	-0.10	6/28/2022 8:40	1.60	6/28/2022 9:03	4.75	6/28/2022 10:26	-0.32	6/27/2022 9:19	11.65
6/27/2022 9:51	-0.10	6/28/2022 8:41	1.62	6/28/2022 9:04	4.76	6/28/2022 10:27	-0.37	6/27/2022 9:20	11.65
6/27/2022 9:52	-0.12	6/28/2022 8:42	1.60	6/28/2022 9:05	4.74	6/28/2022 10:28	-0.36	6/27/2022 9:21	11.71
6/27/2022 9:53	-0.10	6/28/2022 8:43	1.60	6/28/2022 9:06	4.74	6/28/2022 10:29	-0.34	6/27/2022 9:22	11.66
6/27/2022 9:54	-0.10	6/28/2022 8:44	1.63	6/28/2022 9:07	4.70	6/28/2022 10:30	-0.35	6/27/2022 9:23	11.64
6/27/2022 9:55	-0.10	6/28/2022 8:45	1.60	6/28/2022 9:08	4.71	6/28/2022 10:31	-0.39	6/27/2022 9:24	11.69
6/27/2022 9:56	-0.10	6/28/2022 8:46	1.60	6/28/2022 9:09	4.72	6/28/2022 10:32	-0.37	6/27/2022 9:25	11.65
6/27/2022 9:57	-0.10	6/28/2022 8:47	1.62	6/28/2022 9:10	4.71	6/28/2022 10:33	-0.37	6/27/2022 9:26	11.64
6/27/2022 9:58	-0.10	6/28/2022 8:48	1.60	6/28/2022 9:11	4.73	6/28/2022 10:34	-0.38	6/27/2022 9:27	11.68
6/27/2022 9:59	-0.10	6/28/2022 8:49	1.61	6/28/2022 9:12	4.72	6/28/2022 10:35	-0.35	6/27/2022 9:28	11.68
6/27/2022 10:00	-0.10	6/28/2022 8:50	1.62	6/28/2022 9:13	4.72	6/28/2022 10:36	-0.35	6/27/2022 9:29	11.67
6/27/2022 10:01	-0.10	6/28/2022 8:51	1.62	6/28/2022 9:14	4.73	6/28/2022 10:37	-0.35	6/27/2022 9:30	11.68
6/27/2022 10:02	-0.12	6/28/2022 8:52	1.62	6/28/2022 9:15	4.75	6/28/2022 10:38	-0.36	6/27/2022 9:31	11.65
6/27/2022 10:03	-0.10	6/28/2022 8:53	1.62	6/28/2022 9:16	4.74	6/28/2022 10:39	-0.39	6/27/2022 9:32	11.65
6/27/2022 10:04	-0.10	6/28/2022 8:54	1.60	6/28/2022 9:17	4.69	6/28/2022 10:40	-0.35	6/27/2022 9:33	11.66
6/27/2022 10:05	-0.10	6/28/2022 8:55	1.60	6/28/2022 9:18	4.77	6/28/2022 10:41	-0.34	6/27/2022 9:34	11.68
6/27/2022 10:06	-0.12	6/28/2022 8:56	1.60	6/28/2022 9:19	4.75	6/28/2022 10:42	-0.34	6/27/2022 9:35	11.68
6/27/2022 10:07	-0.12	6/28/2022 8:57	1.62	6/28/2022 9:20	4.69	6/28/2022 10:43	-0.35	6/27/2022 9:36	11.68
6/27/2022 10:08	-0.10	6/28/2022 8:58	1.60	6/28/2022 9:21	4.74	6/28/2022 10:44	-0.35	6/27/2022 9:37	11.65
6/27/2022 10:09	-0.12	6/28/2022 8:59	1.60	6/28/2022 9:22	4.71	6/28/2022 10:45	-0.36	6/27/2022 9:38	11.65
6/27/2022 10:10	-0.10	6/28/2022 9:00	1.60	6/28/2022 9:23	4.73	6/28/2022 10:46	-0.35	6/27/2022 9:39	11.64
6/27/2022 10:11	-0.10	6/28/2022 9:01	1.60	6/28/2022 9:24	4.73	6/28/2022 10:47	-0.35	6/27/2022 9:40	11.64
6/27/2022 10:12	-0.10	6/28/2022 9:02	1.60	6/28/2022 9:25	4.72	6/28/2022 10:48	-0.37	6/27/2022 9:41	11.64
6/27/2022 10:13	-0.12	6/28/2022 9:03	1.60	6/28/2022 9:26	4.71	6/28/2022 10:49	-0.41	6/27/2022 9:42	11.66
6/27/2022 10:14	-0.10	6/28/2022 9:04	1.60	6/28/2022 9:27	4.71			6/27/2022 9:43	11.65
6/27/2022 10:15	-0.10	6/28/2022 9:05	1.60	6/28/2022 9:28	4.71			6/27/2022 9:44	11.65
6/27/2022 10:16	-0.10	6/28/2022 9:06	1.61	6/28/2022 9:29	4.71			6/27/2022 9:45	11.65

6/27/2022 10:17	-0.12	6/28/2022 9:07	1.60	6/28/2022 9:30	4.75	6/27/2022 9:46	11.64
6/27/2022 10:18	-0.10	6/28/2022 9:08	1.61	6/28/2022 9:31	4.73	6/27/2022 9:47	11.66
6/27/2022 10:19	-0.10	6/28/2022 9:09	1.60	6/28/2022 9:32	4.73	6/27/2022 9:48	11.63
6/27/2022 10:20	-0.10	6/28/2022 9:10	1.60	6/28/2022 9:33	4.73	6/27/2022 9:49	11.66
6/27/2022 10:21	-0.10	6/28/2022 9:11	1.60	6/28/2022 9:34	4.73	6/27/2022 9:50	11.65
6/27/2022 10:22	-0.12	6/28/2022 9:12	1.60	6/28/2022 9:35	4.72	6/27/2022 9:51	11.62
6/27/2022 10:23	-0.10	6/28/2022 9:13	1.61	6/28/2022 9:36	4.71	6/27/2022 9:52	11.65
6/27/2022 10:24	-0.10	6/28/2022 9:14	1.60	6/28/2022 9:37	4.71	6/27/2022 9:53	11.65
6/27/2022 10:25	-0.10	6/28/2022 9:15	1.60	6/28/2022 9:38	4.73	6/27/2022 9:54	11.70
6/27/2022 10:26	-0.10	6/28/2022 9:16	1.60	6/28/2022 9:39	4.72	6/27/2022 9:55	11.68
6/27/2022 10:27	-0.12	6/28/2022 9:17	1.60	6/28/2022 9:40	4.75	6/27/2022 9:56	11.66
6/27/2022 10:28	-0.10	6/28/2022 9:18	1.60	6/28/2022 9:41	4.72	6/27/2022 9:57	11.63
6/27/2022 10:29	-0.12	6/28/2022 9:19	1.63	6/28/2022 9:42	4.73	6/27/2022 9:58	11.59
6/27/2022 10:30	-0.11	6/28/2022 9:20	1.62	6/28/2022 9:43	4.74	6/27/2022 9:59	11.66
6/27/2022 10:31	-0.12	6/28/2022 9:21	1.62	6/28/2022 9:44	4.74	6/27/2022 10:00	11.66
6/27/2022 10:32	-0.12	6/28/2022 9:22	1.60	6/28/2022 9:45	4.70	6/27/2022 10:01	11.63
6/27/2022 10:33	-0.12	6/28/2022 9:23	1.63	6/28/2022 9:46	4.72	6/27/2022 10:02	11.63
6/27/2022 10:34	-0.12	6/28/2022 9:24	1.60	6/28/2022 9:47	4.74	6/27/2022 10:03	11.62
6/27/2022 10:35	-0.10	6/28/2022 9:25	1.60	6/28/2022 9:48	4.75	6/27/2022 10:04	11.69
6/27/2022 10:36	-0.10	6/28/2022 9:26	1.60	6/28/2022 9:49	4.74	6/27/2022 10:05	11.66
6/27/2022 10:37	-0.12	6/28/2022 9:27	1.60	6/28/2022 9:50	4.74	6/27/2022 10:06	11.66
6/27/2022 10:38	-0.10	6/28/2022 9:28	1.63	6/28/2022 9:51	4.72	6/27/2022 10:07	11.67
6/27/2022 10:39	-0.10	6/28/2022 9:29	1.60	6/28/2022 9:52	4.71	6/27/2022 10:08	11.67
6/27/2022 10:40	-0.12	6/28/2022 9:30	1.63	6/28/2022 9:53	4.69	6/27/2022 10:09	11.67
6/27/2022 10:41	-0.12	6/28/2022 9:31	1.60	6/28/2022 9:54	4.73	6/27/2022 10:10	11.66
6/27/2022 10:42	-0.12	6/28/2022 9:32	1.62	6/28/2022 9:55	4.72	6/27/2022 10:11	11.63
6/27/2022 10:43	-0.12	6/28/2022 9:33	1.60	6/28/2022 9:56	4.75	6/27/2022 10:12	11.67
6/27/2022 10:44	-0.12	6/28/2022 9:34	1.60	6/28/2022 9:57	4.72	6/27/2022 10:13	11.70
6/27/2022 10:45	-0.12	6/28/2022 9:35	1.60	6/28/2022 9:58	4.71	6/27/2022 10:14	11.69
6/27/2022 10:46	-0.10	6/28/2022 9:36	1.60	6/28/2022 9:59	4.73	6/27/2022 10:15	11.67
6/27/2022 10:47	-0.10	6/28/2022 9:37	1.60	6/28/2022 10:00	4.68	6/27/2022 10:16	11.68
6/27/2022 10:48	-0.10	6/28/2022 9:38	1.61	6/28/2022 10:01	4.72	6/27/2022 10:17	11.66
6/27/2022 10:49	-0.11	6/28/2022 9:39	1.60	6/28/2022 10:02	4.76	6/27/2022 10:18	11.64
6/27/2022 10:50	-0.10	6/28/2022 9:40	1.63	6/28/2022 10:03	4.71	6/27/2022 10:19	11.68
6/27/2022 10:51	-0.11	6/28/2022 9:41	1.61	6/28/2022 10:04	4.72	6/27/2022 10:20	11.68
6/27/2022 10:52	-0.12	6/28/2022 9:42	1.60	6/28/2022 10:05	4.71	6/27/2022 10:21	11.66
6/27/2022 10:53	-0.10	6/28/2022 9:43	1.60	6/28/2022 10:06	4.71	6/27/2022 10:22	11.69
6/27/2022 10:54	-0.10	6/28/2022 9:44	1.60	6/28/2022 10:07	4.72	6/27/2022 10:23	11.73
6/27/2022 10:55	-0.10	6/28/2022 9:45	1.60	6/28/2022 10:08	4.72	6/27/2022 10:24	11.71
6/27/2022 10:56	-0.10	6/28/2022 9:46	1.60	6/28/2022 10:09	4.75	6/27/2022 10:25	11.67
6/27/2022 10:57	-0.10	6/28/2022 9:47	1.61	6/28/2022 10:10	4.74	6/27/2022 10:26	11.68
6/27/2022 10:58	-0.12	6/28/2022 9:48	1.60	6/28/2022 10:11	4.71	6/27/2022 10:27	11.67
6/27/2022 10:59	-0.12	6/28/2022 9:49	1.61	6/28/2022 10:12	4.71	6/27/2022 10:28	11.72
6/27/2022 11:00	-0.10	6/28/2022 9:50	1.60	6/28/2022 10:13	4.71	6/27/2022 10:29	11.68
6/27/2022 11:01	-0.12	6/28/2022 9:51	1.60	6/28/2022 10:14	4.71	6/27/2022 10:30	11.66
6/27/2022 11:02	-0.12	6/28/2022 9:52	1.61	6/28/2022 10:15	4.73	6/27/2022 10:31	11.68
6/27/2022 11:03	-0.12	6/28/2022 9:53	1.61	6/28/2022 10:16	4.73	6/27/2022 10:32	11.68
6/27/2022 11:04	-0.12	6/28/2022 9:54	1.63	6/28/2022 10:17	4.74	6/27/2022 10:33	11.71
6/27/2022 11:05	-0.12	6/28/2022 9:55	1.60	6/28/2022 10:18	4.72	6/27/2022 10:34	11.67
6/27/2022 11:06	-0.12	6/28/2022 9:56	1.60	6/28/2022 10:19	4.75	6/27/2022 10:35	11.68
6/27/2022 11:07	-0.10	6/28/2022 9:57	1.60	6/28/2022 10:20	4.75	6/27/2022 10:36	11.62
6/27/2022 11:08	-0.10	6/28/2022 9:58	1.60	6/28/2022 10:21	4.72	6/27/2022 10:37	11.69
6/27/2022 11:09	-0.12	6/28/2022 9:59	1.60	6/28/2022 10:22	4.73	6/27/2022 10:38	11.67
6/27/2022 11:10	-0.10	6/28/2022 10:00	1.60	6/28/2022 10:23	4.75	6/27/2022 10:39	11.66
6/27/2022 11:11	-0.10	6/28/2022 10:01	1.60	6/28/2022 10:24	4.71	6/27/2022 10:40	11.64
6/27/2022 11:12	-0.12	6/28/2022 10:02	1.60	6/28/2022 10:25	4.71	6/27/2022 10:41	11.65
6/27/2022 11:13	-0.10	6/28/2022 10:03	1.60	6/28/2022 10:26	4.72	6/27/2022 10:42	11.66
6/27/2022 11:14	-0.12	6/28/2022 10:04	1.60	6/28/2022 10:27	4.74	6/27/2022 10:43	11.66
6/27/2022 11:15	-0.12	6/28/2022 10:05	1.61	6/28/2022 10:28	4.73	6/27/2022 10:44	11.65
6/27/2022 11:16	-0.10	6/28/2022 10:06	1.60	6/28/2022 10:29	4.71	6/27/2022 10:45	11.68
6/27/2022 11:17	-0.10	6/28/2022 10:07	1.62	6/28/2022 10:30	4.73	6/27/2022 10:46	11.66
6/27/2022 11:18	-0.10	6/28/2022 10:08	1.63	6/28/2022 10:31	4.72	6/27/2022 10:47	11.64
6/27/2022 11:19	-0.11	6/28/2022 10:09	1.61	6/28/2022 10:32	4.74	6/27/2022 10:48	11.66
6/27/2022 11:20	-0.10	6/28/2022 10:10	1.60	6/28/2022 10:33	4.71	6/27/2022 10:49	11.66
6/27/2022 11:21	-0.12	6/28/2022 10:11	1.61	6/28/2022 10:34	4.72	6/27/2022 10:50	11.67
6/27/2022 11:22	-0.10	6/28/2022 10:12	1.61	6/28/2022 10:35	4.73	6/27/2022 10:51	11.65
6/27/2022 11:23	-0.10	6/28/2022 10:13	1.61	6/28/2022 10:36	4.75	6/27/2022 10:52	11.68
6/27/2022 11:24	-0.10	6/28/2022 10:14	1.60	6/28/2022 10:37	4.69	6/27/2022 10:53	11.64
6/27/2022 11:25	-0.10	6/28/2022 10:15	1.60	6/28/2022 10:38	4.72	6/27/2022 10:54	11.69
6/27/2022 11:26	-0.10	6/28/2022 10:16	1.63	6/28/2022 10:39	4.73	6/27/2022 10:55	11.62
6/27/2022 11:27	-0.10	6/28/2022 10:17	1.60	6/28/2022 10:40	4.75	6/27/2022 10:56	11.70
6/27/2022 11:28	-0.10	6/28/2022 10:18	1.60	6/28/2022 10:41	4.71	6/27/2022 10:57	11.63
6/27/2022 11:29	-0.12	6/28/2022 10:19	1.60	6/28/2022 10:42	4.74	6/27/2022 10:58	11.72
6/27/2022 11:30	-0.10	6/28/2022 10:20	1.60	6/28/2022 10:43	4.73	6/27/2022 10:59	11.68
6/27/2022 11:31	-0.10	6/28/2022 10:21	1.62	6/28/2022 10:44	4.71	6/27/2022 11:00	11.69
6/27/2022 11:32	-0.10	6/28/2022 10:22	1.61	6/28/2022 10:45	4.71	6/27/2022 11:01	11.68
6/27/2022 11:33	-0.10	6/28/2022 10:23	1.61	6/28/2022 10:46	4.74	6/27/2022 11:02	11.65
6/27/2022 11:34	-0.10	6/28/2022 10:24	1.61	6/28/2022 10:47	4.75	6/27/2022 11:03	11.64
6/27/2022 11:35	-0.12	6/28/2022 10:25	1.61	6/28/2022 10:48	4.76	6/27/2022 11:04	11.69
6/27/2022 11:36	-0.10	6/28/2022 10:26	1.61	6/28/2022 10:49	4.74	6/27/2022 11:05	11.70
6/27/2022 11:37	-0.12	6/28/2022 10:27	1.61	6/28/2022 10:50	4.73	6/27/2022 11:06	11.66
6/27/2022 11:38	-0.10	6/28/2022 10:28	1.61	6/28/2022 10:51	4.78	6/27/2022 11:07	11.71
6/27/2022 11:39	-0.10	6/28/2022 10:29	1.61	6/28/2022 10:52	4.72	6/27/2022 11:08	11.69
6/27/2022 11:40	-0.12	6/28/2022 10:30	1.60	6/28/2022 10:53	4.74	6/27/2022 11:09	11.66
6/27/2022 11:41	-0.11	6/28/2022 10:31	1.61	6/28/2022 10:54	4.74	6/27/2022 11:10	11.68
6/27/2022 11:42	-0.10	6/28/2022 10:32	1.60	6/28/2022 10:55	4.72	6/27/2022 11:11	11.68
6/27/2022 11:43	-0.12	6/28/2022 10:33	1.61	6/28/2022 10:56	4.73	6/27/2022 11:12	11.67
6/27/2022 11:44	-0.10	6/28/2022 10:34	1.61	6/28/2022 10:57	4.74	6/27/2022 11:13	11.67

6/27/2022 11:45	-0.10	6/28/2022 10:35	1.61	6/28/2022 10:58	4.74	6/27/2022 11:14	11.67
6/27/2022 11:46	-0.12	6/28/2022 10:36	1.61	6/28/2022 10:59	4.74	6/27/2022 11:15	11.67
6/27/2022 11:47	-0.10	6/28/2022 10:37	1.63	6/28/2022 11:00	4.71	6/27/2022 11:16	11.68
6/27/2022 11:48	-0.10	6/28/2022 10:38	1.61	6/28/2022 11:01	4.70	6/27/2022 11:17	11.69
6/27/2022 11:49	-0.12	6/28/2022 10:39	1.61	6/28/2022 11:02	4.77	6/27/2022 11:18	11.64
6/27/2022 11:50	-0.10	6/28/2022 10:40	1.61	6/28/2022 11:03	4.72	6/27/2022 11:19	11.70
6/27/2022 11:51	-0.12	6/28/2022 10:41	1.63	6/28/2022 11:04	4.72	6/27/2022 11:20	11.70
6/27/2022 11:52	-0.11	6/28/2022 10:42	1.61	6/28/2022 11:05	4.72	6/27/2022 11:21	11.71
6/27/2022 11:53	-0.12	6/28/2022 10:43	1.61	6/28/2022 11:06	4.72	6/27/2022 11:22	11.67
6/27/2022 11:54	-0.10	6/28/2022 10:44	1.63	6/28/2022 11:07	4.71	6/27/2022 11:23	11.67
6/27/2022 11:55	-0.12	6/28/2022 10:45	1.61	6/28/2022 11:08	4.74	6/27/2022 11:24	11.71
6/27/2022 11:56	-0.10	6/28/2022 10:46	1.61	6/28/2022 11:09	4.73	6/27/2022 11:25	11.67
6/27/2022 11:57	-0.11	6/28/2022 10:47	1.61	6/28/2022 11:10	4.69	6/27/2022 11:26	11.70
6/27/2022 11:58	-0.12	6/28/2022 10:48	1.63	6/28/2022 11:11	4.73	6/27/2022 11:27	11.67
6/27/2022 11:59	-0.12	6/28/2022 10:49	1.61	6/28/2022 11:12	4.69	6/27/2022 11:28	11.64
6/27/2022 12:00	-0.10	6/28/2022 10:50	1.61	6/28/2022 11:13	4.74	6/27/2022 11:29	11.72
6/27/2022 12:01	-0.12	6/28/2022 10:51	1.60	6/28/2022 11:14	4.73	6/27/2022 11:30	11.65
6/27/2022 12:02	-0.12	6/28/2022 10:52	1.61	6/28/2022 11:15	4.73	6/27/2022 11:31	11.67
6/27/2022 12:03	-0.10	6/28/2022 10:53	1.61	6/28/2022 11:16	4.74	6/27/2022 11:32	11.69
6/27/2022 12:04	-0.12	6/28/2022 10:54	1.60	6/28/2022 11:17	4.74	6/27/2022 11:33	11.67
6/27/2022 12:05	-0.11	6/28/2022 10:55	1.62	6/28/2022 11:18	4.72	6/27/2022 11:34	11.69
6/27/2022 12:06	-0.12	6/28/2022 10:56	1.61	6/28/2022 11:19	4.76	6/27/2022 11:35	11.68
6/27/2022 12:07	-0.10	6/28/2022 10:57	1.63	6/28/2022 11:20	4.72	6/27/2022 11:36	11.74
6/27/2022 12:08	-0.12	6/28/2022 10:58	1.62	6/28/2022 11:21	4.71	6/27/2022 11:37	11.69
6/27/2022 12:09	-0.10	6/28/2022 10:59	1.61	6/28/2022 11:22	4.75	6/27/2022 11:38	11.70
6/27/2022 12:10	-0.12	6/28/2022 11:00	1.61	6/28/2022 11:23	4.76	6/27/2022 11:39	11.72
6/27/2022 12:11	-0.12	6/28/2022 11:01	1.60	6/28/2022 11:24	4.72	6/27/2022 11:40	11.65
6/27/2022 12:12	-0.12	6/28/2022 11:02	1.61	6/28/2022 11:25	4.77	6/27/2022 11:41	11.67
6/27/2022 12:13	-0.12	6/28/2022 11:03	1.61	6/28/2022 11:26	4.74	6/27/2022 11:42	11.74
6/27/2022 12:14	-0.10	6/28/2022 11:04	1.61	6/28/2022 11:27	4.76	6/27/2022 11:43	11.64
6/27/2022 12:15	-0.10	6/28/2022 11:05	1.61	6/28/2022 11:28	4.74	6/27/2022 11:44	11.69
6/27/2022 12:16	-0.10	6/28/2022 11:06	1.61	6/28/2022 11:29	4.73	6/27/2022 11:45	11.65
6/27/2022 12:17	-0.10	6/28/2022 11:07	1.60	6/28/2022 11:30	4.73	6/27/2022 11:46	11.66
6/27/2022 12:18	-0.12	6/28/2022 11:08	1.63	6/28/2022 11:31	4.74	6/27/2022 11:47	11.67
6/27/2022 12:19	-0.10	6/28/2022 11:09	1.61	6/28/2022 11:32	4.74	6/27/2022 11:48	11.65
6/27/2022 12:20	-0.11	6/28/2022 11:10	1.60	6/28/2022 11:33	4.72	6/27/2022 11:49	11.66
6/27/2022 12:21	-0.10	6/28/2022 11:11	1.63	6/28/2022 11:34	4.74	6/27/2022 11:50	11.73
6/27/2022 12:22	-0.12	6/28/2022 11:12	1.61	6/28/2022 11:35	4.72	6/27/2022 11:51	11.72
6/27/2022 12:23	-0.11	6/28/2022 11:13	1.63	6/28/2022 11:36	4.76	6/27/2022 11:52	11.67
6/27/2022 12:24	-0.10	6/28/2022 11:14	1.61	6/28/2022 11:37	4.71	6/27/2022 11:53	11.69
6/27/2022 12:25	-0.10	6/28/2022 11:15	1.60	6/28/2022 11:38	4.75	6/27/2022 11:54	11.72
6/27/2022 12:26	-0.10	6/28/2022 11:16	1.61	6/28/2022 11:39	4.74	6/27/2022 11:55	11.68
6/27/2022 12:27	-0.10	6/28/2022 11:17	1.61			6/27/2022 11:56	11.69
6/27/2022 12:28	-0.11	6/28/2022 11:18	1.60			6/27/2022 11:57	11.73
6/27/2022 12:29	-0.10	6/28/2022 11:19	1.63			6/27/2022 11:58	11.70
6/27/2022 12:30	-0.12	6/28/2022 11:20	1.63			6/27/2022 11:59	11.65
6/27/2022 12:31	-0.10	6/28/2022 11:21	1.61			6/27/2022 12:00	11.71
6/27/2022 12:32	-0.10	6/28/2022 11:22	1.60			6/27/2022 12:01	11.65
6/27/2022 12:33	-0.12	6/28/2022 11:23	1.60			6/27/2022 12:02	11.70
6/27/2022 12:34	-0.12	6/28/2022 11:24	1.63			6/27/2022 12:03	11.68
6/27/2022 12:35	-0.10	6/28/2022 11:25	1.61			6/27/2022 12:04	11.72
6/27/2022 12:36	-0.12	6/28/2022 11:26	1.63			6/27/2022 12:05	11.65
6/27/2022 12:37	-0.10	6/28/2022 11:27	1.61			6/27/2022 12:06	11.68
6/27/2022 12:38	-0.12	6/28/2022 11:28	1.62			6/27/2022 12:07	11.69
6/27/2022 12:39	-0.10	6/28/2022 11:29	1.60			6/27/2022 12:08	11.65
6/27/2022 12:40	-0.10	6/28/2022 11:30	1.61			6/27/2022 12:09	11.71
6/27/2022 12:41	-0.10	6/28/2022 11:31	1.61			6/27/2022 12:10	11.70
6/27/2022 12:42	-0.10	6/28/2022 11:32	1.60			6/27/2022 12:11	11.68
6/27/2022 12:43	-0.10	6/28/2022 11:33	1.60			6/27/2022 12:12	11.68
6/27/2022 12:44	-0.12	6/28/2022 11:34	1.61			6/27/2022 12:13	11.70
6/27/2022 12:45	-0.12	6/28/2022 11:35	1.63			6/27/2022 12:14	11.67
6/27/2022 12:46	-0.11	6/28/2022 11:36	1.60			6/27/2022 12:15	11.68
6/27/2022 12:47	-0.10	6/28/2022 11:37	1.61			6/27/2022 12:16	11.69
6/27/2022 12:48	-0.12	6/28/2022 11:38	1.61			6/27/2022 12:17	11.69
6/27/2022 12:49	-0.10	6/28/2022 11:39	1.60			6/27/2022 12:18	11.64
6/27/2022 12:50	-0.10	6/28/2022 11:40	1.62			6/27/2022 12:19	11.69
6/27/2022 12:51	-0.10	6/28/2022 11:41	1.60			6/27/2022 12:20	11.70
6/27/2022 12:52	-0.10	6/28/2022 11:42	1.61			6/27/2022 12:21	11.64
6/27/2022 12:53	-0.10	6/28/2022 11:43	1.60			6/27/2022 12:22	11.69
6/27/2022 12:54	-0.11	6/28/2022 11:44	1.60			6/27/2022 12:23	11.65
6/27/2022 12:55	-0.10	6/28/2022 11:45	1.60			6/27/2022 12:24	11.62
6/27/2022 12:56	-0.10	6/28/2022 11:46	1.61			6/27/2022 12:25	11.70
6/27/2022 12:57	-0.10	6/28/2022 11:47	1.61			6/27/2022 12:26	11.69
6/27/2022 12:58	-0.12	6/28/2022 11:48	1.62			6/27/2022 12:27	11.66
6/27/2022 12:59	-0.10	6/28/2022 11:49	1.62			6/27/2022 12:28	11.69
6/27/2022 13:00	-0.12	6/28/2022 11:50	1.61			6/27/2022 12:29	11.70
6/27/2022 13:01	-0.10	6/28/2022 11:51	1.61			6/27/2022 12:30	11.61
6/27/2022 13:02	-0.10					6/27/2022 12:31	11.64
6/27/2022 13:03	-0.12					6/27/2022 12:32	11.73
6/27/2022 13:04	-0.10					6/27/2022 12:33	11.69
6/27/2022 13:05	-0.12					6/27/2022 12:34	11.66
6/27/2022 13:06	-0.12					6/27/2022 12:35	11.70
6/27/2022 13:07	-0.10					6/27/2022 12:36	11.66
6/27/2022 13:08	-0.12					6/27/2022 12:37	11.67
6/27/2022 13:09	-0.12					6/27/2022 12:38	11.68
6/27/2022 13:10	-0.10					6/27/2022 12:39	11.67
6/27/2022 13:11	-0.12					6/27/2022 12:40	11.70
6/27/2022 13:12	-0.12					6/27/2022 12:41	11.67

6/27/2022 13:13	-0.10	6/27/2022 12:42	11.68
6/27/2022 13:14	-0.12	6/27/2022 12:43	11.67
6/27/2022 13:15	-0.12	6/27/2022 12:44	11.66
6/27/2022 13:16	-0.11	6/27/2022 12:45	11.63
6/27/2022 13:17	-0.10	6/27/2022 12:46	11.66
6/27/2022 13:18	-0.10	6/27/2022 12:47	11.65
6/27/2022 13:19	-0.10	6/27/2022 12:48	11.72
6/27/2022 13:20	-0.12	6/27/2022 12:49	11.71
6/27/2022 13:21	-0.10	6/27/2022 12:50	11.68
6/27/2022 13:22	-0.10	6/27/2022 12:51	11.72
6/27/2022 13:23	-0.10	6/27/2022 12:52	11.71
6/27/2022 13:24	-0.12	6/27/2022 12:53	11.65
6/27/2022 13:25	-0.10	6/27/2022 12:54	11.67
6/27/2022 13:26	-0.10	6/27/2022 12:55	11.66
6/27/2022 13:27	-0.12	6/27/2022 12:56	11.72
6/27/2022 13:28	-0.12	6/27/2022 12:57	11.69
6/27/2022 13:29	-0.10	6/27/2022 12:58	11.65
6/27/2022 13:30	-0.12	6/27/2022 12:59	11.68
6/27/2022 13:31	-0.11	6/27/2022 13:00	11.69
6/27/2022 13:32	-0.10	6/27/2022 13:01	11.68
6/27/2022 13:33	-0.12	6/27/2022 13:02	11.67
6/27/2022 13:34	-0.10	6/27/2022 13:03	11.65
6/27/2022 13:35	-0.10	6/27/2022 13:04	11.70
6/27/2022 13:36	-0.10	6/27/2022 13:05	11.69
6/27/2022 13:37	-0.10	6/27/2022 13:06	11.74
6/27/2022 13:38	-0.10	6/27/2022 13:07	11.70
6/27/2022 13:39	-0.12	6/27/2022 13:08	11.69
6/27/2022 13:40	-0.12	6/27/2022 13:09	11.70
6/27/2022 13:41	-0.12	6/27/2022 13:10	11.73
6/27/2022 13:42	-0.10	6/27/2022 13:11	11.68
6/27/2022 13:43	-0.10	6/27/2022 13:12	11.71
6/27/2022 13:44	-0.10	6/27/2022 13:13	11.69
6/27/2022 13:45	-0.12	6/27/2022 13:14	11.68
6/27/2022 13:46	-0.10	6/27/2022 13:15	11.72
6/27/2022 13:47	-0.12	6/27/2022 13:16	11.66
6/27/2022 13:48	-0.10	6/27/2022 13:17	11.65
6/27/2022 13:49	-0.11	6/27/2022 13:18	11.71
6/27/2022 13:50	-0.12	6/27/2022 13:19	11.66
6/27/2022 13:51	-0.10	6/27/2022 13:20	11.67
6/27/2022 13:52	-0.12	6/27/2022 13:21	11.63
6/27/2022 13:53	-0.11	6/27/2022 13:22	11.66
6/27/2022 13:54	-0.10	6/27/2022 13:23	11.62
6/27/2022 13:55	-0.10	6/27/2022 13:24	11.66
6/27/2022 13:56	-0.11	6/27/2022 13:25	11.69
6/27/2022 13:57	-0.10	6/27/2022 13:26	11.72
6/27/2022 13:58	-0.10	6/27/2022 13:27	11.69
6/27/2022 13:59	-0.12	6/27/2022 13:28	11.67
6/27/2022 14:00	-0.10	6/27/2022 13:29	11.66
6/27/2022 14:01	-0.10	6/27/2022 13:30	11.64
6/27/2022 14:02	-0.12	6/27/2022 13:31	11.65
6/27/2022 14:03	-0.10	6/27/2022 13:32	11.65
6/27/2022 14:04	-0.12	6/27/2022 13:33	11.65
6/27/2022 14:05	-0.10	6/27/2022 13:34	11.71
6/27/2022 14:06	-0.10	6/27/2022 13:35	11.70
6/27/2022 14:07	-0.12	6/27/2022 13:36	11.66
6/27/2022 14:08	-0.10	6/27/2022 13:37	11.71
6/27/2022 14:09	-0.10	6/27/2022 13:38	11.67
6/27/2022 14:10	-0.10	6/27/2022 13:39	11.65
6/27/2022 14:11	-0.10	6/27/2022 13:40	11.63
6/27/2022 14:12	-0.10	6/27/2022 13:41	11.68
6/27/2022 14:13	-0.11	6/27/2022 13:42	11.72
6/27/2022 14:14	-0.10	6/27/2022 13:43	11.68
6/27/2022 14:15	-0.10	6/27/2022 13:44	11.69
6/27/2022 14:16	-0.11	6/27/2022 13:45	11.67
6/27/2022 14:17	-0.11	6/27/2022 13:46	11.65
6/27/2022 14:18	-0.12	6/27/2022 13:47	11.66
6/27/2022 14:19	-0.10	6/27/2022 13:48	11.65
6/27/2022 14:20	-0.10	6/27/2022 13:49	11.70
6/27/2022 14:21	-0.10	6/27/2022 13:50	11.66
6/27/2022 14:22	-0.12	6/27/2022 13:51	11.69
6/27/2022 14:23	-0.12	6/27/2022 13:52	11.70
6/27/2022 14:24	-0.12	6/27/2022 13:53	11.67
6/27/2022 14:25	-0.12	6/27/2022 13:54	11.66
6/27/2022 14:26	-0.10	6/27/2022 13:55	11.65
6/27/2022 14:27	-0.10	6/27/2022 13:56	11.72
6/27/2022 14:28	-0.12	6/27/2022 13:57	11.70
6/27/2022 14:29	-0.10	6/27/2022 13:58	11.67
6/27/2022 14:30	-0.11	6/27/2022 13:59	11.66
6/27/2022 14:31	-0.11	6/27/2022 14:00	11.68
6/27/2022 14:32	-0.10	6/27/2022 14:01	11.64
6/27/2022 14:33	-0.10	6/27/2022 14:02	11.69
6/27/2022 14:34	-0.12	6/27/2022 14:03	11.66
6/27/2022 14:35	-0.12	6/27/2022 14:04	11.67
6/27/2022 14:36	-0.11	6/27/2022 14:05	11.66
6/27/2022 14:37	-0.12	6/27/2022 14:06	11.65
6/27/2022 14:38	-0.12	6/27/2022 14:07	11.70
6/27/2022 14:39	-0.12	6/27/2022 14:08	11.68
6/27/2022 14:40	-0.10	6/27/2022 14:09	11.66

6/27/2022 14:41	-0.10	6/27/2022 14:10	11.67
6/27/2022 14:42	-0.11	6/27/2022 14:11	11.68
6/27/2022 14:43	-0.10	6/27/2022 14:12	11.69
6/27/2022 14:44	-0.12	6/27/2022 14:13	11.69
6/27/2022 14:45	-0.10	6/27/2022 14:14	11.68
6/27/2022 14:46	-0.10	6/27/2022 14:15	11.70
6/27/2022 14:47	-0.12	6/27/2022 14:16	11.65
6/27/2022 14:48	-0.11	6/27/2022 14:17	11.67
6/27/2022 14:49	-0.12	6/27/2022 14:18	11.65
6/27/2022 14:50	-0.12	6/27/2022 14:19	11.69
6/27/2022 14:51	-0.12	6/27/2022 14:20	11.66
6/27/2022 14:52	-0.12	6/27/2022 14:21	11.66
6/27/2022 14:53	-0.12	6/27/2022 14:22	11.67
6/27/2022 14:54	-0.11	6/27/2022 14:23	11.68
6/27/2022 14:55	-0.12	6/27/2022 14:24	11.66
6/27/2022 14:56	-0.10	6/27/2022 14:25	11.72
6/27/2022 14:57	-0.10	6/27/2022 14:26	11.69
6/27/2022 14:58	-0.10	6/27/2022 14:27	11.72
6/27/2022 14:59	-0.12	6/27/2022 14:28	11.69
6/27/2022 15:00	-0.10	6/27/2022 14:29	11.62
6/27/2022 15:01	-0.10	6/27/2022 14:30	11.69
6/27/2022 15:02	-0.11	6/27/2022 14:31	11.61
6/27/2022 15:03	-0.12	6/27/2022 14:32	11.64
6/27/2022 15:04	-0.11	6/27/2022 14:33	11.67
6/27/2022 15:05	-0.11	6/27/2022 14:34	11.66
6/27/2022 15:06	-0.10	6/27/2022 14:35	11.65
6/27/2022 15:07	-0.10	6/27/2022 14:36	11.67
6/27/2022 15:08	-0.10	6/27/2022 14:37	11.64
6/27/2022 15:09	-0.12	6/27/2022 14:38	11.66
6/27/2022 15:10	-0.10	6/27/2022 14:39	11.62
6/27/2022 15:11	-0.11	6/27/2022 14:40	11.69
6/27/2022 15:12	-0.10	6/27/2022 14:41	11.71
6/27/2022 15:13	-0.10	6/27/2022 14:42	11.68
6/27/2022 15:14	-0.10	6/27/2022 14:43	11.67
6/27/2022 15:15	-0.10	6/27/2022 14:44	11.73
6/27/2022 15:16	-0.11	6/27/2022 14:45	11.63
6/27/2022 15:17	-0.10	6/27/2022 14:46	11.71
6/27/2022 15:18	-0.10	6/27/2022 14:47	11.71
6/27/2022 15:19	-0.12	6/27/2022 14:48	11.63
6/27/2022 15:20	-0.10	6/27/2022 14:49	11.72
6/27/2022 15:21	-0.10	6/27/2022 14:50	11.68
6/27/2022 15:22	-0.10	6/27/2022 14:51	11.67
6/27/2022 15:23	-0.11	6/27/2022 14:52	11.67
6/27/2022 15:24	-0.12	6/27/2022 14:53	11.65
6/27/2022 15:25	-0.12	6/27/2022 14:54	11.66
6/27/2022 15:26	-0.10	6/27/2022 14:55	11.65
6/27/2022 15:27	-0.10	6/27/2022 14:56	11.65
6/27/2022 15:28	-0.10	6/27/2022 14:57	11.62
6/27/2022 15:29	-0.10	6/27/2022 14:58	11.67
6/27/2022 15:30	-0.10	6/27/2022 14:59	11.68
6/27/2022 15:31	-0.12	6/27/2022 15:00	11.66
6/27/2022 15:32	-0.11	6/27/2022 15:01	11.68
6/27/2022 15:33	-0.10	6/27/2022 15:02	11.63
6/27/2022 15:34	-0.10	6/27/2022 15:03	11.61
6/27/2022 15:35	-0.12	6/27/2022 15:04	11.64
6/27/2022 15:36	-0.10	6/27/2022 15:05	11.72
6/27/2022 15:37	-0.11	6/27/2022 15:06	11.69
6/27/2022 15:38	-0.12	6/27/2022 15:07	11.65
6/27/2022 15:39	-0.10	6/27/2022 15:08	11.63
6/27/2022 15:40	-0.10	6/27/2022 15:09	11.65
6/27/2022 15:41	-0.12	6/27/2022 15:10	11.64
6/27/2022 15:42	-0.10	6/27/2022 15:11	11.67
6/27/2022 15:43	-0.11	6/27/2022 15:12	11.67
6/27/2022 15:44	-0.12	6/27/2022 15:13	11.63
6/27/2022 15:45	-0.12	6/27/2022 15:14	11.65
6/27/2022 15:46	-0.10	6/27/2022 15:15	11.68
6/27/2022 15:47	-0.12	6/27/2022 15:16	11.64
6/27/2022 15:48	-0.12	6/27/2022 15:17	11.64
6/27/2022 15:49	-0.10	6/27/2022 15:18	11.60
6/27/2022 15:50	-0.10	6/27/2022 15:19	11.62
6/27/2022 15:51	-0.12	6/27/2022 15:20	11.63
6/27/2022 15:52	-0.10	6/27/2022 15:21	11.69
6/27/2022 15:53	-0.10	6/27/2022 15:22	11.62
6/27/2022 15:54	-0.10	6/27/2022 15:23	11.68
6/27/2022 15:55	-0.10	6/27/2022 15:24	11.59
6/27/2022 15:56	-0.10	6/27/2022 15:25	11.67
6/27/2022 15:57	-0.10	6/27/2022 15:26	11.63
6/27/2022 15:58	-0.12	6/27/2022 15:27	11.64
6/27/2022 15:59	-0.10	6/27/2022 15:28	11.69
6/27/2022 16:00	-0.10	6/27/2022 15:29	11.66
6/27/2022 16:01	-0.10	6/27/2022 15:30	11.62
6/27/2022 16:02	-0.12	6/27/2022 15:31	11.63
6/27/2022 16:03	-0.10	6/27/2022 15:32	11.64
6/27/2022 16:04	-0.10	6/27/2022 15:33	11.62
6/27/2022 16:05	-0.10	6/27/2022 15:34	11.68
6/27/2022 16:06	-0.12	6/27/2022 15:35	11.70
6/27/2022 16:07	-0.10	6/27/2022 15:36	11.63
6/27/2022 16:08	-0.12	6/27/2022 15:37	11.67

6/27/2022 16:09	-0.10	6/27/2022 15:38	11.63
6/27/2022 16:10	-0.10	6/27/2022 15:39	11.64
6/27/2022 16:11	-0.10	6/27/2022 15:40	11.66
6/27/2022 16:12	-0.10	6/27/2022 15:41	11.64
6/27/2022 16:13	-0.12	6/27/2022 15:42	11.63
6/27/2022 16:14	-0.12	6/27/2022 15:43	11.65
6/27/2022 16:15	-0.10	6/27/2022 15:44	11.59
6/27/2022 16:16	-0.10	6/27/2022 15:45	11.70
6/27/2022 16:17	-0.12	6/27/2022 15:46	11.64
6/27/2022 16:18	-0.10	6/27/2022 15:47	11.66
6/27/2022 16:19	-0.10	6/27/2022 15:48	11.66
6/27/2022 16:20	-0.12	6/27/2022 15:49	11.67
6/27/2022 16:21	-0.10	6/27/2022 15:50	11.65
6/27/2022 16:22	-0.10	6/27/2022 15:51	11.66
6/27/2022 16:23	-0.10	6/27/2022 15:52	11.71
6/27/2022 16:24	-0.10	6/27/2022 15:53	11.64
6/27/2022 16:25	-0.10	6/27/2022 15:54	11.65
6/27/2022 16:26	-0.10	6/27/2022 15:55	11.65
6/27/2022 16:27	-0.10	6/27/2022 15:56	11.69
6/27/2022 16:28	-0.10	6/27/2022 15:57	11.68
6/27/2022 16:29	-0.10	6/27/2022 15:58	11.65
6/27/2022 16:30	-0.12	6/27/2022 15:59	11.66
6/27/2022 16:31	-0.12	6/27/2022 16:00	11.61
6/27/2022 16:32	-0.10	6/27/2022 16:01	11.69
6/27/2022 16:33	-0.10	6/27/2022 16:02	11.69
6/27/2022 16:34	-0.12	6/27/2022 16:03	11.70
6/27/2022 16:35	-0.11	6/27/2022 16:04	11.66
6/27/2022 16:36	-0.10	6/27/2022 16:05	11.66
6/27/2022 16:37	-0.10	6/27/2022 16:06	11.67
6/27/2022 16:38	-0.10	6/27/2022 16:07	11.62
6/27/2022 16:39	-0.10	6/27/2022 16:08	11.65
6/27/2022 16:40	-0.10	6/27/2022 16:09	11.64
6/27/2022 16:41	-0.11	6/27/2022 16:10	11.62
6/27/2022 16:42	-0.10	6/27/2022 16:11	11.65
6/27/2022 16:43	-0.10	6/27/2022 16:12	11.66
6/27/2022 16:44	-0.10	6/27/2022 16:13	11.67
6/27/2022 16:45	-0.11	6/27/2022 16:14	11.70
6/27/2022 16:46	-0.10	6/27/2022 16:15	11.67
6/27/2022 16:47	-0.10	6/27/2022 16:16	11.67
6/27/2022 16:48	-0.10	6/27/2022 16:17	11.68
6/27/2022 16:49	-0.12	6/27/2022 16:18	11.68
6/27/2022 16:50	-0.10	6/27/2022 16:19	11.73
6/27/2022 16:51	-0.10	6/27/2022 16:20	11.65
6/27/2022 16:52	-0.12	6/27/2022 16:21	11.68
6/27/2022 16:53	-0.10	6/27/2022 16:22	11.69
6/27/2022 16:54	-0.11	6/27/2022 16:23	11.64
6/27/2022 16:55	-0.11	6/27/2022 16:24	11.64
6/27/2022 16:56	-0.10	6/27/2022 16:25	11.70
6/27/2022 16:57	-0.10	6/27/2022 16:26	11.68
6/27/2022 16:58	-0.11	6/27/2022 16:27	11.65
6/27/2022 16:59	-0.10	6/27/2022 16:28	11.65
6/27/2022 17:00	-0.11	6/27/2022 16:29	11.71
6/27/2022 17:01	-0.11	6/27/2022 16:30	11.63
6/27/2022 17:02	-0.12	6/27/2022 16:31	11.67
6/27/2022 17:03	-0.10	6/27/2022 16:32	11.70
6/27/2022 17:04	-0.11	6/27/2022 16:33	11.66
6/27/2022 17:05	-0.10	6/27/2022 16:34	11.68
6/27/2022 17:06	-0.10	6/27/2022 16:35	11.71
6/27/2022 17:07	-0.10	6/27/2022 16:36	11.70
6/27/2022 17:08	-0.12	6/27/2022 16:37	11.66
6/27/2022 17:09	-0.10	6/27/2022 16:38	11.66
6/27/2022 17:10	-0.11	6/27/2022 16:39	11.67
6/27/2022 17:11	-0.10	6/27/2022 16:40	11.64
6/27/2022 17:12	-0.12	6/27/2022 16:41	11.69
6/27/2022 17:13	-0.10	6/27/2022 16:42	11.69
6/27/2022 17:14	-0.10	6/27/2022 16:43	11.66
6/27/2022 17:15	-0.10	6/27/2022 16:44	11.65
6/27/2022 17:16	-0.10	6/27/2022 16:45	11.66
6/27/2022 17:17	-0.11	6/27/2022 16:46	11.71
6/27/2022 17:18	-0.10	6/27/2022 16:47	11.63
6/27/2022 17:19	-0.10	6/27/2022 16:48	11.62
6/27/2022 17:20	-0.12	6/27/2022 16:49	11.66
6/27/2022 17:21	-0.12	6/27/2022 16:50	11.68
6/27/2022 17:22	-0.10	6/27/2022 16:51	11.69
6/27/2022 17:23	-0.10	6/27/2022 16:52	11.70
6/27/2022 17:24	-0.10	6/27/2022 16:53	11.67
6/27/2022 17:25	-0.10	6/27/2022 16:54	11.73
6/27/2022 17:26	-0.10	6/27/2022 16:55	11.69
6/27/2022 17:27	-0.12	6/27/2022 16:56	11.66
6/27/2022 17:28	-0.10	6/27/2022 16:57	11.64
6/27/2022 17:29	-0.12	6/27/2022 16:58	11.66
6/27/2022 17:30	-0.10	6/27/2022 16:59	11.64
6/27/2022 17:31	-0.10	6/27/2022 17:00	11.66
6/27/2022 17:32	-0.12	6/27/2022 17:01	11.63
6/27/2022 17:33	-0.11	6/27/2022 17:02	11.69
6/27/2022 17:34	-0.10	6/27/2022 17:03	11.67
6/27/2022 17:35	-0.10	6/27/2022 17:04	11.64
6/27/2022 17:36	-0.12	6/27/2022 17:05	11.70

6/27/2022 17:37	-0.10	6/27/2022 17:06	11.68
6/27/2022 17:38	-0.10	6/27/2022 17:07	11.70
6/27/2022 17:39	-0.10	6/27/2022 17:08	11.72
6/27/2022 17:40	-0.10	6/27/2022 17:09	11.66
6/27/2022 17:41	-0.10	6/27/2022 17:10	11.66
6/27/2022 17:42	-0.12	6/27/2022 17:11	11.70
6/27/2022 17:43	-0.10	6/27/2022 17:12	11.69
6/27/2022 17:44	-0.10	6/27/2022 17:13	11.67
6/27/2022 17:45	-0.10	6/27/2022 17:14	11.72
6/27/2022 17:46	-0.11	6/27/2022 17:15	11.68
6/27/2022 17:47	-0.12	6/27/2022 17:16	11.69
6/27/2022 17:48	-0.10	6/27/2022 17:17	11.67
6/27/2022 17:49	-0.12	6/27/2022 17:18	11.71
6/27/2022 17:50	-0.11	6/27/2022 17:19	11.72
6/27/2022 17:51	-0.10	6/27/2022 17:20	11.68
6/27/2022 17:52	-0.12	6/27/2022 17:21	11.71
6/27/2022 17:53	-0.12	6/27/2022 17:22	11.65
6/27/2022 17:54	-0.11	6/27/2022 17:23	11.68
6/27/2022 17:55	-0.10	6/27/2022 17:24	11.68
6/27/2022 17:56	-0.12	6/27/2022 17:25	11.69
6/27/2022 17:57	-0.10	6/27/2022 17:26	11.66
6/27/2022 17:58	-0.10	6/27/2022 17:27	11.71
6/27/2022 17:59	-0.10	6/27/2022 17:28	11.62
6/27/2022 18:00	-0.10	6/27/2022 17:29	11.68
6/27/2022 18:01	-0.10	6/27/2022 17:30	11.68
6/27/2022 18:02	-0.12	6/27/2022 17:31	11.67
6/27/2022 18:03	-0.11	6/27/2022 17:32	11.71
6/27/2022 18:04	-0.10	6/27/2022 17:33	11.66
6/27/2022 18:05	-0.12	6/27/2022 17:34	11.66
6/27/2022 18:06	-0.12	6/27/2022 17:35	11.69
6/27/2022 18:07	-0.10	6/27/2022 17:36	11.68
6/27/2022 18:08	-0.12	6/27/2022 17:37	11.67
6/27/2022 18:09	-0.12	6/27/2022 17:38	11.69
6/27/2022 18:10	-0.10	6/27/2022 17:39	11.69
6/27/2022 18:11	-0.12	6/27/2022 17:40	11.70
6/27/2022 18:12	-0.12	6/27/2022 17:41	11.71
6/27/2022 18:13	-0.12	6/27/2022 17:42	11.74
6/27/2022 18:14	-0.10	6/27/2022 17:43	11.75
6/27/2022 18:15	-0.10	6/27/2022 17:44	11.67
6/27/2022 18:16	-0.12	6/27/2022 17:45	11.64
6/27/2022 18:17	-0.12	6/27/2022 17:46	11.65
6/27/2022 18:18	-0.10	6/27/2022 17:47	11.71
6/27/2022 18:19	-0.10	6/27/2022 17:48	11.66
6/27/2022 18:20	-0.10	6/27/2022 17:49	11.67
6/27/2022 18:21	-0.10	6/27/2022 17:50	11.67
6/27/2022 18:22	-0.10	6/27/2022 17:51	11.68
6/27/2022 18:23	-0.12	6/27/2022 17:52	11.68
6/27/2022 18:24	-0.12	6/27/2022 17:53	11.71
6/27/2022 18:25	-0.10	6/27/2022 17:54	11.71
6/27/2022 18:26	-0.12	6/27/2022 17:55	11.70
6/27/2022 18:27	-0.12	6/27/2022 17:56	11.69
6/27/2022 18:28	-0.10	6/27/2022 17:57	11.67
6/27/2022 18:29	-0.10	6/27/2022 17:58	11.65
6/27/2022 18:30	-0.12	6/27/2022 17:59	11.73
6/27/2022 18:31	-0.10	6/27/2022 18:00	11.68
6/27/2022 18:32	-0.10	6/27/2022 18:01	11.68
6/27/2022 18:33	-0.11	6/27/2022 18:02	11.66
6/27/2022 18:34	-0.12	6/27/2022 18:03	11.70
6/27/2022 18:35	-0.12	6/27/2022 18:04	11.67
6/27/2022 18:36	-0.12	6/27/2022 18:05	11.68
6/27/2022 18:37	-0.10	6/27/2022 18:06	11.69
6/27/2022 18:38	-0.10	6/27/2022 18:07	11.73
6/27/2022 18:39	-0.12	6/27/2022 18:08	11.67
6/27/2022 18:40	-0.11	6/27/2022 18:09	11.66
6/27/2022 18:41	-0.12	6/27/2022 18:10	11.68
6/27/2022 18:42	-0.10	6/27/2022 18:11	11.67
6/27/2022 18:43	-0.10	6/27/2022 18:12	11.68
6/27/2022 18:44	-0.11	6/27/2022 18:13	11.67
6/27/2022 18:45	-0.10	6/27/2022 18:14	11.65
6/27/2022 18:46	-0.10	6/27/2022 18:15	11.70
6/27/2022 18:47	-0.12	6/27/2022 18:16	11.68
6/27/2022 18:48	-0.10	6/27/2022 18:17	11.69
6/27/2022 18:49	-0.10	6/27/2022 18:18	11.65
6/27/2022 18:50	-0.10	6/27/2022 18:19	11.68
6/27/2022 18:51	-0.11	6/27/2022 18:20	11.63
6/27/2022 18:52	-0.10	6/27/2022 18:21	11.69
6/27/2022 18:53	-0.10	6/27/2022 18:22	11.70
6/27/2022 18:54	-0.12	6/27/2022 18:23	11.73
6/27/2022 18:55	-0.12	6/27/2022 18:24	11.70
6/27/2022 18:56	-0.12	6/27/2022 18:25	11.64
6/27/2022 18:57	-0.10	6/27/2022 18:26	11.67
6/27/2022 18:58	-0.10	6/27/2022 18:27	11.71
6/27/2022 18:59	-0.10	6/27/2022 18:28	11.71
6/27/2022 19:00	-0.11	6/27/2022 18:29	11.68
6/27/2022 19:01	-0.10	6/27/2022 18:30	11.66
6/27/2022 19:02	-0.10	6/27/2022 18:31	11.67
6/27/2022 19:03	-0.10	6/27/2022 18:32	11.73
6/27/2022 19:04	-0.10	6/27/2022 18:33	11.68

6/27/2022 19:05	-0.12	6/27/2022 18:34	11.67
6/27/2022 19:06	-0.12	6/27/2022 18:35	11.67
6/27/2022 19:07	-0.11	6/27/2022 18:36	11.71
6/27/2022 19:08	-0.12	6/27/2022 18:37	11.68
6/27/2022 19:09	-0.10	6/27/2022 18:38	11.67
6/27/2022 19:10	-0.12	6/27/2022 18:39	11.65
6/27/2022 19:11	-0.12	6/27/2022 18:40	11.67
6/27/2022 19:12	-0.12	6/27/2022 18:41	11.67
6/27/2022 19:13	-0.10	6/27/2022 18:42	11.65
6/27/2022 19:14	-0.10	6/27/2022 18:43	11.66
6/27/2022 19:15	-0.11	6/27/2022 18:44	11.62
6/27/2022 19:16	-0.10	6/27/2022 18:45	11.67
6/27/2022 19:17	-0.10	6/27/2022 18:46	11.65
6/27/2022 19:18	-0.11	6/27/2022 18:47	11.68
6/27/2022 19:19	-0.11	6/27/2022 18:48	11.68
6/27/2022 19:20	-0.12	6/27/2022 18:49	11.71
6/27/2022 19:21	-0.10	6/27/2022 18:50	11.71
6/27/2022 19:22	-0.12	6/27/2022 18:51	11.64
6/27/2022 19:23	-0.12	6/27/2022 18:52	11.69
6/27/2022 19:24	-0.10	6/27/2022 18:53	11.65
6/27/2022 19:25	-0.12	6/27/2022 18:54	11.70
6/27/2022 19:26	-0.12	6/27/2022 18:55	11.64
6/27/2022 19:27	-0.10	6/27/2022 18:56	11.70
6/27/2022 19:28	-0.12	6/27/2022 18:57	11.69
6/27/2022 19:29	-0.10	6/27/2022 18:58	11.66
6/27/2022 19:30	-0.10	6/27/2022 18:59	11.65
6/27/2022 19:31	-0.10	6/27/2022 19:00	11.70
6/27/2022 19:32	-0.12	6/27/2022 19:01	11.69
6/27/2022 19:33	-0.12	6/27/2022 19:02	11.67
6/27/2022 19:34	-0.12	6/27/2022 19:03	11.64
6/27/2022 19:35	-0.12	6/27/2022 19:04	11.70
6/27/2022 19:36	-0.10	6/27/2022 19:05	11.69
6/27/2022 19:37	-0.11	6/27/2022 19:06	11.65
6/27/2022 19:38	-0.10	6/27/2022 19:07	11.68
6/27/2022 19:39	-0.12	6/27/2022 19:08	11.70
6/27/2022 19:40	-0.11	6/27/2022 19:09	11.67
6/27/2022 19:41	-0.11	6/27/2022 19:10	11.65
6/27/2022 19:42	-0.10	6/27/2022 19:11	11.70
6/27/2022 19:43	-0.10	6/27/2022 19:12	11.67
6/27/2022 19:44	-0.12	6/27/2022 19:13	11.62
6/27/2022 19:45	-0.12	6/27/2022 19:14	11.68
6/27/2022 19:46	-0.12	6/27/2022 19:15	11.70
6/27/2022 19:47	-0.12	6/27/2022 19:16	11.67
6/27/2022 19:48	-0.10	6/27/2022 19:17	11.72
6/27/2022 19:49	-0.12	6/27/2022 19:18	11.65
6/27/2022 19:50	-0.12	6/27/2022 19:19	11.65
6/27/2022 19:51	-0.10	6/27/2022 19:20	11.67
6/27/2022 19:52	-0.12	6/27/2022 19:21	11.71
6/27/2022 19:53	-0.12	6/27/2022 19:22	11.69
6/27/2022 19:54	-0.10	6/27/2022 19:23	11.70
6/27/2022 19:55	-0.10	6/27/2022 19:24	11.68
6/27/2022 19:56	-0.10	6/27/2022 19:25	11.65
6/27/2022 19:57	-0.12	6/27/2022 19:26	11.68
6/27/2022 19:58	-0.12	6/27/2022 19:27	11.69
6/27/2022 19:59	-0.12	6/27/2022 19:28	11.69
6/27/2022 20:00	-0.12	6/27/2022 19:29	11.70
6/27/2022 20:01	-0.10	6/27/2022 19:30	11.68
6/27/2022 20:02	-0.12	6/27/2022 19:31	11.69
6/27/2022 20:03	-0.10	6/27/2022 19:32	11.72
6/27/2022 20:04	-0.12	6/27/2022 19:33	11.64
6/27/2022 20:05	-0.10	6/27/2022 19:34	11.70
6/27/2022 20:06	-0.12	6/27/2022 19:35	11.75
6/27/2022 20:07	-0.10	6/27/2022 19:36	11.71
6/27/2022 20:08	-0.10	6/27/2022 19:37	11.72
6/27/2022 20:09	-0.10	6/27/2022 19:38	11.73
6/27/2022 20:10	-0.10	6/27/2022 19:39	11.70
6/27/2022 20:11	-0.10	6/27/2022 19:40	11.75
6/27/2022 20:12	-0.12	6/27/2022 19:41	11.70
6/27/2022 20:13	-0.12	6/27/2022 19:42	11.64
6/27/2022 20:14	-0.12	6/27/2022 19:43	11.66
6/27/2022 20:15	-0.13	6/27/2022 19:44	11.73
6/27/2022 20:16	-0.12	6/27/2022 19:45	11.64
6/27/2022 20:17	-0.12	6/27/2022 19:46	11.64
6/27/2022 20:18	-0.12	6/27/2022 19:47	11.68
6/27/2022 20:19	-0.11	6/27/2022 19:48	11.71
6/27/2022 20:20	-0.12	6/27/2022 19:49	11.69
6/27/2022 20:21	-0.12	6/27/2022 19:50	11.66
6/27/2022 20:22	-0.12	6/27/2022 19:51	11.65
6/27/2022 20:23	-0.12	6/27/2022 19:52	11.66
6/27/2022 20:24	-0.12	6/27/2022 19:53	11.64
6/27/2022 20:25	-0.12	6/27/2022 19:54	11.71
6/27/2022 20:26	-0.12	6/27/2022 19:55	11.68
6/27/2022 20:27	-0.12	6/27/2022 19:56	11.69
6/27/2022 20:28	-0.12	6/27/2022 19:57	11.73
6/27/2022 20:29	-0.10	6/27/2022 19:58	11.67
6/27/2022 20:30	-0.10	6/27/2022 19:59	11.74
6/27/2022 20:31	-0.10	6/27/2022 20:00	11.70
6/27/2022 20:32	-0.12	6/27/2022 20:01	11.69

6/27/2022 20:33	-0.12	6/27/2022 20:02	11.76
6/27/2022 20:34	-0.10	6/27/2022 20:03	11.67
6/27/2022 20:35	-0.12	6/27/2022 20:04	11.66
6/27/2022 20:36	-0.12	6/27/2022 20:05	11.67
6/27/2022 20:37	-0.10	6/27/2022 20:06	11.71
6/27/2022 20:38	-0.11	6/27/2022 20:07	11.70
6/27/2022 20:39	-0.10	6/27/2022 20:08	11.66
6/27/2022 20:40	-0.12	6/27/2022 20:09	11.71
6/27/2022 20:41	-0.12	6/27/2022 20:10	11.69
6/27/2022 20:42	-0.12	6/27/2022 20:11	11.72
6/27/2022 20:43	-0.10	6/27/2022 20:12	11.74
6/27/2022 20:44	-0.12	6/27/2022 20:13	11.68
6/27/2022 20:45	-0.10	6/27/2022 20:14	11.69
6/27/2022 20:46	-0.11	6/27/2022 20:15	11.72
6/27/2022 20:47	-0.12	6/27/2022 20:16	11.69
6/27/2022 20:48	-0.12	6/27/2022 20:17	11.67
6/27/2022 20:49	-0.12	6/27/2022 20:18	11.71
6/27/2022 20:50	-0.10	6/27/2022 20:19	11.71
6/27/2022 20:51	-0.10	6/27/2022 20:20	11.69
6/27/2022 20:52	-0.12	6/27/2022 20:21	11.69
6/27/2022 20:53	-0.10	6/27/2022 20:22	11.73
6/27/2022 20:54	-0.10	6/27/2022 20:23	11.67
6/27/2022 20:55	-0.10	6/27/2022 20:24	11.64
6/27/2022 20:56	-0.10	6/27/2022 20:25	11.70
6/27/2022 20:57	-0.10	6/27/2022 20:26	11.68
6/27/2022 20:58	-0.12	6/27/2022 20:27	11.68
6/27/2022 20:59	-0.10	6/27/2022 20:28	11.69
6/27/2022 21:00	-0.12	6/27/2022 20:29	11.70
6/27/2022 21:01	-0.12	6/27/2022 20:30	11.69
6/27/2022 21:02	-0.12	6/27/2022 20:31	11.67
6/27/2022 21:03	-0.12	6/27/2022 20:32	11.69
6/27/2022 21:04	-0.10	6/27/2022 20:33	11.72
6/27/2022 21:05	-0.12	6/27/2022 20:34	11.73
6/27/2022 21:06	-0.11	6/27/2022 20:35	11.69
6/27/2022 21:07	-0.12	6/27/2022 20:36	11.74
6/27/2022 21:08	-0.10	6/27/2022 20:37	11.65
6/27/2022 21:09	-0.12	6/27/2022 20:38	11.65
6/27/2022 21:10	-0.12	6/27/2022 20:39	11.67
6/27/2022 21:11	-0.12	6/27/2022 20:40	11.70
6/27/2022 21:12	-0.10	6/27/2022 20:41	11.68
6/27/2022 21:13	-0.10	6/27/2022 20:42	11.69
6/27/2022 21:14	-0.12	6/27/2022 20:43	11.74
6/27/2022 21:15	-0.10	6/27/2022 20:44	11.67
6/27/2022 21:16	-0.12	6/27/2022 20:45	11.68
6/27/2022 21:17	-0.12	6/27/2022 20:46	11.69
6/27/2022 21:18	-0.10	6/27/2022 20:47	11.65
6/27/2022 21:19	-0.11	6/27/2022 20:48	11.67
6/27/2022 21:20	-0.10	6/27/2022 20:49	11.68
6/27/2022 21:21	-0.12	6/27/2022 20:50	11.68
6/27/2022 21:22	-0.12	6/27/2022 20:51	11.67
6/27/2022 21:23	-0.12	6/27/2022 20:52	11.69
6/27/2022 21:24	-0.12	6/27/2022 20:53	11.68
6/27/2022 21:25	-0.12	6/27/2022 20:54	11.68
6/27/2022 21:26	-0.12	6/27/2022 20:55	11.70
6/27/2022 21:27	-0.10	6/27/2022 20:56	11.69
6/27/2022 21:28	-0.12	6/27/2022 20:57	11.66
6/27/2022 21:29	-0.12	6/27/2022 20:58	11.67
6/27/2022 21:30	-0.12	6/27/2022 20:59	11.71
6/27/2022 21:31	-0.10	6/27/2022 21:00	11.73
6/27/2022 21:32	-0.10	6/27/2022 21:01	11.68
6/27/2022 21:33	-0.12	6/27/2022 21:02	11.67
6/27/2022 21:34	-0.12	6/27/2022 21:03	11.69
6/27/2022 21:35	-0.12	6/27/2022 21:04	11.69
6/27/2022 21:36	-0.10	6/27/2022 21:05	11.71
6/27/2022 21:37	-0.12	6/27/2022 21:06	11.69
6/27/2022 21:38	-0.10	6/27/2022 21:07	11.67
6/27/2022 21:39	-0.12	6/27/2022 21:08	11.70
6/27/2022 21:40	-0.12	6/27/2022 21:09	11.68
6/27/2022 21:41	-0.11	6/27/2022 21:10	11.69
6/27/2022 21:42	-0.12	6/27/2022 21:11	11.66
6/27/2022 21:43	-0.12	6/27/2022 21:12	11.68
6/27/2022 21:44	-0.12	6/27/2022 21:13	11.73
6/27/2022 21:45	-0.10	6/27/2022 21:14	11.69
6/27/2022 21:46	-0.12	6/27/2022 21:15	11.64
6/27/2022 21:47	-0.10	6/27/2022 21:16	11.69
6/27/2022 21:48	-0.12	6/27/2022 21:17	11.68
6/27/2022 21:49	-0.10	6/27/2022 21:18	11.69
6/27/2022 21:50	-0.10	6/27/2022 21:19	11.65
6/27/2022 21:51	-0.12	6/27/2022 21:20	11.67
6/27/2022 21:52	-0.10	6/27/2022 21:21	11.74
6/27/2022 21:53	-0.12	6/27/2022 21:22	11.69
6/27/2022 21:54	-0.10	6/27/2022 21:23	11.66
6/27/2022 21:55	-0.10	6/27/2022 21:24	11.69
6/27/2022 21:56	-0.10	6/27/2022 21:25	11.67
6/27/2022 21:57	-0.10	6/27/2022 21:26	11.64
6/27/2022 21:58	-0.12	6/27/2022 21:27	11.67
6/27/2022 21:59	-0.12	6/27/2022 21:28	11.68
6/27/2022 22:00	-0.12	6/27/2022 21:29	11.72

6/27/2022 22:01	-0.10	6/27/2022 21:30	11.69
6/27/2022 22:02	-0.10	6/27/2022 21:31	11.69
6/27/2022 22:03	-0.11	6/27/2022 21:32	11.73
6/27/2022 22:04	-0.12	6/27/2022 21:33	11.71
6/27/2022 22:05	-0.10	6/27/2022 21:34	11.70
6/27/2022 22:06	-0.11	6/27/2022 21:35	11.74
6/27/2022 22:07	-0.10	6/27/2022 21:36	11.68
6/27/2022 22:08	-0.11	6/27/2022 21:37	11.64
6/27/2022 22:09	-0.10	6/27/2022 21:38	11.71
6/27/2022 22:10	-0.10	6/27/2022 21:39	11.75
6/27/2022 22:11	-0.10	6/27/2022 21:40	11.69
6/27/2022 22:12	-0.10	6/27/2022 21:41	11.71
6/27/2022 22:13	-0.10	6/27/2022 21:42	11.67
6/27/2022 22:14	-0.10	6/27/2022 21:43	11.65
6/27/2022 22:15	-0.10	6/27/2022 21:44	11.69
6/27/2022 22:16	-0.10	6/27/2022 21:45	11.74
6/27/2022 22:17	-0.12	6/27/2022 21:46	11.70
6/27/2022 22:18	-0.10	6/27/2022 21:47	11.68
6/27/2022 22:19	-0.10	6/27/2022 21:48	11.71
6/27/2022 22:20	-0.10	6/27/2022 21:49	11.62
6/27/2022 22:21	-0.10	6/27/2022 21:50	11.67
6/27/2022 22:22	-0.10	6/27/2022 21:51	11.70
6/27/2022 22:23	-0.10	6/27/2022 21:52	11.64
6/27/2022 22:24	-0.10	6/27/2022 21:53	11.67
6/27/2022 22:25	-0.11	6/27/2022 21:54	11.70
6/27/2022 22:26	-0.12	6/27/2022 21:55	11.68
6/27/2022 22:27	-0.10	6/27/2022 21:56	11.69
6/27/2022 22:28	-0.12	6/27/2022 21:57	11.69
6/27/2022 22:29	-0.10	6/27/2022 21:58	11.68
6/27/2022 22:30	-0.10	6/27/2022 21:59	11.70
6/27/2022 22:31	-0.10	6/27/2022 22:00	11.71
6/27/2022 22:32	-0.12	6/27/2022 22:01	11.67
6/27/2022 22:33	-0.10	6/27/2022 22:02	11.70
6/27/2022 22:34	-0.12	6/27/2022 22:03	11.75
6/27/2022 22:35	-0.12	6/27/2022 22:04	11.72
6/27/2022 22:36	-0.10	6/27/2022 22:05	11.68
6/27/2022 22:37	-0.12	6/27/2022 22:06	11.74
6/27/2022 22:38	-0.12	6/27/2022 22:07	11.72
6/27/2022 22:39	-0.11	6/27/2022 22:08	11.70
6/27/2022 22:40	-0.10	6/27/2022 22:09	11.68
6/27/2022 22:41	-0.10	6/27/2022 22:10	11.74
6/27/2022 22:42	-0.11	6/27/2022 22:11	11.70
6/27/2022 22:43	-0.11	6/27/2022 22:12	11.69
6/27/2022 22:44	-0.10	6/27/2022 22:13	11.65
6/27/2022 22:45	-0.10	6/27/2022 22:14	11.69
6/27/2022 22:46	-0.12	6/27/2022 22:15	11.76
6/27/2022 22:47	-0.12	6/27/2022 22:16	11.64
6/27/2022 22:48	-0.10	6/27/2022 22:17	11.64
6/27/2022 22:49	-0.10	6/27/2022 22:18	11.64
6/27/2022 22:50	-0.11	6/27/2022 22:19	11.66
6/27/2022 22:51	-0.10	6/27/2022 22:20	11.69
6/27/2022 22:52	-0.12	6/27/2022 22:21	11.67
6/27/2022 22:53	-0.11	6/27/2022 22:22	11.68
6/27/2022 22:54	-0.10	6/27/2022 22:23	11.69
6/27/2022 22:55	-0.10	6/27/2022 22:24	11.69
6/27/2022 22:56	-0.10	6/27/2022 22:25	11.71
6/27/2022 22:57	-0.10	6/27/2022 22:26	11.67
6/27/2022 22:58	-0.10	6/27/2022 22:27	11.68
6/27/2022 22:59	-0.10	6/27/2022 22:28	11.69
6/27/2022 23:00	-0.10	6/27/2022 22:29	11.72
6/27/2022 23:01	-0.12	6/27/2022 22:30	11.68
6/27/2022 23:02	-0.10	6/27/2022 22:31	11.70
6/27/2022 23:03	-0.12	6/27/2022 22:32	11.67
6/27/2022 23:04	-0.12	6/27/2022 22:33	11.64
6/27/2022 23:05	-0.10	6/27/2022 22:34	11.72
6/27/2022 23:06	-0.12	6/27/2022 22:35	11.70
6/27/2022 23:07	-0.10	6/27/2022 22:36	11.72
6/27/2022 23:08	-0.12	6/27/2022 22:37	11.69
6/27/2022 23:09	-0.11	6/27/2022 22:38	11.70
6/27/2022 23:10	-0.12	6/27/2022 22:39	11.76
6/27/2022 23:11	-0.12	6/27/2022 22:40	11.69
6/27/2022 23:12	-0.12	6/27/2022 22:41	11.76
6/27/2022 23:13	-0.10	6/27/2022 22:42	11.72
6/27/2022 23:14	-0.12	6/27/2022 22:43	11.72
6/27/2022 23:15	-0.10	6/27/2022 22:44	11.76
6/27/2022 23:16	-0.12	6/27/2022 22:45	11.66
6/27/2022 23:17	-0.10	6/27/2022 22:46	11.66
6/27/2022 23:18	-0.10	6/27/2022 22:47	11.66
6/27/2022 23:19	-0.11	6/27/2022 22:48	11.73
6/27/2022 23:20	-0.10	6/27/2022 22:49	11.70
6/27/2022 23:21	-0.10	6/27/2022 22:50	11.66
6/27/2022 23:22	-0.12	6/27/2022 22:51	11.68
6/27/2022 23:23	-0.10	6/27/2022 22:52	11.71
6/27/2022 23:24	-0.10	6/27/2022 22:53	11.67
6/27/2022 23:25	-0.11	6/27/2022 22:54	11.74
6/27/2022 23:26	-0.12	6/27/2022 22:55	11.68
6/27/2022 23:27	-0.10	6/27/2022 22:56	11.72
6/27/2022 23:28	-0.12	6/27/2022 22:57	11.68

6/27/2022 23:29	-0.12	6/27/2022 22:58	11.70
6/27/2022 23:30	-0.10	6/27/2022 22:59	11.70
6/27/2022 23:31	-0.12	6/27/2022 23:00	11.71
6/27/2022 23:32	-0.12	6/27/2022 23:01	11.70
6/27/2022 23:33	-0.11	6/27/2022 23:02	11.74
6/27/2022 23:34	-0.12	6/27/2022 23:03	11.69
6/27/2022 23:35	-0.12	6/27/2022 23:04	11.70
6/27/2022 23:36	-0.10	6/27/2022 23:05	11.70
6/27/2022 23:37	-0.12	6/27/2022 23:06	11.71
6/27/2022 23:38	-0.12	6/27/2022 23:07	11.70
6/27/2022 23:39	-0.10	6/27/2022 23:08	11.65
6/27/2022 23:40	-0.11	6/27/2022 23:09	11.72
6/27/2022 23:41	-0.10	6/27/2022 23:10	11.71
6/27/2022 23:42	-0.10	6/27/2022 23:11	11.72
6/27/2022 23:43	-0.12	6/27/2022 23:12	11.74
6/27/2022 23:44	-0.12	6/27/2022 23:13	11.71
6/27/2022 23:45	-0.10	6/27/2022 23:14	11.76
6/27/2022 23:46	-0.12	6/27/2022 23:15	11.70
6/27/2022 23:47	-0.12	6/27/2022 23:16	11.67
6/27/2022 23:48	-0.11	6/27/2022 23:17	11.72
6/27/2022 23:49	-0.11	6/27/2022 23:18	11.73
6/27/2022 23:50	-0.12	6/27/2022 23:19	11.69
6/27/2022 23:51	-0.11	6/27/2022 23:20	11.71
6/27/2022 23:52	-0.10	6/27/2022 23:21	11.75
6/27/2022 23:53	-0.11	6/27/2022 23:22	11.70
6/27/2022 23:54	-0.10	6/27/2022 23:23	11.73
6/27/2022 23:55	-0.10	6/27/2022 23:24	11.72
6/27/2022 23:56	-0.12	6/27/2022 23:25	11.74
6/27/2022 23:57	-0.12	6/27/2022 23:26	11.67
6/27/2022 23:58	-0.10	6/27/2022 23:27	11.65
6/27/2022 23:59	-0.12	6/27/2022 23:28	11.74
6/28/2022 0:00	-0.11	6/27/2022 23:29	11.70
6/28/2022 0:01	-0.10	6/27/2022 23:30	11.68
6/28/2022 0:02	-0.10	6/27/2022 23:31	11.67
6/28/2022 0:03	-0.12	6/27/2022 23:32	11.69
6/28/2022 0:04	-0.11	6/27/2022 23:33	11.75
6/28/2022 0:05	-0.12	6/27/2022 23:34	11.67
6/28/2022 0:06	-0.12	6/27/2022 23:35	11.70
6/28/2022 0:07	-0.12	6/27/2022 23:36	11.71
6/28/2022 0:08	-0.12	6/27/2022 23:37	11.71
6/28/2022 0:09	-0.10	6/27/2022 23:38	11.68
6/28/2022 0:10	-0.10	6/27/2022 23:39	11.69
6/28/2022 0:11	-0.10	6/27/2022 23:40	11.71
6/28/2022 0:12	-0.12	6/27/2022 23:41	11.68
6/28/2022 0:13	-0.11	6/27/2022 23:42	11.72
6/28/2022 0:14	-0.10	6/27/2022 23:43	11.69
6/28/2022 0:15	-0.11	6/27/2022 23:44	11.65
6/28/2022 0:16	-0.10	6/27/2022 23:45	11.71
6/28/2022 0:17	-0.12	6/27/2022 23:46	11.65
6/28/2022 0:18	-0.10	6/27/2022 23:47	11.67
6/28/2022 0:19	-0.12	6/27/2022 23:48	11.72
6/28/2022 0:20	-0.10	6/27/2022 23:49	11.73
6/28/2022 0:21	-0.10	6/27/2022 23:50	11.71
6/28/2022 0:22	-0.11	6/27/2022 23:51	11.73
6/28/2022 0:23	-0.10	6/27/2022 23:52	11.71
6/28/2022 0:24	-0.10	6/27/2022 23:53	11.77
6/28/2022 0:25	-0.11	6/27/2022 23:54	11.69
6/28/2022 0:26	-0.12	6/27/2022 23:55	11.74
6/28/2022 0:27	-0.12	6/27/2022 23:56	11.72
6/28/2022 0:28	-0.10	6/27/2022 23:57	11.73
6/28/2022 0:29	-0.10	6/27/2022 23:58	11.73
6/28/2022 0:30	-0.11	6/27/2022 23:59	11.68
6/28/2022 0:31	-0.10	6/28/2022 0:00	11.69
6/28/2022 0:32	-0.11	6/28/2022 0:01	11.70
6/28/2022 0:33	-0.10	6/28/2022 0:02	11.64
6/28/2022 0:34	-0.12	6/28/2022 0:03	11.68
6/28/2022 0:35	-0.10	6/28/2022 0:04	11.67
6/28/2022 0:36	-0.10	6/28/2022 0:05	11.70
6/28/2022 0:37	-0.10	6/28/2022 0:06	11.69
6/28/2022 0:38	-0.11	6/28/2022 0:07	11.68
6/28/2022 0:39	-0.12	6/28/2022 0:08	11.70
6/28/2022 0:40	-0.11	6/28/2022 0:09	11.70
6/28/2022 0:41	-0.10	6/28/2022 0:10	11.69
6/28/2022 0:42	-0.11	6/28/2022 0:11	11.73
6/28/2022 0:43	-0.11	6/28/2022 0:12	11.67
6/28/2022 0:44	-0.10	6/28/2022 0:13	11.73
6/28/2022 0:45	-0.10	6/28/2022 0:14	11.70
6/28/2022 0:46	-0.10	6/28/2022 0:15	11.73
6/28/2022 0:47	-0.10	6/28/2022 0:16	11.73
6/28/2022 0:48	-0.10	6/28/2022 0:17	11.70
6/28/2022 0:49	-0.12	6/28/2022 0:18	11.74
6/28/2022 0:50	-0.12	6/28/2022 0:19	11.76
6/28/2022 0:51	-0.10	6/28/2022 0:20	11.75
6/28/2022 0:52	-0.12	6/28/2022 0:21	11.68
6/28/2022 0:53	-0.10	6/28/2022 0:22	11.73
6/28/2022 0:54	-0.10	6/28/2022 0:23	11.70
6/28/2022 0:55	-0.10	6/28/2022 0:24	11.71
6/28/2022 0:56	-0.12	6/28/2022 0:25	11.69

6/28/2022 0:57	-0.10	6/28/2022 0:26	11.71
6/28/2022 0:58	-0.10	6/28/2022 0:27	11.66
6/28/2022 0:59	-0.12	6/28/2022 0:28	11.70
6/28/2022 1:00	-0.12	6/28/2022 0:29	11.74
6/28/2022 1:01	-0.10	6/28/2022 0:30	11.71
6/28/2022 1:02	-0.12	6/28/2022 0:31	11.67
6/28/2022 1:03	-0.12	6/28/2022 0:32	11.73
6/28/2022 1:04	-0.10	6/28/2022 0:33	11.65
6/28/2022 1:05	-0.10	6/28/2022 0:34	11.71
6/28/2022 1:06	-0.10	6/28/2022 0:35	11.71
6/28/2022 1:07	-0.12	6/28/2022 0:36	11.75
6/28/2022 1:08	-0.12	6/28/2022 0:37	11.69
6/28/2022 1:09	-0.10	6/28/2022 0:38	11.72
6/28/2022 1:10	-0.10	6/28/2022 0:39	11.72
6/28/2022 1:11	-0.10	6/28/2022 0:40	11.71
6/28/2022 1:12	-0.12	6/28/2022 0:41	11.69
6/28/2022 1:13	-0.10	6/28/2022 0:42	11.73
6/28/2022 1:14	-0.11	6/28/2022 0:43	11.70
6/28/2022 1:15	-0.10	6/28/2022 0:44	11.67
6/28/2022 1:16	-0.10	6/28/2022 0:45	11.68
6/28/2022 1:17	-0.10	6/28/2022 0:46	11.70
6/28/2022 1:18	-0.10	6/28/2022 0:47	11.68
6/28/2022 1:19	-0.12	6/28/2022 0:48	11.74
6/28/2022 1:20	-0.11	6/28/2022 0:49	11.69
6/28/2022 1:21	-0.12	6/28/2022 0:50	11.65
6/28/2022 1:22	-0.10	6/28/2022 0:51	11.69
6/28/2022 1:23	-0.12	6/28/2022 0:52	11.74
6/28/2022 1:24	-0.10	6/28/2022 0:53	11.66
6/28/2022 1:25	-0.11	6/28/2022 0:54	11.74
6/28/2022 1:26	-0.11	6/28/2022 0:55	11.67
6/28/2022 1:27	-0.10	6/28/2022 0:56	11.68
6/28/2022 1:28	-0.12	6/28/2022 0:57	11.72
6/28/2022 1:29	-0.12	6/28/2022 0:58	11.73
6/28/2022 1:30	-0.12	6/28/2022 0:59	11.76
6/28/2022 1:31	-0.12	6/28/2022 1:00	11.75
6/28/2022 1:32	-0.10	6/28/2022 1:01	11.73
6/28/2022 1:33	-0.12	6/28/2022 1:02	11.69
6/28/2022 1:34	-0.10	6/28/2022 1:03	11.68
6/28/2022 1:35	-0.12	6/28/2022 1:04	11.66
6/28/2022 1:36	-0.12	6/28/2022 1:05	11.70
6/28/2022 1:37	-0.12	6/28/2022 1:06	11.68
6/28/2022 1:38	-0.11	6/28/2022 1:07	11.67
6/28/2022 1:39	-0.12	6/28/2022 1:08	11.70
6/28/2022 1:40	-0.12	6/28/2022 1:09	11.70
6/28/2022 1:41	-0.12	6/28/2022 1:10	11.72
6/28/2022 1:42	-0.12	6/28/2022 1:11	11.74
6/28/2022 1:43	-0.12	6/28/2022 1:12	11.72
6/28/2022 1:44	-0.10	6/28/2022 1:13	11.74
6/28/2022 1:45	-0.12	6/28/2022 1:14	11.70
6/28/2022 1:46	-0.10	6/28/2022 1:15	11.74
6/28/2022 1:47	-0.12	6/28/2022 1:16	11.70
6/28/2022 1:48	-0.10	6/28/2022 1:17	11.72
6/28/2022 1:49	-0.12	6/28/2022 1:18	11.73
6/28/2022 1:50	-0.10	6/28/2022 1:19	11.65
6/28/2022 1:51	-0.10	6/28/2022 1:20	11.70
6/28/2022 1:52	-0.12	6/28/2022 1:21	11.67
6/28/2022 1:53	-0.10	6/28/2022 1:22	11.68
6/28/2022 1:54	-0.12	6/28/2022 1:23	11.69
6/28/2022 1:55	-0.10	6/28/2022 1:24	11.73
6/28/2022 1:56	-0.10	6/28/2022 1:25	11.70
6/28/2022 1:57	-0.10	6/28/2022 1:26	11.69
6/28/2022 1:58	-0.10	6/28/2022 1:27	11.69
6/28/2022 1:59	-0.12	6/28/2022 1:28	11.67
6/28/2022 2:00	-0.10	6/28/2022 1:29	11.72
6/28/2022 2:01	-0.10	6/28/2022 1:30	11.72
6/28/2022 2:02	-0.10	6/28/2022 1:31	11.70
6/28/2022 2:03	-0.12	6/28/2022 1:32	11.71
6/28/2022 2:04	-0.11	6/28/2022 1:33	11.67
6/28/2022 2:05	-0.10	6/28/2022 1:34	11.63
6/28/2022 2:06	-0.12	6/28/2022 1:35	11.71
6/28/2022 2:07	-0.12	6/28/2022 1:36	11.72
6/28/2022 2:08	-0.12	6/28/2022 1:37	11.70
6/28/2022 2:09	-0.10	6/28/2022 1:38	11.70
6/28/2022 2:10	-0.10	6/28/2022 1:39	11.68
6/28/2022 2:11	-0.11	6/28/2022 1:40	11.65
6/28/2022 2:12	-0.10	6/28/2022 1:41	11.73
6/28/2022 2:13	-0.10	6/28/2022 1:42	11.69
6/28/2022 2:14	-0.12	6/28/2022 1:43	11.66
6/28/2022 2:15	-0.12	6/28/2022 1:44	11.67
6/28/2022 2:16	-0.10	6/28/2022 1:45	11.72
6/28/2022 2:17	-0.10	6/28/2022 1:46	11.68
6/28/2022 2:18	-0.10	6/28/2022 1:47	11.68
6/28/2022 2:19	-0.10	6/28/2022 1:48	11.73
6/28/2022 2:20	-0.12	6/28/2022 1:49	11.72
6/28/2022 2:21	-0.12	6/28/2022 1:50	11.71
6/28/2022 2:22	-0.10	6/28/2022 1:51	11.71
6/28/2022 2:23	-0.12	6/28/2022 1:52	11.70
6/28/2022 2:24	-0.12	6/28/2022 1:53	11.72

6/28/2022 2:25	-0.10	6/28/2022 1:54	11.72
6/28/2022 2:26	-0.11	6/28/2022 1:55	11.70
6/28/2022 2:27	-0.12	6/28/2022 1:56	11.69
6/28/2022 2:28	-0.12	6/28/2022 1:57	11.67
6/28/2022 2:29	-0.11	6/28/2022 1:58	11.77
6/28/2022 2:30	-0.10	6/28/2022 1:59	11.68
6/28/2022 2:31	-0.12	6/28/2022 2:00	11.73
6/28/2022 2:32	-0.12	6/28/2022 2:01	11.72
6/28/2022 2:33	-0.11	6/28/2022 2:02	11.69
6/28/2022 2:34	-0.11	6/28/2022 2:03	11.70
6/28/2022 2:35	-0.10	6/28/2022 2:04	11.69
6/28/2022 2:36	-0.12	6/28/2022 2:05	11.74
6/28/2022 2:37	-0.12	6/28/2022 2:06	11.67
6/28/2022 2:38	-0.12	6/28/2022 2:07	11.69
6/28/2022 2:39	-0.12	6/28/2022 2:08	11.65
6/28/2022 2:40	-0.10	6/28/2022 2:09	11.68
6/28/2022 2:41	-0.12	6/28/2022 2:10	11.72
6/28/2022 2:42	-0.12	6/28/2022 2:11	11.73
6/28/2022 2:43	-0.12	6/28/2022 2:12	11.69
6/28/2022 2:44	-0.11	6/28/2022 2:13	11.73
6/28/2022 2:45	-0.12	6/28/2022 2:14	11.73
6/28/2022 2:46	-0.12	6/28/2022 2:15	11.70
6/28/2022 2:47	-0.12	6/28/2022 2:16	11.72
6/28/2022 2:48	-0.12	6/28/2022 2:17	11.68
6/28/2022 2:49	-0.12	6/28/2022 2:18	11.70
6/28/2022 2:50	-0.11	6/28/2022 2:19	11.76
6/28/2022 2:51	-0.10	6/28/2022 2:20	11.80
6/28/2022 2:52	-0.12	6/28/2022 2:21	11.69
6/28/2022 2:53	-0.10	6/28/2022 2:22	11.74
6/28/2022 2:54	-0.10	6/28/2022 2:23	11.73
6/28/2022 2:55	-0.10	6/28/2022 2:24	11.73
6/28/2022 2:56	-0.12	6/28/2022 2:25	11.73
6/28/2022 2:57	-0.12	6/28/2022 2:26	11.75
6/28/2022 2:58	-0.10	6/28/2022 2:27	11.74
6/28/2022 2:59	-0.11	6/28/2022 2:28	11.66
6/28/2022 3:00	-0.12	6/28/2022 2:29	11.75
6/28/2022 3:01	-0.12	6/28/2022 2:30	11.69
6/28/2022 3:02	-0.11	6/28/2022 2:31	11.75
6/28/2022 3:03	-0.12	6/28/2022 2:32	11.71
6/28/2022 3:04	-0.12	6/28/2022 2:33	11.74
6/28/2022 3:05	-0.10	6/28/2022 2:34	11.73
6/28/2022 3:06	-0.12	6/28/2022 2:35	11.72
6/28/2022 3:07	-0.12	6/28/2022 2:36	11.68
6/28/2022 3:08	-0.12	6/28/2022 2:37	11.69
6/28/2022 3:09	-0.10	6/28/2022 2:38	11.68
6/28/2022 3:10	-0.10	6/28/2022 2:39	11.73
6/28/2022 3:11	-0.10	6/28/2022 2:40	11.73
6/28/2022 3:12	-0.10	6/28/2022 2:41	11.73
6/28/2022 3:13	-0.10	6/28/2022 2:42	11.71
6/28/2022 3:14	-0.12	6/28/2022 2:43	11.67
6/28/2022 3:15	-0.10	6/28/2022 2:44	11.73
6/28/2022 3:16	-0.12	6/28/2022 2:45	11.73
6/28/2022 3:17	-0.10	6/28/2022 2:46	11.73
6/28/2022 3:18	-0.12	6/28/2022 2:47	11.71
6/28/2022 3:19	-0.12	6/28/2022 2:48	11.72
6/28/2022 3:20	-0.12	6/28/2022 2:49	11.64
6/28/2022 3:21	-0.10	6/28/2022 2:50	11.73
6/28/2022 3:22	-0.10	6/28/2022 2:51	11.72
6/28/2022 3:23	-0.10	6/28/2022 2:52	11.73
6/28/2022 3:24	-0.10	6/28/2022 2:53	11.69
6/28/2022 3:25	-0.12	6/28/2022 2:54	11.68
6/28/2022 3:26	-0.10	6/28/2022 2:55	11.76
6/28/2022 3:27	-0.12	6/28/2022 2:56	11.70
6/28/2022 3:28	-0.10	6/28/2022 2:57	11.74
6/28/2022 3:29	-0.10	6/28/2022 2:58	11.70
6/28/2022 3:30	-0.10	6/28/2022 2:59	11.70
6/28/2022 3:31	-0.11	6/28/2022 3:00	11.71
6/28/2022 3:32	-0.10	6/28/2022 3:01	11.66
6/28/2022 3:33	-0.10	6/28/2022 3:02	11.74
6/28/2022 3:34	-0.10	6/28/2022 3:03	11.76
6/28/2022 3:35	-0.12	6/28/2022 3:04	11.68
6/28/2022 3:36	-0.12	6/28/2022 3:05	11.74
6/28/2022 3:37	-0.10	6/28/2022 3:06	11.74
6/28/2022 3:38	-0.12	6/28/2022 3:07	11.78
6/28/2022 3:39	-0.10	6/28/2022 3:08	11.71
6/28/2022 3:40	-0.10	6/28/2022 3:09	11.75
6/28/2022 3:41	-0.12	6/28/2022 3:10	11.70
6/28/2022 3:42	-0.10	6/28/2022 3:11	11.71
6/28/2022 3:43	-0.12	6/28/2022 3:12	11.68
6/28/2022 3:44	-0.12	6/28/2022 3:13	11.73
6/28/2022 3:45	-0.12	6/28/2022 3:14	11.70
6/28/2022 3:46	-0.12	6/28/2022 3:15	11.72
6/28/2022 3:47	-0.10	6/28/2022 3:16	11.69
6/28/2022 3:48	-0.12	6/28/2022 3:17	11.73
6/28/2022 3:49	-0.12	6/28/2022 3:18	11.71
6/28/2022 3:50	-0.10	6/28/2022 3:19	11.75
6/28/2022 3:51	-0.12	6/28/2022 3:20	11.68
6/28/2022 3:52	-0.12	6/28/2022 3:21	11.73

6/28/2022 3:53	-0.12	6/28/2022 3:22	11.68
6/28/2022 3:54	-0.12	6/28/2022 3:23	11.72
6/28/2022 3:55	-0.10	6/28/2022 3:24	11.69
6/28/2022 3:56	-0.11	6/28/2022 3:25	11.70
6/28/2022 3:57	-0.12	6/28/2022 3:26	11.76
6/28/2022 3:58	-0.10	6/28/2022 3:27	11.72
6/28/2022 3:59	-0.12	6/28/2022 3:28	11.69
6/28/2022 4:00	-0.12	6/28/2022 3:29	11.77
6/28/2022 4:01	-0.10	6/28/2022 3:30	11.70
6/28/2022 4:02	-0.12	6/28/2022 3:31	11.73
6/28/2022 4:03	-0.12	6/28/2022 3:32	11.68
6/28/2022 4:04	-0.12	6/28/2022 3:33	11.73
6/28/2022 4:05	-0.12	6/28/2022 3:34	11.72
6/28/2022 4:06	-0.11	6/28/2022 3:35	11.70
6/28/2022 4:07	-0.10	6/28/2022 3:36	11.72
6/28/2022 4:08	-0.12	6/28/2022 3:37	11.71
6/28/2022 4:09	-0.12	6/28/2022 3:38	11.71
6/28/2022 4:10	-0.10	6/28/2022 3:39	11.73
6/28/2022 4:11	-0.12	6/28/2022 3:40	11.70
6/28/2022 4:12	-0.10	6/28/2022 3:41	11.68
6/28/2022 4:13	-0.10	6/28/2022 3:42	11.74
6/28/2022 4:14	-0.12	6/28/2022 3:43	11.75
6/28/2022 4:15	-0.10	6/28/2022 3:44	11.73
6/28/2022 4:16	-0.10	6/28/2022 3:45	11.68
6/28/2022 4:17	-0.10	6/28/2022 3:46	11.73
6/28/2022 4:18	-0.12	6/28/2022 3:47	11.70
6/28/2022 4:19	-0.10	6/28/2022 3:48	11.71
6/28/2022 4:20	-0.10	6/28/2022 3:49	11.74
6/28/2022 4:21	-0.10	6/28/2022 3:50	11.75
6/28/2022 4:22	-0.12	6/28/2022 3:51	11.71
6/28/2022 4:23	-0.10	6/28/2022 3:52	11.71
6/28/2022 4:24	-0.12	6/28/2022 3:53	11.73
6/28/2022 4:25	-0.12	6/28/2022 3:54	11.72
6/28/2022 4:26	-0.10	6/28/2022 3:55	11.68
6/28/2022 4:27	-0.12	6/28/2022 3:56	11.74
6/28/2022 4:28	-0.12	6/28/2022 3:57	11.71
6/28/2022 4:29	-0.12	6/28/2022 3:58	11.74
6/28/2022 4:30	-0.10	6/28/2022 3:59	11.69
6/28/2022 4:31	-0.12	6/28/2022 4:00	11.74
6/28/2022 4:32	-0.10	6/28/2022 4:01	11.68
6/28/2022 4:33	-0.12	6/28/2022 4:02	11.77
6/28/2022 4:34	-0.12	6/28/2022 4:03	11.73
6/28/2022 4:35	-0.10	6/28/2022 4:04	11.73
6/28/2022 4:36	-0.12	6/28/2022 4:05	11.76
6/28/2022 4:37	-0.12	6/28/2022 4:06	11.72
6/28/2022 4:38	-0.12	6/28/2022 4:07	11.69
6/28/2022 4:39	-0.12	6/28/2022 4:08	11.74
6/28/2022 4:40	-0.12	6/28/2022 4:09	11.76
6/28/2022 4:41	-0.12	6/28/2022 4:10	11.72
6/28/2022 4:42	-0.10	6/28/2022 4:11	11.72
6/28/2022 4:43	-0.11	6/28/2022 4:12	11.76
6/28/2022 4:44	-0.12	6/28/2022 4:13	11.71
6/28/2022 4:45	-0.12	6/28/2022 4:14	11.74
6/28/2022 4:46	-0.11	6/28/2022 4:15	11.73
6/28/2022 4:47	-0.11	6/28/2022 4:16	11.71
6/28/2022 4:48	-0.12	6/28/2022 4:17	11.73
6/28/2022 4:49	-0.12	6/28/2022 4:18	11.69
6/28/2022 4:50	-0.12	6/28/2022 4:19	11.74
6/28/2022 4:51	-0.12	6/28/2022 4:20	11.72
6/28/2022 4:52	-0.12	6/28/2022 4:21	11.72
6/28/2022 4:53	-0.12	6/28/2022 4:22	11.71
6/28/2022 4:54	-0.11	6/28/2022 4:23	11.72
6/28/2022 4:55	-0.10	6/28/2022 4:24	11.73
6/28/2022 4:56	-0.12	6/28/2022 4:25	11.70
6/28/2022 4:57	-0.11	6/28/2022 4:26	11.71
6/28/2022 4:58	-0.12	6/28/2022 4:27	11.72
6/28/2022 4:59	-0.12	6/28/2022 4:28	11.73
6/28/2022 5:00	-0.10	6/28/2022 4:29	11.75
6/28/2022 5:01	-0.12	6/28/2022 4:30	11.68
6/28/2022 5:02	-0.12	6/28/2022 4:31	11.68
6/28/2022 5:03	-0.12	6/28/2022 4:32	11.67
6/28/2022 5:04	-0.10	6/28/2022 4:33	11.75
6/28/2022 5:05	-0.11	6/28/2022 4:34	11.69
6/28/2022 5:06	-0.12	6/28/2022 4:35	11.74
6/28/2022 5:07	-0.12	6/28/2022 4:36	11.71
6/28/2022 5:08	-0.10	6/28/2022 4:37	11.76
6/28/2022 5:09	-0.12	6/28/2022 4:38	11.71
6/28/2022 5:10	-0.12	6/28/2022 4:39	11.76
6/28/2022 5:11	-0.11	6/28/2022 4:40	11.74
6/28/2022 5:12	-0.12	6/28/2022 4:41	11.72
6/28/2022 5:13	-0.10	6/28/2022 4:42	11.70
6/28/2022 5:14	-0.10	6/28/2022 4:43	11.67
6/28/2022 5:15	-0.10	6/28/2022 4:44	11.76
6/28/2022 5:16	-0.10	6/28/2022 4:45	11.73
6/28/2022 5:17	-0.10	6/28/2022 4:46	11.71
6/28/2022 5:18	-0.10	6/28/2022 4:47	11.71
6/28/2022 5:19	-0.12	6/28/2022 4:48	11.70
6/28/2022 5:20	-0.12	6/28/2022 4:49	11.69

6/28/2022 5:21	-0.12	6/28/2022 4:50	11.73
6/28/2022 5:22	-0.12	6/28/2022 4:51	11.67
6/28/2022 5:23	-0.12	6/28/2022 4:52	11.71
6/28/2022 5:24	-0.12	6/28/2022 4:53	11.78
6/28/2022 5:25	-0.12	6/28/2022 4:54	11.73
6/28/2022 5:26	-0.10	6/28/2022 4:55	11.74
6/28/2022 5:27	-0.12	6/28/2022 4:56	11.68
6/28/2022 5:28	-0.10	6/28/2022 4:57	11.70
6/28/2022 5:29	-0.10	6/28/2022 4:58	11.76
6/28/2022 5:30	-0.12	6/28/2022 4:59	11.73
6/28/2022 5:31	-0.12	6/28/2022 5:00	11.73
6/28/2022 5:32	-0.12	6/28/2022 5:01	11.73
6/28/2022 5:33	-0.12	6/28/2022 5:02	11.67
6/28/2022 5:34	-0.12	6/28/2022 5:03	11.79
6/28/2022 5:35	-0.10	6/28/2022 5:04	11.75
6/28/2022 5:36	-0.10	6/28/2022 5:05	11.70
6/28/2022 5:37	-0.10	6/28/2022 5:06	11.78
6/28/2022 5:38	-0.12	6/28/2022 5:07	11.70
6/28/2022 5:39	-0.12	6/28/2022 5:08	11.79
6/28/2022 5:40	-0.12	6/28/2022 5:09	11.77
6/28/2022 5:41	-0.10	6/28/2022 5:10	11.70
6/28/2022 5:42	-0.12	6/28/2022 5:11	11.77
6/28/2022 5:43	-0.10	6/28/2022 5:12	11.76
6/28/2022 5:44	-0.10	6/28/2022 5:13	11.71
6/28/2022 5:45	-0.12	6/28/2022 5:14	11.72
6/28/2022 5:46	-0.12	6/28/2022 5:15	11.73
6/28/2022 5:47	-0.11	6/28/2022 5:16	11.74
6/28/2022 5:48	-0.12	6/28/2022 5:17	11.78
6/28/2022 5:49	-0.12	6/28/2022 5:18	11.66
6/28/2022 5:50	-0.10	6/28/2022 5:19	11.74
6/28/2022 5:51	-0.12	6/28/2022 5:20	11.68
6/28/2022 5:52	-0.10	6/28/2022 5:21	11.73
6/28/2022 5:53	-0.12	6/28/2022 5:22	11.75
6/28/2022 5:54	-0.10	6/28/2022 5:23	11.76
6/28/2022 5:55	-0.12	6/28/2022 5:24	11.78
6/28/2022 5:56	-0.10	6/28/2022 5:25	11.70
6/28/2022 5:57	-0.10	6/28/2022 5:26	11.76
6/28/2022 5:58	-0.10	6/28/2022 5:27	11.75
6/28/2022 5:59	-0.12	6/28/2022 5:28	11.75
6/28/2022 6:00	-0.12	6/28/2022 5:29	11.73
6/28/2022 6:01	-0.12	6/28/2022 5:30	11.77
6/28/2022 6:02	-0.12	6/28/2022 5:31	11.69
6/28/2022 6:03	-0.10	6/28/2022 5:32	11.76
6/28/2022 6:04	-0.10	6/28/2022 5:33	11.72
6/28/2022 6:05	-0.12	6/28/2022 5:34	11.68
6/28/2022 6:06	-0.12	6/28/2022 5:35	11.70
6/28/2022 6:07	-0.10	6/28/2022 5:36	11.75
6/28/2022 6:08	-0.10	6/28/2022 5:37	11.72
6/28/2022 6:09	-0.12	6/28/2022 5:38	11.73
6/28/2022 6:10	-0.12	6/28/2022 5:39	11.75
6/28/2022 6:11	-0.10	6/28/2022 5:40	11.73
6/28/2022 6:12	-0.12	6/28/2022 5:41	11.72
6/28/2022 6:13	-0.12	6/28/2022 5:42	11.70
6/28/2022 6:14	-0.12	6/28/2022 5:43	11.78
6/28/2022 6:15	-0.10	6/28/2022 5:44	11.73
6/28/2022 6:16	-0.12	6/28/2022 5:45	11.74
6/28/2022 6:17	-0.12	6/28/2022 5:46	11.71
6/28/2022 6:18	-0.12	6/28/2022 5:47	11.75
6/28/2022 6:19	-0.12	6/28/2022 5:48	11.75
6/28/2022 6:20	-0.12	6/28/2022 5:49	11.73
6/28/2022 6:21	-0.12	6/28/2022 5:50	11.72
6/28/2022 6:22	-0.10	6/28/2022 5:51	11.74
6/28/2022 6:23	-0.12	6/28/2022 5:52	11.79
6/28/2022 6:24	-0.11	6/28/2022 5:53	11.74
6/28/2022 6:25	-0.10	6/28/2022 5:54	11.78
6/28/2022 6:26	-0.12	6/28/2022 5:55	11.74
6/28/2022 6:27	-0.12	6/28/2022 5:56	11.69
6/28/2022 6:28	-0.12	6/28/2022 5:57	11.77
6/28/2022 6:29	-0.10	6/28/2022 5:58	11.75
6/28/2022 6:30	-0.10	6/28/2022 5:59	11.73
6/28/2022 6:31	-0.12	6/28/2022 6:00	11.70
6/28/2022 6:32	-0.10	6/28/2022 6:01	11.66
6/28/2022 6:33	-0.10	6/28/2022 6:02	11.70
6/28/2022 6:34	-0.12	6/28/2022 6:03	11.73
6/28/2022 6:35	-0.10	6/28/2022 6:04	11.73
6/28/2022 6:36	-0.12	6/28/2022 6:05	11.69
6/28/2022 6:37	-0.10	6/28/2022 6:06	11.72
6/28/2022 6:38	-0.12	6/28/2022 6:07	11.80
6/28/2022 6:39	-0.10	6/28/2022 6:08	11.82
6/28/2022 6:40	-0.12	6/28/2022 6:09	11.78
6/28/2022 6:41	-0.12	6/28/2022 6:10	11.71
6/28/2022 6:42	-0.10	6/28/2022 6:11	11.69
6/28/2022 6:43	-0.12	6/28/2022 6:12	11.77
6/28/2022 6:44	-0.12	6/28/2022 6:13	11.71
6/28/2022 6:45	-0.12	6/28/2022 6:14	11.70
6/28/2022 6:46	-0.10	6/28/2022 6:15	11.69
6/28/2022 6:47	-0.10	6/28/2022 6:16	11.71
6/28/2022 6:48	-0.11	6/28/2022 6:17	11.76

6/28/2022 6:49	-0.10	6/28/2022 6:18	11.74
6/28/2022 6:50	-0.12	6/28/2022 6:19	11.74
6/28/2022 6:51	-0.12	6/28/2022 6:20	11.77
6/28/2022 6:52	-0.10	6/28/2022 6:21	11.68
6/28/2022 6:53	-0.12	6/28/2022 6:22	11.80
6/28/2022 6:54	-0.10	6/28/2022 6:23	11.78
6/28/2022 6:55	-0.10	6/28/2022 6:24	11.74
6/28/2022 6:56	-0.12	6/28/2022 6:25	11.73
6/28/2022 6:57	-0.12	6/28/2022 6:26	11.74
6/28/2022 6:58	-0.11	6/28/2022 6:27	11.77
6/28/2022 6:59	-0.12	6/28/2022 6:28	11.74
6/28/2022 7:00	-0.12	6/28/2022 6:29	11.76
6/28/2022 7:01	-0.12	6/28/2022 6:30	11.72
6/28/2022 7:02	-0.12	6/28/2022 6:31	11.74
6/28/2022 7:03	-0.12	6/28/2022 6:32	11.75
6/28/2022 7:04	-0.12	6/28/2022 6:33	11.69
6/28/2022 7:05	-0.10	6/28/2022 6:34	11.73
6/28/2022 7:06	-0.12	6/28/2022 6:35	11.73
6/28/2022 7:07	-0.12	6/28/2022 6:36	11.72
6/28/2022 7:08	-0.10	6/28/2022 6:37	11.73
6/28/2022 7:09	-0.12	6/28/2022 6:38	11.73
6/28/2022 7:10	-0.10	6/28/2022 6:39	11.71
6/28/2022 7:11	-0.12	6/28/2022 6:40	11.73
6/28/2022 7:12	-0.12	6/28/2022 6:41	11.73
6/28/2022 7:13	-0.12	6/28/2022 6:42	11.72
6/28/2022 7:14	-0.12	6/28/2022 6:43	11.76
6/28/2022 7:15	-0.10	6/28/2022 6:44	11.72
6/28/2022 7:16	-0.10	6/28/2022 6:45	11.72
6/28/2022 7:17	-0.12	6/28/2022 6:46	11.74
6/28/2022 7:18	-0.12	6/28/2022 6:47	11.69
6/28/2022 7:19	-0.12	6/28/2022 6:48	11.72
6/28/2022 7:20	-0.11	6/28/2022 6:49	11.74
6/28/2022 7:21	-0.12	6/28/2022 6:50	11.79
6/28/2022 7:22	-0.12	6/28/2022 6:51	11.73
6/28/2022 7:23	-0.12	6/28/2022 6:52	11.75
6/28/2022 7:24	-0.12	6/28/2022 6:53	11.72
6/28/2022 7:25	-0.10	6/28/2022 6:54	11.75
6/28/2022 7:26	-0.12	6/28/2022 6:55	11.77
6/28/2022 7:27	-0.10	6/28/2022 6:56	11.75
6/28/2022 7:28	-0.12	6/28/2022 6:57	11.74
6/28/2022 7:29	-0.12	6/28/2022 6:58	11.78
6/28/2022 7:30	-0.12	6/28/2022 6:59	11.77
6/28/2022 7:31	-0.12	6/28/2022 7:00	11.78
6/28/2022 7:32	-0.11	6/28/2022 7:01	11.74
6/28/2022 7:33	-0.10	6/28/2022 7:02	11.75
6/28/2022 7:34	-0.12	6/28/2022 7:03	11.74
6/28/2022 7:35	-0.10	6/28/2022 7:04	11.73
6/28/2022 7:36	-0.12	6/28/2022 7:05	11.69
6/28/2022 7:37	-0.10	6/28/2022 7:06	11.72
6/28/2022 7:38	-0.12	6/28/2022 7:07	11.75
6/28/2022 7:39	-0.10	6/28/2022 7:08	11.74
6/28/2022 7:40	-0.10	6/28/2022 7:09	11.75
6/28/2022 7:41	-0.10	6/28/2022 7:10	11.72
6/28/2022 7:42	-0.11	6/28/2022 7:11	11.74
6/28/2022 7:43	-0.12	6/28/2022 7:12	11.75
6/28/2022 7:44	-0.10	6/28/2022 7:13	11.72
6/28/2022 7:45	-0.12	6/28/2022 7:14	11.75
6/28/2022 7:46	-0.12	6/28/2022 7:15	11.69
6/28/2022 7:47	-0.12	6/28/2022 7:16	11.72
6/28/2022 7:48	-0.12	6/28/2022 7:17	11.74
6/28/2022 7:49	-0.12	6/28/2022 7:18	11.77
6/28/2022 7:50	-0.10	6/28/2022 7:19	11.72
6/28/2022 7:51	-0.12	6/28/2022 7:20	11.70
6/28/2022 7:52	-0.12	6/28/2022 7:21	11.75
6/28/2022 7:53	-0.10	6/28/2022 7:22	11.72
6/28/2022 7:54	-0.11	6/28/2022 7:23	11.74
6/28/2022 7:55	-0.12	6/28/2022 7:24	11.68
6/28/2022 7:56	-0.10	6/28/2022 7:25	11.74
6/28/2022 7:57	-0.11	6/28/2022 7:26	11.73
6/28/2022 7:58	-0.10	6/28/2022 7:27	11.74
6/28/2022 7:59	-0.12	6/28/2022 7:28	11.75
6/28/2022 8:00	-0.12	6/28/2022 7:29	11.77
6/28/2022 8:01	-0.12	6/28/2022 7:30	11.74
6/28/2022 8:02	-0.12	6/28/2022 7:31	11.76
6/28/2022 8:03	-0.10	6/28/2022 7:32	11.74
6/28/2022 8:04	-0.10	6/28/2022 7:33	11.71
6/28/2022 8:05	-0.10	6/28/2022 7:34	11.73
6/28/2022 8:06	-0.12	6/28/2022 7:35	11.72
6/28/2022 8:07	-0.12	6/28/2022 7:36	11.75
6/28/2022 8:08	-0.12	6/28/2022 7:37	11.73
6/28/2022 8:09	-0.10	6/28/2022 7:38	11.75
6/28/2022 8:10	-0.12	6/28/2022 7:39	11.72
6/28/2022 8:11	-0.10	6/28/2022 7:40	11.75
6/28/2022 8:12	-0.12	6/28/2022 7:41	11.78
6/28/2022 8:13	-0.12	6/28/2022 7:42	11.75
6/28/2022 8:14	-0.10	6/28/2022 7:43	11.69
6/28/2022 8:15	-0.12	6/28/2022 7:44	11.73
6/28/2022 8:16	-0.10	6/28/2022 7:45	11.81

6/28/2022 8:17	-0.12	6/28/2022 7:46	11.75
6/28/2022 8:18	-0.12	6/28/2022 7:47	11.75
6/28/2022 8:19	-0.12	6/28/2022 7:48	11.72
6/28/2022 8:20	-0.12	6/28/2022 7:49	11.74
6/28/2022 8:21	-0.10	6/28/2022 7:50	11.80
6/28/2022 8:22	-0.12	6/28/2022 7:51	11.74
6/28/2022 8:23	-0.12	6/28/2022 7:52	11.77
6/28/2022 8:24	-0.10	6/28/2022 7:53	11.67
6/28/2022 8:25	-0.10	6/28/2022 7:54	11.76
6/28/2022 8:26	-0.12	6/28/2022 7:55	11.76
6/28/2022 8:27	-0.11	6/28/2022 7:56	11.73
6/28/2022 8:28	-0.12	6/28/2022 7:57	11.79
6/28/2022 8:29	-0.10	6/28/2022 7:58	11.77
6/28/2022 8:30	-0.12	6/28/2022 7:59	11.79
6/28/2022 8:31	-0.12	6/28/2022 8:00	11.73
6/28/2022 8:32	-0.12	6/28/2022 8:01	11.72
6/28/2022 8:33	-0.12	6/28/2022 8:02	11.76
6/28/2022 8:34	-0.12	6/28/2022 8:03	11.73
6/28/2022 8:35	-0.10	6/28/2022 8:04	11.74
6/28/2022 8:36	-0.10	6/28/2022 8:05	11.76
6/28/2022 8:37	-0.12	6/28/2022 8:06	11.75
6/28/2022 8:38	-0.10	6/28/2022 8:07	11.73
6/28/2022 8:39	-0.12	6/28/2022 8:08	11.67
6/28/2022 8:40	-0.10	6/28/2022 8:09	11.75
6/28/2022 8:41	-0.12	6/28/2022 8:10	11.72
6/28/2022 8:42	-0.10	6/28/2022 8:11	11.75
6/28/2022 8:43	-0.12	6/28/2022 8:12	11.77
6/28/2022 8:44	-0.10	6/28/2022 8:13	11.77
6/28/2022 8:45	-0.10	6/28/2022 8:14	11.75
6/28/2022 8:46	-0.12	6/28/2022 8:15	11.75
6/28/2022 8:47	-0.11	6/28/2022 8:16	11.73
6/28/2022 8:48	-0.12	6/28/2022 8:17	11.78
6/28/2022 8:49	-0.12	6/28/2022 8:18	11.74
6/28/2022 8:50	-0.12	6/28/2022 8:19	11.75
6/28/2022 8:51	-0.12	6/28/2022 8:20	11.75
6/28/2022 8:52	-0.10	6/28/2022 8:21	11.73
6/28/2022 8:53	-0.10	6/28/2022 8:22	11.75
6/28/2022 8:54	-0.12	6/28/2022 8:23	11.77
6/28/2022 8:55	-0.10	6/28/2022 8:24	11.75
6/28/2022 8:56	-0.10	6/28/2022 8:25	11.77
6/28/2022 8:57	-0.10	6/28/2022 8:26	11.72
6/28/2022 8:58	-0.11	6/28/2022 8:27	11.73
6/28/2022 8:59	-0.12	6/28/2022 8:28	11.73
6/28/2022 9:00	-0.10	6/28/2022 8:29	11.78
6/28/2022 9:01	-0.10	6/28/2022 8:30	11.77
6/28/2022 9:02	-0.12	6/28/2022 8:31	11.72
6/28/2022 9:03	-0.12	6/28/2022 8:32	11.75
6/28/2022 9:04	-0.10	6/28/2022 8:33	11.75
6/28/2022 9:05	-0.12	6/28/2022 8:34	11.76
6/28/2022 9:06	-0.12	6/28/2022 8:35	11.78
6/28/2022 9:07	-0.10	6/28/2022 8:36	11.78
6/28/2022 9:08	-0.12	6/28/2022 8:37	11.79
6/28/2022 9:09	-0.12	6/28/2022 8:38	11.72
6/28/2022 9:10	-0.12	6/28/2022 8:39	11.71
6/28/2022 9:11	-0.10	6/28/2022 8:40	11.72
6/28/2022 9:12	-0.12	6/28/2022 8:41	11.76
6/28/2022 9:13	-0.11	6/28/2022 8:42	11.77
6/28/2022 9:14	-0.12	6/28/2022 8:43	11.75
6/28/2022 9:15	-0.10	6/28/2022 8:44	11.70
6/28/2022 9:16	-0.12	6/28/2022 8:45	11.77
6/28/2022 9:17	-0.12	6/28/2022 8:46	11.77
6/28/2022 9:18	-0.10	6/28/2022 8:47	11.75
6/28/2022 9:19	-0.10	6/28/2022 8:48	11.71
6/28/2022 9:20	-0.10	6/28/2022 8:49	11.76
6/28/2022 9:21	-0.12	6/28/2022 8:50	11.82
6/28/2022 9:22	-0.10	6/28/2022 8:51	11.76
6/28/2022 9:23	-0.10	6/28/2022 8:52	11.73
6/28/2022 9:24	-0.10	6/28/2022 8:53	11.77
6/28/2022 9:25	-0.10	6/28/2022 8:54	11.75
6/28/2022 9:26	-0.12	6/28/2022 8:55	11.75
6/28/2022 9:27	-0.10	6/28/2022 8:56	11.72
6/28/2022 9:28	-0.10	6/28/2022 8:57	11.77
6/28/2022 9:29	-0.12	6/28/2022 8:58	11.78
6/28/2022 9:30	-0.12	6/28/2022 8:59	11.81
6/28/2022 9:31	-0.12	6/28/2022 9:00	11.69
6/28/2022 9:32	-0.12	6/28/2022 9:01	11.74
6/28/2022 9:33	-0.10	6/28/2022 9:02	11.77
6/28/2022 9:34	-0.12	6/28/2022 9:03	11.77
6/28/2022 9:35	-0.11	6/28/2022 9:04	11.76
6/28/2022 9:36	-0.12	6/28/2022 9:05	11.74
6/28/2022 9:37	-0.10	6/28/2022 9:06	11.75
6/28/2022 9:38	-0.12	6/28/2022 9:07	11.78
6/28/2022 9:39	-0.12	6/28/2022 9:08	11.73
6/28/2022 9:40	-0.10	6/28/2022 9:09	11.74
6/28/2022 9:41	-0.10	6/28/2022 9:10	11.77
6/28/2022 9:42	-0.10	6/28/2022 9:11	11.78
6/28/2022 9:43	-0.10	6/28/2022 9:12	11.76
6/28/2022 9:44	-0.10	6/28/2022 9:13	11.76

6/28/2022 9:45	-0.10
6/28/2022 9:46	-0.12
6/28/2022 9:47	-0.10
6/28/2022 9:48	-0.10
6/28/2022 9:49	-0.12
6/28/2022 9:50	-0.12
6/28/2022 9:51	-0.10
6/28/2022 9:52	-0.11
6/28/2022 9:53	-0.10
6/28/2022 9:54	-0.10
6/28/2022 9:55	-0.10
6/28/2022 9:56	-0.12
6/28/2022 9:57	-0.10
6/28/2022 9:58	-0.12
6/28/2022 9:59	-0.10
6/28/2022 10:00	-0.10
6/28/2022 10:01	-0.10
6/28/2022 10:02	-0.10
6/28/2022 10:03	-0.12
6/28/2022 10:04	-0.10
6/28/2022 10:05	-0.10
6/28/2022 10:06	-0.10
6/28/2022 10:07	-0.10
6/28/2022 10:08	-0.10
6/28/2022 10:09	-0.12
6/28/2022 10:10	-0.12
6/28/2022 10:11	-0.12
6/28/2022 10:12	-0.12
6/28/2022 10:13	-0.12
6/28/2022 10:14	-0.12
6/28/2022 10:15	-0.12
6/28/2022 10:16	-0.10
6/28/2022 10:17	-0.12
6/28/2022 10:18	-0.10
6/28/2022 10:19	-0.10
6/28/2022 10:20	-0.12
6/28/2022 10:21	-0.12
6/28/2022 10:22	-0.12
6/28/2022 10:23	-0.10
6/28/2022 10:24	-0.12
6/28/2022 10:25	-0.12
6/28/2022 10:26	-0.10
6/28/2022 10:27	-0.10
6/28/2022 10:28	-0.12
6/28/2022 10:29	-0.10
6/28/2022 10:30	-0.10
6/28/2022 10:31	-0.12
6/28/2022 10:32	-0.12
6/28/2022 10:33	-0.12
6/28/2022 10:34	-0.12
6/28/2022 10:35	-0.12
6/28/2022 10:36	-0.10
6/28/2022 10:37	-0.12
6/28/2022 10:38	-0.10
6/28/2022 10:39	-0.10
6/28/2022 10:40	-0.12
6/28/2022 10:41	-0.10
6/28/2022 10:42	-0.12
6/28/2022 10:43	-0.12
6/28/2022 10:44	-0.12
6/28/2022 10:45	-0.12
6/28/2022 10:46	-0.12
6/28/2022 10:47	-0.10
6/28/2022 10:48	-0.10
6/28/2022 10:49	-0.10
6/28/2022 10:50	-0.10
6/28/2022 10:51	-0.10
6/28/2022 10:52	-0.10
6/28/2022 10:53	-0.10
6/28/2022 10:54	-0.12
6/28/2022 10:55	-0.10
6/28/2022 10:56	-0.10
6/28/2022 10:57	-0.10
6/28/2022 10:58	-0.10
6/28/2022 10:59	-0.10
6/28/2022 11:00	-0.10
6/28/2022 11:01	-0.10
6/28/2022 11:02	-0.10
6/28/2022 11:03	-0.10
6/28/2022 11:04	-0.10
6/28/2022 11:05	-0.11
6/28/2022 11:06	-0.12
6/28/2022 11:07	-0.11
6/28/2022 11:08	-0.10
6/28/2022 11:09	-0.11
6/28/2022 11:10	-0.10
6/28/2022 11:11	-0.10
6/28/2022 11:12	-0.12

6/28/2022 9:14	11.76
6/28/2022 9:15	11.77
6/28/2022 9:16	11.79
6/28/2022 9:17	11.76
6/28/2022 9:18	11.80
6/28/2022 9:19	11.72
6/28/2022 9:20	11.73
6/28/2022 9:21	11.75
6/28/2022 9:22	11.81
6/28/2022 9:23	11.77
6/28/2022 9:24	11.73
6/28/2022 9:25	11.76
6/28/2022 9:26	11.72
6/28/2022 9:27	11.71
6/28/2022 9:28	11.78
6/28/2022 9:29	11.79
6/28/2022 9:30	11.78
6/28/2022 9:31	11.80
6/28/2022 9:32	11.74
6/28/2022 9:33	11.76
6/28/2022 9:34	11.76
6/28/2022 9:35	11.76
6/28/2022 9:36	11.77
6/28/2022 9:37	11.77
6/28/2022 9:38	11.71
6/28/2022 9:39	11.78
6/28/2022 9:40	11.72
6/28/2022 9:41	11.73
6/28/2022 9:42	11.73
6/28/2022 9:43	11.78
6/28/2022 9:44	11.78
6/28/2022 9:45	11.75
6/28/2022 9:46	11.73
6/28/2022 9:47	11.74
6/28/2022 9:48	11.75
6/28/2022 9:49	11.83
6/28/2022 9:50	11.75
6/28/2022 9:51	11.74
6/28/2022 9:52	11.78
6/28/2022 9:53	11.79
6/28/2022 9:54	11.78
6/28/2022 9:55	11.77
6/28/2022 9:56	11.74
6/28/2022 9:57	11.81
6/28/2022 9:58	11.74
6/28/2022 9:59	11.78
6/28/2022 10:00	11.78
6/28/2022 10:01	11.75
6/28/2022 10:02	11.77
6/28/2022 10:03	11.77
6/28/2022 10:04	11.73
6/28/2022 10:05	11.76
6/28/2022 10:06	11.71
6/28/2022 10:07	11.78
6/28/2022 10:08	11.74
6/28/2022 10:09	11.76
6/28/2022 10:10	11.74
6/28/2022 10:11	11.78
6/28/2022 10:12	11.73
6/28/2022 10:13	11.74
6/28/2022 10:14	11.76
6/28/2022 10:15	11.80
6/28/2022 10:16	11.78
6/28/2022 10:17	11.78
6/28/2022 10:18	11.80
6/28/2022 10:19	11.78
6/28/2022 10:20	11.81
6/28/2022 10:21	11.73
6/28/2022 10:22	11.78
6/28/2022 10:23	11.77
6/28/2022 10:24	11.78
6/28/2022 10:25	11.75
6/28/2022 10:26	11.75
6/28/2022 10:27	11.75
6/28/2022 10:28	11.71
6/28/2022 10:29	11.73
6/28/2022 10:30	11.68
6/28/2022 10:31	11.65
6/28/2022 10:32	11.60
6/28/2022 10:33	11.60
6/28/2022 10:34	11.57

6/28/2022 11:13	-0.10
6/28/2022 11:14	-0.10
6/28/2022 11:15	-0.12
6/28/2022 11:16	-0.12
6/28/2022 11:17	-0.10
6/28/2022 11:18	-0.10
6/28/2022 11:19	-0.10
6/28/2022 11:20	-0.10
6/28/2022 11:21	-0.12
6/28/2022 11:22	-0.12
6/28/2022 11:23	-0.10
6/28/2022 11:24	-0.10
6/28/2022 11:25	-0.12
6/28/2022 11:26	-0.10
6/28/2022 11:27	-0.12
6/28/2022 11:28	-0.10
6/28/2022 11:29	-0.12
6/28/2022 11:30	-0.10
6/28/2022 11:31	-0.10
6/28/2022 11:32	-0.10
6/28/2022 11:33	-0.12
6/28/2022 11:34	-0.10
6/28/2022 11:35	-0.12
6/28/2022 11:36	-0.12
6/28/2022 11:37	-0.10
6/28/2022 11:38	-0.12
6/28/2022 11:39	-0.10
6/28/2022 11:40	-0.10
6/28/2022 11:41	-0.10
6/28/2022 11:42	-0.10
6/28/2022 11:43	-0.10
6/28/2022 11:44	-0.10
6/28/2022 11:45	-0.12
6/28/2022 11:46	-0.10
6/28/2022 11:47	-0.10
6/28/2022 11:48	-0.10
6/28/2022 11:49	-0.12
6/28/2022 11:50	-0.10
6/28/2022 11:51	-0.10
6/28/2022 11:52	-0.11
6/28/2022 11:53	-0.12
6/28/2022 11:54	-0.10
6/28/2022 11:55	-0.10
6/28/2022 11:56	-0.12
6/28/2022 11:57	-0.10
6/28/2022 11:58	-0.10
6/28/2022 11:59	-0.10
6/28/2022 12:00	-0.12
6/28/2022 12:01	-0.12
6/28/2022 12:02	-0.10
6/28/2022 12:03	-0.11
6/28/2022 12:04	-0.12

4 Norman Place		6 Byram Hill Road		8 Colonial Court		8 Embassy Court		8 Evan Place	
Date/Time	Level Depth to Water (ft)	Date/Time	Level Depth to Water (ft)	Date/Time	Level Depth to Water (ft)	Date/Time	Level Depth to Water (ft)	Date/Time	Level Depth to Water (ft)
6/15/2022 13:55	49.85	6/15/2022 12:37	80.53	6/14/2022 11:00	17.12	6/14/2022 10:09	6.55	6/14/2022 15:05	77.88
6/15/2022 13:56	49.87	6/15/2022 12:38	80.52	6/14/2022 11:01	17.14	6/14/2022 10:10	6.58	6/14/2022 15:06	77.77
6/15/2022 13:57	49.88	6/15/2022 12:39	80.57	6/14/2022 11:02	17.08	6/14/2022 10:11	6.67	6/14/2022 15:07	77.72
6/15/2022 13:58	49.85	6/15/2022 12:40	80.59	6/14/2022 11:03	17.12	6/14/2022 10:12	6.54	6/14/2022 15:08	77.57
6/15/2022 13:59	49.82	6/15/2022 12:41	80.54	6/14/2022 11:04	17.04	6/14/2022 10:13	6.52	6/14/2022 15:09	77.50
6/15/2022 14:00	49.82	6/15/2022 12:42	80.56	6/14/2022 11:05	17.05	6/14/2022 10:14	6.49	6/14/2022 15:10	77.40
6/15/2022 14:01	49.82	6/15/2022 12:43	80.54	6/14/2022 11:06	17.00	6/14/2022 10:15	6.54	6/14/2022 15:11	77.29
6/15/2022 14:02	49.81	6/15/2022 12:44	80.55	6/14/2022 11:07	17.01	6/14/2022 10:16	6.45	6/14/2022 15:12	77.23
6/15/2022 14:03	49.82	6/15/2022 12:45	80.55	6/14/2022 11:08	17.03	6/14/2022 10:17	6.43	6/14/2022 15:13	77.12
6/15/2022 14:04	49.81	6/15/2022 12:46	80.53	6/14/2022 11:09	17.07	6/14/2022 10:18	6.48	6/14/2022 15:14	77.03
6/15/2022 14:05	49.78	6/15/2022 12:47	80.57	6/14/2022 11:10	17.00	6/14/2022 10:19	6.42	6/14/2022 15:15	76.96
6/15/2022 14:06	49.79	6/15/2022 12:48	80.52	6/14/2022 11:11	16.99	6/14/2022 10:20	6.38	6/14/2022 15:16	76.84
6/15/2022 14:07	49.78	6/15/2022 12:49	80.55	6/14/2022 11:12	16.99	6/14/2022 10:21	6.44	6/14/2022 15:17	76.78
6/15/2022 14:08	49.75	6/15/2022 12:50	80.52	6/14/2022 11:13	16.97	6/14/2022 10:22	6.41	6/14/2022 15:18	76.69
6/15/2022 14:09	49.77	6/15/2022 12:51	80.50	6/14/2022 11:14	16.92	6/14/2022 10:23	6.45	6/14/2022 15:19	76.59
6/15/2022 14:10	49.75	6/15/2022 12:52	80.53	6/14/2022 11:15	16.93	6/14/2022 10:24	6.37	6/14/2022 15:20	76.54
6/15/2022 14:11	49.76	6/15/2022 12:53	80.55	6/14/2022 11:16	16.93	6/14/2022 10:25	6.37	6/14/2022 15:21	76.42
6/15/2022 14:12	49.78	6/15/2022 12:54	80.51	6/14/2022 11:17	16.94	6/14/2022 10:26	6.38	6/14/2022 15:22	76.37
6/15/2022 14:13	49.74	6/15/2022 12:55	80.55	6/14/2022 11:18	16.92	6/14/2022 10:27	6.33	6/14/2022 15:23	76.28
6/15/2022 14:14	49.75	6/15/2022 12:56	80.55	6/14/2022 11:19	16.89	6/14/2022 10:28	6.32	6/14/2022 15:24	76.16
6/15/2022 14:15	49.74	6/15/2022 12:57	80.54	6/14/2022 11:20	16.85	6/14/2022 10:29	6.31	6/14/2022 15:25	76.09
6/15/2022 14:16	49.73	6/15/2022 12:58	80.51	6/14/2022 11:21	16.90	6/14/2022 10:30	6.31	6/14/2022 15:26	76.00
6/15/2022 14:17	49.72	6/15/2022 12:59	80.50	6/14/2022 11:22	16.86	6/14/2022 10:31	6.26	6/14/2022 15:27	75.89
6/15/2022 14:18	49.68	6/15/2022 13:00	80.54	6/14/2022 11:23	16.86	6/14/2022 10:32	6.25	6/14/2022 15:28	75.81
6/15/2022 14:19	49.71	6/15/2022 13:01	80.54	6/14/2022 11:24	16.89	6/14/2022 10:33	6.25	6/14/2022 15:29	75.72
6/15/2022 14:20	49.72	6/15/2022 13:02	80.52	6/14/2022 11:25	16.86	6/14/2022 10:34	6.27	6/14/2022 15:30	75.65
6/15/2022 14:21	49.71	6/15/2022 13:03	80.50	6/14/2022 11:26	16.87	6/14/2022 10:35	6.22	6/14/2022 15:31	75.56
6/15/2022 14:22	49.74	6/15/2022 13:04	80.54	6/14/2022 11:27	16.82	6/14/2022 10:36	6.24	6/14/2022 15:32	75.48
6/15/2022 14:23	49.73	6/15/2022 13:05	80.53	6/14/2022 11:28	16.83	6/14/2022 10:37	6.25	6/14/2022 15:33	75.38
6/15/2022 14:24	49.67	6/15/2022 13:06	80.53	6/14/2022 11:29	16.81	6/14/2022 10:38	6.28	6/14/2022 15:34	75.31
6/15/2022 14:25	49.67	6/15/2022 13:07	80.50	6/14/2022 11:30	16.77	6/14/2022 10:39	6.18	6/14/2022 15:35	75.22
6/15/2022 14:26	49.66	6/15/2022 13:08	80.51	6/14/2022 11:31	16.80	6/14/2022 10:40	6.16	6/14/2022 15:36	75.16
6/15/2022 14:27	49.67	6/15/2022 13:09	80.52	6/14/2022 11:32	16.82	6/14/2022 10:41	6.16	6/14/2022 15:37	75.07
6/15/2022 14:28	49.68	6/15/2022 13:10	80.51	6/14/2022 11:33	16.79	6/14/2022 10:42	6.39	6/14/2022 15:38	74.99
6/15/2022 14:29	49.66	6/15/2022 13:11	80.51	6/14/2022 11:34	16.82	6/14/2022 10:43	6.31	6/14/2022 15:39	74.88
6/15/2022 14:30	49.67	6/15/2022 13:12	80.51	6/14/2022 11:35	16.77	6/14/2022 10:44	6.68	6/14/2022 15:40	74.83
6/15/2022 14:31	49.68	6/15/2022 13:13	80.50	6/14/2022 11:36	16.77	6/14/2022 10:45	6.93	6/14/2022 15:41	74.75
6/15/2022 14:32	49.68	6/15/2022 13:14	80.53	6/14/2022 11:37	16.74	6/14/2022 10:46	7.08	6/14/2022 15:42	74.65
6/15/2022 14:33	49.64	6/15/2022 13:15	80.52	6/14/2022 11:38	16.80	6/14/2022 10:47	6.99	6/14/2022 15:43	74.60
6/15/2022 14:34	49.64	6/15/2022 13:16	80.54	6/14/2022 11:39	16.77	6/14/2022 10:48	6.96	6/14/2022 15:44	74.53
6/15/2022 14:35	49.65	6/15/2022 13:17	80.49	6/14/2022 11:40	16.76	6/14/2022 10:49	6.94	6/14/2022 15:45	74.43
6/15/2022 14:36	49.64	6/15/2022 13:18	80.52	6/14/2022 11:41	16.75	6/14/2022 10:50	6.96	6/14/2022 15:46	74.37
6/15/2022 14:37	49.65	6/15/2022 13:19	80.53	6/14/2022 11:42	16.73	6/14/2022 10:51	6.70	6/14/2022 15:47	74.28
6/15/2022 14:38	49.63	6/15/2022 13:20	80.49	6/14/2022 11:43	16.73	6/14/2022 10:52	6.65	6/14/2022 15:48	74.23
6/15/2022 14:39	49.64	6/15/2022 13:21	80.50	6/14/2022 11:44	16.79	6/14/2022 10:53	6.46	6/14/2022 15:49	74.14
6/15/2022 14:40	49.64	6/15/2022 13:22	80.49	6/14/2022 11:45	16.76	6/14/2022 10:54	6.41	6/14/2022 15:50	74.06
6/15/2022 14:41	49.62	6/15/2022 13:23	80.51	6/14/2022 11:46	18.10	6/14/2022 10:55	6.40	6/14/2022 15:51	74.01
6/15/2022 14:42	49.63	6/15/2022 13:24	80.47	6/14/2022 11:47	23.24	6/14/2022 10:56	6.39	6/14/2022 15:52	73.95
6/15/2022 14:43	49.59	6/15/2022 13:25	80.52	6/14/2022 11:48	26.21	6/14/2022 10:57	6.41	6/14/2022 15:53	73.88
6/15/2022 14:44	49.61	6/15/2022 13:26	80.49	6/14/2022 11:49	23.55	6/14/2022 10:58	6.33	6/14/2022 15:54	73.79
6/15/2022 14:45	49.61	6/15/2022 13:27	80.51	6/14/2022 11:50	21.79	6/14/2022 10:59	6.28	6/14/2022 15:55	73.73
6/15/2022 14:46	49.61	6/15/2022 13:28	80.48	6/14/2022 11:51	20.79	6/14/2022 11:00	6.25	6/14/2022 15:56	73.64
6/15/2022 14:47	49.64	6/15/2022 13:29	80.46	6/14/2022 11:52	20.12	6/14/2022 11:01	6.24	6/14/2022 15:57	73.60
6/15/2022 14:48	49.58	6/15/2022 13:30	80.49	6/14/2022 11:53	19.68	6/14/2022 11:02	6.24	6/14/2022 15:58	73.51
6/15/2022 14:49	49.55	6/15/2022 13:31	80.51	6/14/2022 11:54	19.36	6/14/2022 11:03	6.21	6/14/2022 15:59	73.44
6/15/2022 14:50	49.57	6/15/2022 13:32	80.52	6/14/2022 11:55	19.13	6/14/2022 11:04	6.23	6/14/2022 16:00	73.39
6/15/2022 14:51	49.58	6/15/2022 13:33	80.49	6/14/2022 11:56	18.94	6/14/2022 11:05	6.20	6/14/2022 16:01	73.35
6/15/2022 14:52	49.59	6/15/2022 13:34	80.51	6/14/2022 11:57	18.78	6/14/2022 11:06	6.12	6/14/2022 16:02	73.27
6/15/2022 14:53	49.57	6/15/2022 13:35	80.52	6/14/2022 11:58	18.66	6/14/2022 11:07	6.14	6/14/2022 16:03	73.18
6/15/2022 14:54	49.59	6/15/2022 13:36	80.47	6/14/2022 11:59	18.56	6/14/2022 11:08	6.20	6/14/2022 16:04	73.13
6/15/2022 14:55	49.59	6/15/2022 13:37	80.50	6/14/2022 12:00	18.42	6/14/2022 11:09	6.09	6/14/2022 16:05	73.06
6/15/2022 14:56	49.59	6/15/2022 13:38	80.49	6/14/2022 12:01	18.35	6/14/2022 11:10	6.10	6/14/2022 16:06	72.99
6/15/2022 14:57	49.58	6/15/2022 13:39	80.45	6/14/2022 12:02	18.23	6/14/2022 11:11	6.10	6/14/2022 16:07	72.94
6/15/2022 14:58	49.56	6/15/2022 13:40	80.47	6/14/2022 12:03	18.12	6/14/2022 11:12	6.14	6/14/2022 16:08	72.86
6/15/2022 14:59	49.53	6/15/2022 13:41	80.48	6/14/2022 12:04	18.10	6/14/2022 11:13	6.12	6/14/2022 16:09	72.82
6/15/2022 15:00	49.54	6/15/2022 13:42	80.47	6/14/2022 12:05	18.07	6/14/2022 11:14	6.07	6/14/2022 16:10	72.73
6/15/2022 15:01	49.56	6/15/2022 13:43	80.50	6/14/2022 12:06	17.98	6/14/2022 11:15	6.09	6/14/2022 16:11	72.74
6/15/2022 15:02	49.53	6/15/2022 13:44	80.48	6/14/2022 12:07	17.92	6/14/2022 11:16	6.02	6/14/2022 16:12	72.66
6/15/2022 15:03	49.53	6/15/2022 13:45	80.52	6/14/2022 12:08	17.90	6/14/2022 11:17	6.04	6/14/2022 16:13	72.55
6/15/2022 15:04	49.55	6/15/2022 13:46	80.51	6/14/2022 12:09	17.80	6/14/2022 11:18	6.02	6/14/2022 16:14	72.51
6/15/2022 15:05	49.50	6/15/2022 13:47	80.50	6/14/2022 12:10	17.80	6/14/2022 11:19	6.04	6/14/2022 16:15	72.50
6/15/2022 15:06	49.53	6/15/2022 13:48	80.50	6/14/2022 12:11	17.74	6/14/2022 11:20	5.97	6/14/2022 16:16	72.40
6/15/2022 15:07	49.53	6/15/2022 13:49	80.48	6/14/2022 12:12	17.76	6/14/2022 11:21	6.00	6/14/2022 16:17	72.31
6/15/2022 15:08	49.51	6/15/2022 13:50	80.48	6/14/2022 12:13	17.64	6/14/2022 11:22	5.98	6/14/2022 16:18	72.28
6/15/2022 15:09	49.51	6/15/2022 13:51	80.52	6/14/2022 12:14	17.59	6/14/2022 11:23	5.97	6/14/2022 16:19	72.21
6/15/2022 15:10	49.54	6/15/2022 13:52	80.48	6/14/2022 12:15	17.55	6/14/2022 11:24	5.94	6/14/2022 16:20	72.17
6/15/2022 15:11	49.50	6/15/2022 13:53	80.48	6/14/2022 12:16	17.56	6/14/2022 11:25	5.97	6/14/2022 16:21	72.09
6/15/2022 15:12	49.52	6/15/2022 13:54	82.52	6/14/2022 12:17	17.54	6/14/2022 11:26	5.88	6/14/2022 16:22	72.06
6/15/2022 15:13	49.54	6/15/2022 13:55	81.97	6/14/2022 12:18	17.49	6/14/2022 11:27	5.91	6/14/2022 16:23	71.99
6/15/2022 15:14	49.50	6/15/2022 13:56	81.66	6/14/2022 12:19	17.46	6/14/2022 11:28	5.94	6/14/2022 16:24	71.92
6/15/2022 15:15	49.51	6/15/2022 13:57	81.49	6/14/2022 12:20	17.46	6/14/2022 11:29	5.97	6/14/2022 16:25	71.88
6/15/2022 15:16	49.50	6/15/2022 13:58	81.36	6/14/2022 12:21	17.43	6/14/2022 11:30	5.90	6/14/2022 16:26	71.86

6/15/2022 15:17	49.50	6/15/2022 13:59	81.25	6/14/2022 12:22	17.35	6/14/2022 11:31	5.88	6/14/2022 16:27	71.74
6/15/2022 15:18	49.51	6/15/2022 14:00	81.17	6/14/2022 12:23	17.32	6/14/2022 11:32	5.85	6/14/2022 16:28	71.70
6/15/2022 15:19	49.48	6/15/2022 14:01	81.03	6/14/2022 12:24	17.33	6/14/2022 11:33	5.83	6/14/2022 16:29	71.62
6/15/2022 15:20	49.49	6/15/2022 14:02	80.99	6/14/2022 12:25	17.29	6/14/2022 11:34	5.82	6/14/2022 16:30	71.60
6/15/2022 15:21	49.47	6/15/2022 14:03	80.97	6/14/2022 12:26	17.24	6/14/2022 11:35	5.86	6/14/2022 16:31	71.55
6/15/2022 15:22	49.49	6/15/2022 14:04	80.86	6/14/2022 12:27	17.20	6/14/2022 11:36	6.02	6/14/2022 16:32	71.51
6/15/2022 15:23	49.50	6/15/2022 14:05	80.83	6/14/2022 12:28	17.20	6/14/2022 11:37	5.99	6/14/2022 16:33	71.45
6/15/2022 15:24	49.49	6/15/2022 14:06	80.82	6/14/2022 12:29	17.20	6/14/2022 11:38	5.95	6/14/2022 16:34	71.40
6/15/2022 15:25	49.48	6/15/2022 14:07	80.76	6/14/2022 12:30	17.22	6/14/2022 11:39	5.79	6/14/2022 16:35	71.34
6/15/2022 15:26	49.45	6/15/2022 14:08	80.75	6/14/2022 12:31	17.19	6/14/2022 11:40	5.80	6/14/2022 16:36	71.29
6/15/2022 15:27	49.44	6/15/2022 14:09	80.71	6/14/2022 12:32	17.16	6/14/2022 11:41	5.82	6/14/2022 16:37	71.22
6/15/2022 15:28	49.45	6/15/2022 14:10	80.70	6/14/2022 12:33	17.16	6/14/2022 11:42	5.89	6/14/2022 16:38	71.19
6/15/2022 15:29	49.46	6/15/2022 14:11	80.64	6/14/2022 12:34	17.13	6/14/2022 11:43	5.78	6/14/2022 16:39	71.14
6/15/2022 15:30	49.48	6/15/2022 14:12	80.66	6/14/2022 12:35	17.09	6/14/2022 11:44	5.75	6/14/2022 16:40	71.06
6/15/2022 15:31	49.45	6/15/2022 14:13	80.60	6/14/2022 12:36	17.08	6/14/2022 11:45	5.82	6/14/2022 16:41	71.00
6/15/2022 15:32	49.45	6/15/2022 14:14	80.67	6/14/2022 12:37	17.08	6/14/2022 11:46	5.79	6/14/2022 16:42	71.00
6/15/2022 15:33	49.45	6/15/2022 14:15	80.64	6/14/2022 12:38	17.06	6/14/2022 11:47	5.77	6/14/2022 16:43	70.93
6/15/2022 15:34	49.41	6/15/2022 14:16	82.56	6/14/2022 12:39	17.01	6/14/2022 11:48	5.71	6/14/2022 16:44	70.89
6/15/2022 15:35	49.46	6/15/2022 14:17	82.19	6/14/2022 12:40	17.00	6/14/2022 11:49	5.73	6/14/2022 16:45	70.84
6/15/2022 15:36	49.44	6/15/2022 14:18	81.93	6/14/2022 12:41	17.01	6/14/2022 11:50	5.80	6/14/2022 16:46	70.78
6/15/2022 15:37	49.47	6/15/2022 14:19	82.68	6/14/2022 12:42	17.02	6/14/2022 11:51	5.90	6/14/2022 16:47	70.73
6/15/2022 15:38	49.45	6/15/2022 14:20	82.65	6/14/2022 12:43	17.00	6/14/2022 11:52	5.94	6/14/2022 16:48	70.72
6/15/2022 15:39	49.43	6/15/2022 14:21	82.36	6/14/2022 12:44	16.91	6/14/2022 11:53	5.81	6/14/2022 16:49	70.64
6/15/2022 15:40	49.42	6/15/2022 14:22	82.07	6/14/2022 12:45	16.91	6/14/2022 11:54	5.80	6/14/2022 16:50	70.58
6/15/2022 15:41	49.43	6/15/2022 14:23	82.36	6/14/2022 12:46	16.91	6/14/2022 11:55	5.77	6/14/2022 16:51	70.53
6/15/2022 15:42	49.43	6/15/2022 14:24	82.67	6/14/2022 12:47	16.94	6/14/2022 11:56	5.70	6/14/2022 16:52	70.53
6/15/2022 15:43	49.40	6/15/2022 14:25	82.30	6/14/2022 12:48	16.93	6/14/2022 11:57	5.71	6/14/2022 16:53	70.50
6/15/2022 15:44	49.43	6/15/2022 14:26	82.09	6/14/2022 12:49	16.90	6/14/2022 11:58	5.71	6/14/2022 16:54	70.40
6/15/2022 15:45	49.41	6/15/2022 14:27	81.83	6/14/2022 12:50	16.88	6/14/2022 11:59	5.61	6/14/2022 16:55	70.36
6/15/2022 15:46	49.43	6/15/2022 14:28	81.70	6/14/2022 12:51	16.89	6/14/2022 12:00	5.61	6/14/2022 16:56	70.33
6/15/2022 15:47	49.41	6/15/2022 14:29	81.55	6/14/2022 12:52	16.86	6/14/2022 12:01	5.62	6/14/2022 16:57	70.25
6/15/2022 15:48	49.39	6/15/2022 14:30	81.45	6/14/2022 12:53	16.88	6/14/2022 12:02	5.69	6/14/2022 16:58	70.22
6/15/2022 15:49	49.42	6/15/2022 14:31	81.34	6/14/2022 12:54	16.83	6/14/2022 12:03	5.58	6/14/2022 16:59	70.20
6/15/2022 15:50	49.42	6/15/2022 14:32	81.23	6/14/2022 12:55	16.80	6/14/2022 12:04	5.59	6/14/2022 17:00	70.15
6/15/2022 15:51	49.37	6/15/2022 14:33	81.21	6/14/2022 12:56	16.78	6/14/2022 12:05	5.60	6/14/2022 17:01	76.21
6/15/2022 15:52	49.37	6/15/2022 14:34	81.12	6/14/2022 12:57	16.80	6/14/2022 12:06	5.51	6/14/2022 17:02	75.97
6/15/2022 15:53	49.37	6/15/2022 14:35	81.11	6/14/2022 12:58	16.81	6/14/2022 12:07	5.55	6/14/2022 17:03	75.80
6/15/2022 15:54	49.39	6/15/2022 14:36	81.05	6/14/2022 12:59	16.83	6/14/2022 12:08	5.56	6/14/2022 17:04	75.67
6/15/2022 15:55	49.37	6/15/2022 14:37	80.95	6/14/2022 13:00	16.76	6/14/2022 12:09	5.60	6/14/2022 17:05	75.52
6/15/2022 15:56	49.37	6/15/2022 14:38	80.91	6/14/2022 13:01	16.77	6/14/2022 12:10	5.52	6/14/2022 17:06	75.39
6/15/2022 15:57	49.39	6/15/2022 14:39	80.89	6/14/2022 13:02	16.75	6/14/2022 12:11	5.50	6/14/2022 17:07	75.27
6/15/2022 15:58	49.38	6/15/2022 14:40	80.84	6/14/2022 13:03	16.73	6/14/2022 12:12	5.51	6/14/2022 17:08	75.17
6/15/2022 15:59	49.37	6/15/2022 14:41	80.86	6/14/2022 13:04	16.69	6/14/2022 12:13	5.43	6/14/2022 17:09	75.08
6/15/2022 16:00	49.39	6/15/2022 14:42	80.83	6/14/2022 13:05	16.73	6/14/2022 12:14	5.47	6/14/2022 17:10	74.94
6/15/2022 16:01	49.36	6/15/2022 14:43	80.76	6/14/2022 13:06	16.69	6/14/2022 12:15	5.48	6/14/2022 17:11	74.86
6/15/2022 16:02	49.39	6/15/2022 14:44	80.76	6/14/2022 13:07	16.70	6/14/2022 12:16	5.49	6/14/2022 17:12	74.75
6/15/2022 16:03	49.37	6/15/2022 14:45	80.74	6/14/2022 13:08	16.67	6/14/2022 12:17	5.42	6/14/2022 17:13	74.66
6/15/2022 16:04	49.35	6/15/2022 14:46	80.72	6/14/2022 13:09	21.20	6/14/2022 12:18	5.42	6/14/2022 17:14	74.55
6/15/2022 16:05	49.35	6/15/2022 14:47	80.71	6/14/2022 13:10	25.07	6/14/2022 12:19	5.39	6/14/2022 17:15	74.46
6/15/2022 16:06	49.34	6/15/2022 14:48	80.69	6/14/2022 13:11	26.49	6/14/2022 12:20	5.48	6/14/2022 17:16	74.34
6/15/2022 16:07	49.40	6/15/2022 14:49	80.66	6/14/2022 13:12	23.41	6/14/2022 12:21	5.38	6/14/2022 17:17	74.27
6/15/2022 16:08	49.34	6/15/2022 14:50	80.68	6/14/2022 13:13	21.84	6/14/2022 12:22	5.41	6/14/2022 17:18	74.16
6/15/2022 16:09	49.37	6/15/2022 14:51	80.65	6/14/2022 13:14	20.84	6/14/2022 12:23	5.41	6/14/2022 17:19	74.07
6/15/2022 16:10	49.38	6/15/2022 14:52	80.66	6/14/2022 13:15	20.25	6/14/2022 12:24	5.38	6/14/2022 17:20	73.95
6/15/2022 16:11	49.34	6/15/2022 14:53	80.66	6/14/2022 13:16	19.78	6/14/2022 12:25	5.38	6/14/2022 17:21	78.86
6/15/2022 16:12	49.38	6/15/2022 14:54	80.65	6/14/2022 13:17	19.49	6/14/2022 12:26	5.41	6/14/2022 17:22	78.71
6/15/2022 16:13	49.33	6/15/2022 14:55	80.60	6/14/2022 13:18	19.24	6/14/2022 12:27	5.35	6/14/2022 17:23	78.57
6/15/2022 16:14	49.36	6/15/2022 14:56	80.58	6/14/2022 13:19	19.03	6/14/2022 12:28	5.31	6/14/2022 17:24	78.44
6/15/2022 16:15	49.36	6/15/2022 14:57	80.59	6/14/2022 13:20	18.84	6/14/2022 12:29	5.35	6/14/2022 17:25	78.34
6/15/2022 16:16	49.34	6/15/2022 14:58	80.57	6/14/2022 13:21	18.70	6/14/2022 12:30	5.38	6/14/2022 17:26	78.22
6/15/2022 16:17	49.34	6/15/2022 14:59	80.59	6/14/2022 13:22	18.57	6/14/2022 12:31	5.31	6/14/2022 17:27	78.10
6/15/2022 16:18	49.36	6/15/2022 15:00	80.58	6/14/2022 13:23	18.47	6/14/2022 12:32	5.29	6/14/2022 17:28	77.95
6/15/2022 16:19	49.32	6/15/2022 15:01	80.55	6/14/2022 13:24	18.39	6/14/2022 12:33	5.32	6/14/2022 17:29	77.83
6/15/2022 16:20	49.33	6/15/2022 15:02	80.54	6/14/2022 13:25	18.31	6/14/2022 12:34	5.28	6/14/2022 17:30	77.71
6/15/2022 16:21	49.32	6/15/2022 15:03	80.55	6/14/2022 13:26	18.19	6/14/2022 12:35	5.30	6/14/2022 17:31	77.57
6/15/2022 16:22	49.34	6/15/2022 15:04	80.54	6/14/2022 13:27	18.12	6/14/2022 12:36	5.29	6/14/2022 17:32	77.45
6/15/2022 16:23	49.34	6/15/2022 15:05	80.57	6/14/2022 13:28	18.06	6/14/2022 12:37	5.35	6/14/2022 17:33	77.34
6/15/2022 16:24	49.33	6/15/2022 15:06	80.57	6/14/2022 13:29	17.99	6/14/2022 12:38	5.26	6/14/2022 17:34	77.22
6/15/2022 16:25	49.32	6/15/2022 15:07	80.54	6/14/2022 13:30	17.92	6/14/2022 12:39	5.24	6/14/2022 17:35	77.09
6/15/2022 16:26	49.30	6/15/2022 15:08	80.53	6/14/2022 13:31	17.89	6/14/2022 12:40	5.25	6/14/2022 17:36	77.01
6/15/2022 16:27	49.33	6/15/2022 15:09	80.52	6/14/2022 13:32	17.81	6/14/2022 12:41	5.23	6/14/2022 17:37	76.93
6/15/2022 16:28	49.30	6/15/2022 15:10	80.55	6/14/2022 13:33	17.77	6/14/2022 12:42	5.24	6/14/2022 17:38	76.85
6/15/2022 16:29	49.29	6/15/2022 15:11	80.55	6/14/2022 13:34	17.73	6/14/2022 12:43	5.18	6/14/2022 17:39	76.69
6/15/2022 16:30	49.34	6/15/2022 15:12	80.55	6/14/2022 13:35	17.68	6/14/2022 12:44	5.23	6/14/2022 17:40	76.64
6/15/2022 16:31	49.30	6/15/2022 15:13	80.55	6/14/2022 13:36	17.61	6/14/2022 12:45	5.21	6/14/2022 17:41	76.50
6/15/2022 16:32	49.32	6/15/2022 15:14	80.56	6/14/2022 13:37	17.56	6/14/2022 12:46	5.22	6/14/2022 17:42	76.43
6/15/2022 16:33	49.28	6/15/2022 15:15	80.51	6/14/2022 13:38	17.58	6/14/2022 12:47	5.20	6/14/2022 17:43	76.29
6/15/2022 16:34	49.32	6/15/2022 15:16	80.53	6/14/2022 13:39	17.44	6/14/2022 12:48	5.17	6/14/2022 17:44	76.20
6/15/2022 16:35	49.32	6/15/2022 15:17	80.49	6/14/2022 13:40	17.55	6/14/2022 12:49	5.14	6/14/2022 17:45	79.78
6/15/2022 16:36	49.26	6/15/2022 15:18	80.53	6/14/2022 13:41	17.49	6/14/2022 12:50	5.18	6/14/2022 17:46	82.10
6/15/2022 16:37	49.32	6/15/2022 15:19	80.49	6/14/2022 13:42	17.41	6/14/2022 12:51	5.23	6/14/2022 17:47	81.85
6/15/2022 16:38	49.28	6/15/2022 15:20	80.51	6/14/2022 13:43	17.44	6/14/2022 12:52	5.14	6/14/2022 17:48	81.63
6/15/2022 16:39	49.30	6/15/2022 15:21	80.54	6/14/2022 13:44	17.39	6/14/2022 12:53	5.14	6/14/2022 17:49	81.42
6/15/2022 16:40	49.29	6/15/2022 15:22	80.50	6/14/2022 13:45	17.32	6/14/2022 12:54	5.16	6/14/2022 17:50	81.25
6/15/2022 16:41	49.32	6/15/2022 15:23	80.53	6/14/2022 13:46	17.30	6/14/2022 12:55	5.20	6/14/2022 17:51	81.13
6/15/2022 16:42	49.28	6/15/2022 15:24	80.47	6/14/2022 13:47	17.27	6/14/2022 12:56	5.12	6/14/2022 17:52	80.96
6/15/2022 16:43	49.29	6/15/2022 15:25	80.51	6/14/2022 13:48	17.22	6/14/2022 12:57	5.09	6/14/2022 17:53	80.80
6/15/2022 16:44	49.33	6/15/2022 15:26	80.48	6/14/2022 13:49	17.24	6/14/2022 12:58	5.16	6/14/2022 17:54	80.70

6/15/2022 16:45	49.28	6/15/2022 15:27	80.49	6/14/2022 13:50	17.22	6/14/2022 12:59	5.09	6/14/2022 17:55	80.58
6/15/2022 16:46	49.26	6/15/2022 15:28	80.46	6/14/2022 13:51	17.20	6/14/2022 13:00	5.20	6/14/2022 17:56	80.42
6/15/2022 16:47	49.31	6/15/2022 15:29	80.49	6/14/2022 13:52	17.16	6/14/2022 13:01	5.36	6/14/2022 17:57	80.26
6/15/2022 16:48	49.26	6/15/2022 15:30	80.50	6/14/2022 13:53	17.19	6/14/2022 13:02	5.24	6/14/2022 17:58	80.12
6/15/2022 16:49	49.34	6/15/2022 15:31	80.49	6/14/2022 13:54	17.13	6/14/2022 13:03	5.17	6/14/2022 17:59	79.96
6/15/2022 16:50	49.30	6/15/2022 15:32	80.49	6/14/2022 13:55	17.08	6/14/2022 13:04	5.15	6/14/2022 18:00	79.83
6/15/2022 16:51	49.26	6/15/2022 15:33	80.49	6/14/2022 13:56	17.10	6/14/2022 13:05	5.17	6/14/2022 18:01	79.68
6/15/2022 16:52	49.29	6/15/2022 15:34	80.48	6/14/2022 13:57	17.04	6/14/2022 13:06	5.13	6/14/2022 18:02	79.57
6/15/2022 16:53	49.26	6/15/2022 15:35	80.49	6/14/2022 13:58	17.04	6/14/2022 13:07	5.10	6/14/2022 18:03	79.42
6/15/2022 16:54	49.23	6/15/2022 15:36	80.46	6/14/2022 13:59	17.05	6/14/2022 13:08	5.09	6/14/2022 18:04	79.29
6/15/2022 16:55	49.26	6/15/2022 15:37	80.47	6/14/2022 14:00	17.06	6/14/2022 13:09	5.11	6/14/2022 18:05	82.36
6/15/2022 16:56	49.26	6/15/2022 15:38	80.44	6/14/2022 14:01	17.01	6/14/2022 13:10	5.05	6/14/2022 18:06	84.09
6/15/2022 16:57	49.29	6/15/2022 15:39	80.48	6/14/2022 14:02	16.98	6/14/2022 13:11	5.08	6/14/2022 18:07	83.83
6/15/2022 16:58	49.24	6/15/2022 15:40	80.48	6/14/2022 14:03	17.01	6/14/2022 13:12	5.07	6/14/2022 18:08	83.64
6/15/2022 16:59	49.29	6/15/2022 15:41	80.47	6/14/2022 14:04	16.97	6/14/2022 13:13	5.08	6/14/2022 18:09	83.40
6/15/2022 17:00	49.27	6/15/2022 15:42	80.49	6/14/2022 14:05	16.91	6/14/2022 13:14	5.04	6/14/2022 18:10	83.18
6/15/2022 17:01	49.24	6/15/2022 15:43	80.46	6/14/2022 14:06	16.94	6/14/2022 13:15	5.01	6/14/2022 18:11	82.98
6/15/2022 17:02	49.26	6/15/2022 15:44	80.43	6/14/2022 14:07	16.90	6/14/2022 13:16	5.04	6/14/2022 18:12	82.82
6/15/2022 17:03	49.25	6/15/2022 15:45	80.47	6/14/2022 14:08	16.88	6/14/2022 13:17	5.05	6/14/2022 18:13	82.60
6/15/2022 17:04	49.24	6/15/2022 15:46	80.51	6/14/2022 14:09	16.86	6/14/2022 13:18	5.00	6/14/2022 18:14	82.45
6/15/2022 17:05	49.29	6/15/2022 15:47	80.49	6/14/2022 14:10	16.84	6/14/2022 13:19	5.01	6/14/2022 18:15	82.27
6/15/2022 17:06	49.23	6/15/2022 15:48	80.49	6/14/2022 14:11	16.88	6/14/2022 13:20	5.07	6/14/2022 18:16	82.09
6/15/2022 17:07	49.23	6/15/2022 15:49	80.46	6/14/2022 14:12	16.84	6/14/2022 13:21	5.02	6/14/2022 18:17	81.94
6/15/2022 17:08	49.28	6/15/2022 15:50	80.48	6/14/2022 14:13	16.84	6/14/2022 13:22	4.99	6/14/2022 18:18	81.76
6/15/2022 17:09	49.25	6/15/2022 15:51	80.49	6/14/2022 14:14	16.88	6/14/2022 13:23	5.04	6/14/2022 18:19	81.60
6/15/2022 17:10	49.23	6/15/2022 15:52	80.48	6/14/2022 14:15	16.79	6/14/2022 13:24	5.03	6/14/2022 18:20	81.46
6/15/2022 17:11	49.25	6/15/2022 15:53	80.44	6/14/2022 14:16	16.77	6/14/2022 13:25	4.97	6/14/2022 18:21	81.32
6/15/2022 17:12	49.28	6/15/2022 15:54	80.45	6/14/2022 14:17	16.78	6/14/2022 13:26	4.97	6/14/2022 18:22	81.16
6/15/2022 17:13	49.26	6/15/2022 15:55	80.47	6/14/2022 14:18	16.77	6/14/2022 13:27	4.97	6/14/2022 18:23	81.01
6/15/2022 17:14	49.24	6/15/2022 15:56	80.42	6/14/2022 14:19	16.76	6/14/2022 13:28	4.94	6/14/2022 18:24	80.88
6/15/2022 17:15	49.21	6/15/2022 15:57	80.44	6/14/2022 14:20	16.77	6/14/2022 13:29	4.91	6/14/2022 18:25	80.73
6/15/2022 17:16	49.26	6/15/2022 15:58	80.44	6/14/2022 14:21	16.69	6/14/2022 13:30	4.91	6/14/2022 18:26	80.63
6/15/2022 17:17	49.24	6/15/2022 15:59	80.45	6/14/2022 14:22	16.68	6/14/2022 13:31	4.92	6/14/2022 18:27	80.52
6/15/2022 17:18	49.27	6/15/2022 16:00	80.46	6/14/2022 14:23	16.70	6/14/2022 13:32	4.95	6/14/2022 18:28	80.32
6/15/2022 17:19	49.24	6/15/2022 16:01	80.48	6/14/2022 14:24	16.72	6/14/2022 13:33	4.93	6/14/2022 18:29	80.24
6/15/2022 17:20	49.23	6/15/2022 16:02	80.48	6/14/2022 14:25	16.66	6/14/2022 13:34	4.93	6/14/2022 18:30	80.10
6/15/2022 17:21	49.28	6/15/2022 16:03	80.38	6/14/2022 14:26	16.68	6/14/2022 13:35	4.87	6/14/2022 18:31	79.92
6/15/2022 17:22	49.26	6/15/2022 16:04	80.46	6/14/2022 14:27	16.63	6/14/2022 13:36	4.85	6/14/2022 18:32	79.85
6/15/2022 17:23	49.24	6/15/2022 16:05	80.45	6/14/2022 14:28	16.66	6/14/2022 13:37	4.86	6/14/2022 18:33	79.70
6/15/2022 17:24	49.23	6/15/2022 16:06	80.43	6/14/2022 14:29	16.64	6/14/2022 13:38	4.90	6/14/2022 18:34	79.55
6/15/2022 17:25	49.24	6/15/2022 16:07	80.45	6/14/2022 14:30	18.03	6/14/2022 13:39	4.87	6/14/2022 18:35	79.40
6/15/2022 17:26	52.07	6/15/2022 16:08	80.44	6/14/2022 14:31	23.12	6/14/2022 13:40	4.88	6/14/2022 18:36	79.30
6/15/2022 17:27	53.48	6/15/2022 16:09	80.42	6/14/2022 14:32	26.21	6/14/2022 13:41	4.87	6/14/2022 18:37	79.17
6/15/2022 17:28	54.21	6/15/2022 16:10	80.42	6/14/2022 14:33	24.88	6/14/2022 13:42	4.82	6/14/2022 18:38	79.04
6/15/2022 17:29	54.66	6/15/2022 16:11	80.47	6/14/2022 14:34	22.65	6/14/2022 13:43	4.80	6/14/2022 18:39	78.96
6/15/2022 17:30	53.33	6/15/2022 16:12	80.45	6/14/2022 14:35	21.41	6/14/2022 13:44	4.85	6/14/2022 18:40	78.85
6/15/2022 17:31	51.78	6/15/2022 16:13	80.48	6/14/2022 14:36	20.59	6/14/2022 13:45	4.90	6/14/2022 18:41	78.76
6/15/2022 17:32	51.18	6/15/2022 16:14	80.45	6/14/2022 14:37	20.03	6/14/2022 13:46	4.81	6/14/2022 18:42	78.63
6/15/2022 17:33	50.82	6/15/2022 16:15	80.45	6/14/2022 14:38	19.64	6/14/2022 13:47	4.83	6/14/2022 18:43	78.53
6/15/2022 17:34	50.62	6/15/2022 16:16	80.42	6/14/2022 14:39	19.37	6/14/2022 13:48	4.83	6/14/2022 18:44	78.47
6/15/2022 17:35	50.50	6/15/2022 16:17	80.44	6/14/2022 14:40	19.15	6/14/2022 13:49	4.78	6/14/2022 18:45	78.32
6/15/2022 17:36	50.43	6/15/2022 16:18	80.41	6/14/2022 14:41	18.96	6/14/2022 13:50	4.78	6/14/2022 18:46	78.25
6/15/2022 17:37	50.31	6/15/2022 16:19	80.45	6/14/2022 14:42	18.81	6/14/2022 13:51	4.90	6/14/2022 18:47	78.18
6/15/2022 17:38	50.27	6/15/2022 16:20	80.45	6/14/2022 14:43	18.62	6/14/2022 13:52	5.03	6/14/2022 18:48	78.05
6/15/2022 17:39	50.13	6/15/2022 16:21	80.47	6/14/2022 14:44	18.54	6/14/2022 13:53	5.06	6/14/2022 18:49	77.93
6/15/2022 17:40	50.16	6/15/2022 16:22	80.46	6/14/2022 14:45	18.41	6/14/2022 13:54	5.13	6/14/2022 18:50	77.83
6/15/2022 17:41	50.07	6/15/2022 16:23	80.44	6/14/2022 14:46	18.30	6/14/2022 13:55	5.06	6/14/2022 18:51	77.70
6/15/2022 17:42	50.05	6/15/2022 16:24	80.47	6/14/2022 14:47	18.24	6/14/2022 13:56	5.03	6/14/2022 18:52	77.58
6/15/2022 17:43	50.00	6/15/2022 16:25	80.42	6/14/2022 14:48	18.14	6/14/2022 13:57	4.85	6/14/2022 18:53	77.44
6/15/2022 17:44	49.97	6/15/2022 16:26	80.43	6/14/2022 14:49	18.06	6/14/2022 13:58	4.89	6/14/2022 18:54	77.32
6/15/2022 17:45	49.97	6/15/2022 16:27	80.47	6/14/2022 14:50	18.01	6/14/2022 13:59	4.86	6/14/2022 18:55	77.27
6/15/2022 17:46	49.92	6/15/2022 16:28	80.43	6/14/2022 14:51	17.89	6/14/2022 14:00	4.83	6/14/2022 18:56	77.19
6/15/2022 17:47	49.91	6/15/2022 16:29	80.43	6/14/2022 14:52	17.87	6/14/2022 14:01	4.85	6/14/2022 18:57	77.06
6/15/2022 17:48	49.90	6/15/2022 16:30	80.43	6/14/2022 14:53	17.81	6/14/2022 14:02	4.81	6/14/2022 18:58	76.96
6/15/2022 17:49	49.85	6/15/2022 16:31	80.43	6/14/2022 14:54	17.79	6/14/2022 14:03	4.72	6/14/2022 18:59	76.89
6/15/2022 17:50	49.85	6/15/2022 16:32	80.75	6/14/2022 14:55	17.68	6/14/2022 14:04	4.82	6/14/2022 19:00	76.81
6/15/2022 17:51	49.82	6/15/2022 16:33	80.71	6/14/2022 14:56	17.68	6/14/2022 14:05	4.78	6/14/2022 19:01	76.68
6/15/2022 17:52	49.80	6/15/2022 16:34	80.63	6/14/2022 14:57	17.61	6/14/2022 14:06	4.77	6/14/2022 19:02	76.62
6/15/2022 17:53	49.82	6/15/2022 16:35	80.65	6/14/2022 14:58	17.57	6/14/2022 14:07	4.72	6/14/2022 19:03	76.52
6/15/2022 17:54	49.80	6/15/2022 16:36	80.60	6/14/2022 14:59	17.54	6/14/2022 14:08	4.73	6/14/2022 19:04	76.45
6/15/2022 17:55	49.78	6/15/2022 16:37	80.60	6/14/2022 15:00	17.51	6/14/2022 14:09	4.73	6/14/2022 19:05	76.32
6/15/2022 17:56	49.78	6/15/2022 16:38	80.55	6/14/2022 15:01	17.48	6/14/2022 14:10	4.76	6/14/2022 19:06	76.24
6/15/2022 17:57	49.75	6/15/2022 16:39	80.57	6/14/2022 15:02	17.45	6/14/2022 14:11	4.73	6/14/2022 19:07	76.13
6/15/2022 17:58	49.74	6/15/2022 16:40	80.53	6/14/2022 15:03	17.41	6/14/2022 14:12	5.06	6/14/2022 19:08	76.04
6/15/2022 17:59	49.75	6/15/2022 16:41	80.56	6/14/2022 15:04	17.37	6/14/2022 14:13	4.89	6/14/2022 19:09	75.92
6/15/2022 18:00	49.74	6/15/2022 16:42	80.51	6/14/2022 15:05	17.33	6/14/2022 14:14	4.84	6/14/2022 19:10	75.84
6/15/2022 18:01	49.71	6/15/2022 16:43	80.51	6/14/2022 15:06	17.33	6/14/2022 14:15	4.78	6/14/2022 19:11	75.76
6/15/2022 18:02	49.70	6/15/2022 16:44	82.00	6/14/2022 15:07	17.30	6/14/2022 14:16	4.77	6/14/2022 19:12	75.65
6/15/2022 18:03	49.72	6/15/2022 16:45	83.58	6/14/2022 15:08	17.31	6/14/2022 14:17	4.74	6/14/2022 19:13	75.56
6/15/2022 18:04	49.66	6/15/2022 16:46	83.02	6/14/2022 15:09	17.27	6/14/2022 14:18	4.75	6/14/2022 19:14	75.49
6/15/2022 18:05	49.69	6/15/2022 16:47	82.59	6/14/2022 15:10	17.16	6/14/2022 14:19	4.80	6/14/2022 19:15	75.38
6/15/2022 18:06	49.70	6/15/2022 16:48	82.26	6/14/2022 15:11	17.19	6/14/2022 14:20	4.73	6/14/2022 19:16	75.28
6/15/2022 18:07	49.66	6/15/2022 16:49	82.00	6/14/2022 15:12	17.16	6/14/2022 14:21	4.71	6/14/2022 19:17	75.19
6/15/2022 18:08	49.65	6/15/2022 16:50	81.78	6/14/2022 15:13	17.15	6/14/2022 14:22	4.73	6/14/2022 19:18	75.11
6/15/2022 18:09	49.66	6/15/2022 16:51	81.62	6/14/2022 15:14	17.15	6/14/2022 14:23	4.72	6/14/2022 19:19	75.01
6/15/2022 18:10	49.65	6/15/2022 16:52	81.49	6/14/2022 15:15	17.10	6/14/2022 14:24	4.64	6/14/2022 19:20	74.93
6/15/2022 18:11	49.62	6/15/2022 16:53	81.36	6/14/2022 15:16	17.06	6/14/2022 14:25	4.63	6/14/2022 19:21	74.84
6/15/2022 18:12	49.65	6/15/2022 16:54	81.25	6/14/2022 15:17	17.04	6/14/2022 14:26	4.69	6/14/2022 19:22	74.76

6/15/2022 18:13	49.61	6/15/2022 16:55	81.19	6/14/2022 15:18	17.02	6/14/2022 14:27	4.72	6/14/2022 19:23	74.64
6/15/2022 18:14	49.63	6/15/2022 16:56	81.07	6/14/2022 15:19	17.01	6/14/2022 14:28	4.65	6/14/2022 19:24	74.56
6/15/2022 18:15	49.61	6/15/2022 16:57	81.04	6/14/2022 15:20	16.98	6/14/2022 14:29	4.65	6/14/2022 19:25	74.49
6/15/2022 18:16	49.61	6/15/2022 16:58	81.00	6/14/2022 15:21	16.99	6/14/2022 14:30	4.65	6/14/2022 19:26	74.38
6/15/2022 18:17	49.61	6/15/2022 16:59	80.94	6/14/2022 15:22	16.94	6/14/2022 14:31	4.69	6/14/2022 19:27	74.31
6/15/2022 18:18	49.60	6/15/2022 17:00	80.92	6/14/2022 15:23	16.95	6/14/2022 14:32	4.78	6/14/2022 19:28	74.29
6/15/2022 18:19	49.61	6/15/2022 17:01	80.85	6/14/2022 15:24	16.91	6/14/2022 14:33	4.68	6/14/2022 19:29	74.17
6/15/2022 18:20	49.59	6/15/2022 17:02	80.85	6/14/2022 15:25	16.88	6/14/2022 14:34	4.66	6/14/2022 19:30	74.10
6/15/2022 18:21	49.59	6/15/2022 17:03	80.74	6/14/2022 15:26	16.90	6/14/2022 14:35	4.69	6/14/2022 19:31	74.02
6/15/2022 18:22	49.56	6/15/2022 17:04	80.79	6/14/2022 15:27	16.91	6/14/2022 14:36	4.71	6/14/2022 19:32	73.93
6/15/2022 18:23	49.56	6/15/2022 17:05	80.72	6/14/2022 15:28	16.85	6/14/2022 14:37	4.61	6/14/2022 19:33	73.89
6/15/2022 18:24	49.57	6/15/2022 17:06	80.72	6/14/2022 15:29	16.88	6/14/2022 14:38	4.59	6/14/2022 19:34	73.78
6/15/2022 18:25	49.57	6/15/2022 17:07	80.70	6/14/2022 15:30	16.84	6/14/2022 14:39	4.63	6/14/2022 19:35	73.68
6/15/2022 18:26	49.55	6/15/2022 17:08	80.68	6/14/2022 15:31	16.83	6/14/2022 14:40	4.68	6/14/2022 19:36	73.64
6/15/2022 18:27	49.54	6/15/2022 17:09	80.65	6/14/2022 15:32	16.80	6/14/2022 14:41	4.61	6/14/2022 19:37	73.58
6/15/2022 18:28	49.54	6/15/2022 17:10	80.64	6/14/2022 15:33	16.79	6/14/2022 14:42	4.54	6/14/2022 19:38	73.49
6/15/2022 18:29	49.52	6/15/2022 17:11	80.64	6/14/2022 15:34	16.75	6/14/2022 14:43	4.61	6/14/2022 19:39	73.45
6/15/2022 18:30	49.58	6/15/2022 17:12	80.61	6/14/2022 15:35	16.79	6/14/2022 14:44	4.57	6/14/2022 19:40	73.35
6/15/2022 18:31	49.51	6/15/2022 17:13	80.63	6/14/2022 15:36	16.76	6/14/2022 14:45	4.55	6/14/2022 19:41	73.31
6/15/2022 18:32	49.52	6/15/2022 17:14	80.59	6/14/2022 15:37	16.76	6/14/2022 14:46	4.84	6/14/2022 19:42	73.21
6/15/2022 18:33	49.53	6/15/2022 17:15	80.55	6/14/2022 15:38	16.71	6/14/2022 14:47	5.18	6/14/2022 19:43	73.11
6/15/2022 18:34	49.53	6/15/2022 17:16	80.56	6/14/2022 15:39	16.74	6/14/2022 14:48	5.28	6/14/2022 19:44	73.07
6/15/2022 18:35	49.54	6/15/2022 17:17	80.57	6/14/2022 15:40	16.71	6/14/2022 14:49	5.20	6/14/2022 19:45	73.02
6/15/2022 18:36	49.53	6/15/2022 17:18	80.55	6/14/2022 15:41	16.68	6/14/2022 14:50	4.92	6/14/2022 19:46	72.96
6/15/2022 18:37	49.52	6/15/2022 17:19	80.49	6/14/2022 15:42	16.69	6/14/2022 14:51	4.82	6/14/2022 19:47	77.58
6/15/2022 18:38	49.51	6/15/2022 17:20	80.52	6/14/2022 15:43	20.97	6/14/2022 14:52	4.77	6/14/2022 19:48	78.10
6/15/2022 18:39	49.51	6/15/2022 17:21	80.51	6/14/2022 15:44	24.83	6/14/2022 14:53	4.82	6/14/2022 19:49	77.94
6/15/2022 18:40	49.51	6/15/2022 17:22	80.52	6/14/2022 15:45	27.32	6/14/2022 14:54	4.71	6/14/2022 19:50	77.79
6/15/2022 18:41	49.51	6/15/2022 17:23	80.53	6/14/2022 15:46	25.73	6/14/2022 14:55	4.74	6/14/2022 19:51	77.65
6/15/2022 18:42	49.49	6/15/2022 17:24	80.54	6/14/2022 15:47	23.34	6/14/2022 14:56	4.75	6/14/2022 19:52	77.52
6/15/2022 18:43	49.50	6/15/2022 17:25	80.52	6/14/2022 15:48	22.00	6/14/2022 14:57	4.73	6/14/2022 19:53	77.40
6/15/2022 18:44	49.50	6/15/2022 17:26	80.50	6/14/2022 15:49	21.08	6/14/2022 14:58	5.34	6/14/2022 19:54	77.25
6/15/2022 18:45	49.49	6/15/2022 17:27	80.50	6/14/2022 15:50	20.48	6/14/2022 14:59	4.94	6/14/2022 19:55	77.94
6/15/2022 18:46	49.48	6/15/2022 17:28	80.53	6/14/2022 15:51	20.06	6/14/2022 15:00	4.79	6/14/2022 19:56	82.17
6/15/2022 18:47	49.45	6/15/2022 17:29	80.49	6/14/2022 15:52	19.77	6/14/2022 15:01	4.79	6/14/2022 19:57	81.91
6/15/2022 18:48	49.48	6/15/2022 17:30	80.48	6/14/2022 15:53	19.50	6/14/2022 15:02	4.77	6/14/2022 19:58	81.72
6/15/2022 18:49	49.46	6/15/2022 17:31	80.51	6/14/2022 15:54	19.29	6/14/2022 15:03	4.71	6/14/2022 19:59	81.48
6/15/2022 18:50	49.49	6/15/2022 17:32	80.43	6/14/2022 15:55	19.10	6/14/2022 15:04	4.68	6/14/2022 20:00	81.34
6/15/2022 18:51	49.44	6/15/2022 17:33	80.51	6/14/2022 15:56	18.94	6/14/2022 15:05	4.64	6/14/2022 20:01	81.16
6/15/2022 18:52	49.47	6/15/2022 17:34	80.49	6/14/2022 15:57	18.83	6/14/2022 15:06	4.71	6/14/2022 20:02	81.01
6/15/2022 18:53	49.45	6/15/2022 17:35	80.49	6/14/2022 15:58	18.68	6/14/2022 15:07	4.61	6/14/2022 20:03	80.87
6/15/2022 18:54	49.50	6/15/2022 17:36	80.47	6/14/2022 15:59	18.58	6/14/2022 15:08	4.60	6/14/2022 20:04	86.77
6/15/2022 18:55	49.47	6/15/2022 17:37	80.49	6/14/2022 16:00	18.48	6/14/2022 15:09	4.61	6/14/2022 20:05	91.68
6/15/2022 18:56	49.44	6/15/2022 17:38	80.48	6/14/2022 16:01	18.46	6/14/2022 15:10	4.64	6/14/2022 20:06	91.27
6/15/2022 18:57	49.48	6/15/2022 17:39	80.52	6/14/2022 16:02	18.35	6/14/2022 15:11	4.54	6/14/2022 20:07	95.12
6/15/2022 18:58	49.47	6/15/2022 17:40	80.46	6/14/2022 16:03	18.26	6/14/2022 15:12	4.59	6/14/2022 20:08	98.63
6/15/2022 18:59	49.43	6/15/2022 17:41	80.50	6/14/2022 16:04	18.20	6/14/2022 15:13	4.59	6/14/2022 20:09	98.09
6/15/2022 19:00	49.49	6/15/2022 17:42	80.48	6/14/2022 16:05	18.15	6/14/2022 15:14	4.59	6/14/2022 20:10	102.64
6/15/2022 19:01	49.43	6/15/2022 17:43	80.44	6/14/2022 16:06	18.08	6/14/2022 15:15	4.53	6/14/2022 20:11	105.53
6/15/2022 19:02	49.47	6/15/2022 17:44	80.46	6/14/2022 16:07	18.03	6/14/2022 15:16	4.51	6/14/2022 20:12	104.93
6/15/2022 19:03	49.43	6/15/2022 17:45	80.45	6/14/2022 16:08	17.99	6/14/2022 15:17	4.55	6/14/2022 20:13	109.44
6/15/2022 19:04	49.48	6/15/2022 17:46	80.47	6/14/2022 16:09	17.94	6/14/2022 15:18	4.55	6/14/2022 20:14	112.36
6/15/2022 19:05	49.46	6/15/2022 17:47	80.46	6/14/2022 16:10	17.90	6/14/2022 15:19	4.47	6/14/2022 20:15	111.68
6/15/2022 19:06	49.48	6/15/2022 17:48	80.44	6/14/2022 16:11	17.80	6/14/2022 15:20	4.54	6/14/2022 20:16	115.92
6/15/2022 19:07	49.43	6/15/2022 17:49	80.48	6/14/2022 16:12	17.80	6/14/2022 15:21	4.55	6/14/2022 20:17	120.04
6/15/2022 19:08	49.45	6/15/2022 17:50	80.46	6/14/2022 16:13	17.79	6/14/2022 15:22	4.50	6/14/2022 20:18	119.21
6/15/2022 19:09	49.44	6/15/2022 17:51	80.45	6/14/2022 16:14	17.76	6/14/2022 15:23	4.46	6/14/2022 20:19	122.31
6/15/2022 19:10	49.43	6/15/2022 17:52	80.46	6/14/2022 16:15	17.74	6/14/2022 15:24	4.47	6/14/2022 20:20	126.63
6/15/2022 19:11	49.44	6/15/2022 17:53	80.44	6/14/2022 16:16	17.72	6/14/2022 15:25	4.51	6/14/2022 20:21	125.75
6/15/2022 19:12	49.44	6/15/2022 17:54	80.49	6/14/2022 16:17	17.71	6/14/2022 15:26	4.50	6/14/2022 20:22	128.26
6/15/2022 19:13	49.43	6/15/2022 17:55	80.44	6/14/2022 16:18	17.70	6/14/2022 15:27	4.49	6/14/2022 20:23	131.78
6/15/2022 19:14	49.46	6/15/2022 17:56	80.45	6/14/2022 16:19	17.66	6/14/2022 15:28	4.44	6/14/2022 20:24	130.95
6/15/2022 19:15	49.46	6/15/2022 17:57	80.48	6/14/2022 16:20	17.65	6/14/2022 15:29	4.44	6/14/2022 20:25	130.07
6/15/2022 19:16	49.38	6/15/2022 17:58	80.45	6/14/2022 16:21	17.65	6/14/2022 15:30	4.52	6/14/2022 20:26	129.30
6/15/2022 19:17	49.42	6/15/2022 17:59	80.45	6/14/2022 16:22	17.62	6/14/2022 15:31	4.44	6/14/2022 20:27	128.58
6/15/2022 19:18	49.43	6/15/2022 18:00	80.43	6/14/2022 16:23	17.58	6/14/2022 15:32	4.41	6/14/2022 20:28	127.85
6/15/2022 19:19	49.42	6/15/2022 18:01	80.43	6/14/2022 16:24	17.56	6/14/2022 15:33	4.46	6/14/2022 20:29	127.15
6/15/2022 19:20	49.42	6/15/2022 18:02	80.47	6/14/2022 16:25	17.57	6/14/2022 15:34	4.44	6/14/2022 20:30	126.44
6/15/2022 19:21	49.40	6/15/2022 18:03	80.45	6/14/2022 16:26	17.61	6/14/2022 15:35	4.41	6/14/2022 20:31	125.78
6/15/2022 19:22	49.42	6/15/2022 18:04	80.45	6/14/2022 16:27	17.56	6/14/2022 15:36	4.38	6/14/2022 20:32	125.09
6/15/2022 19:23	49.42	6/15/2022 18:05	80.45	6/14/2022 16:28	17.53	6/14/2022 15:37	4.40	6/14/2022 20:33	124.42
6/15/2022 19:24	49.43	6/15/2022 18:06	80.46	6/14/2022 16:29	17.51	6/14/2022 15:38	4.48	6/14/2022 20:34	123.78
6/15/2022 19:25	49.39	6/15/2022 18:07	80.45	6/14/2022 16:30	17.50	6/14/2022 15:39	4.44	6/14/2022 20:35	123.11
6/15/2022 19:26	49.39	6/15/2022 18:08	80.47	6/14/2022 16:31	17.46	6/14/2022 15:40	4.46	6/14/2022 20:36	122.45
6/15/2022 19:27	49.40	6/15/2022 18:09	80.47	6/14/2022 16:32	17.47	6/14/2022 15:41	4.44	6/14/2022 20:37	121.89
6/15/2022 19:28	49.37	6/15/2022 18:10	80.40	6/14/2022 16:33	17.48	6/14/2022 15:42	4.40	6/14/2022 20:38	121.27
6/15/2022 19:29	49.41	6/15/2022 18:11	80.45	6/14/2022 16:34	17.42	6/14/2022 15:43	4.41	6/14/2022 20:39	120.67
6/15/2022 19:30	49.41	6/15/2022 18:12	80.46	6/14/2022 16:35	17.46	6/14/2022 15:44	4.45	6/14/2022 20:40	120.05
6/15/2022 19:31	49.38	6/15/2022 18:13	80.48	6/14/2022 16:36	17.45	6/14/2022 15:45	4.41	6/14/2022 20:41	119.50
6/15/2022 19:32	49.39	6/15/2022 18:14	80.46	6/14/2022 16:37	17.41	6/14/2022 15:46	4.46	6/14/2022 20:42	118.92
6/15/2022 19:33	49.37	6/15/2022 18:15	80.45	6/14/2022 16:38	17.44	6/14/2022 15:47	4.39	6/14/2022 20:43	118.32
6/15/2022 19:34	49.38	6/15/2022 18:16	80.48	6/14/2022 16:39	17.43	6/14/2022 15:48	4.40	6/14/2022 20:44	117.80
6/15/2022 19:35	49.37	6/15/2022 18:17	80.44	6/14/2022 16:40	17.38	6/14/2022 15:49	4.47	6/14/2022 20:45	117.22
6/15/2022 19:36	49.37	6/15/2022 18:18	80.49	6/14/2022 16:41	17.40	6/14/2022 15:50	4.39	6/14/2022 20:46	116.71
6/15/2022 19:37	49.38	6/15/2022 18:19	80.44	6/14/2022 16:42	17.41	6/14/2022 15:51	4.46	6/14/2022 20:47	116.17
6/15/2022 19:38	49.35	6/15/2022 18:20	80.46	6/14/2022 16:43	17.36	6/14/2022 15:52	4.45	6/14/2022 20:48	115.65
6/15/2022 19:39	49.35	6/15/2022 18:21	80.42	6/14/2022 16:44	17.40	6/14/2022 15:53	4.36	6/14/2022 20:49	115.13
6/15/2022 19:40	49.36	6/15/2022 18:22	80.44	6/14/2022 16:45	17.40	6/14/2022 15:54	4.43	6/14/2022 20:50	114.59

6/15/2022 19:41	49.37	6/15/2022 18:23	80.48	6/14/2022 16:46	17.32	6/14/2022 15:55	4.38	6/14/2022 20:51	114.09
6/15/2022 19:42	49.39	6/15/2022 18:24	80.45	6/14/2022 16:47	17.39	6/14/2022 15:56	4.38	6/14/2022 20:52	113.60
6/15/2022 19:43	49.37	6/15/2022 18:25	80.46	6/14/2022 16:48	17.33	6/14/2022 15:57	4.41	6/14/2022 20:53	113.13
6/15/2022 19:44	49.36	6/15/2022 18:26	80.45	6/14/2022 16:49	17.30	6/14/2022 15:58	4.35	6/14/2022 20:54	112.64
6/15/2022 19:45	49.34	6/15/2022 18:27	80.43	6/14/2022 16:50	17.33	6/14/2022 15:59	4.38	6/14/2022 20:55	112.14
6/15/2022 19:46	49.37	6/15/2022 18:28	80.45	6/14/2022 16:51	17.29	6/14/2022 16:00	4.37	6/14/2022 20:56	111.65
6/15/2022 19:47	49.37	6/15/2022 18:29	80.47	6/14/2022 16:52	17.27	6/14/2022 16:01	4.42	6/14/2022 20:57	111.22
6/15/2022 19:48	49.36	6/15/2022 18:30	80.42	6/14/2022 16:53	17.31	6/14/2022 16:02	4.36	6/14/2022 20:58	110.72
6/15/2022 19:49	49.36	6/15/2022 18:31	80.41	6/14/2022 16:54	17.27	6/14/2022 16:03	4.42	6/14/2022 20:59	110.28
6/15/2022 19:50	49.33	6/15/2022 18:32	80.41	6/14/2022 16:55	17.29	6/14/2022 16:04	4.39	6/14/2022 21:00	109.81
6/15/2022 19:51	49.34	6/15/2022 18:33	80.49	6/14/2022 16:56	17.30	6/14/2022 16:05	4.34	6/14/2022 21:01	109.39
6/15/2022 19:52	49.35	6/15/2022 18:34	80.45	6/14/2022 16:57	17.22	6/14/2022 16:06	4.36	6/14/2022 21:02	108.94
6/15/2022 19:53	49.37	6/15/2022 18:35	80.44	6/14/2022 16:58	17.19	6/14/2022 16:07	4.42	6/14/2022 21:03	108.53
6/15/2022 19:54	49.35	6/15/2022 18:36	80.43	6/14/2022 16:59	17.16	6/14/2022 16:08	4.33	6/14/2022 21:04	108.12
6/15/2022 19:55	49.35	6/15/2022 18:37	80.47	6/14/2022 17:00	17.23	6/14/2022 16:09	4.37	6/14/2022 21:05	107.69
6/15/2022 19:56	49.33	6/15/2022 18:38	80.40	6/14/2022 17:01	17.23	6/14/2022 16:10	4.35	6/14/2022 21:06	107.27
6/15/2022 19:57	49.32	6/15/2022 18:39	80.45	6/14/2022 17:02	17.22	6/14/2022 16:11	4.33	6/14/2022 21:07	106.85
6/15/2022 19:58	49.36	6/15/2022 18:40	80.46	6/14/2022 17:03	17.15	6/14/2022 16:12	4.37	6/14/2022 21:08	106.45
6/15/2022 19:59	49.33	6/15/2022 18:41	80.45	6/14/2022 17:04	17.17	6/14/2022 16:13	4.36	6/14/2022 21:09	106.05
6/15/2022 20:00	49.37	6/15/2022 18:42	80.47	6/14/2022 17:05	17.16	6/14/2022 16:14	4.34	6/14/2022 21:10	105.65
6/15/2022 20:01	49.33	6/15/2022 18:43	80.44	6/14/2022 17:06	17.18	6/14/2022 16:15	4.38	6/14/2022 21:11	105.26
6/15/2022 20:02	49.30	6/15/2022 18:44	80.46	6/14/2022 17:07	17.18	6/14/2022 16:16	4.34	6/14/2022 21:12	104.84
6/15/2022 20:03	49.32	6/15/2022 18:45	80.45	6/14/2022 17:08	17.11	6/14/2022 16:17	4.33	6/14/2022 21:13	104.51
6/15/2022 20:04	49.34	6/15/2022 18:46	80.44	6/14/2022 17:09	17.13	6/14/2022 16:18	4.34	6/14/2022 21:14	104.13
6/15/2022 20:05	49.34	6/15/2022 18:47	80.46	6/14/2022 17:10	17.12	6/14/2022 16:19	4.36	6/14/2022 21:15	103.79
6/15/2022 20:06	49.35	6/15/2022 18:48	80.43	6/14/2022 17:11	17.14	6/14/2022 16:20	4.29	6/14/2022 21:16	103.46
6/15/2022 20:07	49.34	6/15/2022 18:49	80.46	6/14/2022 17:12	17.09	6/14/2022 16:21	4.29	6/14/2022 21:17	103.11
6/15/2022 20:08	49.35	6/15/2022 18:50	80.45	6/14/2022 17:13	17.06	6/14/2022 16:22	4.30	6/14/2022 21:18	102.71
6/15/2022 20:09	49.35	6/15/2022 18:51	80.41	6/14/2022 17:14	17.08	6/14/2022 16:23	4.26	6/14/2022 21:19	102.35
6/15/2022 20:10	49.32	6/15/2022 18:52	80.42	6/14/2022 17:15	17.05	6/14/2022 16:24	4.23	6/14/2022 21:20	102.00
6/15/2022 20:11	49.30	6/15/2022 18:53	80.41	6/14/2022 17:16	17.05	6/14/2022 16:25	4.26	6/14/2022 21:21	101.66
6/15/2022 20:12	49.32	6/15/2022 18:54	80.45	6/14/2022 17:17	17.07	6/14/2022 16:26	4.26	6/14/2022 21:22	101.32
6/15/2022 20:13	49.31	6/15/2022 18:55	80.44	6/14/2022 17:18	17.07	6/14/2022 16:27	4.28	6/14/2022 21:23	100.99
6/15/2022 20:14	49.31	6/15/2022 18:56	80.45	6/14/2022 17:19	17.07	6/14/2022 16:28	4.18	6/14/2022 21:24	100.67
6/15/2022 20:15	49.27	6/15/2022 18:57	80.48	6/14/2022 17:20	17.04	6/14/2022 16:29	4.25	6/14/2022 21:25	100.31
6/15/2022 20:16	49.29	6/15/2022 18:58	80.46	6/14/2022 17:21	17.01	6/14/2022 16:30	4.24	6/14/2022 21:26	100.02
6/15/2022 20:17	49.34	6/15/2022 18:59	80.42	6/14/2022 17:22	17.02	6/14/2022 16:31	4.17	6/14/2022 21:27	99.74
6/15/2022 20:18	49.31	6/15/2022 19:00	80.46	6/14/2022 17:23	17.01	6/14/2022 16:32	4.21	6/14/2022 21:28	99.40
6/15/2022 20:19	49.29	6/15/2022 19:01	80.46	6/14/2022 17:24	16.98	6/14/2022 16:33	4.18	6/14/2022 21:29	99.08
6/15/2022 20:20	49.29	6/15/2022 19:02	80.43	6/14/2022 17:25	16.99	6/14/2022 16:34	4.20	6/14/2022 21:30	98.79
6/15/2022 20:21	49.29	6/15/2022 19:03	80.45	6/14/2022 17:26	16.98	6/14/2022 16:35	4.13	6/14/2022 21:31	98.50
6/15/2022 20:22	49.32	6/15/2022 19:04	80.41	6/14/2022 17:27	16.99	6/14/2022 16:36	4.14	6/14/2022 21:32	104.57
6/15/2022 20:23	49.28	6/15/2022 19:05	80.42	6/14/2022 17:28	16.98	6/14/2022 16:37	4.17	6/14/2022 21:33	106.68
6/15/2022 20:24	49.30	6/15/2022 19:06	80.45	6/14/2022 17:29	16.97	6/14/2022 16:38	4.15	6/14/2022 21:34	106.13
6/15/2022 20:25	49.31	6/15/2022 19:07	80.42	6/14/2022 17:30	16.96	6/14/2022 16:39	4.13	6/14/2022 21:35	111.77
6/15/2022 20:26	49.29	6/15/2022 19:08	80.50	6/14/2022 17:31	16.92	6/14/2022 16:40	4.14	6/14/2022 21:36	111.72
6/15/2022 20:27	49.28	6/15/2022 19:09	80.45	6/14/2022 17:32	16.88	6/14/2022 16:41	4.09	6/14/2022 21:37	111.11
6/15/2022 20:28	49.28	6/15/2022 19:10	80.46	6/14/2022 17:33	16.92	6/14/2022 16:42	4.43	6/14/2022 21:38	110.61
6/15/2022 20:29	49.29	6/15/2022 19:11	80.42	6/14/2022 17:34	16.92	6/14/2022 16:43	4.33	6/14/2022 21:39	110.14
6/15/2022 20:30	49.27	6/15/2022 19:12	80.45	6/14/2022 17:35	16.89	6/14/2022 16:44	4.43	6/14/2022 21:40	109.67
6/15/2022 20:31	49.29	6/15/2022 19:13	80.45	6/14/2022 17:36	16.90	6/14/2022 16:45	4.68	6/14/2022 21:41	109.22
6/15/2022 20:32	49.28	6/15/2022 19:14	80.46	6/14/2022 17:37	16.87	6/14/2022 16:46	4.81	6/14/2022 21:42	108.79
6/15/2022 20:33	49.30	6/15/2022 19:15	80.45	6/14/2022 17:38	16.88	6/14/2022 16:47	4.81	6/14/2022 21:43	108.31
6/15/2022 20:34	49.32	6/15/2022 19:16	80.45	6/14/2022 17:39	16.91	6/14/2022 16:48	4.83	6/14/2022 21:44	107.86
6/15/2022 20:35	49.29	6/15/2022 19:17	80.46	6/14/2022 17:40	16.87	6/14/2022 16:49	4.87	6/14/2022 21:45	107.44
6/15/2022 20:36	49.29	6/15/2022 19:18	80.42	6/14/2022 17:41	16.83	6/14/2022 16:50	4.96	6/14/2022 21:46	107.02
6/15/2022 20:37	49.32	6/15/2022 19:19	80.45	6/14/2022 17:42	16.91	6/14/2022 16:51	4.91	6/14/2022 21:47	106.62
6/15/2022 20:38	49.32	6/15/2022 19:20	80.47	6/14/2022 17:43	16.84	6/14/2022 16:52	4.99	6/14/2022 21:48	106.18
6/15/2022 20:39	49.28	6/15/2022 19:21	80.44	6/14/2022 17:44	16.87	6/14/2022 16:53	4.70	6/14/2022 21:49	105.82
6/15/2022 20:40	49.31	6/15/2022 19:22	80.44	6/14/2022 17:45	16.86	6/14/2022 16:54	4.59	6/14/2022 21:50	105.44
6/15/2022 20:41	49.29	6/15/2022 19:23	80.48	6/14/2022 17:46	16.84	6/14/2022 16:55	4.47	6/14/2022 21:51	105.00
6/15/2022 20:42	49.29	6/15/2022 19:24	80.44	6/14/2022 17:47	16.87	6/14/2022 16:56	4.40	6/14/2022 21:52	104.66
6/15/2022 20:43	49.28	6/15/2022 19:25	80.47	6/14/2022 17:48	16.85	6/14/2022 16:57	4.44	6/14/2022 21:53	104.28
6/15/2022 20:44	49.25	6/15/2022 19:26	80.43	6/14/2022 17:49	16.86	6/14/2022 16:58	4.35	6/14/2022 21:54	103.94
6/15/2022 20:45	49.25	6/15/2022 19:27	80.47	6/14/2022 17:50	16.86	6/14/2022 16:59	4.37	6/14/2022 21:55	103.62
6/15/2022 20:46	49.27	6/15/2022 19:28	80.45	6/14/2022 17:51	16.82	6/14/2022 17:00	4.29	6/14/2022 21:56	103.20
6/15/2022 20:47	49.27	6/15/2022 19:29	80.45	6/14/2022 17:52	16.83	6/14/2022 17:01	4.37	6/14/2022 21:57	102.86
6/15/2022 20:48	49.27	6/15/2022 19:30	80.41	6/14/2022 17:53	16.82	6/14/2022 17:02	4.28	6/14/2022 21:58	102.54
6/15/2022 20:49	49.27	6/15/2022 19:31	80.47	6/14/2022 17:54	16.82	6/14/2022 17:03	4.27	6/14/2022 21:59	102.18
6/15/2022 20:50	49.24	6/15/2022 19:32	80.47	6/14/2022 17:55	16.84	6/14/2022 17:04	4.26	6/14/2022 22:00	101.83
6/15/2022 20:51	49.27	6/15/2022 19:33	80.41	6/14/2022 17:56	16.85	6/14/2022 17:05	4.21	6/14/2022 22:01	101.48
6/15/2022 20:52	49.30	6/15/2022 19:34	80.45	6/14/2022 17:57	16.87	6/14/2022 17:06	4.22	6/14/2022 22:02	101.16
6/15/2022 20:53	49.25	6/15/2022 19:35	80.46	6/14/2022 17:58	16.85	6/14/2022 17:07	4.24	6/14/2022 22:03	100.80
6/15/2022 20:54	49.24	6/15/2022 19:36	80.43	6/14/2022 17:59	16.87	6/14/2022 17:08	4.23	6/14/2022 22:04	100.47
6/15/2022 20:55	49.27	6/15/2022 19:37	80.42	6/14/2022 18:00	22.44	6/14/2022 17:09	4.23	6/14/2022 22:05	100.15
6/15/2022 20:56	49.28	6/15/2022 19:38	80.47	6/14/2022 18:01	25.86	6/14/2022 17:10	4.22	6/14/2022 22:06	99.87
6/15/2022 20:57	49.25	6/15/2022 19:39	80.46	6/14/2022 18:02	25.72	6/14/2022 17:11	4.24	6/14/2022 22:07	99.55
6/15/2022 20:58	49.26	6/15/2022 19:40	80.46	6/14/2022 18:03	23.10	6/14/2022 17:12	4.27	6/14/2022 22:08	99.23
6/15/2022 20:59	49.23	6/15/2022 19:41	80.49	6/14/2022 18:04	21.72	6/14/2022 17:13	4.23	6/14/2022 22:09	98.91
6/15/2022 21:00	49.29	6/15/2022 19:42	80.44	6/14/2022 18:05	20.92	6/14/2022 17:14	4.17	6/14/2022 22:10	98.60
6/15/2022 21:01	49.25	6/15/2022 19:43	80.44	6/14/2022 18:06	20.39	6/14/2022 17:15	4.17	6/14/2022 22:11	98.31
6/15/2022 21:02	49.26	6/15/2022 19:44	80.45	6/14/2022 18:07	19.93	6/14/2022 17:16	4.19	6/14/2022 22:12	98.01
6/15/2022 21:03	49.25	6/15/2022 19:45	80.42	6/14/2022 18:08	19.69	6/14/2022 17:17	4.12	6/14/2022 22:13	97.73
6/15/2022 21:04	49.27	6/15/2022 19:46	80.48	6/14/2022 18:09	19.43	6/14/2022 17:18	4.12	6/14/2022 22:14	97.43
6/15/2022 21:05	49.27	6/15/2022 19:47	80.44	6/14/2022 18:10	19.31	6/14/2022 17:19	4.14	6/14/2022 22:15	97.15
6/15/2022 21:06	49.26	6/15/2022 19:48	80.45	6/14/2022 18:11	19.16	6/14/2022 17:20	4.21	6/14/2022 22:16	96.86
6/15/2022 21:07	49.26	6/15/2022 19:49	80.45	6/14/2022 18:12	19.04	6/14/2022 17:21	4.15	6/14/2022 22:17	96.58
6/15/2022 21:08	49.28	6/15/2022 19:50	80.44	6/14/2022 18:13	18.87	6/14/2022 17:22	4.07	6/14/2022 22:18	96.29

6/15/2022 21:09	49.27	6/15/2022 19:51	80.44	6/14/2022 18:14	18.80	6/14/2022 17:23	4.12	6/14/2022 22:19	96.03
6/15/2022 21:10	49.24	6/15/2022 19:52	80.41	6/14/2022 18:15	18.71	6/14/2022 17:24	4.07	6/14/2022 22:20	95.75
6/15/2022 21:11	49.23	6/15/2022 19:53	80.46	6/14/2022 18:16	18.59	6/14/2022 17:25	4.08	6/14/2022 22:21	95.49
6/15/2022 21:12	49.23	6/15/2022 19:54	80.45	6/14/2022 18:17	18.54	6/14/2022 17:26	4.08	6/14/2022 22:22	95.22
6/15/2022 21:13	49.24	6/15/2022 19:55	80.45	6/14/2022 18:18	18.52	6/14/2022 17:27	4.09	6/14/2022 22:23	94.94
6/15/2022 21:14	49.27	6/15/2022 19:56	80.42	6/14/2022 18:19	18.46	6/14/2022 17:28	4.06	6/14/2022 22:24	94.69
6/15/2022 21:15	49.25	6/15/2022 19:57	80.45	6/14/2022 18:20	18.40	6/14/2022 17:29	4.08	6/14/2022 22:25	94.45
6/15/2022 21:16	49.27	6/15/2022 19:58	80.44	6/14/2022 18:21	18.38	6/14/2022 17:30	4.12	6/14/2022 22:26	94.22
6/15/2022 21:17	49.24	6/15/2022 19:59	80.45	6/14/2022 18:22	18.34	6/14/2022 17:31	4.04	6/14/2022 22:27	94.00
6/15/2022 21:18	49.24	6/15/2022 20:00	80.41	6/14/2022 18:23	18.28	6/14/2022 17:32	4.00	6/14/2022 22:28	93.78
6/15/2022 21:19	49.23	6/15/2022 20:01	80.47	6/14/2022 18:24	18.23	6/14/2022 17:33	4.10	6/14/2022 22:29	93.52
6/15/2022 21:20	49.23	6/15/2022 20:02	80.45	6/14/2022 18:25	18.14	6/14/2022 17:34	4.00	6/14/2022 22:30	93.32
6/15/2022 21:21	49.25	6/15/2022 20:03	80.46	6/14/2022 18:26	18.15	6/14/2022 17:35	3.99	6/14/2022 22:31	93.06
6/15/2022 21:22	49.25	6/15/2022 20:04	80.43	6/14/2022 18:27	18.13	6/14/2022 17:36	4.00	6/14/2022 22:32	92.89
6/15/2022 21:23	49.25	6/15/2022 20:05	80.43	6/14/2022 18:28	18.13	6/14/2022 17:37	4.00	6/14/2022 22:33	92.61
6/15/2022 21:24	49.23	6/15/2022 20:06	80.38	6/14/2022 18:29	18.08	6/14/2022 17:38	3.96	6/14/2022 22:34	92.39
6/15/2022 21:25	49.24	6/15/2022 20:07	80.43	6/14/2022 18:30	18.04	6/14/2022 17:39	4.00	6/14/2022 22:35	92.14
6/15/2022 21:26	49.22	6/15/2022 20:08	80.45	6/14/2022 18:31	18.02	6/14/2022 17:40	4.09	6/14/2022 22:36	91.93
6/15/2022 21:27	49.23	6/15/2022 20:09	80.45	6/14/2022 18:32	18.00	6/14/2022 17:41	3.98	6/14/2022 22:37	91.71
6/15/2022 21:28	49.22	6/15/2022 20:10	80.43	6/14/2022 18:33	17.97	6/14/2022 17:42	4.02	6/14/2022 22:38	91.55
6/15/2022 21:29	49.23	6/15/2022 20:11	80.43	6/14/2022 18:34	17.93	6/14/2022 17:43	4.05	6/14/2022 22:39	91.33
6/15/2022 21:30	49.25	6/15/2022 20:12	80.47	6/14/2022 18:35	17.99	6/14/2022 17:44	4.01	6/14/2022 22:40	91.13
6/15/2022 21:31	49.24	6/15/2022 20:13	80.45	6/14/2022 18:36	17.89	6/14/2022 17:45	3.97	6/14/2022 22:41	90.95
6/15/2022 21:32	49.24	6/15/2022 20:14	80.45	6/14/2022 18:37	17.92	6/14/2022 17:46	4.28	6/14/2022 22:42	90.76
6/15/2022 21:33	49.24	6/15/2022 20:15	80.42	6/14/2022 18:38	17.88	6/14/2022 17:47	4.12	6/14/2022 22:43	90.54
6/15/2022 21:34	49.26	6/15/2022 20:16	80.43	6/14/2022 18:39	17.86	6/14/2022 17:48	4.10	6/14/2022 22:44	90.33
6/15/2022 21:35	49.25	6/15/2022 20:17	80.45	6/14/2022 18:40	17.88	6/14/2022 17:49	4.01	6/14/2022 22:45	90.15
6/15/2022 21:36	49.23	6/15/2022 20:18	80.44	6/14/2022 18:41	17.88	6/14/2022 17:50	4.02	6/14/2022 22:46	89.95
6/15/2022 21:37	49.20	6/15/2022 20:19	80.44	6/14/2022 18:42	17.83	6/14/2022 17:51	4.04	6/14/2022 22:47	89.76
6/15/2022 21:38	49.21	6/15/2022 20:20	80.46	6/14/2022 18:43	17.83	6/14/2022 17:52	3.99	6/14/2022 22:48	89.54
6/15/2022 21:39	49.22	6/15/2022 20:21	80.42	6/14/2022 18:44	17.81	6/14/2022 17:53	4.16	6/14/2022 22:49	89.37
6/15/2022 21:40	49.24	6/15/2022 20:22	80.44	6/14/2022 18:45	17.78	6/14/2022 17:54	4.17	6/14/2022 22:50	89.20
6/15/2022 21:41	49.25	6/15/2022 20:23	80.44	6/14/2022 18:46	17.80	6/14/2022 17:55	4.02	6/14/2022 22:51	89.00
6/15/2022 21:42	49.22	6/15/2022 20:24	80.44	6/14/2022 18:47	17.77	6/14/2022 17:56	4.02	6/14/2022 22:52	88.79
6/15/2022 21:43	49.21	6/15/2022 20:25	80.49	6/14/2022 18:48	17.80	6/14/2022 17:57	3.99	6/14/2022 22:53	88.60
6/15/2022 21:44	49.23	6/15/2022 20:26	80.42	6/14/2022 18:49	18.58	6/14/2022 17:58	4.02	6/14/2022 22:54	88.42
6/15/2022 21:45	49.22	6/15/2022 20:27	80.45	6/14/2022 18:50	23.98	6/14/2022 17:59	3.97	6/14/2022 22:55	88.26
6/15/2022 21:46	49.26	6/15/2022 20:28	80.46	6/14/2022 18:51	27.15	6/14/2022 18:00	3.94	6/14/2022 22:56	88.10
6/15/2022 21:47	49.19	6/15/2022 20:29	80.46	6/14/2022 18:52	27.41	6/14/2022 18:01	4.03	6/14/2022 22:57	87.90
6/15/2022 21:48	49.23	6/15/2022 20:30	80.48	6/14/2022 18:53	24.60	6/14/2022 18:02	3.94	6/14/2022 22:58	87.69
6/15/2022 21:49	49.21	6/15/2022 20:31	80.46	6/14/2022 18:54	23.08	6/14/2022 18:03	3.89	6/14/2022 22:59	87.54
6/15/2022 21:50	49.21	6/15/2022 20:32	80.44	6/14/2022 18:55	22.09	6/14/2022 18:04	3.96	6/14/2022 23:00	87.36
6/15/2022 21:51	49.21	6/15/2022 20:33	80.92	6/14/2022 18:56	21.46	6/14/2022 18:05	3.91	6/14/2022 23:01	87.18
6/15/2022 21:52	49.19	6/15/2022 20:34	80.85	6/14/2022 18:57	21.03	6/14/2022 18:06	3.90	6/14/2022 23:02	86.99
6/15/2022 21:53	49.22	6/15/2022 20:35	80.76	6/14/2022 18:58	20.72	6/14/2022 18:07	3.89	6/14/2022 23:03	86.82
6/15/2022 21:54	49.21	6/15/2022 20:36	80.75	6/14/2022 18:59	20.44	6/14/2022 18:08	3.87	6/14/2022 23:04	86.60
6/15/2022 21:55	49.21	6/15/2022 20:37	80.68	6/14/2022 19:00	20.27	6/14/2022 18:09	3.88	6/14/2022 23:05	86.43
6/15/2022 21:56	49.22	6/15/2022 20:38	80.67	6/14/2022 19:01	20.08	6/14/2022 18:10	3.88	6/14/2022 23:06	86.26
6/15/2022 21:57	49.24	6/15/2022 20:39	80.68	6/14/2022 19:02	19.88	6/14/2022 18:11	3.89	6/14/2022 23:07	86.12
6/15/2022 21:58	49.21	6/15/2022 20:40	80.61	6/14/2022 19:03	19.77	6/14/2022 18:12	3.82	6/14/2022 23:08	85.92
6/15/2022 21:59	49.20	6/15/2022 20:41	80.56	6/14/2022 19:04	19.67	6/14/2022 18:13	3.86	6/14/2022 23:09	85.76
6/15/2022 22:00	49.20	6/15/2022 20:42	80.55	6/14/2022 19:05	19.50	6/14/2022 18:14	3.85	6/14/2022 23:10	85.62
6/15/2022 22:01	49.22	6/15/2022 20:43	80.57	6/14/2022 19:06	19.44	6/14/2022 18:15	3.80	6/14/2022 23:11	85.43
6/15/2022 22:02	49.22	6/15/2022 20:44	80.56	6/14/2022 19:07	24.05	6/14/2022 18:16	3.84	6/14/2022 23:12	85.28
6/15/2022 22:03	49.19	6/15/2022 20:45	80.56	6/14/2022 19:08	27.66	6/14/2022 18:17	3.86	6/14/2022 23:13	85.10
6/15/2022 22:04	49.21	6/15/2022 20:46	80.56	6/14/2022 19:09	27.25	6/14/2022 18:18	3.87	6/14/2022 23:14	84.99
6/15/2022 22:05	49.21	6/15/2022 20:47	80.50	6/14/2022 19:10	24.78	6/14/2022 18:19	3.78	6/14/2022 23:15	84.82
6/15/2022 22:06	49.17	6/15/2022 20:48	80.54	6/14/2022 19:11	23.48	6/14/2022 18:20	3.82	6/14/2022 23:16	84.67
6/15/2022 22:07	49.23	6/15/2022 20:49	80.52	6/14/2022 19:12	22.65	6/14/2022 18:21	3.81	6/14/2022 23:17	84.51
6/15/2022 22:08	49.21	6/15/2022 20:50	80.50	6/14/2022 19:13	22.04	6/14/2022 18:22	3.82	6/14/2022 23:18	84.35
6/15/2022 22:09	49.21	6/15/2022 20:51	80.50	6/14/2022 19:14	21.64	6/14/2022 18:23	4.02	6/14/2022 23:19	84.22
6/15/2022 22:10	49.20	6/15/2022 20:52	80.48	6/14/2022 19:15	21.33	6/14/2022 18:24	4.13	6/14/2022 23:20	84.06
6/15/2022 22:11	49.22	6/15/2022 20:53	80.50	6/14/2022 19:16	21.04	6/14/2022 18:25	3.98	6/14/2022 23:21	83.90
6/15/2022 22:12	49.22	6/15/2022 20:54	80.53	6/14/2022 19:17	20.83	6/14/2022 18:26	3.93	6/14/2022 23:22	83.78
6/15/2022 22:13	49.18	6/15/2022 20:55	80.51	6/14/2022 19:18	20.64	6/14/2022 18:27	3.83	6/14/2022 23:23	83.59
6/15/2022 22:14	49.23	6/15/2022 20:56	80.50	6/14/2022 19:19	20.52	6/14/2022 18:28	3.99	6/14/2022 23:24	83.45
6/15/2022 22:15	49.19	6/15/2022 20:57	80.48	6/14/2022 19:20	20.37	6/14/2022 18:29	3.90	6/14/2022 23:25	83.35
6/15/2022 22:16	49.20	6/15/2022 20:58	80.48	6/14/2022 19:21	20.25	6/14/2022 18:30	3.83	6/14/2022 23:26	83.19
6/15/2022 22:17	49.20	6/15/2022 20:59	80.52	6/14/2022 19:22	20.18	6/14/2022 18:31	3.87	6/14/2022 23:27	83.09
6/15/2022 22:18	49.19	6/15/2022 21:00	80.48	6/14/2022 19:23	20.02	6/14/2022 18:32	3.83	6/14/2022 23:28	82.92
6/15/2022 22:19	49.19	6/15/2022 21:01	80.49	6/14/2022 19:24	19.94	6/14/2022 18:33	3.99	6/14/2022 23:29	82.76
6/15/2022 22:20	49.22	6/15/2022 21:02	80.46	6/14/2022 19:25	19.85	6/14/2022 18:34	4.01	6/14/2022 23:30	82.66
6/15/2022 22:21	49.21	6/15/2022 21:03	80.46	6/14/2022 19:26	19.78	6/14/2022 18:35	3.91	6/14/2022 23:31	82.50
6/15/2022 22:22	49.19	6/15/2022 21:04	82.44	6/14/2022 19:27	19.67	6/14/2022 18:36	4.05	6/14/2022 23:32	82.38
6/15/2022 22:23	49.22	6/15/2022 21:05	82.05	6/14/2022 19:28	19.62	6/14/2022 18:37	3.91	6/14/2022 23:33	82.27
6/15/2022 22:24	49.20	6/15/2022 21:06	81.75	6/14/2022 19:29	19.51	6/14/2022 18:38	3.85	6/14/2022 23:34	82.10
6/15/2022 22:25	49.18	6/15/2022 21:07	81.57	6/14/2022 19:30	19.45	6/14/2022 18:39	3.91	6/14/2022 23:35	82.00
6/15/2022 22:26	49.19	6/15/2022 21:08	81.41	6/14/2022 19:31	19.41	6/14/2022 18:40	3.84	6/14/2022 23:36	81.88
6/15/2022 22:27	49.21	6/15/2022 21:09	81.29	6/14/2022 19:32	19.37	6/14/2022 18:41	3.81	6/14/2022 23:37	81.78
6/15/2022 22:28	49.21	6/15/2022 21:10	81.22	6/14/2022 19:33	19.31	6/14/2022 18:42	3.84	6/14/2022 23:38	81.64
6/15/2022 22:29	49.15	6/15/2022 21:11	81.14	6/14/2022 19:34	19.23	6/14/2022 18:43	3.85	6/14/2022 23:39	81.52
6/15/2022 22:30	49.17	6/15/2022 21:12	81.08	6/14/2022 19:35	19.14	6/14/2022 18:44	3.81	6/14/2022 23:40	81.39
6/15/2022 22:31	49.19	6/15/2022 21:13	80.96	6/14/2022 19:36	19.12	6/14/2022 18:45	3.82	6/14/2022 23:41	81.30
6/15/2022 22:32	49.16	6/15/2022 21:14	80.95	6/14/2022 19:37	19.09	6/14/2022 18:46	3.79	6/14/2022 23:42	81.18
6/15/2022 22:33	49.15	6/15/2022 21:15	80.91	6/14/2022 19:38	19.04	6/14/2022 18:47	3.82	6/14/2022 23:43	81.05
6/15/2022 22:34	49.15	6/15/2022 21:16	80.82	6/14/2022 19:39	18.98	6/14/2022 18:48	3.78	6/14/2022 23:44	80.98
6/15/2022 22:35	49.18	6/15/2022 21:17	80.77	6/14/2022 19:40	18.94	6/14/2022 18:49	3.78	6/14/2022 23:45	80.85
6/15/2022 22:36	49.19	6/15/2022 21:18	80.80	6/14/2022 19:41	18.88	6/14/2022 18:50	3.78	6/14/2022 23:46	80.76

6/15/2022 22:37	49.18	6/15/2022 21:19	80.81	6/14/2022 19:42	18.90	6/14/2022 18:51	3.73	6/14/2022 23:47	80.67
6/15/2022 22:38	49.14	6/15/2022 21:20	80.72	6/14/2022 19:43	18.78	6/14/2022 18:52	3.80	6/14/2022 23:48	80.59
6/15/2022 22:39	49.18	6/15/2022 21:21	80.69	6/14/2022 19:44	18.83	6/14/2022 18:53	3.82	6/14/2022 23:49	80.46
6/15/2022 22:40	49.14	6/15/2022 21:22	80.72	6/14/2022 19:45	18.71	6/14/2022 18:54	3.75	6/14/2022 23:50	80.38
6/15/2022 22:41	49.24	6/15/2022 21:23	80.69	6/14/2022 19:46	18.72	6/14/2022 18:55	3.87	6/14/2022 23:51	80.28
6/15/2022 22:42	49.17	6/15/2022 21:24	80.62	6/14/2022 19:47	18.68	6/14/2022 18:56	3.75	6/14/2022 23:52	80.21
6/15/2022 22:43	49.14	6/15/2022 21:25	80.64	6/14/2022 19:48	18.62	6/14/2022 18:57	3.73	6/14/2022 23:53	80.08
6/15/2022 22:44	49.17	6/15/2022 21:26	80.63	6/14/2022 19:49	18.59	6/14/2022 18:58	3.74	6/14/2022 23:54	80.01
6/15/2022 22:45	49.18	6/15/2022 21:27	80.62	6/14/2022 19:50	18.56	6/14/2022 18:59	3.71	6/14/2022 23:55	79.83
6/15/2022 22:46	49.18	6/15/2022 21:28	80.63	6/14/2022 19:51	18.55	6/14/2022 19:00	3.71	6/14/2022 23:56	79.78
6/15/2022 22:47	49.17	6/15/2022 21:29	80.61	6/14/2022 19:52	18.51	6/14/2022 19:01	3.72	6/14/2022 23:57	79.63
6/15/2022 22:48	49.19	6/15/2022 21:30	80.58	6/14/2022 19:53	18.46	6/14/2022 19:02	3.74	6/14/2022 23:58	79.55
6/15/2022 22:49	50.61	6/15/2022 21:31	80.58	6/14/2022 19:54	18.44	6/14/2022 19:03	4.13	6/14/2022 23:59	79.43
6/15/2022 22:50	52.76	6/15/2022 21:32	80.56	6/14/2022 19:55	18.39	6/14/2022 19:04	3.84	6/15/2022 0:00	79.35
6/15/2022 22:51	53.73	6/15/2022 21:33	80.57	6/14/2022 19:56	18.39	6/14/2022 19:05	3.81	6/15/2022 0:01	79.22
6/15/2022 22:52	54.32	6/15/2022 21:34	80.57	6/14/2022 19:57	18.30	6/14/2022 19:06	3.83	6/15/2022 0:02	79.14
6/15/2022 22:53	52.83	6/15/2022 21:35	80.60	6/14/2022 19:58	18.32	6/14/2022 19:07	3.73	6/15/2022 0:03	79.03
6/15/2022 22:54	51.45	6/15/2022 21:36	80.56	6/14/2022 19:59	18.26	6/14/2022 19:08	3.75	6/15/2022 0:04	78.95
6/15/2022 22:55	50.91	6/15/2022 21:37	80.55	6/14/2022 20:00	18.30	6/14/2022 19:09	3.71	6/15/2022 0:05	78.88
6/15/2022 22:56	50.58	6/15/2022 21:38	80.54	6/14/2022 20:01	18.25	6/14/2022 19:10	3.75	6/15/2022 0:06	78.80
6/15/2022 22:57	50.41	6/15/2022 21:39	80.53	6/14/2022 20:02	18.28	6/14/2022 19:11	3.72	6/15/2022 0:07	78.72
6/15/2022 22:58	50.28	6/15/2022 21:40	80.55	6/14/2022 20:03	18.18	6/14/2022 19:12	3.68	6/15/2022 0:08	78.68
6/15/2022 22:59	50.18	6/15/2022 21:41	80.50	6/14/2022 20:04	18.18	6/14/2022 19:13	3.75	6/15/2022 0:09	78.55
6/15/2022 23:00	50.10	6/15/2022 21:42	80.54	6/14/2022 20:05	18.16	6/14/2022 19:14	3.72	6/15/2022 0:10	78.46
6/15/2022 23:01	50.06	6/15/2022 21:43	80.54	6/14/2022 20:06	18.15	6/14/2022 19:15	3.67	6/15/2022 0:11	78.40
6/15/2022 23:02	50.02	6/15/2022 21:44	80.54	6/14/2022 20:07	18.12	6/14/2022 19:16	3.69	6/15/2022 0:12	78.32
6/15/2022 23:03	49.93	6/15/2022 21:45	80.54	6/14/2022 20:08	18.11	6/14/2022 19:17	3.72	6/15/2022 0:13	78.26
6/15/2022 23:04	49.91	6/15/2022 21:46	80.54	6/14/2022 20:09	18.10	6/14/2022 19:18	3.65	6/15/2022 0:14	78.18
6/15/2022 23:05	49.89	6/15/2022 21:47	80.50	6/14/2022 20:10	18.02	6/14/2022 19:19	3.67	6/15/2022 0:15	78.10
6/15/2022 23:06	49.83	6/15/2022 21:48	80.51	6/14/2022 20:11	17.98	6/14/2022 19:20	3.62	6/15/2022 0:16	78.05
6/15/2022 23:07	49.83	6/15/2022 21:49	80.48	6/14/2022 20:12	17.99	6/14/2022 19:21	3.70	6/15/2022 0:17	77.94
6/15/2022 23:08	49.83	6/15/2022 21:50	80.54	6/14/2022 20:13	17.98	6/14/2022 19:22	3.59	6/15/2022 0:18	77.89
6/15/2022 23:09	49.81	6/15/2022 21:51	80.50	6/14/2022 20:14	17.97	6/14/2022 19:23	3.63	6/15/2022 0:19	77.74
6/15/2022 23:10	49.76	6/15/2022 21:52	80.49	6/14/2022 20:15	17.96	6/14/2022 19:24	3.62	6/15/2022 0:20	77.72
6/15/2022 23:11	49.74	6/15/2022 21:53	80.52	6/14/2022 20:16	17.89	6/14/2022 19:25	3.64	6/15/2022 0:21	77.60
6/15/2022 23:12	49.70	6/15/2022 21:54	80.49	6/14/2022 20:17	17.87	6/14/2022 19:26	3.61	6/15/2022 0:22	77.53
6/15/2022 23:13	49.71	6/15/2022 21:55	80.50	6/14/2022 20:18	17.86	6/14/2022 19:27	3.62	6/15/2022 0:23	77.41
6/15/2022 23:14	49.70	6/15/2022 21:56	80.51	6/14/2022 20:19	17.84	6/14/2022 19:28	3.65	6/15/2022 0:24	77.39
6/15/2022 23:15	49.65	6/15/2022 21:57	80.50	6/14/2022 20:20	17.82	6/14/2022 19:29	3.61	6/15/2022 0:25	77.26
6/15/2022 23:16	49.68	6/15/2022 21:58	80.50	6/14/2022 20:21	17.83	6/14/2022 19:30	3.58	6/15/2022 0:26	77.22
6/15/2022 23:17	49.67	6/15/2022 21:59	80.51	6/14/2022 20:22	17.83	6/14/2022 19:31	3.61	6/15/2022 0:27	77.13
6/15/2022 23:18	49.64	6/15/2022 22:00	80.48	6/14/2022 20:23	17.80	6/14/2022 19:32	3.68	6/15/2022 0:28	77.05
6/15/2022 23:19	49.63	6/15/2022 22:01	80.45	6/14/2022 20:24	17.79	6/14/2022 19:33	3.59	6/15/2022 0:29	77.01
6/15/2022 23:20	49.64	6/15/2022 22:02	80.51	6/14/2022 20:25	17.77	6/14/2022 19:34	3.63	6/15/2022 0:30	76.95
6/15/2022 23:21	49.60	6/15/2022 22:03	80.47	6/14/2022 20:26	17.75	6/14/2022 19:35	3.59	6/15/2022 0:31	76.87
6/15/2022 23:22	49.57	6/15/2022 22:04	80.50	6/14/2022 20:27	17.72	6/14/2022 19:36	3.63	6/15/2022 0:32	76.81
6/15/2022 23:23	49.61	6/15/2022 22:05	80.52	6/14/2022 20:28	17.62	6/14/2022 19:37	3.59	6/15/2022 0:33	76.75
6/15/2022 23:24	49.57	6/15/2022 22:06	80.51	6/14/2022 20:29	17.66	6/14/2022 19:38	3.56	6/15/2022 0:34	76.68
6/15/2022 23:25	49.59	6/15/2022 22:07	80.48	6/14/2022 20:30	17.67	6/14/2022 19:39	3.63	6/15/2022 0:35	76.59
6/15/2022 23:26	49.56	6/15/2022 22:08	80.52	6/14/2022 20:31	17.68	6/14/2022 19:40	3.55	6/15/2022 0:36	76.55
6/15/2022 23:27	49.57	6/15/2022 22:09	80.49	6/14/2022 20:32	17.58	6/14/2022 19:41	3.53	6/15/2022 0:37	76.48
6/15/2022 23:28	49.53	6/15/2022 22:10	80.51	6/14/2022 20:33	17.59	6/14/2022 19:42	3.57	6/15/2022 0:38	76.41
6/15/2022 23:29	49.52	6/15/2022 22:11	80.50	6/14/2022 20:34	17.61	6/14/2022 19:43	3.55	6/15/2022 0:39	76.33
6/15/2022 23:30	49.53	6/15/2022 22:12	80.47	6/14/2022 20:35	17.59	6/14/2022 19:44	3.52	6/15/2022 0:40	76.30
6/15/2022 23:31	49.56	6/15/2022 22:13	80.47	6/14/2022 20:36	17.54	6/14/2022 19:45	3.54	6/15/2022 0:41	76.24
6/15/2022 23:32	49.51	6/15/2022 22:14	80.47	6/14/2022 20:37	17.54	6/14/2022 19:46	3.55	6/15/2022 0:42	76.14
6/15/2022 23:33	49.49	6/15/2022 22:15	80.50	6/14/2022 20:38	17.54	6/14/2022 19:47	3.55	6/15/2022 0:43	76.10
6/15/2022 23:34	49.55	6/15/2022 22:16	80.50	6/14/2022 20:39	17.50	6/14/2022 19:48	3.56	6/15/2022 0:44	76.01
6/15/2022 23:35	49.53	6/15/2022 22:17	80.50	6/14/2022 20:40	17.49	6/14/2022 19:49	3.64	6/15/2022 0:45	75.95
6/15/2022 23:36	49.52	6/15/2022 22:18	80.49	6/14/2022 20:41	17.46	6/14/2022 19:50	3.50	6/15/2022 0:46	75.88
6/15/2022 23:37	49.47	6/15/2022 22:19	80.48	6/14/2022 20:42	17.52	6/14/2022 19:51	3.56	6/15/2022 0:47	75.79
6/15/2022 23:38	49.50	6/15/2022 22:20	80.49	6/14/2022 20:43	17.46	6/14/2022 19:52	3.56	6/15/2022 0:48	75.75
6/15/2022 23:39	49.50	6/15/2022 22:21	80.48	6/14/2022 20:44	17.43	6/14/2022 19:53	3.49	6/15/2022 0:49	75.65
6/15/2022 23:40	49.48	6/15/2022 22:22	80.48	6/14/2022 20:45	17.45	6/14/2022 19:54	3.51	6/15/2022 0:50	75.65
6/15/2022 23:41	49.50	6/15/2022 22:23	80.49	6/14/2022 20:46	17.40	6/14/2022 19:55	3.56	6/15/2022 0:51	75.56
6/15/2022 23:42	49.46	6/15/2022 22:24	80.49	6/14/2022 20:47	17.41	6/14/2022 19:56	3.73	6/15/2022 0:52	75.51
6/15/2022 23:43	49.49	6/15/2022 22:25	80.50	6/14/2022 20:48	17.37	6/14/2022 19:57	3.66	6/15/2022 0:53	75.45
6/15/2022 23:44	49.46	6/15/2022 22:26	80.53	6/14/2022 20:49	17.38	6/14/2022 19:58	3.68	6/15/2022 0:54	75.40
6/15/2022 23:45	49.48	6/15/2022 22:27	80.49	6/14/2022 20:50	17.34	6/14/2022 19:59	3.81	6/15/2022 0:55	75.36
6/15/2022 23:46	49.44	6/15/2022 22:28	80.48	6/14/2022 20:51	17.31	6/14/2022 20:00	3.89	6/15/2022 0:56	75.23
6/15/2022 23:47	49.47	6/15/2022 22:29	80.50	6/14/2022 20:52	17.36	6/14/2022 20:01	3.86	6/15/2022 0:57	75.20
6/15/2022 23:48	49.46	6/15/2022 22:30	80.43	6/14/2022 20:53	17.30	6/14/2022 20:02	3.94	6/15/2022 0:58	75.13
6/15/2022 23:49	49.42	6/15/2022 22:31	80.47	6/14/2022 20:54	17.30	6/14/2022 20:03	4.03	6/15/2022 0:59	75.05
6/15/2022 23:50	49.46	6/15/2022 22:32	80.47	6/14/2022 20:55	17.28	6/14/2022 20:04	4.02	6/15/2022 1:00	75.01
6/15/2022 23:51	49.41	6/15/2022 22:33	80.48	6/14/2022 20:56	17.28	6/14/2022 20:05	4.11	6/15/2022 1:01	74.97
6/15/2022 23:52	49.43	6/15/2022 22:34	80.47	6/14/2022 20:57	17.26	6/14/2022 20:06	3.93	6/15/2022 1:02	74.91
6/15/2022 23:53	49.40	6/15/2022 22:35	80.50	6/14/2022 20:58	17.26	6/14/2022 20:07	3.94	6/15/2022 1:03	74.87
6/15/2022 23:54	49.41	6/15/2022 22:36	80.53	6/14/2022 20:59	17.24	6/14/2022 20:08	3.87	6/15/2022 1:04	74.80
6/15/2022 23:55	49.40	6/15/2022 22:37	80.47	6/14/2022 21:00	17.22	6/14/2022 20:09	3.76	6/15/2022 1:05	74.72
6/15/2022 23:56	49.42	6/15/2022 22:38	80.50	6/14/2022 21:01	17.21	6/14/2022 20:10	3.78	6/15/2022 1:06	74.67
6/15/2022 23:57	49.41	6/15/2022 22:39	80.46	6/14/2022 21:02	17.18	6/14/2022 20:11	3.72	6/15/2022 1:07	74.61
6/15/2022 23:58	49.42	6/15/2022 22:40	80.48	6/14/2022 21:03	17.18	6/14/2022 20:12	3.80	6/15/2022 1:08	74.57
6/15/2022 23:59	49.41	6/15/2022 22:41	80.49	6/14/2022 21:04	17.15	6/14/2022 20:13	3.68	6/15/2022 1:09	74.47
6/16/2022 0:00	49.37	6/15/2022 22:42	80.50	6/14/2022 21:05	17.18	6/14/2022 20:14	3.74	6/15/2022 1:10	74.44
6/16/2022 0:01	49.42	6/15/2022 22:43	80.53	6/14/2022 21:06	17.18	6/14/2022 20:15	3.67	6/15/2022 1:11	74.39
6/16/2022 0:02	49.39	6/15/2022 22:44	80.48	6/14/2022 21:07	17.19	6/14/2022 20:16	3.71	6/15/2022 1:12	74.36
6/16/2022 0:03	49.41	6/15/2022 22:45	80.53	6/14/2022 21:08	17.12	6/14/2022 20:17	3.66	6/15/2022 1:13	74.29
6/16/2022 0:04	49.38	6/15/2022 22:46	80.49	6/14/2022 21:09	17.17	6/14/2022 20:18	3.64	6/15/2022 1:14	74.26

6/16/2022 0:05	49.39	6/15/2022 22:47	80.48	6/14/2022 21:10	17.13	6/14/2022 20:19	3.60	6/15/2022 1:15	74.20
6/16/2022 0:06	49.36	6/15/2022 22:48	80.46	6/14/2022 21:11	17.13	6/14/2022 20:20	3.59	6/15/2022 1:16	74.13
6/16/2022 0:07	49.39	6/15/2022 22:49	80.50	6/14/2022 21:12	17.07	6/14/2022 20:21	3.68	6/15/2022 1:17	74.08
6/16/2022 0:08	49.36	6/15/2022 22:50	80.49	6/14/2022 21:13	17.07	6/14/2022 20:22	3.64	6/15/2022 1:18	74.01
6/16/2022 0:09	49.34	6/15/2022 22:51	80.50	6/14/2022 21:14	17.11	6/14/2022 20:23	3.62	6/15/2022 1:19	74.00
6/16/2022 0:10	49.35	6/15/2022 22:52	80.53	6/14/2022 21:15	17.05	6/14/2022 20:24	3.66	6/15/2022 1:20	73.90
6/16/2022 0:11	49.34	6/15/2022 22:53	80.51	6/14/2022 21:16	17.06	6/14/2022 20:25	3.70	6/15/2022 1:21	73.84
6/16/2022 0:12	49.36	6/15/2022 22:54	80.48	6/14/2022 21:17	17.07	6/14/2022 20:26	4.01	6/15/2022 1:22	73.82
6/16/2022 0:13	49.39	6/15/2022 22:55	80.49	6/14/2022 21:18	17.01	6/14/2022 20:27	3.90	6/15/2022 1:23	73.76
6/16/2022 0:14	49.34	6/15/2022 22:56	80.49	6/14/2022 21:19	17.05	6/14/2022 20:28	3.81	6/15/2022 1:24	73.72
6/16/2022 0:15	49.36	6/15/2022 22:57	80.55	6/14/2022 21:20	17.03	6/14/2022 20:29	3.73	6/15/2022 1:25	73.66
6/16/2022 0:16	49.38	6/15/2022 22:58	80.47	6/14/2022 21:21	17.04	6/14/2022 20:30	3.71	6/15/2022 1:26	73.63
6/16/2022 0:17	49.36	6/15/2022 22:59	80.50	6/14/2022 21:22	17.01	6/14/2022 20:31	3.69	6/15/2022 1:27	73.56
6/16/2022 0:18	49.36	6/15/2022 23:00	80.49	6/14/2022 21:23	16.94	6/14/2022 20:32	3.66	6/15/2022 1:28	73.57
6/16/2022 0:19	49.32	6/15/2022 23:01	80.48	6/14/2022 21:24	17.01	6/14/2022 20:33	3.65	6/15/2022 1:29	73.43
6/16/2022 0:20	49.33	6/15/2022 23:02	80.50	6/14/2022 21:25	17.00	6/14/2022 20:34	3.67	6/15/2022 1:30	73.42
6/16/2022 0:21	49.31	6/15/2022 23:03	80.46	6/14/2022 21:26	17.01	6/14/2022 20:35	3.63	6/15/2022 1:31	73.37
6/16/2022 0:22	49.34	6/15/2022 23:04	80.48	6/14/2022 21:27	16.94	6/14/2022 20:36	3.64	6/15/2022 1:32	73.33
6/16/2022 0:23	49.35	6/15/2022 23:05	80.47	6/14/2022 21:28	16.96	6/14/2022 20:37	3.68	6/15/2022 1:33	73.28
6/16/2022 0:24	49.34	6/15/2022 23:06	80.47	6/14/2022 21:29	16.94	6/14/2022 20:38	3.71	6/15/2022 1:34	73.22
6/16/2022 0:25	49.32	6/15/2022 23:07	80.46	6/14/2022 21:30	16.93	6/14/2022 20:39	3.58	6/15/2022 1:35	73.19
6/16/2022 0:26	49.30	6/15/2022 23:08	80.49	6/14/2022 21:31	16.91	6/14/2022 20:40	3.64	6/15/2022 1:36	73.12
6/16/2022 0:27	49.34	6/15/2022 23:09	80.52	6/14/2022 21:32	16.94	6/14/2022 20:41	3.66	6/15/2022 1:37	73.12
6/16/2022 0:28	49.32	6/15/2022 23:10	80.49	6/14/2022 21:33	16.88	6/14/2022 20:42	3.58	6/15/2022 1:38	73.05
6/16/2022 0:29	49.29	6/15/2022 23:11	80.49	6/14/2022 21:34	16.92	6/14/2022 20:43	3.61	6/15/2022 1:39	73.02
6/16/2022 0:30	49.31	6/15/2022 23:12	80.50	6/14/2022 21:35	16.85	6/14/2022 20:44	3.64	6/15/2022 1:40	72.96
6/16/2022 0:31	49.33	6/15/2022 23:13	80.49	6/14/2022 21:36	16.90	6/14/2022 20:45	3.57	6/15/2022 1:41	72.88
6/16/2022 0:32	49.33	6/15/2022 23:14	80.50	6/14/2022 21:37	16.85	6/14/2022 20:46	3.58	6/15/2022 1:42	72.84
6/16/2022 0:33	49.32	6/15/2022 23:15	80.48	6/14/2022 21:38	16.87	6/14/2022 20:47	3.61	6/15/2022 1:43	72.83
6/16/2022 0:34	49.27	6/15/2022 23:16	80.48	6/14/2022 21:39	16.88	6/14/2022 20:48	3.62	6/15/2022 1:44	72.80
6/16/2022 0:35	49.34	6/15/2022 23:17	80.51	6/14/2022 21:40	16.86	6/14/2022 20:49	3.59	6/15/2022 1:45	72.76
6/16/2022 0:36	49.31	6/15/2022 23:18	80.48	6/14/2022 21:41	16.84	6/14/2022 20:50	3.59	6/15/2022 1:46	72.68
6/16/2022 0:37	49.30	6/15/2022 23:19	80.49	6/14/2022 21:42	16.82	6/14/2022 20:51	3.64	6/15/2022 1:47	72.65
6/16/2022 0:38	49.31	6/15/2022 23:20	80.47	6/14/2022 21:43	16.82	6/14/2022 20:52	3.56	6/15/2022 1:48	72.60
6/16/2022 0:39	49.30	6/15/2022 23:21	80.50	6/14/2022 21:44	16.77	6/14/2022 20:53	3.60	6/15/2022 1:49	72.58
6/16/2022 0:40	49.34	6/15/2022 23:22	80.47	6/14/2022 21:45	16.81	6/14/2022 20:54	3.65	6/15/2022 1:50	72.50
6/16/2022 0:41	49.30	6/15/2022 23:23	80.47	6/14/2022 21:46	16.77	6/14/2022 20:55	3.56	6/15/2022 1:51	72.46
6/16/2022 0:42	49.29	6/15/2022 23:24	80.49	6/14/2022 21:47	16.81	6/14/2022 20:56	3.59	6/15/2022 1:52	72.42
6/16/2022 0:43	49.31	6/15/2022 23:25	80.49	6/14/2022 21:48	16.77	6/14/2022 20:57	3.61	6/15/2022 1:53	72.41
6/16/2022 0:44	49.28	6/15/2022 23:26	80.49	6/14/2022 21:49	16.77	6/14/2022 20:58	3.72	6/15/2022 1:54	72.37
6/16/2022 0:45	49.29	6/15/2022 23:27	80.45	6/14/2022 21:50	16.77	6/14/2022 20:59	3.67	6/15/2022 1:55	72.33
6/16/2022 0:46	49.31	6/15/2022 23:28	80.48	6/14/2022 21:51	16.73	6/14/2022 21:00	3.61	6/15/2022 1:56	72.29
6/16/2022 0:47	49.28	6/15/2022 23:29	80.49	6/14/2022 21:52	16.77	6/14/2022 21:01	3.60	6/15/2022 1:57	72.25
6/16/2022 0:48	49.27	6/15/2022 23:30	80.47	6/14/2022 21:53	16.79	6/14/2022 21:02	3.60	6/15/2022 1:58	72.20
6/16/2022 0:49	49.25	6/15/2022 23:31	80.51	6/14/2022 21:54	16.79	6/14/2022 21:03	3.61	6/15/2022 1:59	72.13
6/16/2022 0:50	49.30	6/15/2022 23:32	80.46	6/14/2022 21:55	16.68	6/14/2022 21:04	3.55	6/15/2022 2:00	76.86
6/16/2022 0:51	49.24	6/15/2022 23:33	80.49	6/14/2022 21:56	16.72	6/14/2022 21:05	3.56	6/15/2022 2:01	83.65
6/16/2022 0:52	49.28	6/15/2022 23:34	80.50	6/14/2022 21:57	16.74	6/14/2022 21:06	3.74	6/15/2022 2:02	85.11
6/16/2022 0:53	49.26	6/15/2022 23:35	80.49	6/14/2022 21:58	16.71	6/14/2022 21:07	3.65	6/15/2022 2:03	89.71
6/16/2022 0:54	49.29	6/15/2022 23:36	80.46	6/14/2022 21:59	16.71	6/14/2022 21:08	3.72	6/15/2022 2:04	96.25
6/16/2022 0:55	49.29	6/15/2022 23:37	80.51	6/14/2022 22:00	16.66	6/14/2022 21:09	3.71	6/15/2022 2:05	99.06
6/16/2022 0:56	49.25	6/15/2022 23:38	80.48	6/14/2022 22:01	16.69	6/14/2022 21:10	3.73	6/15/2022 2:06	101.73
6/16/2022 0:57	49.25	6/15/2022 23:39	80.51	6/14/2022 22:02	16.67	6/14/2022 21:11	3.86	6/15/2022 2:07	108.36
6/16/2022 0:58	49.21	6/15/2022 23:40	80.50	6/14/2022 22:03	16.70	6/14/2022 21:12	3.75	6/15/2022 2:08	114.06
6/16/2022 0:59	49.24	6/15/2022 23:41	80.50	6/14/2022 22:04	16.69	6/14/2022 21:13	3.80	6/15/2022 2:09	113.22
6/16/2022 1:00	49.28	6/15/2022 23:42	80.48	6/14/2022 22:05	16.67	6/14/2022 21:14	3.87	6/15/2022 2:10	119.83
6/16/2022 1:01	49.26	6/15/2022 23:43	80.50	6/14/2022 22:06	16.66	6/14/2022 21:15	3.79	6/15/2022 2:11	126.09
6/16/2022 1:02	49.29	6/15/2022 23:44	80.50	6/14/2022 22:07	16.62	6/14/2022 21:16	3.77	6/15/2022 2:12	129.25
6/16/2022 1:03	49.26	6/15/2022 23:45	80.47	6/14/2022 22:08	16.65	6/14/2022 21:17	3.70	6/15/2022 2:13	130.49
6/16/2022 1:04	49.25	6/15/2022 23:46	80.51	6/14/2022 22:09	16.63	6/14/2022 21:18	3.67	6/15/2022 2:14	136.73
6/16/2022 1:05	49.23	6/15/2022 23:47	80.47	6/14/2022 22:10	16.64	6/14/2022 21:19	3.65	6/15/2022 2:15	142.61
6/16/2022 1:06	49.27	6/15/2022 23:48	80.44	6/14/2022 22:11	16.63	6/14/2022 21:20	3.66	6/15/2022 2:16	144.89
6/16/2022 1:07	49.23	6/15/2022 23:49	80.51	6/14/2022 22:12	16.64	6/14/2022 21:21	3.64	6/15/2022 2:17	144.85
6/16/2022 1:08	49.25	6/15/2022 23:50	80.48	6/14/2022 22:13	16.64	6/14/2022 21:22	3.63	6/15/2022 2:18	144.85
6/16/2022 1:09	49.26	6/15/2022 23:51	80.50	6/14/2022 22:14	16.59	6/14/2022 21:23	3.96	6/15/2022 2:19	144.85
6/16/2022 1:10	49.25	6/15/2022 23:52	80.51	6/14/2022 22:15	16.60	6/14/2022 21:24	4.54	6/15/2022 2:20	144.86
6/16/2022 1:11	49.26	6/15/2022 23:53	80.48	6/14/2022 22:16	16.59	6/14/2022 21:25	4.97	6/15/2022 2:21	144.82
6/16/2022 1:12	49.25	6/15/2022 23:54	80.46	6/14/2022 22:17	16.60	6/14/2022 21:26	5.29	6/15/2022 2:22	144.86
6/16/2022 1:13	49.24	6/15/2022 23:55	80.51	6/14/2022 22:18	16.59	6/14/2022 21:27	5.50	6/15/2022 2:23	144.87
6/16/2022 1:14	49.24	6/15/2022 23:56	80.49	6/14/2022 22:19	16.59	6/14/2022 21:28	5.65	6/15/2022 2:24	144.89
6/16/2022 1:15	49.26	6/15/2022 23:57	80.48	6/14/2022 22:20	16.61	6/14/2022 21:29	5.05	6/15/2022 2:25	144.90
6/16/2022 1:16	49.24	6/15/2022 23:58	80.49	6/14/2022 22:21	16.61	6/14/2022 21:30	4.65	6/15/2022 2:26	144.82
6/16/2022 1:17	49.28	6/15/2022 23:59	81.10	6/14/2022 22:22	16.57	6/14/2022 21:31	4.43	6/15/2022 2:27	144.89
6/16/2022 1:18	49.21	6/16/2022 0:00	82.44	6/14/2022 22:23	16.59	6/14/2022 21:32	4.32	6/15/2022 2:28	144.86
6/16/2022 1:19	49.25	6/16/2022 0:01	82.06	6/14/2022 22:24	16.55	6/14/2022 21:33	4.29	6/15/2022 2:29	144.87
6/16/2022 1:20	49.24	6/16/2022 0:02	81.77	6/14/2022 22:25	16.59	6/14/2022 21:34	4.64	6/15/2022 2:30	144.84
6/16/2022 1:21	49.23	6/16/2022 0:03	81.58	6/14/2022 22:26	16.59	6/14/2022 21:35	4.60	6/15/2022 2:31	144.86
6/16/2022 1:22	49.24	6/16/2022 0:04	81.45	6/14/2022 22:27	16.55	6/14/2022 21:36	4.53	6/15/2022 2:32	144.86
6/16/2022 1:23	49.21	6/16/2022 0:05	81.35	6/14/2022 22:28	16.56	6/14/2022 21:37	4.77	6/15/2022 2:33	144.88
6/16/2022 1:24	49.24	6/16/2022 0:06	81.26	6/14/2022 22:29	16.59	6/14/2022 21:38	4.54	6/15/2022 2:34	144.87
6/16/2022 1:25	49.26	6/16/2022 0:07	81.15	6/14/2022 22:30	16.57	6/14/2022 21:39	4.35	6/15/2022 2:35	144.86
6/16/2022 1:26	49.22	6/16/2022 0:08	81.05	6/14/2022 22:31	16.56	6/14/2022 21:40	4.24	6/15/2022 2:36	144.84
6/16/2022 1:27	49.21	6/16/2022 0:09	81.00	6/14/2022 22:32	16.53	6/14/2022 21:41	4.25	6/15/2022 2:37	144.86
6/16/2022 1:28	49.22	6/16/2022 0:10	80.94	6/14/2022 22:33	16.56	6/14/2022 21:42	4.20	6/15/2022 2:38	144.87
6/16/2022 1:29	49.22	6/16/2022 0:11	80.91	6/14/2022 22:34	16.56	6/14/2022 21:43	4.20	6/15/2022 2:39	144.86
6/16/2022 1:30	49.21	6/16/2022 0:12	80.86	6/14/2022 22:35	16.51	6/14/2022 21:44	4.18	6/15/2022 2:40	144.87
6/16/2022 1:31	49.20	6/16/2022 0:13	80.81	6/14/2022 22:36	16.52	6/14/2022 21:45	4.14	6/15/2022 2:41	144.83
6/16/2022 1:32	49.21	6/16/2022 0:14	80.79	6/14/2022 22:37	16.53	6/14/2022 21:46	4.06	6/15/2022 2:42	144.84

6/16/2022 1:33	49.24	6/16/2022 0:15	80.74	6/14/2022 22:38	16.51	6/14/2022 21:47	4.07	6/15/2022 2:43	144.86
6/16/2022 1:34	49.23	6/16/2022 0:16	80.78	6/14/2022 22:39	16.54	6/14/2022 21:48	4.06	6/15/2022 2:44	144.85
6/16/2022 1:35	49.20	6/16/2022 0:17	80.72	6/14/2022 22:40	16.45	6/14/2022 21:49	4.12	6/15/2022 2:45	144.87
6/16/2022 1:36	49.19	6/16/2022 0:18	80.70	6/14/2022 22:41	16.52	6/14/2022 21:50	3.99	6/15/2022 2:46	144.84
6/16/2022 1:37	49.22	6/16/2022 0:19	80.70	6/14/2022 22:42	16.50	6/14/2022 21:51	4.06	6/15/2022 2:47	144.87
6/16/2022 1:38	49.17	6/16/2022 0:20	80.66	6/14/2022 22:43	17.45	6/14/2022 21:52	4.09	6/15/2022 2:48	144.84
6/16/2022 1:39	49.22	6/16/2022 0:21	80.65	6/14/2022 22:44	22.81	6/14/2022 21:53	4.04	6/15/2022 2:49	144.85
6/16/2022 1:40	49.21	6/16/2022 0:22	80.66	6/14/2022 22:45	25.88	6/14/2022 21:54	4.01	6/15/2022 2:50	144.87
6/16/2022 1:41	49.21	6/16/2022 0:23	80.62	6/14/2022 22:46	24.61	6/14/2022 21:55	4.03	6/15/2022 2:51	144.85
6/16/2022 1:42	49.21	6/16/2022 0:24	80.63	6/14/2022 22:47	22.38	6/14/2022 21:56	4.05	6/15/2022 2:52	144.88
6/16/2022 1:43	49.21	6/16/2022 0:25	80.61	6/14/2022 22:48	21.15	6/14/2022 21:57	3.95	6/15/2022 2:53	144.85
6/16/2022 1:44	49.22	6/16/2022 0:26	80.59	6/14/2022 22:49	20.40	6/14/2022 21:58	3.97	6/15/2022 2:54	144.86
6/16/2022 1:45	49.19	6/16/2022 0:27	80.58	6/14/2022 22:50	19.81	6/14/2022 21:59	3.96	6/15/2022 2:55	144.86
6/16/2022 1:46	49.20	6/16/2022 0:28	80.60	6/14/2022 22:51	19.47	6/14/2022 22:00	3.99	6/15/2022 2:56	144.84
6/16/2022 1:47	49.21	6/16/2022 0:29	80.60	6/14/2022 22:52	19.16	6/14/2022 22:01	3.90	6/15/2022 2:57	144.84
6/16/2022 1:48	49.18	6/16/2022 0:30	80.57	6/14/2022 22:53	19.01	6/14/2022 22:02	3.93	6/15/2022 2:58	144.89
6/16/2022 1:49	49.20	6/16/2022 0:31	80.59	6/14/2022 22:54	18.85	6/14/2022 22:03	3.94	6/15/2022 2:59	144.87
6/16/2022 1:50	49.18	6/16/2022 0:32	80.60	6/14/2022 22:55	18.62	6/14/2022 22:04	3.99	6/15/2022 3:00	144.88
6/16/2022 1:51	49.20	6/16/2022 0:33	80.59	6/14/2022 22:56	18.55	6/14/2022 22:05	3.93	6/15/2022 3:01	144.88
6/16/2022 1:52	49.18	6/16/2022 0:34	80.59	6/14/2022 22:57	18.39	6/14/2022 22:06	3.93	6/15/2022 3:02	144.89
6/16/2022 1:53	49.16	6/16/2022 0:35	80.55	6/14/2022 22:58	18.33	6/14/2022 22:07	3.94	6/15/2022 3:03	144.85
6/16/2022 1:54	49.21	6/16/2022 0:36	80.55	6/14/2022 22:59	18.25	6/14/2022 22:08	3.93	6/15/2022 3:04	144.87
6/16/2022 1:55	49.15	6/16/2022 0:37	80.57	6/14/2022 23:00	18.10	6/14/2022 22:09	3.86	6/15/2022 3:05	144.84
6/16/2022 1:56	49.18	6/16/2022 0:38	80.57	6/14/2022 23:01	18.01	6/14/2022 22:10	3.89	6/15/2022 3:06	144.86
6/16/2022 1:57	49.17	6/16/2022 0:39	80.57	6/14/2022 23:02	18.00	6/14/2022 22:11	3.92	6/15/2022 3:07	144.85
6/16/2022 1:58	49.20	6/16/2022 0:40	80.55	6/14/2022 23:03	17.90	6/14/2022 22:12	3.85	6/15/2022 3:08	144.85
6/16/2022 1:59	49.18	6/16/2022 0:41	80.54	6/14/2022 23:04	17.88	6/14/2022 22:13	3.85	6/15/2022 3:09	144.88
6/16/2022 2:00	49.19	6/16/2022 0:42	80.54	6/14/2022 23:05	17.77	6/14/2022 22:14	3.86	6/15/2022 3:10	144.84
6/16/2022 2:01	49.16	6/16/2022 0:43	80.54	6/14/2022 23:06	17.74	6/14/2022 22:15	3.92	6/15/2022 3:11	144.87
6/16/2022 2:02	49.17	6/16/2022 0:44	80.52	6/14/2022 23:07	17.69	6/14/2022 22:16	3.89	6/15/2022 3:12	144.87
6/16/2022 2:03	49.20	6/16/2022 0:45	80.51	6/14/2022 23:08	17.67	6/14/2022 22:17	3.83	6/15/2022 3:13	144.88
6/16/2022 2:04	49.16	6/16/2022 0:46	80.51	6/14/2022 23:09	17.62	6/14/2022 22:18	3.88	6/15/2022 3:14	144.89
6/16/2022 2:05	49.18	6/16/2022 0:47	80.56	6/14/2022 23:10	17.56	6/14/2022 22:19	3.84	6/15/2022 3:15	144.85
6/16/2022 2:06	49.18	6/16/2022 0:48	80.56	6/14/2022 23:11	17.55	6/14/2022 22:20	3.82	6/15/2022 3:16	144.88
6/16/2022 2:07	49.19	6/16/2022 0:49	80.55	6/14/2022 23:12	17.52	6/14/2022 22:21	3.85	6/15/2022 3:17	144.84
6/16/2022 2:08	49.17	6/16/2022 0:50	80.52	6/14/2022 23:13	17.49	6/14/2022 22:22	3.86	6/15/2022 3:18	144.83
6/16/2022 2:09	49.17	6/16/2022 0:51	80.51	6/14/2022 23:14	17.40	6/14/2022 22:23	3.83	6/15/2022 3:19	144.83
6/16/2022 2:10	49.21	6/16/2022 0:52	80.54	6/14/2022 23:15	17.39	6/14/2022 22:24	3.78	6/15/2022 3:20	144.84
6/16/2022 2:11	49.17	6/16/2022 0:53	80.52	6/14/2022 23:16	17.35	6/14/2022 22:25	3.83	6/15/2022 3:21	144.88
6/16/2022 2:12	49.16	6/16/2022 0:54	80.49	6/14/2022 23:17	17.28	6/14/2022 22:26	3.78	6/15/2022 3:22	144.86
6/16/2022 2:13	49.14	6/16/2022 0:55	80.51	6/14/2022 23:18	17.29	6/14/2022 22:27	3.79	6/15/2022 3:23	144.84
6/16/2022 2:14	49.16	6/16/2022 0:56	80.50	6/14/2022 23:19	17.28	6/14/2022 22:28	3.75	6/15/2022 3:24	144.87
6/16/2022 2:15	49.17	6/16/2022 0:57	80.52	6/14/2022 23:20	17.25	6/14/2022 22:29	3.80	6/15/2022 3:25	144.83
6/16/2022 2:16	49.13	6/16/2022 0:58	80.54	6/14/2022 23:21	17.28	6/14/2022 22:30	3.79	6/15/2022 3:26	144.86
6/16/2022 2:17	49.18	6/16/2022 0:59	80.50	6/14/2022 23:22	17.17	6/14/2022 22:31	3.81	6/15/2022 3:27	144.84
6/16/2022 2:18	49.19	6/16/2022 1:00	80.52	6/14/2022 23:23	17.18	6/14/2022 22:32	3.79	6/15/2022 3:28	144.83
6/16/2022 2:19	49.21	6/16/2022 1:01	80.48	6/14/2022 23:24	17.15	6/14/2022 22:33	3.78	6/15/2022 3:29	144.85
6/16/2022 2:20	49.17	6/16/2022 1:02	80.51	6/14/2022 23:25	17.18	6/14/2022 22:34	3.74	6/15/2022 3:30	144.86
6/16/2022 2:21	49.15	6/16/2022 1:03	80.49	6/14/2022 23:26	17.13	6/14/2022 22:35	3.69	6/15/2022 3:31	144.85
6/16/2022 2:22	49.18	6/16/2022 1:04	80.55	6/14/2022 23:27	17.12	6/14/2022 22:36	3.78	6/15/2022 3:32	144.86
6/16/2022 2:23	49.15	6/16/2022 1:05	80.48	6/14/2022 23:28	17.08	6/14/2022 22:37	3.75	6/15/2022 3:33	144.87
6/16/2022 2:24	49.17	6/16/2022 1:06	80.50	6/14/2022 23:29	17.06	6/14/2022 22:38	3.73	6/15/2022 3:34	144.82
6/16/2022 2:25	49.16	6/16/2022 1:07	80.46	6/14/2022 23:30	17.08	6/14/2022 22:39	3.73	6/15/2022 3:35	144.86
6/16/2022 2:26	49.16	6/16/2022 1:08	80.50	6/14/2022 23:31	17.01	6/14/2022 22:40	3.72	6/15/2022 3:36	144.87
6/16/2022 2:27	49.16	6/16/2022 1:09	80.52	6/14/2022 23:32	17.06	6/14/2022 22:41	3.68	6/15/2022 3:37	144.85
6/16/2022 2:28	49.14	6/16/2022 1:10	80.50	6/14/2022 23:33	16.98	6/14/2022 22:42	3.69	6/15/2022 3:38	144.87
6/16/2022 2:29	49.17	6/16/2022 1:11	80.56	6/14/2022 23:34	16.92	6/14/2022 22:43	3.75	6/15/2022 3:39	144.89
6/16/2022 2:30	49.14	6/16/2022 1:12	80.51	6/14/2022 23:35	16.93	6/14/2022 22:44	3.76	6/15/2022 3:40	144.85
6/16/2022 2:31	49.13	6/16/2022 1:13	80.48	6/14/2022 23:36	16.96	6/14/2022 22:45	3.66	6/15/2022 3:41	144.83
6/16/2022 2:32	49.14	6/16/2022 1:14	80.44	6/14/2022 23:37	16.96	6/14/2022 22:46	3.71	6/15/2022 3:42	144.87
6/16/2022 2:33	49.12	6/16/2022 1:15	80.51	6/14/2022 23:38	16.95	6/14/2022 22:47	3.83	6/15/2022 3:43	144.84
6/16/2022 2:34	49.17	6/16/2022 1:16	80.49	6/14/2022 23:39	16.94	6/14/2022 22:48	3.83	6/15/2022 3:44	144.88
6/16/2022 2:35	49.12	6/16/2022 1:17	80.48	6/14/2022 23:40	16.87	6/14/2022 22:49	3.72	6/15/2022 3:45	144.85
6/16/2022 2:36	49.14	6/16/2022 1:18	80.50	6/14/2022 23:41	16.84	6/14/2022 22:50	3.71	6/15/2022 3:46	144.86
6/16/2022 2:37	49.12	6/16/2022 1:19	80.49	6/14/2022 23:42	16.84	6/14/2022 22:51	3.70	6/15/2022 3:47	144.87
6/16/2022 2:38	49.16	6/16/2022 1:20	80.51	6/14/2022 23:43	16.86	6/14/2022 22:52	3.66	6/15/2022 3:48	144.86
6/16/2022 2:39	49.14	6/16/2022 1:21	80.50	6/14/2022 23:44	16.83	6/14/2022 22:53	3.69	6/15/2022 3:49	144.84
6/16/2022 2:40	49.15	6/16/2022 1:22	80.47	6/14/2022 23:45	16.86	6/14/2022 22:54	3.66	6/15/2022 3:50	144.89
6/16/2022 2:41	49.14	6/16/2022 1:23	80.49	6/14/2022 23:46	16.81	6/14/2022 22:55	3.72	6/15/2022 3:51	144.86
6/16/2022 2:42	49.13	6/16/2022 1:24	80.50	6/14/2022 23:47	16.82	6/14/2022 22:56	3.62	6/15/2022 3:52	144.88
6/16/2022 2:43	49.14	6/16/2022 1:25	80.49	6/14/2022 23:48	16.80	6/14/2022 22:57	3.68	6/15/2022 3:53	144.88
6/16/2022 2:44	49.13	6/16/2022 1:26	80.52	6/14/2022 23:49	16.78	6/14/2022 22:58	3.74	6/15/2022 3:54	144.84
6/16/2022 2:45	49.11	6/16/2022 1:27	80.48	6/14/2022 23:50	16.81	6/14/2022 22:59	3.65	6/15/2022 3:55	144.87
6/16/2022 2:46	49.10	6/16/2022 1:28	80.54	6/14/2022 23:51	16.74	6/14/2022 23:00	3.65	6/15/2022 3:56	144.86
6/16/2022 2:47	49.11	6/16/2022 1:29	80.48	6/14/2022 23:52	16.76	6/14/2022 23:01	4.26	6/15/2022 3:57	144.90
6/16/2022 2:48	49.12	6/16/2022 1:30	80.48	6/14/2022 23:53	16.71	6/14/2022 23:02	4.75	6/15/2022 3:58	144.85
6/16/2022 2:49	49.11	6/16/2022 1:31	80.51	6/14/2022 23:54	16.73	6/14/2022 23:03	5.05	6/15/2022 3:59	144.87
6/16/2022 2:50	49.09	6/16/2022 1:32	80.47	6/14/2022 23:55	16.72	6/14/2022 23:04	5.40	6/15/2022 4:00	144.86
6/16/2022 2:51	49.10	6/16/2022 1:33	80.48	6/14/2022 23:56	16.68	6/14/2022 23:05	5.54	6/15/2022 4:01	144.86
6/16/2022 2:52	49.11	6/16/2022 1:34	80.49	6/14/2022 23:57	16.69	6/14/2022 23:06	5.65	6/15/2022 4:02	144.87
6/16/2022 2:53	49.11	6/16/2022 1:35	80.51	6/14/2022 23:58	16.66	6/14/2022 23:07	5.78	6/15/2022 4:03	144.85
6/16/2022 2:54	49.11	6/16/2022 1:36	80.48	6/14/2022 23:59	16.71	6/14/2022 23:08	5.90	6/15/2022 4:04	144.84
6/16/2022 2:55	49.17	6/16/2022 1:37	80.51	6/15/2022 0:00	16.66	6/14/2022 23:09	6.14	6/15/2022 4:05	144.85
6/16/2022 2:56	49.14	6/16/2022 1:38	80.48	6/15/2022 0:01	16.69	6/14/2022 23:10	6.12	6/15/2022 4:06	144.86
6/16/2022 2:57	49.07	6/16/2022 1:39	80.47	6/15/2022 0:02	16.67	6/14/2022 23:11	5.42	6/15/2022 4:07	144.89
6/16/2022 2:58	49.10	6/16/2022 1:40	80.50	6/15/2022 0:03	16.69	6/14/2022 23:12	5.08	6/15/2022 4:08	144.88
6/16/2022 2:59	49.12	6/16/2022 1:41	80.48	6/15/2022 0:04	16.69	6/14/2022 23:13	4.82	6/15/2022 4:09	144.87
6/16/2022 3:00	49.13	6/16/2022 1:42	80.49	6/15/2022 0:05	16.66	6/14/2022 23:14	4.66	6/15/2022 4:10	144.86

6/16/2022 3:01	49.07	6/16/2022 1:43	80.45	6/15/2022 0:06	16.65	6/14/2022 23:15	4.64	6/15/2022 4:11	144.87
6/16/2022 3:02	49.10	6/16/2022 1:44	80.50	6/15/2022 0:07	16.69	6/14/2022 23:16	4.74	6/15/2022 4:12	144.84
6/16/2022 3:03	49.12	6/16/2022 1:45	80.47	6/15/2022 0:08	16.61	6/14/2022 23:17	4.57	6/15/2022 4:13	144.86
6/16/2022 3:04	49.09	6/16/2022 1:46	80.46	6/15/2022 0:09	16.64	6/14/2022 23:18	4.55	6/15/2022 4:14	144.89
6/16/2022 3:05	49.12	6/16/2022 1:47	80.50	6/15/2022 0:10	16.61	6/14/2022 23:19	4.48	6/15/2022 4:15	144.87
6/16/2022 3:06	49.09	6/16/2022 1:48	80.50	6/15/2022 0:11	16.68	6/14/2022 23:20	4.49	6/15/2022 4:16	144.86
6/16/2022 3:07	49.10	6/16/2022 1:49	80.50	6/15/2022 0:12	16.62	6/14/2022 23:21	4.35	6/15/2022 4:17	144.87
6/16/2022 3:08	49.09	6/16/2022 1:50	80.52	6/15/2022 0:13	16.64	6/14/2022 23:22	4.36	6/15/2022 4:18	144.87
6/16/2022 3:09	49.11	6/16/2022 1:51	80.48	6/15/2022 0:14	16.66	6/14/2022 23:23	4.32	6/15/2022 4:19	144.90
6/16/2022 3:10	49.13	6/16/2022 1:52	80.50	6/15/2022 0:15	16.62	6/14/2022 23:24	4.30	6/15/2022 4:20	144.86
6/16/2022 3:11	49.10	6/16/2022 1:53	80.48	6/15/2022 0:16	16.65	6/14/2022 23:25	4.31	6/15/2022 4:21	144.86
6/16/2022 3:12	49.11	6/16/2022 1:54	80.45	6/15/2022 0:17	16.61	6/14/2022 23:26	4.36	6/15/2022 4:22	144.85
6/16/2022 3:13	49.06	6/16/2022 1:55	80.45	6/15/2022 0:18	16.61	6/14/2022 23:27	4.25	6/15/2022 4:23	144.88
6/16/2022 3:14	49.11	6/16/2022 1:56	80.52	6/15/2022 0:19	16.65	6/14/2022 23:28	4.27	6/15/2022 4:24	144.87
6/16/2022 3:15	49.10	6/16/2022 1:57	80.48	6/15/2022 0:20	16.68	6/14/2022 23:29	4.23	6/15/2022 4:25	144.86
6/16/2022 3:16	49.09	6/16/2022 1:58	80.48	6/15/2022 0:21	16.64	6/14/2022 23:30	4.19	6/15/2022 4:26	144.82
6/16/2022 3:17	49.07	6/16/2022 1:59	80.49	6/15/2022 0:22	16.67	6/14/2022 23:31	4.20	6/15/2022 4:27	144.84
6/16/2022 3:18	49.06	6/16/2022 2:00	80.52	6/15/2022 0:23	16.65	6/14/2022 23:32	4.22	6/15/2022 4:28	144.89
6/16/2022 3:19	49.10	6/16/2022 2:01	80.49	6/15/2022 0:24	16.61	6/14/2022 23:33	4.20	6/15/2022 4:29	144.88
6/16/2022 3:20	49.08	6/16/2022 2:02	80.47	6/15/2022 0:25	16.65	6/14/2022 23:34	4.11	6/15/2022 4:30	144.85
6/16/2022 3:21	49.10	6/16/2022 2:03	80.46	6/15/2022 0:26	16.64	6/14/2022 23:35	4.16	6/15/2022 4:31	144.85
6/16/2022 3:22	49.05	6/16/2022 2:04	80.46	6/15/2022 0:27	16.66	6/14/2022 23:36	4.22	6/15/2022 4:32	144.85
6/16/2022 3:23	49.07	6/16/2022 2:05	80.46	6/15/2022 0:28	16.66	6/14/2022 23:37	4.13	6/15/2022 4:33	144.87
6/16/2022 3:24	49.05	6/16/2022 2:06	80.49	6/15/2022 0:29	16.61	6/14/2022 23:38	4.16	6/15/2022 4:34	144.87
6/16/2022 3:25	49.12	6/16/2022 2:07	80.48	6/15/2022 0:30	16.75	6/14/2022 23:39	4.18	6/15/2022 4:35	144.83
6/16/2022 3:26	49.07	6/16/2022 2:08	80.46	6/15/2022 0:31	16.66	6/14/2022 23:40	4.11	6/15/2022 4:36	144.86
6/16/2022 3:27	49.08	6/16/2022 2:09	80.50	6/15/2022 0:32	16.72	6/14/2022 23:41	4.11	6/15/2022 4:37	144.86
6/16/2022 3:28	49.09	6/16/2022 2:10	80.50	6/15/2022 0:33	16.67	6/14/2022 23:42	4.13	6/15/2022 4:38	144.85
6/16/2022 3:29	49.04	6/16/2022 2:11	80.46	6/15/2022 0:34	16.64	6/14/2022 23:43	4.09	6/15/2022 4:39	144.86
6/16/2022 3:30	49.07	6/16/2022 2:12	80.47	6/15/2022 0:35	16.67	6/14/2022 23:44	4.03	6/15/2022 4:40	144.87
6/16/2022 3:31	49.11	6/16/2022 2:13	80.50	6/15/2022 0:36	16.70	6/14/2022 23:45	4.30	6/15/2022 4:41	144.90
6/16/2022 3:32	49.06	6/16/2022 2:14	80.52	6/15/2022 0:37	16.71	6/14/2022 23:46	4.13	6/15/2022 4:42	144.87
6/16/2022 3:33	49.07	6/16/2022 2:15	80.50	6/15/2022 0:38	16.71	6/14/2022 23:47	4.12	6/15/2022 4:43	144.85
6/16/2022 3:34	49.04	6/16/2022 2:16	80.50	6/15/2022 0:39	16.70	6/14/2022 23:48	4.17	6/15/2022 4:44	144.85
6/16/2022 3:35	49.07	6/16/2022 2:17	80.52	6/15/2022 0:40	16.68	6/14/2022 23:49	4.08	6/15/2022 4:45	144.86
6/16/2022 3:36	49.09	6/16/2022 2:18	80.48	6/15/2022 0:41	16.69	6/14/2022 23:50	4.05	6/15/2022 4:46	144.86
6/16/2022 3:37	49.08	6/16/2022 2:19	80.47	6/15/2022 0:42	16.74	6/14/2022 23:51	4.08	6/15/2022 4:47	144.89
6/16/2022 3:38	49.06	6/16/2022 2:20	80.51	6/15/2022 0:43	16.72	6/14/2022 23:52	4.01	6/15/2022 4:48	144.86
6/16/2022 3:39	49.07	6/16/2022 2:21	80.48	6/15/2022 0:44	16.70	6/14/2022 23:53	4.05	6/15/2022 4:49	144.87
6/16/2022 3:40	49.09	6/16/2022 2:22	80.49	6/15/2022 0:45	16.68	6/14/2022 23:54	4.05	6/15/2022 4:50	144.85
6/16/2022 3:41	49.10	6/16/2022 2:23	80.49	6/15/2022 0:46	16.69	6/14/2022 23:55	4.01	6/15/2022 4:51	144.83
6/16/2022 3:42	49.08	6/16/2022 2:24	80.49	6/15/2022 0:47	16.72	6/14/2022 23:56	3.97	6/15/2022 4:52	144.83
6/16/2022 3:43	49.07	6/16/2022 2:25	80.50	6/15/2022 0:48	16.71	6/14/2022 23:57	4.05	6/15/2022 4:53	144.84
6/16/2022 3:44	49.09	6/16/2022 2:26	80.51	6/15/2022 0:49	16.70	6/14/2022 23:58	3.96	6/15/2022 4:54	144.88
6/16/2022 3:45	49.09	6/16/2022 2:27	80.47	6/15/2022 0:50	16.72	6/14/2022 23:59	3.98	6/15/2022 4:55	144.86
6/16/2022 3:46	49.05	6/16/2022 2:28	80.46	6/15/2022 0:51	16.66	6/15/2022 0:00	3.99	6/15/2022 4:56	144.84
6/16/2022 3:47	49.03	6/16/2022 2:29	80.49	6/15/2022 0:52	16.74	6/15/2022 0:01	3.99	6/15/2022 4:57	144.86
6/16/2022 3:48	49.06	6/16/2022 2:30	80.52	6/15/2022 0:53	16.67	6/15/2022 0:02	3.91	6/15/2022 4:58	144.85
6/16/2022 3:49	49.03	6/16/2022 2:31	80.47	6/15/2022 0:54	16.70	6/15/2022 0:03	3.93	6/15/2022 4:59	144.86
6/16/2022 3:50	49.05	6/16/2022 2:32	80.50	6/15/2022 0:55	16.70	6/15/2022 0:04	4.01	6/15/2022 5:00	144.90
6/16/2022 3:51	49.10	6/16/2022 2:33	80.50	6/15/2022 0:56	16.67	6/15/2022 0:05	4.33	6/15/2022 5:01	144.85
6/16/2022 3:52	49.07	6/16/2022 2:34	80.48	6/15/2022 0:57	16.69	6/15/2022 0:06	4.08	6/15/2022 5:02	144.88
6/16/2022 3:53	49.07	6/16/2022 2:35	80.45	6/15/2022 0:58	16.68	6/15/2022 0:07	4.13	6/15/2022 5:03	144.87
6/16/2022 3:54	49.04	6/16/2022 2:36	80.52	6/15/2022 0:59	16.63	6/15/2022 0:08	4.07	6/15/2022 5:04	144.87
6/16/2022 3:55	49.09	6/16/2022 2:37	80.48	6/15/2022 1:00	16.69	6/15/2022 0:09	4.10	6/15/2022 5:05	144.87
6/16/2022 3:56	49.08	6/16/2022 2:38	80.48	6/15/2022 1:01	16.70	6/15/2022 0:10	4.05	6/15/2022 5:06	144.87
6/16/2022 3:57	49.06	6/16/2022 2:39	80.48	6/15/2022 1:02	16.67	6/15/2022 0:11	4.08	6/15/2022 5:07	144.85
6/16/2022 3:58	49.11	6/16/2022 2:40	80.44	6/15/2022 1:03	16.69	6/15/2022 0:12	4.01	6/15/2022 5:08	144.85
6/16/2022 3:59	49.04	6/16/2022 2:41	80.50	6/15/2022 1:04	16.66	6/15/2022 0:13	4.02	6/15/2022 5:09	144.84
6/16/2022 4:00	49.07	6/16/2022 2:42	80.46	6/15/2022 1:05	16.63	6/15/2022 0:14	4.01	6/15/2022 5:10	144.89
6/16/2022 4:01	49.05	6/16/2022 2:43	80.48	6/15/2022 1:06	16.64	6/15/2022 0:15	4.03	6/15/2022 5:11	144.86
6/16/2022 4:02	49.07	6/16/2022 2:44	80.45	6/15/2022 1:07	16.66	6/15/2022 0:16	4.10	6/15/2022 5:12	144.86
6/16/2022 4:03	49.05	6/16/2022 2:45	80.48	6/15/2022 1:08	16.64	6/15/2022 0:17	4.08	6/15/2022 5:13	144.89
6/16/2022 4:04	49.05	6/16/2022 2:46	80.46	6/15/2022 1:09	16.59	6/15/2022 0:18	4.06	6/15/2022 5:14	144.88
6/16/2022 4:05	49.05	6/16/2022 2:47	80.48	6/15/2022 1:10	16.63	6/15/2022 0:19	4.07	6/15/2022 5:15	144.88
6/16/2022 4:06	49.04	6/16/2022 2:48	80.43	6/15/2022 1:11	16.62	6/15/2022 0:20	4.02	6/15/2022 5:16	144.87
6/16/2022 4:07	49.05	6/16/2022 2:49	80.48	6/15/2022 1:12	16.65	6/15/2022 0:21	4.00	6/15/2022 5:17	144.86
6/16/2022 4:08	49.05	6/16/2022 2:50	80.48	6/15/2022 1:13	16.65	6/15/2022 0:22	4.02	6/15/2022 5:18	144.85
6/16/2022 4:09	49.07	6/16/2022 2:51	80.47	6/15/2022 1:14	16.66	6/15/2022 0:23	4.00	6/15/2022 5:19	144.85
6/16/2022 4:10	49.05	6/16/2022 2:52	80.48	6/15/2022 1:15	16.62	6/15/2022 0:24	3.97	6/15/2022 5:20	144.85
6/16/2022 4:11	49.06	6/16/2022 2:53	80.49	6/15/2022 1:16	16.61	6/15/2022 0:25	3.94	6/15/2022 5:21	144.88
6/16/2022 4:12	49.05	6/16/2022 2:54	80.45	6/15/2022 1:17	16.65	6/15/2022 0:26	3.96	6/15/2022 5:22	144.87
6/16/2022 4:13	49.08	6/16/2022 2:55	80.47	6/15/2022 1:18	16.62	6/15/2022 0:27	3.91	6/15/2022 5:23	144.88
6/16/2022 4:14	49.06	6/16/2022 2:56	80.49	6/15/2022 1:19	16.62	6/15/2022 0:28	3.92	6/15/2022 5:24	144.85
6/16/2022 4:15	49.06	6/16/2022 2:57	80.46	6/15/2022 1:20	16.63	6/15/2022 0:29	3.93	6/15/2022 5:25	144.86
6/16/2022 4:16	49.02	6/16/2022 2:58	80.45	6/15/2022 1:21	16.56	6/15/2022 0:30	3.86	6/15/2022 5:26	144.86
6/16/2022 4:17	49.03	6/16/2022 2:59	80.47	6/15/2022 1:22	16.59	6/15/2022 0:31	3.87	6/15/2022 5:27	144.86
6/16/2022 4:18	49.06	6/16/2022 3:00	80.46	6/15/2022 1:23	16.58	6/15/2022 0:32	3.87	6/15/2022 5:28	144.87
6/16/2022 4:19	49.05	6/16/2022 3:01	80.49	6/15/2022 1:24	16.55	6/15/2022 0:33	3.82	6/15/2022 5:29	144.88
6/16/2022 4:20	49.03	6/16/2022 3:02	80.50	6/15/2022 1:25	16.63	6/15/2022 0:34	3.85	6/15/2022 5:30	144.88
6/16/2022 4:21	49.06	6/16/2022 3:03	80.45	6/15/2022 1:26	16.56	6/15/2022 0:35	3.83	6/15/2022 5:31	144.86
6/16/2022 4:22	49.03	6/16/2022 3:04	80.46	6/15/2022 1:27	16.63	6/15/2022 0:36	3.95	6/15/2022 5:32	144.89
6/16/2022 4:23	49.04	6/16/2022 3:05	80.44	6/15/2022 1:28	16.58	6/15/2022 0:37	3.81	6/15/2022 5:33	144.84
6/16/2022 4:24	49.04	6/16/2022 3:06	80.43	6/15/2022 1:29	16.60	6/15/2022 0:38	3.82	6/15/2022 5:34	144.86
6/16/2022 4:25	49.03	6/16/2022 3:07	80.44	6/15/2022 1:30	16.58	6/15/2022 0:39	3.86	6/15/2022 5:35	144.85
6/16/2022 4:26	49.04	6/16/2022 3:08	80.46	6/15/2022 1:31	16.60	6/15/2022 0:40	3.84	6/15/2022 5:36	144.86
6/16/2022 4:27	49.02	6/16/2022 3:09	80.47	6/15/2022 1:32	16.60	6/15/2022 0:41	3.77	6/15/2022 5:37	144.90
6/16/2022 4:28	49.04	6/16/2022 3:10	80.44	6/15/2022 1:33	16.59	6/15/2022 0:42	3.85	6/15/2022 5:38	144.83

6/16/2022 4:29	49.04	6/16/2022 3:11	80.50	6/15/2022 1:34	16.57	6/15/2022 0:43	3.83	6/15/2022 5:39	144.86
6/16/2022 4:30	49.02	6/16/2022 3:12	80.49	6/15/2022 1:35	16.60	6/15/2022 0:44	3.80	6/15/2022 5:40	144.86
6/16/2022 4:31	49.03	6/16/2022 3:13	80.49	6/15/2022 1:36	16.58	6/15/2022 0:45	3.82	6/15/2022 5:41	144.87
6/16/2022 4:32	49.06	6/16/2022 3:14	80.46	6/15/2022 1:37	16.52	6/15/2022 0:46	3.79	6/15/2022 5:42	144.85
6/16/2022 4:33	49.04	6/16/2022 3:15	80.48	6/15/2022 1:38	16.54	6/15/2022 0:47	3.79	6/15/2022 5:43	144.85
6/16/2022 4:34	49.03	6/16/2022 3:16	80.45	6/15/2022 1:39	16.58	6/15/2022 0:48	3.77	6/15/2022 5:44	144.88
6/16/2022 4:35	49.02	6/16/2022 3:17	80.50	6/15/2022 1:40	16.53	6/15/2022 0:49	3.80	6/15/2022 5:45	144.86
6/16/2022 4:36	49.05	6/16/2022 3:18	80.50	6/15/2022 1:41	16.52	6/15/2022 0:50	3.76	6/15/2022 5:46	144.88
6/16/2022 4:37	49.04	6/16/2022 3:19	80.48	6/15/2022 1:42	16.52	6/15/2022 0:51	3.77	6/15/2022 5:47	144.87
6/16/2022 4:38	49.06	6/16/2022 3:20	80.46	6/15/2022 1:43	16.53	6/15/2022 0:52	3.80	6/15/2022 5:48	144.86
6/16/2022 4:39	49.02	6/16/2022 3:21	80.44	6/15/2022 1:44	16.53	6/15/2022 0:53	3.74	6/15/2022 5:49	144.87
6/16/2022 4:40	49.00	6/16/2022 3:22	80.44	6/15/2022 1:45	16.55	6/15/2022 0:54	3.74	6/15/2022 5:50	144.86
6/16/2022 4:41	49.00	6/16/2022 3:23	80.51	6/15/2022 1:46	16.52	6/15/2022 0:55	3.77	6/15/2022 5:51	144.85
6/16/2022 4:42	49.01	6/16/2022 3:24	80.47	6/15/2022 1:47	16.49	6/15/2022 0:56	3.73	6/15/2022 5:52	144.87
6/16/2022 4:43	49.02	6/16/2022 3:25	80.48	6/15/2022 1:48	16.50	6/15/2022 0:57	3.75	6/15/2022 5:53	144.89
6/16/2022 4:44	49.03	6/16/2022 3:26	80.49	6/15/2022 1:49	16.54	6/15/2022 0:58	3.74	6/15/2022 5:54	144.85
6/16/2022 4:45	49.00	6/16/2022 3:27	80.43	6/15/2022 1:50	16.47	6/15/2022 0:59	3.74	6/15/2022 5:55	144.86
6/16/2022 4:46	49.01	6/16/2022 3:28	80.46	6/15/2022 1:51	16.51	6/15/2022 1:00	3.72	6/15/2022 5:56	144.85
6/16/2022 4:47	49.00	6/16/2022 3:29	80.47	6/15/2022 1:52	16.50	6/15/2022 1:01	3.73	6/15/2022 5:57	144.87
6/16/2022 4:48	49.02	6/16/2022 3:30	80.47	6/15/2022 1:53	16.57	6/15/2022 1:02	3.69	6/15/2022 5:58	144.87
6/16/2022 4:49	49.04	6/16/2022 3:31	80.45	6/15/2022 1:54	16.51	6/15/2022 1:03	5.23	6/15/2022 5:59	144.85
6/16/2022 4:50	48.98	6/16/2022 3:32	80.44	6/15/2022 1:55	16.49	6/15/2022 1:04	6.33	6/15/2022 6:00	144.83
6/16/2022 4:51	49.03	6/16/2022 3:33	80.48	6/15/2022 1:56	16.50	6/15/2022 1:05	7.01	6/15/2022 6:01	144.84
6/16/2022 4:52	49.04	6/16/2022 3:34	80.46	6/15/2022 1:57	16.46	6/15/2022 1:06	7.54	6/15/2022 6:02	144.85
6/16/2022 4:53	49.01	6/16/2022 3:35	80.48	6/15/2022 1:58	16.49	6/15/2022 1:07	7.91	6/15/2022 6:03	144.85
6/16/2022 4:54	48.99	6/16/2022 3:36	80.45	6/15/2022 1:59	16.45	6/15/2022 1:08	8.25	6/15/2022 6:04	144.85
6/16/2022 4:55	49.01	6/16/2022 3:37	80.44	6/15/2022 2:00	16.43	6/15/2022 1:09	8.58	6/15/2022 6:05	144.83
6/16/2022 4:56	49.01	6/16/2022 3:38	80.49	6/15/2022 2:01	16.50	6/15/2022 1:10	8.80	6/15/2022 6:06	144.85
6/16/2022 4:57	49.04	6/16/2022 3:39	80.47	6/15/2022 2:02	16.49	6/15/2022 1:11	9.11	6/15/2022 6:07	144.85
6/16/2022 4:58	49.03	6/16/2022 3:40	80.43	6/15/2022 2:03	16.42	6/15/2022 1:12	9.35	6/15/2022 6:08	144.83
6/16/2022 4:59	48.99	6/16/2022 3:41	80.45	6/15/2022 2:04	16.41	6/15/2022 1:13	9.51	6/15/2022 6:09	144.84
6/16/2022 5:00	49.03	6/16/2022 3:42	80.47	6/15/2022 2:05	16.41	6/15/2022 1:14	9.73	6/15/2022 6:10	144.87
6/16/2022 5:01	49.05	6/16/2022 3:43	80.46	6/15/2022 2:06	16.42	6/15/2022 1:15	9.92	6/15/2022 6:11	144.86
6/16/2022 5:02	49.06	6/16/2022 3:44	80.48	6/15/2022 2:07	16.45	6/15/2022 1:16	10.14	6/15/2022 6:12	144.84
6/16/2022 5:03	49.01	6/16/2022 3:45	80.46	6/15/2022 2:08	16.42	6/15/2022 1:17	10.33	6/15/2022 6:13	144.86
6/16/2022 5:04	48.98	6/16/2022 3:46	80.49	6/15/2022 2:09	16.41	6/15/2022 1:18	10.51	6/15/2022 6:14	144.84
6/16/2022 5:05	49.00	6/16/2022 3:47	80.49	6/15/2022 2:10	16.42	6/15/2022 1:19	10.64	6/15/2022 6:15	144.84
6/16/2022 5:06	49.01	6/16/2022 3:48	80.47	6/15/2022 2:11	16.44	6/15/2022 1:20	10.81	6/15/2022 6:16	144.84
6/16/2022 5:07	49.00	6/16/2022 3:49	80.49	6/15/2022 2:12	16.41	6/15/2022 1:21	10.94	6/15/2022 6:17	144.85
6/16/2022 5:08	48.97	6/16/2022 3:50	80.48	6/15/2022 2:13	16.41	6/15/2022 1:22	11.11	6/15/2022 6:18	144.83
6/16/2022 5:09	49.02	6/16/2022 3:51	80.44	6/15/2022 2:14	16.39	6/15/2022 1:23	11.56	6/15/2022 6:19	144.84
6/16/2022 5:10	49.01	6/16/2022 3:52	80.45	6/15/2022 2:15	16.38	6/15/2022 1:24	11.79	6/15/2022 6:20	144.85
6/16/2022 5:11	49.02	6/16/2022 3:53	80.45	6/15/2022 2:16	16.42	6/15/2022 1:25	12.07	6/15/2022 6:21	144.85
6/16/2022 5:12	49.01	6/16/2022 3:54	80.41	6/15/2022 2:17	16.35	6/15/2022 1:26	12.29	6/15/2022 6:22	144.84
6/16/2022 5:13	49.02	6/16/2022 3:55	80.47	6/15/2022 2:18	16.39	6/15/2022 1:27	12.45	6/15/2022 6:23	144.82
6/16/2022 5:14	49.00	6/16/2022 3:56	80.46	6/15/2022 2:19	16.35	6/15/2022 1:28	12.66	6/15/2022 6:24	144.88
6/16/2022 5:15	49.00	6/16/2022 3:57	80.45	6/15/2022 2:20	16.38	6/15/2022 1:29	12.81	6/15/2022 6:25	144.85
6/16/2022 5:16	49.00	6/16/2022 3:58	80.44	6/15/2022 2:21	16.40	6/15/2022 1:30	13.02	6/15/2022 6:26	144.85
6/16/2022 5:17	49.00	6/16/2022 3:59	80.45	6/15/2022 2:22	16.38	6/15/2022 1:31	13.15	6/15/2022 6:27	144.83
6/16/2022 5:18	49.00	6/16/2022 4:00	80.44	6/15/2022 2:23	16.42	6/15/2022 1:32	13.32	6/15/2022 6:28	144.85
6/16/2022 5:19	48.99	6/16/2022 4:01	80.46	6/15/2022 2:24	16.35	6/15/2022 1:33	13.49	6/15/2022 6:29	144.83
6/16/2022 5:20	49.02	6/16/2022 4:02	80.46	6/15/2022 2:25	16.38	6/15/2022 1:34	13.70	6/15/2022 6:30	144.87
6/16/2022 5:21	48.97	6/16/2022 4:03	80.42	6/15/2022 2:26	16.36	6/15/2022 1:35	13.81	6/15/2022 6:31	144.83
6/16/2022 5:22	49.01	6/16/2022 4:04	80.43	6/15/2022 2:27	16.32	6/15/2022 1:36	13.93	6/15/2022 6:32	144.81
6/16/2022 5:23	49.02	6/16/2022 4:05	80.50	6/15/2022 2:28	16.33	6/15/2022 1:37	14.08	6/15/2022 6:33	144.84
6/16/2022 5:24	48.99	6/16/2022 4:06	80.43	6/15/2022 2:29	16.34	6/15/2022 1:38	14.23	6/15/2022 6:34	144.87
6/16/2022 5:25	48.99	6/16/2022 4:07	80.46	6/15/2022 2:30	16.35	6/15/2022 1:39	14.34	6/15/2022 6:35	144.87
6/16/2022 5:26	48.96	6/16/2022 4:08	80.45	6/15/2022 2:31	16.35	6/15/2022 1:40	14.49	6/15/2022 6:36	144.83
6/16/2022 5:27	49.01	6/16/2022 4:09	80.45	6/15/2022 2:32	16.33	6/15/2022 1:41	14.65	6/15/2022 6:37	144.85
6/16/2022 5:28	48.99	6/16/2022 4:10	80.46	6/15/2022 2:33	16.32	6/15/2022 1:42	14.82	6/15/2022 6:38	144.84
6/16/2022 5:29	49.01	6/16/2022 4:11	80.46	6/15/2022 2:34	16.32	6/15/2022 1:43	14.96	6/15/2022 6:39	144.84
6/16/2022 5:30	49.02	6/16/2022 4:12	80.46	6/15/2022 2:35	16.35	6/15/2022 1:44	15.08	6/15/2022 6:40	144.84
6/16/2022 5:31	48.99	6/16/2022 4:13	80.46	6/15/2022 2:36	16.34	6/15/2022 1:45	15.22	6/15/2022 6:41	144.87
6/16/2022 5:32	48.98	6/16/2022 4:14	80.44	6/15/2022 2:37	16.34	6/15/2022 1:46	15.35	6/15/2022 6:42	144.86
6/16/2022 5:33	49.00	6/16/2022 4:15	80.48	6/15/2022 2:38	16.33	6/15/2022 1:47	15.45	6/15/2022 6:43	144.82
6/16/2022 5:34	49.02	6/16/2022 4:16	80.44	6/15/2022 2:39	16.35	6/15/2022 1:48	15.56	6/15/2022 6:44	144.83
6/16/2022 5:35	49.01	6/16/2022 4:17	80.45	6/15/2022 2:40	16.26	6/15/2022 1:49	15.70	6/15/2022 6:45	144.86
6/16/2022 5:36	48.98	6/16/2022 4:18	80.45	6/15/2022 2:41	16.31	6/15/2022 1:50	15.82	6/15/2022 6:46	144.85
6/16/2022 5:37	49.00	6/16/2022 4:19	80.42	6/15/2022 2:42	16.34	6/15/2022 1:51	15.92	6/15/2022 6:47	144.88
6/16/2022 5:38	49.01	6/16/2022 4:20	80.45	6/15/2022 2:43	16.34	6/15/2022 1:52	16.06	6/15/2022 6:48	144.86
6/16/2022 5:39	48.96	6/16/2022 4:21	80.44	6/15/2022 2:44	16.28	6/15/2022 1:53	16.22	6/15/2022 6:49	144.85
6/16/2022 5:40	48.98	6/16/2022 4:22	80.46	6/15/2022 2:45	16.30	6/15/2022 1:54	16.33	6/15/2022 6:50	144.85
6/16/2022 5:41	49.00	6/16/2022 4:23	80.44	6/15/2022 2:46	16.33	6/15/2022 1:55	16.45	6/15/2022 6:51	144.88
6/16/2022 5:42	49.00	6/16/2022 4:24	80.44	6/15/2022 2:47	16.26	6/15/2022 1:56	16.54	6/15/2022 6:52	144.85
6/16/2022 5:43	49.00	6/16/2022 4:25	80.45	6/15/2022 2:48	16.28	6/15/2022 1:57	16.62	6/15/2022 6:53	144.88
6/16/2022 5:44	49.03	6/16/2022 4:26	80.45	6/15/2022 2:49	16.27	6/15/2022 1:58	16.77	6/15/2022 6:54	144.85
6/16/2022 5:45	49.01	6/16/2022 4:27	80.44	6/15/2022 2:50	16.28	6/15/2022 1:59	16.85	6/15/2022 6:55	144.88
6/16/2022 5:46	49.00	6/16/2022 4:28	80.43	6/15/2022 2:51	16.29	6/15/2022 2:00	16.95	6/15/2022 6:56	144.85
6/16/2022 5:47	48.95	6/16/2022 4:29	80.42	6/15/2022 2:52	16.26	6/15/2022 2:01	17.09	6/15/2022 6:57	144.85
6/16/2022 5:48	49.01	6/16/2022 4:30	80.40	6/15/2022 2:53	16.26	6/15/2022 2:02	17.20	6/15/2022 6:58	144.86
6/16/2022 5:49	48.98	6/16/2022 4:31	80.42	6/15/2022 2:54	16.33	6/15/2022 2:03	17.34	6/15/2022 6:59	144.86
6/16/2022 5:50	48.95	6/16/2022 4:32	80.45	6/15/2022 2:55	16.26	6/15/2022 2:04	17.46	6/15/2022 7:00	144.87
6/16/2022 5:51	48.96	6/16/2022 4:33	80.45	6/15/2022 2:56	16.23	6/15/2022 2:05	17.52	6/15/2022 7:01	144.87
6/16/2022 5:52	48.97	6/16/2022 4:34	80.46	6/15/2022 2:57	16.27	6/15/2022 2:06	17.64	6/15/2022 7:02	144.88
6/16/2022 5:53	49.02	6/16/2022 4:35	80.44	6/15/2022 2:58	16.28	6/15/2022 2:07	17.73	6/15/2022 7:03	144.84
6/16/2022 5:54	48.94	6/16/2022 4:36	81.82	6/15/2022 2:59	16.26	6/15/2022 2:08	17.79	6/15/2022 7:04	144.87
6/16/2022 5:55	48.99	6/16/2022 4:37	82.12	6/15/2022 3:00	16.25	6/15/2022 2:09	17.88	6/15/2022 7:05	144.86
6/16/2022 5:56	48.98	6/16/2022 4:38	81.83	6/15/2022 3:01	16.31	6/15/2022 2:10	18.02	6/15/2022 7:06	144.86

6/16/2022 5:57	48.93	6/16/2022 4:39	81.59	6/15/2022 3:02	16.28	6/15/2022 2:11	18.11	6/15/2022 7:07	144.87
6/16/2022 5:58	48.97	6/16/2022 4:40	81.46	6/15/2022 3:03	16.22	6/15/2022 2:12	18.16	6/15/2022 7:08	144.88
6/16/2022 5:59	49.01	6/16/2022 4:41	81.26	6/15/2022 3:04	16.30	6/15/2022 2:13	18.28	6/15/2022 7:09	144.85
6/16/2022 6:00	49.00	6/16/2022 4:42	81.15	6/15/2022 3:05	16.22	6/15/2022 2:14	18.41	6/15/2022 7:10	144.90
6/16/2022 6:01	48.96	6/16/2022 4:43	81.09	6/15/2022 3:06	16.26	6/15/2022 2:15	18.53	6/15/2022 7:11	144.85
6/16/2022 6:02	48.99	6/16/2022 4:44	81.04	6/15/2022 3:07	16.22	6/15/2022 2:16	18.53	6/15/2022 7:12	144.84
6/16/2022 6:03	49.00	6/16/2022 4:45	80.95	6/15/2022 3:08	16.21	6/15/2022 2:17	18.70	6/15/2022 7:13	144.88
6/16/2022 6:04	48.97	6/16/2022 4:46	80.88	6/15/2022 3:09	16.21	6/15/2022 2:18	18.75	6/15/2022 7:14	144.85
6/16/2022 6:05	48.97	6/16/2022 4:47	80.88	6/15/2022 3:10	16.20	6/15/2022 2:19	18.84	6/15/2022 7:15	144.87
6/16/2022 6:06	48.98	6/16/2022 4:48	80.81	6/15/2022 3:11	16.20	6/15/2022 2:20	18.97	6/15/2022 7:16	144.85
6/16/2022 6:07	49.00	6/16/2022 4:49	80.78	6/15/2022 3:12	16.22	6/15/2022 2:21	19.07	6/15/2022 7:17	144.87
6/16/2022 6:08	49.01	6/16/2022 4:50	80.72	6/15/2022 3:13	16.22	6/15/2022 2:22	19.15	6/15/2022 7:18	144.83
6/16/2022 6:09	49.01	6/16/2022 4:51	80.74	6/15/2022 3:14	16.27	6/15/2022 2:23	19.35	6/15/2022 7:19	144.86
6/16/2022 6:10	48.99	6/16/2022 4:52	80.69	6/15/2022 3:15	16.24	6/15/2022 2:24	19.49	6/15/2022 7:20	144.88
6/16/2022 6:11	49.00	6/16/2022 4:53	80.66	6/15/2022 3:16	16.17	6/15/2022 2:25	19.92	6/15/2022 7:21	144.87
6/16/2022 6:12	48.95	6/16/2022 4:54	80.70	6/15/2022 3:17	16.21	6/15/2022 2:26	20.37	6/15/2022 7:22	144.83
6/16/2022 6:13	48.99	6/16/2022 4:55	80.63	6/15/2022 3:18	16.20	6/15/2022 2:27	20.74	6/15/2022 7:23	144.83
6/16/2022 6:14	49.02	6/16/2022 4:56	80.66	6/15/2022 3:19	16.22	6/15/2022 2:28	21.00	6/15/2022 7:24	144.80
6/16/2022 6:15	48.95	6/16/2022 4:57	80.61	6/15/2022 3:20	16.22	6/15/2022 2:29	21.25	6/15/2022 7:25	144.83
6/16/2022 6:16	49.00	6/16/2022 4:58	80.64	6/15/2022 3:21	16.19	6/15/2022 2:30	21.46	6/15/2022 7:26	144.83
6/16/2022 6:17	50.19	6/16/2022 4:59	80.61	6/15/2022 3:22	16.13	6/15/2022 2:31	21.68	6/15/2022 7:27	144.85
6/16/2022 6:18	52.50	6/16/2022 5:00	80.57	6/15/2022 3:23	16.24	6/15/2022 2:32	21.83	6/15/2022 7:28	144.87
6/16/2022 6:19	53.55	6/16/2022 5:01	80.59	6/15/2022 3:24	16.19	6/15/2022 2:33	22.04	6/15/2022 7:29	144.87
6/16/2022 6:20	54.16	6/16/2022 5:02	80.53	6/15/2022 3:25	16.22	6/15/2022 2:34	22.24	6/15/2022 7:30	144.88
6/16/2022 6:21	53.43	6/16/2022 5:03	80.57	6/15/2022 3:26	16.21	6/15/2022 2:35	22.35	6/15/2022 7:31	144.85
6/16/2022 6:22	51.61	6/16/2022 5:04	80.50	6/15/2022 3:27	16.15	6/15/2022 2:36	22.58	6/15/2022 7:32	144.88
6/16/2022 6:23	50.90	6/16/2022 5:05	80.54	6/15/2022 3:28	16.17	6/15/2022 2:37	22.71	6/15/2022 7:33	144.84
6/16/2022 6:24	50.58	6/16/2022 5:06	80.56	6/15/2022 3:29	16.19	6/15/2022 2:38	22.80	6/15/2022 7:34	144.86
6/16/2022 6:25	50.35	6/16/2022 5:07	80.52	6/15/2022 3:30	16.20	6/15/2022 2:39	22.98	6/15/2022 7:35	144.83
6/16/2022 6:26	50.23	6/16/2022 5:08	80.56	6/15/2022 3:31	16.17	6/15/2022 2:40	22.76	6/15/2022 7:36	144.84
6/16/2022 6:27	50.16	6/16/2022 5:09	80.51	6/15/2022 3:32	16.17	6/15/2022 2:41	22.65	6/15/2022 7:37	144.85
6/16/2022 6:28	50.05	6/16/2022 5:10	80.49	6/15/2022 3:33	16.23	6/15/2022 2:42	22.63	6/15/2022 7:38	144.47
6/16/2022 6:29	49.97	6/16/2022 5:11	80.49	6/15/2022 3:34	16.19	6/15/2022 2:43	22.70	6/15/2022 7:39	143.93
6/16/2022 6:30	49.93	6/16/2022 5:12	80.51	6/15/2022 3:35	16.13	6/15/2022 2:44	22.78	6/15/2022 7:40	143.49
6/16/2022 6:31	49.89	6/16/2022 5:13	80.54	6/15/2022 3:36	16.15	6/15/2022 2:45	22.87	6/15/2022 7:41	144.87
6/16/2022 6:32	49.82	6/16/2022 5:14	80.51	6/15/2022 3:37	16.12	6/15/2022 2:46	22.89	6/15/2022 7:42	144.87
6/16/2022 6:33	49.81	6/16/2022 5:15	80.49	6/15/2022 3:38	16.13	6/15/2022 2:47	22.99	6/15/2022 7:43	144.84
6/16/2022 6:34	49.75	6/16/2022 5:16	80.53	6/15/2022 3:39	16.17	6/15/2022 2:48	23.11	6/15/2022 7:44	144.86
6/16/2022 6:35	49.78	6/16/2022 5:17	80.48	6/15/2022 3:40	16.15	6/15/2022 2:49	23.17	6/15/2022 7:45	144.85
6/16/2022 6:36	49.70	6/16/2022 5:18	80.52	6/15/2022 3:41	16.16	6/15/2022 2:50	23.20	6/15/2022 7:46	144.85
6/16/2022 6:37	49.71	6/16/2022 5:19	80.47	6/15/2022 3:42	16.16	6/15/2022 2:51	23.28	6/15/2022 7:47	144.86
6/16/2022 6:38	49.67	6/16/2022 5:20	80.51	6/15/2022 3:43	16.13	6/15/2022 2:52	23.39	6/15/2022 7:48	144.89
6/16/2022 6:39	49.68	6/16/2022 5:21	80.48	6/15/2022 3:44	16.12	6/15/2022 2:53	23.44	6/15/2022 7:49	144.87
6/16/2022 6:40	49.65	6/16/2022 5:22	80.52	6/15/2022 3:45	16.16	6/15/2022 2:54	23.55	6/15/2022 7:50	144.86
6/16/2022 6:41	49.64	6/16/2022 5:23	80.48	6/15/2022 3:46	16.10	6/15/2022 2:55	23.64	6/15/2022 7:51	144.87
6/16/2022 6:42	49.59	6/16/2022 5:24	80.50	6/15/2022 3:47	16.14	6/15/2022 2:56	23.75	6/15/2022 7:52	144.85
6/16/2022 6:43	49.61	6/16/2022 5:25	80.47	6/15/2022 3:48	16.15	6/15/2022 2:57	23.76	6/15/2022 7:53	144.87
6/16/2022 6:44	49.58	6/16/2022 5:26	80.45	6/15/2022 3:49	16.11	6/15/2022 2:58	23.78	6/15/2022 7:54	144.85
6/16/2022 6:45	49.56	6/16/2022 5:27	80.51	6/15/2022 3:50	16.16	6/15/2022 2:59	23.88	6/15/2022 7:55	144.85
6/16/2022 6:46	49.56	6/16/2022 5:28	80.49	6/15/2022 3:51	16.10	6/15/2022 3:00	23.90	6/15/2022 7:56	144.86
6/16/2022 6:47	49.51	6/16/2022 5:29	80.49	6/15/2022 3:52	16.14	6/15/2022 3:01	23.95	6/15/2022 7:57	144.84
6/16/2022 6:48	49.51	6/16/2022 5:30	80.50	6/15/2022 3:53	16.14	6/15/2022 3:02	24.09	6/15/2022 7:58	144.40
6/16/2022 6:49	49.51	6/16/2022 5:31	80.52	6/15/2022 3:54	16.14	6/15/2022 3:03	23.94	6/15/2022 7:59	143.78
6/16/2022 6:50	49.52	6/16/2022 5:32	80.45	6/15/2022 3:55	16.17	6/15/2022 3:04	23.95	6/15/2022 8:00	143.20
6/16/2022 6:51	49.48	6/16/2022 5:33	80.47	6/15/2022 3:56	16.14	6/15/2022 3:05	23.92	6/15/2022 8:01	142.62
6/16/2022 6:52	49.51	6/16/2022 5:34	80.44	6/15/2022 3:57	16.13	6/15/2022 3:06	23.88	6/15/2022 8:02	142.06
6/16/2022 6:53	49.49	6/16/2022 5:35	80.50	6/15/2022 3:58	16.11	6/15/2022 3:07	23.94	6/15/2022 8:03	141.46
6/16/2022 6:54	49.46	6/16/2022 5:36	80.49	6/15/2022 3:59	16.09	6/15/2022 3:08	23.88	6/15/2022 8:04	140.91
6/16/2022 6:55	49.45	6/16/2022 5:37	80.45	6/15/2022 4:00	16.13	6/15/2022 3:09	23.99	6/15/2022 8:05	140.40
6/16/2022 6:56	49.47	6/16/2022 5:38	80.50	6/15/2022 4:01	16.11	6/15/2022 3:10	23.99	6/15/2022 8:06	139.83
6/16/2022 6:57	49.44	6/16/2022 5:39	80.47	6/15/2022 4:02	16.11	6/15/2022 3:11	24.03	6/15/2022 8:07	144.83
6/16/2022 6:58	49.42	6/16/2022 5:40	80.49	6/15/2022 4:03	16.09	6/15/2022 3:12	24.10	6/15/2022 8:08	144.84
6/16/2022 6:59	49.45	6/16/2022 5:41	80.44	6/15/2022 4:04	16.10	6/15/2022 3:13	24.17	6/15/2022 8:09	144.89
6/16/2022 7:00	49.41	6/16/2022 5:42	80.48	6/15/2022 4:05	16.13	6/15/2022 3:14	24.19	6/15/2022 8:10	144.86
6/16/2022 7:01	49.42	6/16/2022 5:43	80.48	6/15/2022 4:06	16.06	6/15/2022 3:15	24.23	6/15/2022 8:11	144.85
6/16/2022 7:02	49.42	6/16/2022 5:44	80.48	6/15/2022 4:07	16.14	6/15/2022 3:16	24.31	6/15/2022 8:12	144.87
6/16/2022 7:03	49.38	6/16/2022 5:45	80.50	6/15/2022 4:08	16.11	6/15/2022 3:17	24.36	6/15/2022 8:13	144.85
6/16/2022 7:04	49.37	6/16/2022 5:46	80.51	6/15/2022 4:09	16.05	6/15/2022 3:18	24.37	6/15/2022 8:14	144.85
6/16/2022 7:05	49.38	6/16/2022 5:47	80.48	6/15/2022 4:10	16.11	6/15/2022 3:19	24.48	6/15/2022 8:15	144.86
6/16/2022 7:06	49.34	6/16/2022 5:48	80.49	6/15/2022 4:11	16.07	6/15/2022 3:20	24.55	6/15/2022 8:16	144.89
6/16/2022 7:07	49.37	6/16/2022 5:49	80.46	6/15/2022 4:12	16.12	6/15/2022 3:21	24.57	6/15/2022 8:17	144.84
6/16/2022 7:08	49.37	6/16/2022 5:50	80.51	6/15/2022 4:13	16.09	6/15/2022 3:22	24.53	6/15/2022 8:18	144.85
6/16/2022 7:09	49.36	6/16/2022 5:51	80.50	6/15/2022 4:14	16.08	6/15/2022 3:23	23.96	6/15/2022 8:19	144.85
6/16/2022 7:10	49.36	6/16/2022 5:52	80.46	6/15/2022 4:15	16.08	6/15/2022 3:24	23.51	6/15/2022 8:20	144.87
6/16/2022 7:11	49.36	6/16/2022 5:53	80.49	6/15/2022 4:16	16.09	6/15/2022 3:25	23.13	6/15/2022 8:21	144.86
6/16/2022 7:12	49.35	6/16/2022 5:54	80.46	6/15/2022 4:17	16.06	6/15/2022 3:26	22.84	6/15/2022 8:22	144.83
6/16/2022 7:13	49.36	6/16/2022 5:55	80.47	6/15/2022 4:18	16.07	6/15/2022 3:27	22.60	6/15/2022 8:23	144.85
6/16/2022 7:14	49.34	6/16/2022 5:56	80.48	6/15/2022 4:19	16.08	6/15/2022 3:28	22.45	6/15/2022 8:24	144.88
6/16/2022 7:15	49.35	6/16/2022 5:57	80.50	6/15/2022 4:20	16.10	6/15/2022 3:29	22.30	6/15/2022 8:25	144.84
6/16/2022 7:16	49.36	6/16/2022 5:58	80.48	6/15/2022 4:21	16.08	6/15/2022 3:30	22.22	6/15/2022 8:26	144.84
6/16/2022 7:17	49.33	6/16/2022 5:59	80.47	6/15/2022 4:22	16.07	6/15/2022 3:31	22.10	6/15/2022 8:27	144.88
6/16/2022 7:18	49.31	6/16/2022 6:00	80.45	6/15/2022 4:23	16.01	6/15/2022 3:32	21.96	6/15/2022 8:28	144.87
6/16/2022 7:19	49.30	6/16/2022 6:01	80.45	6/15/2022 4:24	16.10	6/15/2022 3:33	21.88	6/15/2022 8:29	144.85
6/16/2022 7:20	49.31	6/16/2022 6:02	80.53	6/15/2022 4:25	16.06	6/15/2022 3:34	21.85	6/15/2022 8:30	144.83
6/16/2022 7:21	49.32	6/16/2022 6:03	80.50	6/15/2022 4:26	16.05	6/15/2022 3:35	21.76	6/15/2022 8:31	144.87
6/16/2022 7:22	49.30	6/16/2022 6:04	80.48	6/15/2022 4:27	16.06	6/15/2022 3:36	21.74	6/15/2022 8:32	144.86
6/16/2022 7:23	49.30	6/16/2022 6:05	80.46	6/15/2022 4:28	16.09	6/15/2022 3:37	21.67	6/15/2022 8:33	144.46
6/16/2022 7:24	49.28	6/16/2022 6:06	80.42	6/15/2022 4:29	16.06	6/15/2022 3:38	21.60	6/15/2022 8:34	143.89

6/16/2022 7:25	49.33	6/16/2022 6:07	80.47	6/15/2022 4:30	16.05	6/15/2022 3:39	21.54	6/15/2022 8:35	143.26
6/16/2022 7:26	49.28	6/16/2022 6:08	80.45	6/15/2022 4:31	16.05	6/15/2022 3:40	21.48	6/15/2022 8:36	142.68
6/16/2022 7:27	49.29	6/16/2022 6:09	80.49	6/15/2022 4:32	16.03	6/15/2022 3:41	21.50	6/15/2022 8:37	142.08
6/16/2022 7:28	49.27	6/16/2022 6:10	80.47	6/15/2022 4:33	16.07	6/15/2022 3:42	21.40	6/15/2022 8:38	141.46
6/16/2022 7:29	49.27	6/16/2022 6:11	80.47	6/15/2022 4:34	16.02	6/15/2022 3:43	20.71	6/15/2022 8:39	140.92
6/16/2022 7:30	49.24	6/16/2022 6:12	80.48	6/15/2022 4:35	16.05	6/15/2022 3:44	20.17	6/15/2022 8:40	140.39
6/16/2022 7:31	49.26	6/16/2022 6:13	80.49	6/15/2022 4:36	16.10	6/15/2022 3:45	19.74	6/15/2022 8:41	139.83
6/16/2022 7:32	49.24	6/16/2022 6:14	80.43	6/15/2022 4:37	16.01	6/15/2022 3:46	19.37	6/15/2022 8:42	139.23
6/16/2022 7:33	49.27	6/16/2022 6:15	80.45	6/15/2022 4:38	16.05	6/15/2022 3:47	19.22	6/15/2022 8:43	144.86
6/16/2022 7:34	49.27	6/16/2022 6:16	80.46	6/15/2022 4:39	16.07	6/15/2022 3:48	18.92	6/15/2022 8:44	144.35
6/16/2022 7:35	49.28	6/16/2022 6:17	80.51	6/15/2022 4:40	16.05	6/15/2022 3:49	18.71	6/15/2022 8:45	143.65
6/16/2022 7:36	49.25	6/16/2022 6:18	80.48	6/15/2022 4:41	16.06	6/15/2022 3:50	18.92	6/15/2022 8:46	143.02
6/16/2022 7:37	49.22	6/16/2022 6:19	80.47	6/15/2022 4:42	16.04	6/15/2022 3:51	19.06	6/15/2022 8:47	142.43
6/16/2022 7:38	49.22	6/16/2022 6:20	80.42	6/15/2022 4:43	16.06	6/15/2022 3:52	19.07	6/15/2022 8:48	141.79
6/16/2022 7:39	49.25	6/16/2022 6:21	80.43	6/15/2022 4:44	16.01	6/15/2022 3:53	19.03	6/15/2022 8:49	141.22
6/16/2022 7:40	49.21	6/16/2022 6:22	80.45	6/15/2022 4:45	16.02	6/15/2022 3:54	19.02	6/15/2022 8:50	140.63
6/16/2022 7:41	49.23	6/16/2022 6:23	80.50	6/15/2022 4:46	16.05	6/15/2022 3:55	19.00	6/15/2022 8:51	140.08
6/16/2022 7:42	49.22	6/16/2022 6:24	80.50	6/15/2022 4:47	16.01	6/15/2022 3:56	18.97	6/15/2022 8:52	139.48
6/16/2022 7:43	49.20	6/16/2022 6:25	80.49	6/15/2022 4:48	16.00	6/15/2022 3:57	18.83	6/15/2022 8:53	138.87
6/16/2022 7:44	49.21	6/16/2022 6:26	80.49	6/15/2022 4:49	16.02	6/15/2022 3:58	18.35	6/15/2022 8:54	138.33
6/16/2022 7:45	49.23	6/16/2022 6:27	80.50	6/15/2022 4:50	16.00	6/15/2022 3:59	18.07	6/15/2022 8:55	137.78
6/16/2022 7:46	49.21	6/16/2022 6:28	80.51	6/15/2022 4:51	16.00	6/15/2022 4:00	17.82	6/15/2022 8:56	137.17
6/16/2022 7:47	49.18	6/16/2022 6:29	80.54	6/15/2022 4:52	16.02	6/15/2022 4:01	17.63	6/15/2022 8:57	136.63
6/16/2022 7:48	49.24	6/16/2022 6:30	80.49	6/15/2022 4:53	16.02	6/15/2022 4:02	17.37	6/15/2022 8:58	136.09
6/16/2022 7:49	49.17	6/16/2022 6:31	80.50	6/15/2022 4:54	15.97	6/15/2022 4:03	17.15	6/15/2022 8:59	135.51
6/16/2022 7:50	49.20	6/16/2022 6:32	80.47	6/15/2022 4:55	16.02	6/15/2022 4:04	17.03	6/15/2022 9:00	134.98
6/16/2022 7:51	49.23	6/16/2022 6:33	80.52	6/15/2022 4:56	15.99	6/15/2022 4:05	16.92	6/15/2022 9:01	134.47
6/16/2022 7:52	49.17	6/16/2022 6:34	80.51	6/15/2022 4:57	16.01	6/15/2022 4:06	16.79	6/15/2022 9:02	133.93
6/16/2022 7:53	49.15	6/16/2022 6:35	80.50	6/15/2022 4:58	16.00	6/15/2022 4:07	16.70	6/15/2022 9:03	133.40
6/16/2022 7:54	49.18	6/16/2022 6:36	80.47	6/15/2022 4:59	16.03	6/15/2022 4:08	16.55	6/15/2022 9:04	132.90
6/16/2022 7:55	49.19	6/16/2022 6:37	80.49	6/15/2022 5:00	16.01	6/15/2022 4:09	16.38	6/15/2022 9:05	132.42
6/16/2022 7:56	49.17	6/16/2022 6:38	80.48	6/15/2022 5:01	16.03	6/15/2022 4:10	16.29	6/15/2022 9:06	131.84
6/16/2022 7:57	49.14	6/16/2022 6:39	80.50	6/15/2022 5:02	16.01	6/15/2022 4:11	16.16	6/15/2022 9:07	131.36
6/16/2022 7:58	49.22	6/16/2022 6:40	80.50	6/15/2022 5:03	15.97	6/15/2022 4:12	16.11	6/15/2022 9:08	130.83
6/16/2022 7:59	49.17	6/16/2022 6:41	82.58	6/15/2022 5:04	15.97	6/15/2022 4:13	16.00	6/15/2022 9:09	130.31
6/16/2022 8:00	49.15	6/16/2022 6:42	82.97	6/15/2022 5:05	15.99	6/15/2022 4:14	15.92	6/15/2022 9:10	129.82
6/16/2022 8:01	49.18	6/16/2022 6:43	82.52	6/15/2022 5:06	16.00	6/15/2022 4:15	15.75	6/15/2022 9:11	129.35
6/16/2022 8:02	49.18	6/16/2022 6:44	82.19	6/15/2022 5:07	15.96	6/15/2022 4:16	15.70	6/15/2022 9:12	128.79
6/16/2022 8:03	49.17	6/16/2022 6:45	81.94	6/15/2022 5:08	15.99	6/15/2022 4:17	15.62	6/15/2022 9:13	128.30
6/16/2022 8:04	49.15	6/16/2022 6:46	81.76	6/15/2022 5:09	16.00	6/15/2022 4:18	15.45	6/15/2022 9:14	127.82
6/16/2022 8:05	49.14	6/16/2022 6:47	81.54	6/15/2022 5:10	16.02	6/15/2022 4:19	15.41	6/15/2022 9:15	127.35
6/16/2022 8:06	49.13	6/16/2022 6:48	81.42	6/15/2022 5:11	16.05	6/15/2022 4:20	15.29	6/15/2022 9:16	126.85
6/16/2022 8:07	49.15	6/16/2022 6:49	81.34	6/15/2022 5:12	15.99	6/15/2022 4:21	15.25	6/15/2022 9:17	126.36
6/16/2022 8:08	49.13	6/16/2022 6:50	81.25	6/15/2022 5:13	16.05	6/15/2022 4:22	15.11	6/15/2022 9:18	125.88
6/16/2022 8:09	49.15	6/16/2022 6:51	81.16	6/15/2022 5:14	16.03	6/15/2022 4:23	15.06	6/15/2022 9:19	125.39
6/16/2022 8:10	49.14	6/16/2022 6:52	81.09	6/15/2022 5:15	15.99	6/15/2022 4:24	14.97	6/15/2022 9:20	124.90
6/16/2022 8:11	49.13	6/16/2022 6:53	81.07	6/15/2022 5:16	16.01	6/15/2022 4:25	14.85	6/15/2022 9:21	124.45
6/16/2022 8:12	49.14	6/16/2022 6:54	80.97	6/15/2022 5:17	15.98	6/15/2022 4:26	14.80	6/15/2022 9:22	123.96
6/16/2022 8:13	49.14	6/16/2022 6:55	80.95	6/15/2022 5:18	15.99	6/15/2022 4:27	14.70	6/15/2022 9:23	123.49
6/16/2022 8:14	49.14	6/16/2022 6:56	80.93	6/15/2022 5:19	15.93	6/15/2022 4:28	14.65	6/15/2022 9:24	123.06
6/16/2022 8:15	49.15	6/16/2022 6:57	80.87	6/15/2022 5:20	16.02	6/15/2022 4:29	14.60	6/15/2022 9:25	122.60
6/16/2022 8:16	49.14	6/16/2022 6:58	80.86	6/15/2022 5:21	15.99	6/15/2022 4:30	14.50	6/15/2022 9:26	122.17
6/16/2022 8:17	49.19	6/16/2022 6:59	80.80	6/15/2022 5:22	15.94	6/15/2022 4:31	14.43	6/15/2022 9:27	121.69
6/16/2022 8:18	49.15	6/16/2022 7:00	80.82	6/15/2022 5:23	16.01	6/15/2022 4:32	14.30	6/15/2022 9:28	121.25
6/16/2022 8:19	49.14	6/16/2022 7:01	80.77	6/15/2022 5:24	16.00	6/15/2022 4:33	14.26	6/15/2022 9:29	120.82
6/16/2022 8:20	49.10	6/16/2022 7:02	80.76	6/15/2022 5:25	15.98	6/15/2022 4:34	14.22	6/15/2022 9:30	120.39
6/16/2022 8:21	49.14	6/16/2022 7:03	80.71	6/15/2022 5:26	15.97	6/15/2022 4:35	14.16	6/15/2022 9:31	119.97
6/16/2022 8:22	49.15	6/16/2022 7:04	80.65	6/15/2022 5:27	15.96	6/15/2022 4:36	14.03	6/15/2022 9:32	119.51
6/16/2022 8:23	49.14	6/16/2022 7:05	80.67	6/15/2022 5:28	16.01	6/15/2022 4:37	13.99	6/15/2022 9:33	119.12
6/16/2022 8:24	49.14	6/16/2022 7:06	80.68	6/15/2022 5:29	16.00	6/15/2022 4:38	13.96	6/15/2022 9:34	118.66
6/16/2022 8:25	49.14	6/16/2022 7:07	80.68	6/15/2022 5:30	15.98	6/15/2022 4:39	13.89	6/15/2022 9:35	118.28
6/16/2022 8:26	49.13	6/16/2022 7:08	80.66	6/15/2022 5:31	15.98	6/15/2022 4:40	13.74	6/15/2022 9:36	117.88
6/16/2022 8:27	49.15	6/16/2022 7:09	80.66	6/15/2022 5:32	15.97	6/15/2022 4:41	13.69	6/15/2022 9:37	117.44
6/16/2022 8:28	49.12	6/16/2022 7:10	80.62	6/15/2022 5:33	15.98	6/15/2022 4:42	13.69	6/15/2022 9:38	117.04
6/16/2022 8:29	49.12	6/16/2022 7:11	80.61	6/15/2022 5:34	15.94	6/15/2022 4:43	13.56	6/15/2022 9:39	116.64
6/16/2022 8:30	49.13	6/16/2022 7:12	80.61	6/15/2022 5:35	15.94	6/15/2022 4:44	13.55	6/15/2022 9:40	116.26
6/16/2022 8:31	49.11	6/16/2022 7:13	80.59	6/15/2022 5:36	16.00	6/15/2022 4:45	13.46	6/15/2022 9:41	115.90
6/16/2022 8:32	49.10	6/16/2022 7:14	80.57	6/15/2022 5:37	15.96	6/15/2022 4:46	13.40	6/15/2022 9:42	115.50
6/16/2022 8:33	49.11	6/16/2022 7:15	80.59	6/15/2022 5:38	15.96	6/15/2022 4:47	13.29	6/15/2022 9:43	115.10
6/16/2022 8:34	49.06	6/16/2022 7:16	80.59	6/15/2022 5:39	15.94	6/15/2022 4:48	13.27	6/15/2022 9:44	114.72
6/16/2022 8:35	49.14	6/16/2022 7:17	80.57	6/15/2022 5:40	15.96	6/15/2022 4:49	13.19	6/15/2022 9:45	114.34
6/16/2022 8:36	49.13	6/16/2022 7:18	80.56	6/15/2022 5:41	15.99	6/15/2022 4:50	13.15	6/15/2022 9:46	113.98
6/16/2022 8:37	49.11	6/16/2022 7:19	80.57	6/15/2022 5:42	15.98	6/15/2022 4:51	13.07	6/15/2022 9:47	113.62
6/16/2022 8:38	49.04	6/16/2022 7:20	80.57	6/15/2022 5:43	15.92	6/15/2022 4:52	13.08	6/15/2022 9:48	113.21
6/16/2022 8:39	49.12	6/16/2022 7:21	80.58	6/15/2022 5:44	15.92	6/15/2022 4:53	12.99	6/15/2022 9:49	112.87
6/16/2022 8:40	49.12	6/16/2022 7:22	80.59	6/15/2022 5:45	15.99	6/15/2022 4:54	12.98	6/15/2022 9:50	112.48
6/16/2022 8:41	49.17	6/16/2022 7:23	80.53	6/15/2022 5:46	15.91	6/15/2022 4:55	12.83	6/15/2022 9:51	112.15
6/16/2022 8:42	49.14	6/16/2022 7:24	80.54	6/15/2022 5:47	15.94	6/15/2022 4:56	12.82	6/15/2022 9:52	111.78
6/16/2022 8:43	49.10	6/16/2022 7:25	80.56	6/15/2022 5:48	15.97	6/15/2022 4:57	12.76	6/15/2022 9:53	111.40
6/16/2022 8:44	49.10	6/16/2022 7:26	80.52	6/15/2022 5:49	15.95	6/15/2022 4:58	12.65	6/15/2022 9:54	111.07
6/16/2022 8:45	49.12	6/16/2022 7:27	81.11	6/15/2022 5:50	15.96	6/15/2022 4:59	12.64	6/15/2022 9:55	110.74
6/16/2022 8:46	49.08	6/16/2022 7:28	81.61	6/15/2022 5:51	15.96	6/15/2022 5:00	12.61	6/15/2022 9:56	110.38
6/16/2022 8:47	49.07	6/16/2022 7:29	82.01	6/15/2022 5:52	15.91	6/15/2022 5:01	12.61	6/15/2022 9:57	110.05
6/16/2022 8:48	49.12	6/16/2022 7:30	82.41	6/15/2022 5:53	15.97	6/15/2022 5:02	12.42	6/15/2022 9:58	109.72
6/16/2022 8:49	49.07	6/16/2022 7:31	82.08	6/15/2022 5:54	15.93	6/15/2022 5:03	12.38	6/15/2022 9:59	109.40
6/16/2022 8:50	49.11	6/16/2022 7:32	81.79	6/15/2022 5:55	15.94	6/15/2022 5:04	12.33	6/15/2022 10:00	109.07
6/16/2022 8:51	49.07	6/16/2022 7:33	82.11	6/15/2022 5:56	15.95	6/15/2022 5:05	12.31	6/15/2022 10:01	108.74
6/16/2022 8:52	49.07	6/16/2022 7:34	81.91	6/15/2022 5:57	15.98	6/15/2022 5:06	12.27	6/15/2022 10:02	108.41

6/16/2022 8:53	49.10	6/16/2022 7:35	81.73	6/15/2022 5:58	15.99	6/15/2022 5:07	12.21	6/15/2022 10:03	108.09
6/16/2022 8:54	49.09	6/16/2022 7:36	81.56	6/15/2022 5:59	15.99	6/15/2022 5:08	12.23	6/15/2022 10:04	107.78
6/16/2022 8:55	49.11	6/16/2022 7:37	81.40	6/15/2022 6:00	16.02	6/15/2022 5:09	12.09	6/15/2022 10:05	107.45
6/16/2022 8:56	49.09	6/16/2022 7:38	81.33	6/15/2022 6:01	16.01	6/15/2022 5:10	12.03	6/15/2022 10:06	107.15
6/16/2022 8:57	49.09	6/16/2022 7:39	81.22	6/15/2022 6:02	16.00	6/15/2022 5:11	11.99	6/15/2022 10:07	106.83
6/16/2022 8:58	49.07	6/16/2022 7:40	82.13	6/15/2022 6:03	16.05	6/15/2022 5:12	11.95	6/15/2022 10:08	106.55
6/16/2022 8:59	49.08	6/16/2022 7:41	84.11	6/15/2022 6:04	16.04	6/15/2022 5:13	11.91	6/15/2022 10:09	106.24
6/16/2022 9:00	49.09	6/16/2022 7:42	83.52	6/15/2022 6:05	16.01	6/15/2022 5:14	11.87	6/15/2022 10:10	105.93
6/16/2022 9:01	49.09	6/16/2022 7:43	83.06	6/15/2022 6:06	16.00	6/15/2022 5:15	11.85	6/15/2022 10:11	105.67
6/16/2022 9:02	49.14	6/16/2022 7:44	82.66	6/15/2022 6:07	16.03	6/15/2022 5:16	11.82	6/15/2022 10:12	105.37
6/16/2022 9:03	49.08	6/16/2022 7:45	82.42	6/15/2022 6:08	16.05	6/15/2022 5:17	11.69	6/15/2022 10:13	105.08
6/16/2022 9:04	49.09	6/16/2022 7:46	82.13	6/15/2022 6:09	16.06	6/15/2022 5:18	11.68	6/15/2022 10:14	104.76
6/16/2022 9:05	49.06	6/16/2022 7:47	82.53	6/15/2022 6:10	16.08	6/15/2022 5:19	11.61	6/15/2022 10:15	104.51
6/16/2022 9:06	49.10	6/16/2022 7:48	82.74	6/15/2022 6:11	16.09	6/15/2022 5:20	11.57	6/15/2022 10:16	104.20
6/16/2022 9:07	49.09	6/16/2022 7:49	82.98	6/15/2022 6:12	16.04	6/15/2022 5:21	11.53	6/15/2022 10:17	103.98
6/16/2022 9:08	49.06	6/16/2022 7:50	82.62	6/15/2022 6:13	16.03	6/15/2022 5:22	11.56	6/15/2022 10:18	103.72
6/16/2022 9:09	49.07	6/16/2022 7:51	82.32	6/15/2022 6:14	16.05	6/15/2022 5:23	11.48	6/15/2022 10:19	103.46
6/16/2022 9:10	49.06	6/16/2022 7:52	82.10	6/15/2022 6:15	16.05	6/15/2022 5:24	11.40	6/15/2022 10:20	103.16
6/16/2022 9:11	49.07	6/16/2022 7:53	81.93	6/15/2022 6:16	16.05	6/15/2022 5:25	11.34	6/15/2022 10:21	102.91
6/16/2022 9:12	49.08	6/16/2022 7:54	81.77	6/15/2022 6:17	16.11	6/15/2022 5:26	11.29	6/15/2022 10:22	102.61
6/16/2022 9:13	49.04	6/16/2022 7:55	82.26	6/15/2022 6:18	16.06	6/15/2022 5:27	11.29	6/15/2022 10:23	102.37
6/16/2022 9:14	49.04	6/16/2022 7:56	84.53	6/15/2022 6:19	16.05	6/15/2022 5:28	11.23	6/15/2022 10:24	102.09
6/16/2022 9:15	49.08	6/16/2022 7:57	83.92	6/15/2022 6:20	16.08	6/15/2022 5:29	11.23	6/15/2022 10:25	101.82
6/16/2022 9:16	49.06	6/16/2022 7:58	83.41	6/15/2022 6:21	16.12	6/15/2022 5:30	11.18	6/15/2022 10:26	101.58
6/16/2022 9:17	49.08	6/16/2022 7:59	82.99	6/15/2022 6:22	16.06	6/15/2022 5:31	11.15	6/15/2022 10:27	101.33
6/16/2022 9:18	49.04	6/16/2022 8:00	82.67	6/15/2022 6:23	16.04	6/15/2022 5:32	11.03	6/15/2022 10:28	101.06
6/16/2022 9:19	49.06	6/16/2022 8:01	82.45	6/15/2022 6:24	16.05	6/15/2022 5:33	11.00	6/15/2022 10:29	100.84
6/16/2022 9:20	49.03	6/16/2022 8:02	82.17	6/15/2022 6:25	16.03	6/15/2022 5:34	10.99	6/15/2022 10:30	100.55
6/16/2022 9:21	49.05	6/16/2022 8:03	82.08	6/15/2022 6:26	16.05	6/15/2022 5:35	10.93	6/15/2022 10:31	100.31
6/16/2022 9:22	49.08	6/16/2022 8:04	81.87	6/15/2022 6:27	16.05	6/15/2022 5:36	10.86	6/15/2022 10:32	100.06
6/16/2022 9:23	49.05	6/16/2022 8:05	81.73	6/15/2022 6:28	16.04	6/15/2022 5:37	10.88	6/15/2022 10:33	99.82
6/16/2022 9:24	49.04	6/16/2022 8:06	81.63	6/15/2022 6:29	16.10	6/15/2022 5:38	10.88	6/15/2022 10:34	99.63
6/16/2022 9:25	49.07	6/16/2022 8:07	81.52	6/15/2022 6:30	16.07	6/15/2022 5:39	10.78	6/15/2022 10:35	99.39
6/16/2022 9:26	49.04	6/16/2022 8:08	81.44	6/15/2022 6:31	16.07	6/15/2022 5:40	10.67	6/15/2022 10:36	99.13
6/16/2022 9:27	49.07	6/16/2022 8:09	81.40	6/15/2022 6:32	16.06	6/15/2022 5:41	10.71	6/15/2022 10:37	98.90
6/16/2022 9:28	49.03	6/16/2022 8:10	81.29	6/15/2022 6:33	16.10	6/15/2022 5:42	10.67	6/15/2022 10:38	98.66
6/16/2022 9:29	49.01	6/16/2022 8:11	81.27	6/15/2022 6:34	16.05	6/15/2022 5:43	10.66	6/15/2022 10:39	98.44
6/16/2022 9:30	48.98	6/16/2022 8:12	81.19	6/15/2022 6:35	16.05	6/15/2022 5:44	10.62	6/15/2022 10:40	98.23
6/16/2022 9:31	49.00	6/16/2022 8:13	81.11	6/15/2022 6:36	16.05	6/15/2022 5:45	10.59	6/15/2022 10:41	97.98
6/16/2022 9:32	49.03	6/16/2022 8:14	81.06	6/15/2022 6:37	16.09	6/15/2022 5:46	10.50	6/15/2022 10:42	97.75
6/16/2022 9:33	49.03	6/16/2022 8:15	81.06	6/15/2022 6:38	16.06	6/15/2022 5:47	10.48	6/15/2022 10:43	97.51
6/16/2022 9:34	49.03	6/16/2022 8:16	81.01	6/15/2022 6:39	16.03	6/15/2022 5:48	10.45	6/15/2022 10:44	97.30
6/16/2022 9:35	49.07	6/16/2022 8:17	80.97	6/15/2022 6:40	16.08	6/15/2022 5:49	10.40	6/15/2022 10:45	97.07
6/16/2022 9:36	49.02	6/16/2022 8:18	80.94	6/15/2022 6:41	16.07	6/15/2022 5:50	10.35	6/15/2022 10:46	96.86
6/16/2022 9:37	49.03	6/16/2022 8:19	80.95	6/15/2022 6:42	16.07	6/15/2022 5:51	10.35	6/15/2022 10:47	96.62
6/16/2022 9:38	49.05	6/16/2022 8:20	80.93	6/15/2022 6:43	16.08	6/15/2022 5:52	10.34	6/15/2022 10:48	96.42
6/16/2022 9:39	49.05	6/16/2022 8:21	80.89	6/15/2022 6:44	16.06	6/15/2022 5:53	10.20	6/15/2022 10:49	96.20
6/16/2022 9:40	49.00	6/16/2022 8:22	80.86	6/15/2022 6:45	16.07	6/15/2022 5:54	10.24	6/15/2022 10:50	95.99
6/16/2022 9:41	48.98	6/16/2022 8:23	80.86	6/15/2022 6:46	16.06	6/15/2022 5:55	10.17	6/15/2022 10:51	95.82
6/16/2022 9:42	49.00	6/16/2022 8:24	80.87	6/15/2022 6:47	16.06	6/15/2022 5:56	10.13	6/15/2022 10:52	95.57
6/16/2022 9:43	49.02	6/16/2022 8:25	80.82	6/15/2022 6:48	16.08	6/15/2022 5:57	10.20	6/15/2022 10:53	95.41
6/16/2022 9:44	49.02	6/16/2022 8:26	80.79	6/15/2022 6:49	16.03	6/15/2022 5:58	10.08	6/15/2022 10:54	95.20
6/16/2022 9:45	49.02	6/16/2022 8:27	80.76	6/15/2022 6:50	16.04	6/15/2022 5:59	10.03	6/15/2022 10:55	94.98
6/16/2022 9:46	49.02	6/16/2022 8:28	80.77	6/15/2022 6:51	16.08	6/15/2022 6:00	9.99	6/15/2022 10:56	94.80
6/16/2022 9:47	49.02	6/16/2022 8:29	80.75	6/15/2022 6:52	16.07	6/15/2022 6:01	10.00	6/15/2022 10:57	94.59
6/16/2022 9:48	48.99	6/16/2022 8:30	81.38	6/15/2022 6:53	16.07	6/15/2022 6:02	9.98	6/15/2022 10:58	94.40
6/16/2022 9:49	49.04	6/16/2022 8:31	82.04	6/15/2022 6:54	16.05	6/15/2022 6:03	9.89	6/15/2022 10:59	94.25
6/16/2022 9:50	49.00	6/16/2022 8:32	81.79	6/15/2022 6:55	16.06	6/15/2022 6:04	9.85	6/15/2022 11:00	94.06
6/16/2022 9:51	49.01	6/16/2022 8:33	82.41	6/15/2022 6:56	16.05	6/15/2022 6:05	9.83	6/15/2022 11:01	93.87
6/16/2022 9:52	49.00	6/16/2022 8:34	82.06	6/15/2022 6:57	16.05	6/15/2022 6:06	9.88	6/15/2022 11:02	93.69
6/16/2022 9:53	48.99	6/16/2022 8:35	81.86	6/15/2022 6:58	16.08	6/15/2022 6:07	9.83	6/15/2022 11:03	93.53
6/16/2022 9:54	49.00	6/16/2022 8:36	81.67	6/15/2022 6:59	16.06	6/15/2022 6:08	9.81	6/15/2022 11:04	93.38
6/16/2022 9:55	49.02	6/16/2022 8:37	81.56	6/15/2022 7:00	16.05	6/15/2022 6:09	9.69	6/15/2022 11:05	93.19
6/16/2022 9:56	49.00	6/16/2022 8:38	81.47	6/15/2022 7:01	16.05	6/15/2022 6:10	9.70	6/15/2022 11:06	93.04
6/16/2022 9:57	49.01	6/16/2022 8:39	81.33	6/15/2022 7:02	16.06	6/15/2022 6:11	9.65	6/15/2022 11:07	92.86
6/16/2022 9:58	48.96	6/16/2022 8:40	81.25	6/15/2022 7:03	16.04	6/15/2022 6:12	9.68	6/15/2022 11:08	92.67
6/16/2022 9:59	49.00	6/16/2022 8:41	81.23	6/15/2022 7:04	16.08	6/15/2022 6:13	9.68	6/15/2022 11:09	92.48
6/16/2022 10:00	48.99	6/16/2022 8:42	81.16	6/15/2022 7:05	16.09	6/15/2022 6:14	9.57	6/15/2022 11:10	92.31
6/16/2022 10:01	48.99	6/16/2022 8:43	81.86	6/15/2022 7:06	16.09	6/15/2022 6:15	9.52	6/15/2022 11:11	92.10
6/16/2022 10:02	48.99	6/16/2022 8:44	81.48	6/15/2022 7:07	16.07	6/15/2022 6:16	9.48	6/15/2022 11:12	91.96
6/16/2022 10:03	48.97	6/16/2022 8:45	82.26	6/15/2022 7:08	16.04	6/15/2022 6:17	9.46	6/15/2022 11:13	91.78
6/16/2022 10:04	48.96	6/16/2022 8:46	86.13	6/15/2022 7:09	18.10	6/15/2022 6:18	9.51	6/15/2022 11:14	91.62
6/16/2022 10:05	48.98	6/16/2022 8:47	86.96	6/15/2022 7:10	22.95	6/15/2022 6:19	9.46	6/15/2022 11:15	91.47
6/16/2022 10:06	48.99	6/16/2022 8:48	86.00	6/15/2022 7:11	25.89	6/15/2022 6:20	9.36	6/15/2022 11:16	91.33
6/16/2022 10:07	48.96	6/16/2022 8:49	85.18	6/15/2022 7:12	23.62	6/15/2022 6:21	9.36	6/15/2022 11:17	91.23
6/16/2022 10:08	49.00	6/16/2022 8:50	84.58	6/15/2022 7:13	21.67	6/15/2022 6:22	9.32	6/15/2022 11:18	91.02
6/16/2022 10:09	48.98	6/16/2022 8:51	84.01	6/15/2022 7:14	20.50	6/15/2022 6:23	9.26	6/15/2022 11:19	90.90
6/16/2022 10:10	48.98	6/16/2022 8:52	83.57	6/15/2022 7:15	19.81	6/15/2022 6:24	9.57	6/15/2022 11:20	90.77
6/16/2022 10:11	48.99	6/16/2022 8:53	83.18	6/15/2022 7:16	19.33	6/15/2022 6:25	9.61	6/15/2022 11:21	90.60
6/16/2022 10:12	48.99	6/16/2022 8:54	82.89	6/15/2022 7:17	18.97	6/15/2022 6:26	9.62	6/15/2022 11:22	90.41
6/16/2022 10:13	48.96	6/16/2022 8:55	82.61	6/15/2022 7:18	18.74	6/15/2022 6:27	9.62	6/15/2022 11:23	90.31
6/16/2022 10:14	49.02	6/16/2022 8:56	82.42	6/15/2022 7:19	18.55	6/15/2022 6:28	9.64	6/15/2022 11:24	90.11
6/16/2022 10:15	48.97	6/16/2022 8:57	82.21	6/15/2022 7:20	18.36	6/15/2022 6:29	9.65	6/15/2022 11:25	89.99
6/16/2022 10:16	48.99	6/16/2022 8:58	82.08	6/15/2022 7:21	18.22	6/15/2022 6:30	9.70	6/15/2022 11:26	89.82
6/16/2022 10:17	48.96	6/16/2022 8:59	81.98	6/15/2022 7:22	18.09	6/15/2022 6:31	9.41	6/15/2022 11:27	89.71
6/16/2022 10:18	48.98	6/16/2022 9:00	81.80	6/15/2022 7:23	18.00	6/15/2022 6:32	9.69	6/15/2022 11:28	89.55
6/16/2022 10:19	48.96	6/16/2022 9:01	81.70	6/15/2022 7:24	17.92	6/15/2022 6:33	9.40	6/15/2022 11:29	89.41
6/16/2022 10:20	48.99	6/16/2022 9:02	81.59	6/15/2022 7:25	17.79	6/15/2022 6:34	9.34	6/15/2022 11:30	89.26

6/16/2022 10:21	49.00	6/16/2022 9:03	81.55	6/15/2022 7:26	17.71	6/15/2022 6:35	9.30	6/15/2022 11:31	89.12
6/16/2022 10:22	48.99	6/16/2022 9:04	81.46	6/15/2022 7:27	17.65	6/15/2022 6:36	9.41	6/15/2022 11:32	88.97
6/16/2022 10:23	48.98	6/16/2022 9:05	81.36	6/15/2022 7:28	17.57	6/15/2022 6:37	10.00	6/15/2022 11:33	88.79
6/16/2022 10:24	48.99	6/16/2022 9:06	81.33	6/15/2022 7:29	17.51	6/15/2022 6:38	10.39	6/15/2022 11:34	88.70
6/16/2022 10:25	49.01	6/16/2022 9:07	81.31	6/15/2022 7:30	17.49	6/15/2022 6:39	10.56	6/15/2022 11:35	88.56
6/16/2022 10:26	48.98	6/16/2022 9:08	81.21	6/15/2022 7:31	17.47	6/15/2022 6:40	10.78	6/15/2022 11:36	88.41
6/16/2022 10:27	48.98	6/16/2022 9:09	81.15	6/15/2022 7:32	17.38	6/15/2022 6:41	10.92	6/15/2022 11:37	88.28
6/16/2022 10:28	49.00	6/16/2022 9:10	81.12	6/15/2022 7:33	17.31	6/15/2022 6:42	11.04	6/15/2022 11:38	88.14
6/16/2022 10:29	49.00	6/16/2022 9:11	81.12	6/15/2022 7:34	17.26	6/15/2022 6:43	11.15	6/15/2022 11:39	88.00
6/16/2022 10:30	48.98	6/16/2022 9:12	81.04	6/15/2022 7:35	17.21	6/15/2022 6:44	11.22	6/15/2022 11:40	87.88
6/16/2022 10:31	48.94	6/16/2022 9:13	81.02	6/15/2022 7:36	17.22	6/15/2022 6:45	11.27	6/15/2022 11:41	87.73
6/16/2022 10:32	48.99	6/16/2022 9:14	80.98	6/15/2022 7:37	17.19	6/15/2022 6:46	11.35	6/15/2022 11:42	87.56
6/16/2022 10:33	48.98	6/16/2022 9:15	81.00	6/15/2022 7:38	17.15	6/15/2022 6:47	11.53	6/15/2022 11:43	87.39
6/16/2022 10:34	48.97	6/16/2022 9:16	80.96	6/15/2022 7:39	17.12	6/15/2022 6:48	10.97	6/15/2022 11:44	87.27
6/16/2022 10:35	48.99	6/16/2022 9:17	80.90	6/15/2022 7:40	17.13	6/15/2022 6:49	10.47	6/15/2022 11:45	87.19
6/16/2022 10:36	49.00	6/16/2022 9:18	80.91	6/15/2022 7:41	17.06	6/15/2022 6:50	10.29	6/15/2022 11:46	87.01
6/16/2022 10:37	48.99	6/16/2022 9:19	80.88	6/15/2022 7:42	17.03	6/15/2022 6:51	10.06	6/15/2022 11:47	86.90
6/16/2022 10:38	48.96	6/16/2022 9:20	80.86	6/15/2022 7:43	17.02	6/15/2022 6:52	9.86	6/15/2022 11:48	86.75
6/16/2022 10:39	48.98	6/16/2022 9:21	80.89	6/15/2022 7:44	17.01	6/15/2022 6:53	9.73	6/15/2022 11:49	86.65
6/16/2022 10:40	48.98	6/16/2022 9:22	80.87	6/15/2022 7:45	17.03	6/15/2022 6:54	9.90	6/15/2022 11:50	86.49
6/16/2022 10:41	49.00	6/16/2022 9:23	80.83	6/15/2022 7:46	16.94	6/15/2022 6:55	9.70	6/15/2022 11:51	86.39
6/16/2022 10:42	48.99	6/16/2022 9:24	80.86	6/15/2022 7:47	16.92	6/15/2022 6:56	9.85	6/15/2022 11:52	86.23
6/16/2022 10:43	49.00	6/16/2022 9:25	80.83	6/15/2022 7:48	16.88	6/15/2022 6:57	9.60	6/15/2022 11:53	86.11
6/16/2022 10:44	48.98	6/16/2022 9:26	80.77	6/15/2022 7:49	16.90	6/15/2022 6:58	9.59	6/15/2022 11:54	85.98
6/16/2022 10:45	48.98	6/16/2022 9:27	80.78	6/15/2022 7:50	16.85	6/15/2022 6:59	9.46	6/15/2022 11:55	85.85
6/16/2022 10:46	48.99	6/16/2022 9:28	80.83	6/15/2022 7:51	16.82	6/15/2022 7:00	9.44	6/15/2022 11:56	85.70
6/16/2022 10:47	48.97	6/16/2022 9:29	80.72	6/15/2022 7:52	16.87	6/15/2022 7:01	9.37	6/15/2022 11:57	85.59
6/16/2022 10:48	48.99	6/16/2022 9:30	80.79	6/15/2022 7:53	16.81	6/15/2022 7:02	9.43	6/15/2022 11:58	85.45
6/16/2022 10:49	48.95	6/16/2022 9:31	80.75	6/15/2022 7:54	16.81	6/15/2022 7:03	9.54	6/15/2022 11:59	85.31
6/16/2022 10:50	48.99	6/16/2022 9:32	80.76	6/15/2022 7:55	16.79	6/15/2022 7:04	9.45	6/15/2022 12:00	85.21
6/16/2022 10:51	48.98	6/16/2022 9:33	80.72	6/15/2022 7:56	16.82	6/15/2022 7:05	9.29	6/15/2022 12:01	85.09
6/16/2022 10:52	49.00	6/16/2022 9:34	80.71	6/15/2022 7:57	16.70	6/15/2022 7:06	9.19	6/15/2022 12:02	84.94
6/16/2022 10:53	49.00	6/16/2022 9:35	80.75	6/15/2022 7:58	16.72	6/15/2022 7:07	9.17	6/15/2022 12:03	84.87
6/16/2022 10:54	48.96	6/16/2022 9:36	80.77	6/15/2022 7:59	16.74	6/15/2022 7:08	9.12	6/15/2022 12:04	84.75
6/16/2022 10:55	48.97	6/16/2022 9:37	80.76	6/15/2022 8:00	16.68	6/15/2022 7:09	9.10	6/15/2022 12:05	84.65
6/16/2022 10:56	48.97	6/16/2022 9:38	80.72	6/15/2022 8:01	16.68	6/15/2022 7:10	9.09	6/15/2022 12:06	84.50
6/16/2022 10:57	48.96	6/16/2022 9:39	80.70	6/15/2022 8:02	16.68	6/15/2022 7:11	9.00	6/15/2022 12:07	84.41
6/16/2022 10:58	48.95	6/16/2022 9:40	80.70	6/15/2022 8:03	16.74	6/15/2022 7:12	9.09	6/15/2022 12:08	84.32
6/16/2022 10:59	48.95	6/16/2022 9:41	80.70	6/15/2022 8:04	16.71	6/15/2022 7:13	8.98	6/15/2022 12:09	84.13
6/16/2022 11:00	48.98	6/16/2022 9:42	80.71	6/15/2022 8:05	16.62	6/15/2022 7:14	8.92	6/15/2022 12:10	84.07
6/16/2022 11:01	48.98	6/16/2022 9:43	80.69	6/15/2022 8:06	16.66	6/15/2022 7:15	8.88	6/15/2022 12:11	83.94
6/16/2022 11:02	48.98	6/16/2022 9:44	80.71	6/15/2022 8:07	16.61	6/15/2022 7:16	8.89	6/15/2022 12:12	83.83
6/16/2022 11:03	48.97	6/16/2022 9:45	80.68	6/15/2022 8:08	16.67	6/15/2022 7:17	8.84	6/15/2022 12:13	83.71
6/16/2022 11:04	48.96	6/16/2022 9:46	80.65	6/15/2022 8:09	16.61	6/15/2022 7:18	8.79	6/15/2022 12:14	83.63
6/16/2022 11:05	48.94	6/16/2022 9:47	80.68	6/15/2022 8:10	16.60	6/15/2022 7:19	8.75	6/15/2022 12:15	83.50
6/16/2022 11:06	48.97	6/16/2022 9:48	80.68	6/15/2022 8:11	16.58	6/15/2022 7:20	8.74	6/15/2022 12:16	83.37
6/16/2022 11:07	48.94	6/16/2022 9:49	80.69	6/15/2022 8:12	16.58	6/15/2022 7:21	8.66	6/15/2022 12:17	83.25
6/16/2022 11:08	48.96	6/16/2022 9:50	80.71	6/15/2022 8:13	16.59	6/15/2022 7:22	8.65	6/15/2022 12:18	83.17
6/16/2022 11:09	48.96	6/16/2022 9:51	80.66	6/15/2022 8:14	16.56	6/15/2022 7:23	8.65	6/15/2022 12:19	83.06
6/16/2022 11:10	48.95	6/16/2022 9:52	80.69	6/15/2022 8:15	16.53	6/15/2022 7:24	8.67	6/15/2022 12:20	82.96
6/16/2022 11:11	49.00	6/16/2022 9:53	80.70	6/15/2022 8:16	16.51	6/15/2022 7:25	8.59	6/15/2022 12:21	82.84
6/16/2022 11:12	48.95	6/16/2022 9:54	80.67	6/15/2022 8:17	16.49	6/15/2022 7:26	8.55	6/15/2022 12:22	82.71
6/16/2022 11:13	48.97	6/16/2022 9:55	80.65	6/15/2022 8:18	16.47	6/15/2022 7:27	8.50	6/15/2022 12:23	82.65
6/16/2022 11:14	48.97	6/16/2022 9:56	80.68	6/15/2022 8:19	16.56	6/15/2022 7:28	8.54	6/15/2022 12:24	82.54
6/16/2022 11:15	48.95	6/16/2022 9:57	80.65	6/15/2022 8:20	16.50	6/15/2022 7:29	8.47	6/15/2022 12:25	82.42
6/16/2022 11:16	48.95	6/16/2022 9:58	80.63	6/15/2022 8:21	16.53	6/15/2022 7:30	8.47	6/15/2022 12:26	82.36
6/16/2022 11:17	48.99	6/16/2022 9:59	80.68	6/15/2022 8:22	16.49	6/15/2022 7:31	8.51	6/15/2022 12:27	82.22
6/16/2022 11:18	48.96	6/16/2022 10:00	80.65	6/15/2022 8:23	16.51	6/15/2022 7:32	8.42	6/15/2022 12:28	82.12
6/16/2022 11:19	48.95	6/16/2022 10:01	80.65	6/15/2022 8:24	16.44	6/15/2022 7:33	8.44	6/15/2022 12:29	82.05
6/16/2022 11:20	48.99	6/16/2022 10:02	80.65	6/15/2022 8:25	16.46	6/15/2022 7:34	8.41	6/15/2022 12:30	81.95
6/16/2022 11:21	48.98	6/16/2022 10:03	80.66	6/15/2022 8:26	16.47	6/15/2022 7:35	8.30	6/15/2022 12:31	81.84
6/16/2022 11:22	48.94	6/16/2022 10:04	80.67	6/15/2022 8:27	16.47	6/15/2022 7:36	8.31	6/15/2022 12:32	81.72
6/16/2022 11:23	48.97	6/16/2022 10:05	80.64	6/15/2022 8:28	16.45	6/15/2022 7:37	8.30	6/15/2022 12:33	81.67
6/16/2022 11:24	48.97	6/16/2022 10:06	80.64	6/15/2022 8:29	16.45	6/15/2022 7:38	8.29	6/15/2022 12:34	81.58
6/16/2022 11:25	51.79	6/16/2022 10:07	80.63	6/15/2022 8:30	16.44	6/15/2022 7:39	8.31	6/15/2022 12:35	81.44
6/16/2022 11:26	53.18	6/16/2022 10:08	80.64	6/15/2022 8:31	16.43	6/15/2022 7:40	8.31	6/15/2022 12:36	81.36
6/16/2022 11:27	53.88	6/16/2022 10:09	80.64	6/15/2022 8:32	16.44	6/15/2022 7:41	8.16	6/15/2022 12:37	81.29
6/16/2022 11:28	54.33	6/16/2022 10:10	80.61	6/15/2022 8:33	16.43	6/15/2022 7:42	8.19	6/15/2022 12:38	81.21
6/16/2022 11:29	52.46	6/16/2022 10:11	80.59	6/15/2022 8:34	16.43	6/15/2022 7:43	8.18	6/15/2022 12:39	81.13
6/16/2022 11:30	51.22	6/16/2022 10:12	80.63	6/15/2022 8:35	16.45	6/15/2022 7:44	8.19	6/15/2022 12:40	81.04
6/16/2022 11:31	50.76	6/16/2022 10:13	80.63	6/15/2022 8:36	16.41	6/15/2022 7:45	8.18	6/15/2022 12:41	80.96
6/16/2022 11:32	50.45	6/16/2022 10:14	80.61	6/15/2022 8:37	16.41	6/15/2022 7:46	8.19	6/15/2022 12:42	80.89
6/16/2022 11:33	50.25	6/16/2022 10:15	80.62	6/15/2022 8:38	16.39	6/15/2022 7:47	8.05	6/15/2022 12:43	80.79
6/16/2022 11:34	50.14	6/16/2022 10:16	80.66	6/15/2022 8:39	16.39	6/15/2022 7:48	8.04	6/15/2022 12:44	80.72
6/16/2022 11:35	50.05	6/16/2022 10:17	80.64	6/15/2022 8:40	16.42	6/15/2022 7:49	8.01	6/15/2022 12:45	80.71
6/16/2022 11:36	49.96	6/16/2022 10:18	80.59	6/15/2022 8:41	16.40	6/15/2022 7:50	8.04	6/15/2022 12:46	80.58
6/16/2022 11:37	49.91	6/16/2022 10:19	80.68	6/15/2022 8:42	16.39	6/15/2022 7:51	8.00	6/15/2022 12:47	80.52
6/16/2022 11:38	49.87	6/16/2022 10:20	80.65	6/15/2022 8:43	16.38	6/15/2022 7:52	8.05	6/15/2022 12:48	80.42
6/16/2022 11:39	49.80	6/16/2022 10:21	80.66	6/15/2022 8:44	16.35	6/15/2022 7:53	7.92	6/15/2022 12:49	80.38
6/16/2022 11:40	49.79	6/16/2022 10:22	80.61	6/15/2022 8:45	16.35	6/15/2022 7:54	7.91	6/15/2022 12:50	80.25
6/16/2022 11:41	49.79	6/16/2022 10:23	80.62	6/15/2022 8:46	16.36	6/15/2022 7:55	7.90	6/15/2022 12:51	80.19
6/16/2022 11:42	49.69	6/16/2022 10:24	80.61	6/15/2022 8:47	16.37	6/15/2022 7:56	7.97	6/15/2022 12:52	80.10
6/16/2022 11:43	49.68	6/16/2022 10:25	80.66	6/15/2022 8:48	16.34	6/15/2022 7:57	7.93	6/15/2022 12:53	80.03
6/16/2022 11:44	49.65	6/16/2022 10:26	80.65	6/15/2022 8:49	16.34	6/15/2022 7:58	7.99	6/15/2022 12:54	79.94
6/16/2022 11:45	49.61	6/16/2022 10:27	80.63	6/15/2022 8:50	16.34	6/15/2022 7:59	7.90	6/15/2022 12:55	79.86
6/16/2022 11:46	49.62	6/16/2022 10:28	80.63	6/15/2022 8:51	16.34	6/15/2022 8:00	7.95	6/15/2022 12:56	79.79
6/16/2022 11:47	49.59	6/16/2022 10:29	80.62	6/15/2022 8:52	16.33	6/15/2022 8:01	8.14	6/15/2022 12:57	79.68
6/16/2022 11:48	49.59	6/16/2022 10:30	80.58	6/15/2022 8:53	16.32	6/15/2022 8:02	8.07	6/15/2022 12:58	79.62

6/16/2022 11:49	49.57	6/16/2022 10:31	80.62	6/15/2022 8:54	16.33	6/15/2022 8:03	7.96	6/15/2022 12:59	79.57
6/16/2022 11:50	49.55	6/16/2022 10:32	80.62	6/15/2022 8:55	16.35	6/15/2022 8:04	7.95	6/15/2022 13:00	79.48
6/16/2022 11:51	49.54	6/16/2022 10:33	80.64	6/15/2022 8:56	16.34	6/15/2022 8:05	7.89	6/15/2022 13:01	79.37
6/16/2022 11:52	49.51	6/16/2022 10:34	80.59	6/15/2022 8:57	16.36	6/15/2022 8:06	7.89	6/15/2022 13:02	79.28
6/16/2022 11:53	49.50	6/16/2022 10:35	80.60	6/15/2022 8:58	16.31	6/15/2022 8:07	7.78	6/15/2022 13:03	79.23
6/16/2022 11:54	49.46	6/16/2022 10:36	80.62	6/15/2022 8:59	16.30	6/15/2022 8:08	7.84	6/15/2022 13:04	79.12
6/16/2022 11:55	49.45	6/16/2022 10:37	80.64	6/15/2022 9:00	16.32	6/15/2022 8:09	7.86	6/15/2022 13:05	79.05
6/16/2022 11:56	49.43	6/16/2022 10:38	80.61	6/15/2022 9:01	16.28	6/15/2022 8:10	7.94	6/15/2022 13:06	79.02
6/16/2022 11:57	49.46	6/16/2022 10:39	80.62	6/15/2022 9:02	16.29	6/15/2022 8:11	7.86	6/15/2022 13:07	78.94
6/16/2022 11:58	49.46	6/16/2022 10:40	80.61	6/15/2022 9:03	16.24	6/15/2022 8:12	7.78	6/15/2022 13:08	78.88
6/16/2022 11:59	49.45	6/16/2022 10:41	80.62	6/15/2022 9:04	16.25	6/15/2022 8:13	7.81	6/15/2022 13:09	78.81
6/16/2022 12:00	49.42	6/16/2022 10:42	80.61	6/15/2022 9:05	16.29	6/15/2022 8:14	7.77	6/15/2022 13:10	78.77
6/16/2022 12:01	49.41	6/16/2022 10:43	80.60	6/15/2022 9:06	16.23	6/15/2022 8:15	7.65	6/15/2022 13:11	78.74
6/16/2022 12:02	49.41	6/16/2022 10:44	80.61	6/15/2022 9:07	16.27	6/15/2022 8:16	7.76	6/15/2022 13:12	78.63
6/16/2022 12:03	49.38	6/16/2022 10:45	80.60	6/15/2022 9:08	16.24	6/15/2022 8:17	7.66	6/15/2022 13:13	78.57
6/16/2022 12:04	49.33	6/16/2022 10:46	80.62	6/15/2022 9:09	16.25	6/15/2022 8:18	7.69	6/15/2022 13:14	78.51
6/16/2022 12:05	49.38	6/16/2022 10:47	80.63	6/15/2022 9:10	16.28	6/15/2022 8:19	7.67	6/15/2022 13:15	78.43
6/16/2022 12:06	49.32	6/16/2022 10:48	80.61	6/15/2022 9:11	16.29	6/15/2022 8:20	7.66	6/15/2022 13:16	78.37
6/16/2022 12:07	49.35	6/16/2022 10:49	80.59	6/15/2022 9:12	16.28	6/15/2022 8:21	7.66	6/15/2022 13:17	78.34
6/16/2022 12:08	49.34	6/16/2022 10:50	80.60	6/15/2022 9:13	16.24	6/15/2022 8:22	7.59	6/15/2022 13:18	78.27
6/16/2022 12:09	49.34	6/16/2022 10:51	80.62	6/15/2022 9:14	16.27	6/15/2022 8:23	7.72	6/15/2022 13:19	78.21
6/16/2022 12:10	49.32	6/16/2022 10:52	80.66	6/15/2022 9:15	16.26	6/15/2022 8:24	7.61	6/15/2022 13:20	78.13
6/16/2022 12:11	49.30	6/16/2022 10:53	80.61	6/15/2022 9:16	16.27	6/15/2022 8:25	7.60	6/15/2022 13:21	78.10
6/16/2022 12:12	49.36	6/16/2022 10:54	80.65	6/15/2022 9:17	16.23	6/15/2022 8:26	7.60	6/15/2022 13:22	78.00
6/16/2022 12:13	49.34	6/16/2022 10:55	80.61	6/15/2022 9:18	16.24	6/15/2022 8:27	7.56	6/15/2022 13:23	77.96
6/16/2022 12:14	49.31	6/16/2022 10:56	80.62	6/15/2022 9:19	16.26	6/15/2022 8:28	7.53	6/15/2022 13:24	77.91
6/16/2022 12:15	49.32	6/16/2022 10:57	80.61	6/15/2022 9:20	16.25	6/15/2022 8:29	7.51	6/15/2022 13:25	77.85
6/16/2022 12:16	49.30	6/16/2022 10:58	80.58	6/15/2022 9:21	16.21	6/15/2022 8:30	7.45	6/15/2022 13:26	77.79
6/16/2022 12:17	49.27	6/16/2022 10:59	80.60	6/15/2022 9:22	16.28	6/15/2022 8:31	7.51	6/15/2022 13:27	77.70
6/16/2022 12:18	49.29	6/16/2022 11:00	80.59	6/15/2022 9:23	16.20	6/15/2022 8:32	7.81	6/15/2022 13:28	82.39
6/16/2022 12:19	49.29	6/16/2022 11:01	80.64	6/15/2022 9:24	16.23	6/15/2022 8:33	7.78	6/15/2022 13:29	85.60
6/16/2022 12:20	49.29	6/16/2022 11:02	80.62	6/15/2022 9:25	16.21	6/15/2022 8:34	7.72	6/15/2022 13:30	85.34
6/16/2022 12:21	49.28	6/16/2022 11:03	82.58	6/15/2022 9:26	16.22	6/15/2022 8:35	7.57	6/15/2022 13:31	85.13
6/16/2022 12:22	49.25	6/16/2022 11:04	83.45	6/15/2022 9:27	16.25	6/15/2022 8:36	7.54	6/15/2022 13:32	88.45
6/16/2022 12:23	49.25	6/16/2022 11:05	82.91	6/15/2022 9:28	16.23	6/15/2022 8:37	7.48	6/15/2022 13:33	90.15
6/16/2022 12:24	49.25	6/16/2022 11:06	82.57	6/15/2022 9:29	16.22	6/15/2022 8:38	7.50	6/15/2022 13:34	89.86
6/16/2022 12:25	49.27	6/16/2022 11:07	82.26	6/15/2022 9:30	16.16	6/15/2022 8:39	7.43	6/15/2022 13:35	89.64
6/16/2022 12:26	49.25	6/16/2022 11:08	82.00	6/15/2022 9:31	16.21	6/15/2022 8:40	7.57	6/15/2022 13:36	89.37
6/16/2022 12:27	49.27	6/16/2022 11:09	81.82	6/15/2022 9:32	16.19	6/15/2022 8:41	7.43	6/15/2022 13:37	89.19
6/16/2022 12:28	49.26	6/16/2022 11:10	81.70	6/15/2022 9:33	16.21	6/15/2022 8:42	7.38	6/15/2022 13:38	88.93
6/16/2022 12:29	49.25	6/16/2022 11:11	86.01	6/15/2022 9:34	16.16	6/15/2022 8:43	7.40	6/15/2022 13:39	88.72
6/16/2022 12:30	49.22	6/16/2022 11:12	86.82	6/15/2022 9:35	16.23	6/15/2022 8:44	7.33	6/15/2022 13:40	88.54
6/16/2022 12:31	49.24	6/16/2022 11:13	85.85	6/15/2022 9:36	16.17	6/15/2022 8:45	7.35	6/15/2022 13:41	88.36
6/16/2022 12:32	49.23	6/16/2022 11:14	85.08	6/15/2022 9:37	16.14	6/15/2022 8:46	7.32	6/15/2022 13:42	88.13
6/16/2022 12:33	49.22	6/16/2022 11:15	84.47	6/15/2022 9:38	16.22	6/15/2022 8:47	7.27	6/15/2022 13:43	87.92
6/16/2022 12:34	49.22	6/16/2022 11:16	83.92	6/15/2022 9:39	16.20	6/15/2022 8:48	7.24	6/15/2022 13:44	87.77
6/16/2022 12:35	49.23	6/16/2022 11:17	83.49	6/15/2022 9:40	16.17	6/15/2022 8:49	7.27	6/15/2022 13:45	87.55
6/16/2022 12:36	49.17	6/16/2022 11:18	83.15	6/15/2022 9:41	16.14	6/15/2022 8:50	7.24	6/15/2022 13:46	87.38
6/16/2022 12:37	49.21	6/16/2022 11:19	82.85	6/15/2022 9:42	16.17	6/15/2022 8:51	7.17	6/15/2022 13:47	87.16
6/16/2022 12:38	49.20	6/16/2022 11:20	82.59	6/15/2022 9:43	16.15	6/15/2022 8:52	7.17	6/15/2022 13:48	86.98
6/16/2022 12:39	49.20	6/16/2022 11:21	82.37	6/15/2022 9:44	16.15	6/15/2022 8:53	7.16	6/15/2022 13:49	86.80
6/16/2022 12:40	49.21	6/16/2022 11:22	82.18	6/15/2022 9:45	16.12	6/15/2022 8:54	7.15	6/15/2022 13:50	86.63
6/16/2022 12:41	49.16	6/16/2022 11:23	82.01	6/15/2022 9:46	16.17	6/15/2022 8:55	7.17	6/15/2022 13:51	86.45
6/16/2022 12:42	49.17	6/16/2022 11:24	81.92	6/15/2022 9:47	16.16	6/15/2022 8:56	7.13	6/15/2022 13:52	86.25
6/16/2022 12:43	49.19	6/16/2022 11:25	81.81	6/15/2022 9:48	16.17	6/15/2022 8:57	7.07	6/15/2022 13:53	86.12
6/16/2022 12:44	49.17	6/16/2022 11:26	81.66	6/15/2022 9:49	16.17	6/15/2022 8:58	7.09	6/15/2022 13:54	85.93
6/16/2022 12:45	49.20	6/16/2022 11:27	81.60	6/15/2022 9:50	16.19	6/15/2022 8:59	7.07	6/15/2022 13:55	85.76
6/16/2022 12:46	49.16	6/16/2022 11:28	81.49	6/15/2022 9:51	16.17	6/15/2022 9:00	7.08	6/15/2022 13:56	85.57
6/16/2022 12:47	49.17	6/16/2022 11:29	81.42	6/15/2022 9:52	16.13	6/15/2022 9:01	7.07	6/15/2022 13:57	85.39
6/16/2022 12:48	49.21	6/16/2022 11:30	81.38	6/15/2022 9:53	16.12	6/15/2022 9:02	7.03	6/15/2022 13:58	85.25
6/16/2022 12:49	49.18	6/16/2022 11:31	82.21	6/15/2022 9:54	16.14	6/15/2022 9:03	6.97	6/15/2022 13:59	85.09
6/16/2022 12:50	49.14	6/16/2022 11:32	81.99	6/15/2022 9:55	16.18	6/15/2022 9:04	6.98	6/15/2022 14:00	84.92
6/16/2022 12:51	49.17	6/16/2022 11:33	81.81	6/15/2022 9:56	16.21	6/15/2022 9:05	6.99	6/15/2022 14:01	84.82
6/16/2022 12:52	49.15	6/16/2022 11:34	81.66	6/15/2022 9:57	16.15	6/15/2022 9:06	7.01	6/15/2022 14:02	84.61
6/16/2022 12:53	49.17	6/16/2022 11:35	81.57	6/15/2022 9:58	16.13	6/15/2022 9:07	6.95	6/15/2022 14:03	84.47
6/16/2022 12:54	49.18	6/16/2022 11:36	81.45	6/15/2022 9:59	16.14	6/15/2022 9:08	6.92	6/15/2022 14:04	84.35
6/16/2022 12:55	49.14	6/16/2022 11:37	81.34	6/15/2022 10:00	16.14	6/15/2022 9:09	6.89	6/15/2022 14:05	84.19
6/16/2022 12:56	49.18	6/16/2022 11:38	81.32	6/15/2022 10:01	16.14	6/15/2022 9:10	6.91	6/15/2022 14:06	84.03
6/16/2022 12:57	49.15	6/16/2022 11:39	81.25	6/15/2022 10:02	16.11	6/15/2022 9:11	6.94	6/15/2022 14:07	83.91
6/16/2022 12:58	49.16	6/16/2022 11:40	81.17	6/15/2022 10:03	16.10	6/15/2022 9:12	6.86	6/15/2022 14:08	83.72
6/16/2022 12:59	49.17	6/16/2022 11:41	81.17	6/15/2022 10:04	16.10	6/15/2022 9:13	6.86	6/15/2022 14:09	83.55
6/16/2022 13:00	49.14	6/16/2022 11:42	81.12	6/15/2022 10:05	16.14	6/15/2022 9:14	6.82	6/15/2022 14:10	83.48
6/16/2022 13:01	49.14	6/16/2022 11:43	81.07	6/15/2022 10:06	16.11	6/15/2022 9:15	6.84	6/15/2022 14:11	83.32
6/16/2022 13:02	49.14	6/16/2022 11:44	81.08	6/15/2022 10:07	16.10	6/15/2022 9:16	6.84	6/15/2022 14:12	83.19
6/16/2022 13:03	49.12	6/16/2022 11:45	80.98	6/15/2022 10:08	16.15	6/15/2022 9:17	6.80	6/15/2022 14:13	83.05
6/16/2022 13:04	49.12	6/16/2022 11:46	80.98	6/15/2022 10:09	16.09	6/15/2022 9:18	6.76	6/15/2022 14:14	82.91
6/16/2022 13:05	49.12	6/16/2022 11:47	81.01	6/15/2022 10:10	16.14	6/15/2022 9:19	6.78	6/15/2022 14:15	82.72
6/16/2022 13:06	49.12	6/16/2022 11:48	80.95	6/15/2022 10:11	16.12	6/15/2022 9:20	6.76	6/15/2022 14:16	82.65
6/16/2022 13:07	49.11	6/16/2022 11:49	82.61	6/15/2022 10:12	16.08	6/15/2022 9:21	6.83	6/15/2022 14:17	82.50
6/16/2022 13:08	49.17	6/16/2022 11:50	83.64	6/15/2022 10:13	16.07	6/15/2022 9:22	6.73	6/15/2022 14:18	82.37
6/16/2022 13:09	49.11	6/16/2022 11:51	83.08	6/15/2022 10:14	16.14	6/15/2022 9:23	6.72	6/15/2022 14:19	82.24
6/16/2022 13:10	49.11	6/16/2022 11:52	82.68	6/15/2022 10:15	16.14	6/15/2022 9:24	6.74	6/15/2022 14:20	82.12
6/16/2022 13:11	49.10	6/16/2022 11:53	82.40	6/15/2022 10:16	16.11	6/15/2022 9:25	6.72	6/15/2022 14:21	81.99
6/16/2022 13:12	49.14	6/16/2022 11:54	82.15	6/15/2022 10:17	16.11	6/15/2022 9:26	6.71	6/15/2022 14:22	81.87
6/16/2022 13:13	49.12	6/16/2022 11:55	82.04	6/15/2022 10:18	16.12	6/15/2022 9:27	6.65	6/15/2022 14:23	81.75
6/16/2022 13:14	49.09	6/16/2022 11:56	81.83	6/15/2022 10:19	16.11	6/15/2022 9:28	6.63	6/15/2022 14:24	81.63
6/16/2022 13:15	49.08	6/16/2022 11:57	81.71	6/15/2022 10:20	16.09	6/15/2022 9:29	6.68	6/15/2022 14:25	81.52
6/16/2022 13:16	49.12	6/16/2022 11:58	81.62	6/15/2022 10:21	16.04	6/15/2022 9:30	6.64	6/15/2022 14:26	81.41

6/16/2022 13:17	49.12	6/16/2022 11:59	81.50	6/15/2022 10:22	16.07	6/15/2022 9:31	6.69	6/15/2022 14:27	81.26
6/16/2022 13:18	49.13	6/16/2022 12:00	81.39	6/15/2022 10:23	16.04	6/15/2022 9:32	6.61	6/15/2022 14:28	81.22
6/16/2022 13:19	49.14	6/16/2022 12:01	81.33	6/15/2022 10:24	16.12	6/15/2022 9:33	6.62	6/15/2022 14:29	81.08
6/16/2022 13:20	49.10	6/16/2022 12:02	81.29	6/15/2022 10:25	16.13	6/15/2022 9:34	6.61	6/15/2022 14:30	80.97
6/16/2022 13:21	49.15	6/16/2022 12:03	81.23	6/15/2022 10:26	16.06	6/15/2022 9:35	6.64	6/15/2022 14:31	80.90
6/16/2022 13:22	49.09	6/16/2022 12:04	81.16	6/15/2022 10:27	16.08	6/15/2022 9:36	6.63	6/15/2022 14:32	80.72
6/16/2022 13:23	49.06	6/16/2022 12:05	81.17	6/15/2022 10:28	16.06	6/15/2022 9:37	6.51	6/15/2022 14:33	80.67
6/16/2022 13:24	49.08	6/16/2022 12:06	81.11	6/15/2022 10:29	16.09	6/15/2022 9:38	6.56	6/15/2022 14:34	80.57
6/16/2022 13:25	49.10	6/16/2022 12:07	81.04	6/15/2022 10:30	16.04	6/15/2022 9:39	6.57	6/15/2022 14:35	80.47
6/16/2022 13:26	49.10	6/16/2022 12:08	81.05	6/15/2022 10:31	16.08	6/15/2022 9:40	6.56	6/15/2022 14:36	80.41
6/16/2022 13:27	49.10	6/16/2022 12:09	81.01	6/15/2022 10:32	16.09	6/15/2022 9:41	6.59	6/15/2022 14:37	80.30
6/16/2022 13:28	49.07	6/16/2022 12:10	81.02	6/15/2022 10:33	16.08	6/15/2022 9:42	6.51	6/15/2022 14:38	80.18
6/16/2022 13:29	49.11	6/16/2022 12:11	80.95	6/15/2022 10:34	16.09	6/15/2022 9:43	6.53	6/15/2022 14:39	80.11
6/16/2022 13:30	49.05	6/16/2022 12:12	80.91	6/15/2022 10:35	16.06	6/15/2022 9:44	6.50	6/15/2022 14:40	80.00
6/16/2022 13:31	49.09	6/16/2022 12:13	80.87	6/15/2022 10:36	16.06	6/15/2022 9:45	6.49	6/15/2022 14:41	79.87
6/16/2022 13:32	49.07	6/16/2022 12:14	80.91	6/15/2022 10:37	16.06	6/15/2022 9:46	6.54	6/15/2022 14:42	79.80
6/16/2022 13:33	49.08	6/16/2022 12:15	80.85	6/15/2022 10:38	16.04	6/15/2022 9:47	6.44	6/15/2022 14:43	79.68
6/16/2022 13:34	49.06	6/16/2022 12:16	80.85	6/15/2022 10:39	16.08	6/15/2022 9:48	6.51	6/15/2022 14:44	79.55
6/16/2022 13:35	49.09	6/16/2022 12:17	80.86	6/15/2022 10:40	16.00	6/15/2022 9:49	6.43	6/15/2022 14:45	79.49
6/16/2022 13:36	49.07	6/16/2022 12:18	80.82	6/15/2022 10:41	16.05	6/15/2022 9:50	6.42	6/15/2022 14:46	79.37
6/16/2022 13:37	49.07	6/16/2022 12:19	80.85	6/15/2022 10:42	16.04	6/15/2022 9:51	6.50	6/15/2022 14:47	79.29
6/16/2022 13:38	49.06	6/16/2022 12:20	80.84	6/15/2022 10:43	16.08	6/15/2022 9:52	6.41	6/15/2022 14:48	79.19
6/16/2022 13:39	49.07	6/16/2022 12:21	80.80	6/15/2022 10:44	16.11	6/15/2022 9:53	6.62	6/15/2022 14:49	79.10
6/16/2022 13:40	49.05	6/16/2022 12:22	80.75	6/15/2022 10:45	16.05	6/15/2022 9:54	6.95	6/15/2022 14:50	78.98
6/16/2022 13:41	49.07	6/16/2022 12:23	80.80	6/15/2022 10:46	16.06	6/15/2022 9:55	6.63	6/15/2022 14:51	78.90
6/16/2022 13:42	49.07	6/16/2022 12:24	80.77	6/15/2022 10:47	16.08	6/15/2022 9:56	6.59	6/15/2022 14:52	78.85
6/16/2022 13:43	49.09	6/16/2022 12:25	80.78	6/15/2022 10:48	16.06	6/15/2022 9:57	6.52	6/15/2022 14:53	78.79
6/16/2022 13:44	49.06	6/16/2022 12:26	80.71	6/15/2022 10:49	16.04	6/15/2022 9:58	6.46	6/15/2022 14:54	78.70
6/16/2022 13:45	49.04	6/16/2022 12:27	80.75	6/15/2022 10:50	16.07	6/15/2022 9:59	6.45	6/15/2022 14:55	78.63
6/16/2022 13:46	49.06	6/16/2022 12:28	80.77	6/15/2022 10:51	16.02	6/15/2022 10:00	6.43	6/15/2022 14:56	78.53
6/16/2022 13:47	49.05	6/16/2022 12:29	80.73	6/15/2022 10:52	16.02	6/15/2022 10:01	6.39	6/15/2022 14:57	78.46
6/16/2022 13:48	49.06	6/16/2022 12:30	80.75	6/15/2022 10:53	16.04	6/15/2022 10:02	6.38	6/15/2022 14:58	78.41
6/16/2022 13:49	49.04	6/16/2022 12:31	80.75	6/15/2022 10:54	16.04	6/15/2022 10:03	6.44	6/15/2022 14:59	78.33
6/16/2022 13:50	49.01	6/16/2022 12:32	80.74	6/15/2022 10:55	16.07	6/15/2022 10:04	7.03	6/15/2022 15:00	78.26
6/16/2022 13:51	49.03	6/16/2022 12:33	80.75	6/15/2022 10:56	15.98	6/15/2022 10:05	7.01	6/15/2022 15:01	78.19
6/16/2022 13:52	49.07	6/16/2022 12:34	80.71	6/15/2022 10:57	16.01	6/15/2022 10:06	6.65	6/15/2022 15:02	78.11
6/16/2022 13:53	49.00	6/16/2022 12:35	80.71	6/15/2022 10:58	16.06	6/15/2022 10:07	6.84	6/15/2022 15:03	78.01
6/16/2022 13:54	49.02	6/16/2022 12:36	80.71	6/15/2022 10:59	16.05	6/15/2022 10:08	6.91	6/15/2022 15:04	77.96
6/16/2022 13:55	49.00	6/16/2022 12:37	80.68	6/15/2022 11:00	16.01	6/15/2022 10:09	6.78	6/15/2022 15:05	77.87
6/16/2022 13:56	49.04	6/16/2022 12:38	80.70	6/15/2022 11:01	16.06	6/15/2022 10:10	6.68	6/15/2022 15:06	77.78
6/16/2022 13:57	49.02	6/16/2022 12:39	80.69	6/15/2022 11:02	16.02	6/15/2022 10:11	6.55	6/15/2022 15:07	77.70
6/16/2022 13:58	49.04	6/16/2022 12:40	80.72	6/15/2022 11:03	16.03	6/15/2022 10:12	6.53	6/15/2022 15:08	77.60
6/16/2022 13:59	49.01	6/16/2022 12:41	80.71	6/15/2022 11:04	16.04	6/15/2022 10:13	6.54	6/15/2022 15:09	77.54
6/16/2022 14:00	49.01	6/16/2022 12:42	80.70	6/15/2022 11:05	16.04	6/15/2022 10:14	6.48	6/15/2022 15:10	77.47
6/16/2022 14:01	48.99	6/16/2022 12:43	80.70	6/15/2022 11:06	16.05	6/15/2022 10:15	6.44	6/15/2022 15:11	77.39
6/16/2022 14:02	48.99	6/16/2022 12:44	80.71	6/15/2022 11:07	16.06	6/15/2022 10:16	6.46	6/15/2022 15:12	77.31
6/16/2022 14:03	48.99	6/16/2022 12:45	80.71	6/15/2022 11:08	16.00	6/15/2022 10:17	6.56	6/15/2022 15:13	77.25
6/16/2022 14:04	48.99	6/16/2022 12:46	80.68	6/15/2022 11:09	16.05	6/15/2022 10:18	6.44	6/15/2022 15:14	77.15
6/16/2022 14:05	49.03	6/16/2022 12:47	80.67	6/15/2022 11:10	16.02	6/15/2022 10:19	6.42	6/15/2022 15:15	77.07
6/16/2022 14:06	49.03	6/16/2022 12:48	80.69	6/15/2022 11:11	16.04	6/15/2022 10:20	6.42	6/15/2022 15:16	76.98
6/16/2022 14:07	49.00	6/16/2022 12:49	80.72	6/15/2022 11:12	16.04	6/15/2022 10:21	6.45	6/15/2022 15:17	76.92
6/16/2022 14:08	49.04	6/16/2022 12:50	80.68	6/15/2022 11:13	16.03	6/15/2022 10:22	6.57	6/15/2022 15:18	76.89
6/16/2022 14:09	49.03	6/16/2022 12:51	80.68	6/15/2022 11:14	16.01	6/15/2022 10:23	6.64	6/15/2022 15:19	76.80
6/16/2022 14:10	49.01	6/16/2022 12:52	80.67	6/15/2022 11:15	16.04	6/15/2022 10:24	6.44	6/15/2022 15:20	76.75
6/16/2022 14:11	49.01	6/16/2022 12:53	80.69	6/15/2022 11:16	15.99	6/15/2022 10:25	6.36	6/15/2022 15:21	76.67
6/16/2022 14:12	49.04	6/16/2022 12:54	80.69	6/15/2022 11:17	15.98	6/15/2022 10:26	6.39	6/15/2022 15:22	76.57
6/16/2022 14:13	49.01	6/16/2022 12:55	80.67	6/15/2022 11:18	16.02	6/15/2022 10:27	6.41	6/15/2022 15:23	76.53
6/16/2022 14:14	49.02	6/16/2022 12:56	80.65	6/15/2022 11:19	16.02	6/15/2022 10:28	6.40	6/15/2022 15:24	76.48
6/16/2022 14:15	48.99	6/16/2022 12:57	80.66	6/15/2022 11:20	16.05	6/15/2022 10:29	6.32	6/15/2022 15:25	76.41
6/16/2022 14:16	48.99	6/16/2022 12:58	80.67	6/15/2022 11:21	16.02	6/15/2022 10:30	6.38	6/15/2022 15:26	76.31
6/16/2022 14:17	49.00	6/16/2022 12:59	80.65	6/15/2022 11:22	16.03	6/15/2022 10:31	6.38	6/15/2022 15:27	76.23
6/16/2022 14:18	49.02	6/16/2022 13:00	80.68	6/15/2022 11:23	15.99	6/15/2022 10:32	6.29	6/15/2022 15:28	76.21
6/16/2022 14:19	49.03	6/16/2022 13:01	80.64	6/15/2022 11:24	16.03	6/15/2022 10:33	6.25	6/15/2022 15:29	76.13
6/16/2022 14:20	49.02	6/16/2022 13:02	80.67	6/15/2022 11:25	16.01	6/15/2022 10:34	6.28	6/15/2022 15:30	76.05
6/16/2022 14:21	48.98	6/16/2022 13:03	80.67	6/15/2022 11:26	16.07	6/15/2022 10:35	6.29	6/15/2022 15:31	75.99
6/16/2022 14:22	48.97	6/16/2022 13:04	80.62	6/15/2022 11:27	15.98	6/15/2022 10:36	6.22	6/15/2022 15:32	75.86
6/16/2022 14:23	48.99	6/16/2022 13:05	80.65	6/15/2022 11:28	16.05	6/15/2022 10:37	6.24	6/15/2022 15:33	75.83
6/16/2022 14:24	48.99	6/16/2022 13:06	80.65	6/15/2022 11:29	16.01	6/15/2022 10:38	6.21	6/15/2022 15:34	75.78
6/16/2022 14:25	49.00	6/16/2022 13:07	80.67	6/15/2022 11:30	16.00	6/15/2022 10:39	6.19	6/15/2022 15:35	75.72
6/16/2022 14:26	49.01	6/16/2022 13:08	80.63	6/15/2022 11:31	16.02	6/15/2022 10:40	6.28	6/15/2022 15:36	75.63
6/16/2022 14:27	48.99	6/16/2022 13:09	80.66	6/15/2022 11:32	16.05	6/15/2022 10:41	6.26	6/15/2022 15:37	75.54
6/16/2022 14:28	49.00	6/16/2022 13:10	80.70	6/15/2022 11:33	16.05	6/15/2022 10:42	6.18	6/15/2022 15:38	75.51
6/16/2022 14:29	49.00	6/16/2022 13:11	80.64	6/15/2022 11:34	16.00	6/15/2022 10:43	6.19	6/15/2022 15:39	75.43
6/16/2022 14:30	48.97	6/16/2022 13:12	80.62	6/15/2022 11:35	16.00	6/15/2022 10:44	6.21	6/15/2022 15:40	75.40
6/16/2022 14:31	48.95	6/16/2022 13:13	80.64	6/15/2022 11:36	16.00	6/15/2022 10:45	6.15	6/15/2022 15:41	75.30
6/16/2022 14:32	48.99	6/16/2022 13:14	80.65	6/15/2022 11:37	16.02	6/15/2022 10:46	6.26	6/15/2022 15:42	75.23
6/16/2022 14:33	48.98	6/16/2022 13:15	80.65	6/15/2022 11:38	16.02	6/15/2022 10:47	6.10	6/15/2022 15:43	75.18
6/16/2022 14:34	48.97	6/16/2022 13:16	80.65	6/15/2022 11:39	16.07	6/15/2022 10:48	6.14	6/15/2022 15:44	75.11
6/16/2022 14:35	48.97	6/16/2022 13:17	80.61	6/15/2022 11:40	16.04	6/15/2022 10:49	6.10	6/15/2022 15:45	75.03
6/16/2022 14:36	48.98	6/16/2022 13:18	80.64	6/15/2022 11:41	16.00	6/15/2022 10:50	6.15	6/15/2022 15:46	74.93
6/16/2022 14:37	48.97	6/16/2022 13:19	80.60	6/15/2022 11:42	16.01	6/15/2022 10:51	6.10	6/15/2022 15:47	74.93
6/16/2022 14:38	49.00	6/16/2022 13:20	80.66	6/15/2022 11:43	15.99	6/15/2022 10:52	6.33	6/15/2022 15:48	74.86
6/16/2022 14:39	48.93	6/16/2022 13:21	80.61	6/15/2022 11:44	16.01	6/15/2022 10:53	6.37	6/15/2022 15:49	74.77
6/16/2022 14:40	48.97	6/16/2022 13:22	80.64	6/15/2022 11:45	16.01	6/15/2022 10:54	6.27	6/15/2022 15:50	74.75
6/16/2022 14:41	48.98	6/16/2022 13:23	80.64	6/15/2022 11:46	15.99	6/15/2022 10:55	6.19	6/15/2022 15:51	74.66
6/16/2022 14:42	49.00	6/16/2022 13:24	80.63	6/15/2022 11:47	15.96	6/15/2022 10:56	6.10	6/15/2022 15:52	74.61
6/16/2022 14:43	48.95	6/16/2022 13:25	80.61	6/15/2022 11:48	15.98	6/15/2022 10:57	6.13	6/15/2022 15:53	74.54
6/16/2022 14:44	48.99	6/16/2022 13:26	80.60	6/15/2022 11:49	16.02	6/15/2022 10:58	6.14	6/15/2022 15:54	74.49

6/16/2022 14:45	48.98	6/16/2022 13:27	80.62	6/15/2022 11:50	15.99	6/15/2022 10:59	6.12	6/15/2022 15:55	74.42
6/16/2022 14:46	48.97	6/16/2022 13:28	80.63	6/15/2022 11:51	15.99	6/15/2022 11:00	6.07	6/15/2022 15:56	74.38
6/16/2022 14:47	49.00	6/16/2022 13:29	80.64	6/15/2022 11:52	15.99	6/15/2022 11:01	6.06	6/15/2022 15:57	74.28
6/16/2022 14:48	48.91	6/16/2022 13:30	80.63	6/15/2022 11:53	15.99	6/15/2022 11:02	6.04	6/15/2022 15:58	74.29
6/16/2022 14:49	48.96	6/16/2022 13:31	80.63	6/15/2022 11:54	15.99	6/15/2022 11:03	6.08	6/15/2022 15:59	74.22
6/16/2022 14:50	48.94	6/16/2022 13:32	80.63	6/15/2022 11:55	16.05	6/15/2022 11:04	6.10	6/15/2022 16:00	74.10
6/16/2022 14:51	48.96	6/16/2022 13:33	80.62	6/15/2022 11:56	16.00	6/15/2022 11:05	6.04	6/15/2022 16:01	74.08
6/16/2022 14:52	48.95	6/16/2022 13:34	80.62	6/15/2022 11:57	16.02	6/15/2022 11:06	6.07	6/15/2022 16:02	74.02
6/16/2022 14:53	48.96	6/16/2022 13:35	80.61	6/15/2022 11:58	15.96	6/15/2022 11:07	6.02	6/15/2022 16:03	74.00
6/16/2022 14:54	48.94	6/16/2022 13:36	80.61	6/15/2022 11:59	15.96	6/15/2022 11:08	6.02	6/15/2022 16:04	73.93
6/16/2022 14:55	48.91	6/16/2022 13:37	80.61	6/15/2022 12:00	15.97	6/15/2022 11:09	6.03	6/15/2022 16:05	73.86
6/16/2022 14:56	48.94	6/16/2022 13:38	80.64	6/15/2022 12:01	15.99	6/15/2022 11:10	5.99	6/15/2022 16:06	73.81
6/16/2022 14:57	48.93	6/16/2022 13:39	80.61	6/15/2022 12:02	16.01	6/15/2022 11:11	6.01	6/15/2022 16:07	73.77
6/16/2022 14:58	48.95	6/16/2022 13:40	80.59	6/15/2022 12:03	15.98	6/15/2022 11:12	6.00	6/15/2022 16:08	73.71
6/16/2022 14:59	48.97	6/16/2022 13:41	80.57	6/15/2022 12:04	16.01	6/15/2022 11:13	5.99	6/15/2022 16:09	73.62
6/16/2022 15:00	48.91	6/16/2022 13:42	80.60	6/15/2022 12:05	15.99	6/15/2022 11:14	6.00	6/15/2022 16:10	73.60
6/16/2022 15:01	48.92	6/16/2022 13:43	80.61	6/15/2022 12:06	15.90	6/15/2022 11:15	5.93	6/15/2022 16:11	73.56
6/16/2022 15:02	48.93	6/16/2022 13:44	80.61	6/15/2022 12:07	15.96	6/15/2022 11:16	5.97	6/15/2022 16:12	73.50
6/16/2022 15:03	48.88	6/16/2022 13:45	80.60	6/15/2022 12:08	15.96	6/15/2022 11:17	5.92	6/15/2022 16:13	73.45
6/16/2022 15:04	48.90	6/16/2022 13:46	80.59	6/15/2022 12:09	15.98	6/15/2022 11:18	5.92	6/15/2022 16:14	73.43
6/16/2022 15:05	48.91	6/16/2022 13:47	80.61	6/15/2022 12:10	15.99	6/15/2022 11:19	5.97	6/15/2022 16:15	73.36
6/16/2022 15:06	48.93	6/16/2022 13:48	80.62	6/15/2022 12:11	16.01	6/15/2022 11:20	6.12	6/15/2022 16:16	73.33
6/16/2022 15:07	48.96	6/16/2022 13:49	80.61	6/15/2022 12:12	15.97	6/15/2022 11:21	5.98	6/15/2022 16:17	73.29
6/16/2022 15:08	48.90	6/16/2022 13:50	80.62	6/15/2022 12:13	15.95	6/15/2022 11:22	5.95	6/15/2022 16:18	73.21
6/16/2022 15:09	48.94	6/16/2022 13:51	80.62	6/15/2022 12:14	15.97	6/15/2022 11:23	5.93	6/15/2022 16:19	73.17
6/16/2022 15:10	48.91	6/16/2022 13:52	80.60	6/15/2022 12:15	15.99	6/15/2022 11:24	5.94	6/15/2022 16:20	73.11
6/16/2022 15:11	48.92	6/16/2022 13:53	80.58	6/15/2022 12:16	15.99	6/15/2022 11:25	5.94	6/15/2022 16:21	73.08
6/16/2022 15:12	48.92	6/16/2022 13:54	80.59	6/15/2022 12:17	15.96	6/15/2022 11:26	5.94	6/15/2022 16:22	73.07
6/16/2022 15:13	48.90	6/16/2022 13:55	80.62	6/15/2022 12:18	15.96	6/15/2022 11:27	5.95	6/15/2022 16:23	72.98
6/16/2022 15:14	48.95	6/16/2022 13:56	80.61	6/15/2022 12:19	15.98	6/15/2022 11:28	5.89	6/15/2022 16:24	72.96
6/16/2022 15:15	48.92	6/16/2022 13:57	80.60	6/15/2022 12:20	15.95	6/15/2022 11:29	5.85	6/15/2022 16:25	72.92
6/16/2022 15:16	48.87	6/16/2022 13:58	80.59	6/15/2022 12:21	15.95	6/15/2022 11:30	5.84	6/15/2022 16:26	72.85
6/16/2022 15:17	48.95	6/16/2022 13:59	80.62	6/15/2022 12:22	15.97	6/15/2022 11:31	5.88	6/15/2022 16:27	72.81
6/16/2022 15:18	48.94	6/16/2022 14:00	80.58	6/15/2022 12:23	15.90	6/15/2022 11:32	5.87	6/15/2022 16:28	72.77
6/16/2022 15:19	48.94	6/16/2022 14:01	80.58	6/15/2022 12:24	16.00	6/15/2022 11:33	5.80	6/15/2022 16:29	72.74
6/16/2022 15:20	48.93	6/16/2022 14:02	80.59	6/15/2022 12:25	16.00	6/15/2022 11:34	5.83	6/15/2022 16:30	72.73
6/16/2022 15:21	48.90	6/16/2022 14:03	80.59	6/15/2022 12:26	15.98	6/15/2022 11:35	5.85	6/15/2022 16:31	72.66
6/16/2022 15:22	48.94	6/16/2022 14:04	80.55	6/15/2022 12:27	15.99	6/15/2022 11:36	6.11	6/15/2022 16:32	72.64
6/16/2022 15:23	48.96	6/16/2022 14:05	80.60	6/15/2022 12:28	15.99	6/15/2022 11:37	5.97	6/15/2022 16:33	72.60
6/16/2022 15:24	48.90	6/16/2022 14:06	80.59	6/15/2022 12:29	15.97	6/15/2022 11:38	5.92	6/15/2022 16:34	72.52
6/16/2022 15:25	48.90	6/16/2022 14:07	80.55	6/15/2022 12:30	16.01	6/15/2022 11:39	5.91	6/15/2022 16:35	72.47
6/16/2022 15:26	48.93	6/16/2022 14:08	80.57	6/15/2022 12:31	15.97	6/15/2022 11:40	5.88	6/15/2022 16:36	72.42
6/16/2022 15:27	48.95	6/16/2022 14:09	80.57	6/15/2022 12:32	15.95	6/15/2022 11:41	5.87	6/15/2022 16:37	72.41
6/16/2022 15:28	48.93	6/16/2022 14:10	80.59	6/15/2022 12:33	15.96	6/15/2022 11:42	5.80	6/15/2022 16:38	72.37
6/16/2022 15:29	48.92	6/16/2022 14:11	80.58	6/15/2022 12:34	15.96	6/15/2022 11:43	5.84	6/15/2022 16:39	72.33
6/16/2022 15:30	48.90	6/16/2022 14:12	80.60	6/15/2022 12:35	15.98	6/15/2022 11:44	5.82	6/15/2022 16:40	72.24
6/16/2022 15:31	48.91	6/16/2022 14:13	80.58	6/15/2022 12:36	15.96	6/15/2022 11:45	5.78	6/15/2022 16:41	72.24
6/16/2022 15:32	48.87	6/16/2022 14:14	80.57	6/15/2022 12:37	19.85	6/15/2022 11:46	5.85	6/15/2022 16:42	72.18
6/16/2022 15:33	48.91	6/16/2022 14:15	80.60	6/15/2022 12:38	23.85	6/15/2022 11:47	5.83	6/15/2022 16:43	72.14
6/16/2022 15:34	48.91	6/16/2022 14:16	80.62	6/15/2022 12:39	25.52	6/15/2022 11:48	5.75	6/15/2022 16:44	72.11
6/16/2022 15:35	48.92	6/16/2022 14:17	80.55	6/15/2022 12:40	22.90	6/15/2022 11:49	5.79	6/15/2022 16:45	72.09
6/16/2022 15:36	48.90	6/16/2022 14:18	80.55	6/15/2022 12:41	21.26	6/15/2022 11:50	5.76	6/15/2022 16:46	72.06
6/16/2022 15:37	48.90	6/16/2022 14:19	80.61	6/15/2022 12:42	20.25	6/15/2022 11:51	5.75	6/15/2022 16:47	72.03
6/16/2022 15:38	48.89	6/16/2022 14:20	80.55	6/15/2022 12:43	19.62	6/15/2022 11:52	5.77	6/15/2022 16:48	71.96
6/16/2022 15:39	48.94	6/16/2022 14:21	80.57	6/15/2022 12:44	19.16	6/15/2022 11:53	5.80	6/15/2022 16:49	71.95
6/16/2022 15:40	48.89	6/16/2022 14:22	80.56	6/15/2022 12:45	18.85	6/15/2022 11:54	5.71	6/15/2022 16:50	71.89
6/16/2022 15:41	48.90	6/16/2022 14:23	80.57	6/15/2022 12:46	18.62	6/15/2022 11:55	5.71	6/15/2022 16:51	71.87
6/16/2022 15:42	48.92	6/16/2022 14:24	80.58	6/15/2022 12:47	18.43	6/15/2022 11:56	5.71	6/15/2022 16:52	71.81
6/16/2022 15:43	48.87	6/16/2022 14:25	80.58	6/15/2022 12:48	18.29	6/15/2022 11:57	5.71	6/15/2022 16:53	71.77
6/16/2022 15:44	48.88	6/16/2022 14:26	80.58	6/15/2022 12:49	18.12	6/15/2022 11:58	5.72	6/15/2022 16:54	71.77
6/16/2022 15:45	48.86	6/16/2022 14:27	80.53	6/15/2022 12:50	18.01	6/15/2022 11:59	5.74	6/15/2022 16:55	71.66
6/16/2022 15:46	48.91	6/16/2022 14:28	80.54	6/15/2022 12:51	17.95	6/15/2022 12:00	5.66	6/15/2022 16:56	71.69
6/16/2022 15:47	48.87	6/16/2022 14:29	80.58	6/15/2022 12:52	17.85	6/15/2022 12:01	5.68	6/15/2022 16:57	71.66
6/16/2022 15:48	48.90	6/16/2022 14:30	80.54	6/15/2022 12:53	17.73	6/15/2022 12:02	5.67	6/15/2022 16:58	71.64
6/16/2022 15:49	48.89	6/16/2022 14:31	80.60	6/15/2022 12:54	17.65	6/15/2022 12:03	5.67	6/15/2022 16:59	71.56
6/16/2022 15:50	48.89	6/16/2022 14:32	80.57	6/15/2022 12:55	17.61	6/15/2022 12:04	5.67	6/15/2022 17:00	71.51
6/16/2022 15:51	48.88	6/16/2022 14:33	80.58	6/15/2022 12:56	17.56	6/15/2022 12:05	5.70	6/15/2022 17:01	71.49
6/16/2022 15:52	48.84	6/16/2022 14:34	80.54	6/15/2022 12:57	17.52	6/15/2022 12:06	5.68	6/15/2022 17:02	71.48
6/16/2022 15:53	48.88	6/16/2022 14:35	80.58	6/15/2022 12:58	17.43	6/15/2022 12:07	5.67	6/15/2022 17:03	71.41
6/16/2022 15:54	48.89	6/16/2022 14:36	80.58	6/15/2022 12:59	17.36	6/15/2022 12:08	5.65	6/15/2022 17:04	71.39
6/16/2022 15:55	48.88	6/16/2022 14:37	80.54	6/15/2022 13:00	17.36	6/15/2022 12:09	5.61	6/15/2022 17:05	71.36
6/16/2022 15:56	48.86	6/16/2022 14:38	80.56	6/15/2022 13:01	17.32	6/15/2022 12:10	5.68	6/15/2022 17:06	71.36
6/16/2022 15:57	48.87	6/16/2022 14:39	80.56	6/15/2022 13:02	17.29	6/15/2022 12:11	5.61	6/15/2022 17:07	71.27
6/16/2022 15:58	48.90	6/16/2022 14:40	80.58	6/15/2022 13:03	17.25	6/15/2022 12:12	5.63	6/15/2022 17:08	71.28
6/16/2022 15:59	48.88	6/16/2022 14:41	80.56	6/15/2022 13:04	17.19	6/15/2022 12:13	5.60	6/15/2022 17:09	71.23
6/16/2022 16:00	48.85	6/16/2022 14:42	80.55	6/15/2022 13:05	17.19	6/15/2022 12:14	5.60	6/15/2022 17:10	71.20
6/16/2022 16:01	48.92	6/16/2022 14:43	80.54	6/15/2022 13:06	17.18	6/15/2022 12:15	5.63	6/15/2022 17:11	71.11
6/16/2022 16:02	48.89	6/16/2022 14:44	80.55	6/15/2022 13:07	17.16	6/15/2022 12:16	5.64	6/15/2022 17:12	71.12
6/16/2022 16:03	48.90	6/16/2022 14:45	80.56	6/15/2022 13:08	17.12	6/15/2022 12:17	5.56	6/15/2022 17:13	71.06
6/16/2022 16:04	48.85	6/16/2022 14:46	80.56	6/15/2022 13:09	17.10	6/15/2022 12:18	5.58	6/15/2022 17:14	71.05
6/16/2022 16:05	48.85	6/16/2022 14:47	80.54	6/15/2022 13:10	17.09	6/15/2022 12:19	5.61	6/15/2022 17:15	71.04
6/16/2022 16:06	48.87	6/16/2022 14:48	80.56	6/15/2022 13:11	17.05	6/15/2022 12:20	5.57	6/15/2022 17:16	70.99
6/16/2022 16:07	48.86	6/16/2022 14:49	80.57	6/15/2022 13:12	16.98	6/15/2022 12:21	5.56	6/15/2022 17:17	70.94
6/16/2022 16:08	48.85	6/16/2022 14:50	80.55	6/15/2022 13:13	16.99	6/15/2022 12:22	5.63	6/15/2022 17:18	70.93
6/16/2022 16:09	48.89	6/16/2022 14:51	80.56	6/15/2022 13:14	16.96	6/15/2022 12:23	5.50	6/15/2022 17:19	70.89
6/16/2022 16:10	48.87	6/16/2022 14:52	80.58	6/15/2022 13:15	16.94	6/15/2022 12:24	5.51	6/15/2022 17:20	70.87
6/16/2022 16:11	48.87	6/16/2022 14:53	80.56	6/15/2022 13:16	16.93	6/15/2022 12:25	5.83	6/15/2022 17:21	70.80
6/16/2022 16:12	48.85	6/16/2022 14:54	80.55	6/15/2022 13:17	16.91	6/15/2022 12:26	5.77	6/15/2022 17:22	70.82

6/16/2022 16:13	48.86	6/16/2022 14:55	80.58	6/15/2022 13:18	16.93	6/15/2022 12:27	5.67	6/15/2022 17:23	70.78
6/16/2022 16:14	48.86	6/16/2022 14:56	80.55	6/15/2022 13:19	16.86	6/15/2022 12:28	5.71	6/15/2022 17:24	70.75
6/16/2022 16:15	48.85	6/16/2022 14:57	80.55	6/15/2022 13:20	16.91	6/15/2022 12:29	5.60	6/15/2022 17:25	70.72
6/16/2022 16:16	48.85	6/16/2022 14:58	80.57	6/15/2022 13:21	16.86	6/15/2022 12:30	5.60	6/15/2022 17:26	70.72
6/16/2022 16:17	48.84	6/16/2022 14:59	80.56	6/15/2022 13:22	16.80	6/15/2022 12:31	5.59	6/15/2022 17:27	70.61
6/16/2022 16:18	48.85	6/16/2022 15:00	80.55	6/15/2022 13:23	16.81	6/15/2022 12:32	5.59	6/15/2022 17:28	70.60
6/16/2022 16:19	48.86	6/16/2022 15:01	80.54	6/15/2022 13:24	16.83	6/15/2022 12:33	5.58	6/15/2022 17:29	70.58
6/16/2022 16:20	48.86	6/16/2022 15:02	80.56	6/15/2022 13:25	16.81	6/15/2022 12:34	5.52	6/15/2022 17:30	70.57
6/16/2022 16:21	48.81	6/16/2022 15:03	80.56	6/15/2022 13:26	16.82	6/15/2022 12:35	5.52	6/15/2022 17:31	70.52
6/16/2022 16:22	48.88	6/16/2022 15:04	80.60	6/15/2022 13:27	16.76	6/15/2022 12:36	5.54	6/15/2022 17:32	70.48
6/16/2022 16:23	48.83	6/16/2022 15:05	80.53	6/15/2022 13:28	16.79	6/15/2022 12:37	5.55	6/15/2022 17:33	70.50
6/16/2022 16:24	48.83	6/16/2022 15:06	80.54	6/15/2022 13:29	16.74	6/15/2022 12:38	5.47	6/15/2022 17:34	70.46
6/16/2022 16:25	48.83	6/16/2022 15:07	80.54	6/15/2022 13:30	16.79	6/15/2022 12:39	5.46	6/15/2022 17:35	70.40
6/16/2022 16:26	48.83	6/16/2022 15:08	80.52	6/15/2022 13:31	16.71	6/15/2022 12:40	5.51	6/15/2022 17:36	70.37
6/16/2022 16:27	48.87	6/16/2022 15:09	80.54	6/15/2022 13:32	16.67	6/15/2022 12:41	5.50	6/15/2022 17:37	70.36
6/16/2022 16:28	48.88	6/16/2022 15:10	80.55	6/15/2022 13:33	16.73	6/15/2022 12:42	5.47	6/15/2022 17:38	70.33
6/16/2022 16:29	48.87	6/16/2022 15:11	80.54	6/15/2022 13:34	16.68	6/15/2022 12:43	5.48	6/15/2022 17:39	70.31
6/16/2022 16:30	48.87	6/16/2022 15:12	80.53	6/15/2022 13:35	16.68	6/15/2022 12:44	5.45	6/15/2022 17:40	70.27
6/16/2022 16:31	48.82	6/16/2022 15:13	80.58	6/15/2022 13:36	16.65	6/15/2022 12:45	5.49	6/15/2022 17:41	70.26
6/16/2022 16:32	48.83	6/16/2022 15:14	80.53	6/15/2022 13:37	16.66	6/15/2022 12:46	5.49	6/15/2022 17:42	70.23
6/16/2022 16:33	48.84	6/16/2022 15:15	80.53	6/15/2022 13:38	16.65	6/15/2022 12:47	5.50	6/15/2022 17:43	72.76
6/16/2022 16:34	48.87	6/16/2022 15:16	80.55	6/15/2022 13:39	16.66	6/15/2022 12:48	5.44	6/15/2022 17:44	76.18
6/16/2022 16:35	48.84	6/16/2022 15:17	80.57	6/15/2022 13:40	16.65	6/15/2022 12:49	5.45	6/15/2022 17:45	76.02
6/16/2022 16:36	48.83	6/16/2022 15:18	80.59	6/15/2022 13:41	16.65	6/15/2022 12:50	5.41	6/15/2022 17:46	75.86
6/16/2022 16:37	48.80	6/16/2022 15:19	80.56	6/15/2022 13:42	16.61	6/15/2022 12:51	5.40	6/15/2022 17:47	75.73
6/16/2022 16:38	48.86	6/16/2022 15:20	80.53	6/15/2022 13:43	16.60	6/15/2022 12:52	5.47	6/15/2022 17:48	75.62
6/16/2022 16:39	48.84	6/16/2022 15:21	80.52	6/15/2022 13:44	16.61	6/15/2022 12:53	5.46	6/15/2022 17:49	75.54
6/16/2022 16:40	48.78	6/16/2022 15:22	80.51	6/15/2022 13:45	16.60	6/15/2022 12:54	5.49	6/15/2022 17:50	75.42
6/16/2022 16:41	48.82	6/16/2022 15:23	80.51	6/15/2022 13:46	16.61	6/15/2022 12:55	5.57	6/15/2022 17:51	75.34
6/16/2022 16:42	48.84	6/16/2022 15:24	80.55	6/15/2022 13:47	16.58	6/15/2022 12:56	5.51	6/15/2022 17:52	75.22
6/16/2022 16:43	48.84	6/16/2022 15:25	80.51	6/15/2022 13:48	16.60	6/15/2022 12:57	5.47	6/15/2022 17:53	75.15
6/16/2022 16:44	48.81	6/16/2022 15:26	80.53	6/15/2022 13:49	16.55	6/15/2022 12:58	5.46	6/15/2022 17:54	75.02
6/16/2022 16:45	48.80	6/16/2022 15:27	80.54	6/15/2022 13:50	16.56	6/15/2022 12:59	5.54	6/15/2022 17:55	74.93
6/16/2022 16:46	48.81	6/16/2022 15:28	80.50	6/15/2022 13:51	16.55	6/15/2022 13:00	5.49	6/15/2022 17:56	74.84
6/16/2022 16:47	48.85	6/16/2022 15:29	80.49	6/15/2022 13:52	16.54	6/15/2022 13:01	5.75	6/15/2022 17:57	74.77
6/16/2022 16:48	48.84	6/16/2022 15:30	80.53	6/15/2022 13:53	16.53	6/15/2022 13:02	5.56	6/15/2022 17:58	74.68
6/16/2022 16:49	48.83	6/16/2022 15:31	80.52	6/15/2022 13:54	16.57	6/15/2022 13:03	5.55	6/15/2022 17:59	74.59
6/16/2022 16:50	48.82	6/16/2022 15:32	80.54	6/15/2022 13:55	16.59	6/15/2022 13:04	5.55	6/15/2022 18:00	74.50
6/16/2022 16:51	48.81	6/16/2022 15:33	80.53	6/15/2022 13:56	16.49	6/15/2022 13:05	5.41	6/15/2022 18:01	74.46
6/16/2022 16:52	48.82	6/16/2022 15:34	80.52	6/15/2022 13:57	16.53	6/15/2022 13:06	5.42	6/15/2022 18:02	74.34
6/16/2022 16:53	48.80	6/16/2022 15:35	80.52	6/15/2022 13:58	16.51	6/15/2022 13:07	5.45	6/15/2022 18:03	74.26
6/16/2022 16:54	48.84	6/16/2022 15:36	80.53	6/15/2022 13:59	16.51	6/15/2022 13:08	5.44	6/15/2022 18:04	74.18
6/16/2022 16:55	48.82	6/16/2022 15:37	80.54	6/15/2022 14:00	16.43	6/15/2022 13:09	5.46	6/15/2022 18:05	74.13
6/16/2022 16:56	48.79	6/16/2022 15:38	80.50	6/15/2022 14:01	16.48	6/15/2022 13:10	5.38	6/15/2022 18:06	74.02
6/16/2022 16:57	48.79	6/16/2022 15:39	80.52	6/15/2022 14:02	16.48	6/15/2022 13:11	5.37	6/15/2022 18:07	73.94
6/16/2022 16:58	48.79	6/16/2022 15:40	80.53	6/15/2022 14:03	16.44	6/15/2022 13:12	5.38	6/15/2022 18:08	73.85
6/16/2022 16:59	48.78	6/16/2022 15:41	80.54	6/15/2022 14:04	16.45	6/15/2022 13:13	5.39	6/15/2022 18:09	73.82
6/16/2022 17:00	48.82	6/16/2022 15:42	80.57	6/15/2022 14:05	16.44	6/15/2022 13:14	5.40	6/15/2022 18:10	73.73
6/16/2022 17:01	48.79	6/16/2022 15:43	80.52	6/15/2022 14:06	16.45	6/15/2022 13:15	5.38	6/15/2022 18:11	73.65
6/16/2022 17:02	48.79	6/16/2022 15:44	80.54	6/15/2022 14:07	16.45	6/15/2022 13:16	5.35	6/15/2022 18:12	73.61
6/16/2022 17:03	48.80	6/16/2022 15:45	80.52	6/15/2022 14:08	16.43	6/15/2022 13:17	5.35	6/15/2022 18:13	73.53
6/16/2022 17:04	48.81	6/16/2022 15:46	80.53	6/15/2022 14:09	16.45	6/15/2022 13:18	5.68	6/15/2022 18:14	73.49
6/16/2022 17:05	48.80	6/16/2022 15:47	80.52	6/15/2022 14:10	16.44	6/15/2022 13:19	5.91	6/15/2022 18:15	73.37
6/16/2022 17:06	48.80	6/16/2022 15:48	80.52	6/15/2022 14:11	16.41	6/15/2022 13:20	6.14	6/15/2022 18:16	73.34
6/16/2022 17:07	48.79	6/16/2022 15:49	80.55	6/15/2022 14:12	16.42	6/15/2022 13:21	6.27	6/15/2022 18:17	73.24
6/16/2022 17:08	48.80	6/16/2022 15:50	80.51	6/15/2022 14:13	16.38	6/15/2022 13:22	6.38	6/15/2022 18:18	73.19
6/16/2022 17:09	48.78	6/16/2022 15:51	80.55	6/15/2022 14:14	16.39	6/15/2022 13:23	6.46	6/15/2022 18:19	73.14
6/16/2022 17:10	48.80	6/16/2022 15:52	80.49	6/15/2022 14:15	16.41	6/15/2022 13:24	6.54	6/15/2022 18:20	73.09
6/16/2022 17:11	48.79	6/16/2022 15:53	80.52	6/15/2022 14:16	16.40	6/15/2022 13:25	6.61	6/15/2022 18:21	72.99
6/16/2022 17:12	48.77	6/16/2022 15:54	80.51	6/15/2022 14:17	16.43	6/15/2022 13:26	6.34	6/15/2022 18:22	72.98
6/16/2022 17:13	48.79	6/16/2022 15:55	80.51	6/15/2022 14:18	16.41	6/15/2022 13:27	6.06	6/15/2022 18:23	72.88
6/16/2022 17:14	48.79	6/16/2022 15:56	80.55	6/15/2022 14:19	16.37	6/15/2022 13:28	5.91	6/15/2022 18:24	72.80
6/16/2022 17:15	48.77	6/16/2022 15:57	80.51	6/15/2022 14:20	16.37	6/15/2022 13:29	5.84	6/15/2022 18:25	72.76
6/16/2022 17:16	48.82	6/16/2022 15:58	80.52	6/15/2022 14:21	16.39	6/15/2022 13:30	5.81	6/15/2022 18:26	72.70
6/16/2022 17:17	48.77	6/16/2022 15:59	80.53	6/15/2022 14:22	16.36	6/15/2022 13:31	5.73	6/15/2022 18:27	72.64
6/16/2022 17:18	48.81	6/16/2022 16:00	80.52	6/15/2022 14:23	16.36	6/15/2022 13:32	5.70	6/15/2022 18:28	72.61
6/16/2022 17:19	48.78	6/16/2022 16:01	80.53	6/15/2022 14:24	16.36	6/15/2022 13:33	5.67	6/15/2022 18:29	72.52
6/16/2022 17:20	48.79	6/16/2022 16:02	80.52	6/15/2022 14:25	16.38	6/15/2022 13:34	5.63	6/15/2022 18:30	72.44
6/16/2022 17:21	48.79	6/16/2022 16:03	80.53	6/15/2022 14:26	16.36	6/15/2022 13:35	5.62	6/15/2022 18:31	72.38
6/16/2022 17:22	48.76	6/16/2022 16:04	80.50	6/15/2022 14:27	16.34	6/15/2022 13:36	5.59	6/15/2022 18:32	72.35
6/16/2022 17:23	48.79	6/16/2022 16:05	80.49	6/15/2022 14:28	16.31	6/15/2022 13:37	5.58	6/15/2022 18:33	72.29
6/16/2022 17:24	48.82	6/16/2022 16:06	80.54	6/15/2022 14:29	16.32	6/15/2022 13:38	5.58	6/15/2022 18:34	72.23
6/16/2022 17:25	48.81	6/16/2022 16:07	80.49	6/15/2022 14:30	16.30	6/15/2022 13:39	5.60	6/15/2022 18:35	72.20
6/16/2022 17:26	48.79	6/16/2022 16:08	80.53	6/15/2022 14:31	16.35	6/15/2022 13:40	5.55	6/15/2022 18:36	72.11
6/16/2022 17:27	48.77	6/16/2022 16:09	80.52	6/15/2022 14:32	16.33	6/15/2022 13:41	5.53	6/15/2022 18:37	72.10
6/16/2022 17:28	48.80	6/16/2022 16:10	80.53	6/15/2022 14:33	16.33	6/15/2022 13:42	5.51	6/15/2022 18:38	72.02
6/16/2022 17:29	48.76	6/16/2022 16:11	80.55	6/15/2022 14:34	16.30	6/15/2022 13:43	5.51	6/15/2022 18:39	71.96
6/16/2022 17:30	48.76	6/16/2022 16:12	80.49	6/15/2022 14:35	16.30	6/15/2022 13:44	5.56	6/15/2022 18:40	71.90
6/16/2022 17:31	48.78	6/16/2022 16:13	80.53	6/15/2022 14:36	16.30	6/15/2022 13:45	5.42	6/15/2022 18:41	71.90
6/16/2022 17:32	48.79	6/16/2022 16:14	80.49	6/15/2022 14:37	16.28	6/15/2022 13:46	5.44	6/15/2022 18:42	71.85
6/16/2022 17:33	48.77	6/16/2022 16:15	80.50	6/15/2022 14:38	16.32	6/15/2022 13:47	5.46	6/15/2022 18:43	71.75
6/16/2022 17:34	48.77	6/16/2022 16:16	80.51	6/15/2022 14:39	16.32	6/15/2022 13:48	5.46	6/15/2022 18:44	71.72
6/16/2022 17:35	48.76	6/16/2022 16:17	80.51	6/15/2022 14:40	16.24	6/15/2022 13:49	5.51	6/15/2022 18:45	71.67
6/16/2022 17:36	48.77	6/16/2022 16:18	80.51	6/15/2022 14:41	16.30	6/15/2022 13:50	5.43	6/15/2022 18:46	71.63
6/16/2022 17:37	48.76	6/16/2022 16:19	80.53	6/15/2022 14:42	16.29	6/15/2022 13:51	5.42	6/15/2022 18:47	71.60
6/16/2022 17:38	48.78	6/16/2022 16:20	80.50	6/15/2022 14:43	16.32	6/15/2022 13:52	5.42	6/15/2022 18:48	71.51
6/16/2022 17:39	48.77	6/16/2022 16:21	80.52	6/15/2022 14:44	16.28	6/15/2022 13:53	5.74	6/15/2022 18:49	71.48
6/16/2022 17:40	48.77	6/16/2022 16:22	80.54	6/15/2022 14:45	16.26	6/15/2022 13:54	5.98	6/15/2022 18:50	71.39

6/16/2022 17:41	48.74	6/16/2022 16:23	80.48	6/15/2022 14:46	16.28	6/15/2022 13:55	5.68	6/15/2022 18:51	71.38
6/16/2022 17:42	48.79	6/16/2022 16:24	80.51	6/15/2022 14:47	16.25	6/15/2022 13:56	5.57	6/15/2022 18:52	71.31
6/16/2022 17:43	48.78	6/16/2022 16:25	80.48	6/15/2022 14:48	16.26	6/15/2022 13:57	5.51	6/15/2022 18:53	71.29
6/16/2022 17:44	48.76	6/16/2022 16:26	80.50	6/15/2022 14:49	16.28	6/15/2022 13:58	5.56	6/15/2022 18:54	71.24
6/16/2022 17:45	48.80	6/16/2022 16:27	80.51	6/15/2022 14:50	16.22	6/15/2022 13:59	5.45	6/15/2022 18:55	71.18
6/16/2022 17:46	48.76	6/16/2022 16:28	80.51	6/15/2022 14:51	16.32	6/15/2022 14:00	5.41	6/15/2022 18:56	71.17
6/16/2022 17:47	51.19	6/16/2022 16:29	80.52	6/15/2022 14:52	16.27	6/15/2022 14:01	5.42	6/15/2022 18:57	71.14
6/16/2022 17:48	52.81	6/16/2022 16:30	80.49	6/15/2022 14:53	16.33	6/15/2022 14:02	5.45	6/15/2022 18:58	71.07
6/16/2022 17:49	53.60	6/16/2022 16:31	80.52	6/15/2022 14:54	16.29	6/15/2022 14:03	5.42	6/15/2022 18:59	71.03
6/16/2022 17:50	54.08	6/16/2022 16:32	80.48	6/15/2022 14:55	16.33	6/15/2022 14:04	5.36	6/15/2022 19:00	70.98
6/16/2022 17:51	51.95	6/16/2022 16:33	80.52	6/15/2022 14:56	16.29	6/15/2022 14:05	5.96	6/15/2022 19:01	70.93
6/16/2022 17:52	50.86	6/16/2022 16:34	80.49	6/15/2022 14:57	16.25	6/15/2022 14:06	5.72	6/15/2022 19:02	70.90
6/16/2022 17:53	50.44	6/16/2022 16:35	80.54	6/15/2022 14:58	16.29	6/15/2022 14:07	5.98	6/15/2022 19:03	70.89
6/16/2022 17:54	50.15	6/16/2022 16:36	80.54	6/15/2022 14:59	16.23	6/15/2022 14:08	6.06	6/15/2022 19:04	70.81
6/16/2022 17:55	50.01	6/16/2022 16:37	80.48	6/15/2022 15:00	16.30	6/15/2022 14:09	5.80	6/15/2022 19:05	70.76
6/16/2022 17:56	49.87	6/16/2022 16:38	80.51	6/15/2022 15:01	16.32	6/15/2022 14:10	5.68	6/15/2022 19:06	70.71
6/16/2022 17:57	49.79	6/16/2022 16:39	80.50	6/15/2022 15:02	16.33	6/15/2022 14:11	5.64	6/15/2022 19:07	70.71
6/16/2022 17:58	49.72	6/16/2022 16:40	80.47	6/15/2022 15:03	16.32	6/15/2022 14:12	5.56	6/15/2022 19:08	70.69
6/16/2022 17:59	49.66	6/16/2022 16:41	80.51	6/15/2022 15:04	16.27	6/15/2022 14:13	5.50	6/15/2022 19:09	70.63
6/16/2022 18:00	49.59	6/16/2022 16:42	80.46	6/15/2022 15:05	16.32	6/15/2022 14:14	5.46	6/15/2022 19:10	70.56
6/16/2022 18:01	49.56	6/16/2022 16:43	80.51	6/15/2022 15:06	16.33	6/15/2022 14:15	5.47	6/15/2022 19:11	70.55
6/16/2022 18:02	49.52	6/16/2022 16:44	80.50	6/15/2022 15:07	16.35	6/15/2022 14:16	5.49	6/15/2022 19:12	70.49
6/16/2022 18:03	49.46	6/16/2022 16:45	80.50	6/15/2022 15:08	16.35	6/15/2022 14:17	5.45	6/15/2022 19:13	70.46
6/16/2022 18:04	49.44	6/16/2022 16:46	80.48	6/15/2022 15:09	16.35	6/15/2022 14:18	5.48	6/15/2022 19:14	70.46
6/16/2022 18:05	49.44	6/16/2022 16:47	80.47	6/15/2022 15:10	16.38	6/15/2022 14:19	5.36	6/15/2022 19:15	70.38
6/16/2022 18:06	49.42	6/16/2022 16:48	80.46	6/15/2022 15:11	16.36	6/15/2022 14:20	5.33	6/15/2022 19:16	70.39
6/16/2022 18:07	49.38	6/16/2022 16:49	80.49	6/15/2022 15:12	16.40	6/15/2022 14:21	5.41	6/15/2022 19:17	70.33
6/16/2022 18:08	49.36	6/16/2022 16:50	80.49	6/15/2022 15:13	16.36	6/15/2022 14:22	5.40	6/15/2022 19:18	70.28
6/16/2022 18:09	49.33	6/16/2022 16:51	80.48	6/15/2022 15:14	16.35	6/15/2022 14:23	5.41	6/15/2022 19:19	70.27
6/16/2022 18:10	49.33	6/16/2022 16:52	80.49	6/15/2022 15:15	16.38	6/15/2022 14:24	5.41	6/15/2022 19:20	70.21
6/16/2022 18:11	49.31	6/16/2022 16:53	80.48	6/15/2022 15:16	16.40	6/15/2022 14:25	5.40	6/15/2022 19:21	70.20
6/16/2022 18:12	49.25	6/16/2022 16:54	80.50	6/15/2022 15:17	16.39	6/15/2022 14:26	5.84	6/15/2022 19:22	70.13
6/16/2022 18:13	49.27	6/16/2022 16:55	80.51	6/15/2022 15:18	16.42	6/15/2022 14:27	5.50	6/15/2022 19:23	70.10
6/16/2022 18:14	49.31	6/16/2022 16:56	80.47	6/15/2022 15:19	16.45	6/15/2022 14:28	5.46	6/15/2022 19:24	70.08
6/16/2022 18:15	49.26	6/16/2022 16:57	80.47	6/15/2022 15:20	16.45	6/15/2022 14:29	5.42	6/15/2022 19:25	70.06
6/16/2022 18:16	49.25	6/16/2022 16:58	80.50	6/15/2022 15:21	16.45	6/15/2022 14:30	5.59	6/15/2022 19:26	70.02
6/16/2022 18:17	49.24	6/16/2022 16:59	80.46	6/15/2022 15:22	16.47	6/15/2022 14:31	5.55	6/15/2022 19:27	70.00
6/16/2022 18:18	49.24	6/16/2022 17:00	80.47	6/15/2022 15:23	16.44	6/15/2022 14:32	5.52	6/15/2022 19:28	69.94
6/16/2022 18:19	49.22	6/16/2022 17:01	80.48	6/15/2022 15:24	16.44	6/15/2022 14:33	5.40	6/15/2022 19:29	69.91
6/16/2022 18:20	49.22	6/16/2022 17:02	80.51	6/15/2022 15:25	16.51	6/15/2022 14:34	5.36	6/15/2022 19:30	69.88
6/16/2022 18:21	49.22	6/16/2022 17:03	80.48	6/15/2022 15:26	16.43	6/15/2022 14:35	5.38	6/15/2022 19:31	69.81
6/16/2022 18:22	49.18	6/16/2022 17:04	80.48	6/15/2022 15:27	16.49	6/15/2022 14:36	5.35	6/15/2022 19:32	69.80
6/16/2022 18:23	49.18	6/16/2022 17:05	80.52	6/15/2022 15:28	16.49	6/15/2022 14:37	5.38	6/15/2022 19:33	69.78
6/16/2022 18:24	49.18	6/16/2022 17:06	80.44	6/15/2022 15:29	16.48	6/15/2022 14:38	5.37	6/15/2022 19:34	69.76
6/16/2022 18:25	49.15	6/16/2022 17:07	80.49	6/15/2022 15:30	16.48	6/15/2022 14:39	5.30	6/15/2022 19:35	69.75
6/16/2022 18:26	49.17	6/16/2022 17:08	80.46	6/15/2022 15:31	16.51	6/15/2022 14:40	5.30	6/15/2022 19:36	69.71
6/16/2022 18:27	49.15	6/16/2022 17:09	80.48	6/15/2022 15:32	16.53	6/15/2022 14:41	5.31	6/15/2022 19:37	69.67
6/16/2022 18:28	49.14	6/16/2022 17:10	80.50	6/15/2022 15:33	16.49	6/15/2022 14:42	5.31	6/15/2022 19:38	69.63
6/16/2022 18:29	49.14	6/16/2022 17:11	80.48	6/15/2022 15:34	16.50	6/15/2022 14:43	5.38	6/15/2022 19:39	75.31
6/16/2022 18:30	49.13	6/16/2022 17:12	80.49	6/15/2022 15:35	16.48	6/15/2022 14:44	5.24	6/15/2022 19:40	74.99
6/16/2022 18:31	49.13	6/16/2022 17:13	80.50	6/15/2022 15:36	16.51	6/15/2022 14:45	5.27	6/15/2022 19:41	74.84
6/16/2022 18:32	49.13	6/16/2022 17:14	80.50	6/15/2022 15:37	16.50	6/15/2022 14:46	5.26	6/15/2022 19:42	74.73
6/16/2022 18:33	49.12	6/16/2022 17:15	80.47	6/15/2022 15:38	16.46	6/15/2022 14:47	5.22	6/15/2022 19:43	74.60
6/16/2022 18:34	49.12	6/16/2022 17:16	80.45	6/15/2022 15:39	16.51	6/15/2022 14:48	5.25	6/15/2022 19:44	74.52
6/16/2022 18:35	49.12	6/16/2022 17:17	80.47	6/15/2022 15:40	16.49	6/15/2022 14:49	5.20	6/15/2022 19:45	74.39
6/16/2022 18:36	49.14	6/16/2022 17:18	80.48	6/15/2022 15:41	16.49	6/15/2022 14:50	5.25	6/15/2022 19:46	74.28
6/16/2022 18:37	49.09	6/16/2022 17:19	80.44	6/15/2022 15:42	16.50	6/15/2022 14:51	5.23	6/15/2022 19:47	74.23
6/16/2022 18:38	49.11	6/16/2022 17:20	80.46	6/15/2022 15:43	16.47	6/15/2022 14:52	5.22	6/15/2022 19:48	74.12
6/16/2022 18:39	49.10	6/16/2022 17:21	80.49	6/15/2022 15:44	16.48	6/15/2022 14:53	5.21	6/15/2022 19:49	74.01
6/16/2022 18:40	49.11	6/16/2022 17:22	80.46	6/15/2022 15:45	16.50	6/15/2022 14:54	5.22	6/15/2022 19:50	80.83
6/16/2022 18:41	49.09	6/16/2022 17:23	80.46	6/15/2022 15:46	16.54	6/15/2022 14:55	5.19	6/15/2022 19:51	81.86
6/16/2022 18:42	49.08	6/16/2022 17:24	80.49	6/15/2022 15:47	16.52	6/15/2022 14:56	5.21	6/15/2022 19:52	82.52
6/16/2022 18:43	49.09	6/16/2022 17:25	80.49	6/15/2022 15:48	16.48	6/15/2022 14:57	5.16	6/15/2022 19:53	88.95
6/16/2022 18:44	49.08	6/16/2022 17:26	80.48	6/15/2022 15:49	16.50	6/15/2022 14:58	5.15	6/15/2022 19:54	89.39
6/16/2022 18:45	49.06	6/16/2022 17:27	80.44	6/15/2022 15:50	16.52	6/15/2022 14:59	5.16	6/15/2022 19:55	89.43
6/16/2022 18:46	49.07	6/16/2022 17:28	80.51	6/15/2022 15:51	16.48	6/15/2022 15:00	5.22	6/15/2022 19:56	96.10
6/16/2022 18:47	49.07	6/16/2022 17:29	80.50	6/15/2022 15:52	16.49	6/15/2022 15:01	5.10	6/15/2022 19:57	96.22
6/16/2022 18:48	49.10	6/16/2022 17:30	80.48	6/15/2022 15:53	16.50	6/15/2022 15:02	5.12	6/15/2022 19:58	96.26
6/16/2022 18:49	49.07	6/16/2022 17:31	80.46	6/15/2022 15:54	16.55	6/15/2022 15:03	5.13	6/15/2022 19:59	103.19
6/16/2022 18:50	49.09	6/16/2022 17:32	80.48	6/15/2022 15:55	16.47	6/15/2022 15:04	5.14	6/15/2022 20:00	103.29
6/16/2022 18:51	49.07	6/16/2022 17:33	80.46	6/15/2022 15:56	16.50	6/15/2022 15:05	5.12	6/15/2022 20:01	103.71
6/16/2022 18:52	49.10	6/16/2022 17:34	80.47	6/15/2022 15:57	16.48	6/15/2022 15:06	5.13	6/15/2022 20:02	109.50
6/16/2022 18:53	49.08	6/16/2022 17:35	80.44	6/15/2022 15:58	16.50	6/15/2022 15:07	5.12	6/15/2022 20:03	109.95
6/16/2022 18:54	49.02	6/16/2022 17:36	80.47	6/15/2022 15:59	16.48	6/15/2022 15:08	5.05	6/15/2022 20:04	109.37
6/16/2022 18:55	49.06	6/16/2022 17:37	80.46	6/15/2022 16:00	16.51	6/15/2022 15:09	5.07	6/15/2022 20:05	115.33
6/16/2022 18:56	49.03	6/16/2022 17:38	80.46	6/15/2022 16:01	16.48	6/15/2022 15:10	5.13	6/15/2022 20:06	114.98
6/16/2022 18:57	49.04	6/16/2022 17:39	80.49	6/15/2022 16:02	16.45	6/15/2022 15:11	5.42	6/15/2022 20:07	114.28
6/16/2022 18:58	49.04	6/16/2022 17:40	80.52	6/15/2022 16:03	16.46	6/15/2022 15:12	5.20	6/15/2022 20:08	113.65
6/16/2022 18:59	49.04	6/16/2022 17:41	80.48	6/15/2022 16:04	16.49	6/15/2022 15:13	5.15	6/15/2022 20:09	113.05
6/16/2022 19:00	49.07	6/16/2022 17:42	80.48	6/15/2022 16:05	16.45	6/15/2022 15:14	5.16	6/15/2022 20:10	112.44
6/16/2022 19:01	49.03	6/16/2022 17:43	80.49	6/15/2022 16:06	16.50	6/15/2022 15:15	5.19	6/15/2022 20:11	111.91
6/16/2022 19:02	49.03	6/16/2022 17:44	80.46	6/15/2022 16:07	16.47	6/15/2022 15:16	5.10	6/15/2022 20:12	111.34
6/16/2022 19:03	49.03	6/16/2022 17:45	80.45	6/15/2022 16:08	16.47	6/15/2022 15:17	5.09	6/15/2022 20:13	110.79
6/16/2022 19:04	49.02	6/16/2022 17:46	80.47	6/15/2022 16:09	16.47	6/15/2022 15:18	5.09	6/15/2022 20:14	110.27
6/16/2022 19:05	49.07	6/16/2022 17:47	80.46	6/15/2022 16:10	16.42	6/15/2022 15:19	5.08	6/15/2022 20:15	109.76
6/16/2022 19:06	49.04	6/16/2022 17:48	80.50	6/15/2022 16:11	16.48	6/15/2022 15:20	5.12	6/15/2022 20:16	109.25
6/16/2022 19:07	49.04	6/16/2022 17:49	80.47	6/15/2022 16:12	16.46	6/15/2022 15:21	5.15	6/15/2022 20:17	108.76
6/16/2022 19:08	49.03	6/16/2022 17:50	80.49	6/15/2022 16:13	16.44	6/15/2022 15:22	5.04	6/15/2022 20:18	108.24

6/16/2022 19:09	49.01	6/16/2022 17:51	80.47	6/15/2022 16:14	16.42	6/15/2022 15:23	5.00	6/15/2022 20:19	107.80
6/16/2022 19:10	49.01	6/16/2022 17:52	80.50	6/15/2022 16:15	16.41	6/15/2022 15:24	5.03	6/15/2022 20:20	107.32
6/16/2022 19:11	49.04	6/16/2022 17:53	80.46	6/15/2022 16:16	16.42	6/15/2022 15:25	5.06	6/15/2022 20:21	106.86
6/16/2022 19:12	49.03	6/16/2022 17:54	80.49	6/15/2022 16:17	16.44	6/15/2022 15:26	5.00	6/15/2022 20:22	106.43
6/16/2022 19:13	49.02	6/16/2022 17:55	80.47	6/15/2022 16:18	16.42	6/15/2022 15:27	5.06	6/15/2022 20:23	105.96
6/16/2022 19:14	48.99	6/16/2022 17:56	80.53	6/15/2022 16:19	16.40	6/15/2022 15:28	5.09	6/15/2022 20:24	105.50
6/16/2022 19:15	49.02	6/16/2022 17:57	80.50	6/15/2022 16:20	16.42	6/15/2022 15:29	4.95	6/15/2022 20:25	105.10
6/16/2022 19:16	49.02	6/16/2022 17:58	80.44	6/15/2022 16:21	16.39	6/15/2022 15:30	4.97	6/15/2022 20:26	104.71
6/16/2022 19:17	49.03	6/16/2022 17:59	80.45	6/15/2022 16:22	16.44	6/15/2022 15:31	4.95	6/15/2022 20:27	104.29
6/16/2022 19:18	49.02	6/16/2022 18:00	80.49	6/15/2022 16:23	16.42	6/15/2022 15:32	4.99	6/15/2022 20:28	103.92
6/16/2022 19:19	49.00	6/16/2022 18:01	80.52	6/15/2022 16:24	16.40	6/15/2022 15:33	5.01	6/15/2022 20:29	103.55
6/16/2022 19:20	49.02	6/16/2022 18:02	80.46	6/15/2022 16:25	16.39	6/15/2022 15:34	4.99	6/15/2022 20:30	103.12
6/16/2022 19:21	49.01	6/16/2022 18:03	80.46	6/15/2022 16:26	16.41	6/15/2022 15:35	5.02	6/15/2022 20:31	102.74
6/16/2022 19:22	49.03	6/16/2022 18:04	80.45	6/15/2022 16:27	16.43	6/15/2022 15:36	4.99	6/15/2022 20:32	102.35
6/16/2022 19:23	48.98	6/16/2022 18:05	80.45	6/15/2022 16:28	16.40	6/15/2022 15:37	5.01	6/15/2022 20:33	101.97
6/16/2022 19:24	49.02	6/16/2022 18:06	80.47	6/15/2022 16:29	16.36	6/15/2022 15:38	5.01	6/15/2022 20:34	101.56
6/16/2022 19:25	49.01	6/16/2022 18:07	80.44	6/15/2022 16:30	16.42	6/15/2022 15:39	5.00	6/15/2022 20:35	101.21
6/16/2022 19:26	49.00	6/16/2022 18:08	80.49	6/15/2022 16:31	16.39	6/15/2022 15:40	5.09	6/15/2022 20:36	100.80
6/16/2022 19:27	49.03	6/16/2022 18:09	80.49	6/15/2022 16:32	16.43	6/15/2022 15:41	5.01	6/15/2022 20:37	100.46
6/16/2022 19:28	48.98	6/16/2022 18:10	80.50	6/15/2022 16:33	16.37	6/15/2022 15:42	5.05	6/15/2022 20:38	104.62
6/16/2022 19:29	48.99	6/16/2022 18:11	80.48	6/15/2022 16:34	16.36	6/15/2022 15:43	4.99	6/15/2022 20:39	105.51
6/16/2022 19:30	48.99	6/16/2022 18:12	80.45	6/15/2022 16:35	16.39	6/15/2022 15:44	5.09	6/15/2022 20:40	105.03
6/16/2022 19:31	48.99	6/16/2022 18:13	80.48	6/15/2022 16:36	16.37	6/15/2022 15:45	5.03	6/15/2022 20:41	104.57
6/16/2022 19:32	49.00	6/16/2022 18:14	80.45	6/15/2022 16:37	16.33	6/15/2022 15:46	5.09	6/15/2022 20:42	104.18
6/16/2022 19:33	49.00	6/16/2022 18:15	80.47	6/15/2022 16:38	16.38	6/15/2022 15:47	4.97	6/15/2022 20:43	103.78
6/16/2022 19:34	48.96	6/16/2022 18:16	80.48	6/15/2022 16:39	16.35	6/15/2022 15:48	4.99	6/15/2022 20:44	103.40
6/16/2022 19:35	48.99	6/16/2022 18:17	80.49	6/15/2022 16:40	16.38	6/15/2022 15:49	5.02	6/15/2022 20:45	103.02
6/16/2022 19:36	48.96	6/16/2022 18:18	80.50	6/15/2022 16:41	16.38	6/15/2022 15:50	4.98	6/15/2022 20:46	102.61
6/16/2022 19:37	48.98	6/16/2022 18:19	80.49	6/15/2022 16:42	16.41	6/15/2022 15:51	5.01	6/15/2022 20:47	102.22
6/16/2022 19:38	48.98	6/16/2022 18:20	80.43	6/15/2022 16:43	16.34	6/15/2022 15:52	4.99	6/15/2022 20:48	101.87
6/16/2022 19:39	48.97	6/16/2022 18:21	80.45	6/15/2022 16:44	16.42	6/15/2022 15:53	5.02	6/15/2022 20:49	101.44
6/16/2022 19:40	48.95	6/16/2022 18:22	80.44	6/15/2022 16:45	16.39	6/15/2022 15:54	4.99	6/15/2022 20:50	101.12
6/16/2022 19:41	48.95	6/16/2022 18:23	80.47	6/15/2022 16:46	16.38	6/15/2022 15:55	4.94	6/15/2022 20:51	100.74
6/16/2022 19:42	48.96	6/16/2022 18:24	80.45	6/15/2022 16:47	16.40	6/15/2022 15:56	5.03	6/15/2022 20:52	100.39
6/16/2022 19:43	49.00	6/16/2022 18:25	80.46	6/15/2022 16:48	16.36	6/15/2022 15:57	5.23	6/15/2022 20:53	100.04
6/16/2022 19:44	48.96	6/16/2022 18:26	80.46	6/15/2022 16:49	16.40	6/15/2022 15:58	5.11	6/15/2022 20:54	99.74
6/16/2022 19:45	48.97	6/16/2022 18:27	80.45	6/15/2022 16:50	16.37	6/15/2022 15:59	5.09	6/15/2022 20:55	99.41
6/16/2022 19:46	48.95	6/16/2022 18:28	80.48	6/15/2022 16:51	16.36	6/15/2022 16:00	5.02	6/15/2022 20:56	99.07
6/16/2022 19:47	48.94	6/16/2022 18:29	80.46	6/15/2022 16:52	16.37	6/15/2022 16:01	5.08	6/15/2022 20:57	98.74
6/16/2022 19:48	48.94	6/16/2022 18:30	80.40	6/15/2022 16:53	16.34	6/15/2022 16:02	5.02	6/15/2022 20:58	98.42
6/16/2022 19:49	48.92	6/16/2022 18:31	80.45	6/15/2022 16:54	16.39	6/15/2022 16:03	5.00	6/15/2022 20:59	98.09
6/16/2022 19:50	48.93	6/16/2022 18:32	80.43	6/15/2022 16:55	16.38	6/15/2022 16:04	5.03	6/15/2022 21:00	97.81
6/16/2022 19:51	48.96	6/16/2022 18:33	80.44	6/15/2022 16:56	16.39	6/15/2022 16:05	4.99	6/15/2022 21:01	97.44
6/16/2022 19:52	48.92	6/16/2022 18:34	80.46	6/15/2022 16:57	16.38	6/15/2022 16:06	5.08	6/15/2022 21:02	97.12
6/16/2022 19:53	48.94	6/16/2022 18:35	80.46	6/15/2022 16:58	16.34	6/15/2022 16:07	4.99	6/15/2022 21:03	96.85
6/16/2022 19:54	48.91	6/16/2022 18:36	80.45	6/15/2022 16:59	16.37	6/15/2022 16:08	4.92	6/15/2022 21:04	96.49
6/16/2022 19:55	48.93	6/16/2022 18:37	80.43	6/15/2022 17:00	16.38	6/15/2022 16:09	5.01	6/15/2022 21:05	96.21
6/16/2022 19:56	48.93	6/16/2022 18:38	80.48	6/15/2022 17:01	16.36	6/15/2022 16:10	5.01	6/15/2022 21:06	95.95
6/16/2022 19:57	48.92	6/16/2022 18:39	80.45	6/15/2022 17:02	16.36	6/15/2022 16:11	4.99	6/15/2022 21:07	95.65
6/16/2022 19:58	48.94	6/16/2022 18:40	80.49	6/15/2022 17:03	16.35	6/15/2022 16:12	4.89	6/15/2022 21:08	95.33
6/16/2022 19:59	48.94	6/16/2022 18:41	80.48	6/15/2022 17:04	16.30	6/15/2022 16:13	4.89	6/15/2022 21:09	95.07
6/16/2022 20:00	48.92	6/16/2022 18:42	80.46	6/15/2022 17:05	16.33	6/15/2022 16:14	4.93	6/15/2022 21:10	94.82
6/16/2022 20:01	48.91	6/16/2022 18:43	80.46	6/15/2022 17:06	16.36	6/15/2022 16:15	4.91	6/15/2022 21:11	94.55
6/16/2022 20:02	48.91	6/16/2022 18:44	80.48	6/15/2022 17:07	16.29	6/15/2022 16:16	4.96	6/15/2022 21:12	94.31
6/16/2022 20:03	48.89	6/16/2022 18:45	80.48	6/15/2022 17:08	16.31	6/15/2022 16:17	4.83	6/15/2022 21:13	94.00
6/16/2022 20:04	48.91	6/16/2022 18:46	80.47	6/15/2022 17:09	16.38	6/15/2022 16:18	4.85	6/15/2022 21:14	93.79
6/16/2022 20:05	48.89	6/16/2022 18:47	80.47	6/15/2022 17:10	16.34	6/15/2022 16:19	4.87	6/15/2022 21:15	93.55
6/16/2022 20:06	48.92	6/16/2022 18:48	80.44	6/15/2022 17:11	16.33	6/15/2022 16:20	4.89	6/15/2022 21:16	93.33
6/16/2022 20:07	48.92	6/16/2022 18:49	80.43	6/15/2022 17:12	16.33	6/15/2022 16:21	4.86	6/15/2022 21:17	93.09
6/16/2022 20:08	48.91	6/16/2022 18:50	80.47	6/15/2022 17:13	16.32	6/15/2022 16:22	4.87	6/15/2022 21:18	92.83
6/16/2022 20:09	48.95	6/16/2022 18:51	80.50	6/15/2022 17:14	16.34	6/15/2022 16:23	4.79	6/15/2022 21:19	92.57
6/16/2022 20:10	48.92	6/16/2022 18:52	80.46	6/15/2022 17:15	16.37	6/15/2022 16:24	4.82	6/15/2022 21:20	92.32
6/16/2022 20:11	48.88	6/16/2022 18:53	80.46	6/15/2022 17:16	16.36	6/15/2022 16:25	4.79	6/15/2022 21:21	92.07
6/16/2022 20:12	48.94	6/16/2022 18:54	80.48	6/15/2022 17:17	16.34	6/15/2022 16:26	4.79	6/15/2022 21:22	91.83
6/16/2022 20:13	48.89	6/16/2022 18:55	80.45	6/15/2022 17:18	16.31	6/15/2022 16:27	4.84	6/15/2022 21:23	91.61
6/16/2022 20:14	48.88	6/16/2022 18:56	80.49	6/15/2022 17:19	16.31	6/15/2022 16:28	4.88	6/15/2022 21:24	91.40
6/16/2022 20:15	48.90	6/16/2022 18:57	80.47	6/15/2022 17:20	16.29	6/15/2022 16:29	4.77	6/15/2022 21:25	91.22
6/16/2022 20:16	48.93	6/16/2022 18:58	80.44	6/15/2022 17:21	16.31	6/15/2022 16:30	4.84	6/15/2022 21:26	91.02
6/16/2022 20:17	48.92	6/16/2022 18:59	80.49	6/15/2022 17:22	16.31	6/15/2022 16:31	4.77	6/15/2022 21:27	90.81
6/16/2022 20:18	48.91	6/16/2022 19:00	80.46	6/15/2022 17:23	16.33	6/15/2022 16:32	4.80	6/15/2022 21:28	90.60
6/16/2022 20:19	48.89	6/16/2022 19:01	80.48	6/15/2022 17:24	16.32	6/15/2022 16:33	4.84	6/15/2022 21:29	90.36
6/16/2022 20:20	48.88	6/16/2022 19:02	80.47	6/15/2022 17:25	16.30	6/15/2022 16:34	4.74	6/15/2022 21:30	90.16
6/16/2022 20:21	48.87	6/16/2022 19:03	80.45	6/15/2022 17:26	16.27	6/15/2022 16:35	4.70	6/15/2022 21:31	89.93
6/16/2022 20:22	48.87	6/16/2022 19:04	80.46	6/15/2022 17:27	16.31	6/15/2022 16:36	4.73	6/15/2022 21:32	89.75
6/16/2022 20:23	48.87	6/16/2022 19:05	80.48	6/15/2022 17:28	16.33	6/15/2022 16:37	4.77	6/15/2022 21:33	89.57
6/16/2022 20:24	48.88	6/16/2022 19:06	80.47	6/15/2022 17:29	16.32	6/15/2022 16:38	4.76	6/15/2022 21:34	89.34
6/16/2022 20:25	48.90	6/16/2022 19:07	80.46	6/15/2022 17:30	16.28	6/15/2022 16:39	4.71	6/15/2022 21:35	89.12
6/16/2022 20:26	48.88	6/16/2022 19:08	80.45	6/15/2022 17:31	16.35	6/15/2022 16:40	4.69	6/15/2022 21:36	88.95
6/16/2022 20:27	48.89	6/16/2022 19:09	80.50	6/15/2022 17:32	16.32	6/15/2022 16:41	4.71	6/15/2022 21:37	88.71
6/16/2022 20:28	48.89	6/16/2022 19:10	80.45	6/15/2022 17:33	16.34	6/15/2022 16:42	4.75	6/15/2022 21:38	88.54
6/16/2022 20:29	48.85	6/16/2022 19:11	80.47	6/15/2022 17:34	16.32	6/15/2022 16:43	4.77	6/15/2022 21:39	88.36
6/16/2022 20:30	48.88	6/16/2022 19:12	80.48	6/15/2022 17:35	16.30	6/15/2022 16:44	4.69	6/15/2022 21:40	88.18
6/16/2022 20:31	48.88	6/16/2022 19:13	80.49	6/15/2022 17:36	16.36	6/15/2022 16:45	4.69	6/15/2022 21:41	87.99
6/16/2022 20:32	48.87	6/16/2022 19:14	80.50	6/15/2022 17:37	16.32	6/15/2022 16:46	4.69	6/15/2022 21:42	87.75
6/16/2022 20:33	48.90	6/16/2022 19:15	80.46	6/15/2022 17:38	16.31	6/15/2022 16:47	4.73	6/15/2022 21:43	87.56
6/16/2022 20:34	48.89	6/16/2022 19:16	80.46	6/15/2022 17:39	16.30	6/15/2022 16:48	4.78	6/15/2022 21:44	87.36
6/16/2022 20:35	48.88	6/16/2022 19:17	80.48	6/15/2022 17:40	16.27	6/15/2022 16:49	4.70	6/15/2022 21:45	87.15
6/16/2022 20:36	48.88	6/16/2022 19:18	80.49	6/15/2022 17:41	16.28	6/15/2022 16:50	4.68	6/15/2022 21:46	86.99

6/16/2022 20:37	48.87	6/16/2022 19:19	80.48	6/15/2022 17:42	16.30	6/15/2022 16:51	4.63	6/15/2022 21:47	86.81
6/16/2022 20:38	48.90	6/16/2022 19:20	80.49	6/15/2022 17:43	16.30	6/15/2022 16:52	4.67	6/15/2022 21:48	86.62
6/16/2022 20:39	48.84	6/16/2022 19:21	80.48	6/15/2022 17:44	16.28	6/15/2022 16:53	4.95	6/15/2022 21:49	86.44
6/16/2022 20:40	48.86	6/16/2022 19:22	80.47	6/15/2022 17:45	16.27	6/15/2022 16:54	5.09	6/15/2022 21:50	86.21
6/16/2022 20:41	48.87	6/16/2022 19:23	80.46	6/15/2022 17:46	16.27	6/15/2022 16:55	4.85	6/15/2022 21:51	86.05
6/16/2022 20:42	48.88	6/16/2022 19:24	80.47	6/15/2022 17:47	16.31	6/15/2022 16:56	4.75	6/15/2022 21:52	85.90
6/16/2022 20:43	48.90	6/16/2022 19:25	80.50	6/15/2022 17:48	16.29	6/15/2022 16:57	4.75	6/15/2022 21:53	85.70
6/16/2022 20:44	48.89	6/16/2022 19:26	80.48	6/15/2022 17:49	16.24	6/15/2022 16:58	4.78	6/15/2022 21:54	85.54
6/16/2022 20:45	48.88	6/16/2022 19:27	80.46	6/15/2022 17:50	16.28	6/15/2022 16:59	4.79	6/15/2022 21:55	85.36
6/16/2022 20:46	48.87	6/16/2022 19:28	80.48	6/15/2022 17:51	16.26	6/15/2022 17:00	4.70	6/15/2022 21:56	85.21
6/16/2022 20:47	48.85	6/16/2022 19:29	80.48	6/15/2022 17:52	16.28	6/15/2022 17:01	4.68	6/15/2022 21:57	85.01
6/16/2022 20:48	48.84	6/16/2022 19:30	80.49	6/15/2022 17:53	16.24	6/15/2022 17:02	4.72	6/15/2022 21:58	84.87
6/16/2022 20:49	48.84	6/16/2022 19:31	80.48	6/15/2022 17:54	16.30	6/15/2022 17:03	4.64	6/15/2022 21:59	84.70
6/16/2022 20:50	48.88	6/16/2022 19:32	80.46	6/15/2022 17:55	16.24	6/15/2022 17:04	5.09	6/15/2022 22:00	84.54
6/16/2022 20:51	48.88	6/16/2022 19:33	80.51	6/15/2022 17:56	16.32	6/15/2022 17:05	4.84	6/15/2022 22:01	84.37
6/16/2022 20:52	48.86	6/16/2022 19:34	80.46	6/15/2022 17:57	16.22	6/15/2022 17:06	4.77	6/15/2022 22:02	84.23
6/16/2022 20:53	48.88	6/16/2022 19:35	80.47	6/15/2022 17:58	16.24	6/15/2022 17:07	4.73	6/15/2022 22:03	84.05
6/16/2022 20:54	48.86	6/16/2022 19:36	80.49	6/15/2022 17:59	16.24	6/15/2022 17:08	4.75	6/15/2022 22:04	83.92
6/16/2022 20:55	48.89	6/16/2022 19:37	80.47	6/15/2022 18:00	16.28	6/15/2022 17:09	4.76	6/15/2022 22:05	83.76
6/16/2022 20:56	48.87	6/16/2022 19:38	80.50	6/15/2022 18:01	16.25	6/15/2022 17:10	4.64	6/15/2022 22:06	83.62
6/16/2022 20:57	48.88	6/16/2022 19:39	80.46	6/15/2022 18:02	16.29	6/15/2022 17:11	4.70	6/15/2022 22:07	83.44
6/16/2022 20:58	48.83	6/16/2022 19:40	80.46	6/15/2022 18:03	16.27	6/15/2022 17:12	4.65	6/15/2022 22:08	83.33
6/16/2022 20:59	48.85	6/16/2022 19:41	80.47	6/15/2022 18:04	16.28	6/15/2022 17:13	4.66	6/15/2022 22:09	83.11
6/16/2022 21:00	48.85	6/16/2022 19:42	80.47	6/15/2022 18:05	16.29	6/15/2022 17:14	4.67	6/15/2022 22:10	82.98
6/16/2022 21:01	48.83	6/16/2022 19:43	80.45	6/15/2022 18:06	16.26	6/15/2022 17:15	4.68	6/15/2022 22:11	82.87
6/16/2022 21:02	48.87	6/16/2022 19:44	80.49	6/15/2022 18:07	16.23	6/15/2022 17:16	4.64	6/15/2022 22:12	82.72
6/16/2022 21:03	48.83	6/16/2022 19:45	80.47	6/15/2022 18:08	16.27	6/15/2022 17:17	4.64	6/15/2022 22:13	82.56
6/16/2022 21:04	48.84	6/16/2022 19:46	80.45	6/15/2022 18:09	16.26	6/15/2022 17:18	4.71	6/15/2022 22:14	82.43
6/16/2022 21:05	48.81	6/16/2022 19:47	80.49	6/15/2022 18:10	16.24	6/15/2022 17:19	4.60	6/15/2022 22:15	82.30
6/16/2022 21:06	48.85	6/16/2022 19:48	80.45	6/15/2022 18:11	16.24	6/15/2022 17:20	4.60	6/15/2022 22:16	82.15
6/16/2022 21:07	48.84	6/16/2022 19:49	80.47	6/15/2022 18:12	16.24	6/15/2022 17:21	4.59	6/15/2022 22:17	82.01
6/16/2022 21:08	48.82	6/16/2022 19:50	80.46	6/15/2022 18:13	16.25	6/15/2022 17:22	4.61	6/15/2022 22:18	81.89
6/16/2022 21:09	48.82	6/16/2022 19:51	80.43	6/15/2022 18:14	17.37	6/15/2022 17:23	4.66	6/15/2022 22:19	81.71
6/16/2022 21:10	48.82	6/16/2022 19:52	80.46	6/15/2022 18:15	22.64	6/15/2022 17:24	4.56	6/15/2022 22:20	81.59
6/16/2022 21:11	48.85	6/16/2022 19:53	80.45	6/15/2022 18:16	25.77	6/15/2022 17:25	4.56	6/15/2022 22:21	81.52
6/16/2022 21:12	48.79	6/16/2022 19:54	80.45	6/15/2022 18:17	25.32	6/15/2022 17:26	4.61	6/15/2022 22:22	81.39
6/16/2022 21:13	48.82	6/16/2022 19:55	80.48	6/15/2022 18:18	22.83	6/15/2022 17:27	4.61	6/15/2022 22:23	81.30
6/16/2022 21:14	48.82	6/16/2022 19:56	80.45	6/15/2022 18:19	21.36	6/15/2022 17:28	4.64	6/15/2022 22:24	81.12
6/16/2022 21:15	48.81	6/16/2022 19:57	80.45	6/15/2022 18:20	20.49	6/15/2022 17:29	4.65	6/15/2022 22:25	81.01
6/16/2022 21:16	48.80	6/16/2022 19:58	80.48	6/15/2022 18:21	19.88	6/15/2022 17:30	4.50	6/15/2022 22:26	80.93
6/16/2022 21:17	48.85	6/16/2022 19:59	80.50	6/15/2022 18:22	19.44	6/15/2022 17:31	4.56	6/15/2022 22:27	80.80
6/16/2022 21:18	48.84	6/16/2022 20:00	80.47	6/15/2022 18:23	19.21	6/15/2022 17:32	4.59	6/15/2022 22:28	80.69
6/16/2022 21:19	48.82	6/16/2022 20:01	80.44	6/15/2022 18:24	18.94	6/15/2022 17:33	4.60	6/15/2022 22:29	80.59
6/16/2022 21:20	48.82	6/16/2022 20:02	80.47	6/15/2022 18:25	18.75	6/15/2022 17:34	4.62	6/15/2022 22:30	80.48
6/16/2022 21:21	48.81	6/16/2022 20:03	80.48	6/15/2022 18:26	18.58	6/15/2022 17:35	4.72	6/15/2022 22:31	80.39
6/16/2022 21:22	48.80	6/16/2022 20:04	80.48	6/15/2022 18:27	18.42	6/15/2022 17:36	4.83	6/15/2022 22:32	80.29
6/16/2022 21:23	48.81	6/16/2022 20:05	80.47	6/15/2022 18:28	18.32	6/15/2022 17:37	4.91	6/15/2022 22:33	80.18
6/16/2022 21:24	48.81	6/16/2022 20:06	80.44	6/15/2022 18:29	18.21	6/15/2022 17:38	4.84	6/15/2022 22:34	80.06
6/16/2022 21:25	48.81	6/16/2022 20:07	80.48	6/15/2022 18:30	18.12	6/15/2022 17:39	4.74	6/15/2022 22:35	79.92
6/16/2022 21:26	48.81	6/16/2022 20:08	80.50	6/15/2022 18:31	18.02	6/15/2022 17:40	4.82	6/15/2022 22:36	79.83
6/16/2022 21:27	48.80	6/16/2022 20:09	80.46	6/15/2022 18:32	17.97	6/15/2022 17:41	4.71	6/15/2022 22:37	79.73
6/16/2022 21:28	48.79	6/16/2022 20:10	80.48	6/15/2022 18:33	17.86	6/15/2022 17:42	4.71	6/15/2022 22:38	79.61
6/16/2022 21:29	48.82	6/16/2022 20:11	80.50	6/15/2022 18:34	17.82	6/15/2022 17:43	4.70	6/15/2022 22:39	79.52
6/16/2022 21:30	48.78	6/16/2022 20:12	80.46	6/15/2022 18:35	17.77	6/15/2022 17:44	4.62	6/15/2022 22:40	79.39
6/16/2022 21:31	48.82	6/16/2022 20:13	80.44	6/15/2022 18:36	17.69	6/15/2022 17:45	4.68	6/15/2022 22:41	79.28
6/16/2022 21:32	48.79	6/16/2022 20:14	80.47	6/15/2022 18:37	17.67	6/15/2022 17:46	4.61	6/15/2022 22:42	79.20
6/16/2022 21:33	48.79	6/16/2022 20:15	80.43	6/15/2022 18:38	17.58	6/15/2022 17:47	4.77	6/15/2022 22:43	79.09
6/16/2022 21:34	48.80	6/16/2022 20:16	80.46	6/15/2022 18:39	17.55	6/15/2022 17:48	4.62	6/15/2022 22:44	78.98
6/16/2022 21:35	48.79	6/16/2022 20:17	80.49	6/15/2022 18:40	17.53	6/15/2022 17:49	4.60	6/15/2022 22:45	78.89
6/16/2022 21:36	48.81	6/16/2022 20:18	80.46	6/15/2022 18:41	17.45	6/15/2022 17:50	4.66	6/15/2022 22:46	78.82
6/16/2022 21:37	48.81	6/16/2022 20:19	80.49	6/15/2022 18:42	17.43	6/15/2022 17:51	4.62	6/15/2022 22:47	78.74
6/16/2022 21:38	48.79	6/16/2022 20:20	80.45	6/15/2022 18:43	17.40	6/15/2022 17:52	4.63	6/15/2022 22:48	78.62
6/16/2022 21:39	48.78	6/16/2022 20:21	80.46	6/15/2022 18:44	20.73	6/15/2022 17:53	4.60	6/15/2022 22:49	78.54
6/16/2022 21:40	48.82	6/16/2022 20:22	80.44	6/15/2022 18:45	24.97	6/15/2022 17:54	4.73	6/15/2022 22:50	78.49
6/16/2022 21:41	48.79	6/16/2022 20:23	80.48	6/15/2022 18:46	27.64	6/15/2022 17:55	4.74	6/15/2022 22:51	78.38
6/16/2022 21:42	48.79	6/16/2022 20:24	80.48	6/15/2022 18:47	27.77	6/15/2022 17:56	4.77	6/15/2022 22:52	78.31
6/16/2022 21:43	48.78	6/16/2022 20:25	80.48	6/15/2022 18:48	24.76	6/15/2022 17:57	4.60	6/15/2022 22:53	78.23
6/16/2022 21:44	48.77	6/16/2022 20:26	80.48	6/15/2022 18:49	23.06	6/15/2022 17:58	4.62	6/15/2022 22:54	78.14
6/16/2022 21:45	48.77	6/16/2022 20:27	80.46	6/15/2022 18:50	22.00	6/15/2022 17:59	4.61	6/15/2022 22:55	78.07
6/16/2022 21:46	48.75	6/16/2022 20:28	80.45	6/15/2022 18:51	21.28	6/15/2022 18:00	4.57	6/15/2022 22:56	77.97
6/16/2022 21:47	48.77	6/16/2022 20:29	80.47	6/15/2022 18:52	20.73	6/15/2022 18:01	4.66	6/15/2022 22:57	77.88
6/16/2022 21:48	48.75	6/16/2022 20:30	80.49	6/15/2022 18:53	20.41	6/15/2022 18:02	4.57	6/15/2022 22:58	77.75
6/16/2022 21:49	48.77	6/16/2022 20:31	80.48	6/15/2022 18:54	20.13	6/15/2022 18:03	4.57	6/15/2022 22:59	77.68
6/16/2022 21:50	48.76	6/16/2022 20:32	80.45	6/15/2022 18:55	23.21	6/15/2022 18:04	4.56	6/15/2022 23:00	77.56
6/16/2022 21:51	48.82	6/16/2022 20:33	80.44	6/15/2022 18:56	27.24	6/15/2022 18:05	4.56	6/15/2022 23:01	77.48
6/16/2022 21:52	48.77	6/16/2022 20:34	80.45	6/15/2022 18:57	29.77	6/15/2022 18:06	4.54	6/15/2022 23:02	77.44
6/16/2022 21:53	48.77	6/16/2022 20:35	80.48	6/15/2022 18:58	29.69	6/15/2022 18:07	4.57	6/15/2022 23:03	77.35
6/16/2022 21:54	48.79	6/16/2022 20:36	80.47	6/15/2022 18:59	26.57	6/15/2022 18:08	4.51	6/15/2022 23:04	77.25
6/16/2022 21:55	48.74	6/16/2022 20:37	80.48	6/15/2022 19:00	24.77	6/15/2022 18:09	4.52	6/15/2022 23:05	77.17
6/16/2022 21:56	48.79	6/16/2022 20:38	80.47	6/15/2022 19:01	23.63	6/15/2022 18:10	4.51	6/15/2022 23:06	77.07
6/16/2022 21:57	48.76	6/16/2022 20:39	80.48	6/15/2022 19:02	22.85	6/15/2022 18:11	4.57	6/15/2022 23:07	76.98
6/16/2022 21:58	48.75	6/16/2022 20:40	80.48	6/15/2022 19:03	22.25	6/15/2022 18:12	4.55	6/15/2022 23:08	76.92
6/16/2022 21:59	48.76	6/16/2022 20:41	80.48	6/15/2022 19:04	21.81	6/15/2022 18:13	4.46	6/15/2022 23:09	76.86
6/16/2022 22:00	48.78	6/16/2022 20:42	80.46	6/15/2022 19:05	21.43	6/15/2022 18:14	4.48	6/15/2022 23:10	76.78
6/16/2022 22:01	48.77	6/16/2022 20:43	80.51	6/15/2022 19:06	21.45	6/15/2022 18:15	4.50	6/15/2022 23:11	76.70
6/16/2022 22:02	48.75	6/16/2022 20:44	80.48	6/15/2022 19:07	26.92	6/15/2022 18:16	4.47	6/15/2022 23:12	76.59
6/16/2022 22:03	48.78	6/16/2022 20:45	80.45	6/15/2022 19:08	29.90	6/15/2022 18:17	4.50	6/15/2022 23:13	76.54
6/16/2022 22:04	48.77	6/16/2022 20:46	80.48	6/15/2022 19:09	31.88	6/15/2022 18:18	4.49	6/15/2022 23:14	76.47

6/16/2022 22:05	48.77	6/16/2022 20:47	80.47	6/15/2022 19:10	28.87	6/15/2022 18:19	4.47	6/15/2022 23:15	76.43
6/16/2022 22:06	48.78	6/16/2022 20:48	80.48	6/15/2022 19:11	26.58	6/15/2022 18:20	4.46	6/15/2022 23:16	76.31
6/16/2022 22:07	48.79	6/16/2022 20:49	80.50	6/15/2022 19:12	25.17	6/15/2022 18:21	4.45	6/15/2022 23:17	76.22
6/16/2022 22:08	48.81	6/16/2022 20:50	80.47	6/15/2022 19:13	24.16	6/15/2022 18:22	4.45	6/15/2022 23:18	76.14
6/16/2022 22:09	48.83	6/16/2022 20:51	80.50	6/15/2022 19:14	23.50	6/15/2022 18:23	4.49	6/15/2022 23:19	76.08
6/16/2022 22:10	48.79	6/16/2022 20:52	80.47	6/15/2022 19:15	22.89	6/15/2022 18:24	4.55	6/15/2022 23:20	75.95
6/16/2022 22:11	48.78	6/16/2022 20:53	80.48	6/15/2022 19:16	22.51	6/15/2022 18:25	4.49	6/15/2022 23:21	75.90
6/16/2022 22:12	48.80	6/16/2022 20:54	80.49	6/15/2022 19:17	22.12	6/15/2022 18:26	4.50	6/15/2022 23:22	75.82
6/16/2022 22:13	48.79	6/16/2022 20:55	80.48	6/15/2022 19:18	21.88	6/15/2022 18:27	4.46	6/15/2022 23:23	75.75
6/16/2022 22:14	48.79	6/16/2022 20:56	80.47	6/15/2022 19:19	21.60	6/15/2022 18:28	4.46	6/15/2022 23:24	75.63
6/16/2022 22:15	48.81	6/16/2022 20:57	80.47	6/15/2022 19:20	21.34	6/15/2022 18:29	4.45	6/15/2022 23:25	75.58
6/16/2022 22:16	48.80	6/16/2022 20:58	80.47	6/15/2022 19:21	21.19	6/15/2022 18:30	4.82	6/15/2022 23:26	75.48
6/16/2022 22:17	48.80	6/16/2022 20:59	80.47	6/15/2022 19:22	21.02	6/15/2022 18:31	4.71	6/15/2022 23:27	75.42
6/16/2022 22:18	48.79	6/16/2022 21:00	80.48	6/15/2022 19:23	20.86	6/15/2022 18:32	4.59	6/15/2022 23:28	75.37
6/16/2022 22:19	48.80	6/16/2022 21:01	80.44	6/15/2022 19:24	20.67	6/15/2022 18:33	4.65	6/15/2022 23:29	75.25
6/16/2022 22:20	48.81	6/16/2022 21:02	80.49	6/15/2022 19:25	20.55	6/15/2022 18:34	4.65	6/15/2022 23:30	75.20
6/16/2022 22:21	48.80	6/16/2022 21:03	80.48	6/15/2022 19:26	20.41	6/15/2022 18:35	4.61	6/15/2022 23:31	75.11
6/16/2022 22:22	48.79	6/16/2022 21:04	80.45	6/15/2022 19:27	20.32	6/15/2022 18:36	4.56	6/15/2022 23:32	75.01
6/16/2022 22:23	48.76	6/16/2022 21:05	80.46	6/15/2022 19:28	20.18	6/15/2022 18:37	4.48	6/15/2022 23:33	75.01
6/16/2022 22:24	48.82	6/16/2022 21:06	80.45	6/15/2022 19:29	20.09	6/15/2022 18:38	4.68	6/15/2022 23:34	74.89
6/16/2022 22:25	48.81	6/16/2022 21:07	80.43	6/15/2022 19:30	19.98	6/15/2022 18:39	4.61	6/15/2022 23:35	74.83
6/16/2022 22:26	48.80	6/16/2022 21:08	80.49	6/15/2022 19:31	19.92	6/15/2022 18:40	4.58	6/15/2022 23:36	74.75
6/16/2022 22:27	48.82	6/16/2022 21:09	80.46	6/15/2022 19:32	19.78	6/15/2022 18:41	4.49	6/15/2022 23:37	74.71
6/16/2022 22:28	48.81	6/16/2022 21:10	80.48	6/15/2022 19:33	19.71	6/15/2022 18:42	4.46	6/15/2022 23:38	74.62
6/16/2022 22:29	48.82	6/16/2022 21:11	80.47	6/15/2022 19:34	19.66	6/15/2022 18:43	4.47	6/15/2022 23:39	74.54
6/16/2022 22:30	48.78	6/16/2022 21:12	80.46	6/15/2022 19:35	19.54	6/15/2022 18:44	4.47	6/15/2022 23:40	74.47
6/16/2022 22:31	48.79	6/16/2022 21:13	80.49	6/15/2022 19:36	19.54	6/15/2022 18:45	4.49	6/15/2022 23:41	74.39
6/16/2022 22:32	48.79	6/16/2022 21:14	80.43	6/15/2022 19:37	19.46	6/15/2022 18:46	4.42	6/15/2022 23:42	74.33
6/16/2022 22:33	48.78	6/16/2022 21:15	80.44	6/15/2022 19:38	19.35	6/15/2022 18:47	4.43	6/15/2022 23:43	74.28
6/16/2022 22:34	48.75	6/16/2022 21:16	80.48	6/15/2022 19:39	19.31	6/15/2022 18:48	4.50	6/15/2022 23:44	74.21
6/16/2022 22:35	48.78	6/16/2022 21:17	80.44	6/15/2022 19:40	19.28	6/15/2022 18:49	4.53	6/15/2022 23:45	74.15
6/16/2022 22:36	48.79	6/16/2022 21:18	80.44	6/15/2022 19:41	19.21	6/15/2022 18:50	4.42	6/15/2022 23:46	74.08
6/16/2022 22:37	48.81	6/16/2022 21:19	80.52	6/15/2022 19:42	19.16	6/15/2022 18:51	4.41	6/15/2022 23:47	74.04
6/16/2022 22:38	48.78	6/16/2022 21:20	80.47	6/15/2022 19:43	19.06	6/15/2022 18:52	4.44	6/15/2022 23:48	73.95
6/16/2022 22:39	48.76	6/16/2022 21:21	80.46	6/15/2022 19:44	19.04	6/15/2022 18:53	4.47	6/15/2022 23:49	73.90
6/16/2022 22:40	48.73	6/16/2022 21:22	80.45	6/15/2022 19:45	18.99	6/15/2022 18:54	4.47	6/15/2022 23:50	73.82
6/16/2022 22:41	48.80	6/16/2022 21:23	80.48	6/15/2022 19:46	18.95	6/15/2022 18:55	4.42	6/15/2022 23:51	73.76
6/16/2022 22:42	48.79	6/16/2022 21:24	80.49	6/15/2022 19:47	18.89	6/15/2022 18:56	4.39	6/15/2022 23:52	73.71
6/16/2022 22:43	48.78	6/16/2022 21:25	80.42	6/15/2022 19:48	18.80	6/15/2022 18:57	4.43	6/15/2022 23:53	73.65
6/16/2022 22:44	48.78	6/16/2022 21:26	80.48	6/15/2022 19:49	18.83	6/15/2022 18:58	4.42	6/15/2022 23:54	73.58
6/16/2022 22:45	48.77	6/16/2022 21:27	80.45	6/15/2022 19:50	18.74	6/15/2022 18:59	4.43	6/15/2022 23:55	73.53
6/16/2022 22:46	48.78	6/16/2022 21:28	80.46	6/15/2022 19:51	18.73	6/15/2022 19:00	4.38	6/15/2022 23:56	73.47
6/16/2022 22:47	48.76	6/16/2022 21:29	80.46	6/15/2022 19:52	18.63	6/15/2022 19:01	4.36	6/15/2022 23:57	73.41
6/16/2022 22:48	48.77	6/16/2022 21:30	80.48	6/15/2022 19:53	18.67	6/15/2022 19:02	4.36	6/15/2022 23:58	73.34
6/16/2022 22:49	48.80	6/16/2022 21:31	80.46	6/15/2022 19:54	18.63	6/15/2022 19:03	4.42	6/15/2022 23:59	73.29
6/16/2022 22:50	48.74	6/16/2022 21:32	80.47	6/15/2022 19:55	18.56	6/15/2022 19:04	4.35	6/16/2022 0:00	73.24
6/16/2022 22:51	48.76	6/16/2022 21:33	80.48	6/15/2022 19:56	18.47	6/15/2022 19:05	4.35	6/16/2022 0:01	73.18
6/16/2022 22:52	48.78	6/16/2022 21:34	80.47	6/15/2022 19:57	18.48	6/15/2022 19:06	4.31	6/16/2022 0:02	73.14
6/16/2022 22:53	48.77	6/16/2022 21:35	80.45	6/15/2022 19:58	18.45	6/15/2022 19:07	4.40	6/16/2022 0:03	73.06
6/16/2022 22:54	48.78	6/16/2022 21:36	80.48	6/15/2022 19:59	18.40	6/15/2022 19:08	4.37	6/16/2022 0:04	73.00
6/16/2022 22:55	48.74	6/16/2022 21:37	80.45	6/15/2022 20:00	18.35	6/15/2022 19:09	4.32	6/16/2022 0:05	72.91
6/16/2022 22:56	48.76	6/16/2022 21:38	80.52	6/15/2022 20:01	18.32	6/15/2022 19:10	4.35	6/16/2022 0:06	72.91
6/16/2022 22:57	48.79	6/16/2022 21:39	80.44	6/15/2022 20:02	18.33	6/15/2022 19:11	4.29	6/16/2022 0:07	72.81
6/16/2022 22:58	48.77	6/16/2022 21:40	80.48	6/15/2022 20:03	18.27	6/15/2022 19:12	4.61	6/16/2022 0:08	72.75
6/16/2022 22:59	48.80	6/16/2022 21:41	80.46	6/15/2022 20:04	18.22	6/15/2022 19:13	4.60	6/16/2022 0:09	72.74
6/16/2022 23:00	48.74	6/16/2022 21:42	80.48	6/15/2022 20:05	18.23	6/15/2022 19:14	4.48	6/16/2022 0:10	72.72
6/16/2022 23:01	48.76	6/16/2022 21:43	80.47	6/15/2022 20:06	18.18	6/15/2022 19:15	4.38	6/16/2022 0:11	72.61
6/16/2022 23:02	48.74	6/16/2022 21:44	80.48	6/15/2022 20:07	18.14	6/15/2022 19:16	4.46	6/16/2022 0:12	72.57
6/16/2022 23:03	48.75	6/16/2022 21:45	80.46	6/15/2022 20:08	18.18	6/15/2022 19:17	4.41	6/16/2022 0:13	72.49
6/16/2022 23:04	48.75	6/16/2022 21:46	80.44	6/15/2022 20:09	18.13	6/15/2022 19:18	4.35	6/16/2022 0:14	72.49
6/16/2022 23:05	48.80	6/16/2022 21:47	80.46	6/15/2022 20:10	18.10	6/15/2022 19:19	4.30	6/16/2022 0:15	72.46
6/16/2022 23:06	48.73	6/16/2022 21:48	80.45	6/15/2022 20:11	18.03	6/15/2022 19:20	4.33	6/16/2022 0:16	72.39
6/16/2022 23:07	48.78	6/16/2022 21:49	80.46	6/15/2022 20:12	18.00	6/15/2022 19:21	4.36	6/16/2022 0:17	72.31
6/16/2022 23:08	48.75	6/16/2022 21:50	80.48	6/15/2022 20:13	18.00	6/15/2022 19:22	4.37	6/16/2022 0:18	72.26
6/16/2022 23:09	48.76	6/16/2022 21:51	80.46	6/15/2022 20:14	17.98	6/15/2022 19:23	4.34	6/16/2022 0:19	72.24
6/16/2022 23:10	48.77	6/16/2022 21:52	80.50	6/15/2022 20:15	17.94	6/15/2022 19:24	4.29	6/16/2022 0:20	72.17
6/16/2022 23:11	48.75	6/16/2022 21:53	80.46	6/15/2022 20:16	17.93	6/15/2022 19:25	4.32	6/16/2022 0:21	72.12
6/16/2022 23:12	48.75	6/16/2022 21:54	80.45	6/15/2022 20:17	17.89	6/15/2022 19:26	4.28	6/16/2022 0:22	72.06
6/16/2022 23:13	48.72	6/16/2022 21:55	80.43	6/15/2022 20:18	17.86	6/15/2022 19:27	4.33	6/16/2022 0:23	72.05
6/16/2022 23:14	48.74	6/16/2022 21:56	80.49	6/15/2022 20:19	17.88	6/15/2022 19:28	4.44	6/16/2022 0:24	72.01
6/16/2022 23:15	48.74	6/16/2022 21:57	80.46	6/15/2022 20:20	17.81	6/15/2022 19:29	4.37	6/16/2022 0:25	71.95
6/16/2022 23:16	48.77	6/16/2022 21:58	80.45	6/15/2022 20:21	17.80	6/15/2022 19:30	4.28	6/16/2022 0:26	71.93
6/16/2022 23:17	48.76	6/16/2022 21:59	80.44	6/15/2022 20:22	17.76	6/15/2022 19:31	4.32	6/16/2022 0:27	71.84
6/16/2022 23:18	48.78	6/16/2022 22:00	80.49	6/15/2022 20:23	17.76	6/15/2022 19:32	4.33	6/16/2022 0:28	71.82
6/16/2022 23:19	48.74	6/16/2022 22:01	80.48	6/15/2022 20:24	17.76	6/15/2022 19:33	4.26	6/16/2022 0:29	71.73
6/16/2022 23:20	48.75	6/16/2022 22:02	80.45	6/15/2022 20:25	17.70	6/15/2022 19:34	4.23	6/16/2022 0:30	71.74
6/16/2022 23:21	48.77	6/16/2022 22:03	80.43	6/15/2022 20:26	17.69	6/15/2022 19:35	4.28	6/16/2022 0:31	71.67
6/16/2022 23:22	48.75	6/16/2022 22:04	80.48	6/15/2022 20:27	17.73	6/15/2022 19:36	4.26	6/16/2022 0:32	71.65
6/16/2022 23:23	48.73	6/16/2022 22:05	80.47	6/15/2022 20:28	17.64	6/15/2022 19:37	4.29	6/16/2022 0:33	71.59
6/16/2022 23:24	48.73	6/16/2022 22:06	80.47	6/15/2022 20:29	17.69	6/15/2022 19:38	4.24	6/16/2022 0:34	71.58
6/16/2022 23:25	48.75	6/16/2022 22:07	80.45	6/15/2022 20:30	17.62	6/15/2022 19:39	4.24	6/16/2022 0:35	71.46
6/16/2022 23:26	48.74	6/16/2022 22:08	80.48	6/15/2022 20:31	17.58	6/15/2022 19:40	4.25	6/16/2022 0:36	71.49
6/16/2022 23:27	48.75	6/16/2022 22:09	80.44	6/15/2022 20:32	17.58	6/15/2022 19:41	4.29	6/16/2022 0:37	71.40
6/16/2022 23:28	48.74	6/16/2022 22:10	80.48	6/15/2022 20:33	17.58	6/15/2022 19:42	4.16	6/16/2022 0:38	71.40
6/16/2022 23:29	48.73	6/16/2022 22:11	81.05	6/15/2022 20:34	17.57	6/15/2022 19:43	4.24	6/16/2022 0:39	71.36
6/16/2022 23:30	48.74	6/16/2022 22:12	81.58	6/15/2022 20:35	17.53	6/15/2022 19:44	4.19	6/16/2022 0:40	71.30
6/16/2022 23:31	48.75	6/16/2022 22:13	81.40	6/15/2022 20:36	17.53	6/15/2022 19:45	4.23	6/16/2022 0:41	71.26
6/16/2022 23:32	48.74	6/16/2022 22:14	81.22	6/15/2022 20:37	17.49	6/15/2022 19:46	4.28	6/16/2022 0:42	71.23

6/16/2022 23:33	48.73	6/16/2022 22:15	81.10	6/15/2022 20:38	17.48	6/15/2022 19:47	4.17	6/16/2022 0:43	71.19
6/16/2022 23:34	48.74	6/16/2022 22:16	81.01	6/15/2022 20:39	17.47	6/15/2022 19:48	4.13	6/16/2022 0:44	71.12
6/16/2022 23:35	48.76	6/16/2022 22:17	81.01	6/15/2022 20:40	17.47	6/15/2022 19:49	4.26	6/16/2022 0:45	71.11
6/16/2022 23:36	48.74	6/16/2022 22:18	80.93	6/15/2022 20:41	17.46	6/15/2022 19:50	4.23	6/16/2022 0:46	71.04
6/16/2022 23:37	48.75	6/16/2022 22:19	80.88	6/15/2022 20:42	17.41	6/15/2022 19:51	4.19	6/16/2022 0:47	71.05
6/16/2022 23:38	48.74	6/16/2022 22:20	80.88	6/15/2022 20:43	17.43	6/15/2022 19:52	4.15	6/16/2022 0:48	70.99
6/16/2022 23:39	48.76	6/16/2022 22:21	80.79	6/15/2022 20:44	17.40	6/15/2022 19:53	4.22	6/16/2022 0:49	70.94
6/16/2022 23:40	48.74	6/16/2022 22:22	80.78	6/15/2022 20:45	17.37	6/15/2022 19:54	4.22	6/16/2022 0:50	70.94
6/16/2022 23:41	48.73	6/16/2022 22:23	80.73	6/15/2022 20:46	17.36	6/15/2022 19:55	4.26	6/16/2022 0:51	70.91
6/16/2022 23:42	48.78	6/16/2022 22:24	80.72	6/15/2022 20:47	17.34	6/15/2022 19:56	4.22	6/16/2022 0:52	70.81
6/16/2022 23:43	48.72	6/16/2022 22:25	80.66	6/15/2022 20:48	17.34	6/15/2022 19:57	4.22	6/16/2022 0:53	70.82
6/16/2022 23:44	48.72	6/16/2022 22:26	80.69	6/15/2022 20:49	17.32	6/15/2022 19:58	4.19	6/16/2022 0:54	70.74
6/16/2022 23:45	48.74	6/16/2022 22:27	80.64	6/15/2022 20:50	17.32	6/15/2022 19:59	4.25	6/16/2022 0:55	70.74
6/16/2022 23:46	48.71	6/16/2022 22:28	80.64	6/15/2022 20:51	17.29	6/15/2022 20:00	4.35	6/16/2022 0:56	70.69
6/16/2022 23:47	48.73	6/16/2022 22:29	80.65	6/15/2022 20:52	17.29	6/15/2022 20:01	4.41	6/16/2022 0:57	70.68
6/16/2022 23:48	48.76	6/16/2022 22:30	80.63	6/15/2022 20:53	17.26	6/15/2022 20:02	4.37	6/16/2022 0:58	70.61
6/16/2022 23:49	48.71	6/16/2022 22:31	80.61	6/15/2022 20:54	17.26	6/15/2022 20:03	4.32	6/16/2022 0:59	70.55
6/16/2022 23:50	48.71	6/16/2022 22:32	80.62	6/15/2022 20:55	17.23	6/15/2022 20:04	4.40	6/16/2022 1:00	70.51
6/16/2022 23:51	48.70	6/16/2022 22:33	80.63	6/15/2022 20:56	17.22	6/15/2022 20:05	4.28	6/16/2022 1:01	70.53
6/16/2022 23:52	48.72	6/16/2022 22:34	80.64	6/15/2022 20:57	17.24	6/15/2022 20:06	4.32	6/16/2022 1:02	70.49
6/16/2022 23:53	48.73	6/16/2022 22:35	80.55	6/15/2022 20:58	17.20	6/15/2022 20:07	4.31	6/16/2022 1:03	70.44
6/16/2022 23:54	48.73	6/16/2022 22:36	80.57	6/15/2022 20:59	17.18	6/15/2022 20:08	4.33	6/16/2022 1:04	70.38
6/16/2022 23:55	48.70	6/16/2022 22:37	80.54	6/15/2022 21:00	17.20	6/15/2022 20:09	4.43	6/16/2022 1:05	70.36
6/16/2022 23:56	48.70	6/16/2022 22:38	80.55	6/15/2022 21:01	17.10	6/15/2022 20:10	4.54	6/16/2022 1:06	70.34
6/16/2022 23:57	48.72	6/16/2022 22:39	80.56	6/15/2022 21:02	17.18	6/15/2022 20:11	4.49	6/16/2022 1:07	70.30
6/16/2022 23:58	48.72	6/16/2022 22:40	80.55	6/15/2022 21:03	17.14	6/15/2022 20:12	4.36	6/16/2022 1:08	70.25
6/16/2022 23:59	48.71	6/16/2022 22:41	80.53	6/15/2022 21:04	17.13	6/15/2022 20:13	4.36	6/16/2022 1:09	70.26
6/17/2022 0:00	48.72	6/16/2022 22:42	80.57	6/15/2022 21:05	17.10	6/15/2022 20:14	4.29	6/16/2022 1:10	70.20
6/17/2022 0:01	48.75	6/16/2022 22:43	80.55	6/15/2022 21:06	17.12	6/15/2022 20:15	4.33	6/16/2022 1:11	70.17
6/17/2022 0:02	48.73	6/16/2022 22:44	80.53	6/15/2022 21:07	17.12	6/15/2022 20:16	4.26	6/16/2022 1:12	70.16
6/17/2022 0:03	48.70	6/16/2022 22:45	80.58	6/15/2022 21:08	17.11	6/15/2022 20:17	4.22	6/16/2022 1:13	70.13
6/17/2022 0:04	48.75	6/16/2022 22:46	80.54	6/15/2022 21:09	17.04	6/15/2022 20:18	4.22	6/16/2022 1:14	70.08
6/17/2022 0:05	48.72	6/16/2022 22:47	80.50	6/15/2022 21:10	17.06	6/15/2022 20:19	4.34	6/16/2022 1:15	70.06
6/17/2022 0:06	48.67	6/16/2022 22:48	80.50	6/15/2022 21:11	17.04	6/15/2022 20:20	4.45	6/16/2022 1:16	70.00
6/17/2022 0:07	48.73	6/16/2022 22:49	80.52	6/15/2022 21:12	17.06	6/15/2022 20:21	4.55	6/16/2022 1:17	69.97
6/17/2022 0:08	48.73	6/16/2022 22:50	80.54	6/15/2022 21:13	17.04	6/15/2022 20:22	4.60	6/16/2022 1:18	69.96
6/17/2022 0:09	48.70	6/16/2022 22:51	80.53	6/15/2022 21:14	17.00	6/15/2022 20:23	4.68	6/16/2022 1:19	69.90
6/17/2022 0:10	48.73	6/16/2022 22:52	80.56	6/15/2022 21:15	17.03	6/15/2022 20:24	4.54	6/16/2022 1:20	69.90
6/17/2022 0:11	48.70	6/16/2022 22:53	80.49	6/15/2022 21:16	16.99	6/15/2022 20:25	4.43	6/16/2022 1:21	69.87
6/17/2022 0:12	48.72	6/16/2022 22:54	80.55	6/15/2022 21:17	16.98	6/15/2022 20:26	4.62	6/16/2022 1:22	69.83
6/17/2022 0:13	48.73	6/16/2022 22:55	80.52	6/15/2022 21:18	17.01	6/15/2022 20:27	4.61	6/16/2022 1:23	69.81
6/17/2022 0:14	48.71	6/16/2022 22:56	80.53	6/15/2022 21:19	16.97	6/15/2022 20:28	4.48	6/16/2022 1:24	69.78
6/17/2022 0:15	48.76	6/16/2022 22:57	80.48	6/15/2022 21:20	17.00	6/15/2022 20:29	4.43	6/16/2022 1:25	69.75
6/17/2022 0:16	48.69	6/16/2022 22:58	80.54	6/15/2022 21:21	16.95	6/15/2022 20:30	4.58	6/16/2022 1:26	69.72
6/17/2022 0:17	48.70	6/16/2022 22:59	80.52	6/15/2022 21:22	16.95	6/15/2022 20:31	4.45	6/16/2022 1:27	69.68
6/17/2022 0:18	48.71	6/16/2022 23:00	80.52	6/15/2022 21:23	16.95	6/15/2022 20:32	4.42	6/16/2022 1:28	69.65
6/17/2022 0:19	48.68	6/16/2022 23:01	80.52	6/15/2022 21:24	16.96	6/15/2022 20:33	4.36	6/16/2022 1:29	69.64
6/17/2022 0:20	48.71	6/16/2022 23:02	80.50	6/15/2022 21:25	16.94	6/15/2022 20:34	4.36	6/16/2022 1:30	69.60
6/17/2022 0:21	48.69	6/16/2022 23:03	80.51	6/15/2022 21:26	16.92	6/15/2022 20:35	4.29	6/16/2022 1:31	69.56
6/17/2022 0:22	48.71	6/16/2022 23:04	80.51	6/15/2022 21:27	16.88	6/15/2022 20:36	4.29	6/16/2022 1:32	69.57
6/17/2022 0:23	48.71	6/16/2022 23:05	80.50	6/15/2022 21:28	16.93	6/15/2022 20:37	4.30	6/16/2022 1:33	69.52
6/17/2022 0:24	48.70	6/16/2022 23:06	80.50	6/15/2022 21:29	16.90	6/15/2022 20:38	4.28	6/16/2022 1:34	69.48
6/17/2022 0:25	48.73	6/16/2022 23:07	80.49	6/15/2022 21:30	16.91	6/15/2022 20:39	4.24	6/16/2022 1:35	69.45
6/17/2022 0:26	48.73	6/16/2022 23:08	80.51	6/15/2022 21:31	16.90	6/15/2022 20:40	4.24	6/16/2022 1:36	69.42
6/17/2022 0:27	48.73	6/16/2022 23:09	80.56	6/15/2022 21:32	16.94	6/15/2022 20:41	4.24	6/16/2022 1:37	69.39
6/17/2022 0:28	48.70	6/16/2022 23:10	80.50	6/15/2022 21:33	16.86	6/15/2022 20:42	4.27	6/16/2022 1:38	69.35
6/17/2022 0:29	48.70	6/16/2022 23:11	80.52	6/15/2022 21:34	16.88	6/15/2022 20:43	4.31	6/16/2022 1:39	69.33
6/17/2022 0:30	48.71	6/16/2022 23:12	80.52	6/15/2022 21:35	16.88	6/15/2022 20:44	4.20	6/16/2022 1:40	69.33
6/17/2022 0:31	48.70	6/16/2022 23:13	80.52	6/15/2022 21:36	16.83	6/15/2022 20:45	4.21	6/16/2022 1:41	69.29
6/17/2022 0:32	48.68	6/16/2022 23:14	80.50	6/15/2022 21:37	16.86	6/15/2022 20:46	4.21	6/16/2022 1:42	69.22
6/17/2022 0:33	48.69	6/16/2022 23:15	80.52	6/15/2022 21:38	16.87	6/15/2022 20:47	4.30	6/16/2022 1:43	69.28
6/17/2022 0:34	48.74	6/16/2022 23:16	80.51	6/15/2022 21:39	16.82	6/15/2022 20:48	4.19	6/16/2022 1:44	69.22
6/17/2022 0:35	48.70	6/16/2022 23:17	80.49	6/15/2022 21:40	16.87	6/15/2022 20:49	4.18	6/16/2022 1:45	69.21
6/17/2022 0:36	48.70	6/16/2022 23:18	80.50	6/15/2022 21:41	16.81	6/15/2022 20:50	4.19	6/16/2022 1:46	69.16
6/17/2022 0:37	48.67	6/16/2022 23:19	80.52	6/15/2022 21:42	16.82	6/15/2022 20:51	4.19	6/16/2022 1:47	69.15
6/17/2022 0:38	48.69	6/16/2022 23:20	80.50	6/15/2022 21:43	16.80	6/15/2022 20:52	4.20	6/16/2022 1:48	69.08
6/17/2022 0:39	48.71	6/16/2022 23:21	80.54	6/15/2022 21:44	16.88	6/15/2022 20:53	4.21	6/16/2022 1:49	69.10
6/17/2022 0:40	48.72	6/16/2022 23:22	80.48	6/15/2022 21:45	16.79	6/15/2022 20:54	4.18	6/16/2022 1:50	69.08
6/17/2022 0:41	48.72	6/16/2022 23:23	80.51	6/15/2022 21:46	16.75	6/15/2022 20:55	4.20	6/16/2022 1:51	69.03
6/17/2022 0:42	48.67	6/16/2022 23:24	80.52	6/15/2022 21:47	16.84	6/15/2022 20:56	4.21	6/16/2022 1:52	69.01
6/17/2022 0:43	48.71	6/16/2022 23:25	80.49	6/15/2022 21:48	16.80	6/15/2022 20:57	4.13	6/16/2022 1:53	68.97
6/17/2022 0:44	48.70	6/16/2022 23:26	80.56	6/15/2022 21:49	16.82	6/15/2022 20:58	4.14	6/16/2022 1:54	68.97
6/17/2022 0:45	48.69	6/16/2022 23:27	80.52	6/15/2022 21:50	16.83	6/15/2022 20:59	4.15	6/16/2022 1:55	68.94
6/17/2022 0:46	48.71	6/16/2022 23:28	80.51	6/15/2022 21:51	16.81	6/15/2022 21:00	4.15	6/16/2022 1:56	68.92
6/17/2022 0:47	48.68	6/16/2022 23:29	80.49	6/15/2022 21:52	16.74	6/15/2022 21:01	4.12	6/16/2022 1:57	68.89
6/17/2022 0:48	48.72	6/16/2022 23:30	80.52	6/15/2022 21:53	16.80	6/15/2022 21:02	4.12	6/16/2022 1:58	68.90
6/17/2022 0:49	48.65	6/16/2022 23:31	80.47	6/15/2022 21:54	16.76	6/15/2022 21:03	4.13	6/16/2022 1:59	68.86
6/17/2022 0:50	48.65	6/16/2022 23:32	80.50	6/15/2022 21:55	16.78	6/15/2022 21:04	4.16	6/16/2022 2:00	74.73
6/17/2022 0:51	48.66	6/16/2022 23:33	80.51	6/15/2022 21:56	16.75	6/15/2022 21:05	4.18	6/16/2022 2:01	81.49
6/17/2022 0:52	48.68	6/16/2022 23:34	80.54	6/15/2022 21:57	16.78	6/15/2022 21:06	4.13	6/16/2022 2:02	84.41
6/17/2022 0:53	48.69	6/16/2022 23:35	80.50	6/15/2022 21:58	16.73	6/15/2022 21:07	4.18	6/16/2022 2:03	87.60
6/17/2022 0:54	48.74	6/16/2022 23:36	80.51	6/15/2022 21:59	16.73	6/15/2022 21:08	4.26	6/16/2022 2:04	94.19
6/17/2022 0:55	48.67	6/16/2022 23:37	80.54	6/15/2022 22:00	16.70	6/15/2022 21:09	4.39	6/16/2022 2:05	98.75
6/17/2022 0:56	48.67	6/16/2022 23:38	80.49	6/15/2022 22:01	16.73	6/15/2022 21:10	4.46	6/16/2022 2:06	99.39
6/17/2022 0:57	48.67	6/16/2022 23:39	80.51	6/15/2022 22:02	16.73	6/15/2022 21:11	4.48	6/16/2022 2:07	106.15
6/17/2022 0:58	48.68	6/16/2022 23:40	80.50	6/15/2022 22:03	16.72	6/15/2022 21:12	4.57	6/16/2022 2:08	112.52
6/17/2022 0:59	48.68	6/16/2022 23:41	80.50	6/15/2022 22:04	16.73	6/15/2022 21:13	4.44	6/16/2022 2:09	112.96
6/17/2022 1:00	48.67	6/16/2022 23:42	80.47	6/15/2022 22:05	16.72	6/15/2022 21:14	4.38	6/16/2022 2:10	117.50

6/17/2022 1:01	48.67	6/16/2022 23:43	80.55	6/15/2022 22:06	16.70	6/15/2022 21:15	4.25	6/16/2022 2:11	123.80
6/17/2022 1:02	48.70	6/16/2022 23:44	80.49	6/15/2022 22:07	16.71	6/15/2022 21:16	4.43	6/16/2022 2:12	129.12
6/17/2022 1:03	48.69	6/16/2022 23:45	80.52	6/15/2022 22:08	16.71	6/15/2022 21:17	4.47	6/16/2022 2:13	128.10
6/17/2022 1:04	48.64	6/16/2022 23:46	80.46	6/15/2022 22:09	16.69	6/15/2022 21:18	4.34	6/16/2022 2:14	134.43
6/17/2022 1:05	48.70	6/16/2022 23:47	80.52	6/15/2022 22:10	16.71	6/15/2022 21:19	4.31	6/16/2022 2:15	140.46
6/17/2022 1:06	48.68	6/16/2022 23:48	80.50	6/15/2022 22:11	16.64	6/15/2022 21:20	4.24	6/16/2022 2:16	144.98
6/17/2022 1:07	48.69	6/16/2022 23:49	80.47	6/15/2022 22:12	16.67	6/15/2022 21:21	4.33	6/16/2022 2:17	144.94
6/17/2022 1:08	48.69	6/16/2022 23:50	80.50	6/15/2022 22:13	16.65	6/15/2022 21:22	4.22	6/16/2022 2:18	144.94
6/17/2022 1:09	48.68	6/16/2022 23:51	80.48	6/15/2022 22:14	16.64	6/15/2022 21:23	4.26	6/16/2022 2:19	144.96
6/17/2022 1:10	48.67	6/16/2022 23:52	80.54	6/15/2022 22:15	16.62	6/15/2022 21:24	4.26	6/16/2022 2:20	144.95
6/17/2022 1:11	48.65	6/16/2022 23:53	80.50	6/15/2022 22:16	16.66	6/15/2022 21:25	4.20	6/16/2022 2:21	144.95
6/17/2022 1:12	48.66	6/16/2022 23:54	80.49	6/15/2022 22:17	16.67	6/15/2022 21:26	4.14	6/16/2022 2:22	144.93
6/17/2022 1:13	48.65	6/16/2022 23:55	80.50	6/15/2022 22:18	16.62	6/15/2022 21:27	4.18	6/16/2022 2:23	144.96
6/17/2022 1:14	48.67	6/16/2022 23:56	80.48	6/15/2022 22:19	16.66	6/15/2022 21:28	4.15	6/16/2022 2:24	144.95
6/17/2022 1:15	48.68	6/16/2022 23:57	80.50	6/15/2022 22:20	16.66	6/15/2022 21:29	4.19	6/16/2022 2:25	144.93
6/17/2022 1:16	48.68	6/16/2022 23:58	80.45	6/15/2022 22:21	16.60	6/15/2022 21:30	4.20	6/16/2022 2:26	144.94
6/17/2022 1:17	48.66	6/16/2022 23:59	80.52	6/15/2022 22:22	16.63	6/15/2022 21:31	4.21	6/16/2022 2:27	144.94
6/17/2022 1:18	48.65	6/17/2022 0:00	80.50	6/15/2022 22:23	16.63	6/15/2022 21:32	4.15	6/16/2022 2:28	144.94
6/17/2022 1:19	48.66	6/17/2022 0:01	80.50	6/15/2022 22:24	16.68	6/15/2022 21:33	4.17	6/16/2022 2:29	144.97
6/17/2022 1:20	48.68	6/17/2022 0:02	80.49	6/15/2022 22:25	16.60	6/15/2022 21:34	4.17	6/16/2022 2:30	144.91
6/17/2022 1:21	48.68	6/17/2022 0:03	80.48	6/15/2022 22:26	16.61	6/15/2022 21:35	4.12	6/16/2022 2:31	144.94
6/17/2022 1:22	48.70	6/17/2022 0:04	80.52	6/15/2022 22:27	16.60	6/15/2022 21:36	4.14	6/16/2022 2:32	144.97
6/17/2022 1:23	48.67	6/17/2022 0:05	80.52	6/15/2022 22:28	16.58	6/15/2022 21:37	4.14	6/16/2022 2:33	144.94
6/17/2022 1:24	48.68	6/17/2022 0:06	80.53	6/15/2022 22:29	16.62	6/15/2022 21:38	4.11	6/16/2022 2:34	144.94
6/17/2022 1:25	48.65	6/17/2022 0:07	80.49	6/15/2022 22:30	16.59	6/15/2022 21:39	4.15	6/16/2022 2:35	144.91
6/17/2022 1:26	48.64	6/17/2022 0:08	80.50	6/15/2022 22:31	16.53	6/15/2022 21:40	4.19	6/16/2022 2:36	144.97
6/17/2022 1:27	48.64	6/17/2022 0:09	80.52	6/15/2022 22:32	16.57	6/15/2022 21:41	4.10	6/16/2022 2:37	144.95
6/17/2022 1:28	48.65	6/17/2022 0:10	80.50	6/15/2022 22:33	16.58	6/15/2022 21:42	4.11	6/16/2022 2:38	144.93
6/17/2022 1:29	48.67	6/17/2022 0:11	80.49	6/15/2022 22:34	16.61	6/15/2022 21:43	4.07	6/16/2022 2:39	144.94
6/17/2022 1:30	48.65	6/17/2022 0:12	80.47	6/15/2022 22:35	16.58	6/15/2022 21:44	4.08	6/16/2022 2:40	144.93
6/17/2022 1:31	48.65	6/17/2022 0:13	80.50	6/15/2022 22:36	16.55	6/15/2022 21:45	4.16	6/16/2022 2:41	144.92
6/17/2022 1:32	48.65	6/17/2022 0:14	80.49	6/15/2022 22:37	16.53	6/15/2022 21:46	4.00	6/16/2022 2:42	144.95
6/17/2022 1:33	48.66	6/17/2022 0:15	80.50	6/15/2022 22:38	16.53	6/15/2022 21:47	4.08	6/16/2022 2:43	144.93
6/17/2022 1:34	48.63	6/17/2022 0:16	80.49	6/15/2022 22:39	16.53	6/15/2022 21:48	4.07	6/16/2022 2:44	144.95
6/17/2022 1:35	48.64	6/17/2022 0:17	80.47	6/15/2022 22:40	16.62	6/15/2022 21:49	4.04	6/16/2022 2:45	144.96
6/17/2022 1:36	48.65	6/17/2022 0:18	80.49	6/15/2022 22:41	16.57	6/15/2022 21:50	4.05	6/16/2022 2:46	144.95
6/17/2022 1:37	48.64	6/17/2022 0:19	80.49	6/15/2022 22:42	16.55	6/15/2022 21:51	4.22	6/16/2022 2:47	144.94
6/17/2022 1:38	48.63	6/17/2022 0:20	80.49	6/15/2022 22:43	16.54	6/15/2022 21:52	4.09	6/16/2022 2:48	144.94
6/17/2022 1:39	48.65	6/17/2022 0:21	80.50	6/15/2022 22:44	16.52	6/15/2022 21:53	4.06	6/16/2022 2:49	144.93
6/17/2022 1:40	48.64	6/17/2022 0:22	80.48	6/15/2022 22:45	16.54	6/15/2022 21:54	4.07	6/16/2022 2:50	144.92
6/17/2022 1:41	48.67	6/17/2022 0:23	80.48	6/15/2022 22:46	16.51	6/15/2022 21:55	4.11	6/16/2022 2:51	144.97
6/17/2022 1:42	48.62	6/17/2022 0:24	80.49	6/15/2022 22:47	16.55	6/15/2022 21:56	4.03	6/16/2022 2:52	144.94
6/17/2022 1:43	48.64	6/17/2022 0:25	80.52	6/15/2022 22:48	16.52	6/15/2022 21:57	4.01	6/16/2022 2:53	144.94
6/17/2022 1:44	48.67	6/17/2022 0:26	80.55	6/15/2022 22:49	16.52	6/15/2022 21:58	4.04	6/16/2022 2:54	144.95
6/17/2022 1:45	48.63	6/17/2022 0:27	80.49	6/15/2022 22:50	16.50	6/15/2022 21:59	4.01	6/16/2022 2:55	144.92
6/17/2022 1:46	48.66	6/17/2022 0:28	80.50	6/15/2022 22:51	16.58	6/15/2022 22:00	4.04	6/16/2022 2:56	144.93
6/17/2022 1:47	48.63	6/17/2022 0:29	80.51	6/15/2022 22:52	16.58	6/15/2022 22:01	4.07	6/16/2022 2:57	144.94
6/17/2022 1:48	48.65	6/17/2022 0:30	80.50	6/15/2022 22:53	16.50	6/15/2022 22:02	3.97	6/16/2022 2:58	144.97
6/17/2022 1:49	48.63	6/17/2022 0:31	80.50	6/15/2022 22:54	16.49	6/15/2022 22:03	3.96	6/16/2022 2:59	144.94
6/17/2022 1:50	48.64	6/17/2022 0:32	80.51	6/15/2022 22:55	16.49	6/15/2022 22:04	3.97	6/16/2022 3:00	144.93
6/17/2022 1:51	48.62	6/17/2022 0:33	80.49	6/15/2022 22:56	16.55	6/15/2022 22:05	4.02	6/16/2022 3:01	144.94
6/17/2022 1:52	48.62	6/17/2022 0:34	80.44	6/15/2022 22:57	16.49	6/15/2022 22:06	4.07	6/16/2022 3:02	144.94
6/17/2022 1:53	48.64	6/17/2022 0:35	80.52	6/15/2022 22:58	16.51	6/15/2022 22:07	3.93	6/16/2022 3:03	144.92
6/17/2022 1:54	48.64	6/17/2022 0:36	80.48	6/15/2022 22:59	16.49	6/15/2022 22:08	4.02	6/16/2022 3:04	144.94
6/17/2022 1:55	48.63	6/17/2022 0:37	80.47	6/15/2022 23:00	16.54	6/15/2022 22:09	3.96	6/16/2022 3:05	144.92
6/17/2022 1:56	48.62	6/17/2022 0:38	80.49	6/15/2022 23:01	16.49	6/15/2022 22:10	4.03	6/16/2022 3:06	144.95
6/17/2022 1:57	48.62	6/17/2022 0:39	80.48	6/15/2022 23:02	16.47	6/15/2022 22:11	3.98	6/16/2022 3:07	144.94
6/17/2022 1:58	48.62	6/17/2022 0:40	80.50	6/15/2022 23:03	16.53	6/15/2022 22:12	3.94	6/16/2022 3:08	144.94
6/17/2022 1:59	48.66	6/17/2022 0:41	81.20	6/15/2022 23:04	16.46	6/15/2022 22:13	3.98	6/16/2022 3:09	144.94
6/17/2022 2:00	48.67	6/17/2022 0:42	81.08	6/15/2022 23:05	16.48	6/15/2022 22:14	3.98	6/16/2022 3:10	144.95
6/17/2022 2:01	48.60	6/17/2022 0:43	80.98	6/15/2022 23:06	16.50	6/15/2022 22:15	3.98	6/16/2022 3:11	144.94
6/17/2022 2:02	48.67	6/17/2022 0:44	80.93	6/15/2022 23:07	16.46	6/15/2022 22:16	3.95	6/16/2022 3:12	144.94
6/17/2022 2:03	48.66	6/17/2022 0:45	80.87	6/15/2022 23:08	16.48	6/15/2022 22:17	3.95	6/16/2022 3:13	144.95
6/17/2022 2:04	48.65	6/17/2022 0:46	80.80	6/15/2022 23:09	16.48	6/15/2022 22:18	3.94	6/16/2022 3:14	144.96
6/17/2022 2:05	48.63	6/17/2022 0:47	80.82	6/15/2022 23:10	16.48	6/15/2022 22:19	3.97	6/16/2022 3:15	144.93
6/17/2022 2:06	48.63	6/17/2022 0:48	80.77	6/15/2022 23:11	16.43	6/15/2022 22:20	4.00	6/16/2022 3:16	144.96
6/17/2022 2:07	48.62	6/17/2022 0:49	80.74	6/15/2022 23:12	16.46	6/15/2022 22:21	3.93	6/16/2022 3:17	144.97
6/17/2022 2:08	48.61	6/17/2022 0:50	80.68	6/15/2022 23:13	16.48	6/15/2022 22:22	3.89	6/16/2022 3:18	144.96
6/17/2022 2:09	48.65	6/17/2022 0:51	80.66	6/15/2022 23:14	16.47	6/15/2022 22:23	3.94	6/16/2022 3:19	144.94
6/17/2022 2:10	48.63	6/17/2022 0:52	80.63	6/15/2022 23:15	16.46	6/15/2022 22:24	3.95	6/16/2022 3:20	144.92
6/17/2022 2:11	48.64	6/17/2022 0:53	80.61	6/15/2022 23:16	16.46	6/15/2022 22:25	3.96	6/16/2022 3:21	144.95
6/17/2022 2:12	48.61	6/17/2022 0:54	80.65	6/15/2022 23:17	16.43	6/15/2022 22:26	3.92	6/16/2022 3:22	144.93
6/17/2022 2:13	48.64	6/17/2022 0:55	80.59	6/15/2022 23:18	16.44	6/15/2022 22:27	3.93	6/16/2022 3:23	144.94
6/17/2022 2:14	48.67	6/17/2022 0:56	80.65	6/15/2022 23:19	16.44	6/15/2022 22:28	3.94	6/16/2022 3:24	144.94
6/17/2022 2:15	48.61	6/17/2022 0:57	80.62	6/15/2022 23:20	16.46	6/15/2022 22:29	3.95	6/16/2022 3:25	144.93
6/17/2022 2:16	48.62	6/17/2022 0:58	80.58	6/15/2022 23:21	16.45	6/15/2022 22:30	3.92	6/16/2022 3:26	144.96
6/17/2022 2:17	48.62	6/17/2022 0:59	80.58	6/15/2022 23:22	16.48	6/15/2022 22:31	3.94	6/16/2022 3:27	144.94
6/17/2022 2:18	48.62	6/17/2022 1:00	80.59	6/15/2022 23:23	16.41	6/15/2022 22:32	3.91	6/16/2022 3:28	144.94
6/17/2022 2:19	48.64	6/17/2022 1:01	80.58	6/15/2022 23:24	16.39	6/15/2022 22:33	3.92	6/16/2022 3:29	144.94
6/17/2022 2:20	48.63	6/17/2022 1:02	80.56	6/15/2022 23:25	16.42	6/15/2022 22:34	3.90	6/16/2022 3:30	144.90
6/17/2022 2:21	48.65	6/17/2022 1:03	80.56	6/15/2022 23:26	16.42	6/15/2022 22:35	3.90	6/16/2022 3:31	144.91
6/17/2022 2:22	48.63	6/17/2022 1:04	80.53	6/15/2022 23:27	16.38	6/15/2022 22:36	3.88	6/16/2022 3:32	144.95
6/17/2022 2:23	48.66	6/17/2022 1:05	80.54	6/15/2022 23:28	16.40	6/15/2022 22:37	3.91	6/16/2022 3:33	144.93
6/17/2022 2:24	48.62	6/17/2022 1:06	80.55	6/15/2022 23:29	16.40	6/15/2022 22:38	3.95	6/16/2022 3:34	144.92
6/17/2022 2:25	48.63	6/17/2022 1:07	80.54	6/15/2022 23:30	16.45	6/15/2022 22:39	3.89	6/16/2022 3:35	144.91
6/17/2022 2:26	48.62	6/17/2022 1:08	80.54	6/15/2022 23:31	16.45	6/15/2022 22:40	3.84	6/16/2022 3:36	144.96
6/17/2022 2:27	48.63	6/17/2022 1:09	80.52	6/15/2022 23:32	16.42	6/15/2022 22:41	3.89	6/16/2022 3:37	144.92
6/17/2022 2:28	48.61	6/17/2022 1:10	80.50	6/15/2022 23:33	16.36	6/15/2022 22:42	3.92	6/16/2022 3:38	144.92

6/17/2022 2:29	48.61	6/17/2022 1:11	80.57	6/15/2022 23:34	16.36	6/15/2022 22:43	3.89	6/16/2022 3:39	144.96
6/17/2022 2:30	48.61	6/17/2022 1:12	80.49	6/15/2022 23:35	16.38	6/15/2022 22:44	3.85	6/16/2022 3:40	144.91
6/17/2022 2:31	48.62	6/17/2022 1:13	80.48	6/15/2022 23:36	16.36	6/15/2022 22:45	3.86	6/16/2022 3:41	144.92
6/17/2022 2:32	48.64	6/17/2022 1:14	80.55	6/15/2022 23:37	16.38	6/15/2022 22:46	3.89	6/16/2022 3:42	144.91
6/17/2022 2:33	48.61	6/17/2022 1:15	80.51	6/15/2022 23:38	16.40	6/15/2022 22:47	3.94	6/16/2022 3:43	144.94
6/17/2022 2:34	48.59	6/17/2022 1:16	80.54	6/15/2022 23:39	16.37	6/15/2022 22:48	3.83	6/16/2022 3:44	144.94
6/17/2022 2:35	48.61	6/17/2022 1:17	80.53	6/15/2022 23:40	16.40	6/15/2022 22:49	3.85	6/16/2022 3:45	144.92
6/17/2022 2:36	48.63	6/17/2022 1:18	80.52	6/15/2022 23:41	16.38	6/15/2022 22:50	3.86	6/16/2022 3:46	144.92
6/17/2022 2:37	48.60	6/17/2022 1:19	80.52	6/15/2022 23:42	16.39	6/15/2022 22:51	3.89	6/16/2022 3:47	144.93
6/17/2022 2:38	48.62	6/17/2022 1:20	80.51	6/15/2022 23:43	16.40	6/15/2022 22:52	3.90	6/16/2022 3:48	144.92
6/17/2022 2:39	48.62	6/17/2022 1:21	80.55	6/15/2022 23:44	16.37	6/15/2022 22:53	3.82	6/16/2022 3:49	144.93
6/17/2022 2:40	48.61	6/17/2022 1:22	80.52	6/15/2022 23:45	16.39	6/15/2022 22:54	3.85	6/16/2022 3:50	144.96
6/17/2022 2:41	48.64	6/17/2022 1:23	80.47	6/15/2022 23:46	16.39	6/15/2022 22:55	3.87	6/16/2022 3:51	144.94
6/17/2022 2:42	48.61	6/17/2022 1:24	80.55	6/15/2022 23:47	16.35	6/15/2022 22:56	3.87	6/16/2022 3:52	144.97
6/17/2022 2:43	48.63	6/17/2022 1:25	80.51	6/15/2022 23:48	16.38	6/15/2022 22:57	3.82	6/16/2022 3:53	144.92
6/17/2022 2:44	48.63	6/17/2022 1:26	80.53	6/15/2022 23:49	16.34	6/15/2022 22:58	3.81	6/16/2022 3:54	145.00
6/17/2022 2:45	48.60	6/17/2022 1:27	80.54	6/15/2022 23:50	16.36	6/15/2022 22:59	3.84	6/16/2022 3:55	144.96
6/17/2022 2:46	48.61	6/17/2022 1:28	80.50	6/15/2022 23:51	16.34	6/15/2022 23:00	3.86	6/16/2022 3:56	144.93
6/17/2022 2:47	48.62	6/17/2022 1:29	80.50	6/15/2022 23:52	16.33	6/15/2022 23:01	4.04	6/16/2022 3:57	144.90
6/17/2022 2:48	48.60	6/17/2022 1:30	80.47	6/15/2022 23:53	16.29	6/15/2022 23:02	4.27	6/16/2022 3:58	144.94
6/17/2022 2:49	48.64	6/17/2022 1:31	80.49	6/15/2022 23:54	16.36	6/15/2022 23:03	4.79	6/16/2022 3:59	144.93
6/17/2022 2:50	48.60	6/17/2022 1:32	80.51	6/15/2022 23:55	16.35	6/15/2022 23:04	5.15	6/16/2022 4:00	144.94
6/17/2022 2:51	48.60	6/17/2022 1:33	80.50	6/15/2022 23:56	16.33	6/15/2022 23:05	5.35	6/16/2022 4:01	144.91
6/17/2022 2:52	48.61	6/17/2022 1:34	80.51	6/15/2022 23:57	16.33	6/15/2022 23:06	5.54	6/16/2022 4:02	144.93
6/17/2022 2:53	48.60	6/17/2022 1:35	80.48	6/15/2022 23:58	16.33	6/15/2022 23:07	5.72	6/16/2022 4:03	144.90
6/17/2022 2:54	48.57	6/17/2022 1:36	80.52	6/15/2022 23:59	16.33	6/15/2022 23:08	5.84	6/16/2022 4:04	144.93
6/17/2022 2:55	48.59	6/17/2022 1:37	80.51	6/16/2022 0:00	16.35	6/15/2022 23:09	5.93	6/16/2022 4:05	144.89
6/17/2022 2:56	48.57	6/17/2022 1:38	80.54	6/16/2022 0:01	16.32	6/15/2022 23:10	6.03	6/16/2022 4:06	144.96
6/17/2022 2:57	48.62	6/17/2022 1:39	80.52	6/16/2022 0:02	16.34	6/15/2022 23:11	6.12	6/16/2022 4:07	144.93
6/17/2022 2:58	48.61	6/17/2022 1:40	80.52	6/16/2022 0:03	16.32	6/15/2022 23:12	6.25	6/16/2022 4:08	144.91
6/17/2022 2:59	48.58	6/17/2022 1:41	80.50	6/16/2022 0:04	16.31	6/15/2022 23:13	6.50	6/16/2022 4:09	144.93
6/17/2022 3:00	48.63	6/17/2022 1:42	80.53	6/16/2022 0:05	16.34	6/15/2022 23:14	6.49	6/16/2022 4:10	144.93
6/17/2022 3:01	48.63	6/17/2022 1:43	80.48	6/16/2022 0:06	16.30	6/15/2022 23:15	6.01	6/16/2022 4:11	144.94
6/17/2022 3:02	48.62	6/17/2022 1:44	80.52	6/16/2022 0:07	16.35	6/15/2022 23:16	5.57	6/16/2022 4:12	144.93
6/17/2022 3:03	48.62	6/17/2022 1:45	80.47	6/16/2022 0:08	16.29	6/15/2022 23:17	5.24	6/16/2022 4:13	144.94
6/17/2022 3:04	48.59	6/17/2022 1:46	80.50	6/16/2022 0:09	16.25	6/15/2022 23:18	5.37	6/16/2022 4:14	144.95
6/17/2022 3:05	48.61	6/17/2022 1:47	82.28	6/16/2022 0:10	16.30	6/15/2022 23:19	5.32	6/16/2022 4:15	144.92
6/17/2022 3:06	48.59	6/17/2022 1:48	81.96	6/16/2022 0:11	16.35	6/15/2022 23:20	5.17	6/16/2022 4:16	144.91
6/17/2022 3:07	48.59	6/17/2022 1:49	81.73	6/16/2022 0:12	16.30	6/15/2022 23:21	5.15	6/16/2022 4:17	144.92
6/17/2022 3:08	48.60	6/17/2022 1:50	81.55	6/16/2022 0:13	16.29	6/15/2022 23:22	4.94	6/16/2022 4:18	144.93
6/17/2022 3:09	48.56	6/17/2022 1:51	81.38	6/16/2022 0:14	16.26	6/15/2022 23:23	4.85	6/16/2022 4:19	144.95
6/17/2022 3:10	48.59	6/17/2022 1:52	81.26	6/16/2022 0:15	16.31	6/15/2022 23:24	4.82	6/16/2022 4:20	144.96
6/17/2022 3:11	48.56	6/17/2022 1:53	81.17	6/16/2022 0:16	16.27	6/15/2022 23:25	4.87	6/16/2022 4:21	144.97
6/17/2022 3:12	48.60	6/17/2022 1:54	81.08	6/16/2022 0:17	16.31	6/15/2022 23:26	4.69	6/16/2022 4:22	145.00
6/17/2022 3:13	48.60	6/17/2022 1:55	81.04	6/16/2022 0:18	16.28	6/15/2022 23:27	4.72	6/16/2022 4:23	144.95
6/17/2022 3:14	48.61	6/17/2022 1:56	80.94	6/16/2022 0:19	16.24	6/15/2022 23:28	4.68	6/16/2022 4:24	144.94
6/17/2022 3:15	48.62	6/17/2022 1:57	80.93	6/16/2022 0:20	16.33	6/15/2022 23:29	4.72	6/16/2022 4:25	144.93
6/17/2022 3:16	48.62	6/17/2022 1:58	80.89	6/16/2022 0:21	16.28	6/15/2022 23:30	4.68	6/16/2022 4:26	144.97
6/17/2022 3:17	48.60	6/17/2022 1:59	80.89	6/16/2022 0:22	16.31	6/15/2022 23:31	4.65	6/16/2022 4:27	144.97
6/17/2022 3:18	48.58	6/17/2022 2:00	80.78	6/16/2022 0:23	16.28	6/15/2022 23:32	4.61	6/16/2022 4:28	144.94
6/17/2022 3:19	48.59	6/17/2022 2:01	80.79	6/16/2022 0:24	16.25	6/15/2022 23:33	4.59	6/16/2022 4:29	144.95
6/17/2022 3:20	48.57	6/17/2022 2:02	80.75	6/16/2022 0:25	16.23	6/15/2022 23:34	4.59	6/16/2022 4:30	144.95
6/17/2022 3:21	48.59	6/17/2022 2:03	80.77	6/16/2022 0:26	16.28	6/15/2022 23:35	4.60	6/16/2022 4:31	144.94
6/17/2022 3:22	48.61	6/17/2022 2:04	80.71	6/16/2022 0:27	16.26	6/15/2022 23:36	4.56	6/16/2022 4:32	144.92
6/17/2022 3:23	48.59	6/17/2022 2:05	80.71	6/16/2022 0:28	16.27	6/15/2022 23:37	4.49	6/16/2022 4:33	144.92
6/17/2022 3:24	48.58	6/17/2022 2:06	80.62	6/16/2022 0:29	16.28	6/15/2022 23:38	4.48	6/16/2022 4:34	144.96
6/17/2022 3:25	48.57	6/17/2022 2:07	80.71	6/16/2022 0:30	16.28	6/15/2022 23:39	4.56	6/16/2022 4:35	144.91
6/17/2022 3:26	48.61	6/17/2022 2:08	80.64	6/16/2022 0:31	16.24	6/15/2022 23:40	4.53	6/16/2022 4:36	144.96
6/17/2022 3:27	48.58	6/17/2022 2:09	80.67	6/16/2022 0:32	16.26	6/15/2022 23:41	4.57	6/16/2022 4:37	144.97
6/17/2022 3:28	48.59	6/17/2022 2:10	80.67	6/16/2022 0:33	16.25	6/15/2022 23:42	4.42	6/16/2022 4:38	144.95
6/17/2022 3:29	48.59	6/17/2022 2:11	80.62	6/16/2022 0:34	16.25	6/15/2022 23:43	4.43	6/16/2022 4:39	144.94
6/17/2022 3:30	48.58	6/17/2022 2:12	80.65	6/16/2022 0:35	16.23	6/15/2022 23:44	4.45	6/16/2022 4:40	144.95
6/17/2022 3:31	48.57	6/17/2022 2:13	80.60	6/16/2022 0:36	16.27	6/15/2022 23:45	4.44	6/16/2022 4:41	144.98
6/17/2022 3:32	48.60	6/17/2022 2:14	80.60	6/16/2022 0:37	16.24	6/15/2022 23:46	4.44	6/16/2022 4:42	144.96
6/17/2022 3:33	48.58	6/17/2022 2:15	80.59	6/16/2022 0:38	16.27	6/15/2022 23:47	4.42	6/16/2022 4:43	144.94
6/17/2022 3:34	48.59	6/17/2022 2:16	80.55	6/16/2022 0:39	16.25	6/15/2022 23:48	4.36	6/16/2022 4:44	144.96
6/17/2022 3:35	48.58	6/17/2022 2:17	80.58	6/16/2022 0:40	16.26	6/15/2022 23:49	4.40	6/16/2022 4:45	144.91
6/17/2022 3:36	48.56	6/17/2022 2:18	80.58	6/16/2022 0:41	16.25	6/15/2022 23:50	4.39	6/16/2022 4:46	144.92
6/17/2022 3:37	48.60	6/17/2022 2:19	80.56	6/16/2022 0:42	16.23	6/15/2022 23:51	4.39	6/16/2022 4:47	144.95
6/17/2022 3:38	48.60	6/17/2022 2:20	80.58	6/16/2022 0:43	16.24	6/15/2022 23:52	4.32	6/16/2022 4:48	144.94
6/17/2022 3:39	48.58	6/17/2022 2:21	80.56	6/16/2022 0:44	16.30	6/15/2022 23:53	4.32	6/16/2022 4:49	144.92
6/17/2022 3:40	48.60	6/17/2022 2:22	80.56	6/16/2022 0:45	16.27	6/15/2022 23:54	4.34	6/16/2022 4:50	144.94
6/17/2022 3:41	48.60	6/17/2022 2:23	80.57	6/16/2022 0:46	16.25	6/15/2022 23:55	4.32	6/16/2022 4:51	144.93
6/17/2022 3:42	48.59	6/17/2022 2:24	80.54	6/16/2022 0:47	16.22	6/15/2022 23:56	4.32	6/16/2022 4:52	144.95
6/17/2022 3:43	48.58	6/17/2022 2:25	80.55	6/16/2022 0:48	16.24	6/15/2022 23:57	4.30	6/16/2022 4:53	144.96
6/17/2022 3:44	48.62	6/17/2022 2:26	80.52	6/16/2022 0:49	16.20	6/15/2022 23:58	4.27	6/16/2022 4:54	144.93
6/17/2022 3:45	48.59	6/17/2022 2:27	80.55	6/16/2022 0:50	16.24	6/15/2022 23:59	4.34	6/16/2022 4:55	144.93
6/17/2022 3:46	48.57	6/17/2022 2:28	80.53	6/16/2022 0:51	16.22	6/16/2022 0:00	4.38	6/16/2022 4:56	144.96
6/17/2022 3:47	48.60	6/17/2022 2:29	80.58	6/16/2022 0:52	16.25	6/16/2022 0:01	4.30	6/16/2022 4:57	144.95
6/17/2022 3:48	48.58	6/17/2022 2:30	80.53	6/16/2022 0:53	16.20	6/16/2022 0:02	4.26	6/16/2022 4:58	144.91
6/17/2022 3:49	48.59	6/17/2022 2:31	80.53	6/16/2022 0:54	16.21	6/16/2022 0:03	4.26	6/16/2022 4:59	144.96
6/17/2022 3:50	48.61	6/17/2022 2:32	80.53	6/16/2022 0:55	16.24	6/16/2022 0:04	4.29	6/16/2022 5:00	144.92
6/17/2022 3:51	48.58	6/17/2022 2:33	80.53	6/16/2022 0:56	16.24	6/16/2022 0:05	4.60	6/16/2022 5:01	144.94
6/17/2022 3:52	48.61	6/17/2022 2:34	80.51	6/16/2022 0:57	16.22	6/16/2022 0:06	4.49	6/16/2022 5:02	144.92
6/17/2022 3:53	48.57	6/17/2022 2:35	80.55	6/16/2022 0:58	16.21	6/16/2022 0:07	4.40	6/16/2022 5:03	144.97
6/17/2022 3:54	48.58	6/17/2022 2:36	80.48	6/16/2022 0:59	16.23	6/16/2022 0:08	5.23	6/16/2022 5:04	144.95
6/17/2022 3:55	48.57	6/17/2022 2:37	80.55	6/16/2022 1:00	16.22	6/16/2022 0:09	5.66	6/16/2022 5:05	144.93
6/17/2022 3:56	48.57	6/17/2022 2:38	80.56	6/16/2022 1:01	16.25	6/16/2022 0:10	5.92	6/16/2022 5:06	144.94

6/17/2022 3:57	48.57	6/17/2022 2:39	80.51	6/16/2022 1:02	16.20	6/16/2022 0:11	6.19	6/16/2022 5:07	144.94
6/17/2022 3:58	48.60	6/17/2022 2:40	80.54	6/16/2022 1:03	16.19	6/16/2022 0:12	6.31	6/16/2022 5:08	144.91
6/17/2022 3:59	48.54	6/17/2022 2:41	80.52	6/16/2022 1:04	16.23	6/16/2022 0:13	5.87	6/16/2022 5:09	144.92
6/17/2022 4:00	48.56	6/17/2022 2:42	80.48	6/16/2022 1:05	16.22	6/16/2022 0:14	5.45	6/16/2022 5:10	144.91
6/17/2022 4:01	48.55	6/17/2022 2:43	80.52	6/16/2022 1:06	16.23	6/16/2022 0:15	5.21	6/16/2022 5:11	144.95
6/17/2022 4:02	48.57	6/17/2022 2:44	80.54	6/16/2022 1:07	16.24	6/16/2022 0:16	5.14	6/16/2022 5:12	144.93
6/17/2022 4:03	48.57	6/17/2022 2:45	80.57	6/16/2022 1:08	16.24	6/16/2022 0:17	4.99	6/16/2022 5:13	144.94
6/17/2022 4:04	48.55	6/17/2022 2:46	80.48	6/16/2022 1:09	16.17	6/16/2022 0:18	4.96	6/16/2022 5:14	144.96
6/17/2022 4:05	48.58	6/17/2022 2:47	80.56	6/16/2022 1:10	16.17	6/16/2022 0:19	4.93	6/16/2022 5:15	144.94
6/17/2022 4:06	48.57	6/17/2022 2:48	80.47	6/16/2022 1:11	16.17	6/16/2022 0:20	4.82	6/16/2022 5:16	144.94
6/17/2022 4:07	48.57	6/17/2022 2:49	80.54	6/16/2022 1:12	16.20	6/16/2022 0:21	4.78	6/16/2022 5:17	144.94
6/17/2022 4:08	48.59	6/17/2022 2:50	80.51	6/16/2022 1:13	16.20	6/16/2022 0:22	4.74	6/16/2022 5:18	144.93
6/17/2022 4:09	48.57	6/17/2022 2:51	80.51	6/16/2022 1:14	16.19	6/16/2022 0:23	4.81	6/16/2022 5:19	144.93
6/17/2022 4:10	48.57	6/17/2022 2:52	80.51	6/16/2022 1:15	16.21	6/16/2022 0:24	4.79	6/16/2022 5:20	144.93
6/17/2022 4:11	48.54	6/17/2022 2:53	80.51	6/16/2022 1:16	16.20	6/16/2022 0:25	4.65	6/16/2022 5:21	144.95
6/17/2022 4:12	48.55	6/17/2022 2:54	80.50	6/16/2022 1:17	16.16	6/16/2022 0:26	4.63	6/16/2022 5:22	144.92
6/17/2022 4:13	48.59	6/17/2022 2:55	80.51	6/16/2022 1:18	16.19	6/16/2022 0:27	4.58	6/16/2022 5:23	144.92
6/17/2022 4:14	48.56	6/17/2022 2:56	80.51	6/16/2022 1:19	16.17	6/16/2022 0:28	4.56	6/16/2022 5:24	144.95
6/17/2022 4:15	48.55	6/17/2022 2:57	80.51	6/16/2022 1:20	16.24	6/16/2022 0:29	4.62	6/16/2022 5:25	144.91
6/17/2022 4:16	48.57	6/17/2022 2:58	80.50	6/16/2022 1:21	16.23	6/16/2022 0:30	4.50	6/16/2022 5:26	144.93
6/17/2022 4:17	48.54	6/17/2022 2:59	80.48	6/16/2022 1:22	16.18	6/16/2022 0:31	4.53	6/16/2022 5:27	144.93
6/17/2022 4:18	48.58	6/17/2022 3:00	80.50	6/16/2022 1:23	16.20	6/16/2022 0:32	4.54	6/16/2022 5:28	144.94
6/17/2022 4:19	48.61	6/17/2022 3:01	80.51	6/16/2022 1:24	16.19	6/16/2022 0:33	4.54	6/16/2022 5:29	144.93
6/17/2022 4:20	48.55	6/17/2022 3:02	80.50	6/16/2022 1:25	16.18	6/16/2022 0:34	4.46	6/16/2022 5:30	144.95
6/17/2022 4:21	48.58	6/17/2022 3:03	80.53	6/16/2022 1:26	16.20	6/16/2022 0:35	4.47	6/16/2022 5:31	144.92
6/17/2022 4:22	48.55	6/17/2022 3:04	80.52	6/16/2022 1:27	16.19	6/16/2022 0:36	4.45	6/16/2022 5:32	144.89
6/17/2022 4:23	48.60	6/17/2022 3:05	80.52	6/16/2022 1:28	16.18	6/16/2022 0:37	4.52	6/16/2022 5:33	144.91
6/17/2022 4:24	48.58	6/17/2022 3:06	80.52	6/16/2022 1:29	16.22	6/16/2022 0:38	4.45	6/16/2022 5:34	144.89
6/17/2022 4:25	48.53	6/17/2022 3:07	80.51	6/16/2022 1:30	16.13	6/16/2022 0:39	4.38	6/16/2022 5:35	144.91
6/17/2022 4:26	48.57	6/17/2022 3:08	80.49	6/16/2022 1:31	16.15	6/16/2022 0:40	4.44	6/16/2022 5:36	144.92
6/17/2022 4:27	48.58	6/17/2022 3:09	80.47	6/16/2022 1:32	16.16	6/16/2022 0:41	4.40	6/16/2022 5:37	144.91
6/17/2022 4:28	48.57	6/17/2022 3:10	80.47	6/16/2022 1:33	16.16	6/16/2022 0:42	4.41	6/16/2022 5:38	144.93
6/17/2022 4:29	48.52	6/17/2022 3:11	80.52	6/16/2022 1:34	16.20	6/16/2022 0:43	4.35	6/16/2022 5:39	144.97
6/17/2022 4:30	48.57	6/17/2022 3:12	80.54	6/16/2022 1:35	16.15	6/16/2022 0:44	4.35	6/16/2022 5:40	144.94
6/17/2022 4:31	48.57	6/17/2022 3:13	80.49	6/16/2022 1:36	16.21	6/16/2022 0:45	4.33	6/16/2022 5:41	144.93
6/17/2022 4:32	48.58	6/17/2022 3:14	80.49	6/16/2022 1:37	16.21	6/16/2022 0:46	4.35	6/16/2022 5:42	144.95
6/17/2022 4:33	48.57	6/17/2022 3:15	80.51	6/16/2022 1:38	16.14	6/16/2022 0:47	4.26	6/16/2022 5:43	144.92
6/17/2022 4:34	48.55	6/17/2022 3:16	80.48	6/16/2022 1:39	16.18	6/16/2022 0:48	4.33	6/16/2022 5:44	144.94
6/17/2022 4:35	48.57	6/17/2022 3:17	80.48	6/16/2022 1:40	16.13	6/16/2022 0:49	4.29	6/16/2022 5:45	144.94
6/17/2022 4:36	48.57	6/17/2022 3:18	80.49	6/16/2022 1:41	16.20	6/16/2022 0:50	4.29	6/16/2022 5:46	144.94
6/17/2022 4:37	48.57	6/17/2022 3:19	80.46	6/16/2022 1:42	16.16	6/16/2022 0:51	4.38	6/16/2022 5:47	144.95
6/17/2022 4:38	48.55	6/17/2022 3:20	80.47	6/16/2022 1:43	16.18	6/16/2022 0:52	4.27	6/16/2022 5:48	144.93
6/17/2022 4:39	48.59	6/17/2022 3:21	80.51	6/16/2022 1:44	16.22	6/16/2022 0:53	4.27	6/16/2022 5:49	144.94
6/17/2022 4:40	48.56	6/17/2022 3:22	80.51	6/16/2022 1:45	16.18	6/16/2022 0:54	4.28	6/16/2022 5:50	144.92
6/17/2022 4:41	48.52	6/17/2022 3:23	80.50	6/16/2022 1:46	16.16	6/16/2022 0:55	4.31	6/16/2022 5:51	144.93
6/17/2022 4:42	48.57	6/17/2022 3:24	80.53	6/16/2022 1:47	16.14	6/16/2022 0:56	4.24	6/16/2022 5:52	144.95
6/17/2022 4:43	48.55	6/17/2022 3:25	80.49	6/16/2022 1:48	16.14	6/16/2022 0:57	4.26	6/16/2022 5:53	144.95
6/17/2022 4:44	48.57	6/17/2022 3:26	80.49	6/16/2022 1:49	16.20	6/16/2022 0:58	4.29	6/16/2022 5:54	144.95
6/17/2022 4:45	48.56	6/17/2022 3:27	80.49	6/16/2022 1:50	16.14	6/16/2022 0:59	4.26	6/16/2022 5:55	144.91
6/17/2022 4:46	48.59	6/17/2022 3:28	80.47	6/16/2022 1:51	16.18	6/16/2022 1:00	4.30	6/16/2022 5:56	144.91
6/17/2022 4:47	48.57	6/17/2022 3:29	80.51	6/16/2022 1:52	16.15	6/16/2022 1:01	4.23	6/16/2022 5:57	144.91
6/17/2022 4:48	48.55	6/17/2022 3:30	80.49	6/16/2022 1:53	16.13	6/16/2022 1:02	4.25	6/16/2022 5:58	144.95
6/17/2022 4:49	48.59	6/17/2022 3:31	80.51	6/16/2022 1:54	16.15	6/16/2022 1:03	4.22	6/16/2022 5:59	144.96
6/17/2022 4:50	48.59	6/17/2022 3:32	80.48	6/16/2022 1:55	16.14	6/16/2022 1:04	4.30	6/16/2022 6:00	144.92
6/17/2022 4:51	48.57	6/17/2022 3:33	80.50	6/16/2022 1:56	16.11	6/16/2022 1:05	4.18	6/16/2022 6:01	144.94
6/17/2022 4:52	48.58	6/17/2022 3:34	80.48	6/16/2022 1:57	16.14	6/16/2022 1:06	4.21	6/16/2022 6:02	144.92
6/17/2022 4:53	48.58	6/17/2022 3:35	80.51	6/16/2022 1:58	16.17	6/16/2022 1:07	4.19	6/16/2022 6:03	144.90
6/17/2022 4:54	48.56	6/17/2022 3:36	80.49	6/16/2022 1:59	16.15	6/16/2022 1:08	4.24	6/16/2022 6:04	144.93
6/17/2022 4:55	48.56	6/17/2022 3:37	80.48	6/16/2022 2:00	16.18	6/16/2022 1:09	4.17	6/16/2022 6:05	144.92
6/17/2022 4:56	48.55	6/17/2022 3:38	80.51	6/16/2022 2:01	16.15	6/16/2022 1:10	4.18	6/16/2022 6:06	144.90
6/17/2022 4:57	48.56	6/17/2022 3:39	80.48	6/16/2022 2:02	16.15	6/16/2022 1:11	4.14	6/16/2022 6:07	144.90
6/17/2022 4:58	48.56	6/17/2022 3:40	80.47	6/16/2022 2:03	16.13	6/16/2022 1:12	4.19	6/16/2022 6:08	144.92
6/17/2022 4:59	48.56	6/17/2022 3:41	80.50	6/16/2022 2:04	16.11	6/16/2022 1:13	4.15	6/16/2022 6:09	144.88
6/17/2022 5:00	48.56	6/17/2022 3:42	80.45	6/16/2022 2:05	16.16	6/16/2022 1:14	4.15	6/16/2022 6:10	144.91
6/17/2022 5:01	48.59	6/17/2022 3:43	80.51	6/16/2022 2:06	16.11	6/16/2022 1:15	4.17	6/16/2022 6:11	144.88
6/17/2022 5:02	48.56	6/17/2022 3:44	80.46	6/16/2022 2:07	16.13	6/16/2022 1:16	4.20	6/16/2022 6:12	144.91
6/17/2022 5:03	48.54	6/17/2022 3:45	80.46	6/16/2022 2:08	16.15	6/16/2022 1:17	4.16	6/16/2022 6:13	144.90
6/17/2022 5:04	48.57	6/17/2022 3:46	80.49	6/16/2022 2:09	16.15	6/16/2022 1:18	4.10	6/16/2022 6:14	144.90
6/17/2022 5:05	48.57	6/17/2022 3:47	80.49	6/16/2022 2:10	16.13	6/16/2022 1:19	4.10	6/16/2022 6:15	144.88
6/17/2022 5:06	48.57	6/17/2022 3:48	80.49	6/16/2022 2:11	16.13	6/16/2022 1:20	4.16	6/16/2022 6:16	144.90
6/17/2022 5:07	48.54	6/17/2022 3:49	80.44	6/16/2022 2:12	16.13	6/16/2022 1:21	4.19	6/16/2022 6:17	144.91
6/17/2022 5:08	48.54	6/17/2022 3:50	80.45	6/16/2022 2:13	16.11	6/16/2022 1:22	4.09	6/16/2022 6:18	144.95
6/17/2022 5:09	48.53	6/17/2022 3:51	80.49	6/16/2022 2:14	16.11	6/16/2022 1:23	4.14	6/16/2022 6:19	144.91
6/17/2022 5:10	48.58	6/17/2022 3:52	80.47	6/16/2022 2:15	16.20	6/16/2022 1:24	4.12	6/16/2022 6:20	144.87
6/17/2022 5:11	48.60	6/17/2022 3:53	80.47	6/16/2022 2:16	16.09	6/16/2022 1:25	4.16	6/16/2022 6:21	144.85
6/17/2022 5:12	48.56	6/17/2022 3:54	80.50	6/16/2022 2:17	19.66	6/16/2022 1:26	4.08	6/16/2022 6:22	144.90
6/17/2022 5:13	48.56	6/17/2022 3:55	80.53	6/16/2022 2:18	23.81	6/16/2022 1:27	4.08	6/16/2022 6:23	144.88
6/17/2022 5:14	48.56	6/17/2022 3:56	80.48	6/16/2022 2:19	25.77	6/16/2022 1:28	4.07	6/16/2022 6:24	144.89
6/17/2022 5:15	48.56	6/17/2022 3:57	80.48	6/16/2022 2:20	22.63	6/16/2022 1:29	4.08	6/16/2022 6:25	144.88
6/17/2022 5:16	48.56	6/17/2022 3:58	80.50	6/16/2022 2:21	21.10	6/16/2022 1:30	4.18	6/16/2022 6:26	144.89
6/17/2022 5:17	48.54	6/17/2022 3:59	80.45	6/16/2022 2:22	20.18	6/16/2022 1:31	4.04	6/16/2022 6:27	144.91
6/17/2022 5:18	48.56	6/17/2022 4:00	80.49	6/16/2022 2:23	19.53	6/16/2022 1:32	4.08	6/16/2022 6:28	144.93
6/17/2022 5:19	48.53	6/17/2022 4:01	80.48	6/16/2022 2:24	19.15	6/16/2022 1:33	4.10	6/16/2022 6:29	144.89
6/17/2022 5:20	48.55	6/17/2022 4:02	80.48	6/16/2022 2:25	18.90	6/16/2022 1:34	4.13	6/16/2022 6:30	144.90
6/17/2022 5:21	48.58	6/17/2022 4:03	80.50	6/16/2022 2:26	18.65	6/16/2022 1:35	4.02	6/16/2022 6:31	144.92
6/17/2022 5:22	48.56	6/17/2022 4:04	80.47	6/16/2022 2:27	18.43	6/16/2022 1:36	4.03	6/16/2022 6:32	144.87
6/17/2022 5:23	48.55	6/17/2022 4:05	80.48	6/16/2022 2:28	18.29	6/16/2022 1:37	3.99	6/16/2022 6:33	144.89
6/17/2022 5:24	48.54	6/17/2022 4:06	80.47	6/16/2022 2:29	18.17	6/16/2022 1:38	4.09	6/16/2022 6:34	144.93

6/17/2022 5:25	48.56	6/17/2022 4:07	80.49	6/16/2022 2:30	18.05	6/16/2022 1:39	4.10	6/16/2022 6:35	144.90
6/17/2022 5:26	48.55	6/17/2022 4:08	80.48	6/16/2022 2:31	17.95	6/16/2022 1:40	4.00	6/16/2022 6:36	144.89
6/17/2022 5:27	48.57	6/17/2022 4:09	80.46	6/16/2022 2:32	17.85	6/16/2022 1:41	3.98	6/16/2022 6:37	144.90
6/17/2022 5:28	48.55	6/17/2022 4:10	80.46	6/16/2022 2:33	17.79	6/16/2022 1:42	4.05	6/16/2022 6:38	144.86
6/17/2022 5:29	48.54	6/17/2022 4:11	80.52	6/16/2022 2:34	17.76	6/16/2022 1:43	4.12	6/16/2022 6:39	144.88
6/17/2022 5:30	48.56	6/17/2022 4:12	80.47	6/16/2022 2:35	17.64	6/16/2022 1:44	3.99	6/16/2022 6:40	144.92
6/17/2022 5:31	48.56	6/17/2022 4:13	80.46	6/16/2022 2:36	17.57	6/16/2022 1:45	4.00	6/16/2022 6:41	144.89
6/17/2022 5:32	48.53	6/17/2022 4:14	80.51	6/16/2022 2:37	17.46	6/16/2022 1:46	3.99	6/16/2022 6:42	144.90
6/17/2022 5:33	48.55	6/17/2022 4:15	80.48	6/16/2022 2:38	17.48	6/16/2022 1:47	4.00	6/16/2022 6:43	144.89
6/17/2022 5:34	48.54	6/17/2022 4:16	80.51	6/16/2022 2:39	17.42	6/16/2022 1:48	3.98	6/16/2022 6:44	144.91
6/17/2022 5:35	48.55	6/17/2022 4:17	80.47	6/16/2022 2:40	17.37	6/16/2022 1:49	4.00	6/16/2022 6:45	144.89
6/17/2022 5:36	48.57	6/17/2022 4:18	80.49	6/16/2022 2:41	17.36	6/16/2022 1:50	3.95	6/16/2022 6:46	144.90
6/17/2022 5:37	48.53	6/17/2022 4:19	80.51	6/16/2022 2:42	17.31	6/16/2022 1:51	4.06	6/16/2022 6:47	144.91
6/17/2022 5:38	48.57	6/17/2022 4:20	80.46	6/16/2022 2:43	17.27	6/16/2022 1:52	3.99	6/16/2022 6:48	144.89
6/17/2022 5:39	48.54	6/17/2022 4:21	80.48	6/16/2022 2:44	17.23	6/16/2022 1:53	3.99	6/16/2022 6:49	144.94
6/17/2022 5:40	48.54	6/17/2022 4:22	80.48	6/16/2022 2:45	17.19	6/16/2022 1:54	3.95	6/16/2022 6:50	144.86
6/17/2022 5:41	48.53	6/17/2022 4:23	80.50	6/16/2022 2:46	17.23	6/16/2022 1:55	3.96	6/16/2022 6:51	144.90
6/17/2022 5:42	48.55	6/17/2022 4:24	80.47	6/16/2022 2:47	17.12	6/16/2022 1:56	4.03	6/16/2022 6:52	144.89
6/17/2022 5:43	48.54	6/17/2022 4:25	80.50	6/16/2022 2:48	17.14	6/16/2022 1:57	3.92	6/16/2022 6:53	144.86
6/17/2022 5:44	48.56	6/17/2022 4:26	80.48	6/16/2022 2:49	17.08	6/16/2022 1:58	3.93	6/16/2022 6:54	144.89
6/17/2022 5:45	48.54	6/17/2022 4:27	80.47	6/16/2022 2:50	17.03	6/16/2022 1:59	3.94	6/16/2022 6:55	144.87
6/17/2022 5:46	48.55	6/17/2022 4:28	80.50	6/16/2022 2:51	17.05	6/16/2022 2:00	3.96	6/16/2022 6:56	144.95
6/17/2022 5:47	48.54	6/17/2022 4:29	80.48	6/16/2022 2:52	16.96	6/16/2022 2:01	3.89	6/16/2022 6:57	144.89
6/17/2022 5:48	48.57	6/17/2022 4:30	80.47	6/16/2022 2:53	16.98	6/16/2022 2:02	3.91	6/16/2022 6:58	144.88
6/17/2022 5:49	48.55	6/17/2022 4:31	80.46	6/16/2022 2:54	17.00	6/16/2022 2:03	3.97	6/16/2022 6:59	144.90
6/17/2022 5:50	48.57	6/17/2022 4:32	80.46	6/16/2022 2:55	16.94	6/16/2022 2:04	3.92	6/16/2022 7:00	144.89
6/17/2022 5:51	48.53	6/17/2022 4:33	80.46	6/16/2022 2:56	16.93	6/16/2022 2:05	3.86	6/16/2022 7:01	144.89
6/17/2022 5:52	48.54	6/17/2022 4:34	80.50	6/16/2022 2:57	16.89	6/16/2022 2:06	3.91	6/16/2022 7:02	144.93
6/17/2022 5:53	48.53	6/17/2022 4:35	80.47	6/16/2022 2:58	16.88	6/16/2022 2:07	3.88	6/16/2022 7:03	144.93
6/17/2022 5:54	48.53	6/17/2022 4:36	80.46	6/16/2022 2:59	16.84	6/16/2022 2:08	3.87	6/16/2022 7:04	144.92
6/17/2022 5:55	48.56	6/17/2022 4:37	80.48	6/16/2022 3:00	16.86	6/16/2022 2:09	3.93	6/16/2022 7:05	144.90
6/17/2022 5:56	48.54	6/17/2022 4:38	80.45	6/16/2022 3:01	16.82	6/16/2022 2:10	3.83	6/16/2022 7:06	144.90
6/17/2022 5:57	48.53	6/17/2022 4:39	80.49	6/16/2022 3:02	16.82	6/16/2022 2:11	3.87	6/16/2022 7:07	144.91
6/17/2022 5:58	48.52	6/17/2022 4:40	80.44	6/16/2022 3:03	16.77	6/16/2022 2:12	3.86	6/16/2022 7:08	144.90
6/17/2022 5:59	48.57	6/17/2022 4:41	80.50	6/16/2022 3:04	16.79	6/16/2022 2:13	3.85	6/16/2022 7:09	144.87
6/17/2022 6:00	48.57	6/17/2022 4:42	80.47	6/16/2022 3:05	16.78	6/16/2022 2:14	3.84	6/16/2022 7:10	144.89
6/17/2022 6:01	48.54	6/17/2022 4:43	80.51	6/16/2022 3:06	16.76	6/16/2022 2:15	3.80	6/16/2022 7:11	144.89
6/17/2022 6:02	48.56	6/17/2022 4:44	80.45	6/16/2022 3:07	16.72	6/16/2022 2:16	3.85	6/16/2022 7:12	144.90
6/17/2022 6:03	48.56	6/17/2022 4:45	80.47	6/16/2022 3:08	16.75	6/16/2022 2:17	3.83	6/16/2022 7:13	144.89
6/17/2022 6:04	48.58	6/17/2022 4:46	80.48	6/16/2022 3:09	16.77	6/16/2022 2:18	3.90	6/16/2022 7:14	144.90
6/17/2022 6:05	48.55	6/17/2022 4:47	80.47	6/16/2022 3:10	16.68	6/16/2022 2:19	3.80	6/16/2022 7:15	144.90
6/17/2022 6:06	48.56	6/17/2022 4:48	80.47	6/16/2022 3:11	16.76	6/16/2022 2:20	3.84	6/16/2022 7:16	144.88
6/17/2022 6:07	48.56	6/17/2022 4:49	80.49	6/16/2022 3:12	16.68	6/16/2022 2:21	3.85	6/16/2022 7:17	144.93
6/17/2022 6:08	48.53	6/17/2022 4:50	80.49	6/16/2022 3:13	16.68	6/16/2022 2:22	3.89	6/16/2022 7:18	144.89
6/17/2022 6:09	48.56	6/17/2022 4:51	80.42	6/16/2022 3:14	16.71	6/16/2022 2:23	3.78	6/16/2022 7:19	144.91
6/17/2022 6:10	48.58	6/17/2022 4:52	80.48	6/16/2022 3:15	16.65	6/16/2022 2:24	3.77	6/16/2022 7:20	144.93
6/17/2022 6:11	48.54	6/17/2022 4:53	80.49	6/16/2022 3:16	16.67	6/16/2022 2:25	4.32	6/16/2022 7:21	144.87
6/17/2022 6:12	48.57	6/17/2022 4:54	80.49	6/16/2022 3:17	16.66	6/16/2022 2:26	4.68	6/16/2022 7:22	144.91
6/17/2022 6:13	48.53	6/17/2022 4:55	80.45	6/16/2022 3:18	16.63	6/16/2022 2:27	4.90	6/16/2022 7:23	144.90
6/17/2022 6:14	48.54	6/17/2022 4:56	80.50	6/16/2022 3:19	16.65	6/16/2022 2:28	4.95	6/16/2022 7:24	144.89
6/17/2022 6:15	48.55	6/17/2022 4:57	80.48	6/16/2022 3:20	16.66	6/16/2022 2:29	5.17	6/16/2022 7:25	144.90
6/17/2022 6:16	48.56	6/17/2022 4:58	80.46	6/16/2022 3:21	16.57	6/16/2022 2:30	5.31	6/16/2022 7:26	144.91
6/17/2022 6:17	48.55	6/17/2022 4:59	80.46	6/16/2022 3:22	16.61	6/16/2022 2:31	5.37	6/16/2022 7:27	144.92
6/17/2022 6:18	48.57	6/17/2022 5:00	80.43	6/16/2022 3:23	16.54	6/16/2022 2:32	5.49	6/16/2022 7:28	144.95
6/17/2022 6:19	48.54	6/17/2022 5:01	80.48	6/16/2022 3:24	16.59	6/16/2022 2:33	5.52	6/16/2022 7:29	144.92
6/17/2022 6:20	48.54	6/17/2022 5:02	80.50	6/16/2022 3:25	16.58	6/16/2022 2:34	5.61	6/16/2022 7:30	144.90
6/17/2022 6:21	48.56	6/17/2022 5:03	80.45	6/16/2022 3:26	16.58	6/16/2022 2:35	5.69	6/16/2022 7:31	144.94
6/17/2022 6:22	48.56	6/17/2022 5:04	80.48	6/16/2022 3:27	16.55	6/16/2022 2:36	5.73	6/16/2022 7:32	144.92
6/17/2022 6:23	48.51	6/17/2022 5:05	80.47	6/16/2022 3:28	16.53	6/16/2022 2:37	5.72	6/16/2022 7:33	144.91
6/17/2022 6:24	48.57	6/17/2022 5:06	80.52	6/16/2022 3:29	16.52	6/16/2022 2:38	5.80	6/16/2022 7:34	144.84
6/17/2022 6:25	48.55	6/17/2022 5:07	80.44	6/16/2022 3:30	16.53	6/16/2022 2:39	5.89	6/16/2022 7:35	144.28
6/17/2022 6:26	48.55	6/17/2022 5:08	80.47	6/16/2022 3:31	16.51	6/16/2022 2:40	5.54	6/16/2022 7:36	143.74
6/17/2022 6:27	48.53	6/17/2022 5:09	80.47	6/16/2022 3:32	16.53	6/16/2022 2:41	5.22	6/16/2022 7:37	143.16
6/17/2022 6:28	48.55	6/17/2022 5:10	80.49	6/16/2022 3:33	16.48	6/16/2022 2:42	5.06	6/16/2022 7:38	142.59
6/17/2022 6:29	48.60	6/17/2022 5:11	80.51	6/16/2022 3:34	16.49	6/16/2022 2:43	4.95	6/16/2022 7:39	142.01
6/17/2022 6:30	48.56	6/17/2022 5:12	80.43	6/16/2022 3:35	16.48	6/16/2022 2:44	4.94	6/16/2022 7:40	141.46
6/17/2022 6:31	48.56	6/17/2022 5:13	80.44	6/16/2022 3:36	16.50	6/16/2022 2:45	4.86	6/16/2022 7:41	140.93
6/17/2022 6:32	48.58	6/17/2022 5:14	80.46	6/16/2022 3:37	16.50	6/16/2022 2:46	4.81	6/16/2022 7:42	140.40
6/17/2022 6:33	48.59	6/17/2022 5:15	80.47	6/16/2022 3:38	16.45	6/16/2022 2:47	4.75	6/16/2022 7:43	139.84
6/17/2022 6:34	48.54	6/17/2022 5:16	80.46	6/16/2022 3:39	16.43	6/16/2022 2:48	4.79	6/16/2022 7:44	139.32
6/17/2022 6:35	48.55	6/17/2022 5:17	80.49	6/16/2022 3:40	16.42	6/16/2022 2:49	4.80	6/16/2022 7:45	138.78
6/17/2022 6:36	48.54	6/17/2022 5:18	80.48	6/16/2022 3:41	16.44	6/16/2022 2:50	4.70	6/16/2022 7:46	138.21
6/17/2022 6:37	48.55	6/17/2022 5:19	80.46	6/16/2022 3:42	16.50	6/16/2022 2:51	4.71	6/16/2022 7:47	137.69
6/17/2022 6:38	48.55	6/17/2022 5:20	80.46	6/16/2022 3:43	16.46	6/16/2022 2:52	4.72	6/16/2022 7:48	137.18
6/17/2022 6:39	48.56	6/17/2022 5:21	80.49	6/16/2022 3:44	16.48	6/16/2022 2:53	4.66	6/16/2022 7:49	136.62
6/17/2022 6:40	48.55	6/17/2022 5:22	80.49	6/16/2022 3:45	16.44	6/16/2022 2:54	4.68	6/16/2022 7:50	136.12
6/17/2022 6:41	48.57	6/17/2022 5:23	80.46	6/16/2022 3:46	16.43	6/16/2022 2:55	4.60	6/16/2022 7:51	135.57
6/17/2022 6:42	48.53	6/17/2022 5:24	80.49	6/16/2022 3:47	16.48	6/16/2022 2:56	4.63	6/16/2022 7:52	135.03
6/17/2022 6:43	48.54	6/17/2022 5:25	80.50	6/16/2022 3:48	16.41	6/16/2022 2:57	4.66	6/16/2022 7:53	134.50
6/17/2022 6:44	48.58	6/17/2022 5:26	80.44	6/16/2022 3:49	16.39	6/16/2022 2:58	4.66	6/16/2022 7:54	134.05
6/17/2022 6:45	48.54	6/17/2022 5:27	80.43	6/16/2022 3:50	16.40	6/16/2022 2:59	4.61	6/16/2022 7:55	133.50
6/17/2022 6:46	48.56	6/17/2022 5:28	80.44	6/16/2022 3:51	16.42	6/16/2022 3:00	4.60	6/16/2022 7:56	136.17
6/17/2022 6:47	48.56	6/17/2022 5:29	80.47	6/16/2022 3:52	16.38	6/16/2022 3:01	4.61	6/16/2022 7:57	139.47
6/17/2022 6:48	48.55	6/17/2022 5:30	80.47	6/16/2022 3:53	16.41	6/16/2022 3:02	4.62	6/16/2022 7:58	138.78
6/17/2022 6:49	48.54	6/17/2022 5:31	80.47	6/16/2022 3:54	16.39	6/16/2022 3:03	4.61	6/16/2022 7:59	138.23
6/17/2022 6:50	48.55	6/17/2022 5:32	80.48	6/16/2022 3:55	16.42	6/16/2022 3:04	4.53	6/16/2022 8:00	137.62
6/17/2022 6:51	48.56	6/17/2022 5:33	80.44	6/16/2022 3:56	16.35	6/16/2022 3:05	4.60	6/16/2022 8:01	139.78
6/17/2022 6:52	50.98	6/17/2022 5:34	80.45	6/16/2022 3:57	16.41	6/16/2022 3:06	4.58	6/16/2022 8:02	141.78

6/17/2022 6:53	52.64	6/17/2022 5:35	80.47	6/16/2022 3:58	16.39	6/16/2022 3:07	4.57	6/16/2022 8:03	141.15
6/17/2022 6:54	53.43	6/17/2022 5:36	80.51	6/16/2022 3:59	16.42	6/16/2022 3:08	4.62	6/16/2022 8:04	140.59
6/17/2022 6:55	54.03	6/17/2022 5:37	80.49	6/16/2022 4:00	16.35	6/16/2022 3:09	4.59	6/16/2022 8:05	139.95
6/17/2022 6:56	54.46	6/17/2022 5:38	80.44	6/16/2022 4:01	16.40	6/16/2022 3:10	4.52	6/16/2022 8:06	144.93
6/17/2022 6:57	54.80	6/17/2022 5:39	80.48	6/16/2022 4:02	16.35	6/16/2022 3:11	4.59	6/16/2022 8:07	144.95
6/17/2022 6:58	55.02	6/17/2022 5:40	80.50	6/16/2022 4:03	16.33	6/16/2022 3:12	4.61	6/16/2022 8:08	144.92
6/17/2022 6:59	55.27	6/17/2022 5:41	80.46	6/16/2022 4:04	16.35	6/16/2022 3:13	4.49	6/16/2022 8:09	144.95
6/17/2022 7:00	52.74	6/17/2022 5:42	80.48	6/16/2022 4:05	16.35	6/16/2022 3:14	4.58	6/16/2022 8:10	144.92
6/17/2022 7:01	51.67	6/17/2022 5:43	80.45	6/16/2022 4:06	16.36	6/16/2022 3:15	4.52	6/16/2022 8:11	144.93
6/17/2022 7:02	51.18	6/17/2022 5:44	80.48	6/16/2022 4:07	16.33	6/16/2022 3:16	4.49	6/16/2022 8:12	144.91
6/17/2022 7:03	50.83	6/17/2022 5:45	80.49	6/16/2022 4:08	16.36	6/16/2022 3:17	4.56	6/16/2022 8:13	144.94
6/17/2022 7:04	50.64	6/17/2022 5:46	80.43	6/16/2022 4:09	16.32	6/16/2022 3:18	4.47	6/16/2022 8:14	144.93
6/17/2022 7:05	50.48	6/17/2022 5:47	80.48	6/16/2022 4:10	16.29	6/16/2022 3:19	4.44	6/16/2022 8:15	144.92
6/17/2022 7:06	50.35	6/17/2022 5:48	80.43	6/16/2022 4:11	16.29	6/16/2022 3:20	4.56	6/16/2022 8:16	144.92
6/17/2022 7:07	50.21	6/17/2022 5:49	80.46	6/16/2022 4:12	16.34	6/16/2022 3:21	4.50	6/16/2022 8:17	144.91
6/17/2022 7:08	50.15	6/17/2022 5:50	80.45	6/16/2022 4:13	16.35	6/16/2022 3:22	4.45	6/16/2022 8:18	144.92
6/17/2022 7:09	50.11	6/17/2022 5:51	80.47	6/16/2022 4:14	16.33	6/16/2022 3:23	4.50	6/16/2022 8:19	144.90
6/17/2022 7:10	50.02	6/17/2022 5:52	80.44	6/16/2022 4:15	16.29	6/16/2022 3:24	4.46	6/16/2022 8:20	144.95
6/17/2022 7:11	49.94	6/17/2022 5:53	80.46	6/16/2022 4:16	16.33	6/16/2022 3:25	4.49	6/16/2022 8:21	144.93
6/17/2022 7:12	49.90	6/17/2022 5:54	80.47	6/16/2022 4:17	16.29	6/16/2022 3:26	4.50	6/16/2022 8:22	144.93
6/17/2022 7:13	49.84	6/17/2022 5:55	80.47	6/16/2022 4:18	16.29	6/16/2022 3:27	4.43	6/16/2022 8:23	144.92
6/17/2022 7:14	49.83	6/17/2022 5:56	80.52	6/16/2022 4:19	16.31	6/16/2022 3:28	4.38	6/16/2022 8:24	144.92
6/17/2022 7:15	49.76	6/17/2022 5:57	80.47	6/16/2022 4:20	16.33	6/16/2022 3:29	4.47	6/16/2022 8:25	144.94
6/17/2022 7:16	49.74	6/17/2022 5:58	80.48	6/16/2022 4:21	16.32	6/16/2022 3:30	4.45	6/16/2022 8:26	144.93
6/17/2022 7:17	49.74	6/17/2022 5:59	80.48	6/16/2022 4:22	16.30	6/16/2022 3:31	4.44	6/16/2022 8:27	144.92
6/17/2022 7:18	49.68	6/17/2022 6:00	80.49	6/16/2022 4:23	16.30	6/16/2022 3:32	4.46	6/16/2022 8:28	144.90
6/17/2022 7:19	49.64	6/17/2022 6:01	80.50	6/16/2022 4:24	16.27	6/16/2022 3:33	4.40	6/16/2022 8:29	144.93
6/17/2022 7:20	49.61	6/17/2022 6:02	80.44	6/16/2022 4:25	16.29	6/16/2022 3:34	4.37	6/16/2022 8:30	144.95
6/17/2022 7:21	49.60	6/17/2022 6:03	80.42	6/16/2022 4:26	16.28	6/16/2022 3:35	4.39	6/16/2022 8:31	144.90
6/17/2022 7:22	49.59	6/17/2022 6:04	80.45	6/16/2022 4:27	16.24	6/16/2022 3:36	4.42	6/16/2022 8:32	144.93
6/17/2022 7:23	49.55	6/17/2022 6:05	80.45	6/16/2022 4:28	16.23	6/16/2022 3:37	4.34	6/16/2022 8:33	144.94
6/17/2022 7:24	49.53	6/17/2022 6:06	80.45	6/16/2022 4:29	16.28	6/16/2022 3:38	4.42	6/16/2022 8:34	144.96
6/17/2022 7:25	49.50	6/17/2022 6:07	80.51	6/16/2022 4:30	16.25	6/16/2022 3:39	4.43	6/16/2022 8:35	144.72
6/17/2022 7:26	49.47	6/17/2022 6:08	80.43	6/16/2022 4:31	16.23	6/16/2022 3:40	4.37	6/16/2022 8:36	144.08
6/17/2022 7:27	49.50	6/17/2022 6:09	80.46	6/16/2022 4:32	16.24	6/16/2022 3:41	4.38	6/16/2022 8:37	143.50
6/17/2022 7:28	49.43	6/17/2022 6:10	80.46	6/16/2022 4:33	16.31	6/16/2022 3:42	4.40	6/16/2022 8:38	142.87
6/17/2022 7:29	49.43	6/17/2022 6:11	80.43	6/16/2022 4:34	16.26	6/16/2022 3:43	4.35	6/16/2022 8:39	142.25
6/17/2022 7:30	49.40	6/17/2022 6:12	80.48	6/16/2022 4:35	16.30	6/16/2022 3:44	4.38	6/16/2022 8:40	141.65
6/17/2022 7:31	49.41	6/17/2022 6:13	80.49	6/16/2022 4:36	16.25	6/16/2022 3:45	4.39	6/16/2022 8:41	141.10
6/17/2022 7:32	49.38	6/17/2022 6:14	80.48	6/16/2022 4:37	16.24	6/16/2022 3:46	4.35	6/16/2022 8:42	140.53
6/17/2022 7:33	49.37	6/17/2022 6:15	80.45	6/16/2022 4:38	16.23	6/16/2022 3:47	4.43	6/16/2022 8:43	139.93
6/17/2022 7:34	49.36	6/17/2022 6:16	80.47	6/16/2022 4:39	16.24	6/16/2022 3:48	4.40	6/16/2022 8:44	139.39
6/17/2022 7:35	49.37	6/17/2022 6:17	80.44	6/16/2022 4:40	16.24	6/16/2022 3:49	4.40	6/16/2022 8:45	138.77
6/17/2022 7:36	49.32	6/17/2022 6:18	80.46	6/16/2022 4:41	16.27	6/16/2022 3:50	4.87	6/16/2022 8:46	138.28
6/17/2022 7:37	49.36	6/17/2022 6:19	80.46	6/16/2022 4:42	16.26	6/16/2022 3:51	5.16	6/16/2022 8:47	137.70
6/17/2022 7:38	49.30	6/17/2022 6:20	80.44	6/16/2022 4:43	16.23	6/16/2022 3:52	5.36	6/16/2022 8:48	137.12
6/17/2022 7:39	49.34	6/17/2022 6:21	80.48	6/16/2022 4:44	16.24	6/16/2022 3:53	5.45	6/16/2022 8:49	136.59
6/17/2022 7:40	49.30	6/17/2022 6:22	80.44	6/16/2022 4:45	16.24	6/16/2022 3:54	5.57	6/16/2022 8:50	135.96
6/17/2022 7:41	49.26	6/17/2022 6:23	80.45	6/16/2022 4:46	16.22	6/16/2022 3:55	5.65	6/16/2022 8:51	135.46
6/17/2022 7:42	49.28	6/17/2022 6:24	80.45	6/16/2022 4:47	16.25	6/16/2022 3:56	5.79	6/16/2022 8:52	134.91
6/17/2022 7:43	49.28	6/17/2022 6:25	80.49	6/16/2022 4:48	16.24	6/16/2022 3:57	5.58	6/16/2022 8:53	134.37
6/17/2022 7:44	49.26	6/17/2022 6:26	80.43	6/16/2022 4:49	16.20	6/16/2022 3:58	5.21	6/16/2022 8:54	133.83
6/17/2022 7:45	49.26	6/17/2022 6:27	80.45	6/16/2022 4:50	16.23	6/16/2022 3:59	5.05	6/16/2022 8:55	133.30
6/17/2022 7:46	49.27	6/17/2022 6:28	80.47	6/16/2022 4:51	16.21	6/16/2022 4:00	4.83	6/16/2022 8:56	132.81
6/17/2022 7:47	49.26	6/17/2022 6:29	80.49	6/16/2022 4:52	16.21	6/16/2022 4:01	4.76	6/16/2022 8:57	132.30
6/17/2022 7:48	49.24	6/17/2022 6:30	80.47	6/16/2022 4:53	16.23	6/16/2022 4:02	4.72	6/16/2022 8:58	131.75
6/17/2022 7:49	49.22	6/17/2022 6:31	80.48	6/16/2022 4:54	16.23	6/16/2022 4:03	4.68	6/16/2022 8:59	131.22
6/17/2022 7:50	49.19	6/17/2022 6:32	80.43	6/16/2022 4:55	16.21	6/16/2022 4:04	4.64	6/16/2022 9:00	130.71
6/17/2022 7:51	49.17	6/17/2022 6:33	80.49	6/16/2022 4:56	16.17	6/16/2022 4:05	4.58	6/16/2022 9:01	130.20
6/17/2022 7:52	49.17	6/17/2022 6:34	80.47	6/16/2022 4:57	16.22	6/16/2022 4:06	4.56	6/16/2022 9:02	129.70
6/17/2022 7:53	49.19	6/17/2022 6:35	80.45	6/16/2022 4:58	16.22	6/16/2022 4:07	4.53	6/16/2022 9:03	129.21
6/17/2022 7:54	49.21	6/17/2022 6:36	80.43	6/16/2022 4:59	16.22	6/16/2022 4:08	4.55	6/16/2022 9:04	128.72
6/17/2022 7:55	49.17	6/17/2022 6:37	80.47	6/16/2022 5:00	16.19	6/16/2022 4:09	4.54	6/16/2022 9:05	128.23
6/17/2022 7:56	49.16	6/17/2022 6:38	80.44	6/16/2022 5:01	16.19	6/16/2022 4:10	4.44	6/16/2022 9:06	127.72
6/17/2022 7:57	49.17	6/17/2022 6:39	80.46	6/16/2022 5:02	16.18	6/16/2022 4:11	4.45	6/16/2022 9:07	127.25
6/17/2022 7:58	49.16	6/17/2022 6:40	80.48	6/16/2022 5:03	16.22	6/16/2022 4:12	4.43	6/16/2022 9:08	126.76
6/17/2022 7:59	49.17	6/17/2022 6:41	80.42	6/16/2022 5:04	16.19	6/16/2022 4:13	4.41	6/16/2022 9:09	126.28
6/17/2022 8:00	49.17	6/17/2022 6:42	80.45	6/16/2022 5:05	16.18	6/16/2022 4:14	4.46	6/16/2022 9:10	125.81
6/17/2022 8:01	49.15	6/17/2022 6:43	80.46	6/16/2022 5:06	16.18	6/16/2022 4:15	4.38	6/16/2022 9:11	125.30
6/17/2022 8:02	49.10	6/17/2022 6:44	80.43	6/16/2022 5:07	16.13	6/16/2022 4:16	4.38	6/16/2022 9:12	124.86
6/17/2022 8:03	49.08	6/17/2022 6:45	80.49	6/16/2022 5:08	16.22	6/16/2022 4:17	4.38	6/16/2022 9:13	124.36
6/17/2022 8:04	49.12	6/17/2022 6:46	80.46	6/16/2022 5:09	16.17	6/16/2022 4:18	4.36	6/16/2022 9:14	123.91
6/17/2022 8:05	49.12	6/17/2022 6:47	80.47	6/16/2022 5:10	16.14	6/16/2022 4:19	4.42	6/16/2022 9:15	123.43
6/17/2022 8:06	49.16	6/17/2022 6:48	80.46	6/16/2022 5:11	16.19	6/16/2022 4:20	4.31	6/16/2022 9:16	122.97
6/17/2022 8:07	49.09	6/17/2022 6:49	80.47	6/16/2022 5:12	16.16	6/16/2022 4:21	4.27	6/16/2022 9:17	122.52
6/17/2022 8:08	49.11	6/17/2022 6:50	80.45	6/16/2022 5:13	16.14	6/16/2022 4:22	4.28	6/16/2022 9:18	122.07
6/17/2022 8:09	49.11	6/17/2022 6:51	80.48	6/16/2022 5:14	16.21	6/16/2022 4:23	4.26	6/16/2022 9:19	121.61
6/17/2022 8:10	49.10	6/17/2022 6:52	80.52	6/16/2022 5:15	16.15	6/16/2022 4:24	4.31	6/16/2022 9:20	121.17
6/17/2022 8:11	49.07	6/17/2022 6:53	80.48	6/16/2022 5:16	16.20	6/16/2022 4:25	4.26	6/16/2022 9:21	120.73
6/17/2022 8:12	49.06	6/17/2022 6:54	80.44	6/16/2022 5:17	16.16	6/16/2022 4:26	4.24	6/16/2022 9:22	120.31
6/17/2022 8:13	49.07	6/17/2022 6:55	80.46	6/16/2022 5:18	16.18	6/16/2022 4:27	4.26	6/16/2022 9:23	119.89
6/17/2022 8:14	49.05	6/17/2022 6:56	80.43	6/16/2022 5:19	16.18	6/16/2022 4:28	4.22	6/16/2022 9:24	119.45
6/17/2022 8:15	49.06	6/17/2022 6:57	80.48	6/16/2022 5:20	16.14	6/16/2022 4:29	4.29	6/16/2022 9:25	119.06
6/17/2022 8:16	49.07	6/17/2022 6:58	80.48	6/16/2022 5:21	16.17	6/16/2022 4:30	4.21	6/16/2022 9:26	118.61
6/17/2022 8:17	49.08	6/17/2022 6:59	80.49	6/16/2022 5:22	16.19	6/16/2022 4:31	4.22	6/16/2022 9:27	118.23
6/17/2022 8:18	49.08	6/17/2022 7:00	80.47	6/16/2022 5:23	16.21	6/16/2022 4:32	4.18	6/16/2022 9:28	117.82
6/17/2022 8:19	49.07	6/17/2022 7:01	80.49	6/16/2022 5:24	16.17	6/16/2022 4:33	4.17	6/16/2022 9:29	117.38
6/17/2022 8:20	49.04	6/17/2022 7:02	80.46	6/16/2022 5:25	16.15	6/16/2022 4:34	4.23	6/16/2022 9:30	116.97

6/17/2022 8:21	49.07	6/17/2022 7:03	80.48	6/16/2022 5:26	16.18	6/16/2022 4:35	4.16	6/16/2022 9:31	116.56
6/17/2022 8:22	49.04	6/17/2022 7:04	80.47	6/16/2022 5:27	16.15	6/16/2022 4:36	4.15	6/16/2022 9:32	116.17
6/17/2022 8:23	49.03	6/17/2022 7:05	80.50	6/16/2022 5:28	16.14	6/16/2022 4:37	4.11	6/16/2022 9:33	115.77
6/17/2022 8:24	49.03	6/17/2022 7:06	80.48	6/16/2022 5:29	16.19	6/16/2022 4:38	4.14	6/16/2022 9:34	115.38
6/17/2022 8:25	49.04	6/17/2022 7:07	80.50	6/16/2022 5:30	16.11	6/16/2022 4:39	4.16	6/16/2022 9:35	115.03
6/17/2022 8:26	49.01	6/17/2022 7:08	80.46	6/16/2022 5:31	16.16	6/16/2022 4:40	4.10	6/16/2022 9:36	114.61
6/17/2022 8:27	49.02	6/17/2022 7:09	80.46	6/16/2022 5:32	16.17	6/16/2022 4:41	4.08	6/16/2022 9:37	114.25
6/17/2022 8:28	49.02	6/17/2022 7:10	80.45	6/16/2022 5:33	16.13	6/16/2022 4:42	4.10	6/16/2022 9:38	113.90
6/17/2022 8:29	49.01	6/17/2022 7:11	80.48	6/16/2022 5:34	16.16	6/16/2022 4:43	4.07	6/16/2022 9:39	113.54
6/17/2022 8:30	49.01	6/17/2022 7:12	80.42	6/16/2022 5:35	16.13	6/16/2022 4:44	4.11	6/16/2022 9:40	113.14
6/17/2022 8:31	49.02	6/17/2022 7:13	80.44	6/16/2022 5:36	16.13	6/16/2022 4:45	4.05	6/16/2022 9:41	112.78
6/17/2022 8:32	49.01	6/17/2022 7:14	80.46	6/16/2022 5:37	16.11	6/16/2022 4:46	4.03	6/16/2022 9:42	112.41
6/17/2022 8:33	48.99	6/17/2022 7:15	80.45	6/16/2022 5:38	16.09	6/16/2022 4:47	4.04	6/16/2022 9:43	112.06
6/17/2022 8:34	49.00	6/17/2022 7:16	80.45	6/16/2022 5:39	16.17	6/16/2022 4:48	4.01	6/16/2022 9:44	111.70
6/17/2022 8:35	49.01	6/17/2022 7:17	80.48	6/16/2022 5:40	16.14	6/16/2022 4:49	3.96	6/16/2022 9:45	111.34
6/17/2022 8:36	48.99	6/17/2022 7:18	80.47	6/16/2022 5:41	16.15	6/16/2022 4:50	4.02	6/16/2022 9:46	111.03
6/17/2022 8:37	48.98	6/17/2022 7:19	80.48	6/16/2022 5:42	16.14	6/16/2022 4:51	3.99	6/16/2022 9:47	110.64
6/17/2022 8:38	48.97	6/17/2022 7:20	80.47	6/16/2022 5:43	16.15	6/16/2022 4:52	3.99	6/16/2022 9:48	110.32
6/17/2022 8:39	48.99	6/17/2022 7:21	80.46	6/16/2022 5:44	16.11	6/16/2022 4:53	3.99	6/16/2022 9:49	109.97
6/17/2022 8:40	48.97	6/17/2022 7:22	80.47	6/16/2022 5:45	16.18	6/16/2022 4:54	3.95	6/16/2022 9:50	109.63
6/17/2022 8:41	49.00	6/17/2022 7:23	80.49	6/16/2022 5:46	16.13	6/16/2022 4:55	3.95	6/16/2022 9:51	109.29
6/17/2022 8:42	48.96	6/17/2022 7:24	80.46	6/16/2022 5:47	16.16	6/16/2022 4:56	3.92	6/16/2022 9:52	109.01
6/17/2022 8:43	48.94	6/17/2022 7:25	80.47	6/16/2022 5:48	16.17	6/16/2022 4:57	3.97	6/16/2022 9:53	108.67
6/17/2022 8:44	48.98	6/17/2022 7:26	80.49	6/16/2022 5:49	16.14	6/16/2022 4:58	3.96	6/16/2022 9:54	108.34
6/17/2022 8:45	48.97	6/17/2022 7:27	80.45	6/16/2022 5:50	16.14	6/16/2022 4:59	3.91	6/16/2022 9:55	107.98
6/17/2022 8:46	48.99	6/17/2022 7:28	80.47	6/16/2022 5:51	16.14	6/16/2022 5:00	3.88	6/16/2022 9:56	107.69
6/17/2022 8:47	49.00	6/17/2022 7:29	80.48	6/16/2022 5:52	16.16	6/16/2022 5:01	3.88	6/16/2022 9:57	107.39
6/17/2022 8:48	48.97	6/17/2022 7:30	80.47	6/16/2022 5:53	16.14	6/16/2022 5:02	3.87	6/16/2022 9:58	107.09
6/17/2022 8:49	48.99	6/17/2022 7:31	80.48	6/16/2022 5:54	16.13	6/16/2022 5:03	3.89	6/16/2022 9:59	106.77
6/17/2022 8:50	48.98	6/17/2022 7:32	80.47	6/16/2022 5:55	16.15	6/16/2022 5:04	3.85	6/16/2022 10:00	106.47
6/17/2022 8:51	48.96	6/17/2022 7:33	80.47	6/16/2022 5:56	16.12	6/16/2022 5:05	3.84	6/16/2022 10:01	106.15
6/17/2022 8:52	48.97	6/17/2022 7:34	80.51	6/16/2022 5:57	16.14	6/16/2022 5:06	3.82	6/16/2022 10:02	105.85
6/17/2022 8:53	48.97	6/17/2022 7:35	80.45	6/16/2022 5:58	16.12	6/16/2022 5:07	3.83	6/16/2022 10:03	105.54
6/17/2022 8:54	48.94	6/17/2022 7:36	80.50	6/16/2022 5:59	16.15	6/16/2022 5:08	3.84	6/16/2022 10:04	105.25
6/17/2022 8:55	48.95	6/17/2022 7:37	80.47	6/16/2022 6:00	16.11	6/16/2022 5:09	3.79	6/16/2022 10:05	104.99
6/17/2022 8:56	48.93	6/17/2022 7:38	80.47	6/16/2022 6:01	16.09	6/16/2022 5:10	3.81	6/16/2022 10:06	104.71
6/17/2022 8:57	48.94	6/17/2022 7:39	80.49	6/16/2022 6:02	16.13	6/16/2022 5:11	3.82	6/16/2022 10:07	104.39
6/17/2022 8:58	48.92	6/17/2022 7:40	80.47	6/16/2022 6:03	16.14	6/16/2022 5:12	3.82	6/16/2022 10:08	104.14
6/17/2022 8:59	48.91	6/17/2022 7:41	80.50	6/16/2022 6:04	16.16	6/16/2022 5:13	3.85	6/16/2022 10:09	103.95
6/17/2022 9:00	48.93	6/17/2022 7:42	80.41	6/16/2022 6:05	16.12	6/16/2022 5:14	3.79	6/16/2022 10:10	103.61
6/17/2022 9:01	48.90	6/17/2022 7:43	80.49	6/16/2022 6:06	16.15	6/16/2022 5:15	3.78	6/16/2022 10:11	103.33
6/17/2022 9:02	48.91	6/17/2022 7:44	80.50	6/16/2022 6:07	16.13	6/16/2022 5:16	3.80	6/16/2022 10:12	103.08
6/17/2022 9:03	48.91	6/17/2022 7:45	80.49	6/16/2022 6:08	16.07	6/16/2022 5:17	3.82	6/16/2022 10:13	102.79
6/17/2022 9:04	48.92	6/17/2022 7:46	80.49	6/16/2022 6:09	16.09	6/16/2022 5:18	3.85	6/16/2022 10:14	102.54
6/17/2022 9:05	48.91	6/17/2022 7:47	80.49	6/16/2022 6:10	16.14	6/16/2022 5:19	3.74	6/16/2022 10:15	102.25
6/17/2022 9:06	48.91	6/17/2022 7:48	80.49	6/16/2022 6:11	16.09	6/16/2022 5:20	3.76	6/16/2022 10:16	102.01
6/17/2022 9:07	48.91	6/17/2022 7:49	80.45	6/16/2022 6:12	16.09	6/16/2022 5:21	3.75	6/16/2022 10:17	101.73
6/17/2022 9:08	48.91	6/17/2022 7:50	80.48	6/16/2022 6:13	16.12	6/16/2022 5:22	3.80	6/16/2022 10:18	101.46
6/17/2022 9:09	48.91	6/17/2022 7:51	80.44	6/16/2022 6:14	16.15	6/16/2022 5:23	3.76	6/16/2022 10:19	101.22
6/17/2022 9:10	48.91	6/17/2022 7:52	80.49	6/16/2022 6:15	16.05	6/16/2022 5:24	3.71	6/16/2022 10:20	100.94
6/17/2022 9:11	48.91	6/17/2022 7:53	80.47	6/16/2022 6:16	16.14	6/16/2022 5:25	3.74	6/16/2022 10:21	100.70
6/17/2022 9:12	48.91	6/17/2022 7:54	80.46	6/16/2022 6:17	16.07	6/16/2022 5:26	3.75	6/16/2022 10:22	100.47
6/17/2022 9:13	48.89	6/17/2022 7:55	80.46	6/16/2022 6:18	16.12	6/16/2022 5:27	3.75	6/16/2022 10:23	100.18
6/17/2022 9:14	48.88	6/17/2022 7:56	80.47	6/16/2022 6:19	16.11	6/16/2022 5:28	3.70	6/16/2022 10:24	99.97
6/17/2022 9:15	48.90	6/17/2022 7:57	80.47	6/16/2022 6:20	16.08	6/16/2022 5:29	3.66	6/16/2022 10:25	99.74
6/17/2022 9:16	48.89	6/17/2022 7:58	80.44	6/16/2022 6:21	16.13	6/16/2022 5:30	3.67	6/16/2022 10:26	99.46
6/17/2022 9:17	48.91	6/17/2022 7:59	80.51	6/16/2022 6:22	16.08	6/16/2022 5:31	3.64	6/16/2022 10:27	99.24
6/17/2022 9:18	48.90	6/17/2022 8:00	80.46	6/16/2022 6:23	16.10	6/16/2022 5:32	3.68	6/16/2022 10:28	98.99
6/17/2022 9:19	48.86	6/17/2022 8:01	80.49	6/16/2022 6:24	16.13	6/16/2022 5:33	3.62	6/16/2022 10:29	98.79
6/17/2022 9:20	48.87	6/17/2022 8:02	80.48	6/16/2022 6:25	16.09	6/16/2022 5:34	3.60	6/16/2022 10:30	98.53
6/17/2022 9:21	48.88	6/17/2022 8:03	80.46	6/16/2022 6:26	16.10	6/16/2022 5:35	3.65	6/16/2022 10:31	98.29
6/17/2022 9:22	48.88	6/17/2022 8:04	80.48	6/16/2022 6:27	16.17	6/16/2022 5:36	3.62	6/16/2022 10:32	98.09
6/17/2022 9:23	48.89	6/17/2022 8:05	80.45	6/16/2022 6:28	16.14	6/16/2022 5:37	3.65	6/16/2022 10:33	97.86
6/17/2022 9:24	48.89	6/17/2022 8:06	80.51	6/16/2022 6:29	16.08	6/16/2022 5:38	3.59	6/16/2022 10:34	97.65
6/17/2022 9:25	48.87	6/17/2022 8:07	80.51	6/16/2022 6:30	16.11	6/16/2022 5:39	3.63	6/16/2022 10:35	97.37
6/17/2022 9:26	48.90	6/17/2022 8:08	80.46	6/16/2022 6:31	16.08	6/16/2022 5:40	3.63	6/16/2022 10:36	97.19
6/17/2022 9:27	48.88	6/17/2022 8:09	80.50	6/16/2022 6:32	16.04	6/16/2022 5:41	3.62	6/16/2022 10:37	96.94
6/17/2022 9:28	48.88	6/17/2022 8:10	80.51	6/16/2022 6:33	16.10	6/16/2022 5:42	3.60	6/16/2022 10:38	96.72
6/17/2022 9:29	48.86	6/17/2022 8:11	80.47	6/16/2022 6:34	16.08	6/16/2022 5:43	3.58	6/16/2022 10:39	96.53
6/17/2022 9:30	48.86	6/17/2022 8:12	80.51	6/16/2022 6:35	16.13	6/16/2022 5:44	3.57	6/16/2022 10:40	96.28
6/17/2022 9:31	48.93	6/17/2022 8:13	80.49	6/16/2022 6:36	16.08	6/16/2022 5:45	3.58	6/16/2022 10:41	96.07
6/17/2022 9:32	48.84	6/17/2022 8:14	80.50	6/16/2022 6:37	16.07	6/16/2022 5:46	3.59	6/16/2022 10:42	95.86
6/17/2022 9:33	48.85	6/17/2022 8:15	80.46	6/16/2022 6:38	16.12	6/16/2022 5:47	3.60	6/16/2022 10:43	97.17
6/17/2022 9:34	48.86	6/17/2022 8:16	80.50	6/16/2022 6:39	16.12	6/16/2022 5:48	3.57	6/16/2022 10:44	101.18
6/17/2022 9:35	48.86	6/17/2022 8:17	80.50	6/16/2022 6:40	16.11	6/16/2022 5:49	3.58	6/16/2022 10:45	100.78
6/17/2022 9:36	48.87	6/17/2022 8:18	80.48	6/16/2022 6:41	16.08	6/16/2022 5:50	3.59	6/16/2022 10:46	100.48
6/17/2022 9:37	48.85	6/17/2022 8:19	80.47	6/16/2022 6:42	16.12	6/16/2022 5:51	3.61	6/16/2022 10:47	100.19
6/17/2022 9:38	48.89	6/17/2022 8:20	80.47	6/16/2022 6:43	16.09	6/16/2022 5:52	3.59	6/16/2022 10:48	99.90
6/17/2022 9:39	48.86	6/17/2022 8:21	80.44	6/16/2022 6:44	16.08	6/16/2022 5:53	3.62	6/16/2022 10:49	99.63
6/17/2022 9:40	48.84	6/17/2022 8:22	80.46	6/16/2022 6:45	16.07	6/16/2022 5:54	3.58	6/16/2022 10:50	99.38
6/17/2022 9:41	48.86	6/17/2022 8:23	80.51	6/16/2022 6:46	16.07	6/16/2022 5:55	3.59	6/16/2022 10:51	99.12
6/17/2022 9:42	48.88	6/17/2022 8:24	80.50	6/16/2022 6:47	16.11	6/16/2022 5:56	3.60	6/16/2022 10:52	98.86
6/17/2022 9:43	48.85	6/17/2022 8:25	80.49	6/16/2022 6:48	16.08	6/16/2022 5:57	3.61	6/16/2022 10:53	98.64
6/17/2022 9:44	48.84	6/17/2022 8:26	80.49	6/16/2022 6:49	16.13	6/16/2022 5:58	3.59	6/16/2022 10:54	98.34
6/17/2022 9:45	48.85	6/17/2022 8:27	80.50	6/16/2022 6:50	16.11	6/16/2022 5:59	3.52	6/16/2022 10:55	98.11
6/17/2022 9:46	48.86	6/17/2022 8:28	80.48	6/16/2022 6:51	16.07	6/16/2022 6:00	3.53	6/16/2022 10:56	97.81
6/17/2022 9:47	48.86	6/17/2022 8:29	80.50	6/16/2022 6:52	16.06	6/16/2022 6:01	3.59	6/16/2022 10:57	97.59
6/17/2022 9:48	48.84	6/17/2022 8:30	80.49	6/16/2022 6:53	16.12	6/16/2022 6:02	3.57	6/16/2022 10:58	97.36

6/17/2022 9:49	48.81	6/17/2022 8:31	80.51	6/16/2022 6:54	16.08	6/16/2022 6:03	5.64	6/16/2022 10:59	97.10
6/17/2022 9:50	48.84	6/17/2022 8:32	80.47	6/16/2022 6:55	16.12	6/16/2022 6:04	6.72	6/16/2022 11:00	96.87
6/17/2022 9:51	48.79	6/17/2022 8:33	80.49	6/16/2022 6:56	16.12	6/16/2022 6:05	7.50	6/16/2022 11:01	96.63
6/17/2022 9:52	48.82	6/17/2022 8:34	80.49	6/16/2022 6:57	16.07	6/16/2022 6:06	8.08	6/16/2022 11:02	96.39
6/17/2022 9:53	48.85	6/17/2022 8:35	80.49	6/16/2022 6:58	16.09	6/16/2022 6:07	9.03	6/16/2022 11:03	96.13
6/17/2022 9:54	48.84	6/17/2022 8:36	80.48	6/16/2022 6:59	16.11	6/16/2022 6:08	9.60	6/16/2022 11:04	95.94
6/17/2022 9:55	48.82	6/17/2022 8:37	80.50	6/16/2022 7:00	16.08	6/16/2022 6:09	10.53	6/16/2022 11:05	95.75
6/17/2022 9:56	48.83	6/17/2022 8:38	80.48	6/16/2022 7:01	16.09	6/16/2022 6:10	10.98	6/16/2022 11:06	95.53
6/17/2022 9:57	48.83	6/17/2022 8:39	80.46	6/16/2022 7:02	16.10	6/16/2022 6:11	11.35	6/16/2022 11:07	95.27
6/17/2022 9:58	48.81	6/17/2022 8:40	80.46	6/16/2022 7:03	16.10	6/16/2022 6:12	11.82	6/16/2022 11:08	95.05
6/17/2022 9:59	48.81	6/17/2022 8:41	80.48	6/16/2022 7:04	16.10	6/16/2022 6:13	12.19	6/16/2022 11:09	94.87
6/17/2022 10:00	48.82	6/17/2022 8:42	80.50	6/16/2022 7:05	16.09	6/16/2022 6:14	12.35	6/16/2022 11:10	94.67
6/17/2022 10:01	48.79	6/17/2022 8:43	80.48	6/16/2022 7:06	16.12	6/16/2022 6:15	12.48	6/16/2022 11:11	94.43
6/17/2022 10:02	48.82	6/17/2022 8:44	80.49	6/16/2022 7:07	16.08	6/16/2022 6:16	12.69	6/16/2022 11:12	94.25
6/17/2022 10:03	48.81	6/17/2022 8:45	80.50	6/16/2022 7:08	16.06	6/16/2022 6:17	12.66	6/16/2022 11:13	94.07
6/17/2022 10:04	48.81	6/17/2022 8:46	80.48	6/16/2022 7:09	16.06	6/16/2022 6:18	12.16	6/16/2022 11:14	93.87
6/17/2022 10:05	48.80	6/17/2022 8:47	80.44	6/16/2022 7:10	16.11	6/16/2022 6:19	11.97	6/16/2022 11:15	93.72
6/17/2022 10:06	48.84	6/17/2022 8:48	80.48	6/16/2022 7:11	16.07	6/16/2022 6:20	11.89	6/16/2022 11:16	93.52
6/17/2022 10:07	48.79	6/17/2022 8:49	80.49	6/16/2022 7:12	16.09	6/16/2022 6:21	11.89	6/16/2022 11:17	93.33
6/17/2022 10:08	48.82	6/17/2022 8:50	80.54	6/16/2022 7:13	16.09	6/16/2022 6:22	11.95	6/16/2022 11:18	93.14
6/17/2022 10:09	48.82	6/17/2022 8:51	80.48	6/16/2022 7:14	16.11	6/16/2022 6:23	11.94	6/16/2022 11:19	92.97
6/17/2022 10:10	48.80	6/17/2022 8:52	80.49	6/16/2022 7:15	16.08	6/16/2022 6:24	12.00	6/16/2022 11:20	92.79
6/17/2022 10:11	48.80	6/17/2022 8:53	80.49	6/16/2022 7:16	16.09	6/16/2022 6:25	12.15	6/16/2022 11:21	92.59
6/17/2022 10:12	48.78	6/17/2022 8:54	80.47	6/16/2022 7:17	16.05	6/16/2022 6:26	12.17	6/16/2022 11:22	92.40
6/17/2022 10:13	48.81	6/17/2022 8:55	80.46	6/16/2022 7:18	16.09	6/16/2022 6:27	12.20	6/16/2022 11:23	92.18
6/17/2022 10:14	48.79	6/17/2022 8:56	80.48	6/16/2022 7:19	16.11	6/16/2022 6:28	12.35	6/16/2022 11:24	92.02
6/17/2022 10:15	48.79	6/17/2022 8:57	80.46	6/16/2022 7:20	20.94	6/16/2022 6:29	12.38	6/16/2022 11:25	91.85
6/17/2022 10:16	48.81	6/17/2022 8:58	80.49	6/16/2022 7:21	24.63	6/16/2022 6:30	12.50	6/16/2022 11:26	91.63
6/17/2022 10:17	48.80	6/17/2022 8:59	80.52	6/16/2022 7:22	25.71	6/16/2022 6:31	12.61	6/16/2022 11:27	91.52
6/17/2022 10:18	48.81	6/17/2022 9:00	80.50	6/16/2022 7:23	22.79	6/16/2022 6:32	13.40	6/16/2022 11:28	91.37
6/17/2022 10:19	48.80	6/17/2022 9:01	80.50	6/16/2022 7:24	21.21	6/16/2022 6:33	13.71	6/16/2022 11:29	91.22
6/17/2022 10:20	48.84	6/17/2022 9:02	80.48	6/16/2022 7:25	20.30	6/16/2022 6:34	13.94	6/16/2022 11:30	91.05
6/17/2022 10:21	48.79	6/17/2022 9:03	80.49	6/16/2022 7:26	19.73	6/16/2022 6:35	14.33	6/16/2022 11:31	90.88
6/17/2022 10:22	48.77	6/17/2022 9:04	80.50	6/16/2022 7:27	19.29	6/16/2022 6:36	14.50	6/16/2022 11:32	90.72
6/17/2022 10:23	48.79	6/17/2022 9:05	80.54	6/16/2022 7:28	18.96	6/16/2022 6:37	14.66	6/16/2022 11:33	90.58
6/17/2022 10:24	48.78	6/17/2022 9:06	80.49	6/16/2022 7:29	18.74	6/16/2022 6:38	14.79	6/16/2022 11:34	90.45
6/17/2022 10:25	48.78	6/17/2022 9:07	80.50	6/16/2022 7:30	18.57	6/16/2022 6:39	15.31	6/16/2022 11:35	90.24
6/17/2022 10:26	48.74	6/17/2022 9:08	80.47	6/16/2022 7:31	18.40	6/16/2022 6:40	15.88	6/16/2022 11:36	90.09
6/17/2022 10:27	48.78	6/17/2022 9:09	80.48	6/16/2022 7:32	18.25	6/16/2022 6:41	15.73	6/16/2022 11:37	89.92
6/17/2022 10:28	48.81	6/17/2022 9:10	80.52	6/16/2022 7:33	18.14	6/16/2022 6:42	15.77	6/16/2022 11:38	89.77
6/17/2022 10:29	48.77	6/17/2022 9:11	80.57	6/16/2022 7:34	18.04	6/16/2022 6:43	15.83	6/16/2022 11:39	89.62
6/17/2022 10:30	48.77	6/17/2022 9:12	80.50	6/16/2022 7:35	17.91	6/16/2022 6:44	15.94	6/16/2022 11:40	89.46
6/17/2022 10:31	48.75	6/17/2022 9:13	80.51	6/16/2022 7:36	17.90	6/16/2022 6:45	16.55	6/16/2022 11:41	89.33
6/17/2022 10:32	48.78	6/17/2022 9:14	80.53	6/16/2022 7:37	17.77	6/16/2022 6:46	17.12	6/16/2022 11:42	89.16
6/17/2022 10:33	48.76	6/17/2022 9:15	80.51	6/16/2022 7:38	17.71	6/16/2022 6:47	17.91	6/16/2022 11:43	88.99
6/17/2022 10:34	48.75	6/17/2022 9:16	80.50	6/16/2022 7:39	17.63	6/16/2022 6:48	17.90	6/16/2022 11:44	88.89
6/17/2022 10:35	48.75	6/17/2022 9:17	80.47	6/16/2022 7:40	17.55	6/16/2022 6:49	18.12	6/16/2022 11:45	88.71
6/17/2022 10:36	48.74	6/17/2022 9:18	80.46	6/16/2022 7:41	17.53	6/16/2022 6:50	18.23	6/16/2022 11:46	88.56
6/17/2022 10:37	48.75	6/17/2022 9:19	80.53	6/16/2022 7:42	17.48	6/16/2022 6:51	18.43	6/16/2022 11:47	88.45
6/17/2022 10:38	48.77	6/17/2022 9:20	80.49	6/16/2022 7:43	17.41	6/16/2022 6:52	18.61	6/16/2022 11:48	88.28
6/17/2022 10:39	48.74	6/17/2022 9:21	80.47	6/16/2022 7:44	17.40	6/16/2022 6:53	18.77	6/16/2022 11:49	88.13
6/17/2022 10:40	48.79	6/17/2022 9:22	80.48	6/16/2022 7:45	17.33	6/16/2022 6:54	19.06	6/16/2022 11:50	88.01
6/17/2022 10:41	48.74	6/17/2022 9:23	80.49	6/16/2022 7:46	17.35	6/16/2022 6:55	19.14	6/16/2022 11:51	87.84
6/17/2022 10:42	48.74	6/17/2022 9:24	80.48	6/16/2022 7:47	17.28	6/16/2022 6:56	18.82	6/16/2022 11:52	87.70
6/17/2022 10:43	48.78	6/17/2022 9:25	80.51	6/16/2022 7:48	17.25	6/16/2022 6:57	18.60	6/16/2022 11:53	87.57
6/17/2022 10:44	48.75	6/17/2022 9:26	80.48	6/16/2022 7:49	17.23	6/16/2022 6:58	18.47	6/16/2022 11:54	87.42
6/17/2022 10:45	48.76	6/17/2022 9:27	80.46	6/16/2022 7:50	17.17	6/16/2022 6:59	18.37	6/16/2022 11:55	87.28
6/17/2022 10:46	48.75	6/17/2022 9:28	80.51	6/16/2022 7:51	17.14	6/16/2022 7:00	18.47	6/16/2022 11:56	87.09
6/17/2022 10:47	48.76	6/17/2022 9:29	80.54	6/16/2022 7:52	17.13	6/16/2022 7:01	18.53	6/16/2022 11:57	86.97
6/17/2022 10:48	48.77	6/17/2022 9:30	80.47	6/16/2022 7:53	17.09	6/16/2022 7:02	18.53	6/16/2022 11:58	86.84
6/17/2022 10:49	48.78	6/17/2022 9:31	80.49	6/16/2022 7:54	17.09	6/16/2022 7:03	18.46	6/16/2022 11:59	86.72
6/17/2022 10:50	48.75	6/17/2022 9:32	80.50	6/16/2022 7:55	17.05	6/16/2022 7:04	18.54	6/16/2022 12:00	86.58
6/17/2022 10:51	48.76	6/17/2022 9:33	80.54	6/16/2022 7:56	17.04	6/16/2022 7:05	18.56	6/16/2022 12:01	86.43
6/17/2022 10:52	48.76	6/17/2022 9:34	80.50	6/16/2022 7:57	17.00	6/16/2022 7:06	18.63	6/16/2022 12:02	86.29
6/17/2022 10:53	48.76	6/17/2022 9:35	80.54	6/16/2022 7:58	16.91	6/16/2022 7:07	18.05	6/16/2022 12:03	86.18
6/17/2022 10:54	48.76	6/17/2022 9:36	80.48	6/16/2022 7:59	16.96	6/16/2022 7:08	17.48	6/16/2022 12:04	86.04
6/17/2022 10:55	48.73	6/17/2022 9:37	80.50	6/16/2022 8:00	16.97	6/16/2022 7:09	17.05	6/16/2022 12:05	85.89
6/17/2022 10:56	48.78	6/17/2022 9:38	80.48	6/16/2022 8:01	16.91	6/16/2022 7:10	16.73	6/16/2022 12:06	85.79
6/17/2022 10:57	48.76	6/17/2022 9:39	80.52	6/16/2022 8:02	16.95	6/16/2022 7:11	16.55	6/16/2022 12:07	85.63
6/17/2022 10:58	48.74	6/17/2022 9:40	80.56	6/16/2022 8:03	16.90	6/16/2022 7:12	16.38	6/16/2022 12:08	85.51
6/17/2022 10:59	48.74	6/17/2022 9:41	80.52	6/16/2022 8:04	16.89	6/16/2022 7:13	16.22	6/16/2022 12:09	85.40
6/17/2022 11:00	48.76	6/17/2022 9:42	80.51	6/16/2022 8:05	16.86	6/16/2022 7:14	16.15	6/16/2022 12:10	85.24
6/17/2022 11:01	48.75	6/17/2022 9:43	80.51	6/16/2022 8:06	16.81	6/16/2022 7:15	15.22	6/16/2022 12:11	85.10
6/17/2022 11:02	48.77	6/17/2022 9:44	80.49	6/16/2022 8:07	16.84	6/16/2022 7:16	14.52	6/16/2022 12:12	85.01
6/17/2022 11:03	48.74	6/17/2022 9:45	80.55	6/16/2022 8:08	16.82	6/16/2022 7:17	14.18	6/16/2022 12:13	84.91
6/17/2022 11:04	48.74	6/17/2022 9:46	80.47	6/16/2022 8:09	16.82	6/16/2022 7:18	13.88	6/16/2022 12:14	84.75
6/17/2022 11:05	48.73	6/17/2022 9:47	80.48	6/16/2022 8:10	16.83	6/16/2022 7:19	13.58	6/16/2022 12:15	84.67
6/17/2022 11:06	48.74	6/17/2022 9:48	80.45	6/16/2022 8:11	16.72	6/16/2022 7:20	13.38	6/16/2022 12:16	84.53
6/17/2022 11:07	48.74	6/17/2022 9:49	80.49	6/16/2022 8:12	16.72	6/16/2022 7:21	13.22	6/16/2022 12:17	84.41
6/17/2022 11:08	48.75	6/17/2022 9:50	80.50	6/16/2022 8:13	16.72	6/16/2022 7:22	13.37	6/16/2022 12:18	84.28
6/17/2022 11:09	48.73	6/17/2022 9:51	80.46	6/16/2022 8:14	16.72	6/16/2022 7:23	13.45	6/16/2022 12:19	84.20
6/17/2022 11:10	48.71	6/17/2022 9:52	80.51	6/16/2022 8:15	16.72	6/16/2022 7:24	13.02	6/16/2022 12:20	84.05
6/17/2022 11:11	48.73	6/17/2022 9:53	80.50	6/16/2022 8:16	16.78	6/16/2022 7:25	12.78	6/16/2022 12:21	83.94
6/17/2022 11:12	48.73	6/17/2022 9:54	80.51	6/16/2022 8:17	21.53	6/16/2022 7:26	12.62	6/16/2022 12:22	83.81
6/17/2022 11:13	48.75	6/17/2022 9:55	80.53	6/16/2022 8:18	25.23	6/16/2022 7:27	12.49	6/16/2022 12:23	83.69
6/17/2022 11:14	48.73	6/17/2022 9:56	80.49	6/16/2022 8:19	26.49	6/16/2022 7:28	12.29	6/16/2022 12:24	83.57
6/17/2022 11:15	48.72	6/17/2022 9:57	80.51	6/16/2022 8:20	23.39	6/16/2022 7:29	12.20	6/16/2022 12:25	83.50
6/17/2022 11:16	48.75	6/17/2022 9:58	80.47	6/16/2022 8:21	21.84	6/16/2022 7:30	12.08	6/16/2022 12:26	83.35

6/17/2022 11:17	48.75	6/17/2022 9:59	80.52	6/16/2022 8:22	20.90	6/16/2022 7:31	12.00	6/16/2022 12:27	83.26
6/17/2022 11:18	48.74	6/17/2022 10:00	80.51	6/16/2022 8:23	20.28	6/16/2022 7:32	11.93	6/16/2022 12:28	83.14
6/17/2022 11:19	48.71	6/17/2022 10:01	80.49	6/16/2022 8:24	19.81	6/16/2022 7:33	11.77	6/16/2022 12:29	83.05
6/17/2022 11:20	48.70	6/17/2022 10:02	80.52	6/16/2022 8:25	19.47	6/16/2022 7:34	11.69	6/16/2022 12:30	82.94
6/17/2022 11:21	48.73	6/17/2022 10:03	80.50	6/16/2022 8:26	19.28	6/16/2022 7:35	11.55	6/16/2022 12:31	82.82
6/17/2022 11:22	48.77	6/17/2022 10:04	80.47	6/16/2022 8:27	19.09	6/16/2022 7:36	11.52	6/16/2022 12:32	82.74
6/17/2022 11:23	48.75	6/17/2022 10:05	80.48	6/16/2022 8:28	18.91	6/16/2022 7:37	11.42	6/16/2022 12:33	82.65
6/17/2022 11:24	48.75	6/17/2022 10:06	80.49	6/16/2022 8:29	18.79	6/16/2022 7:38	11.33	6/16/2022 12:34	82.49
6/17/2022 11:25	48.73	6/17/2022 10:07	80.55	6/16/2022 8:30	18.65	6/16/2022 7:39	11.25	6/16/2022 12:35	82.38
6/17/2022 11:26	48.75	6/17/2022 10:08	80.49	6/16/2022 8:31	18.47	6/16/2022 7:40	11.13	6/16/2022 12:36	82.27
6/17/2022 11:27	48.73	6/17/2022 10:09	80.52	6/16/2022 8:32	18.37	6/16/2022 7:41	11.10	6/16/2022 12:37	82.21
6/17/2022 11:28	48.71	6/17/2022 10:10	80.48	6/16/2022 8:33	18.31	6/16/2022 7:42	11.00	6/16/2022 12:38	82.11
6/17/2022 11:29	48.73	6/17/2022 10:11	80.47	6/16/2022 8:34	18.25	6/16/2022 7:43	10.93	6/16/2022 12:39	81.99
6/17/2022 11:30	48.74	6/17/2022 10:12	80.48	6/16/2022 8:35	18.12	6/16/2022 7:44	10.79	6/16/2022 12:40	81.93
6/17/2022 11:31	48.71	6/17/2022 10:13	80.50	6/16/2022 8:36	18.08	6/16/2022 7:45	10.81	6/16/2022 12:41	81.83
6/17/2022 11:32	48.70	6/17/2022 10:14	80.50	6/16/2022 8:37	18.01	6/16/2022 7:46	10.72	6/16/2022 12:42	81.71
6/17/2022 11:33	48.69	6/17/2022 10:15	80.48	6/16/2022 8:38	17.97	6/16/2022 7:47	10.66	6/16/2022 12:43	81.63
6/17/2022 11:34	48.70	6/17/2022 10:16	80.50	6/16/2022 8:39	17.89	6/16/2022 7:48	10.55	6/16/2022 12:44	81.52
6/17/2022 11:35	48.73	6/17/2022 10:17	80.49	6/16/2022 8:40	17.91	6/16/2022 7:49	10.53	6/16/2022 12:45	81.46
6/17/2022 11:36	48.69	6/17/2022 10:18	80.49	6/16/2022 8:41	17.78	6/16/2022 7:50	10.45	6/16/2022 12:46	81.38
6/17/2022 11:37	48.74	6/17/2022 10:19	80.48	6/16/2022 8:42	17.75	6/16/2022 7:51	10.42	6/16/2022 12:47	81.27
6/17/2022 11:38	48.71	6/17/2022 10:20	80.52	6/16/2022 8:43	17.72	6/16/2022 7:52	10.31	6/16/2022 12:48	81.18
6/17/2022 11:39	48.71	6/17/2022 10:21	80.54	6/16/2022 8:44	17.70	6/16/2022 7:53	10.30	6/16/2022 12:49	81.09
6/17/2022 11:40	48.72	6/17/2022 10:22	80.50	6/16/2022 8:45	17.64	6/16/2022 7:54	10.22	6/16/2022 12:50	81.03
6/17/2022 11:41	48.68	6/17/2022 10:23	80.48	6/16/2022 8:46	17.60	6/16/2022 7:55	10.16	6/16/2022 12:51	80.92
6/17/2022 11:42	48.69	6/17/2022 10:24	80.51	6/16/2022 8:47	17.55	6/16/2022 7:56	10.14	6/16/2022 12:52	80.87
6/17/2022 11:43	48.70	6/17/2022 10:25	80.50	6/16/2022 8:48	17.52	6/16/2022 7:57	10.05	6/16/2022 12:53	80.81
6/17/2022 11:44	48.67	6/17/2022 10:26	80.51	6/16/2022 8:49	17.47	6/16/2022 7:58	9.98	6/16/2022 12:54	80.71
6/17/2022 11:45	48.70	6/17/2022 10:27	80.50	6/16/2022 8:50	17.46	6/16/2022 7:59	9.93	6/16/2022 12:55	80.64
6/17/2022 11:46	48.70	6/17/2022 10:28	80.54	6/16/2022 8:51	17.35	6/16/2022 8:00	9.91	6/16/2022 12:56	80.55
6/17/2022 11:47	48.70	6/17/2022 10:29	80.51	6/16/2022 8:52	17.39	6/16/2022 8:01	10.14	6/16/2022 12:57	80.49
6/17/2022 11:48	48.71	6/17/2022 10:30	80.53	6/16/2022 8:53	17.33	6/16/2022 8:02	9.87	6/16/2022 12:58	80.42
6/17/2022 11:49	48.67	6/17/2022 10:31	80.51	6/16/2022 8:54	17.34	6/16/2022 8:03	9.82	6/16/2022 12:59	80.33
6/17/2022 11:50	48.70	6/17/2022 10:32	80.50	6/16/2022 8:55	17.37	6/16/2022 8:04	9.80	6/16/2022 13:00	80.21
6/17/2022 11:51	48.69	6/17/2022 10:33	80.50	6/16/2022 8:56	17.22	6/16/2022 8:05	9.73	6/16/2022 13:01	80.17
6/17/2022 11:52	48.69	6/17/2022 10:34	80.52	6/16/2022 8:57	17.28	6/16/2022 8:06	9.67	6/16/2022 13:02	80.07
6/17/2022 11:53	48.71	6/17/2022 10:35	80.52	6/16/2022 8:58	17.22	6/16/2022 8:07	9.59	6/16/2022 13:03	79.97
6/17/2022 11:54	48.67	6/17/2022 10:36	80.51	6/16/2022 8:59	17.21	6/16/2022 8:08	9.53	6/16/2022 13:04	79.88
6/17/2022 11:55	48.67	6/17/2022 10:37	80.52	6/16/2022 9:00	17.16	6/16/2022 8:09	9.49	6/16/2022 13:05	79.81
6/17/2022 11:56	48.69	6/17/2022 10:38	80.52	6/16/2022 9:01	17.16	6/16/2022 8:10	9.49	6/16/2022 13:06	79.73
6/17/2022 11:57	48.65	6/17/2022 10:39	80.53	6/16/2022 9:02	17.19	6/16/2022 8:11	9.37	6/16/2022 13:07	79.67
6/17/2022 11:58	48.69	6/17/2022 10:40	80.50	6/16/2022 9:03	17.16	6/16/2022 8:12	9.36	6/16/2022 13:08	79.59
6/17/2022 11:59	48.66	6/17/2022 10:41	80.51	6/16/2022 9:04	17.14	6/16/2022 8:13	9.35	6/16/2022 13:09	79.47
6/17/2022 12:00	48.72	6/17/2022 10:42	80.54	6/16/2022 9:05	17.10	6/16/2022 8:14	9.29	6/16/2022 13:10	79.40
6/17/2022 12:01	48.70	6/17/2022 10:43	80.48	6/16/2022 9:06	17.11	6/16/2022 8:15	9.29	6/16/2022 13:11	79.32
6/17/2022 12:02	48.68	6/17/2022 10:44	80.51	6/16/2022 9:07	17.03	6/16/2022 8:16	9.19	6/16/2022 13:12	79.23
6/17/2022 12:03	48.70	6/17/2022 10:45	80.50	6/16/2022 9:08	17.04	6/16/2022 8:17	9.13	6/16/2022 13:13	79.20
6/17/2022 12:04	48.66	6/17/2022 10:46	80.49	6/16/2022 9:09	17.12	6/16/2022 8:18	9.14	6/16/2022 13:14	79.07
6/17/2022 12:05	48.68	6/17/2022 10:47	80.55	6/16/2022 9:10	17.03	6/16/2022 8:19	9.13	6/16/2022 13:15	78.99
6/17/2022 12:06	48.68	6/17/2022 10:48	80.50	6/16/2022 9:11	17.03	6/16/2022 8:20	9.03	6/16/2022 13:16	78.98
6/17/2022 12:07	48.69	6/17/2022 10:49	80.53	6/16/2022 9:12	17.00	6/16/2022 8:21	8.99	6/16/2022 13:17	78.89
6/17/2022 12:08	48.69	6/17/2022 10:50	80.49	6/16/2022 9:13	16.98	6/16/2022 8:22	8.95	6/16/2022 13:18	78.86
6/17/2022 12:09	48.68	6/17/2022 10:51	80.50	6/16/2022 9:14	17.00	6/16/2022 8:23	8.94	6/16/2022 13:19	78.77
6/17/2022 12:10	48.64	6/17/2022 10:52	80.55	6/16/2022 9:15	16.95	6/16/2022 8:24	8.88	6/16/2022 13:20	78.70
6/17/2022 12:11	48.68	6/17/2022 10:53	80.53	6/16/2022 9:16	16.95	6/16/2022 8:25	8.86	6/16/2022 13:21	78.64
6/17/2022 12:12	48.68	6/17/2022 10:54	80.52	6/16/2022 9:17	16.98	6/16/2022 8:26	8.81	6/16/2022 13:22	78.56
6/17/2022 12:13	48.67	6/17/2022 10:55	80.51	6/16/2022 9:18	16.92	6/16/2022 8:27	9.29	6/16/2022 13:23	78.55
6/17/2022 12:14	48.66	6/17/2022 10:56	80.55	6/16/2022 9:19	16.92	6/16/2022 8:28	9.21	6/16/2022 13:24	78.48
6/17/2022 12:15	48.70	6/17/2022 10:57	80.51	6/16/2022 9:20	16.94	6/16/2022 8:29	8.96	6/16/2022 13:25	78.43
6/17/2022 12:16	48.67	6/17/2022 10:58	80.52	6/16/2022 9:21	16.90	6/16/2022 8:30	8.87	6/16/2022 13:26	78.33
6/17/2022 12:17	48.68	6/17/2022 10:59	80.51	6/16/2022 9:22	16.91	6/16/2022 8:31	8.81	6/16/2022 13:27	78.26
6/17/2022 12:18	48.67	6/17/2022 11:00	80.53	6/16/2022 9:23	16.92	6/16/2022 8:32	8.76	6/16/2022 13:28	78.21
6/17/2022 12:19	48.64	6/17/2022 11:01	80.57	6/16/2022 9:24	16.89	6/16/2022 8:33	8.70	6/16/2022 13:29	78.14
6/17/2022 12:20	48.67	6/17/2022 11:02	80.49	6/16/2022 9:25	16.91	6/16/2022 8:34	8.64	6/16/2022 13:30	78.07
6/17/2022 12:21	48.69	6/17/2022 11:03	80.50	6/16/2022 9:26	16.88	6/16/2022 8:35	8.59	6/16/2022 13:31	78.01
6/17/2022 12:22	50.35	6/17/2022 11:04	80.54	6/16/2022 9:27	16.89	6/16/2022 8:36	8.61	6/16/2022 13:32	77.94
6/17/2022 12:23	52.35	6/17/2022 11:05	80.51	6/16/2022 9:28	16.83	6/16/2022 8:37	8.62	6/16/2022 13:33	77.85
6/17/2022 12:24	53.26	6/17/2022 11:06	80.54	6/16/2022 9:29	16.88	6/16/2022 8:38	8.48	6/16/2022 13:34	77.81
6/17/2022 12:25	53.85	6/17/2022 11:07	80.50	6/16/2022 9:30	16.85	6/16/2022 8:39	8.50	6/16/2022 13:35	77.69
6/17/2022 12:26	53.04	6/17/2022 11:08	80.51	6/16/2022 9:31	16.84	6/16/2022 8:40	8.59	6/16/2022 13:36	77.66
6/17/2022 12:27	51.27	6/17/2022 11:09	80.48	6/16/2022 9:32	16.85	6/16/2022 8:41	9.02	6/16/2022 13:37	77.57
6/17/2022 12:28	50.56	6/17/2022 11:10	80.53	6/16/2022 9:33	16.83	6/16/2022 8:42	8.69	6/16/2022 13:38	77.54
6/17/2022 12:29	50.24	6/17/2022 11:11	80.47	6/16/2022 9:34	16.77	6/16/2022 8:43	8.95	6/16/2022 13:39	77.48
6/17/2022 12:30	50.03	6/17/2022 11:12	80.50	6/16/2022 9:35	16.83	6/16/2022 8:44	9.01	6/16/2022 13:40	77.42
6/17/2022 12:31	49.90	6/17/2022 11:13	80.49	6/16/2022 9:36	16.76	6/16/2022 8:45	8.71	6/16/2022 13:41	77.32
6/17/2022 12:32	49.80	6/17/2022 11:14	80.54	6/16/2022 9:37	16.81	6/16/2022 8:46	8.59	6/16/2022 13:42	77.29
6/17/2022 12:33	49.70	6/17/2022 11:15	80.51	6/16/2022 9:38	16.83	6/16/2022 8:47	8.48	6/16/2022 13:43	77.21
6/17/2022 12:34	49.61	6/17/2022 11:16	80.53	6/16/2022 9:39	16.78	6/16/2022 8:48	8.40	6/16/2022 13:44	77.14
6/17/2022 12:35	49.57	6/17/2022 11:17	80.47	6/16/2022 9:40	16.80	6/16/2022 8:49	8.41	6/16/2022 13:45	77.10
6/17/2022 12:36	49.48	6/17/2022 11:18	80.52	6/16/2022 9:41	16.78	6/16/2022 8:50	8.35	6/16/2022 13:46	77.03
6/17/2022 12:37	49.47	6/17/2022 11:19	80.94	6/16/2022 9:42	16.78	6/16/2022 8:51	8.33	6/16/2022 13:47	76.96
6/17/2022 12:38	49.43	6/17/2022 11:20	85.24	6/16/2022 9:43	16.76	6/16/2022 8:52	8.31	6/16/2022 13:48	76.91
6/17/2022 12:39	49.38	6/17/2022 11:21	84.36	6/16/2022 9:44	16.80	6/16/2022 8:53	8.25	6/16/2022 13:49	76.81
6/17/2022 12:40	49.41	6/17/2022 11:22	83.74	6/16/2022 9:45	16.76	6/16/2022 8:54	8.21	6/16/2022 13:50	76.80
6/17/2022 12:41	49.34	6/17/2022 11:23	83.25	6/16/2022 9:46	16.77	6/16/2022 8:55	8.23	6/16/2022 13:51	76.74
6/17/2022 12:42	49.33	6/17/2022 11:24	82.82	6/16/2022 9:47	16.73	6/16/2022 8:56	8.16	6/16/2022 13:52	76.69
6/17/2022 12:43	49.31	6/17/2022 11:25	82.49	6/16/2022 9:48	16.76	6/16/2022 8:57	8.11	6/16/2022 13:53	76.63
6/17/2022 12:44	49.33	6/17/2022 11:26	82.27	6/16/2022 9:49	16.76	6/16/2022 8:58	8.18	6/16/2022 13:54	76.55

6/17/2022 12:45	49.28	6/17/2022 11:27	82.04	6/16/2022 9:50	16.71	6/16/2022 8:59	8.15	6/16/2022 13:55	76.50
6/17/2022 12:46	49.27	6/17/2022 11:28	81.86	6/16/2022 9:51	16.74	6/16/2022 9:00	8.12	6/16/2022 13:56	76.44
6/17/2022 12:47	49.21	6/17/2022 11:29	81.72	6/16/2022 9:52	16.68	6/16/2022 9:01	8.09	6/16/2022 13:57	76.40
6/17/2022 12:48	49.20	6/17/2022 11:30	81.57	6/16/2022 9:53	16.70	6/16/2022 9:02	8.04	6/16/2022 13:58	76.35
6/17/2022 12:49	49.21	6/17/2022 11:31	81.45	6/16/2022 9:54	16.70	6/16/2022 9:03	7.98	6/16/2022 13:59	76.28
6/17/2022 12:50	49.22	6/17/2022 11:32	81.38	6/16/2022 9:55	16.70	6/16/2022 9:04	7.98	6/16/2022 14:00	76.20
6/17/2022 12:51	49.17	6/17/2022 11:33	81.32	6/16/2022 9:56	16.65	6/16/2022 9:05	7.93	6/16/2022 14:01	76.17
6/17/2022 12:52	49.16	6/17/2022 11:34	81.24	6/16/2022 9:57	16.68	6/16/2022 9:06	7.89	6/16/2022 14:02	76.10
6/17/2022 12:53	49.14	6/17/2022 11:35	81.21	6/16/2022 9:58	16.68	6/16/2022 9:07	7.89	6/16/2022 14:03	76.02
6/17/2022 12:54	49.14	6/17/2022 11:36	81.13	6/16/2022 9:59	16.70	6/16/2022 9:08	7.83	6/16/2022 14:04	75.94
6/17/2022 12:55	49.16	6/17/2022 11:37	81.09	6/16/2022 10:00	16.68	6/16/2022 9:09	7.78	6/16/2022 14:05	75.88
6/17/2022 12:56	49.10	6/17/2022 11:38	81.02	6/16/2022 10:01	16.64	6/16/2022 9:10	7.85	6/16/2022 14:06	75.85
6/17/2022 12:57	49.13	6/17/2022 11:39	81.00	6/16/2022 10:02	16.64	6/16/2022 9:11	7.79	6/16/2022 14:07	75.77
6/17/2022 12:58	49.14	6/17/2022 11:40	80.95	6/16/2022 10:03	16.65	6/16/2022 9:12	7.72	6/16/2022 14:08	75.70
6/17/2022 12:59	49.08	6/17/2022 11:41	80.93	6/16/2022 10:04	16.63	6/16/2022 9:13	7.78	6/16/2022 14:09	75.67
6/17/2022 13:00	49.06	6/17/2022 11:42	80.91	6/16/2022 10:05	16.66	6/16/2022 9:14	7.71	6/16/2022 14:10	75.57
6/17/2022 13:01	49.08	6/17/2022 11:43	80.85	6/16/2022 10:06	16.63	6/16/2022 9:15	7.88	6/16/2022 14:11	75.50
6/17/2022 13:02	49.04	6/17/2022 11:44	80.86	6/16/2022 10:07	16.62	6/16/2022 9:16	7.99	6/16/2022 14:12	75.48
6/17/2022 13:03	49.06	6/17/2022 11:45	80.81	6/16/2022 10:08	16.62	6/16/2022 9:17	7.82	6/16/2022 14:13	75.43
6/17/2022 13:04	49.04	6/17/2022 11:46	80.77	6/16/2022 10:09	16.58	6/16/2022 9:18	7.86	6/16/2022 14:14	75.36
6/17/2022 13:05	49.04	6/17/2022 11:47	80.79	6/16/2022 10:10	16.60	6/16/2022 9:19	7.83	6/16/2022 14:15	75.31
6/17/2022 13:06	49.03	6/17/2022 11:48	80.75	6/16/2022 10:11	16.65	6/16/2022 9:20	7.79	6/16/2022 14:16	75.23
6/17/2022 13:07	49.07	6/17/2022 11:49	80.76	6/16/2022 10:12	16.62	6/16/2022 9:21	7.65	6/16/2022 14:17	75.22
6/17/2022 13:08	48.99	6/17/2022 11:50	80.73	6/16/2022 10:13	16.63	6/16/2022 9:22	7.60	6/16/2022 14:18	75.13
6/17/2022 13:09	49.04	6/17/2022 11:51	80.72	6/16/2022 10:14	16.58	6/16/2022 9:23	7.74	6/16/2022 14:19	75.10
6/17/2022 13:10	49.06	6/17/2022 11:52	80.74	6/16/2022 10:15	16.63	6/16/2022 9:24	7.66	6/16/2022 14:20	75.04
6/17/2022 13:11	49.04	6/17/2022 11:53	80.70	6/16/2022 10:16	16.61	6/16/2022 9:25	7.59	6/16/2022 14:21	74.99
6/17/2022 13:12	49.00	6/17/2022 11:54	80.66	6/16/2022 10:17	16.60	6/16/2022 9:26	7.61	6/16/2022 14:22	74.90
6/17/2022 13:13	49.02	6/17/2022 11:55	80.72	6/16/2022 10:18	16.58	6/16/2022 9:27	7.53	6/16/2022 14:23	74.87
6/17/2022 13:14	48.97	6/17/2022 11:56	80.69	6/16/2022 10:19	16.53	6/16/2022 9:28	7.47	6/16/2022 14:24	74.85
6/17/2022 13:15	49.00	6/17/2022 11:57	80.67	6/16/2022 10:20	16.58	6/16/2022 9:29	7.50	6/16/2022 14:25	74.77
6/17/2022 13:16	48.96	6/17/2022 11:58	80.65	6/16/2022 10:21	16.59	6/16/2022 9:30	7.44	6/16/2022 14:26	74.72
6/17/2022 13:17	49.00	6/17/2022 11:59	80.63	6/16/2022 10:22	16.55	6/16/2022 9:31	7.39	6/16/2022 14:27	74.64
6/17/2022 13:18	48.97	6/17/2022 12:00	80.61	6/16/2022 10:23	16.58	6/16/2022 9:32	7.48	6/16/2022 14:28	74.61
6/17/2022 13:19	48.98	6/17/2022 12:01	80.64	6/16/2022 10:24	16.57	6/16/2022 9:33	7.38	6/16/2022 14:29	74.55
6/17/2022 13:20	48.98	6/17/2022 12:02	80.66	6/16/2022 10:25	16.59	6/16/2022 9:34	7.33	6/16/2022 14:30	74.46
6/17/2022 13:21	48.99	6/17/2022 12:03	80.65	6/16/2022 10:26	16.52	6/16/2022 9:35	7.40	6/16/2022 14:31	74.46
6/17/2022 13:22	49.01	6/17/2022 12:04	80.64	6/16/2022 10:27	16.57	6/16/2022 9:36	7.31	6/16/2022 14:32	74.39
6/17/2022 13:23	48.95	6/17/2022 12:05	80.64	6/16/2022 10:28	16.56	6/16/2022 9:37	7.32	6/16/2022 14:33	74.34
6/17/2022 13:24	48.96	6/17/2022 12:06	80.62	6/16/2022 10:29	16.50	6/16/2022 9:38	7.29	6/16/2022 14:34	74.33
6/17/2022 13:25	48.98	6/17/2022 12:07	80.61	6/16/2022 10:30	16.53	6/16/2022 9:39	7.28	6/16/2022 14:35	74.25
6/17/2022 13:26	48.94	6/17/2022 12:08	80.60	6/16/2022 10:31	16.55	6/16/2022 9:40	7.17	6/16/2022 14:36	74.25
6/17/2022 13:27	48.93	6/17/2022 12:09	80.62	6/16/2022 10:32	16.52	6/16/2022 9:41	7.49	6/16/2022 14:37	74.18
6/17/2022 13:28	48.94	6/17/2022 12:10	80.61	6/16/2022 10:33	16.49	6/16/2022 9:42	7.74	6/16/2022 14:38	74.13
6/17/2022 13:29	48.94	6/17/2022 12:11	80.63	6/16/2022 10:34	16.53	6/16/2022 9:43	7.45	6/16/2022 14:39	74.06
6/17/2022 13:30	48.93	6/17/2022 12:12	80.59	6/16/2022 10:35	16.48	6/16/2022 9:44	7.32	6/16/2022 14:40	74.04
6/17/2022 13:31	48.95	6/17/2022 12:13	80.58	6/16/2022 10:36	16.49	6/16/2022 9:45	7.30	6/16/2022 14:41	73.99
6/17/2022 13:32	48.95	6/17/2022 12:14	80.63	6/16/2022 10:37	16.50	6/16/2022 9:46	7.18	6/16/2022 14:42	73.92
6/17/2022 13:33	48.90	6/17/2022 12:15	80.63	6/16/2022 10:38	16.51	6/16/2022 9:47	7.19	6/16/2022 14:43	73.87
6/17/2022 13:34	48.93	6/17/2022 12:16	80.59	6/16/2022 10:39	16.48	6/16/2022 9:48	7.22	6/16/2022 14:44	73.78
6/17/2022 13:35	48.93	6/17/2022 12:17	80.62	6/16/2022 10:40	16.49	6/16/2022 9:49	7.13	6/16/2022 14:45	73.77
6/17/2022 13:36	48.90	6/17/2022 12:18	80.59	6/16/2022 10:41	16.52	6/16/2022 9:50	7.03	6/16/2022 14:46	73.71
6/17/2022 13:37	48.92	6/17/2022 12:19	80.61	6/16/2022 10:42	16.49	6/16/2022 9:51	7.11	6/16/2022 14:47	73.66
6/17/2022 13:38	48.89	6/17/2022 12:20	80.61	6/16/2022 10:43	16.50	6/16/2022 9:52	7.04	6/16/2022 14:48	73.62
6/17/2022 13:39	48.90	6/17/2022 12:21	80.58	6/16/2022 10:44	16.47	6/16/2022 9:53	6.98	6/16/2022 14:49	73.57
6/17/2022 13:40	48.90	6/17/2022 12:22	80.62	6/16/2022 10:45	16.51	6/16/2022 9:54	6.99	6/16/2022 14:50	73.54
6/17/2022 13:41	48.89	6/17/2022 12:23	80.61	6/16/2022 10:46	16.49	6/16/2022 9:55	6.93	6/16/2022 14:51	73.47
6/17/2022 13:42	48.89	6/17/2022 12:24	80.58	6/16/2022 10:47	16.48	6/16/2022 9:56	6.95	6/16/2022 14:52	73.42
6/17/2022 13:43	48.89	6/17/2022 12:25	80.55	6/16/2022 10:48	16.43	6/16/2022 9:57	6.93	6/16/2022 14:53	73.38
6/17/2022 13:44	48.87	6/17/2022 12:26	80.57	6/16/2022 10:49	16.48	6/16/2022 9:58	7.32	6/16/2022 14:54	73.36
6/17/2022 13:45	48.92	6/17/2022 12:27	80.55	6/16/2022 10:50	16.43	6/16/2022 9:59	7.17	6/16/2022 14:55	73.31
6/17/2022 13:46	48.87	6/17/2022 12:28	80.58	6/16/2022 10:51	16.46	6/16/2022 10:00	7.02	6/16/2022 14:56	73.26
6/17/2022 13:47	48.88	6/17/2022 12:29	80.59	6/16/2022 10:52	16.50	6/16/2022 10:01	6.99	6/16/2022 14:57	73.21
6/17/2022 13:48	48.89	6/17/2022 12:30	80.62	6/16/2022 10:53	16.49	6/16/2022 10:02	6.88	6/16/2022 14:58	73.20
6/17/2022 13:49	48.88	6/17/2022 12:31	80.57	6/16/2022 10:54	16.45	6/16/2022 10:03	6.87	6/16/2022 14:59	73.15
6/17/2022 13:50	48.87	6/17/2022 12:32	80.57	6/16/2022 10:55	16.43	6/16/2022 10:04	6.85	6/16/2022 15:00	73.06
6/17/2022 13:51	48.90	6/17/2022 12:33	80.57	6/16/2022 10:56	16.47	6/16/2022 10:05	6.81	6/16/2022 15:01	73.06
6/17/2022 13:52	48.88	6/17/2022 12:34	80.56	6/16/2022 10:57	16.46	6/16/2022 10:06	6.90	6/16/2022 15:02	73.01
6/17/2022 13:53	48.85	6/17/2022 12:35	80.60	6/16/2022 10:58	16.43	6/16/2022 10:07	6.76	6/16/2022 15:03	72.97
6/17/2022 13:54	48.86	6/17/2022 12:36	80.59	6/16/2022 10:59	16.44	6/16/2022 10:08	6.79	6/16/2022 15:04	72.95
6/17/2022 13:55	48.87	6/17/2022 12:37	80.59	6/16/2022 11:00	16.47	6/16/2022 10:09	6.94	6/16/2022 15:05	72.91
6/17/2022 13:56	48.87	6/17/2022 12:38	80.59	6/16/2022 11:01	16.44	6/16/2022 10:10	7.76	6/16/2022 15:06	72.83
6/17/2022 13:57	48.85	6/17/2022 12:39	80.55	6/16/2022 11:02	16.42	6/16/2022 10:11	7.19	6/16/2022 15:07	72.83
6/17/2022 13:58	48.86	6/17/2022 12:40	80.61	6/16/2022 11:03	16.43	6/16/2022 10:12	7.35	6/16/2022 15:08	72.76
6/17/2022 13:59	48.82	6/17/2022 12:41	80.58	6/16/2022 11:04	16.43	6/16/2022 10:13	7.47	6/16/2022 15:09	72.71
6/17/2022 14:00	48.85	6/17/2022 12:42	80.56	6/16/2022 11:05	16.43	6/16/2022 10:14	7.09	6/16/2022 15:10	72.67
6/17/2022 14:01	48.83	6/17/2022 12:43	80.60	6/16/2022 11:06	16.39	6/16/2022 10:15	6.99	6/16/2022 15:11	72.60
6/17/2022 14:02	48.82	6/17/2022 12:44	80.55	6/16/2022 11:07	16.39	6/16/2022 10:16	6.89	6/16/2022 15:12	72.60
6/17/2022 14:03	48.85	6/17/2022 12:45	80.56	6/16/2022 11:08	16.41	6/16/2022 10:17	6.86	6/16/2022 15:13	72.58
6/17/2022 14:04	48.82	6/17/2022 12:46	80.56	6/16/2022 11:09	16.40	6/16/2022 10:18	6.80	6/16/2022 15:14	72.55
6/17/2022 14:05	48.81	6/17/2022 12:47	80.59	6/16/2022 11:10	16.42	6/16/2022 10:19	6.81	6/16/2022 15:15	72.50
6/17/2022 14:06	48.81	6/17/2022 12:48	80.54	6/16/2022 11:11	16.43	6/16/2022 10:20	6.77	6/16/2022 15:16	76.83
6/17/2022 14:07	48.87	6/17/2022 12:49	80.58	6/16/2022 11:12	16.46	6/16/2022 10:21	6.75	6/16/2022 15:17	78.57
6/17/2022 14:08	48.84	6/17/2022 12:50	80.57	6/16/2022 11:13	16.38	6/16/2022 10:22	6.76	6/16/2022 15:18	78.42
6/17/2022 14:09	48.80	6/17/2022 12:51	80.54	6/16/2022 11:14	16.43	6/16/2022 10:23	6.69	6/16/2022 15:19	78.30
6/17/2022 14:10	48.84	6/17/2022 12:52	80.58	6/16/2022 11:15	16.37	6/16/2022 10:24	6.67	6/16/2022 15:20	78.15
6/17/2022 14:11	48.80	6/17/2022 12:53	80.59	6/16/2022 11:16	16.40	6/16/2022 10:25	6.91	6/16/2022 15:21	78.07
6/17/2022 14:12	48.80	6/17/2022 12:54	80.55	6/16/2022 11:17	16.40	6/16/2022 10:26	6.83	6/16/2022 15:22	77.97

6/17/2022 14:13	48.81	6/17/2022 12:55	80.58	6/16/2022 11:18	16.39	6/16/2022 10:27	6.82	6/16/2022 15:23	77.86
6/17/2022 14:14	48.84	6/17/2022 12:56	80.59	6/16/2022 11:19	16.36	6/16/2022 10:28	6.67	6/16/2022 15:24	77.71
6/17/2022 14:15	48.88	6/17/2022 12:57	80.56	6/16/2022 11:20	16.40	6/16/2022 10:29	6.62	6/16/2022 15:25	77.61
6/17/2022 14:16	48.81	6/17/2022 12:58	80.58	6/16/2022 11:21	16.37	6/16/2022 10:30	6.63	6/16/2022 15:26	77.53
6/17/2022 14:17	48.83	6/17/2022 12:59	80.56	6/16/2022 11:22	16.40	6/16/2022 10:31	6.61	6/16/2022 15:27	77.47
6/17/2022 14:18	48.81	6/17/2022 13:00	80.57	6/16/2022 11:23	16.41	6/16/2022 10:32	6.56	6/16/2022 15:28	77.29
6/17/2022 14:19	48.83	6/17/2022 13:01	80.55	6/16/2022 11:24	16.33	6/16/2022 10:33	6.58	6/16/2022 15:29	77.23
6/17/2022 14:20	48.80	6/17/2022 13:02	80.55	6/16/2022 11:25	16.32	6/16/2022 10:34	6.54	6/16/2022 15:30	77.18
6/17/2022 14:21	48.80	6/17/2022 13:03	80.56	6/16/2022 11:26	16.35	6/16/2022 10:35	6.45	6/16/2022 15:31	77.07
6/17/2022 14:22	48.81	6/17/2022 13:04	80.57	6/16/2022 11:27	16.36	6/16/2022 10:36	6.52	6/16/2022 15:32	76.99
6/17/2022 14:23	48.85	6/17/2022 13:05	80.53	6/16/2022 11:28	16.37	6/16/2022 10:37	6.51	6/16/2022 15:33	76.89
6/17/2022 14:24	48.80	6/17/2022 13:06	80.55	6/16/2022 11:29	16.34	6/16/2022 10:38	6.44	6/16/2022 15:34	76.81
6/17/2022 14:25	48.82	6/17/2022 13:07	80.56	6/16/2022 11:30	16.34	6/16/2022 10:39	6.40	6/16/2022 15:35	76.71
6/17/2022 14:26	48.79	6/17/2022 13:08	80.55	6/16/2022 11:31	16.34	6/16/2022 10:40	6.45	6/16/2022 15:36	76.61
6/17/2022 14:27	48.80	6/17/2022 13:09	80.59	6/16/2022 11:32	16.38	6/16/2022 10:41	6.46	6/16/2022 15:37	76.56
6/17/2022 14:28	48.77	6/17/2022 13:10	80.59	6/16/2022 11:33	16.34	6/16/2022 10:42	6.40	6/16/2022 15:38	76.47
6/17/2022 14:29	48.82	6/17/2022 13:11	80.59	6/16/2022 11:34	16.35	6/16/2022 10:43	6.36	6/16/2022 15:39	76.40
6/17/2022 14:30	48.76	6/17/2022 13:12	80.55	6/16/2022 11:35	16.33	6/16/2022 10:44	6.35	6/16/2022 15:40	76.32
6/17/2022 14:31	48.79	6/17/2022 13:13	80.57	6/16/2022 11:36	16.29	6/16/2022 10:45	6.34	6/16/2022 15:41	76.24
6/17/2022 14:32	48.79	6/17/2022 13:14	80.52	6/16/2022 11:37	16.32	6/16/2022 10:46	6.30	6/16/2022 15:42	76.15
6/17/2022 14:33	48.82	6/17/2022 13:15	80.57	6/16/2022 11:38	16.33	6/16/2022 10:47	6.30	6/16/2022 15:43	76.06
6/17/2022 14:34	48.79	6/17/2022 13:16	80.53	6/16/2022 11:39	16.35	6/16/2022 10:48	6.36	6/16/2022 15:44	75.95
6/17/2022 14:35	48.78	6/17/2022 13:17	80.55	6/16/2022 11:40	16.36	6/16/2022 10:49	6.22	6/16/2022 15:45	75.89
6/17/2022 14:36	48.78	6/17/2022 13:18	80.54	6/16/2022 11:41	16.31	6/16/2022 10:50	6.25	6/16/2022 15:46	75.80
6/17/2022 14:37	48.78	6/17/2022 13:19	80.56	6/16/2022 11:42	16.32	6/16/2022 10:51	6.24	6/16/2022 15:47	75.73
6/17/2022 14:38	48.76	6/17/2022 13:20	80.55	6/16/2022 11:43	16.32	6/16/2022 10:52	6.22	6/16/2022 15:48	75.66
6/17/2022 14:39	48.76	6/17/2022 13:21	80.54	6/16/2022 11:44	16.34	6/16/2022 10:53	6.22	6/16/2022 15:49	75.57
6/17/2022 14:40	48.78	6/17/2022 13:22	80.54	6/16/2022 11:45	16.33	6/16/2022 10:54	6.23	6/16/2022 15:50	75.49
6/17/2022 14:41	48.80	6/17/2022 13:23	80.56	6/16/2022 11:46	16.31	6/16/2022 10:55	6.20	6/16/2022 15:51	75.42
6/17/2022 14:42	48.81	6/17/2022 13:24	80.54	6/16/2022 11:47	16.32	6/16/2022 10:56	6.18	6/16/2022 15:52	75.34
6/17/2022 14:43	48.79	6/17/2022 13:25	80.53	6/16/2022 11:48	16.32	6/16/2022 10:57	6.16	6/16/2022 15:53	75.29
6/17/2022 14:44	48.78	6/17/2022 13:26	80.55	6/16/2022 11:49	16.32	6/16/2022 10:58	6.15	6/16/2022 15:54	75.20
6/17/2022 14:45	48.77	6/17/2022 13:27	80.55	6/16/2022 11:50	16.24	6/16/2022 10:59	6.13	6/16/2022 15:55	75.10
6/17/2022 14:46	48.80	6/17/2022 13:28	80.54	6/16/2022 11:51	16.30	6/16/2022 11:00	6.12	6/16/2022 15:56	75.04
6/17/2022 14:47	48.78	6/17/2022 13:29	80.54	6/16/2022 11:52	16.24	6/16/2022 11:01	6.13	6/16/2022 15:57	74.97
6/17/2022 14:48	48.79	6/17/2022 13:30	80.53	6/16/2022 11:53	16.30	6/16/2022 11:02	6.12	6/16/2022 15:58	74.91
6/17/2022 14:49	48.76	6/17/2022 13:31	80.58	6/16/2022 11:54	16.28	6/16/2022 11:03	6.10	6/16/2022 15:59	74.83
6/17/2022 14:50	48.79	6/17/2022 13:32	80.54	6/16/2022 11:55	16.25	6/16/2022 11:04	6.07	6/16/2022 16:00	74.75
6/17/2022 14:51	48.77	6/17/2022 13:33	80.57	6/16/2022 11:56	16.32	6/16/2022 11:05	6.10	6/16/2022 16:01	74.69
6/17/2022 14:52	48.78	6/17/2022 13:34	80.53	6/16/2022 11:57	16.28	6/16/2022 11:06	6.08	6/16/2022 16:02	74.63
6/17/2022 14:53	48.81	6/17/2022 13:35	80.58	6/16/2022 11:58	16.30	6/16/2022 11:07	6.02	6/16/2022 16:03	74.54
6/17/2022 14:54	48.77	6/17/2022 13:36	80.55	6/16/2022 11:59	16.30	6/16/2022 11:08	6.05	6/16/2022 16:04	74.47
6/17/2022 14:55	48.77	6/17/2022 13:37	80.53	6/16/2022 12:00	16.26	6/16/2022 11:09	6.07	6/16/2022 16:05	74.41
6/17/2022 14:56	48.76	6/17/2022 13:38	80.55	6/16/2022 12:01	16.32	6/16/2022 11:10	6.03	6/16/2022 16:06	74.36
6/17/2022 14:57	48.75	6/17/2022 13:39	80.56	6/16/2022 12:02	16.32	6/16/2022 11:11	6.01	6/16/2022 16:07	74.27
6/17/2022 14:58	48.75	6/17/2022 13:40	80.56	6/16/2022 12:03	16.27	6/16/2022 11:12	6.02	6/16/2022 16:08	74.21
6/17/2022 14:59	48.76	6/17/2022 13:41	80.54	6/16/2022 12:04	16.30	6/16/2022 11:13	5.97	6/16/2022 16:09	74.14
6/17/2022 15:00	48.72	6/17/2022 13:42	80.55	6/16/2022 12:05	16.26	6/16/2022 11:14	5.96	6/16/2022 16:10	78.36
6/17/2022 15:01	48.77	6/17/2022 13:43	80.55	6/16/2022 12:06	16.26	6/16/2022 11:15	6.11	6/16/2022 16:11	79.44
6/17/2022 15:02	48.78	6/17/2022 13:44	80.54	6/16/2022 12:07	16.29	6/16/2022 11:16	6.18	6/16/2022 16:12	79.25
6/17/2022 15:03	48.73	6/17/2022 13:45	80.58	6/16/2022 12:08	16.30	6/16/2022 11:17	6.03	6/16/2022 16:13	79.13
6/17/2022 15:04	48.75	6/17/2022 13:46	80.54	6/16/2022 12:09	16.27	6/16/2022 11:18	5.97	6/16/2022 16:14	78.97
6/17/2022 15:05	48.76	6/17/2022 13:47	80.55	6/16/2022 12:10	16.25	6/16/2022 11:19	5.98	6/16/2022 16:15	78.85
6/17/2022 15:06	48.73	6/17/2022 13:48	80.54	6/16/2022 12:11	16.26	6/16/2022 11:20	5.91	6/16/2022 16:16	78.77
6/17/2022 15:07	48.76	6/17/2022 13:49	80.56	6/16/2022 12:12	16.24	6/16/2022 11:21	5.92	6/16/2022 16:17	78.67
6/17/2022 15:08	48.76	6/17/2022 13:50	80.56	6/16/2022 12:13	16.26	6/16/2022 11:22	5.91	6/16/2022 16:18	78.58
6/17/2022 15:09	48.78	6/17/2022 13:51	80.53	6/16/2022 12:14	16.30	6/16/2022 11:23	5.92	6/16/2022 16:19	78.44
6/17/2022 15:10	48.75	6/17/2022 13:52	80.54	6/16/2022 12:15	16.29	6/16/2022 11:24	6.22	6/16/2022 16:20	78.37
6/17/2022 15:11	48.78	6/17/2022 13:53	80.53	6/16/2022 12:16	16.25	6/16/2022 11:25	6.49	6/16/2022 16:21	78.29
6/17/2022 15:12	48.77	6/17/2022 13:54	80.51	6/16/2022 12:17	16.24	6/16/2022 11:26	6.61	6/16/2022 16:22	78.20
6/17/2022 15:13	48.74	6/17/2022 13:55	80.52	6/16/2022 12:18	16.22	6/16/2022 11:27	6.77	6/16/2022 16:23	78.05
6/17/2022 15:14	48.74	6/17/2022 13:56	80.55	6/16/2022 12:19	16.24	6/16/2022 11:28	6.86	6/16/2022 16:24	77.95
6/17/2022 15:15	48.76	6/17/2022 13:57	80.50	6/16/2022 12:20	16.28	6/16/2022 11:29	6.89	6/16/2022 16:25	77.83
6/17/2022 15:16	48.71	6/17/2022 13:58	80.54	6/16/2022 12:21	16.27	6/16/2022 11:30	7.01	6/16/2022 16:26	77.75
6/17/2022 15:17	48.77	6/17/2022 13:59	80.53	6/16/2022 12:22	16.25	6/16/2022 11:31	6.99	6/16/2022 16:27	77.62
6/17/2022 15:18	48.71	6/17/2022 14:00	80.55	6/16/2022 12:23	16.27	6/16/2022 11:32	6.61	6/16/2022 16:28	77.54
6/17/2022 15:19	48.77	6/17/2022 14:01	80.55	6/16/2022 12:24	16.28	6/16/2022 11:33	6.48	6/16/2022 16:29	77.44
6/17/2022 15:20	48.74	6/17/2022 14:02	80.54	6/16/2022 12:25	16.27	6/16/2022 11:34	6.28	6/16/2022 16:30	77.30
6/17/2022 15:21	48.74	6/17/2022 14:03	80.57	6/16/2022 12:26	16.28	6/16/2022 11:35	6.22	6/16/2022 16:31	77.23
6/17/2022 15:22	48.71	6/17/2022 14:04	80.56	6/16/2022 12:27	16.26	6/16/2022 11:36	6.18	6/16/2022 16:32	77.15
6/17/2022 15:23	48.70	6/17/2022 14:05	80.56	6/16/2022 12:28	16.23	6/16/2022 11:37	6.12	6/16/2022 16:33	77.02
6/17/2022 15:24	48.74	6/17/2022 14:06	80.55	6/16/2022 12:29	16.17	6/16/2022 11:38	6.11	6/16/2022 16:34	76.97
6/17/2022 15:25	48.75	6/17/2022 14:07	80.57	6/16/2022 12:30	16.21	6/16/2022 11:39	6.06	6/16/2022 16:35	76.92
6/17/2022 15:26	48.71	6/17/2022 14:08	80.52	6/16/2022 12:31	16.25	6/16/2022 11:40	6.11	6/16/2022 16:36	76.78
6/17/2022 15:27	48.71	6/17/2022 14:09	80.51	6/16/2022 12:32	16.28	6/16/2022 11:41	6.03	6/16/2022 16:37	76.67
6/17/2022 15:28	48.74	6/17/2022 14:10	80.54	6/16/2022 12:33	16.23	6/16/2022 11:42	5.98	6/16/2022 16:38	76.61
6/17/2022 15:29	48.72	6/17/2022 14:11	80.53	6/16/2022 12:34	16.23	6/16/2022 11:43	5.99	6/16/2022 16:39	76.55
6/17/2022 15:30	48.77	6/17/2022 14:12	80.49	6/16/2022 12:35	16.22	6/16/2022 11:44	5.96	6/16/2022 16:40	76.46
6/17/2022 15:31	48.73	6/17/2022 14:13	80.54	6/16/2022 12:36	16.22	6/16/2022 11:45	5.91	6/16/2022 16:41	76.38
6/17/2022 15:32	48.72	6/17/2022 14:14	80.56	6/16/2022 12:37	16.25	6/16/2022 11:46	5.92	6/16/2022 16:42	76.28
6/17/2022 15:33	48.67	6/17/2022 14:15	80.55	6/16/2022 12:38	16.24	6/16/2022 11:47	5.90	6/16/2022 16:43	76.17
6/17/2022 15:34	48.74	6/17/2022 14:16	80.51	6/16/2022 12:39	16.20	6/16/2022 11:48	5.84	6/16/2022 16:44	76.09
6/17/2022 15:35	48.73	6/17/2022 14:17	80.53	6/16/2022 12:40	16.22	6/16/2022 11:49	5.87	6/16/2022 16:45	76.02
6/17/2022 15:36	48.72	6/17/2022 14:18	80.54	6/16/2022 12:41	16.22	6/16/2022 11:50	5.90	6/16/2022 16:46	75.92
6/17/2022 15:37	48.73	6/17/2022 14:19	80.54	6/16/2022 12:42	16.22	6/16/2022 11:51	5.74	6/16/2022 16:47	75.85
6/17/2022 15:38	48.72	6/17/2022 14:20	80.51	6/16/2022 12:43	16.21	6/16/2022 11:52	5.81	6/16/2022 16:48	75.74
6/17/2022 15:39	48.70	6/17/2022 14:21	80.52	6/16/2022 12:44	16.21	6/16/2022 11:53	5.82	6/16/2022 16:49	75.64
6/17/2022 15:40	48.69	6/17/2022 14:22	80.53	6/16/2022 12:45	16.19	6/16/2022 11:54	5.72	6/16/2022 16:50	75.59

6/17/2022 15:41	48.71	6/17/2022 14:23	80.52	6/16/2022 12:46	16.21	6/16/2022 11:55	5.83	6/16/2022 16:51	75.49
6/17/2022 15:42	48.70	6/17/2022 14:24	80.56	6/16/2022 12:47	16.21	6/16/2022 11:56	5.79	6/16/2022 16:52	75.38
6/17/2022 15:43	48.70	6/17/2022 14:25	80.51	6/16/2022 12:48	16.19	6/16/2022 11:57	5.78	6/16/2022 16:53	75.30
6/17/2022 15:44	48.74	6/17/2022 14:26	80.53	6/16/2022 12:49	16.21	6/16/2022 11:58	5.66	6/16/2022 16:54	75.23
6/17/2022 15:45	48.74	6/17/2022 14:27	80.55	6/16/2022 12:50	16.17	6/16/2022 11:59	5.69	6/16/2022 16:55	75.17
6/17/2022 15:46	48.70	6/17/2022 14:28	80.53	6/16/2022 12:51	16.22	6/16/2022 12:00	5.74	6/16/2022 16:56	75.07
6/17/2022 15:47	48.72	6/17/2022 14:29	80.50	6/16/2022 12:52	16.24	6/16/2022 12:01	5.70	6/16/2022 16:57	74.98
6/17/2022 15:48	48.72	6/17/2022 14:30	80.56	6/16/2022 12:53	16.21	6/16/2022 12:02	5.66	6/16/2022 16:58	74.92
6/17/2022 15:49	48.71	6/17/2022 14:31	80.53	6/16/2022 12:54	16.22	6/16/2022 12:03	5.88	6/16/2022 16:59	74.82
6/17/2022 15:50	50.88	6/17/2022 14:32	80.52	6/16/2022 12:55	16.19	6/16/2022 12:04	5.74	6/16/2022 17:00	74.77
6/17/2022 15:51	52.60	6/17/2022 14:33	80.51	6/16/2022 12:56	16.16	6/16/2022 12:05	5.70	6/16/2022 17:01	74.69
6/17/2022 15:52	53.46	6/17/2022 14:34	80.56	6/16/2022 12:57	16.18	6/16/2022 12:06	5.69	6/16/2022 17:02	74.63
6/17/2022 15:53	54.00	6/17/2022 14:35	80.53	6/16/2022 12:58	16.19	6/16/2022 12:07	5.62	6/16/2022 17:03	74.55
6/17/2022 15:54	53.49	6/17/2022 14:36	80.53	6/16/2022 12:59	16.20	6/16/2022 12:08	6.02	6/16/2022 17:04	74.46
6/17/2022 15:55	51.48	6/17/2022 14:37	80.53	6/16/2022 13:00	16.21	6/16/2022 12:09	5.85	6/16/2022 17:05	74.40
6/17/2022 15:56	50.75	6/17/2022 14:38	80.55	6/16/2022 13:01	16.24	6/16/2022 12:10	5.81	6/16/2022 17:06	74.35
6/17/2022 15:57	50.37	6/17/2022 14:39	80.53	6/16/2022 13:02	16.17	6/16/2022 12:11	5.70	6/16/2022 17:07	74.26
6/17/2022 15:58	50.15	6/17/2022 14:40	80.50	6/16/2022 13:03	16.18	6/16/2022 12:12	5.66	6/16/2022 17:08	74.20
6/17/2022 15:59	50.00	6/17/2022 14:41	80.54	6/16/2022 13:04	16.16	6/16/2022 12:13	5.69	6/16/2022 17:09	74.12
6/17/2022 16:00	49.87	6/17/2022 14:42	80.53	6/16/2022 13:05	16.20	6/16/2022 12:14	5.68	6/16/2022 17:10	74.04
6/17/2022 16:01	49.79	6/17/2022 14:43	80.54	6/16/2022 13:06	16.18	6/16/2022 12:15	5.57	6/16/2022 17:11	73.94
6/17/2022 16:02	49.74	6/17/2022 14:44	80.51	6/16/2022 13:07	16.19	6/16/2022 12:16	5.62	6/16/2022 17:12	73.92
6/17/2022 16:03	49.67	6/17/2022 14:45	80.53	6/16/2022 13:08	16.20	6/16/2022 12:17	5.62	6/16/2022 17:13	73.85
6/17/2022 16:04	49.63	6/17/2022 14:46	80.54	6/16/2022 13:09	16.16	6/16/2022 12:18	5.58	6/16/2022 17:14	73.77
6/17/2022 16:05	49.57	6/17/2022 14:47	80.50	6/16/2022 13:10	16.15	6/16/2022 12:19	5.58	6/16/2022 17:15	73.69
6/17/2022 16:06	49.57	6/17/2022 14:48	80.56	6/16/2022 13:11	16.19	6/16/2022 12:20	5.55	6/16/2022 17:16	73.67
6/17/2022 16:07	49.49	6/17/2022 14:49	80.57	6/16/2022 13:12	16.15	6/16/2022 12:21	5.55	6/16/2022 17:17	73.58
6/17/2022 16:08	49.50	6/17/2022 14:50	80.50	6/16/2022 13:13	16.16	6/16/2022 12:22	5.53	6/16/2022 17:18	73.49
6/17/2022 16:09	49.43	6/17/2022 14:51	80.53	6/16/2022 13:14	16.18	6/16/2022 12:23	5.58	6/16/2022 17:19	73.45
6/17/2022 16:10	49.43	6/17/2022 14:52	80.53	6/16/2022 13:15	16.14	6/16/2022 12:24	5.49	6/16/2022 17:20	73.41
6/17/2022 16:11	49.39	6/17/2022 14:53	80.56	6/16/2022 13:16	16.16	6/16/2022 12:25	5.49	6/16/2022 17:21	73.37
6/17/2022 16:12	49.36	6/17/2022 14:54	80.52	6/16/2022 13:17	16.15	6/16/2022 12:26	5.51	6/16/2022 17:22	73.27
6/17/2022 16:13	51.14	6/17/2022 14:55	80.51	6/16/2022 13:18	16.14	6/16/2022 12:27	5.47	6/16/2022 17:23	73.20
6/17/2022 16:14	52.99	6/17/2022 14:56	80.52	6/16/2022 13:19	16.07	6/16/2022 12:28	5.50	6/16/2022 17:24	73.12
6/17/2022 16:15	53.96	6/17/2022 14:57	80.53	6/16/2022 13:20	16.16	6/16/2022 12:29	5.50	6/16/2022 17:25	73.12
6/17/2022 16:16	54.50	6/17/2022 14:58	80.53	6/16/2022 13:21	16.18	6/16/2022 12:30	5.52	6/16/2022 17:26	73.03
6/17/2022 16:17	54.86	6/17/2022 14:59	80.55	6/16/2022 13:22	16.17	6/16/2022 12:31	5.44	6/16/2022 17:27	72.98
6/17/2022 16:18	52.45	6/17/2022 15:00	80.47	6/16/2022 13:23	16.15	6/16/2022 12:32	5.42	6/16/2022 17:28	72.89
6/17/2022 16:19	51.49	6/17/2022 15:01	80.50	6/16/2022 13:24	16.15	6/16/2022 12:33	5.44	6/16/2022 17:29	72.86
6/17/2022 16:20	51.00	6/17/2022 15:02	80.49	6/16/2022 13:25	16.13	6/16/2022 12:34	5.60	6/16/2022 17:30	72.82
6/17/2022 16:21	50.74	6/17/2022 15:03	80.57	6/16/2022 13:26	16.14	6/16/2022 12:35	5.54	6/16/2022 17:31	72.74
6/17/2022 16:22	50.59	6/17/2022 15:04	80.56	6/16/2022 13:27	16.18	6/16/2022 12:36	5.57	6/16/2022 17:32	72.70
6/17/2022 16:23	50.43	6/17/2022 15:05	80.52	6/16/2022 13:28	16.17	6/16/2022 12:37	5.40	6/16/2022 17:33	72.66
6/17/2022 16:24	50.37	6/17/2022 15:06	80.56	6/16/2022 13:29	16.12	6/16/2022 12:38	5.44	6/16/2022 17:34	72.57
6/17/2022 16:25	50.26	6/17/2022 15:07	80.53	6/16/2022 13:30	16.13	6/16/2022 12:39	5.41	6/16/2022 17:35	72.55
6/17/2022 16:26	50.21	6/17/2022 15:08	80.54	6/16/2022 13:31	16.17	6/16/2022 12:40	5.41	6/16/2022 17:36	72.51
6/17/2022 16:27	50.12	6/17/2022 15:09	80.51	6/16/2022 13:32	16.13	6/16/2022 12:41	5.34	6/16/2022 17:37	72.40
6/17/2022 16:28	50.07	6/17/2022 15:10	80.53	6/16/2022 13:33	16.15	6/16/2022 12:42	5.38	6/16/2022 17:38	72.35
6/17/2022 16:29	50.03	6/17/2022 15:11	80.59	6/16/2022 13:34	16.16	6/16/2022 12:43	5.37	6/16/2022 17:39	72.33
6/17/2022 16:30	49.97	6/17/2022 15:12	80.56	6/16/2022 13:35	16.13	6/16/2022 12:44	5.33	6/16/2022 17:40	73.74
6/17/2022 16:31	49.94	6/17/2022 15:13	80.53	6/16/2022 13:36	16.18	6/16/2022 12:45	5.55	6/16/2022 17:41	78.44
6/17/2022 16:32	49.90	6/17/2022 15:14	80.50	6/16/2022 13:37	16.12	6/16/2022 12:46	5.43	6/16/2022 17:42	78.30
6/17/2022 16:33	49.90	6/17/2022 15:15	80.51	6/16/2022 13:38	16.11	6/16/2022 12:47	5.39	6/16/2022 17:43	78.15
6/17/2022 16:34	49.86	6/17/2022 15:16	80.51	6/16/2022 13:39	16.15	6/16/2022 12:48	5.43	6/16/2022 17:44	77.99
6/17/2022 16:35	49.82	6/17/2022 15:17	80.55	6/16/2022 13:40	16.16	6/16/2022 12:49	5.46	6/16/2022 17:45	77.86
6/17/2022 16:36	49.76	6/17/2022 15:18	80.52	6/16/2022 13:41	16.14	6/16/2022 12:50	5.32	6/16/2022 17:46	77.73
6/17/2022 16:37	49.74	6/17/2022 15:19	80.53	6/16/2022 13:42	16.16	6/16/2022 12:51	5.86	6/16/2022 17:47	77.58
6/17/2022 16:38	49.78	6/17/2022 15:20	80.54	6/16/2022 13:43	16.12	6/16/2022 12:52	5.52	6/16/2022 17:48	77.49
6/17/2022 16:39	49.73	6/17/2022 15:21	80.51	6/16/2022 13:44	16.16	6/16/2022 12:53	5.46	6/16/2022 17:49	77.36
6/17/2022 16:40	49.71	6/17/2022 15:22	80.53	6/16/2022 13:45	16.09	6/16/2022 12:54	5.38	6/16/2022 17:50	77.26
6/17/2022 16:41	49.69	6/17/2022 15:23	80.48	6/16/2022 13:46	16.09	6/16/2022 12:55	5.34	6/16/2022 17:51	77.15
6/17/2022 16:42	49.66	6/17/2022 15:24	80.56	6/16/2022 13:47	16.16	6/16/2022 12:56	5.37	6/16/2022 17:52	77.05
6/17/2022 16:43	49.64	6/17/2022 15:25	80.54	6/16/2022 13:48	16.16	6/16/2022 12:57	5.80	6/16/2022 17:53	76.99
6/17/2022 16:44	49.60	6/17/2022 15:26	80.55	6/16/2022 13:49	16.12	6/16/2022 12:58	5.65	6/16/2022 17:54	76.87
6/17/2022 16:45	49.61	6/17/2022 15:27	80.56	6/16/2022 13:50	16.10	6/16/2022 12:59	5.55	6/16/2022 17:55	76.78
6/17/2022 16:46	49.59	6/17/2022 15:28	80.54	6/16/2022 13:51	16.11	6/16/2022 13:00	5.38	6/16/2022 17:56	76.71
6/17/2022 16:47	49.58	6/17/2022 15:29	80.52	6/16/2022 13:52	16.12	6/16/2022 13:01	5.40	6/16/2022 17:57	76.58
6/17/2022 16:48	49.56	6/17/2022 15:30	80.53	6/16/2022 13:53	16.12	6/16/2022 13:02	5.37	6/16/2022 17:58	76.48
6/17/2022 16:49	49.54	6/17/2022 15:31	80.55	6/16/2022 13:54	16.11	6/16/2022 13:03	5.33	6/16/2022 17:59	76.40
6/17/2022 16:50	49.53	6/17/2022 15:32	80.51	6/16/2022 13:55	16.12	6/16/2022 13:04	5.34	6/16/2022 18:00	76.28
6/17/2022 16:51	49.52	6/17/2022 15:33	80.55	6/16/2022 13:56	16.15	6/16/2022 13:05	5.28	6/16/2022 18:01	76.19
6/17/2022 16:52	49.56	6/17/2022 15:34	80.54	6/16/2022 13:57	16.13	6/16/2022 13:06	5.29	6/16/2022 18:02	76.08
6/17/2022 16:53	49.52	6/17/2022 15:35	80.52	6/16/2022 13:58	16.12	6/16/2022 13:07	5.28	6/16/2022 18:03	75.99
6/17/2022 16:54	49.52	6/17/2022 15:36	80.52	6/16/2022 13:59	16.13	6/16/2022 13:08	5.27	6/16/2022 18:04	75.87
6/17/2022 16:55	49.49	6/17/2022 15:37	80.54	6/16/2022 14:00	16.13	6/16/2022 13:09	5.24	6/16/2022 18:05	75.79
6/17/2022 16:56	49.48	6/17/2022 15:38	80.54	6/16/2022 14:01	16.16	6/16/2022 13:10	5.25	6/16/2022 18:06	75.69
6/17/2022 16:57	49.47	6/17/2022 15:39	80.51	6/16/2022 14:02	16.09	6/16/2022 13:11	5.33	6/16/2022 18:07	75.60
6/17/2022 16:58	49.46	6/17/2022 15:40	80.52	6/16/2022 14:03	16.09	6/16/2022 13:12	5.33	6/16/2022 18:08	75.49
6/17/2022 16:59	49.47	6/17/2022 15:41	80.52	6/16/2022 14:04	16.14	6/16/2022 13:13	5.32	6/16/2022 18:09	75.39
6/17/2022 17:00	49.41	6/17/2022 15:42	80.49	6/16/2022 14:05	16.09	6/16/2022 13:14	5.41	6/16/2022 18:10	75.32
6/17/2022 17:01	49.41	6/17/2022 15:43	80.51	6/16/2022 14:06	16.12	6/16/2022 13:15	5.44	6/16/2022 18:11	75.21
6/17/2022 17:02	49.39	6/17/2022 15:44	80.49	6/16/2022 14:07	16.14	6/16/2022 13:16	5.35	6/16/2022 18:12	75.15
6/17/2022 17:03	49.41	6/17/2022 15:45	80.56	6/16/2022 14:08	16.13	6/16/2022 13:17	5.37	6/16/2022 18:13	75.09
6/17/2022 17:04	49.40	6/17/2022 15:46	80.51	6/16/2022 14:09	16.11	6/16/2022 13:18	5.43	6/16/2022 18:14	74.98
6/17/2022 17:05	49.38	6/17/2022 15:47	80.53	6/16/2022 14:10	16.10	6/16/2022 13:19	5.36	6/16/2022 18:15	74.87
6/17/2022 17:06	49.37	6/17/2022 15:48	80.51	6/16/2022 14:11	16.13	6/16/2022 13:20	5.30	6/16/2022 18:16	74.77
6/17/2022 17:07	49.40	6/17/2022 15:49	80.48	6/16/2022 14:12	16.09	6/16/2022 13:21	5.30	6/16/2022 18:17	74.70
6/17/2022 17:08	49.34	6/17/2022 15:50	80.54	6/16/2022 14:13	16.13	6/16/2022 13:22	5.25	6/16/2022 18:18	74.62

6/17/2022 17:09	49.37	6/17/2022 15:51	80.52	6/16/2022 14:14	16.09	6/16/2022 13:23	5.26	6/16/2022 18:19	74.53
6/17/2022 17:10	49.34	6/17/2022 15:52	80.52	6/16/2022 14:15	16.10	6/16/2022 13:24	5.67	6/16/2022 18:20	74.46
6/17/2022 17:11	49.37	6/17/2022 15:53	80.49	6/16/2022 14:16	16.09	6/16/2022 13:25	5.64	6/16/2022 18:21	74.36
6/17/2022 17:12	49.34	6/17/2022 15:54	80.56	6/16/2022 14:17	16.12	6/16/2022 13:26	5.57	6/16/2022 18:22	74.32
6/17/2022 17:13	49.34	6/17/2022 15:55	80.48	6/16/2022 14:18	16.10	6/16/2022 13:27	5.42	6/16/2022 18:23	74.20
6/17/2022 17:14	49.33	6/17/2022 15:56	80.56	6/16/2022 14:19	16.12	6/16/2022 13:28	5.35	6/16/2022 18:24	74.15
6/17/2022 17:15	49.31	6/17/2022 15:57	80.53	6/16/2022 14:20	16.15	6/16/2022 13:29	5.33	6/16/2022 18:25	74.10
6/17/2022 17:16	49.30	6/17/2022 15:58	80.52	6/16/2022 14:21	16.08	6/16/2022 13:30	5.31	6/16/2022 18:26	74.00
6/17/2022 17:17	49.26	6/17/2022 15:59	80.50	6/16/2022 14:22	16.14	6/16/2022 13:31	5.37	6/16/2022 18:27	73.94
6/17/2022 17:18	49.30	6/17/2022 16:00	80.52	6/16/2022 14:23	16.12	6/16/2022 13:32	5.21	6/16/2022 18:28	73.86
6/17/2022 17:19	49.28	6/17/2022 16:01	80.48	6/16/2022 14:24	16.10	6/16/2022 13:33	5.28	6/16/2022 18:29	76.33
6/17/2022 17:20	49.26	6/17/2022 16:02	80.54	6/16/2022 14:25	16.09	6/16/2022 13:34	5.25	6/16/2022 18:30	79.17
6/17/2022 17:21	49.29	6/17/2022 16:03	80.51	6/16/2022 14:26	16.14	6/16/2022 13:35	5.28	6/16/2022 18:31	79.00
6/17/2022 17:22	49.28	6/17/2022 16:04	80.53	6/16/2022 14:27	16.11	6/16/2022 13:36	5.21	6/16/2022 18:32	78.83
6/17/2022 17:23	49.29	6/17/2022 16:05	80.55	6/16/2022 14:28	16.12	6/16/2022 13:37	5.20	6/16/2022 18:33	78.73
6/17/2022 17:24	49.24	6/17/2022 16:06	80.52	6/16/2022 14:29	16.10	6/16/2022 13:38	5.19	6/16/2022 18:34	78.61
6/17/2022 17:25	49.28	6/17/2022 16:07	80.54	6/16/2022 14:30	16.06	6/16/2022 13:39	5.17	6/16/2022 18:35	78.50
6/17/2022 17:26	49.28	6/17/2022 16:08	80.48	6/16/2022 14:31	16.14	6/16/2022 13:40	5.16	6/16/2022 18:36	78.40
6/17/2022 17:27	49.26	6/17/2022 16:09	80.50	6/16/2022 14:32	16.11	6/16/2022 13:41	5.15	6/16/2022 18:37	78.26
6/17/2022 17:28	49.28	6/17/2022 16:10	80.53	6/16/2022 14:33	16.07	6/16/2022 13:42	5.14	6/16/2022 18:38	78.16
6/17/2022 17:29	49.23	6/17/2022 16:11	80.51	6/16/2022 14:34	16.12	6/16/2022 13:43	5.17	6/16/2022 18:39	78.07
6/17/2022 17:30	49.20	6/17/2022 16:12	80.51	6/16/2022 14:35	16.11	6/16/2022 13:44	5.15	6/16/2022 18:40	77.96
6/17/2022 17:31	49.21	6/17/2022 16:13	80.51	6/16/2022 14:36	16.09	6/16/2022 13:45	5.21	6/16/2022 18:41	77.80
6/17/2022 17:32	49.21	6/17/2022 16:14	80.50	6/16/2022 14:37	16.11	6/16/2022 13:46	5.11	6/16/2022 18:42	77.68
6/17/2022 17:33	49.20	6/17/2022 16:15	80.53	6/16/2022 14:38	16.10	6/16/2022 13:47	5.09	6/16/2022 18:43	77.52
6/17/2022 17:34	49.21	6/17/2022 16:16	80.49	6/16/2022 14:39	16.06	6/16/2022 13:48	5.14	6/16/2022 18:44	77.48
6/17/2022 17:35	49.23	6/17/2022 16:17	80.50	6/16/2022 14:40	16.08	6/16/2022 13:49	5.08	6/16/2022 18:45	77.34
6/17/2022 17:36	49.19	6/17/2022 16:18	80.51	6/16/2022 14:41	16.14	6/16/2022 13:50	5.07	6/16/2022 18:46	77.25
6/17/2022 17:37	49.20	6/17/2022 16:19	80.51	6/16/2022 14:42	16.10	6/16/2022 13:51	5.13	6/16/2022 18:47	77.10
6/17/2022 17:38	49.21	6/17/2022 16:20	80.53	6/16/2022 14:43	16.11	6/16/2022 13:52	5.14	6/16/2022 18:48	77.04
6/17/2022 17:39	49.17	6/17/2022 16:21	80.48	6/16/2022 14:44	16.12	6/16/2022 13:53	5.03	6/16/2022 18:49	76.92
6/17/2022 17:40	49.18	6/17/2022 16:22	80.51	6/16/2022 14:45	16.13	6/16/2022 13:54	5.10	6/16/2022 18:50	76.83
6/17/2022 17:41	49.19	6/17/2022 16:23	80.53	6/16/2022 14:46	16.12	6/16/2022 13:55	5.10	6/16/2022 18:51	76.75
6/17/2022 17:42	49.20	6/17/2022 16:24	80.54	6/16/2022 14:47	16.14	6/16/2022 13:56	5.03	6/16/2022 18:52	76.64
6/17/2022 17:43	49.18	6/17/2022 16:25	80.48	6/16/2022 14:48	16.15	6/16/2022 13:57	5.05	6/16/2022 18:53	76.56
6/17/2022 17:44	49.17	6/17/2022 16:26	80.52	6/16/2022 14:49	16.09	6/16/2022 13:58	5.05	6/16/2022 18:54	76.47
6/17/2022 17:45	49.17	6/17/2022 16:27	80.53	6/16/2022 14:50	16.16	6/16/2022 13:59	5.01	6/16/2022 18:55	76.37
6/17/2022 17:46	49.18	6/17/2022 16:28	80.49	6/16/2022 14:51	16.09	6/16/2022 14:00	5.00	6/16/2022 18:56	76.26
6/17/2022 17:47	49.15	6/17/2022 16:29	80.52	6/16/2022 14:52	16.07	6/16/2022 14:01	5.05	6/16/2022 18:57	76.15
6/17/2022 17:48	49.15	6/17/2022 16:30	80.52	6/16/2022 14:53	16.11	6/16/2022 14:02	5.02	6/16/2022 18:58	76.08
6/17/2022 17:49	49.16	6/17/2022 16:31	80.53	6/16/2022 14:54	16.09	6/16/2022 14:03	4.99	6/16/2022 18:59	75.97
6/17/2022 17:50	49.14	6/17/2022 16:32	80.50	6/16/2022 14:55	16.10	6/16/2022 14:04	4.98	6/16/2022 19:00	75.91
6/17/2022 17:51	49.11	6/17/2022 16:33	80.50	6/16/2022 14:56	16.07	6/16/2022 14:05	5.04	6/16/2022 19:01	75.76
6/17/2022 17:52	49.14	6/17/2022 16:34	80.51	6/16/2022 14:57	16.08	6/16/2022 14:06	4.99	6/16/2022 19:02	75.68
6/17/2022 17:53	49.16	6/17/2022 16:35	80.56	6/16/2022 14:58	16.09	6/16/2022 14:07	4.96	6/16/2022 19:03	75.56
6/17/2022 17:54	49.12	6/17/2022 16:36	80.54	6/16/2022 14:59	16.11	6/16/2022 14:08	5.01	6/16/2022 19:04	75.48
6/17/2022 17:55	49.17	6/17/2022 16:37	80.56	6/16/2022 15:00	16.09	6/16/2022 14:09	4.97	6/16/2022 19:05	75.38
6/17/2022 17:56	49.12	6/17/2022 16:38	80.51	6/16/2022 15:01	16.17	6/16/2022 14:10	4.96	6/16/2022 19:06	75.28
6/17/2022 17:57	49.14	6/17/2022 16:39	80.50	6/16/2022 15:02	16.09	6/16/2022 14:11	4.99	6/16/2022 19:07	75.20
6/17/2022 17:58	49.13	6/17/2022 16:40	80.51	6/16/2022 15:03	16.09	6/16/2022 14:12	4.99	6/16/2022 19:08	75.10
6/17/2022 17:59	49.12	6/17/2022 16:41	80.50	6/16/2022 15:04	16.13	6/16/2022 14:13	4.97	6/16/2022 19:09	75.05
6/17/2022 18:00	49.08	6/17/2022 16:42	80.50	6/16/2022 15:05	16.10	6/16/2022 14:14	4.97	6/16/2022 19:10	74.93
6/17/2022 18:01	49.12	6/17/2022 16:43	80.54	6/16/2022 15:06	16.11	6/16/2022 14:15	4.95	6/16/2022 19:11	74.83
6/17/2022 18:02	49.11	6/17/2022 16:44	80.49	6/16/2022 15:07	16.09	6/16/2022 14:16	4.93	6/16/2022 19:12	74.73
6/17/2022 18:03	49.09	6/17/2022 16:45	80.51	6/16/2022 15:08	16.06	6/16/2022 14:17	4.90	6/16/2022 19:13	74.68
6/17/2022 18:04	49.10	6/17/2022 16:46	80.54	6/16/2022 15:09	16.11	6/16/2022 14:18	4.97	6/16/2022 19:14	74.60
6/17/2022 18:05	49.11	6/17/2022 16:47	80.50	6/16/2022 15:10	16.11	6/16/2022 14:19	4.92	6/16/2022 19:15	74.53
6/17/2022 18:06	49.10	6/17/2022 16:48	80.50	6/16/2022 15:11	16.08	6/16/2022 14:20	4.91	6/16/2022 19:16	74.39
6/17/2022 18:07	49.12	6/17/2022 16:49	80.50	6/16/2022 15:12	16.12	6/16/2022 14:21	4.91	6/16/2022 19:17	74.37
6/17/2022 18:08	49.10	6/17/2022 16:50	80.50	6/16/2022 15:13	16.12	6/16/2022 14:22	4.96	6/16/2022 19:18	74.25
6/17/2022 18:09	49.07	6/17/2022 16:51	80.52	6/16/2022 15:14	16.12	6/16/2022 14:23	4.95	6/16/2022 19:19	74.20
6/17/2022 18:10	49.12	6/17/2022 16:52	80.48	6/16/2022 15:15	16.09	6/16/2022 14:24	4.92	6/16/2022 19:20	74.10
6/17/2022 18:11	49.11	6/17/2022 16:53	80.48	6/16/2022 15:16	16.11	6/16/2022 14:25	4.91	6/16/2022 19:21	74.04
6/17/2022 18:12	49.08	6/17/2022 16:54	80.51	6/16/2022 15:17	16.11	6/16/2022 14:26	4.88	6/16/2022 19:22	73.96
6/17/2022 18:13	49.11	6/17/2022 16:55	80.52	6/16/2022 15:18	16.12	6/16/2022 14:27	4.90	6/16/2022 19:23	73.90
6/17/2022 18:14	49.10	6/17/2022 16:56	80.52	6/16/2022 15:19	16.08	6/16/2022 14:28	4.87	6/16/2022 19:24	73.82
6/17/2022 18:15	49.09	6/17/2022 16:57	80.52	6/16/2022 15:20	16.15	6/16/2022 14:29	4.84	6/16/2022 19:25	73.76
6/17/2022 18:16	49.10	6/17/2022 16:58	80.48	6/16/2022 15:21	16.13	6/16/2022 14:30	4.86	6/16/2022 19:26	73.65
6/17/2022 18:17	49.09	6/17/2022 16:59	80.52	6/16/2022 15:22	16.10	6/16/2022 14:31	4.92	6/16/2022 19:27	73.62
6/17/2022 18:18	49.10	6/17/2022 17:00	80.49	6/16/2022 15:23	16.13	6/16/2022 14:32	4.87	6/16/2022 19:28	73.50
6/17/2022 18:19	49.05	6/17/2022 17:01	80.49	6/16/2022 15:24	16.10	6/16/2022 14:33	4.86	6/16/2022 19:29	73.46
6/17/2022 18:20	49.10	6/17/2022 17:02	80.51	6/16/2022 15:25	16.11	6/16/2022 14:34	4.88	6/16/2022 19:30	73.41
6/17/2022 18:21	49.06	6/17/2022 17:03	80.49	6/16/2022 15:26	16.06	6/16/2022 14:35	4.82	6/16/2022 19:31	73.34
6/17/2022 18:22	49.10	6/17/2022 17:04	80.51	6/16/2022 15:27	16.09	6/16/2022 14:36	4.84	6/16/2022 19:32	73.31
6/17/2022 18:23	49.04	6/17/2022 17:05	80.50	6/16/2022 15:28	16.10	6/16/2022 14:37	4.85	6/16/2022 19:33	73.23
6/17/2022 18:24	49.09	6/17/2022 17:06	80.49	6/16/2022 15:29	16.12	6/16/2022 14:38	4.77	6/16/2022 19:34	73.11
6/17/2022 18:25	49.07	6/17/2022 17:07	80.49	6/16/2022 15:30	16.09	6/16/2022 14:39	4.81	6/16/2022 19:35	73.10
6/17/2022 18:26	49.07	6/17/2022 17:08	80.49	6/16/2022 15:31	16.12	6/16/2022 14:40	4.82	6/16/2022 19:36	73.01
6/17/2022 18:27	49.06	6/17/2022 17:09	80.51	6/16/2022 15:32	16.06	6/16/2022 14:41	4.83	6/16/2022 19:37	72.97
6/17/2022 18:28	49.08	6/17/2022 17:10	80.54	6/16/2022 15:33	16.11	6/16/2022 14:42	4.79	6/16/2022 19:38	72.87
6/17/2022 18:29	49.06	6/17/2022 17:11	80.53	6/16/2022 15:34	16.13	6/16/2022 14:43	4.82	6/16/2022 19:39	72.82
6/17/2022 18:30	49.06	6/17/2022 17:12	80.49	6/16/2022 15:35	16.13	6/16/2022 14:44	4.74	6/16/2022 19:40	72.78
6/17/2022 18:31	49.07	6/17/2022 17:13	80.49	6/16/2022 15:36	16.12	6/16/2022 14:45	4.79	6/16/2022 19:41	72.71
6/17/2022 18:32	49.05	6/17/2022 17:14	80.54	6/16/2022 15:37	16.06	6/16/2022 14:46	4.75	6/16/2022 19:42	72.60
6/17/2022 18:33	49.08	6/17/2022 17:15	80.52	6/16/2022 15:38	16.10	6/16/2022 14:47	4.75	6/16/2022 19:43	72.61
6/17/2022 18:34	49.07	6/17/2022 17:16	80.49	6/16/2022 15:39	16.06	6/16/2022 14:48	4.78	6/16/2022 19:44	72.51
6/17/2022 18:35	49.05	6/17/2022 17:17	80.52	6/16/2022 15:40	16.05	6/16/2022 14:49	4.83	6/16/2022 19:45	72.48
6/17/2022 18:36	49.07	6/17/2022 17:18	80.47	6/16/2022 15:41	16.08	6/16/2022 14:50	4.70	6/16/2022 19:46	72.43

6/17/2022 18:37	49.05	6/17/2022 17:19	80.48	6/16/2022 15:42	16.12	6/16/2022 14:51	4.75	6/16/2022 19:47	72.35
6/17/2022 18:38	49.04	6/17/2022 17:20	80.54	6/16/2022 15:43	16.05	6/16/2022 14:52	4.77	6/16/2022 19:48	72.26
6/17/2022 18:39	49.06	6/17/2022 17:21	80.50	6/16/2022 15:44	16.06	6/16/2022 14:53	5.09	6/16/2022 19:49	72.27
6/17/2022 18:40	49.03	6/17/2022 17:22	80.50	6/16/2022 15:45	16.10	6/16/2022 14:54	4.93	6/16/2022 19:50	72.20
6/17/2022 18:41	49.05	6/17/2022 17:23	80.47	6/16/2022 15:46	16.09	6/16/2022 14:55	5.12	6/16/2022 19:51	72.16
6/17/2022 18:42	49.02	6/17/2022 17:24	80.49	6/16/2022 15:47	16.06	6/16/2022 14:56	4.97	6/16/2022 19:52	72.10
6/17/2022 18:43	49.04	6/17/2022 17:25	80.48	6/16/2022 15:48	16.04	6/16/2022 14:57	4.87	6/16/2022 19:53	72.35
6/17/2022 18:44	49.03	6/17/2022 17:26	80.51	6/16/2022 15:49	16.08	6/16/2022 14:58	4.89	6/16/2022 19:54	77.34
6/17/2022 18:45	49.05	6/17/2022 17:27	80.52	6/16/2022 15:50	16.08	6/16/2022 14:59	4.79	6/16/2022 19:55	77.17
6/17/2022 18:46	49.04	6/17/2022 17:28	80.48	6/16/2022 15:51	16.08	6/16/2022 15:00	4.78	6/16/2022 19:56	77.04
6/17/2022 18:47	49.04	6/17/2022 17:29	80.52	6/16/2022 15:52	16.09	6/16/2022 15:01	4.84	6/16/2022 19:57	76.90
6/17/2022 18:48	49.06	6/17/2022 17:30	80.51	6/16/2022 15:53	16.11	6/16/2022 15:02	4.72	6/16/2022 19:58	76.79
6/17/2022 18:49	49.00	6/17/2022 17:31	80.50	6/16/2022 15:54	16.09	6/16/2022 15:03	4.77	6/16/2022 19:59	76.72
6/17/2022 18:50	49.02	6/17/2022 17:32	80.50	6/16/2022 15:55	16.11	6/16/2022 15:04	4.83	6/16/2022 20:00	76.56
6/17/2022 18:51	49.04	6/17/2022 17:33	80.53	6/16/2022 15:56	16.06	6/16/2022 15:05	4.80	6/16/2022 20:01	76.43
6/17/2022 18:52	49.01	6/17/2022 17:34	80.49	6/16/2022 15:57	16.09	6/16/2022 15:06	4.69	6/16/2022 20:02	76.33
6/17/2022 18:53	49.00	6/17/2022 17:35	80.53	6/16/2022 15:58	16.10	6/16/2022 15:07	4.71	6/16/2022 20:03	76.24
6/17/2022 18:54	49.01	6/17/2022 17:36	80.46	6/16/2022 15:59	16.09	6/16/2022 15:08	4.71	6/16/2022 20:04	76.12
6/17/2022 18:55	49.03	6/17/2022 17:37	80.52	6/16/2022 16:00	16.10	6/16/2022 15:09	4.71	6/16/2022 20:05	76.03
6/17/2022 18:56	49.02	6/17/2022 17:38	80.52	6/16/2022 16:01	16.14	6/16/2022 15:10	4.71	6/16/2022 20:06	75.92
6/17/2022 18:57	49.02	6/17/2022 17:39	80.49	6/16/2022 16:02	16.16	6/16/2022 15:11	4.67	6/16/2022 20:07	75.84
6/17/2022 18:58	49.02	6/17/2022 17:40	80.51	6/16/2022 16:03	16.12	6/16/2022 15:12	4.63	6/16/2022 20:08	75.72
6/17/2022 18:59	49.02	6/17/2022 17:41	80.51	6/16/2022 16:04	16.14	6/16/2022 15:13	4.66	6/16/2022 20:09	75.64
6/17/2022 19:00	48.99	6/17/2022 17:42	80.52	6/16/2022 16:05	16.16	6/16/2022 15:14	4.67	6/16/2022 20:10	75.52
6/17/2022 19:01	49.02	6/17/2022 17:43	80.50	6/16/2022 16:06	16.17	6/16/2022 15:15	4.64	6/16/2022 20:11	75.43
6/17/2022 19:02	49.02	6/17/2022 17:44	80.48	6/16/2022 16:07	16.14	6/16/2022 15:16	4.65	6/16/2022 20:12	75.36
6/17/2022 19:03	49.01	6/17/2022 17:45	80.51	6/16/2022 16:08	16.22	6/16/2022 15:17	4.64	6/16/2022 20:13	75.27
6/17/2022 19:04	49.03	6/17/2022 17:46	80.54	6/16/2022 16:09	16.17	6/16/2022 15:18	4.65	6/16/2022 20:14	75.17
6/17/2022 19:05	48.99	6/17/2022 17:47	80.49	6/16/2022 16:10	16.22	6/16/2022 15:19	4.61	6/16/2022 20:15	75.07
6/17/2022 19:06	49.02	6/17/2022 17:48	80.49	6/16/2022 16:11	16.22	6/16/2022 15:20	4.62	6/16/2022 20:16	75.02
6/17/2022 19:07	49.00	6/17/2022 17:49	80.50	6/16/2022 16:12	16.22	6/16/2022 15:21	4.63	6/16/2022 20:17	74.88
6/17/2022 19:08	48.99	6/17/2022 17:50	80.54	6/16/2022 16:13	16.21	6/16/2022 15:22	4.62	6/16/2022 20:18	74.85
6/17/2022 19:09	48.98	6/17/2022 17:51	80.52	6/16/2022 16:14	16.25	6/16/2022 15:23	4.56	6/16/2022 20:19	74.71
6/17/2022 19:10	48.97	6/17/2022 17:52	80.52	6/16/2022 16:15	16.24	6/16/2022 15:24	4.66	6/16/2022 20:20	74.63
6/17/2022 19:11	48.99	6/17/2022 17:53	80.49	6/16/2022 16:16	16.23	6/16/2022 15:25	4.58	6/16/2022 20:21	74.56
6/17/2022 19:12	49.00	6/17/2022 17:54	80.53	6/16/2022 16:17	16.27	6/16/2022 15:26	4.60	6/16/2022 20:22	74.49
6/17/2022 19:13	49.01	6/17/2022 17:55	80.48	6/16/2022 16:18	16.27	6/16/2022 15:27	4.63	6/16/2022 20:23	74.40
6/17/2022 19:14	48.97	6/17/2022 17:56	80.52	6/16/2022 16:19	16.27	6/16/2022 15:28	4.61	6/16/2022 20:24	74.30
6/17/2022 19:15	49.02	6/17/2022 17:57	80.50	6/16/2022 16:20	16.28	6/16/2022 15:29	4.58	6/16/2022 20:25	74.21
6/17/2022 19:16	48.97	6/17/2022 17:58	80.51	6/16/2022 16:21	16.31	6/16/2022 15:30	4.64	6/16/2022 20:26	74.17
6/17/2022 19:17	49.01	6/17/2022 17:59	80.49	6/16/2022 16:22	16.30	6/16/2022 15:31	4.58	6/16/2022 20:27	74.12
6/17/2022 19:18	48.97	6/17/2022 18:00	80.54	6/16/2022 16:23	16.30	6/16/2022 15:32	4.85	6/16/2022 20:28	74.02
6/17/2022 19:19	48.96	6/17/2022 18:01	80.50	6/16/2022 16:24	16.35	6/16/2022 15:33	4.71	6/16/2022 20:29	73.92
6/17/2022 19:20	48.97	6/17/2022 18:02	80.49	6/16/2022 16:25	16.33	6/16/2022 15:34	4.75	6/16/2022 20:30	73.84
6/17/2022 19:21	48.97	6/17/2022 18:03	80.50	6/16/2022 16:26	16.36	6/16/2022 15:35	4.64	6/16/2022 20:31	73.75
6/17/2022 19:22	48.96	6/17/2022 18:04	80.50	6/16/2022 16:27	16.28	6/16/2022 15:36	4.63	6/16/2022 20:32	73.66
6/17/2022 19:23	48.96	6/17/2022 18:05	80.50	6/16/2022 16:28	16.38	6/16/2022 15:37	4.55	6/16/2022 20:33	73.63
6/17/2022 19:24	48.94	6/17/2022 18:06	80.52	6/16/2022 16:29	16.35	6/16/2022 15:38	4.51	6/16/2022 20:34	73.60
6/17/2022 19:25	48.98	6/17/2022 18:07	80.53	6/16/2022 16:30	16.35	6/16/2022 15:39	4.58	6/16/2022 20:35	73.49
6/17/2022 19:26	48.98	6/17/2022 18:08	80.54	6/16/2022 16:31	16.38	6/16/2022 15:40	4.64	6/16/2022 20:36	73.41
6/17/2022 19:27	49.00	6/17/2022 18:09	80.51	6/16/2022 16:32	16.35	6/16/2022 15:41	4.52	6/16/2022 20:37	74.26
6/17/2022 19:28	48.96	6/17/2022 18:10	80.52	6/16/2022 16:33	16.41	6/16/2022 15:42	4.59	6/16/2022 20:38	78.29
6/17/2022 19:29	48.96	6/17/2022 18:11	80.53	6/16/2022 16:34	16.41	6/16/2022 15:43	4.60	6/16/2022 20:39	78.11
6/17/2022 19:30	48.96	6/17/2022 18:12	80.51	6/16/2022 16:35	16.42	6/16/2022 15:44	4.50	6/16/2022 20:40	77.97
6/17/2022 19:31	48.95	6/17/2022 18:13	80.53	6/16/2022 16:36	16.40	6/16/2022 15:45	4.51	6/16/2022 20:41	77.81
6/17/2022 19:32	48.98	6/17/2022 18:14	80.51	6/16/2022 16:37	16.41	6/16/2022 15:46	4.56	6/16/2022 20:42	77.69
6/17/2022 19:33	48.96	6/17/2022 18:15	80.49	6/16/2022 16:38	16.40	6/16/2022 15:47	4.48	6/16/2022 20:43	77.56
6/17/2022 19:34	48.99	6/17/2022 18:16	80.51	6/16/2022 16:39	16.38	6/16/2022 15:48	4.49	6/16/2022 20:44	77.43
6/17/2022 19:35	48.96	6/17/2022 18:17	80.50	6/16/2022 16:40	16.44	6/16/2022 15:49	4.51	6/16/2022 20:45	77.31
6/17/2022 19:36	48.96	6/17/2022 18:18	80.52	6/16/2022 16:41	16.39	6/16/2022 15:50	4.54	6/16/2022 20:46	77.24
6/17/2022 19:37	48.99	6/17/2022 18:19	80.51	6/16/2022 16:42	16.37	6/16/2022 15:51	4.52	6/16/2022 20:47	77.10
6/17/2022 19:38	48.96	6/17/2022 18:20	80.51	6/16/2022 16:43	16.41	6/16/2022 15:52	4.50	6/16/2022 20:48	77.01
6/17/2022 19:39	48.95	6/17/2022 18:21	80.52	6/16/2022 16:44	16.39	6/16/2022 15:53	4.52	6/16/2022 20:49	76.90
6/17/2022 19:40	48.94	6/17/2022 18:22	80.51	6/16/2022 16:45	16.43	6/16/2022 15:54	4.50	6/16/2022 20:50	76.81
6/17/2022 19:41	48.96	6/17/2022 18:23	80.54	6/16/2022 16:46	16.43	6/16/2022 15:55	4.47	6/16/2022 20:51	76.70
6/17/2022 19:42	48.96	6/17/2022 18:24	80.55	6/16/2022 16:47	16.40	6/16/2022 15:56	4.47	6/16/2022 20:52	76.63
6/17/2022 19:43	48.95	6/17/2022 18:25	80.55	6/16/2022 16:48	16.38	6/16/2022 15:57	4.47	6/16/2022 20:53	76.53
6/17/2022 19:44	48.92	6/17/2022 18:26	80.49	6/16/2022 16:49	16.43	6/16/2022 15:58	4.48	6/16/2022 20:54	76.43
6/17/2022 19:45	48.98	6/17/2022 18:27	80.51	6/16/2022 16:50	16.44	6/16/2022 15:59	4.51	6/16/2022 20:55	76.32
6/17/2022 19:46	48.95	6/17/2022 18:28	80.51	6/16/2022 16:51	16.43	6/16/2022 16:00	4.53	6/16/2022 20:56	76.24
6/17/2022 19:47	48.98	6/17/2022 18:29	80.50	6/16/2022 16:52	16.43	6/16/2022 16:01	4.41	6/16/2022 20:57	76.12
6/17/2022 19:48	48.98	6/17/2022 18:30	80.51	6/16/2022 16:53	16.44	6/16/2022 16:02	4.42	6/16/2022 20:58	76.07
6/17/2022 19:49	48.94	6/17/2022 18:31	80.49	6/16/2022 16:54	16.46	6/16/2022 16:03	4.44	6/16/2022 20:59	75.93
6/17/2022 19:50	48.91	6/17/2022 18:32	80.49	6/16/2022 16:55	16.45	6/16/2022 16:04	4.40	6/16/2022 21:00	75.82
6/17/2022 19:51	48.93	6/17/2022 18:33	80.50	6/16/2022 16:56	16.46	6/16/2022 16:05	4.41	6/16/2022 21:01	75.71
6/17/2022 19:52	48.97	6/17/2022 18:34	80.54	6/16/2022 16:57	16.48	6/16/2022 16:06	4.38	6/16/2022 21:02	75.65
6/17/2022 19:53	48.94	6/17/2022 18:35	80.52	6/16/2022 16:58	16.46	6/16/2022 16:07	4.43	6/16/2022 21:03	75.55
6/17/2022 19:54	48.94	6/17/2022 18:36	80.52	6/16/2022 16:59	16.47	6/16/2022 16:08	4.42	6/16/2022 21:04	75.45
6/17/2022 19:55	48.97	6/17/2022 18:37	80.53	6/16/2022 17:00	16.45	6/16/2022 16:09	4.61	6/16/2022 21:05	75.38
6/17/2022 19:56	48.94	6/17/2022 18:38	80.47	6/16/2022 17:01	16.50	6/16/2022 16:10	4.90	6/16/2022 21:06	75.30
6/17/2022 19:57	48.93	6/17/2022 18:39	80.53	6/16/2022 17:02	16.49	6/16/2022 16:11	4.72	6/16/2022 21:07	75.21
6/17/2022 19:58	48.93	6/17/2022 18:40	80.50	6/16/2022 17:03	16.40	6/16/2022 16:12	4.64	6/16/2022 21:08	75.10
6/17/2022 19:59	48.93	6/17/2022 18:41	80.53	6/16/2022 17:04	16.46	6/16/2022 16:13	4.50	6/16/2022 21:09	75.05
6/17/2022 20:00	48.96	6/17/2022 18:42	80.51	6/16/2022 17:05	16.44	6/16/2022 16:14	4.46	6/16/2022 21:10	74.95
6/17/2022 20:01	48.94	6/17/2022 18:43	80.52	6/16/2022 17:06	16.46	6/16/2022 16:15	4.47	6/16/2022 21:11	74.87
6/17/2022 20:02	48.91	6/17/2022 18:44	80.53	6/16/2022 17:07	16.47	6/16/2022 16:16	4.47	6/16/2022 21:12	74.79
6/17/2022 20:03	48.92	6/17/2022 18:45	80.51	6/16/2022 17:08	16.49	6/16/2022 16:17	4.44	6/16/2022 21:13	74.74
6/17/2022 20:04	48.95	6/17/2022 18:46	80.51	6/16/2022 17:09	16.47	6/16/2022 16:18	4.39	6/16/2022 21:14	74.64

6/17/2022 20:05	48.91	6/17/2022 18:47	80.50	6/16/2022 17:10	16.48	6/16/2022 16:19	4.39	6/16/2022 21:15	74.56
6/17/2022 20:06	48.96	6/17/2022 18:48	80.47	6/16/2022 17:11	16.47	6/16/2022 16:20	4.37	6/16/2022 21:16	74.44
6/17/2022 20:07	48.95	6/17/2022 18:49	80.52	6/16/2022 17:12	16.46	6/16/2022 16:21	4.34	6/16/2022 21:17	74.37
6/17/2022 20:08	48.93	6/17/2022 18:50	80.53	6/16/2022 17:13	16.45	6/16/2022 16:22	4.40	6/16/2022 21:18	74.33
6/17/2022 20:09	48.90	6/17/2022 18:51	80.50	6/16/2022 17:14	16.45	6/16/2022 16:23	4.38	6/16/2022 21:19	74.21
6/17/2022 20:10	48.90	6/17/2022 18:52	80.51	6/16/2022 17:15	16.44	6/16/2022 16:24	4.40	6/16/2022 21:20	74.20
6/17/2022 20:11	48.92	6/17/2022 18:53	80.51	6/16/2022 17:16	16.47	6/16/2022 16:25	4.34	6/16/2022 21:21	74.07
6/17/2022 20:12	48.89	6/17/2022 18:54	80.53	6/16/2022 17:17	16.43	6/16/2022 16:26	4.35	6/16/2022 21:22	74.01
6/17/2022 20:13	48.93	6/17/2022 18:55	80.49	6/16/2022 17:18	16.45	6/16/2022 16:27	4.40	6/16/2022 21:23	73.96
6/17/2022 20:14	48.92	6/17/2022 18:56	80.51	6/16/2022 17:19	16.47	6/16/2022 16:28	4.32	6/16/2022 21:24	73.91
6/17/2022 20:15	48.92	6/17/2022 18:57	80.52	6/16/2022 17:20	16.44	6/16/2022 16:29	4.31	6/16/2022 21:25	73.78
6/17/2022 20:16	48.92	6/17/2022 18:58	80.51	6/16/2022 17:21	16.45	6/16/2022 16:30	4.36	6/16/2022 21:26	73.75
6/17/2022 20:17	48.91	6/17/2022 18:59	80.52	6/16/2022 17:22	16.51	6/16/2022 16:31	4.31	6/16/2022 21:27	73.66
6/17/2022 20:18	48.93	6/17/2022 19:00	80.53	6/16/2022 17:23	16.49	6/16/2022 16:32	4.32	6/16/2022 21:28	73.62
6/17/2022 20:19	48.91	6/17/2022 19:01	80.50	6/16/2022 17:24	16.46	6/16/2022 16:33	4.31	6/16/2022 21:29	73.58
6/17/2022 20:20	48.89	6/17/2022 19:02	80.50	6/16/2022 17:25	16.44	6/16/2022 16:34	4.27	6/16/2022 21:30	73.54
6/17/2022 20:21	48.90	6/17/2022 19:03	80.50	6/16/2022 17:26	16.49	6/16/2022 16:35	4.26	6/16/2022 21:31	73.44
6/17/2022 20:22	48.90	6/17/2022 19:04	80.53	6/16/2022 17:27	16.44	6/16/2022 16:36	4.32	6/16/2022 21:32	73.36
6/17/2022 20:23	48.92	6/17/2022 19:05	80.52	6/16/2022 17:28	16.50	6/16/2022 16:37	4.29	6/16/2022 21:33	73.31
6/17/2022 20:24	48.92	6/17/2022 19:06	80.53	6/16/2022 17:29	16.44	6/16/2022 16:38	4.28	6/16/2022 21:34	73.26
6/17/2022 20:25	48.89	6/17/2022 19:07	80.53	6/16/2022 17:30	16.49	6/16/2022 16:39	4.26	6/16/2022 21:35	73.22
6/17/2022 20:26	48.90	6/17/2022 19:08	80.49	6/16/2022 17:31	16.45	6/16/2022 16:40	4.23	6/16/2022 21:36	73.14
6/17/2022 20:27	48.93	6/17/2022 19:09	80.52	6/16/2022 17:32	16.45	6/16/2022 16:41	4.26	6/16/2022 21:37	73.08
6/17/2022 20:28	48.93	6/17/2022 19:10	80.52	6/16/2022 17:33	16.43	6/16/2022 16:42	4.25	6/16/2022 21:38	73.06
6/17/2022 20:29	48.86	6/17/2022 19:11	80.51	6/16/2022 17:34	16.48	6/16/2022 16:43	4.19	6/16/2022 21:39	72.98
6/17/2022 20:30	48.91	6/17/2022 19:12	80.53	6/16/2022 17:35	16.42	6/16/2022 16:44	4.25	6/16/2022 21:40	72.93
6/17/2022 20:31	48.91	6/17/2022 19:13	80.50	6/16/2022 17:36	16.42	6/16/2022 16:45	4.27	6/16/2022 21:41	72.87
6/17/2022 20:32	48.88	6/17/2022 19:14	80.50	6/16/2022 17:37	16.39	6/16/2022 16:46	4.19	6/16/2022 21:42	72.79
6/17/2022 20:33	48.90	6/17/2022 19:15	80.54	6/16/2022 17:38	16.43	6/16/2022 16:47	4.36	6/16/2022 21:43	72.74
6/17/2022 20:34	48.89	6/17/2022 19:16	80.51	6/16/2022 17:39	16.48	6/16/2022 16:48	4.76	6/16/2022 21:44	72.70
6/17/2022 20:35	48.91	6/17/2022 19:17	80.47	6/16/2022 17:40	16.41	6/16/2022 16:49	5.00	6/16/2022 21:45	72.67
6/17/2022 20:36	48.90	6/17/2022 19:18	80.51	6/16/2022 17:41	16.43	6/16/2022 16:50	5.12	6/16/2022 21:46	72.61
6/17/2022 20:37	48.91	6/17/2022 19:19	80.51	6/16/2022 17:42	16.44	6/16/2022 16:51	5.18	6/16/2022 21:47	72.55
6/17/2022 20:38	48.89	6/17/2022 19:20	80.52	6/16/2022 17:43	16.43	6/16/2022 16:52	5.29	6/16/2022 21:48	72.49
6/17/2022 20:39	48.89	6/17/2022 19:21	80.54	6/16/2022 17:44	16.41	6/16/2022 16:53	5.38	6/16/2022 21:49	72.44
6/17/2022 20:40	48.87	6/17/2022 19:22	80.51	6/16/2022 17:45	16.41	6/16/2022 16:54	5.43	6/16/2022 21:50	72.39
6/17/2022 20:41	48.89	6/17/2022 19:23	80.51	6/16/2022 17:46	16.41	6/16/2022 16:55	5.14	6/16/2022 21:51	72.34
6/17/2022 20:42	48.89	6/17/2022 19:24	80.51	6/16/2022 17:47	16.38	6/16/2022 16:56	4.98	6/16/2022 21:52	72.28
6/17/2022 20:43	48.87	6/17/2022 19:25	80.54	6/16/2022 17:48	16.46	6/16/2022 16:57	4.77	6/16/2022 21:53	72.29
6/17/2022 20:44	48.87	6/17/2022 19:26	80.51	6/16/2022 17:49	16.40	6/16/2022 16:58	4.68	6/16/2022 21:54	72.21
6/17/2022 20:45	48.91	6/17/2022 19:27	80.49	6/16/2022 17:50	16.40	6/16/2022 16:59	4.69	6/16/2022 21:55	72.14
6/17/2022 20:46	48.87	6/17/2022 19:28	80.48	6/16/2022 17:51	16.38	6/16/2022 17:00	4.60	6/16/2022 21:56	72.07
6/17/2022 20:47	48.87	6/17/2022 19:29	80.53	6/16/2022 17:52	16.37	6/16/2022 17:01	4.58	6/16/2022 21:57	72.05
6/17/2022 20:48	48.87	6/17/2022 19:30	80.53	6/16/2022 17:53	16.42	6/16/2022 17:02	4.51	6/16/2022 21:58	72.03
6/17/2022 20:49	48.86	6/17/2022 19:31	80.50	6/16/2022 17:54	16.37	6/16/2022 17:03	4.51	6/16/2022 21:59	71.95
6/17/2022 20:50	48.90	6/17/2022 19:32	80.54	6/16/2022 17:55	16.38	6/16/2022 17:04	4.55	6/16/2022 22:00	71.93
6/17/2022 20:51	48.92	6/17/2022 19:33	80.54	6/16/2022 17:56	16.39	6/16/2022 17:05	4.47	6/16/2022 22:01	71.89
6/17/2022 20:52	48.85	6/17/2022 19:34	80.54	6/16/2022 17:57	16.41	6/16/2022 17:06	4.45	6/16/2022 22:02	71.83
6/17/2022 20:53	48.87	6/17/2022 19:35	80.50	6/16/2022 17:58	16.36	6/16/2022 17:07	4.44	6/16/2022 22:03	71.78
6/17/2022 20:54	48.86	6/17/2022 19:36	80.51	6/16/2022 17:59	16.36	6/16/2022 17:08	4.45	6/16/2022 22:04	71.71
6/17/2022 20:55	48.87	6/17/2022 19:37	80.51	6/16/2022 18:00	16.38	6/16/2022 17:09	4.43	6/16/2022 22:05	71.70
6/17/2022 20:56	48.85	6/17/2022 19:38	80.56	6/16/2022 18:01	16.35	6/16/2022 17:10	4.39	6/16/2022 22:06	71.63
6/17/2022 20:57	48.87	6/17/2022 19:39	80.52	6/16/2022 18:02	16.38	6/16/2022 17:11	4.44	6/16/2022 22:07	71.56
6/17/2022 20:58	48.85	6/17/2022 19:40	80.54	6/16/2022 18:03	16.36	6/16/2022 17:12	4.37	6/16/2022 22:08	71.53
6/17/2022 20:59	48.86	6/17/2022 19:41	80.51	6/16/2022 18:04	16.36	6/16/2022 17:13	4.33	6/16/2022 22:09	71.50
6/17/2022 21:00	48.88	6/17/2022 19:42	80.49	6/16/2022 18:05	16.41	6/16/2022 17:14	4.37	6/16/2022 22:10	71.43
6/17/2022 21:01	48.86	6/17/2022 19:43	80.46	6/16/2022 18:06	16.34	6/16/2022 17:15	4.35	6/16/2022 22:11	71.41
6/17/2022 21:02	48.86	6/17/2022 19:44	80.54	6/16/2022 18:07	16.37	6/16/2022 17:16	4.35	6/16/2022 22:12	71.35
6/17/2022 21:03	48.87	6/17/2022 19:45	80.52	6/16/2022 18:08	16.32	6/16/2022 17:17	4.49	6/16/2022 22:13	71.33
6/17/2022 21:04	48.87	6/17/2022 19:46	80.51	6/16/2022 18:09	16.39	6/16/2022 17:18	4.39	6/16/2022 22:14	71.26
6/17/2022 21:05	48.86	6/17/2022 19:47	80.56	6/16/2022 18:10	16.34	6/16/2022 17:19	4.35	6/16/2022 22:15	71.24
6/17/2022 21:06	48.85	6/17/2022 19:48	80.49	6/16/2022 18:11	16.35	6/16/2022 17:20	4.37	6/16/2022 22:16	71.23
6/17/2022 21:07	48.85	6/17/2022 19:49	80.50	6/16/2022 18:12	16.34	6/16/2022 17:21	4.30	6/16/2022 22:17	71.17
6/17/2022 21:08	48.85	6/17/2022 19:50	80.52	6/16/2022 18:13	16.35	6/16/2022 17:22	4.33	6/16/2022 22:18	71.15
6/17/2022 21:09	48.85	6/17/2022 19:51	80.52	6/16/2022 18:14	16.36	6/16/2022 17:23	4.33	6/16/2022 22:19	71.09
6/17/2022 21:10	48.86	6/17/2022 19:52	80.55	6/16/2022 18:15	16.35	6/16/2022 17:24	4.26	6/16/2022 22:20	71.06
6/17/2022 21:11	48.88	6/17/2022 19:53	80.56	6/16/2022 18:16	16.36	6/16/2022 17:25	4.23	6/16/2022 22:21	71.04
6/17/2022 21:12	48.85	6/17/2022 19:54	80.54	6/16/2022 18:17	16.34	6/16/2022 17:26	4.25	6/16/2022 22:22	70.98
6/17/2022 21:13	48.85	6/17/2022 19:55	80.52	6/16/2022 18:18	16.34	6/16/2022 17:27	4.23	6/16/2022 22:23	70.94
6/17/2022 21:14	48.85	6/17/2022 19:56	80.51	6/16/2022 18:19	16.34	6/16/2022 17:28	4.26	6/16/2022 22:24	70.93
6/17/2022 21:15	48.82	6/17/2022 19:57	80.48	6/16/2022 18:20	16.34	6/16/2022 17:29	4.23	6/16/2022 22:25	70.86
6/17/2022 21:16	48.87	6/17/2022 19:58	80.54	6/16/2022 18:21	20.80	6/16/2022 17:30	4.15	6/16/2022 22:26	70.81
6/17/2022 21:17	48.88	6/17/2022 19:59	80.55	6/16/2022 18:22	24.60	6/16/2022 17:31	4.22	6/16/2022 22:27	70.81
6/17/2022 21:18	48.86	6/17/2022 20:00	80.55	6/16/2022 18:23	26.63	6/16/2022 17:32	4.24	6/16/2022 22:28	70.82
6/17/2022 21:19	48.89	6/17/2022 20:01	80.55	6/16/2022 18:24	23.31	6/16/2022 17:33	4.17	6/16/2022 22:29	70.73
6/17/2022 21:20	48.85	6/17/2022 20:02	80.55	6/16/2022 18:25	21.67	6/16/2022 17:34	4.18	6/16/2022 22:30	70.73
6/17/2022 21:21	48.85	6/17/2022 20:03	80.51	6/16/2022 18:26	20.68	6/16/2022 17:35	4.25	6/16/2022 22:31	70.69
6/17/2022 21:22	48.88	6/17/2022 20:04	80.53	6/16/2022 18:27	19.99	6/16/2022 17:36	4.25	6/16/2022 22:32	70.66
6/17/2022 21:23	48.86	6/17/2022 20:05	80.49	6/16/2022 18:28	19.57	6/16/2022 17:37	4.26	6/16/2022 22:33	70.64
6/17/2022 21:24	48.86	6/17/2022 20:06	80.54	6/16/2022 18:29	19.28	6/16/2022 17:38	4.23	6/16/2022 22:34	70.61
6/17/2022 21:25	48.86	6/17/2022 20:07	80.49	6/16/2022 18:30	19.03	6/16/2022 17:39	4.31	6/16/2022 22:35	70.57
6/17/2022 21:26	48.85	6/17/2022 20:08	80.54	6/16/2022 18:31	18.81	6/16/2022 17:40	4.21	6/16/2022 22:36	70.54
6/17/2022 21:27	48.86	6/17/2022 20:09	80.55	6/16/2022 18:32	18.67	6/16/2022 17:41	4.21	6/16/2022 22:37	70.49
6/17/2022 21:28	48.83	6/17/2022 20:10	80.49	6/16/2022 18:33	18.51	6/16/2022 17:42	4.17	6/16/2022 22:38	70.50
6/17/2022 21:29	48.84	6/17/2022 20:11	80.58	6/16/2022 18:34	18.40	6/16/2022 17:43	4.37	6/16/2022 22:39	70.45
6/17/2022 21:30	48.83	6/17/2022 20:12	80.51	6/16/2022 18:35	18.26	6/16/2022 17:44	4.35	6/16/2022 22:40	70.42
6/17/2022 21:31	48.83	6/17/2022 20:13	80.56	6/16/2022 18:36	18.16	6/16/2022 17:45	4.22	6/16/2022 22:41	70.37
6/17/2022 21:32	48.82	6/17/2022 20:14	80.54	6/16/2022 18:37	18.08	6/16/2022 17:46	4.16	6/16/2022 22:42	70.34

6/17/2022 21:33	48.84	6/17/2022 20:15	80.50	6/16/2022 18:38	17.98	6/16/2022 17:47	4.21	6/16/2022 22:43	70.30
6/17/2022 21:34	48.85	6/17/2022 20:16	80.52	6/16/2022 18:39	17.92	6/16/2022 17:48	4.08	6/16/2022 22:44	70.27
6/17/2022 21:35	48.86	6/17/2022 20:17	80.50	6/16/2022 18:40	17.81	6/16/2022 17:49	4.13	6/16/2022 22:45	70.26
6/17/2022 21:36	48.87	6/17/2022 20:18	80.55	6/16/2022 18:41	17.82	6/16/2022 17:50	4.11	6/16/2022 22:46	70.25
6/17/2022 21:37	48.84	6/17/2022 20:19	80.50	6/16/2022 18:42	17.78	6/16/2022 17:51	4.15	6/16/2022 22:47	70.18
6/17/2022 21:38	48.81	6/17/2022 20:20	80.50	6/16/2022 18:43	17.71	6/16/2022 17:52	4.05	6/16/2022 22:48	70.17
6/17/2022 21:39	48.82	6/17/2022 20:21	80.52	6/16/2022 18:44	17.64	6/16/2022 17:53	4.09	6/16/2022 22:49	70.15
6/17/2022 21:40	48.86	6/17/2022 20:22	80.51	6/16/2022 18:45	17.54	6/16/2022 17:54	4.12	6/16/2022 22:50	70.14
6/17/2022 21:41	48.85	6/17/2022 20:23	80.50	6/16/2022 18:46	17.54	6/16/2022 17:55	4.07	6/16/2022 22:51	70.10
6/17/2022 21:42	48.84	6/17/2022 20:24	80.50	6/16/2022 18:47	17.50	6/16/2022 17:56	4.06	6/16/2022 22:52	70.08
6/17/2022 21:43	48.88	6/17/2022 20:25	80.49	6/16/2022 18:48	17.46	6/16/2022 17:57	4.10	6/16/2022 22:53	70.06
6/17/2022 21:44	48.85	6/17/2022 20:26	80.54	6/16/2022 18:49	17.43	6/16/2022 17:58	4.01	6/16/2022 22:54	69.99
6/17/2022 21:45	48.83	6/17/2022 20:27	80.51	6/16/2022 18:50	17.37	6/16/2022 17:59	4.00	6/16/2022 22:55	69.99
6/17/2022 21:46	48.84	6/17/2022 20:28	80.51	6/16/2022 18:51	17.41	6/16/2022 18:00	4.05	6/16/2022 22:56	69.94
6/17/2022 21:47	48.82	6/17/2022 20:29	80.56	6/16/2022 18:52	17.37	6/16/2022 18:01	4.07	6/16/2022 22:57	69.95
6/17/2022 21:48	48.85	6/17/2022 20:30	80.50	6/16/2022 18:53	17.29	6/16/2022 18:02	3.96	6/16/2022 22:58	69.88
6/17/2022 21:49	48.83	6/17/2022 20:31	80.54	6/16/2022 18:54	17.28	6/16/2022 18:03	4.00	6/16/2022 22:59	69.86
6/17/2022 21:50	48.84	6/17/2022 20:32	80.51	6/16/2022 18:55	17.26	6/16/2022 18:04	4.06	6/16/2022 23:00	69.86
6/17/2022 21:51	48.83	6/17/2022 20:33	80.53	6/16/2022 18:56	17.24	6/16/2022 18:05	3.96	6/16/2022 23:01	69.80
6/17/2022 21:52	48.83	6/17/2022 20:34	80.50	6/16/2022 18:57	17.19	6/16/2022 18:06	3.98	6/16/2022 23:02	69.80
6/17/2022 21:53	48.82	6/17/2022 20:35	80.54	6/16/2022 18:58	17.20	6/16/2022 18:07	3.99	6/16/2022 23:03	69.79
6/17/2022 21:54	48.85	6/17/2022 20:36	80.52	6/16/2022 18:59	17.15	6/16/2022 18:08	3.98	6/16/2022 23:04	69.76
6/17/2022 21:55	48.84	6/17/2022 20:37	80.49	6/16/2022 19:00	17.15	6/16/2022 18:09	3.91	6/16/2022 23:05	69.74
6/17/2022 21:56	48.82	6/17/2022 20:38	80.48	6/16/2022 19:01	17.12	6/16/2022 18:10	3.97	6/16/2022 23:06	69.67
6/17/2022 21:57	48.80	6/17/2022 20:39	82.25	6/16/2022 19:02	17.09	6/16/2022 18:11	4.00	6/16/2022 23:07	69.69
6/17/2022 21:58	48.78	6/17/2022 20:40	81.90	6/16/2022 19:03	17.07	6/16/2022 18:12	3.94	6/16/2022 23:08	69.65
6/17/2022 21:59	48.80	6/17/2022 20:41	81.64	6/16/2022 19:04	17.10	6/16/2022 18:13	3.92	6/16/2022 23:09	69.60
6/17/2022 22:00	48.84	6/17/2022 20:42	81.48	6/16/2022 19:05	17.03	6/16/2022 18:14	4.08	6/16/2022 23:10	69.58
6/17/2022 22:01	48.80	6/17/2022 20:43	81.29	6/16/2022 19:06	17.03	6/16/2022 18:15	4.01	6/16/2022 23:11	69.56
6/17/2022 22:02	48.83	6/17/2022 20:44	81.24	6/16/2022 19:07	17.02	6/16/2022 18:16	3.98	6/16/2022 23:12	69.56
6/17/2022 22:03	48.83	6/17/2022 20:45	81.19	6/16/2022 19:08	16.95	6/16/2022 18:17	3.98	6/16/2022 23:13	69.53
6/17/2022 22:04	48.79	6/17/2022 20:46	81.13	6/16/2022 19:09	17.00	6/16/2022 18:18	3.96	6/16/2022 23:14	69.53
6/17/2022 22:05	48.82	6/17/2022 20:47	81.04	6/16/2022 19:10	17.02	6/16/2022 18:19	3.98	6/16/2022 23:15	69.46
6/17/2022 22:06	48.79	6/17/2022 20:48	80.94	6/16/2022 19:11	16.97	6/16/2022 18:20	3.98	6/16/2022 23:16	69.43
6/17/2022 22:07	48.80	6/17/2022 20:49	80.90	6/16/2022 19:12	16.95	6/16/2022 18:21	3.94	6/16/2022 23:17	69.43
6/17/2022 22:08	48.80	6/17/2022 20:50	80.89	6/16/2022 19:13	16.94	6/16/2022 18:22	3.89	6/16/2022 23:18	69.43
6/17/2022 22:09	48.81	6/17/2022 20:51	80.84	6/16/2022 19:14	16.90	6/16/2022 18:23	3.90	6/16/2022 23:19	69.38
6/17/2022 22:10	48.77	6/17/2022 20:52	80.77	6/16/2022 19:15	16.92	6/16/2022 18:24	3.88	6/16/2022 23:20	69.32
6/17/2022 22:11	48.80	6/17/2022 20:53	80.80	6/16/2022 19:16	16.92	6/16/2022 18:25	3.92	6/16/2022 23:21	69.34
6/17/2022 22:12	48.82	6/17/2022 20:54	80.74	6/16/2022 19:17	16.90	6/16/2022 18:26	3.95	6/16/2022 23:22	69.33
6/17/2022 22:13	48.81	6/17/2022 20:55	80.75	6/16/2022 19:18	16.85	6/16/2022 18:27	3.93	6/16/2022 23:23	69.29
6/17/2022 22:14	48.81	6/17/2022 20:56	80.71	6/16/2022 19:19	16.85	6/16/2022 18:28	3.89	6/16/2022 23:24	69.26
6/17/2022 22:15	48.78	6/17/2022 20:57	80.69	6/16/2022 19:20	16.84	6/16/2022 18:29	3.92	6/16/2022 23:25	69.26
6/17/2022 22:16	48.83	6/17/2022 20:58	80.71	6/16/2022 19:21	16.83	6/16/2022 18:30	3.86	6/16/2022 23:26	69.20
6/17/2022 22:17	48.79	6/17/2022 20:59	80.68	6/16/2022 19:22	16.78	6/16/2022 18:31	3.89	6/16/2022 23:27	69.23
6/17/2022 22:18	48.77	6/17/2022 21:00	80.71	6/16/2022 19:23	16.83	6/16/2022 18:32	4.14	6/16/2022 23:28	69.18
6/17/2022 22:19	48.79	6/17/2022 21:01	80.65	6/16/2022 19:24	16.79	6/16/2022 18:33	3.99	6/16/2022 23:29	69.17
6/17/2022 22:20	48.82	6/17/2022 21:02	80.66	6/16/2022 19:25	16.78	6/16/2022 18:34	3.92	6/16/2022 23:30	69.15
6/17/2022 22:21	48.85	6/17/2022 21:03	80.65	6/16/2022 19:26	16.77	6/16/2022 18:35	3.88	6/16/2022 23:31	69.14
6/17/2022 22:22	48.80	6/17/2022 21:04	80.62	6/16/2022 19:27	16.83	6/16/2022 18:36	3.97	6/16/2022 23:32	69.11
6/17/2022 22:23	48.81	6/17/2022 21:05	80.62	6/16/2022 19:28	16.77	6/16/2022 18:37	3.87	6/16/2022 23:33	69.07
6/17/2022 22:24	48.82	6/17/2022 21:06	80.62	6/16/2022 19:29	16.78	6/16/2022 18:38	3.88	6/16/2022 23:34	69.06
6/17/2022 22:25	48.81	6/17/2022 21:07	80.65	6/16/2022 19:30	16.74	6/16/2022 18:39	3.88	6/16/2022 23:35	69.05
6/17/2022 22:26	48.81	6/17/2022 21:08	80.61	6/16/2022 19:31	16.77	6/16/2022 18:40	3.96	6/16/2022 23:36	69.04
6/17/2022 22:27	48.81	6/17/2022 21:09	80.59	6/16/2022 19:32	16.73	6/16/2022 18:41	3.86	6/16/2022 23:37	69.01
6/17/2022 22:28	48.80	6/17/2022 21:10	80.60	6/16/2022 19:33	16.72	6/16/2022 18:42	3.83	6/16/2022 23:38	69.01
6/17/2022 22:29	48.78	6/17/2022 21:11	80.61	6/16/2022 19:34	16.71	6/16/2022 18:43	3.92	6/16/2022 23:39	68.96
6/17/2022 22:30	48.79	6/17/2022 21:12	80.60	6/16/2022 19:35	16.69	6/16/2022 18:44	3.91	6/16/2022 23:40	68.92
6/17/2022 22:31	48.76	6/17/2022 21:13	80.56	6/16/2022 19:36	16.69	6/16/2022 18:45	3.84	6/16/2022 23:41	68.95
6/17/2022 22:32	48.79	6/17/2022 21:14	80.64	6/16/2022 19:37	16.69	6/16/2022 18:46	3.91	6/16/2022 23:42	68.91
6/17/2022 22:33	48.79	6/17/2022 21:15	80.60	6/16/2022 19:38	16.72	6/16/2022 18:47	3.79	6/16/2022 23:43	68.89
6/17/2022 22:34	48.80	6/17/2022 21:16	80.57	6/16/2022 19:39	16.68	6/16/2022 18:48	3.86	6/16/2022 23:44	68.87
6/17/2022 22:35	48.80	6/17/2022 21:17	80.58	6/16/2022 19:40	16.66	6/16/2022 18:49	3.84	6/16/2022 23:45	68.86
6/17/2022 22:36	48.82	6/17/2022 21:18	80.58	6/16/2022 19:41	16.60	6/16/2022 18:50	3.83	6/16/2022 23:46	68.86
6/17/2022 22:37	48.80	6/17/2022 21:19	80.59	6/16/2022 19:42	16.65	6/16/2022 18:51	3.77	6/16/2022 23:47	68.83
6/17/2022 22:38	48.78	6/17/2022 21:20	80.60	6/16/2022 19:43	16.64	6/16/2022 18:52	3.80	6/16/2022 23:48	68.79
6/17/2022 22:39	48.79	6/17/2022 21:21	80.59	6/16/2022 19:44	16.66	6/16/2022 18:53	3.79	6/16/2022 23:49	68.78
6/17/2022 22:40	48.76	6/17/2022 21:22	80.59	6/16/2022 19:45	16.65	6/16/2022 18:54	3.79	6/16/2022 23:50	68.76
6/17/2022 22:41	48.79	6/17/2022 21:23	80.58	6/16/2022 19:46	16.63	6/16/2022 18:55	3.79	6/16/2022 23:51	68.74
6/17/2022 22:42	48.77	6/17/2022 21:24	80.55	6/16/2022 19:47	16.56	6/16/2022 18:56	3.83	6/16/2022 23:52	68.77
6/17/2022 22:43	48.78	6/17/2022 21:25	80.54	6/16/2022 19:48	16.60	6/16/2022 18:57	3.73	6/16/2022 23:53	68.71
6/17/2022 22:44	48.77	6/17/2022 21:26	80.58	6/16/2022 19:49	16.62	6/16/2022 18:58	3.76	6/16/2022 23:54	68.70
6/17/2022 22:45	48.75	6/17/2022 21:27	80.58	6/16/2022 19:50	16.61	6/16/2022 18:59	3.83	6/16/2022 23:55	68.68
6/17/2022 22:46	48.77	6/17/2022 21:28	80.54	6/16/2022 19:51	16.60	6/16/2022 19:00	3.76	6/16/2022 23:56	68.64
6/17/2022 22:47	48.79	6/17/2022 21:29	80.57	6/16/2022 19:52	16.58	6/16/2022 19:01	3.75	6/16/2022 23:57	68.66
6/17/2022 22:48	48.77	6/17/2022 21:30	80.58	6/16/2022 19:53	16.54	6/16/2022 19:02	3.78	6/16/2022 23:58	68.63
6/17/2022 22:49	48.80	6/17/2022 21:31	80.57	6/16/2022 19:54	16.56	6/16/2022 19:03	3.73	6/16/2022 23:59	68.61
6/17/2022 22:50	48.78	6/17/2022 21:32	80.55	6/16/2022 19:55	16.61	6/16/2022 19:04	3.71	6/17/2022 0:00	68.57
6/17/2022 22:51	48.80	6/17/2022 21:33	80.55	6/16/2022 19:56	16.54	6/16/2022 19:05	3.72	6/17/2022 0:01	68.56
6/17/2022 22:52	48.80	6/17/2022 21:34	80.57	6/16/2022 19:57	16.60	6/16/2022 19:06	3.71	6/17/2022 0:02	68.54
6/17/2022 22:53	48.77	6/17/2022 21:35	80.57	6/16/2022 19:58	16.54	6/16/2022 19:07	3.72	6/17/2022 0:03	68.54
6/17/2022 22:54	48.75	6/17/2022 21:36	80.57	6/16/2022 19:59	16.52	6/16/2022 19:08	3.74	6/17/2022 0:04	68.54
6/17/2022 22:55	48.80	6/17/2022 21:37	80.54	6/16/2022 20:00	16.53	6/16/2022 19:09	3.66	6/17/2022 0:05	68.53
6/17/2022 22:56	48.80	6/17/2022 21:38	80.57	6/16/2022 20:01	16.51	6/16/2022 19:10	3.66	6/17/2022 0:06	68.49
6/17/2022 22:57	48.80	6/17/2022 21:39	80.54	6/16/2022 20:02	16.55	6/16/2022 19:11	3.71	6/17/2022 0:07	68.52
6/17/2022 22:58	48.78	6/17/2022 21:40	80.54	6/16/2022 20:03	16.53	6/16/2022 19:12	3.66	6/17/2022 0:08	68.47
6/17/2022 22:59	48.75	6/17/2022 21:41	80.51	6/16/2022 20:04	16.52	6/16/2022 19:13	3.67	6/17/2022 0:09	68.43
6/17/2022 23:00	48.78	6/17/2022 21:42	80.58	6/16/2022 20:05	16.52	6/16/2022 19:14	3.68	6/17/2022 0:10	68.43

6/17/2022 23:01	48.78	6/17/2022 21:43	80.57	6/16/2022 20:06	16.54	6/16/2022 19:15	4.48	6/17/2022 0:11	68.42
6/17/2022 23:02	48.77	6/17/2022 21:44	80.57	6/16/2022 20:07	16.57	6/16/2022 19:16	4.99	6/17/2022 0:12	68.40
6/17/2022 23:03	48.78	6/17/2022 21:45	80.53	6/16/2022 20:08	16.49	6/16/2022 19:17	5.21	6/17/2022 0:13	68.40
6/17/2022 23:04	48.74	6/17/2022 21:46	80.56	6/16/2022 20:09	16.48	6/16/2022 19:18	4.72	6/17/2022 0:14	68.36
6/17/2022 23:05	48.79	6/17/2022 21:47	80.58	6/16/2022 20:10	16.51	6/16/2022 19:19	4.45	6/17/2022 0:15	68.34
6/17/2022 23:06	48.78	6/17/2022 21:48	80.59	6/16/2022 20:11	16.48	6/16/2022 19:20	4.20	6/17/2022 0:16	68.33
6/17/2022 23:07	48.77	6/17/2022 21:49	80.56	6/16/2022 20:12	16.50	6/16/2022 19:21	4.13	6/17/2022 0:17	68.30
6/17/2022 23:08	48.79	6/17/2022 21:50	80.52	6/16/2022 20:13	16.49	6/16/2022 19:22	4.07	6/17/2022 0:18	68.30
6/17/2022 23:09	48.79	6/17/2022 21:51	80.55	6/16/2022 20:14	16.49	6/16/2022 19:23	3.98	6/17/2022 0:19	68.31
6/17/2022 23:10	48.76	6/17/2022 21:52	80.53	6/16/2022 20:15	16.45	6/16/2022 19:24	4.05	6/17/2022 0:20	68.29
6/17/2022 23:11	48.77	6/17/2022 21:53	80.54	6/16/2022 20:16	16.46	6/16/2022 19:25	3.91	6/17/2022 0:21	68.25
6/17/2022 23:12	48.76	6/17/2022 21:54	80.54	6/16/2022 20:17	16.49	6/16/2022 19:26	3.93	6/17/2022 0:22	68.26
6/17/2022 23:13	48.78	6/17/2022 21:55	80.53	6/16/2022 20:18	16.43	6/16/2022 19:27	3.89	6/17/2022 0:23	68.20
6/17/2022 23:14	48.75	6/17/2022 21:56	80.55	6/16/2022 20:19	16.44	6/16/2022 19:28	3.96	6/17/2022 0:24	68.22
6/17/2022 23:15	48.75	6/17/2022 21:57	80.55	6/16/2022 20:20	16.45	6/16/2022 19:29	3.84	6/17/2022 0:25	68.21
6/17/2022 23:16	48.75	6/17/2022 21:58	80.50	6/16/2022 20:21	16.45	6/16/2022 19:30	3.85	6/17/2022 0:26	68.19
6/17/2022 23:17	48.78	6/17/2022 21:59	80.54	6/16/2022 20:22	16.45	6/16/2022 19:31	3.81	6/17/2022 0:27	68.14
6/17/2022 23:18	48.74	6/17/2022 22:00	80.54	6/16/2022 20:23	16.44	6/16/2022 19:32	3.86	6/17/2022 0:28	68.17
6/17/2022 23:19	48.78	6/17/2022 22:01	80.57	6/16/2022 20:24	16.45	6/16/2022 19:33	3.84	6/17/2022 0:29	68.15
6/17/2022 23:20	48.77	6/17/2022 22:02	80.59	6/16/2022 20:25	16.42	6/16/2022 19:34	4.12	6/17/2022 0:30	68.14
6/17/2022 23:21	48.76	6/17/2022 22:03	80.52	6/16/2022 20:26	16.41	6/16/2022 19:35	4.51	6/17/2022 0:31	68.13
6/17/2022 23:22	48.75	6/17/2022 22:04	80.56	6/16/2022 20:27	16.42	6/16/2022 19:36	4.08	6/17/2022 0:32	68.10
6/17/2022 23:23	48.77	6/17/2022 22:05	80.56	6/16/2022 20:28	16.45	6/16/2022 19:37	4.05	6/17/2022 0:33	68.08
6/17/2022 23:24	48.76	6/17/2022 22:06	80.53	6/16/2022 20:29	16.40	6/16/2022 19:38	4.18	6/17/2022 0:34	68.06
6/17/2022 23:25	48.77	6/17/2022 22:07	80.58	6/16/2022 20:30	16.41	6/16/2022 19:39	4.07	6/17/2022 0:35	68.06
6/17/2022 23:26	48.75	6/17/2022 22:08	80.55	6/16/2022 20:31	16.39	6/16/2022 19:40	4.00	6/17/2022 0:36	68.05
6/17/2022 23:27	48.77	6/17/2022 22:09	80.56	6/16/2022 20:32	16.40	6/16/2022 19:41	3.92	6/17/2022 0:37	68.03
6/17/2022 23:28	48.76	6/17/2022 22:10	80.57	6/16/2022 20:33	16.39	6/16/2022 19:42	3.95	6/17/2022 0:38	68.02
6/17/2022 23:29	48.78	6/17/2022 22:11	80.55	6/16/2022 20:34	16.39	6/16/2022 19:43	3.95	6/17/2022 0:39	68.02
6/17/2022 23:30	48.76	6/17/2022 22:12	80.51	6/16/2022 20:35	16.43	6/16/2022 19:44	3.88	6/17/2022 0:40	68.02
6/17/2022 23:31	48.73	6/17/2022 22:13	80.54	6/16/2022 20:36	16.38	6/16/2022 19:45	4.03	6/17/2022 0:41	67.97
6/17/2022 23:32	48.78	6/17/2022 22:14	80.56	6/16/2022 20:37	16.40	6/16/2022 19:46	4.39	6/17/2022 0:42	67.95
6/17/2022 23:33	48.77	6/17/2022 22:15	80.54	6/16/2022 20:38	16.39	6/16/2022 19:47	4.34	6/17/2022 0:43	67.95
6/17/2022 23:34	48.72	6/17/2022 22:16	80.56	6/16/2022 20:39	16.36	6/16/2022 19:48	4.37	6/17/2022 0:44	67.93
6/17/2022 23:35	48.74	6/17/2022 22:17	80.57	6/16/2022 20:40	16.40	6/16/2022 19:49	4.45	6/17/2022 0:45	67.92
6/17/2022 23:36	48.79	6/17/2022 22:18	80.53	6/16/2022 20:41	16.37	6/16/2022 19:50	4.35	6/17/2022 0:46	67.92
6/17/2022 23:37	48.73	6/17/2022 22:19	80.58	6/16/2022 20:42	16.35	6/16/2022 19:51	4.15	6/17/2022 0:47	67.91
6/17/2022 23:38	48.77	6/17/2022 22:20	80.53	6/16/2022 20:43	16.38	6/16/2022 19:52	4.09	6/17/2022 0:48	67.88
6/17/2022 23:39	48.76	6/17/2022 22:21	80.58	6/16/2022 20:44	16.38	6/16/2022 19:53	4.07	6/17/2022 0:49	67.88
6/17/2022 23:40	48.75	6/17/2022 22:22	80.57	6/16/2022 20:45	16.38	6/16/2022 19:54	4.07	6/17/2022 0:50	67.84
6/17/2022 23:41	48.73	6/17/2022 22:23	80.56	6/16/2022 20:46	16.32	6/16/2022 19:55	3.96	6/17/2022 0:51	67.84
6/17/2022 23:42	48.77	6/17/2022 22:24	80.54	6/16/2022 20:47	16.35	6/16/2022 19:56	4.00	6/17/2022 0:52	67.83
6/17/2022 23:43	48.75	6/17/2022 22:25	80.56	6/16/2022 20:48	16.35	6/16/2022 19:57	3.94	6/17/2022 0:53	67.86
6/17/2022 23:44	48.76	6/17/2022 22:26	80.54	6/16/2022 20:49	16.36	6/16/2022 19:58	3.95	6/17/2022 0:54	67.82
6/17/2022 23:45	48.77	6/17/2022 22:27	80.57	6/16/2022 20:50	16.35	6/16/2022 19:59	3.92	6/17/2022 0:55	67.80
6/17/2022 23:46	48.72	6/17/2022 22:28	80.56	6/16/2022 20:51	16.32	6/16/2022 20:00	3.95	6/17/2022 0:56	67.82
6/17/2022 23:47	48.76	6/17/2022 22:29	80.57	6/16/2022 20:52	16.34	6/16/2022 20:01	3.91	6/17/2022 0:57	67.77
6/17/2022 23:48	48.76	6/17/2022 22:30	80.57	6/16/2022 20:53	16.31	6/16/2022 20:02	3.89	6/17/2022 0:58	67.77
6/17/2022 23:49	48.75	6/17/2022 22:31	80.54	6/16/2022 20:54	16.35	6/16/2022 20:03	3.85	6/17/2022 0:59	67.74
6/17/2022 23:50	48.74	6/17/2022 22:32	80.53	6/16/2022 20:55	16.32	6/16/2022 20:04	3.92	6/17/2022 1:00	67.77
6/17/2022 23:51	48.77	6/17/2022 22:33	80.53	6/16/2022 20:56	16.30	6/16/2022 20:05	3.82	6/17/2022 1:01	67.74
6/17/2022 23:52	48.71	6/17/2022 22:34	80.58	6/16/2022 20:57	16.35	6/16/2022 20:06	3.83	6/17/2022 1:02	67.74
6/17/2022 23:53	48.72	6/17/2022 22:35	80.56	6/16/2022 20:58	16.32	6/16/2022 20:07	4.28	6/17/2022 1:03	67.70
6/17/2022 23:54	48.72	6/17/2022 22:36	80.56	6/16/2022 20:59	16.31	6/16/2022 20:08	4.15	6/17/2022 1:04	67.70
6/17/2022 23:55	48.74	6/17/2022 22:37	80.56	6/16/2022 21:00	16.31	6/16/2022 20:09	4.04	6/17/2022 1:05	67.68
6/17/2022 23:56	48.77	6/17/2022 22:38	80.56	6/16/2022 21:01	16.33	6/16/2022 20:10	3.93	6/17/2022 1:06	67.67
6/17/2022 23:57	48.74	6/17/2022 22:39	80.54	6/16/2022 21:02	16.31	6/16/2022 20:11	4.37	6/17/2022 1:07	67.70
6/17/2022 23:58	48.74	6/17/2022 22:40	80.54	6/16/2022 21:03	16.33	6/16/2022 20:12	4.10	6/17/2022 1:08	67.63
6/17/2022 23:59	48.75	6/17/2022 22:41	80.54	6/16/2022 21:04	16.31	6/16/2022 20:13	4.05	6/17/2022 1:09	67.67
6/18/2022 0:00	48.74	6/17/2022 22:42	80.54	6/16/2022 21:05	16.30	6/16/2022 20:14	3.93	6/17/2022 1:10	67.64
6/18/2022 0:01	48.76	6/17/2022 22:43	80.55	6/16/2022 21:06	16.32	6/16/2022 20:15	3.95	6/17/2022 1:11	67.61
6/18/2022 0:02	48.75	6/17/2022 22:44	80.52	6/16/2022 21:07	16.27	6/16/2022 20:16	3.92	6/17/2022 1:12	67.63
6/18/2022 0:03	48.74	6/17/2022 22:45	80.55	6/16/2022 21:08	16.31	6/16/2022 20:17	3.96	6/17/2022 1:13	67.60
6/18/2022 0:04	48.70	6/17/2022 22:46	80.56	6/16/2022 21:09	16.32	6/16/2022 20:18	3.89	6/17/2022 1:14	67.58
6/18/2022 0:05	48.74	6/17/2022 22:47	80.58	6/16/2022 21:10	16.27	6/16/2022 20:19	3.84	6/17/2022 1:15	67.58
6/18/2022 0:06	48.73	6/17/2022 22:48	80.56	6/16/2022 21:11	16.25	6/16/2022 20:20	3.85	6/17/2022 1:16	67.51
6/18/2022 0:07	48.74	6/17/2022 22:49	80.57	6/16/2022 21:12	16.28	6/16/2022 20:21	3.84	6/17/2022 1:17	67.55
6/18/2022 0:08	48.72	6/17/2022 22:50	80.56	6/16/2022 21:13	16.32	6/16/2022 20:22	4.26	6/17/2022 1:18	67.54
6/18/2022 0:09	48.75	6/17/2022 22:51	80.52	6/16/2022 21:14	16.26	6/16/2022 20:23	4.50	6/17/2022 1:19	67.54
6/18/2022 0:10	48.76	6/17/2022 22:52	80.57	6/16/2022 21:15	20.69	6/16/2022 20:24	4.38	6/17/2022 1:20	67.52
6/18/2022 0:11	48.74	6/17/2022 22:53	80.54	6/16/2022 21:16	24.62	6/16/2022 20:25	4.61	6/17/2022 1:21	67.49
6/18/2022 0:12	48.75	6/17/2022 22:54	80.56	6/16/2022 21:17	27.12	6/16/2022 20:26	4.63	6/17/2022 1:22	67.51
6/18/2022 0:13	48.76	6/17/2022 22:55	80.57	6/16/2022 21:18	26.57	6/16/2022 20:27	4.68	6/17/2022 1:23	67.50
6/18/2022 0:14	48.74	6/17/2022 22:56	80.58	6/16/2022 21:19	23.80	6/16/2022 20:28	4.59	6/17/2022 1:24	67.46
6/18/2022 0:15	48.76	6/17/2022 22:57	80.53	6/16/2022 21:20	22.19	6/16/2022 20:29	4.54	6/17/2022 1:25	67.47
6/18/2022 0:16	48.73	6/17/2022 22:58	80.53	6/16/2022 21:21	21.20	6/16/2022 20:30	4.56	6/17/2022 1:26	67.48
6/18/2022 0:17	48.76	6/17/2022 22:59	80.55	6/16/2022 21:22	20.50	6/16/2022 20:31	4.56	6/17/2022 1:27	67.43
6/18/2022 0:18	48.75	6/17/2022 23:00	80.58	6/16/2022 21:23	19.99	6/16/2022 20:32	4.53	6/17/2022 1:28	67.44
6/18/2022 0:19	48.73	6/17/2022 23:01	80.54	6/16/2022 21:24	19.73	6/16/2022 20:33	4.47	6/17/2022 1:29	67.40
6/18/2022 0:20	48.74	6/17/2022 23:02	80.54	6/16/2022 21:25	19.39	6/16/2022 20:34	4.36	6/17/2022 1:30	67.42
6/18/2022 0:21	48.74	6/17/2022 23:03	80.57	6/16/2022 21:26	22.52	6/16/2022 20:35	4.27	6/17/2022 1:31	67.39
6/18/2022 0:22	48.74	6/17/2022 23:04	80.55	6/16/2022 21:27	26.63	6/16/2022 20:36	4.27	6/17/2022 1:32	67.35
6/18/2022 0:23	48.75	6/17/2022 23:05	80.58	6/16/2022 21:28	29.19	6/16/2022 20:37	4.16	6/17/2022 1:33	67.40
6/18/2022 0:24	48.75	6/17/2022 23:06	80.58	6/16/2022 21:29	29.31	6/16/2022 20:38	4.14	6/17/2022 1:34	67.40
6/18/2022 0:25	48.75	6/17/2022 23:07	80.53	6/16/2022 21:30	26.07	6/16/2022 20:39	4.15	6/17/2022 1:35	67.36
6/18/2022 0:26	48.73	6/17/2022 23:08	80.58	6/16/2022 21:31	24.33	6/16/2022 20:40	4.07	6/17/2022 1:36	67.39
6/18/2022 0:27	48.71	6/17/2022 23:09	80.56	6/16/2022 21:32	23.11	6/16/2022 20:41	4.05	6/17/2022 1:37	67.34
6/18/2022 0:28	48.75	6/17/2022 23:10	80.51	6/16/2022 21:33	22.35	6/16/2022 20:42	4.09	6/17/2022 1:38	67.36

6/18/2022 0:29	48.71	6/17/2022 23:11	80.59	6/16/2022 21:34	21.74	6/16/2022 20:43	4.00	6/17/2022 1:39	67.34
6/18/2022 0:30	48.71	6/17/2022 23:12	80.51	6/16/2022 21:35	21.33	6/16/2022 20:44	4.02	6/17/2022 1:40	67.32
6/18/2022 0:31	48.69	6/17/2022 23:13	80.56	6/16/2022 21:36	20.93	6/16/2022 20:45	4.04	6/17/2022 1:41	67.32
6/18/2022 0:32	48.74	6/17/2022 23:14	80.56	6/16/2022 21:37	20.68	6/16/2022 20:46	3.96	6/17/2022 1:42	67.31
6/18/2022 0:33	48.73	6/17/2022 23:15	80.55	6/16/2022 21:38	23.44	6/16/2022 20:47	4.01	6/17/2022 1:43	67.29
6/18/2022 0:34	48.71	6/17/2022 23:16	80.54	6/16/2022 21:39	27.62	6/16/2022 20:48	4.02	6/17/2022 1:44	67.26
6/18/2022 0:35	48.70	6/17/2022 23:17	80.59	6/16/2022 21:40	30.26	6/16/2022 20:49	3.96	6/17/2022 1:45	67.27
6/18/2022 0:36	48.73	6/17/2022 23:18	80.57	6/16/2022 21:41	30.04	6/16/2022 20:50	3.94	6/17/2022 1:46	67.27
6/18/2022 0:37	48.69	6/17/2022 23:19	80.52	6/16/2022 21:42	26.98	6/16/2022 20:51	4.01	6/17/2022 1:47	67.23
6/18/2022 0:38	48.71	6/17/2022 23:20	80.56	6/16/2022 21:43	25.22	6/16/2022 20:52	3.93	6/17/2022 1:48	67.24
6/18/2022 0:39	48.76	6/17/2022 23:21	80.59	6/16/2022 21:44	24.07	6/16/2022 20:53	3.95	6/17/2022 1:49	67.25
6/18/2022 0:40	48.70	6/17/2022 23:22	80.55	6/16/2022 21:45	23.30	6/16/2022 20:54	3.98	6/17/2022 1:50	67.23
6/18/2022 0:41	48.70	6/17/2022 23:23	80.54	6/16/2022 21:46	22.71	6/16/2022 20:55	3.92	6/17/2022 1:51	67.22
6/18/2022 0:42	48.74	6/17/2022 23:24	80.56	6/16/2022 21:47	22.26	6/16/2022 20:56	3.92	6/17/2022 1:52	67.23
6/18/2022 0:43	48.77	6/17/2022 23:25	80.55	6/16/2022 21:48	21.88	6/16/2022 20:57	3.92	6/17/2022 1:53	67.18
6/18/2022 0:44	48.73	6/17/2022 23:26	80.56	6/16/2022 21:49	25.72	6/16/2022 20:58	3.93	6/17/2022 1:54	67.19
6/18/2022 0:45	48.72	6/17/2022 23:27	80.56	6/16/2022 21:50	29.47	6/16/2022 20:59	3.91	6/17/2022 1:55	67.16
6/18/2022 0:46	48.70	6/17/2022 23:28	80.56	6/16/2022 21:51	31.82	6/16/2022 21:00	3.93	6/17/2022 1:56	67.17
6/18/2022 0:47	48.72	6/17/2022 23:29	80.56	6/16/2022 21:52	31.30	6/16/2022 21:01	3.84	6/17/2022 1:57	67.17
6/18/2022 0:48	48.73	6/17/2022 23:30	80.52	6/16/2022 21:53	28.13	6/16/2022 21:02	3.90	6/17/2022 1:58	67.15
6/18/2022 0:49	48.72	6/17/2022 23:31	80.54	6/16/2022 21:54	26.40	6/16/2022 21:03	3.88	6/17/2022 1:59	67.17
6/18/2022 0:50	48.69	6/17/2022 23:32	80.60	6/16/2022 21:55	25.17	6/16/2022 21:04	3.85	6/17/2022 2:00	73.27
6/18/2022 0:51	48.68	6/17/2022 23:33	80.58	6/16/2022 21:56	24.32	6/16/2022 21:05	3.86	6/17/2022 2:01	80.22
6/18/2022 0:52	48.70	6/17/2022 23:34	80.57	6/16/2022 21:57	23.71	6/16/2022 21:06	3.87	6/17/2022 2:02	81.67
6/18/2022 0:53	48.73	6/17/2022 23:35	80.57	6/16/2022 21:58	23.18	6/16/2022 21:07	3.86	6/17/2022 2:03	86.12
6/18/2022 0:54	48.75	6/17/2022 23:36	80.54	6/16/2022 21:59	22.82	6/16/2022 21:08	3.85	6/17/2022 2:04	92.83
6/18/2022 0:55	48.71	6/17/2022 23:37	80.58	6/16/2022 22:00	22.49	6/16/2022 21:09	3.83	6/17/2022 2:05	95.79
6/18/2022 0:56	48.70	6/17/2022 23:38	80.56	6/16/2022 22:01	22.23	6/16/2022 21:10	3.91	6/17/2022 2:06	98.04
6/18/2022 0:57	48.70	6/17/2022 23:39	80.55	6/16/2022 22:02	22.00	6/16/2022 21:11	3.85	6/17/2022 2:07	104.69
6/18/2022 0:58	48.69	6/17/2022 23:40	80.57	6/16/2022 22:03	21.79	6/16/2022 21:12	3.86	6/17/2022 2:08	110.97
6/18/2022 0:59	48.72	6/17/2022 23:41	80.56	6/16/2022 22:04	21.57	6/16/2022 21:13	3.84	6/17/2022 2:09	110.00
6/18/2022 1:00	48.73	6/17/2022 23:42	80.58	6/16/2022 22:05	21.33	6/16/2022 21:14	3.79	6/17/2022 2:10	116.12
6/18/2022 1:01	48.67	6/17/2022 23:43	80.57	6/16/2022 22:06	21.22	6/16/2022 21:15	3.77	6/17/2022 2:11	122.35
6/18/2022 1:02	48.75	6/17/2022 23:44	80.56	6/16/2022 22:07	21.09	6/16/2022 21:16	3.87	6/17/2022 2:12	126.20
6/18/2022 1:03	48.70	6/17/2022 23:45	80.57	6/16/2022 22:08	20.94	6/16/2022 21:17	3.82	6/17/2022 2:13	126.65
6/18/2022 1:04	48.69	6/17/2022 23:46	80.55	6/16/2022 22:09	20.80	6/16/2022 21:18	3.76	6/17/2022 2:14	133.04
6/18/2022 1:05	48.71	6/17/2022 23:47	80.55	6/16/2022 22:10	20.67	6/16/2022 21:19	3.85	6/17/2022 2:15	139.09
6/18/2022 1:06	48.73	6/17/2022 23:48	80.59	6/16/2022 22:11	20.54	6/16/2022 21:20	3.72	6/17/2022 2:16	144.78
6/18/2022 1:07	48.72	6/17/2022 23:49	80.53	6/16/2022 22:12	20.49	6/16/2022 21:21	3.72	6/17/2022 2:17	145.18
6/18/2022 1:08	48.70	6/17/2022 23:50	80.55	6/16/2022 22:13	20.37	6/16/2022 21:22	3.78	6/17/2022 2:18	145.22
6/18/2022 1:09	48.71	6/17/2022 23:51	80.55	6/16/2022 22:14	20.26	6/16/2022 21:23	3.79	6/17/2022 2:19	145.22
6/18/2022 1:10	48.70	6/17/2022 23:52	80.53	6/16/2022 22:15	20.17	6/16/2022 21:24	3.80	6/17/2022 2:20	145.21
6/18/2022 1:11	48.73	6/17/2022 23:53	80.55	6/16/2022 22:16	20.11	6/16/2022 21:25	3.80	6/17/2022 2:21	145.21
6/18/2022 1:12	48.69	6/17/2022 23:54	80.55	6/16/2022 22:17	20.07	6/16/2022 21:26	3.70	6/17/2022 2:22	145.20
6/18/2022 1:13	48.76	6/17/2022 23:55	80.53	6/16/2022 22:18	19.94	6/16/2022 21:27	3.75	6/17/2022 2:23	145.22
6/18/2022 1:14	48.71	6/17/2022 23:56	80.58	6/16/2022 22:19	19.89	6/16/2022 21:28	3.76	6/17/2022 2:24	145.21
6/18/2022 1:15	48.70	6/17/2022 23:57	80.57	6/16/2022 22:20	19.78	6/16/2022 21:29	3.73	6/17/2022 2:25	145.24
6/18/2022 1:16	48.74	6/17/2022 23:58	80.57	6/16/2022 22:21	19.76	6/16/2022 21:30	3.71	6/17/2022 2:26	145.21
6/18/2022 1:17	48.69	6/17/2022 23:59	80.58	6/16/2022 22:22	19.68	6/16/2022 21:31	3.75	6/17/2022 2:27	145.21
6/18/2022 1:18	48.70	6/18/2022 0:00	80.58	6/16/2022 22:23	19.64	6/16/2022 21:32	3.72	6/17/2022 2:28	145.19
6/18/2022 1:19	48.72	6/18/2022 0:01	80.57	6/16/2022 22:24	19.56	6/16/2022 21:33	3.70	6/17/2022 2:29	145.19
6/18/2022 1:20	48.70	6/18/2022 0:02	80.54	6/16/2022 22:25	19.50	6/16/2022 21:34	3.70	6/17/2022 2:30	145.19
6/18/2022 1:21	48.71	6/18/2022 0:03	80.55	6/16/2022 22:26	19.40	6/16/2022 21:35	3.70	6/17/2022 2:31	145.18
6/18/2022 1:22	48.69	6/18/2022 0:04	80.55	6/16/2022 22:27	19.40	6/16/2022 21:36	3.73	6/17/2022 2:32	145.21
6/18/2022 1:23	48.71	6/18/2022 0:05	80.55	6/16/2022 22:28	19.31	6/16/2022 21:37	3.68	6/17/2022 2:33	145.20
6/18/2022 1:24	48.71	6/18/2022 0:06	80.56	6/16/2022 22:29	19.30	6/16/2022 21:38	3.70	6/17/2022 2:34	145.21
6/18/2022 1:25	48.73	6/18/2022 0:07	80.58	6/16/2022 22:30	19.25	6/16/2022 21:39	3.70	6/17/2022 2:35	145.20
6/18/2022 1:26	48.70	6/18/2022 0:08	80.57	6/16/2022 22:31	19.18	6/16/2022 21:40	3.70	6/17/2022 2:36	145.21
6/18/2022 1:27	48.70	6/18/2022 0:09	80.56	6/16/2022 22:32	19.13	6/16/2022 21:41	3.85	6/17/2022 2:37	145.21
6/18/2022 1:28	48.70	6/18/2022 0:10	80.61	6/16/2022 22:33	19.09	6/16/2022 21:42	3.94	6/17/2022 2:38	145.22
6/18/2022 1:29	48.69	6/18/2022 0:11	80.58	6/16/2022 22:34	19.05	6/16/2022 21:43	3.81	6/17/2022 2:39	145.19
6/18/2022 1:30	48.66	6/18/2022 0:12	80.54	6/16/2022 22:35	18.99	6/16/2022 21:44	3.84	6/17/2022 2:40	145.20
6/18/2022 1:31	48.68	6/18/2022 0:13	80.56	6/16/2022 22:36	18.95	6/16/2022 21:45	3.70	6/17/2022 2:41	145.17
6/18/2022 1:32	48.72	6/18/2022 0:14	80.56	6/16/2022 22:37	18.89	6/16/2022 21:46	3.69	6/17/2022 2:42	145.20
6/18/2022 1:33	48.70	6/18/2022 0:15	80.58	6/16/2022 22:38	18.86	6/16/2022 21:47	3.70	6/17/2022 2:43	145.24
6/18/2022 1:34	48.68	6/18/2022 0:16	80.56	6/16/2022 22:39	18.84	6/16/2022 21:48	3.69	6/17/2022 2:44	145.20
6/18/2022 1:35	48.71	6/18/2022 0:17	80.56	6/16/2022 22:40	18.82	6/16/2022 21:49	3.69	6/17/2022 2:45	145.19
6/18/2022 1:36	48.69	6/18/2022 0:18	80.56	6/16/2022 22:41	18.75	6/16/2022 21:50	3.69	6/17/2022 2:46	145.20
6/18/2022 1:37	48.71	6/18/2022 0:19	80.59	6/16/2022 22:42	18.71	6/16/2022 21:51	3.71	6/17/2022 2:47	145.18
6/18/2022 1:38	48.70	6/18/2022 0:20	80.60	6/16/2022 22:43	18.72	6/16/2022 21:52	3.74	6/17/2022 2:48	145.22
6/18/2022 1:39	48.70	6/18/2022 0:21	80.56	6/16/2022 22:44	18.69	6/16/2022 21:53	3.81	6/17/2022 2:49	145.22
6/18/2022 1:40	48.72	6/18/2022 0:22	80.57	6/16/2022 22:45	18.59	6/16/2022 21:54	3.75	6/17/2022 2:50	145.21
6/18/2022 1:41	48.68	6/18/2022 0:23	80.59	6/16/2022 22:46	18.60	6/16/2022 21:55	3.75	6/17/2022 2:51	145.18
6/18/2022 1:42	48.71	6/18/2022 0:24	80.56	6/16/2022 22:47	18.57	6/16/2022 21:56	3.69	6/17/2022 2:52	145.19
6/18/2022 1:43	48.69	6/18/2022 0:25	80.58	6/16/2022 22:48	18.54	6/16/2022 21:57	3.82	6/17/2022 2:53	145.19
6/18/2022 1:44	48.68	6/18/2022 0:26	80.55	6/16/2022 22:49	18.47	6/16/2022 21:58	3.78	6/17/2022 2:54	145.19
6/18/2022 1:45	48.69	6/18/2022 0:27	80.58	6/16/2022 22:50	18.53	6/16/2022 21:59	3.93	6/17/2022 2:55	145.14
6/18/2022 1:46	48.66	6/18/2022 0:28	80.55	6/16/2022 22:51	18.46	6/16/2022 22:00	3.91	6/17/2022 2:56	145.21
6/18/2022 1:47	48.70	6/18/2022 0:29	80.54	6/16/2022 22:52	18.43	6/16/2022 22:01	3.80	6/17/2022 2:57	145.15
6/18/2022 1:48	48.71	6/18/2022 0:30	80.57	6/16/2022 22:53	18.37	6/16/2022 22:02	3.95	6/17/2022 2:58	145.19
6/18/2022 1:49	48.69	6/18/2022 0:31	80.56	6/16/2022 22:54	18.35	6/16/2022 22:03	4.01	6/17/2022 2:59	145.22
6/18/2022 1:50	48.70	6/18/2022 0:32	80.55	6/16/2022 22:55	18.32	6/16/2022 22:04	4.06	6/17/2022 3:00	145.19
6/18/2022 1:51	48.68	6/18/2022 0:33	80.56	6/16/2022 22:56	18.27	6/16/2022 22:05	3.97	6/17/2022 3:01	145.19
6/18/2022 1:52	48.68	6/18/2022 0:34	80.58	6/16/2022 22:57	18.29	6/16/2022 22:06	3.93	6/17/2022 3:02	145.21
6/18/2022 1:53	48.67	6/18/2022 0:35	80.57	6/16/2022 22:58	18.23	6/16/2022 22:07	3.97	6/17/2022 3:03	145.20
6/18/2022 1:54	48.68	6/18/2022 0:36	80.59	6/16/2022 22:59	18.22	6/16/2022 22:08	4.07	6/17/2022 3:04	145.17
6/18/2022 1:55	48.72	6/18/2022 0:37	80.53	6/16/2022 23:00	18.18	6/16/2022 22:09	4.01	6/17/2022 3:05	145.21
6/18/2022 1:56	48.66	6/18/2022 0:38	80.60	6/16/2022 23:01	18.17	6/16/2022 22:10	3.94	6/17/2022 3:06	145.16

6/18/2022 1:57	48.68	6/18/2022 0:39	80.57	6/16/2022 23:02	18.16	6/16/2022 22:11	3.87	6/17/2022 3:07	145.21
6/18/2022 1:58	48.70	6/18/2022 0:40	80.58	6/16/2022 23:03	18.14	6/16/2022 22:12	4.03	6/17/2022 3:08	145.17
6/18/2022 1:59	48.69	6/18/2022 0:41	80.53	6/16/2022 23:04	18.09	6/16/2022 22:13	3.98	6/17/2022 3:09	145.23
6/18/2022 2:00	48.69	6/18/2022 0:42	80.57	6/16/2022 23:05	18.06	6/16/2022 22:14	3.96	6/17/2022 3:10	145.22
6/18/2022 2:01	48.69	6/18/2022 0:43	80.57	6/16/2022 23:06	18.04	6/16/2022 22:15	3.82	6/17/2022 3:11	145.21
6/18/2022 2:02	48.76	6/18/2022 0:44	80.57	6/16/2022 23:07	18.07	6/16/2022 22:16	3.87	6/17/2022 3:12	145.22
6/18/2022 2:03	48.68	6/18/2022 0:45	80.57	6/16/2022 23:08	18.01	6/16/2022 22:17	3.84	6/17/2022 3:13	145.23
6/18/2022 2:04	48.74	6/18/2022 0:46	80.60	6/16/2022 23:09	17.99	6/16/2022 22:18	3.90	6/17/2022 3:14	145.21
6/18/2022 2:05	48.67	6/18/2022 0:47	80.57	6/16/2022 23:10	17.92	6/16/2022 22:19	3.78	6/17/2022 3:15	145.20
6/18/2022 2:06	48.71	6/18/2022 0:48	80.55	6/16/2022 23:11	17.91	6/16/2022 22:20	3.82	6/17/2022 3:16	145.21
6/18/2022 2:07	48.71	6/18/2022 0:49	80.60	6/16/2022 23:12	17.91	6/16/2022 22:21	3.82	6/17/2022 3:17	145.26
6/18/2022 2:08	48.66	6/18/2022 0:50	80.60	6/16/2022 23:13	17.90	6/16/2022 22:22	3.77	6/17/2022 3:18	145.23
6/18/2022 2:09	48.64	6/18/2022 0:51	80.58	6/16/2022 23:14	17.89	6/16/2022 22:23	3.76	6/17/2022 3:19	145.24
6/18/2022 2:10	48.70	6/18/2022 0:52	80.55	6/16/2022 23:15	17.86	6/16/2022 22:24	3.79	6/17/2022 3:20	145.24
6/18/2022 2:11	48.66	6/18/2022 0:53	80.56	6/16/2022 23:16	17.80	6/16/2022 22:25	3.77	6/17/2022 3:21	145.23
6/18/2022 2:12	48.66	6/18/2022 0:54	80.57	6/16/2022 23:17	17.84	6/16/2022 22:26	3.74	6/17/2022 3:22	145.23
6/18/2022 2:13	48.69	6/18/2022 0:55	80.61	6/16/2022 23:18	17.82	6/16/2022 22:27	3.81	6/17/2022 3:23	145.25
6/18/2022 2:14	48.69	6/18/2022 0:56	80.61	6/16/2022 23:19	17.81	6/16/2022 22:28	3.80	6/17/2022 3:24	145.21
6/18/2022 2:15	48.68	6/18/2022 0:57	80.55	6/16/2022 23:20	17.76	6/16/2022 22:29	3.94	6/17/2022 3:25	145.22
6/18/2022 2:16	48.69	6/18/2022 0:58	80.56	6/16/2022 23:21	17.75	6/16/2022 22:30	3.83	6/17/2022 3:26	145.23
6/18/2022 2:17	48.70	6/18/2022 0:59	80.63	6/16/2022 23:22	17.74	6/16/2022 22:31	4.07	6/17/2022 3:27	145.25
6/18/2022 2:18	48.68	6/18/2022 1:00	80.53	6/16/2022 23:23	17.77	6/16/2022 22:32	4.39	6/17/2022 3:28	145.22
6/18/2022 2:19	48.70	6/18/2022 1:01	80.58	6/16/2022 23:24	17.67	6/16/2022 22:33	4.81	6/17/2022 3:29	145.21
6/18/2022 2:20	48.71	6/18/2022 1:02	80.56	6/16/2022 23:25	17.73	6/16/2022 22:34	5.03	6/17/2022 3:30	145.24
6/18/2022 2:21	48.67	6/18/2022 1:03	80.58	6/16/2022 23:26	17.64	6/16/2022 22:35	5.23	6/17/2022 3:31	145.22
6/18/2022 2:22	48.66	6/18/2022 1:04	80.55	6/16/2022 23:27	17.61	6/16/2022 22:36	5.34	6/17/2022 3:32	145.23
6/18/2022 2:23	48.69	6/18/2022 1:05	80.58	6/16/2022 23:28	17.66	6/16/2022 22:37	5.52	6/17/2022 3:33	145.25
6/18/2022 2:24	48.67	6/18/2022 1:06	80.58	6/16/2022 23:29	17.63	6/16/2022 22:38	5.58	6/17/2022 3:34	145.23
6/18/2022 2:25	48.64	6/18/2022 1:07	80.57	6/16/2022 23:30	17.64	6/16/2022 22:39	5.70	6/17/2022 3:35	145.21
6/18/2022 2:26	48.67	6/18/2022 1:08	80.60	6/16/2022 23:31	17.62	6/16/2022 22:40	5.83	6/17/2022 3:36	145.22
6/18/2022 2:27	48.69	6/18/2022 1:09	80.58	6/16/2022 23:32	17.58	6/16/2022 22:41	5.89	6/17/2022 3:37	145.20
6/18/2022 2:28	48.64	6/18/2022 1:10	80.59	6/16/2022 23:33	17.62	6/16/2022 22:42	6.13	6/17/2022 3:38	145.21
6/18/2022 2:29	48.68	6/18/2022 1:11	80.59	6/16/2022 23:34	17.58	6/16/2022 22:43	6.13	6/17/2022 3:39	145.22
6/18/2022 2:30	48.65	6/18/2022 1:12	80.58	6/16/2022 23:35	17.58	6/16/2022 22:44	5.52	6/17/2022 3:40	145.19
6/18/2022 2:31	48.67	6/18/2022 1:13	80.63	6/16/2022 23:36	17.52	6/16/2022 22:45	5.15	6/17/2022 3:41	145.21
6/18/2022 2:32	48.70	6/18/2022 1:14	80.57	6/16/2022 23:37	17.49	6/16/2022 22:46	5.01	6/17/2022 3:42	145.21
6/18/2022 2:33	48.66	6/18/2022 1:15	80.58	6/16/2022 23:38	17.50	6/16/2022 22:47	4.83	6/17/2022 3:43	145.24
6/18/2022 2:34	48.67	6/18/2022 1:16	80.55	6/16/2022 23:39	17.49	6/16/2022 22:48	4.89	6/17/2022 3:44	145.22
6/18/2022 2:35	48.66	6/18/2022 1:17	80.56	6/16/2022 23:40	17.44	6/16/2022 22:49	4.87	6/17/2022 3:45	145.22
6/18/2022 2:36	48.65	6/18/2022 1:18	80.59	6/16/2022 23:41	17.46	6/16/2022 22:50	4.82	6/17/2022 3:46	145.20
6/18/2022 2:37	48.64	6/18/2022 1:19	80.58	6/16/2022 23:42	17.46	6/16/2022 22:51	4.73	6/17/2022 3:47	145.24
6/18/2022 2:38	48.68	6/18/2022 1:20	80.57	6/16/2022 23:43	17.44	6/16/2022 22:52	4.62	6/17/2022 3:48	145.21
6/18/2022 2:39	48.66	6/18/2022 1:21	80.59	6/16/2022 23:44	17.40	6/16/2022 22:53	4.59	6/17/2022 3:49	145.19
6/18/2022 2:40	48.72	6/18/2022 1:22	80.58	6/16/2022 23:45	17.40	6/16/2022 22:54	4.60	6/17/2022 3:50	145.18
6/18/2022 2:41	48.73	6/18/2022 1:23	80.54	6/16/2022 23:46	17.35	6/16/2022 22:55	4.51	6/17/2022 3:51	145.21
6/18/2022 2:42	48.67	6/18/2022 1:24	80.60	6/16/2022 23:47	17.45	6/16/2022 22:56	4.50	6/17/2022 3:52	145.25
6/18/2022 2:43	48.71	6/18/2022 1:25	80.55	6/16/2022 23:48	17.36	6/16/2022 22:57	4.51	6/17/2022 3:53	145.22
6/18/2022 2:44	48.71	6/18/2022 1:26	80.55	6/16/2022 23:49	17.40	6/16/2022 22:58	4.45	6/17/2022 3:54	145.25
6/18/2022 2:45	48.67	6/18/2022 1:27	80.61	6/16/2022 23:50	17.38	6/16/2022 22:59	4.43	6/17/2022 3:55	145.22
6/18/2022 2:46	48.71	6/18/2022 1:28	80.56	6/16/2022 23:51	17.33	6/16/2022 23:00	4.43	6/17/2022 3:56	145.22
6/18/2022 2:47	48.68	6/18/2022 1:29	80.61	6/16/2022 23:52	17.34	6/16/2022 23:01	4.46	6/17/2022 3:57	145.23
6/18/2022 2:48	48.69	6/18/2022 1:30	80.58	6/16/2022 23:53	17.30	6/16/2022 23:02	4.38	6/17/2022 3:58	145.23
6/18/2022 2:49	48.67	6/18/2022 1:31	80.54	6/16/2022 23:54	17.27	6/16/2022 23:03	4.38	6/17/2022 3:59	145.23
6/18/2022 2:50	48.70	6/18/2022 1:32	80.57	6/16/2022 23:55	17.31	6/16/2022 23:04	4.38	6/17/2022 4:00	145.20
6/18/2022 2:51	48.67	6/18/2022 1:33	80.55	6/16/2022 23:56	17.32	6/16/2022 23:05	4.33	6/17/2022 4:01	145.25
6/18/2022 2:52	48.67	6/18/2022 1:34	80.53	6/16/2022 23:57	17.28	6/16/2022 23:06	4.37	6/17/2022 4:02	145.24
6/18/2022 2:53	48.69	6/18/2022 1:35	80.57	6/16/2022 23:58	17.25	6/16/2022 23:07	4.49	6/17/2022 4:03	145.21
6/18/2022 2:54	48.66	6/18/2022 1:36	80.57	6/16/2022 23:59	17.24	6/16/2022 23:08	4.38	6/17/2022 4:04	145.26
6/18/2022 2:55	48.70	6/18/2022 1:37	80.58	6/17/2022 0:00	17.25	6/16/2022 23:09	4.42	6/17/2022 4:05	145.22
6/18/2022 2:56	48.68	6/18/2022 1:38	80.60	6/17/2022 0:01	17.17	6/16/2022 23:10	4.31	6/17/2022 4:06	145.21
6/18/2022 2:57	48.70	6/18/2022 1:39	80.56	6/17/2022 0:02	17.24	6/16/2022 23:11	4.30	6/17/2022 4:07	145.25
6/18/2022 2:58	48.68	6/18/2022 1:40	80.57	6/17/2022 0:03	17.21	6/16/2022 23:12	4.32	6/17/2022 4:08	145.23
6/18/2022 2:59	48.69	6/18/2022 1:41	80.56	6/17/2022 0:04	17.21	6/16/2022 23:13	4.22	6/17/2022 4:09	145.24
6/18/2022 3:00	48.65	6/18/2022 1:42	80.58	6/17/2022 0:05	17.16	6/16/2022 23:14	4.22	6/17/2022 4:10	145.21
6/18/2022 3:01	48.67	6/18/2022 1:43	80.57	6/17/2022 0:06	17.20	6/16/2022 23:15	4.25	6/17/2022 4:11	145.22
6/18/2022 3:02	48.70	6/18/2022 1:44	80.58	6/17/2022 0:07	17.18	6/16/2022 23:16	4.29	6/17/2022 4:12	145.24
6/18/2022 3:03	48.65	6/18/2022 1:45	80.59	6/17/2022 0:08	17.15	6/16/2022 23:17	4.21	6/17/2022 4:13	145.24
6/18/2022 3:04	48.66	6/18/2022 1:46	80.58	6/17/2022 0:09	17.11	6/16/2022 23:18	4.18	6/17/2022 4:14	145.24
6/18/2022 3:05	48.67	6/18/2022 1:47	80.58	6/17/2022 0:10	17.13	6/16/2022 23:19	4.24	6/17/2022 4:15	145.23
6/18/2022 3:06	48.67	6/18/2022 1:48	80.58	6/17/2022 0:11	17.13	6/16/2022 23:20	4.16	6/17/2022 4:16	145.21
6/18/2022 3:07	48.71	6/18/2022 1:49	80.60	6/17/2022 0:12	17.13	6/16/2022 23:21	4.15	6/17/2022 4:17	145.24
6/18/2022 3:08	48.65	6/18/2022 1:50	80.58	6/17/2022 0:13	17.14	6/16/2022 23:22	4.20	6/17/2022 4:18	145.20
6/18/2022 3:09	48.67	6/18/2022 1:51	80.59	6/17/2022 0:14	17.10	6/16/2022 23:23	4.19	6/17/2022 4:19	145.20
6/18/2022 3:10	48.67	6/18/2022 1:52	80.57	6/17/2022 0:15	17.08	6/16/2022 23:24	4.12	6/17/2022 4:20	145.23
6/18/2022 3:11	48.65	6/18/2022 1:53	80.58	6/17/2022 0:16	17.10	6/16/2022 23:25	4.15	6/17/2022 4:21	145.20
6/18/2022 3:12	48.64	6/18/2022 1:54	80.58	6/17/2022 0:17	17.12	6/16/2022 23:26	4.19	6/17/2022 4:22	145.22
6/18/2022 3:13	48.69	6/18/2022 1:55	80.53	6/17/2022 0:18	17.06	6/16/2022 23:27	4.20	6/17/2022 4:23	145.24
6/18/2022 3:14	48.66	6/18/2022 1:56	80.59	6/17/2022 0:19	17.08	6/16/2022 23:28	4.12	6/17/2022 4:24	145.20
6/18/2022 3:15	48.66	6/18/2022 1:57	80.58	6/17/2022 0:20	17.09	6/16/2022 23:29	4.14	6/17/2022 4:25	145.23
6/18/2022 3:16	48.69	6/18/2022 1:58	80.61	6/17/2022 0:21	17.05	6/16/2022 23:30	4.17	6/17/2022 4:26	145.21
6/18/2022 3:17	48.65	6/18/2022 1:59	80.56	6/17/2022 0:22	17.08	6/16/2022 23:31	4.13	6/17/2022 4:27	145.23
6/18/2022 3:18	48.66	6/18/2022 2:00	80.58	6/17/2022 0:23	17.06	6/16/2022 23:32	4.12	6/17/2022 4:28	145.25
6/18/2022 3:19	48.65	6/18/2022 2:01	80.61	6/17/2022 0:24	17.06	6/16/2022 23:33	4.12	6/17/2022 4:29	145.22
6/18/2022 3:20	48.67	6/18/2022 2:02	80.58	6/17/2022 0:25	17.04	6/16/2022 23:34	4.05	6/17/2022 4:30	145.23
6/18/2022 3:21	48.70	6/18/2022 2:03	80.58	6/17/2022 0:26	17.00	6/16/2022 23:35	4.10	6/17/2022 4:31	145.22
6/18/2022 3:22	48.68	6/18/2022 2:04	80.59	6/17/2022 0:27	17.06	6/16/2022 23:36	4.07	6/17/2022 4:32	145.21
6/18/2022 3:23	48.64	6/18/2022 2:05	80.60	6/17/2022 0:28	17.02	6/16/2022 23:37	4.12	6/17/2022 4:33	145.21
6/18/2022 3:24	48.68	6/18/2022 2:06	80.59	6/17/2022 0:29	17.02	6/16/2022 23:38	4.10	6/17/2022 4:34	145.20

6/18/2022 3:25	48.67	6/18/2022 2:07	80.62	6/17/2022 0:30	17.01	6/16/2022 23:39	4.03	6/17/2022 4:35	145.23
6/18/2022 3:26	48.67	6/18/2022 2:08	80.59	6/17/2022 0:31	16.99	6/16/2022 23:40	4.06	6/17/2022 4:36	145.20
6/18/2022 3:27	48.66	6/18/2022 2:09	80.56	6/17/2022 0:32	17.02	6/16/2022 23:41	4.02	6/17/2022 4:37	145.21
6/18/2022 3:28	48.65	6/18/2022 2:10	80.57	6/17/2022 0:33	17.00	6/16/2022 23:42	4.04	6/17/2022 4:38	145.24
6/18/2022 3:29	48.68	6/18/2022 2:11	80.57	6/17/2022 0:34	17.03	6/16/2022 23:43	4.03	6/17/2022 4:39	145.26
6/18/2022 3:30	48.68	6/18/2022 2:12	80.55	6/17/2022 0:35	17.06	6/16/2022 23:44	4.08	6/17/2022 4:40	145.23
6/18/2022 3:31	48.66	6/18/2022 2:13	80.55	6/17/2022 0:36	17.04	6/16/2022 23:45	3.99	6/17/2022 4:41	145.22
6/18/2022 3:32	48.68	6/18/2022 2:14	80.55	6/17/2022 0:37	17.02	6/16/2022 23:46	3.99	6/17/2022 4:42	145.18
6/18/2022 3:33	48.67	6/18/2022 2:15	80.60	6/17/2022 0:38	17.01	6/16/2022 23:47	4.00	6/17/2022 4:43	145.26
6/18/2022 3:34	48.68	6/18/2022 2:16	80.57	6/17/2022 0:39	17.03	6/16/2022 23:48	4.00	6/17/2022 4:44	145.22
6/18/2022 3:35	48.67	6/18/2022 2:17	80.59	6/17/2022 0:40	16.99	6/16/2022 23:49	3.98	6/17/2022 4:45	145.19
6/18/2022 3:36	48.65	6/18/2022 2:18	80.56	6/17/2022 0:41	16.99	6/16/2022 23:50	4.01	6/17/2022 4:46	145.20
6/18/2022 3:37	48.70	6/18/2022 2:19	80.59	6/17/2022 0:42	16.98	6/16/2022 23:51	4.02	6/17/2022 4:47	145.21
6/18/2022 3:38	48.66	6/18/2022 2:20	80.57	6/17/2022 0:43	16.99	6/16/2022 23:52	3.96	6/17/2022 4:48	145.23
6/18/2022 3:39	48.68	6/18/2022 2:21	80.56	6/17/2022 0:44	17.00	6/16/2022 23:53	3.95	6/17/2022 4:49	145.24
6/18/2022 3:40	48.68	6/18/2022 2:22	80.60	6/17/2022 0:45	16.97	6/16/2022 23:54	3.98	6/17/2022 4:50	145.20
6/18/2022 3:41	48.67	6/18/2022 2:23	80.55	6/17/2022 0:46	17.02	6/16/2022 23:55	3.93	6/17/2022 4:51	145.25
6/18/2022 3:42	48.66	6/18/2022 2:24	80.55	6/17/2022 0:47	16.91	6/16/2022 23:56	3.94	6/17/2022 4:52	145.22
6/18/2022 3:43	48.65	6/18/2022 2:25	80.59	6/17/2022 0:48	16.92	6/16/2022 23:57	4.00	6/17/2022 4:53	145.21
6/18/2022 3:44	48.68	6/18/2022 2:26	80.55	6/17/2022 0:49	16.98	6/16/2022 23:58	3.98	6/17/2022 4:54	145.22
6/18/2022 3:45	48.66	6/18/2022 2:27	80.58	6/17/2022 0:50	16.91	6/16/2022 23:59	3.97	6/17/2022 4:55	145.21
6/18/2022 3:46	48.71	6/18/2022 2:28	80.55	6/17/2022 0:51	16.97	6/17/2022 0:00	3.93	6/17/2022 4:56	145.21
6/18/2022 3:47	48.68	6/18/2022 2:29	80.59	6/17/2022 0:52	16.94	6/17/2022 0:01	3.95	6/17/2022 4:57	145.22
6/18/2022 3:48	48.63	6/18/2022 2:30	80.55	6/17/2022 0:53	16.93	6/17/2022 0:02	3.88	6/17/2022 4:58	145.21
6/18/2022 3:49	48.68	6/18/2022 2:31	80.57	6/17/2022 0:54	16.91	6/17/2022 0:03	3.95	6/17/2022 4:59	145.19
6/18/2022 3:50	48.68	6/18/2022 2:32	80.58	6/17/2022 0:55	16.93	6/17/2022 0:04	3.92	6/17/2022 5:00	145.22
6/18/2022 3:51	48.65	6/18/2022 2:33	80.61	6/17/2022 0:56	16.95	6/17/2022 0:05	4.22	6/17/2022 5:01	145.19
6/18/2022 3:52	48.69	6/18/2022 2:34	80.56	6/17/2022 0:57	16.92	6/17/2022 0:06	4.16	6/17/2022 5:02	145.20
6/18/2022 3:53	48.65	6/18/2022 2:35	80.57	6/17/2022 0:58	16.94	6/17/2022 0:07	4.10	6/17/2022 5:03	145.22
6/18/2022 3:54	48.65	6/18/2022 2:36	80.61	6/17/2022 0:59	16.87	6/17/2022 0:08	4.08	6/17/2022 5:04	145.23
6/18/2022 3:55	48.66	6/18/2022 2:37	80.55	6/17/2022 1:00	16.91	6/17/2022 0:09	4.07	6/17/2022 5:05	145.23
6/18/2022 3:56	48.60	6/18/2022 2:38	80.64	6/17/2022 1:01	16.89	6/17/2022 0:10	4.05	6/17/2022 5:06	145.21
6/18/2022 3:57	48.69	6/18/2022 2:39	80.58	6/17/2022 1:02	16.92	6/17/2022 0:11	4.05	6/17/2022 5:07	145.26
6/18/2022 3:58	48.68	6/18/2022 2:40	80.58	6/17/2022 1:03	16.88	6/17/2022 0:12	4.05	6/17/2022 5:08	145.23
6/18/2022 3:59	48.66	6/18/2022 2:41	80.58	6/17/2022 1:04	16.91	6/17/2022 0:13	4.00	6/17/2022 5:09	145.19
6/18/2022 4:00	48.66	6/18/2022 2:42	80.61	6/17/2022 1:05	16.89	6/17/2022 0:14	4.07	6/17/2022 5:10	145.25
6/18/2022 4:01	48.68	6/18/2022 2:43	80.58	6/17/2022 1:06	16.88	6/17/2022 0:15	4.08	6/17/2022 5:11	145.24
6/18/2022 4:02	48.64	6/18/2022 2:44	80.58	6/17/2022 1:07	16.83	6/17/2022 0:16	4.03	6/17/2022 5:12	145.22
6/18/2022 4:03	48.69	6/18/2022 2:45	80.58	6/17/2022 1:08	16.86	6/17/2022 0:17	4.09	6/17/2022 5:13	145.24
6/18/2022 4:04	48.64	6/18/2022 2:46	80.57	6/17/2022 1:09	16.90	6/17/2022 0:18	4.08	6/17/2022 5:14	145.21
6/18/2022 4:05	48.68	6/18/2022 2:47	80.61	6/17/2022 1:10	16.86	6/17/2022 0:19	4.06	6/17/2022 5:15	145.20
6/18/2022 4:06	48.71	6/18/2022 2:48	80.60	6/17/2022 1:11	16.85	6/17/2022 0:20	4.08	6/17/2022 5:16	145.21
6/18/2022 4:07	48.67	6/18/2022 2:49	80.58	6/17/2022 1:12	16.86	6/17/2022 0:21	4.08	6/17/2022 5:17	145.20
6/18/2022 4:08	48.65	6/18/2022 2:50	80.60	6/17/2022 1:13	16.81	6/17/2022 0:22	4.04	6/17/2022 5:18	145.22
6/18/2022 4:09	48.68	6/18/2022 2:51	80.60	6/17/2022 1:14	16.80	6/17/2022 0:23	4.06	6/17/2022 5:19	145.24
6/18/2022 4:10	48.65	6/18/2022 2:52	80.59	6/17/2022 1:15	16.82	6/17/2022 0:24	4.03	6/17/2022 5:20	145.23
6/18/2022 4:11	48.64	6/18/2022 2:53	80.59	6/17/2022 1:16	16.83	6/17/2022 0:25	4.00	6/17/2022 5:21	145.24
6/18/2022 4:12	48.66	6/18/2022 2:54	80.56	6/17/2022 1:17	16.79	6/17/2022 0:26	4.02	6/17/2022 5:22	145.25
6/18/2022 4:13	48.70	6/18/2022 2:55	80.57	6/17/2022 1:18	16.82	6/17/2022 0:27	3.96	6/17/2022 5:23	145.22
6/18/2022 4:14	48.69	6/18/2022 2:56	80.56	6/17/2022 1:19	16.79	6/17/2022 0:28	3.99	6/17/2022 5:24	145.22
6/18/2022 4:15	48.67	6/18/2022 2:57	80.58	6/17/2022 1:20	16.79	6/17/2022 0:29	3.97	6/17/2022 5:25	145.24
6/18/2022 4:16	48.66	6/18/2022 2:58	80.58	6/17/2022 1:21	16.83	6/17/2022 0:30	3.93	6/17/2022 5:26	145.25
6/18/2022 4:17	48.70	6/18/2022 2:59	80.60	6/17/2022 1:22	16.78	6/17/2022 0:31	3.92	6/17/2022 5:27	145.25
6/18/2022 4:18	48.71	6/18/2022 3:00	80.60	6/17/2022 1:23	16.77	6/17/2022 0:32	3.90	6/17/2022 5:28	145.25
6/18/2022 4:19	48.66	6/18/2022 3:01	80.56	6/17/2022 1:24	16.81	6/17/2022 0:33	3.96	6/17/2022 5:29	145.23
6/18/2022 4:20	48.70	6/18/2022 3:02	80.59	6/17/2022 1:25	16.78	6/17/2022 0:34	3.92	6/17/2022 5:30	145.20
6/18/2022 4:21	48.67	6/18/2022 3:03	80.59	6/17/2022 1:26	16.79	6/17/2022 0:35	3.90	6/17/2022 5:31	145.22
6/18/2022 4:22	48.63	6/18/2022 3:04	80.56	6/17/2022 1:27	16.73	6/17/2022 0:36	3.92	6/17/2022 5:32	145.24
6/18/2022 4:23	48.66	6/18/2022 3:05	80.62	6/17/2022 1:28	16.81	6/17/2022 0:37	3.92	6/17/2022 5:33	145.25
6/18/2022 4:24	48.67	6/18/2022 3:06	80.58	6/17/2022 1:29	16.76	6/17/2022 0:38	3.90	6/17/2022 5:34	145.22
6/18/2022 4:25	48.68	6/18/2022 3:07	80.60	6/17/2022 1:30	16.79	6/17/2022 0:39	3.93	6/17/2022 5:35	145.24
6/18/2022 4:26	48.69	6/18/2022 3:08	80.59	6/17/2022 1:31	16.76	6/17/2022 0:40	3.92	6/17/2022 5:36	145.22
6/18/2022 4:27	48.70	6/18/2022 3:09	80.54	6/17/2022 1:32	16.76	6/17/2022 0:41	3.85	6/17/2022 5:37	145.19
6/18/2022 4:28	48.70	6/18/2022 3:10	80.58	6/17/2022 1:33	16.70	6/17/2022 0:42	3.91	6/17/2022 5:38	145.23
6/18/2022 4:29	48.72	6/18/2022 3:11	80.60	6/17/2022 1:34	16.75	6/17/2022 0:43	3.91	6/17/2022 5:39	145.22
6/18/2022 4:30	48.66	6/18/2022 3:12	80.57	6/17/2022 1:35	16.75	6/17/2022 0:44	3.90	6/17/2022 5:40	145.21
6/18/2022 4:31	48.66	6/18/2022 3:13	80.59	6/17/2022 1:36	16.72	6/17/2022 0:45	3.89	6/17/2022 5:41	145.23
6/18/2022 4:32	48.71	6/18/2022 3:14	80.56	6/17/2022 1:37	16.74	6/17/2022 0:46	3.83	6/17/2022 5:42	145.21
6/18/2022 4:33	48.66	6/18/2022 3:15	80.62	6/17/2022 1:38	16.71	6/17/2022 0:47	3.88	6/17/2022 5:43	145.23
6/18/2022 4:34	48.66	6/18/2022 3:16	80.59	6/17/2022 1:39	16.72	6/17/2022 0:48	3.86	6/17/2022 5:44	145.23
6/18/2022 4:35	48.69	6/18/2022 3:17	80.56	6/17/2022 1:40	16.73	6/17/2022 0:49	3.82	6/17/2022 5:45	145.23
6/18/2022 4:36	48.69	6/18/2022 3:18	80.54	6/17/2022 1:41	16.71	6/17/2022 0:50	3.82	6/17/2022 5:46	145.24
6/18/2022 4:37	48.69	6/18/2022 3:19	80.58	6/17/2022 1:42	16.66	6/17/2022 0:51	3.80	6/17/2022 5:47	145.25
6/18/2022 4:38	48.69	6/18/2022 3:20	80.56	6/17/2022 1:43	16.68	6/17/2022 0:52	3.79	6/17/2022 5:48	145.22
6/18/2022 4:39	48.67	6/18/2022 3:21	80.59	6/17/2022 1:44	16.70	6/17/2022 0:53	3.81	6/17/2022 5:49	145.20
6/18/2022 4:40	48.66	6/18/2022 3:22	80.58	6/17/2022 1:45	16.69	6/17/2022 0:54	3.87	6/17/2022 5:50	145.21
6/18/2022 4:41	48.67	6/18/2022 3:23	80.56	6/17/2022 1:46	16.68	6/17/2022 0:55	3.77	6/17/2022 5:51	145.26
6/18/2022 4:42	48.68	6/18/2022 3:24	80.56	6/17/2022 1:47	16.71	6/17/2022 0:56	3.80	6/17/2022 5:52	145.20
6/18/2022 4:43	48.71	6/18/2022 3:25	80.61	6/17/2022 1:48	16.67	6/17/2022 0:57	3.83	6/17/2022 5:53	145.21
6/18/2022 4:44	48.70	6/18/2022 3:26	80.58	6/17/2022 1:49	16.66	6/17/2022 0:58	3.74	6/17/2022 5:54	145.22
6/18/2022 4:45	48.68	6/18/2022 3:27	80.59	6/17/2022 1:50	16.67	6/17/2022 0:59	3.75	6/17/2022 5:55	145.20
6/18/2022 4:46	48.69	6/18/2022 3:28	80.58	6/17/2022 1:51	16.63	6/17/2022 1:00	3.82	6/17/2022 5:56	145.22
6/18/2022 4:47	48.69	6/18/2022 3:29	80.59	6/17/2022 1:52	16.68	6/17/2022 1:01	3.81	6/17/2022 5:57	145.23
6/18/2022 4:48	48.68	6/18/2022 3:30	80.60	6/17/2022 1:53	16.63	6/17/2022 1:02	3.78	6/17/2022 5:58	145.21
6/18/2022 4:49	48.69	6/18/2022 3:31	80.60	6/17/2022 1:54	16.63	6/17/2022 1:03	5.44	6/17/2022 5:59	145.20
6/18/2022 4:50	48.70	6/18/2022 3:32	80.59	6/17/2022 1:55	16.60	6/17/2022 1:04	6.42	6/17/2022 6:00	145.23
6/18/2022 4:51	48.66	6/18/2022 3:33	80.58	6/17/2022 1:56	16.68	6/17/2022 1:05	7.07	6/17/2022 6:01	145.20
6/18/2022 4:52	48.66	6/18/2022 3:34	80.57	6/17/2022 1:57	16.63	6/17/2022 1:06	7.59	6/17/2022 6:02	145.20

6/18/2022 4:53	48.67	6/18/2022 3:35	80.56	6/17/2022 1:58	16.63	6/17/2022 1:07	7.99	6/17/2022 6:03	145.23
6/18/2022 4:54	48.70	6/18/2022 3:36	80.56	6/17/2022 1:59	16.62	6/17/2022 1:08	8.39	6/17/2022 6:04	145.22
6/18/2022 4:55	48.67	6/18/2022 3:37	80.59	6/17/2022 2:00	16.61	6/17/2022 1:09	8.68	6/17/2022 6:05	145.20
6/18/2022 4:56	48.67	6/18/2022 3:38	80.57	6/17/2022 2:01	16.64	6/17/2022 1:10	8.95	6/17/2022 6:06	145.22
6/18/2022 4:57	48.69	6/18/2022 3:39	80.55	6/17/2022 2:02	16.63	6/17/2022 1:11	9.18	6/17/2022 6:07	145.25
6/18/2022 4:58	48.66	6/18/2022 3:40	80.55	6/17/2022 2:03	16.64	6/17/2022 1:12	9.40	6/17/2022 6:08	145.24
6/18/2022 4:59	48.71	6/18/2022 3:41	80.56	6/17/2022 2:04	16.64	6/17/2022 1:13	9.64	6/17/2022 6:09	145.19
6/18/2022 5:00	48.68	6/18/2022 3:42	80.58	6/17/2022 2:05	16.63	6/17/2022 1:14	9.86	6/17/2022 6:10	145.22
6/18/2022 5:01	48.68	6/18/2022 3:43	80.57	6/17/2022 2:06	16.60	6/17/2022 1:15	10.05	6/17/2022 6:11	145.22
6/18/2022 5:02	48.66	6/18/2022 3:44	80.58	6/17/2022 2:07	16.60	6/17/2022 1:16	10.20	6/17/2022 6:12	145.24
6/18/2022 5:03	48.68	6/18/2022 3:45	80.58	6/17/2022 2:08	16.59	6/17/2022 1:17	10.41	6/17/2022 6:13	145.21
6/18/2022 5:04	48.65	6/18/2022 3:46	80.58	6/17/2022 2:09	16.57	6/17/2022 1:18	10.55	6/17/2022 6:14	145.21
6/18/2022 5:05	48.68	6/18/2022 3:47	80.61	6/17/2022 2:10	16.58	6/17/2022 1:19	10.78	6/17/2022 6:15	145.24
6/18/2022 5:06	48.69	6/18/2022 3:48	80.57	6/17/2022 2:11	16.60	6/17/2022 1:20	10.92	6/17/2022 6:16	145.22
6/18/2022 5:07	48.70	6/18/2022 3:49	80.59	6/17/2022 2:12	16.60	6/17/2022 1:21	11.07	6/17/2022 6:17	145.22
6/18/2022 5:08	48.68	6/18/2022 3:50	80.60	6/17/2022 2:13	16.53	6/17/2022 1:22	11.23	6/17/2022 6:18	145.21
6/18/2022 5:09	48.67	6/18/2022 3:51	80.58	6/17/2022 2:14	16.56	6/17/2022 1:23	11.61	6/17/2022 6:19	145.22
6/18/2022 5:10	48.69	6/18/2022 3:52	80.60	6/17/2022 2:15	16.59	6/17/2022 1:24	11.97	6/17/2022 6:20	145.24
6/18/2022 5:11	48.67	6/18/2022 3:53	80.62	6/17/2022 2:16	16.62	6/17/2022 1:25	12.19	6/17/2022 6:21	145.26
6/18/2022 5:12	48.68	6/18/2022 3:54	80.58	6/17/2022 2:17	16.53	6/17/2022 1:26	12.39	6/17/2022 6:22	145.19
6/18/2022 5:13	48.69	6/18/2022 3:55	80.57	6/17/2022 2:18	16.55	6/17/2022 1:27	12.58	6/17/2022 6:23	145.22
6/18/2022 5:14	48.69	6/18/2022 3:56	80.57	6/17/2022 2:19	16.56	6/17/2022 1:28	12.83	6/17/2022 6:24	145.21
6/18/2022 5:15	48.71	6/18/2022 3:57	80.58	6/17/2022 2:20	16.50	6/17/2022 1:29	12.96	6/17/2022 6:25	145.20
6/18/2022 5:16	48.67	6/18/2022 3:58	80.59	6/17/2022 2:21	16.50	6/17/2022 1:30	13.17	6/17/2022 6:26	145.23
6/18/2022 5:17	48.69	6/18/2022 3:59	80.59	6/17/2022 2:22	16.53	6/17/2022 1:31	13.32	6/17/2022 6:27	145.26
6/18/2022 5:18	48.66	6/18/2022 4:00	80.59	6/17/2022 2:23	16.55	6/17/2022 1:32	13.50	6/17/2022 6:28	145.22
6/18/2022 5:19	48.67	6/18/2022 4:01	80.57	6/17/2022 2:24	16.52	6/17/2022 1:33	13.68	6/17/2022 6:29	145.20
6/18/2022 5:20	48.70	6/18/2022 4:02	80.61	6/17/2022 2:25	16.52	6/17/2022 1:34	13.82	6/17/2022 6:30	145.21
6/18/2022 5:21	48.72	6/18/2022 4:03	80.55	6/17/2022 2:26	16.55	6/17/2022 1:35	13.95	6/17/2022 6:31	145.21
6/18/2022 5:22	48.70	6/18/2022 4:04	80.55	6/17/2022 2:27	16.52	6/17/2022 1:36	14.09	6/17/2022 6:32	145.23
6/18/2022 5:23	48.68	6/18/2022 4:05	80.59	6/17/2022 2:28	16.52	6/17/2022 1:37	14.21	6/17/2022 6:33	145.23
6/18/2022 5:24	48.71	6/18/2022 4:06	80.58	6/17/2022 2:29	16.53	6/17/2022 1:38	14.40	6/17/2022 6:34	145.22
6/18/2022 5:25	48.69	6/18/2022 4:07	80.57	6/17/2022 2:30	16.48	6/17/2022 1:39	14.60	6/17/2022 6:35	145.22
6/18/2022 5:26	48.70	6/18/2022 4:08	80.57	6/17/2022 2:31	16.53	6/17/2022 1:40	14.70	6/17/2022 6:36	145.21
6/18/2022 5:27	48.70	6/18/2022 4:09	80.58	6/17/2022 2:32	16.57	6/17/2022 1:41	14.85	6/17/2022 6:37	145.23
6/18/2022 5:28	48.68	6/18/2022 4:10	80.55	6/17/2022 2:33	16.52	6/17/2022 1:42	14.94	6/17/2022 6:38	145.22
6/18/2022 5:29	48.71	6/18/2022 4:11	80.56	6/17/2022 2:34	16.49	6/17/2022 1:43	15.15	6/17/2022 6:39	145.24
6/18/2022 5:30	48.69	6/18/2022 4:12	80.56	6/17/2022 2:35	16.51	6/17/2022 1:44	15.21	6/17/2022 6:40	145.20
6/18/2022 5:31	48.64	6/18/2022 4:13	80.56	6/17/2022 2:36	16.53	6/17/2022 1:45	15.36	6/17/2022 6:41	145.23
6/18/2022 5:32	48.69	6/18/2022 4:14	80.59	6/17/2022 2:37	16.50	6/17/2022 1:46	15.49	6/17/2022 6:42	145.21
6/18/2022 5:33	48.65	6/18/2022 4:15	80.58	6/17/2022 2:38	16.51	6/17/2022 1:47	15.60	6/17/2022 6:43	145.21
6/18/2022 5:34	48.70	6/18/2022 4:16	80.57	6/17/2022 2:39	16.49	6/17/2022 1:48	15.74	6/17/2022 6:44	145.22
6/18/2022 5:35	48.68	6/18/2022 4:17	80.59	6/17/2022 2:40	16.49	6/17/2022 1:49	15.89	6/17/2022 6:45	145.23
6/18/2022 5:36	48.66	6/18/2022 4:18	80.59	6/17/2022 2:41	16.50	6/17/2022 1:50	16.01	6/17/2022 6:46	145.24
6/18/2022 5:37	48.70	6/18/2022 4:19	80.59	6/17/2022 2:42	16.50	6/17/2022 1:51	16.15	6/17/2022 6:47	145.23
6/18/2022 5:38	48.68	6/18/2022 4:20	80.60	6/17/2022 2:43	16.45	6/17/2022 1:52	16.25	6/17/2022 6:48	145.23
6/18/2022 5:39	48.69	6/18/2022 4:21	80.58	6/17/2022 2:44	16.47	6/17/2022 1:53	16.40	6/17/2022 6:49	145.22
6/18/2022 5:40	48.70	6/18/2022 4:22	80.55	6/17/2022 2:45	16.46	6/17/2022 1:54	16.49	6/17/2022 6:50	145.20
6/18/2022 5:41	48.71	6/18/2022 4:23	80.58	6/17/2022 2:46	16.46	6/17/2022 1:55	16.57	6/17/2022 6:51	145.21
6/18/2022 5:42	48.72	6/18/2022 4:24	80.60	6/17/2022 2:47	16.45	6/17/2022 1:56	16.70	6/17/2022 6:52	145.23
6/18/2022 5:43	48.70	6/18/2022 4:25	80.59	6/17/2022 2:48	16.49	6/17/2022 1:57	16.81	6/17/2022 6:53	145.21
6/18/2022 5:44	48.70	6/18/2022 4:26	80.61	6/17/2022 2:49	16.49	6/17/2022 1:58	16.95	6/17/2022 6:54	145.24
6/18/2022 5:45	48.68	6/18/2022 4:27	80.57	6/17/2022 2:50	16.45	6/17/2022 1:59	17.08	6/17/2022 6:55	145.26
6/18/2022 5:46	48.70	6/18/2022 4:28	80.60	6/17/2022 2:51	16.44	6/17/2022 2:00	17.19	6/17/2022 6:56	145.25
6/18/2022 5:47	48.67	6/18/2022 4:29	80.59	6/17/2022 2:52	16.48	6/17/2022 2:01	17.32	6/17/2022 6:57	145.23
6/18/2022 5:48	48.70	6/18/2022 4:30	80.59	6/17/2022 2:53	16.46	6/17/2022 2:02	17.39	6/17/2022 6:58	145.22
6/18/2022 5:49	48.69	6/18/2022 4:31	80.53	6/17/2022 2:54	16.43	6/17/2022 2:03	17.54	6/17/2022 6:59	145.20
6/18/2022 5:50	48.68	6/18/2022 4:32	80.56	6/17/2022 2:55	16.44	6/17/2022 2:04	17.62	6/17/2022 7:00	145.23
6/18/2022 5:51	48.74	6/18/2022 4:33	80.57	6/17/2022 2:56	16.42	6/17/2022 2:05	17.73	6/17/2022 7:01	145.23
6/18/2022 5:52	48.68	6/18/2022 4:34	80.55	6/17/2022 2:57	16.46	6/17/2022 2:06	17.79	6/17/2022 7:02	145.24
6/18/2022 5:53	48.69	6/18/2022 4:35	80.54	6/17/2022 2:58	16.47	6/17/2022 2:07	17.93	6/17/2022 7:03	145.21
6/18/2022 5:54	48.68	6/18/2022 4:36	80.58	6/17/2022 2:59	16.42	6/17/2022 2:08	17.99	6/17/2022 7:04	145.22
6/18/2022 5:55	48.70	6/18/2022 4:37	80.59	6/17/2022 3:00	16.45	6/17/2022 2:09	18.13	6/17/2022 7:05	145.24
6/18/2022 5:56	48.71	6/18/2022 4:38	80.58	6/17/2022 3:01	16.45	6/17/2022 2:10	18.19	6/17/2022 7:06	145.24
6/18/2022 5:57	48.73	6/18/2022 4:39	80.59	6/17/2022 3:02	16.42	6/17/2022 2:11	18.32	6/17/2022 7:07	145.22
6/18/2022 5:58	48.69	6/18/2022 4:40	80.59	6/17/2022 3:03	16.42	6/17/2022 2:12	18.39	6/17/2022 7:08	145.25
6/18/2022 5:59	48.70	6/18/2022 4:41	80.56	6/17/2022 3:04	16.40	6/17/2022 2:13	18.49	6/17/2022 7:09	145.27
6/18/2022 6:00	48.71	6/18/2022 4:42	80.57	6/17/2022 3:05	16.44	6/17/2022 2:14	18.58	6/17/2022 7:10	145.21
6/18/2022 6:01	48.70	6/18/2022 4:43	80.56	6/17/2022 3:06	16.44	6/17/2022 2:15	18.75	6/17/2022 7:11	145.22
6/18/2022 6:02	48.74	6/18/2022 4:44	80.56	6/17/2022 3:07	16.41	6/17/2022 2:16	18.79	6/17/2022 7:12	145.28
6/18/2022 6:03	48.69	6/18/2022 4:45	80.59	6/17/2022 3:08	16.39	6/17/2022 2:17	18.89	6/17/2022 7:13	145.23
6/18/2022 6:04	48.68	6/18/2022 4:46	80.57	6/17/2022 3:09	16.42	6/17/2022 2:18	19.06	6/17/2022 7:14	145.22
6/18/2022 6:05	48.70	6/18/2022 4:47	80.58	6/17/2022 3:10	16.38	6/17/2022 2:19	19.12	6/17/2022 7:15	145.25
6/18/2022 6:06	48.72	6/18/2022 4:48	80.59	6/17/2022 3:11	16.42	6/17/2022 2:20	19.20	6/17/2022 7:16	145.23
6/18/2022 6:07	48.67	6/18/2022 4:49	80.54	6/17/2022 3:12	16.41	6/17/2022 2:21	19.27	6/17/2022 7:17	145.24
6/18/2022 6:08	48.69	6/18/2022 4:50	80.56	6/17/2022 3:13	16.36	6/17/2022 2:22	19.35	6/17/2022 7:18	145.25
6/18/2022 6:09	48.73	6/18/2022 4:51	80.62	6/17/2022 3:14	16.36	6/17/2022 2:23	19.55	6/17/2022 7:19	145.23
6/18/2022 6:10	48.70	6/18/2022 4:52	80.55	6/17/2022 3:15	16.38	6/17/2022 2:24	19.65	6/17/2022 7:20	145.25
6/18/2022 6:11	48.69	6/18/2022 4:53	80.60	6/17/2022 3:16	16.34	6/17/2022 2:25	20.14	6/17/2022 7:21	145.23
6/18/2022 6:12	48.69	6/18/2022 4:54	80.60	6/17/2022 3:17	16.41	6/17/2022 2:26	20.56	6/17/2022 7:22	145.21
6/18/2022 6:13	48.67	6/18/2022 4:55	80.59	6/17/2022 3:18	16.37	6/17/2022 2:27	20.92	6/17/2022 7:23	145.25
6/18/2022 6:14	48.70	6/18/2022 4:56	80.59	6/17/2022 3:19	16.42	6/17/2022 2:28	21.22	6/17/2022 7:24	145.22
6/18/2022 6:15	48.72	6/18/2022 4:57	80.58	6/17/2022 3:20	16.40	6/17/2022 2:29	21.44	6/17/2022 7:25	145.24
6/18/2022 6:16	48.69	6/18/2022 4:58	80.57	6/17/2022 3:21	16.40	6/17/2022 2:30	21.67	6/17/2022 7:26	145.22
6/18/2022 6:17	48.73	6/18/2022 4:59	80.61	6/17/2022 3:22	16.41	6/17/2022 2:31	21.88	6/17/2022 7:27	145.27
6/18/2022 6:18	48.71	6/18/2022 5:00	80.58	6/17/2022 3:23	16.31	6/17/2022 2:32	22.06	6/17/2022 7:28	145.22
6/18/2022 6:19	48.65	6/18/2022 5:01	80.59	6/17/2022 3:24	16.39	6/17/2022 2:33	22.22	6/17/2022 7:29	145.24
6/18/2022 6:20	48.69	6/18/2022 5:02	80.60	6/17/2022 3:25	16.35	6/17/2022 2:34	22.37	6/17/2022 7:30	145.23

6/18/2022 6:21	48.73	6/18/2022 5:03	80.57	6/17/2022 3:26	16.34	6/17/2022 2:35	22.61	6/17/2022 7:31	145.22
6/18/2022 6:22	48.73	6/18/2022 5:04	80.59	6/17/2022 3:27	16.38	6/17/2022 2:36	22.79	6/17/2022 7:32	145.25
6/18/2022 6:23	48.70	6/18/2022 5:05	80.60	6/17/2022 3:28	16.38	6/17/2022 2:37	22.94	6/17/2022 7:33	145.25
6/18/2022 6:24	48.71	6/18/2022 5:06	80.61	6/17/2022 3:29	16.37	6/17/2022 2:38	23.07	6/17/2022 7:34	145.12
6/18/2022 6:25	48.70	6/18/2022 5:07	80.60	6/17/2022 3:30	16.37	6/17/2022 2:39	23.30	6/17/2022 7:35	144.54
6/18/2022 6:26	48.70	6/18/2022 5:08	80.57	6/17/2022 3:31	16.32	6/17/2022 2:40	23.01	6/17/2022 7:36	143.95
6/18/2022 6:27	48.69	6/18/2022 5:09	80.59	6/17/2022 3:32	16.38	6/17/2022 2:41	22.90	6/17/2022 7:37	143.41
6/18/2022 6:28	48.69	6/18/2022 5:10	80.58	6/17/2022 3:33	16.33	6/17/2022 2:42	22.86	6/17/2022 7:38	142.84
6/18/2022 6:29	48.74	6/18/2022 5:11	80.60	6/17/2022 3:34	16.32	6/17/2022 2:43	22.94	6/17/2022 7:39	142.28
6/18/2022 6:30	48.70	6/18/2022 5:12	80.59	6/17/2022 3:35	16.38	6/17/2022 2:44	23.06	6/17/2022 7:40	141.78
6/18/2022 6:31	48.75	6/18/2022 5:13	80.56	6/17/2022 3:36	16.35	6/17/2022 2:45	23.10	6/17/2022 7:41	144.74
6/18/2022 6:32	48.73	6/18/2022 5:14	80.60	6/17/2022 3:37	16.37	6/17/2022 2:46	23.14	6/17/2022 7:42	145.21
6/18/2022 6:33	48.72	6/18/2022 5:15	80.56	6/17/2022 3:38	16.37	6/17/2022 2:47	23.25	6/17/2022 7:43	145.27
6/18/2022 6:34	48.69	6/18/2022 5:16	80.61	6/17/2022 3:39	16.34	6/17/2022 2:48	23.35	6/17/2022 7:44	145.20
6/18/2022 6:35	48.71	6/18/2022 5:17	80.61	6/17/2022 3:40	16.31	6/17/2022 2:49	23.43	6/17/2022 7:45	145.23
6/18/2022 6:36	48.72	6/18/2022 5:18	80.61	6/17/2022 3:41	16.33	6/17/2022 2:50	23.49	6/17/2022 7:46	145.20
6/18/2022 6:37	48.73	6/18/2022 5:19	80.63	6/17/2022 3:42	16.31	6/17/2022 2:51	23.55	6/17/2022 7:47	144.57
6/18/2022 6:38	48.71	6/18/2022 5:20	80.60	6/17/2022 3:43	16.33	6/17/2022 2:52	23.68	6/17/2022 7:48	143.99
6/18/2022 6:39	48.75	6/18/2022 5:21	80.61	6/17/2022 3:44	16.33	6/17/2022 2:53	23.72	6/17/2022 7:49	143.40
6/18/2022 6:40	48.70	6/18/2022 5:22	80.55	6/17/2022 3:45	16.33	6/17/2022 2:54	23.77	6/17/2022 7:50	142.78
6/18/2022 6:41	48.71	6/18/2022 5:23	80.58	6/17/2022 3:46	16.32	6/17/2022 2:55	23.85	6/17/2022 7:51	142.21
6/18/2022 6:42	48.69	6/18/2022 5:24	80.58	6/17/2022 3:47	16.30	6/17/2022 2:56	23.87	6/17/2022 7:52	141.64
6/18/2022 6:43	48.67	6/18/2022 5:25	80.59	6/17/2022 3:48	16.32	6/17/2022 2:57	23.94	6/17/2022 7:53	141.11
6/18/2022 6:44	48.71	6/18/2022 5:26	80.59	6/17/2022 3:49	16.33	6/17/2022 2:58	24.08	6/17/2022 7:54	140.55
6/18/2022 6:45	48.71	6/18/2022 5:27	80.60	6/17/2022 3:50	16.33	6/17/2022 2:59	24.13	6/17/2022 7:55	144.21
6/18/2022 6:46	48.71	6/18/2022 5:28	80.53	6/17/2022 3:51	16.31	6/17/2022 3:00	24.20	6/17/2022 7:56	145.10
6/18/2022 6:47	48.70	6/18/2022 5:29	80.57	6/17/2022 3:52	16.29	6/17/2022 3:01	24.34	6/17/2022 7:57	144.43
6/18/2022 6:48	48.73	6/18/2022 5:30	80.62	6/17/2022 3:53	16.32	6/17/2022 3:02	24.44	6/17/2022 7:58	143.77
6/18/2022 6:49	48.74	6/18/2022 5:31	80.57	6/17/2022 3:54	16.34	6/17/2022 3:03	24.29	6/17/2022 7:59	143.20
6/18/2022 6:50	48.73	6/18/2022 5:32	80.55	6/17/2022 3:55	16.31	6/17/2022 3:04	24.18	6/17/2022 8:00	142.60
6/18/2022 6:51	48.70	6/18/2022 5:33	80.56	6/17/2022 3:56	16.32	6/17/2022 3:05	24.22	6/17/2022 8:01	141.99
6/18/2022 6:52	48.68	6/18/2022 5:34	80.60	6/17/2022 3:57	16.27	6/17/2022 3:06	24.24	6/17/2022 8:02	145.24
6/18/2022 6:53	48.74	6/18/2022 5:35	80.57	6/17/2022 3:58	16.28	6/17/2022 3:07	24.22	6/17/2022 8:03	145.23
6/18/2022 6:54	48.71	6/18/2022 5:36	80.59	6/17/2022 3:59	16.29	6/17/2022 3:08	24.24	6/17/2022 8:04	145.21
6/18/2022 6:55	48.71	6/18/2022 5:37	80.58	6/17/2022 4:00	16.32	6/17/2022 3:09	24.27	6/17/2022 8:05	145.17
6/18/2022 6:56	48.73	6/18/2022 5:38	80.59	6/17/2022 4:01	16.31	6/17/2022 3:10	24.36	6/17/2022 8:06	144.55
6/18/2022 6:57	48.68	6/18/2022 5:39	80.59	6/17/2022 4:02	16.30	6/17/2022 3:11	24.39	6/17/2022 8:07	143.94
6/18/2022 6:58	48.74	6/18/2022 5:40	80.58	6/17/2022 4:03	16.32	6/17/2022 3:12	24.38	6/17/2022 8:08	143.35
6/18/2022 6:59	48.73	6/18/2022 5:41	80.59	6/17/2022 4:04	16.29	6/17/2022 3:13	24.46	6/17/2022 8:09	142.75
6/18/2022 7:00	48.73	6/18/2022 5:42	80.55	6/17/2022 4:05	16.29	6/17/2022 3:14	24.53	6/17/2022 8:10	142.13
6/18/2022 7:01	48.70	6/18/2022 5:43	80.58	6/17/2022 4:06	16.31	6/17/2022 3:15	24.57	6/17/2022 8:11	141.55
6/18/2022 7:02	48.75	6/18/2022 5:44	80.56	6/17/2022 4:07	16.25	6/17/2022 3:16	24.63	6/17/2022 8:12	140.99
6/18/2022 7:03	48.75	6/18/2022 5:45	80.57	6/17/2022 4:08	16.29	6/17/2022 3:17	24.63	6/17/2022 8:13	140.41
6/18/2022 7:04	48.73	6/18/2022 5:46	80.58	6/17/2022 4:09	16.27	6/17/2022 3:18	24.72	6/17/2022 8:14	139.85
6/18/2022 7:05	48.72	6/18/2022 5:47	80.59	6/17/2022 4:10	16.26	6/17/2022 3:19	24.75	6/17/2022 8:15	139.28
6/18/2022 7:06	48.69	6/18/2022 5:48	80.57	6/17/2022 4:11	16.28	6/17/2022 3:20	24.80	6/17/2022 8:16	138.70
6/18/2022 7:07	48.77	6/18/2022 5:49	80.59	6/17/2022 4:12	16.30	6/17/2022 3:21	24.90	6/17/2022 8:17	138.16
6/18/2022 7:08	48.75	6/18/2022 5:50	80.56	6/17/2022 4:13	16.31	6/17/2022 3:22	24.91	6/17/2022 8:18	137.61
6/18/2022 7:09	48.70	6/18/2022 5:51	80.61	6/17/2022 4:14	16.22	6/17/2022 3:23	24.18	6/17/2022 8:19	137.05
6/18/2022 7:10	48.76	6/18/2022 5:52	80.60	6/17/2022 4:15	16.27	6/17/2022 3:24	23.82	6/17/2022 8:20	136.49
6/18/2022 7:11	48.74	6/18/2022 5:53	80.58	6/17/2022 4:16	16.26	6/17/2022 3:25	23.46	6/17/2022 8:21	135.93
6/18/2022 7:12	48.68	6/18/2022 5:54	80.59	6/17/2022 4:17	16.26	6/17/2022 3:26	23.18	6/17/2022 8:22	135.38
6/18/2022 7:13	48.70	6/18/2022 5:55	80.60	6/17/2022 4:18	16.28	6/17/2022 3:27	22.92	6/17/2022 8:23	134.85
6/18/2022 7:14	48.71	6/18/2022 5:56	82.68	6/17/2022 4:19	16.27	6/17/2022 3:28	22.72	6/17/2022 8:24	134.38
6/18/2022 7:15	48.76	6/18/2022 5:57	83.26	6/17/2022 4:20	16.30	6/17/2022 3:29	22.59	6/17/2022 8:25	133.81
6/18/2022 7:16	48.74	6/18/2022 5:58	82.80	6/17/2022 4:21	16.30	6/17/2022 3:30	22.49	6/17/2022 8:26	133.29
6/18/2022 7:17	48.74	6/18/2022 5:59	82.43	6/17/2022 4:22	16.28	6/17/2022 3:31	22.39	6/17/2022 8:27	132.80
6/18/2022 7:18	48.70	6/18/2022 6:00	82.18	6/17/2022 4:23	16.21	6/17/2022 3:32	22.28	6/17/2022 8:28	132.31
6/18/2022 7:19	48.70	6/18/2022 6:01	81.98	6/17/2022 4:24	16.22	6/17/2022 3:33	22.19	6/17/2022 8:29	131.78
6/18/2022 7:20	48.71	6/18/2022 6:02	81.75	6/17/2022 4:25	16.22	6/17/2022 3:34	22.13	6/17/2022 8:30	131.55
6/18/2022 7:21	48.72	6/18/2022 6:03	81.59	6/17/2022 4:26	16.22	6/17/2022 3:35	22.11	6/17/2022 8:31	136.48
6/18/2022 7:22	48.72	6/18/2022 6:04	81.49	6/17/2022 4:27	16.24	6/17/2022 3:36	21.97	6/17/2022 8:32	135.83
6/18/2022 7:23	48.73	6/18/2022 6:05	81.41	6/17/2022 4:28	16.21	6/17/2022 3:37	22.01	6/17/2022 8:33	135.28
6/18/2022 7:24	48.72	6/18/2022 6:06	81.30	6/17/2022 4:29	16.26	6/17/2022 3:38	21.94	6/17/2022 8:34	134.73
6/18/2022 7:25	48.73	6/18/2022 6:07	81.25	6/17/2022 4:30	16.25	6/17/2022 3:39	21.84	6/17/2022 8:35	134.15
6/18/2022 7:26	48.68	6/18/2022 6:08	81.16	6/17/2022 4:31	16.23	6/17/2022 3:40	21.79	6/17/2022 8:36	133.59
6/18/2022 7:27	48.71	6/18/2022 6:09	81.12	6/17/2022 4:32	16.23	6/17/2022 3:41	21.80	6/17/2022 8:37	133.03
6/18/2022 7:28	48.71	6/18/2022 6:10	81.07	6/17/2022 4:33	16.24	6/17/2022 3:42	21.75	6/17/2022 8:38	132.54
6/18/2022 7:29	48.70	6/18/2022 6:11	81.03	6/17/2022 4:34	16.27	6/17/2022 3:43	20.98	6/17/2022 8:39	132.02
6/18/2022 7:30	48.69	6/18/2022 6:12	80.97	6/17/2022 4:35	16.22	6/17/2022 3:44	20.44	6/17/2022 8:40	131.46
6/18/2022 7:31	48.74	6/18/2022 6:13	80.99	6/17/2022 4:36	16.22	6/17/2022 3:45	20.05	6/17/2022 8:41	130.96
6/18/2022 7:32	48.74	6/18/2022 6:14	80.94	6/17/2022 4:37	16.24	6/17/2022 3:46	19.75	6/17/2022 8:42	130.42
6/18/2022 7:33	48.71	6/18/2022 6:15	80.86	6/17/2022 4:38	16.22	6/17/2022 3:47	19.51	6/17/2022 8:43	129.93
6/18/2022 7:34	48.70	6/18/2022 6:16	80.86	6/17/2022 4:39	16.23	6/17/2022 3:48	19.25	6/17/2022 8:44	129.44
6/18/2022 7:35	48.70	6/18/2022 6:17	80.88	6/17/2022 4:40	16.23	6/17/2022 3:49	19.04	6/17/2022 8:45	128.95
6/18/2022 7:36	48.72	6/18/2022 6:18	80.83	6/17/2022 4:41	16.23	6/17/2022 3:50	19.27	6/17/2022 8:46	128.44
6/18/2022 7:37	48.70	6/18/2022 6:19	80.81	6/17/2022 4:42	16.20	6/17/2022 3:51	19.35	6/17/2022 8:47	127.94
6/18/2022 7:38	48.71	6/18/2022 6:20	80.81	6/17/2022 4:43	16.21	6/17/2022 3:52	19.40	6/17/2022 8:48	127.45
6/18/2022 7:39	48.73	6/18/2022 6:21	80.77	6/17/2022 4:44	16.26	6/17/2022 3:53	19.37	6/17/2022 8:49	126.92
6/18/2022 7:40	48.72	6/18/2022 6:22	80.76	6/17/2022 4:45	16.21	6/17/2022 3:54	19.32	6/17/2022 8:50	126.46
6/18/2022 7:41	48.72	6/18/2022 6:23	80.75	6/17/2022 4:46	16.25	6/17/2022 3:55	19.31	6/17/2022 8:51	125.98
6/18/2022 7:42	48.72	6/18/2022 6:24	80.74	6/17/2022 4:47	16.26	6/17/2022 3:56	19.28	6/17/2022 8:52	125.48
6/18/2022 7:43	48.74	6/18/2022 6:25	80.75	6/17/2022 4:48	16.22	6/17/2022 3:57	19.11	6/17/2022 8:53	125.03
6/18/2022 7:44	48.69	6/18/2022 6:26	80.72	6/17/2022 4:49	16.22	6/17/2022 3:58	18.67	6/17/2022 8:54	124.58
6/18/2022 7:45	51.65	6/18/2022 6:27	80.75	6/17/2022 4:50	16.23	6/17/2022 3:59	18.37	6/17/2022 8:55	124.07
6/18/2022 7:46	52.99	6/18/2022 6:28	80.75	6/17/2022 4:51	16.19	6/17/2022 4:00	18.16	6/17/2022 8:56	123.61
6/18/2022 7:47	53.75	6/18/2022 6:29	80.72	6/17/2022 4:52	16.22	6/17/2022 4:01	17.96	6/17/2022 8:57	123.17
6/18/2022 7:48	54.23	6/18/2022 6:30	80.73	6/17/2022 4:53	16.20	6/17/2022 4:02	17.71	6/17/2022 8:58	122.70

6/18/2022 7:49	54.67	6/18/2022 6:31	80.71	6/17/2022 4:54	16.25	6/17/2022 4:03	17.59	6/17/2022 8:59	122.26
6/18/2022 7:50	54.97	6/18/2022 6:32	80.69	6/17/2022 4:55	16.18	6/17/2022 4:04	17.45	6/17/2022 9:00	121.79
6/18/2022 7:51	55.22	6/18/2022 6:33	80.68	6/17/2022 4:56	16.21	6/17/2022 4:05	17.26	6/17/2022 9:01	121.37
6/18/2022 7:52	55.40	6/18/2022 6:34	80.67	6/17/2022 4:57	16.19	6/17/2022 4:06	17.14	6/17/2022 9:02	120.92
6/18/2022 7:53	53.01	6/18/2022 6:35	80.69	6/17/2022 4:58	16.22	6/17/2022 4:07	17.02	6/17/2022 9:03	120.53
6/18/2022 7:54	51.94	6/18/2022 6:36	80.71	6/17/2022 4:59	16.22	6/17/2022 4:08	16.93	6/17/2022 9:04	120.07
6/18/2022 7:55	51.34	6/18/2022 6:37	80.68	6/17/2022 5:00	16.21	6/17/2022 4:09	16.77	6/17/2022 9:05	119.64
6/18/2022 7:56	51.07	6/18/2022 6:38	80.70	6/17/2022 5:01	16.22	6/17/2022 4:10	16.67	6/17/2022 9:06	119.23
6/18/2022 7:57	50.84	6/18/2022 6:39	80.68	6/17/2022 5:02	16.16	6/17/2022 4:11	16.55	6/17/2022 9:07	118.79
6/18/2022 7:58	50.66	6/18/2022 6:40	80.68	6/17/2022 5:03	16.23	6/17/2022 4:12	16.48	6/17/2022 9:08	118.38
6/18/2022 7:59	50.56	6/18/2022 6:41	80.65	6/17/2022 5:04	16.20	6/17/2022 4:13	16.32	6/17/2022 9:09	117.99
6/18/2022 8:00	50.43	6/18/2022 6:42	80.63	6/17/2022 5:05	16.23	6/17/2022 4:14	16.27	6/17/2022 9:10	117.57
6/18/2022 8:01	50.33	6/18/2022 6:43	80.66	6/17/2022 5:06	16.18	6/17/2022 4:15	16.21	6/17/2022 9:11	117.14
6/18/2022 8:02	50.29	6/18/2022 6:44	80.62	6/17/2022 5:07	16.19	6/17/2022 4:16	16.11	6/17/2022 9:12	116.78
6/18/2022 8:03	50.22	6/18/2022 6:45	80.63	6/17/2022 5:08	16.21	6/17/2022 4:17	15.97	6/17/2022 9:13	116.37
6/18/2022 8:04	50.16	6/18/2022 6:46	80.66	6/17/2022 5:09	16.19	6/17/2022 4:18	15.88	6/17/2022 9:14	116.00
6/18/2022 8:05	50.08	6/18/2022 6:47	80.69	6/17/2022 5:10	16.23	6/17/2022 4:19	15.72	6/17/2022 9:15	115.59
6/18/2022 8:06	50.05	6/18/2022 6:48	80.65	6/17/2022 5:11	16.13	6/17/2022 4:20	15.66	6/17/2022 9:16	115.22
6/18/2022 8:07	50.03	6/18/2022 6:49	80.68	6/17/2022 5:12	16.18	6/17/2022 4:21	15.58	6/17/2022 9:17	114.82
6/18/2022 8:08	49.97	6/18/2022 6:50	80.64	6/17/2022 5:13	16.13	6/17/2022 4:22	15.50	6/17/2022 9:18	114.46
6/18/2022 8:09	49.94	6/18/2022 6:51	80.62	6/17/2022 5:14	16.17	6/17/2022 4:23	15.43	6/17/2022 9:19	120.15
6/18/2022 8:10	49.89	6/18/2022 6:52	80.67	6/17/2022 5:15	16.22	6/17/2022 4:24	15.36	6/17/2022 9:20	120.44
6/18/2022 8:11	49.90	6/18/2022 6:53	80.64	6/17/2022 5:16	16.15	6/17/2022 4:25	15.28	6/17/2022 9:21	119.88
6/18/2022 8:12	49.89	6/18/2022 6:54	80.66	6/17/2022 5:17	16.15	6/17/2022 4:26	15.15	6/17/2022 9:22	119.43
6/18/2022 8:13	49.76	6/18/2022 6:55	80.66	6/17/2022 5:18	16.19	6/17/2022 4:27	15.10	6/17/2022 9:23	118.95
6/18/2022 8:14	49.76	6/18/2022 6:56	80.66	6/17/2022 5:19	16.21	6/17/2022 4:28	15.00	6/17/2022 9:24	118.51
6/18/2022 8:15	49.74	6/18/2022 6:57	80.63	6/17/2022 5:20	16.15	6/17/2022 4:29	14.98	6/17/2022 9:25	118.10
6/18/2022 8:16	49.72	6/18/2022 6:58	80.64	6/17/2022 5:21	16.22	6/17/2022 4:30	14.87	6/17/2022 9:26	117.67
6/18/2022 8:17	49.72	6/18/2022 6:59	80.63	6/17/2022 5:22	16.19	6/17/2022 4:31	14.74	6/17/2022 9:27	117.23
6/18/2022 8:18	49.72	6/18/2022 7:00	80.68	6/17/2022 5:23	16.20	6/17/2022 4:32	14.67	6/17/2022 9:28	116.78
6/18/2022 8:19	49.68	6/18/2022 7:01	80.67	6/17/2022 5:24	16.21	6/17/2022 4:33	14.60	6/17/2022 9:29	116.37
6/18/2022 8:20	49.68	6/18/2022 7:02	80.63	6/17/2022 5:25	16.15	6/17/2022 4:34	14.58	6/17/2022 9:30	115.96
6/18/2022 8:21	49.68	6/18/2022 7:03	80.64	6/17/2022 5:26	16.16	6/17/2022 4:35	14.50	6/17/2022 9:31	115.55
6/18/2022 8:22	49.60	6/18/2022 7:04	80.63	6/17/2022 5:27	16.16	6/17/2022 4:36	14.44	6/17/2022 9:32	115.17
6/18/2022 8:23	49.62	6/18/2022 7:05	80.59	6/17/2022 5:28	16.19	6/17/2022 4:37	14.36	6/17/2022 9:33	114.79
6/18/2022 8:24	49.62	6/18/2022 7:06	80.60	6/17/2022 5:29	16.16	6/17/2022 4:38	14.32	6/17/2022 9:34	114.38
6/18/2022 8:25	49.56	6/18/2022 7:07	80.64	6/17/2022 5:30	16.16	6/17/2022 4:39	14.18	6/17/2022 9:35	113.98
6/18/2022 8:26	49.57	6/18/2022 7:08	80.62	6/17/2022 5:31	16.19	6/17/2022 4:40	14.15	6/17/2022 9:36	113.58
6/18/2022 8:27	49.57	6/18/2022 7:09	80.59	6/17/2022 5:32	16.17	6/17/2022 4:41	14.06	6/17/2022 9:37	113.21
6/18/2022 8:28	49.55	6/18/2022 7:10	80.64	6/17/2022 5:33	16.14	6/17/2022 4:42	14.04	6/17/2022 9:38	112.85
6/18/2022 8:29	49.57	6/18/2022 7:11	80.62	6/17/2022 5:34	16.20	6/17/2022 4:43	13.91	6/17/2022 9:39	112.45
6/18/2022 8:30	49.53	6/18/2022 7:12	80.64	6/17/2022 5:35	16.17	6/17/2022 4:44	13.84	6/17/2022 9:40	112.09
6/18/2022 8:31	49.55	6/18/2022 7:13	80.63	6/17/2022 5:36	16.20	6/17/2022 4:45	13.82	6/17/2022 9:41	111.75
6/18/2022 8:32	49.49	6/18/2022 7:14	80.64	6/17/2022 5:37	16.15	6/17/2022 4:46	13.75	6/17/2022 9:42	111.36
6/18/2022 8:33	49.51	6/18/2022 7:15	80.61	6/17/2022 5:38	16.17	6/17/2022 4:47	13.66	6/17/2022 9:43	111.02
6/18/2022 8:34	49.51	6/18/2022 7:16	80.62	6/17/2022 5:39	16.18	6/17/2022 4:48	13.60	6/17/2022 9:44	110.68
6/18/2022 8:35	49.47	6/18/2022 7:17	80.61	6/17/2022 5:40	16.21	6/17/2022 4:49	13.55	6/17/2022 9:45	110.32
6/18/2022 8:36	49.51	6/18/2022 7:18	80.62	6/17/2022 5:41	16.18	6/17/2022 4:50	13.50	6/17/2022 9:46	110.02
6/18/2022 8:37	49.45	6/18/2022 7:19	80.66	6/17/2022 5:42	16.18	6/17/2022 4:51	13.44	6/17/2022 9:47	109.67
6/18/2022 8:38	49.47	6/18/2022 7:20	80.58	6/17/2022 5:43	16.15	6/17/2022 4:52	13.42	6/17/2022 9:48	109.31
6/18/2022 8:39	49.44	6/18/2022 7:21	80.61	6/17/2022 5:44	16.19	6/17/2022 4:53	13.36	6/17/2022 9:49	108.97
6/18/2022 8:40	49.42	6/18/2022 7:22	80.60	6/17/2022 5:45	16.16	6/17/2022 4:54	13.24	6/17/2022 9:50	108.67
6/18/2022 8:41	49.48	6/18/2022 7:23	80.62	6/17/2022 5:46	16.14	6/17/2022 4:55	13.20	6/17/2022 9:51	108.29
6/18/2022 8:42	49.40	6/18/2022 7:24	80.61	6/17/2022 5:47	16.14	6/17/2022 4:56	13.11	6/17/2022 9:52	107.98
6/18/2022 8:43	49.39	6/18/2022 7:25	80.62	6/17/2022 5:48	16.13	6/17/2022 4:57	13.10	6/17/2022 9:53	107.67
6/18/2022 8:44	49.44	6/18/2022 7:26	80.59	6/17/2022 5:49	16.17	6/17/2022 4:58	13.06	6/17/2022 9:54	107.39
6/18/2022 8:45	49.44	6/18/2022 7:27	80.60	6/17/2022 5:50	16.12	6/17/2022 4:59	12.95	6/17/2022 9:55	107.06
6/18/2022 8:46	49.36	6/18/2022 7:28	80.61	6/17/2022 5:51	16.15	6/17/2022 5:00	12.98	6/17/2022 9:56	106.77
6/18/2022 8:47	49.42	6/18/2022 7:29	80.62	6/17/2022 5:52	16.16	6/17/2022 5:01	12.89	6/17/2022 9:57	106.48
6/18/2022 8:48	49.38	6/18/2022 7:30	80.61	6/17/2022 5:53	16.15	6/17/2022 5:02	12.80	6/17/2022 9:58	106.15
6/18/2022 8:49	49.39	6/18/2022 7:31	80.59	6/17/2022 5:54	16.11	6/17/2022 5:03	12.72	6/17/2022 9:59	105.82
6/18/2022 8:50	49.37	6/18/2022 7:32	80.62	6/17/2022 5:55	16.19	6/17/2022 5:04	12.64	6/17/2022 10:00	105.53
6/18/2022 8:51	51.30	6/18/2022 7:33	80.63	6/17/2022 5:56	16.11	6/17/2022 5:05	12.65	6/17/2022 10:01	105.26
6/18/2022 8:52	53.14	6/18/2022 7:34	80.62	6/17/2022 5:57	16.12	6/17/2022 5:06	12.64	6/17/2022 10:02	104.96
6/18/2022 8:53	54.02	6/18/2022 7:35	80.61	6/17/2022 5:58	16.16	6/17/2022 5:07	12.60	6/17/2022 10:03	104.67
6/18/2022 8:54	54.56	6/18/2022 7:36	80.62	6/17/2022 5:59	16.15	6/17/2022 5:08	12.47	6/17/2022 10:04	104.40
6/18/2022 8:55	53.37	6/18/2022 7:37	80.64	6/17/2022 6:00	16.14	6/17/2022 5:09	12.40	6/17/2022 10:05	104.19
6/18/2022 8:56	51.80	6/18/2022 7:38	80.63	6/17/2022 6:01	16.16	6/17/2022 5:10	12.37	6/17/2022 10:06	103.89
6/18/2022 8:57	51.15	6/18/2022 7:39	80.62	6/17/2022 6:02	16.11	6/17/2022 5:11	12.31	6/17/2022 10:07	103.62
6/18/2022 8:58	50.83	6/18/2022 7:40	80.64	6/17/2022 6:03	16.15	6/17/2022 5:12	12.28	6/17/2022 10:08	103.34
6/18/2022 8:59	50.62	6/18/2022 7:41	80.65	6/17/2022 6:04	16.15	6/17/2022 5:13	12.28	6/17/2022 10:09	103.05
6/18/2022 9:00	50.50	6/18/2022 7:42	80.62	6/17/2022 6:05	16.18	6/17/2022 5:14	12.21	6/17/2022 10:10	102.80
6/18/2022 9:01	50.38	6/18/2022 7:43	80.62	6/17/2022 6:06	16.14	6/17/2022 5:15	12.20	6/17/2022 10:11	102.50
6/18/2022 9:02	50.32	6/18/2022 7:44	80.63	6/17/2022 6:07	16.13	6/17/2022 5:16	12.12	6/17/2022 10:12	102.24
6/18/2022 9:03	50.19	6/18/2022 7:45	80.62	6/17/2022 6:08	16.18	6/17/2022 5:17	12.01	6/17/2022 10:13	101.96
6/18/2022 9:04	50.16	6/18/2022 7:46	80.61	6/17/2022 6:09	16.16	6/17/2022 5:18	12.01	6/17/2022 10:14	101.71
6/18/2022 9:05	50.11	6/18/2022 7:47	80.62	6/17/2022 6:10	16.13	6/17/2022 5:19	11.94	6/17/2022 10:15	101.48
6/18/2022 9:06	50.11	6/18/2022 7:48	80.59	6/17/2022 6:11	16.12	6/17/2022 5:20	11.92	6/17/2022 10:16	101.20
6/18/2022 9:07	50.05	6/18/2022 7:49	80.62	6/17/2022 6:12	16.12	6/17/2022 5:21	11.92	6/17/2022 10:17	100.92
6/18/2022 9:08	49.99	6/18/2022 7:50	80.60	6/17/2022 6:13	16.10	6/17/2022 5:22	11.79	6/17/2022 10:18	100.71
6/18/2022 9:09	49.99	6/18/2022 7:51	80.61	6/17/2022 6:14	16.07	6/17/2022 5:23	11.76	6/17/2022 10:19	100.45
6/18/2022 9:10	49.95	6/18/2022 7:52	80.65	6/17/2022 6:15	16.17	6/17/2022 5:24	11.72	6/17/2022 10:20	100.21
6/18/2022 9:11	49.88	6/18/2022 7:53	80.60	6/17/2022 6:16	16.12	6/17/2022 5:25	11.69	6/17/2022 10:21	99.97
6/18/2022 9:12	49.89	6/18/2022 7:54	80.63	6/17/2022 6:17	16.12	6/17/2022 5:26	11.61	6/17/2022 10:22	99.74
6/18/2022 9:13	49.87	6/18/2022 7:55	80.61	6/17/2022 6:18	16.13	6/17/2022 5:27	11.61	6/17/2022 10:23	99.46
6/18/2022 9:14	49.83	6/18/2022 7:56	80.60	6/17/2022 6:19	16.17	6/17/2022 5:28	11.56	6/17/2022 10:24	99.26
6/18/2022 9:15	49.82	6/18/2022 7:57	80.62	6/17/2022 6:20	16.16	6/17/2022 5:29	11.59	6/17/2022 10:25	99.03
6/18/2022 9:16	49.82	6/18/2022 7:58	80.62	6/17/2022 6:21	16.11	6/17/2022 5:30	11.45	6/17/2022 10:26	98.77

6/18/2022 9:17	49.82	6/18/2022 7:59	80.59	6/17/2022 6:22	16.17	6/17/2022 5:31	11.41	6/17/2022 10:27	98.56
6/18/2022 9:18	49.76	6/18/2022 8:00	80.64	6/17/2022 6:23	16.11	6/17/2022 5:32	11.41	6/17/2022 10:28	98.33
6/18/2022 9:19	49.77	6/18/2022 8:01	80.65	6/17/2022 6:24	16.14	6/17/2022 5:33	11.30	6/17/2022 10:29	98.10
6/18/2022 9:20	49.75	6/18/2022 8:02	80.61	6/17/2022 6:25	16.13	6/17/2022 5:34	11.28	6/17/2022 10:30	97.86
6/18/2022 9:21	49.72	6/18/2022 8:03	80.65	6/17/2022 6:26	16.16	6/17/2022 5:35	11.29	6/17/2022 10:31	97.65
6/18/2022 9:22	49.73	6/18/2022 8:04	80.61	6/17/2022 6:27	16.14	6/17/2022 5:36	11.22	6/17/2022 10:32	97.43
6/18/2022 9:23	49.71	6/18/2022 8:05	80.62	6/17/2022 6:28	16.16	6/17/2022 5:37	11.21	6/17/2022 10:33	97.18
6/18/2022 9:24	51.97	6/18/2022 8:06	80.63	6/17/2022 6:29	16.15	6/17/2022 5:38	11.10	6/17/2022 10:34	96.95
6/18/2022 9:25	53.56	6/18/2022 8:07	80.61	6/17/2022 6:30	16.10	6/17/2022 5:39	11.09	6/17/2022 10:35	96.79
6/18/2022 9:26	54.44	6/18/2022 8:08	80.62	6/17/2022 6:31	16.16	6/17/2022 5:40	11.07	6/17/2022 10:36	96.53
6/18/2022 9:27	54.92	6/18/2022 8:09	80.63	6/17/2022 6:32	16.12	6/17/2022 5:41	11.00	6/17/2022 10:37	96.33
6/18/2022 9:28	53.42	6/18/2022 8:10	80.61	6/17/2022 6:33	16.13	6/17/2022 5:42	11.03	6/17/2022 10:38	96.09
6/18/2022 9:29	52.02	6/18/2022 8:11	80.60	6/17/2022 6:34	16.13	6/17/2022 5:43	10.99	6/17/2022 10:39	95.93
6/18/2022 9:30	51.40	6/18/2022 8:12	80.64	6/17/2022 6:35	16.13	6/17/2022 5:44	10.90	6/17/2022 10:40	95.74
6/18/2022 9:31	51.11	6/18/2022 8:13	80.62	6/17/2022 6:36	16.10	6/17/2022 5:45	10.83	6/17/2022 10:41	95.53
6/18/2022 9:32	50.90	6/18/2022 8:14	80.61	6/17/2022 6:37	16.11	6/17/2022 5:46	10.85	6/17/2022 10:42	95.32
6/18/2022 9:33	50.79	6/18/2022 8:15	80.59	6/17/2022 6:38	16.09	6/17/2022 5:47	10.75	6/17/2022 10:43	95.12
6/18/2022 9:34	50.64	6/18/2022 8:16	80.63	6/17/2022 6:39	16.11	6/17/2022 5:48	10.75	6/17/2022 10:44	94.94
6/18/2022 9:35	50.58	6/18/2022 8:17	80.63	6/17/2022 6:40	16.13	6/17/2022 5:49	10.77	6/17/2022 10:45	94.71
6/18/2022 9:36	50.51	6/18/2022 8:18	80.63	6/17/2022 6:41	16.15	6/17/2022 5:50	10.71	6/17/2022 10:46	94.54
6/18/2022 9:37	50.43	6/18/2022 8:19	80.60	6/17/2022 6:42	16.10	6/17/2022 5:51	10.64	6/17/2022 10:47	94.40
6/18/2022 9:38	50.42	6/18/2022 8:20	80.58	6/17/2022 6:43	16.13	6/17/2022 5:52	10.60	6/17/2022 10:48	94.18
6/18/2022 9:39	50.36	6/18/2022 8:21	80.66	6/17/2022 6:44	16.08	6/17/2022 5:53	10.61	6/17/2022 10:49	94.04
6/18/2022 9:40	50.31	6/18/2022 8:22	80.60	6/17/2022 6:45	16.11	6/17/2022 5:54	10.57	6/17/2022 10:50	93.88
6/18/2022 9:41	50.25	6/18/2022 8:23	80.64	6/17/2022 6:46	16.11	6/17/2022 5:55	10.54	6/17/2022 10:51	93.75
6/18/2022 9:42	50.25	6/18/2022 8:24	80.62	6/17/2022 6:47	16.16	6/17/2022 5:56	10.46	6/17/2022 10:52	93.56
6/18/2022 9:43	50.24	6/18/2022 8:25	80.62	6/17/2022 6:48	16.13	6/17/2022 5:57	10.43	6/17/2022 10:53	93.37
6/18/2022 9:44	50.17	6/18/2022 8:26	80.64	6/17/2022 6:49	16.08	6/17/2022 5:58	10.45	6/17/2022 10:54	93.21
6/18/2022 9:45	50.16	6/18/2022 8:27	80.64	6/17/2022 6:50	16.14	6/17/2022 5:59	10.35	6/17/2022 10:55	92.98
6/18/2022 9:46	50.12	6/18/2022 8:28	80.61	6/17/2022 6:51	16.14	6/17/2022 6:00	10.33	6/17/2022 10:56	92.83
6/18/2022 9:47	50.10	6/18/2022 8:29	80.58	6/17/2022 6:52	16.15	6/17/2022 6:01	10.33	6/17/2022 10:57	92.63
6/18/2022 9:48	50.09	6/18/2022 8:30	80.64	6/17/2022 6:53	16.12	6/17/2022 6:02	10.24	6/17/2022 10:58	92.48
6/18/2022 9:49	50.05	6/18/2022 8:31	80.64	6/17/2022 6:54	16.13	6/17/2022 6:03	10.25	6/17/2022 10:59	92.26
6/18/2022 9:50	50.07	6/18/2022 8:32	80.62	6/17/2022 6:55	16.13	6/17/2022 6:04	10.19	6/17/2022 11:00	96.26
6/18/2022 9:51	50.05	6/18/2022 8:33	80.67	6/17/2022 6:56	16.12	6/17/2022 6:05	10.21	6/17/2022 11:01	99.03
6/18/2022 9:52	49.99	6/18/2022 8:34	80.64	6/17/2022 6:57	16.15	6/17/2022 6:06	10.16	6/17/2022 11:02	98.68
6/18/2022 9:53	49.95	6/18/2022 8:35	80.59	6/17/2022 6:58	16.13	6/17/2022 6:07	10.08	6/17/2022 11:03	98.32
6/18/2022 9:54	50.00	6/18/2022 8:36	80.63	6/17/2022 6:59	16.15	6/17/2022 6:08	10.06	6/17/2022 11:04	98.06
6/18/2022 9:55	52.37	6/18/2022 8:37	80.61	6/17/2022 7:00	18.64	6/17/2022 6:09	10.02	6/17/2022 11:05	101.33
6/18/2022 9:56	53.88	6/18/2022 8:38	80.64	6/17/2022 7:01	23.26	6/17/2022 6:10	10.04	6/17/2022 11:06	106.20
6/18/2022 9:57	54.73	6/18/2022 8:39	80.63	6/17/2022 7:02	26.10	6/17/2022 6:11	10.02	6/17/2022 11:07	105.68
6/18/2022 9:58	55.16	6/18/2022 8:40	80.64	6/17/2022 7:03	24.54	6/17/2022 6:12	9.96	6/17/2022 11:08	108.50
6/18/2022 9:59	53.55	6/18/2022 8:41	80.64	6/17/2022 7:04	22.32	6/17/2022 6:13	9.88	6/17/2022 11:09	113.63
6/18/2022 10:00	52.24	6/18/2022 8:42	80.64	6/17/2022 7:05	21.06	6/17/2022 6:14	9.87	6/17/2022 11:10	113.03
6/18/2022 10:01	51.64	6/18/2022 8:43	80.62	6/17/2022 7:06	20.24	6/17/2022 6:15	9.80	6/17/2022 11:11	115.27
6/18/2022 10:02	51.33	6/18/2022 8:44	80.63	6/17/2022 7:07	19.69	6/17/2022 6:16	9.83	6/17/2022 11:12	120.76
6/18/2022 10:03	51.14	6/18/2022 8:45	80.63	6/17/2022 7:08	19.30	6/17/2022 6:17	9.78	6/17/2022 11:13	120.03
6/18/2022 10:04	51.03	6/18/2022 8:46	80.62	6/17/2022 7:09	19.06	6/17/2022 6:18	9.79	6/17/2022 11:14	119.41
6/18/2022 10:05	50.93	6/18/2022 8:47	80.60	6/17/2022 7:10	18.85	6/17/2022 6:19	9.78	6/17/2022 11:15	118.79
6/18/2022 10:06	50.83	6/18/2022 8:48	80.63	6/17/2022 7:11	18.64	6/17/2022 6:20	9.65	6/17/2022 11:16	118.33
6/18/2022 10:07	50.74	6/18/2022 8:49	80.62	6/17/2022 7:12	18.50	6/17/2022 6:21	9.64	6/17/2022 11:17	117.80
6/18/2022 10:08	50.71	6/18/2022 8:50	80.61	6/17/2022 7:13	18.34	6/17/2022 6:22	9.63	6/17/2022 11:18	117.25
6/18/2022 10:09	50.62	6/18/2022 8:51	80.64	6/17/2022 7:14	18.23	6/17/2022 6:23	9.61	6/17/2022 11:19	116.74
6/18/2022 10:10	50.58	6/18/2022 8:52	80.66	6/17/2022 7:15	18.10	6/17/2022 6:24	9.88	6/17/2022 11:20	116.26
6/18/2022 10:11	50.54	6/18/2022 8:53	80.60	6/17/2022 7:16	18.05	6/17/2022 6:25	9.94	6/17/2022 11:21	115.85
6/18/2022 10:12	50.52	6/18/2022 8:54	80.64	6/17/2022 7:17	17.99	6/17/2022 6:26	9.90	6/17/2022 11:22	115.31
6/18/2022 10:13	50.47	6/18/2022 8:55	80.65	6/17/2022 7:18	17.85	6/17/2022 6:27	9.84	6/17/2022 11:23	114.85
6/18/2022 10:14	50.43	6/18/2022 8:56	80.61	6/17/2022 7:19	22.77	6/17/2022 6:28	9.97	6/17/2022 11:24	114.43
6/18/2022 10:15	50.43	6/18/2022 8:57	80.61	6/17/2022 7:20	26.32	6/17/2022 6:29	9.81	6/17/2022 11:25	113.97
6/18/2022 10:16	50.38	6/18/2022 8:58	80.58	6/17/2022 7:21	28.63	6/17/2022 6:30	9.72	6/17/2022 11:26	119.58
6/18/2022 10:17	50.35	6/18/2022 8:59	80.62	6/17/2022 7:22	25.01	6/17/2022 6:31	9.62	6/17/2022 11:27	118.97
6/18/2022 10:18	50.32	6/18/2022 9:00	80.64	6/17/2022 7:23	23.14	6/17/2022 6:32	9.56	6/17/2022 11:28	118.38
6/18/2022 10:19	50.30	6/18/2022 9:01	80.64	6/17/2022 7:24	22.01	6/17/2022 6:33	9.47	6/17/2022 11:29	117.86
6/18/2022 10:20	50.31	6/18/2022 9:02	80.58	6/17/2022 7:25	21.30	6/17/2022 6:34	9.46	6/17/2022 11:30	117.36
6/18/2022 10:21	50.26	6/18/2022 9:03	80.65	6/17/2022 7:26	20.78	6/17/2022 6:35	9.43	6/17/2022 11:31	116.92
6/18/2022 10:22	50.24	6/18/2022 9:04	80.65	6/17/2022 7:27	20.44	6/17/2022 6:36	9.38	6/17/2022 11:32	116.42
6/18/2022 10:23	50.23	6/18/2022 9:05	80.65	6/17/2022 7:28	20.06	6/17/2022 6:37	9.36	6/17/2022 11:33	115.95
6/18/2022 10:24	50.22	6/18/2022 9:06	80.63	6/17/2022 7:29	19.82	6/17/2022 6:38	9.35	6/17/2022 11:34	115.50
6/18/2022 10:25	50.23	6/18/2022 9:07	80.63	6/17/2022 7:30	19.63	6/17/2022 6:39	9.26	6/17/2022 11:35	115.03
6/18/2022 10:26	50.18	6/18/2022 9:08	80.62	6/17/2022 7:31	19.49	6/17/2022 6:40	9.22	6/17/2022 11:36	114.58
6/18/2022 10:27	52.87	6/18/2022 9:09	80.57	6/17/2022 7:32	19.31	6/17/2022 6:41	9.21	6/17/2022 11:37	114.13
6/18/2022 10:28	54.25	6/18/2022 9:10	80.66	6/17/2022 7:33	19.17	6/17/2022 6:42	9.16	6/17/2022 11:38	113.69
6/18/2022 10:29	55.00	6/18/2022 9:11	80.62	6/17/2022 7:34	19.04	6/17/2022 6:43	9.13	6/17/2022 11:39	113.30
6/18/2022 10:30	55.48	6/18/2022 9:12	80.64	6/17/2022 7:35	18.95	6/17/2022 6:44	9.15	6/17/2022 11:40	112.84
6/18/2022 10:31	55.48	6/18/2022 9:13	80.65	6/17/2022 7:36	18.83	6/17/2022 6:45	9.23	6/17/2022 11:41	112.41
6/18/2022 10:32	53.13	6/18/2022 9:14	80.65	6/17/2022 7:37	18.73	6/17/2022 6:46	9.13	6/17/2022 11:42	112.01
6/18/2022 10:33	52.26	6/18/2022 9:15	80.62	6/17/2022 7:38	18.65	6/17/2022 6:47	9.15	6/17/2022 11:43	111.59
6/18/2022 10:34	51.81	6/18/2022 9:16	80.60	6/17/2022 7:39	18.58	6/17/2022 6:48	9.05	6/17/2022 11:44	111.21
6/18/2022 10:35	51.56	6/18/2022 9:17	80.64	6/17/2022 7:40	18.53	6/17/2022 6:49	9.05	6/17/2022 11:45	110.81
6/18/2022 10:36	51.40	6/18/2022 9:18	80.62	6/17/2022 7:41	18.48	6/17/2022 6:50	9.03	6/17/2022 11:46	110.42
6/18/2022 10:37	51.27	6/18/2022 9:19	80.63	6/17/2022 7:42	18.39	6/17/2022 6:51	9.08	6/17/2022 11:47	110.03
6/18/2022 10:38	51.17	6/18/2022 9:20	80.61	6/17/2022 7:43	18.33	6/17/2022 6:52	9.00	6/17/2022 11:48	109.61
6/18/2022 10:39	51.11	6/18/2022 9:21	80.64	6/17/2022 7:44	18.25	6/17/2022 6:53	8.95	6/17/2022 11:49	109.28
6/18/2022 10:40	51.01	6/18/2022 9:22	80.63	6/17/2022 7:45	18.23	6/17/2022 6:54	8.96	6/17/2022 11:50	108.89
6/18/2022 10:41	50.93	6/18/2022 9:23	80.62	6/17/2022 7:46	18.15	6/17/2022 6:55	8.90	6/17/2022 11:51	108.51
6/18/2022 10:42	50.90	6/18/2022 9:24	80.64	6/17/2022 7:47	18.14	6/17/2022 6:56	8.95	6/17/2022 11:52	108.16
6/18/2022 10:43	50.85	6/18/2022 9:25	80.63	6/17/2022 7:48	18.07	6/17/2022 6:57	8.89	6/17/2022 11:53	107.76
6/18/2022 10:44	50.79	6/18/2022 9:26	80.64	6/17/2022 7:49	17.99	6/17/2022 6:58	8.87	6/17/2022 11:54	107.47

6/18/2022 10:45	50.75	6/18/2022 9:27	80.61	6/17/2022 7:50	18.01	6/17/2022 6:59	8.82	6/17/2022 11:55	107.05
6/18/2022 10:46	50.72	6/18/2022 9:28	80.63	6/17/2022 7:51	17.95	6/17/2022 7:00	8.86	6/17/2022 11:56	106.71
6/18/2022 10:47	50.68	6/18/2022 9:29	80.67	6/17/2022 7:52	17.87	6/17/2022 7:01	8.78	6/17/2022 11:57	106.40
6/18/2022 10:48	50.66	6/18/2022 9:30	80.63	6/17/2022 7:53	17.87	6/17/2022 7:02	8.78	6/17/2022 11:58	106.02
6/18/2022 10:49	50.64	6/18/2022 9:31	80.62	6/17/2022 7:54	17.80	6/17/2022 7:03	8.72	6/17/2022 11:59	105.70
6/18/2022 10:50	50.62	6/18/2022 9:32	80.63	6/17/2022 7:55	17.75	6/17/2022 7:04	8.78	6/17/2022 12:00	105.34
6/18/2022 10:51	50.58	6/18/2022 9:33	80.58	6/17/2022 7:56	17.78	6/17/2022 7:05	8.66	6/17/2022 12:01	105.03
6/18/2022 10:52	50.58	6/18/2022 9:34	80.64	6/17/2022 7:57	17.71	6/17/2022 7:06	8.71	6/17/2022 12:02	104.73
6/18/2022 10:53	50.48	6/18/2022 9:35	80.64	6/17/2022 7:58	17.71	6/17/2022 7:07	8.67	6/17/2022 12:03	104.43
6/18/2022 10:54	50.49	6/18/2022 9:36	80.64	6/17/2022 7:59	17.69	6/17/2022 7:08	8.70	6/17/2022 12:04	104.13
6/18/2022 10:55	50.46	6/18/2022 9:37	80.66	6/17/2022 8:00	17.68	6/17/2022 7:09	8.64	6/17/2022 12:05	103.83
6/18/2022 10:56	50.46	6/18/2022 9:38	80.65	6/17/2022 8:01	17.62	6/17/2022 7:10	8.59	6/17/2022 12:06	103.51
6/18/2022 10:57	50.44	6/18/2022 9:39	80.65	6/17/2022 8:02	17.59	6/17/2022 7:11	8.60	6/17/2022 12:07	103.22
6/18/2022 10:58	50.44	6/18/2022 9:40	80.64	6/17/2022 8:03	17.55	6/17/2022 7:12	8.56	6/17/2022 12:08	102.89
6/18/2022 10:59	50.41	6/18/2022 9:41	80.62	6/17/2022 8:04	17.56	6/17/2022 7:13	8.60	6/17/2022 12:09	102.56
6/18/2022 11:00	50.36	6/18/2022 9:42	80.62	6/17/2022 8:05	17.55	6/17/2022 7:14	8.53	6/17/2022 12:10	102.31
6/18/2022 11:01	50.38	6/18/2022 9:43	80.61	6/17/2022 8:06	17.53	6/17/2022 7:15	8.53	6/17/2022 12:11	102.00
6/18/2022 11:02	50.35	6/18/2022 9:44	80.64	6/17/2022 8:07	17.51	6/17/2022 7:16	8.48	6/17/2022 12:12	101.69
6/18/2022 11:03	50.33	6/18/2022 9:45	80.64	6/17/2022 8:08	17.47	6/17/2022 7:17	8.41	6/17/2022 12:13	101.41
6/18/2022 11:04	50.33	6/18/2022 9:46	80.64	6/17/2022 8:09	17.44	6/17/2022 7:18	8.42	6/17/2022 12:14	101.11
6/18/2022 11:05	50.33	6/18/2022 9:47	80.65	6/17/2022 8:10	17.43	6/17/2022 7:19	8.46	6/17/2022 12:15	100.81
6/18/2022 11:06	50.30	6/18/2022 9:48	80.64	6/17/2022 8:11	17.40	6/17/2022 7:20	8.40	6/17/2022 12:16	100.52
6/18/2022 11:07	50.27	6/18/2022 9:49	80.67	6/17/2022 8:12	17.37	6/17/2022 7:21	8.46	6/17/2022 12:17	100.29
6/18/2022 11:08	50.27	6/18/2022 9:50	80.63	6/17/2022 8:13	17.37	6/17/2022 7:22	8.37	6/17/2022 12:18	100.02
6/18/2022 11:09	50.27	6/18/2022 9:51	80.62	6/17/2022 8:14	17.39	6/17/2022 7:23	8.36	6/17/2022 12:19	99.71
6/18/2022 11:10	50.20	6/18/2022 9:52	80.70	6/17/2022 8:15	17.41	6/17/2022 7:24	8.33	6/17/2022 12:20	99.44
6/18/2022 11:11	50.19	6/18/2022 9:53	80.64	6/17/2022 8:16	17.28	6/17/2022 7:25	8.31	6/17/2022 12:21	99.20
6/18/2022 11:12	50.20	6/18/2022 9:54	80.66	6/17/2022 8:17	17.32	6/17/2022 7:26	8.33	6/17/2022 12:22	98.95
6/18/2022 11:13	50.19	6/18/2022 9:55	80.64	6/17/2022 8:18	17.30	6/17/2022 7:27	8.19	6/17/2022 12:23	98.70
6/18/2022 11:14	50.21	6/18/2022 9:56	80.63	6/17/2022 8:19	17.28	6/17/2022 7:28	8.30	6/17/2022 12:24	98.49
6/18/2022 11:15	50.18	6/18/2022 9:57	80.67	6/17/2022 8:20	17.23	6/17/2022 7:29	8.21	6/17/2022 12:25	98.17
6/18/2022 11:16	50.18	6/18/2022 9:58	80.66	6/17/2022 8:21	17.23	6/17/2022 7:30	8.19	6/17/2022 12:26	97.91
6/18/2022 11:17	50.15	6/18/2022 9:59	80.63	6/17/2022 8:22	17.21	6/17/2022 7:31	8.23	6/17/2022 12:27	97.66
6/18/2022 11:18	50.14	6/18/2022 10:00	80.68	6/17/2022 8:23	17.19	6/17/2022 7:32	8.15	6/17/2022 12:28	97.41
6/18/2022 11:19	50.17	6/18/2022 10:01	80.63	6/17/2022 8:24	17.24	6/17/2022 7:33	8.19	6/17/2022 12:29	97.19
6/18/2022 11:20	50.11	6/18/2022 10:02	80.62	6/17/2022 8:25	17.19	6/17/2022 7:34	8.13	6/17/2022 12:30	96.90
6/18/2022 11:21	50.10	6/18/2022 10:03	80.65	6/17/2022 8:26	17.17	6/17/2022 7:35	8.15	6/17/2022 12:31	96.67
6/18/2022 11:22	50.12	6/18/2022 10:04	80.65	6/17/2022 8:27	17.11	6/17/2022 7:36	8.10	6/17/2022 12:32	96.41
6/18/2022 11:23	50.10	6/18/2022 10:05	80.67	6/17/2022 8:28	17.15	6/17/2022 7:37	8.12	6/17/2022 12:33	96.22
6/18/2022 11:24	50.09	6/18/2022 10:06	80.65	6/17/2022 8:29	17.07	6/17/2022 7:38	8.08	6/17/2022 12:34	95.96
6/18/2022 11:25	50.09	6/18/2022 10:07	80.63	6/17/2022 8:30	17.07	6/17/2022 7:39	8.58	6/17/2022 12:35	95.74
6/18/2022 11:26	50.06	6/18/2022 10:08	80.62	6/17/2022 8:31	17.04	6/17/2022 7:40	8.41	6/17/2022 12:36	95.52
6/18/2022 11:27	50.03	6/18/2022 10:09	80.66	6/17/2022 8:32	17.07	6/17/2022 7:41	8.18	6/17/2022 12:37	95.30
6/18/2022 11:28	50.01	6/18/2022 10:10	80.63	6/17/2022 8:33	17.05	6/17/2022 7:42	8.09	6/17/2022 12:38	95.05
6/18/2022 11:29	50.03	6/18/2022 10:11	80.65	6/17/2022 8:34	17.05	6/17/2022 7:43	8.08	6/17/2022 12:39	94.86
6/18/2022 11:30	50.01	6/18/2022 10:12	80.65	6/17/2022 8:35	17.04	6/17/2022 7:44	8.02	6/17/2022 12:40	94.63
6/18/2022 11:31	50.04	6/18/2022 10:13	80.61	6/17/2022 8:36	17.03	6/17/2022 7:45	8.04	6/17/2022 12:41	94.45
6/18/2022 11:32	50.04	6/18/2022 10:14	80.62	6/17/2022 8:37	17.03	6/17/2022 7:46	7.96	6/17/2022 12:42	94.26
6/18/2022 11:33	50.00	6/18/2022 10:15	80.65	6/17/2022 8:38	17.01	6/17/2022 7:47	7.90	6/17/2022 12:43	94.06
6/18/2022 11:34	50.00	6/18/2022 10:16	80.66	6/17/2022 8:39	16.96	6/17/2022 7:48	7.90	6/17/2022 12:44	93.90
6/18/2022 11:35	50.01	6/18/2022 10:17	80.65	6/17/2022 8:40	16.96	6/17/2022 7:49	7.90	6/17/2022 12:45	93.66
6/18/2022 11:36	50.00	6/18/2022 10:18	80.65	6/17/2022 8:41	16.96	6/17/2022 7:50	7.94	6/17/2022 12:46	93.48
6/18/2022 11:37	49.99	6/18/2022 10:19	80.65	6/17/2022 8:42	16.96	6/17/2022 7:51	7.87	6/17/2022 12:47	93.28
6/18/2022 11:38	49.98	6/18/2022 10:20	80.63	6/17/2022 8:43	16.98	6/17/2022 7:52	7.84	6/17/2022 12:48	93.06
6/18/2022 11:39	49.96	6/18/2022 10:21	80.64	6/17/2022 8:44	16.94	6/17/2022 7:53	7.85	6/17/2022 12:49	92.87
6/18/2022 11:40	49.97	6/18/2022 10:22	80.65	6/17/2022 8:45	16.92	6/17/2022 7:54	7.76	6/17/2022 12:50	92.68
6/18/2022 11:41	49.95	6/18/2022 10:23	80.64	6/17/2022 8:46	16.88	6/17/2022 7:55	7.80	6/17/2022 12:51	92.48
6/18/2022 11:42	49.93	6/18/2022 10:24	80.69	6/17/2022 8:47	16.89	6/17/2022 7:56	7.73	6/17/2022 12:52	92.30
6/18/2022 11:43	49.95	6/18/2022 10:25	80.69	6/17/2022 8:48	16.83	6/17/2022 7:57	7.73	6/17/2022 12:53	92.10
6/18/2022 11:44	49.95	6/18/2022 10:26	80.64	6/17/2022 8:49	16.90	6/17/2022 7:58	7.76	6/17/2022 12:54	91.90
6/18/2022 11:45	49.94	6/18/2022 10:27	80.66	6/17/2022 8:50	16.91	6/17/2022 7:59	7.67	6/17/2022 12:55	91.77
6/18/2022 11:46	49.96	6/18/2022 10:28	80.64	6/17/2022 8:51	16.90	6/17/2022 8:00	7.68	6/17/2022 12:56	91.57
6/18/2022 11:47	49.92	6/18/2022 10:29	80.63	6/17/2022 8:52	16.87	6/17/2022 8:01	7.68	6/17/2022 12:57	91.42
6/18/2022 11:48	49.89	6/18/2022 10:30	80.65	6/17/2022 8:53	16.85	6/17/2022 8:02	7.70	6/17/2022 12:58	91.27
6/18/2022 11:49	49.91	6/18/2022 10:31	80.60	6/17/2022 8:54	16.86	6/17/2022 8:03	7.66	6/17/2022 12:59	91.10
6/18/2022 11:50	49.89	6/18/2022 10:32	80.67	6/17/2022 8:55	16.84	6/17/2022 8:04	7.59	6/17/2022 13:00	90.94
6/18/2022 11:51	49.88	6/18/2022 10:33	80.66	6/17/2022 8:56	16.82	6/17/2022 8:05	7.54	6/17/2022 13:01	90.74
6/18/2022 11:52	49.90	6/18/2022 10:34	80.67	6/17/2022 8:57	16.80	6/17/2022 8:06	7.58	6/17/2022 13:02	90.58
6/18/2022 11:53	49.89	6/18/2022 10:35	80.70	6/17/2022 8:58	16.83	6/17/2022 8:07	7.57	6/17/2022 13:03	90.39
6/18/2022 11:54	49.84	6/18/2022 10:36	80.61	6/17/2022 8:59	16.77	6/17/2022 8:08	7.50	6/17/2022 13:04	90.23
6/18/2022 11:55	49.86	6/18/2022 10:37	80.61	6/17/2022 9:00	16.79	6/17/2022 8:09	7.52	6/17/2022 13:05	90.10
6/18/2022 11:56	49.85	6/18/2022 10:38	80.65	6/17/2022 9:01	16.78	6/17/2022 8:10	7.51	6/17/2022 13:06	89.94
6/18/2022 11:57	49.87	6/18/2022 10:39	80.65	6/17/2022 9:02	16.84	6/17/2022 8:11	7.52	6/17/2022 13:07	89.79
6/18/2022 11:58	49.84	6/18/2022 10:40	80.61	6/17/2022 9:03	16.78	6/17/2022 8:12	7.51	6/17/2022 13:08	89.58
6/18/2022 11:59	49.88	6/18/2022 10:41	80.65	6/17/2022 9:04	16.83	6/17/2022 8:13	7.43	6/17/2022 13:09	89.48
6/18/2022 12:00	49.87	6/18/2022 10:42	80.65	6/17/2022 9:05	16.80	6/17/2022 8:14	7.42	6/17/2022 13:10	89.26
6/18/2022 12:01	49.84	6/18/2022 10:43	80.66	6/17/2022 9:06	16.75	6/17/2022 8:15	7.47	6/17/2022 13:11	89.11
6/18/2022 12:02	49.81	6/18/2022 10:44	80.65	6/17/2022 9:07	16.81	6/17/2022 8:16	7.45	6/17/2022 13:12	88.99
6/18/2022 12:03	49.84	6/18/2022 10:45	80.62	6/17/2022 9:08	16.81	6/17/2022 8:17	7.38	6/17/2022 13:13	88.82
6/18/2022 12:04	49.82	6/18/2022 10:46	80.66	6/17/2022 9:09	16.85	6/17/2022 8:18	7.34	6/17/2022 13:14	88.66
6/18/2022 12:05	49.81	6/18/2022 10:47	80.64	6/17/2022 9:10	16.83	6/17/2022 8:19	7.37	6/17/2022 13:15	88.53
6/18/2022 12:06	49.84	6/18/2022 10:48	80.67	6/17/2022 9:11	16.77	6/17/2022 8:20	7.33	6/17/2022 13:16	88.36
6/18/2022 12:07	49.82	6/18/2022 10:49	80.65	6/17/2022 9:12	16.77	6/17/2022 8:21	7.36	6/17/2022 13:17	88.17
6/18/2022 12:08	49.78	6/18/2022 10:50	80.64	6/17/2022 9:13	16.81	6/17/2022 8:22	7.31	6/17/2022 13:18	88.07
6/18/2022 12:09	49.79	6/18/2022 10:51	80.67	6/17/2022 9:14	16.79	6/17/2022 8:23	7.29	6/17/2022 13:19	87.92
6/18/2022 12:10	49.75	6/18/2022 10:52	80.68	6/17/2022 9:15	16.80	6/17/2022 8:24	7.30	6/17/2022 13:20	87.75
6/18/2022 12:11	49.75	6/18/2022 10:53	80.67	6/17/2022 9:16	16.83	6/17/2022 8:25	7.32	6/17/2022 13:21	87.59
6/18/2022 12:12	49.83	6/18/2022 10:54	80.66	6/17/2022 9:17	16.79	6/17/2022 8:26	7.25	6/17/2022 13:22	87.42

6/18/2022 12:13	49.75	6/18/2022 10:55	80.66	6/17/2022 9:18	16.81	6/17/2022 8:27	7.26	6/17/2022 13:23	87.28
6/18/2022 12:14	49.77	6/18/2022 10:56	80.69	6/17/2022 9:19	16.73	6/17/2022 8:28	7.48	6/17/2022 13:24	87.12
6/18/2022 12:15	49.78	6/18/2022 10:57	80.67	6/17/2022 9:20	16.79	6/17/2022 8:29	7.60	6/17/2022 13:25	86.97
6/18/2022 12:16	49.79	6/18/2022 10:58	80.63	6/17/2022 9:21	16.83	6/17/2022 8:30	7.43	6/17/2022 13:26	86.80
6/18/2022 12:17	49.76	6/18/2022 10:59	80.66	6/17/2022 9:22	16.85	6/17/2022 8:31	7.57	6/17/2022 13:27	86.68
6/18/2022 12:18	49.75	6/18/2022 11:00	80.61	6/17/2022 9:23	16.80	6/17/2022 8:32	7.35	6/17/2022 13:28	86.53
6/18/2022 12:19	49.77	6/18/2022 11:01	80.63	6/17/2022 9:24	16.76	6/17/2022 8:33	7.35	6/17/2022 13:29	86.39
6/18/2022 12:20	49.75	6/18/2022 11:02	80.64	6/17/2022 9:25	16.73	6/17/2022 8:34	7.32	6/17/2022 13:30	86.23
6/18/2022 12:21	49.71	6/18/2022 11:03	80.66	6/17/2022 9:26	16.78	6/17/2022 8:35	7.31	6/17/2022 13:31	86.12
6/18/2022 12:22	49.70	6/18/2022 11:04	80.64	6/17/2022 9:27	16.77	6/17/2022 8:36	7.32	6/17/2022 13:32	85.96
6/18/2022 12:23	49.73	6/18/2022 11:05	83.05	6/17/2022 9:28	16.72	6/17/2022 8:37	7.25	6/17/2022 13:33	85.85
6/18/2022 12:24	49.70	6/18/2022 11:06	82.79	6/17/2022 9:29	16.81	6/17/2022 8:38	7.28	6/17/2022 13:34	85.69
6/18/2022 12:25	49.71	6/18/2022 11:07	82.43	6/17/2022 9:30	16.72	6/17/2022 8:39	7.15	6/17/2022 13:35	85.55
6/18/2022 12:26	49.74	6/18/2022 11:08	82.14	6/17/2022 9:31	16.82	6/17/2022 8:40	7.31	6/17/2022 13:36	85.43
6/18/2022 12:27	49.70	6/18/2022 11:09	81.90	6/17/2022 9:32	16.69	6/17/2022 8:41	7.26	6/17/2022 13:37	85.33
6/18/2022 12:28	49.74	6/18/2022 11:10	82.06	6/17/2022 9:33	16.81	6/17/2022 8:42	7.17	6/17/2022 13:38	85.18
6/18/2022 12:29	49.68	6/18/2022 11:11	82.01	6/17/2022 9:34	16.73	6/17/2022 8:43	7.15	6/17/2022 13:39	85.05
6/18/2022 12:30	49.68	6/18/2022 11:12	82.21	6/17/2022 9:35	16.75	6/17/2022 8:44	7.13	6/17/2022 13:40	91.56
6/18/2022 12:31	49.68	6/18/2022 11:13	82.27	6/17/2022 9:36	16.75	6/17/2022 8:45	7.16	6/17/2022 13:41	91.52
6/18/2022 12:32	49.70	6/18/2022 11:14	82.04	6/17/2022 9:37	16.76	6/17/2022 8:46	7.14	6/17/2022 13:42	91.29
6/18/2022 12:33	49.68	6/18/2022 11:15	81.88	6/17/2022 9:38	16.76	6/17/2022 8:47	7.13	6/17/2022 13:43	91.09
6/18/2022 12:34	49.68	6/18/2022 11:16	81.97	6/17/2022 9:39	16.72	6/17/2022 8:48	7.11	6/17/2022 13:44	90.89
6/18/2022 12:35	49.69	6/18/2022 11:17	81.81	6/17/2022 9:40	16.71	6/17/2022 8:49	7.12	6/17/2022 13:45	90.67
6/18/2022 12:36	49.67	6/18/2022 11:18	81.65	6/17/2022 9:41	16.69	6/17/2022 8:50	7.14	6/17/2022 13:46	90.44
6/18/2022 12:37	49.68	6/18/2022 11:19	81.57	6/17/2022 9:42	16.67	6/17/2022 8:51	7.00	6/17/2022 13:47	90.27
6/18/2022 12:38	49.69	6/18/2022 11:20	81.48	6/17/2022 9:43	16.70	6/17/2022 8:52	7.03	6/17/2022 13:48	90.05
6/18/2022 12:39	49.64	6/18/2022 11:21	81.36	6/17/2022 9:44	16.74	6/17/2022 8:53	7.02	6/17/2022 13:49	89.89
6/18/2022 12:40	49.69	6/18/2022 11:22	81.33	6/17/2022 9:45	16.72	6/17/2022 8:54	7.06	6/17/2022 13:50	89.67
6/18/2022 12:41	49.68	6/18/2022 11:23	81.23	6/17/2022 9:46	16.72	6/17/2022 8:55	7.00	6/17/2022 13:51	89.49
6/18/2022 12:42	49.67	6/18/2022 11:24	81.23	6/17/2022 9:47	16.65	6/17/2022 8:56	7.00	6/17/2022 13:52	89.32
6/18/2022 12:43	49.65	6/18/2022 11:25	81.16	6/17/2022 9:48	16.70	6/17/2022 8:57	7.01	6/17/2022 13:53	89.14
6/18/2022 12:44	49.68	6/18/2022 11:26	81.10	6/17/2022 9:49	16.72	6/17/2022 8:58	6.95	6/17/2022 13:54	88.99
6/18/2022 12:45	49.66	6/18/2022 11:27	81.06	6/17/2022 9:50	16.64	6/17/2022 8:59	7.06	6/17/2022 13:55	88.77
6/18/2022 12:46	49.65	6/18/2022 11:28	81.05	6/17/2022 9:51	16.71	6/17/2022 9:00	6.98	6/17/2022 13:56	88.60
6/18/2022 12:47	49.65	6/18/2022 11:29	81.04	6/17/2022 9:52	16.64	6/17/2022 9:01	6.97	6/17/2022 13:57	88.50
6/18/2022 12:48	49.64	6/18/2022 11:30	80.97	6/17/2022 9:53	16.61	6/17/2022 9:02	6.90	6/17/2022 13:58	88.27
6/18/2022 12:49	49.65	6/18/2022 11:31	80.94	6/17/2022 9:54	16.72	6/17/2022 9:03	6.96	6/17/2022 13:59	88.13
6/18/2022 12:50	49.62	6/18/2022 11:32	80.96	6/17/2022 9:55	16.65	6/17/2022 9:04	6.86	6/17/2022 14:00	87.97
6/18/2022 12:51	49.63	6/18/2022 11:33	80.90	6/17/2022 9:56	16.66	6/17/2022 9:05	6.89	6/17/2022 14:01	87.79
6/18/2022 12:52	49.65	6/18/2022 11:34	80.91	6/17/2022 9:57	16.62	6/17/2022 9:06	6.88	6/17/2022 14:02	87.57
6/18/2022 12:53	49.60	6/18/2022 11:35	80.89	6/17/2022 9:58	16.64	6/17/2022 9:07	6.89	6/17/2022 14:03	87.45
6/18/2022 12:54	49.63	6/18/2022 11:36	80.86	6/17/2022 9:59	16.62	6/17/2022 9:08	6.90	6/17/2022 14:04	87.27
6/18/2022 12:55	49.64	6/18/2022 11:37	80.89	6/17/2022 10:00	16.62	6/17/2022 9:09	6.82	6/17/2022 14:05	87.11
6/18/2022 12:56	49.61	6/18/2022 11:38	80.86	6/17/2022 10:01	16.62	6/17/2022 9:10	6.84	6/17/2022 14:06	86.92
6/18/2022 12:57	49.62	6/18/2022 11:39	80.88	6/17/2022 10:02	16.63	6/17/2022 9:11	6.79	6/17/2022 14:07	86.77
6/18/2022 12:58	49.61	6/18/2022 11:40	80.80	6/17/2022 10:03	16.65	6/17/2022 9:12	6.84	6/17/2022 14:08	86.60
6/18/2022 12:59	49.60	6/18/2022 11:41	80.84	6/17/2022 10:04	16.61	6/17/2022 9:13	6.84	6/17/2022 14:09	86.45
6/18/2022 13:00	49.60	6/18/2022 11:42	80.81	6/17/2022 10:05	16.66	6/17/2022 9:14	6.79	6/17/2022 14:10	86.28
6/18/2022 13:01	49.59	6/18/2022 11:43	80.80	6/17/2022 10:06	16.61	6/17/2022 9:15	6.75	6/17/2022 14:11	86.15
6/18/2022 13:02	49.61	6/18/2022 11:44	80.79	6/17/2022 10:07	16.64	6/17/2022 9:16	6.75	6/17/2022 14:12	85.98
6/18/2022 13:03	49.61	6/18/2022 11:45	80.81	6/17/2022 10:08	16.65	6/17/2022 9:17	6.79	6/17/2022 14:13	85.83
6/18/2022 13:04	49.56	6/18/2022 11:46	80.75	6/17/2022 10:09	16.60	6/17/2022 9:18	6.77	6/17/2022 14:14	85.74
6/18/2022 13:05	49.59	6/18/2022 11:47	80.83	6/17/2022 10:10	16.54	6/17/2022 9:19	6.70	6/17/2022 14:15	85.55
6/18/2022 13:06	49.57	6/18/2022 11:48	80.74	6/17/2022 10:11	16.64	6/17/2022 9:20	6.74	6/17/2022 14:16	85.39
6/18/2022 13:07	49.56	6/18/2022 11:49	80.82	6/17/2022 10:12	16.62	6/17/2022 9:21	6.73	6/17/2022 14:17	85.27
6/18/2022 13:08	49.55	6/18/2022 11:50	80.74	6/17/2022 10:13	16.62	6/17/2022 9:22	6.73	6/17/2022 14:18	85.13
6/18/2022 13:09	49.56	6/18/2022 11:51	80.76	6/17/2022 10:14	16.60	6/17/2022 9:23	6.66	6/17/2022 14:19	85.00
6/18/2022 13:10	49.59	6/18/2022 11:52	80.73	6/17/2022 10:15	16.57	6/17/2022 9:24	6.69	6/17/2022 14:20	84.87
6/18/2022 13:11	49.58	6/18/2022 11:53	80.77	6/17/2022 10:16	16.56	6/17/2022 9:25	6.69	6/17/2022 14:21	84.71
6/18/2022 13:12	49.55	6/18/2022 11:54	80.76	6/17/2022 10:17	16.55	6/17/2022 9:26	6.73	6/17/2022 14:22	84.58
6/18/2022 13:13	49.56	6/18/2022 11:55	80.71	6/17/2022 10:18	16.59	6/17/2022 9:27	6.67	6/17/2022 14:23	84.47
6/18/2022 13:14	49.56	6/18/2022 11:56	80.75	6/17/2022 10:19	16.57	6/17/2022 9:28	6.70	6/17/2022 14:24	84.31
6/18/2022 13:15	49.55	6/18/2022 11:57	80.72	6/17/2022 10:20	16.54	6/17/2022 9:29	6.64	6/17/2022 14:25	84.19
6/18/2022 13:16	49.55	6/18/2022 11:58	80.78	6/17/2022 10:21	16.51	6/17/2022 9:30	6.67	6/17/2022 14:26	84.00
6/18/2022 13:17	49.57	6/18/2022 11:59	80.76	6/17/2022 10:22	16.55	6/17/2022 9:31	6.67	6/17/2022 14:27	83.92
6/18/2022 13:18	49.53	6/18/2022 12:00	80.75	6/17/2022 10:23	16.58	6/17/2022 9:32	6.66	6/17/2022 14:28	83.78
6/18/2022 13:19	49.54	6/18/2022 12:01	80.73	6/17/2022 10:24	16.54	6/17/2022 9:33	6.60	6/17/2022 14:29	83.64
6/18/2022 13:20	49.53	6/18/2022 12:02	80.75	6/17/2022 10:25	16.53	6/17/2022 9:34	6.56	6/17/2022 14:30	83.54
6/18/2022 13:21	49.51	6/18/2022 12:03	80.73	6/17/2022 10:26	16.56	6/17/2022 9:35	6.58	6/17/2022 14:31	83.39
6/18/2022 13:22	49.51	6/18/2022 12:04	80.74	6/17/2022 10:27	16.57	6/17/2022 9:36	6.61	6/17/2022 14:32	83.29
6/18/2022 13:23	49.53	6/18/2022 12:05	80.72	6/17/2022 10:28	16.53	6/17/2022 9:37	6.68	6/17/2022 14:33	83.17
6/18/2022 13:24	49.54	6/18/2022 12:06	80.74	6/17/2022 10:29	16.56	6/17/2022 9:38	6.57	6/17/2022 14:34	83.05
6/18/2022 13:25	49.54	6/18/2022 12:07	80.72	6/17/2022 10:30	16.52	6/17/2022 9:39	6.71	6/17/2022 14:35	82.92
6/18/2022 13:26	49.55	6/18/2022 12:08	80.72	6/17/2022 10:31	16.48	6/17/2022 9:40	6.55	6/17/2022 14:36	82.80
6/18/2022 13:27	49.53	6/18/2022 12:09	80.74	6/17/2022 10:32	16.52	6/17/2022 9:41	6.57	6/17/2022 14:37	82.69
6/18/2022 13:28	49.49	6/18/2022 12:10	80.71	6/17/2022 10:33	16.43	6/17/2022 9:42	6.55	6/17/2022 14:38	82.57
6/18/2022 13:29	49.52	6/18/2022 12:11	80.73	6/17/2022 10:34	16.50	6/17/2022 9:43	7.06	6/17/2022 14:39	82.49
6/18/2022 13:30	49.51	6/18/2022 12:12	80.72	6/17/2022 10:35	16.51	6/17/2022 9:44	6.76	6/17/2022 14:40	82.35
6/18/2022 13:31	49.51	6/18/2022 12:13	80.69	6/17/2022 10:36	16.50	6/17/2022 9:45	6.67	6/17/2022 14:41	82.24
6/18/2022 13:32	49.53	6/18/2022 12:14	80.72	6/17/2022 10:37	16.53	6/17/2022 9:46	6.63	6/17/2022 14:42	82.09
6/18/2022 13:33	49.51	6/18/2022 12:15	80.75	6/17/2022 10:38	16.50	6/17/2022 9:47	6.65	6/17/2022 14:43	82.04
6/18/2022 13:34	49.51	6/18/2022 12:16	80.73	6/17/2022 10:39	16.49	6/17/2022 9:48	6.60	6/17/2022 14:44	81.92
6/18/2022 13:35	49.51	6/18/2022 12:17	80.72	6/17/2022 10:40	16.47	6/17/2022 9:49	6.61	6/17/2022 14:45	81.84
6/18/2022 13:36	49.51	6/18/2022 12:18	80.76	6/17/2022 10:41	16.54	6/17/2022 9:50	6.54	6/17/2022 14:46	81.71
6/18/2022 13:37	49.49	6/18/2022 12:19	80.71	6/17/2022 10:42	16.51	6/17/2022 9:51	6.51	6/17/2022 14:47	81.61
6/18/2022 13:38	49.49	6/18/2022 12:20	80.76	6/17/2022 10:43	16.51	6/17/2022 9:52	6.48	6/17/2022 14:48	81.51
6/18/2022 13:39	49.51	6/18/2022 12:21	80.75	6/17/2022 10:44	16.47	6/17/2022 9:53	6.51	6/17/2022 14:49	81.39
6/18/2022 13:40	49.52	6/18/2022 12:22	80.71	6/17/2022 10:45	16.42	6/17/2022 9:54	6.49	6/17/2022 14:50	81.32

6/18/2022 13:41	49.49	6/18/2022 12:23	80.73	6/17/2022 10:46	16.48	6/17/2022 9:55	6.43	6/17/2022 14:51	81.23
6/18/2022 13:42	49.49	6/18/2022 12:24	80.72	6/17/2022 10:47	16.42	6/17/2022 9:56	6.42	6/17/2022 14:52	81.16
6/18/2022 13:43	49.53	6/18/2022 12:25	80.76	6/17/2022 10:48	16.47	6/17/2022 9:57	6.39	6/17/2022 14:53	81.06
6/18/2022 13:44	49.47	6/18/2022 12:26	80.73	6/17/2022 10:49	16.48	6/17/2022 9:58	6.42	6/17/2022 14:54	80.98
6/18/2022 13:45	49.47	6/18/2022 12:27	80.70	6/17/2022 10:50	16.46	6/17/2022 9:59	6.46	6/17/2022 14:55	80.86
6/18/2022 13:46	49.46	6/18/2022 12:28	80.73	6/17/2022 10:51	16.46	6/17/2022 10:00	6.42	6/17/2022 14:56	80.81
6/18/2022 13:47	49.46	6/18/2022 12:29	80.70	6/17/2022 10:52	16.48	6/17/2022 10:01	6.39	6/17/2022 14:57	80.72
6/18/2022 13:48	49.47	6/18/2022 12:30	80.73	6/17/2022 10:53	16.47	6/17/2022 10:02	6.36	6/17/2022 14:58	80.62
6/18/2022 13:49	49.48	6/18/2022 12:31	80.69	6/17/2022 10:54	16.48	6/17/2022 10:03	6.37	6/17/2022 14:59	80.55
6/18/2022 13:50	49.49	6/18/2022 12:32	81.93	6/17/2022 10:55	16.42	6/17/2022 10:04	6.40	6/17/2022 15:00	80.48
6/18/2022 13:51	49.45	6/18/2022 12:33	83.61	6/17/2022 10:56	16.42	6/17/2022 10:05	6.34	6/17/2022 15:01	80.39
6/18/2022 13:52	49.48	6/18/2022 12:34	83.08	6/17/2022 10:57	16.45	6/17/2022 10:06	6.33	6/17/2022 15:02	80.24
6/18/2022 13:53	49.44	6/18/2022 12:35	82.70	6/17/2022 10:58	16.42	6/17/2022 10:07	6.33	6/17/2022 15:03	80.19
6/18/2022 13:54	49.43	6/18/2022 12:36	82.39	6/17/2022 10:59	16.43	6/17/2022 10:08	6.33	6/17/2022 15:04	80.07
6/18/2022 13:55	49.47	6/18/2022 12:37	82.12	6/17/2022 11:00	16.49	6/17/2022 10:09	6.32	6/17/2022 15:05	80.00
6/18/2022 13:56	49.47	6/18/2022 12:38	81.93	6/17/2022 11:01	16.42	6/17/2022 10:10	6.32	6/17/2022 15:06	79.89
6/18/2022 13:57	49.44	6/18/2022 12:39	81.81	6/17/2022 11:02	16.47	6/17/2022 10:11	6.36	6/17/2022 15:07	79.82
6/18/2022 13:58	49.44	6/18/2022 12:40	81.68	6/17/2022 11:03	16.46	6/17/2022 10:12	6.27	6/17/2022 15:08	79.73
6/18/2022 13:59	49.46	6/18/2022 12:41	81.56	6/17/2022 11:04	16.43	6/17/2022 10:13	6.27	6/17/2022 15:09	79.60
6/18/2022 14:00	49.46	6/18/2022 12:42	81.51	6/17/2022 11:05	16.40	6/17/2022 10:14	6.29	6/17/2022 15:10	79.54
6/18/2022 14:01	49.46	6/18/2022 12:43	81.37	6/17/2022 11:06	16.46	6/17/2022 10:15	6.29	6/17/2022 15:11	79.45
6/18/2022 14:02	49.45	6/18/2022 12:44	81.34	6/17/2022 11:07	16.50	6/17/2022 10:16	6.30	6/17/2022 15:12	79.40
6/18/2022 14:03	49.42	6/18/2022 12:45	81.26	6/17/2022 11:08	16.43	6/17/2022 10:17	6.21	6/17/2022 15:13	79.29
6/18/2022 14:04	49.45	6/18/2022 12:46	81.20	6/17/2022 11:09	17.85	6/17/2022 10:18	6.22	6/17/2022 15:14	79.22
6/18/2022 14:05	49.41	6/18/2022 12:47	81.20	6/17/2022 11:10	22.88	6/17/2022 10:19	6.30	6/17/2022 15:15	79.19
6/18/2022 14:06	49.43	6/18/2022 12:48	81.12	6/17/2022 11:11	25.86	6/17/2022 10:20	6.27	6/17/2022 15:16	79.15
6/18/2022 14:07	49.46	6/18/2022 12:49	81.07	6/17/2022 11:12	23.32	6/17/2022 10:21	6.28	6/17/2022 15:17	79.04
6/18/2022 14:08	49.43	6/18/2022 12:50	81.10	6/17/2022 11:13	21.62	6/17/2022 10:22	6.52	6/17/2022 15:18	78.96
6/18/2022 14:09	49.44	6/18/2022 12:51	81.04	6/17/2022 11:14	20.55	6/17/2022 10:23	6.57	6/17/2022 15:19	78.94
6/18/2022 14:10	49.44	6/18/2022 12:52	81.03	6/17/2022 11:15	19.93	6/17/2022 10:24	6.88	6/17/2022 15:20	78.87
6/18/2022 14:11	49.44	6/18/2022 12:53	80.96	6/17/2022 11:16	19.43	6/17/2022 10:25	6.56	6/17/2022 15:21	78.77
6/18/2022 14:12	49.42	6/18/2022 12:54	81.01	6/17/2022 11:17	19.12	6/17/2022 10:26	6.52	6/17/2022 15:22	78.73
6/18/2022 14:13	49.45	6/18/2022 12:55	80.93	6/17/2022 11:18	18.88	6/17/2022 10:27	6.55	6/17/2022 15:23	78.63
6/18/2022 14:14	49.39	6/18/2022 12:56	80.92	6/17/2022 11:19	18.74	6/17/2022 10:28	6.52	6/17/2022 15:24	78.57
6/18/2022 14:15	49.44	6/18/2022 12:57	80.94	6/17/2022 11:20	18.54	6/17/2022 10:29	6.50	6/17/2022 15:25	79.08
6/18/2022 14:16	49.43	6/18/2022 12:58	80.94	6/17/2022 11:21	18.34	6/17/2022 10:30	6.42	6/17/2022 15:26	83.89
6/18/2022 14:17	49.43	6/18/2022 12:59	80.91	6/17/2022 11:22	18.31	6/17/2022 10:31	6.53	6/17/2022 15:27	83.62
6/18/2022 14:18	49.44	6/18/2022 13:00	80.87	6/17/2022 11:23	18.22	6/17/2022 10:32	6.48	6/17/2022 15:28	83.44
6/18/2022 14:19	49.38	6/18/2022 13:01	80.88	6/17/2022 11:24	18.11	6/17/2022 10:33	6.35	6/17/2022 15:29	83.25
6/18/2022 14:20	49.38	6/18/2022 13:02	80.88	6/17/2022 11:25	17.99	6/17/2022 10:34	6.32	6/17/2022 15:30	83.11
6/18/2022 14:21	49.40	6/18/2022 13:03	80.85	6/17/2022 11:26	17.95	6/17/2022 10:35	6.43	6/17/2022 15:31	82.97
6/18/2022 14:22	49.42	6/18/2022 13:04	80.86	6/17/2022 11:27	17.88	6/17/2022 10:36	6.31	6/17/2022 15:32	82.83
6/18/2022 14:23	49.39	6/18/2022 13:05	80.83	6/17/2022 11:28	17.80	6/17/2022 10:37	6.30	6/17/2022 15:33	82.71
6/18/2022 14:24	49.41	6/18/2022 13:06	80.85	6/17/2022 11:29	17.77	6/17/2022 10:38	6.24	6/17/2022 15:34	82.55
6/18/2022 14:25	49.41	6/18/2022 13:07	80.83	6/17/2022 11:30	17.66	6/17/2022 10:39	6.27	6/17/2022 15:35	82.40
6/18/2022 14:26	49.39	6/18/2022 13:08	80.81	6/17/2022 11:31	17.68	6/17/2022 10:40	6.35	6/17/2022 15:36	82.24
6/18/2022 14:27	49.43	6/18/2022 13:09	80.81	6/17/2022 11:32	17.60	6/17/2022 10:41	6.50	6/17/2022 15:37	82.13
6/18/2022 14:28	49.38	6/18/2022 13:10	80.83	6/17/2022 11:33	17.53	6/17/2022 10:42	6.47	6/17/2022 15:38	82.02
6/18/2022 14:29	49.41	6/18/2022 13:11	80.80	6/17/2022 11:34	17.53	6/17/2022 10:43	6.56	6/17/2022 15:39	81.89
6/18/2022 14:30	49.37	6/18/2022 13:12	80.84	6/17/2022 11:35	17.52	6/17/2022 10:44	6.60	6/17/2022 15:40	81.79
6/18/2022 14:31	49.41	6/18/2022 13:13	80.77	6/17/2022 11:36	17.44	6/17/2022 10:45	6.61	6/17/2022 15:41	81.66
6/18/2022 14:32	49.37	6/18/2022 13:14	80.78	6/17/2022 11:37	17.47	6/17/2022 10:46	6.45	6/17/2022 15:42	81.57
6/18/2022 14:33	49.43	6/18/2022 13:15	80.80	6/17/2022 11:38	17.39	6/17/2022 10:47	6.82	6/17/2022 15:43	81.42
6/18/2022 14:34	49.39	6/18/2022 13:16	80.76	6/17/2022 11:39	17.37	6/17/2022 10:48	6.80	6/17/2022 15:44	81.29
6/18/2022 14:35	49.38	6/18/2022 13:17	80.80	6/17/2022 11:40	17.31	6/17/2022 10:49	6.50	6/17/2022 15:45	81.21
6/18/2022 14:36	49.40	6/18/2022 13:18	80.81	6/17/2022 11:41	17.35	6/17/2022 10:50	6.84	6/17/2022 15:46	81.11
6/18/2022 14:37	49.37	6/18/2022 13:19	80.75	6/17/2022 11:42	17.26	6/17/2022 10:51	7.00	6/17/2022 15:47	81.05
6/18/2022 14:38	49.34	6/18/2022 13:20	80.74	6/17/2022 11:43	17.24	6/17/2022 10:52	6.68	6/17/2022 15:48	80.92
6/18/2022 14:39	49.38	6/18/2022 13:21	80.79	6/17/2022 11:44	17.27	6/17/2022 10:53	6.89	6/17/2022 15:49	80.80
6/18/2022 14:40	49.38	6/18/2022 13:22	80.75	6/17/2022 11:45	17.18	6/17/2022 10:54	6.64	6/17/2022 15:50	80.73
6/18/2022 14:41	49.39	6/18/2022 13:23	80.79	6/17/2022 11:46	17.15	6/17/2022 10:55	6.67	6/17/2022 15:51	80.63
6/18/2022 14:42	49.37	6/18/2022 13:24	80.76	6/17/2022 11:47	17.17	6/17/2022 10:56	6.61	6/17/2022 15:52	80.52
6/18/2022 14:43	49.39	6/18/2022 13:25	80.78	6/17/2022 11:48	17.17	6/17/2022 10:57	6.72	6/17/2022 15:53	80.42
6/18/2022 14:44	49.40	6/18/2022 13:26	80.77	6/17/2022 11:49	17.16	6/17/2022 10:58	6.98	6/17/2022 15:54	80.28
6/18/2022 14:45	49.34	6/18/2022 13:27	80.77	6/17/2022 11:50	17.13	6/17/2022 10:59	6.65	6/17/2022 15:55	80.26
6/18/2022 14:46	49.36	6/18/2022 13:28	80.73	6/17/2022 11:51	17.06	6/17/2022 11:00	6.63	6/17/2022 15:56	80.13
6/18/2022 14:47	49.34	6/18/2022 13:29	80.73	6/17/2022 11:52	17.08	6/17/2022 11:01	6.46	6/17/2022 15:57	80.04
6/18/2022 14:48	49.39	6/18/2022 13:30	80.75	6/17/2022 11:53	17.09	6/17/2022 11:02	6.46	6/17/2022 15:58	79.89
6/18/2022 14:49	49.38	6/18/2022 13:31	80.79	6/17/2022 11:54	17.07	6/17/2022 11:03	6.60	6/17/2022 15:59	79.85
6/18/2022 14:50	49.35	6/18/2022 13:32	80.74	6/17/2022 11:55	20.57	6/17/2022 11:04	6.65	6/17/2022 16:00	79.70
6/18/2022 14:51	49.34	6/18/2022 13:33	80.79	6/17/2022 11:56	24.69	6/17/2022 11:05	6.47	6/17/2022 16:01	79.56
6/18/2022 14:52	49.34	6/18/2022 13:34	80.70	6/17/2022 11:57	27.16	6/17/2022 11:06	6.53	6/17/2022 16:02	79.51
6/18/2022 14:53	49.33	6/18/2022 13:35	80.77	6/17/2022 11:58	23.71	6/17/2022 11:07	6.36	6/17/2022 16:03	79.41
6/18/2022 14:54	49.33	6/18/2022 13:36	80.76	6/17/2022 11:59	22.09	6/17/2022 11:08	6.38	6/17/2022 16:04	79.32
6/18/2022 14:55	49.34	6/18/2022 13:37	80.79	6/17/2022 12:00	21.12	6/17/2022 11:09	6.36	6/17/2022 16:05	79.25
6/18/2022 14:56	49.36	6/18/2022 13:38	80.75	6/17/2022 12:01	20.47	6/17/2022 11:10	6.37	6/17/2022 16:06	79.17
6/18/2022 14:57	49.38	6/18/2022 13:39	80.74	6/17/2022 12:02	20.04	6/17/2022 11:11	6.62	6/17/2022 16:07	79.08
6/18/2022 14:58	49.34	6/18/2022 13:40	80.78	6/17/2022 12:03	19.74	6/17/2022 11:12	6.38	6/17/2022 16:08	79.07
6/18/2022 14:59	49.35	6/18/2022 13:41	80.74	6/17/2022 12:04	19.43	6/17/2022 11:13	6.42	6/17/2022 16:09	78.97
6/18/2022 15:00	49.35	6/18/2022 13:42	80.78	6/17/2022 12:05	19.26	6/17/2022 11:14	6.39	6/17/2022 16:10	78.89
6/18/2022 15:01	49.36	6/18/2022 13:43	80.71	6/17/2022 12:06	19.09	6/17/2022 11:15	6.34	6/17/2022 16:11	78.79
6/18/2022 15:02	49.31	6/18/2022 13:44	80.77	6/17/2022 12:07	18.93	6/17/2022 11:16	6.29	6/17/2022 16:12	78.75
6/18/2022 15:03	49.35	6/18/2022 13:45	80.75	6/17/2022 12:08	18.84	6/17/2022 11:17	6.24	6/17/2022 16:13	78.66
6/18/2022 15:04	49.34	6/18/2022 13:46	80.77	6/17/2022 12:09	18.69	6/17/2022 11:18	6.25	6/17/2022 16:14	78.58
6/18/2022 15:05	49.35	6/18/2022 13:47	80.75	6/17/2022 12:10	18.60	6/17/2022 11:19	6.23	6/17/2022 16:15	78.51
6/18/2022 15:06	49.33	6/18/2022 13:48	80.75	6/17/2022 12:11	18.53	6/17/2022 11:20	6.30	6/17/2022 16:16	78.43
6/18/2022 15:07	49.35	6/18/2022 13:49	80.70	6/17/2022 12:12	18.38	6/17/2022 11:21	6.24	6/17/2022 16:17	78.32
6/18/2022 15:08	49.36	6/18/2022 13:50	80.77	6/17/2022 12:13	18.39	6/17/2022 11:22	6.20	6/17/2022 16:18	78.22

6/18/2022 15:09	49.30	6/18/2022 13:51	80.74	6/17/2022 12:14	18.24	6/17/2022 11:23	6.26	6/17/2022 16:19	78.20
6/18/2022 15:10	49.37	6/18/2022 13:52	80.73	6/17/2022 12:15	18.26	6/17/2022 11:24	6.16	6/17/2022 16:20	78.08
6/18/2022 15:11	49.35	6/18/2022 13:53	80.72	6/17/2022 12:16	18.16	6/17/2022 11:25	6.16	6/17/2022 16:21	78.00
6/18/2022 15:12	49.32	6/18/2022 13:54	80.72	6/17/2022 12:17	18.07	6/17/2022 11:26	6.30	6/17/2022 16:22	77.92
6/18/2022 15:13	49.32	6/18/2022 13:55	80.73	6/17/2022 12:18	18.09	6/17/2022 11:27	6.21	6/17/2022 16:23	77.81
6/18/2022 15:14	49.30	6/18/2022 13:56	80.76	6/17/2022 12:19	17.99	6/17/2022 11:28	6.14	6/17/2022 16:24	77.76
6/18/2022 15:15	49.32	6/18/2022 13:57	80.74	6/17/2022 12:20	17.97	6/17/2022 11:29	6.30	6/17/2022 16:25	77.69
6/18/2022 15:16	49.32	6/18/2022 13:58	80.72	6/17/2022 12:21	17.91	6/17/2022 11:30	6.18	6/17/2022 16:26	77.61
6/18/2022 15:17	49.33	6/18/2022 13:59	80.71	6/17/2022 12:22	17.88	6/17/2022 11:31	6.16	6/17/2022 16:27	77.52
6/18/2022 15:18	49.30	6/18/2022 14:00	80.70	6/17/2022 12:23	17.82	6/17/2022 11:32	6.17	6/17/2022 16:28	77.47
6/18/2022 15:19	49.32	6/18/2022 14:01	80.73	6/17/2022 12:24	17.79	6/17/2022 11:33	6.26	6/17/2022 16:29	77.37
6/18/2022 15:20	49.34	6/18/2022 14:02	80.72	6/17/2022 12:25	17.77	6/17/2022 11:34	6.23	6/17/2022 16:30	77.34
6/18/2022 15:21	49.35	6/18/2022 14:03	80.74	6/17/2022 12:26	17.70	6/17/2022 11:35	6.21	6/17/2022 16:31	77.21
6/18/2022 15:22	49.33	6/18/2022 14:04	80.76	6/17/2022 12:27	17.71	6/17/2022 11:36	6.09	6/17/2022 16:32	77.17
6/18/2022 15:23	49.37	6/18/2022 14:05	80.75	6/17/2022 12:28	17.64	6/17/2022 11:37	6.09	6/17/2022 16:33	77.11
6/18/2022 15:24	49.32	6/18/2022 14:06	80.74	6/17/2022 12:29	17.58	6/17/2022 11:38	6.22	6/17/2022 16:34	77.07
6/18/2022 15:25	49.31	6/18/2022 14:07	80.75	6/17/2022 12:30	17.58	6/17/2022 11:39	6.13	6/17/2022 16:35	76.98
6/18/2022 15:26	49.32	6/18/2022 14:08	80.74	6/17/2022 12:31	17.59	6/17/2022 11:40	6.05	6/17/2022 16:36	76.90
6/18/2022 15:27	49.31	6/18/2022 14:09	80.75	6/17/2022 12:32	17.55	6/17/2022 11:41	6.06	6/17/2022 16:37	76.83
6/18/2022 15:28	49.32	6/18/2022 14:10	80.75	6/17/2022 12:33	17.57	6/17/2022 11:42	6.06	6/17/2022 16:38	76.73
6/18/2022 15:29	49.35	6/18/2022 14:11	80.72	6/17/2022 12:34	17.49	6/17/2022 11:43	6.02	6/17/2022 16:39	76.69
6/18/2022 15:30	49.32	6/18/2022 14:12	80.75	6/17/2022 12:35	17.47	6/17/2022 11:44	6.05	6/17/2022 16:40	76.65
6/18/2022 15:31	49.30	6/18/2022 14:13	80.74	6/17/2022 12:36	17.46	6/17/2022 11:45	5.98	6/17/2022 16:41	76.54
6/18/2022 15:32	49.28	6/18/2022 14:14	80.75	6/17/2022 12:37	17.43	6/17/2022 11:46	6.12	6/17/2022 16:42	76.50
6/18/2022 15:33	49.32	6/18/2022 14:15	80.76	6/17/2022 12:38	17.39	6/17/2022 11:47	6.22	6/17/2022 16:43	76.43
6/18/2022 15:34	49.30	6/18/2022 14:16	80.74	6/17/2022 12:39	17.35	6/17/2022 11:48	6.05	6/17/2022 16:44	76.36
6/18/2022 15:35	49.30	6/18/2022 14:17	80.76	6/17/2022 12:40	17.35	6/17/2022 11:49	6.37	6/17/2022 16:45	76.26
6/18/2022 15:36	49.31	6/18/2022 14:18	80.73	6/17/2022 12:41	17.36	6/17/2022 11:50	6.28	6/17/2022 16:46	76.20
6/18/2022 15:37	49.28	6/18/2022 14:19	80.73	6/17/2022 12:42	17.36	6/17/2022 11:51	6.41	6/17/2022 16:47	76.15
6/18/2022 15:38	49.31	6/18/2022 14:20	80.71	6/17/2022 12:43	17.30	6/17/2022 11:52	6.23	6/17/2022 16:48	76.08
6/18/2022 15:39	49.33	6/18/2022 14:21	80.76	6/17/2022 12:44	17.30	6/17/2022 11:53	6.17	6/17/2022 16:49	75.96
6/18/2022 15:40	49.30	6/18/2022 14:22	80.76	6/17/2022 12:45	17.27	6/17/2022 11:54	6.14	6/17/2022 16:50	75.92
6/18/2022 15:41	49.32	6/18/2022 14:23	80.74	6/17/2022 12:46	17.25	6/17/2022 11:55	6.04	6/17/2022 16:51	75.86
6/18/2022 15:42	49.32	6/18/2022 14:24	80.71	6/17/2022 12:47	17.24	6/17/2022 11:56	6.02	6/17/2022 16:52	75.84
6/18/2022 15:43	49.32	6/18/2022 14:25	80.74	6/17/2022 12:48	17.25	6/17/2022 11:57	6.03	6/17/2022 16:53	75.75
6/18/2022 15:44	49.32	6/18/2022 14:26	80.71	6/17/2022 12:49	17.21	6/17/2022 11:58	6.04	6/17/2022 16:54	75.65
6/18/2022 15:45	49.30	6/18/2022 14:27	80.74	6/17/2022 12:50	17.15	6/17/2022 11:59	5.92	6/17/2022 16:55	75.60
6/18/2022 15:46	49.32	6/18/2022 14:28	80.70	6/17/2022 12:51	17.18	6/17/2022 12:00	5.95	6/17/2022 16:56	75.53
6/18/2022 15:47	49.31	6/18/2022 14:29	80.73	6/17/2022 12:52	17.15	6/17/2022 12:01	5.97	6/17/2022 16:57	75.48
6/18/2022 15:48	49.28	6/18/2022 14:30	80.71	6/17/2022 12:53	17.15	6/17/2022 12:02	6.37	6/17/2022 16:58	75.43
6/18/2022 15:49	49.28	6/18/2022 14:31	80.70	6/17/2022 12:54	17.11	6/17/2022 12:03	6.09	6/17/2022 16:59	75.38
6/18/2022 15:50	49.30	6/18/2022 14:32	80.73	6/17/2022 12:55	17.12	6/17/2022 12:04	6.03	6/17/2022 17:00	75.32
6/18/2022 15:51	49.31	6/18/2022 14:33	80.73	6/17/2022 12:56	17.10	6/17/2022 12:05	6.03	6/17/2022 17:01	75.25
6/18/2022 15:52	49.30	6/18/2022 14:34	80.72	6/17/2022 12:57	17.09	6/17/2022 12:06	5.92	6/17/2022 17:02	75.16
6/18/2022 15:53	49.27	6/18/2022 14:35	80.71	6/17/2022 12:58	17.08	6/17/2022 12:07	5.90	6/17/2022 17:03	75.15
6/18/2022 15:54	49.27	6/18/2022 14:36	80.70	6/17/2022 12:59	17.10	6/17/2022 12:08	5.92	6/17/2022 17:04	75.04
6/18/2022 15:55	49.31	6/18/2022 14:37	80.72	6/17/2022 13:00	17.05	6/17/2022 12:09	5.92	6/17/2022 17:05	75.02
6/18/2022 15:56	49.29	6/18/2022 14:38	80.75	6/17/2022 13:01	17.01	6/17/2022 12:10	5.96	6/17/2022 17:06	74.94
6/18/2022 15:57	49.28	6/18/2022 14:39	80.71	6/17/2022 13:02	17.02	6/17/2022 12:11	5.88	6/17/2022 17:07	74.87
6/18/2022 15:58	49.31	6/18/2022 14:40	80.72	6/17/2022 13:03	17.04	6/17/2022 12:12	5.84	6/17/2022 17:08	74.82
6/18/2022 15:59	49.28	6/18/2022 14:41	80.70	6/17/2022 13:04	16.98	6/17/2022 12:13	5.85	6/17/2022 17:09	74.78
6/18/2022 16:00	49.31	6/18/2022 14:42	80.73	6/17/2022 13:05	17.00	6/17/2022 12:14	5.89	6/17/2022 17:10	74.72
6/18/2022 16:01	49.24	6/18/2022 14:43	80.71	6/17/2022 13:06	16.99	6/17/2022 12:15	5.91	6/17/2022 17:11	74.67
6/18/2022 16:02	49.29	6/18/2022 14:44	80.71	6/17/2022 13:07	16.96	6/17/2022 12:16	5.83	6/17/2022 17:12	74.62
6/18/2022 16:03	49.29	6/18/2022 14:45	80.76	6/17/2022 13:08	16.93	6/17/2022 12:17	5.82	6/17/2022 17:13	74.58
6/18/2022 16:04	49.28	6/18/2022 14:46	80.73	6/17/2022 13:09	16.99	6/17/2022 12:18	5.79	6/17/2022 17:14	74.50
6/18/2022 16:05	49.28	6/18/2022 14:47	80.76	6/17/2022 13:10	16.92	6/17/2022 12:19	5.97	6/17/2022 17:15	74.45
6/18/2022 16:06	49.29	6/18/2022 14:48	80.72	6/17/2022 13:11	16.94	6/17/2022 12:20	5.93	6/17/2022 17:16	74.39
6/18/2022 16:07	49.26	6/18/2022 14:49	80.71	6/17/2022 13:12	16.92	6/17/2022 12:21	5.87	6/17/2022 17:17	74.33
6/18/2022 16:08	49.30	6/18/2022 14:50	80.71	6/17/2022 13:13	16.88	6/17/2022 12:22	5.83	6/17/2022 17:18	74.30
6/18/2022 16:09	49.28	6/18/2022 14:51	80.73	6/17/2022 13:14	16.87	6/17/2022 12:23	5.85	6/17/2022 17:19	74.24
6/18/2022 16:10	49.29	6/18/2022 14:52	80.72	6/17/2022 13:15	16.86	6/17/2022 12:24	5.72	6/17/2022 17:20	74.17
6/18/2022 16:11	49.26	6/18/2022 14:53	80.73	6/17/2022 13:16	16.96	6/17/2022 12:25	5.77	6/17/2022 17:21	74.13
6/18/2022 16:12	49.31	6/18/2022 14:54	80.76	6/17/2022 13:17	16.89	6/17/2022 12:26	5.73	6/17/2022 17:22	74.08
6/18/2022 16:13	49.28	6/18/2022 14:55	80.72	6/17/2022 13:18	16.87	6/17/2022 12:27	5.74	6/17/2022 17:23	74.03
6/18/2022 16:14	49.29	6/18/2022 14:56	80.73	6/17/2022 13:19	16.84	6/17/2022 12:28	5.73	6/17/2022 17:24	73.96
6/18/2022 16:15	49.29	6/18/2022 14:57	80.72	6/17/2022 13:20	16.85	6/17/2022 12:29	5.74	6/17/2022 17:25	73.90
6/18/2022 16:16	49.26	6/18/2022 14:58	80.73	6/17/2022 13:21	16.83	6/17/2022 12:30	5.69	6/17/2022 17:26	73.89
6/18/2022 16:17	49.25	6/18/2022 14:59	80.73	6/17/2022 13:22	16.85	6/17/2022 12:31	5.68	6/17/2022 17:27	73.82
6/18/2022 16:18	49.24	6/18/2022 15:00	80.73	6/17/2022 13:23	16.82	6/17/2022 12:32	5.69	6/17/2022 17:28	73.79
6/18/2022 16:19	49.26	6/18/2022 15:01	80.68	6/17/2022 13:24	16.84	6/17/2022 12:33	5.73	6/17/2022 17:29	73.75
6/18/2022 16:20	49.27	6/18/2022 15:02	80.70	6/17/2022 13:25	16.82	6/17/2022 12:34	5.80	6/17/2022 17:30	73.68
6/18/2022 16:21	49.28	6/18/2022 15:03	80.69	6/17/2022 13:26	16.84	6/17/2022 12:35	5.66	6/17/2022 17:31	73.67
6/18/2022 16:22	49.25	6/18/2022 15:04	80.72	6/17/2022 13:27	16.82	6/17/2022 12:36	5.71	6/17/2022 17:32	73.59
6/18/2022 16:23	49.31	6/18/2022 15:05	80.70	6/17/2022 13:28	19.44	6/17/2022 12:37	5.68	6/17/2022 17:33	73.55
6/18/2022 16:24	49.26	6/18/2022 15:06	80.73	6/17/2022 13:29	24.01	6/17/2022 12:38	5.70	6/17/2022 17:34	73.48
6/18/2022 16:25	49.25	6/18/2022 15:07	80.70	6/17/2022 13:30	26.71	6/17/2022 12:39	5.65	6/17/2022 17:35	73.44
6/18/2022 16:26	49.28	6/18/2022 15:08	80.72	6/17/2022 13:31	23.97	6/17/2022 12:40	5.69	6/17/2022 17:36	73.41
6/18/2022 16:27	49.27	6/18/2022 15:09	80.71	6/17/2022 13:32	22.19	6/17/2022 12:41	5.60	6/17/2022 17:37	73.36
6/18/2022 16:28	49.26	6/18/2022 15:10	80.69	6/17/2022 13:33	21.10	6/17/2022 12:42	5.60	6/17/2022 17:38	73.30
6/18/2022 16:29	49.28	6/18/2022 15:11	80.72	6/17/2022 13:34	20.42	6/17/2022 12:43	5.59	6/17/2022 17:39	73.26
6/18/2022 16:30	49.29	6/18/2022 15:12	80.72	6/17/2022 13:35	19.94	6/17/2022 12:44	5.66	6/17/2022 17:40	74.10
6/18/2022 16:31	49.28	6/18/2022 15:13	80.75	6/17/2022 13:36	19.58	6/17/2022 12:45	5.66	6/17/2022 17:41	78.91
6/18/2022 16:32	49.21	6/18/2022 15:14	80.72	6/17/2022 13:37	19.39	6/17/2022 12:46	5.54	6/17/2022 17:42	78.78
6/18/2022 16:33	49.27	6/18/2022 15:15	80.76	6/17/2022 13:38	19.11	6/17/2022 12:47	5.57	6/17/2022 17:43	78.62
6/18/2022 16:34	49.26	6/18/2022 15:16	80.74	6/17/2022 13:39	18.98	6/17/2022 12:48	5.57	6/17/2022 17:44	78.50
6/18/2022 16:35	49.23	6/18/2022 15:17	80.75	6/17/2022 13:40	18.81	6/17/2022 12:49	5.56	6/17/2022 17:45	78.42
6/18/2022 16:36	49.26	6/18/2022 15:18	80.72	6/17/2022 13:41	18.67	6/17/2022 12:50	5.58	6/17/2022 17:46	78.26

6/18/2022 16:37	49.29	6/18/2022 15:19	80.74	6/17/2022 13:42	18.62	6/17/2022 12:51	5.50	6/17/2022 17:47	78.18
6/18/2022 16:38	49.29	6/18/2022 15:20	80.73	6/17/2022 13:43	18.48	6/17/2022 12:52	5.54	6/17/2022 17:48	78.04
6/18/2022 16:39	49.24	6/18/2022 15:21	80.71	6/17/2022 13:44	18.40	6/17/2022 12:53	5.48	6/17/2022 17:49	77.96
6/18/2022 16:40	49.26	6/18/2022 15:22	80.70	6/17/2022 13:45	18.37	6/17/2022 12:54	5.50	6/17/2022 17:50	77.85
6/18/2022 16:41	49.27	6/18/2022 15:23	80.73	6/17/2022 13:46	18.29	6/17/2022 12:55	5.54	6/17/2022 17:51	77.78
6/18/2022 16:42	49.28	6/18/2022 15:24	80.71	6/17/2022 13:47	18.19	6/17/2022 12:56	5.53	6/17/2022 17:52	77.64
6/18/2022 16:43	49.25	6/18/2022 15:25	80.74	6/17/2022 13:48	18.14	6/17/2022 12:57	5.55	6/17/2022 17:53	77.54
6/18/2022 16:44	49.23	6/18/2022 15:26	80.70	6/17/2022 13:49	18.02	6/17/2022 12:58	5.48	6/17/2022 17:54	77.48
6/18/2022 16:45	49.27	6/18/2022 15:27	80.75	6/17/2022 13:50	17.99	6/17/2022 12:59	5.78	6/17/2022 17:55	77.41
6/18/2022 16:46	49.25	6/18/2022 15:28	80.72	6/17/2022 13:51	17.94	6/17/2022 13:00	5.60	6/17/2022 17:56	77.30
6/18/2022 16:47	49.25	6/18/2022 15:29	80.73	6/17/2022 13:52	17.87	6/17/2022 13:01	5.53	6/17/2022 17:57	77.20
6/18/2022 16:48	49.27	6/18/2022 15:30	80.75	6/17/2022 13:53	17.85	6/17/2022 13:02	5.56	6/17/2022 17:58	77.13
6/18/2022 16:49	49.24	6/18/2022 15:31	80.70	6/17/2022 13:54	17.82	6/17/2022 13:03	5.53	6/17/2022 17:59	77.05
6/18/2022 16:50	49.25	6/18/2022 15:32	80.72	6/17/2022 13:55	17.74	6/17/2022 13:04	5.55	6/17/2022 18:00	76.95
6/18/2022 16:51	49.25	6/18/2022 15:33	80.72	6/17/2022 13:56	17.75	6/17/2022 13:05	5.46	6/17/2022 18:01	76.87
6/18/2022 16:52	49.25	6/18/2022 15:34	80.71	6/17/2022 13:57	17.70	6/17/2022 13:06	5.47	6/17/2022 18:02	76.80
6/18/2022 16:53	49.25	6/18/2022 15:35	80.71	6/17/2022 13:58	17.69	6/17/2022 13:07	5.46	6/17/2022 18:03	76.74
6/18/2022 16:54	49.26	6/18/2022 15:36	80.71	6/17/2022 13:59	17.64	6/17/2022 13:08	5.46	6/17/2022 18:04	76.66
6/18/2022 16:55	49.27	6/18/2022 15:37	80.76	6/17/2022 14:00	17.61	6/17/2022 13:09	5.50	6/17/2022 18:05	76.55
6/18/2022 16:56	49.25	6/18/2022 15:38	80.72	6/17/2022 14:01	17.53	6/17/2022 13:10	5.52	6/17/2022 18:06	76.45
6/18/2022 16:57	49.23	6/18/2022 15:39	80.72	6/17/2022 14:02	17.53	6/17/2022 13:11	5.43	6/17/2022 18:07	76.40
6/18/2022 16:58	49.23	6/18/2022 15:40	80.77	6/17/2022 14:03	17.53	6/17/2022 13:12	5.45	6/17/2022 18:08	76.28
6/18/2022 16:59	49.24	6/18/2022 15:41	80.72	6/17/2022 14:04	17.44	6/17/2022 13:13	5.47	6/17/2022 18:09	76.24
6/18/2022 17:00	49.27	6/18/2022 15:42	80.71	6/17/2022 14:05	17.42	6/17/2022 13:14	5.45	6/17/2022 18:10	76.17
6/18/2022 17:01	49.26	6/18/2022 15:43	80.71	6/17/2022 14:06	17.41	6/17/2022 13:15	5.48	6/17/2022 18:11	76.07
6/18/2022 17:02	49.22	6/18/2022 15:44	80.70	6/17/2022 14:07	17.38	6/17/2022 13:16	5.41	6/17/2022 18:12	75.99
6/18/2022 17:03	49.25	6/18/2022 15:45	80.73	6/17/2022 14:08	17.39	6/17/2022 13:17	5.40	6/17/2022 18:13	75.89
6/18/2022 17:04	49.24	6/18/2022 15:46	80.73	6/17/2022 14:09	17.36	6/17/2022 13:18	5.71	6/17/2022 18:14	75.85
6/18/2022 17:05	49.21	6/18/2022 15:47	80.70	6/17/2022 14:10	17.34	6/17/2022 13:19	5.75	6/17/2022 18:15	75.75
6/18/2022 17:06	49.26	6/18/2022 15:48	80.71	6/17/2022 14:11	17.33	6/17/2022 13:20	5.62	6/17/2022 18:16	75.67
6/18/2022 17:07	49.26	6/18/2022 15:49	80.75	6/17/2022 14:12	17.28	6/17/2022 13:21	5.55	6/17/2022 18:17	75.60
6/18/2022 17:08	49.24	6/18/2022 15:50	80.72	6/17/2022 14:13	17.30	6/17/2022 13:22	5.52	6/17/2022 18:18	75.50
6/18/2022 17:09	49.27	6/18/2022 15:51	80.74	6/17/2022 14:14	17.24	6/17/2022 13:23	5.44	6/17/2022 18:19	75.47
6/18/2022 17:10	49.24	6/18/2022 15:52	80.70	6/17/2022 14:15	17.27	6/17/2022 13:24	5.45	6/17/2022 18:20	75.37
6/18/2022 17:11	49.24	6/18/2022 15:53	80.71	6/17/2022 14:16	17.26	6/17/2022 13:25	5.42	6/17/2022 18:21	75.28
6/18/2022 17:12	49.25	6/18/2022 15:54	80.70	6/17/2022 14:17	17.17	6/17/2022 13:26	5.39	6/17/2022 18:22	75.23
6/18/2022 17:13	49.24	6/18/2022 15:55	80.74	6/17/2022 14:18	17.25	6/17/2022 13:27	5.40	6/17/2022 18:23	75.12
6/18/2022 17:14	49.24	6/18/2022 15:56	80.75	6/17/2022 14:19	17.18	6/17/2022 13:28	5.41	6/17/2022 18:24	75.08
6/18/2022 17:15	49.22	6/18/2022 15:57	80.71	6/17/2022 14:20	17.19	6/17/2022 13:29	5.44	6/17/2022 18:25	75.03
6/18/2022 17:16	49.26	6/18/2022 15:58	80.69	6/17/2022 14:21	17.15	6/17/2022 13:30	5.36	6/17/2022 18:26	74.94
6/18/2022 17:17	49.24	6/18/2022 15:59	80.69	6/17/2022 14:22	17.16	6/17/2022 13:31	5.31	6/17/2022 18:27	74.91
6/18/2022 17:18	49.28	6/18/2022 16:00	80.70	6/17/2022 14:23	17.10	6/17/2022 13:32	5.36	6/17/2022 18:28	74.83
6/18/2022 17:19	49.25	6/18/2022 16:01	80.71	6/17/2022 14:24	17.09	6/17/2022 13:33	5.37	6/17/2022 18:29	74.74
6/18/2022 17:20	49.25	6/18/2022 16:02	80.70	6/17/2022 14:25	17.10	6/17/2022 13:34	5.37	6/17/2022 18:30	74.67
6/18/2022 17:21	49.24	6/18/2022 16:03	80.73	6/17/2022 14:26	17.05	6/17/2022 13:35	5.40	6/17/2022 18:31	74.60
6/18/2022 17:22	49.23	6/18/2022 16:04	80.74	6/17/2022 14:27	17.06	6/17/2022 13:36	5.39	6/17/2022 18:32	74.55
6/18/2022 17:23	49.24	6/18/2022 16:05	80.73	6/17/2022 14:28	17.05	6/17/2022 13:37	5.32	6/17/2022 18:33	74.50
6/18/2022 17:24	49.26	6/18/2022 16:06	80.70	6/17/2022 14:29	16.99	6/17/2022 13:38	5.30	6/17/2022 18:34	74.41
6/18/2022 17:25	49.25	6/18/2022 16:07	80.71	6/17/2022 14:30	17.05	6/17/2022 13:39	5.32	6/17/2022 18:35	74.38
6/18/2022 17:26	49.26	6/18/2022 16:08	80.71	6/17/2022 14:31	17.01	6/17/2022 13:40	5.55	6/17/2022 18:36	74.29
6/18/2022 17:27	49.21	6/18/2022 16:09	80.73	6/17/2022 14:32	17.01	6/17/2022 13:41	5.56	6/17/2022 18:37	74.25
6/18/2022 17:28	49.21	6/18/2022 16:10	80.68	6/17/2022 14:33	17.00	6/17/2022 13:42	5.44	6/17/2022 18:38	74.19
6/18/2022 17:29	49.25	6/18/2022 16:11	80.72	6/17/2022 14:34	16.97	6/17/2022 13:43	5.33	6/17/2022 18:39	74.11
6/18/2022 17:30	49.28	6/18/2022 16:12	80.70	6/17/2022 14:35	16.94	6/17/2022 13:44	5.36	6/17/2022 18:40	74.06
6/18/2022 17:31	49.21	6/18/2022 16:13	80.70	6/17/2022 14:36	16.98	6/17/2022 13:45	5.34	6/17/2022 18:41	74.00
6/18/2022 17:32	49.27	6/18/2022 16:14	80.72	6/17/2022 14:37	16.95	6/17/2022 13:46	5.31	6/17/2022 18:42	73.94
6/18/2022 17:33	49.22	6/18/2022 16:15	80.73	6/17/2022 14:38	17.00	6/17/2022 13:47	5.36	6/17/2022 18:43	73.90
6/18/2022 17:34	49.26	6/18/2022 16:16	80.71	6/17/2022 14:39	16.95	6/17/2022 13:48	5.31	6/17/2022 18:44	73.82
6/18/2022 17:35	49.24	6/18/2022 16:17	80.70	6/17/2022 14:40	16.94	6/17/2022 13:49	5.26	6/17/2022 18:45	73.81
6/18/2022 17:36	49.23	6/18/2022 16:18	80.71	6/17/2022 14:41	22.07	6/17/2022 13:50	5.29	6/17/2022 18:46	73.72
6/18/2022 17:37	49.24	6/18/2022 16:19	80.72	6/17/2022 14:42	25.55	6/17/2022 13:51	5.26	6/17/2022 18:47	73.68
6/18/2022 17:38	49.21	6/18/2022 16:20	80.72	6/17/2022 14:43	25.77	6/17/2022 13:52	5.31	6/17/2022 18:48	73.61
6/18/2022 17:39	49.22	6/18/2022 16:21	80.75	6/17/2022 14:44	23.12	6/17/2022 13:53	5.31	6/17/2022 18:49	73.54
6/18/2022 17:40	49.21	6/18/2022 16:22	80.72	6/17/2022 14:45	21.71	6/17/2022 13:54	5.27	6/17/2022 18:50	73.49
6/18/2022 17:41	49.21	6/18/2022 16:23	80.69	6/17/2022 14:46	20.83	6/17/2022 13:55	5.24	6/17/2022 18:51	73.45
6/18/2022 17:42	49.22	6/18/2022 16:24	80.71	6/17/2022 14:47	20.28	6/17/2022 13:56	5.25	6/17/2022 18:52	73.38
6/18/2022 17:43	49.18	6/18/2022 16:25	80.73	6/17/2022 14:48	19.89	6/17/2022 13:57	5.24	6/17/2022 18:53	73.35
6/18/2022 17:44	49.23	6/18/2022 16:26	80.74	6/17/2022 14:49	19.58	6/17/2022 13:58	5.24	6/17/2022 18:54	73.29
6/18/2022 17:45	49.26	6/18/2022 16:27	80.71	6/17/2022 14:50	19.35	6/17/2022 13:59	5.21	6/17/2022 18:55	73.23
6/18/2022 17:46	49.24	6/18/2022 16:28	80.71	6/17/2022 14:51	19.18	6/17/2022 14:00	5.19	6/17/2022 18:56	73.20
6/18/2022 17:47	49.23	6/18/2022 16:29	80.75	6/17/2022 14:52	18.95	6/17/2022 14:01	5.20	6/17/2022 18:57	73.16
6/18/2022 17:48	49.24	6/18/2022 16:30	80.74	6/17/2022 14:53	18.88	6/17/2022 14:02	5.23	6/17/2022 18:58	73.12
6/18/2022 17:49	49.63	6/18/2022 16:31	80.74	6/17/2022 14:54	18.76	6/17/2022 14:03	5.26	6/17/2022 18:59	74.82
6/18/2022 17:50	52.35	6/18/2022 16:32	80.74	6/17/2022 14:55	18.67	6/17/2022 14:04	5.26	6/17/2022 19:00	78.31
6/18/2022 17:51	53.57	6/18/2022 16:33	80.73	6/17/2022 14:56	18.53	6/17/2022 14:05	5.13	6/17/2022 19:01	78.17
6/18/2022 17:52	54.20	6/18/2022 16:34	80.73	6/17/2022 14:57	18.47	6/17/2022 14:06	5.17	6/17/2022 19:02	78.02
6/18/2022 17:53	53.07	6/18/2022 16:35	80.72	6/17/2022 14:58	18.37	6/17/2022 14:07	5.18	6/17/2022 19:03	77.87
6/18/2022 17:54	51.55	6/18/2022 16:36	80.72	6/17/2022 14:59	18.33	6/17/2022 14:08	5.18	6/17/2022 19:04	77.80
6/18/2022 17:55	50.93	6/18/2022 16:37	80.71	6/17/2022 15:00	18.22	6/17/2022 14:09	5.22	6/17/2022 19:05	77.64
6/18/2022 17:56	50.61	6/18/2022 16:38	80.70	6/17/2022 15:01	18.18	6/17/2022 14:10	5.14	6/17/2022 19:06	77.52
6/18/2022 17:57	50.40	6/18/2022 16:39	80.69	6/17/2022 15:02	18.13	6/17/2022 14:11	5.15	6/17/2022 19:07	77.44
6/18/2022 17:58	50.28	6/18/2022 16:40	80.70	6/17/2022 15:03	18.02	6/17/2022 14:12	5.18	6/17/2022 19:08	77.35
6/18/2022 17:59	50.22	6/18/2022 16:41	80.78	6/17/2022 15:04	17.97	6/17/2022 14:13	5.16	6/17/2022 19:09	77.25
6/18/2022 18:00	50.13	6/18/2022 16:42	80.73	6/17/2022 15:05	17.97	6/17/2022 14:14	5.16	6/17/2022 19:10	77.15
6/18/2022 18:01	50.08	6/18/2022 16:43	80.73	6/17/2022 15:06	17.94	6/17/2022 14:15	5.26	6/17/2022 19:11	77.06
6/18/2022 18:02	50.04	6/18/2022 16:44	80.75	6/17/2022 15:07	17.85	6/17/2022 14:16	5.13	6/17/2022 19:12	76.98
6/18/2022 18:03	49.98	6/18/2022 16:45	80.72	6/17/2022 15:08	17.83	6/17/2022 14:17	5.10	6/17/2022 19:13	76.90
6/18/2022 18:04	49.95	6/18/2022 16:46	80.76	6/17/2022 15:09	17.78	6/17/2022 14:18	5.14	6/17/2022 19:14	76.79

6/18/2022 18:05	49.92	6/18/2022 16:47	80.72	6/17/2022 15:10	17.76	6/17/2022 14:19	5.12	6/17/2022 19:15	76.72
6/18/2022 18:06	49.85	6/18/2022 16:48	80.68	6/17/2022 15:11	17.71	6/17/2022 14:20	5.46	6/17/2022 19:16	76.61
6/18/2022 18:07	49.86	6/18/2022 16:49	80.68	6/17/2022 15:12	17.69	6/17/2022 14:21	5.22	6/17/2022 19:17	76.53
6/18/2022 18:08	49.86	6/18/2022 16:50	80.76	6/17/2022 15:13	17.65	6/17/2022 14:22	5.18	6/17/2022 19:18	76.45
6/18/2022 18:09	49.81	6/18/2022 16:51	80.70	6/17/2022 15:14	17.63	6/17/2022 14:23	5.20	6/17/2022 19:19	76.36
6/18/2022 18:10	49.80	6/18/2022 16:52	80.72	6/17/2022 15:15	17.62	6/17/2022 14:24	5.17	6/17/2022 19:20	76.28
6/18/2022 18:11	49.75	6/18/2022 16:53	80.71	6/17/2022 15:16	17.55	6/17/2022 14:25	5.15	6/17/2022 19:21	76.18
6/18/2022 18:12	49.79	6/18/2022 16:54	80.71	6/17/2022 15:17	17.52	6/17/2022 14:26	5.09	6/17/2022 19:22	76.08
6/18/2022 18:13	49.75	6/18/2022 16:55	80.73	6/17/2022 15:18	17.54	6/17/2022 14:27	5.07	6/17/2022 19:23	76.02
6/18/2022 18:14	49.72	6/18/2022 16:56	80.71	6/17/2022 15:19	17.52	6/17/2022 14:28	5.11	6/17/2022 19:24	75.89
6/18/2022 18:15	49.72	6/18/2022 16:57	80.70	6/17/2022 15:20	17.45	6/17/2022 14:29	5.13	6/17/2022 19:25	75.82
6/18/2022 18:16	49.71	6/18/2022 16:58	80.72	6/17/2022 15:21	17.46	6/17/2022 14:30	5.12	6/17/2022 19:26	75.72
6/18/2022 18:17	49.72	6/18/2022 16:59	80.74	6/17/2022 15:22	17.46	6/17/2022 14:31	5.13	6/17/2022 19:27	75.65
6/18/2022 18:18	49.70	6/18/2022 17:00	80.73	6/17/2022 15:23	17.40	6/17/2022 14:32	5.07	6/17/2022 19:28	75.57
6/18/2022 18:19	49.67	6/18/2022 17:01	80.75	6/17/2022 15:24	17.39	6/17/2022 14:33	5.07	6/17/2022 19:29	75.47
6/18/2022 18:20	49.66	6/18/2022 17:02	80.70	6/17/2022 15:25	17.38	6/17/2022 14:34	5.07	6/17/2022 19:30	75.40
6/18/2022 18:21	49.63	6/18/2022 17:03	80.71	6/17/2022 15:26	17.32	6/17/2022 14:35	5.07	6/17/2022 19:31	75.33
6/18/2022 18:22	49.65	6/18/2022 17:04	80.73	6/17/2022 15:27	17.27	6/17/2022 14:36	5.42	6/17/2022 19:32	75.21
6/18/2022 18:23	49.68	6/18/2022 17:05	80.73	6/17/2022 15:28	17.28	6/17/2022 14:37	5.31	6/17/2022 19:33	75.15
6/18/2022 18:24	49.63	6/18/2022 17:06	80.71	6/17/2022 15:29	17.27	6/17/2022 14:38	5.21	6/17/2022 19:34	75.06
6/18/2022 18:25	49.64	6/18/2022 17:07	80.72	6/17/2022 15:30	17.28	6/17/2022 14:39	5.17	6/17/2022 19:35	75.02
6/18/2022 18:26	49.64	6/18/2022 17:08	80.70	6/17/2022 15:31	17.22	6/17/2022 14:40	5.11	6/17/2022 19:36	74.93
6/18/2022 18:27	49.63	6/18/2022 17:09	80.69	6/17/2022 15:32	17.21	6/17/2022 14:41	5.10	6/17/2022 19:37	74.89
6/18/2022 18:28	49.57	6/18/2022 17:10	80.71	6/17/2022 15:33	17.22	6/17/2022 14:42	5.10	6/17/2022 19:38	74.77
6/18/2022 18:29	49.59	6/18/2022 17:11	80.69	6/17/2022 15:34	17.21	6/17/2022 14:43	5.09	6/17/2022 19:39	74.74
6/18/2022 18:30	49.61	6/18/2022 17:12	80.69	6/17/2022 15:35	17.19	6/17/2022 14:44	5.08	6/17/2022 19:40	74.64
6/18/2022 18:31	49.60	6/18/2022 17:13	80.70	6/17/2022 15:36	17.17	6/17/2022 14:45	5.07	6/17/2022 19:41	74.55
6/18/2022 18:32	49.55	6/18/2022 17:14	80.71	6/17/2022 15:37	17.16	6/17/2022 14:46	5.06	6/17/2022 19:42	74.53
6/18/2022 18:33	49.58	6/18/2022 17:15	80.72	6/17/2022 15:38	17.11	6/17/2022 14:47	5.07	6/17/2022 19:43	74.41
6/18/2022 18:34	49.55	6/18/2022 17:16	80.69	6/17/2022 15:39	17.13	6/17/2022 14:48	5.10	6/17/2022 19:44	74.37
6/18/2022 18:35	49.56	6/18/2022 17:17	80.74	6/17/2022 15:40	17.17	6/17/2022 14:49	5.12	6/17/2022 19:45	74.30
6/18/2022 18:36	49.54	6/18/2022 17:18	80.72	6/17/2022 15:41	17.08	6/17/2022 14:50	5.00	6/17/2022 19:46	74.22
6/18/2022 18:37	49.55	6/18/2022 17:19	80.71	6/17/2022 15:42	17.06	6/17/2022 14:51	4.97	6/17/2022 19:47	74.20
6/18/2022 18:38	49.52	6/18/2022 17:20	80.69	6/17/2022 15:43	17.12	6/17/2022 14:52	4.99	6/17/2022 19:48	74.06
6/18/2022 18:39	49.56	6/18/2022 17:21	80.72	6/17/2022 15:44	17.06	6/17/2022 14:53	5.07	6/17/2022 19:49	74.02
6/18/2022 18:40	49.56	6/18/2022 17:22	80.69	6/17/2022 15:45	17.06	6/17/2022 14:54	5.05	6/17/2022 19:50	73.97
6/18/2022 18:41	49.51	6/18/2022 17:23	80.72	6/17/2022 15:46	21.44	6/17/2022 14:55	4.98	6/17/2022 19:51	73.88
6/18/2022 18:42	49.55	6/18/2022 17:24	80.75	6/17/2022 15:47	25.23	6/17/2022 14:56	4.98	6/17/2022 19:52	73.82
6/18/2022 18:43	49.51	6/18/2022 17:25	80.70	6/17/2022 15:48	27.62	6/17/2022 14:57	5.08	6/17/2022 19:53	73.73
6/18/2022 18:44	49.52	6/18/2022 17:26	80.70	6/17/2022 15:49	24.07	6/17/2022 14:58	5.02	6/17/2022 19:54	73.72
6/18/2022 18:45	49.51	6/18/2022 17:27	80.70	6/17/2022 15:50	22.41	6/17/2022 14:59	5.03	6/17/2022 19:55	73.66
6/18/2022 18:46	49.51	6/18/2022 17:28	80.69	6/17/2022 15:51	21.36	6/17/2022 15:00	5.04	6/17/2022 19:56	73.58
6/18/2022 18:47	49.52	6/18/2022 17:29	80.74	6/17/2022 15:52	20.74	6/17/2022 15:01	5.03	6/17/2022 19:57	73.51
6/18/2022 18:48	49.48	6/18/2022 17:30	80.69	6/17/2022 15:53	20.24	6/17/2022 15:02	5.00	6/17/2022 19:58	73.48
6/18/2022 18:49	49.50	6/18/2022 17:31	80.71	6/17/2022 15:54	19.87	6/17/2022 15:03	4.97	6/17/2022 19:59	73.42
6/18/2022 18:50	49.48	6/18/2022 17:32	80.71	6/17/2022 15:55	19.65	6/17/2022 15:04	5.00	6/17/2022 20:00	73.32
6/18/2022 18:51	49.48	6/18/2022 17:33	80.75	6/17/2022 15:56	19.44	6/17/2022 15:05	4.98	6/17/2022 20:01	73.30
6/18/2022 18:52	49.48	6/18/2022 17:34	80.71	6/17/2022 15:57	19.24	6/17/2022 15:06	4.99	6/17/2022 20:02	73.26
6/18/2022 18:53	49.50	6/18/2022 17:35	80.75	6/17/2022 15:58	19.13	6/17/2022 15:07	5.01	6/17/2022 20:03	73.16
6/18/2022 18:54	49.51	6/18/2022 17:36	80.70	6/17/2022 15:59	19.00	6/17/2022 15:08	4.91	6/17/2022 20:04	73.12
6/18/2022 18:55	49.47	6/18/2022 17:37	80.72	6/17/2022 16:00	18.88	6/17/2022 15:09	4.95	6/17/2022 20:05	73.05
6/18/2022 18:56	49.47	6/18/2022 17:38	80.73	6/17/2022 16:01	18.76	6/17/2022 15:10	4.90	6/17/2022 20:06	73.01
6/18/2022 18:57	49.48	6/18/2022 17:39	80.73	6/17/2022 16:02	18.68	6/17/2022 15:11	4.98	6/17/2022 20:07	72.94
6/18/2022 18:58	49.46	6/18/2022 17:40	80.71	6/17/2022 16:03	18.61	6/17/2022 15:12	4.98	6/17/2022 20:08	72.91
6/18/2022 18:59	49.45	6/18/2022 17:41	80.74	6/17/2022 16:04	18.51	6/17/2022 15:13	4.94	6/17/2022 20:09	72.86
6/18/2022 19:00	49.45	6/18/2022 17:42	80.74	6/17/2022 16:05	18.43	6/17/2022 15:14	4.88	6/17/2022 20:10	72.79
6/18/2022 19:01	49.48	6/18/2022 17:43	80.71	6/17/2022 16:06	18.38	6/17/2022 15:15	4.90	6/17/2022 20:11	72.76
6/18/2022 19:02	49.44	6/18/2022 17:44	80.72	6/17/2022 16:07	18.31	6/17/2022 15:16	4.93	6/17/2022 20:12	72.69
6/18/2022 19:03	49.49	6/18/2022 17:45	80.75	6/17/2022 16:08	18.25	6/17/2022 15:17	4.91	6/17/2022 20:13	72.63
6/18/2022 19:04	49.45	6/18/2022 17:46	80.74	6/17/2022 16:09	18.21	6/17/2022 15:18	4.92	6/17/2022 20:14	72.57
6/18/2022 19:05	49.45	6/18/2022 17:47	80.71	6/17/2022 16:10	18.13	6/17/2022 15:19	4.87	6/17/2022 20:15	72.53
6/18/2022 19:06	49.44	6/18/2022 17:48	80.72	6/17/2022 16:11	18.11	6/17/2022 15:20	4.91	6/17/2022 20:16	72.47
6/18/2022 19:07	49.47	6/18/2022 17:49	80.74	6/17/2022 16:12	18.10	6/17/2022 15:21	4.86	6/17/2022 20:17	72.43
6/18/2022 19:08	49.45	6/18/2022 17:50	80.73	6/17/2022 16:13	17.99	6/17/2022 15:22	4.89	6/17/2022 20:18	72.37
6/18/2022 19:09	49.41	6/18/2022 17:51	80.71	6/17/2022 16:14	17.97	6/17/2022 15:23	4.92	6/17/2022 20:19	72.33
6/18/2022 19:10	49.44	6/18/2022 17:52	80.71	6/17/2022 16:15	17.94	6/17/2022 15:24	4.85	6/17/2022 20:20	75.24
6/18/2022 19:11	49.44	6/18/2022 17:53	80.68	6/17/2022 16:16	17.87	6/17/2022 15:25	4.88	6/17/2022 20:21	80.76
6/18/2022 19:12	49.44	6/18/2022 17:54	80.68	6/17/2022 16:17	17.91	6/17/2022 15:26	4.86	6/17/2022 20:22	80.50
6/18/2022 19:13	49.42	6/18/2022 17:55	80.71	6/17/2022 16:18	17.84	6/17/2022 15:27	4.85	6/17/2022 20:23	83.00
6/18/2022 19:14	49.44	6/18/2022 17:56	80.71	6/17/2022 16:19	17.78	6/17/2022 15:28	4.86	6/17/2022 20:24	88.41
6/18/2022 19:15	49.41	6/18/2022 17:57	80.73	6/17/2022 16:20	17.82	6/17/2022 15:29	4.89	6/17/2022 20:25	88.03
6/18/2022 19:16	49.43	6/18/2022 17:58	80.73	6/17/2022 16:21	17.71	6/17/2022 15:30	4.86	6/17/2022 20:26	90.61
6/18/2022 19:17	49.41	6/18/2022 17:59	80.72	6/17/2022 16:22	17.74	6/17/2022 15:31	4.81	6/17/2022 20:27	95.44
6/18/2022 19:18	49.41	6/18/2022 18:00	80.73	6/17/2022 16:23	17.64	6/17/2022 15:32	4.86	6/17/2022 20:28	94.89
6/18/2022 19:19	49.39	6/18/2022 18:01	80.75	6/17/2022 16:24	17.64	6/17/2022 15:33	4.87	6/17/2022 20:29	97.41
6/18/2022 19:20	49.40	6/18/2022 18:02	80.75	6/17/2022 16:25	17.65	6/17/2022 15:34	4.87	6/17/2022 20:30	102.66
6/18/2022 19:21	49.38	6/18/2022 18:03	80.71	6/17/2022 16:26	17.56	6/17/2022 15:35	4.81	6/17/2022 20:31	102.05
6/18/2022 19:22	49.40	6/18/2022 18:04	80.69	6/17/2022 16:27	17.54	6/17/2022 15:36	4.80	6/17/2022 20:32	103.63
6/18/2022 19:23	49.40	6/18/2022 18:05	80.71	6/17/2022 16:28	17.57	6/17/2022 15:37	4.82	6/17/2022 20:33	109.53
6/18/2022 19:24	49.39	6/18/2022 18:06	80.71	6/17/2022 16:29	17.54	6/17/2022 15:38	4.81	6/17/2022 20:34	108.81
6/18/2022 19:25	49.38	6/18/2022 18:07	80.71	6/17/2022 16:30	17.48	6/17/2022 15:39	4.82	6/17/2022 20:35	108.18
6/18/2022 19:26	49.34	6/18/2022 18:08	80.73	6/17/2022 16:31	17.47	6/17/2022 15:40	4.86	6/17/2022 20:36	107.66
6/18/2022 19:27	49.38	6/18/2022 18:09	80.71	6/17/2022 16:32	17.43	6/17/2022 15:41	4.77	6/17/2022 20:37	107.12
6/18/2022 19:28	49.38	6/18/2022 18:10	80.73	6/17/2022 16:33	17.40	6/17/2022 15:42	4.77	6/17/2022 20:38	106.63
6/18/2022 19:29	49.35	6/18/2022 18:11	80.72	6/17/2022 16:34	17.44	6/17/2022 15:43	4.81	6/17/2022 20:39	106.15
6/18/2022 19:30	49.40	6/18/2022 18:12	80.70	6/17/2022 16:35	17.41	6/17/2022 15:44	4.78	6/17/2022 20:40	105.67
6/18/2022 19:31	49.37	6/18/2022 18:13	80.73	6/17/2022 16:36	17.40	6/17/2022 15:45	4.81	6/17/2022 20:41	105.20
6/18/2022 19:32	49.33	6/18/2022 18:14	80.73	6/17/2022 16:37	17.38	6/17/2022 15:46	4.76	6/17/2022 20:42	104.75

6/18/2022 19:33	49.38	6/18/2022 18:15	80.70	6/17/2022 16:38	17.38	6/17/2022 15:47	4.77	6/17/2022 20:43	104.33
6/18/2022 19:34	49.36	6/18/2022 18:16	80.71	6/17/2022 16:39	17.38	6/17/2022 15:48	4.99	6/17/2022 20:44	103.92
6/18/2022 19:35	49.36	6/18/2022 18:17	80.72	6/17/2022 16:40	17.34	6/17/2022 15:49	4.94	6/17/2022 20:45	103.48
6/18/2022 19:36	49.37	6/18/2022 18:18	80.71	6/17/2022 16:41	17.31	6/17/2022 15:50	4.85	6/17/2022 20:46	103.05
6/18/2022 19:37	49.37	6/18/2022 18:19	80.71	6/17/2022 16:42	17.26	6/17/2022 15:51	4.86	6/17/2022 20:47	102.67
6/18/2022 19:38	49.34	6/18/2022 18:20	80.67	6/17/2022 16:43	17.29	6/17/2022 15:52	4.79	6/17/2022 20:48	102.28
6/18/2022 19:39	49.36	6/18/2022 18:21	80.72	6/17/2022 16:44	17.27	6/17/2022 15:53	4.79	6/17/2022 20:49	101.87
6/18/2022 19:40	49.32	6/18/2022 18:22	80.75	6/17/2022 16:45	17.24	6/17/2022 15:54	4.78	6/17/2022 20:50	101.49
6/18/2022 19:41	49.34	6/18/2022 18:23	80.70	6/17/2022 16:46	17.23	6/17/2022 15:55	4.79	6/17/2022 20:51	101.09
6/18/2022 19:42	49.37	6/18/2022 18:24	80.70	6/17/2022 16:47	17.22	6/17/2022 15:56	4.78	6/17/2022 20:52	100.75
6/18/2022 19:43	49.38	6/18/2022 18:25	80.72	6/17/2022 16:48	17.24	6/17/2022 15:57	4.82	6/17/2022 20:53	100.33
6/18/2022 19:44	49.35	6/18/2022 18:26	80.70	6/17/2022 16:49	17.16	6/17/2022 15:58	4.73	6/17/2022 20:54	100.01
6/18/2022 19:45	49.34	6/18/2022 18:27	80.74	6/17/2022 16:50	17.18	6/17/2022 15:59	4.69	6/17/2022 20:55	99.66
6/18/2022 19:46	49.35	6/18/2022 18:28	80.72	6/17/2022 16:51	17.17	6/17/2022 16:00	4.71	6/17/2022 20:56	99.29
6/18/2022 19:47	49.30	6/18/2022 18:29	80.73	6/17/2022 16:52	17.18	6/17/2022 16:01	4.73	6/17/2022 20:57	98.94
6/18/2022 19:48	49.28	6/18/2022 18:30	80.71	6/17/2022 16:53	17.20	6/17/2022 16:02	4.79	6/17/2022 20:58	98.64
6/18/2022 19:49	49.33	6/18/2022 18:31	80.68	6/17/2022 16:54	17.11	6/17/2022 16:03	4.89	6/17/2022 20:59	98.26
6/18/2022 19:50	49.31	6/18/2022 18:32	80.72	6/17/2022 16:55	22.50	6/17/2022 16:04	4.84	6/17/2022 21:00	97.95
6/18/2022 19:51	49.34	6/18/2022 18:33	80.75	6/17/2022 16:56	25.92	6/17/2022 16:05	4.77	6/17/2022 21:01	101.02
6/18/2022 19:52	49.33	6/18/2022 18:34	80.69	6/17/2022 16:57	27.38	6/17/2022 16:06	4.81	6/17/2022 21:02	106.04
6/18/2022 19:53	49.32	6/18/2022 18:35	80.71	6/17/2022 16:58	24.19	6/17/2022 16:07	4.78	6/17/2022 21:03	105.47
6/18/2022 19:54	49.30	6/18/2022 18:36	80.75	6/17/2022 16:59	22.55	6/17/2022 16:08	4.79	6/17/2022 21:04	108.01
6/18/2022 19:55	49.38	6/18/2022 18:37	80.74	6/17/2022 17:00	21.61	6/17/2022 16:09	4.77	6/17/2022 21:05	112.25
6/18/2022 19:56	49.32	6/18/2022 18:38	80.75	6/17/2022 17:01	20.91	6/17/2022 16:10	4.87	6/17/2022 21:06	111.60
6/18/2022 19:57	49.34	6/18/2022 18:39	80.70	6/17/2022 17:02	20.45	6/17/2022 16:11	4.74	6/17/2022 21:07	111.03
6/18/2022 19:58	49.32	6/18/2022 18:40	80.70	6/17/2022 17:03	20.13	6/17/2022 16:12	4.78	6/17/2022 21:08	110.48
6/18/2022 19:59	49.35	6/18/2022 18:41	80.69	6/17/2022 17:04	19.86	6/17/2022 16:13	4.77	6/17/2022 21:09	109.98
6/18/2022 20:00	49.33	6/18/2022 18:42	80.72	6/17/2022 17:05	19.66	6/17/2022 16:14	4.75	6/17/2022 21:10	109.45
6/18/2022 20:01	49.33	6/18/2022 18:43	80.67	6/17/2022 17:06	19.53	6/17/2022 16:15	4.76	6/17/2022 21:11	108.98
6/18/2022 20:02	49.36	6/18/2022 18:44	80.68	6/17/2022 17:07	19.38	6/17/2022 16:16	4.73	6/17/2022 21:12	108.51
6/18/2022 20:03	49.32	6/18/2022 18:45	80.69	6/17/2022 17:08	19.20	6/17/2022 16:17	4.79	6/17/2022 21:13	108.03
6/18/2022 20:04	49.30	6/18/2022 18:46	80.70	6/17/2022 17:09	19.11	6/17/2022 16:18	4.75	6/17/2022 21:14	107.56
6/18/2022 20:05	49.31	6/18/2022 18:47	80.72	6/17/2022 17:10	19.05	6/17/2022 16:19	4.71	6/17/2022 21:15	107.17
6/18/2022 20:06	49.31	6/18/2022 18:48	80.72	6/17/2022 17:11	18.95	6/17/2022 16:20	4.75	6/17/2022 21:16	106.70
6/18/2022 20:07	49.35	6/18/2022 18:49	80.72	6/17/2022 17:12	18.87	6/17/2022 16:21	4.75	6/17/2022 21:17	106.29
6/18/2022 20:08	49.32	6/18/2022 18:50	80.69	6/17/2022 17:13	18.83	6/17/2022 16:22	4.75	6/17/2022 21:18	105.87
6/18/2022 20:09	49.34	6/18/2022 18:51	80.71	6/17/2022 17:14	18.74	6/17/2022 16:23	4.75	6/17/2022 21:19	105.44
6/18/2022 20:10	49.33	6/18/2022 18:52	80.71	6/17/2022 17:15	18.68	6/17/2022 16:24	4.71	6/17/2022 21:20	104.99
6/18/2022 20:11	49.30	6/18/2022 18:53	80.72	6/17/2022 17:16	18.62	6/17/2022 16:25	4.73	6/17/2022 21:21	104.61
6/18/2022 20:12	49.30	6/18/2022 18:54	80.70	6/17/2022 17:17	18.56	6/17/2022 16:26	4.70	6/17/2022 21:22	104.27
6/18/2022 20:13	49.32	6/18/2022 18:55	80.71	6/17/2022 17:18	18.47	6/17/2022 16:27	4.76	6/17/2022 21:23	103.89
6/18/2022 20:14	49.32	6/18/2022 18:56	80.69	6/17/2022 17:19	18.44	6/17/2022 16:28	4.70	6/17/2022 21:24	103.49
6/18/2022 20:15	49.33	6/18/2022 18:57	80.72	6/17/2022 17:20	18.38	6/17/2022 16:29	4.78	6/17/2022 21:25	103.11
6/18/2022 20:16	49.30	6/18/2022 18:58	80.77	6/17/2022 17:21	18.38	6/17/2022 16:30	4.69	6/17/2022 21:26	102.75
6/18/2022 20:17	49.31	6/18/2022 18:59	80.70	6/17/2022 17:22	18.30	6/17/2022 16:31	4.76	6/17/2022 21:27	102.37
6/18/2022 20:18	49.29	6/18/2022 19:00	80.68	6/17/2022 17:23	18.24	6/17/2022 16:32	4.72	6/17/2022 21:28	102.00
6/18/2022 20:19	49.32	6/18/2022 19:01	80.71	6/17/2022 17:24	18.25	6/17/2022 16:33	4.68	6/17/2022 21:29	101.64
6/18/2022 20:20	49.30	6/18/2022 19:02	80.71	6/17/2022 17:25	18.24	6/17/2022 16:34	4.76	6/17/2022 21:30	101.29
6/18/2022 20:21	49.34	6/18/2022 19:03	80.71	6/17/2022 17:26	18.19	6/17/2022 16:35	4.66	6/17/2022 21:31	100.95
6/18/2022 20:22	49.33	6/18/2022 19:04	80.71	6/17/2022 17:27	18.11	6/17/2022 16:36	4.70	6/17/2022 21:32	100.58
6/18/2022 20:23	49.31	6/18/2022 19:05	80.71	6/17/2022 17:28	18.12	6/17/2022 16:37	4.70	6/17/2022 21:33	100.26
6/18/2022 20:24	49.31	6/18/2022 19:06	80.71	6/17/2022 17:29	18.13	6/17/2022 16:38	4.69	6/17/2022 21:34	99.95
6/18/2022 20:25	49.31	6/18/2022 19:07	80.71	6/17/2022 17:30	18.04	6/17/2022 16:39	4.77	6/17/2022 21:35	99.55
6/18/2022 20:26	49.30	6/18/2022 19:08	80.76	6/17/2022 17:31	18.03	6/17/2022 16:40	4.67	6/17/2022 21:36	99.30
6/18/2022 20:27	49.33	6/18/2022 19:09	80.73	6/17/2022 17:32	17.99	6/17/2022 16:41	4.69	6/17/2022 21:37	98.94
6/18/2022 20:28	49.29	6/18/2022 19:10	80.73	6/17/2022 17:33	17.97	6/17/2022 16:42	4.67	6/17/2022 21:38	98.62
6/18/2022 20:29	49.33	6/18/2022 19:11	80.73	6/17/2022 17:34	17.97	6/17/2022 16:43	4.63	6/17/2022 21:39	98.29
6/18/2022 20:30	49.31	6/18/2022 19:12	80.74	6/17/2022 17:35	17.93	6/17/2022 16:44	4.64	6/17/2022 21:40	97.97
6/18/2022 20:31	49.30	6/18/2022 19:13	80.73	6/17/2022 17:36	17.89	6/17/2022 16:45	4.59	6/17/2022 21:41	97.64
6/18/2022 20:32	49.31	6/18/2022 19:14	80.73	6/17/2022 17:37	17.89	6/17/2022 16:46	4.60	6/17/2022 21:42	97.33
6/18/2022 20:33	49.29	6/18/2022 19:15	80.72	6/17/2022 17:38	17.88	6/17/2022 16:47	4.63	6/17/2022 21:43	97.05
6/18/2022 20:34	49.28	6/18/2022 19:16	80.73	6/17/2022 17:39	17.85	6/17/2022 16:48	4.59	6/17/2022 21:44	96.72
6/18/2022 20:35	49.28	6/18/2022 19:17	80.71	6/17/2022 17:40	17.82	6/17/2022 16:49	4.63	6/17/2022 21:45	96.44
6/18/2022 20:36	49.28	6/18/2022 19:18	80.70	6/17/2022 17:41	17.81	6/17/2022 16:50	4.59	6/17/2022 21:46	96.17
6/18/2022 20:37	49.29	6/18/2022 19:19	80.71	6/17/2022 17:42	17.82	6/17/2022 16:51	4.58	6/17/2022 21:47	95.91
6/18/2022 20:38	49.30	6/18/2022 19:20	80.72	6/17/2022 17:43	17.77	6/17/2022 16:52	4.57	6/17/2022 21:48	95.64
6/18/2022 20:39	49.29	6/18/2022 19:21	80.72	6/17/2022 17:44	17.77	6/17/2022 16:53	4.60	6/17/2022 21:49	95.33
6/18/2022 20:40	49.29	6/18/2022 19:22	80.74	6/17/2022 17:45	17.70	6/17/2022 16:54	4.52	6/17/2022 21:50	95.04
6/18/2022 20:41	49.31	6/18/2022 19:23	80.74	6/17/2022 17:46	17.72	6/17/2022 16:55	4.57	6/17/2022 21:51	94.77
6/18/2022 20:42	49.29	6/18/2022 19:24	80.70	6/17/2022 17:47	17.70	6/17/2022 16:56	4.54	6/17/2022 21:52	94.54
6/18/2022 20:43	49.27	6/18/2022 19:25	80.74	6/17/2022 17:48	17.66	6/17/2022 16:57	4.56	6/17/2022 21:53	94.29
6/18/2022 20:44	49.25	6/18/2022 19:26	80.76	6/17/2022 17:49	17.65	6/17/2022 16:58	4.59	6/17/2022 21:54	94.08
6/18/2022 20:45	49.34	6/18/2022 19:27	80.72	6/17/2022 17:50	17.62	6/17/2022 16:59	4.52	6/17/2022 21:55	93.83
6/18/2022 20:46	49.28	6/18/2022 19:28	80.75	6/17/2022 17:51	17.63	6/17/2022 17:00	4.57	6/17/2022 21:56	93.59
6/18/2022 20:47	49.29	6/18/2022 19:29	80.72	6/17/2022 17:52	17.58	6/17/2022 17:01	4.55	6/17/2022 21:57	93.32
6/18/2022 20:48	49.29	6/18/2022 19:30	80.72	6/17/2022 17:53	17.60	6/17/2022 17:02	4.61	6/17/2022 21:58	93.07
6/18/2022 20:49	49.29	6/18/2022 19:31	80.77	6/17/2022 17:54	17.52	6/17/2022 17:03	4.46	6/17/2022 21:59	92.84
6/18/2022 20:50	49.29	6/18/2022 19:32	80.72	6/17/2022 17:55	17.49	6/17/2022 17:04	4.45	6/17/2022 22:00	92.54
6/18/2022 20:51	49.30	6/18/2022 19:33	80.72	6/17/2022 17:56	17.55	6/17/2022 17:05	4.51	6/17/2022 22:01	92.31
6/18/2022 20:52	49.30	6/18/2022 19:34	80.70	6/17/2022 17:57	17.51	6/17/2022 17:06	4.55	6/17/2022 22:02	92.06
6/18/2022 20:53	49.31	6/18/2022 19:35	80.70	6/17/2022 17:58	17.49	6/17/2022 17:07	4.47	6/17/2022 22:03	91.90
6/18/2022 20:54	49.27	6/18/2022 19:36	80.72	6/17/2022 17:59	17.50	6/17/2022 17:08	4.86	6/17/2022 22:04	91.68
6/18/2022 20:55	49.31	6/18/2022 19:37	80.73	6/17/2022 18:00	17.47	6/17/2022 17:09	4.78	6/17/2022 22:05	91.47
6/18/2022 20:56	49.27	6/18/2022 19:38	80.69	6/17/2022 18:01	17.45	6/17/2022 17:10	4.58	6/17/2022 22:06	91.30
6/18/2022 20:57	49.30	6/18/2022 19:39	80.76	6/17/2022 18:02	17.43	6/17/2022 17:11	4.58	6/17/2022 22:07	91.07
6/18/2022 20:58	49.29	6/18/2022 19:40	80.70	6/17/2022 18:03	17.42	6/17/2022 17:12	4.56	6/17/2022 22:08	90.86
6/18/2022 20:59	49.28	6/18/2022 19:41	80.72	6/17/2022 18:04	17.44	6/17/2022 17:13	4.55	6/17/2022 22:09	90.60
6/18/2022 21:00	49.28	6/18/2022 19:42	80.70	6/17/2022 18:05	17.42	6/17/2022 17:14	4.53	6/17/2022 22:10	90.40

6/18/2022 21:01	49.29	6/18/2022 19:43	80.75	6/17/2022 18:06	17.39	6/17/2022 17:15	4.52	6/17/2022 22:11	90.23
6/18/2022 21:02	49.30	6/18/2022 19:44	80.72	6/17/2022 18:07	17.34	6/17/2022 17:16	4.52	6/17/2022 22:12	90.05
6/18/2022 21:03	49.28	6/18/2022 19:45	80.72	6/17/2022 18:08	17.37	6/17/2022 17:17	4.59	6/17/2022 22:13	89.80
6/18/2022 21:04	49.26	6/18/2022 19:46	80.70	6/17/2022 18:09	17.32	6/17/2022 17:18	4.48	6/17/2022 22:14	89.60
6/18/2022 21:05	49.28	6/18/2022 19:47	80.72	6/17/2022 18:10	17.31	6/17/2022 17:19	4.61	6/17/2022 22:15	89.39
6/18/2022 21:06	49.27	6/18/2022 19:48	80.72	6/17/2022 18:11	17.38	6/17/2022 17:20	4.49	6/17/2022 22:16	89.20
6/18/2022 21:07	49.31	6/18/2022 19:49	80.75	6/17/2022 18:12	17.32	6/17/2022 17:21	4.49	6/17/2022 22:17	89.03
6/18/2022 21:08	49.26	6/18/2022 19:50	80.69	6/17/2022 18:13	17.31	6/17/2022 17:22	4.54	6/17/2022 22:18	88.85
6/18/2022 21:09	49.28	6/18/2022 19:51	80.75	6/17/2022 18:14	17.29	6/17/2022 17:23	4.48	6/17/2022 22:19	88.65
6/18/2022 21:10	49.30	6/18/2022 19:52	80.72	6/17/2022 18:15	17.29	6/17/2022 17:24	4.43	6/17/2022 22:20	88.45
6/18/2022 21:11	49.28	6/18/2022 19:53	80.70	6/17/2022 18:16	17.29	6/17/2022 17:25	4.47	6/17/2022 22:21	88.25
6/18/2022 21:12	49.27	6/18/2022 19:54	80.74	6/17/2022 18:17	17.27	6/17/2022 17:26	4.50	6/17/2022 22:22	88.06
6/18/2022 21:13	49.27	6/18/2022 19:55	80.71	6/17/2022 18:18	17.27	6/17/2022 17:27	4.47	6/17/2022 22:23	87.87
6/18/2022 21:14	49.28	6/18/2022 19:56	80.74	6/17/2022 18:19	17.23	6/17/2022 17:28	4.48	6/17/2022 22:24	87.67
6/18/2022 21:15	49.27	6/18/2022 19:57	80.72	6/17/2022 18:20	17.26	6/17/2022 17:29	4.41	6/17/2022 22:25	87.44
6/18/2022 21:16	49.25	6/18/2022 19:58	80.75	6/17/2022 18:21	17.23	6/17/2022 17:30	4.46	6/17/2022 22:26	87.27
6/18/2022 21:17	49.28	6/18/2022 19:59	80.67	6/17/2022 18:22	17.21	6/17/2022 17:31	4.51	6/17/2022 22:27	87.12
6/18/2022 21:18	49.28	6/18/2022 20:00	80.72	6/17/2022 18:23	17.17	6/17/2022 17:32	4.40	6/17/2022 22:28	86.95
6/18/2022 21:19	49.27	6/18/2022 20:01	80.74	6/17/2022 18:24	17.21	6/17/2022 17:33	4.43	6/17/2022 22:29	86.74
6/18/2022 21:20	49.28	6/18/2022 20:02	80.73	6/17/2022 18:25	17.24	6/17/2022 17:34	4.45	6/17/2022 22:30	86.52
6/18/2022 21:21	49.28	6/18/2022 20:03	80.75	6/17/2022 18:26	17.20	6/17/2022 17:35	4.45	6/17/2022 22:31	86.37
6/18/2022 21:22	49.28	6/18/2022 20:04	80.70	6/17/2022 18:27	17.17	6/17/2022 17:36	4.43	6/17/2022 22:32	86.19
6/18/2022 21:23	49.24	6/18/2022 20:05	80.71	6/17/2022 18:28	17.11	6/17/2022 17:37	4.42	6/17/2022 22:33	86.01
6/18/2022 21:24	49.27	6/18/2022 20:06	80.73	6/17/2022 18:29	17.16	6/17/2022 17:38	4.46	6/17/2022 22:34	85.81
6/18/2022 21:25	49.23	6/18/2022 20:07	80.68	6/17/2022 18:30	17.20	6/17/2022 17:39	4.37	6/17/2022 22:35	85.64
6/18/2022 21:26	49.27	6/18/2022 20:08	80.69	6/17/2022 18:31	17.15	6/17/2022 17:40	4.38	6/17/2022 22:36	85.50
6/18/2022 21:27	49.26	6/18/2022 20:09	80.69	6/17/2022 18:32	17.15	6/17/2022 17:41	4.38	6/17/2022 22:37	85.37
6/18/2022 21:28	49.27	6/18/2022 20:10	80.72	6/17/2022 18:33	17.14	6/17/2022 17:42	4.43	6/17/2022 22:38	85.21
6/18/2022 21:29	49.29	6/18/2022 20:11	80.70	6/17/2022 18:34	17.12	6/17/2022 17:43	4.36	6/17/2022 22:39	85.05
6/18/2022 21:30	49.26	6/18/2022 20:12	80.72	6/17/2022 18:35	17.14	6/17/2022 17:44	4.38	6/17/2022 22:40	84.88
6/18/2022 21:31	49.25	6/18/2022 20:13	80.72	6/17/2022 18:36	17.09	6/17/2022 17:45	4.35	6/17/2022 22:41	84.68
6/18/2022 21:32	49.29	6/18/2022 20:14	80.73	6/17/2022 18:37	17.11	6/17/2022 17:46	4.41	6/17/2022 22:42	84.54
6/18/2022 21:33	49.30	6/18/2022 20:15	80.74	6/17/2022 18:38	17.13	6/17/2022 17:47	4.43	6/17/2022 22:43	84.40
6/18/2022 21:34	49.28	6/18/2022 20:16	80.73	6/17/2022 18:39	17.07	6/17/2022 17:48	4.42	6/17/2022 22:44	84.24
6/18/2022 21:35	49.26	6/18/2022 20:17	80.66	6/17/2022 18:40	17.09	6/17/2022 17:49	4.37	6/17/2022 22:45	84.06
6/18/2022 21:36	49.27	6/18/2022 20:18	80.73	6/17/2022 18:41	17.07	6/17/2022 17:50	4.39	6/17/2022 22:46	83.90
6/18/2022 21:37	49.23	6/18/2022 20:19	80.74	6/17/2022 18:42	17.05	6/17/2022 17:51	4.38	6/17/2022 22:47	83.73
6/18/2022 21:38	49.23	6/18/2022 20:20	80.71	6/17/2022 18:43	17.08	6/17/2022 17:52	4.37	6/17/2022 22:48	83.60
6/18/2022 21:39	49.24	6/18/2022 20:21	80.69	6/17/2022 18:44	17.03	6/17/2022 17:53	4.28	6/17/2022 22:49	83.47
6/18/2022 21:40	49.25	6/18/2022 20:22	80.72	6/17/2022 18:45	17.05	6/17/2022 17:54	4.31	6/17/2022 22:50	83.33
6/18/2022 21:41	49.25	6/18/2022 20:23	80.70	6/17/2022 18:46	17.01	6/17/2022 17:55	4.34	6/17/2022 22:51	83.20
6/18/2022 21:42	49.27	6/18/2022 20:24	80.70	6/17/2022 18:47	17.03	6/17/2022 17:56	4.41	6/17/2022 22:52	83.01
6/18/2022 21:43	49.26	6/18/2022 20:25	80.74	6/17/2022 18:48	16.95	6/17/2022 17:57	4.36	6/17/2022 22:53	82.89
6/18/2022 21:44	51.61	6/18/2022 20:26	80.70	6/17/2022 18:49	17.07	6/17/2022 17:58	4.32	6/17/2022 22:54	82.75
6/18/2022 21:45	53.19	6/18/2022 20:27	80.73	6/17/2022 18:50	17.00	6/17/2022 17:59	4.31	6/17/2022 22:55	82.63
6/18/2022 21:46	53.99	6/18/2022 20:28	80.71	6/17/2022 18:51	16.96	6/17/2022 18:00	4.36	6/17/2022 22:56	82.46
6/18/2022 21:47	54.07	6/18/2022 20:29	80.73	6/17/2022 18:52	16.98	6/17/2022 18:01	4.31	6/17/2022 22:57	82.35
6/18/2022 21:48	51.91	6/18/2022 20:30	80.70	6/17/2022 18:53	16.96	6/17/2022 18:02	4.32	6/17/2022 22:58	82.25
6/18/2022 21:49	51.08	6/18/2022 20:31	80.69	6/17/2022 18:54	16.98	6/17/2022 18:03	4.33	6/17/2022 22:59	82.10
6/18/2022 21:50	50.70	6/18/2022 20:32	80.69	6/17/2022 18:55	16.96	6/17/2022 18:04	4.32	6/17/2022 23:00	81.95
6/18/2022 21:51	50.47	6/18/2022 20:33	80.70	6/17/2022 18:56	16.94	6/17/2022 18:05	4.37	6/17/2022 23:01	81.81
6/18/2022 21:52	50.35	6/18/2022 20:34	80.70	6/17/2022 18:57	16.93	6/17/2022 18:06	4.26	6/17/2022 23:02	81.71
6/18/2022 21:53	50.26	6/18/2022 20:35	80.72	6/17/2022 18:58	16.98	6/17/2022 18:07	4.32	6/17/2022 23:03	81.58
6/18/2022 21:54	50.18	6/18/2022 20:36	80.73	6/17/2022 18:59	16.95	6/17/2022 18:08	4.30	6/17/2022 23:04	81.48
6/18/2022 21:55	50.11	6/18/2022 20:37	80.71	6/17/2022 19:00	16.95	6/17/2022 18:09	4.30	6/17/2022 23:05	81.37
6/18/2022 21:56	50.05	6/18/2022 20:38	80.73	6/17/2022 19:01	16.92	6/17/2022 18:10	4.31	6/17/2022 23:06	81.27
6/18/2022 21:57	50.01	6/18/2022 20:39	80.70	6/17/2022 19:02	16.90	6/17/2022 18:11	4.36	6/17/2022 23:07	81.15
6/18/2022 21:58	49.99	6/18/2022 20:40	80.74	6/17/2022 19:03	16.87	6/17/2022 18:12	4.34	6/17/2022 23:08	81.05
6/18/2022 21:59	49.97	6/18/2022 20:41	80.71	6/17/2022 19:04	16.90	6/17/2022 18:13	4.77	6/17/2022 23:09	80.92
6/18/2022 22:00	49.90	6/18/2022 20:42	80.72	6/17/2022 19:05	16.90	6/17/2022 18:14	4.81	6/17/2022 23:10	80.79
6/18/2022 22:01	49.87	6/18/2022 20:43	80.75	6/17/2022 19:06	16.92	6/17/2022 18:15	4.55	6/17/2022 23:11	80.73
6/18/2022 22:02	49.86	6/18/2022 20:44	80.70	6/17/2022 19:07	16.90	6/17/2022 18:16	4.47	6/17/2022 23:12	80.61
6/18/2022 22:03	49.84	6/18/2022 20:45	80.72	6/17/2022 19:08	16.85	6/17/2022 18:17	4.45	6/17/2022 23:13	80.48
6/18/2022 22:04	49.80	6/18/2022 20:46	80.68	6/17/2022 19:09	16.86	6/17/2022 18:18	4.42	6/17/2022 23:14	80.40
6/18/2022 22:05	49.83	6/18/2022 20:47	80.73	6/17/2022 19:10	16.87	6/17/2022 18:19	4.38	6/17/2022 23:15	80.28
6/18/2022 22:06	49.81	6/18/2022 20:48	80.72	6/17/2022 19:11	16.84	6/17/2022 18:20	4.36	6/17/2022 23:16	80.17
6/18/2022 22:07	49.77	6/18/2022 20:49	80.71	6/17/2022 19:12	16.90	6/17/2022 18:21	4.34	6/17/2022 23:17	80.03
6/18/2022 22:08	49.75	6/18/2022 20:50	80.73	6/17/2022 19:13	16.85	6/17/2022 18:22	4.57	6/17/2022 23:18	79.91
6/18/2022 22:09	49.74	6/18/2022 20:51	80.74	6/17/2022 19:14	16.86	6/17/2022 18:23	4.55	6/17/2022 23:19	79.79
6/18/2022 22:10	49.75	6/18/2022 20:52	80.72	6/17/2022 19:15	16.86	6/17/2022 18:24	4.66	6/17/2022 23:20	79.72
6/18/2022 22:11	49.74	6/18/2022 20:53	80.73	6/17/2022 19:16	16.85	6/17/2022 18:25	4.86	6/17/2022 23:21	79.59
6/18/2022 22:12	49.74	6/18/2022 20:54	80.71	6/17/2022 19:17	16.82	6/17/2022 18:26	4.64	6/17/2022 23:22	79.54
6/18/2022 22:13	49.70	6/18/2022 20:55	80.71	6/17/2022 19:18	16.83	6/17/2022 18:27	4.97	6/17/2022 23:23	79.42
6/18/2022 22:14	49.72	6/18/2022 20:56	80.70	6/17/2022 19:19	16.85	6/17/2022 18:28	4.87	6/17/2022 23:24	79.33
6/18/2022 22:15	49.66	6/18/2022 20:57	80.70	6/17/2022 19:20	16.79	6/17/2022 18:29	4.67	6/17/2022 23:25	79.23
6/18/2022 22:16	49.64	6/18/2022 20:58	80.72	6/17/2022 19:21	16.82	6/17/2022 18:30	4.59	6/17/2022 23:26	79.15
6/18/2022 22:17	49.65	6/18/2022 20:59	80.70	6/17/2022 19:22	16.77	6/17/2022 18:31	4.93	6/17/2022 23:27	79.09
6/18/2022 22:18	49.64	6/18/2022 21:00	80.72	6/17/2022 19:23	16.81	6/17/2022 18:32	4.84	6/17/2022 23:28	78.96
6/18/2022 22:19	49.63	6/18/2022 21:01	80.74	6/17/2022 19:24	16.82	6/17/2022 18:33	4.64	6/17/2022 23:29	78.93
6/18/2022 22:20	49.63	6/18/2022 21:02	80.72	6/17/2022 19:25	16.81	6/17/2022 18:34	4.63	6/17/2022 23:30	78.85
6/18/2022 22:21	49.65	6/18/2022 21:03	80.69	6/17/2022 19:26	16.75	6/17/2022 18:35	4.53	6/17/2022 23:31	78.74
6/18/2022 22:22	49.64	6/18/2022 21:04	80.74	6/17/2022 19:27	16.78	6/17/2022 18:36	4.50	6/17/2022 23:32	78.67
6/18/2022 22:23	49.60	6/18/2022 21:05	80.75	6/17/2022 19:28	16.78	6/17/2022 18:37	4.48	6/17/2022 23:33	78.57
6/18/2022 22:24	49.62	6/18/2022 21:06	80.71	6/17/2022 19:29	16.76	6/17/2022 18:38	4.43	6/17/2022 23:34	78.48
6/18/2022 22:25	49.60	6/18/2022 21:07	80.73	6/17/2022 19:30	16.75	6/17/2022 18:39	4.42	6/17/2022 23:35	78.38
6/18/2022 22:26	49.61	6/18/2022 21:08	80.72	6/17/2022 19:31	16.78	6/17/2022 18:40	4.48	6/17/2022 23:36	78.28
6/18/2022 22:27	49.58	6/18/2022 21:09	80.72	6/17/2022 19:32	16.69	6/17/2022 18:41	4.42	6/17/2022 23:37	78.18
6/18/2022 22:28	49.56	6/18/2022 21:10	80.69	6/17/2022 19:33	16.73	6/17/2022 18:42	4.40	6/17/2022 23:38	78.07

6/18/2022 22:29	49.60	6/18/2022 21:11	80.71	6/17/2022 19:34	16.77	6/17/2022 18:43	4.39	6/17/2022 23:39	78.04
6/18/2022 22:30	49.63	6/18/2022 21:12	80.73	6/17/2022 19:35	16.80	6/17/2022 18:44	4.39	6/17/2022 23:40	77.91
6/18/2022 22:31	49.55	6/18/2022 21:13	80.69	6/17/2022 19:36	16.72	6/17/2022 18:45	4.33	6/17/2022 23:41	77.85
6/18/2022 22:32	49.59	6/18/2022 21:14	80.71	6/17/2022 19:37	16.71	6/17/2022 18:46	4.36	6/17/2022 23:42	77.73
6/18/2022 22:33	49.60	6/18/2022 21:15	80.71	6/17/2022 19:38	16.72	6/17/2022 18:47	4.33	6/17/2022 23:43	77.65
6/18/2022 22:34	49.56	6/18/2022 21:16	80.73	6/17/2022 19:39	16.75	6/17/2022 18:48	4.38	6/17/2022 23:44	77.55
6/18/2022 22:35	49.54	6/18/2022 21:17	80.73	6/17/2022 19:40	16.71	6/17/2022 18:49	4.47	6/17/2022 23:45	77.45
6/18/2022 22:36	49.54	6/18/2022 21:18	80.70	6/17/2022 19:41	16.73	6/17/2022 18:50	4.52	6/17/2022 23:46	77.37
6/18/2022 22:37	49.56	6/18/2022 21:19	80.68	6/17/2022 19:42	16.70	6/17/2022 18:51	4.39	6/17/2022 23:47	77.30
6/18/2022 22:38	49.57	6/18/2022 21:20	80.71	6/17/2022 19:43	16.74	6/17/2022 18:52	4.36	6/17/2022 23:48	77.26
6/18/2022 22:39	49.54	6/18/2022 21:21	80.76	6/17/2022 19:44	16.67	6/17/2022 18:53	4.36	6/17/2022 23:49	77.14
6/18/2022 22:40	49.57	6/18/2022 21:22	80.69	6/17/2022 19:45	16.73	6/17/2022 18:54	4.33	6/17/2022 23:50	77.07
6/18/2022 22:41	49.50	6/18/2022 21:23	80.72	6/17/2022 19:46	16.70	6/17/2022 18:55	4.30	6/17/2022 23:51	77.02
6/18/2022 22:42	49.49	6/18/2022 21:24	80.72	6/17/2022 19:47	16.69	6/17/2022 18:56	4.30	6/17/2022 23:52	76.92
6/18/2022 22:43	49.54	6/18/2022 21:25	80.73	6/17/2022 19:48	16.70	6/17/2022 18:57	4.35	6/17/2022 23:53	76.83
6/18/2022 22:44	49.55	6/18/2022 21:26	80.71	6/17/2022 19:49	16.69	6/17/2022 18:58	4.30	6/17/2022 23:54	76.76
6/18/2022 22:45	49.53	6/18/2022 21:27	80.75	6/17/2022 19:50	16.71	6/17/2022 18:59	4.25	6/17/2022 23:55	76.69
6/18/2022 22:46	49.54	6/18/2022 21:28	80.73	6/17/2022 19:51	16.70	6/17/2022 19:00	4.32	6/17/2022 23:56	76.60
6/18/2022 22:47	49.52	6/18/2022 21:29	80.75	6/17/2022 19:52	16.67	6/17/2022 19:01	4.32	6/17/2022 23:57	76.53
6/18/2022 22:48	49.52	6/18/2022 21:30	80.76	6/17/2022 19:53	16.70	6/17/2022 19:02	4.38	6/17/2022 23:58	76.45
6/18/2022 22:49	49.53	6/18/2022 21:31	80.78	6/17/2022 19:54	16.64	6/17/2022 19:03	4.37	6/17/2022 23:59	76.35
6/18/2022 22:50	49.50	6/18/2022 21:32	80.72	6/17/2022 19:55	16.65	6/17/2022 19:04	4.49	6/18/2022 0:00	76.28
6/18/2022 22:51	49.49	6/18/2022 21:33	80.72	6/17/2022 19:56	16.63	6/17/2022 19:05	4.51	6/18/2022 0:01	76.21
6/18/2022 22:52	49.52	6/18/2022 21:34	80.73	6/17/2022 19:57	16.66	6/17/2022 19:06	4.61	6/18/2022 0:02	76.14
6/18/2022 22:53	49.48	6/18/2022 21:35	80.72	6/17/2022 19:58	16.66	6/17/2022 19:07	4.63	6/18/2022 0:03	76.02
6/18/2022 22:54	49.51	6/18/2022 21:36	80.73	6/17/2022 19:59	16.65	6/17/2022 19:08	4.67	6/18/2022 0:04	75.96
6/18/2022 22:55	49.47	6/18/2022 21:37	80.74	6/17/2022 20:00	16.65	6/17/2022 19:09	4.74	6/18/2022 0:05	75.85
6/18/2022 22:56	49.50	6/18/2022 21:38	80.71	6/17/2022 20:01	16.56	6/17/2022 19:10	4.79	6/18/2022 0:06	75.78
6/18/2022 22:57	49.48	6/18/2022 21:39	80.74	6/17/2022 20:02	16.63	6/17/2022 19:11	4.76	6/18/2022 0:07	75.72
6/18/2022 22:58	49.48	6/18/2022 21:40	80.68	6/17/2022 20:03	16.63	6/17/2022 19:12	4.64	6/18/2022 0:08	75.65
6/18/2022 22:59	49.46	6/18/2022 21:41	80.70	6/17/2022 20:04	16.59	6/17/2022 19:13	4.60	6/18/2022 0:09	75.57
6/18/2022 23:00	49.49	6/18/2022 21:42	80.75	6/17/2022 20:05	16.62	6/17/2022 19:14	4.52	6/18/2022 0:10	75.48
6/18/2022 23:01	49.47	6/18/2022 21:43	80.72	6/17/2022 20:06	16.57	6/17/2022 19:15	4.46	6/18/2022 0:11	75.45
6/18/2022 23:02	49.48	6/18/2022 21:44	80.75	6/17/2022 20:07	16.61	6/17/2022 19:16	4.44	6/18/2022 0:12	75.34
6/18/2022 23:03	49.48	6/18/2022 21:45	80.76	6/17/2022 20:08	16.59	6/17/2022 19:17	4.63	6/18/2022 0:13	75.26
6/18/2022 23:04	49.42	6/18/2022 21:46	80.72	6/17/2022 20:09	16.60	6/17/2022 19:18	4.49	6/18/2022 0:14	75.19
6/18/2022 23:05	49.48	6/18/2022 21:47	80.71	6/17/2022 20:10	16.61	6/17/2022 19:19	4.40	6/18/2022 0:15	75.11
6/18/2022 23:06	49.43	6/18/2022 21:48	80.71	6/17/2022 20:11	16.63	6/17/2022 19:20	4.41	6/18/2022 0:16	75.07
6/18/2022 23:07	49.46	6/18/2022 21:49	80.70	6/17/2022 20:12	16.65	6/17/2022 19:21	4.35	6/18/2022 0:17	74.98
6/18/2022 23:08	49.45	6/18/2022 21:50	80.75	6/17/2022 20:13	16.62	6/17/2022 19:22	4.38	6/18/2022 0:18	74.92
6/18/2022 23:09	49.46	6/18/2022 21:51	80.74	6/17/2022 20:14	16.56	6/17/2022 19:23	4.36	6/18/2022 0:19	74.84
6/18/2022 23:10	49.47	6/18/2022 21:52	80.71	6/17/2022 20:15	16.63	6/17/2022 19:24	4.40	6/18/2022 0:20	74.80
6/18/2022 23:11	49.47	6/18/2022 21:53	80.78	6/17/2022 20:16	16.57	6/17/2022 19:25	4.49	6/18/2022 0:21	74.72
6/18/2022 23:12	49.45	6/18/2022 21:54	80.75	6/17/2022 20:17	16.60	6/17/2022 19:26	4.39	6/18/2022 0:22	74.67
6/18/2022 23:13	49.44	6/18/2022 21:55	80.76	6/17/2022 20:18	16.58	6/17/2022 19:27	4.36	6/18/2022 0:23	74.61
6/18/2022 23:14	49.43	6/18/2022 21:56	80.77	6/17/2022 20:19	16.55	6/17/2022 19:28	4.41	6/18/2022 0:24	74.54
6/18/2022 23:15	49.44	6/18/2022 21:57	80.71	6/17/2022 20:20	16.58	6/17/2022 19:29	4.40	6/18/2022 0:25	74.48
6/18/2022 23:16	49.42	6/18/2022 21:58	80.71	6/17/2022 20:21	16.56	6/17/2022 19:30	4.35	6/18/2022 0:26	74.43
6/18/2022 23:17	49.45	6/18/2022 21:59	80.72	6/17/2022 20:22	16.57	6/17/2022 19:31	4.39	6/18/2022 0:27	74.39
6/18/2022 23:18	49.42	6/18/2022 22:00	80.73	6/17/2022 20:23	16.57	6/17/2022 19:32	4.39	6/18/2022 0:28	74.31
6/18/2022 23:19	49.44	6/18/2022 22:01	80.74	6/17/2022 20:24	16.53	6/17/2022 19:33	4.35	6/18/2022 0:29	74.28
6/18/2022 23:20	49.42	6/18/2022 22:02	80.73	6/17/2022 20:25	16.55	6/17/2022 19:34	4.36	6/18/2022 0:30	74.22
6/18/2022 23:21	49.45	6/18/2022 22:03	80.72	6/17/2022 20:26	16.56	6/17/2022 19:35	4.31	6/18/2022 0:31	74.13
6/18/2022 23:22	49.45	6/18/2022 22:04	80.71	6/17/2022 20:27	16.55	6/17/2022 19:36	4.35	6/18/2022 0:32	74.10
6/18/2022 23:23	49.43	6/18/2022 22:05	80.71	6/17/2022 20:28	16.60	6/17/2022 19:37	4.30	6/18/2022 0:33	74.06
6/18/2022 23:24	49.43	6/18/2022 22:06	80.72	6/17/2022 20:29	16.54	6/17/2022 19:38	4.31	6/18/2022 0:34	74.00
6/18/2022 23:25	49.44	6/18/2022 22:07	80.76	6/17/2022 20:30	16.48	6/17/2022 19:39	4.29	6/18/2022 0:35	73.95
6/18/2022 23:26	49.40	6/18/2022 22:08	80.73	6/17/2022 20:31	16.56	6/17/2022 19:40	4.25	6/18/2022 0:36	73.91
6/18/2022 23:27	49.42	6/18/2022 22:09	80.77	6/17/2022 20:32	16.51	6/17/2022 19:41	4.31	6/18/2022 0:37	73.85
6/18/2022 23:28	49.40	6/18/2022 22:10	80.72	6/17/2022 20:33	16.50	6/17/2022 19:42	4.31	6/18/2022 0:38	73.83
6/18/2022 23:29	49.41	6/18/2022 22:11	80.65	6/17/2022 20:34	16.54	6/17/2022 19:43	4.26	6/18/2022 0:39	73.73
6/18/2022 23:30	49.40	6/18/2022 22:12	80.71	6/17/2022 20:35	16.50	6/17/2022 19:44	4.49	6/18/2022 0:40	73.67
6/18/2022 23:31	49.45	6/18/2022 22:13	80.73	6/17/2022 20:36	16.52	6/17/2022 19:45	4.43	6/18/2022 0:41	73.64
6/18/2022 23:32	49.40	6/18/2022 22:14	80.74	6/17/2022 20:37	16.53	6/17/2022 19:46	4.40	6/18/2022 0:42	73.57
6/18/2022 23:33	49.40	6/18/2022 22:15	80.71	6/17/2022 20:38	16.48	6/17/2022 19:47	4.34	6/18/2022 0:43	73.54
6/18/2022 23:34	49.41	6/18/2022 22:16	80.73	6/17/2022 20:39	16.46	6/17/2022 19:48	4.54	6/18/2022 0:44	73.48
6/18/2022 23:35	49.39	6/18/2022 22:17	80.68	6/17/2022 20:40	16.53	6/17/2022 19:49	4.51	6/18/2022 0:45	73.39
6/18/2022 23:36	49.42	6/18/2022 22:18	80.70	6/17/2022 20:41	16.47	6/17/2022 19:50	4.39	6/18/2022 0:46	73.37
6/18/2022 23:37	49.39	6/18/2022 22:19	80.74	6/17/2022 20:42	16.47	6/17/2022 19:51	4.34	6/18/2022 0:47	73.31
6/18/2022 23:38	49.38	6/18/2022 22:20	80.72	6/17/2022 20:43	16.47	6/17/2022 19:52	4.31	6/18/2022 0:48	73.27
6/18/2022 23:39	49.43	6/18/2022 22:21	80.72	6/17/2022 20:44	16.50	6/17/2022 19:53	4.28	6/18/2022 0:49	73.27
6/18/2022 23:40	49.41	6/18/2022 22:22	80.73	6/17/2022 20:45	16.48	6/17/2022 19:54	4.29	6/18/2022 0:50	73.20
6/18/2022 23:41	49.41	6/18/2022 22:23	80.69	6/17/2022 20:46	16.50	6/17/2022 19:55	4.24	6/18/2022 0:51	73.14
6/18/2022 23:42	49.36	6/18/2022 22:24	80.74	6/17/2022 20:47	21.24	6/17/2022 19:56	4.32	6/18/2022 0:52	73.11
6/18/2022 23:43	49.41	6/18/2022 22:25	80.75	6/17/2022 20:48	24.94	6/17/2022 19:57	4.24	6/18/2022 0:53	73.08
6/18/2022 23:44	49.38	6/18/2022 22:26	80.77	6/17/2022 20:49	26.73	6/17/2022 19:58	4.24	6/18/2022 0:54	73.03
6/18/2022 23:45	49.37	6/18/2022 22:27	80.70	6/17/2022 20:50	23.47	6/17/2022 19:59	4.24	6/18/2022 0:55	73.00
6/18/2022 23:46	49.39	6/18/2022 22:28	80.72	6/17/2022 20:51	21.81	6/17/2022 20:00	4.24	6/18/2022 0:56	72.94
6/18/2022 23:47	49.42	6/18/2022 22:29	80.74	6/17/2022 20:52	20.81	6/17/2022 20:01	4.23	6/18/2022 0:57	72.90
6/18/2022 23:48	49.39	6/18/2022 22:30	80.69	6/17/2022 20:53	20.20	6/17/2022 20:02	4.17	6/18/2022 0:58	72.88
6/18/2022 23:49	49.38	6/18/2022 22:31	80.75	6/17/2022 20:54	19.76	6/17/2022 20:03	4.19	6/18/2022 0:59	72.81
6/18/2022 23:50	49.39	6/18/2022 22:32	80.74	6/17/2022 20:55	19.42	6/17/2022 20:04	4.21	6/18/2022 1:00	72.78
6/18/2022 23:51	49.35	6/18/2022 22:33	80.72	6/17/2022 20:56	19.14	6/17/2022 20:05	4.21	6/18/2022 1:01	72.75
6/18/2022 23:52	49.37	6/18/2022 22:34	80.72	6/17/2022 20:57	18.95	6/17/2022 20:06	4.24	6/18/2022 1:02	72.69
6/18/2022 23:53	49.37	6/18/2022 22:35	80.73	6/17/2022 20:58	18.82	6/17/2022 20:07	4.16	6/18/2022 1:03	72.63
6/18/2022 23:54	49.41	6/18/2022 22:36	80.75	6/17/2022 20:59	18.66	6/17/2022 20:08	4.14	6/18/2022 1:04	72.62
6/18/2022 23:55	49.36	6/18/2022 22:37	80.72	6/17/2022 21:00	18.56	6/17/2022 20:09	4.16	6/18/2022 1:05	72.55
6/18/2022 23:56	49.36	6/18/2022 22:38	80.72	6/17/2022 21:01	18.42	6/17/2022 20:10	4.18	6/18/2022 1:06	72.54

6/18/2022 23:57	49.36	6/18/2022 22:39	80.75	6/17/2022 21:02	18.37	6/17/2022 20:11	4.12	6/18/2022 1:07	72.49
6/18/2022 23:58	49.39	6/18/2022 22:40	80.75	6/17/2022 21:03	18.26	6/17/2022 20:12	4.14	6/18/2022 1:08	72.45
6/18/2022 23:59	49.39	6/18/2022 22:41	80.71	6/17/2022 21:04	18.20	6/17/2022 20:13	4.13	6/18/2022 1:09	72.43
6/19/2022 0:00	49.35	6/18/2022 22:42	80.76	6/17/2022 21:05	18.12	6/17/2022 20:14	4.14	6/18/2022 1:10	72.41
6/19/2022 0:01	49.35	6/18/2022 22:43	80.73	6/17/2022 21:06	18.04	6/17/2022 20:15	4.20	6/18/2022 1:11	72.33
6/19/2022 0:02	49.35	6/18/2022 22:44	80.75	6/17/2022 21:07	17.98	6/17/2022 20:16	4.09	6/18/2022 1:12	72.26
6/19/2022 0:03	49.38	6/18/2022 22:45	80.70	6/17/2022 21:08	17.91	6/17/2022 20:17	4.10	6/18/2022 1:13	72.21
6/19/2022 0:04	49.36	6/18/2022 22:46	80.73	6/17/2022 21:09	17.88	6/17/2022 20:18	4.15	6/18/2022 1:14	72.21
6/19/2022 0:05	49.36	6/18/2022 22:47	80.76	6/17/2022 21:10	17.80	6/17/2022 20:19	4.21	6/18/2022 1:15	72.19
6/19/2022 0:06	49.34	6/18/2022 22:48	80.74	6/17/2022 21:11	17.77	6/17/2022 20:20	4.10	6/18/2022 1:16	72.12
6/19/2022 0:07	49.37	6/18/2022 22:49	80.74	6/17/2022 21:12	17.71	6/17/2022 20:21	4.14	6/18/2022 1:17	72.08
6/19/2022 0:08	49.36	6/18/2022 22:50	80.74	6/17/2022 21:13	17.70	6/17/2022 20:22	4.15	6/18/2022 1:18	72.05
6/19/2022 0:09	49.39	6/18/2022 22:51	80.78	6/17/2022 21:14	17.65	6/17/2022 20:23	4.17	6/18/2022 1:19	72.03
6/19/2022 0:10	49.37	6/18/2022 22:52	80.69	6/17/2022 21:15	17.62	6/17/2022 20:24	4.05	6/18/2022 1:20	72.00
6/19/2022 0:11	49.35	6/18/2022 22:53	80.75	6/17/2022 21:16	17.62	6/17/2022 20:25	4.08	6/18/2022 1:21	71.99
6/19/2022 0:12	49.34	6/18/2022 22:54	80.73	6/17/2022 21:17	17.56	6/17/2022 20:26	4.10	6/18/2022 1:22	71.89
6/19/2022 0:13	49.39	6/18/2022 22:55	80.74	6/17/2022 21:18	17.56	6/17/2022 20:27	4.13	6/18/2022 1:23	71.91
6/19/2022 0:14	49.35	6/18/2022 22:56	80.76	6/17/2022 21:19	17.56	6/17/2022 20:28	4.07	6/18/2022 1:24	71.85
6/19/2022 0:15	49.34	6/18/2022 22:57	80.73	6/17/2022 21:20	17.47	6/17/2022 20:29	4.05	6/18/2022 1:25	71.81
6/19/2022 0:16	49.37	6/18/2022 22:58	80.70	6/17/2022 21:21	17.48	6/17/2022 20:30	4.12	6/18/2022 1:26	71.78
6/19/2022 0:17	49.30	6/18/2022 22:59	80.73	6/17/2022 21:22	17.55	6/17/2022 20:31	4.06	6/18/2022 1:27	71.71
6/19/2022 0:18	49.34	6/18/2022 23:00	80.73	6/17/2022 21:23	17.47	6/17/2022 20:32	4.06	6/18/2022 1:28	71.69
6/19/2022 0:19	49.35	6/18/2022 23:01	80.72	6/17/2022 21:24	17.41	6/17/2022 20:33	4.09	6/18/2022 1:29	71.67
6/19/2022 0:20	49.37	6/18/2022 23:02	80.74	6/17/2022 21:25	17.37	6/17/2022 20:34	4.08	6/18/2022 1:30	71.62
6/19/2022 0:21	49.36	6/18/2022 23:03	80.75	6/17/2022 21:26	17.40	6/17/2022 20:35	4.08	6/18/2022 1:31	71.64
6/19/2022 0:22	49.29	6/18/2022 23:04	80.72	6/17/2022 21:27	17.41	6/17/2022 20:36	4.05	6/18/2022 1:32	71.55
6/19/2022 0:23	49.31	6/18/2022 23:05	80.72	6/17/2022 21:28	17.34	6/17/2022 20:37	4.03	6/18/2022 1:33	71.55
6/19/2022 0:24	49.34	6/18/2022 23:06	80.74	6/17/2022 21:29	17.33	6/17/2022 20:38	4.06	6/18/2022 1:34	71.51
6/19/2022 0:25	49.38	6/18/2022 23:07	80.78	6/17/2022 21:30	17.30	6/17/2022 20:39	4.03	6/18/2022 1:35	71.47
6/19/2022 0:26	49.32	6/18/2022 23:08	80.75	6/17/2022 21:31	17.30	6/17/2022 20:40	4.05	6/18/2022 1:36	71.42
6/19/2022 0:27	49.32	6/18/2022 23:09	80.79	6/17/2022 21:32	17.30	6/17/2022 20:41	4.03	6/18/2022 1:37	71.41
6/19/2022 0:28	49.34	6/18/2022 23:10	80.74	6/17/2022 21:33	17.29	6/17/2022 20:42	4.06	6/18/2022 1:38	71.36
6/19/2022 0:29	49.33	6/18/2022 23:11	80.77	6/17/2022 21:34	17.27	6/17/2022 20:43	4.01	6/18/2022 1:39	71.36
6/19/2022 0:30	49.32	6/18/2022 23:12	80.75	6/17/2022 21:35	17.25	6/17/2022 20:44	3.98	6/18/2022 1:40	71.31
6/19/2022 0:31	49.33	6/18/2022 23:13	80.72	6/17/2022 21:36	17.21	6/17/2022 20:45	4.04	6/18/2022 1:41	71.28
6/19/2022 0:32	49.38	6/18/2022 23:14	80.76	6/17/2022 21:37	17.22	6/17/2022 20:46	4.07	6/18/2022 1:42	71.23
6/19/2022 0:33	49.33	6/18/2022 23:15	80.75	6/17/2022 21:38	17.14	6/17/2022 20:47	3.99	6/18/2022 1:43	71.20
6/19/2022 0:34	49.33	6/18/2022 23:16	80.75	6/17/2022 21:39	17.16	6/17/2022 20:48	3.94	6/18/2022 1:44	71.17
6/19/2022 0:35	49.31	6/18/2022 23:17	80.75	6/17/2022 21:40	17.21	6/17/2022 20:49	4.02	6/18/2022 1:45	71.15
6/19/2022 0:36	49.32	6/18/2022 23:18	80.72	6/17/2022 21:41	17.15	6/17/2022 20:50	3.92	6/18/2022 1:46	71.11
6/19/2022 0:37	49.36	6/18/2022 23:19	80.77	6/17/2022 21:42	17.18	6/17/2022 20:51	3.95	6/18/2022 1:47	71.10
6/19/2022 0:38	49.32	6/18/2022 23:20	80.78	6/17/2022 21:43	17.12	6/17/2022 20:52	3.97	6/18/2022 1:48	71.08
6/19/2022 0:39	49.32	6/18/2022 23:21	80.73	6/17/2022 21:44	17.12	6/17/2022 20:53	3.97	6/18/2022 1:49	71.01
6/19/2022 0:40	49.33	6/18/2022 23:22	80.80	6/17/2022 21:45	17.11	6/17/2022 20:54	3.94	6/18/2022 1:50	70.96
6/19/2022 0:41	49.34	6/18/2022 23:23	80.81	6/17/2022 21:46	17.10	6/17/2022 20:55	3.95	6/18/2022 1:51	70.94
6/19/2022 0:42	49.34	6/18/2022 23:24	80.73	6/17/2022 21:47	17.11	6/17/2022 20:56	3.95	6/18/2022 1:52	70.94
6/19/2022 0:43	49.34	6/18/2022 23:25	80.73	6/17/2022 21:48	17.06	6/17/2022 20:57	3.98	6/18/2022 1:53	70.89
6/19/2022 0:44	49.29	6/18/2022 23:26	80.78	6/17/2022 21:49	17.11	6/17/2022 20:58	3.91	6/18/2022 1:54	70.85
6/19/2022 0:45	49.32	6/18/2022 23:27	80.74	6/17/2022 21:50	17.06	6/17/2022 20:59	3.92	6/18/2022 1:55	70.86
6/19/2022 0:46	49.33	6/18/2022 23:28	80.77	6/17/2022 21:51	17.06	6/17/2022 21:00	3.94	6/18/2022 1:56	70.82
6/19/2022 0:47	49.31	6/18/2022 23:29	80.77	6/17/2022 21:52	17.07	6/17/2022 21:01	3.94	6/18/2022 1:57	70.78
6/19/2022 0:48	49.32	6/18/2022 23:30	80.74	6/17/2022 21:53	17.07	6/17/2022 21:02	3.91	6/18/2022 1:58	70.76
6/19/2022 0:49	49.31	6/18/2022 23:31	80.76	6/17/2022 21:54	17.05	6/17/2022 21:03	3.92	6/18/2022 1:59	70.70
6/19/2022 0:50	49.32	6/18/2022 23:32	80.74	6/17/2022 21:55	17.01	6/17/2022 21:04	3.92	6/18/2022 2:00	77.38
6/19/2022 0:51	49.32	6/18/2022 23:33	80.74	6/17/2022 21:56	17.01	6/17/2022 21:05	4.00	6/18/2022 2:01	84.11
6/19/2022 0:52	49.33	6/18/2022 23:34	80.72	6/17/2022 21:57	17.06	6/17/2022 21:06	3.90	6/18/2022 2:02	84.49
6/19/2022 0:53	49.31	6/18/2022 23:35	80.78	6/17/2022 21:58	17.00	6/17/2022 21:07	3.91	6/18/2022 2:03	90.11
6/19/2022 0:54	49.32	6/18/2022 23:36	80.74	6/17/2022 21:59	17.00	6/17/2022 21:08	3.92	6/18/2022 2:04	96.56
6/19/2022 0:55	49.32	6/18/2022 23:37	80.77	6/17/2022 22:00	17.03	6/17/2022 21:09	4.01	6/18/2022 2:05	99.42
6/19/2022 0:56	49.28	6/18/2022 23:38	80.74	6/17/2022 22:01	17.01	6/17/2022 21:10	3.90	6/18/2022 2:06	102.65
6/19/2022 0:57	49.32	6/18/2022 23:39	80.75	6/17/2022 22:02	16.97	6/17/2022 21:11	3.96	6/18/2022 2:07	109.33
6/19/2022 0:58	49.34	6/18/2022 23:40	80.75	6/17/2022 22:03	17.00	6/17/2022 21:12	3.92	6/18/2022 2:08	115.88
6/19/2022 0:59	49.32	6/18/2022 23:41	80.74	6/17/2022 22:04	16.95	6/17/2022 21:13	3.95	6/18/2022 2:09	122.20
6/19/2022 1:00	49.30	6/18/2022 23:42	80.69	6/17/2022 22:05	16.97	6/17/2022 21:14	3.90	6/18/2022 2:10	128.32
6/19/2022 1:01	49.31	6/18/2022 23:43	80.73	6/17/2022 22:06	16.96	6/17/2022 21:15	3.86	6/18/2022 2:11	134.27
6/19/2022 1:02	49.32	6/18/2022 23:44	80.77	6/17/2022 22:07	17.00	6/17/2022 21:16	3.93	6/18/2022 2:12	140.10
6/19/2022 1:03	49.28	6/18/2022 23:45	80.71	6/17/2022 22:08	17.00	6/17/2022 21:17	3.93	6/18/2022 2:13	144.53
6/19/2022 1:04	49.26	6/18/2022 23:46	80.75	6/17/2022 22:09	17.00	6/17/2022 21:18	3.83	6/18/2022 2:14	143.90
6/19/2022 1:05	49.27	6/18/2022 23:47	80.74	6/17/2022 22:10	17.00	6/17/2022 21:19	3.86	6/18/2022 2:15	145.50
6/19/2022 1:06	49.29	6/18/2022 23:48	82.37	6/17/2022 22:11	17.05	6/17/2022 21:20	3.90	6/18/2022 2:16	145.51
6/19/2022 1:07	49.30	6/18/2022 23:49	82.03	6/17/2022 22:12	17.04	6/17/2022 21:21	3.89	6/18/2022 2:17	145.51
6/19/2022 1:08	49.29	6/18/2022 23:50	81.83	6/17/2022 22:13	17.07	6/17/2022 21:22	3.87	6/18/2022 2:18	145.52
6/19/2022 1:09	49.31	6/18/2022 23:51	81.67	6/17/2022 22:14	17.09	6/17/2022 21:23	3.90	6/18/2022 2:19	145.49
6/19/2022 1:10	49.25	6/18/2022 23:52	81.51	6/17/2022 22:15	17.04	6/17/2022 21:24	3.93	6/18/2022 2:20	145.52
6/19/2022 1:11	49.31	6/18/2022 23:53	81.41	6/17/2022 22:16	17.04	6/17/2022 21:25	3.88	6/18/2022 2:21	145.51
6/19/2022 1:12	49.31	6/18/2022 23:54	81.33	6/17/2022 22:17	17.07	6/17/2022 21:26	3.82	6/18/2022 2:22	145.49
6/19/2022 1:13	49.26	6/18/2022 23:55	81.29	6/17/2022 22:18	17.09	6/17/2022 21:27	3.84	6/18/2022 2:23	145.53
6/19/2022 1:14	49.27	6/18/2022 23:56	81.18	6/17/2022 22:19	17.14	6/17/2022 21:28	3.89	6/18/2022 2:24	145.49
6/19/2022 1:15	49.27	6/18/2022 23:57	81.13	6/17/2022 22:20	17.09	6/17/2022 21:29	3.84	6/18/2022 2:25	145.52
6/19/2022 1:16	49.28	6/18/2022 23:58	81.13	6/17/2022 22:21	17.10	6/17/2022 21:30	3.87	6/18/2022 2:26	145.50
6/19/2022 1:17	49.30	6/18/2022 23:59	81.08	6/17/2022 22:22	17.10	6/17/2022 21:31	3.88	6/18/2022 2:27	145.51
6/19/2022 1:18	49.31	6/19/2022 0:00	81.10	6/17/2022 22:23	17.09	6/17/2022 21:32	3.92	6/18/2022 2:28	145.52
6/19/2022 1:19	49.26	6/19/2022 0:01	81.05	6/17/2022 22:24	17.13	6/17/2022 21:33	3.87	6/18/2022 2:29	145.49
6/19/2022 1:20	49.30	6/19/2022 0:02	81.00	6/17/2022 22:25	17.09	6/17/2022 21:34	3.84	6/18/2022 2:30	145.52
6/19/2022 1:21	49.28	6/19/2022 0:03	81.02	6/17/2022 22:26	17.14	6/17/2022 21:35	3.85	6/18/2022 2:31	145.52
6/19/2022 1:22	49.27	6/19/2022 0:04	81.00	6/17/2022 22:27	17.13	6/17/2022 21:36	3.84	6/18/2022 2:32	145.52
6/19/2022 1:23	49.28	6/19/2022 0:05	80.96	6/17/2022 22:28	17.14	6/17/2022 21:37	3.83	6/18/2022 2:33	145.51
6/19/2022 1:24	49.29	6/19/2022 0:06	80.94	6/17/2022 22:29	17.10	6/17/2022 21:38	3.85	6/18/2022 2:34	145.49

6/19/2022 1:25	49.29	6/19/2022 0:07	80.94	6/17/2022 22:30	17.11	6/17/2022 21:39	3.84	6/18/2022 2:35	145.49
6/19/2022 1:26	49.26	6/19/2022 0:08	80.89	6/17/2022 22:31	17.15	6/17/2022 21:40	3.86	6/18/2022 2:36	145.53
6/19/2022 1:27	49.29	6/19/2022 0:09	80.91	6/17/2022 22:32	17.97	6/17/2022 21:41	3.79	6/18/2022 2:37	145.50
6/19/2022 1:28	49.26	6/19/2022 0:10	80.92	6/17/2022 22:33	23.36	6/17/2022 21:42	3.84	6/18/2022 2:38	145.53
6/19/2022 1:29	49.27	6/19/2022 0:11	80.88	6/17/2022 22:34	26.65	6/17/2022 21:43	3.82	6/18/2022 2:39	145.50
6/19/2022 1:30	49.29	6/19/2022 0:12	80.86	6/17/2022 22:35	28.74	6/17/2022 21:44	3.88	6/18/2022 2:40	145.50
6/19/2022 1:31	49.28	6/19/2022 0:13	80.86	6/17/2022 22:36	25.40	6/17/2022 21:45	3.78	6/18/2022 2:41	145.52
6/19/2022 1:32	49.26	6/19/2022 0:14	80.86	6/17/2022 22:37	23.41	6/17/2022 21:46	3.86	6/18/2022 2:42	145.52
6/19/2022 1:33	49.27	6/19/2022 0:15	80.83	6/17/2022 22:38	22.27	6/17/2022 21:47	3.82	6/18/2022 2:43	145.51
6/19/2022 1:34	49.25	6/19/2022 0:16	80.85	6/17/2022 22:39	21.51	6/17/2022 21:48	3.89	6/18/2022 2:44	145.49
6/19/2022 1:35	49.27	6/19/2022 0:17	80.82	6/17/2022 22:40	20.93	6/17/2022 21:49	3.91	6/18/2022 2:45	145.53
6/19/2022 1:36	49.25	6/19/2022 0:18	80.84	6/17/2022 22:41	20.65	6/17/2022 21:50	3.79	6/18/2022 2:46	145.52
6/19/2022 1:37	49.30	6/19/2022 0:19	80.84	6/17/2022 22:42	20.28	6/17/2022 21:51	3.80	6/18/2022 2:47	145.49
6/19/2022 1:38	49.25	6/19/2022 0:20	80.83	6/17/2022 22:43	20.14	6/17/2022 21:52	3.81	6/18/2022 2:48	145.52
6/19/2022 1:39	49.28	6/19/2022 0:21	80.81	6/17/2022 22:44	25.68	6/17/2022 21:53	4.47	6/18/2022 2:49	145.50
6/19/2022 1:40	49.25	6/19/2022 0:22	80.82	6/17/2022 22:45	28.90	6/17/2022 21:54	4.99	6/18/2022 2:50	145.53
6/19/2022 1:41	49.30	6/19/2022 0:23	80.80	6/17/2022 22:46	30.95	6/17/2022 21:55	5.54	6/18/2022 2:51	145.49
6/19/2022 1:42	49.28	6/19/2022 0:24	80.82	6/17/2022 22:47	28.11	6/17/2022 21:56	5.73	6/18/2022 2:52	145.56
6/19/2022 1:43	49.23	6/19/2022 0:25	80.86	6/17/2022 22:48	25.84	6/17/2022 21:57	5.87	6/18/2022 2:53	145.48
6/19/2022 1:44	49.26	6/19/2022 0:26	80.81	6/17/2022 22:49	24.41	6/17/2022 21:58	5.99	6/18/2022 2:54	145.51
6/19/2022 1:45	49.27	6/19/2022 0:27	80.78	6/17/2022 22:50	23.48	6/17/2022 21:59	6.11	6/18/2022 2:55	145.52
6/19/2022 1:46	49.27	6/19/2022 0:28	80.81	6/17/2022 22:51	22.82	6/17/2022 22:00	5.94	6/18/2022 2:56	145.52
6/19/2022 1:47	49.23	6/19/2022 0:29	80.81	6/17/2022 22:52	22.33	6/17/2022 22:01	5.29	6/18/2022 2:57	145.51
6/19/2022 1:48	49.27	6/19/2022 0:30	80.80	6/17/2022 22:53	21.90	6/17/2022 22:02	5.02	6/18/2022 2:58	145.47
6/19/2022 1:49	49.26	6/19/2022 0:31	80.79	6/17/2022 22:54	21.65	6/17/2022 22:03	5.45	6/18/2022 2:59	145.50
6/19/2022 1:50	49.23	6/19/2022 0:32	80.81	6/17/2022 22:55	25.07	6/17/2022 22:04	5.82	6/18/2022 3:00	145.54
6/19/2022 1:51	49.28	6/19/2022 0:33	80.79	6/17/2022 22:56	28.97	6/17/2022 22:05	6.05	6/18/2022 3:01	145.50
6/19/2022 1:52	49.26	6/19/2022 0:34	80.80	6/17/2022 22:57	31.42	6/17/2022 22:06	6.21	6/18/2022 3:02	145.53
6/19/2022 1:53	49.25	6/19/2022 0:35	80.77	6/17/2022 22:58	30.41	6/17/2022 22:07	6.29	6/18/2022 3:03	145.50
6/19/2022 1:54	49.26	6/19/2022 0:36	80.79	6/17/2022 22:59	27.55	6/17/2022 22:08	6.41	6/18/2022 3:04	145.55
6/19/2022 1:55	49.27	6/19/2022 0:37	80.80	6/17/2022 23:00	25.93	6/17/2022 22:09	6.52	6/18/2022 3:05	145.54
6/19/2022 1:56	49.28	6/19/2022 0:38	80.84	6/17/2022 23:01	24.79	6/17/2022 22:10	6.63	6/18/2022 3:06	145.52
6/19/2022 1:57	49.26	6/19/2022 0:39	80.77	6/17/2022 23:02	24.06	6/17/2022 22:11	6.70	6/18/2022 3:07	145.52
6/19/2022 1:58	49.27	6/19/2022 0:40	80.77	6/17/2022 23:03	23.47	6/17/2022 22:12	6.86	6/18/2022 3:08	145.56
6/19/2022 1:59	49.23	6/19/2022 0:41	80.79	6/17/2022 23:04	23.02	6/17/2022 22:13	6.85	6/18/2022 3:09	145.50
6/19/2022 2:00	49.24	6/19/2022 0:42	80.80	6/17/2022 23:05	22.65	6/17/2022 22:14	6.37	6/18/2022 3:10	145.57
6/19/2022 2:01	49.25	6/19/2022 0:43	80.79	6/17/2022 23:06	22.38	6/17/2022 22:15	5.92	6/18/2022 3:11	145.54
6/19/2022 2:02	49.25	6/19/2022 0:44	80.79	6/17/2022 23:07	22.13	6/17/2022 22:16	5.71	6/18/2022 3:12	145.56
6/19/2022 2:03	49.22	6/19/2022 0:45	80.80	6/17/2022 23:08	21.83	6/17/2022 22:17	5.53	6/18/2022 3:13	145.55
6/19/2022 2:04	49.22	6/19/2022 0:46	80.79	6/17/2022 23:09	21.64	6/17/2022 22:18	5.55	6/18/2022 3:14	145.52
6/19/2022 2:05	49.27	6/19/2022 0:47	80.76	6/17/2022 23:10	21.45	6/17/2022 22:19	5.53	6/18/2022 3:15	145.53
6/19/2022 2:06	49.26	6/19/2022 0:48	80.78	6/17/2022 23:11	21.30	6/17/2022 22:20	5.36	6/18/2022 3:16	145.54
6/19/2022 2:07	49.23	6/19/2022 0:49	80.81	6/17/2022 23:12	21.21	6/17/2022 22:21	5.29	6/18/2022 3:17	145.54
6/19/2022 2:08	49.23	6/19/2022 0:50	80.83	6/17/2022 23:13	21.04	6/17/2022 22:22	5.23	6/18/2022 3:18	145.57
6/19/2022 2:09	49.25	6/19/2022 0:51	80.84	6/17/2022 23:14	20.95	6/17/2022 22:23	5.21	6/18/2022 3:19	145.53
6/19/2022 2:10	49.25	6/19/2022 0:52	80.81	6/17/2022 23:15	20.79	6/17/2022 22:24	5.29	6/18/2022 3:20	145.54
6/19/2022 2:11	49.28	6/19/2022 0:53	80.76	6/17/2022 23:16	20.71	6/17/2022 22:25	5.28	6/18/2022 3:21	145.53
6/19/2022 2:12	49.24	6/19/2022 0:54	80.77	6/17/2022 23:17	20.56	6/17/2022 22:26	5.16	6/18/2022 3:22	145.52
6/19/2022 2:13	49.23	6/19/2022 0:55	80.79	6/17/2022 23:18	20.48	6/17/2022 22:27	5.14	6/18/2022 3:23	145.55
6/19/2022 2:14	49.24	6/19/2022 0:56	80.75	6/17/2022 23:19	20.43	6/17/2022 22:28	5.08	6/18/2022 3:24	145.57
6/19/2022 2:15	49.24	6/19/2022 0:57	80.80	6/17/2022 23:20	20.34	6/17/2022 22:29	5.08	6/18/2022 3:25	145.53
6/19/2022 2:16	49.21	6/19/2022 0:58	80.75	6/17/2022 23:21	20.23	6/17/2022 22:30	5.00	6/18/2022 3:26	145.57
6/19/2022 2:17	49.24	6/19/2022 0:59	80.79	6/17/2022 23:22	20.14	6/17/2022 22:31	4.97	6/18/2022 3:27	145.53
6/19/2022 2:18	49.25	6/19/2022 1:00	80.77	6/17/2022 23:23	20.09	6/17/2022 22:32	4.94	6/18/2022 3:28	145.53
6/19/2022 2:19	49.25	6/19/2022 1:01	80.77	6/17/2022 23:24	20.03	6/17/2022 22:33	4.97	6/18/2022 3:29	145.55
6/19/2022 2:20	49.25	6/19/2022 1:02	80.78	6/17/2022 23:25	19.90	6/17/2022 22:34	4.93	6/18/2022 3:30	145.53
6/19/2022 2:21	49.23	6/19/2022 1:03	80.81	6/17/2022 23:26	19.89	6/17/2022 22:35	4.89	6/18/2022 3:31	145.53
6/19/2022 2:22	49.24	6/19/2022 1:04	80.78	6/17/2022 23:27	19.83	6/17/2022 22:36	4.90	6/18/2022 3:32	145.55
6/19/2022 2:23	49.26	6/19/2022 1:05	80.79	6/17/2022 23:28	19.72	6/17/2022 22:37	4.83	6/18/2022 3:33	145.57
6/19/2022 2:24	49.24	6/19/2022 1:06	80.76	6/17/2022 23:29	19.70	6/17/2022 22:38	4.93	6/18/2022 3:34	145.58
6/19/2022 2:25	49.22	6/19/2022 1:07	80.77	6/17/2022 23:30	19.59	6/17/2022 22:39	4.85	6/18/2022 3:35	145.54
6/19/2022 2:26	49.27	6/19/2022 1:08	80.78	6/17/2022 23:31	19.56	6/17/2022 22:40	4.77	6/18/2022 3:36	145.56
6/19/2022 2:27	49.24	6/19/2022 1:09	80.81	6/17/2022 23:32	19.51	6/17/2022 22:41	4.96	6/18/2022 3:37	145.57
6/19/2022 2:28	49.25	6/19/2022 1:10	80.81	6/17/2022 23:33	19.46	6/17/2022 22:42	4.93	6/18/2022 3:38	145.58
6/19/2022 2:29	49.23	6/19/2022 1:11	80.82	6/17/2022 23:34	19.46	6/17/2022 22:43	4.89	6/18/2022 3:39	145.59
6/19/2022 2:30	49.24	6/19/2022 1:12	80.75	6/17/2022 23:35	19.38	6/17/2022 22:44	4.84	6/18/2022 3:40	145.55
6/19/2022 2:31	49.22	6/19/2022 1:13	80.80	6/17/2022 23:36	19.32	6/17/2022 22:45	4.74	6/18/2022 3:41	145.56
6/19/2022 2:32	49.23	6/19/2022 1:14	80.78	6/17/2022 23:37	19.32	6/17/2022 22:46	4.76	6/18/2022 3:42	145.53
6/19/2022 2:33	49.26	6/19/2022 1:15	80.74	6/17/2022 23:38	19.24	6/17/2022 22:47	4.76	6/18/2022 3:43	145.56
6/19/2022 2:34	49.25	6/19/2022 1:16	80.78	6/17/2022 23:39	19.17	6/17/2022 22:48	4.76	6/18/2022 3:44	145.56
6/19/2022 2:35	49.23	6/19/2022 1:17	80.80	6/17/2022 23:40	19.19	6/17/2022 22:49	4.71	6/18/2022 3:45	145.58
6/19/2022 2:36	49.22	6/19/2022 1:18	80.75	6/17/2022 23:41	19.13	6/17/2022 22:50	4.75	6/18/2022 3:46	145.56
6/19/2022 2:37	49.21	6/19/2022 1:19	80.82	6/17/2022 23:42	19.11	6/17/2022 22:51	4.70	6/18/2022 3:47	145.55
6/19/2022 2:38	49.24	6/19/2022 1:20	80.78	6/17/2022 23:43	19.02	6/17/2022 22:52	4.78	6/18/2022 3:48	145.57
6/19/2022 2:39	49.20	6/19/2022 1:21	80.80	6/17/2022 23:44	19.03	6/17/2022 22:53	4.69	6/18/2022 3:49	145.55
6/19/2022 2:40	49.22	6/19/2022 1:22	80.76	6/17/2022 23:45	18.97	6/17/2022 22:54	4.65	6/18/2022 3:50	145.55
6/19/2022 2:41	49.21	6/19/2022 1:23	80.83	6/17/2022 23:46	18.96	6/17/2022 22:55	4.63	6/18/2022 3:51	145.55
6/19/2022 2:42	49.24	6/19/2022 1:24	80.75	6/17/2022 23:47	18.92	6/17/2022 22:56	4.73	6/18/2022 3:52	145.56
6/19/2022 2:43	49.24	6/19/2022 1:25	80.77	6/17/2022 23:48	18.91	6/17/2022 22:57	4.63	6/18/2022 3:53	145.56
6/19/2022 2:44	49.21	6/19/2022 1:26	80.77	6/17/2022 23:49	18.86	6/17/2022 22:58	4.59	6/18/2022 3:54	145.54
6/19/2022 2:45	49.20	6/19/2022 1:27	80.80	6/17/2022 23:50	18.82	6/17/2022 22:59	4.61	6/18/2022 3:55	145.51
6/19/2022 2:46	49.26	6/19/2022 1:28	80.79	6/17/2022 23:51	18.76	6/17/2022 23:00	4.69	6/18/2022 3:56	145.58
6/19/2022 2:47	49.24	6/19/2022 1:29	80.77	6/17/2022 23:52	18.77	6/17/2022 23:01	4.57	6/18/2022 3:57	145.53
6/19/2022 2:48	49.24	6/19/2022 1:30	80.81	6/17/2022 23:53	18.72	6/17/2022 23:02	4.58	6/18/2022 3:58	145.52
6/19/2022 2:49	49.21	6/19/2022 1:31	80.73	6/17/2022 23:54	18.65	6/17/2022 23:03	4.56	6/18/2022 3:59	145.54
6/19/2022 2:50	49.22	6/19/2022 1:32	80.77	6/17/2022 23:55	18.67	6/17/2022 23:04	4.61	6/18/2022 4:00	145.54
6/19/2022 2:51	49.22	6/19/2022 1:33	80.75	6/17/2022 23:56	18.64	6/17/2022 23:05	4.55	6/18/2022 4:01	145.54
6/19/2022 2:52	49.19	6/19/2022 1:34	80.79	6/17/2022 23:57	18.64	6/17/2022 23:06	4.57	6/18/2022 4:02	145.54

6/19/2022 2:53	49.24	6/19/2022 1:35	80.77	6/17/2022 23:58	18.59	6/17/2022 23:07	4.53	6/18/2022 4:03	145.48
6/19/2022 2:54	49.23	6/19/2022 1:36	80.77	6/17/2022 23:59	18.56	6/17/2022 23:08	4.60	6/18/2022 4:04	145.54
6/19/2022 2:55	49.24	6/19/2022 1:37	80.78	6/18/2022 0:00	18.56	6/17/2022 23:09	4.53	6/18/2022 4:05	145.54
6/19/2022 2:56	49.23	6/19/2022 1:38	80.80	6/18/2022 0:01	18.49	6/17/2022 23:10	4.54	6/18/2022 4:06	145.51
6/19/2022 2:57	49.20	6/19/2022 1:39	80.77	6/18/2022 0:02	18.48	6/17/2022 23:11	4.55	6/18/2022 4:07	145.56
6/19/2022 2:58	49.24	6/19/2022 1:40	80.79	6/18/2022 0:03	18.42	6/17/2022 23:12	4.51	6/18/2022 4:08	145.53
6/19/2022 2:59	49.24	6/19/2022 1:41	80.77	6/18/2022 0:04	18.43	6/17/2022 23:13	4.46	6/18/2022 4:09	145.53
6/19/2022 3:00	49.21	6/19/2022 1:42	80.76	6/18/2022 0:05	18.40	6/17/2022 23:14	4.50	6/18/2022 4:10	145.54
6/19/2022 3:01	49.21	6/19/2022 1:43	80.82	6/18/2022 0:06	18.39	6/17/2022 23:15	4.47	6/18/2022 4:11	145.53
6/19/2022 3:02	49.19	6/19/2022 1:44	80.78	6/18/2022 0:07	18.37	6/17/2022 23:16	4.51	6/18/2022 4:12	145.56
6/19/2022 3:03	49.21	6/19/2022 1:45	80.79	6/18/2022 0:08	18.36	6/17/2022 23:17	4.47	6/18/2022 4:13	145.56
6/19/2022 3:04	49.22	6/19/2022 1:46	80.76	6/18/2022 0:09	18.30	6/17/2022 23:18	4.47	6/18/2022 4:14	145.56
6/19/2022 3:05	49.18	6/19/2022 1:47	80.79	6/18/2022 0:10	18.34	6/17/2022 23:19	4.45	6/18/2022 4:15	145.56
6/19/2022 3:06	49.21	6/19/2022 1:48	80.74	6/18/2022 0:11	18.28	6/17/2022 23:20	4.51	6/18/2022 4:16	145.57
6/19/2022 3:07	49.22	6/19/2022 1:49	80.74	6/18/2022 0:12	18.26	6/17/2022 23:21	4.42	6/18/2022 4:17	145.56
6/19/2022 3:08	49.25	6/19/2022 1:50	80.81	6/18/2022 0:13	18.26	6/17/2022 23:22	4.46	6/18/2022 4:18	145.56
6/19/2022 3:09	49.21	6/19/2022 1:51	80.74	6/18/2022 0:14	18.23	6/17/2022 23:23	4.66	6/18/2022 4:19	145.56
6/19/2022 3:10	49.23	6/19/2022 1:52	80.78	6/18/2022 0:15	18.20	6/17/2022 23:24	4.46	6/18/2022 4:20	145.56
6/19/2022 3:11	49.20	6/19/2022 1:53	80.77	6/18/2022 0:16	18.19	6/17/2022 23:25	4.50	6/18/2022 4:21	145.59
6/19/2022 3:12	49.19	6/19/2022 1:54	80.79	6/18/2022 0:17	18.12	6/17/2022 23:26	4.48	6/18/2022 4:22	145.58
6/19/2022 3:13	49.23	6/19/2022 1:55	80.79	6/18/2022 0:18	18.13	6/17/2022 23:27	4.48	6/18/2022 4:23	145.57
6/19/2022 3:14	49.20	6/19/2022 1:56	80.74	6/18/2022 0:19	18.11	6/17/2022 23:28	4.40	6/18/2022 4:24	145.58
6/19/2022 3:15	49.24	6/19/2022 1:57	80.79	6/18/2022 0:20	18.12	6/17/2022 23:29	4.46	6/18/2022 4:25	145.56
6/19/2022 3:16	49.21	6/19/2022 1:58	80.77	6/18/2022 0:21	18.13	6/17/2022 23:30	4.38	6/18/2022 4:26	145.56
6/19/2022 3:17	49.18	6/19/2022 1:59	80.79	6/18/2022 0:22	18.06	6/17/2022 23:31	4.45	6/18/2022 4:27	145.58
6/19/2022 3:18	49.22	6/19/2022 2:00	80.76	6/18/2022 0:23	18.06	6/17/2022 23:32	4.36	6/18/2022 4:28	145.52
6/19/2022 3:19	49.23	6/19/2022 2:01	80.78	6/18/2022 0:24	18.10	6/17/2022 23:33	4.41	6/18/2022 4:29	145.57
6/19/2022 3:20	49.20	6/19/2022 2:02	80.80	6/18/2022 0:25	18.00	6/17/2022 23:34	4.41	6/18/2022 4:30	145.52
6/19/2022 3:21	49.21	6/19/2022 2:03	80.77	6/18/2022 0:26	18.01	6/17/2022 23:35	4.45	6/18/2022 4:31	145.55
6/19/2022 3:22	49.22	6/19/2022 2:04	80.74	6/18/2022 0:27	17.98	6/17/2022 23:36	4.37	6/18/2022 4:32	145.54
6/19/2022 3:23	49.24	6/19/2022 2:05	80.76	6/18/2022 0:28	18.01	6/17/2022 23:37	4.36	6/18/2022 4:33	145.52
6/19/2022 3:24	49.22	6/19/2022 2:06	80.79	6/18/2022 0:29	17.93	6/17/2022 23:38	4.70	6/18/2022 4:34	145.53
6/19/2022 3:25	49.18	6/19/2022 2:07	80.78	6/18/2022 0:30	17.94	6/17/2022 23:39	4.55	6/18/2022 4:35	145.56
6/19/2022 3:26	49.20	6/19/2022 2:08	80.75	6/18/2022 0:31	17.92	6/17/2022 23:40	4.46	6/18/2022 4:36	145.53
6/19/2022 3:27	49.14	6/19/2022 2:09	80.80	6/18/2022 0:32	17.90	6/17/2022 23:41	4.39	6/18/2022 4:37	145.56
6/19/2022 3:28	49.19	6/19/2022 2:10	80.80	6/18/2022 0:33	17.86	6/17/2022 23:42	4.41	6/18/2022 4:38	145.53
6/19/2022 3:29	49.20	6/19/2022 2:11	80.77	6/18/2022 0:34	17.87	6/17/2022 23:43	4.35	6/18/2022 4:39	145.54
6/19/2022 3:30	49.20	6/19/2022 2:12	80.77	6/18/2022 0:35	17.83	6/17/2022 23:44	4.32	6/18/2022 4:40	145.54
6/19/2022 3:31	49.18	6/19/2022 2:13	80.83	6/18/2022 0:36	17.86	6/17/2022 23:45	4.35	6/18/2022 4:41	145.52
6/19/2022 3:32	49.21	6/19/2022 2:14	80.78	6/18/2022 0:37	17.79	6/17/2022 23:46	4.32	6/18/2022 4:42	145.52
6/19/2022 3:33	49.20	6/19/2022 2:15	80.76	6/18/2022 0:38	17.83	6/17/2022 23:47	4.33	6/18/2022 4:43	145.54
6/19/2022 3:34	49.21	6/19/2022 2:16	80.81	6/18/2022 0:39	17.83	6/17/2022 23:48	4.37	6/18/2022 4:44	145.52
6/19/2022 3:35	49.20	6/19/2022 2:17	80.78	6/18/2022 0:40	17.79	6/17/2022 23:49	4.33	6/18/2022 4:45	145.54
6/19/2022 3:36	49.21	6/19/2022 2:18	80.80	6/18/2022 0:41	17.78	6/17/2022 23:50	4.26	6/18/2022 4:46	145.51
6/19/2022 3:37	49.21	6/19/2022 2:19	80.81	6/18/2022 0:42	17.78	6/17/2022 23:51	4.32	6/18/2022 4:47	145.55
6/19/2022 3:38	49.21	6/19/2022 2:20	80.78	6/18/2022 0:43	17.74	6/17/2022 23:52	4.30	6/18/2022 4:48	145.52
6/19/2022 3:39	49.16	6/19/2022 2:21	80.78	6/18/2022 0:44	17.71	6/17/2022 23:53	4.32	6/18/2022 4:49	145.50
6/19/2022 3:40	49.20	6/19/2022 2:22	80.77	6/18/2022 0:45	17.72	6/17/2022 23:54	4.26	6/18/2022 4:50	145.51
6/19/2022 3:41	49.22	6/19/2022 2:23	80.79	6/18/2022 0:46	17.68	6/17/2022 23:55	4.25	6/18/2022 4:51	145.54
6/19/2022 3:42	49.16	6/19/2022 2:24	80.81	6/18/2022 0:47	17.67	6/17/2022 23:56	4.25	6/18/2022 4:52	145.52
6/19/2022 3:43	49.20	6/19/2022 2:25	80.80	6/18/2022 0:48	17.67	6/17/2022 23:57	4.29	6/18/2022 4:53	145.52
6/19/2022 3:44	49.18	6/19/2022 2:26	80.77	6/18/2022 0:49	17.67	6/17/2022 23:58	4.20	6/18/2022 4:54	145.52
6/19/2022 3:45	49.21	6/19/2022 2:27	80.80	6/18/2022 0:50	17.66	6/17/2022 23:59	4.21	6/18/2022 4:55	145.53
6/19/2022 3:46	49.21	6/19/2022 2:28	80.77	6/18/2022 0:51	17.60	6/18/2022 0:00	4.22	6/18/2022 4:56	145.49
6/19/2022 3:47	49.19	6/19/2022 2:29	80.77	6/18/2022 0:52	17.62	6/18/2022 0:01	4.23	6/18/2022 4:57	145.52
6/19/2022 3:48	49.20	6/19/2022 2:30	80.81	6/18/2022 0:53	17.64	6/18/2022 0:02	4.19	6/18/2022 4:58	145.51
6/19/2022 3:49	49.18	6/19/2022 2:31	80.74	6/18/2022 0:54	17.60	6/18/2022 0:03	4.17	6/18/2022 4:59	145.50
6/19/2022 3:50	49.18	6/19/2022 2:32	80.77	6/18/2022 0:55	17.63	6/18/2022 0:04	4.21	6/18/2022 5:00	145.51
6/19/2022 3:51	49.17	6/19/2022 2:33	80.79	6/18/2022 0:56	17.58	6/18/2022 0:05	4.47	6/18/2022 5:01	145.53
6/19/2022 3:52	49.22	6/19/2022 2:34	80.82	6/18/2022 0:57	17.57	6/18/2022 0:06	4.41	6/18/2022 5:02	145.51
6/19/2022 3:53	49.21	6/19/2022 2:35	80.83	6/18/2022 0:58	17.58	6/18/2022 0:07	4.35	6/18/2022 5:03	145.51
6/19/2022 3:54	49.20	6/19/2022 2:36	80.80	6/18/2022 0:59	17.55	6/18/2022 0:08	4.34	6/18/2022 5:04	145.50
6/19/2022 3:55	49.20	6/19/2022 2:37	80.84	6/18/2022 1:00	17.57	6/18/2022 0:09	4.33	6/18/2022 5:05	145.49
6/19/2022 3:56	49.21	6/19/2022 2:38	80.78	6/18/2022 1:01	17.52	6/18/2022 0:10	4.31	6/18/2022 5:06	145.52
6/19/2022 3:57	49.21	6/19/2022 2:39	80.76	6/18/2022 1:02	17.60	6/18/2022 0:11	4.34	6/18/2022 5:07	145.49
6/19/2022 3:58	49.19	6/19/2022 2:40	80.77	6/18/2022 1:03	17.55	6/18/2022 0:12	4.33	6/18/2022 5:08	145.51
6/19/2022 3:59	49.17	6/19/2022 2:41	80.77	6/18/2022 1:04	17.50	6/18/2022 0:13	4.35	6/18/2022 5:09	145.52
6/19/2022 4:00	49.21	6/19/2022 2:42	80.78	6/18/2022 1:05	17.55	6/18/2022 0:14	4.35	6/18/2022 5:10	145.53
6/19/2022 4:01	49.20	6/19/2022 2:43	80.80	6/18/2022 1:06	17.53	6/18/2022 0:15	4.33	6/18/2022 5:11	145.49
6/19/2022 4:02	49.21	6/19/2022 2:44	80.84	6/18/2022 1:07	17.50	6/18/2022 0:16	4.37	6/18/2022 5:12	145.51
6/19/2022 4:03	49.20	6/19/2022 2:45	80.78	6/18/2022 1:08	17.48	6/18/2022 0:17	4.31	6/18/2022 5:13	145.52
6/19/2022 4:04	49.19	6/19/2022 2:46	80.75	6/18/2022 1:09	17.50	6/18/2022 0:18	4.27	6/18/2022 5:14	145.52
6/19/2022 4:05	49.18	6/19/2022 2:47	80.79	6/18/2022 1:10	17.50	6/18/2022 0:19	4.30	6/18/2022 5:15	145.50
6/19/2022 4:06	49.19	6/19/2022 2:48	80.76	6/18/2022 1:11	17.47	6/18/2022 0:20	4.25	6/18/2022 5:16	145.55
6/19/2022 4:07	49.17	6/19/2022 2:49	80.75	6/18/2022 1:12	17.49	6/18/2022 0:21	4.33	6/18/2022 5:17	145.50
6/19/2022 4:08	49.24	6/19/2022 2:50	80.81	6/18/2022 1:13	17.51	6/18/2022 0:22	4.30	6/18/2022 5:18	145.48
6/19/2022 4:09	49.17	6/19/2022 2:51	80.78	6/18/2022 1:14	17.41	6/18/2022 0:23	4.35	6/18/2022 5:19	145.53
6/19/2022 4:10	49.18	6/19/2022 2:52	80.75	6/18/2022 1:15	17.44	6/18/2022 0:24	4.35	6/18/2022 5:20	145.50
6/19/2022 4:11	49.18	6/19/2022 2:53	80.78	6/18/2022 1:16	17.42	6/18/2022 0:25	4.28	6/18/2022 5:21	145.49
6/19/2022 4:12	49.21	6/19/2022 2:54	80.76	6/18/2022 1:17	17.45	6/18/2022 0:26	4.31	6/18/2022 5:22	145.48
6/19/2022 4:13	49.16	6/19/2022 2:55	80.77	6/18/2022 1:18	17.43	6/18/2022 0:27	4.25	6/18/2022 5:23	145.51
6/19/2022 4:14	49.18	6/19/2022 2:56	80.79	6/18/2022 1:19	17.44	6/18/2022 0:28	4.33	6/18/2022 5:24	145.51
6/19/2022 4:15	49.13	6/19/2022 2:57	80.77	6/18/2022 1:20	17.46	6/18/2022 0:29	4.30	6/18/2022 5:25	145.50
6/19/2022 4:16	49.21	6/19/2022 2:58	80.83	6/18/2022 1:21	17.41	6/18/2022 0:30	4.28	6/18/2022 5:26	145.52
6/19/2022 4:17	49.17	6/19/2022 2:59	80.76	6/18/2022 1:22	17.38	6/18/2022 0:31	4.32	6/18/2022 5:27	145.49
6/19/2022 4:18	49.15	6/19/2022 3:00	80.78	6/18/2022 1:23	17.40	6/18/2022 0:32	4.34	6/18/2022 5:28	145.47
6/19/2022 4:19	49.19	6/19/2022 3:01	80.79	6/18/2022 1:24	17.39	6/18/2022 0:33	4.28	6/18/2022 5:29	145.53
6/19/2022 4:20	49.18	6/19/2022 3:02	80.81	6/18/2022 1:25	17.40	6/18/2022 0:34	4.25	6/18/2022 5:30	145.49

6/19/2022 4:21	49.20	6/19/2022 3:03	80.75	6/18/2022 1:26	17.38	6/18/2022 0:35	4.27	6/18/2022 5:31	145.48
6/19/2022 4:22	49.19	6/19/2022 3:04	80.78	6/18/2022 1:27	17.34	6/18/2022 0:36	4.24	6/18/2022 5:32	145.50
6/19/2022 4:23	49.21	6/19/2022 3:05	80.85	6/18/2022 1:28	17.36	6/18/2022 0:37	4.16	6/18/2022 5:33	145.52
6/19/2022 4:24	49.18	6/19/2022 3:06	80.75	6/18/2022 1:29	17.34	6/18/2022 0:38	4.17	6/18/2022 5:34	145.49
6/19/2022 4:25	49.21	6/19/2022 3:07	80.84	6/18/2022 1:30	17.31	6/18/2022 0:39	4.18	6/18/2022 5:35	145.51
6/19/2022 4:26	49.20	6/19/2022 3:08	80.77	6/18/2022 1:31	17.32	6/18/2022 0:40	4.22	6/18/2022 5:36	145.49
6/19/2022 4:27	49.17	6/19/2022 3:09	80.78	6/18/2022 1:32	17.33	6/18/2022 0:41	4.14	6/18/2022 5:37	145.47
6/19/2022 4:28	49.18	6/19/2022 3:10	80.78	6/18/2022 1:33	17.30	6/18/2022 0:42	4.15	6/18/2022 5:38	145.48
6/19/2022 4:29	49.20	6/19/2022 3:11	80.76	6/18/2022 1:34	17.32	6/18/2022 0:43	4.16	6/18/2022 5:39	145.49
6/19/2022 4:30	49.17	6/19/2022 3:12	80.79	6/18/2022 1:35	17.32	6/18/2022 0:44	4.15	6/18/2022 5:40	145.48
6/19/2022 4:31	49.17	6/19/2022 3:13	80.78	6/18/2022 1:36	17.32	6/18/2022 0:45	4.16	6/18/2022 5:41	145.47
6/19/2022 4:32	49.19	6/19/2022 3:14	80.78	6/18/2022 1:37	17.23	6/18/2022 0:46	4.13	6/18/2022 5:42	145.50
6/19/2022 4:33	49.19	6/19/2022 3:15	80.81	6/18/2022 1:38	17.26	6/18/2022 0:47	4.11	6/18/2022 5:43	145.50
6/19/2022 4:34	49.19	6/19/2022 3:16	80.80	6/18/2022 1:39	17.25	6/18/2022 0:48	4.09	6/18/2022 5:44	145.48
6/19/2022 4:35	49.21	6/19/2022 3:17	80.82	6/18/2022 1:40	17.22	6/18/2022 0:49	4.15	6/18/2022 5:45	145.50
6/19/2022 4:36	49.16	6/19/2022 3:18	80.77	6/18/2022 1:41	17.24	6/18/2022 0:50	4.07	6/18/2022 5:46	145.49
6/19/2022 4:37	49.16	6/19/2022 3:19	80.79	6/18/2022 1:42	17.23	6/18/2022 0:51	4.11	6/18/2022 5:47	145.49
6/19/2022 4:38	49.20	6/19/2022 3:20	80.78	6/18/2022 1:43	17.24	6/18/2022 0:52	4.05	6/18/2022 5:48	145.47
6/19/2022 4:39	49.17	6/19/2022 3:21	80.78	6/18/2022 1:44	17.25	6/18/2022 0:53	4.11	6/18/2022 5:49	145.51
6/19/2022 4:40	49.17	6/19/2022 3:22	80.77	6/18/2022 1:45	17.19	6/18/2022 0:54	4.03	6/18/2022 5:50	145.51
6/19/2022 4:41	49.23	6/19/2022 3:23	80.79	6/18/2022 1:46	17.17	6/18/2022 0:55	4.05	6/18/2022 5:51	145.49
6/19/2022 4:42	49.16	6/19/2022 3:24	80.78	6/18/2022 1:47	17.21	6/18/2022 0:56	4.09	6/18/2022 5:52	145.50
6/19/2022 4:43	49.16	6/19/2022 3:25	80.78	6/18/2022 1:48	17.21	6/18/2022 0:57	4.07	6/18/2022 5:53	145.48
6/19/2022 4:44	49.16	6/19/2022 3:26	80.80	6/18/2022 1:49	17.17	6/18/2022 0:58	4.04	6/18/2022 5:54	145.47
6/19/2022 4:45	49.20	6/19/2022 3:27	80.81	6/18/2022 1:50	17.25	6/18/2022 0:59	4.05	6/18/2022 5:55	145.47
6/19/2022 4:46	49.18	6/19/2022 3:28	80.78	6/18/2022 1:51	17.20	6/18/2022 1:00	4.06	6/18/2022 5:56	145.49
6/19/2022 4:47	49.17	6/19/2022 3:29	80.78	6/18/2022 1:52	17.17	6/18/2022 1:01	3.96	6/18/2022 5:57	145.48
6/19/2022 4:48	49.17	6/19/2022 3:30	80.75	6/18/2022 1:53	17.22	6/18/2022 1:02	4.00	6/18/2022 5:58	145.46
6/19/2022 4:49	49.17	6/19/2022 3:31	80.79	6/18/2022 1:54	17.16	6/18/2022 1:03	3.98	6/18/2022 5:59	145.50
6/19/2022 4:50	49.16	6/19/2022 3:32	80.77	6/18/2022 1:55	17.14	6/18/2022 1:04	4.02	6/18/2022 6:00	145.46
6/19/2022 4:51	49.17	6/19/2022 3:33	80.77	6/18/2022 1:56	17.21	6/18/2022 1:05	4.03	6/18/2022 6:01	145.48
6/19/2022 4:52	49.18	6/19/2022 3:34	80.81	6/18/2022 1:57	17.13	6/18/2022 1:06	3.99	6/18/2022 6:02	145.48
6/19/2022 4:53	49.16	6/19/2022 3:35	80.78	6/18/2022 1:58	17.17	6/18/2022 1:07	4.03	6/18/2022 6:03	145.48
6/19/2022 4:54	49.20	6/19/2022 3:36	80.75	6/18/2022 1:59	17.12	6/18/2022 1:08	4.01	6/18/2022 6:04	145.45
6/19/2022 4:55	49.16	6/19/2022 3:37	80.80	6/18/2022 2:00	17.17	6/18/2022 1:09	4.02	6/18/2022 6:05	145.43
6/19/2022 4:56	49.21	6/19/2022 3:38	80.83	6/18/2022 2:01	17.14	6/18/2022 1:10	3.98	6/18/2022 6:06	145.43
6/19/2022 4:57	49.19	6/19/2022 3:39	80.77	6/18/2022 2:02	17.11	6/18/2022 1:11	3.97	6/18/2022 6:07	145.45
6/19/2022 4:58	49.21	6/19/2022 3:40	80.79	6/18/2022 2:03	17.13	6/18/2022 1:12	4.02	6/18/2022 6:08	145.43
6/19/2022 4:59	49.19	6/19/2022 3:41	80.78	6/18/2022 2:04	17.12	6/18/2022 1:13	4.01	6/18/2022 6:09	145.43
6/19/2022 5:00	49.17	6/19/2022 3:42	80.80	6/18/2022 2:05	17.08	6/18/2022 1:14	3.95	6/18/2022 6:10	145.45
6/19/2022 5:01	49.20	6/19/2022 3:43	80.81	6/18/2022 2:06	17.08	6/18/2022 1:15	3.95	6/18/2022 6:11	145.41
6/19/2022 5:02	49.16	6/19/2022 3:44	80.77	6/18/2022 2:07	17.10	6/18/2022 1:16	3.97	6/18/2022 6:12	145.48
6/19/2022 5:03	49.19	6/19/2022 3:45	80.82	6/18/2022 2:08	17.08	6/18/2022 1:17	3.99	6/18/2022 6:13	145.43
6/19/2022 5:04	49.17	6/19/2022 3:46	80.76	6/18/2022 2:09	17.03	6/18/2022 1:18	3.95	6/18/2022 6:14	145.42
6/19/2022 5:05	49.18	6/19/2022 3:47	80.79	6/18/2022 2:10	17.08	6/18/2022 1:19	3.94	6/18/2022 6:15	145.41
6/19/2022 5:06	49.17	6/19/2022 3:48	80.78	6/18/2022 2:11	17.06	6/18/2022 1:20	3.97	6/18/2022 6:16	145.43
6/19/2022 5:07	49.18	6/19/2022 3:49	80.74	6/18/2022 2:12	17.09	6/18/2022 1:21	4.00	6/18/2022 6:17	145.42
6/19/2022 5:08	49.18	6/19/2022 3:50	80.81	6/18/2022 2:13	17.01	6/18/2022 1:22	3.97	6/18/2022 6:18	145.42
6/19/2022 5:09	49.91	6/19/2022 3:51	80.75	6/18/2022 2:14	17.01	6/18/2022 1:23	3.93	6/18/2022 6:19	145.42
6/19/2022 5:10	52.41	6/19/2022 3:52	80.80	6/18/2022 2:15	17.03	6/18/2022 1:24	3.93	6/18/2022 6:20	145.42
6/19/2022 5:11	53.54	6/19/2022 3:53	80.76	6/18/2022 2:16	17.01	6/18/2022 1:25	4.04	6/18/2022 6:21	145.45
6/19/2022 5:12	54.19	6/19/2022 3:54	80.77	6/18/2022 2:17	16.98	6/18/2022 1:26	3.90	6/18/2022 6:22	145.43
6/19/2022 5:13	52.71	6/19/2022 3:55	80.76	6/18/2022 2:18	17.00	6/18/2022 1:27	3.92	6/18/2022 6:23	145.43
6/19/2022 5:14	51.35	6/19/2022 3:56	80.84	6/18/2022 2:19	17.01	6/18/2022 1:28	3.96	6/18/2022 6:24	145.42
6/19/2022 5:15	50.81	6/19/2022 3:57	80.78	6/18/2022 2:20	17.02	6/18/2022 1:29	3.94	6/18/2022 6:25	145.41
6/19/2022 5:16	50.53	6/19/2022 3:58	80.76	6/18/2022 2:21	17.00	6/18/2022 1:30	3.92	6/18/2022 6:26	145.43
6/19/2022 5:17	50.37	6/19/2022 3:59	80.76	6/18/2022 2:22	17.02	6/18/2022 1:31	3.92	6/18/2022 6:27	145.40
6/19/2022 5:18	50.25	6/19/2022 4:00	80.78	6/18/2022 2:23	16.98	6/18/2022 1:32	3.87	6/18/2022 6:28	145.41
6/19/2022 5:19	50.17	6/19/2022 4:01	80.79	6/18/2022 2:24	16.99	6/18/2022 1:33	3.99	6/18/2022 6:29	145.41
6/19/2022 5:20	50.11	6/19/2022 4:02	80.83	6/18/2022 2:25	17.01	6/18/2022 1:34	3.86	6/18/2022 6:30	145.44
6/19/2022 5:21	50.04	6/19/2022 4:03	80.78	6/18/2022 2:26	16.99	6/18/2022 1:35	3.90	6/18/2022 6:31	145.43
6/19/2022 5:22	49.99	6/19/2022 4:04	80.80	6/18/2022 2:27	16.99	6/18/2022 1:36	3.85	6/18/2022 6:32	145.43
6/19/2022 5:23	49.93	6/19/2022 4:05	80.82	6/18/2022 2:28	17.02	6/18/2022 1:37	3.95	6/18/2022 6:33	145.39
6/19/2022 5:24	49.87	6/19/2022 4:06	80.79	6/18/2022 2:29	16.99	6/18/2022 1:38	3.89	6/18/2022 6:34	145.43
6/19/2022 5:25	49.86	6/19/2022 4:07	80.81	6/18/2022 2:30	16.98	6/18/2022 1:39	3.85	6/18/2022 6:35	145.40
6/19/2022 5:26	49.83	6/19/2022 4:08	80.79	6/18/2022 2:31	16.98	6/18/2022 1:40	3.89	6/18/2022 6:36	145.44
6/19/2022 5:27	49.81	6/19/2022 4:09	80.81	6/18/2022 2:32	16.91	6/18/2022 1:41	3.90	6/18/2022 6:37	145.40
6/19/2022 5:28	49.79	6/19/2022 4:10	80.75	6/18/2022 2:33	16.94	6/18/2022 1:42	3.82	6/18/2022 6:38	145.42
6/19/2022 5:29	49.77	6/19/2022 4:11	80.85	6/18/2022 2:34	16.94	6/18/2022 1:43	3.81	6/18/2022 6:39	145.42
6/19/2022 5:30	49.73	6/19/2022 4:12	80.78	6/18/2022 2:35	16.92	6/18/2022 1:44	3.85	6/18/2022 6:40	145.43
6/19/2022 5:31	49.71	6/19/2022 4:13	80.79	6/18/2022 2:36	16.91	6/18/2022 1:45	3.91	6/18/2022 6:41	145.42
6/19/2022 5:32	49.75	6/19/2022 4:14	80.81	6/18/2022 2:37	16.90	6/18/2022 1:46	3.83	6/18/2022 6:42	145.41
6/19/2022 5:33	49.69	6/19/2022 4:15	80.79	6/18/2022 2:38	16.91	6/18/2022 1:47	3.88	6/18/2022 6:43	145.41
6/19/2022 5:34	49.67	6/19/2022 4:16	80.76	6/18/2022 2:39	16.91	6/18/2022 1:48	3.83	6/18/2022 6:44	145.40
6/19/2022 5:35	49.71	6/19/2022 4:17	80.75	6/18/2022 2:40	16.90	6/18/2022 1:49	3.89	6/18/2022 6:45	145.42
6/19/2022 5:36	49.64	6/19/2022 4:18	80.78	6/18/2022 2:41	16.88	6/18/2022 1:50	3.78	6/18/2022 6:46	145.43
6/19/2022 5:37	49.64	6/19/2022 4:19	80.79	6/18/2022 2:42	16.86	6/18/2022 1:51	3.83	6/18/2022 6:47	145.38
6/19/2022 5:38	49.63	6/19/2022 4:20	80.75	6/18/2022 2:43	16.92	6/18/2022 1:52	3.83	6/18/2022 6:48	145.43
6/19/2022 5:39	49.65	6/19/2022 4:21	80.83	6/18/2022 2:44	16.90	6/18/2022 1:53	3.88	6/18/2022 6:49	145.40
6/19/2022 5:40	49.62	6/19/2022 4:22	80.78	6/18/2022 2:45	16.84	6/18/2022 1:54	3.81	6/18/2022 6:50	145.41
6/19/2022 5:41	49.60	6/19/2022 4:23	80.75	6/18/2022 2:46	16.90	6/18/2022 1:55	3.79	6/18/2022 6:51	145.40
6/19/2022 5:42	49.62	6/19/2022 4:24	80.79	6/18/2022 2:47	16.93	6/18/2022 1:56	3.81	6/18/2022 6:52	145.41
6/19/2022 5:43	49.58	6/19/2022 4:25	80.79	6/18/2022 2:48	16.86	6/18/2022 1:57	3.81	6/18/2022 6:53	145.39
6/19/2022 5:44	49.57	6/19/2022 4:26	80.80	6/18/2022 2:49	16.90	6/18/2022 1:58	3.76	6/18/2022 6:54	145.39
6/19/2022 5:45	49.58	6/19/2022 4:27	80.81	6/18/2022 2:50	16.82	6/18/2022 1:59	3.76	6/18/2022 6:55	145.38
6/19/2022 5:46	49.59	6/19/2022 4:28	80.77	6/18/2022 2:51	16.87	6/18/2022 2:00	3.79	6/18/2022 6:56	145.40
6/19/2022 5:47	49.53	6/19/2022 4:29	80.83	6/18/2022 2:52	16.84	6/18/2022 2:01	3.82	6/18/2022 6:57	145.39
6/19/2022 5:48	49.55	6/19/2022 4:30	80.80	6/18/2022 2:53	16.85	6/18/2022 2:02	3.74	6/18/2022 6:58	145.40

6/19/2022 5:49	49.59	6/19/2022 4:31	80.76	6/18/2022 2:54	16.84	6/18/2022 2:03	3.74	6/18/2022 6:59	145.43
6/19/2022 5:50	49.50	6/19/2022 4:32	80.79	6/18/2022 2:55	16.87	6/18/2022 2:04	3.75	6/18/2022 7:00	145.39
6/19/2022 5:51	49.51	6/19/2022 4:33	80.78	6/18/2022 2:56	16.86	6/18/2022 2:05	3.81	6/18/2022 7:01	145.40
6/19/2022 5:52	49.53	6/19/2022 4:34	80.74	6/18/2022 2:57	16.83	6/18/2022 2:06	3.77	6/18/2022 7:02	145.40
6/19/2022 5:53	49.55	6/19/2022 4:35	80.81	6/18/2022 2:58	16.77	6/18/2022 2:07	3.77	6/18/2022 7:03	145.39
6/19/2022 5:54	49.55	6/19/2022 4:36	80.80	6/18/2022 2:59	16.85	6/18/2022 2:08	3.76	6/18/2022 7:04	145.40
6/19/2022 5:55	49.50	6/19/2022 4:37	80.78	6/18/2022 3:00	16.80	6/18/2022 2:09	3.75	6/18/2022 7:05	145.36
6/19/2022 5:56	49.52	6/19/2022 4:38	80.80	6/18/2022 3:01	16.76	6/18/2022 2:10	3.73	6/18/2022 7:06	145.38
6/19/2022 5:57	49.53	6/19/2022 4:39	80.77	6/18/2022 3:02	16.81	6/18/2022 2:11	3.72	6/18/2022 7:07	145.39
6/19/2022 5:58	49.49	6/19/2022 4:40	80.81	6/18/2022 3:03	16.83	6/18/2022 2:12	3.75	6/18/2022 7:08	145.36
6/19/2022 5:59	49.49	6/19/2022 4:41	80.82	6/18/2022 3:04	16.75	6/18/2022 2:13	3.73	6/18/2022 7:09	145.38
6/19/2022 6:00	49.52	6/19/2022 4:42	80.79	6/18/2022 3:05	16.78	6/18/2022 2:14	3.70	6/18/2022 7:10	145.42
6/19/2022 6:01	49.49	6/19/2022 4:43	80.77	6/18/2022 3:06	16.81	6/18/2022 2:15	3.72	6/18/2022 7:11	145.38
6/19/2022 6:02	49.49	6/19/2022 4:44	80.78	6/18/2022 3:07	16.80	6/18/2022 2:16	3.78	6/18/2022 7:12	145.38
6/19/2022 6:03	49.46	6/19/2022 4:45	80.78	6/18/2022 3:08	16.82	6/18/2022 2:17	3.76	6/18/2022 7:13	145.41
6/19/2022 6:04	49.47	6/19/2022 4:46	80.79	6/18/2022 3:09	16.80	6/18/2022 2:18	3.69	6/18/2022 7:14	145.39
6/19/2022 6:05	49.48	6/19/2022 4:47	80.83	6/18/2022 3:10	16.78	6/18/2022 2:19	3.69	6/18/2022 7:15	145.42
6/19/2022 6:06	49.47	6/19/2022 4:48	80.86	6/18/2022 3:11	16.76	6/18/2022 2:20	3.70	6/18/2022 7:16	145.41
6/19/2022 6:07	49.43	6/19/2022 4:49	80.75	6/18/2022 3:12	16.77	6/18/2022 2:21	3.74	6/18/2022 7:17	145.40
6/19/2022 6:08	49.47	6/19/2022 4:50	80.79	6/18/2022 3:13	16.77	6/18/2022 2:22	3.70	6/18/2022 7:18	145.39
6/19/2022 6:09	49.46	6/19/2022 4:51	80.77	6/18/2022 3:14	16.75	6/18/2022 2:23	3.66	6/18/2022 7:19	145.39
6/19/2022 6:10	49.48	6/19/2022 4:52	80.81	6/18/2022 3:15	16.72	6/18/2022 2:24	3.72	6/18/2022 7:20	145.41
6/19/2022 6:11	49.48	6/19/2022 4:53	80.79	6/18/2022 3:16	16.79	6/18/2022 2:25	3.75	6/18/2022 7:21	145.42
6/19/2022 6:12	49.42	6/19/2022 4:54	80.77	6/18/2022 3:17	16.76	6/18/2022 2:26	3.68	6/18/2022 7:22	145.42
6/19/2022 6:13	49.44	6/19/2022 4:55	80.75	6/18/2022 3:18	16.81	6/18/2022 2:27	3.70	6/18/2022 7:23	145.41
6/19/2022 6:14	49.44	6/19/2022 4:56	80.80	6/18/2022 3:19	16.77	6/18/2022 2:28	3.71	6/18/2022 7:24	145.38
6/19/2022 6:15	49.46	6/19/2022 4:57	80.80	6/18/2022 3:20	16.76	6/18/2022 2:29	3.69	6/18/2022 7:25	145.42
6/19/2022 6:16	49.46	6/19/2022 4:58	80.78	6/18/2022 3:21	16.75	6/18/2022 2:30	3.63	6/18/2022 7:26	145.41
6/19/2022 6:17	49.44	6/19/2022 4:59	80.82	6/18/2022 3:22	16.74	6/18/2022 2:31	3.66	6/18/2022 7:27	145.41
6/19/2022 6:18	49.44	6/19/2022 5:00	80.82	6/18/2022 3:23	16.73	6/18/2022 2:32	3.71	6/18/2022 7:28	145.42
6/19/2022 6:19	49.44	6/19/2022 5:01	80.78	6/18/2022 3:24	16.73	6/18/2022 2:33	3.68	6/18/2022 7:29	145.41
6/19/2022 6:20	49.43	6/19/2022 5:02	80.79	6/18/2022 3:25	16.73	6/18/2022 2:34	3.87	6/18/2022 7:30	145.43
6/19/2022 6:21	49.45	6/19/2022 5:03	80.79	6/18/2022 3:26	16.70	6/18/2022 2:35	4.33	6/18/2022 7:31	145.39
6/19/2022 6:22	49.40	6/19/2022 5:04	80.76	6/18/2022 3:27	16.69	6/18/2022 2:36	4.63	6/18/2022 7:32	145.39
6/19/2022 6:23	49.41	6/19/2022 5:05	80.76	6/18/2022 3:28	16.70	6/18/2022 2:37	4.82	6/18/2022 7:33	145.38
6/19/2022 6:24	49.42	6/19/2022 5:06	80.81	6/18/2022 3:29	16.71	6/18/2022 2:38	4.95	6/18/2022 7:34	145.39
6/19/2022 6:25	49.43	6/19/2022 5:07	80.80	6/18/2022 3:30	16.71	6/18/2022 2:39	5.08	6/18/2022 7:35	145.40
6/19/2022 6:26	49.45	6/19/2022 5:08	80.78	6/18/2022 3:31	16.69	6/18/2022 2:40	5.18	6/18/2022 7:36	145.39
6/19/2022 6:27	49.41	6/19/2022 5:09	80.77	6/18/2022 3:32	16.71	6/18/2022 2:41	5.29	6/18/2022 7:37	145.41
6/19/2022 6:28	49.42	6/19/2022 5:10	80.81	6/18/2022 3:33	16.71	6/18/2022 2:42	5.35	6/18/2022 7:38	145.39
6/19/2022 6:29	49.44	6/19/2022 5:11	80.79	6/18/2022 3:34	16.65	6/18/2022 2:43	5.43	6/18/2022 7:39	145.39
6/19/2022 6:30	49.39	6/19/2022 5:12	80.84	6/18/2022 3:35	16.68	6/18/2022 2:44	5.49	6/18/2022 7:40	145.40
6/19/2022 6:31	49.39	6/19/2022 5:13	80.77	6/18/2022 3:36	16.69	6/18/2022 2:45	5.57	6/18/2022 7:41	145.38
6/19/2022 6:32	49.41	6/19/2022 5:14	80.79	6/18/2022 3:37	16.70	6/18/2022 2:46	5.68	6/18/2022 7:42	145.38
6/19/2022 6:33	49.41	6/19/2022 5:15	80.80	6/18/2022 3:38	16.68	6/18/2022 2:47	5.70	6/18/2022 7:43	145.39
6/19/2022 6:34	49.40	6/19/2022 5:16	80.76	6/18/2022 3:39	16.69	6/18/2022 2:48	5.73	6/18/2022 7:44	145.38
6/19/2022 6:35	49.41	6/19/2022 5:17	80.80	6/18/2022 3:40	16.70	6/18/2022 2:49	5.63	6/18/2022 7:45	145.39
6/19/2022 6:36	49.40	6/19/2022 5:18	80.82	6/18/2022 3:41	16.65	6/18/2022 2:50	5.21	6/18/2022 7:46	145.39
6/19/2022 6:37	49.38	6/19/2022 5:19	80.77	6/18/2022 3:42	16.68	6/18/2022 2:51	4.96	6/18/2022 7:47	145.39
6/19/2022 6:38	49.39	6/19/2022 5:20	80.74	6/18/2022 3:43	16.65	6/18/2022 2:52	4.91	6/18/2022 7:48	145.01
6/19/2022 6:39	49.35	6/19/2022 5:21	80.81	6/18/2022 3:44	16.64	6/18/2022 2:53	4.84	6/18/2022 7:49	144.44
6/19/2022 6:40	49.41	6/19/2022 5:22	80.80	6/18/2022 3:45	16.63	6/18/2022 2:54	4.79	6/18/2022 7:50	143.85
6/19/2022 6:41	49.39	6/19/2022 5:23	80.78	6/18/2022 3:46	16.68	6/18/2022 2:55	4.73	6/18/2022 7:51	143.31
6/19/2022 6:42	49.41	6/19/2022 5:24	80.80	6/18/2022 3:47	16.68	6/18/2022 2:56	4.71	6/18/2022 7:52	142.77
6/19/2022 6:43	49.41	6/19/2022 5:25	80.80	6/18/2022 3:48	16.67	6/18/2022 2:57	4.69	6/18/2022 7:53	142.22
6/19/2022 6:44	49.41	6/19/2022 5:26	80.80	6/18/2022 3:49	16.71	6/18/2022 2:58	4.61	6/18/2022 7:54	141.67
6/19/2022 6:45	49.41	6/19/2022 5:27	80.78	6/18/2022 3:50	16.66	6/18/2022 2:59	4.67	6/18/2022 7:55	141.14
6/19/2022 6:46	49.42	6/19/2022 5:28	80.76	6/18/2022 3:51	16.66	6/18/2022 3:00	4.65	6/18/2022 7:56	140.60
6/19/2022 6:47	49.35	6/19/2022 5:29	80.75	6/18/2022 3:52	16.67	6/18/2022 3:01	4.55	6/18/2022 7:57	140.09
6/19/2022 6:48	49.38	6/19/2022 5:30	80.79	6/18/2022 3:53	16.65	6/18/2022 3:02	4.56	6/18/2022 7:58	139.58
6/19/2022 6:49	49.36	6/19/2022 5:31	80.76	6/18/2022 3:54	16.63	6/18/2022 3:03	4.58	6/18/2022 7:59	138.98
6/19/2022 6:50	49.39	6/19/2022 5:32	80.79	6/18/2022 3:55	16.66	6/18/2022 3:04	4.52	6/18/2022 8:00	138.49
6/19/2022 6:51	49.39	6/19/2022 5:33	80.81	6/18/2022 3:56	16.64	6/18/2022 3:05	4.51	6/18/2022 8:01	137.96
6/19/2022 6:52	49.37	6/19/2022 5:34	80.80	6/18/2022 3:57	16.57	6/18/2022 3:06	4.51	6/18/2022 8:02	137.41
6/19/2022 6:53	49.36	6/19/2022 5:35	80.81	6/18/2022 3:58	16.67	6/18/2022 3:07	4.50	6/18/2022 8:03	136.91
6/19/2022 6:54	49.40	6/19/2022 5:36	80.82	6/18/2022 3:59	16.61	6/18/2022 3:08	4.48	6/18/2022 8:04	136.35
6/19/2022 6:55	49.35	6/19/2022 5:37	80.81	6/18/2022 4:00	16.62	6/18/2022 3:09	4.48	6/18/2022 8:05	135.84
6/19/2022 6:56	49.35	6/19/2022 5:38	80.78	6/18/2022 4:01	16.61	6/18/2022 3:10	4.49	6/18/2022 8:06	135.33
6/19/2022 6:57	49.38	6/19/2022 5:39	80.76	6/18/2022 4:02	16.61	6/18/2022 3:11	4.50	6/18/2022 8:07	134.85
6/19/2022 6:58	49.36	6/19/2022 5:40	80.78	6/18/2022 4:03	16.62	6/18/2022 3:12	4.45	6/18/2022 8:08	134.30
6/19/2022 6:59	49.40	6/19/2022 5:41	80.77	6/18/2022 4:04	16.61	6/18/2022 3:13	4.47	6/18/2022 8:09	133.81
6/19/2022 7:00	49.38	6/19/2022 5:42	80.80	6/18/2022 4:05	16.60	6/18/2022 3:14	4.42	6/18/2022 8:10	133.29
6/19/2022 7:01	49.38	6/19/2022 5:43	80.78	6/18/2022 4:06	16.60	6/18/2022 3:15	4.48	6/18/2022 8:11	132.85
6/19/2022 7:02	49.39	6/19/2022 5:44	80.77	6/18/2022 4:07	16.58	6/18/2022 3:16	4.37	6/18/2022 8:12	132.35
6/19/2022 7:03	49.36	6/19/2022 5:45	80.82	6/18/2022 4:08	16.62	6/18/2022 3:17	4.43	6/18/2022 8:13	131.83
6/19/2022 7:04	49.38	6/19/2022 5:46	80.80	6/18/2022 4:09	16.58	6/18/2022 3:18	4.39	6/18/2022 8:14	131.38
6/19/2022 7:05	49.37	6/19/2022 5:47	80.82	6/18/2022 4:10	16.57	6/18/2022 3:19	4.42	6/18/2022 8:15	130.87
6/19/2022 7:06	49.37	6/19/2022 5:48	80.81	6/18/2022 4:11	16.60	6/18/2022 3:20	4.31	6/18/2022 8:16	130.38
6/19/2022 7:07	49.34	6/19/2022 5:49	80.79	6/18/2022 4:12	16.57	6/18/2022 3:21	4.39	6/18/2022 8:17	129.91
6/19/2022 7:08	49.39	6/19/2022 5:50	80.80	6/18/2022 4:13	16.60	6/18/2022 3:22	4.40	6/18/2022 8:18	129.42
6/19/2022 7:09	49.36	6/19/2022 5:51	80.78	6/18/2022 4:14	16.61	6/18/2022 3:23	4.34	6/18/2022 8:19	128.96
6/19/2022 7:10	49.36	6/19/2022 5:52	80.77	6/18/2022 4:15	16.56	6/18/2022 3:24	4.42	6/18/2022 8:20	128.47
6/19/2022 7:11	49.36	6/19/2022 5:53	80.74	6/18/2022 4:16	16.57	6/18/2022 3:25	4.41	6/18/2022 8:21	128.00
6/19/2022 7:12	49.38	6/19/2022 5:54	80.79	6/18/2022 4:17	16.58	6/18/2022 3:26	4.32	6/18/2022 8:22	127.55
6/19/2022 7:13	49.30	6/19/2022 5:55	80.76	6/18/2022 4:18	16.60	6/18/2022 3:27	4.41	6/18/2022 8:23	127.07
6/19/2022 7:14	49.33	6/19/2022 5:56	80.81	6/18/2022 4:19	16.56	6/18/2022 3:28	4.40	6/18/2022 8:24	126.61
6/19/2022 7:15	49.33	6/19/2022 5:57	80.78	6/18/2022 4:20	16.58	6/18/2022 3:29	4.37	6/18/2022 8:25	126.14
6/19/2022 7:16	49.33	6/19/2022 5:58	80.74	6/18/2022 4:21	16.59	6/18/2022 3:30	4.32	6/18/2022 8:26	125.68

6/19/2022 7:17	49.35	6/19/2022 5:59	80.79	6/18/2022 4:22	16.56	6/18/2022 3:31	4.35	6/18/2022 8:27	125.20
6/19/2022 7:18	49.36	6/19/2022 6:00	80.79	6/18/2022 4:23	16.55	6/18/2022 3:32	4.39	6/18/2022 8:28	124.77
6/19/2022 7:19	49.38	6/19/2022 6:01	80.77	6/18/2022 4:24	16.54	6/18/2022 3:33	4.26	6/18/2022 8:29	124.32
6/19/2022 7:20	49.33	6/19/2022 6:02	80.77	6/18/2022 4:25	16.57	6/18/2022 3:34	4.29	6/18/2022 8:30	123.87
6/19/2022 7:21	49.35	6/19/2022 6:03	80.80	6/18/2022 4:26	16.55	6/18/2022 3:35	4.35	6/18/2022 8:31	123.41
6/19/2022 7:22	49.35	6/19/2022 6:04	80.81	6/18/2022 4:27	16.58	6/18/2022 3:36	4.36	6/18/2022 8:32	122.99
6/19/2022 7:23	49.34	6/19/2022 6:05	80.80	6/18/2022 4:28	16.57	6/18/2022 3:37	4.25	6/18/2022 8:33	122.58
6/19/2022 7:24	49.31	6/19/2022 6:06	80.81	6/18/2022 4:29	16.49	6/18/2022 3:38	4.33	6/18/2022 8:34	122.13
6/19/2022 7:25	49.35	6/19/2022 6:07	80.78	6/18/2022 4:30	16.55	6/18/2022 3:39	4.38	6/18/2022 8:35	121.68
6/19/2022 7:26	49.33	6/19/2022 6:08	80.78	6/18/2022 4:31	16.53	6/18/2022 3:40	4.31	6/18/2022 8:36	121.29
6/19/2022 7:27	49.33	6/19/2022 6:09	80.79	6/18/2022 4:32	16.54	6/18/2022 3:41	4.31	6/18/2022 8:37	120.85
6/19/2022 7:28	49.32	6/19/2022 6:10	80.80	6/18/2022 4:33	16.54	6/18/2022 3:42	4.32	6/18/2022 8:38	120.44
6/19/2022 7:29	49.30	6/19/2022 6:11	80.78	6/18/2022 4:34	16.52	6/18/2022 3:43	4.28	6/18/2022 8:39	120.04
6/19/2022 7:30	49.37	6/19/2022 6:12	80.76	6/18/2022 4:35	16.57	6/18/2022 3:44	4.32	6/18/2022 8:40	119.60
6/19/2022 7:31	49.35	6/19/2022 6:13	80.79	6/18/2022 4:36	16.52	6/18/2022 3:45	4.35	6/18/2022 8:41	119.22
6/19/2022 7:32	49.33	6/19/2022 6:14	80.77	6/18/2022 4:37	16.57	6/18/2022 3:46	4.25	6/18/2022 8:42	118.78
6/19/2022 7:33	49.32	6/19/2022 6:15	80.78	6/18/2022 4:38	16.53	6/18/2022 3:47	4.32	6/18/2022 8:43	118.40
6/19/2022 7:34	49.35	6/19/2022 6:16	80.80	6/18/2022 4:39	16.56	6/18/2022 3:48	4.30	6/18/2022 8:44	117.99
6/19/2022 7:35	49.36	6/19/2022 6:17	80.76	6/18/2022 4:40	16.60	6/18/2022 3:49	4.29	6/18/2022 8:45	117.62
6/19/2022 7:36	49.34	6/19/2022 6:18	80.79	6/18/2022 4:41	16.53	6/18/2022 3:50	4.33	6/18/2022 8:46	117.22
6/19/2022 7:37	49.34	6/19/2022 6:19	80.74	6/18/2022 4:42	16.55	6/18/2022 3:51	4.26	6/18/2022 8:47	116.86
6/19/2022 7:38	49.33	6/19/2022 6:20	80.82	6/18/2022 4:43	16.56	6/18/2022 3:52	4.23	6/18/2022 8:48	116.51
6/19/2022 7:39	49.31	6/19/2022 6:21	80.79	6/18/2022 4:44	16.54	6/18/2022 3:53	4.28	6/18/2022 8:49	116.10
6/19/2022 7:40	49.32	6/19/2022 6:22	80.79	6/18/2022 4:45	16.51	6/18/2022 3:54	4.29	6/18/2022 8:50	116.91
6/19/2022 7:41	49.34	6/19/2022 6:23	80.78	6/18/2022 4:46	16.46	6/18/2022 3:55	4.28	6/18/2022 8:51	122.20
6/19/2022 7:42	49.35	6/19/2022 6:24	80.77	6/18/2022 4:47	16.48	6/18/2022 3:56	4.26	6/18/2022 8:52	121.64
6/19/2022 7:43	49.35	6/19/2022 6:25	80.82	6/18/2022 4:48	16.46	6/18/2022 3:57	4.31	6/18/2022 8:53	121.13
6/19/2022 7:44	49.32	6/19/2022 6:26	80.81	6/18/2022 4:49	16.52	6/18/2022 3:58	4.33	6/18/2022 8:54	120.70
6/19/2022 7:45	49.36	6/19/2022 6:27	80.77	6/18/2022 4:50	16.53	6/18/2022 3:59	4.24	6/18/2022 8:55	120.22
6/19/2022 7:46	49.32	6/19/2022 6:28	80.78	6/18/2022 4:51	16.49	6/18/2022 4:00	4.27	6/18/2022 8:56	119.77
6/19/2022 7:47	49.34	6/19/2022 6:29	80.75	6/18/2022 4:52	16.49	6/18/2022 4:01	4.25	6/18/2022 8:57	119.34
6/19/2022 7:48	49.32	6/19/2022 6:30	80.82	6/18/2022 4:53	16.49	6/18/2022 4:02	4.22	6/18/2022 8:58	118.94
6/19/2022 7:49	49.28	6/19/2022 6:31	80.78	6/18/2022 4:54	16.52	6/18/2022 4:03	4.30	6/18/2022 8:59	118.48
6/19/2022 7:50	49.32	6/19/2022 6:32	80.77	6/18/2022 4:55	16.50	6/18/2022 4:04	4.28	6/18/2022 9:00	118.09
6/19/2022 7:51	49.30	6/19/2022 6:33	80.82	6/18/2022 4:56	16.49	6/18/2022 4:05	4.23	6/18/2022 9:01	117.65
6/19/2022 7:52	49.33	6/19/2022 6:34	80.75	6/18/2022 4:57	16.50	6/18/2022 4:06	4.29	6/18/2022 9:02	117.24
6/19/2022 7:53	49.33	6/19/2022 6:35	80.77	6/18/2022 4:58	16.50	6/18/2022 4:07	4.32	6/18/2022 9:03	116.80
6/19/2022 7:54	49.36	6/19/2022 6:36	80.81	6/18/2022 4:59	16.49	6/18/2022 4:08	4.23	6/18/2022 9:04	116.48
6/19/2022 7:55	49.30	6/19/2022 6:37	80.78	6/18/2022 5:00	16.54	6/18/2022 4:09	4.28	6/18/2022 9:05	116.03
6/19/2022 7:56	49.31	6/19/2022 6:38	80.82	6/18/2022 5:01	16.49	6/18/2022 4:10	4.82	6/18/2022 9:06	115.66
6/19/2022 7:57	49.31	6/19/2022 6:39	80.78	6/18/2022 5:02	16.48	6/18/2022 4:11	5.09	6/18/2022 9:07	115.26
6/19/2022 7:58	49.30	6/19/2022 6:40	80.80	6/18/2022 5:03	16.48	6/18/2022 4:12	5.30	6/18/2022 9:08	114.89
6/19/2022 7:59	49.31	6/19/2022 6:41	80.74	6/18/2022 5:04	16.49	6/18/2022 4:13	5.36	6/18/2022 9:09	114.51
6/19/2022 8:00	49.31	6/19/2022 6:42	80.81	6/18/2022 5:05	16.46	6/18/2022 4:14	5.48	6/18/2022 9:10	114.13
6/19/2022 8:01	49.33	6/19/2022 6:43	80.78	6/18/2022 5:06	16.44	6/18/2022 4:15	5.59	6/18/2022 9:11	115.13
6/19/2022 8:02	49.31	6/19/2022 6:44	80.73	6/18/2022 5:07	16.47	6/18/2022 4:16	5.65	6/18/2022 9:12	119.57
6/19/2022 8:03	49.29	6/19/2022 6:45	80.76	6/18/2022 5:08	16.55	6/18/2022 4:17	5.53	6/18/2022 9:13	119.02
6/19/2022 8:04	49.29	6/19/2022 6:46	80.78	6/18/2022 5:09	16.51	6/18/2022 4:18	5.04	6/18/2022 9:14	118.58
6/19/2022 8:05	49.32	6/19/2022 6:47	80.78	6/18/2022 5:10	16.45	6/18/2022 4:19	4.84	6/18/2022 9:15	118.11
6/19/2022 8:06	49.31	6/19/2022 6:48	80.77	6/18/2022 5:11	16.49	6/18/2022 4:20	4.71	6/18/2022 9:16	117.65
6/19/2022 8:07	49.32	6/19/2022 6:49	80.80	6/18/2022 5:12	16.47	6/18/2022 4:21	4.61	6/18/2022 9:17	117.24
6/19/2022 8:08	49.32	6/19/2022 6:50	80.76	6/18/2022 5:13	16.47	6/18/2022 4:22	4.60	6/18/2022 9:18	116.84
6/19/2022 8:09	49.30	6/19/2022 6:51	80.79	6/18/2022 5:14	16.46	6/18/2022 4:23	4.56	6/18/2022 9:19	116.41
6/19/2022 8:10	49.30	6/19/2022 6:52	80.79	6/18/2022 5:15	16.52	6/18/2022 4:24	4.54	6/18/2022 9:20	116.01
6/19/2022 8:11	49.29	6/19/2022 6:53	80.78	6/18/2022 5:16	16.46	6/18/2022 4:25	4.47	6/18/2022 9:21	115.55
6/19/2022 8:12	49.31	6/19/2022 6:54	80.80	6/18/2022 5:17	16.49	6/18/2022 4:26	4.43	6/18/2022 9:22	115.19
6/19/2022 8:13	49.31	6/19/2022 6:55	80.79	6/18/2022 5:18	16.45	6/18/2022 4:27	4.40	6/18/2022 9:23	114.78
6/19/2022 8:14	49.31	6/19/2022 6:56	80.75	6/18/2022 5:19	16.45	6/18/2022 4:28	4.42	6/18/2022 9:24	114.38
6/19/2022 8:15	49.30	6/19/2022 6:57	80.78	6/18/2022 5:20	16.45	6/18/2022 4:29	4.34	6/18/2022 9:25	114.03
6/19/2022 8:16	49.32	6/19/2022 6:58	80.77	6/18/2022 5:21	16.47	6/18/2022 4:30	4.31	6/18/2022 9:26	113.64
6/19/2022 8:17	49.29	6/19/2022 6:59	80.79	6/18/2022 5:22	16.44	6/18/2022 4:31	4.33	6/18/2022 9:27	113.24
6/19/2022 8:18	49.29	6/19/2022 7:00	80.81	6/18/2022 5:23	16.40	6/18/2022 4:32	4.33	6/18/2022 9:28	112.90
6/19/2022 8:19	49.29	6/19/2022 7:01	80.80	6/18/2022 5:24	16.44	6/18/2022 4:33	4.32	6/18/2022 9:29	112.49
6/19/2022 8:20	49.29	6/19/2022 7:02	80.81	6/18/2022 5:25	16.41	6/18/2022 4:34	4.25	6/18/2022 9:30	112.14
6/19/2022 8:21	49.33	6/19/2022 7:03	80.77	6/18/2022 5:26	16.47	6/18/2022 4:35	4.23	6/18/2022 9:31	111.78
6/19/2022 8:22	49.32	6/19/2022 7:04	80.76	6/18/2022 5:27	16.46	6/18/2022 4:36	4.27	6/18/2022 9:32	111.40
6/19/2022 8:23	49.26	6/19/2022 7:05	80.80	6/18/2022 5:28	16.42	6/18/2022 4:37	4.25	6/18/2022 9:33	111.10
6/19/2022 8:24	49.29	6/19/2022 7:06	80.80	6/18/2022 5:29	16.41	6/18/2022 4:38	4.18	6/18/2022 9:34	110.73
6/19/2022 8:25	49.29	6/19/2022 7:07	80.81	6/18/2022 5:30	16.43	6/18/2022 4:39	4.21	6/18/2022 9:35	110.37
6/19/2022 8:26	49.28	6/19/2022 7:08	80.83	6/18/2022 5:31	16.41	6/18/2022 4:40	4.21	6/18/2022 9:36	110.05
6/19/2022 8:27	49.28	6/19/2022 7:09	80.81	6/18/2022 5:32	16.44	6/18/2022 4:41	4.16	6/18/2022 9:37	109.75
6/19/2022 8:28	49.28	6/19/2022 7:10	80.79	6/18/2022 5:33	16.42	6/18/2022 4:42	4.24	6/18/2022 9:38	115.18
6/19/2022 8:29	49.30	6/19/2022 7:11	80.81	6/18/2022 5:34	16.42	6/18/2022 4:43	4.12	6/18/2022 9:39	114.43
6/19/2022 8:30	49.28	6/19/2022 7:12	80.79	6/18/2022 5:35	16.42	6/18/2022 4:44	4.13	6/18/2022 9:40	113.95
6/19/2022 8:31	49.29	6/19/2022 7:13	80.80	6/18/2022 5:36	16.43	6/18/2022 4:45	4.16	6/18/2022 9:41	113.53
6/19/2022 8:32	49.28	6/19/2022 7:14	80.79	6/18/2022 5:37	16.42	6/18/2022 4:46	4.05	6/18/2022 9:42	113.15
6/19/2022 8:33	49.29	6/19/2022 7:15	80.79	6/18/2022 5:38	16.43	6/18/2022 4:47	4.09	6/18/2022 9:43	112.74
6/19/2022 8:34	49.29	6/19/2022 7:16	80.79	6/18/2022 5:39	16.42	6/18/2022 4:48	4.12	6/18/2022 9:44	112.34
6/19/2022 8:35	49.29	6/19/2022 7:17	80.83	6/18/2022 5:40	16.43	6/18/2022 4:49	4.11	6/18/2022 9:45	111.99
6/19/2022 8:36	49.28	6/19/2022 7:18	80.80	6/18/2022 5:41	16.42	6/18/2022 4:50	4.04	6/18/2022 9:46	111.59
6/19/2022 8:37	49.27	6/19/2022 7:19	80.77	6/18/2022 5:42	16.45	6/18/2022 4:51	4.06	6/18/2022 9:47	111.23
6/19/2022 8:38	49.28	6/19/2022 7:20	80.76	6/18/2022 5:43	16.40	6/18/2022 4:52	4.03	6/18/2022 9:48	110.90
6/19/2022 8:39	49.29	6/19/2022 7:21	80.76	6/18/2022 5:44	16.44	6/18/2022 4:53	4.05	6/18/2022 9:49	110.49
6/19/2022 8:40	49.28	6/19/2022 7:22	80.76	6/18/2022 5:45	16.45	6/18/2022 4:54	3.97	6/18/2022 9:50	110.17
6/19/2022 8:41	49.28	6/19/2022 7:23	80.82	6/18/2022 5:46	16.40	6/18/2022 4:55	4.01	6/18/2022 9:51	109.82
6/19/2022 8:42	49.29	6/19/2022 7:24	80.80	6/18/2022 5:47	16.42	6/18/2022 4:56	3.97	6/18/2022 9:52	109.44
6/19/2022 8:43	49.28	6/19/2022 7:25	80.78	6/18/2022 5:48	16.46	6/18/2022 4:57	3.99	6/18/2022 9:53	109.13
6/19/2022 8:44	49.28	6/19/2022 7:26	80.82	6/18/2022 5:49	16.40	6/18/2022 4:58	3.95	6/18/2022 9:54	108.77

6/19/2022 8:45	49.26	6/19/2022 7:27	80.80	6/18/2022 5:50	16.43	6/18/2022 4:59	3.91	6/18/2022 9:55	108.42
6/19/2022 8:46	49.27	6/19/2022 7:28	80.78	6/18/2022 5:51	16.39	6/18/2022 5:00	3.94	6/18/2022 9:56	108.12
6/19/2022 8:47	49.26	6/19/2022 7:29	80.78	6/18/2022 5:52	16.45	6/18/2022 5:01	4.02	6/18/2022 9:57	107.34
6/19/2022 8:48	49.29	6/19/2022 7:30	80.78	6/18/2022 5:53	16.41	6/18/2022 5:02	3.92	6/18/2022 9:58	112.74
6/19/2022 8:49	49.26	6/19/2022 7:31	80.77	6/18/2022 5:54	16.40	6/18/2022 5:03	3.91	6/18/2022 9:59	112.30
6/19/2022 8:50	49.30	6/19/2022 7:32	80.82	6/18/2022 5:55	16.40	6/18/2022 5:04	3.92	6/18/2022 10:00	111.87
6/19/2022 8:51	49.29	6/19/2022 7:33	80.81	6/18/2022 5:56	16.42	6/18/2022 5:05	3.99	6/18/2022 10:01	111.50
6/19/2022 8:52	49.26	6/19/2022 7:34	80.82	6/18/2022 5:57	16.43	6/18/2022 5:06	3.89	6/18/2022 10:02	111.06
6/19/2022 8:53	49.28	6/19/2022 7:35	80.78	6/18/2022 5:58	16.41	6/18/2022 5:07	3.88	6/18/2022 10:03	110.69
6/19/2022 8:54	49.28	6/19/2022 7:36	80.79	6/18/2022 5:59	16.42	6/18/2022 5:08	3.91	6/18/2022 10:04	110.37
6/19/2022 8:55	49.25	6/19/2022 7:37	80.83	6/18/2022 6:00	16.36	6/18/2022 5:09	3.92	6/18/2022 10:05	109.96
6/19/2022 8:56	49.28	6/19/2022 7:38	80.77	6/18/2022 6:01	16.40	6/18/2022 5:10	3.87	6/18/2022 10:06	109.61
6/19/2022 8:57	49.26	6/19/2022 7:39	80.80	6/18/2022 6:02	16.38	6/18/2022 5:11	3.83	6/18/2022 10:07	109.28
6/19/2022 8:58	49.28	6/19/2022 7:40	80.76	6/18/2022 6:03	16.37	6/18/2022 5:12	3.86	6/18/2022 10:08	108.89
6/19/2022 8:59	49.29	6/19/2022 7:41	80.83	6/18/2022 6:04	16.41	6/18/2022 5:13	3.84	6/18/2022 10:09	108.55
6/19/2022 9:00	49.31	6/19/2022 7:42	80.77	6/18/2022 6:05	16.37	6/18/2022 5:14	3.85	6/18/2022 10:10	108.22
6/19/2022 9:01	52.31	6/19/2022 7:43	80.79	6/18/2022 6:06	16.35	6/18/2022 5:15	3.82	6/18/2022 10:11	107.88
6/19/2022 9:02	53.58	6/19/2022 7:44	80.78	6/18/2022 6:07	16.40	6/18/2022 5:16	3.85	6/18/2022 10:12	107.56
6/19/2022 9:03	54.35	6/19/2022 7:45	80.77	6/18/2022 6:08	16.41	6/18/2022 5:17	3.82	6/18/2022 10:13	107.20
6/19/2022 9:04	54.87	6/19/2022 7:46	80.82	6/18/2022 6:09	16.38	6/18/2022 5:18	3.79	6/18/2022 10:14	106.88
6/19/2022 9:05	55.25	6/19/2022 7:47	80.80	6/18/2022 6:10	16.38	6/18/2022 5:19	3.79	6/18/2022 10:15	106.59
6/19/2022 9:06	55.28	6/19/2022 7:48	80.79	6/18/2022 6:11	16.35	6/18/2022 5:20	3.85	6/18/2022 10:16	106.22
6/19/2022 9:07	52.79	6/19/2022 7:49	80.82	6/18/2022 6:12	16.39	6/18/2022 5:21	3.81	6/18/2022 10:17	105.95
6/19/2022 9:08	51.87	6/19/2022 7:50	80.79	6/18/2022 6:13	16.40	6/18/2022 5:22	3.77	6/18/2022 10:18	105.66
6/19/2022 9:09	51.42	6/19/2022 7:51	80.85	6/18/2022 6:14	16.35	6/18/2022 5:23	3.80	6/18/2022 10:19	105.32
6/19/2022 9:10	51.11	6/19/2022 7:52	80.75	6/18/2022 6:15	16.38	6/18/2022 5:24	3.82	6/18/2022 10:20	105.02
6/19/2022 9:11	50.93	6/19/2022 7:53	80.83	6/18/2022 6:16	16.35	6/18/2022 5:25	3.74	6/18/2022 10:21	104.78
6/19/2022 9:12	50.82	6/19/2022 7:54	80.82	6/18/2022 6:17	16.34	6/18/2022 5:26	3.76	6/18/2022 10:22	104.50
6/19/2022 9:13	50.69	6/19/2022 7:55	80.78	6/18/2022 6:18	16.36	6/18/2022 5:27	3.76	6/18/2022 10:23	104.22
6/19/2022 9:14	50.62	6/19/2022 7:56	80.80	6/18/2022 6:19	16.41	6/18/2022 5:28	3.81	6/18/2022 10:24	103.95
6/19/2022 9:15	50.55	6/19/2022 7:57	80.79	6/18/2022 6:20	16.33	6/18/2022 5:29	3.71	6/18/2022 10:25	103.64
6/19/2022 9:16	50.47	6/19/2022 7:58	80.80	6/18/2022 6:21	16.39	6/18/2022 5:30	3.79	6/18/2022 10:26	103.36
6/19/2022 9:17	50.41	6/19/2022 7:59	80.77	6/18/2022 6:22	16.38	6/18/2022 5:31	3.74	6/18/2022 10:27	103.08
6/19/2022 9:18	50.39	6/19/2022 8:00	80.77	6/18/2022 6:23	16.34	6/18/2022 5:32	3.77	6/18/2022 10:28	102.80
6/19/2022 9:19	50.33	6/19/2022 8:01	83.15	6/18/2022 6:24	16.37	6/18/2022 5:33	3.70	6/18/2022 10:29	102.52
6/19/2022 9:20	50.28	6/19/2022 8:02	83.44	6/18/2022 6:25	16.37	6/18/2022 5:34	3.71	6/18/2022 10:30	102.26
6/19/2022 9:21	50.22	6/19/2022 8:03	82.93	6/18/2022 6:26	16.39	6/18/2022 5:35	3.70	6/18/2022 10:31	102.00
6/19/2022 9:22	50.23	6/19/2022 8:04	82.59	6/18/2022 6:27	16.37	6/18/2022 5:36	3.76	6/18/2022 10:32	101.75
6/19/2022 9:23	50.21	6/19/2022 8:05	82.32	6/18/2022 6:28	16.38	6/18/2022 5:37	3.66	6/18/2022 10:33	101.42
6/19/2022 9:24	50.19	6/19/2022 8:06	82.11	6/18/2022 6:29	16.35	6/18/2022 5:38	3.67	6/18/2022 10:34	101.18
6/19/2022 9:25	50.14	6/19/2022 8:07	81.90	6/18/2022 6:30	16.39	6/18/2022 5:39	3.69	6/18/2022 10:35	100.94
6/19/2022 9:26	50.14	6/19/2022 8:08	81.80	6/18/2022 6:31	16.41	6/18/2022 5:40	3.76	6/18/2022 10:36	100.66
6/19/2022 9:27	50.08	6/19/2022 8:09	81.66	6/18/2022 6:32	16.38	6/18/2022 5:41	3.69	6/18/2022 10:37	100.41
6/19/2022 9:28	50.07	6/19/2022 8:10	81.57	6/18/2022 6:33	16.41	6/18/2022 5:42	3.70	6/18/2022 10:38	100.18
6/19/2022 9:29	50.03	6/19/2022 8:11	81.45	6/18/2022 6:34	16.43	6/18/2022 5:43	3.71	6/18/2022 10:39	99.91
6/19/2022 9:30	50.02	6/19/2022 8:12	81.43	6/18/2022 6:35	16.37	6/18/2022 5:44	3.68	6/18/2022 10:40	99.69
6/19/2022 9:31	50.02	6/19/2022 8:13	81.37	6/18/2022 6:36	16.36	6/18/2022 5:45	3.61	6/18/2022 10:41	99.47
6/19/2022 9:32	49.99	6/19/2022 8:14	81.31	6/18/2022 6:37	16.40	6/18/2022 5:46	3.64	6/18/2022 10:42	99.23
6/19/2022 9:33	50.03	6/19/2022 8:15	81.27	6/18/2022 6:38	16.42	6/18/2022 5:47	3.67	6/18/2022 10:43	98.99
6/19/2022 9:34	49.95	6/19/2022 8:16	81.25	6/18/2022 6:39	16.37	6/18/2022 5:48	3.58	6/18/2022 10:44	98.72
6/19/2022 9:35	49.94	6/19/2022 8:17	81.19	6/18/2022 6:40	16.39	6/18/2022 5:49	3.62	6/18/2022 10:45	98.49
6/19/2022 9:36	49.92	6/19/2022 8:18	81.18	6/18/2022 6:41	16.42	6/18/2022 5:50	3.60	6/18/2022 10:46	98.26
6/19/2022 9:37	49.93	6/19/2022 8:19	81.12	6/18/2022 6:42	16.40	6/18/2022 5:51	3.65	6/18/2022 10:47	98.03
6/19/2022 9:38	49.91	6/19/2022 8:20	81.07	6/18/2022 6:43	16.35	6/18/2022 5:52	3.57	6/18/2022 10:48	97.81
6/19/2022 9:39	49.90	6/19/2022 8:21	81.05	6/18/2022 6:44	16.38	6/18/2022 5:53	3.55	6/18/2022 10:49	97.55
6/19/2022 9:40	49.89	6/19/2022 8:22	81.08	6/18/2022 6:45	16.34	6/18/2022 5:54	3.62	6/18/2022 10:50	97.33
6/19/2022 9:41	49.89	6/19/2022 8:23	81.01	6/18/2022 6:46	16.38	6/18/2022 5:55	3.62	6/18/2022 10:51	97.11
6/19/2022 9:42	49.85	6/19/2022 8:24	81.05	6/18/2022 6:47	16.36	6/18/2022 5:56	3.54	6/18/2022 10:52	96.91
6/19/2022 9:43	49.83	6/19/2022 8:25	80.99	6/18/2022 6:48	16.38	6/18/2022 5:57	3.58	6/18/2022 10:53	96.67
6/19/2022 9:44	49.86	6/19/2022 8:26	80.99	6/18/2022 6:49	16.35	6/18/2022 5:58	3.57	6/18/2022 10:54	96.45
6/19/2022 9:45	49.83	6/19/2022 8:27	81.00	6/18/2022 6:50	16.40	6/18/2022 5:59	3.57	6/18/2022 10:55	96.23
6/19/2022 9:46	49.81	6/19/2022 8:28	80.99	6/18/2022 6:51	16.35	6/18/2022 6:00	3.52	6/18/2022 10:56	96.05
6/19/2022 9:47	49.83	6/19/2022 8:29	80.95	6/18/2022 6:52	16.35	6/18/2022 6:01	3.55	6/18/2022 10:57	95.85
6/19/2022 9:48	49.84	6/19/2022 8:30	80.95	6/18/2022 6:53	16.40	6/18/2022 6:02	3.58	6/18/2022 10:58	97.35
6/19/2022 9:49	49.83	6/19/2022 8:31	80.94	6/18/2022 6:54	16.41	6/18/2022 6:03	5.67	6/18/2022 10:59	100.62
6/19/2022 9:50	49.78	6/19/2022 8:32	80.88	6/18/2022 6:55	16.38	6/18/2022 6:04	6.84	6/18/2022 11:00	100.29
6/19/2022 9:51	49.81	6/19/2022 8:33	80.90	6/18/2022 6:56	16.38	6/18/2022 6:05	7.58	6/18/2022 11:01	100.00
6/19/2022 9:52	49.81	6/19/2022 8:34	80.89	6/18/2022 6:57	16.36	6/18/2022 6:06	8.16	6/18/2022 11:02	99.71
6/19/2022 9:53	49.82	6/19/2022 8:35	80.91	6/18/2022 6:58	16.38	6/18/2022 6:07	9.04	6/18/2022 11:03	99.44
6/19/2022 9:54	49.78	6/19/2022 8:36	80.91	6/18/2022 6:59	16.42	6/18/2022 6:08	9.64	6/18/2022 11:04	99.22
6/19/2022 9:55	49.77	6/19/2022 8:37	80.88	6/18/2022 7:00	16.39	6/18/2022 6:09	10.10	6/18/2022 11:05	98.94
6/19/2022 9:56	49.77	6/19/2022 8:38	80.90	6/18/2022 7:01	16.35	6/18/2022 6:10	10.57	6/18/2022 11:06	98.64
6/19/2022 9:57	49.77	6/19/2022 8:39	80.88	6/18/2022 7:02	16.33	6/18/2022 6:11	10.96	6/18/2022 11:07	98.41
6/19/2022 9:58	49.76	6/19/2022 8:40	80.87	6/18/2022 7:03	16.35	6/18/2022 6:12	11.31	6/18/2022 11:08	98.14
6/19/2022 9:59	49.75	6/19/2022 8:41	80.88	6/18/2022 7:04	16.36	6/18/2022 6:13	11.63	6/18/2022 11:09	97.90
6/19/2022 10:00	49.75	6/19/2022 8:42	80.87	6/18/2022 7:05	16.38	6/18/2022 6:14	11.89	6/18/2022 11:10	97.65
6/19/2022 10:01	49.74	6/19/2022 8:43	80.88	6/18/2022 7:06	16.35	6/18/2022 6:15	12.19	6/18/2022 11:11	97.42
6/19/2022 10:02	49.73	6/19/2022 8:44	80.86	6/18/2022 7:07	16.32	6/18/2022 6:16	12.50	6/18/2022 11:12	97.15
6/19/2022 10:03	49.72	6/19/2022 8:45	80.91	6/18/2022 7:08	16.40	6/18/2022 6:17	12.39	6/18/2022 11:13	96.92
6/19/2022 10:04	49.71	6/19/2022 8:46	80.85	6/18/2022 7:09	16.36	6/18/2022 6:18	12.00	6/18/2022 11:14	96.67
6/19/2022 10:05	49.71	6/19/2022 8:47	80.88	6/18/2022 7:10	16.37	6/18/2022 6:19	11.77	6/18/2022 11:15	96.44
6/19/2022 10:06	49.70	6/19/2022 8:48	80.83	6/18/2022 7:11	16.37	6/18/2022 6:20	11.72	6/18/2022 11:16	96.19
6/19/2022 10:07	49.72	6/19/2022 8:49	80.88	6/18/2022 7:12	16.40	6/18/2022 6:21	11.69	6/18/2022 11:17	96.02
6/19/2022 10:08	49.71	6/19/2022 8:50	80.83	6/18/2022 7:13	16.38	6/18/2022 6:22	11.69	6/18/2022 11:18	95.76
6/19/2022 10:09	49.68	6/19/2022 8:51	80.87	6/18/2022 7:14	16.38	6/18/2022 6:23	11.84	6/18/2022 11:19	95.58
6/19/2022 10:10	49.68	6/19/2022 8:52	80.85	6/18/2022 7:15	16.34	6/18/2022 6:24	11.86	6/18/2022 11:20	95.34
6/19/2022 10:11	49.67	6/19/2022 8:53	80.87	6/18/2022 7:16	16.40	6/18/2022 6:25	11.97	6/18/2022 11:21	95.13
6/19/2022 10:12	49.68	6/19/2022 8:54	80.86	6/18/2022 7:17	16.38	6/18/2022 6:26	12.02	6/18/2022 11:22	94.90

6/19/2022 10:13	49.71	6/19/2022 8:55	80.87	6/18/2022 7:18	16.34	6/18/2022 6:27	12.14	6/18/2022 11:23	94.72
6/19/2022 10:14	49.67	6/19/2022 8:56	80.84	6/18/2022 7:19	16.37	6/18/2022 6:28	12.18	6/18/2022 11:24	94.56
6/19/2022 10:15	49.68	6/19/2022 8:57	80.82	6/18/2022 7:20	16.36	6/18/2022 6:29	12.30	6/18/2022 11:25	94.33
6/19/2022 10:16	49.67	6/19/2022 8:58	80.83	6/18/2022 7:21	16.30	6/18/2022 6:30	12.40	6/18/2022 11:26	94.16
6/19/2022 10:17	49.67	6/19/2022 8:59	80.84	6/18/2022 7:22	16.39	6/18/2022 6:31	12.51	6/18/2022 11:27	94.00
6/19/2022 10:18	49.66	6/19/2022 9:00	80.88	6/18/2022 7:23	16.36	6/18/2022 6:32	13.34	6/18/2022 11:28	93.84
6/19/2022 10:19	49.65	6/19/2022 9:01	80.85	6/18/2022 7:24	16.35	6/18/2022 6:33	13.62	6/18/2022 11:29	93.63
6/19/2022 10:20	49.66	6/19/2022 9:02	80.84	6/18/2022 7:25	16.36	6/18/2022 6:34	13.89	6/18/2022 11:30	93.45
6/19/2022 10:21	49.67	6/19/2022 9:03	80.86	6/18/2022 7:26	16.31	6/18/2022 6:35	14.10	6/18/2022 11:31	93.25
6/19/2022 10:22	49.63	6/19/2022 9:04	80.83	6/18/2022 7:27	16.36	6/18/2022 6:36	14.34	6/18/2022 11:32	93.07
6/19/2022 10:23	49.64	6/19/2022 9:05	80.83	6/18/2022 7:28	16.33	6/18/2022 6:37	14.56	6/18/2022 11:33	92.87
6/19/2022 10:24	49.62	6/19/2022 9:06	80.84	6/18/2022 7:29	16.37	6/18/2022 6:38	14.72	6/18/2022 11:34	92.68
6/19/2022 10:25	49.61	6/19/2022 9:07	80.84	6/18/2022 7:30	16.37	6/18/2022 6:39	14.90	6/18/2022 11:35	92.52
6/19/2022 10:26	49.61	6/19/2022 9:08	80.78	6/18/2022 7:31	16.33	6/18/2022 6:40	15.07	6/18/2022 11:36	92.32
6/19/2022 10:27	49.63	6/19/2022 9:09	80.85	6/18/2022 7:32	16.39	6/18/2022 6:41	15.23	6/18/2022 11:37	92.15
6/19/2022 10:28	49.66	6/19/2022 9:10	80.84	6/18/2022 7:33	16.31	6/18/2022 6:42	15.42	6/18/2022 11:38	91.96
6/19/2022 10:29	49.60	6/19/2022 9:11	80.86	6/18/2022 7:34	16.34	6/18/2022 6:43	15.53	6/18/2022 11:39	91.82
6/19/2022 10:30	49.60	6/19/2022 9:12	80.85	6/18/2022 7:35	16.35	6/18/2022 6:44	15.66	6/18/2022 11:40	91.64
6/19/2022 10:31	49.62	6/19/2022 9:13	80.80	6/18/2022 7:36	16.31	6/18/2022 6:45	15.88	6/18/2022 11:41	91.49
6/19/2022 10:32	49.57	6/19/2022 9:14	80.84	6/18/2022 7:37	16.34	6/18/2022 6:46	16.00	6/18/2022 11:42	91.39
6/19/2022 10:33	49.60	6/19/2022 9:15	80.84	6/18/2022 7:38	16.40	6/18/2022 6:47	16.67	6/18/2022 11:43	91.20
6/19/2022 10:34	49.58	6/19/2022 9:16	80.80	6/18/2022 7:39	16.31	6/18/2022 6:48	16.42	6/18/2022 11:44	91.02
6/19/2022 10:35	49.61	6/19/2022 9:17	80.83	6/18/2022 7:40	16.35	6/18/2022 6:49	16.39	6/18/2022 11:45	90.86
6/19/2022 10:36	49.58	6/19/2022 9:18	80.83	6/18/2022 7:41	16.37	6/18/2022 6:50	16.42	6/18/2022 11:46	90.75
6/19/2022 10:37	49.57	6/19/2022 9:19	80.83	6/18/2022 7:42	16.35	6/18/2022 6:51	16.47	6/18/2022 11:47	90.53
6/19/2022 10:38	49.59	6/19/2022 9:20	80.78	6/18/2022 7:43	16.38	6/18/2022 6:52	16.53	6/18/2022 11:48	90.40
6/19/2022 10:39	49.59	6/19/2022 9:21	80.82	6/18/2022 7:44	16.33	6/18/2022 6:53	16.72	6/18/2022 11:49	90.23
6/19/2022 10:40	49.59	6/19/2022 9:22	80.82	6/18/2022 7:45	16.31	6/18/2022 6:54	16.85	6/18/2022 11:50	90.11
6/19/2022 10:41	49.57	6/19/2022 9:23	80.81	6/18/2022 7:46	16.35	6/18/2022 6:55	16.88	6/18/2022 11:51	89.95
6/19/2022 10:42	49.61	6/19/2022 9:24	80.81	6/18/2022 7:47	16.31	6/18/2022 6:56	16.90	6/18/2022 11:52	89.80
6/19/2022 10:43	49.57	6/19/2022 9:25	80.84	6/18/2022 7:48	16.33	6/18/2022 6:57	17.04	6/18/2022 11:53	89.65
6/19/2022 10:44	49.60	6/19/2022 9:26	80.81	6/18/2022 7:49	16.34	6/18/2022 6:58	17.08	6/18/2022 11:54	89.50
6/19/2022 10:45	49.57	6/19/2022 9:27	80.84	6/18/2022 7:50	16.33	6/18/2022 6:59	17.17	6/18/2022 11:55	89.33
6/19/2022 10:46	49.57	6/19/2022 9:28	80.86	6/18/2022 7:51	16.34	6/18/2022 7:00	17.47	6/18/2022 11:56	89.22
6/19/2022 10:47	49.56	6/19/2022 9:29	80.80	6/18/2022 7:52	16.36	6/18/2022 7:01	17.60	6/18/2022 11:57	89.03
6/19/2022 10:48	49.53	6/19/2022 9:30	80.81	6/18/2022 7:53	16.33	6/18/2022 7:02	17.59	6/18/2022 11:58	88.91
6/19/2022 10:49	49.56	6/19/2022 9:31	80.84	6/18/2022 7:54	16.34	6/18/2022 7:03	17.63	6/18/2022 11:59	88.76
6/19/2022 10:50	49.57	6/19/2022 9:32	80.83	6/18/2022 7:55	16.32	6/18/2022 7:04	17.70	6/18/2022 12:00	88.64
6/19/2022 10:51	49.54	6/19/2022 9:33	80.86	6/18/2022 7:56	16.36	6/18/2022 7:05	17.80	6/18/2022 12:01	88.53
6/19/2022 10:52	49.55	6/19/2022 9:34	80.77	6/18/2022 7:57	16.35	6/18/2022 7:06	17.88	6/18/2022 12:02	88.34
6/19/2022 10:53	49.55	6/19/2022 9:35	80.81	6/18/2022 7:58	16.28	6/18/2022 7:07	17.15	6/18/2022 12:03	89.61
6/19/2022 10:54	49.55	6/19/2022 9:36	80.83	6/18/2022 7:59	16.31	6/18/2022 7:08	16.55	6/18/2022 12:04	94.37
6/19/2022 10:55	49.57	6/19/2022 9:37	80.85	6/18/2022 8:00	16.35	6/18/2022 7:09	16.23	6/18/2022 12:05	94.10
6/19/2022 10:56	49.53	6/19/2022 9:38	80.82	6/18/2022 8:01	16.35	6/18/2022 7:10	16.03	6/18/2022 12:06	93.83
6/19/2022 10:57	49.53	6/19/2022 9:39	80.84	6/18/2022 8:02	16.33	6/18/2022 7:11	15.80	6/18/2022 12:07	93.60
6/19/2022 10:58	49.57	6/19/2022 9:40	80.79	6/18/2022 8:03	16.32	6/18/2022 7:12	15.65	6/18/2022 12:08	93.37
6/19/2022 10:59	49.56	6/19/2022 9:41	80.83	6/18/2022 8:04	16.37	6/18/2022 7:13	15.56	6/18/2022 12:09	93.15
6/19/2022 11:00	49.52	6/19/2022 9:42	80.83	6/18/2022 8:05	16.33	6/18/2022 7:14	15.52	6/18/2022 12:10	92.93
6/19/2022 11:01	49.57	6/19/2022 9:43	80.81	6/18/2022 8:06	16.34	6/18/2022 7:15	14.51	6/18/2022 12:11	92.71
6/19/2022 11:02	49.54	6/19/2022 9:44	80.88	6/18/2022 8:07	16.31	6/18/2022 7:16	13.92	6/18/2022 12:12	92.50
6/19/2022 11:03	49.51	6/19/2022 9:45	82.40	6/18/2022 8:08	16.33	6/18/2022 7:17	13.51	6/18/2022 12:13	92.28
6/19/2022 11:04	49.53	6/19/2022 9:46	82.14	6/18/2022 8:09	16.34	6/18/2022 7:18	13.25	6/18/2022 12:14	95.50
6/19/2022 11:05	49.52	6/19/2022 9:47	81.90	6/18/2022 8:10	16.34	6/18/2022 7:19	13.02	6/18/2022 12:15	97.41
6/19/2022 11:06	49.54	6/19/2022 9:48	81.76	6/18/2022 8:11	16.30	6/18/2022 7:20	12.78	6/18/2022 12:16	97.05
6/19/2022 11:07	49.53	6/19/2022 9:49	83.02	6/18/2022 8:12	16.33	6/18/2022 7:21	12.58	6/18/2022 12:17	96.79
6/19/2022 11:08	49.50	6/19/2022 9:50	82.48	6/18/2022 8:13	16.33	6/18/2022 7:22	12.43	6/18/2022 12:18	96.48
6/19/2022 11:09	49.51	6/19/2022 9:51	83.37	6/18/2022 8:14	16.33	6/18/2022 7:23	12.26	6/18/2022 12:19	96.24
6/19/2022 11:10	49.50	6/19/2022 9:52	85.39	6/18/2022 8:15	16.36	6/18/2022 7:24	12.11	6/18/2022 12:20	95.93
6/19/2022 11:11	49.50	6/19/2022 9:53	84.67	6/18/2022 8:16	16.33	6/18/2022 7:25	11.99	6/18/2022 12:21	95.72
6/19/2022 11:12	49.53	6/19/2022 9:54	84.05	6/18/2022 8:17	16.35	6/18/2022 7:26	11.96	6/18/2022 12:22	95.46
6/19/2022 11:13	49.48	6/19/2022 9:55	83.57	6/18/2022 8:18	16.34	6/18/2022 7:27	11.76	6/18/2022 12:23	95.21
6/19/2022 11:14	49.53	6/19/2022 9:56	83.19	6/18/2022 8:19	16.30	6/18/2022 7:28	11.64	6/18/2022 12:24	94.98
6/19/2022 11:15	49.55	6/19/2022 9:57	82.89	6/18/2022 8:20	16.31	6/18/2022 7:29	11.52	6/18/2022 12:25	94.73
6/19/2022 11:16	49.54	6/19/2022 9:58	83.14	6/18/2022 8:21	16.32	6/18/2022 7:30	11.46	6/18/2022 12:26	94.55
6/19/2022 11:17	49.49	6/19/2022 9:59	82.83	6/18/2022 8:22	16.35	6/18/2022 7:31	11.34	6/18/2022 12:27	94.30
6/19/2022 11:18	49.45	6/19/2022 10:00	82.54	6/18/2022 8:23	19.91	6/18/2022 7:32	11.32	6/18/2022 12:28	94.11
6/19/2022 11:19	49.47	6/19/2022 10:01	82.36	6/18/2022 8:24	24.13	6/18/2022 7:33	11.13	6/18/2022 12:29	93.93
6/19/2022 11:20	49.47	6/19/2022 10:02	82.21	6/18/2022 8:25	26.75	6/18/2022 7:34	11.07	6/18/2022 12:30	93.74
6/19/2022 11:21	49.50	6/19/2022 10:03	82.05	6/18/2022 8:26	24.32	6/18/2022 7:35	10.92	6/18/2022 12:31	93.49
6/19/2022 11:22	49.50	6/19/2022 10:04	81.93	6/18/2022 8:27	22.35	6/18/2022 7:36	10.88	6/18/2022 12:32	93.30
6/19/2022 11:23	49.48	6/19/2022 10:05	81.79	6/18/2022 8:28	21.14	6/18/2022 7:37	10.83	6/18/2022 12:33	93.10
6/19/2022 11:24	49.49	6/19/2022 10:06	84.34	6/18/2022 8:29	20.38	6/18/2022 7:38	10.75	6/18/2022 12:34	92.85
6/19/2022 11:25	49.49	6/19/2022 10:07	83.78	6/18/2022 8:30	19.89	6/18/2022 7:39	10.72	6/18/2022 12:35	92.69
6/19/2022 11:26	49.46	6/19/2022 10:08	83.31	6/18/2022 8:31	19.49	6/18/2022 7:40	10.61	6/18/2022 12:36	92.47
6/19/2022 11:27	49.48	6/19/2022 10:09	82.95	6/18/2022 8:32	19.26	6/18/2022 7:41	10.52	6/18/2022 12:37	92.26
6/19/2022 11:28	49.49	6/19/2022 10:10	82.65	6/18/2022 8:33	19.04	6/18/2022 7:42	10.44	6/18/2022 12:38	92.03
6/19/2022 11:29	49.48	6/19/2022 10:11	82.47	6/18/2022 8:34	18.82	6/18/2022 7:43	10.37	6/18/2022 12:39	91.88
6/19/2022 11:30	49.50	6/19/2022 10:12	82.30	6/18/2022 8:35	18.72	6/18/2022 7:44	10.34	6/18/2022 12:40	91.72
6/19/2022 11:31	49.46	6/19/2022 10:13	82.10	6/18/2022 8:36	18.57	6/18/2022 7:45	10.26	6/18/2022 12:41	91.58
6/19/2022 11:32	49.46	6/19/2022 10:14	81.97	6/18/2022 8:37	18.45	6/18/2022 7:46	10.25	6/18/2022 12:42	91.38
6/19/2022 11:33	49.49	6/19/2022 10:15	81.87	6/18/2022 8:38	18.35	6/18/2022 7:47	10.14	6/18/2022 12:43	91.19
6/19/2022 11:34	49.48	6/19/2022 10:16	81.78	6/18/2022 8:39	18.27	6/18/2022 7:48	10.01	6/18/2022 12:44	91.01
6/19/2022 11:35	49.47	6/19/2022 10:17	81.71	6/18/2022 8:40	18.20	6/18/2022 7:49	10.09	6/18/2022 12:45	90.85
6/19/2022 11:36	49.46	6/19/2022 10:18	81.61	6/18/2022 8:41	18.16	6/18/2022 7:50	9.99	6/18/2022 12:46	90.68
6/19/2022 11:37	49.47	6/19/2022 10:19	81.58	6/18/2022 8:42	18.04	6/18/2022 7:51	9.95	6/18/2022 12:47	90.51
6/19/2022 11:38	49.47	6/19/2022 10:20	81.48	6/18/2022 8:43	17.99	6/18/2022 7:52	9.87	6/18/2022 12:48	90.32
6/19/2022 11:39	49.48	6/19/2022 10:21	81.45	6/18/2022 8:44	17.97	6/18/2022 7:53	9.76	6/18/2022 12:49	90.16
6/19/2022 11:40	49.46	6/19/2022 10:22	81.39	6/18/2022 8:45	17.89	6/18/2022 7:54	10.11	6/18/2022 12:50	90.01

6/19/2022 11:41	49.45	6/19/2022 10:23	81.38	6/18/2022 8:46	17.80	6/18/2022 7:55	10.14	6/18/2022 12:51	89.82
6/19/2022 11:42	49.45	6/19/2022 10:24	81.30	6/18/2022 8:47	17.81	6/18/2022 7:56	10.30	6/18/2022 12:52	92.57
6/19/2022 11:43	49.45	6/19/2022 10:25	81.35	6/18/2022 8:48	17.78	6/18/2022 7:57	9.90	6/18/2022 12:53	97.73
6/19/2022 11:44	49.44	6/19/2022 10:26	81.27	6/18/2022 8:49	17.71	6/18/2022 7:58	10.02	6/18/2022 12:54	97.37
6/19/2022 11:45	49.46	6/19/2022 10:27	81.26	6/18/2022 8:50	17.71	6/18/2022 7:59	10.48	6/18/2022 12:55	100.09
6/19/2022 11:46	49.42	6/19/2022 10:28	81.23	6/18/2022 8:51	17.72	6/18/2022 8:00	10.72	6/18/2022 12:56	105.23
6/19/2022 11:47	49.43	6/19/2022 10:29	81.19	6/18/2022 8:52	17.61	6/18/2022 8:01	10.87	6/18/2022 12:57	104.71
6/19/2022 11:48	49.44	6/19/2022 10:30	81.12	6/18/2022 8:53	17.62	6/18/2022 8:02	11.06	6/18/2022 12:58	104.34
6/19/2022 11:49	49.41	6/19/2022 10:31	81.14	6/18/2022 8:54	17.57	6/18/2022 8:03	11.17	6/18/2022 12:59	103.91
6/19/2022 11:50	49.43	6/19/2022 10:32	81.15	6/18/2022 8:55	17.56	6/18/2022 8:04	11.19	6/18/2022 13:00	103.52
6/19/2022 11:51	49.43	6/19/2022 10:33	81.13	6/18/2022 8:56	17.54	6/18/2022 8:05	11.28	6/18/2022 13:01	103.16
6/19/2022 11:52	49.42	6/19/2022 10:34	81.09	6/18/2022 8:57	17.49	6/18/2022 8:06	11.34	6/18/2022 13:02	102.79
6/19/2022 11:53	49.44	6/19/2022 10:35	81.09	6/18/2022 8:58	17.50	6/18/2022 8:07	11.43	6/18/2022 13:03	102.44
6/19/2022 11:54	49.42	6/19/2022 10:36	81.11	6/18/2022 8:59	17.51	6/18/2022 8:08	11.48	6/18/2022 13:04	102.12
6/19/2022 11:55	49.42	6/19/2022 10:37	81.04	6/18/2022 9:00	17.48	6/18/2022 8:09	10.78	6/18/2022 13:05	101.73
6/19/2022 11:56	49.42	6/19/2022 10:38	81.09	6/18/2022 9:01	17.43	6/18/2022 8:10	10.32	6/18/2022 13:06	101.41
6/19/2022 11:57	49.42	6/19/2022 10:39	81.07	6/18/2022 9:02	17.38	6/18/2022 8:11	10.13	6/18/2022 13:07	101.09
6/19/2022 11:58	49.42	6/19/2022 10:40	81.02	6/18/2022 9:03	17.38	6/18/2022 8:12	10.01	6/18/2022 13:08	100.75
6/19/2022 11:59	49.43	6/19/2022 10:41	81.01	6/18/2022 9:04	17.34	6/18/2022 8:13	9.89	6/18/2022 13:09	106.49
6/19/2022 12:00	49.43	6/19/2022 10:42	81.02	6/18/2022 9:05	17.35	6/18/2022 8:14	9.74	6/18/2022 13:10	108.72
6/19/2022 12:01	49.40	6/19/2022 10:43	81.00	6/18/2022 9:06	17.32	6/18/2022 8:15	9.63	6/18/2022 13:11	108.25
6/19/2022 12:02	49.39	6/19/2022 10:44	80.98	6/18/2022 9:07	17.38	6/18/2022 8:16	9.62	6/18/2022 13:12	113.46
6/19/2022 12:03	49.43	6/19/2022 10:45	81.00	6/18/2022 9:08	17.30	6/18/2022 8:17	9.52	6/18/2022 13:13	116.09
6/19/2022 12:04	49.42	6/19/2022 10:46	80.98	6/18/2022 9:09	17.32	6/18/2022 8:18	9.49	6/18/2022 13:14	115.44
6/19/2022 12:05	49.42	6/19/2022 10:47	80.97	6/18/2022 9:10	17.30	6/18/2022 8:19	9.49	6/18/2022 13:15	114.87
6/19/2022 12:06	49.42	6/19/2022 10:48	80.93	6/18/2022 9:11	17.24	6/18/2022 8:20	9.38	6/18/2022 13:16	114.34
6/19/2022 12:07	49.41	6/19/2022 10:49	80.99	6/18/2022 9:12	17.29	6/18/2022 8:21	9.36	6/18/2022 13:17	113.83
6/19/2022 12:08	49.42	6/19/2022 10:50	80.96	6/18/2022 9:13	17.25	6/18/2022 8:22	9.32	6/18/2022 13:18	113.37
6/19/2022 12:09	49.40	6/19/2022 10:51	80.94	6/18/2022 9:14	17.27	6/18/2022 8:23	9.24	6/18/2022 13:19	113.72
6/19/2022 12:10	49.41	6/19/2022 10:52	80.97	6/18/2022 9:15	17.21	6/18/2022 8:24	9.23	6/18/2022 13:20	118.41
6/19/2022 12:11	49.41	6/19/2022 10:53	80.98	6/18/2022 9:16	17.21	6/18/2022 8:25	9.14	6/18/2022 13:21	117.78
6/19/2022 12:12	49.42	6/19/2022 10:54	80.96	6/18/2022 9:17	17.18	6/18/2022 8:26	9.14	6/18/2022 13:22	117.24
6/19/2022 12:13	49.43	6/19/2022 10:55	80.95	6/18/2022 9:18	17.20	6/18/2022 8:27	9.08	6/18/2022 13:23	116.68
6/19/2022 12:14	49.42	6/19/2022 10:56	80.98	6/18/2022 9:19	17.14	6/18/2022 8:28	9.10	6/18/2022 13:24	116.20
6/19/2022 12:15	49.42	6/19/2022 10:57	80.92	6/18/2022 9:20	17.16	6/18/2022 8:29	9.03	6/18/2022 13:25	115.66
6/19/2022 12:16	49.42	6/19/2022 10:58	80.96	6/18/2022 9:21	17.21	6/18/2022 8:30	9.02	6/18/2022 13:26	115.16
6/19/2022 12:17	49.42	6/19/2022 10:59	80.95	6/18/2022 9:22	17.18	6/18/2022 8:31	8.95	6/18/2022 13:27	114.67
6/19/2022 12:18	49.42	6/19/2022 11:00	80.93	6/18/2022 9:23	17.17	6/18/2022 8:32	8.85	6/18/2022 13:28	114.22
6/19/2022 12:19	49.39	6/19/2022 11:01	80.94	6/18/2022 9:24	17.12	6/18/2022 8:33	8.88	6/18/2022 13:29	113.76
6/19/2022 12:20	49.41	6/19/2022 11:02	80.92	6/18/2022 9:25	17.19	6/18/2022 8:34	8.79	6/18/2022 13:30	113.27
6/19/2022 12:21	49.40	6/19/2022 11:03	80.97	6/18/2022 9:26	17.11	6/18/2022 8:35	8.90	6/18/2022 13:31	112.81
6/19/2022 12:22	49.43	6/19/2022 11:04	80.92	6/18/2022 9:27	17.15	6/18/2022 8:36	9.04	6/18/2022 13:32	112.36
6/19/2022 12:23	49.42	6/19/2022 11:05	80.93	6/18/2022 9:28	17.11	6/18/2022 8:37	9.07	6/18/2022 13:33	111.94
6/19/2022 12:24	49.42	6/19/2022 11:06	80.92	6/18/2022 9:29	17.17	6/18/2022 8:38	8.91	6/18/2022 13:34	111.52
6/19/2022 12:25	49.39	6/19/2022 11:07	80.95	6/18/2022 9:30	17.06	6/18/2022 8:39	8.80	6/18/2022 13:35	111.08
6/19/2022 12:26	49.38	6/19/2022 11:08	80.92	6/18/2022 9:31	17.17	6/18/2022 8:40	8.76	6/18/2022 13:36	110.66
6/19/2022 12:27	49.41	6/19/2022 11:09	80.96	6/18/2022 9:32	17.14	6/18/2022 8:41	8.70	6/18/2022 13:37	110.28
6/19/2022 12:28	49.38	6/19/2022 11:10	80.94	6/18/2022 9:33	17.09	6/18/2022 8:42	8.64	6/18/2022 13:38	109.84
6/19/2022 12:29	49.40	6/19/2022 11:11	80.92	6/18/2022 9:34	17.09	6/18/2022 8:43	8.61	6/18/2022 13:39	109.43
6/19/2022 12:30	49.41	6/19/2022 11:12	80.92	6/18/2022 9:35	17.12	6/18/2022 8:44	8.57	6/18/2022 13:40	109.05
6/19/2022 12:31	49.41	6/19/2022 11:13	80.93	6/18/2022 9:36	17.07	6/18/2022 8:45	8.55	6/18/2022 13:41	108.66
6/19/2022 12:32	49.41	6/19/2022 11:14	80.92	6/18/2022 9:37	17.04	6/18/2022 8:46	8.51	6/18/2022 13:42	108.29
6/19/2022 12:33	49.41	6/19/2022 11:15	80.94	6/18/2022 9:38	17.02	6/18/2022 8:47	8.54	6/18/2022 13:43	107.88
6/19/2022 12:34	49.40	6/19/2022 11:16	80.92	6/18/2022 9:39	17.09	6/18/2022 8:48	8.42	6/18/2022 13:44	107.52
6/19/2022 12:35	49.40	6/19/2022 11:17	80.88	6/18/2022 9:40	17.06	6/18/2022 8:49	8.38	6/18/2022 13:45	107.12
6/19/2022 12:36	49.39	6/19/2022 11:18	80.95	6/18/2022 9:41	17.08	6/18/2022 8:50	8.40	6/18/2022 13:46	106.76
6/19/2022 12:37	49.40	6/19/2022 11:19	80.91	6/18/2022 9:42	17.07	6/18/2022 8:51	8.35	6/18/2022 13:47	106.41
6/19/2022 12:38	49.41	6/19/2022 11:20	80.91	6/18/2022 9:43	17.01	6/18/2022 8:52	8.40	6/18/2022 13:48	106.04
6/19/2022 12:39	49.39	6/19/2022 11:21	80.94	6/18/2022 9:44	17.06	6/18/2022 8:53	8.32	6/18/2022 13:49	105.69
6/19/2022 12:40	49.35	6/19/2022 11:22	80.91	6/18/2022 9:45	17.04	6/18/2022 8:54	8.25	6/18/2022 13:50	110.74
6/19/2022 12:41	49.36	6/19/2022 11:23	80.88	6/18/2022 9:46	16.99	6/18/2022 8:55	8.22	6/18/2022 13:51	110.28
6/19/2022 12:42	49.38	6/19/2022 11:24	80.94	6/18/2022 9:47	17.03	6/18/2022 8:56	8.15	6/18/2022 13:52	109.82
6/19/2022 12:43	49.42	6/19/2022 11:25	80.91	6/18/2022 9:48	17.03	6/18/2022 8:57	8.26	6/18/2022 13:53	109.35
6/19/2022 12:44	49.38	6/19/2022 11:26	80.91	6/18/2022 9:49	17.02	6/18/2022 8:58	8.26	6/18/2022 13:54	108.95
6/19/2022 12:45	49.38	6/19/2022 11:27	80.90	6/18/2022 9:50	17.04	6/18/2022 8:59	8.19	6/18/2022 13:55	108.57
6/19/2022 12:46	49.39	6/19/2022 11:28	80.87	6/18/2022 9:51	17.03	6/18/2022 9:00	8.06	6/18/2022 13:56	108.19
6/19/2022 12:47	49.38	6/19/2022 11:29	80.90	6/18/2022 9:52	17.01	6/18/2022 9:01	8.19	6/18/2022 13:57	107.78
6/19/2022 12:48	49.38	6/19/2022 11:30	80.90	6/18/2022 9:53	17.08	6/18/2022 9:02	8.16	6/18/2022 13:58	107.39
6/19/2022 12:49	49.35	6/19/2022 11:31	80.90	6/18/2022 9:54	16.98	6/18/2022 9:03	8.06	6/18/2022 13:59	107.02
6/19/2022 12:50	49.37	6/19/2022 11:32	80.86	6/18/2022 9:55	17.10	6/18/2022 9:04	8.16	6/18/2022 14:00	106.64
6/19/2022 12:51	49.37	6/19/2022 11:33	80.85	6/18/2022 9:56	17.09	6/18/2022 9:05	7.99	6/18/2022 14:01	106.26
6/19/2022 12:52	49.36	6/19/2022 11:34	80.91	6/18/2022 9:57	17.06	6/18/2022 9:06	7.98	6/18/2022 14:02	105.92
6/19/2022 12:53	49.35	6/19/2022 11:35	80.90	6/18/2022 9:58	17.02	6/18/2022 9:07	7.92	6/18/2022 14:03	105.57
6/19/2022 12:54	49.39	6/19/2022 11:36	80.88	6/18/2022 9:59	17.09	6/18/2022 9:08	7.87	6/18/2022 14:04	105.21
6/19/2022 12:55	49.35	6/19/2022 11:37	80.93	6/18/2022 10:00	17.03	6/18/2022 9:09	7.85	6/18/2022 14:05	104.91
6/19/2022 12:56	49.37	6/19/2022 11:38	80.86	6/18/2022 10:01	17.04	6/18/2022 9:10	8.13	6/18/2022 14:06	104.56
6/19/2022 12:57	49.36	6/19/2022 11:39	80.92	6/18/2022 10:02	17.06	6/18/2022 9:11	8.06	6/18/2022 14:07	104.26
6/19/2022 12:58	49.36	6/19/2022 11:40	80.90	6/18/2022 10:03	17.05	6/18/2022 9:12	7.97	6/18/2022 14:08	103.95
6/19/2022 12:59	49.35	6/19/2022 11:41	80.93	6/18/2022 10:04	17.07	6/18/2022 9:13	7.80	6/18/2022 14:09	103.59
6/19/2022 13:00	49.37	6/19/2022 11:42	80.89	6/18/2022 10:05	17.02	6/18/2022 9:14	7.75	6/18/2022 14:10	103.28
6/19/2022 13:01	49.35	6/19/2022 11:43	80.88	6/18/2022 10:06	17.05	6/18/2022 9:15	7.71	6/18/2022 14:11	102.96
6/19/2022 13:02	49.36	6/19/2022 11:44	80.89	6/18/2022 10:07	17.11	6/18/2022 9:16	7.79	6/18/2022 14:12	102.62
6/19/2022 13:03	49.34	6/19/2022 11:45	80.87	6/18/2022 10:08	17.06	6/18/2022 9:17	7.85	6/18/2022 14:13	102.34
6/19/2022 13:04	49.36	6/19/2022 11:46	80.89	6/18/2022 10:09	17.03	6/18/2022 9:18	7.75	6/18/2022 14:14	102.00
6/19/2022 13:05	49.37	6/19/2022 11:47	80.94	6/18/2022 10:10	16.99	6/18/2022 9:19	7.73	6/18/2022 14:15	101.71
6/19/2022 13:06	49.37	6/19/2022 11:48	80.89	6/18/2022 10:11	17.05	6/18/2022 9:20	7.75	6/18/2022 14:16	101.39
6/19/2022 13:07	49.36	6/19/2022 11:49	80.90	6/18/2022 10:12	17.01	6/18/2022 9:21	7.75	6/18/2022 14:17	101.08
6/19/2022 13:08	49.36	6/19/2022 11:50	80.91	6/18/2022 10:13	17.01	6/18/2022 9:22	7.68	6/18/2022 14:18	100.78

6/19/2022 13:09	49.37	6/19/2022 11:51	80.89	6/18/2022 10:14	17.02	6/18/2022 9:23	7.79	6/18/2022 14:19	100.53
6/19/2022 13:10	49.33	6/19/2022 11:52	80.90	6/18/2022 10:15	16.96	6/18/2022 9:24	7.61	6/18/2022 14:20	100.22
6/19/2022 13:11	49.37	6/19/2022 11:53	80.89	6/18/2022 10:16	17.01	6/18/2022 9:25	7.57	6/18/2022 14:21	99.92
6/19/2022 13:12	49.39	6/19/2022 11:54	80.86	6/18/2022 10:17	17.02	6/18/2022 9:26	7.70	6/18/2022 14:22	99.67
6/19/2022 13:13	49.34	6/19/2022 11:55	80.90	6/18/2022 10:18	17.03	6/18/2022 9:27	7.59	6/18/2022 14:23	99.40
6/19/2022 13:14	49.34	6/19/2022 11:56	80.90	6/18/2022 10:19	16.99	6/18/2022 9:28	7.56	6/18/2022 14:24	99.09
6/19/2022 13:15	49.37	6/19/2022 11:57	80.88	6/18/2022 10:20	16.98	6/18/2022 9:29	7.48	6/18/2022 14:25	98.83
6/19/2022 13:16	49.35	6/19/2022 11:58	80.84	6/18/2022 10:21	16.97	6/18/2022 9:30	7.45	6/18/2022 14:26	98.56
6/19/2022 13:17	49.35	6/19/2022 11:59	80.91	6/18/2022 10:22	17.00	6/18/2022 9:31	7.42	6/18/2022 14:27	98.33
6/19/2022 13:18	49.40	6/19/2022 12:00	80.86	6/18/2022 10:23	16.99	6/18/2022 9:32	7.37	6/18/2022 14:28	97.98
6/19/2022 13:19	49.37	6/19/2022 12:01	80.90	6/18/2022 10:24	16.99	6/18/2022 9:33	7.37	6/18/2022 14:29	97.76
6/19/2022 13:20	49.36	6/19/2022 12:02	80.89	6/18/2022 10:25	16.96	6/18/2022 9:34	7.32	6/18/2022 14:30	97.51
6/19/2022 13:21	49.38	6/19/2022 12:03	80.90	6/18/2022 10:26	16.97	6/18/2022 9:35	7.30	6/18/2022 14:31	97.26
6/19/2022 13:22	49.37	6/19/2022 12:04	80.85	6/18/2022 10:27	16.93	6/18/2022 9:36	7.27	6/18/2022 14:32	97.00
6/19/2022 13:23	49.36	6/19/2022 12:05	80.92	6/18/2022 10:28	16.95	6/18/2022 9:37	7.21	6/18/2022 14:33	96.71
6/19/2022 13:24	49.36	6/19/2022 12:06	80.85	6/18/2022 10:29	16.95	6/18/2022 9:38	7.25	6/18/2022 14:34	96.50
6/19/2022 13:25	49.33	6/19/2022 12:07	80.89	6/18/2022 10:30	16.97	6/18/2022 9:39	7.15	6/18/2022 14:35	96.21
6/19/2022 13:26	49.35	6/19/2022 12:08	80.88	6/18/2022 10:31	16.98	6/18/2022 9:40	7.14	6/18/2022 14:36	96.01
6/19/2022 13:27	49.38	6/19/2022 12:09	80.90	6/18/2022 10:32	16.96	6/18/2022 9:41	7.17	6/18/2022 14:37	95.76
6/19/2022 13:28	49.34	6/19/2022 12:10	80.90	6/18/2022 10:33	16.91	6/18/2022 9:42	7.17	6/18/2022 14:38	95.55
6/19/2022 13:29	49.36	6/19/2022 12:11	80.87	6/18/2022 10:34	16.95	6/18/2022 9:43	7.20	6/18/2022 14:39	95.26
6/19/2022 13:30	49.35	6/19/2022 12:12	80.88	6/18/2022 10:35	16.93	6/18/2022 9:44	7.08	6/18/2022 14:40	95.04
6/19/2022 13:31	49.38	6/19/2022 12:13	80.90	6/18/2022 10:36	16.94	6/18/2022 9:45	7.05	6/18/2022 14:41	94.82
6/19/2022 13:32	49.38	6/19/2022 12:14	80.86	6/18/2022 10:37	16.93	6/18/2022 9:46	7.03	6/18/2022 14:42	94.61
6/19/2022 13:33	49.36	6/19/2022 12:15	80.87	6/18/2022 10:38	16.90	6/18/2022 9:47	7.08	6/18/2022 14:43	94.43
6/19/2022 13:34	49.34	6/19/2022 12:16	80.88	6/18/2022 10:39	16.97	6/18/2022 9:48	7.06	6/18/2022 14:44	94.21
6/19/2022 13:35	49.33	6/19/2022 12:17	80.84	6/18/2022 10:40	16.92	6/18/2022 9:49	6.99	6/18/2022 14:45	94.02
6/19/2022 13:36	49.34	6/19/2022 12:18	80.87	6/18/2022 10:41	16.95	6/18/2022 9:50	6.95	6/18/2022 14:46	93.82
6/19/2022 13:37	49.32	6/19/2022 12:19	80.88	6/18/2022 10:42	16.93	6/18/2022 9:51	6.97	6/18/2022 14:47	93.63
6/19/2022 13:38	49.33	6/19/2022 12:20	80.89	6/18/2022 10:43	16.89	6/18/2022 9:52	6.91	6/18/2022 14:48	93.39
6/19/2022 13:39	49.35	6/19/2022 12:21	80.84	6/18/2022 10:44	16.92	6/18/2022 9:53	6.87	6/18/2022 14:49	93.19
6/19/2022 13:40	49.33	6/19/2022 12:22	80.88	6/18/2022 10:45	16.91	6/18/2022 9:54	6.86	6/18/2022 14:50	92.99
6/19/2022 13:41	49.36	6/19/2022 12:23	80.89	6/18/2022 10:46	16.90	6/18/2022 9:55	6.82	6/18/2022 14:51	92.78
6/19/2022 13:42	49.33	6/19/2022 12:24	80.91	6/18/2022 10:47	16.89	6/18/2022 9:56	6.79	6/18/2022 14:52	92.58
6/19/2022 13:43	49.34	6/19/2022 12:25	80.89	6/18/2022 10:48	16.89	6/18/2022 9:57	6.87	6/18/2022 14:53	92.36
6/19/2022 13:44	49.32	6/19/2022 12:26	80.91	6/18/2022 10:49	16.95	6/18/2022 9:58	6.77	6/18/2022 14:54	92.16
6/19/2022 13:45	49.33	6/19/2022 12:27	80.91	6/18/2022 10:50	16.87	6/18/2022 9:59	6.73	6/18/2022 14:55	91.96
6/19/2022 13:46	49.34	6/19/2022 12:28	80.89	6/18/2022 10:51	16.91	6/18/2022 10:00	6.74	6/18/2022 14:56	91.83
6/19/2022 13:47	49.30	6/19/2022 12:29	80.88	6/18/2022 10:52	16.91	6/18/2022 10:01	6.74	6/18/2022 14:57	91.62
6/19/2022 13:48	49.34	6/19/2022 12:30	80.84	6/18/2022 10:53	16.90	6/18/2022 10:02	6.73	6/18/2022 14:58	91.50
6/19/2022 13:49	49.33	6/19/2022 12:31	80.88	6/18/2022 10:54	16.88	6/18/2022 10:03	6.67	6/18/2022 14:59	91.30
6/19/2022 13:50	49.31	6/19/2022 12:32	80.85	6/18/2022 10:55	16.89	6/18/2022 10:04	6.68	6/18/2022 15:00	91.14
6/19/2022 13:51	49.32	6/19/2022 12:33	80.91	6/18/2022 10:56	16.90	6/18/2022 10:05	6.68	6/18/2022 15:01	90.93
6/19/2022 13:52	49.36	6/19/2022 12:34	80.89	6/18/2022 10:57	16.88	6/18/2022 10:06	6.67	6/18/2022 15:02	90.75
6/19/2022 13:53	49.35	6/19/2022 12:35	80.88	6/18/2022 10:58	16.84	6/18/2022 10:07	6.64	6/18/2022 15:03	90.59
6/19/2022 13:54	49.34	6/19/2022 12:36	80.87	6/18/2022 10:59	16.88	6/18/2022 10:08	6.56	6/18/2022 15:04	90.43
6/19/2022 13:55	49.33	6/19/2022 12:37	80.85	6/18/2022 11:00	16.83	6/18/2022 10:09	6.58	6/18/2022 15:05	90.25
6/19/2022 13:56	49.83	6/19/2022 12:38	80.91	6/18/2022 11:01	16.82	6/18/2022 10:10	6.56	6/18/2022 15:06	90.09
6/19/2022 13:57	52.50	6/19/2022 12:39	80.89	6/18/2022 11:02	16.82	6/18/2022 10:11	6.57	6/18/2022 15:07	89.93
6/19/2022 13:58	53.72	6/19/2022 12:40	80.84	6/18/2022 11:03	16.82	6/18/2022 10:12	6.53	6/18/2022 15:08	89.75
6/19/2022 13:59	54.40	6/19/2022 12:41	80.88	6/18/2022 11:04	16.85	6/18/2022 10:13	6.52	6/18/2022 15:09	89.59
6/19/2022 14:00	54.82	6/19/2022 12:42	80.86	6/18/2022 11:05	16.84	6/18/2022 10:14	6.47	6/18/2022 15:10	89.41
6/19/2022 14:01	53.53	6/19/2022 12:43	80.90	6/18/2022 11:06	16.79	6/18/2022 10:15	6.49	6/18/2022 15:11	89.23
6/19/2022 14:02	51.94	6/19/2022 12:44	80.90	6/18/2022 11:07	16.83	6/18/2022 10:16	6.52	6/18/2022 15:12	89.08
6/19/2022 14:03	51.35	6/19/2022 12:45	80.92	6/18/2022 11:08	16.83	6/18/2022 10:17	6.43	6/18/2022 15:13	88.92
6/19/2022 14:04	50.95	6/19/2022 12:46	80.89	6/18/2022 11:09	16.83	6/18/2022 10:18	6.42	6/18/2022 15:14	88.76
6/19/2022 14:05	50.76	6/19/2022 12:47	80.86	6/18/2022 11:10	16.82	6/18/2022 10:19	6.38	6/18/2022 15:15	88.58
6/19/2022 14:06	50.69	6/19/2022 12:48	80.87	6/18/2022 11:11	16.84	6/18/2022 10:20	6.45	6/18/2022 15:16	88.41
6/19/2022 14:07	50.52	6/19/2022 12:49	80.89	6/18/2022 11:12	16.77	6/18/2022 10:21	6.40	6/18/2022 15:17	88.28
6/19/2022 14:08	50.44	6/19/2022 12:50	80.88	6/18/2022 11:13	16.80	6/18/2022 10:22	6.38	6/18/2022 15:18	88.08
6/19/2022 14:09	50.36	6/19/2022 12:51	80.89	6/18/2022 11:14	16.81	6/18/2022 10:23	6.35	6/18/2022 15:19	87.94
6/19/2022 14:10	50.30	6/19/2022 12:52	80.88	6/18/2022 11:15	16.80	6/18/2022 10:24	6.34	6/18/2022 15:20	87.82
6/19/2022 14:11	50.28	6/19/2022 12:53	80.88	6/18/2022 11:16	16.85	6/18/2022 10:25	6.35	6/18/2022 15:21	87.63
6/19/2022 14:12	50.24	6/19/2022 12:54	80.86	6/18/2022 11:17	16.83	6/18/2022 10:26	6.29	6/18/2022 15:22	87.51
6/19/2022 14:13	50.19	6/19/2022 12:55	80.83	6/18/2022 11:18	16.81	6/18/2022 10:27	6.31	6/18/2022 15:23	87.32
6/19/2022 14:14	50.13	6/19/2022 12:56	80.89	6/18/2022 11:19	16.80	6/18/2022 10:28	6.31	6/18/2022 15:24	87.15
6/19/2022 14:15	50.10	6/19/2022 12:57	80.86	6/18/2022 11:20	16.78	6/18/2022 10:29	6.31	6/18/2022 15:25	87.02
6/19/2022 14:16	50.10	6/19/2022 12:58	80.89	6/18/2022 11:21	16.80	6/18/2022 10:30	6.18	6/18/2022 15:26	86.89
6/19/2022 14:17	50.03	6/19/2022 12:59	80.88	6/18/2022 11:22	16.82	6/18/2022 10:31	6.24	6/18/2022 15:27	86.70
6/19/2022 14:18	50.05	6/19/2022 13:00	80.84	6/18/2022 11:23	16.75	6/18/2022 10:32	6.25	6/18/2022 15:28	86.59
6/19/2022 14:19	49.99	6/19/2022 13:01	80.88	6/18/2022 11:24	16.79	6/18/2022 10:33	6.23	6/18/2022 15:29	86.44
6/19/2022 14:20	49.99	6/19/2022 13:02	80.88	6/18/2022 11:25	16.76	6/18/2022 10:34	6.16	6/18/2022 15:30	86.27
6/19/2022 14:21	49.97	6/19/2022 13:03	80.85	6/18/2022 11:26	16.78	6/18/2022 10:35	6.17	6/18/2022 15:31	86.09
6/19/2022 14:22	49.94	6/19/2022 13:04	80.89	6/18/2022 11:27	16.73	6/18/2022 10:36	6.20	6/18/2022 15:32	85.99
6/19/2022 14:23	49.94	6/19/2022 13:05	80.84	6/18/2022 11:28	16.79	6/18/2022 10:37	6.19	6/18/2022 15:33	85.80
6/19/2022 14:24	49.92	6/19/2022 13:06	80.86	6/18/2022 11:29	16.75	6/18/2022 10:38	6.22	6/18/2022 15:34	85.73
6/19/2022 14:25	49.90	6/19/2022 13:07	80.86	6/18/2022 11:30	16.73	6/18/2022 10:39	6.11	6/18/2022 15:35	91.46
6/19/2022 14:26	49.95	6/19/2022 13:08	80.86	6/18/2022 11:31	16.78	6/18/2022 10:40	6.13	6/18/2022 15:36	91.76
6/19/2022 14:27	49.92	6/19/2022 13:09	80.86	6/18/2022 11:32	16.76	6/18/2022 10:41	6.10	6/18/2022 15:37	91.51
6/19/2022 14:28	49.89	6/19/2022 13:10	80.91	6/18/2022 11:33	16.74	6/18/2022 10:42	6.16	6/18/2022 15:38	91.31
6/19/2022 14:29	49.92	6/19/2022 13:11	80.90	6/18/2022 11:34	16.73	6/18/2022 10:43	6.08	6/18/2022 15:39	91.08
6/19/2022 14:30	52.90	6/19/2022 13:12	80.85	6/18/2022 11:35	16.76	6/18/2022 10:44	6.08	6/18/2022 15:40	90.85
6/19/2022 14:31	54.12	6/19/2022 13:13	80.86	6/18/2022 11:36	16.74	6/18/2022 10:45	6.07	6/18/2022 15:41	90.65
6/19/2022 14:32	54.82	6/19/2022 13:14	80.84	6/18/2022 11:37	16.74	6/18/2022 10:46	6.02	6/18/2022 15:42	90.44
6/19/2022 14:33	55.25	6/19/2022 13:15	80.90	6/18/2022 11:38	16.71	6/18/2022 10:47	6.08	6/18/2022 15:43	90.26
6/19/2022 14:34	54.25	6/19/2022 13:16	80.87	6/18/2022 11:39	16.75	6/18/2022 10:48	6.04	6/18/2022 15:44	90.06
6/19/2022 14:35	52.52	6/19/2022 13:17	80.90	6/18/2022 11:40	16.71	6/18/2022 10:49	5.99	6/18/2022 15:45	89.84
6/19/2022 14:36	51.81	6/19/2022 13:18	80.89	6/18/2022 11:41	16.76	6/18/2022 10:50	6.00	6/18/2022 15:46	89.66

6/19/2022 14:37	51.47	6/19/2022 13:19	80.87	6/18/2022 11:42	16.71	6/18/2022 10:51	6.01	6/18/2022 15:47	89.48
6/19/2022 14:38	51.27	6/19/2022 13:20	80.89	6/18/2022 11:43	16.73	6/18/2022 10:52	6.03	6/18/2022 15:48	89.32
6/19/2022 14:39	51.15	6/19/2022 13:21	80.92	6/18/2022 11:44	16.69	6/18/2022 10:53	5.97	6/18/2022 15:49	89.13
6/19/2022 14:40	50.98	6/19/2022 13:22	80.89	6/18/2022 11:45	16.73	6/18/2022 10:54	5.88	6/18/2022 15:50	88.98
6/19/2022 14:41	50.88	6/19/2022 13:23	80.86	6/18/2022 11:46	16.73	6/18/2022 10:55	5.91	6/18/2022 15:51	88.80
6/19/2022 14:42	50.77	6/19/2022 13:24	80.90	6/18/2022 11:47	16.73	6/18/2022 10:56	5.96	6/18/2022 15:52	88.64
6/19/2022 14:43	50.75	6/19/2022 13:25	80.85	6/18/2022 11:48	16.73	6/18/2022 10:57	5.90	6/18/2022 15:53	88.43
6/19/2022 14:44	50.69	6/19/2022 13:26	80.90	6/18/2022 11:49	16.76	6/18/2022 10:58	5.94	6/18/2022 15:54	88.29
6/19/2022 14:45	50.59	6/19/2022 13:27	80.90	6/18/2022 11:50	16.74	6/18/2022 10:59	5.89	6/18/2022 15:55	88.08
6/19/2022 14:46	50.58	6/19/2022 13:28	80.89	6/18/2022 11:51	16.73	6/18/2022 11:00	5.90	6/18/2022 15:56	87.91
6/19/2022 14:47	50.55	6/19/2022 13:29	80.85	6/18/2022 11:52	16.73	6/18/2022 11:01	5.92	6/18/2022 15:57	87.71
6/19/2022 14:48	50.52	6/19/2022 13:30	80.88	6/18/2022 11:53	16.76	6/18/2022 11:02	5.82	6/18/2022 15:58	87.59
6/19/2022 14:49	50.52	6/19/2022 13:31	80.89	6/18/2022 11:54	16.75	6/18/2022 11:03	5.82	6/18/2022 15:59	87.39
6/19/2022 14:50	50.45	6/19/2022 13:32	80.87	6/18/2022 11:55	16.77	6/18/2022 11:04	5.80	6/18/2022 16:00	87.37
6/19/2022 14:51	50.45	6/19/2022 13:33	80.91	6/18/2022 11:56	16.80	6/18/2022 11:05	5.83	6/18/2022 16:01	93.47
6/19/2022 14:52	50.42	6/19/2022 13:34	80.88	6/18/2022 11:57	16.77	6/18/2022 11:06	5.86	6/18/2022 16:02	93.15
6/19/2022 14:53	50.37	6/19/2022 13:35	80.88	6/18/2022 11:58	16.80	6/18/2022 11:07	5.75	6/18/2022 16:03	92.83
6/19/2022 14:54	50.34	6/19/2022 13:36	80.88	6/18/2022 11:59	16.77	6/18/2022 11:08	5.81	6/18/2022 16:04	92.58
6/19/2022 14:55	50.32	6/19/2022 13:37	80.85	6/18/2022 12:00	16.79	6/18/2022 11:09	5.78	6/18/2022 16:05	92.31
6/19/2022 14:56	50.30	6/19/2022 13:38	80.87	6/18/2022 12:01	16.81	6/18/2022 11:10	5.83	6/18/2022 16:06	92.09
6/19/2022 14:57	50.24	6/19/2022 13:39	80.86	6/18/2022 12:02	16.80	6/18/2022 11:11	5.74	6/18/2022 16:07	91.87
6/19/2022 14:58	50.28	6/19/2022 13:40	80.88	6/18/2022 12:03	16.82	6/18/2022 11:12	5.69	6/18/2022 16:08	91.69
6/19/2022 14:59	50.25	6/19/2022 13:41	80.91	6/18/2022 12:04	16.82	6/18/2022 11:13	5.73	6/18/2022 16:09	91.51
6/19/2022 15:00	50.27	6/19/2022 13:42	80.86	6/18/2022 12:05	16.84	6/18/2022 11:14	5.73	6/18/2022 16:10	91.28
6/19/2022 15:01	50.19	6/19/2022 13:43	80.86	6/18/2022 12:06	16.81	6/18/2022 11:15	5.71	6/18/2022 16:11	91.07
6/19/2022 15:02	50.18	6/19/2022 13:44	80.90	6/18/2022 12:07	16.83	6/18/2022 11:16	5.68	6/18/2022 16:12	90.88
6/19/2022 15:03	50.24	6/19/2022 13:45	80.89	6/18/2022 12:08	16.86	6/18/2022 11:17	5.68	6/18/2022 16:13	90.65
6/19/2022 15:04	50.18	6/19/2022 13:46	80.88	6/18/2022 12:09	16.87	6/18/2022 11:18	5.67	6/18/2022 16:14	90.49
6/19/2022 15:05	50.19	6/19/2022 13:47	80.88	6/18/2022 12:10	16.93	6/18/2022 11:19	5.69	6/18/2022 16:15	90.27
6/19/2022 15:06	50.17	6/19/2022 13:48	80.87	6/18/2022 12:11	16.94	6/18/2022 11:20	5.65	6/18/2022 16:16	90.10
6/19/2022 15:07	50.15	6/19/2022 13:49	80.91	6/18/2022 12:12	16.90	6/18/2022 11:21	5.60	6/18/2022 16:17	89.93
6/19/2022 15:08	50.14	6/19/2022 13:50	80.85	6/18/2022 12:13	16.91	6/18/2022 11:22	5.65	6/18/2022 16:18	89.71
6/19/2022 15:09	50.10	6/19/2022 13:51	80.92	6/18/2022 12:14	16.92	6/18/2022 11:23	5.61	6/18/2022 16:19	89.50
6/19/2022 15:10	50.13	6/19/2022 13:52	80.90	6/18/2022 12:15	16.95	6/18/2022 11:24	5.66	6/18/2022 16:20	89.33
6/19/2022 15:11	50.13	6/19/2022 13:53	80.90	6/18/2022 12:16	16.93	6/18/2022 11:25	5.60	6/18/2022 16:21	89.13
6/19/2022 15:12	50.09	6/19/2022 13:54	80.87	6/18/2022 12:17	16.90	6/18/2022 11:26	5.58	6/18/2022 16:22	89.01
6/19/2022 15:13	50.10	6/19/2022 13:55	80.91	6/18/2022 12:18	16.94	6/18/2022 11:27	5.59	6/18/2022 16:23	88.81
6/19/2022 15:14	50.08	6/19/2022 13:56	80.89	6/18/2022 12:19	16.96	6/18/2022 11:28	5.64	6/18/2022 16:24	88.66
6/19/2022 15:15	50.04	6/19/2022 13:57	80.89	6/18/2022 12:20	16.95	6/18/2022 11:29	5.55	6/18/2022 16:25	88.49
6/19/2022 15:16	50.03	6/19/2022 13:58	80.84	6/18/2022 12:21	16.97	6/18/2022 11:30	5.55	6/18/2022 16:26	88.29
6/19/2022 15:17	50.04	6/19/2022 13:59	80.85	6/18/2022 12:22	17.00	6/18/2022 11:31	5.54	6/18/2022 16:27	88.10
6/19/2022 15:18	50.02	6/19/2022 14:00	80.92	6/18/2022 12:23	17.05	6/18/2022 11:32	5.57	6/18/2022 16:28	87.94
6/19/2022 15:19	50.03	6/19/2022 14:01	80.88	6/18/2022 12:24	16.94	6/18/2022 11:33	5.52	6/18/2022 16:29	87.76
6/19/2022 15:20	50.05	6/19/2022 14:02	80.85	6/18/2022 12:25	16.97	6/18/2022 11:34	5.51	6/18/2022 16:30	87.59
6/19/2022 15:21	50.02	6/19/2022 14:03	80.88	6/18/2022 12:26	16.99	6/18/2022 11:35	5.53	6/18/2022 16:31	87.43
6/19/2022 15:22	50.02	6/19/2022 14:04	80.88	6/18/2022 12:27	17.01	6/18/2022 11:36	5.49	6/18/2022 16:32	87.26
6/19/2022 15:23	50.00	6/19/2022 14:05	80.87	6/18/2022 12:28	17.05	6/18/2022 11:37	5.52	6/18/2022 16:33	87.10
6/19/2022 15:24	49.99	6/19/2022 14:06	80.91	6/18/2022 12:29	17.04	6/18/2022 11:38	5.49	6/18/2022 16:34	86.89
6/19/2022 15:25	49.97	6/19/2022 14:07	80.87	6/18/2022 12:30	17.02	6/18/2022 11:39	5.46	6/18/2022 16:35	86.73
6/19/2022 15:26	50.01	6/19/2022 14:08	80.88	6/18/2022 12:31	17.04	6/18/2022 11:40	5.47	6/18/2022 16:36	86.58
6/19/2022 15:27	49.97	6/19/2022 14:09	80.87	6/18/2022 12:32	17.08	6/18/2022 11:41	5.43	6/18/2022 16:37	86.41
6/19/2022 15:28	49.99	6/19/2022 14:10	80.87	6/18/2022 12:33	17.03	6/18/2022 11:42	5.41	6/18/2022 16:38	86.26
6/19/2022 15:29	49.97	6/19/2022 14:11	80.93	6/18/2022 12:34	17.03	6/18/2022 11:43	5.43	6/18/2022 16:39	86.08
6/19/2022 15:30	49.93	6/19/2022 14:12	80.87	6/18/2022 12:35	17.06	6/18/2022 11:44	5.43	6/18/2022 16:40	85.94
6/19/2022 15:31	49.92	6/19/2022 14:13	80.91	6/18/2022 12:36	17.07	6/18/2022 11:45	5.43	6/18/2022 16:41	85.80
6/19/2022 15:32	49.92	6/19/2022 14:14	80.86	6/18/2022 12:37	17.06	6/18/2022 11:46	5.49	6/18/2022 16:42	85.67
6/19/2022 15:33	49.94	6/19/2022 14:15	80.87	6/18/2022 12:38	17.09	6/18/2022 11:47	5.39	6/18/2022 16:43	85.48
6/19/2022 15:34	49.92	6/19/2022 14:16	80.87	6/18/2022 12:39	17.11	6/18/2022 11:48	5.35	6/18/2022 16:44	85.33
6/19/2022 15:35	49.94	6/19/2022 14:17	80.89	6/18/2022 12:40	17.09	6/18/2022 11:49	5.38	6/18/2022 16:45	85.19
6/19/2022 15:36	49.94	6/19/2022 14:18	80.87	6/18/2022 12:41	17.10	6/18/2022 11:50	5.41	6/18/2022 16:46	85.06
6/19/2022 15:37	49.91	6/19/2022 14:19	80.88	6/18/2022 12:42	17.13	6/18/2022 11:51	5.34	6/18/2022 16:47	84.88
6/19/2022 15:38	49.90	6/19/2022 14:20	80.88	6/18/2022 12:43	17.14	6/18/2022 11:52	5.33	6/18/2022 16:48	84.79
6/19/2022 15:39	49.90	6/19/2022 14:21	80.89	6/18/2022 12:44	17.15	6/18/2022 11:53	5.36	6/18/2022 16:49	84.61
6/19/2022 15:40	49.92	6/19/2022 14:22	80.88	6/18/2022 12:45	17.16	6/18/2022 11:54	5.36	6/18/2022 16:50	84.48
6/19/2022 15:41	49.93	6/19/2022 14:23	80.88	6/18/2022 12:46	17.21	6/18/2022 11:55	5.36	6/18/2022 16:51	88.94
6/19/2022 15:42	49.91	6/19/2022 14:24	80.87	6/18/2022 12:47	17.18	6/18/2022 11:56	5.31	6/18/2022 16:52	90.07
6/19/2022 15:43	49.87	6/19/2022 14:25	80.87	6/18/2022 12:48	17.19	6/18/2022 11:57	5.32	6/18/2022 16:53	89.84
6/19/2022 15:44	49.89	6/19/2022 14:26	80.87	6/18/2022 12:49	17.20	6/18/2022 11:58	5.33	6/18/2022 16:54	89.58
6/19/2022 15:45	49.88	6/19/2022 14:27	80.88	6/18/2022 12:50	17.20	6/18/2022 11:59	5.32	6/18/2022 16:55	89.39
6/19/2022 15:46	49.89	6/19/2022 14:28	80.85	6/18/2022 12:51	17.26	6/18/2022 12:00	5.25	6/18/2022 16:56	89.18
6/19/2022 15:47	49.85	6/19/2022 14:29	80.86	6/18/2022 12:52	17.23	6/18/2022 12:01	5.30	6/18/2022 16:57	88.98
6/19/2022 15:48	49.89	6/19/2022 14:30	80.91	6/18/2022 12:53	17.27	6/18/2022 12:02	5.28	6/18/2022 16:58	88.83
6/19/2022 15:49	49.85	6/19/2022 14:31	80.91	6/18/2022 12:54	17.30	6/18/2022 12:03	5.30	6/18/2022 16:59	88.62
6/19/2022 15:50	49.87	6/19/2022 14:32	80.88	6/18/2022 12:55	17.26	6/18/2022 12:04	5.30	6/18/2022 17:00	88.41
6/19/2022 15:51	49.89	6/19/2022 14:33	80.87	6/18/2022 12:56	17.31	6/18/2022 12:05	5.26	6/18/2022 17:01	88.23
6/19/2022 15:52	49.84	6/19/2022 14:34	80.84	6/18/2022 12:57	17.30	6/18/2022 12:06	5.28	6/18/2022 17:02	88.03
6/19/2022 15:53	49.86	6/19/2022 14:35	80.91	6/18/2022 12:58	17.31	6/18/2022 12:07	5.27	6/18/2022 17:03	87.85
6/19/2022 15:54	49.86	6/19/2022 14:36	80.91	6/18/2022 12:59	17.30	6/18/2022 12:08	5.29	6/18/2022 17:04	87.66
6/19/2022 15:55	49.84	6/19/2022 14:37	80.90	6/18/2022 13:00	17.30	6/18/2022 12:09	5.23	6/18/2022 17:05	87.45
6/19/2022 15:56	49.83	6/19/2022 14:38	80.85	6/18/2022 13:01	17.30	6/18/2022 12:10	5.24	6/18/2022 17:06	87.32
6/19/2022 15:57	49.86	6/19/2022 14:39	80.86	6/18/2022 13:02	17.35	6/18/2022 12:11	5.25	6/18/2022 17:07	87.09
6/19/2022 15:58	49.82	6/19/2022 14:40	80.89	6/18/2022 13:03	17.30	6/18/2022 12:12	5.29	6/18/2022 17:08	86.93
6/19/2022 15:59	49.79	6/19/2022 14:41	80.87	6/18/2022 13:04	17.33	6/18/2022 12:13	5.16	6/18/2022 17:09	86.79
6/19/2022 16:00	49.84	6/19/2022 14:42	80.86	6/18/2022 13:05	17.37	6/18/2022 12:14	5.72	6/18/2022 17:10	86.58
6/19/2022 16:01	49.78	6/19/2022 14:43	80.85	6/18/2022 13:06	17.39	6/18/2022 12:15	5.36	6/18/2022 17:11	86.44
6/19/2022 16:02	49.79	6/19/2022 14:44	80.88	6/18/2022 13:07	17.41	6/18/2022 12:16	5.55	6/18/2022 17:12	86.27
6/19/2022 16:03	49.80	6/19/2022 14:45	80.86	6/18/2022 13:08	17.36	6/18/2022 12:17	5.50	6/18/2022 17:13	86.10
6/19/2022 16:04	49.81	6/19/2022 14:46	80.89	6/18/2022 13:09	17.36	6/18/2022 12:18	5.40	6/18/2022 17:14	85.96

6/19/2022 16:05	49.79	6/19/2022 14:47	80.87	6/18/2022 13:10	17.39	6/18/2022 12:19	5.38	6/18/2022 17:15	85.76
6/19/2022 16:06	49.81	6/19/2022 14:48	80.89	6/18/2022 13:11	17.45	6/18/2022 12:20	5.32	6/18/2022 17:16	85.61
6/19/2022 16:07	49.74	6/19/2022 14:49	80.87	6/18/2022 13:12	17.42	6/18/2022 12:21	5.27	6/18/2022 17:17	85.47
6/19/2022 16:08	49.80	6/19/2022 14:50	80.86	6/18/2022 13:13	17.46	6/18/2022 12:22	5.31	6/18/2022 17:18	85.34
6/19/2022 16:09	49.79	6/19/2022 14:51	80.92	6/18/2022 13:14	17.45	6/18/2022 12:23	5.29	6/18/2022 17:19	85.18
6/19/2022 16:10	49.78	6/19/2022 14:52	80.93	6/18/2022 13:15	17.45	6/18/2022 12:24	5.23	6/18/2022 17:20	84.98
6/19/2022 16:11	49.78	6/19/2022 14:53	80.87	6/18/2022 13:16	17.43	6/18/2022 12:25	5.21	6/18/2022 17:21	84.87
6/19/2022 16:12	49.78	6/19/2022 14:54	80.86	6/18/2022 13:17	17.51	6/18/2022 12:26	5.21	6/18/2022 17:22	84.73
6/19/2022 16:13	49.80	6/19/2022 14:55	80.89	6/18/2022 13:18	17.53	6/18/2022 12:27	5.19	6/18/2022 17:23	84.55
6/19/2022 16:14	49.80	6/19/2022 14:56	80.84	6/18/2022 13:19	17.52	6/18/2022 12:28	5.26	6/18/2022 17:24	84.41
6/19/2022 16:15	49.77	6/19/2022 14:57	80.92	6/18/2022 13:20	17.53	6/18/2022 12:29	5.12	6/18/2022 17:25	84.27
6/19/2022 16:16	49.75	6/19/2022 14:58	80.85	6/18/2022 13:21	17.48	6/18/2022 12:30	5.18	6/18/2022 17:26	84.11
6/19/2022 16:17	49.75	6/19/2022 14:59	80.90	6/18/2022 13:22	17.54	6/18/2022 12:31	5.20	6/18/2022 17:27	84.00
6/19/2022 16:18	49.74	6/19/2022 15:00	80.93	6/18/2022 13:23	17.55	6/18/2022 12:32	5.16	6/18/2022 17:28	83.89
6/19/2022 16:19	49.78	6/19/2022 15:01	80.87	6/18/2022 13:24	17.56	6/18/2022 12:33	5.13	6/18/2022 17:29	83.74
6/19/2022 16:20	49.77	6/19/2022 15:02	80.90	6/18/2022 13:25	17.54	6/18/2022 12:34	5.14	6/18/2022 17:30	83.56
6/19/2022 16:21	49.76	6/19/2022 15:03	80.88	6/18/2022 13:26	17.54	6/18/2022 12:35	5.16	6/18/2022 17:31	83.51
6/19/2022 16:22	49.73	6/19/2022 15:04	80.84	6/18/2022 13:27	17.53	6/18/2022 12:36	5.14	6/18/2022 17:32	83.34
6/19/2022 16:23	49.76	6/19/2022 15:05	80.91	6/18/2022 13:28	17.56	6/18/2022 12:37	5.09	6/18/2022 17:33	83.18
6/19/2022 16:24	49.74	6/19/2022 15:06	80.90	6/18/2022 13:29	17.56	6/18/2022 12:38	5.09	6/18/2022 17:34	83.08
6/19/2022 16:25	49.73	6/19/2022 15:07	80.92	6/18/2022 13:30	17.53	6/18/2022 12:39	5.11	6/18/2022 17:35	82.92
6/19/2022 16:26	49.71	6/19/2022 15:08	80.85	6/18/2022 13:31	17.56	6/18/2022 12:40	5.10	6/18/2022 17:36	82.80
6/19/2022 16:27	49.76	6/19/2022 15:09	80.91	6/18/2022 13:32	17.57	6/18/2022 12:41	5.18	6/18/2022 17:37	82.69
6/19/2022 16:28	49.72	6/19/2022 15:10	80.86	6/18/2022 13:33	17.57	6/18/2022 12:42	5.04	6/18/2022 17:38	82.51
6/19/2022 16:29	49.74	6/19/2022 15:11	80.91	6/18/2022 13:34	17.63	6/18/2022 12:43	5.08	6/18/2022 17:39	82.43
6/19/2022 16:30	49.73	6/19/2022 15:12	80.87	6/18/2022 13:35	17.60	6/18/2022 12:44	5.08	6/18/2022 17:40	82.27
6/19/2022 16:31	49.73	6/19/2022 15:13	80.86	6/18/2022 13:36	17.60	6/18/2022 12:45	5.10	6/18/2022 17:41	82.22
6/19/2022 16:32	49.72	6/19/2022 15:14	80.87	6/18/2022 13:37	17.57	6/18/2022 12:46	5.05	6/18/2022 17:42	82.07
6/19/2022 16:33	49.72	6/19/2022 15:15	80.88	6/18/2022 13:38	17.58	6/18/2022 12:47	5.43	6/18/2022 17:43	81.99
6/19/2022 16:34	49.68	6/19/2022 15:16	80.89	6/18/2022 13:39	17.60	6/18/2022 12:48	5.27	6/18/2022 17:44	81.87
6/19/2022 16:35	49.68	6/19/2022 15:17	80.87	6/18/2022 13:40	17.55	6/18/2022 12:49	5.24	6/18/2022 17:45	81.75
6/19/2022 16:36	49.71	6/19/2022 15:18	80.91	6/18/2022 13:41	17.62	6/18/2022 12:50	5.10	6/18/2022 17:46	81.62
6/19/2022 16:37	49.70	6/19/2022 15:19	80.90	6/18/2022 13:42	17.63	6/18/2022 12:51	5.03	6/18/2022 17:47	81.54
6/19/2022 16:38	49.69	6/19/2022 15:20	80.91	6/18/2022 13:43	17.60	6/18/2022 12:52	5.14	6/18/2022 17:48	81.43
6/19/2022 16:39	49.71	6/19/2022 15:21	80.88	6/18/2022 13:44	17.58	6/18/2022 12:53	5.10	6/18/2022 17:49	81.33
6/19/2022 16:40	49.71	6/19/2022 15:22	80.90	6/18/2022 13:45	17.58	6/18/2022 12:54	5.15	6/18/2022 17:50	81.24
6/19/2022 16:41	49.70	6/19/2022 15:23	80.85	6/18/2022 13:46	17.56	6/18/2022 12:55	5.02	6/18/2022 17:51	81.19
6/19/2022 16:42	49.69	6/19/2022 15:24	80.86	6/18/2022 13:47	17.60	6/18/2022 12:56	5.00	6/18/2022 17:52	81.06
6/19/2022 16:43	49.69	6/19/2022 15:25	80.90	6/18/2022 13:48	17.62	6/18/2022 12:57	5.06	6/18/2022 17:53	80.99
6/19/2022 16:44	49.69	6/19/2022 15:26	80.89	6/18/2022 13:49	17.58	6/18/2022 12:58	5.05	6/18/2022 17:54	80.88
6/19/2022 16:45	49.68	6/19/2022 15:27	80.88	6/18/2022 13:50	17.54	6/18/2022 12:59	5.07	6/18/2022 17:55	80.78
6/19/2022 16:46	49.67	6/19/2022 15:28	80.88	6/18/2022 13:51	17.62	6/18/2022 13:00	5.00	6/18/2022 17:56	80.69
6/19/2022 16:47	49.65	6/19/2022 15:29	80.90	6/18/2022 13:52	17.55	6/18/2022 13:01	5.03	6/18/2022 17:57	80.58
6/19/2022 16:48	49.71	6/19/2022 15:30	80.83	6/18/2022 13:53	17.57	6/18/2022 13:02	5.06	6/18/2022 17:58	80.50
6/19/2022 16:49	49.71	6/19/2022 15:31	80.92	6/18/2022 13:54	17.55	6/18/2022 13:03	5.03	6/18/2022 17:59	80.40
6/19/2022 16:50	49.65	6/19/2022 15:32	80.90	6/18/2022 13:55	17.60	6/18/2022 13:04	5.02	6/18/2022 18:00	80.27
6/19/2022 16:51	49.67	6/19/2022 15:33	80.88	6/18/2022 13:56	17.55	6/18/2022 13:05	4.99	6/18/2022 18:01	83.42
6/19/2022 16:52	49.67	6/19/2022 15:34	80.87	6/18/2022 13:57	17.56	6/18/2022 13:06	4.99	6/18/2022 18:02	85.18
6/19/2022 16:53	49.69	6/19/2022 15:35	80.88	6/18/2022 13:58	17.58	6/18/2022 13:07	4.97	6/18/2022 18:03	84.93
6/19/2022 16:54	49.67	6/19/2022 15:36	80.84	6/18/2022 13:59	17.57	6/18/2022 13:08	4.99	6/18/2022 18:04	84.77
6/19/2022 16:55	49.66	6/19/2022 15:37	80.89	6/18/2022 14:00	17.54	6/18/2022 13:09	5.00	6/18/2022 18:05	84.59
6/19/2022 16:56	49.67	6/19/2022 15:38	80.86	6/18/2022 14:01	17.57	6/18/2022 13:10	4.90	6/18/2022 18:06	84.41
6/19/2022 16:57	49.65	6/19/2022 15:39	80.90	6/18/2022 14:02	17.56	6/18/2022 13:11	4.95	6/18/2022 18:07	84.23
6/19/2022 16:58	49.65	6/19/2022 15:40	80.87	6/18/2022 14:03	17.52	6/18/2022 13:12	5.41	6/18/2022 18:08	84.11
6/19/2022 16:59	49.67	6/19/2022 15:41	80.91	6/18/2022 14:04	17.54	6/18/2022 13:13	5.18	6/18/2022 18:09	83.90
6/19/2022 17:00	49.66	6/19/2022 15:42	80.91	6/18/2022 14:05	17.48	6/18/2022 13:14	5.10	6/18/2022 18:10	83.77
6/19/2022 17:01	49.64	6/19/2022 15:43	80.86	6/18/2022 14:06	17.49	6/18/2022 13:15	5.12	6/18/2022 18:11	83.62
6/19/2022 17:02	49.65	6/19/2022 15:44	80.86	6/18/2022 14:07	19.80	6/18/2022 13:16	5.03	6/18/2022 18:12	83.46
6/19/2022 17:03	49.61	6/19/2022 15:45	80.89	6/18/2022 14:08	24.52	6/18/2022 13:17	4.98	6/18/2022 18:13	83.29
6/19/2022 17:04	49.63	6/19/2022 15:46	80.90	6/18/2022 14:09	27.29	6/18/2022 13:18	4.96	6/18/2022 18:14	83.20
6/19/2022 17:05	49.65	6/19/2022 15:47	80.88	6/18/2022 14:10	24.71	6/18/2022 13:19	4.95	6/18/2022 18:15	83.01
6/19/2022 17:06	49.63	6/19/2022 15:48	80.90	6/18/2022 14:11	22.84	6/18/2022 13:20	5.00	6/18/2022 18:16	82.90
6/19/2022 17:07	49.63	6/19/2022 15:49	80.87	6/18/2022 14:12	21.80	6/18/2022 13:21	4.91	6/18/2022 18:17	82.74
6/19/2022 17:08	49.62	6/19/2022 15:50	80.87	6/18/2022 14:13	21.09	6/18/2022 13:22	4.89	6/18/2022 18:18	82.62
6/19/2022 17:09	49.64	6/19/2022 15:51	80.86	6/18/2022 14:14	20.61	6/18/2022 13:23	4.91	6/18/2022 18:19	82.47
6/19/2022 17:10	49.61	6/19/2022 15:52	80.92	6/18/2022 14:15	20.30	6/18/2022 13:24	4.91	6/18/2022 18:20	82.34
6/19/2022 17:11	49.61	6/19/2022 15:53	80.87	6/18/2022 14:16	20.07	6/18/2022 13:25	4.94	6/18/2022 18:21	82.23
6/19/2022 17:12	49.84	6/19/2022 15:54	80.92	6/18/2022 14:17	19.89	6/18/2022 13:26	4.85	6/18/2022 18:22	82.07
6/19/2022 17:13	52.73	6/19/2022 15:55	80.90	6/18/2022 14:18	19.70	6/18/2022 13:27	4.86	6/18/2022 18:23	81.97
6/19/2022 17:14	53.93	6/19/2022 15:56	80.89	6/18/2022 14:19	19.49	6/18/2022 13:28	4.87	6/18/2022 18:24	81.86
6/19/2022 17:15	54.65	6/19/2022 15:57	80.86	6/18/2022 14:20	19.37	6/18/2022 13:29	4.87	6/18/2022 18:25	81.74
6/19/2022 17:16	54.87	6/19/2022 15:58	80.87	6/18/2022 14:21	19.28	6/18/2022 13:30	4.86	6/18/2022 18:26	81.61
6/19/2022 17:17	52.49	6/19/2022 15:59	80.91	6/18/2022 14:22	19.12	6/18/2022 13:31	4.90	6/18/2022 18:27	81.49
6/19/2022 17:18	51.63	6/19/2022 16:00	80.89	6/18/2022 14:23	19.12	6/18/2022 13:32	4.84	6/18/2022 18:28	81.38
6/19/2022 17:19	51.20	6/19/2022 16:01	80.90	6/18/2022 14:24	19.01	6/18/2022 13:33	4.81	6/18/2022 18:29	81.29
6/19/2022 17:20	50.98	6/19/2022 16:02	80.90	6/18/2022 14:25	18.91	6/18/2022 13:34	4.78	6/18/2022 18:30	81.15
6/19/2022 17:21	50.79	6/19/2022 16:03	80.90	6/18/2022 14:26	18.87	6/18/2022 13:35	4.95	6/18/2022 18:31	81.07
6/19/2022 17:22	50.72	6/19/2022 16:04	80.91	6/18/2022 14:27	18.79	6/18/2022 13:36	4.87	6/18/2022 18:32	80.98
6/19/2022 17:23	50.62	6/19/2022 16:05	80.86	6/18/2022 14:28	18.75	6/18/2022 13:37	4.88	6/18/2022 18:33	80.90
6/19/2022 17:24	50.55	6/19/2022 16:06	80.86	6/18/2022 14:29	18.72	6/18/2022 13:38	4.86	6/18/2022 18:34	80.79
6/19/2022 17:25	50.51	6/19/2022 16:07	80.86	6/18/2022 14:30	18.68	6/18/2022 13:39	4.81	6/18/2022 18:35	80.70
6/19/2022 17:26	50.46	6/19/2022 16:08	80.90	6/18/2022 14:31	18.58	6/18/2022 13:40	4.79	6/18/2022 18:36	80.57
6/19/2022 17:27	50.41	6/19/2022 16:09	80.84	6/18/2022 14:32	18.53	6/18/2022 13:41	4.96	6/18/2022 18:37	80.46
6/19/2022 17:28	50.36	6/19/2022 16:10	80.89	6/18/2022 14:33	18.49	6/18/2022 13:42	4.82	6/18/2022 18:38	80.36
6/19/2022 17:29	50.34	6/19/2022 16:11	80.88	6/18/2022 14:34	18.45	6/18/2022 13:43	4.80	6/18/2022 18:39	80.24
6/19/2022 17:30	50.29	6/19/2022 16:12	80.87	6/18/2022 14:35	18.43	6/18/2022 13:44	4.80	6/18/2022 18:40	80.15
6/19/2022 17:31	50.27	6/19/2022 16:13	80.87	6/18/2022 14:36	18.38	6/18/2022 13:45	4.84	6/18/2022 18:41	80.03
6/19/2022 17:32	50.29	6/19/2022 16:14	80.89	6/18/2022 14:37	18.32	6/18/2022 13:46	4.84	6/18/2022 18:42	79.96

6/19/2022 17:33	50.21	6/19/2022 16:15	80.86	6/18/2022 14:38	18.31	6/18/2022 13:47	4.77	6/18/2022 18:43	79.85
6/19/2022 17:34	50.20	6/19/2022 16:16	80.86	6/18/2022 14:39	18.29	6/18/2022 13:48	4.78	6/18/2022 18:44	79.75
6/19/2022 17:35	50.18	6/19/2022 16:17	80.90	6/18/2022 14:40	18.25	6/18/2022 13:49	4.72	6/18/2022 18:45	79.65
6/19/2022 17:36	50.20	6/19/2022 16:18	80.87	6/18/2022 14:41	18.27	6/18/2022 13:50	4.79	6/18/2022 18:46	83.67
6/19/2022 17:37	50.17	6/19/2022 16:19	80.93	6/18/2022 14:42	18.22	6/18/2022 13:51	4.71	6/18/2022 18:47	85.68
6/19/2022 17:38	50.18	6/19/2022 16:20	80.86	6/18/2022 14:43	18.22	6/18/2022 13:52	4.74	6/18/2022 18:48	85.48
6/19/2022 17:39	50.13	6/19/2022 16:21	80.88	6/18/2022 14:44	18.15	6/18/2022 13:53	4.73	6/18/2022 18:49	85.25
6/19/2022 17:40	50.13	6/19/2022 16:22	80.88	6/18/2022 14:45	18.10	6/18/2022 13:54	4.74	6/18/2022 18:50	85.06
6/19/2022 17:41	50.12	6/19/2022 16:23	80.86	6/18/2022 14:46	18.11	6/18/2022 13:55	4.71	6/18/2022 18:51	84.90
6/19/2022 17:42	50.09	6/19/2022 16:24	80.89	6/18/2022 14:47	18.01	6/18/2022 13:56	4.72	6/18/2022 18:52	84.68
6/19/2022 17:43	50.09	6/19/2022 16:25	80.87	6/18/2022 14:48	18.03	6/18/2022 13:57	4.72	6/18/2022 18:53	84.52
6/19/2022 17:44	50.07	6/19/2022 16:26	80.88	6/18/2022 14:49	18.09	6/18/2022 13:58	4.67	6/18/2022 18:54	84.35
6/19/2022 17:45	50.07	6/19/2022 16:27	80.89	6/18/2022 14:50	18.02	6/18/2022 13:59	4.65	6/18/2022 18:55	84.17
6/19/2022 17:46	50.07	6/19/2022 16:28	80.87	6/18/2022 14:51	17.97	6/18/2022 14:00	4.64	6/18/2022 18:56	89.80
6/19/2022 17:47	50.01	6/19/2022 16:29	80.89	6/18/2022 14:52	18.01	6/18/2022 14:01	4.65	6/18/2022 18:57	89.64
6/19/2022 17:48	50.01	6/19/2022 16:30	80.88	6/18/2022 14:53	17.96	6/18/2022 14:02	4.70	6/18/2022 18:58	89.39
6/19/2022 17:49	50.00	6/19/2022 16:31	80.84	6/18/2022 14:54	17.92	6/18/2022 14:03	4.61	6/18/2022 18:59	89.13
6/19/2022 17:50	50.03	6/19/2022 16:32	80.87	6/18/2022 14:55	17.88	6/18/2022 14:04	4.63	6/18/2022 19:00	88.91
6/19/2022 17:51	49.99	6/19/2022 16:33	80.88	6/18/2022 14:56	17.86	6/18/2022 14:05	4.67	6/18/2022 19:01	88.72
6/19/2022 17:52	50.01	6/19/2022 16:34	80.86	6/18/2022 14:57	17.88	6/18/2022 14:06	4.61	6/18/2022 19:02	88.48
6/19/2022 17:53	50.00	6/19/2022 16:35	80.86	6/18/2022 14:58	17.84	6/18/2022 14:07	4.60	6/18/2022 19:03	88.29
6/19/2022 17:54	49.99	6/19/2022 16:36	80.90	6/18/2022 14:59	17.81	6/18/2022 14:08	4.57	6/18/2022 19:04	88.06
6/19/2022 17:55	49.98	6/19/2022 16:37	80.89	6/18/2022 15:00	17.82	6/18/2022 14:09	4.61	6/18/2022 19:05	93.39
6/19/2022 17:56	49.96	6/19/2022 16:38	80.86	6/18/2022 15:01	17.82	6/18/2022 14:10	4.64	6/18/2022 19:06	93.21
6/19/2022 17:57	49.95	6/19/2022 16:39	80.88	6/18/2022 15:02	17.79	6/18/2022 14:11	4.60	6/18/2022 19:07	92.88
6/19/2022 17:58	49.95	6/19/2022 16:40	80.87	6/18/2022 15:03	17.80	6/18/2022 14:12	4.63	6/18/2022 19:08	92.56
6/19/2022 17:59	49.94	6/19/2022 16:41	80.86	6/18/2022 15:04	17.78	6/18/2022 14:13	4.60	6/18/2022 19:09	92.29
6/19/2022 18:00	49.96	6/19/2022 16:42	80.91	6/18/2022 15:05	17.76	6/18/2022 14:14	4.65	6/18/2022 19:10	92.03
6/19/2022 18:01	49.96	6/19/2022 16:43	80.91	6/18/2022 15:06	17.71	6/18/2022 14:15	4.56	6/18/2022 19:11	91.80
6/19/2022 18:02	49.95	6/19/2022 16:44	80.84	6/18/2022 15:07	17.72	6/18/2022 14:16	4.54	6/18/2022 19:12	91.62
6/19/2022 18:03	49.92	6/19/2022 16:45	80.86	6/18/2022 15:08	17.72	6/18/2022 14:17	4.56	6/18/2022 19:13	91.40
6/19/2022 18:04	49.94	6/19/2022 16:46	80.90	6/18/2022 15:09	17.68	6/18/2022 14:18	4.62	6/18/2022 19:14	91.18
6/19/2022 18:05	49.92	6/19/2022 16:47	80.89	6/18/2022 15:10	17.70	6/18/2022 14:19	4.54	6/18/2022 19:15	90.94
6/19/2022 18:06	49.89	6/19/2022 16:48	80.86	6/18/2022 15:11	17.64	6/18/2022 14:20	4.55	6/18/2022 19:16	90.70
6/19/2022 18:07	49.92	6/19/2022 16:49	80.91	6/18/2022 15:12	17.68	6/18/2022 14:21	4.56	6/18/2022 19:17	90.50
6/19/2022 18:08	49.92	6/19/2022 16:50	80.89	6/18/2022 15:13	17.67	6/18/2022 14:22	4.63	6/18/2022 19:18	90.30
6/19/2022 18:09	49.93	6/19/2022 16:51	80.86	6/18/2022 15:14	17.62	6/18/2022 14:23	4.94	6/18/2022 19:19	90.04
6/19/2022 18:10	49.92	6/19/2022 16:52	80.85	6/18/2022 15:15	17.57	6/18/2022 14:24	4.72	6/18/2022 19:20	89.88
6/19/2022 18:11	49.92	6/19/2022 16:53	80.91	6/18/2022 15:16	17.58	6/18/2022 14:25	4.67	6/18/2022 19:21	89.65
6/19/2022 18:12	49.87	6/19/2022 16:54	80.87	6/18/2022 15:17	17.54	6/18/2022 14:26	4.62	6/18/2022 19:22	89.48
6/19/2022 18:13	49.87	6/19/2022 16:55	80.88	6/18/2022 15:18	17.53	6/18/2022 14:27	4.59	6/18/2022 19:23	89.24
6/19/2022 18:14	49.89	6/19/2022 16:56	80.92	6/18/2022 15:19	17.55	6/18/2022 14:28	4.61	6/18/2022 19:24	89.06
6/19/2022 18:15	49.87	6/19/2022 16:57	80.87	6/18/2022 15:20	17.56	6/18/2022 14:29	4.63	6/18/2022 19:25	88.86
6/19/2022 18:16	49.87	6/19/2022 16:58	80.87	6/18/2022 15:21	17.54	6/18/2022 14:30	4.59	6/18/2022 19:26	88.70
6/19/2022 18:17	49.87	6/19/2022 16:59	80.90	6/18/2022 15:22	17.55	6/18/2022 14:31	4.54	6/18/2022 19:27	88.48
6/19/2022 18:18	49.88	6/19/2022 17:00	80.84	6/18/2022 15:23	17.49	6/18/2022 14:32	4.56	6/18/2022 19:28	88.32
6/19/2022 18:19	49.87	6/19/2022 17:01	80.87	6/18/2022 15:24	17.53	6/18/2022 14:33	4.56	6/18/2022 19:29	88.07
6/19/2022 18:20	49.86	6/19/2022 17:02	80.90	6/18/2022 15:25	17.45	6/18/2022 14:34	4.56	6/18/2022 19:30	87.87
6/19/2022 18:21	49.83	6/19/2022 17:03	80.88	6/18/2022 15:26	17.48	6/18/2022 14:35	4.52	6/18/2022 19:31	87.71
6/19/2022 18:22	49.86	6/19/2022 17:04	80.88	6/18/2022 15:27	17.53	6/18/2022 14:36	4.50	6/18/2022 19:32	87.52
6/19/2022 18:23	49.84	6/19/2022 17:05	80.84	6/18/2022 15:28	17.46	6/18/2022 14:37	4.54	6/18/2022 19:33	87.33
6/19/2022 18:24	49.82	6/19/2022 17:06	80.89	6/18/2022 15:29	17.45	6/18/2022 14:38	4.55	6/18/2022 19:34	87.12
6/19/2022 18:25	49.86	6/19/2022 17:07	80.87	6/18/2022 15:30	17.47	6/18/2022 14:39	4.51	6/18/2022 19:35	86.99
6/19/2022 18:26	49.83	6/19/2022 17:08	80.88	6/18/2022 15:31	17.41	6/18/2022 14:40	4.48	6/18/2022 19:36	86.77
6/19/2022 18:27	49.84	6/19/2022 17:09	80.90	6/18/2022 15:32	17.44	6/18/2022 14:41	4.48	6/18/2022 19:37	86.58
6/19/2022 18:28	49.84	6/19/2022 17:10	80.86	6/18/2022 15:33	17.38	6/18/2022 14:42	4.49	6/18/2022 19:38	86.43
6/19/2022 18:29	49.84	6/19/2022 17:11	80.88	6/18/2022 15:34	17.38	6/18/2022 14:43	4.57	6/18/2022 19:39	86.22
6/19/2022 18:30	49.81	6/19/2022 17:12	80.85	6/18/2022 15:35	17.37	6/18/2022 14:44	4.49	6/18/2022 19:40	86.07
6/19/2022 18:31	49.84	6/19/2022 17:13	80.88	6/18/2022 15:36	17.40	6/18/2022 14:45	4.50	6/18/2022 19:41	85.93
6/19/2022 18:32	49.80	6/19/2022 17:14	80.88	6/18/2022 15:37	17.36	6/18/2022 14:46	4.47	6/18/2022 19:42	85.71
6/19/2022 18:33	49.82	6/19/2022 17:15	80.89	6/18/2022 15:38	17.36	6/18/2022 14:47	4.55	6/18/2022 19:43	85.57
6/19/2022 18:34	49.78	6/19/2022 17:16	80.84	6/18/2022 15:39	17.33	6/18/2022 14:48	4.44	6/18/2022 19:44	85.39
6/19/2022 18:35	49.82	6/19/2022 17:17	80.86	6/18/2022 15:40	17.33	6/18/2022 14:49	4.45	6/18/2022 19:45	85.25
6/19/2022 18:36	49.84	6/19/2022 17:18	80.89	6/18/2022 15:41	17.33	6/18/2022 14:50	4.45	6/18/2022 19:46	85.09
6/19/2022 18:37	49.83	6/19/2022 17:19	80.88	6/18/2022 15:42	17.31	6/18/2022 14:51	4.48	6/18/2022 19:47	84.92
6/19/2022 18:38	49.81	6/19/2022 17:20	80.90	6/18/2022 15:43	17.36	6/18/2022 14:52	4.41	6/18/2022 19:48	84.78
6/19/2022 18:39	49.80	6/19/2022 17:21	80.84	6/18/2022 15:44	17.30	6/18/2022 14:53	4.45	6/18/2022 19:49	84.62
6/19/2022 18:40	49.77	6/19/2022 17:22	80.88	6/18/2022 15:45	17.30	6/18/2022 14:54	4.46	6/18/2022 19:50	84.46
6/19/2022 18:41	49.76	6/19/2022 17:23	80.87	6/18/2022 15:46	17.25	6/18/2022 14:55	4.40	6/18/2022 19:51	84.28
6/19/2022 18:42	49.78	6/19/2022 17:24	80.84	6/18/2022 15:47	17.27	6/18/2022 14:56	4.45	6/18/2022 19:52	84.14
6/19/2022 18:43	49.81	6/19/2022 17:25	80.91	6/18/2022 15:48	17.24	6/18/2022 14:57	4.40	6/18/2022 19:53	83.98
6/19/2022 18:44	49.78	6/19/2022 17:26	80.89	6/18/2022 15:49	17.31	6/18/2022 14:58	4.44	6/18/2022 19:54	83.85
6/19/2022 18:45	49.78	6/19/2022 17:27	80.89	6/18/2022 15:50	17.23	6/18/2022 14:59	4.44	6/18/2022 19:55	83.73
6/19/2022 18:46	49.79	6/19/2022 17:28	80.84	6/18/2022 15:51	17.21	6/18/2022 15:00	4.48	6/18/2022 19:56	83.53
6/19/2022 18:47	49.77	6/19/2022 17:29	80.86	6/18/2022 15:52	17.19	6/18/2022 15:01	4.36	6/18/2022 19:57	83.42
6/19/2022 18:48	49.78	6/19/2022 17:30	80.91	6/18/2022 15:53	17.23	6/18/2022 15:02	4.39	6/18/2022 19:58	83.30
6/19/2022 18:49	49.75	6/19/2022 17:31	80.91	6/18/2022 15:54	17.24	6/18/2022 15:03	4.42	6/18/2022 19:59	83.13
6/19/2022 18:50	49.73	6/19/2022 17:32	80.91	6/18/2022 15:55	17.22	6/18/2022 15:04	4.39	6/18/2022 20:00	82.96
6/19/2022 18:51	49.77	6/19/2022 17:33	80.86	6/18/2022 15:56	17.24	6/18/2022 15:05	4.35	6/18/2022 20:01	82.87
6/19/2022 18:52	49.75	6/19/2022 17:34	80.84	6/18/2022 15:57	17.19	6/18/2022 15:06	4.68	6/18/2022 20:02	82.72
6/19/2022 18:53	49.79	6/19/2022 17:35	80.89	6/18/2022 15:58	17.22	6/18/2022 15:07	4.65	6/18/2022 20:03	82.58
6/19/2022 18:54	49.74	6/19/2022 17:36	80.84	6/18/2022 15:59	17.21	6/18/2022 15:08	4.60	6/18/2022 20:04	86.09
6/19/2022 18:55	49.75	6/19/2022 17:37	80.86	6/18/2022 16:00	17.17	6/18/2022 15:09	4.51	6/18/2022 20:05	88.49
6/19/2022 18:56	49.74	6/19/2022 17:38	80.83	6/18/2022 16:01	17.20	6/18/2022 15:10	4.47	6/18/2022 20:06	88.21
6/19/2022 18:57	49.73	6/19/2022 17:39	80.87	6/18/2022 16:02	17.19	6/18/2022 15:11	4.49	6/18/2022 20:07	87.97
6/19/2022 18:58	49.72	6/19/2022 17:40	80.86	6/18/2022 16:03	17.17	6/18/2022 15:12	4.44	6/18/2022 20:08	87.72
6/19/2022 18:59	49.73	6/19/2022 17:41	80.90	6/18/2022 16:04	17.13	6/18/2022 15:13	4.39	6/18/2022 20:09	87.53
6/19/2022 19:00	49.76	6/19/2022 17:42	80.85	6/18/2022 16:05	17.10	6/18/2022 15:14	4.38	6/18/2022 20:10	87.28

6/19/2022 19:01	49.76	6/19/2022 17:43	80.88	6/18/2022 16:06	17.16	6/18/2022 15:15	4.52	6/18/2022 20:11	87.05
6/19/2022 19:02	49.75	6/19/2022 17:44	80.90	6/18/2022 16:07	17.17	6/18/2022 15:16	4.42	6/18/2022 20:12	86.87
6/19/2022 19:03	49.74	6/19/2022 17:45	80.87	6/18/2022 16:08	17.12	6/18/2022 15:17	4.38	6/18/2022 20:13	86.66
6/19/2022 19:04	49.73	6/19/2022 17:46	80.86	6/18/2022 16:09	17.15	6/18/2022 15:18	4.38	6/18/2022 20:14	86.50
6/19/2022 19:05	49.75	6/19/2022 17:47	80.86	6/18/2022 16:10	17.10	6/18/2022 15:19	4.44	6/18/2022 20:15	86.31
6/19/2022 19:06	49.74	6/19/2022 17:48	80.88	6/18/2022 16:11	17.06	6/18/2022 15:20	4.32	6/18/2022 20:16	86.13
6/19/2022 19:07	49.74	6/19/2022 17:49	80.90	6/18/2022 16:12	17.13	6/18/2022 15:21	4.35	6/18/2022 20:17	85.92
6/19/2022 19:08	49.72	6/19/2022 17:50	80.86	6/18/2022 16:13	17.06	6/18/2022 15:22	4.39	6/18/2022 20:18	85.74
6/19/2022 19:09	49.66	6/19/2022 17:51	80.82	6/18/2022 16:14	17.05	6/18/2022 15:23	4.41	6/18/2022 20:19	85.60
6/19/2022 19:10	49.72	6/19/2022 17:52	80.85	6/18/2022 16:15	17.11	6/18/2022 15:24	4.35	6/18/2022 20:20	85.43
6/19/2022 19:11	49.73	6/19/2022 17:53	80.83	6/18/2022 16:16	17.08	6/18/2022 15:25	4.31	6/18/2022 20:21	85.28
6/19/2022 19:12	49.72	6/19/2022 17:54	80.91	6/18/2022 16:17	17.09	6/18/2022 15:26	4.35	6/18/2022 20:22	85.07
6/19/2022 19:13	49.70	6/19/2022 17:55	80.89	6/18/2022 16:18	17.04	6/18/2022 15:27	4.34	6/18/2022 20:23	84.91
6/19/2022 19:14	49.69	6/19/2022 17:56	80.84	6/18/2022 16:19	17.06	6/18/2022 15:28	4.34	6/18/2022 20:24	84.73
6/19/2022 19:15	49.70	6/19/2022 17:57	80.85	6/18/2022 16:20	17.03	6/18/2022 15:29	4.34	6/18/2022 20:25	84.58
6/19/2022 19:16	49.73	6/19/2022 17:58	80.89	6/18/2022 16:21	17.11	6/18/2022 15:30	4.27	6/18/2022 20:26	84.43
6/19/2022 19:17	49.69	6/19/2022 17:59	80.87	6/18/2022 16:22	17.05	6/18/2022 15:31	4.25	6/18/2022 20:27	84.29
6/19/2022 19:18	49.70	6/19/2022 18:00	80.85	6/18/2022 16:23	16.99	6/18/2022 15:32	4.29	6/18/2022 20:28	84.13
6/19/2022 19:19	51.62	6/19/2022 18:01	80.92	6/18/2022 16:24	17.03	6/18/2022 15:33	4.29	6/18/2022 20:29	83.98
6/19/2022 19:20	53.46	6/19/2022 18:02	80.88	6/18/2022 16:25	17.02	6/18/2022 15:34	4.34	6/18/2022 20:30	83.83
6/19/2022 19:21	54.40	6/19/2022 18:03	80.88	6/18/2022 16:26	17.03	6/18/2022 15:35	4.26	6/18/2022 20:31	83.66
6/19/2022 19:22	54.93	6/19/2022 18:04	80.85	6/18/2022 16:27	17.05	6/18/2022 15:36	4.24	6/18/2022 20:32	83.52
6/19/2022 19:23	54.96	6/19/2022 18:05	80.90	6/18/2022 16:28	16.99	6/18/2022 15:37	4.25	6/18/2022 20:33	83.36
6/19/2022 19:24	52.64	6/19/2022 18:06	80.86	6/18/2022 16:29	17.03	6/18/2022 15:38	4.27	6/18/2022 20:34	83.27
6/19/2022 19:25	51.79	6/19/2022 18:07	80.86	6/18/2022 16:30	17.00	6/18/2022 15:39	4.31	6/18/2022 20:35	83.10
6/19/2022 19:26	51.42	6/19/2022 18:08	80.88	6/18/2022 16:31	16.99	6/18/2022 15:40	4.28	6/18/2022 20:36	82.93
6/19/2022 19:27	51.18	6/19/2022 18:09	80.86	6/18/2022 16:32	17.00	6/18/2022 15:41	4.24	6/18/2022 20:37	82.81
6/19/2022 19:28	51.01	6/19/2022 18:10	80.87	6/18/2022 16:33	17.00	6/18/2022 15:42	4.40	6/18/2022 20:38	82.70
6/19/2022 19:29	50.87	6/19/2022 18:11	80.89	6/18/2022 16:34	17.05	6/18/2022 15:43	4.32	6/18/2022 20:39	82.52
6/19/2022 19:30	50.77	6/19/2022 18:12	80.87	6/18/2022 16:35	17.05	6/18/2022 15:44	4.35	6/18/2022 20:40	82.39
6/19/2022 19:31	50.71	6/19/2022 18:13	80.85	6/18/2022 16:36	16.95	6/18/2022 15:45	4.28	6/18/2022 20:41	82.27
6/19/2022 19:32	50.66	6/19/2022 18:14	80.87	6/18/2022 16:37	16.99	6/18/2022 15:46	4.27	6/18/2022 20:42	82.10
6/19/2022 19:33	50.57	6/19/2022 18:15	80.87	6/18/2022 16:38	16.93	6/18/2022 15:47	4.25	6/18/2022 20:43	82.01
6/19/2022 19:34	50.59	6/19/2022 18:16	80.94	6/18/2022 16:39	16.94	6/18/2022 15:48	4.31	6/18/2022 20:44	81.87
6/19/2022 19:35	50.53	6/19/2022 18:17	80.86	6/18/2022 16:40	16.95	6/18/2022 15:49	4.24	6/18/2022 20:45	81.76
6/19/2022 19:36	50.50	6/19/2022 18:18	80.88	6/18/2022 16:41	16.92	6/18/2022 15:50	4.23	6/18/2022 20:46	81.63
6/19/2022 19:37	50.45	6/19/2022 18:19	80.89	6/18/2022 16:42	16.95	6/18/2022 15:51	4.24	6/18/2022 20:47	81.53
6/19/2022 19:38	50.43	6/19/2022 18:20	80.89	6/18/2022 16:43	16.96	6/18/2022 15:52	4.23	6/18/2022 20:48	81.42
6/19/2022 19:39	50.41	6/19/2022 18:21	80.86	6/18/2022 16:44	16.94	6/18/2022 15:53	4.23	6/18/2022 20:49	81.30
6/19/2022 19:40	50.38	6/19/2022 18:22	80.86	6/18/2022 16:45	16.97	6/18/2022 15:54	4.24	6/18/2022 20:50	81.16
6/19/2022 19:41	50.33	6/19/2022 18:23	80.88	6/18/2022 16:46	16.94	6/18/2022 15:55	4.27	6/18/2022 20:51	81.07
6/19/2022 19:42	50.35	6/19/2022 18:24	80.88	6/18/2022 16:47	16.92	6/18/2022 15:56	4.28	6/18/2022 20:52	80.96
6/19/2022 19:43	50.30	6/19/2022 18:25	80.87	6/18/2022 16:48	16.93	6/18/2022 15:57	4.27	6/18/2022 20:53	80.86
6/19/2022 19:44	50.30	6/19/2022 18:26	80.86	6/18/2022 16:49	16.90	6/18/2022 15:58	4.34	6/18/2022 20:54	80.78
6/19/2022 19:45	50.26	6/19/2022 18:27	80.89	6/18/2022 16:50	16.94	6/18/2022 15:59	4.30	6/18/2022 20:55	80.67
6/19/2022 19:46	50.24	6/19/2022 18:28	80.85	6/18/2022 16:51	16.90	6/18/2022 16:00	4.24	6/18/2022 20:56	80.54
6/19/2022 19:47	50.25	6/19/2022 18:29	80.86	6/18/2022 16:52	16.91	6/18/2022 16:01	4.39	6/18/2022 20:57	80.48
6/19/2022 19:48	50.24	6/19/2022 18:30	80.84	6/18/2022 16:53	16.87	6/18/2022 16:02	4.31	6/18/2022 20:58	80.35
6/19/2022 19:49	50.20	6/19/2022 18:31	80.88	6/18/2022 16:54	16.91	6/18/2022 16:03	4.22	6/18/2022 20:59	80.22
6/19/2022 19:50	50.19	6/19/2022 18:32	80.90	6/18/2022 16:55	16.90	6/18/2022 16:04	4.28	6/18/2022 21:00	80.12
6/19/2022 19:51	50.19	6/19/2022 18:33	80.85	6/18/2022 16:56	16.85	6/18/2022 16:05	4.25	6/18/2022 21:01	79.99
6/19/2022 19:52	50.17	6/19/2022 18:34	80.88	6/18/2022 16:57	16.90	6/18/2022 16:06	4.24	6/18/2022 21:02	79.90
6/19/2022 19:53	50.17	6/19/2022 18:35	80.87	6/18/2022 16:58	16.88	6/18/2022 16:07	4.20	6/18/2022 21:03	79.82
6/19/2022 19:54	50.17	6/19/2022 18:36	80.84	6/18/2022 16:59	16.88	6/18/2022 16:08	4.47	6/18/2022 21:04	79.69
6/19/2022 19:55	50.13	6/19/2022 18:37	80.85	6/18/2022 17:00	16.83	6/18/2022 16:09	4.31	6/18/2022 21:05	79.61
6/19/2022 19:56	50.15	6/19/2022 18:38	80.86	6/18/2022 17:01	16.89	6/18/2022 16:10	4.31	6/18/2022 21:06	79.50
6/19/2022 19:57	50.14	6/19/2022 18:39	80.86	6/18/2022 17:02	16.87	6/18/2022 16:11	4.26	6/18/2022 21:07	79.41
6/19/2022 19:58	50.13	6/19/2022 18:40	80.85	6/18/2022 17:03	16.91	6/18/2022 16:12	4.29	6/18/2022 21:08	79.32
6/19/2022 19:59	50.16	6/19/2022 18:41	80.85	6/18/2022 17:04	16.87	6/18/2022 16:13	4.21	6/18/2022 21:09	79.24
6/19/2022 20:00	50.10	6/19/2022 18:42	80.86	6/18/2022 17:05	16.89	6/18/2022 16:14	4.22	6/18/2022 21:10	79.17
6/19/2022 20:01	50.07	6/19/2022 18:43	80.90	6/18/2022 17:06	16.85	6/18/2022 16:15	4.25	6/18/2022 21:11	79.05
6/19/2022 20:02	50.09	6/19/2022 18:44	80.90	6/18/2022 17:07	16.82	6/18/2022 16:16	4.22	6/18/2022 21:12	78.99
6/19/2022 20:03	50.09	6/19/2022 18:45	80.90	6/18/2022 17:08	16.82	6/18/2022 16:17	4.21	6/18/2022 21:13	78.89
6/19/2022 20:04	50.04	6/19/2022 18:46	80.89	6/18/2022 17:09	16.82	6/18/2022 16:18	4.19	6/18/2022 21:14	78.84
6/19/2022 20:05	50.06	6/19/2022 18:47	80.89	6/18/2022 17:10	16.85	6/18/2022 16:19	4.17	6/18/2022 21:15	78.76
6/19/2022 20:06	50.05	6/19/2022 18:48	80.88	6/18/2022 17:11	16.86	6/18/2022 16:20	4.18	6/18/2022 21:16	78.69
6/19/2022 20:07	50.06	6/19/2022 18:49	80.89	6/18/2022 17:12	16.85	6/18/2022 16:21	4.22	6/18/2022 21:17	78.61
6/19/2022 20:08	50.04	6/19/2022 18:50	80.85	6/18/2022 17:13	16.86	6/18/2022 16:22	4.16	6/18/2022 21:18	78.54
6/19/2022 20:09	50.03	6/19/2022 18:51	80.84	6/18/2022 17:14	16.80	6/18/2022 16:23	4.20	6/18/2022 21:19	78.45
6/19/2022 20:10	50.04	6/19/2022 18:52	80.87	6/18/2022 17:15	16.85	6/18/2022 16:24	4.17	6/18/2022 21:20	78.37
6/19/2022 20:11	50.05	6/19/2022 18:53	80.89	6/18/2022 17:16	16.83	6/18/2022 16:25	4.24	6/18/2022 21:21	78.29
6/19/2022 20:12	50.04	6/19/2022 18:54	80.87	6/18/2022 17:17	16.82	6/18/2022 16:26	4.14	6/18/2022 21:22	78.22
6/19/2022 20:13	50.00	6/19/2022 18:55	80.90	6/18/2022 17:18	16.79	6/18/2022 16:27	4.15	6/18/2022 21:23	78.12
6/19/2022 20:14	50.02	6/19/2022 18:56	80.91	6/18/2022 17:19	16.81	6/18/2022 16:28	4.15	6/18/2022 21:24	78.04
6/19/2022 20:15	50.02	6/19/2022 18:57	80.85	6/18/2022 17:20	16.81	6/18/2022 16:29	4.20	6/18/2022 21:25	77.96
6/19/2022 20:16	50.01	6/19/2022 18:58	80.88	6/18/2022 17:21	16.79	6/18/2022 16:30	4.14	6/18/2022 21:26	77.87
6/19/2022 20:17	49.99	6/19/2022 18:59	80.89	6/18/2022 17:22	16.79	6/18/2022 16:31	4.11	6/18/2022 21:27	77.78
6/19/2022 20:18	50.00	6/19/2022 19:00	80.89	6/18/2022 17:23	16.81	6/18/2022 16:32	4.10	6/18/2022 21:28	77.67
6/19/2022 20:19	50.00	6/19/2022 19:01	80.89	6/18/2022 17:24	16.78	6/18/2022 16:33	4.13	6/18/2022 21:29	77.63
6/19/2022 20:20	50.00	6/19/2022 19:02	80.87	6/18/2022 17:25	16.80	6/18/2022 16:34	4.12	6/18/2022 21:30	77.53
6/19/2022 20:21	49.98	6/19/2022 19:03	80.91	6/18/2022 17:26	16.74	6/18/2022 16:35	4.23	6/18/2022 21:31	77.46
6/19/2022 20:22	49.97	6/19/2022 19:04	80.87	6/18/2022 17:27	16.79	6/18/2022 16:36	4.16	6/18/2022 21:32	77.40
6/19/2022 20:23	49.98	6/19/2022 19:05	80.87	6/18/2022 17:28	16.82	6/18/2022 16:37	4.11	6/18/2022 21:33	77.32
6/19/2022 20:24	49.91	6/19/2022 19:06	80.88	6/18/2022 17:29	16.75	6/18/2022 16:38	4.19	6/18/2022 21:34	77.25
6/19/2022 20:25	49.95	6/19/2022 19:07	80.87	6/18/2022 17:30	16.80	6/18/2022 16:39	4.21	6/18/2022 21:35	77.17
6/19/2022 20:26	49.97	6/19/2022 19:08	80.87	6/18/2022 17:31	16.75	6/18/2022 16:40	4.23	6/18/2022 21:36	77.13
6/19/2022 20:27	49.94	6/19/2022 19:09	80.89	6/18/2022 17:32	16.75	6/18/2022 16:41	4.12	6/18/2022 21:37	77.02
6/19/2022 20:28	49.95	6/19/2022 19:10	80.91	6/18/2022 17:33	16.75	6/18/2022 16:42	4.09	6/18/2022 21:38	76.98

6/19/2022 20:29	49.92	6/19/2022 19:11	80.87	6/18/2022 17:34	16.74	6/18/2022 16:43	4.14	6/18/2022 21:39	76.90
6/19/2022 20:30	49.96	6/19/2022 19:12	80.86	6/18/2022 17:35	16.77	6/18/2022 16:44	4.19	6/18/2022 21:40	76.83
6/19/2022 20:31	49.96	6/19/2022 19:13	80.87	6/18/2022 17:36	16.73	6/18/2022 16:45	4.06	6/18/2022 21:41	76.77
6/19/2022 20:32	49.92	6/19/2022 19:14	80.88	6/18/2022 17:37	16.73	6/18/2022 16:46	4.50	6/18/2022 21:42	76.69
6/19/2022 20:33	49.95	6/19/2022 19:15	80.84	6/18/2022 17:38	16.75	6/18/2022 16:47	4.25	6/18/2022 21:43	76.63
6/19/2022 20:34	49.94	6/19/2022 19:16	80.87	6/18/2022 17:39	16.75	6/18/2022 16:48	4.20	6/18/2022 21:44	76.55
6/19/2022 20:35	49.95	6/19/2022 19:17	80.92	6/18/2022 17:40	16.71	6/18/2022 16:49	4.21	6/18/2022 21:45	76.47
6/19/2022 20:36	49.95	6/19/2022 19:18	80.89	6/18/2022 17:41	16.76	6/18/2022 16:50	4.18	6/18/2022 21:46	76.40
6/19/2022 20:37	49.90	6/19/2022 19:19	80.87	6/18/2022 17:42	16.77	6/18/2022 16:51	4.11	6/18/2022 21:47	76.34
6/19/2022 20:38	49.91	6/19/2022 19:20	80.87	6/18/2022 17:43	16.73	6/18/2022 16:52	4.12	6/18/2022 21:48	76.23
6/19/2022 20:39	49.93	6/19/2022 19:21	80.88	6/18/2022 17:44	16.75	6/18/2022 16:53	4.13	6/18/2022 21:49	76.22
6/19/2022 20:40	49.89	6/19/2022 19:22	80.88	6/18/2022 17:45	16.68	6/18/2022 16:54	4.13	6/18/2022 21:50	76.12
6/19/2022 20:41	49.91	6/19/2022 19:23	80.91	6/18/2022 17:46	16.68	6/18/2022 16:55	4.19	6/18/2022 21:51	76.04
6/19/2022 20:42	49.91	6/19/2022 19:24	80.92	6/18/2022 17:47	16.74	6/18/2022 16:56	4.07	6/18/2022 21:52	75.96
6/19/2022 20:43	49.92	6/19/2022 19:25	80.91	6/18/2022 17:48	16.68	6/18/2022 16:57	4.09	6/18/2022 21:53	75.93
6/19/2022 20:44	49.87	6/19/2022 19:26	80.84	6/18/2022 17:49	16.75	6/18/2022 16:58	4.05	6/18/2022 21:54	75.82
6/19/2022 20:45	49.91	6/19/2022 19:27	80.89	6/18/2022 17:50	16.72	6/18/2022 16:59	4.10	6/18/2022 21:55	75.76
6/19/2022 20:46	49.88	6/19/2022 19:28	80.87	6/18/2022 17:51	16.71	6/18/2022 17:00	4.16	6/18/2022 21:56	75.73
6/19/2022 20:47	49.89	6/19/2022 19:29	80.89	6/18/2022 17:52	16.68	6/18/2022 17:01	4.08	6/18/2022 21:57	75.64
6/19/2022 20:48	49.86	6/19/2022 19:30	80.89	6/18/2022 17:53	16.72	6/18/2022 17:02	4.45	6/18/2022 21:58	75.59
6/19/2022 20:49	49.90	6/19/2022 19:31	80.86	6/18/2022 17:54	16.68	6/18/2022 17:03	4.53	6/18/2022 21:59	75.49
6/19/2022 20:50	49.91	6/19/2022 19:32	80.90	6/18/2022 17:55	16.70	6/18/2022 17:04	4.37	6/18/2022 22:00	75.47
6/19/2022 20:51	49.87	6/19/2022 19:33	80.88	6/18/2022 17:56	16.65	6/18/2022 17:05	4.21	6/18/2022 22:01	75.38
6/19/2022 20:52	49.85	6/19/2022 19:34	80.93	6/18/2022 17:57	16.69	6/18/2022 17:06	4.17	6/18/2022 22:02	75.31
6/19/2022 20:53	49.86	6/19/2022 19:35	80.87	6/18/2022 17:58	16.69	6/18/2022 17:07	4.18	6/18/2022 22:03	75.26
6/19/2022 20:54	49.86	6/19/2022 19:36	80.86	6/18/2022 17:59	16.70	6/18/2022 17:08	4.18	6/18/2022 22:04	75.19
6/19/2022 20:55	49.87	6/19/2022 19:37	80.88	6/18/2022 18:00	16.72	6/18/2022 17:09	4.13	6/18/2022 22:05	75.13
6/19/2022 20:56	49.88	6/19/2022 19:38	80.84	6/18/2022 18:01	16.64	6/18/2022 17:10	4.13	6/18/2022 22:06	75.10
6/19/2022 20:57	49.86	6/19/2022 19:39	80.84	6/18/2022 18:02	16.67	6/18/2022 17:11	4.11	6/18/2022 22:07	75.01
6/19/2022 20:58	49.88	6/19/2022 19:40	80.90	6/18/2022 18:03	16.65	6/18/2022 17:12	4.12	6/18/2022 22:08	74.94
6/19/2022 20:59	49.87	6/19/2022 19:41	80.84	6/18/2022 18:04	16.64	6/18/2022 17:13	4.12	6/18/2022 22:09	74.88
6/19/2022 21:00	49.88	6/19/2022 19:42	80.87	6/18/2022 18:05	16.67	6/18/2022 17:14	4.16	6/18/2022 22:10	74.86
6/19/2022 21:01	49.85	6/19/2022 19:43	80.86	6/18/2022 18:06	16.63	6/18/2022 17:15	4.06	6/18/2022 22:11	74.77
6/19/2022 21:02	49.84	6/19/2022 19:44	80.90	6/18/2022 18:07	16.62	6/18/2022 17:16	4.04	6/18/2022 22:12	74.73
6/19/2022 21:03	49.83	6/19/2022 19:45	80.89	6/18/2022 18:08	16.64	6/18/2022 17:17	4.10	6/18/2022 22:13	74.67
6/19/2022 21:04	49.83	6/19/2022 19:46	80.90	6/18/2022 18:09	16.69	6/18/2022 17:18	4.03	6/18/2022 22:14	74.62
6/19/2022 21:05	49.83	6/19/2022 19:47	80.91	6/18/2022 18:10	16.70	6/18/2022 17:19	4.10	6/18/2022 22:15	74.55
6/19/2022 21:06	49.84	6/19/2022 19:48	80.87	6/18/2022 18:11	16.62	6/18/2022 17:20	4.11	6/18/2022 22:16	74.48
6/19/2022 21:07	49.82	6/19/2022 19:49	80.90	6/18/2022 18:12	16.65	6/18/2022 17:21	4.04	6/18/2022 22:17	74.43
6/19/2022 21:08	49.85	6/19/2022 19:50	80.92	6/18/2022 18:13	16.60	6/18/2022 17:22	4.05	6/18/2022 22:18	74.38
6/19/2022 21:09	49.84	6/19/2022 19:51	80.92	6/18/2022 18:14	16.63	6/18/2022 17:23	4.03	6/18/2022 22:19	74.32
6/19/2022 21:10	49.85	6/19/2022 19:52	80.88	6/18/2022 18:15	16.64	6/18/2022 17:24	4.04	6/18/2022 22:20	74.24
6/19/2022 21:11	49.83	6/19/2022 19:53	80.86	6/18/2022 18:16	16.62	6/18/2022 17:25	4.08	6/18/2022 22:21	74.22
6/19/2022 21:12	49.80	6/19/2022 19:54	80.86	6/18/2022 18:17	16.62	6/18/2022 17:26	4.05	6/18/2022 22:22	74.11
6/19/2022 21:13	49.80	6/19/2022 19:55	80.88	6/18/2022 18:18	16.63	6/18/2022 17:27	4.04	6/18/2022 22:23	74.12
6/19/2022 21:14	49.82	6/19/2022 19:56	80.91	6/18/2022 18:19	16.60	6/18/2022 17:28	4.00	6/18/2022 22:24	74.04
6/19/2022 21:15	49.83	6/19/2022 19:57	80.91	6/18/2022 18:20	16.66	6/18/2022 17:29	4.00	6/18/2022 22:25	74.00
6/19/2022 21:16	49.83	6/19/2022 19:58	80.86	6/18/2022 18:21	16.65	6/18/2022 17:30	4.07	6/18/2022 22:26	73.97
6/19/2022 21:17	49.81	6/19/2022 19:59	80.85	6/18/2022 18:22	16.62	6/18/2022 17:31	3.94	6/18/2022 22:27	73.88
6/19/2022 21:18	49.81	6/19/2022 20:00	80.89	6/18/2022 18:23	16.63	6/18/2022 17:32	3.92	6/18/2022 22:28	73.84
6/19/2022 21:19	49.85	6/19/2022 20:01	80.91	6/18/2022 18:24	16.62	6/18/2022 17:33	3.98	6/18/2022 22:29	73.79
6/19/2022 21:20	49.79	6/19/2022 20:02	80.88	6/18/2022 18:25	16.64	6/18/2022 17:34	4.00	6/18/2022 22:30	73.77
6/19/2022 21:21	49.82	6/19/2022 20:03	80.86	6/18/2022 18:26	16.61	6/18/2022 17:35	3.98	6/18/2022 22:31	73.70
6/19/2022 21:22	49.79	6/19/2022 20:04	80.89	6/18/2022 18:27	16.65	6/18/2022 17:36	3.95	6/18/2022 22:32	73.65
6/19/2022 21:23	49.83	6/19/2022 20:05	80.88	6/18/2022 18:28	16.63	6/18/2022 17:37	3.94	6/18/2022 22:33	73.58
6/19/2022 21:24	49.79	6/19/2022 20:06	80.87	6/18/2022 18:29	16.61	6/18/2022 17:38	3.97	6/18/2022 22:34	73.55
6/19/2022 21:25	49.79	6/19/2022 20:07	80.90	6/18/2022 18:30	16.65	6/18/2022 17:39	3.98	6/18/2022 22:35	73.53
6/19/2022 21:26	49.78	6/19/2022 20:08	80.89	6/18/2022 18:31	16.65	6/18/2022 17:40	3.99	6/18/2022 22:36	73.46
6/19/2022 21:27	49.81	6/19/2022 20:09	80.88	6/18/2022 18:32	16.62	6/18/2022 17:41	3.91	6/18/2022 22:37	73.41
6/19/2022 21:28	49.78	6/19/2022 20:10	80.93	6/18/2022 18:33	16.62	6/18/2022 17:42	3.91	6/18/2022 22:38	73.37
6/19/2022 21:29	49.78	6/19/2022 20:11	80.90	6/18/2022 18:34	16.63	6/18/2022 17:43	3.94	6/18/2022 22:39	73.31
6/19/2022 21:30	49.79	6/19/2022 20:12	80.89	6/18/2022 18:35	16.63	6/18/2022 17:44	3.94	6/18/2022 22:40	73.29
6/19/2022 21:31	49.76	6/19/2022 20:13	80.88	6/18/2022 18:36	16.60	6/18/2022 17:45	3.99	6/18/2022 22:41	73.23
6/19/2022 21:32	49.80	6/19/2022 20:14	80.87	6/18/2022 18:37	16.61	6/18/2022 17:46	3.89	6/18/2022 22:42	73.20
6/19/2022 21:33	49.81	6/19/2022 20:15	80.93	6/18/2022 18:38	16.56	6/18/2022 17:47	3.84	6/18/2022 22:43	73.12
6/19/2022 21:34	49.78	6/19/2022 20:16	80.84	6/18/2022 18:39	16.63	6/18/2022 17:48	3.92	6/18/2022 22:44	73.10
6/19/2022 21:35	49.80	6/19/2022 20:17	80.88	6/18/2022 18:40	16.56	6/18/2022 17:49	3.94	6/18/2022 22:45	73.07
6/19/2022 21:36	49.81	6/19/2022 20:18	80.92	6/18/2022 18:41	16.58	6/18/2022 17:50	3.93	6/18/2022 22:46	73.04
6/19/2022 21:37	49.82	6/19/2022 20:19	80.88	6/18/2022 18:42	16.58	6/18/2022 17:51	3.85	6/18/2022 22:47	72.99
6/19/2022 21:38	49.80	6/19/2022 20:20	80.88	6/18/2022 18:43	16.60	6/18/2022 17:52	3.88	6/18/2022 22:48	72.97
6/19/2022 21:39	49.80	6/19/2022 20:21	80.87	6/18/2022 18:44	16.57	6/18/2022 17:53	3.86	6/18/2022 22:49	72.86
6/19/2022 21:40	49.77	6/19/2022 20:22	80.88	6/18/2022 18:45	16.58	6/18/2022 17:54	3.88	6/18/2022 22:50	72.83
6/19/2022 21:41	49.77	6/19/2022 20:23	80.88	6/18/2022 18:46	16.63	6/18/2022 17:55	3.89	6/18/2022 22:51	72.84
6/19/2022 21:42	49.76	6/19/2022 20:24	80.90	6/18/2022 18:47	16.60	6/18/2022 17:56	3.91	6/18/2022 22:52	72.77
6/19/2022 21:43	49.74	6/19/2022 20:25	80.94	6/18/2022 18:48	16.59	6/18/2022 17:57	3.86	6/18/2022 22:53	72.72
6/19/2022 21:44	49.73	6/19/2022 20:26	80.89	6/18/2022 18:49	16.57	6/18/2022 17:58	3.83	6/18/2022 22:54	72.68
6/19/2022 21:45	49.74	6/19/2022 20:27	80.88	6/18/2022 18:50	16.54	6/18/2022 17:59	3.85	6/18/2022 22:55	72.48
6/19/2022 21:46	49.73	6/19/2022 20:28	80.89	6/18/2022 18:51	16.60	6/18/2022 18:00	3.88	6/18/2022 22:56	78.52
6/19/2022 21:47	49.78	6/19/2022 20:29	80.94	6/18/2022 18:52	16.57	6/18/2022 18:01	3.86	6/18/2022 22:57	78.34
6/19/2022 21:48	49.73	6/19/2022 20:30	80.94	6/18/2022 18:53	16.52	6/18/2022 18:02	3.86	6/18/2022 22:58	78.19
6/19/2022 21:49	49.74	6/19/2022 20:31	80.90	6/18/2022 18:54	16.57	6/18/2022 18:03	3.82	6/18/2022 22:59	78.07
6/19/2022 21:50	49.73	6/19/2022 20:32	80.92	6/18/2022 18:55	16.56	6/18/2022 18:04	3.82	6/18/2022 23:00	77.96
6/19/2022 21:51	49.77	6/19/2022 20:33	80.89	6/18/2022 18:56	16.59	6/18/2022 18:05	3.85	6/18/2022 23:01	77.82
6/19/2022 21:52	49.78	6/19/2022 20:34	80.83	6/18/2022 18:57	16.59	6/18/2022 18:06	3.94	6/18/2022 23:02	77.72
6/19/2022 21:53	49.76	6/19/2022 20:35	80.91	6/18/2022 18:58	16.60	6/18/2022 18:07	3.83	6/18/2022 23:03	77.60
6/19/2022 21:54	49.75	6/19/2022 20:36	80.87	6/18/2022 18:59	16.59	6/18/2022 18:08	3.84	6/18/2022 23:04	77.49
6/19/2022 21:55	49.77	6/19/2022 20:37	80.89	6/18/2022 19:00	16.54	6/18/2022 18:09	3.84	6/18/2022 23:05	77.39
6/19/2022 21:56	49.76	6/19/2022 20:38	80.86	6/18/2022 19:01	16.57	6/18/2022 18:10	3.86	6/18/2022 23:06	77.35

6/19/2022 21:57	49.75	6/19/2022 20:39	80.86	6/18/2022 19:02	16.58	6/18/2022 18:11	3.83	6/18/2022 23:07	77.20
6/19/2022 21:58	49.74	6/19/2022 20:40	80.85	6/18/2022 19:03	16.53	6/18/2022 18:12	3.80	6/18/2022 23:08	77.16
6/19/2022 21:59	49.72	6/19/2022 20:41	80.90	6/18/2022 19:04	16.54	6/18/2022 18:13	3.78	6/18/2022 23:09	77.09
6/19/2022 22:00	49.72	6/19/2022 20:42	80.94	6/18/2022 19:05	16.55	6/18/2022 18:14	3.80	6/18/2022 23:10	76.96
6/19/2022 22:01	49.75	6/19/2022 20:43	80.84	6/18/2022 19:06	16.57	6/18/2022 18:15	3.81	6/18/2022 23:11	76.88
6/19/2022 22:02	49.73	6/19/2022 20:44	80.93	6/18/2022 19:07	16.54	6/18/2022 18:16	3.76	6/18/2022 23:12	76.80
6/19/2022 22:03	49.73	6/19/2022 20:45	80.92	6/18/2022 19:08	16.57	6/18/2022 18:17	3.85	6/18/2022 23:13	76.72
6/19/2022 22:04	49.75	6/19/2022 20:46	80.86	6/18/2022 19:09	16.53	6/18/2022 18:18	3.78	6/18/2022 23:14	76.62
6/19/2022 22:05	49.70	6/19/2022 20:47	80.84	6/18/2022 19:10	16.54	6/18/2022 18:19	3.76	6/18/2022 23:15	76.56
6/19/2022 22:06	49.75	6/19/2022 20:48	80.88	6/18/2022 19:11	16.56	6/18/2022 18:20	3.74	6/18/2022 23:16	76.43
6/19/2022 22:07	49.73	6/19/2022 20:49	80.88	6/18/2022 19:12	16.54	6/18/2022 18:21	3.79	6/18/2022 23:17	76.36
6/19/2022 22:08	49.74	6/19/2022 20:50	80.87	6/18/2022 19:13	16.58	6/18/2022 18:22	3.82	6/18/2022 23:18	76.30
6/19/2022 22:09	49.70	6/19/2022 20:51	80.85	6/18/2022 19:14	16.52	6/18/2022 18:23	3.74	6/18/2022 23:19	76.21
6/19/2022 22:10	49.67	6/19/2022 20:52	80.89	6/18/2022 19:15	16.53	6/18/2022 18:24	3.79	6/18/2022 23:20	76.13
6/19/2022 22:11	49.72	6/19/2022 20:53	80.86	6/18/2022 19:16	16.55	6/18/2022 18:25	3.76	6/18/2022 23:21	76.03
6/19/2022 22:12	49.71	6/19/2022 20:54	80.88	6/18/2022 19:17	16.48	6/18/2022 18:26	3.81	6/18/2022 23:22	75.92
6/19/2022 22:13	49.71	6/19/2022 20:55	80.91	6/18/2022 19:18	16.55	6/18/2022 18:27	3.74	6/18/2022 23:23	75.86
6/19/2022 22:14	49.73	6/19/2022 20:56	80.87	6/18/2022 19:19	16.54	6/18/2022 18:28	3.74	6/18/2022 23:24	75.78
6/19/2022 22:15	49.74	6/19/2022 20:57	80.91	6/18/2022 19:20	16.55	6/18/2022 18:29	3.78	6/18/2022 23:25	75.70
6/19/2022 22:16	49.71	6/19/2022 20:58	80.88	6/18/2022 19:21	16.53	6/18/2022 18:30	3.73	6/18/2022 23:26	75.61
6/19/2022 22:17	49.73	6/19/2022 20:59	80.84	6/18/2022 19:22	16.49	6/18/2022 18:31	3.75	6/18/2022 23:27	75.54
6/19/2022 22:18	49.70	6/19/2022 21:00	80.89	6/18/2022 19:23	16.54	6/18/2022 18:32	3.72	6/18/2022 23:28	75.42
6/19/2022 22:19	49.68	6/19/2022 21:01	80.90	6/18/2022 19:24	16.52	6/18/2022 18:33	3.74	6/18/2022 23:29	75.37
6/19/2022 22:20	49.71	6/19/2022 21:02	80.88	6/18/2022 19:25	16.51	6/18/2022 18:34	3.72	6/18/2022 23:30	75.34
6/19/2022 22:21	49.70	6/19/2022 21:03	80.87	6/18/2022 19:26	16.57	6/18/2022 18:35	3.72	6/18/2022 23:31	75.26
6/19/2022 22:22	49.73	6/19/2022 21:04	80.83	6/18/2022 19:27	16.55	6/18/2022 18:36	3.70	6/18/2022 23:32	75.16
6/19/2022 22:23	49.71	6/19/2022 21:05	80.88	6/18/2022 19:28	16.53	6/18/2022 18:37	3.65	6/18/2022 23:33	75.12
6/19/2022 22:24	49.68	6/19/2022 21:06	80.86	6/18/2022 19:29	16.51	6/18/2022 18:38	3.71	6/18/2022 23:34	75.05
6/19/2022 22:25	49.71	6/19/2022 21:07	80.84	6/18/2022 19:30	16.53	6/18/2022 18:39	3.75	6/18/2022 23:35	74.91
6/19/2022 22:26	49.70	6/19/2022 21:08	80.86	6/18/2022 19:31	16.47	6/18/2022 18:40	3.68	6/18/2022 23:36	74.87
6/19/2022 22:27	49.71	6/19/2022 21:09	80.89	6/18/2022 19:32	16.48	6/18/2022 18:41	3.75	6/18/2022 23:37	74.83
6/19/2022 22:28	49.70	6/19/2022 21:10	80.87	6/18/2022 19:33	16.59	6/18/2022 18:42	3.69	6/18/2022 23:38	74.76
6/19/2022 22:29	49.72	6/19/2022 21:11	80.95	6/18/2022 19:34	16.52	6/18/2022 18:43	3.63	6/18/2022 23:39	74.70
6/19/2022 22:30	49.70	6/19/2022 21:12	80.87	6/18/2022 19:35	16.54	6/18/2022 18:44	3.65	6/18/2022 23:40	74.63
6/19/2022 22:31	49.69	6/19/2022 21:13	80.90	6/18/2022 19:36	16.52	6/18/2022 18:45	3.69	6/18/2022 23:41	74.56
6/19/2022 22:32	49.71	6/19/2022 21:14	80.87	6/18/2022 19:37	16.54	6/18/2022 18:46	3.73	6/18/2022 23:42	74.50
6/19/2022 22:33	49.70	6/19/2022 21:15	80.86	6/18/2022 19:38	16.52	6/18/2022 18:47	3.66	6/18/2022 23:43	74.43
6/19/2022 22:34	49.69	6/19/2022 21:16	80.89	6/18/2022 19:39	16.52	6/18/2022 18:48	3.61	6/18/2022 23:44	74.36
6/19/2022 22:35	49.69	6/19/2022 21:17	80.90	6/18/2022 19:40	16.46	6/18/2022 18:49	3.62	6/18/2022 23:45	74.30
6/19/2022 22:36	49.67	6/19/2022 21:18	80.87	6/18/2022 19:41	16.51	6/18/2022 18:50	3.68	6/18/2022 23:46	74.25
6/19/2022 22:37	49.70	6/19/2022 21:19	80.86	6/18/2022 19:42	16.52	6/18/2022 18:51	3.68	6/18/2022 23:47	74.16
6/19/2022 22:38	49.69	6/19/2022 21:20	80.89	6/18/2022 19:43	16.53	6/18/2022 18:52	3.60	6/18/2022 23:48	74.08
6/19/2022 22:39	49.70	6/19/2022 21:21	80.90	6/18/2022 19:44	16.50	6/18/2022 18:53	3.62	6/18/2022 23:49	74.04
6/19/2022 22:40	49.69	6/19/2022 21:22	80.92	6/18/2022 19:45	16.50	6/18/2022 18:54	3.64	6/18/2022 23:50	73.99
6/19/2022 22:41	49.67	6/19/2022 21:23	80.83	6/18/2022 19:46	16.48	6/18/2022 18:55	3.64	6/18/2022 23:51	73.93
6/19/2022 22:42	49.67	6/19/2022 21:24	80.90	6/18/2022 19:47	16.53	6/18/2022 18:56	3.69	6/18/2022 23:52	73.88
6/19/2022 22:43	49.70	6/19/2022 21:25	80.90	6/18/2022 19:48	16.52	6/18/2022 18:57	3.59	6/18/2022 23:53	73.80
6/19/2022 22:44	49.69	6/19/2022 21:26	80.88	6/18/2022 19:49	16.54	6/18/2022 18:58	3.61	6/18/2022 23:54	73.74
6/19/2022 22:45	49.68	6/19/2022 21:27	80.88	6/18/2022 19:50	16.55	6/18/2022 18:59	3.66	6/18/2022 23:55	73.69
6/19/2022 22:46	49.66	6/19/2022 21:28	80.89	6/18/2022 19:51	16.51	6/18/2022 19:00	3.64	6/18/2022 23:56	73.64
6/19/2022 22:47	49.67	6/19/2022 21:29	80.84	6/18/2022 19:52	16.51	6/18/2022 19:01	3.62	6/18/2022 23:57	73.57
6/19/2022 22:48	49.65	6/19/2022 21:30	80.85	6/18/2022 19:53	16.49	6/18/2022 19:02	3.66	6/18/2022 23:58	73.53
6/19/2022 22:49	49.69	6/19/2022 21:31	80.90	6/18/2022 19:54	16.51	6/18/2022 19:03	3.62	6/18/2022 23:59	73.46
6/19/2022 22:50	49.70	6/19/2022 21:32	80.92	6/18/2022 19:55	16.49	6/18/2022 19:04	3.65	6/19/2022 0:00	73.38
6/19/2022 22:51	49.66	6/19/2022 21:33	80.92	6/18/2022 19:56	16.54	6/18/2022 19:05	3.61	6/19/2022 0:01	73.37
6/19/2022 22:52	49.68	6/19/2022 21:34	80.89	6/18/2022 19:57	16.52	6/18/2022 19:06	3.64	6/19/2022 0:02	73.30
6/19/2022 22:53	49.65	6/19/2022 21:35	80.91	6/18/2022 19:58	16.52	6/18/2022 19:07	3.63	6/19/2022 0:03	73.24
6/19/2022 22:54	49.69	6/19/2022 21:36	80.86	6/18/2022 19:59	16.54	6/18/2022 19:08	3.61	6/19/2022 0:04	73.23
6/19/2022 22:55	49.69	6/19/2022 21:37	80.87	6/18/2022 20:00	16.49	6/18/2022 19:09	4.55	6/19/2022 0:05	73.13
6/19/2022 22:56	49.69	6/19/2022 21:38	80.89	6/18/2022 20:01	16.46	6/18/2022 19:10	5.01	6/19/2022 0:06	73.10
6/19/2022 22:57	49.68	6/19/2022 21:39	80.87	6/18/2022 20:02	16.51	6/18/2022 19:11	5.33	6/19/2022 0:07	73.03
6/19/2022 22:58	49.67	6/19/2022 21:40	80.86	6/18/2022 20:03	16.48	6/18/2022 19:12	5.69	6/19/2022 0:08	73.01
6/19/2022 22:59	49.67	6/19/2022 21:41	80.90	6/18/2022 20:04	16.55	6/18/2022 19:13	5.95	6/19/2022 0:09	72.93
6/19/2022 23:00	49.68	6/19/2022 21:42	80.87	6/18/2022 20:05	16.51	6/18/2022 19:14	6.15	6/19/2022 0:10	72.90
6/19/2022 23:01	49.65	6/19/2022 21:43	80.89	6/18/2022 20:06	16.52	6/18/2022 19:15	6.32	6/19/2022 0:11	72.87
6/19/2022 23:02	49.68	6/19/2022 21:44	80.93	6/18/2022 20:07	16.47	6/18/2022 19:16	6.48	6/19/2022 0:12	72.80
6/19/2022 23:03	49.69	6/19/2022 21:45	80.87	6/18/2022 20:08	16.49	6/18/2022 19:17	6.32	6/19/2022 0:13	72.76
6/19/2022 23:04	49.66	6/19/2022 21:46	80.87	6/18/2022 20:09	16.54	6/18/2022 19:18	5.48	6/19/2022 0:14	72.72
6/19/2022 23:05	49.69	6/19/2022 21:47	80.89	6/18/2022 20:10	16.48	6/18/2022 19:19	5.16	6/19/2022 0:15	72.66
6/19/2022 23:06	49.67	6/19/2022 21:48	80.90	6/18/2022 20:11	16.53	6/18/2022 19:20	4.87	6/19/2022 0:16	72.65
6/19/2022 23:07	49.67	6/19/2022 21:49	80.89	6/18/2022 20:12	16.52	6/18/2022 19:21	4.80	6/19/2022 0:17	72.59
6/19/2022 23:08	49.68	6/19/2022 21:50	80.92	6/18/2022 20:13	16.49	6/18/2022 19:22	4.61	6/19/2022 0:18	72.53
6/19/2022 23:09	49.66	6/19/2022 21:51	80.89	6/18/2022 20:14	16.50	6/18/2022 19:23	4.80	6/19/2022 0:19	72.48
6/19/2022 23:10	49.67	6/19/2022 21:52	80.92	6/18/2022 20:15	16.49	6/18/2022 19:24	4.79	6/19/2022 0:20	72.43
6/19/2022 23:11	49.63	6/19/2022 21:53	80.91	6/18/2022 20:16	16.46	6/18/2022 19:25	4.86	6/19/2022 0:21	72.38
6/19/2022 23:12	49.66	6/19/2022 21:54	80.89	6/18/2022 20:17	16.51	6/18/2022 19:26	4.83	6/19/2022 0:22	72.36
6/19/2022 23:13	49.65	6/19/2022 21:55	80.89	6/18/2022 20:18	16.55	6/18/2022 19:27	4.82	6/19/2022 0:23	72.31
6/19/2022 23:14	49.63	6/19/2022 21:56	80.88	6/18/2022 20:19	16.50	6/18/2022 19:28	4.65	6/19/2022 0:24	72.26
6/19/2022 23:15	49.63	6/19/2022 21:57	80.92	6/18/2022 20:20	16.46	6/18/2022 19:29	4.64	6/19/2022 0:25	72.22
6/19/2022 23:16	49.62	6/19/2022 21:58	80.91	6/18/2022 20:21	16.50	6/18/2022 19:30	4.51	6/19/2022 0:26	72.19
6/19/2022 23:17	49.65	6/19/2022 21:59	80.88	6/18/2022 20:22	16.48	6/18/2022 19:31	4.50	6/19/2022 0:27	72.12
6/19/2022 23:18	49.69	6/19/2022 22:00	80.89	6/18/2022 20:23	16.52	6/18/2022 19:32	4.44	6/19/2022 0:28	72.08
6/19/2022 23:19	49.66	6/19/2022 22:01	80.88	6/18/2022 20:24	16.50	6/18/2022 19:33	4.44	6/19/2022 0:29	72.04
6/19/2022 23:20	49.67	6/19/2022 22:02	80.87	6/18/2022 20:25	16.47	6/18/2022 19:34	4.64	6/19/2022 0:30	71.97
6/19/2022 23:21	49.65	6/19/2022 22:03	80.89	6/18/2022 20:26	16.50	6/18/2022 19:35	4.65	6/19/2022 0:31	71.99
6/19/2022 23:22	49.68	6/19/2022 22:04	80.91	6/18/2022 20:27	16.49	6/18/2022 19:36	4.72	6/19/2022 0:32	71.96
6/19/2022 23:23	49.64	6/19/2022 22:05	80.88	6/18/2022 20:28	16.49	6/18/2022 19:37	4.73	6/19/2022 0:33	71.87
6/19/2022 23:24	49.64	6/19/2022 22:06	80.88	6/18/2022 20:29	16.47	6/18/2022 19:38	4.78	6/19/2022 0:34	71.85

6/19/2022 23:25	49.63	6/19/2022 22:07	80.90	6/18/2022 20:30	16.46	6/18/2022 19:39	4.61	6/19/2022 0:35	71.80
6/19/2022 23:26	49.64	6/19/2022 22:08	80.91	6/18/2022 20:31	16.50	6/18/2022 19:40	4.60	6/19/2022 0:36	71.79
6/19/2022 23:27	49.62	6/19/2022 22:09	80.90	6/18/2022 20:32	16.50	6/18/2022 19:41	4.44	6/19/2022 0:37	71.74
6/19/2022 23:28	49.66	6/19/2022 22:10	80.91	6/18/2022 20:33	16.48	6/18/2022 19:42	4.66	6/19/2022 0:38	71.67
6/19/2022 23:29	49.63	6/19/2022 22:11	80.91	6/18/2022 20:34	16.50	6/18/2022 19:43	5.19	6/19/2022 0:39	71.69
6/19/2022 23:30	49.62	6/19/2022 22:12	80.89	6/18/2022 20:35	16.50	6/18/2022 19:44	4.70	6/19/2022 0:40	71.63
6/19/2022 23:31	49.64	6/19/2022 22:13	80.90	6/18/2022 20:36	16.46	6/18/2022 19:45	4.57	6/19/2022 0:41	71.58
6/19/2022 23:32	49.62	6/19/2022 22:14	80.90	6/18/2022 20:37	16.48	6/18/2022 19:46	4.48	6/19/2022 0:42	71.55
6/19/2022 23:33	49.61	6/19/2022 22:15	80.92	6/18/2022 20:38	16.44	6/18/2022 19:47	4.67	6/19/2022 0:43	71.50
6/19/2022 23:34	49.62	6/19/2022 22:16	80.91	6/18/2022 20:39	16.48	6/18/2022 19:48	4.69	6/19/2022 0:44	71.47
6/19/2022 23:35	49.63	6/19/2022 22:17	80.93	6/18/2022 20:40	16.46	6/18/2022 19:49	4.71	6/19/2022 0:45	71.45
6/19/2022 23:36	49.61	6/19/2022 22:18	80.89	6/18/2022 20:41	16.46	6/18/2022 19:50	4.50	6/19/2022 0:46	71.44
6/19/2022 23:37	49.64	6/19/2022 22:19	80.91	6/18/2022 20:42	16.44	6/18/2022 19:51	4.50	6/19/2022 0:47	71.37
6/19/2022 23:38	49.64	6/19/2022 22:20	80.91	6/18/2022 20:43	16.44	6/18/2022 19:52	4.47	6/19/2022 0:48	71.32
6/19/2022 23:39	49.66	6/19/2022 22:21	80.89	6/18/2022 20:44	16.46	6/18/2022 19:53	4.37	6/19/2022 0:49	71.30
6/19/2022 23:40	49.63	6/19/2022 22:22	80.89	6/18/2022 20:45	16.51	6/18/2022 19:54	4.38	6/19/2022 0:50	71.28
6/19/2022 23:41	49.61	6/19/2022 22:23	80.92	6/18/2022 20:46	16.43	6/18/2022 19:55	4.39	6/19/2022 0:51	71.23
6/19/2022 23:42	49.64	6/19/2022 22:24	80.89	6/18/2022 20:47	16.45	6/18/2022 19:56	4.31	6/19/2022 0:52	71.21
6/19/2022 23:43	49.62	6/19/2022 22:25	80.88	6/18/2022 20:48	16.49	6/18/2022 19:57	4.32	6/19/2022 0:53	71.14
6/19/2022 23:44	49.67	6/19/2022 22:26	80.88	6/18/2022 20:49	16.48	6/18/2022 19:58	4.30	6/19/2022 0:54	71.15
6/19/2022 23:45	49.65	6/19/2022 22:27	80.91	6/18/2022 20:50	16.48	6/18/2022 19:59	4.30	6/19/2022 0:55	71.12
6/19/2022 23:46	49.62	6/19/2022 22:28	80.90	6/18/2022 20:51	16.45	6/18/2022 20:00	4.24	6/19/2022 0:56	71.08
6/19/2022 23:47	49.64	6/19/2022 22:29	80.90	6/18/2022 20:52	16.46	6/18/2022 20:01	4.25	6/19/2022 0:57	71.05
6/19/2022 23:48	49.62	6/19/2022 22:30	80.92	6/18/2022 20:53	16.42	6/18/2022 20:02	4.23	6/19/2022 0:58	71.01
6/19/2022 23:49	49.60	6/19/2022 22:31	80.87	6/18/2022 20:54	16.44	6/18/2022 20:03	4.23	6/19/2022 0:59	71.01
6/19/2022 23:50	49.65	6/19/2022 22:32	80.91	6/18/2022 20:55	16.45	6/18/2022 20:04	4.22	6/19/2022 1:00	70.92
6/19/2022 23:51	49.64	6/19/2022 22:33	80.90	6/18/2022 20:56	16.48	6/18/2022 20:05	4.36	6/19/2022 1:01	70.90
6/19/2022 23:52	49.63	6/19/2022 22:34	80.90	6/18/2022 20:57	16.46	6/18/2022 20:06	4.46	6/19/2022 1:02	70.91
6/19/2022 23:53	49.65	6/19/2022 22:35	80.89	6/18/2022 20:58	16.52	6/18/2022 20:07	4.40	6/19/2022 1:03	70.86
6/19/2022 23:54	49.63	6/19/2022 22:36	80.90	6/18/2022 20:59	16.42	6/18/2022 20:08	4.22	6/19/2022 1:04	70.83
6/19/2022 23:55	49.60	6/19/2022 22:37	80.95	6/18/2022 21:00	16.44	6/18/2022 20:09	4.24	6/19/2022 1:05	70.79
6/19/2022 23:56	49.64	6/19/2022 22:38	80.91	6/18/2022 21:01	16.46	6/18/2022 20:10	4.27	6/19/2022 1:06	70.78
6/19/2022 23:57	49.61	6/19/2022 22:39	80.92	6/18/2022 21:02	16.49	6/18/2022 20:11	4.19	6/19/2022 1:07	70.72
6/19/2022 23:58	49.63	6/19/2022 22:40	80.91	6/18/2022 21:03	16.46	6/18/2022 20:12	4.33	6/19/2022 1:08	70.74
6/19/2022 23:59	49.56	6/19/2022 22:41	80.89	6/18/2022 21:04	16.47	6/18/2022 20:13	4.21	6/19/2022 1:09	70.71
6/20/2022 0:00	49.62	6/19/2022 22:42	80.89	6/18/2022 21:05	16.46	6/18/2022 20:14	4.20	6/19/2022 1:10	70.67
6/20/2022 0:01	49.62	6/19/2022 22:43	80.89	6/18/2022 21:06	16.47	6/18/2022 20:15	4.24	6/19/2022 1:11	70.62
6/20/2022 0:02	49.66	6/19/2022 22:44	80.90	6/18/2022 21:07	16.48	6/18/2022 20:16	4.27	6/19/2022 1:12	70.60
6/20/2022 0:03	49.61	6/19/2022 22:45	80.87	6/18/2022 21:08	16.43	6/18/2022 20:17	4.24	6/19/2022 1:13	70.56
6/20/2022 0:04	49.62	6/19/2022 22:46	80.88	6/18/2022 21:09	16.45	6/18/2022 20:18	4.33	6/19/2022 1:14	70.56
6/20/2022 0:05	49.63	6/19/2022 22:47	80.92	6/18/2022 21:10	16.47	6/18/2022 20:19	4.44	6/19/2022 1:15	70.50
6/20/2022 0:06	49.60	6/19/2022 22:48	80.90	6/18/2022 21:11	16.45	6/18/2022 20:20	4.43	6/19/2022 1:16	70.48
6/20/2022 0:07	49.61	6/19/2022 22:49	80.92	6/18/2022 21:12	16.47	6/18/2022 20:21	4.53	6/19/2022 1:17	70.45
6/20/2022 0:08	49.62	6/19/2022 22:50	80.91	6/18/2022 21:13	16.44	6/18/2022 20:22	4.33	6/19/2022 1:18	70.41
6/20/2022 0:09	49.62	6/19/2022 22:51	80.93	6/18/2022 21:14	16.45	6/18/2022 20:23	4.38	6/19/2022 1:19	70.37
6/20/2022 0:10	49.59	6/19/2022 22:52	80.89	6/18/2022 21:15	16.43	6/18/2022 20:24	4.43	6/19/2022 1:20	70.41
6/20/2022 0:11	49.65	6/19/2022 22:53	80.89	6/18/2022 21:16	16.45	6/18/2022 20:25	4.28	6/19/2022 1:21	70.32
6/20/2022 0:12	49.65	6/19/2022 22:54	80.89	6/18/2022 21:17	16.44	6/18/2022 20:26	4.25	6/19/2022 1:22	70.30
6/20/2022 0:13	49.63	6/19/2022 22:55	80.87	6/18/2022 21:18	16.46	6/18/2022 20:27	4.23	6/19/2022 1:23	70.27
6/20/2022 0:14	49.64	6/19/2022 22:56	80.93	6/18/2022 21:19	16.42	6/18/2022 20:28	4.20	6/19/2022 1:24	70.27
6/20/2022 0:15	49.63	6/19/2022 22:57	80.93	6/18/2022 21:20	16.43	6/18/2022 20:29	4.16	6/19/2022 1:25	70.22
6/20/2022 0:16	49.60	6/19/2022 22:58	80.93	6/18/2022 21:21	16.41	6/18/2022 20:30	4.11	6/19/2022 1:26	70.22
6/20/2022 0:17	49.60	6/19/2022 22:59	80.94	6/18/2022 21:22	16.46	6/18/2022 20:31	4.05	6/19/2022 1:27	70.22
6/20/2022 0:18	49.61	6/19/2022 23:00	80.94	6/18/2022 21:23	16.44	6/18/2022 20:32	4.18	6/19/2022 1:28	70.17
6/20/2022 0:19	49.61	6/19/2022 23:01	80.89	6/18/2022 21:24	16.42	6/18/2022 20:33	4.04	6/19/2022 1:29	70.15
6/20/2022 0:20	49.62	6/19/2022 23:02	80.92	6/18/2022 21:25	16.43	6/18/2022 20:34	4.06	6/19/2022 1:30	70.11
6/20/2022 0:21	49.60	6/19/2022 23:03	80.91	6/18/2022 21:26	16.44	6/18/2022 20:35	4.10	6/19/2022 1:31	70.10
6/20/2022 0:22	49.62	6/19/2022 23:04	80.87	6/18/2022 21:27	16.46	6/18/2022 20:36	4.12	6/19/2022 1:32	70.09
6/20/2022 0:23	49.64	6/19/2022 23:05	80.90	6/18/2022 21:28	16.44	6/18/2022 20:37	4.04	6/19/2022 1:33	70.03
6/20/2022 0:24	49.58	6/19/2022 23:06	80.92	6/18/2022 21:29	16.46	6/18/2022 20:38	4.04	6/19/2022 1:34	70.02
6/20/2022 0:25	49.61	6/19/2022 23:07	80.92	6/18/2022 21:30	16.42	6/18/2022 20:39	4.05	6/19/2022 1:35	70.00
6/20/2022 0:26	49.60	6/19/2022 23:08	80.91	6/18/2022 21:31	16.46	6/18/2022 20:40	4.04	6/19/2022 1:36	70.01
6/20/2022 0:27	49.60	6/19/2022 23:09	80.95	6/18/2022 21:32	16.45	6/18/2022 20:41	4.02	6/19/2022 1:37	69.98
6/20/2022 0:28	49.60	6/19/2022 23:10	80.92	6/18/2022 21:33	16.44	6/18/2022 20:42	3.93	6/19/2022 1:38	69.94
6/20/2022 0:29	49.58	6/19/2022 23:11	80.91	6/18/2022 21:34	16.44	6/18/2022 20:43	4.01	6/19/2022 1:39	69.96
6/20/2022 0:30	49.60	6/19/2022 23:12	80.92	6/18/2022 21:35	21.50	6/18/2022 20:44	4.02	6/19/2022 1:40	69.90
6/20/2022 0:31	49.62	6/19/2022 23:13	80.89	6/18/2022 21:36	25.00	6/18/2022 20:45	3.92	6/19/2022 1:41	69.90
6/20/2022 0:32	49.59	6/19/2022 23:14	80.93	6/18/2022 21:37	23.84	6/18/2022 20:46	3.92	6/19/2022 1:42	69.87
6/20/2022 0:33	49.61	6/19/2022 23:15	80.92	6/18/2022 21:38	21.80	6/18/2022 20:47	3.92	6/19/2022 1:43	69.86
6/20/2022 0:34	49.61	6/19/2022 23:16	80.89	6/18/2022 21:39	20.70	6/18/2022 20:48	4.00	6/19/2022 1:44	69.81
6/20/2022 0:35	49.60	6/19/2022 23:17	80.92	6/18/2022 21:40	19.96	6/18/2022 20:49	3.92	6/19/2022 1:45	69.80
6/20/2022 0:36	49.58	6/19/2022 23:18	81.36	6/18/2022 21:41	19.49	6/18/2022 20:50	3.95	6/19/2022 1:46	69.80
6/20/2022 0:37	49.60	6/19/2022 23:19	81.27	6/18/2022 21:42	19.14	6/18/2022 20:51	3.93	6/19/2022 1:47	69.78
6/20/2022 0:38	49.59	6/19/2022 23:20	81.17	6/18/2022 21:43	18.93	6/18/2022 20:52	3.98	6/19/2022 1:48	69.72
6/20/2022 0:39	49.60	6/19/2022 23:21	81.17	6/18/2022 21:44	18.78	6/18/2022 20:53	3.88	6/19/2022 1:49	69.75
6/20/2022 0:40	49.58	6/19/2022 23:22	81.10	6/18/2022 21:45	18.59	6/18/2022 20:54	3.92	6/19/2022 1:50	69.73
6/20/2022 0:41	49.57	6/19/2022 23:23	81.12	6/18/2022 21:46	18.42	6/18/2022 20:55	3.92	6/19/2022 1:51	69.72
6/20/2022 0:42	49.58	6/19/2022 23:24	81.03	6/18/2022 21:47	18.30	6/18/2022 20:56	3.93	6/19/2022 1:52	69.68
6/20/2022 0:43	49.56	6/19/2022 23:25	81.05	6/18/2022 21:48	18.27	6/18/2022 20:57	3.89	6/19/2022 1:53	69.67
6/20/2022 0:44	49.59	6/19/2022 23:26	81.12	6/18/2022 21:49	18.15	6/18/2022 20:58	3.89	6/19/2022 1:54	69.59
6/20/2022 0:45	49.56	6/19/2022 23:27	81.09	6/18/2022 21:50	18.03	6/18/2022 20:59	3.89	6/19/2022 1:55	69.65
6/20/2022 0:46	49.57	6/19/2022 23:28	81.01	6/18/2022 21:51	18.00	6/18/2022 21:00	3.86	6/19/2022 1:56	69.63
6/20/2022 0:47	49.55	6/19/2022 23:29	80.98	6/18/2022 21:52	17.89	6/18/2022 21:01	3.84	6/19/2022 1:57	69.60
6/20/2022 0:48	49.55	6/19/2022 23:30	81.01	6/18/2022 21:53	17.86	6/18/2022 21:02	3.89	6/19/2022 1:58	69.55
6/20/2022 0:49	49.56	6/19/2022 23:31	80.96	6/18/2022 21:54	17.77	6/18/2022 21:03	3.90	6/19/2022 1:59	69.56
6/20/2022 0:50	49.56	6/19/2022 23:32	80.99	6/18/2022 21:55	17.77	6/18/2022 21:04	3.85	6/19/2022 2:00	70.70
6/20/2022 0:51	49.57	6/19/2022 23:33	80.97	6/18/2022 21:56	17.67	6/18/2022 21:05	3.85	6/19/2022 2:01	78.31
6/20/2022 0:52	49.58	6/19/2022 23:34	80.94	6/18/2022 21:57	17.64	6/18/2022 21:06	3.86	6/19/2022 2:02	84.00

6/20/2022 0:53	49.54	6/19/2022 23:35	81.01	6/18/2022 21:58	17.59	6/18/2022 21:07	3.86	6/19/2022 2:03	83.84
6/20/2022 0:54	49.55	6/19/2022 23:36	81.02	6/18/2022 21:59	17.56	6/18/2022 21:08	3.83	6/19/2022 2:04	91.05
6/20/2022 0:55	49.55	6/19/2022 23:37	80.93	6/18/2022 22:00	17.49	6/18/2022 21:09	3.83	6/19/2022 2:05	97.47
6/20/2022 0:56	49.58	6/19/2022 23:38	80.94	6/18/2022 22:01	17.51	6/18/2022 21:10	3.83	6/19/2022 2:06	97.50
6/20/2022 0:57	49.58	6/19/2022 23:39	80.95	6/18/2022 22:02	17.50	6/18/2022 21:11	3.85	6/19/2022 2:07	102.98
6/20/2022 0:58	49.57	6/19/2022 23:40	80.97	6/18/2022 22:03	17.45	6/18/2022 21:12	3.77	6/19/2022 2:08	109.52
6/20/2022 0:59	49.56	6/19/2022 23:41	80.96	6/18/2022 22:04	17.40	6/18/2022 21:13	3.82	6/19/2022 2:09	112.48
6/20/2022 1:00	49.59	6/19/2022 23:42	80.91	6/18/2022 22:05	17.36	6/18/2022 21:14	3.84	6/19/2022 2:10	114.35
6/20/2022 1:01	49.55	6/19/2022 23:43	80.95	6/18/2022 22:06	17.35	6/18/2022 21:15	3.88	6/19/2022 2:11	120.86
6/20/2022 1:02	49.55	6/19/2022 23:44	80.94	6/18/2022 22:07	17.36	6/18/2022 21:16	3.79	6/19/2022 2:12	126.98
6/20/2022 1:03	49.58	6/19/2022 23:45	80.98	6/18/2022 22:08	17.33	6/18/2022 21:17	3.81	6/19/2022 2:13	127.98
6/20/2022 1:04	49.58	6/19/2022 23:46	80.94	6/18/2022 22:09	17.30	6/18/2022 21:18	3.80	6/19/2022 2:14	131.48
6/20/2022 1:05	49.58	6/19/2022 23:47	80.97	6/18/2022 22:10	17.30	6/18/2022 21:19	3.89	6/19/2022 2:15	137.65
6/20/2022 1:06	49.55	6/19/2022 23:48	80.96	6/18/2022 22:11	17.24	6/18/2022 21:20	3.76	6/19/2022 2:16	143.49
6/20/2022 1:07	49.58	6/19/2022 23:49	80.94	6/18/2022 22:12	17.23	6/18/2022 21:21	3.77	6/19/2022 2:17	145.34
6/20/2022 1:08	49.55	6/19/2022 23:50	80.94	6/18/2022 22:13	17.22	6/18/2022 21:22	3.80	6/19/2022 2:18	145.31
6/20/2022 1:09	49.53	6/19/2022 23:51	80.96	6/18/2022 22:14	17.19	6/18/2022 21:23	3.81	6/19/2022 2:19	145.33
6/20/2022 1:10	49.55	6/19/2022 23:52	80.98	6/18/2022 22:15	17.20	6/18/2022 21:24	3.74	6/19/2022 2:20	145.31
6/20/2022 1:11	49.55	6/19/2022 23:53	80.93	6/18/2022 22:16	17.19	6/18/2022 21:25	3.78	6/19/2022 2:21	145.32
6/20/2022 1:12	49.57	6/19/2022 23:54	80.97	6/18/2022 22:17	17.17	6/18/2022 21:26	3.82	6/19/2022 2:22	145.34
6/20/2022 1:13	49.52	6/19/2022 23:55	80.97	6/18/2022 22:18	17.15	6/18/2022 21:27	3.72	6/19/2022 2:23	145.33
6/20/2022 1:14	49.55	6/19/2022 23:56	80.92	6/18/2022 22:19	17.10	6/18/2022 21:28	3.74	6/19/2022 2:24	145.35
6/20/2022 1:15	49.54	6/19/2022 23:57	80.95	6/18/2022 22:20	17.12	6/18/2022 21:29	3.76	6/19/2022 2:25	145.33
6/20/2022 1:16	49.55	6/19/2022 23:58	80.90	6/18/2022 22:21	17.07	6/18/2022 21:30	3.78	6/19/2022 2:26	145.33
6/20/2022 1:17	49.58	6/19/2022 23:59	80.89	6/18/2022 22:22	17.06	6/18/2022 21:31	3.71	6/19/2022 2:27	145.32
6/20/2022 1:18	49.55	6/20/2022 0:00	80.95	6/18/2022 22:23	22.89	6/18/2022 21:32	3.73	6/19/2022 2:28	145.32
6/20/2022 1:19	49.55	6/20/2022 0:01	80.96	6/18/2022 22:24	26.27	6/18/2022 21:33	3.75	6/19/2022 2:29	145.34
6/20/2022 1:20	49.53	6/20/2022 0:02	80.91	6/18/2022 22:25	28.55	6/18/2022 21:34	3.76	6/19/2022 2:30	145.31
6/20/2022 1:21	49.54	6/20/2022 0:03	80.93	6/18/2022 22:26	26.46	6/18/2022 21:35	3.73	6/19/2022 2:31	145.29
6/20/2022 1:22	49.54	6/20/2022 0:04	80.98	6/18/2022 22:27	24.02	6/18/2022 21:36	3.74	6/19/2022 2:32	145.37
6/20/2022 1:23	49.54	6/20/2022 0:05	80.93	6/18/2022 22:28	22.68	6/18/2022 21:37	3.74	6/19/2022 2:33	145.34
6/20/2022 1:24	49.56	6/20/2022 0:06	80.97	6/18/2022 22:29	21.75	6/18/2022 21:38	3.73	6/19/2022 2:34	145.36
6/20/2022 1:25	49.54	6/20/2022 0:07	80.97	6/18/2022 22:30	21.12	6/18/2022 21:39	3.70	6/19/2022 2:35	145.31
6/20/2022 1:26	49.53	6/20/2022 0:08	80.92	6/18/2022 22:31	20.70	6/18/2022 21:40	3.72	6/19/2022 2:36	145.34
6/20/2022 1:27	49.54	6/20/2022 0:09	80.89	6/18/2022 22:32	20.33	6/18/2022 21:41	3.72	6/19/2022 2:37	145.33
6/20/2022 1:28	49.52	6/20/2022 0:10	80.93	6/18/2022 22:33	20.08	6/18/2022 21:42	3.76	6/19/2022 2:38	145.36
6/20/2022 1:29	49.52	6/20/2022 0:11	80.96	6/18/2022 22:34	22.64	6/18/2022 21:43	3.66	6/19/2022 2:39	145.35
6/20/2022 1:30	49.89	6/20/2022 0:12	80.93	6/18/2022 22:35	26.99	6/18/2022 21:44	3.74	6/19/2022 2:40	145.35
6/20/2022 1:31	52.64	6/20/2022 0:13	80.97	6/18/2022 22:36	29.61	6/18/2022 21:45	3.68	6/19/2022 2:41	145.35
6/20/2022 1:32	53.83	6/20/2022 0:14	80.94	6/18/2022 22:37	30.18	6/18/2022 21:46	3.74	6/19/2022 2:42	145.36
6/20/2022 1:33	54.51	6/20/2022 0:15	80.94	6/18/2022 22:38	26.83	6/18/2022 21:47	3.69	6/19/2022 2:43	145.33
6/20/2022 1:34	53.33	6/20/2022 0:16	80.93	6/18/2022 22:39	24.94	6/18/2022 21:48	3.73	6/19/2022 2:44	145.36
6/20/2022 1:35	51.81	6/20/2022 0:17	80.94	6/18/2022 22:40	23.80	6/18/2022 21:49	3.70	6/19/2022 2:45	145.34
6/20/2022 1:36	51.26	6/20/2022 0:18	80.92	6/18/2022 22:41	22.90	6/18/2022 21:50	3.75	6/19/2022 2:46	145.33
6/20/2022 1:37	50.94	6/20/2022 0:19	80.93	6/18/2022 22:42	22.41	6/18/2022 21:51	3.68	6/19/2022 2:47	145.34
6/20/2022 1:38	50.76	6/20/2022 0:20	80.95	6/18/2022 22:43	21.90	6/18/2022 21:52	3.67	6/19/2022 2:48	145.32
6/20/2022 1:39	50.60	6/20/2022 0:21	80.93	6/18/2022 22:44	21.54	6/18/2022 21:53	3.72	6/19/2022 2:49	145.32
6/20/2022 1:40	50.49	6/20/2022 0:22	80.95	6/18/2022 22:45	23.03	6/18/2022 21:54	3.68	6/19/2022 2:50	145.33
6/20/2022 1:41	50.41	6/20/2022 0:23	80.92	6/18/2022 22:46	27.75	6/18/2022 21:55	3.67	6/19/2022 2:51	145.31
6/20/2022 1:42	50.39	6/20/2022 0:24	80.93	6/18/2022 22:47	30.58	6/18/2022 21:56	3.66	6/19/2022 2:52	145.35
6/20/2022 1:43	50.32	6/20/2022 0:25	80.97	6/18/2022 22:48	32.33	6/18/2022 21:57	3.71	6/19/2022 2:53	145.33
6/20/2022 1:44	50.30	6/20/2022 0:26	80.95	6/18/2022 22:49	28.43	6/18/2022 21:58	3.68	6/19/2022 2:54	145.33
6/20/2022 1:45	50.26	6/20/2022 0:27	80.95	6/18/2022 22:50	26.34	6/18/2022 21:59	3.69	6/19/2022 2:55	145.34
6/20/2022 1:46	50.23	6/20/2022 0:28	80.95	6/18/2022 22:51	25.03	6/18/2022 22:00	3.63	6/19/2022 2:56	145.34
6/20/2022 1:47	50.16	6/20/2022 0:29	80.95	6/18/2022 22:52	24.20	6/18/2022 22:01	3.71	6/19/2022 2:57	145.32
6/20/2022 1:48	50.18	6/20/2022 0:30	80.94	6/18/2022 22:53	23.51	6/18/2022 22:02	3.64	6/19/2022 2:58	145.31
6/20/2022 1:49	50.15	6/20/2022 0:31	80.95	6/18/2022 22:54	23.00	6/18/2022 22:03	3.66	6/19/2022 2:59	145.32
6/20/2022 1:50	50.14	6/20/2022 0:32	80.96	6/18/2022 22:55	22.58	6/18/2022 22:04	3.65	6/19/2022 3:00	145.33
6/20/2022 1:51	50.14	6/20/2022 0:33	80.91	6/18/2022 22:56	24.37	6/18/2022 22:05	3.69	6/19/2022 3:01	145.32
6/20/2022 1:52	50.09	6/20/2022 0:34	80.94	6/18/2022 22:57	28.94	6/18/2022 22:06	3.62	6/19/2022 3:02	145.34
6/20/2022 1:53	50.09	6/20/2022 0:35	80.94	6/18/2022 22:58	31.68	6/18/2022 22:07	3.60	6/19/2022 3:03	145.32
6/20/2022 1:54	50.07	6/20/2022 0:36	80.93	6/18/2022 22:59	32.98	6/18/2022 22:08	3.65	6/19/2022 3:04	145.35
6/20/2022 1:55	50.05	6/20/2022 0:37	80.91	6/18/2022 23:00	29.21	6/18/2022 22:09	3.68	6/19/2022 3:05	145.33
6/20/2022 1:56	50.03	6/20/2022 0:38	80.91	6/18/2022 23:01	27.21	6/18/2022 22:10	3.65	6/19/2022 3:06	145.32
6/20/2022 1:57	50.04	6/20/2022 0:39	80.92	6/18/2022 23:02	25.86	6/18/2022 22:11	3.85	6/19/2022 3:07	145.31
6/20/2022 1:58	50.02	6/20/2022 0:40	80.91	6/18/2022 23:03	25.01	6/18/2022 22:12	4.49	6/19/2022 3:08	145.39
6/20/2022 1:59	50.00	6/20/2022 0:41	80.91	6/18/2022 23:04	24.31	6/18/2022 22:13	5.02	6/19/2022 3:09	145.33
6/20/2022 2:00	49.97	6/20/2022 0:42	80.93	6/18/2022 23:05	23.73	6/18/2022 22:14	5.39	6/19/2022 3:10	145.34
6/20/2022 2:01	50.00	6/20/2022 0:43	80.99	6/18/2022 23:06	23.31	6/18/2022 22:15	5.47	6/19/2022 3:11	145.33
6/20/2022 2:02	49.95	6/20/2022 0:44	80.92	6/18/2022 23:07	22.98	6/18/2022 22:16	5.65	6/19/2022 3:12	145.35
6/20/2022 2:03	49.96	6/20/2022 0:45	80.91	6/18/2022 23:08	22.71	6/18/2022 22:17	5.79	6/19/2022 3:13	145.37
6/20/2022 2:04	49.98	6/20/2022 0:46	80.90	6/18/2022 23:09	22.49	6/18/2022 22:18	5.87	6/19/2022 3:14	145.35
6/20/2022 2:05	49.95	6/20/2022 0:47	80.94	6/18/2022 23:10	22.19	6/18/2022 22:19	5.94	6/19/2022 3:15	145.35
6/20/2022 2:06	49.94	6/20/2022 0:48	80.94	6/18/2022 23:11	21.98	6/18/2022 22:20	6.18	6/19/2022 3:16	145.34
6/20/2022 2:07	49.96	6/20/2022 0:49	80.88	6/18/2022 23:12	21.79	6/18/2022 22:21	6.24	6/19/2022 3:17	145.32
6/20/2022 2:08	49.92	6/20/2022 0:50	80.93	6/18/2022 23:13	21.66	6/18/2022 22:22	5.87	6/19/2022 3:18	145.32
6/20/2022 2:09	49.91	6/20/2022 0:51	80.94	6/18/2022 23:14	21.51	6/18/2022 22:23	5.31	6/19/2022 3:19	145.36
6/20/2022 2:10	49.94	6/20/2022 0:52	80.90	6/18/2022 23:15	21.33	6/18/2022 22:24	5.12	6/19/2022 3:20	145.36
6/20/2022 2:11	49.89	6/20/2022 0:53	80.93	6/18/2022 23:16	21.23	6/18/2022 22:25	4.86	6/19/2022 3:21	145.38
6/20/2022 2:12	49.93	6/20/2022 0:54	80.90	6/18/2022 23:17	21.08	6/18/2022 22:26	4.74	6/19/2022 3:22	145.36
6/20/2022 2:13	49.92	6/20/2022 0:55	80.94	6/18/2022 23:18	21.00	6/18/2022 22:27	4.61	6/19/2022 3:23	145.40
6/20/2022 2:14	49.89	6/20/2022 0:56	80.97	6/18/2022 23:19	20.86	6/18/2022 22:28	4.84	6/19/2022 3:24	145.38
6/20/2022 2:15	49.89	6/20/2022 0:57	80.93	6/18/2022 23:20	20.77	6/18/2022 22:29	4.75	6/19/2022 3:25	145.39
6/20/2022 2:16	49.86	6/20/2022 0:58	80.88	6/18/2022 23:21	20.68	6/18/2022 22:30	4.68	6/19/2022 3:26	145.37
6/20/2022 2:17	49.87	6/20/2022 0:59	80.92	6/18/2022 23:22	20.55	6/18/2022 22:31	4.71	6/19/2022 3:27	145.37
6/20/2022 2:18	49.85	6/20/2022 1:00	80.93	6/18/2022 23:23	20.44	6/18/2022 22:32	4.57	6/19/2022 3:28	145.38
6/20/2022 2:19	49.87	6/20/2022 1:01	80.92	6/18/2022 23:24	20.40	6/18/2022 22:33	4.55	6/19/2022 3:29	145.36
6/20/2022 2:20	49.86	6/20/2022 1:02	80.92	6/18/2022 23:25	20.34	6/18/2022 22:34	4.49	6/19/2022 3:30	145.40

6/20/2022 2:21	49.86	6/20/2022 1:03	80.92	6/18/2022 23:26	20.23	6/18/2022 22:35	4.42	6/19/2022 3:31	145.34
6/20/2022 2:22	49.81	6/20/2022 1:04	80.89	6/18/2022 23:27	20.19	6/18/2022 22:36	4.45	6/19/2022 3:32	145.38
6/20/2022 2:23	49.86	6/20/2022 1:05	80.96	6/18/2022 23:28	20.05	6/18/2022 22:37	4.37	6/19/2022 3:33	145.42
6/20/2022 2:24	49.82	6/20/2022 1:06	80.95	6/18/2022 23:29	20.03	6/18/2022 22:38	4.34	6/19/2022 3:34	145.39
6/20/2022 2:25	49.83	6/20/2022 1:07	80.90	6/18/2022 23:30	19.95	6/18/2022 22:39	4.34	6/19/2022 3:35	145.39
6/20/2022 2:26	49.83	6/20/2022 1:08	80.99	6/18/2022 23:31	19.90	6/18/2022 22:40	4.35	6/19/2022 3:36	145.37
6/20/2022 2:27	49.81	6/20/2022 1:09	80.97	6/18/2022 23:32	19.85	6/18/2022 22:41	4.38	6/19/2022 3:37	145.38
6/20/2022 2:28	49.78	6/20/2022 1:10	80.93	6/18/2022 23:33	19.77	6/18/2022 22:42	4.29	6/19/2022 3:38	145.34
6/20/2022 2:29	49.83	6/20/2022 1:11	80.89	6/18/2022 23:34	19.69	6/18/2022 22:43	4.33	6/19/2022 3:39	145.35
6/20/2022 2:30	49.83	6/20/2022 1:12	80.92	6/18/2022 23:35	19.65	6/18/2022 22:44	4.29	6/19/2022 3:40	145.35
6/20/2022 2:31	49.79	6/20/2022 1:13	80.94	6/18/2022 23:36	19.64	6/18/2022 22:45	4.32	6/19/2022 3:41	145.36
6/20/2022 2:32	49.81	6/20/2022 1:14	80.94	6/18/2022 23:37	19.59	6/18/2022 22:46	4.24	6/19/2022 3:42	145.36
6/20/2022 2:33	49.79	6/20/2022 1:15	80.97	6/18/2022 23:38	19.50	6/18/2022 22:47	4.21	6/19/2022 3:43	145.35
6/20/2022 2:34	49.78	6/20/2022 1:16	80.94	6/18/2022 23:39	19.46	6/18/2022 22:48	4.26	6/19/2022 3:44	145.34
6/20/2022 2:35	49.81	6/20/2022 1:17	80.93	6/18/2022 23:40	19.45	6/18/2022 22:49	4.25	6/19/2022 3:45	145.36
6/20/2022 2:36	49.78	6/20/2022 1:18	80.93	6/18/2022 23:41	19.38	6/18/2022 22:50	4.19	6/19/2022 3:46	145.34
6/20/2022 2:37	49.80	6/20/2022 1:19	80.94	6/18/2022 23:42	19.35	6/18/2022 22:51	4.20	6/19/2022 3:47	145.33
6/20/2022 2:38	49.78	6/20/2022 1:20	80.98	6/18/2022 23:43	19.29	6/18/2022 22:52	4.24	6/19/2022 3:48	145.38
6/20/2022 2:39	49.75	6/20/2022 1:21	80.95	6/18/2022 23:44	19.26	6/18/2022 22:53	4.27	6/19/2022 3:49	145.35
6/20/2022 2:40	49.79	6/20/2022 1:22	80.94	6/18/2022 23:45	19.13	6/18/2022 22:54	4.18	6/19/2022 3:50	145.33
6/20/2022 2:41	49.79	6/20/2022 1:23	80.90	6/18/2022 23:46	19.14	6/18/2022 22:55	4.12	6/19/2022 3:51	145.31
6/20/2022 2:42	49.77	6/20/2022 1:24	80.93	6/18/2022 23:47	19.15	6/18/2022 22:56	4.19	6/19/2022 3:52	145.35
6/20/2022 2:43	49.78	6/20/2022 1:25	80.95	6/18/2022 23:48	19.09	6/18/2022 22:57	4.16	6/19/2022 3:53	145.35
6/20/2022 2:44	49.73	6/20/2022 1:26	80.89	6/18/2022 23:49	19.08	6/18/2022 22:58	4.18	6/19/2022 3:54	145.34
6/20/2022 2:45	49.80	6/20/2022 1:27	80.92	6/18/2022 23:50	19.06	6/18/2022 22:59	4.18	6/19/2022 3:55	145.33
6/20/2022 2:46	49.75	6/20/2022 1:28	80.94	6/18/2022 23:51	19.01	6/18/2022 23:00	4.16	6/19/2022 3:56	145.34
6/20/2022 2:47	49.79	6/20/2022 1:29	80.97	6/18/2022 23:52	18.97	6/18/2022 23:01	4.08	6/19/2022 3:57	145.30
6/20/2022 2:48	49.75	6/20/2022 1:30	80.96	6/18/2022 23:53	18.90	6/18/2022 23:02	4.09	6/19/2022 3:58	145.31
6/20/2022 2:49	49.79	6/20/2022 1:31	80.93	6/18/2022 23:54	18.88	6/18/2022 23:03	4.07	6/19/2022 3:59	145.31
6/20/2022 2:50	49.75	6/20/2022 1:32	80.95	6/18/2022 23:55	18.81	6/18/2022 23:04	4.12	6/19/2022 4:00	145.33
6/20/2022 2:51	49.74	6/20/2022 1:33	80.95	6/18/2022 23:56	18.82	6/18/2022 23:05	4.10	6/19/2022 4:01	145.32
6/20/2022 2:52	49.76	6/20/2022 1:34	80.91	6/18/2022 23:57	18.81	6/18/2022 23:06	4.05	6/19/2022 4:02	145.32
6/20/2022 2:53	49.74	6/20/2022 1:35	80.95	6/18/2022 23:58	18.73	6/18/2022 23:07	4.13	6/19/2022 4:03	145.32
6/20/2022 2:54	49.73	6/20/2022 1:36	80.92	6/18/2022 23:59	18.71	6/18/2022 23:08	4.09	6/19/2022 4:04	145.36
6/20/2022 2:55	49.70	6/20/2022 1:37	80.92	6/19/2022 0:00	18.69	6/18/2022 23:09	4.00	6/19/2022 4:05	145.34
6/20/2022 2:56	49.75	6/20/2022 1:38	80.94	6/19/2022 0:01	18.68	6/18/2022 23:10	4.21	6/19/2022 4:06	145.31
6/20/2022 2:57	49.71	6/20/2022 1:39	80.94	6/19/2022 0:02	18.60	6/18/2022 23:11	4.13	6/19/2022 4:07	145.34
6/20/2022 2:58	49.77	6/20/2022 1:40	80.99	6/19/2022 0:03	18.66	6/18/2022 23:12	4.04	6/19/2022 4:08	145.33
6/20/2022 2:59	49.69	6/20/2022 1:41	80.93	6/19/2022 0:04	18.65	6/18/2022 23:13	4.10	6/19/2022 4:09	145.33
6/20/2022 3:00	49.72	6/20/2022 1:42	80.92	6/19/2022 0:05	18.55	6/18/2022 23:14	4.06	6/19/2022 4:10	145.31
6/20/2022 3:01	49.71	6/20/2022 1:43	80.95	6/19/2022 0:06	18.51	6/18/2022 23:15	4.03	6/19/2022 4:11	145.32
6/20/2022 3:02	49.74	6/20/2022 1:44	80.95	6/19/2022 0:07	18.51	6/18/2022 23:16	4.06	6/19/2022 4:12	145.33
6/20/2022 3:03	49.70	6/20/2022 1:45	80.93	6/19/2022 0:08	18.47	6/18/2022 23:17	4.08	6/19/2022 4:13	145.29
6/20/2022 3:04	49.73	6/20/2022 1:46	80.95	6/19/2022 0:09	18.47	6/18/2022 23:18	3.97	6/19/2022 4:14	145.35
6/20/2022 3:05	49.69	6/20/2022 1:47	80.94	6/19/2022 0:10	18.43	6/18/2022 23:19	4.04	6/19/2022 4:15	145.36
6/20/2022 3:06	49.69	6/20/2022 1:48	80.92	6/19/2022 0:11	18.43	6/18/2022 23:20	4.02	6/19/2022 4:16	145.34
6/20/2022 3:07	49.68	6/20/2022 1:49	80.94	6/19/2022 0:12	18.40	6/18/2022 23:21	4.01	6/19/2022 4:17	145.33
6/20/2022 3:08	49.68	6/20/2022 1:50	80.94	6/19/2022 0:13	18.43	6/18/2022 23:22	4.00	6/19/2022 4:18	145.33
6/20/2022 3:09	49.72	6/20/2022 1:51	80.93	6/19/2022 0:14	18.36	6/18/2022 23:23	4.00	6/19/2022 4:19	145.34
6/20/2022 3:10	49.60	6/20/2022 1:52	80.93	6/19/2022 0:15	18.32	6/18/2022 23:24	4.01	6/19/2022 4:20	145.35
6/20/2022 3:11	52.72	6/20/2022 1:53	80.96	6/19/2022 0:16	18.28	6/18/2022 23:25	4.04	6/19/2022 4:21	145.36
6/20/2022 3:12	54.00	6/20/2022 1:54	80.95	6/19/2022 0:17	18.23	6/18/2022 23:26	3.97	6/19/2022 4:22	145.33
6/20/2022 3:13	54.72	6/20/2022 1:55	80.93	6/19/2022 0:18	18.26	6/18/2022 23:27	4.01	6/19/2022 4:23	145.33
6/20/2022 3:14	55.12	6/20/2022 1:56	80.95	6/19/2022 0:19	18.25	6/18/2022 23:28	3.98	6/19/2022 4:24	145.37
6/20/2022 3:15	52.84	6/20/2022 1:57	80.92	6/19/2022 0:20	18.21	6/18/2022 23:29	4.02	6/19/2022 4:25	145.37
6/20/2022 3:16	51.83	6/20/2022 1:58	80.94	6/19/2022 0:21	18.18	6/18/2022 23:30	3.90	6/19/2022 4:26	145.33
6/20/2022 3:17	51.39	6/20/2022 1:59	80.95	6/19/2022 0:22	18.19	6/18/2022 23:31	3.99	6/19/2022 4:27	145.34
6/20/2022 3:18	51.11	6/20/2022 2:00	80.92	6/19/2022 0:23	18.15	6/18/2022 23:32	3.99	6/19/2022 4:28	145.35
6/20/2022 3:19	50.96	6/20/2022 2:01	80.92	6/19/2022 0:24	18.17	6/18/2022 23:33	3.96	6/19/2022 4:29	145.34
6/20/2022 3:20	50.84	6/20/2022 2:02	83.61	6/19/2022 0:25	18.13	6/18/2022 23:34	3.96	6/19/2022 4:30	145.33
6/20/2022 3:21	50.73	6/20/2022 2:03	83.09	6/19/2022 0:26	18.13	6/18/2022 23:35	3.89	6/19/2022 4:31	145.34
6/20/2022 3:22	50.66	6/20/2022 2:04	82.72	6/19/2022 0:27	18.10	6/18/2022 23:36	3.95	6/19/2022 4:32	145.31
6/20/2022 3:23	50.59	6/20/2022 2:05	82.48	6/19/2022 0:28	18.06	6/18/2022 23:37	3.89	6/19/2022 4:33	145.32
6/20/2022 3:24	50.57	6/20/2022 2:06	82.22	6/19/2022 0:29	18.04	6/18/2022 23:38	3.92	6/19/2022 4:34	145.31
6/20/2022 3:25	50.55	6/20/2022 2:07	82.04	6/19/2022 0:30	18.06	6/18/2022 23:39	3.92	6/19/2022 4:35	145.33
6/20/2022 3:26	50.50	6/20/2022 2:08	81.90	6/19/2022 0:31	18.00	6/18/2022 23:40	3.93	6/19/2022 4:36	145.35
6/20/2022 3:27	50.41	6/20/2022 2:09	81.79	6/19/2022 0:32	17.99	6/18/2022 23:41	3.93	6/19/2022 4:37	145.31
6/20/2022 3:28	50.41	6/20/2022 2:10	81.68	6/19/2022 0:33	18.00	6/18/2022 23:42	3.90	6/19/2022 4:38	145.30
6/20/2022 3:29	50.39	6/20/2022 2:11	81.62	6/19/2022 0:34	17.96	6/18/2022 23:43	3.88	6/19/2022 4:39	145.31
6/20/2022 3:30	50.34	6/20/2022 2:12	81.54	6/19/2022 0:35	17.94	6/18/2022 23:44	3.98	6/19/2022 4:40	145.32
6/20/2022 3:31	50.33	6/20/2022 2:13	81.47	6/19/2022 0:36	17.90	6/18/2022 23:45	3.86	6/19/2022 4:41	145.30
6/20/2022 3:32	50.28	6/20/2022 2:14	81.44	6/19/2022 0:37	17.93	6/18/2022 23:46	3.87	6/19/2022 4:42	145.31
6/20/2022 3:33	50.25	6/20/2022 2:15	81.41	6/19/2022 0:38	17.95	6/18/2022 23:47	3.91	6/19/2022 4:43	145.31
6/20/2022 3:34	50.26	6/20/2022 2:16	81.34	6/19/2022 0:39	17.87	6/18/2022 23:48	3.83	6/19/2022 4:44	145.31
6/20/2022 3:35	50.23	6/20/2022 2:17	81.28	6/19/2022 0:40	17.91	6/18/2022 23:49	3.87	6/19/2022 4:45	145.31
6/20/2022 3:36	50.25	6/20/2022 2:18	81.29	6/19/2022 0:41	17.87	6/18/2022 23:50	3.89	6/19/2022 4:46	145.30
6/20/2022 3:37	50.19	6/20/2022 2:19	81.25	6/19/2022 0:42	17.89	6/18/2022 23:51	3.83	6/19/2022 4:47	145.29
6/20/2022 3:38	50.19	6/20/2022 2:20	81.23	6/19/2022 0:43	17.84	6/18/2022 23:52	3.88	6/19/2022 4:48	145.30
6/20/2022 3:39	50.18	6/20/2022 2:21	81.21	6/19/2022 0:44	17.84	6/18/2022 23:53	3.85	6/19/2022 4:49	145.33
6/20/2022 3:40	50.18	6/20/2022 2:22	81.19	6/19/2022 0:45	17.83	6/18/2022 23:54	3.87	6/19/2022 4:50	145.34
6/20/2022 3:41	50.14	6/20/2022 2:23	81.16	6/19/2022 0:46	17.80	6/18/2022 23:55	3.84	6/19/2022 4:51	145.32
6/20/2022 3:42	50.16	6/20/2022 2:24	81.12	6/19/2022 0:47	17.74	6/18/2022 23:56	3.84	6/19/2022 4:52	145.31
6/20/2022 3:43	50.13	6/20/2022 2:25	81.10	6/19/2022 0:48	17.78	6/18/2022 23:57	3.86	6/19/2022 4:53	145.31
6/20/2022 3:44	52.76	6/20/2022 2:26	81.11	6/19/2022 0:49	17.73	6/18/2022 23:58	3.83	6/19/2022 4:54	145.30
6/20/2022 3:45	54.22	6/20/2022 2:27	81.10	6/19/2022 0:50	17.70	6/18/2022 23:59	3.82	6/19/2022 4:55	145.34
6/20/2022 3:46	54.97	6/20/2022 2:28	81.09	6/19/2022 0:51	17.73	6/19/2022 0:00	3.83	6/19/2022 4:56	145.29
6/20/2022 3:47	55.44	6/20/2022 2:29	81.08	6/19/2022 0:52	17.69	6/19/2022 0:01	3.85	6/19/2022 4:57	145.30
6/20/2022 3:48	53.61	6/20/2022 2:30	81.09	6/19/2022 0:53	17.65	6/19/2022 0:02	3.82	6/19/2022 4:58	145.31

6/20/2022 3:49	52.35	6/20/2022 2:31	81.07	6/19/2022 0:54	17.68	6/19/2022 0:03	3.84	6/19/2022 4:59	145.29
6/20/2022 3:50	51.84	6/20/2022 2:32	81.05	6/19/2022 0:55	17.70	6/19/2022 0:04	3.83	6/19/2022 5:00	145.29
6/20/2022 3:51	51.57	6/20/2022 2:33	81.08	6/19/2022 0:56	17.70	6/19/2022 0:05	4.08	6/19/2022 5:01	145.29
6/20/2022 3:52	51.34	6/20/2022 2:34	81.11	6/19/2022 0:57	17.65	6/19/2022 0:06	4.12	6/19/2022 5:02	145.29
6/20/2022 3:53	51.24	6/20/2022 2:35	81.04	6/19/2022 0:58	17.62	6/19/2022 0:07	3.99	6/19/2022 5:03	145.30
6/20/2022 3:54	51.16	6/20/2022 2:36	81.02	6/19/2022 0:59	17.59	6/19/2022 0:08	4.01	6/19/2022 5:04	145.33
6/20/2022 3:55	51.05	6/20/2022 2:37	81.06	6/19/2022 1:00	17.62	6/19/2022 0:09	3.98	6/19/2022 5:05	145.32
6/20/2022 3:56	50.95	6/20/2022 2:38	81.08	6/19/2022 1:01	17.63	6/19/2022 0:10	3.96	6/19/2022 5:06	145.27
6/20/2022 3:57	50.93	6/20/2022 2:39	81.03	6/19/2022 1:02	17.57	6/19/2022 0:11	3.95	6/19/2022 5:07	145.26
6/20/2022 3:58	50.87	6/20/2022 2:40	81.02	6/19/2022 1:03	17.59	6/19/2022 0:12	3.93	6/19/2022 5:08	145.31
6/20/2022 3:59	50.85	6/20/2022 2:41	81.01	6/19/2022 1:04	17.59	6/19/2022 0:13	4.05	6/19/2022 5:09	145.30
6/20/2022 4:00	50.78	6/20/2022 2:42	81.00	6/19/2022 1:05	17.59	6/19/2022 0:14	4.01	6/19/2022 5:10	145.30
6/20/2022 4:01	50.76	6/20/2022 2:43	81.01	6/19/2022 1:06	17.57	6/19/2022 0:15	3.96	6/19/2022 5:11	145.34
6/20/2022 4:02	50.75	6/20/2022 2:44	81.04	6/19/2022 1:07	17.56	6/19/2022 0:16	3.96	6/19/2022 5:12	145.29
6/20/2022 4:03	50.71	6/20/2022 2:45	81.05	6/19/2022 1:08	17.56	6/19/2022 0:17	3.96	6/19/2022 5:13	145.27
6/20/2022 4:04	50.67	6/20/2022 2:46	81.02	6/19/2022 1:09	17.53	6/19/2022 0:18	3.95	6/19/2022 5:14	145.28
6/20/2022 4:05	50.63	6/20/2022 2:47	81.02	6/19/2022 1:10	17.53	6/19/2022 0:19	3.94	6/19/2022 5:15	145.28
6/20/2022 4:06	50.60	6/20/2022 2:48	80.99	6/19/2022 1:11	17.55	6/19/2022 0:20	3.94	6/19/2022 5:16	145.31
6/20/2022 4:07	50.58	6/20/2022 2:49	81.01	6/19/2022 1:12	17.52	6/19/2022 0:21	4.05	6/19/2022 5:17	145.30
6/20/2022 4:08	50.55	6/20/2022 2:50	80.97	6/19/2022 1:13	17.52	6/19/2022 0:22	4.00	6/19/2022 5:18	145.27
6/20/2022 4:09	50.57	6/20/2022 2:51	80.97	6/19/2022 1:14	17.54	6/19/2022 0:23	4.02	6/19/2022 5:19	145.28
6/20/2022 4:10	50.53	6/20/2022 2:52	81.01	6/19/2022 1:15	17.48	6/19/2022 0:24	4.01	6/19/2022 5:20	145.29
6/20/2022 4:11	50.54	6/20/2022 2:53	81.04	6/19/2022 1:16	17.49	6/19/2022 0:25	3.92	6/19/2022 5:21	145.28
6/20/2022 4:12	50.51	6/20/2022 2:54	81.00	6/19/2022 1:17	17.48	6/19/2022 0:26	3.93	6/19/2022 5:22	145.29
6/20/2022 4:13	51.61	6/20/2022 2:55	81.00	6/19/2022 1:18	17.47	6/19/2022 0:27	3.92	6/19/2022 5:23	145.29
6/20/2022 4:14	53.85	6/20/2022 2:56	81.00	6/19/2022 1:19	17.55	6/19/2022 0:28	3.93	6/19/2022 5:24	145.26
6/20/2022 4:15	55.00	6/20/2022 2:57	81.02	6/19/2022 1:20	17.50	6/19/2022 0:29	3.90	6/19/2022 5:25	145.25
6/20/2022 4:16	55.60	6/20/2022 2:58	81.01	6/19/2022 1:21	17.52	6/19/2022 0:30	3.89	6/19/2022 5:26	145.28
6/20/2022 4:17	56.04	6/20/2022 2:59	80.98	6/19/2022 1:22	17.48	6/19/2022 0:31	3.86	6/19/2022 5:27	145.26
6/20/2022 4:18	56.28	6/20/2022 3:00	81.00	6/19/2022 1:23	17.49	6/19/2022 0:32	3.82	6/19/2022 5:28	145.28
6/20/2022 4:19	53.97	6/20/2022 3:01	81.03	6/19/2022 1:24	17.46	6/19/2022 0:33	3.89	6/19/2022 5:29	145.28
6/20/2022 4:20	52.92	6/20/2022 3:02	81.02	6/19/2022 1:25	17.50	6/19/2022 0:34	3.87	6/19/2022 5:30	145.26
6/20/2022 4:21	52.41	6/20/2022 3:03	81.02	6/19/2022 1:26	17.56	6/19/2022 0:35	3.83	6/19/2022 5:31	145.27
6/20/2022 4:22	52.10	6/20/2022 3:04	81.01	6/19/2022 1:27	17.49	6/19/2022 0:36	3.80	6/19/2022 5:32	145.28
6/20/2022 4:23	51.94	6/20/2022 3:05	81.03	6/19/2022 1:28	17.47	6/19/2022 0:37	3.89	6/19/2022 5:33	145.29
6/20/2022 4:24	51.77	6/20/2022 3:06	80.98	6/19/2022 1:29	17.47	6/19/2022 0:38	3.81	6/19/2022 5:34	145.28
6/20/2022 4:25	51.64	6/20/2022 3:07	81.01	6/19/2022 1:30	17.50	6/19/2022 0:39	3.80	6/19/2022 5:35	145.28
6/20/2022 4:26	51.55	6/20/2022 3:08	80.99	6/19/2022 1:31	17.50	6/19/2022 0:40	3.86	6/19/2022 5:36	145.27
6/20/2022 4:27	51.47	6/20/2022 3:09	81.02	6/19/2022 1:32	17.52	6/19/2022 0:41	3.78	6/19/2022 5:37	145.28
6/20/2022 4:28	51.43	6/20/2022 3:10	80.99	6/19/2022 1:33	17.47	6/19/2022 0:42	3.79	6/19/2022 5:38	145.30
6/20/2022 4:29	51.35	6/20/2022 3:11	80.98	6/19/2022 1:34	17.51	6/19/2022 0:43	3.81	6/19/2022 5:39	145.27
6/20/2022 4:30	51.30	6/20/2022 3:12	81.01	6/19/2022 1:35	17.46	6/19/2022 0:44	3.76	6/19/2022 5:40	145.26
6/20/2022 4:31	51.24	6/20/2022 3:13	81.00	6/19/2022 1:36	17.44	6/19/2022 0:45	3.86	6/19/2022 5:41	145.27
6/20/2022 4:32	51.21	6/20/2022 3:14	80.99	6/19/2022 1:37	17.48	6/19/2022 0:46	3.80	6/19/2022 5:42	145.30
6/20/2022 4:33	51.16	6/20/2022 3:15	80.98	6/19/2022 1:38	17.43	6/19/2022 0:47	3.80	6/19/2022 5:43	145.28
6/20/2022 4:34	51.12	6/20/2022 3:16	80.99	6/19/2022 1:39	17.47	6/19/2022 0:48	3.81	6/19/2022 5:44	145.28
6/20/2022 4:35	51.11	6/20/2022 3:17	80.98	6/19/2022 1:40	17.47	6/19/2022 0:49	3.88	6/19/2022 5:45	145.26
6/20/2022 4:36	51.06	6/20/2022 3:18	80.99	6/19/2022 1:41	17.45	6/19/2022 0:50	3.79	6/19/2022 5:46	145.28
6/20/2022 4:37	51.02	6/20/2022 3:19	80.99	6/19/2022 1:42	17.40	6/19/2022 0:51	3.80	6/19/2022 5:47	145.26
6/20/2022 4:38	51.03	6/20/2022 3:20	81.02	6/19/2022 1:43	17.48	6/19/2022 0:52	3.80	6/19/2022 5:48	145.29
6/20/2022 4:39	50.96	6/20/2022 3:21	81.02	6/19/2022 1:44	17.44	6/19/2022 0:53	3.87	6/19/2022 5:49	145.29
6/20/2022 4:40	50.97	6/20/2022 3:22	81.02	6/19/2022 1:45	17.47	6/19/2022 0:54	3.76	6/19/2022 5:50	145.27
6/20/2022 4:41	50.95	6/20/2022 3:23	80.99	6/19/2022 1:46	17.41	6/19/2022 0:55	3.77	6/19/2022 5:51	145.27
6/20/2022 4:42	50.93	6/20/2022 3:24	80.98	6/19/2022 1:47	17.41	6/19/2022 0:56	3.80	6/19/2022 5:52	145.25
6/20/2022 4:43	50.92	6/20/2022 3:25	80.99	6/19/2022 1:48	17.43	6/19/2022 0:57	3.76	6/19/2022 5:53	145.28
6/20/2022 4:44	50.87	6/20/2022 3:26	80.99	6/19/2022 1:49	17.41	6/19/2022 0:58	3.74	6/19/2022 5:54	145.26
6/20/2022 4:45	50.88	6/20/2022 3:27	81.02	6/19/2022 1:50	17.41	6/19/2022 0:59	3.75	6/19/2022 5:55	145.27
6/20/2022 4:46	50.82	6/20/2022 3:28	80.96	6/19/2022 1:51	17.41	6/19/2022 1:00	3.84	6/19/2022 5:56	145.27
6/20/2022 4:47	50.82	6/20/2022 3:29	80.99	6/19/2022 1:52	17.42	6/19/2022 1:01	3.73	6/19/2022 5:57	145.27
6/20/2022 4:48	50.81	6/20/2022 3:30	80.99	6/19/2022 1:53	17.40	6/19/2022 1:02	3.70	6/19/2022 5:58	145.27
6/20/2022 4:49	50.81	6/20/2022 3:31	81.02	6/19/2022 1:54	17.37	6/19/2022 1:03	5.45	6/19/2022 5:59	145.30
6/20/2022 4:50	50.79	6/20/2022 3:32	80.99	6/19/2022 1:55	17.42	6/19/2022 1:04	6.45	6/19/2022 6:00	145.24
6/20/2022 4:51	50.78	6/20/2022 3:33	81.01	6/19/2022 1:56	17.35	6/19/2022 1:05	7.08	6/19/2022 6:01	145.27
6/20/2022 4:52	50.72	6/20/2022 3:34	81.00	6/19/2022 1:57	17.41	6/19/2022 1:06	7.57	6/19/2022 6:02	145.26
6/20/2022 4:53	50.74	6/20/2022 3:35	80.99	6/19/2022 1:58	17.33	6/19/2022 1:07	7.98	6/19/2022 6:03	145.27
6/20/2022 4:54	50.74	6/20/2022 3:36	80.97	6/19/2022 1:59	17.31	6/19/2022 1:08	8.34	6/19/2022 6:04	145.28
6/20/2022 4:55	50.71	6/20/2022 3:37	80.96	6/19/2022 2:00	17.38	6/19/2022 1:09	8.65	6/19/2022 6:05	145.30
6/20/2022 4:56	50.69	6/20/2022 3:38	80.99	6/19/2022 2:01	17.89	6/19/2022 1:10	8.91	6/19/2022 6:06	145.31
6/20/2022 4:57	50.68	6/20/2022 3:39	81.00	6/19/2022 2:02	23.44	6/19/2022 1:11	9.17	6/19/2022 6:07	145.26
6/20/2022 4:58	50.66	6/20/2022 3:40	80.96	6/19/2022 2:03	26.68	6/19/2022 1:12	9.40	6/19/2022 6:08	145.26
6/20/2022 4:59	50.62	6/20/2022 3:41	81.01	6/19/2022 2:04	27.44	6/19/2022 1:13	9.60	6/19/2022 6:09	145.25
6/20/2022 5:00	50.64	6/20/2022 3:42	80.94	6/19/2022 2:05	24.43	6/19/2022 1:14	9.80	6/19/2022 6:10	145.26
6/20/2022 5:01	50.65	6/20/2022 3:43	80.96	6/19/2022 2:06	22.79	6/19/2022 1:15	10.02	6/19/2022 6:11	145.29
6/20/2022 5:02	50.61	6/20/2022 3:44	80.99	6/19/2022 2:07	21.85	6/19/2022 1:16	10.20	6/19/2022 6:12	145.28
6/20/2022 5:03	50.60	6/20/2022 3:45	80.95	6/19/2022 2:08	21.17	6/19/2022 1:17	10.37	6/19/2022 6:13	145.25
6/20/2022 5:04	50.60	6/20/2022 3:46	80.99	6/19/2022 2:09	20.77	6/19/2022 1:18	10.57	6/19/2022 6:14	145.27
6/20/2022 5:05	50.61	6/20/2022 3:47	80.98	6/19/2022 2:10	20.37	6/19/2022 1:19	10.70	6/19/2022 6:15	145.26
6/20/2022 5:06	50.56	6/20/2022 3:48	80.95	6/19/2022 2:11	20.15	6/19/2022 1:20	10.87	6/19/2022 6:16	145.26
6/20/2022 5:07	50.57	6/20/2022 3:49	80.98	6/19/2022 2:12	19.90	6/19/2022 1:21	11.08	6/19/2022 6:17	145.27
6/20/2022 5:08	50.59	6/20/2022 3:50	80.98	6/19/2022 2:13	19.79	6/19/2022 1:22	11.22	6/19/2022 6:18	145.29
6/20/2022 5:09	50.56	6/20/2022 3:51	80.97	6/19/2022 2:14	19.61	6/19/2022 1:23	11.64	6/19/2022 6:19	145.29
6/20/2022 5:10	50.50	6/20/2022 3:52	80.97	6/19/2022 2:15	19.49	6/19/2022 1:24	11.96	6/19/2022 6:20	145.29
6/20/2022 5:11	50.50	6/20/2022 3:53	81.00	6/19/2022 2:16	19.39	6/19/2022 1:25	12.13	6/19/2022 6:21	145.31
6/20/2022 5:12	50.53	6/20/2022 3:54	80.99	6/19/2022 2:17	19.28	6/19/2022 1:26	12.33	6/19/2022 6:22	145.25
6/20/2022 5:13	50.53	6/20/2022 3:55	80.99	6/19/2022 2:18	19.14	6/19/2022 1:27	12.56	6/19/2022 6:23	145.28
6/20/2022 5:14	50.48	6/20/2022 3:56	80.96	6/19/2022 2:19	19.09	6/19/2022 1:28	12.79	6/19/2022 6:24	145.28
6/20/2022 5:15	50.51	6/20/2022 3:57	80.99	6/19/2022 2:20	19.03	6/19/2022 1:29	12.91	6/19/2022 6:25	145.27
6/20/2022 5:16	50.48	6/20/2022 3:58	80.95	6/19/2022 2:21	18.93	6/19/2022 1:30	13.14	6/19/2022 6:26	145.27

6/20/2022 5:17	50.49	6/20/2022 3:59	80.98	6/19/2022 2:22	18.83	6/19/2022 1:31	13.33	6/19/2022 6:27	145.28
6/20/2022 5:18	50.46	6/20/2022 4:00	80.95	6/19/2022 2:23	18.80	6/19/2022 1:32	13.49	6/19/2022 6:28	145.25
6/20/2022 5:19	50.49	6/20/2022 4:01	80.98	6/19/2022 2:24	18.70	6/19/2022 1:33	13.60	6/19/2022 6:29	145.27
6/20/2022 5:20	50.43	6/20/2022 4:02	81.00	6/19/2022 2:25	18.67	6/19/2022 1:34	13.76	6/19/2022 6:30	145.27
6/20/2022 5:21	50.43	6/20/2022 4:03	80.94	6/19/2022 2:26	18.62	6/19/2022 1:35	13.92	6/19/2022 6:31	145.25
6/20/2022 5:22	50.50	6/20/2022 4:04	80.99	6/19/2022 2:27	18.56	6/19/2022 1:36	14.07	6/19/2022 6:32	145.28
6/20/2022 5:23	50.48	6/20/2022 4:05	80.99	6/19/2022 2:28	20.17	6/19/2022 1:37	14.21	6/19/2022 6:33	145.26
6/20/2022 5:24	50.44	6/20/2022 4:06	80.99	6/19/2022 2:29	25.08	6/19/2022 1:38	14.35	6/19/2022 6:34	145.26
6/20/2022 5:25	50.41	6/20/2022 4:07	80.98	6/19/2022 2:30	28.06	6/19/2022 1:39	14.53	6/19/2022 6:35	145.26
6/20/2022 5:26	50.44	6/20/2022 4:08	81.00	6/19/2022 2:31	25.49	6/19/2022 1:40	14.66	6/19/2022 6:36	145.24
6/20/2022 5:27	50.44	6/20/2022 4:09	81.03	6/19/2022 2:32	23.59	6/19/2022 1:41	14.77	6/19/2022 6:37	145.25
6/20/2022 5:28	50.41	6/20/2022 4:10	80.98	6/19/2022 2:33	22.49	6/19/2022 1:42	14.91	6/19/2022 6:38	145.28
6/20/2022 5:29	50.42	6/20/2022 4:11	81.00	6/19/2022 2:34	21.80	6/19/2022 1:43	15.08	6/19/2022 6:39	145.24
6/20/2022 5:30	50.44	6/20/2022 4:12	80.93	6/19/2022 2:35	21.35	6/19/2022 1:44	15.21	6/19/2022 6:40	145.25
6/20/2022 5:31	50.40	6/20/2022 4:13	80.96	6/19/2022 2:36	21.00	6/19/2022 1:45	15.29	6/19/2022 6:41	145.29
6/20/2022 5:32	50.42	6/20/2022 4:14	80.99	6/19/2022 2:37	20.69	6/19/2022 1:46	15.47	6/19/2022 6:42	145.26
6/20/2022 5:33	50.37	6/20/2022 4:15	80.99	6/19/2022 2:38	20.47	6/19/2022 1:47	15.61	6/19/2022 6:43	145.25
6/20/2022 5:34	50.38	6/20/2022 4:16	80.98	6/19/2022 2:39	20.24	6/19/2022 1:48	15.77	6/19/2022 6:44	145.27
6/20/2022 5:35	50.36	6/20/2022 4:17	80.96	6/19/2022 2:40	20.08	6/19/2022 1:49	15.91	6/19/2022 6:45	145.26
6/20/2022 5:36	50.40	6/20/2022 4:18	80.98	6/19/2022 2:41	19.97	6/19/2022 1:50	16.00	6/19/2022 6:46	145.27
6/20/2022 5:37	50.35	6/20/2022 4:19	80.96	6/19/2022 2:42	19.84	6/19/2022 1:51	16.11	6/19/2022 6:47	145.28
6/20/2022 5:38	50.34	6/20/2022 4:20	80.99	6/19/2022 2:43	19.70	6/19/2022 1:52	16.23	6/19/2022 6:48	145.29
6/20/2022 5:39	50.38	6/20/2022 4:21	80.96	6/19/2022 2:44	19.57	6/19/2022 1:53	16.36	6/19/2022 6:49	145.26
6/20/2022 5:40	50.33	6/20/2022 4:22	80.98	6/19/2022 2:45	19.56	6/19/2022 1:54	16.44	6/19/2022 6:50	145.29
6/20/2022 5:41	50.34	6/20/2022 4:23	80.97	6/19/2022 2:46	19.43	6/19/2022 1:55	16.55	6/19/2022 6:51	145.24
6/20/2022 5:42	50.32	6/20/2022 4:24	80.98	6/19/2022 2:47	19.38	6/19/2022 1:56	16.73	6/19/2022 6:52	145.26
6/20/2022 5:43	50.36	6/20/2022 4:25	80.96	6/19/2022 2:48	19.24	6/19/2022 1:57	16.85	6/19/2022 6:53	145.27
6/20/2022 5:44	50.35	6/20/2022 4:26	80.96	6/19/2022 2:49	19.19	6/19/2022 1:58	16.97	6/19/2022 6:54	145.27
6/20/2022 5:45	50.32	6/20/2022 4:27	80.96	6/19/2022 2:50	19.12	6/19/2022 1:59	17.12	6/19/2022 6:55	145.23
6/20/2022 5:46	50.30	6/20/2022 4:28	80.96	6/19/2022 2:51	19.03	6/19/2022 2:00	17.14	6/19/2022 6:56	145.25
6/20/2022 5:47	50.28	6/20/2022 4:29	80.98	6/19/2022 2:52	18.99	6/19/2022 2:01	17.22	6/19/2022 6:57	145.26
6/20/2022 5:48	50.29	6/20/2022 4:30	80.97	6/19/2022 2:53	18.92	6/19/2022 2:02	17.31	6/19/2022 6:58	145.29
6/20/2022 5:49	50.29	6/20/2022 4:31	80.96	6/19/2022 2:54	18.92	6/19/2022 2:03	17.47	6/19/2022 6:59	145.27
6/20/2022 5:50	50.27	6/20/2022 4:32	80.97	6/19/2022 2:55	18.83	6/19/2022 2:04	17.62	6/19/2022 7:00	145.26
6/20/2022 5:51	50.29	6/20/2022 4:33	80.97	6/19/2022 2:56	18.79	6/19/2022 2:05	17.64	6/19/2022 7:01	145.25
6/20/2022 5:52	50.25	6/20/2022 4:34	80.94	6/19/2022 2:57	18.78	6/19/2022 2:06	17.76	6/19/2022 7:02	145.27
6/20/2022 5:53	50.29	6/20/2022 4:35	80.98	6/19/2022 2:58	18.71	6/19/2022 2:07	17.83	6/19/2022 7:03	145.25
6/20/2022 5:54	50.31	6/20/2022 4:36	80.98	6/19/2022 2:59	18.70	6/19/2022 2:08	17.98	6/19/2022 7:04	145.23
6/20/2022 5:55	50.32	6/20/2022 4:37	81.00	6/19/2022 3:00	18.68	6/19/2022 2:09	18.03	6/19/2022 7:05	145.27
6/20/2022 5:56	50.29	6/20/2022 4:38	80.97	6/19/2022 3:01	18.57	6/19/2022 2:10	18.14	6/19/2022 7:06	145.25
6/20/2022 5:57	50.28	6/20/2022 4:39	80.97	6/19/2022 3:02	18.57	6/19/2022 2:11	18.22	6/19/2022 7:07	145.27
6/20/2022 5:58	50.27	6/20/2022 4:40	80.97	6/19/2022 3:03	18.52	6/19/2022 2:12	18.29	6/19/2022 7:08	145.27
6/20/2022 5:59	50.27	6/20/2022 4:41	80.98	6/19/2022 3:04	18.49	6/19/2022 2:13	18.43	6/19/2022 7:09	145.22
6/20/2022 6:00	50.22	6/20/2022 4:42	80.97	6/19/2022 3:05	18.49	6/19/2022 2:14	18.48	6/19/2022 7:10	145.20
6/20/2022 6:01	50.26	6/20/2022 4:43	80.98	6/19/2022 3:06	18.41	6/19/2022 2:15	18.64	6/19/2022 7:11	145.27
6/20/2022 6:02	50.29	6/20/2022 4:44	80.98	6/19/2022 3:07	22.93	6/19/2022 2:16	18.73	6/19/2022 7:12	145.26
6/20/2022 6:03	50.25	6/20/2022 4:45	81.00	6/19/2022 3:08	26.64	6/19/2022 2:17	18.84	6/19/2022 7:13	145.27
6/20/2022 6:04	50.27	6/20/2022 4:46	81.00	6/19/2022 3:09	27.05	6/19/2022 2:18	18.91	6/19/2022 7:14	145.26
6/20/2022 6:05	50.22	6/20/2022 4:47	80.98	6/19/2022 3:10	24.41	6/19/2022 2:19	19.04	6/19/2022 7:15	145.27
6/20/2022 6:06	50.25	6/20/2022 4:48	80.98	6/19/2022 3:11	22.96	6/19/2022 2:20	19.10	6/19/2022 7:16	145.25
6/20/2022 6:07	50.20	6/20/2022 4:49	80.97	6/19/2022 3:12	22.11	6/19/2022 2:21	19.15	6/19/2022 7:17	145.28
6/20/2022 6:08	50.24	6/20/2022 4:50	80.95	6/19/2022 3:13	21.56	6/19/2022 2:22	19.30	6/19/2022 7:18	145.25
6/20/2022 6:09	50.23	6/20/2022 4:51	80.99	6/19/2022 3:14	21.10	6/19/2022 2:23	19.47	6/19/2022 7:19	145.23
6/20/2022 6:10	50.22	6/20/2022 4:52	80.94	6/19/2022 3:15	20.84	6/19/2022 2:24	19.61	6/19/2022 7:20	145.23
6/20/2022 6:11	50.22	6/20/2022 4:53	80.97	6/19/2022 3:16	20.53	6/19/2022 2:25	20.15	6/19/2022 7:21	145.27
6/20/2022 6:12	50.20	6/20/2022 4:54	80.97	6/19/2022 3:17	20.38	6/19/2022 2:26	20.53	6/19/2022 7:22	145.28
6/20/2022 6:13	50.25	6/20/2022 4:55	80.97	6/19/2022 3:18	20.18	6/19/2022 2:27	20.90	6/19/2022 7:23	145.26
6/20/2022 6:14	50.20	6/20/2022 4:56	80.96	6/19/2022 3:19	20.04	6/19/2022 2:28	21.16	6/19/2022 7:24	145.27
6/20/2022 6:15	50.19	6/20/2022 4:57	80.97	6/19/2022 3:20	19.93	6/19/2022 2:29	21.39	6/19/2022 7:25	145.23
6/20/2022 6:16	50.21	6/20/2022 4:58	80.98	6/19/2022 3:21	19.82	6/19/2022 2:30	21.63	6/19/2022 7:26	145.30
6/20/2022 6:17	50.24	6/20/2022 4:59	80.96	6/19/2022 3:22	19.70	6/19/2022 2:31	21.79	6/19/2022 7:27	145.24
6/20/2022 6:18	50.20	6/20/2022 5:00	80.98	6/19/2022 3:23	19.61	6/19/2022 2:32	21.95	6/19/2022 7:28	145.23
6/20/2022 6:19	50.20	6/20/2022 5:01	81.01	6/19/2022 3:24	19.49	6/19/2022 2:33	22.11	6/19/2022 7:29	145.24
6/20/2022 6:20	50.18	6/20/2022 5:02	80.97	6/19/2022 3:25	19.44	6/19/2022 2:34	22.32	6/19/2022 7:30	145.23
6/20/2022 6:21	50.19	6/20/2022 5:03	80.98	6/19/2022 3:26	19.34	6/19/2022 2:35	22.52	6/19/2022 7:31	145.26
6/20/2022 6:22	50.17	6/20/2022 5:04	80.95	6/19/2022 3:27	19.21	6/19/2022 2:36	22.73	6/19/2022 7:32	145.26
6/20/2022 6:23	50.21	6/20/2022 5:05	80.96	6/19/2022 3:28	19.21	6/19/2022 2:37	22.86	6/19/2022 7:33	145.23
6/20/2022 6:24	50.18	6/20/2022 5:06	80.96	6/19/2022 3:29	19.12	6/19/2022 2:38	23.06	6/19/2022 7:34	145.25
6/20/2022 6:25	50.16	6/20/2022 5:07	80.95	6/19/2022 3:30	19.04	6/19/2022 2:39	23.15	6/19/2022 7:35	145.28
6/20/2022 6:26	50.19	6/20/2022 5:08	80.97	6/19/2022 3:31	19.05	6/19/2022 2:40	22.97	6/19/2022 7:36	145.27
6/20/2022 6:27	50.16	6/20/2022 5:09	80.93	6/19/2022 3:32	18.99	6/19/2022 2:41	22.79	6/19/2022 7:37	145.24
6/20/2022 6:28	50.18	6/20/2022 5:10	80.98	6/19/2022 3:33	21.90	6/19/2022 2:42	22.73	6/19/2022 7:38	144.74
6/20/2022 6:29	50.15	6/20/2022 5:11	80.98	6/19/2022 3:34	26.41	6/19/2022 2:43	22.87	6/19/2022 7:39	144.17
6/20/2022 6:30	50.13	6/20/2022 5:12	80.97	6/19/2022 3:35	29.26	6/19/2022 2:44	22.93	6/19/2022 7:40	143.66
6/20/2022 6:31	50.16	6/20/2022 5:13	80.98	6/19/2022 3:36	31.30	6/19/2022 2:45	22.98	6/19/2022 7:41	143.10
6/20/2022 6:32	50.15	6/20/2022 5:14	80.97	6/19/2022 3:37	32.80	6/19/2022 2:46	23.06	6/19/2022 7:42	142.53
6/20/2022 6:33	50.16	6/20/2022 5:15	80.98	6/19/2022 3:38	31.53	6/19/2022 2:47	23.12	6/19/2022 7:43	142.00
6/20/2022 6:34	50.13	6/20/2022 5:16	80.97	6/19/2022 3:39	28.30	6/19/2022 2:48	23.24	6/19/2022 7:44	141.43
6/20/2022 6:35	50.15	6/20/2022 5:17	80.99	6/19/2022 3:40	26.37	6/19/2022 2:49	23.34	6/19/2022 7:45	140.92
6/20/2022 6:36	50.15	6/20/2022 5:18	80.96	6/19/2022 3:41	25.14	6/19/2022 2:50	23.39	6/19/2022 7:46	140.37
6/20/2022 6:37	50.16	6/20/2022 5:19	80.99	6/19/2022 3:42	24.24	6/19/2022 2:51	23.52	6/19/2022 7:47	139.87
6/20/2022 6:38	50.16	6/20/2022 5:20	80.94	6/19/2022 3:43	23.61	6/19/2022 2:52	23.60	6/19/2022 7:48	139.30
6/20/2022 6:39	50.16	6/20/2022 5:21	80.95	6/19/2022 3:44	23.06	6/19/2022 2:53	23.71	6/19/2022 7:49	138.82
6/20/2022 6:40	50.16	6/20/2022 5:22	80.96	6/19/2022 3:45	22.65	6/19/2022 2:54	23.72	6/19/2022 7:50	138.29
6/20/2022 6:41	50.12	6/20/2022 5:23	80.93	6/19/2022 3:46	22.29	6/19/2022 2:55	23.72	6/19/2022 7:51	137.75
6/20/2022 6:42	50.13	6/20/2022 5:24	80.98	6/19/2022 3:47	22.09	6/19/2022 2:56	23.79	6/19/2022 7:52	137.27
6/20/2022 6:43	50.11	6/20/2022 5:25	81.00	6/19/2022 3:48	21.81	6/19/2022 2:57	23.85	6/19/2022 7:53	136.70
6/20/2022 6:44	50.12	6/20/2022 5:26	80.97	6/19/2022 3:49	21.62	6/19/2022 2:58	23.90	6/19/2022 7:54	136.21

6/20/2022 6:45	50.14	6/20/2022 5:27	80.95	6/19/2022 3:50	21.42	6/19/2022 2:59	24.02	6/19/2022 7:55	135.69
6/20/2022 6:46	50.15	6/20/2022 5:28	80.95	6/19/2022 3:51	21.26	6/19/2022 3:00	24.17	6/19/2022 7:56	135.21
6/20/2022 6:47	50.11	6/20/2022 5:29	80.97	6/19/2022 3:52	21.12	6/19/2022 3:01	24.26	6/19/2022 7:57	134.73
6/20/2022 6:48	50.08	6/20/2022 5:30	80.95	6/19/2022 3:53	21.00	6/19/2022 3:02	24.32	6/19/2022 7:58	134.20
6/20/2022 6:49	50.10	6/20/2022 5:31	80.96	6/19/2022 3:54	20.81	6/19/2022 3:03	24.21	6/19/2022 7:59	133.74
6/20/2022 6:50	50.11	6/20/2022 5:32	80.97	6/19/2022 3:55	20.71	6/19/2022 3:04	24.12	6/19/2022 8:00	133.21
6/20/2022 6:51	50.12	6/20/2022 5:33	80.99	6/19/2022 3:56	20.57	6/19/2022 3:05	24.12	6/19/2022 8:01	132.73
6/20/2022 6:52	50.11	6/20/2022 5:34	81.00	6/19/2022 3:57	20.45	6/19/2022 3:06	24.14	6/19/2022 8:02	132.26
6/20/2022 6:53	50.13	6/20/2022 5:35	81.02	6/19/2022 3:58	20.42	6/19/2022 3:07	24.11	6/19/2022 8:03	131.78
6/20/2022 6:54	50.08	6/20/2022 5:36	80.98	6/19/2022 3:59	20.30	6/19/2022 3:08	24.15	6/19/2022 8:04	131.32
6/20/2022 6:55	50.07	6/20/2022 5:37	80.98	6/19/2022 4:00	20.25	6/19/2022 3:09	24.25	6/19/2022 8:05	130.81
6/20/2022 6:56	50.11	6/20/2022 5:38	80.95	6/19/2022 4:01	20.20	6/19/2022 3:10	24.20	6/19/2022 8:06	130.36
6/20/2022 6:57	50.08	6/20/2022 5:39	80.99	6/19/2022 4:02	20.09	6/19/2022 3:11	24.28	6/19/2022 8:07	129.87
6/20/2022 6:58	50.09	6/20/2022 5:40	80.91	6/19/2022 4:03	19.97	6/19/2022 3:12	24.32	6/19/2022 8:08	129.34
6/20/2022 6:59	50.10	6/20/2022 5:41	81.00	6/19/2022 4:04	19.96	6/19/2022 3:13	24.37	6/19/2022 8:09	128.90
6/20/2022 7:00	50.09	6/20/2022 5:42	80.96	6/19/2022 4:05	19.91	6/19/2022 3:14	24.41	6/19/2022 8:10	128.43
6/20/2022 7:01	50.07	6/20/2022 5:43	80.99	6/19/2022 4:06	19.77	6/19/2022 3:15	24.39	6/19/2022 8:11	127.97
6/20/2022 7:02	50.09	6/20/2022 5:44	80.95	6/19/2022 4:07	19.75	6/19/2022 3:16	24.50	6/19/2022 8:12	127.54
6/20/2022 7:03	50.07	6/20/2022 5:45	80.97	6/19/2022 4:08	19.67	6/19/2022 3:17	24.60	6/19/2022 8:13	127.08
6/20/2022 7:04	50.07	6/20/2022 5:46	80.96	6/19/2022 4:09	19.62	6/19/2022 3:18	24.60	6/19/2022 8:14	126.60
6/20/2022 7:05	50.06	6/20/2022 5:47	80.98	6/19/2022 4:10	19.57	6/19/2022 3:19	24.63	6/19/2022 8:15	126.16
6/20/2022 7:06	50.07	6/20/2022 5:48	80.98	6/19/2022 4:11	19.51	6/19/2022 3:20	24.65	6/19/2022 8:16	125.68
6/20/2022 7:07	50.04	6/20/2022 5:49	80.96	6/19/2022 4:12	19.44	6/19/2022 3:21	24.76	6/19/2022 8:17	125.25
6/20/2022 7:08	50.08	6/20/2022 5:50	80.99	6/19/2022 4:13	19.36	6/19/2022 3:22	24.78	6/19/2022 8:18	124.76
6/20/2022 7:09	50.07	6/20/2022 5:51	80.94	6/19/2022 4:14	19.38	6/19/2022 3:23	24.06	6/19/2022 8:19	124.34
6/20/2022 7:10	50.04	6/20/2022 5:52	80.98	6/19/2022 4:15	19.30	6/19/2022 3:24	23.70	6/19/2022 8:20	123.90
6/20/2022 7:11	50.03	6/20/2022 5:53	81.01	6/19/2022 4:16	19.23	6/19/2022 3:25	23.32	6/19/2022 8:21	123.48
6/20/2022 7:12	50.05	6/20/2022 5:54	80.95	6/19/2022 4:17	19.24	6/19/2022 3:26	23.00	6/19/2022 8:22	128.89
6/20/2022 7:13	50.08	6/20/2022 5:55	80.98	6/19/2022 4:18	19.19	6/19/2022 3:27	22.82	6/19/2022 8:23	128.36
6/20/2022 7:14	50.04	6/20/2022 5:56	80.96	6/19/2022 4:19	19.11	6/19/2022 3:28	22.66	6/19/2022 8:24	127.82
6/20/2022 7:15	50.04	6/20/2022 5:57	80.96	6/19/2022 4:20	19.10	6/19/2022 3:29	22.45	6/19/2022 8:25	127.34
6/20/2022 7:16	50.03	6/20/2022 5:58	80.96	6/19/2022 4:21	19.02	6/19/2022 3:30	22.35	6/19/2022 8:26	126.85
6/20/2022 7:17	50.03	6/20/2022 5:59	80.98	6/19/2022 4:22	19.02	6/19/2022 3:31	22.28	6/19/2022 8:27	126.35
6/20/2022 7:18	50.04	6/20/2022 6:00	81.02	6/19/2022 4:23	19.02	6/19/2022 3:32	22.18	6/19/2022 8:28	125.87
6/20/2022 7:19	50.03	6/20/2022 6:01	80.98	6/19/2022 4:24	18.92	6/19/2022 3:33	22.11	6/19/2022 8:29	125.41
6/20/2022 7:20	50.03	6/20/2022 6:02	80.98	6/19/2022 4:25	18.96	6/19/2022 3:34	22.04	6/19/2022 8:30	124.93
6/20/2022 7:21	50.04	6/20/2022 6:03	80.99	6/19/2022 4:26	18.89	6/19/2022 3:35	21.90	6/19/2022 8:31	124.42
6/20/2022 7:22	50.04	6/20/2022 6:04	80.97	6/19/2022 4:27	18.88	6/19/2022 3:36	21.86	6/19/2022 8:32	123.98
6/20/2022 7:23	52.20	6/20/2022 6:05	80.98	6/19/2022 4:28	18.82	6/19/2022 3:37	21.84	6/19/2022 8:33	123.56
6/20/2022 7:24	53.92	6/20/2022 6:06	80.97	6/19/2022 4:29	18.82	6/19/2022 3:38	21.81	6/19/2022 8:34	123.05
6/20/2022 7:25	54.84	6/20/2022 6:07	80.96	6/19/2022 4:30	18.74	6/19/2022 3:39	21.76	6/19/2022 8:35	122.65
6/20/2022 7:26	55.39	6/20/2022 6:08	80.95	6/19/2022 4:31	18.74	6/19/2022 3:40	21.78	6/19/2022 8:36	122.19
6/20/2022 7:27	55.85	6/20/2022 6:09	80.95	6/19/2022 4:32	18.71	6/19/2022 3:41	21.66	6/19/2022 8:37	121.78
6/20/2022 7:28	56.14	6/20/2022 6:10	80.94	6/19/2022 4:33	18.71	6/19/2022 3:42	21.66	6/19/2022 8:38	121.35
6/20/2022 7:29	56.40	6/20/2022 6:11	80.98	6/19/2022 4:34	18.64	6/19/2022 3:43	20.88	6/19/2022 8:39	120.93
6/20/2022 7:30	56.62	6/20/2022 6:12	80.95	6/19/2022 4:35	18.62	6/19/2022 3:44	20.29	6/19/2022 8:40	120.49
6/20/2022 7:31	54.80	6/20/2022 6:13	80.93	6/19/2022 4:36	18.58	6/19/2022 3:45	19.91	6/19/2022 8:41	120.06
6/20/2022 7:32	53.37	6/20/2022 6:14	80.95	6/19/2022 4:37	18.62	6/19/2022 3:46	19.55	6/19/2022 8:42	119.68
6/20/2022 7:33	52.75	6/20/2022 6:15	80.93	6/19/2022 4:38	18.51	6/19/2022 3:47	19.30	6/19/2022 8:43	119.26
6/20/2022 7:34	52.37	6/20/2022 6:16	80.95	6/19/2022 4:39	18.49	6/19/2022 3:48	19.10	6/19/2022 8:44	118.81
6/20/2022 7:35	52.12	6/20/2022 6:17	80.94	6/19/2022 4:40	18.55	6/19/2022 3:49	18.94	6/19/2022 8:45	118.45
6/20/2022 7:36	51.95	6/20/2022 6:18	80.95	6/19/2022 4:41	18.47	6/19/2022 3:50	19.12	6/19/2022 8:46	118.02
6/20/2022 7:37	51.82	6/20/2022 6:19	80.95	6/19/2022 4:42	18.38	6/19/2022 3:51	19.21	6/19/2022 8:47	117.65
6/20/2022 7:38	51.69	6/20/2022 6:20	80.97	6/19/2022 4:43	18.41	6/19/2022 3:52	19.25	6/19/2022 8:48	117.25
6/20/2022 7:39	51.62	6/20/2022 6:21	80.97	6/19/2022 4:44	18.34	6/19/2022 3:53	19.27	6/19/2022 8:49	116.87
6/20/2022 7:40	51.57	6/20/2022 6:22	80.93	6/19/2022 4:45	18.31	6/19/2022 3:54	19.27	6/19/2022 8:50	116.47
6/20/2022 7:41	51.48	6/20/2022 6:23	80.93	6/19/2022 4:46	18.35	6/19/2022 3:55	19.20	6/19/2022 8:51	116.11
6/20/2022 7:42	51.44	6/20/2022 6:24	80.97	6/19/2022 4:47	18.33	6/19/2022 3:56	19.17	6/19/2022 8:52	115.76
6/20/2022 7:43	51.35	6/20/2022 6:25	80.98	6/19/2022 4:48	18.33	6/19/2022 3:57	19.05	6/19/2022 8:53	115.40
6/20/2022 7:44	51.36	6/20/2022 6:26	80.96	6/19/2022 4:49	18.25	6/19/2022 3:58	18.50	6/19/2022 8:54	115.02
6/20/2022 7:45	51.26	6/20/2022 6:27	80.95	6/19/2022 4:50	18.27	6/19/2022 3:59	18.24	6/19/2022 8:55	114.62
6/20/2022 7:46	51.22	6/20/2022 6:28	80.95	6/19/2022 4:51	18.20	6/19/2022 4:00	18.02	6/19/2022 8:56	114.26
6/20/2022 7:47	51.22	6/20/2022 6:29	80.97	6/19/2022 4:52	18.18	6/19/2022 4:01	17.77	6/19/2022 8:57	113.91
6/20/2022 7:48	51.16	6/20/2022 6:30	80.97	6/19/2022 4:53	18.22	6/19/2022 4:02	17.63	6/19/2022 8:58	113.56
6/20/2022 7:49	51.13	6/20/2022 6:31	81.01	6/19/2022 4:54	18.21	6/19/2022 4:03	17.47	6/19/2022 8:59	113.19
6/20/2022 7:50	51.10	6/20/2022 6:32	80.97	6/19/2022 4:55	18.17	6/19/2022 4:04	17.30	6/19/2022 9:00	112.85
6/20/2022 7:51	51.06	6/20/2022 6:33	80.95	6/19/2022 4:56	18.14	6/19/2022 4:05	17.19	6/19/2022 9:01	112.50
6/20/2022 7:52	51.04	6/20/2022 6:34	80.97	6/19/2022 4:57	18.16	6/19/2022 4:06	16.96	6/19/2022 9:02	112.17
6/20/2022 7:53	51.02	6/20/2022 6:35	80.96	6/19/2022 4:58	18.13	6/19/2022 4:07	16.88	6/19/2022 9:03	111.81
6/20/2022 7:54	51.00	6/20/2022 6:36	80.99	6/19/2022 4:59	18.14	6/19/2022 4:08	16.72	6/19/2022 9:04	116.75
6/20/2022 7:55	50.95	6/20/2022 6:37	80.96	6/19/2022 5:00	18.07	6/19/2022 4:09	16.66	6/19/2022 9:05	116.55
6/20/2022 7:56	50.92	6/20/2022 6:38	80.97	6/19/2022 5:01	18.06	6/19/2022 4:10	16.53	6/19/2022 9:06	116.11
6/20/2022 7:57	50.88	6/20/2022 6:39	80.95	6/19/2022 5:02	18.07	6/19/2022 4:11	16.45	6/19/2022 9:07	115.65
6/20/2022 7:58	50.88	6/20/2022 6:40	80.94	6/19/2022 5:03	18.03	6/19/2022 4:12	16.35	6/19/2022 9:08	115.27
6/20/2022 7:59	50.89	6/20/2022 6:41	80.97	6/19/2022 5:04	17.95	6/19/2022 4:13	16.18	6/19/2022 9:09	114.89
6/20/2022 8:00	50.83	6/20/2022 6:42	80.96	6/19/2022 5:05	17.96	6/19/2022 4:14	16.07	6/19/2022 9:10	114.48
6/20/2022 8:01	50.85	6/20/2022 6:43	80.98	6/19/2022 5:06	17.95	6/19/2022 4:15	16.06	6/19/2022 9:11	114.09
6/20/2022 8:02	50.84	6/20/2022 6:44	80.95	6/19/2022 5:07	17.95	6/19/2022 4:16	15.96	6/19/2022 9:12	113.72
6/20/2022 8:03	50.81	6/20/2022 6:45	80.98	6/19/2022 5:08	17.92	6/19/2022 4:17	15.84	6/19/2022 9:13	113.33
6/20/2022 8:04	50.81	6/20/2022 6:46	80.97	6/19/2022 5:09	17.95	6/19/2022 4:18	15.69	6/19/2022 9:14	112.97
6/20/2022 8:05	50.80	6/20/2022 6:47	80.90	6/19/2022 5:10	17.89	6/19/2022 4:19	15.65	6/19/2022 9:15	112.62
6/20/2022 8:06	50.75	6/20/2022 6:48	80.97	6/19/2022 5:11	17.90	6/19/2022 4:20	15.57	6/19/2022 9:16	112.27
6/20/2022 8:07	50.75	6/20/2022 6:49	80.97	6/19/2022 5:12	17.89	6/19/2022 4:21	15.50	6/19/2022 9:17	111.90
6/20/2022 8:08	50.73	6/20/2022 6:50	80.94	6/19/2022 5:13	17.89	6/19/2022 4:22	15.46	6/19/2022 9:18	111.55
6/20/2022 8:09	50.74	6/20/2022 6:51	80.95	6/19/2022 5:14	17.85	6/19/2022 4:23	15.36	6/19/2022 9:19	111.19
6/20/2022 8:10	50.72	6/20/2022 6:52	80.95	6/19/2022 5:15	17.87	6/19/2022 4:24	15.20	6/19/2022 9:20	110.86
6/20/2022 8:11	50.70	6/20/2022 6:53	80.96	6/19/2022 5:16	17.81	6/19/2022 4:25	15.17	6/19/2022 9:21	110.50
6/20/2022 8:12	50.65	6/20/2022 6:54	80.98	6/19/2022 5:17	17.84	6/19/2022 4:26	15.05	6/19/2022 9:22	110.16

6/20/2022 8:13	50.68	6/20/2022 6:55	80.93	6/19/2022 5:18	17.79	6/19/2022 4:27	15.01	6/19/2022 9:23	109.87
6/20/2022 8:14	50.65	6/20/2022 6:56	80.95	6/19/2022 5:19	17.79	6/19/2022 4:28	14.88	6/19/2022 9:24	109.55
6/20/2022 8:15	50.66	6/20/2022 6:57	80.99	6/19/2022 5:20	17.80	6/19/2022 4:29	14.81	6/19/2022 9:25	109.22
6/20/2022 8:16	50.63	6/20/2022 6:58	80.97	6/19/2022 5:21	17.76	6/19/2022 4:30	14.78	6/19/2022 9:26	108.90
6/20/2022 8:17	50.64	6/20/2022 6:59	80.96	6/19/2022 5:22	17.74	6/19/2022 4:31	14.68	6/19/2022 9:27	108.60
6/20/2022 8:18	50.61	6/20/2022 7:00	80.94	6/19/2022 5:23	17.71	6/19/2022 4:32	14.58	6/19/2022 9:28	108.27
6/20/2022 8:19	50.62	6/20/2022 7:01	81.01	6/19/2022 5:24	17.72	6/19/2022 4:33	14.56	6/19/2022 9:29	108.00
6/20/2022 8:20	50.60	6/20/2022 7:02	80.96	6/19/2022 5:25	17.73	6/19/2022 4:34	14.47	6/19/2022 9:30	107.65
6/20/2022 8:21	50.62	6/20/2022 7:03	80.94	6/19/2022 5:26	17.73	6/19/2022 4:35	14.38	6/19/2022 9:31	107.39
6/20/2022 8:22	50.58	6/20/2022 7:04	80.91	6/19/2022 5:27	17.73	6/19/2022 4:36	14.30	6/19/2022 9:32	107.08
6/20/2022 8:23	50.58	6/20/2022 7:05	80.91	6/19/2022 5:28	17.66	6/19/2022 4:37	14.26	6/19/2022 9:33	106.77
6/20/2022 8:24	50.58	6/20/2022 7:06	80.99	6/19/2022 5:29	17.67	6/19/2022 4:38	14.23	6/19/2022 9:34	106.48
6/20/2022 8:25	50.53	6/20/2022 7:07	80.97	6/19/2022 5:30	17.63	6/19/2022 4:39	14.09	6/19/2022 9:35	106.17
6/20/2022 8:26	50.54	6/20/2022 7:08	80.95	6/19/2022 5:31	17.65	6/19/2022 4:40	14.02	6/19/2022 9:36	105.87
6/20/2022 8:27	50.57	6/20/2022 7:09	80.96	6/19/2022 5:32	17.58	6/19/2022 4:41	13.97	6/19/2022 9:37	105.62
6/20/2022 8:28	50.52	6/20/2022 7:10	80.99	6/19/2022 5:33	17.62	6/19/2022 4:42	13.88	6/19/2022 9:38	109.89
6/20/2022 8:29	50.55	6/20/2022 7:11	80.96	6/19/2022 5:34	17.62	6/19/2022 4:43	13.85	6/19/2022 9:39	111.18
6/20/2022 8:30	50.52	6/20/2022 7:12	80.95	6/19/2022 5:35	17.60	6/19/2022 4:44	13.86	6/19/2022 9:40	110.75
6/20/2022 8:31	50.52	6/20/2022 7:13	80.95	6/19/2022 5:36	17.57	6/19/2022 4:45	13.71	6/19/2022 9:41	110.36
6/20/2022 8:32	50.53	6/20/2022 7:14	80.98	6/19/2022 5:37	17.53	6/19/2022 4:46	13.68	6/19/2022 9:42	110.03
6/20/2022 8:33	50.53	6/20/2022 7:15	80.95	6/19/2022 5:38	17.57	6/19/2022 4:47	13.61	6/19/2022 9:43	109.65
6/20/2022 8:34	50.51	6/20/2022 7:16	80.95	6/19/2022 5:39	17.57	6/19/2022 4:48	13.53	6/19/2022 9:44	109.28
6/20/2022 8:35	50.49	6/20/2022 7:17	80.97	6/19/2022 5:40	17.54	6/19/2022 4:49	13.53	6/19/2022 9:45	108.94
6/20/2022 8:36	50.49	6/20/2022 7:18	80.95	6/19/2022 5:41	17.58	6/19/2022 4:50	13.40	6/19/2022 9:46	108.62
6/20/2022 8:37	50.45	6/20/2022 7:19	80.94	6/19/2022 5:42	17.51	6/19/2022 4:51	13.36	6/19/2022 9:47	108.28
6/20/2022 8:38	50.48	6/20/2022 7:20	80.96	6/19/2022 5:43	17.53	6/19/2022 4:52	13.27	6/19/2022 9:48	107.97
6/20/2022 8:39	50.46	6/20/2022 7:21	80.94	6/19/2022 5:44	17.51	6/19/2022 4:53	13.25	6/19/2022 9:49	107.59
6/20/2022 8:40	50.46	6/20/2022 7:22	80.96	6/19/2022 5:45	17.49	6/19/2022 4:54	13.20	6/19/2022 9:50	107.29
6/20/2022 8:41	50.47	6/20/2022 7:23	80.95	6/19/2022 5:46	17.48	6/19/2022 4:55	13.19	6/19/2022 9:51	106.96
6/20/2022 8:42	50.47	6/20/2022 7:24	80.97	6/19/2022 5:47	17.51	6/19/2022 4:56	13.11	6/19/2022 9:52	106.67
6/20/2022 8:43	50.47	6/20/2022 7:25	81.00	6/19/2022 5:48	17.47	6/19/2022 4:57	12.97	6/19/2022 9:53	106.37
6/20/2022 8:44	50.43	6/20/2022 7:26	80.96	6/19/2022 5:49	17.44	6/19/2022 4:58	12.94	6/19/2022 9:54	106.07
6/20/2022 8:45	50.41	6/20/2022 7:27	80.95	6/19/2022 5:50	17.46	6/19/2022 4:59	12.91	6/19/2022 9:55	105.77
6/20/2022 8:46	50.42	6/20/2022 7:28	80.95	6/19/2022 5:51	17.46	6/19/2022 5:00	12.85	6/19/2022 9:56	105.44
6/20/2022 8:47	50.44	6/20/2022 7:29	80.97	6/19/2022 5:52	17.43	6/19/2022 5:01	12.79	6/19/2022 9:57	105.16
6/20/2022 8:48	50.37	6/20/2022 7:30	80.96	6/19/2022 5:53	17.44	6/19/2022 5:02	12.71	6/19/2022 9:58	104.90
6/20/2022 8:49	50.36	6/20/2022 7:31	80.93	6/19/2022 5:54	17.39	6/19/2022 5:03	12.70	6/19/2022 9:59	104.60
6/20/2022 8:50	50.44	6/20/2022 7:32	80.95	6/19/2022 5:55	17.41	6/19/2022 5:04	12.62	6/19/2022 10:00	104.34
6/20/2022 8:51	50.44	6/20/2022 7:33	80.95	6/19/2022 5:56	17.36	6/19/2022 5:05	12.64	6/19/2022 10:01	104.08
6/20/2022 8:52	50.40	6/20/2022 7:34	80.93	6/19/2022 5:57	17.40	6/19/2022 5:06	12.50	6/19/2022 10:02	103.82
6/20/2022 8:53	50.42	6/20/2022 7:35	81.00	6/19/2022 5:58	17.35	6/19/2022 5:07	12.49	6/19/2022 10:03	103.51
6/20/2022 8:54	50.41	6/20/2022 7:36	80.97	6/19/2022 5:59	17.33	6/19/2022 5:08	12.40	6/19/2022 10:04	103.27
6/20/2022 8:55	50.39	6/20/2022 7:37	80.94	6/19/2022 6:00	17.38	6/19/2022 5:09	12.37	6/19/2022 10:05	102.98
6/20/2022 8:56	50.39	6/20/2022 7:38	80.98	6/19/2022 6:01	17.36	6/19/2022 5:10	12.31	6/19/2022 10:06	102.69
6/20/2022 8:57	50.38	6/20/2022 7:39	81.01	6/19/2022 6:02	17.33	6/19/2022 5:11	12.30	6/19/2022 10:07	102.45
6/20/2022 8:58	50.40	6/20/2022 7:40	81.00	6/19/2022 6:03	17.36	6/19/2022 5:12	12.21	6/19/2022 10:08	102.17
6/20/2022 8:59	50.37	6/20/2022 7:41	80.95	6/19/2022 6:04	17.33	6/19/2022 5:13	12.21	6/19/2022 10:09	101.93
6/20/2022 9:00	50.34	6/20/2022 7:42	80.93	6/19/2022 6:05	17.38	6/19/2022 5:14	12.15	6/19/2022 10:10	101.68
6/20/2022 9:01	50.36	6/20/2022 7:43	80.96	6/19/2022 6:06	17.30	6/19/2022 5:15	12.08	6/19/2022 10:11	104.27
6/20/2022 9:02	50.36	6/20/2022 7:44	80.99	6/19/2022 6:07	17.32	6/19/2022 5:16	12.05	6/19/2022 10:12	106.95
6/20/2022 9:03	50.37	6/20/2022 7:45	80.96	6/19/2022 6:08	17.28	6/19/2022 5:17	11.97	6/19/2022 10:13	106.59
6/20/2022 9:04	50.34	6/20/2022 7:46	80.94	6/19/2022 6:09	17.25	6/19/2022 5:18	11.93	6/19/2022 10:14	106.23
6/20/2022 9:05	50.28	6/20/2022 7:47	80.99	6/19/2022 6:10	17.27	6/19/2022 5:19	11.92	6/19/2022 10:15	105.92
6/20/2022 9:06	50.34	6/20/2022 7:48	80.97	6/19/2022 6:11	17.23	6/19/2022 5:20	11.91	6/19/2022 10:16	105.57
6/20/2022 9:07	50.31	6/20/2022 7:49	80.96	6/19/2022 6:12	17.25	6/19/2022 5:21	11.85	6/19/2022 10:17	105.24
6/20/2022 9:08	50.31	6/20/2022 7:50	80.94	6/19/2022 6:13	17.28	6/19/2022 5:22	11.76	6/19/2022 10:18	104.94
6/20/2022 9:09	50.33	6/20/2022 7:51	80.94	6/19/2022 6:14	17.27	6/19/2022 5:23	11.66	6/19/2022 10:19	104.62
6/20/2022 9:10	50.29	6/20/2022 7:52	80.96	6/19/2022 6:15	17.26	6/19/2022 5:24	11.67	6/19/2022 10:20	104.34
6/20/2022 9:11	50.31	6/20/2022 7:53	80.97	6/19/2022 6:16	17.25	6/19/2022 5:25	11.62	6/19/2022 10:21	104.04
6/20/2022 9:12	50.27	6/20/2022 7:54	80.94	6/19/2022 6:17	17.26	6/19/2022 5:26	11.63	6/19/2022 10:22	103.78
6/20/2022 9:13	50.28	6/20/2022 7:55	80.97	6/19/2022 6:18	17.26	6/19/2022 5:27	11.53	6/19/2022 10:23	103.47
6/20/2022 9:14	50.25	6/20/2022 7:56	80.97	6/19/2022 6:19	17.25	6/19/2022 5:28	11.50	6/19/2022 10:24	103.20
6/20/2022 9:15	50.30	6/20/2022 7:57	80.96	6/19/2022 6:20	17.22	6/19/2022 5:29	11.47	6/19/2022 10:25	102.93
6/20/2022 9:16	50.30	6/20/2022 7:58	80.98	6/19/2022 6:21	17.21	6/19/2022 5:30	11.46	6/19/2022 10:26	103.64
6/20/2022 9:17	50.27	6/20/2022 7:59	80.97	6/19/2022 6:22	17.15	6/19/2022 5:31	11.39	6/19/2022 10:27	108.15
6/20/2022 9:18	50.27	6/20/2022 8:00	80.94	6/19/2022 6:23	17.22	6/19/2022 5:32	11.30	6/19/2022 10:28	107.68
6/20/2022 9:19	50.27	6/20/2022 8:01	80.97	6/19/2022 6:24	17.18	6/19/2022 5:33	11.29	6/19/2022 10:29	107.32
6/20/2022 9:20	50.25	6/20/2022 8:02	80.97	6/19/2022 6:25	17.24	6/19/2022 5:34	11.23	6/19/2022 10:30	106.94
6/20/2022 9:21	50.31	6/20/2022 8:03	80.95	6/19/2022 6:26	17.20	6/19/2022 5:35	11.22	6/19/2022 10:31	106.59
6/20/2022 9:22	50.24	6/20/2022 8:04	80.94	6/19/2022 6:27	17.16	6/19/2022 5:36	11.24	6/19/2022 10:32	106.27
6/20/2022 9:23	50.25	6/20/2022 8:05	80.98	6/19/2022 6:28	17.18	6/19/2022 5:37	11.13	6/19/2022 10:33	105.91
6/20/2022 9:24	50.26	6/20/2022 8:06	80.96	6/19/2022 6:29	17.13	6/19/2022 5:38	11.04	6/19/2022 10:34	105.58
6/20/2022 9:25	50.28	6/20/2022 8:07	80.98	6/19/2022 6:30	17.19	6/19/2022 5:39	11.03	6/19/2022 10:35	105.24
6/20/2022 9:26	50.21	6/20/2022 8:08	80.94	6/19/2022 6:31	17.18	6/19/2022 5:40	10.99	6/19/2022 10:36	104.94
6/20/2022 9:27	50.24	6/20/2022 8:09	80.98	6/19/2022 6:32	17.13	6/19/2022 5:41	11.03	6/19/2022 10:37	104.64
6/20/2022 9:28	50.24	6/20/2022 8:10	80.93	6/19/2022 6:33	17.21	6/19/2022 5:42	10.93	6/19/2022 10:38	104.37
6/20/2022 9:29	50.23	6/20/2022 8:11	80.97	6/19/2022 6:34	17.13	6/19/2022 5:43	10.93	6/19/2022 10:39	104.07
6/20/2022 9:30	50.24	6/20/2022 8:12	80.93	6/19/2022 6:35	17.15	6/19/2022 5:44	10.86	6/19/2022 10:40	103.80
6/20/2022 9:31	50.20	6/20/2022 8:13	80.95	6/19/2022 6:36	17.11	6/19/2022 5:45	10.83	6/19/2022 10:41	103.49
6/20/2022 9:32	50.25	6/20/2022 8:14	80.98	6/19/2022 6:37	17.12	6/19/2022 5:46	10.80	6/19/2022 10:42	103.19
6/20/2022 9:33	50.16	6/20/2022 8:15	80.99	6/19/2022 6:38	17.13	6/19/2022 5:47	10.74	6/19/2022 10:43	102.92
6/20/2022 9:34	50.20	6/20/2022 8:16	80.96	6/19/2022 6:39	17.06	6/19/2022 5:48	10.71	6/19/2022 10:44	102.58
6/20/2022 9:35	50.17	6/20/2022 8:17	80.99	6/19/2022 6:40	17.08	6/19/2022 5:49	10.70	6/19/2022 10:45	102.34
6/20/2022 9:36	50.22	6/20/2022 8:18	80.97	6/19/2022 6:41	17.06	6/19/2022 5:50	10.65	6/19/2022 10:46	102.06
6/20/2022 9:37	50.20	6/20/2022 8:19	80.95	6/19/2022 6:42	17.08	6/19/2022 5:51	10.66	6/19/2022 10:47	101.76
6/20/2022 9:38	50.20	6/20/2022 8:20	80.95	6/19/2022 6:43	17.11	6/19/2022 5:52	10.56	6/19/2022 10:48	101.46
6/20/2022 9:39	50.20	6/20/2022 8:21	80.94	6/19/2022 6:44	17.07	6/19/2022 5:53	10.52	6/19/2022 10:49	101.21
6/20/2022 9:40	50.21	6/20/2022 8:22	80.98	6/19/2022 6:45	17.12	6/19/2022 5:54	10.49	6/19/2022 10:50	100.96

6/20/2022 9:41	50.18	6/20/2022 8:23	80.94	6/19/2022 6:46	17.08	6/19/2022 5:55	10.43	6/19/2022 10:51	100.70
6/20/2022 9:42	50.20	6/20/2022 8:24	80.94	6/19/2022 6:47	17.07	6/19/2022 5:56	10.48	6/19/2022 10:52	100.44
6/20/2022 9:43	50.21	6/20/2022 8:25	80.91	6/19/2022 6:48	17.08	6/19/2022 5:57	10.36	6/19/2022 10:53	100.20
6/20/2022 9:44	50.24	6/20/2022 8:26	80.99	6/19/2022 6:49	17.03	6/19/2022 5:58	10.33	6/19/2022 10:54	99.95
6/20/2022 9:45	50.20	6/20/2022 8:27	80.94	6/19/2022 6:50	17.10	6/19/2022 5:59	10.34	6/19/2022 10:55	99.68
6/20/2022 9:46	50.16	6/20/2022 8:28	80.97	6/19/2022 6:51	17.03	6/19/2022 6:00	10.33	6/19/2022 10:56	99.46
6/20/2022 9:47	50.21	6/20/2022 8:29	80.94	6/19/2022 6:52	17.06	6/19/2022 6:01	10.23	6/19/2022 10:57	99.23
6/20/2022 9:48	50.17	6/20/2022 8:30	80.93	6/19/2022 6:53	17.06	6/19/2022 6:02	10.17	6/19/2022 10:58	98.99
6/20/2022 9:49	50.15	6/20/2022 8:31	81.02	6/19/2022 6:54	17.01	6/19/2022 6:03	10.16	6/19/2022 10:59	98.71
6/20/2022 9:50	50.17	6/20/2022 8:32	81.00	6/19/2022 6:55	17.04	6/19/2022 6:04	10.18	6/19/2022 11:00	98.49
6/20/2022 9:51	50.19	6/20/2022 8:33	80.97	6/19/2022 6:56	17.03	6/19/2022 6:05	10.15	6/19/2022 11:01	98.24
6/20/2022 9:52	50.13	6/20/2022 8:34	80.95	6/19/2022 6:57	17.05	6/19/2022 6:06	10.08	6/19/2022 11:02	98.01
6/20/2022 9:53	50.14	6/20/2022 8:35	80.97	6/19/2022 6:58	17.04	6/19/2022 6:07	10.05	6/19/2022 11:03	97.77
6/20/2022 9:54	50.15	6/20/2022 8:36	80.97	6/19/2022 6:59	16.98	6/19/2022 6:08	10.08	6/19/2022 11:04	97.55
6/20/2022 9:55	50.15	6/20/2022 8:37	80.96	6/19/2022 7:00	17.00	6/19/2022 6:09	10.06	6/19/2022 11:05	97.30
6/20/2022 9:56	50.15	6/20/2022 8:38	80.97	6/19/2022 7:01	16.98	6/19/2022 6:10	9.97	6/19/2022 11:06	97.10
6/20/2022 9:57	50.16	6/20/2022 8:39	80.95	6/19/2022 7:02	17.03	6/19/2022 6:11	9.93	6/19/2022 11:07	96.86
6/20/2022 9:58	50.13	6/20/2022 8:40	80.95	6/19/2022 7:03	17.01	6/19/2022 6:12	9.91	6/19/2022 11:08	96.64
6/20/2022 9:59	50.19	6/20/2022 8:41	81.00	6/19/2022 7:04	17.00	6/19/2022 6:13	9.94	6/19/2022 11:09	96.45
6/20/2022 10:00	50.13	6/20/2022 8:42	80.98	6/19/2022 7:05	17.01	6/19/2022 6:14	9.84	6/19/2022 11:10	96.21
6/20/2022 10:01	50.16	6/20/2022 8:43	80.96	6/19/2022 7:06	17.00	6/19/2022 6:15	9.78	6/19/2022 11:11	96.00
6/20/2022 10:02	50.17	6/20/2022 8:44	80.95	6/19/2022 7:07	17.01	6/19/2022 6:16	9.78	6/19/2022 11:12	95.80
6/20/2022 10:03	50.16	6/20/2022 8:45	80.98	6/19/2022 7:08	16.98	6/19/2022 6:17	9.79	6/19/2022 11:13	95.57
6/20/2022 10:04	50.16	6/20/2022 8:46	80.98	6/19/2022 7:09	16.96	6/19/2022 6:18	9.78	6/19/2022 11:14	95.38
6/20/2022 10:05	50.15	6/20/2022 8:47	81.00	6/19/2022 7:10	16.99	6/19/2022 6:19	9.68	6/19/2022 11:15	95.20
6/20/2022 10:06	50.15	6/20/2022 8:48	80.98	6/19/2022 7:11	16.98	6/19/2022 6:20	9.62	6/19/2022 11:16	95.00
6/20/2022 10:07	50.13	6/20/2022 8:49	81.01	6/19/2022 7:12	16.98	6/19/2022 6:21	9.59	6/19/2022 11:17	94.79
6/20/2022 10:08	50.11	6/20/2022 8:50	80.99	6/19/2022 7:13	16.99	6/19/2022 6:22	9.60	6/19/2022 11:18	94.60
6/20/2022 10:09	50.11	6/20/2022 8:51	80.95	6/19/2022 7:14	16.95	6/19/2022 6:23	9.62	6/19/2022 11:19	94.42
6/20/2022 10:10	50.10	6/20/2022 8:52	80.96	6/19/2022 7:15	16.93	6/19/2022 6:24	9.49	6/19/2022 11:20	94.25
6/20/2022 10:11	50.12	6/20/2022 8:53	80.97	6/19/2022 7:16	16.98	6/19/2022 6:25	9.49	6/19/2022 11:21	94.08
6/20/2022 10:12	50.12	6/20/2022 8:54	80.95	6/19/2022 7:17	16.95	6/19/2022 6:26	9.49	6/19/2022 11:22	93.87
6/20/2022 10:13	50.11	6/20/2022 8:55	80.95	6/19/2022 7:18	16.95	6/19/2022 6:27	9.48	6/19/2022 11:23	93.74
6/20/2022 10:14	50.09	6/20/2022 8:56	80.94	6/19/2022 7:19	16.94	6/19/2022 6:28	9.40	6/19/2022 11:24	93.58
6/20/2022 10:15	50.12	6/20/2022 8:57	80.96	6/19/2022 7:20	16.94	6/19/2022 6:29	9.43	6/19/2022 11:25	93.40
6/20/2022 10:16	50.10	6/20/2022 8:58	80.98	6/19/2022 7:21	16.93	6/19/2022 6:30	9.34	6/19/2022 11:26	93.23
6/20/2022 10:17	50.11	6/20/2022 8:59	80.95	6/19/2022 7:22	16.93	6/19/2022 6:31	9.34	6/19/2022 11:27	93.04
6/20/2022 10:18	50.10	6/20/2022 9:00	80.94	6/19/2022 7:23	16.94	6/19/2022 6:32	9.38	6/19/2022 11:28	92.83
6/20/2022 10:19	50.09	6/20/2022 9:01	80.95	6/19/2022 7:24	16.96	6/19/2022 6:33	9.45	6/19/2022 11:29	92.67
6/20/2022 10:20	50.07	6/20/2022 9:02	80.94	6/19/2022 7:25	16.90	6/19/2022 6:34	9.36	6/19/2022 11:30	92.49
6/20/2022 10:21	50.10	6/20/2022 9:03	80.98	6/19/2022 7:26	16.93	6/19/2022 6:35	9.30	6/19/2022 11:31	92.29
6/20/2022 10:22	50.10	6/20/2022 9:04	80.93	6/19/2022 7:27	16.90	6/19/2022 6:36	9.71	6/19/2022 11:32	92.10
6/20/2022 10:23	50.09	6/20/2022 9:05	80.96	6/19/2022 7:28	16.89	6/19/2022 6:37	9.36	6/19/2022 11:33	91.96
6/20/2022 10:24	50.11	6/20/2022 9:06	80.95	6/19/2022 7:29	16.88	6/19/2022 6:38	9.26	6/19/2022 11:34	91.82
6/20/2022 10:25	50.06	6/20/2022 9:07	80.98	6/19/2022 7:30	16.91	6/19/2022 6:39	9.22	6/19/2022 11:35	91.67
6/20/2022 10:26	50.08	6/20/2022 9:08	80.96	6/19/2022 7:31	16.92	6/19/2022 6:40	9.17	6/19/2022 11:36	91.52
6/20/2022 10:27	50.10	6/20/2022 9:09	80.98	6/19/2022 7:32	16.90	6/19/2022 6:41	9.15	6/19/2022 11:37	91.38
6/20/2022 10:28	50.10	6/20/2022 9:10	80.95	6/19/2022 7:33	16.88	6/19/2022 6:42	9.08	6/19/2022 11:38	91.26
6/20/2022 10:29	50.09	6/20/2022 9:11	80.97	6/19/2022 7:34	16.90	6/19/2022 6:43	9.05	6/19/2022 11:39	91.11
6/20/2022 10:30	50.09	6/20/2022 9:12	81.00	6/19/2022 7:35	16.88	6/19/2022 6:44	9.05	6/19/2022 11:40	90.93
6/20/2022 10:31	50.07	6/20/2022 9:13	80.97	6/19/2022 7:36	16.90	6/19/2022 6:45	9.07	6/19/2022 11:41	90.77
6/20/2022 10:32	50.10	6/20/2022 9:14	80.93	6/19/2022 7:37	16.87	6/19/2022 6:46	8.99	6/19/2022 11:42	90.61
6/20/2022 10:33	50.09	6/20/2022 9:15	80.97	6/19/2022 7:38	16.84	6/19/2022 6:47	8.97	6/19/2022 11:43	90.51
6/20/2022 10:34	50.11	6/20/2022 9:16	80.92	6/19/2022 7:39	16.89	6/19/2022 6:48	8.95	6/19/2022 11:44	90.32
6/20/2022 10:35	50.07	6/20/2022 9:17	80.96	6/19/2022 7:40	16.84	6/19/2022 6:49	8.94	6/19/2022 11:45	90.18
6/20/2022 10:36	50.09	6/20/2022 9:18	80.96	6/19/2022 7:41	16.85	6/19/2022 6:50	8.92	6/19/2022 11:46	90.07
6/20/2022 10:37	50.07	6/20/2022 9:19	80.93	6/19/2022 7:42	16.86	6/19/2022 6:51	8.83	6/19/2022 11:47	89.90
6/20/2022 10:38	50.06	6/20/2022 9:20	80.93	6/19/2022 7:43	16.87	6/19/2022 6:52	8.82	6/19/2022 11:48	89.77
6/20/2022 10:39	50.06	6/20/2022 9:21	81.00	6/19/2022 7:44	16.86	6/19/2022 6:53	8.80	6/19/2022 11:49	89.60
6/20/2022 10:40	50.05	6/20/2022 9:22	80.94	6/19/2022 7:45	16.84	6/19/2022 6:54	8.75	6/19/2022 11:50	89.45
6/20/2022 10:41	52.22	6/20/2022 9:23	81.00	6/19/2022 7:46	16.87	6/19/2022 6:55	8.80	6/19/2022 11:51	89.28
6/20/2022 10:42	53.96	6/20/2022 9:24	80.99	6/19/2022 7:47	16.91	6/19/2022 6:56	8.70	6/19/2022 11:52	89.19
6/20/2022 10:43	54.82	6/20/2022 9:25	80.94	6/19/2022 7:48	16.84	6/19/2022 6:57	8.67	6/19/2022 11:53	89.02
6/20/2022 10:44	55.32	6/20/2022 9:26	81.01	6/19/2022 7:49	16.84	6/19/2022 6:58	8.65	6/19/2022 11:54	88.91
6/20/2022 10:45	54.37	6/20/2022 9:27	80.99	6/19/2022 7:50	16.86	6/19/2022 6:59	8.65	6/19/2022 11:55	88.77
6/20/2022 10:46	52.63	6/20/2022 9:28	80.97	6/19/2022 7:51	16.86	6/19/2022 7:00	8.67	6/19/2022 11:56	88.63
6/20/2022 10:47	51.97	6/20/2022 9:29	80.97	6/19/2022 7:52	16.87	6/19/2022 7:01	8.61	6/19/2022 11:57	88.48
6/20/2022 10:48	51.58	6/20/2022 9:30	80.96	6/19/2022 7:53	16.85	6/19/2022 7:02	8.57	6/19/2022 11:58	88.35
6/20/2022 10:49	51.42	6/20/2022 9:31	80.99	6/19/2022 7:54	16.79	6/19/2022 7:03	8.56	6/19/2022 11:59	88.22
6/20/2022 10:50	51.30	6/20/2022 9:32	80.95	6/19/2022 7:55	16.86	6/19/2022 7:04	8.53	6/19/2022 12:00	88.10
6/20/2022 10:51	51.16	6/20/2022 9:33	80.95	6/19/2022 7:56	16.82	6/19/2022 7:05	8.53	6/19/2022 12:01	87.94
6/20/2022 10:52	51.06	6/20/2022 9:34	80.98	6/19/2022 7:57	16.80	6/19/2022 7:06	8.49	6/19/2022 12:02	87.84
6/20/2022 10:53	51.06	6/20/2022 9:35	80.96	6/19/2022 7:58	16.82	6/19/2022 7:07	8.44	6/19/2022 12:03	87.66
6/20/2022 10:54	50.98	6/20/2022 9:36	80.97	6/19/2022 7:59	16.88	6/19/2022 7:08	8.44	6/19/2022 12:04	87.52
6/20/2022 10:55	50.90	6/20/2022 9:37	80.97	6/19/2022 8:00	16.84	6/19/2022 7:09	8.36	6/19/2022 12:05	87.38
6/20/2022 10:56	50.87	6/20/2022 9:38	80.96	6/19/2022 8:01	16.81	6/19/2022 7:10	8.41	6/19/2022 12:06	87.26
6/20/2022 10:57	50.79	6/20/2022 9:39	80.96	6/19/2022 8:02	16.77	6/19/2022 7:11	8.36	6/19/2022 12:07	87.18
6/20/2022 10:58	50.78	6/20/2022 9:40	80.96	6/19/2022 8:03	16.85	6/19/2022 7:12	8.33	6/19/2022 12:08	87.03
6/20/2022 10:59	50.77	6/20/2022 9:41	80.98	6/19/2022 8:04	16.78	6/19/2022 7:13	8.30	6/19/2022 12:09	86.87
6/20/2022 11:00	50.74	6/20/2022 9:42	80.95	6/19/2022 8:05	16.82	6/19/2022 7:14	8.29	6/19/2022 12:10	86.78
6/20/2022 11:01	50.72	6/20/2022 9:43	80.96	6/19/2022 8:06	16.80	6/19/2022 7:15	8.31	6/19/2022 12:11	86.63
6/20/2022 11:02	50.71	6/20/2022 9:44	80.96	6/19/2022 8:07	16.81	6/19/2022 7:16	8.30	6/19/2022 12:12	86.52
6/20/2022 11:03	50.64	6/20/2022 9:45	81.01	6/19/2022 8:08	16.79	6/19/2022 7:17	8.21	6/19/2022 12:13	86.37
6/20/2022 11:04	50.62	6/20/2022 9:46	80.93	6/19/2022 8:09	16.79	6/19/2022 7:18	8.23	6/19/2022 12:14	86.26
6/20/2022 11:05	50.62	6/20/2022 9:47	80.94	6/19/2022 8:10	16.77	6/19/2022 7:19	8.20	6/19/2022 12:15	86.15
6/20/2022 11:06	50.60	6/20/2022 9:48	80.98	6/19/2022 8:11	16.77	6/19/2022 7:20	8.16	6/19/2022 12:16	86.00
6/20/2022 11:07	50.60	6/20/2022 9:49	80.97	6/19/2022 8:12	16.78	6/19/2022 7:21	8.18	6/19/2022 12:17	85.89
6/20/2022 11:08	50.59	6/20/2022 9:50	80.99	6/19/2022 8:13	16.77	6/19/2022 7:22	8.10	6/19/2022 12:18	85.74

6/20/2022 11:09	50.54	6/20/2022 9:51	80.96	6/19/2022 8:14	16.78	6/19/2022 7:23	8.06	6/19/2022 12:19	85.66
6/20/2022 11:10	50.57	6/20/2022 9:52	80.97	6/19/2022 8:15	16.77	6/19/2022 7:24	8.09	6/19/2022 12:20	85.53
6/20/2022 11:11	50.56	6/20/2022 9:53	80.95	6/19/2022 8:16	16.82	6/19/2022 7:25	8.06	6/19/2022 12:21	85.38
6/20/2022 11:12	50.53	6/20/2022 9:54	80.96	6/19/2022 8:17	16.79	6/19/2022 7:26	8.05	6/19/2022 12:22	85.32
6/20/2022 11:13	50.52	6/20/2022 9:55	80.96	6/19/2022 8:18	16.77	6/19/2022 7:27	8.07	6/19/2022 12:23	85.14
6/20/2022 11:14	50.51	6/20/2022 9:56	80.99	6/19/2022 8:19	16.76	6/19/2022 7:28	8.05	6/19/2022 12:24	85.07
6/20/2022 11:15	50.50	6/20/2022 9:57	80.98	6/19/2022 8:20	16.78	6/19/2022 7:29	8.00	6/19/2022 12:25	84.94
6/20/2022 11:16	50.49	6/20/2022 9:58	81.01	6/19/2022 8:21	16.79	6/19/2022 7:30	7.94	6/19/2022 12:26	84.82
6/20/2022 11:17	50.51	6/20/2022 9:59	80.97	6/19/2022 8:22	16.78	6/19/2022 7:31	7.93	6/19/2022 12:27	84.73
6/20/2022 11:18	50.49	6/20/2022 10:00	81.01	6/19/2022 8:23	16.77	6/19/2022 7:32	7.96	6/19/2022 12:28	84.66
6/20/2022 11:19	50.48	6/20/2022 10:01	80.97	6/19/2022 8:24	16.72	6/19/2022 7:33	7.87	6/19/2022 12:29	84.55
6/20/2022 11:20	50.42	6/20/2022 10:02	80.97	6/19/2022 8:25	16.77	6/19/2022 7:34	7.86	6/19/2022 12:30	84.42
6/20/2022 11:21	50.42	6/20/2022 10:03	80.99	6/19/2022 8:26	16.74	6/19/2022 7:35	7.89	6/19/2022 12:31	84.30
6/20/2022 11:22	50.39	6/20/2022 10:04	80.95	6/19/2022 8:27	16.77	6/19/2022 7:36	7.86	6/19/2022 12:32	84.20
6/20/2022 11:23	50.42	6/20/2022 10:05	80.96	6/19/2022 8:28	16.75	6/19/2022 7:37	7.86	6/19/2022 12:33	84.08
6/20/2022 11:24	50.44	6/20/2022 10:06	80.97	6/19/2022 8:29	16.71	6/19/2022 7:38	7.81	6/19/2022 12:34	84.00
6/20/2022 11:25	50.40	6/20/2022 10:07	80.95	6/19/2022 8:30	16.74	6/19/2022 7:39	7.77	6/19/2022 12:35	83.86
6/20/2022 11:26	50.41	6/20/2022 10:08	80.96	6/19/2022 8:31	16.78	6/19/2022 7:40	7.77	6/19/2022 12:36	83.82
6/20/2022 11:27	50.39	6/20/2022 10:09	80.96	6/19/2022 8:32	16.77	6/19/2022 7:41	7.79	6/19/2022 12:37	83.67
6/20/2022 11:28	50.38	6/20/2022 10:10	80.97	6/19/2022 8:33	16.71	6/19/2022 7:42	7.75	6/19/2022 12:38	83.54
6/20/2022 11:29	50.38	6/20/2022 10:11	80.92	6/19/2022 8:34	16.68	6/19/2022 7:43	7.68	6/19/2022 12:39	83.47
6/20/2022 11:30	50.36	6/20/2022 10:12	80.99	6/19/2022 8:35	16.76	6/19/2022 7:44	7.69	6/19/2022 12:40	83.37
6/20/2022 11:31	50.38	6/20/2022 10:13	80.96	6/19/2022 8:36	16.72	6/19/2022 7:45	7.67	6/19/2022 12:41	83.26
6/20/2022 11:32	50.38	6/20/2022 10:14	80.97	6/19/2022 8:37	16.67	6/19/2022 7:46	7.68	6/19/2022 12:42	83.19
6/20/2022 11:33	50.36	6/20/2022 10:15	80.97	6/19/2022 8:38	16.68	6/19/2022 7:47	7.63	6/19/2022 12:43	83.07
6/20/2022 11:34	50.32	6/20/2022 10:16	80.97	6/19/2022 8:39	16.69	6/19/2022 7:48	7.60	6/19/2022 12:44	82.96
6/20/2022 11:35	50.35	6/20/2022 10:17	80.94	6/19/2022 8:40	16.71	6/19/2022 7:49	7.58	6/19/2022 12:45	82.85
6/20/2022 11:36	50.31	6/20/2022 10:18	81.02	6/19/2022 8:41	16.73	6/19/2022 7:50	7.56	6/19/2022 12:46	82.76
6/20/2022 11:37	50.35	6/20/2022 10:19	80.93	6/19/2022 8:42	16.71	6/19/2022 7:51	7.58	6/19/2022 12:47	82.69
6/20/2022 11:38	50.33	6/20/2022 10:20	81.01	6/19/2022 8:43	16.71	6/19/2022 7:52	7.56	6/19/2022 12:48	82.60
6/20/2022 11:39	50.31	6/20/2022 10:21	81.00	6/19/2022 8:44	16.78	6/19/2022 7:53	7.51	6/19/2022 12:49	82.49
6/20/2022 11:40	50.32	6/20/2022 10:22	80.97	6/19/2022 8:45	16.71	6/19/2022 7:54	7.47	6/19/2022 12:50	82.40
6/20/2022 11:41	50.35	6/20/2022 10:23	80.99	6/19/2022 8:46	16.70	6/19/2022 7:55	7.48	6/19/2022 12:51	82.34
6/20/2022 11:42	50.29	6/20/2022 10:24	80.96	6/19/2022 8:47	16.72	6/19/2022 7:56	7.47	6/19/2022 12:52	82.23
6/20/2022 11:43	50.27	6/20/2022 10:25	80.98	6/19/2022 8:48	22.09	6/19/2022 7:57	7.46	6/19/2022 12:53	82.09
6/20/2022 11:44	50.35	6/20/2022 10:26	80.96	6/19/2022 8:49	25.58	6/19/2022 7:58	7.42	6/19/2022 12:54	82.04
6/20/2022 11:45	50.28	6/20/2022 10:27	81.00	6/19/2022 8:50	26.06	6/19/2022 7:59	7.39	6/19/2022 12:55	81.96
6/20/2022 11:46	50.26	6/20/2022 10:28	81.00	6/19/2022 8:51	23.21	6/19/2022 8:00	7.36	6/19/2022 12:56	81.87
6/20/2022 11:47	50.28	6/20/2022 10:29	81.03	6/19/2022 8:52	21.76	6/19/2022 8:01	7.38	6/19/2022 12:57	81.79
6/20/2022 11:48	50.28	6/20/2022 10:30	80.98	6/19/2022 8:53	20.90	6/19/2022 8:02	7.40	6/19/2022 12:58	81.69
6/20/2022 11:49	50.28	6/20/2022 10:31	80.95	6/19/2022 8:54	20.33	6/19/2022 8:03	7.42	6/19/2022 12:59	81.62
6/20/2022 11:50	50.28	6/20/2022 10:32	80.96	6/19/2022 8:55	19.88	6/19/2022 8:04	7.31	6/19/2022 13:00	81.51
6/20/2022 11:51	50.24	6/20/2022 10:33	80.96	6/19/2022 8:56	19.55	6/19/2022 8:05	7.28	6/19/2022 13:01	81.44
6/20/2022 11:52	50.25	6/20/2022 10:34	80.95	6/19/2022 8:57	19.32	6/19/2022 8:06	7.29	6/19/2022 13:02	81.37
6/20/2022 11:53	50.25	6/20/2022 10:35	80.99	6/19/2022 8:58	19.16	6/19/2022 8:07	7.28	6/19/2022 13:03	81.30
6/20/2022 11:54	50.25	6/20/2022 10:36	80.98	6/19/2022 8:59	19.01	6/19/2022 8:08	7.31	6/19/2022 13:04	81.24
6/20/2022 11:55	50.27	6/20/2022 10:37	80.98	6/19/2022 9:00	18.88	6/19/2022 8:09	7.22	6/19/2022 13:05	81.15
6/20/2022 11:56	50.24	6/20/2022 10:38	80.98	6/19/2022 9:01	18.73	6/19/2022 8:10	7.21	6/19/2022 13:06	81.07
6/20/2022 11:57	50.24	6/20/2022 10:39	80.97	6/19/2022 9:02	18.67	6/19/2022 8:11	7.20	6/19/2022 13:07	81.00
6/20/2022 11:58	50.24	6/20/2022 10:40	80.97	6/19/2022 9:03	18.59	6/19/2022 8:12	7.65	6/19/2022 13:08	80.94
6/20/2022 11:59	50.24	6/20/2022 10:41	81.02	6/19/2022 9:04	18.48	6/19/2022 8:13	7.50	6/19/2022 13:09	80.85
6/20/2022 12:00	50.22	6/20/2022 10:42	80.95	6/19/2022 9:05	21.60	6/19/2022 8:14	7.34	6/19/2022 13:10	80.79
6/20/2022 12:01	50.26	6/20/2022 10:43	80.96	6/19/2022 9:06	25.83	6/19/2022 8:15	7.27	6/19/2022 13:11	80.70
6/20/2022 12:02	50.23	6/20/2022 10:44	81.00	6/19/2022 9:07	28.44	6/19/2022 8:16	7.76	6/19/2022 13:12	80.66
6/20/2022 12:03	50.26	6/20/2022 10:45	81.00	6/19/2022 9:08	27.45	6/19/2022 8:17	7.63	6/19/2022 13:13	80.62
6/20/2022 12:04	50.22	6/20/2022 10:46	80.97	6/19/2022 9:09	24.84	6/19/2022 8:18	7.38	6/19/2022 13:14	80.51
6/20/2022 12:05	50.20	6/20/2022 10:47	80.96	6/19/2022 9:10	23.31	6/19/2022 8:19	7.31	6/19/2022 13:15	80.44
6/20/2022 12:06	50.21	6/20/2022 10:48	80.99	6/19/2022 9:11	22.39	6/19/2022 8:20	7.29	6/19/2022 13:16	80.35
6/20/2022 12:07	50.22	6/20/2022 10:49	80.95	6/19/2022 9:12	21.74	6/19/2022 8:21	7.25	6/19/2022 13:17	80.30
6/20/2022 12:08	50.18	6/20/2022 10:50	80.98	6/19/2022 9:13	21.26	6/19/2022 8:22	7.32	6/19/2022 13:18	80.23
6/20/2022 12:09	50.18	6/20/2022 10:51	80.97	6/19/2022 9:14	20.90	6/19/2022 8:23	7.34	6/19/2022 13:19	80.16
6/20/2022 12:10	50.15	6/20/2022 10:52	80.98	6/19/2022 9:15	20.58	6/19/2022 8:24	7.19	6/19/2022 13:20	80.05
6/20/2022 12:11	50.16	6/20/2022 10:53	80.96	6/19/2022 9:16	20.38	6/19/2022 8:25	7.15	6/19/2022 13:21	80.00
6/20/2022 12:12	50.17	6/20/2022 10:54	80.99	6/19/2022 9:17	20.21	6/19/2022 8:26	7.12	6/19/2022 13:22	79.91
6/20/2022 12:13	50.20	6/20/2022 10:55	80.96	6/19/2022 9:18	19.97	6/19/2022 8:27	7.11	6/19/2022 13:23	79.83
6/20/2022 12:14	50.20	6/20/2022 10:56	80.99	6/19/2022 9:19	19.84	6/19/2022 8:28	7.10	6/19/2022 13:24	79.78
6/20/2022 12:15	50.21	6/20/2022 10:57	80.94	6/19/2022 9:20	19.76	6/19/2022 8:29	7.09	6/19/2022 13:25	79.69
6/20/2022 12:16	50.16	6/20/2022 10:58	80.95	6/19/2022 9:21	19.59	6/19/2022 8:30	7.12	6/19/2022 13:26	79.65
6/20/2022 12:17	50.17	6/20/2022 10:59	81.02	6/19/2022 9:22	19.52	6/19/2022 8:31	7.13	6/19/2022 13:27	79.54
6/20/2022 12:18	50.19	6/20/2022 11:00	81.00	6/19/2022 9:23	19.41	6/19/2022 8:32	7.01	6/19/2022 13:28	79.49
6/20/2022 12:19	50.19	6/20/2022 11:01	80.97	6/19/2022 9:24	19.30	6/19/2022 8:33	7.00	6/19/2022 13:29	79.42
6/20/2022 12:20	50.18	6/20/2022 11:02	80.98	6/19/2022 9:25	19.20	6/19/2022 8:34	6.98	6/19/2022 13:30	79.37
6/20/2022 12:21	50.16	6/20/2022 11:03	81.02	6/19/2022 9:26	19.16	6/19/2022 8:35	7.03	6/19/2022 13:31	79.31
6/20/2022 12:22	50.15	6/20/2022 11:04	80.97	6/19/2022 9:27	19.06	6/19/2022 8:36	7.00	6/19/2022 13:32	79.23
6/20/2022 12:23	50.18	6/20/2022 11:05	81.00	6/19/2022 9:28	19.01	6/19/2022 8:37	6.95	6/19/2022 13:33	79.17
6/20/2022 12:24	50.17	6/20/2022 11:06	81.00	6/19/2022 9:29	18.93	6/19/2022 8:38	6.90	6/19/2022 13:34	79.12
6/20/2022 12:25	50.14	6/20/2022 11:07	80.96	6/19/2022 9:30	18.89	6/19/2022 8:39	6.96	6/19/2022 13:35	79.07
6/20/2022 12:26	50.14	6/20/2022 11:08	80.98	6/19/2022 9:31	18.78	6/19/2022 8:40	6.86	6/19/2022 13:36	79.06
6/20/2022 12:27	50.13	6/20/2022 11:09	80.98	6/19/2022 9:32	18.75	6/19/2022 8:41	6.90	6/19/2022 13:37	78.98
6/20/2022 12:28	50.15	6/20/2022 11:10	80.99	6/19/2022 9:33	18.69	6/19/2022 8:42	6.85	6/19/2022 13:38	78.90
6/20/2022 12:29	50.10	6/20/2022 11:11	81.00	6/19/2022 9:34	18.63	6/19/2022 8:43	6.82	6/19/2022 13:39	78.84
6/20/2022 12:30	50.13	6/20/2022 11:12	81.01	6/19/2022 9:35	18.62	6/19/2022 8:44	6.82	6/19/2022 13:40	78.84
6/20/2022 12:31	50.16	6/20/2022 11:13	80.95	6/19/2022 9:36	18.57	6/19/2022 8:45	6.79	6/19/2022 13:41	78.78
6/20/2022 12:32	50.11	6/20/2022 11:14	80.96	6/19/2022 9:37	18.52	6/19/2022 8:46	6.78	6/19/2022 13:42	83.31
6/20/2022 12:33	50.12	6/20/2022 11:15	80.99	6/19/2022 9:38	18.46	6/19/2022 8:47	6.79	6/19/2022 13:43	83.52
6/20/2022 12:34	50.11	6/20/2022 11:16	80.97	6/19/2022 9:39	18.45	6/19/2022 8:48	6.82	6/19/2022 13:44	83.34
6/20/2022 12:35	50.15	6/20/2022 11:17	80.97	6/19/2022 9:40	18.43	6/19/2022 8:49	6.75	6/19/2022 13:45	83.18
6/20/2022 12:36	50.12	6/20/2022 11:18	80.97	6/19/2022 9:41	18.36	6/19/2022 8:50	6.78	6/19/2022 13:46	83.06

6/20/2022 12:37	50.12	6/20/2022 11:19	81.01	6/19/2022 9:42	18.34	6/19/2022 8:51	6.72	6/19/2022 13:47	82.93
6/20/2022 12:38	50.10	6/20/2022 11:20	80.99	6/19/2022 9:43	18.29	6/19/2022 8:52	6.77	6/19/2022 13:48	82.80
6/20/2022 12:39	50.11	6/20/2022 11:21	84.75	6/19/2022 9:44	18.26	6/19/2022 8:53	6.72	6/19/2022 13:49	82.65
6/20/2022 12:40	50.13	6/20/2022 11:22	85.41	6/19/2022 9:45	18.23	6/19/2022 8:54	6.69	6/19/2022 13:50	82.53
6/20/2022 12:41	50.10	6/20/2022 11:23	84.69	6/19/2022 9:46	18.17	6/19/2022 8:55	6.65	6/19/2022 13:51	82.43
6/20/2022 12:42	50.11	6/20/2022 11:24	84.11	6/19/2022 9:47	18.19	6/19/2022 8:56	6.74	6/19/2022 13:52	82.34
6/20/2022 12:43	50.10	6/20/2022 11:25	83.65	6/19/2022 9:48	18.17	6/19/2022 8:57	6.64	6/19/2022 13:53	82.18
6/20/2022 12:44	50.08	6/20/2022 11:26	83.24	6/19/2022 9:49	18.09	6/19/2022 8:58	6.66	6/19/2022 13:54	82.08
6/20/2022 12:45	50.11	6/20/2022 11:27	82.95	6/19/2022 9:50	18.09	6/19/2022 8:59	6.64	6/19/2022 13:55	81.98
6/20/2022 12:46	50.10	6/20/2022 11:28	82.72	6/19/2022 9:51	18.04	6/19/2022 9:00	6.62	6/19/2022 13:56	81.90
6/20/2022 12:47	50.11	6/20/2022 11:29	83.98	6/19/2022 9:52	18.01	6/19/2022 9:01	6.74	6/19/2022 13:57	81.75
6/20/2022 12:48	50.10	6/20/2022 11:30	83.54	6/19/2022 9:53	18.06	6/19/2022 9:02	6.64	6/19/2022 13:58	81.66
6/20/2022 12:49	50.10	6/20/2022 11:31	83.15	6/19/2022 9:54	17.98	6/19/2022 9:03	6.63	6/19/2022 13:59	81.55
6/20/2022 12:50	50.07	6/20/2022 11:32	82.84	6/19/2022 9:55	17.98	6/19/2022 9:04	6.64	6/19/2022 14:00	81.49
6/20/2022 12:51	50.08	6/20/2022 11:33	83.28	6/19/2022 9:56	17.93	6/19/2022 9:05	6.55	6/19/2022 14:01	81.38
6/20/2022 12:52	50.10	6/20/2022 11:34	83.09	6/19/2022 9:57	17.94	6/19/2022 9:06	6.56	6/19/2022 14:02	81.26
6/20/2022 12:53	50.13	6/20/2022 11:35	82.81	6/19/2022 9:58	17.88	6/19/2022 9:07	6.50	6/19/2022 14:03	81.18
6/20/2022 12:54	50.09	6/20/2022 11:36	82.62	6/19/2022 9:59	17.87	6/19/2022 9:08	6.56	6/19/2022 14:04	81.10
6/20/2022 12:55	50.08	6/20/2022 11:37	82.42	6/19/2022 10:00	17.84	6/19/2022 9:09	6.53	6/19/2022 14:05	81.03
6/20/2022 12:56	50.07	6/20/2022 11:38	82.30	6/19/2022 10:01	17.89	6/19/2022 9:10	6.48	6/19/2022 14:06	80.92
6/20/2022 12:57	50.09	6/20/2022 11:39	82.11	6/19/2022 10:02	17.83	6/19/2022 9:11	6.53	6/19/2022 14:07	80.86
6/20/2022 12:58	50.06	6/20/2022 11:40	82.01	6/19/2022 10:03	17.83	6/19/2022 9:12	6.46	6/19/2022 14:08	80.80
6/20/2022 12:59	50.07	6/20/2022 11:41	81.93	6/19/2022 10:04	17.79	6/19/2022 9:13	6.46	6/19/2022 14:09	80.69
6/20/2022 13:00	50.04	6/20/2022 11:42	81.87	6/19/2022 10:05	17.75	6/19/2022 9:14	6.46	6/19/2022 14:10	80.64
6/20/2022 13:01	50.10	6/20/2022 11:43	81.76	6/19/2022 10:06	17.75	6/19/2022 9:15	6.45	6/19/2022 14:11	80.54
6/20/2022 13:02	50.06	6/20/2022 11:44	81.72	6/19/2022 10:07	17.72	6/19/2022 9:16	6.45	6/19/2022 14:12	80.43
6/20/2022 13:03	50.03	6/20/2022 11:45	81.66	6/19/2022 10:08	17.77	6/19/2022 9:17	6.49	6/19/2022 14:13	80.32
6/20/2022 13:04	50.07	6/20/2022 11:46	81.60	6/19/2022 10:09	17.71	6/19/2022 9:18	6.56	6/19/2022 14:14	80.27
6/20/2022 13:05	50.09	6/20/2022 11:47	81.57	6/19/2022 10:10	17.69	6/19/2022 9:19	6.69	6/19/2022 14:15	80.18
6/20/2022 13:06	50.06	6/20/2022 11:48	81.49	6/19/2022 10:11	17.70	6/19/2022 9:20	6.48	6/19/2022 14:16	80.08
6/20/2022 13:07	50.04	6/20/2022 11:49	81.51	6/19/2022 10:12	17.68	6/19/2022 9:21	6.44	6/19/2022 14:17	79.97
6/20/2022 13:08	50.03	6/20/2022 11:50	81.44	6/19/2022 10:13	17.63	6/19/2022 9:22	6.51	6/19/2022 14:18	79.91
6/20/2022 13:09	50.07	6/20/2022 11:51	81.39	6/19/2022 10:14	17.64	6/19/2022 9:23	6.64	6/19/2022 14:19	79.82
6/20/2022 13:10	50.04	6/20/2022 11:52	81.36	6/19/2022 10:15	17.62	6/19/2022 9:24	6.62	6/19/2022 14:20	79.72
6/20/2022 13:11	50.06	6/20/2022 11:53	81.34	6/19/2022 10:16	17.65	6/19/2022 9:25	6.53	6/19/2022 14:21	79.64
6/20/2022 13:12	50.04	6/20/2022 11:54	81.33	6/19/2022 10:17	17.61	6/19/2022 9:26	6.48	6/19/2022 14:22	79.60
6/20/2022 13:13	50.03	6/20/2022 11:55	81.30	6/19/2022 10:18	17.61	6/19/2022 9:27	6.48	6/19/2022 14:23	79.52
6/20/2022 13:14	50.05	6/20/2022 11:56	81.30	6/19/2022 10:19	17.57	6/19/2022 9:28	6.51	6/19/2022 14:24	79.39
6/20/2022 13:15	50.04	6/20/2022 11:57	81.26	6/19/2022 10:20	17.55	6/19/2022 9:29	6.51	6/19/2022 14:25	79.34
6/20/2022 13:16	50.01	6/20/2022 11:58	81.25	6/19/2022 10:21	17.54	6/19/2022 9:30	6.57	6/19/2022 14:26	79.26
6/20/2022 13:17	50.05	6/20/2022 11:59	81.23	6/19/2022 10:22	17.50	6/19/2022 9:31	6.61	6/19/2022 14:27	79.24
6/20/2022 13:18	50.03	6/20/2022 12:00	81.25	6/19/2022 10:23	17.52	6/19/2022 9:32	6.53	6/19/2022 14:28	79.10
6/20/2022 13:19	50.05	6/20/2022 12:01	81.24	6/19/2022 10:24	17.49	6/19/2022 9:33	6.56	6/19/2022 14:29	79.09
6/20/2022 13:20	50.01	6/20/2022 12:02	81.18	6/19/2022 10:25	17.51	6/19/2022 9:34	6.53	6/19/2022 14:30	79.02
6/20/2022 13:21	49.98	6/20/2022 12:03	81.26	6/19/2022 10:26	17.47	6/19/2022 9:35	6.47	6/19/2022 14:31	78.98
6/20/2022 13:22	50.03	6/20/2022 12:04	81.20	6/19/2022 10:27	17.47	6/19/2022 9:36	6.64	6/19/2022 14:32	78.89
6/20/2022 13:23	50.04	6/20/2022 12:05	81.20	6/19/2022 10:28	17.47	6/19/2022 9:37	6.77	6/19/2022 14:33	78.80
6/20/2022 13:24	50.01	6/20/2022 12:06	81.18	6/19/2022 10:29	17.47	6/19/2022 9:38	6.78	6/19/2022 14:34	78.78
6/20/2022 13:25	50.00	6/20/2022 12:07	81.19	6/19/2022 10:30	17.47	6/19/2022 9:39	6.74	6/19/2022 14:35	78.70
6/20/2022 13:26	49.98	6/20/2022 12:08	81.18	6/19/2022 10:31	17.44	6/19/2022 9:40	6.73	6/19/2022 14:36	78.64
6/20/2022 13:27	50.01	6/20/2022 12:09	81.17	6/19/2022 10:32	17.41	6/19/2022 9:41	6.62	6/19/2022 14:37	78.60
6/20/2022 13:28	50.02	6/20/2022 12:10	81.14	6/19/2022 10:33	17.42	6/19/2022 9:42	6.54	6/19/2022 14:38	78.52
6/20/2022 13:29	49.98	6/20/2022 12:11	81.13	6/19/2022 10:34	17.44	6/19/2022 9:43	6.57	6/19/2022 14:39	78.46
6/20/2022 13:30	50.01	6/20/2022 12:12	81.15	6/19/2022 10:35	17.44	6/19/2022 9:44	6.59	6/19/2022 14:40	78.37
6/20/2022 13:31	50.00	6/20/2022 12:13	81.15	6/19/2022 10:36	17.35	6/19/2022 9:45	6.56	6/19/2022 14:41	78.32
6/20/2022 13:32	49.98	6/20/2022 12:14	81.13	6/19/2022 10:37	17.41	6/19/2022 9:46	6.45	6/19/2022 14:42	78.24
6/20/2022 13:33	50.01	6/20/2022 12:15	81.15	6/19/2022 10:38	17.41	6/19/2022 9:47	6.47	6/19/2022 14:43	78.18
6/20/2022 13:34	49.99	6/20/2022 12:16	81.12	6/19/2022 10:39	17.33	6/19/2022 9:48	6.48	6/19/2022 14:44	78.11
6/20/2022 13:35	49.99	6/20/2022 12:17	81.13	6/19/2022 10:40	17.29	6/19/2022 9:49	6.44	6/19/2022 14:45	78.02
6/20/2022 13:36	50.01	6/20/2022 12:18	81.12	6/19/2022 10:41	17.38	6/19/2022 9:50	6.41	6/19/2022 14:46	77.95
6/20/2022 13:37	50.01	6/20/2022 12:19	81.12	6/19/2022 10:42	17.32	6/19/2022 9:51	6.65	6/19/2022 14:47	77.95
6/20/2022 13:38	49.98	6/20/2022 12:20	81.12	6/19/2022 10:43	17.34	6/19/2022 9:52	6.41	6/19/2022 14:48	77.89
6/20/2022 13:39	50.01	6/20/2022 12:21	81.14	6/19/2022 10:44	17.25	6/19/2022 9:53	6.38	6/19/2022 14:49	77.79
6/20/2022 13:40	50.01	6/20/2022 12:22	81.11	6/19/2022 10:45	17.29	6/19/2022 9:54	6.41	6/19/2022 14:50	77.73
6/20/2022 13:41	49.97	6/20/2022 12:23	81.08	6/19/2022 10:46	17.28	6/19/2022 9:55	6.90	6/19/2022 14:51	77.67
6/20/2022 13:42	49.99	6/20/2022 12:24	81.10	6/19/2022 10:47	17.28	6/19/2022 9:56	6.64	6/19/2022 14:52	77.61
6/20/2022 13:43	49.99	6/20/2022 12:25	81.08	6/19/2022 10:48	17.26	6/19/2022 9:57	6.58	6/19/2022 14:53	77.55
6/20/2022 13:44	50.02	6/20/2022 12:26	81.09	6/19/2022 10:49	17.22	6/19/2022 9:58	6.54	6/19/2022 14:54	77.45
6/20/2022 13:45	49.97	6/20/2022 12:27	81.11	6/19/2022 10:50	17.30	6/19/2022 9:59	6.45	6/19/2022 14:55	77.39
6/20/2022 13:46	49.98	6/20/2022 12:28	81.08	6/19/2022 10:51	17.27	6/19/2022 10:00	6.42	6/19/2022 14:56	77.33
6/20/2022 13:47	50.00	6/20/2022 12:29	81.11	6/19/2022 10:52	17.24	6/19/2022 10:01	6.38	6/19/2022 14:57	77.28
6/20/2022 13:48	49.98	6/20/2022 12:30	81.10	6/19/2022 10:53	17.22	6/19/2022 10:02	6.35	6/19/2022 14:58	77.24
6/20/2022 13:49	49.99	6/20/2022 12:31	81.09	6/19/2022 10:54	17.26	6/19/2022 10:03	6.27	6/19/2022 14:59	77.16
6/20/2022 13:50	49.97	6/20/2022 12:32	81.07	6/19/2022 10:55	17.22	6/19/2022 10:04	6.29	6/19/2022 15:00	77.15
6/20/2022 13:51	49.99	6/20/2022 12:33	81.09	6/19/2022 10:56	17.24	6/19/2022 10:05	6.31	6/19/2022 15:01	77.09
6/20/2022 13:52	49.97	6/20/2022 12:34	81.07	6/19/2022 10:57	17.25	6/19/2022 10:06	6.23	6/19/2022 15:02	77.02
6/20/2022 13:53	50.01	6/20/2022 12:35	81.14	6/19/2022 10:58	17.15	6/19/2022 10:07	6.24	6/19/2022 15:03	76.93
6/20/2022 13:54	49.97	6/20/2022 12:36	81.09	6/19/2022 10:59	17.18	6/19/2022 10:08	6.19	6/19/2022 15:04	76.90
6/20/2022 13:55	49.98	6/20/2022 12:37	81.07	6/19/2022 11:00	17.18	6/19/2022 10:09	6.22	6/19/2022 15:05	76.86
6/20/2022 13:56	49.97	6/20/2022 12:38	81.07	6/19/2022 11:01	17.16	6/19/2022 10:10	6.20	6/19/2022 15:06	76.80
6/20/2022 13:57	50.00	6/20/2022 12:39	81.10	6/19/2022 11:02	17.20	6/19/2022 10:11	6.13	6/19/2022 15:07	76.74
6/20/2022 13:58	49.96	6/20/2022 12:40	81.05	6/19/2022 11:03	17.19	6/19/2022 10:12	6.19	6/19/2022 15:08	76.70
6/20/2022 13:59	49.96	6/20/2022 12:41	81.09	6/19/2022 11:04	17.17	6/19/2022 10:13	6.15	6/19/2022 15:09	76.67
6/20/2022 14:00	50.00	6/20/2022 12:42	81.09	6/19/2022 11:05	17.16	6/19/2022 10:14	6.17	6/19/2022 15:10	76.57
6/20/2022 14:01	49.98	6/20/2022 12:43	81.08	6/19/2022 11:06	17.16	6/19/2022 10:15	6.13	6/19/2022 15:11	76.52
6/20/2022 14:02	49.97	6/20/2022 12:44	81.11	6/19/2022 11:07	17.13	6/19/2022 10:16	6.11	6/19/2022 15:12	76.46
6/20/2022 14:03	49.96	6/20/2022 12:45	81.07	6/19/2022 11:08	17.16	6/19/2022 10:17	6.10	6/19/2022 15:13	76.43
6/20/2022 14:04	51.99	6/20/2022 12:46	81.07	6/19/2022 11:09	17.13	6/19/2022 10:18	6.06	6/19/2022 15:14	76.32

6/20/2022 14:05	53.74	6/20/2022 12:47	81.06	6/19/2022 11:10	17.14	6/19/2022 10:19	6.08	6/19/2022 15:15	76.28
6/20/2022 14:06	54.67	6/20/2022 12:48	81.10	6/19/2022 11:11	17.14	6/19/2022 10:20	6.01	6/19/2022 15:16	76.23
6/20/2022 14:07	55.14	6/20/2022 12:49	81.05	6/19/2022 11:12	17.13	6/19/2022 10:21	6.08	6/19/2022 15:17	76.18
6/20/2022 14:08	52.84	6/20/2022 12:50	81.06	6/19/2022 11:13	17.11	6/19/2022 10:22	6.09	6/19/2022 15:18	76.14
6/20/2022 14:09	51.88	6/20/2022 12:51	81.10	6/19/2022 11:14	17.08	6/19/2022 10:23	6.07	6/19/2022 15:19	76.05
6/20/2022 14:10	51.46	6/20/2022 12:52	81.08	6/19/2022 11:15	17.14	6/19/2022 10:24	6.08	6/19/2022 15:20	76.00
6/20/2022 14:11	51.26	6/20/2022 12:53	81.09	6/19/2022 11:16	17.14	6/19/2022 10:25	5.98	6/19/2022 15:21	75.96
6/20/2022 14:12	51.05	6/20/2022 12:54	81.06	6/19/2022 11:17	17.09	6/19/2022 10:26	6.00	6/19/2022 15:22	75.91
6/20/2022 14:13	50.98	6/20/2022 12:55	81.08	6/19/2022 11:18	17.13	6/19/2022 10:27	6.00	6/19/2022 15:23	75.83
6/20/2022 14:14	50.87	6/20/2022 12:56	81.07	6/19/2022 11:19	17.11	6/19/2022 10:28	5.98	6/19/2022 15:24	75.78
6/20/2022 14:15	50.83	6/20/2022 12:57	81.09	6/19/2022 11:20	17.12	6/19/2022 10:29	5.98	6/19/2022 15:25	75.77
6/20/2022 14:16	50.77	6/20/2022 12:58	81.03	6/19/2022 11:21	17.14	6/19/2022 10:30	5.91	6/19/2022 15:26	75.70
6/20/2022 14:17	50.73	6/20/2022 12:59	81.06	6/19/2022 11:22	17.11	6/19/2022 10:31	5.96	6/19/2022 15:27	75.65
6/20/2022 14:18	50.70	6/20/2022 13:00	81.08	6/19/2022 11:23	17.12	6/19/2022 10:32	5.96	6/19/2022 15:28	75.62
6/20/2022 14:19	50.62	6/20/2022 13:01	81.08	6/19/2022 11:24	17.06	6/19/2022 10:33	5.99	6/19/2022 15:29	75.49
6/20/2022 14:20	50.62	6/20/2022 13:02	81.06	6/19/2022 11:25	17.11	6/19/2022 10:34	5.90	6/19/2022 15:30	75.49
6/20/2022 14:21	50.57	6/20/2022 13:03	81.12	6/19/2022 11:26	17.08	6/19/2022 10:35	5.93	6/19/2022 15:31	75.42
6/20/2022 14:22	50.59	6/20/2022 13:04	81.10	6/19/2022 11:27	17.05	6/19/2022 10:36	5.87	6/19/2022 15:32	75.42
6/20/2022 14:23	50.57	6/20/2022 13:05	81.07	6/19/2022 11:28	17.07	6/19/2022 10:37	5.94	6/19/2022 15:33	75.33
6/20/2022 14:24	50.51	6/20/2022 13:06	81.08	6/19/2022 11:29	17.07	6/19/2022 10:38	5.87	6/19/2022 15:34	75.29
6/20/2022 14:25	50.54	6/20/2022 13:07	81.06	6/19/2022 11:30	17.02	6/19/2022 10:39	5.85	6/19/2022 15:35	75.24
6/20/2022 14:26	50.47	6/20/2022 13:08	81.06	6/19/2022 11:31	17.06	6/19/2022 10:40	5.85	6/19/2022 15:36	75.15
6/20/2022 14:27	50.49	6/20/2022 13:09	81.06	6/19/2022 11:32	17.09	6/19/2022 10:41	5.87	6/19/2022 15:37	75.13
6/20/2022 14:28	50.50	6/20/2022 13:10	81.07	6/19/2022 11:33	17.04	6/19/2022 10:42	5.89	6/19/2022 15:38	75.06
6/20/2022 14:29	50.44	6/20/2022 13:11	81.11	6/19/2022 11:34	17.09	6/19/2022 10:43	5.85	6/19/2022 15:39	75.06
6/20/2022 14:30	50.46	6/20/2022 13:12	81.06	6/19/2022 11:35	17.08	6/19/2022 10:44	5.80	6/19/2022 15:40	74.98
6/20/2022 14:31	50.43	6/20/2022 13:13	81.04	6/19/2022 11:36	17.03	6/19/2022 10:45	5.82	6/19/2022 15:41	74.94
6/20/2022 14:32	50.41	6/20/2022 13:14	81.06	6/19/2022 11:37	17.01	6/19/2022 10:46	5.83	6/19/2022 15:42	74.88
6/20/2022 14:33	50.41	6/20/2022 13:15	81.10	6/19/2022 11:38	17.02	6/19/2022 10:47	5.75	6/19/2022 15:43	74.85
6/20/2022 14:34	50.37	6/20/2022 13:16	81.09	6/19/2022 11:39	17.02	6/19/2022 10:48	5.80	6/19/2022 15:44	74.81
6/20/2022 14:35	50.40	6/20/2022 13:17	81.07	6/19/2022 11:40	16.98	6/19/2022 10:49	5.78	6/19/2022 15:45	74.75
6/20/2022 14:36	50.38	6/20/2022 13:18	81.13	6/19/2022 11:41	17.04	6/19/2022 10:50	5.83	6/19/2022 15:46	74.75
6/20/2022 14:37	50.38	6/20/2022 13:19	81.07	6/19/2022 11:42	21.59	6/19/2022 10:51	5.74	6/19/2022 15:47	74.64
6/20/2022 14:38	50.34	6/20/2022 13:20	81.06	6/19/2022 11:43	25.41	6/19/2022 10:52	5.79	6/19/2022 15:48	74.62
6/20/2022 14:39	50.34	6/20/2022 13:21	81.06	6/19/2022 11:44	27.94	6/19/2022 10:53	5.92	6/19/2022 15:49	74.55
6/20/2022 14:40	50.30	6/20/2022 13:22	81.06	6/19/2022 11:45	29.10	6/19/2022 10:54	5.90	6/19/2022 15:50	74.52
6/20/2022 14:41	50.33	6/20/2022 13:23	81.05	6/19/2022 11:46	25.49	6/19/2022 10:55	5.77	6/19/2022 15:51	74.47
6/20/2022 14:42	50.31	6/20/2022 13:24	81.09	6/19/2022 11:47	23.59	6/19/2022 10:56	5.74	6/19/2022 15:52	74.45
6/20/2022 14:43	50.31	6/20/2022 13:25	81.06	6/19/2022 11:48	22.46	6/19/2022 10:57	5.86	6/19/2022 15:53	74.41
6/20/2022 14:44	50.31	6/20/2022 13:26	81.07	6/19/2022 11:49	21.67	6/19/2022 10:58	5.89	6/19/2022 15:54	74.39
6/20/2022 14:45	50.30	6/20/2022 13:27	81.09	6/19/2022 11:50	21.15	6/19/2022 10:59	5.82	6/19/2022 15:55	74.31
6/20/2022 14:46	50.28	6/20/2022 13:28	81.03	6/19/2022 11:51	20.73	6/19/2022 11:00	5.87	6/19/2022 15:56	74.24
6/20/2022 14:47	50.25	6/20/2022 13:29	81.05	6/19/2022 11:52	20.39	6/19/2022 11:01	5.74	6/19/2022 15:57	74.22
6/20/2022 14:48	50.29	6/20/2022 13:30	81.10	6/19/2022 11:53	20.16	6/19/2022 11:02	5.71	6/19/2022 15:58	74.17
6/20/2022 14:49	50.26	6/20/2022 13:31	81.08	6/19/2022 11:54	19.97	6/19/2022 11:03	5.75	6/19/2022 15:59	74.14
6/20/2022 14:50	50.26	6/20/2022 13:32	81.08	6/19/2022 11:55	19.79	6/19/2022 11:04	5.76	6/19/2022 16:00	74.10
6/20/2022 14:51	50.26	6/20/2022 13:33	81.08	6/19/2022 11:56	19.61	6/19/2022 11:05	5.90	6/19/2022 16:01	74.05
6/20/2022 14:52	50.24	6/20/2022 13:34	81.07	6/19/2022 11:57	19.53	6/19/2022 11:06	6.25	6/19/2022 16:02	74.03
6/20/2022 14:53	50.25	6/20/2022 13:35	81.07	6/19/2022 11:58	19.39	6/19/2022 11:07	6.20	6/19/2022 16:03	73.98
6/20/2022 14:54	50.23	6/20/2022 13:36	81.09	6/19/2022 11:59	19.24	6/19/2022 11:08	6.23	6/19/2022 16:04	73.96
6/20/2022 14:55	50.23	6/20/2022 13:37	81.08	6/19/2022 12:00	19.20	6/19/2022 11:09	6.08	6/19/2022 16:05	73.90
6/20/2022 14:56	50.22	6/20/2022 13:38	81.08	6/19/2022 12:01	19.06	6/19/2022 11:10	5.94	6/19/2022 16:06	73.86
6/20/2022 14:57	50.21	6/20/2022 13:39	81.08	6/19/2022 12:02	19.00	6/19/2022 11:11	5.86	6/19/2022 16:07	73.84
6/20/2022 14:58	50.25	6/20/2022 13:40	81.06	6/19/2022 12:03	18.91	6/19/2022 11:12	5.90	6/19/2022 16:08	73.79
6/20/2022 14:59	50.22	6/20/2022 13:41	81.06	6/19/2022 12:04	18.84	6/19/2022 11:13	5.75	6/19/2022 16:09	73.74
6/20/2022 15:00	50.22	6/20/2022 13:42	81.07	6/19/2022 12:05	18.77	6/19/2022 11:14	5.88	6/19/2022 16:10	73.73
6/20/2022 15:01	50.20	6/20/2022 13:43	81.11	6/19/2022 12:06	18.73	6/19/2022 11:15	5.72	6/19/2022 16:11	73.67
6/20/2022 15:02	50.18	6/20/2022 13:44	81.06	6/19/2022 12:07	18.61	6/19/2022 11:16	5.74	6/19/2022 16:12	73.62
6/20/2022 15:03	50.20	6/20/2022 13:45	81.07	6/19/2022 12:08	18.53	6/19/2022 11:17	5.71	6/19/2022 16:13	73.59
6/20/2022 15:04	50.20	6/20/2022 13:46	81.06	6/19/2022 12:09	18.55	6/19/2022 11:18	5.74	6/19/2022 16:14	73.53
6/20/2022 15:05	50.17	6/20/2022 13:47	81.03	6/19/2022 12:10	18.47	6/19/2022 11:19	5.66	6/19/2022 16:15	73.49
6/20/2022 15:06	50.20	6/20/2022 13:48	81.09	6/19/2022 12:11	18.42	6/19/2022 11:20	5.68	6/19/2022 16:16	73.50
6/20/2022 15:07	50.20	6/20/2022 13:49	81.09	6/19/2022 12:12	18.38	6/19/2022 11:21	5.67	6/19/2022 16:17	73.49
6/20/2022 15:08	50.19	6/20/2022 13:50	81.06	6/19/2022 12:13	18.39	6/19/2022 11:22	5.69	6/19/2022 16:18	73.39
6/20/2022 15:09	50.15	6/20/2022 13:51	81.07	6/19/2022 12:14	18.34	6/19/2022 11:23	5.64	6/19/2022 16:19	73.40
6/20/2022 15:10	50.19	6/20/2022 13:52	81.07	6/19/2022 12:15	18.24	6/19/2022 11:24	5.70	6/19/2022 16:20	73.35
6/20/2022 15:11	50.18	6/20/2022 13:53	81.07	6/19/2022 12:16	18.22	6/19/2022 11:25	5.71	6/19/2022 16:21	73.31
6/20/2022 15:12	50.17	6/20/2022 13:54	81.08	6/19/2022 12:17	18.22	6/19/2022 11:26	5.74	6/19/2022 16:22	73.26
6/20/2022 15:13	50.15	6/20/2022 13:55	81.10	6/19/2022 12:18	18.14	6/19/2022 11:27	5.64	6/19/2022 16:23	73.24
6/20/2022 15:14	50.17	6/20/2022 13:56	81.06	6/19/2022 12:19	18.14	6/19/2022 11:28	5.62	6/19/2022 16:24	73.21
6/20/2022 15:15	50.16	6/20/2022 13:57	81.06	6/19/2022 12:20	18.12	6/19/2022 11:29	5.74	6/19/2022 16:25	73.16
6/20/2022 15:16	50.13	6/20/2022 13:58	81.12	6/19/2022 12:21	18.07	6/19/2022 11:30	5.63	6/19/2022 16:26	73.14
6/20/2022 15:17	50.14	6/20/2022 13:59	81.09	6/19/2022 12:22	18.07	6/19/2022 11:31	5.63	6/19/2022 16:27	73.10
6/20/2022 15:18	50.15	6/20/2022 14:00	81.08	6/19/2022 12:23	18.02	6/19/2022 11:32	5.57	6/19/2022 16:28	73.06
6/20/2022 15:19	50.15	6/20/2022 14:01	81.09	6/19/2022 12:24	17.97	6/19/2022 11:33	5.88	6/19/2022 16:29	73.02
6/20/2022 15:20	50.13	6/20/2022 14:02	81.08	6/19/2022 12:25	18.00	6/19/2022 11:34	5.72	6/19/2022 16:30	73.00
6/20/2022 15:21	50.16	6/20/2022 14:03	81.06	6/19/2022 12:26	17.93	6/19/2022 11:35	5.66	6/19/2022 16:31	72.95
6/20/2022 15:22	50.12	6/20/2022 14:04	81.07	6/19/2022 12:27	17.95	6/19/2022 11:36	5.60	6/19/2022 16:32	72.93
6/20/2022 15:23	50.11	6/20/2022 14:05	81.07	6/19/2022 12:28	17.94	6/19/2022 11:37	5.59	6/19/2022 16:33	72.92
6/20/2022 15:24	50.14	6/20/2022 14:06	81.08	6/19/2022 12:29	17.88	6/19/2022 11:38	5.60	6/19/2022 16:34	72.84
6/20/2022 15:25	50.12	6/20/2022 14:07	81.08	6/19/2022 12:30	17.86	6/19/2022 11:39	5.61	6/19/2022 16:35	72.83
6/20/2022 15:26	50.15	6/20/2022 14:08	81.10	6/19/2022 12:31	17.83	6/19/2022 11:40	5.53	6/19/2022 16:36	72.78
6/20/2022 15:27	50.10	6/20/2022 14:09	81.07	6/19/2022 12:32	17.82	6/19/2022 11:41	5.54	6/19/2022 16:37	72.77
6/20/2022 15:28	50.11	6/20/2022 14:10	81.04	6/19/2022 12:33	17.80	6/19/2022 11:42	5.52	6/19/2022 16:38	72.74
6/20/2022 15:29	50.13	6/20/2022 14:11	81.08	6/19/2022 12:34	17.84	6/19/2022 11:43	5.51	6/19/2022 16:39	72.69
6/20/2022 15:30	50.07	6/20/2022 14:12	81.09	6/19/2022 12:35	17.76	6/19/2022 11:44	5.57	6/19/2022 16:40	72.67
6/20/2022 15:31	50.08	6/20/2022 14:13	81.07	6/19/2022 12:36	17.72	6/19/2022 11:45	5.48	6/19/2022 16:41	72.66
6/20/2022 15:32	50.10	6/20/2022 14:14	81.07	6/19/2022 12:37	17.71	6/19/2022 11:46	5.52	6/19/2022 16:42	72.60

6/20/2022 15:33	50.08	6/20/2022 14:15	81.08	6/19/2022 12:38	17.73	6/19/2022 11:47	5.52	6/19/2022 16:43	72.59
6/20/2022 15:34	50.06	6/20/2022 14:16	81.09	6/19/2022 12:39	17.64	6/19/2022 11:48	5.47	6/19/2022 16:44	72.57
6/20/2022 15:35	50.13	6/20/2022 14:17	81.07	6/19/2022 12:40	17.67	6/19/2022 11:49	5.54	6/19/2022 16:45	72.50
6/20/2022 15:36	50.12	6/20/2022 14:18	81.10	6/19/2022 12:41	17.65	6/19/2022 11:50	5.48	6/19/2022 16:46	72.50
6/20/2022 15:37	50.10	6/20/2022 14:19	81.08	6/19/2022 12:42	17.61	6/19/2022 11:51	5.46	6/19/2022 16:47	72.46
6/20/2022 15:38	50.09	6/20/2022 14:20	81.07	6/19/2022 12:43	17.60	6/19/2022 11:52	5.44	6/19/2022 16:48	72.42
6/20/2022 15:39	50.08	6/20/2022 14:21	81.08	6/19/2022 12:44	17.57	6/19/2022 11:53	5.51	6/19/2022 16:49	72.41
6/20/2022 15:40	50.07	6/20/2022 14:22	81.06	6/19/2022 12:45	17.58	6/19/2022 11:54	5.38	6/19/2022 16:50	72.36
6/20/2022 15:41	50.07	6/20/2022 14:23	81.03	6/19/2022 12:46	17.59	6/19/2022 11:55	5.41	6/19/2022 16:51	72.33
6/20/2022 15:42	50.06	6/20/2022 14:24	81.05	6/19/2022 12:47	17.57	6/19/2022 11:56	5.37	6/19/2022 16:52	72.34
6/20/2022 15:43	50.07	6/20/2022 14:25	81.10	6/19/2022 12:48	17.54	6/19/2022 11:57	5.39	6/19/2022 16:53	72.27
6/20/2022 15:44	50.04	6/20/2022 14:26	81.06	6/19/2022 12:49	17.54	6/19/2022 11:58	5.46	6/19/2022 16:54	72.26
6/20/2022 15:45	50.09	6/20/2022 14:27	81.12	6/19/2022 12:50	17.54	6/19/2022 11:59	5.35	6/19/2022 16:55	72.25
6/20/2022 15:46	50.09	6/20/2022 14:28	81.08	6/19/2022 12:51	17.49	6/19/2022 12:00	5.39	6/19/2022 16:56	72.21
6/20/2022 15:47	50.06	6/20/2022 14:29	81.09	6/19/2022 12:52	17.47	6/19/2022 12:01	5.41	6/19/2022 16:57	72.19
6/20/2022 15:48	50.08	6/20/2022 14:30	81.08	6/19/2022 12:53	17.49	6/19/2022 12:02	5.33	6/19/2022 16:58	72.15
6/20/2022 15:49	50.07	6/20/2022 14:31	81.08	6/19/2022 12:54	17.44	6/19/2022 12:03	5.36	6/19/2022 16:59	72.12
6/20/2022 15:50	50.05	6/20/2022 14:32	81.09	6/19/2022 12:55	17.46	6/19/2022 12:04	5.37	6/19/2022 17:00	72.08
6/20/2022 15:51	50.05	6/20/2022 14:33	81.09	6/19/2022 12:56	17.48	6/19/2022 12:05	5.38	6/19/2022 17:01	72.05
6/20/2022 15:52	50.04	6/20/2022 14:34	81.11	6/19/2022 12:57	17.49	6/19/2022 12:06	5.34	6/19/2022 17:02	72.02
6/20/2022 15:53	50.06	6/20/2022 14:35	81.06	6/19/2022 12:58	17.47	6/19/2022 12:07	5.31	6/19/2022 17:03	72.02
6/20/2022 15:54	50.07	6/20/2022 14:36	81.06	6/19/2022 12:59	17.46	6/19/2022 12:08	5.31	6/19/2022 17:04	71.99
6/20/2022 15:55	50.08	6/20/2022 14:37	81.11	6/19/2022 13:00	17.41	6/19/2022 12:09	5.35	6/19/2022 17:05	71.97
6/20/2022 15:56	50.04	6/20/2022 14:38	81.05	6/19/2022 13:01	17.43	6/19/2022 12:10	5.28	6/19/2022 17:06	71.94
6/20/2022 15:57	50.02	6/20/2022 14:39	81.05	6/19/2022 13:02	17.45	6/19/2022 12:11	5.31	6/19/2022 17:07	71.90
6/20/2022 15:58	50.03	6/20/2022 14:40	81.04	6/19/2022 13:03	17.41	6/19/2022 12:12	5.29	6/19/2022 17:08	71.89
6/20/2022 15:59	50.05	6/20/2022 14:41	81.08	6/19/2022 13:04	17.38	6/19/2022 12:13	5.29	6/19/2022 17:09	71.84
6/20/2022 16:00	50.06	6/20/2022 14:42	81.11	6/19/2022 13:05	17.44	6/19/2022 12:14	5.24	6/19/2022 17:10	71.83
6/20/2022 16:01	50.03	6/20/2022 14:43	81.08	6/19/2022 13:06	17.42	6/19/2022 12:15	5.29	6/19/2022 17:11	71.80
6/20/2022 16:02	50.00	6/20/2022 14:44	81.09	6/19/2022 13:07	17.43	6/19/2022 12:16	5.28	6/19/2022 17:12	71.80
6/20/2022 16:03	50.04	6/20/2022 14:45	81.02	6/19/2022 13:08	17.37	6/19/2022 12:17	5.26	6/19/2022 17:13	71.76
6/20/2022 16:04	50.02	6/20/2022 14:46	81.03	6/19/2022 13:09	17.40	6/19/2022 12:18	5.21	6/19/2022 17:14	71.73
6/20/2022 16:05	50.00	6/20/2022 14:47	81.06	6/19/2022 13:10	17.38	6/19/2022 12:19	5.21	6/19/2022 17:15	71.73
6/20/2022 16:06	50.02	6/20/2022 14:48	81.08	6/19/2022 13:11	17.37	6/19/2022 12:20	5.27	6/19/2022 17:16	71.69
6/20/2022 16:07	50.03	6/20/2022 14:49	81.09	6/19/2022 13:12	17.39	6/19/2022 12:21	5.29	6/19/2022 17:17	71.66
6/20/2022 16:08	50.01	6/20/2022 14:50	81.09	6/19/2022 13:13	17.40	6/19/2022 12:22	5.18	6/19/2022 17:18	71.65
6/20/2022 16:09	50.00	6/20/2022 14:51	81.04	6/19/2022 13:14	17.38	6/19/2022 12:23	5.19	6/19/2022 17:19	71.61
6/20/2022 16:10	50.02	6/20/2022 14:52	81.08	6/19/2022 13:15	17.43	6/19/2022 12:24	5.23	6/19/2022 17:20	71.59
6/20/2022 16:11	50.05	6/20/2022 14:53	81.09	6/19/2022 13:16	17.38	6/19/2022 12:25	5.27	6/19/2022 17:21	71.57
6/20/2022 16:12	49.98	6/20/2022 14:54	81.09	6/19/2022 13:17	17.36	6/19/2022 12:26	5.22	6/19/2022 17:22	71.53
6/20/2022 16:13	50.01	6/20/2022 14:55	81.09	6/19/2022 13:18	17.43	6/19/2022 12:27	5.22	6/19/2022 17:23	71.49
6/20/2022 16:14	50.02	6/20/2022 14:56	81.10	6/19/2022 13:19	17.41	6/19/2022 12:28	5.20	6/19/2022 17:24	71.45
6/20/2022 16:15	49.99	6/20/2022 14:57	81.04	6/19/2022 13:20	17.36	6/19/2022 12:29	5.21	6/19/2022 17:25	71.44
6/20/2022 16:16	50.05	6/20/2022 14:58	81.04	6/19/2022 13:21	17.37	6/19/2022 12:30	5.16	6/19/2022 17:26	71.43
6/20/2022 16:17	50.03	6/20/2022 14:59	81.10	6/19/2022 13:22	17.41	6/19/2022 12:31	5.18	6/19/2022 17:27	71.41
6/20/2022 16:18	49.99	6/20/2022 15:00	81.08	6/19/2022 13:23	17.36	6/19/2022 12:32	5.19	6/19/2022 17:28	71.38
6/20/2022 16:19	50.02	6/20/2022 15:01	81.10	6/19/2022 13:24	17.39	6/19/2022 12:33	5.25	6/19/2022 17:29	71.35
6/20/2022 16:20	50.00	6/20/2022 15:02	81.08	6/19/2022 13:25	17.40	6/19/2022 12:34	5.14	6/19/2022 17:30	71.33
6/20/2022 16:21	50.00	6/20/2022 15:03	81.09	6/19/2022 13:26	17.43	6/19/2022 12:35	5.18	6/19/2022 17:31	71.30
6/20/2022 16:22	50.01	6/20/2022 15:04	81.09	6/19/2022 13:27	17.41	6/19/2022 12:36	5.19	6/19/2022 17:32	71.29
6/20/2022 16:23	50.02	6/20/2022 15:05	81.08	6/19/2022 13:28	17.43	6/19/2022 12:37	5.20	6/19/2022 17:33	71.26
6/20/2022 16:24	49.96	6/20/2022 15:06	81.06	6/19/2022 13:29	17.44	6/19/2022 12:38	5.17	6/19/2022 17:34	71.25
6/20/2022 16:25	50.00	6/20/2022 15:07	81.07	6/19/2022 13:30	17.45	6/19/2022 12:39	5.13	6/19/2022 17:35	71.20
6/20/2022 16:26	50.01	6/20/2022 15:08	81.11	6/19/2022 13:31	17.45	6/19/2022 12:40	5.18	6/19/2022 17:36	71.20
6/20/2022 16:27	50.01	6/20/2022 15:09	81.11	6/19/2022 13:32	17.43	6/19/2022 12:41	5.19	6/19/2022 17:37	71.17
6/20/2022 16:28	50.00	6/20/2022 15:10	81.07	6/19/2022 13:33	17.45	6/19/2022 12:42	5.12	6/19/2022 17:38	71.13
6/20/2022 16:29	49.97	6/20/2022 15:11	81.11	6/19/2022 13:34	17.45	6/19/2022 12:43	5.13	6/19/2022 17:39	71.15
6/20/2022 16:30	49.99	6/20/2022 15:12	81.05	6/19/2022 13:35	17.44	6/19/2022 12:44	5.09	6/19/2022 17:40	71.10
6/20/2022 16:31	49.99	6/20/2022 15:13	81.05	6/19/2022 13:36	17.41	6/19/2022 12:45	5.17	6/19/2022 17:41	71.10
6/20/2022 16:32	49.98	6/20/2022 15:14	81.06	6/19/2022 13:37	17.48	6/19/2022 12:46	5.09	6/19/2022 17:42	71.06
6/20/2022 16:33	49.99	6/20/2022 15:15	81.06	6/19/2022 13:38	17.43	6/19/2022 12:47	5.10	6/19/2022 17:43	71.05
6/20/2022 16:34	49.96	6/20/2022 15:16	81.09	6/19/2022 13:39	17.42	6/19/2022 12:48	5.13	6/19/2022 17:44	71.00
6/20/2022 16:35	50.00	6/20/2022 15:17	81.01	6/19/2022 13:40	17.42	6/19/2022 12:49	5.13	6/19/2022 17:45	71.00
6/20/2022 16:36	49.96	6/20/2022 15:18	81.08	6/19/2022 13:41	17.41	6/19/2022 12:50	5.08	6/19/2022 17:46	70.99
6/20/2022 16:37	49.96	6/20/2022 15:19	81.10	6/19/2022 13:42	17.45	6/19/2022 12:51	5.14	6/19/2022 17:47	70.94
6/20/2022 16:38	49.95	6/20/2022 15:20	81.10	6/19/2022 13:43	17.42	6/19/2022 12:52	5.13	6/19/2022 17:48	70.91
6/20/2022 16:39	49.96	6/20/2022 15:21	81.08	6/19/2022 13:44	17.40	6/19/2022 12:53	5.17	6/19/2022 17:49	70.90
6/20/2022 16:40	49.93	6/20/2022 15:22	81.08	6/19/2022 13:45	17.41	6/19/2022 12:54	5.06	6/19/2022 17:50	70.91
6/20/2022 16:41	49.97	6/20/2022 15:23	81.05	6/19/2022 13:46	17.43	6/19/2022 12:55	5.06	6/19/2022 17:51	70.92
6/20/2022 16:42	50.00	6/20/2022 15:24	81.12	6/19/2022 13:47	17.43	6/19/2022 12:56	5.05	6/19/2022 17:52	70.90
6/20/2022 16:43	49.96	6/20/2022 15:25	81.09	6/19/2022 13:48	17.43	6/19/2022 12:57	5.06	6/19/2022 17:53	70.85
6/20/2022 16:44	49.96	6/20/2022 15:26	81.05	6/19/2022 13:49	17.37	6/19/2022 12:58	5.04	6/19/2022 17:54	70.84
6/20/2022 16:45	49.96	6/20/2022 15:27	81.09	6/19/2022 13:50	17.42	6/19/2022 12:59	5.01	6/19/2022 17:55	70.79
6/20/2022 16:46	49.97	6/20/2022 15:28	81.10	6/19/2022 13:51	17.41	6/19/2022 13:00	5.04	6/19/2022 17:56	70.81
6/20/2022 16:47	49.94	6/20/2022 15:29	81.08	6/19/2022 13:52	17.36	6/19/2022 13:01	5.11	6/19/2022 17:57	72.75
6/20/2022 16:48	49.96	6/20/2022 15:30	81.07	6/19/2022 13:53	17.42	6/19/2022 13:02	5.03	6/19/2022 17:58	76.19
6/20/2022 16:49	49.97	6/20/2022 15:31	81.07	6/19/2022 13:54	17.36	6/19/2022 13:03	5.05	6/19/2022 17:59	76.01
6/20/2022 16:50	49.98	6/20/2022 15:32	81.07	6/19/2022 13:55	17.34	6/19/2022 13:04	5.03	6/19/2022 18:00	75.88
6/20/2022 16:51	49.92	6/20/2022 15:33	81.06	6/19/2022 13:56	17.35	6/19/2022 13:05	5.06	6/19/2022 18:01	75.78
6/20/2022 16:52	49.94	6/20/2022 15:34	81.07	6/19/2022 13:57	17.34	6/19/2022 13:06	5.02	6/19/2022 18:02	75.70
6/20/2022 16:53	49.97	6/20/2022 15:35	81.09	6/19/2022 13:58	17.37	6/19/2022 13:07	5.04	6/19/2022 18:03	75.59
6/20/2022 16:54	49.93	6/20/2022 15:36	81.10	6/19/2022 13:59	17.40	6/19/2022 13:08	5.02	6/19/2022 18:04	75.51
6/20/2022 16:55	49.94	6/20/2022 15:37	81.07	6/19/2022 14:00	17.36	6/19/2022 13:09	5.05	6/19/2022 18:05	75.44
6/20/2022 16:56	49.96	6/20/2022 15:38	81.09	6/19/2022 14:01	17.34	6/19/2022 13:10	4.95	6/19/2022 18:06	75.33
6/20/2022 16:57	49.91	6/20/2022 15:39	81.06	6/19/2022 14:02	17.33	6/19/2022 13:11	5.04	6/19/2022 18:07	75.26
6/20/2022 16:58	49.92	6/20/2022 15:40	81.07	6/19/2022 14:03	17.35	6/19/2022 13:12	5.01	6/19/2022 18:08	75.20
6/20/2022 16:59	49.96	6/20/2022 15:41	81.05	6/19/2022 14:04	17.36	6/19/2022 13:13	5.00	6/19/2022 18:09	75.08
6/20/2022 17:00	49.95	6/20/2022 15:42	81.10	6/19/2022 14:05	17.32	6/19/2022 13:14	4.97	6/19/2022 18:10	75.01

6/20/2022 17:01	49.92	6/20/2022 15:43	81.06	6/19/2022 14:06	17.33	6/19/2022 13:15	4.97	6/19/2022 18:11	78.43
6/20/2022 17:02	49.93	6/20/2022 15:44	81.09	6/19/2022 14:07	17.38	6/19/2022 13:16	4.96	6/19/2022 18:12	79.76
6/20/2022 17:03	49.91	6/20/2022 15:45	81.07	6/19/2022 14:08	17.27	6/19/2022 13:17	4.95	6/19/2022 18:13	79.57
6/20/2022 17:04	49.92	6/20/2022 15:46	81.08	6/19/2022 14:09	17.31	6/19/2022 13:18	4.96	6/19/2022 18:14	79.46
6/20/2022 17:05	49.98	6/20/2022 15:47	81.01	6/19/2022 14:10	17.31	6/19/2022 13:19	4.91	6/19/2022 18:15	79.29
6/20/2022 17:06	49.94	6/20/2022 15:48	81.10	6/19/2022 14:11	17.33	6/19/2022 13:20	4.96	6/19/2022 18:16	79.20
6/20/2022 17:07	49.94	6/20/2022 15:49	81.08	6/19/2022 14:12	17.30	6/19/2022 13:21	4.99	6/19/2022 18:17	79.08
6/20/2022 17:08	49.98	6/20/2022 15:50	81.10	6/19/2022 14:13	17.33	6/19/2022 13:22	4.93	6/19/2022 18:18	78.98
6/20/2022 17:09	49.92	6/20/2022 15:51	81.06	6/19/2022 14:14	17.29	6/19/2022 13:23	4.93	6/19/2022 18:19	78.87
6/20/2022 17:10	49.96	6/20/2022 15:52	81.04	6/19/2022 14:15	17.31	6/19/2022 13:24	4.90	6/19/2022 18:20	78.76
6/20/2022 17:11	49.91	6/20/2022 15:53	81.05	6/19/2022 14:16	17.30	6/19/2022 13:25	4.96	6/19/2022 18:21	78.67
6/20/2022 17:12	49.95	6/20/2022 15:54	81.07	6/19/2022 14:17	17.24	6/19/2022 13:26	4.88	6/19/2022 18:22	78.54
6/20/2022 17:13	49.95	6/20/2022 15:55	81.07	6/19/2022 14:18	17.23	6/19/2022 13:27	4.94	6/19/2022 18:23	78.47
6/20/2022 17:14	49.94	6/20/2022 15:56	81.10	6/19/2022 14:19	17.25	6/19/2022 13:28	4.94	6/19/2022 18:24	78.36
6/20/2022 17:15	49.95	6/20/2022 15:57	81.07	6/19/2022 14:20	17.23	6/19/2022 13:29	4.95	6/19/2022 18:25	78.26
6/20/2022 17:16	49.92	6/20/2022 15:58	81.07	6/19/2022 14:21	17.26	6/19/2022 13:30	4.84	6/19/2022 18:26	78.17
6/20/2022 17:17	49.91	6/20/2022 15:59	81.10	6/19/2022 14:22	17.21	6/19/2022 13:31	4.91	6/19/2022 18:27	78.07
6/20/2022 17:18	49.92	6/20/2022 16:00	81.07	6/19/2022 14:23	17.26	6/19/2022 13:32	4.88	6/19/2022 18:28	77.95
6/20/2022 17:19	49.91	6/20/2022 16:01	81.07	6/19/2022 14:24	17.25	6/19/2022 13:33	4.88	6/19/2022 18:29	77.87
6/20/2022 17:20	49.93	6/20/2022 16:02	81.10	6/19/2022 14:25	17.23	6/19/2022 13:34	4.87	6/19/2022 18:30	77.77
6/20/2022 17:21	49.88	6/20/2022 16:03	81.05	6/19/2022 14:26	17.23	6/19/2022 13:35	4.86	6/19/2022 18:31	77.68
6/20/2022 17:22	49.89	6/20/2022 16:04	81.07	6/19/2022 14:27	17.26	6/19/2022 13:36	4.88	6/19/2022 18:32	77.57
6/20/2022 17:23	49.91	6/20/2022 16:05	81.07	6/19/2022 14:28	17.22	6/19/2022 13:37	4.92	6/19/2022 18:33	77.46
6/20/2022 17:24	49.89	6/20/2022 16:06	81.10	6/19/2022 14:29	17.24	6/19/2022 13:38	4.87	6/19/2022 18:34	77.39
6/20/2022 17:25	49.91	6/20/2022 16:07	81.11	6/19/2022 14:30	17.21	6/19/2022 13:39	4.86	6/19/2022 18:35	77.28
6/20/2022 17:26	49.93	6/20/2022 16:08	81.08	6/19/2022 14:31	17.23	6/19/2022 13:40	4.87	6/19/2022 18:36	80.55
6/20/2022 17:27	49.92	6/20/2022 16:09	81.07	6/19/2022 14:32	17.21	6/19/2022 13:41	4.86	6/19/2022 18:37	82.90
6/20/2022 17:28	49.91	6/20/2022 16:10	81.09	6/19/2022 14:33	17.24	6/19/2022 13:42	4.81	6/19/2022 18:38	82.64
6/20/2022 17:29	49.91	6/20/2022 16:11	81.06	6/19/2022 14:34	17.17	6/19/2022 13:43	4.85	6/19/2022 18:39	82.44
6/20/2022 17:30	49.91	6/20/2022 16:12	81.10	6/19/2022 14:35	17.16	6/19/2022 13:44	4.87	6/19/2022 18:40	82.29
6/20/2022 17:31	49.93	6/20/2022 16:13	81.10	6/19/2022 14:36	17.17	6/19/2022 13:45	4.90	6/19/2022 18:41	82.09
6/20/2022 17:32	49.87	6/20/2022 16:14	81.05	6/19/2022 14:37	17.15	6/19/2022 13:46	4.83	6/19/2022 18:42	81.93
6/20/2022 17:33	49.90	6/20/2022 16:15	81.05	6/19/2022 14:38	17.14	6/19/2022 13:47	4.82	6/19/2022 18:43	81.76
6/20/2022 17:34	49.88	6/20/2022 16:16	81.07	6/19/2022 14:39	22.43	6/19/2022 13:48	4.84	6/19/2022 18:44	81.60
6/20/2022 17:35	49.92	6/20/2022 16:17	81.05	6/19/2022 14:40	25.90	6/19/2022 13:49	4.90	6/19/2022 18:45	81.49
6/20/2022 17:36	49.89	6/20/2022 16:18	81.08	6/19/2022 14:41	24.92	6/19/2022 13:50	4.79	6/19/2022 18:46	81.35
6/20/2022 17:37	49.89	6/20/2022 16:19	81.09	6/19/2022 14:42	22.74	6/19/2022 13:51	4.79	6/19/2022 18:47	81.18
6/20/2022 17:38	49.91	6/20/2022 16:20	81.07	6/19/2022 14:43	21.61	6/19/2022 13:52	4.82	6/19/2022 18:48	81.06
6/20/2022 17:39	49.87	6/20/2022 16:21	81.10	6/19/2022 14:44	20.81	6/19/2022 13:53	4.86	6/19/2022 18:49	80.95
6/20/2022 17:40	49.90	6/20/2022 16:22	81.03	6/19/2022 14:45	20.34	6/19/2022 13:54	4.77	6/19/2022 18:50	80.81
6/20/2022 17:41	49.90	6/20/2022 16:23	81.05	6/19/2022 14:46	19.98	6/19/2022 13:55	4.82	6/19/2022 18:51	80.69
6/20/2022 17:42	49.89	6/20/2022 16:24	81.09	6/19/2022 14:47	19.73	6/19/2022 13:56	4.84	6/19/2022 18:52	80.57
6/20/2022 17:43	49.88	6/20/2022 16:25	81.07	6/19/2022 14:48	19.51	6/19/2022 13:57	4.83	6/19/2022 18:53	80.46
6/20/2022 17:44	49.89	6/20/2022 16:26	81.09	6/19/2022 14:49	19.36	6/19/2022 13:58	4.79	6/19/2022 18:54	80.33
6/20/2022 17:45	49.89	6/20/2022 16:27	81.09	6/19/2022 14:50	19.19	6/19/2022 13:59	4.81	6/19/2022 18:55	80.19
6/20/2022 17:46	49.84	6/20/2022 16:28	81.08	6/19/2022 14:51	19.08	6/19/2022 14:00	4.77	6/19/2022 18:56	80.08
6/20/2022 17:47	49.86	6/20/2022 16:29	81.04	6/19/2022 14:52	18.98	6/19/2022 14:01	4.84	6/19/2022 18:57	79.97
6/20/2022 17:48	49.89	6/20/2022 16:30	81.09	6/19/2022 14:53	18.86	6/19/2022 14:02	4.85	6/19/2022 18:58	79.83
6/20/2022 17:49	49.87	6/20/2022 16:31	81.06	6/19/2022 14:54	18.76	6/19/2022 14:03	4.83	6/19/2022 18:59	79.69
6/20/2022 17:50	49.89	6/20/2022 16:32	81.08	6/19/2022 14:55	18.70	6/19/2022 14:04	4.79	6/19/2022 19:00	79.59
6/20/2022 17:51	49.89	6/20/2022 16:33	81.09	6/19/2022 14:56	18.61	6/19/2022 14:05	4.78	6/19/2022 19:01	79.46
6/20/2022 17:52	49.86	6/20/2022 16:34	81.05	6/19/2022 14:57	18.55	6/19/2022 14:06	4.78	6/19/2022 19:02	79.34
6/20/2022 17:53	49.86	6/20/2022 16:35	81.09	6/19/2022 14:58	18.47	6/19/2022 14:07	4.77	6/19/2022 19:03	79.21
6/20/2022 17:54	49.89	6/20/2022 16:36	81.12	6/19/2022 14:59	18.42	6/19/2022 14:08	4.86	6/19/2022 19:04	79.15
6/20/2022 17:55	49.87	6/20/2022 16:37	81.06	6/19/2022 15:00	18.37	6/19/2022 14:09	4.83	6/19/2022 19:05	79.07
6/20/2022 17:56	49.86	6/20/2022 16:38	81.04	6/19/2022 15:01	18.31	6/19/2022 14:10	4.75	6/19/2022 19:06	80.64
6/20/2022 17:57	49.87	6/20/2022 16:39	81.07	6/19/2022 15:02	18.28	6/19/2022 14:11	4.77	6/19/2022 19:07	85.26
6/20/2022 17:58	49.90	6/20/2022 16:40	81.07	6/19/2022 15:03	18.27	6/19/2022 14:12	4.80	6/19/2022 19:08	85.00
6/20/2022 17:59	49.89	6/20/2022 16:41	81.07	6/19/2022 15:04	18.22	6/19/2022 14:13	4.78	6/19/2022 19:09	84.75
6/20/2022 18:00	49.87	6/20/2022 16:42	81.08	6/19/2022 15:05	18.20	6/19/2022 14:14	4.80	6/19/2022 19:10	84.55
6/20/2022 18:01	49.87	6/20/2022 16:43	81.05	6/19/2022 15:06	18.15	6/19/2022 14:15	4.75	6/19/2022 19:11	84.36
6/20/2022 18:02	49.89	6/20/2022 16:44	81.08	6/19/2022 15:07	18.11	6/19/2022 14:16	4.79	6/19/2022 19:12	89.77
6/20/2022 18:03	49.90	6/20/2022 16:45	81.05	6/19/2022 15:08	18.08	6/19/2022 14:17	4.73	6/19/2022 19:13	89.42
6/20/2022 18:04	49.88	6/20/2022 16:46	81.08	6/19/2022 15:09	18.05	6/19/2022 14:18	4.75	6/19/2022 19:14	89.16
6/20/2022 18:05	49.89	6/20/2022 16:47	81.04	6/19/2022 15:10	18.01	6/19/2022 14:19	4.80	6/19/2022 19:15	88.88
6/20/2022 18:06	49.85	6/20/2022 16:48	81.07	6/19/2022 15:11	17.99	6/19/2022 14:20	4.76	6/19/2022 19:16	88.64
6/20/2022 18:07	49.89	6/20/2022 16:49	81.05	6/19/2022 15:12	17.93	6/19/2022 14:21	4.79	6/19/2022 19:17	88.44
6/20/2022 18:08	49.88	6/20/2022 16:50	81.08	6/19/2022 15:13	17.91	6/19/2022 14:22	4.81	6/19/2022 19:18	88.19
6/20/2022 18:09	49.86	6/20/2022 16:51	81.06	6/19/2022 15:14	17.90	6/19/2022 14:23	4.75	6/19/2022 19:19	87.94
6/20/2022 18:10	49.83	6/20/2022 16:52	81.11	6/19/2022 15:15	17.88	6/19/2022 14:24	4.73	6/19/2022 19:20	87.70
6/20/2022 18:11	49.88	6/20/2022 16:53	81.10	6/19/2022 15:16	17.85	6/19/2022 14:25	4.79	6/19/2022 19:21	87.48
6/20/2022 18:12	49.88	6/20/2022 16:54	81.07	6/19/2022 15:17	17.86	6/19/2022 14:26	4.84	6/19/2022 19:22	87.23
6/20/2022 18:13	49.88	6/20/2022 16:55	81.06	6/19/2022 15:18	17.82	6/19/2022 14:27	4.73	6/19/2022 19:23	87.02
6/20/2022 18:14	49.88	6/20/2022 16:56	81.09	6/19/2022 15:19	17.77	6/19/2022 14:28	4.76	6/19/2022 19:24	86.85
6/20/2022 18:15	49.86	6/20/2022 16:57	81.11	6/19/2022 15:20	17.76	6/19/2022 14:29	4.78	6/19/2022 19:25	86.64
6/20/2022 18:16	49.89	6/20/2022 16:58	81.04	6/19/2022 15:21	17.73	6/19/2022 14:30	4.75	6/19/2022 19:26	86.38
6/20/2022 18:17	49.88	6/20/2022 16:59	81.02	6/19/2022 15:22	17.70	6/19/2022 14:31	4.70	6/19/2022 19:27	86.22
6/20/2022 18:18	49.90	6/20/2022 17:00	81.06	6/19/2022 15:23	17.67	6/19/2022 14:32	4.78	6/19/2022 19:28	86.00
6/20/2022 18:19	49.82	6/20/2022 17:01	81.06	6/19/2022 15:24	17.66	6/19/2022 14:33	4.77	6/19/2022 19:29	85.80
6/20/2022 18:20	49.84	6/20/2022 17:02	81.05	6/19/2022 15:25	17.69	6/19/2022 14:34	4.78	6/19/2022 19:30	85.60
6/20/2022 18:21	49.84	6/20/2022 17:03	81.09	6/19/2022 15:26	17.66	6/19/2022 14:35	4.75	6/19/2022 19:31	85.43
6/20/2022 18:22	49.83	6/20/2022 17:04	81.09	6/19/2022 15:27	17.65	6/19/2022 14:36	4.75	6/19/2022 19:32	85.25
6/20/2022 18:23	49.84	6/20/2022 17:05	81.05	6/19/2022 15:28	17.62	6/19/2022 14:37	4.76	6/19/2022 19:33	85.05
6/20/2022 18:24	49.83	6/20/2022 17:06	81.02	6/19/2022 15:29	17.61	6/19/2022 14:38	4.77	6/19/2022 19:34	84.85
6/20/2022 18:25	49.86	6/20/2022 17:07	81.08	6/19/2022 15:30	17.59	6/19/2022 14:39	4.86	6/19/2022 19:35	84.71
6/20/2022 18:26	49.84	6/20/2022 17:08	81.07	6/19/2022 15:31	17.58	6/19/2022 14:40	4.98	6/19/2022 19:36	84.51
6/20/2022 18:27	49.88	6/20/2022 17:09	81.09	6/19/2022 15:32	17.57	6/19/2022 14:41	5.06	6/19/2022 19:37	84.33
6/20/2022 18:28	49.86	6/20/2022 17:10	81.06	6/19/2022 15:33	17.56	6/19/2022 14:42	4.99	6/19/2022 19:38	84.19

6/20/2022 18:29	49.86	6/20/2022 17:11	81.08	6/19/2022 15:34	17.51	6/19/2022 14:43	4.89	6/19/2022 19:39	84.00
6/20/2022 18:30	49.85	6/20/2022 17:12	81.08	6/19/2022 15:35	17.55	6/19/2022 14:44	4.88	6/19/2022 19:40	83.86
6/20/2022 18:31	49.86	6/20/2022 17:13	81.08	6/19/2022 15:36	17.47	6/19/2022 14:45	4.88	6/19/2022 19:41	83.68
6/20/2022 18:32	49.84	6/20/2022 17:14	81.05	6/19/2022 15:37	17.51	6/19/2022 14:46	5.10	6/19/2022 19:42	83.51
6/20/2022 18:33	49.83	6/20/2022 17:15	81.09	6/19/2022 15:38	17.51	6/19/2022 14:47	4.98	6/19/2022 19:43	83.80
6/20/2022 18:34	49.86	6/20/2022 17:16	81.09	6/19/2022 15:39	17.50	6/19/2022 14:48	4.94	6/19/2022 19:44	91.05
6/20/2022 18:35	49.85	6/20/2022 17:17	81.06	6/19/2022 15:40	17.45	6/19/2022 14:49	4.95	6/19/2022 19:45	91.41
6/20/2022 18:36	49.82	6/20/2022 17:18	81.08	6/19/2022 15:41	17.53	6/19/2022 14:50	4.89	6/19/2022 19:46	91.51
6/20/2022 18:37	49.84	6/20/2022 17:19	81.09	6/19/2022 15:42	17.46	6/19/2022 14:51	4.82	6/19/2022 19:47	98.40
6/20/2022 18:38	49.85	6/20/2022 17:20	81.08	6/19/2022 15:43	17.44	6/19/2022 14:52	4.83	6/19/2022 19:48	98.59
6/20/2022 18:39	49.84	6/20/2022 17:21	81.03	6/19/2022 15:44	17.42	6/19/2022 14:53	4.86	6/19/2022 19:49	98.75
6/20/2022 18:40	49.84	6/20/2022 17:22	81.09	6/19/2022 15:45	17.41	6/19/2022 14:54	4.84	6/19/2022 19:50	105.55
6/20/2022 18:41	49.84	6/20/2022 17:23	81.06	6/19/2022 15:46	17.40	6/19/2022 14:55	4.88	6/19/2022 19:51	105.69
6/20/2022 18:42	49.80	6/20/2022 17:24	81.08	6/19/2022 15:47	17.37	6/19/2022 14:56	4.78	6/19/2022 19:52	105.52
6/20/2022 18:43	49.80	6/20/2022 17:25	81.07	6/19/2022 15:48	17.39	6/19/2022 14:57	4.78	6/19/2022 19:53	112.32
6/20/2022 18:44	49.83	6/20/2022 17:26	81.06	6/19/2022 15:49	17.38	6/19/2022 14:58	4.83	6/19/2022 19:54	112.65
6/20/2022 18:45	49.83	6/20/2022 17:27	81.07	6/19/2022 15:50	17.32	6/19/2022 14:59	4.78	6/19/2022 19:55	111.99
6/20/2022 18:46	49.81	6/20/2022 17:28	81.04	6/19/2022 15:51	17.37	6/19/2022 15:00	4.83	6/19/2022 19:56	111.40
6/20/2022 18:47	49.82	6/20/2022 17:29	81.09	6/19/2022 15:52	17.33	6/19/2022 15:01	4.81	6/19/2022 19:57	110.86
6/20/2022 18:48	49.84	6/20/2022 17:30	81.10	6/19/2022 15:53	17.36	6/19/2022 15:02	4.78	6/19/2022 19:58	110.34
6/20/2022 18:49	49.82	6/20/2022 17:31	81.05	6/19/2022 15:54	17.28	6/19/2022 15:03	4.84	6/19/2022 19:59	109.82
6/20/2022 18:50	49.78	6/20/2022 17:32	81.02	6/19/2022 15:55	17.24	6/19/2022 15:04	4.80	6/19/2022 20:00	109.31
6/20/2022 18:51	49.85	6/20/2022 17:33	81.10	6/19/2022 15:56	17.31	6/19/2022 15:05	4.99	6/19/2022 20:01	108.83
6/20/2022 18:52	49.85	6/20/2022 17:34	81.07	6/19/2022 15:57	17.33	6/19/2022 15:06	4.81	6/19/2022 20:02	108.35
6/20/2022 18:53	49.83	6/20/2022 17:35	81.04	6/19/2022 15:58	17.30	6/19/2022 15:07	4.85	6/19/2022 20:03	107.86
6/20/2022 18:54	49.83	6/20/2022 17:36	81.07	6/19/2022 15:59	17.30	6/19/2022 15:08	4.81	6/19/2022 20:04	107.43
6/20/2022 18:55	49.84	6/20/2022 17:37	81.11	6/19/2022 16:00	17.24	6/19/2022 15:09	4.78	6/19/2022 20:05	106.96
6/20/2022 18:56	49.84	6/20/2022 17:38	81.06	6/19/2022 16:01	17.28	6/19/2022 15:10	4.80	6/19/2022 20:06	106.53
6/20/2022 18:57	49.80	6/20/2022 17:39	81.03	6/19/2022 16:02	17.25	6/19/2022 15:11	4.87	6/19/2022 20:07	106.08
6/20/2022 18:58	49.82	6/20/2022 17:40	81.07	6/19/2022 16:03	17.22	6/19/2022 15:12	4.79	6/19/2022 20:08	105.69
6/20/2022 18:59	49.83	6/20/2022 17:41	81.05	6/19/2022 16:04	17.17	6/19/2022 15:13	4.71	6/19/2022 20:09	105.23
6/20/2022 19:00	49.84	6/20/2022 17:42	81.10	6/19/2022 16:05	17.21	6/19/2022 15:14	4.80	6/19/2022 20:10	104.84
6/20/2022 19:01	49.87	6/20/2022 17:43	81.08	6/19/2022 16:06	17.23	6/19/2022 15:15	4.99	6/19/2022 20:11	104.46
6/20/2022 19:02	49.86	6/20/2022 17:44	81.07	6/19/2022 16:07	17.22	6/19/2022 15:16	4.93	6/19/2022 20:12	104.09
6/20/2022 19:03	49.80	6/20/2022 17:45	81.05	6/19/2022 16:08	17.17	6/19/2022 15:17	4.87	6/19/2022 20:13	103.72
6/20/2022 19:04	49.83	6/20/2022 17:46	81.03	6/19/2022 16:09	17.20	6/19/2022 15:18	4.80	6/19/2022 20:14	103.33
6/20/2022 19:05	49.82	6/20/2022 17:47	81.08	6/19/2022 16:10	17.23	6/19/2022 15:19	4.81	6/19/2022 20:15	102.94
6/20/2022 19:06	49.86	6/20/2022 17:48	81.08	6/19/2022 16:11	17.21	6/19/2022 15:20	4.75	6/19/2022 20:16	102.53
6/20/2022 19:07	49.83	6/20/2022 17:49	81.09	6/19/2022 16:12	17.18	6/19/2022 15:21	4.76	6/19/2022 20:17	102.18
6/20/2022 19:08	49.83	6/20/2022 17:50	81.05	6/19/2022 16:13	17.16	6/19/2022 15:22	4.80	6/19/2022 20:18	101.81
6/20/2022 19:09	49.87	6/20/2022 17:51	81.05	6/19/2022 16:14	17.16	6/19/2022 15:23	4.72	6/19/2022 20:19	101.46
6/20/2022 19:10	49.85	6/20/2022 17:52	81.08	6/19/2022 16:15	17.11	6/19/2022 15:24	4.75	6/19/2022 20:20	101.07
6/20/2022 19:11	49.79	6/20/2022 17:53	81.11	6/19/2022 16:16	17.12	6/19/2022 15:25	4.76	6/19/2022 20:21	100.77
6/20/2022 19:12	49.82	6/20/2022 17:54	81.06	6/19/2022 16:17	17.15	6/19/2022 15:26	4.76	6/19/2022 20:22	100.38
6/20/2022 19:13	49.83	6/20/2022 17:55	81.11	6/19/2022 16:18	17.11	6/19/2022 15:27	4.79	6/19/2022 20:23	100.07
6/20/2022 19:14	49.84	6/20/2022 17:56	81.10	6/19/2022 16:19	17.17	6/19/2022 15:28	4.66	6/19/2022 20:24	99.74
6/20/2022 19:15	49.81	6/20/2022 17:57	81.05	6/19/2022 16:20	17.14	6/19/2022 15:29	4.72	6/19/2022 20:25	99.38
6/20/2022 19:16	49.81	6/20/2022 17:58	81.03	6/19/2022 16:21	17.14	6/19/2022 15:30	4.76	6/19/2022 20:26	99.08
6/20/2022 19:17	49.81	6/20/2022 17:59	81.07	6/19/2022 16:22	17.07	6/19/2022 15:31	4.74	6/19/2022 20:27	98.77
6/20/2022 19:18	52.04	6/20/2022 18:00	81.05	6/19/2022 16:23	17.10	6/19/2022 15:32	4.73	6/19/2022 20:28	98.44
6/20/2022 19:19	53.69	6/20/2022 18:01	81.09	6/19/2022 16:24	17.10	6/19/2022 15:33	4.74	6/19/2022 20:29	98.13
6/20/2022 19:20	54.52	6/20/2022 18:02	81.05	6/19/2022 16:25	17.07	6/19/2022 15:34	4.73	6/19/2022 20:30	97.82
6/20/2022 19:21	55.05	6/20/2022 18:03	81.08	6/19/2022 16:26	17.10	6/19/2022 15:35	4.71	6/19/2022 20:31	97.50
6/20/2022 19:22	52.58	6/20/2022 18:04	81.03	6/19/2022 16:27	17.10	6/19/2022 15:36	4.68	6/19/2022 20:32	97.20
6/20/2022 19:23	51.69	6/20/2022 18:05	81.06	6/19/2022 16:28	17.04	6/19/2022 15:37	4.68	6/19/2022 20:33	96.90
6/20/2022 19:24	51.30	6/20/2022 18:06	81.07	6/19/2022 16:29	17.03	6/19/2022 15:38	4.74	6/19/2022 20:34	96.61
6/20/2022 19:25	51.09	6/20/2022 18:07	81.04	6/19/2022 16:30	17.06	6/19/2022 15:39	4.69	6/19/2022 20:35	96.30
6/20/2022 19:26	50.95	6/20/2022 18:08	81.08	6/19/2022 16:31	17.09	6/19/2022 15:40	4.70	6/19/2022 20:36	96.03
6/20/2022 19:27	50.82	6/20/2022 18:09	81.09	6/19/2022 16:32	17.04	6/19/2022 15:41	4.94	6/19/2022 20:37	95.78
6/20/2022 19:28	50.77	6/20/2022 18:10	81.09	6/19/2022 16:33	17.04	6/19/2022 15:42	4.95	6/19/2022 20:38	95.46
6/20/2022 19:29	50.69	6/20/2022 18:11	81.05	6/19/2022 16:34	17.08	6/19/2022 15:43	5.41	6/19/2022 20:39	95.20
6/20/2022 19:30	50.65	6/20/2022 18:12	81.07	6/19/2022 16:35	17.06	6/19/2022 15:44	5.03	6/19/2022 20:40	94.93
6/20/2022 19:31	50.60	6/20/2022 18:13	81.03	6/19/2022 16:36	17.06	6/19/2022 15:45	5.36	6/19/2022 20:41	94.65
6/20/2022 19:32	50.59	6/20/2022 18:14	81.06	6/19/2022 16:37	17.00	6/19/2022 15:46	5.33	6/19/2022 20:42	94.40
6/20/2022 19:33	50.52	6/20/2022 18:15	81.05	6/19/2022 16:38	17.02	6/19/2022 15:47	5.30	6/19/2022 20:43	94.16
6/20/2022 19:34	50.48	6/20/2022 18:16	81.05	6/19/2022 16:39	17.08	6/19/2022 15:48	5.29	6/19/2022 20:44	93.91
6/20/2022 19:35	50.46	6/20/2022 18:17	81.09	6/19/2022 16:40	17.05	6/19/2022 15:49	5.50	6/19/2022 20:45	93.71
6/20/2022 19:36	50.44	6/20/2022 18:18	81.06	6/19/2022 16:41	17.04	6/19/2022 15:50	5.35	6/19/2022 20:46	93.52
6/20/2022 19:37	50.45	6/20/2022 18:19	81.04	6/19/2022 16:42	17.05	6/19/2022 15:51	5.10	6/19/2022 20:47	93.22
6/20/2022 19:38	50.41	6/20/2022 18:20	81.11	6/19/2022 16:43	17.01	6/19/2022 15:52	5.61	6/19/2022 20:48	93.00
6/20/2022 19:39	50.37	6/20/2022 18:21	81.06	6/19/2022 16:44	17.02	6/19/2022 15:53	5.50	6/19/2022 20:49	92.72
6/20/2022 19:40	50.37	6/20/2022 18:22	81.08	6/19/2022 16:45	16.99	6/19/2022 15:54	5.31	6/19/2022 20:50	92.46
6/20/2022 19:41	50.33	6/20/2022 18:23	81.04	6/19/2022 16:46	16.94	6/19/2022 15:55	5.33	6/19/2022 20:51	92.22
6/20/2022 19:42	50.35	6/20/2022 18:24	81.07	6/19/2022 16:47	16.93	6/19/2022 15:56	5.43	6/19/2022 20:52	92.02
6/20/2022 19:43	50.33	6/20/2022 18:25	81.06	6/19/2022 16:48	16.96	6/19/2022 15:57	5.62	6/19/2022 20:53	91.79
6/20/2022 19:44	50.32	6/20/2022 18:26	81.08	6/19/2022 16:49	16.98	6/19/2022 15:58	5.55	6/19/2022 20:54	91.60
6/20/2022 19:45	50.31	6/20/2022 18:27	81.07	6/19/2022 16:50	16.97	6/19/2022 15:59	5.55	6/19/2022 20:55	91.40
6/20/2022 19:46	50.28	6/20/2022 18:28	81.05	6/19/2022 16:51	16.99	6/19/2022 16:00	5.34	6/19/2022 20:56	91.20
6/20/2022 19:47	50.27	6/20/2022 18:29	81.05	6/19/2022 16:52	17.00	6/19/2022 16:01	5.26	6/19/2022 20:57	91.01
6/20/2022 19:48	50.27	6/20/2022 18:30	81.04	6/19/2022 16:53	16.95	6/19/2022 16:02	5.39	6/19/2022 20:58	90.75
6/20/2022 19:49	50.27	6/20/2022 18:31	81.07	6/19/2022 16:54	16.96	6/19/2022 16:03	5.56	6/19/2022 20:59	90.58
6/20/2022 19:50	50.25	6/20/2022 18:32	81.05	6/19/2022 16:55	16.95	6/19/2022 16:04	5.74	6/19/2022 21:00	90.37
6/20/2022 19:51	50.27	6/20/2022 18:33	81.08	6/19/2022 16:56	16.92	6/19/2022 16:05	5.57	6/19/2022 21:01	90.18
6/20/2022 19:52	50.23	6/20/2022 18:34	81.07	6/19/2022 16:57	16.93	6/19/2022 16:06	5.42	6/19/2022 21:02	89.94
6/20/2022 19:53	50.22	6/20/2022 18:35	81.09	6/19/2022 16:58	16.97	6/19/2022 16:07	5.65	6/19/2022 21:03	89.76
6/20/2022 19:54	50.22	6/20/2022 18:36	81.06	6/19/2022 16:59	16.98	6/19/2022 16:08	5.80	6/19/2022 21:04	89.57
6/20/2022 19:55	50.24	6/20/2022 18:37	81.07	6/19/2022 17:00	16.96	6/19/2022 16:09	5.79	6/19/2022 21:05	89.38
6/20/2022 19:56	50.20	6/20/2022 18:38	81.05	6/19/2022 17:01	16.95	6/19/2022 16:10	5.92	6/19/2022 21:06	89.16

6/20/2022 19:57	50.22	6/20/2022 18:39	81.04	6/19/2022 17:02	16.91	6/19/2022 16:11	5.51	6/19/2022 21:07	88.95
6/20/2022 19:58	50.17	6/20/2022 18:40	81.12	6/19/2022 17:03	16.91	6/19/2022 16:12	5.74	6/19/2022 21:08	88.76
6/20/2022 19:59	50.22	6/20/2022 18:41	81.10	6/19/2022 17:04	16.93	6/19/2022 16:13	5.51	6/19/2022 21:09	88.59
6/20/2022 20:00	50.17	6/20/2022 18:42	81.06	6/19/2022 17:05	16.90	6/19/2022 16:14	5.75	6/19/2022 21:10	88.40
6/20/2022 20:01	50.18	6/20/2022 18:43	81.06	6/19/2022 17:06	16.88	6/19/2022 16:15	5.91	6/19/2022 21:11	88.23
6/20/2022 20:02	50.17	6/20/2022 18:44	81.05	6/19/2022 17:07	16.89	6/19/2022 16:16	5.82	6/19/2022 21:12	88.01
6/20/2022 20:03	50.18	6/20/2022 18:45	81.07	6/19/2022 17:08	16.93	6/19/2022 16:17	5.95	6/19/2022 21:13	87.86
6/20/2022 20:04	50.17	6/20/2022 18:46	81.08	6/19/2022 17:09	16.94	6/19/2022 16:18	5.78	6/19/2022 21:14	87.62
6/20/2022 20:05	50.18	6/20/2022 18:47	81.07	6/19/2022 17:10	16.89	6/19/2022 16:19	5.82	6/19/2022 21:15	87.43
6/20/2022 20:06	50.13	6/20/2022 18:48	81.02	6/19/2022 17:11	16.90	6/19/2022 16:20	5.84	6/19/2022 21:16	87.26
6/20/2022 20:07	50.15	6/20/2022 18:49	81.09	6/19/2022 17:12	16.96	6/19/2022 16:21	5.85	6/19/2022 21:17	87.07
6/20/2022 20:08	50.13	6/20/2022 18:50	81.09	6/19/2022 17:13	16.92	6/19/2022 16:22	5.99	6/19/2022 21:18	86.92
6/20/2022 20:09	50.13	6/20/2022 18:51	81.08	6/19/2022 17:14	16.89	6/19/2022 16:23	6.23	6/19/2022 21:19	86.71
6/20/2022 20:10	50.15	6/20/2022 18:52	81.07	6/19/2022 17:15	16.92	6/19/2022 16:24	6.08	6/19/2022 21:20	86.56
6/20/2022 20:11	50.13	6/20/2022 18:53	81.08	6/19/2022 17:16	16.92	6/19/2022 16:25	5.70	6/19/2022 21:21	86.37
6/20/2022 20:12	50.14	6/20/2022 18:54	81.08	6/19/2022 17:17	16.90	6/19/2022 16:26	5.68	6/19/2022 21:22	86.16
6/20/2022 20:13	50.14	6/20/2022 18:55	81.08	6/19/2022 17:18	16.88	6/19/2022 16:27	5.58	6/19/2022 21:23	86.03
6/20/2022 20:14	50.09	6/20/2022 18:56	81.09	6/19/2022 17:19	16.94	6/19/2022 16:28	5.50	6/19/2022 21:24	85.81
6/20/2022 20:15	50.14	6/20/2022 18:57	81.05	6/19/2022 17:20	16.90	6/19/2022 16:29	5.44	6/19/2022 21:25	85.67
6/20/2022 20:16	50.10	6/20/2022 18:58	81.04	6/19/2022 17:21	16.86	6/19/2022 16:30	5.39	6/19/2022 21:26	85.52
6/20/2022 20:17	50.10	6/20/2022 18:59	81.09	6/19/2022 17:22	16.86	6/19/2022 16:31	5.42	6/19/2022 21:27	85.33
6/20/2022 20:18	50.11	6/20/2022 19:00	81.05	6/19/2022 17:23	16.86	6/19/2022 16:32	5.37	6/19/2022 21:28	85.17
6/20/2022 20:19	50.12	6/20/2022 19:01	81.05	6/19/2022 17:24	16.92	6/19/2022 16:33	5.32	6/19/2022 21:29	84.99
6/20/2022 20:20	50.11	6/20/2022 19:02	81.02	6/19/2022 17:25	16.90	6/19/2022 16:34	5.30	6/19/2022 21:30	84.83
6/20/2022 20:21	50.13	6/20/2022 19:03	81.07	6/19/2022 17:26	16.92	6/19/2022 16:35	5.32	6/19/2022 21:31	84.72
6/20/2022 20:22	50.07	6/20/2022 19:04	81.03	6/19/2022 17:27	16.87	6/19/2022 16:36	5.32	6/19/2022 21:32	84.55
6/20/2022 20:23	50.11	6/20/2022 19:05	81.08	6/19/2022 17:28	16.88	6/19/2022 16:37	5.23	6/19/2022 21:33	84.38
6/20/2022 20:24	50.09	6/20/2022 19:06	81.07	6/19/2022 17:29	16.86	6/19/2022 16:38	5.19	6/19/2022 21:34	84.24
6/20/2022 20:25	50.07	6/20/2022 19:07	81.09	6/19/2022 17:30	16.81	6/19/2022 16:39	5.27	6/19/2022 21:35	84.07
6/20/2022 20:26	50.09	6/20/2022 19:08	81.03	6/19/2022 17:31	16.85	6/19/2022 16:40	5.21	6/19/2022 21:36	83.90
6/20/2022 20:27	50.07	6/20/2022 19:09	81.05	6/19/2022 17:32	16.87	6/19/2022 16:41	5.24	6/19/2022 21:37	88.24
6/20/2022 20:28	50.10	6/20/2022 19:10	81.09	6/19/2022 17:33	16.89	6/19/2022 16:42	5.39	6/19/2022 21:38	89.06
6/20/2022 20:29	50.08	6/20/2022 19:11	81.05	6/19/2022 17:34	16.86	6/19/2022 16:43	5.33	6/19/2022 21:39	88.81
6/20/2022 20:30	50.08	6/20/2022 19:12	81.07	6/19/2022 17:35	16.93	6/19/2022 16:44	5.26	6/19/2022 21:40	88.59
6/20/2022 20:31	50.07	6/20/2022 19:13	81.09	6/19/2022 17:36	16.86	6/19/2022 16:45	5.22	6/19/2022 21:41	88.39
6/20/2022 20:32	50.08	6/20/2022 19:14	81.10	6/19/2022 17:37	16.80	6/19/2022 16:46	5.23	6/19/2022 21:42	88.13
6/20/2022 20:33	50.04	6/20/2022 19:15	81.10	6/19/2022 17:38	16.89	6/19/2022 16:47	5.17	6/19/2022 21:43	87.91
6/20/2022 20:34	50.07	6/20/2022 19:16	81.06	6/19/2022 17:39	16.86	6/19/2022 16:48	5.19	6/19/2022 21:44	87.73
6/20/2022 20:35	50.06	6/20/2022 19:17	81.09	6/19/2022 17:40	16.88	6/19/2022 16:49	5.13	6/19/2022 21:45	87.52
6/20/2022 20:36	50.06	6/20/2022 19:18	81.08	6/19/2022 17:41	16.86	6/19/2022 16:50	5.12	6/19/2022 21:46	87.35
6/20/2022 20:37	50.05	6/20/2022 19:19	81.02	6/19/2022 17:42	16.87	6/19/2022 16:51	5.22	6/19/2022 21:47	87.12
6/20/2022 20:38	50.06	6/20/2022 19:20	81.05	6/19/2022 17:43	16.88	6/19/2022 16:52	5.06	6/19/2022 21:48	86.91
6/20/2022 20:39	50.03	6/20/2022 19:21	81.08	6/19/2022 17:44	16.83	6/19/2022 16:53	5.06	6/19/2022 21:49	86.71
6/20/2022 20:40	50.04	6/20/2022 19:22	81.06	6/19/2022 17:45	16.88	6/19/2022 16:54	5.13	6/19/2022 21:50	86.49
6/20/2022 20:41	50.05	6/20/2022 19:23	81.01	6/19/2022 17:46	16.83	6/19/2022 16:55	5.12	6/19/2022 21:51	86.36
6/20/2022 20:42	50.09	6/20/2022 19:24	81.07	6/19/2022 17:47	16.85	6/19/2022 16:56	5.06	6/19/2022 21:52	86.14
6/20/2022 20:43	50.04	6/20/2022 19:25	81.07	6/19/2022 17:48	16.80	6/19/2022 16:57	5.07	6/19/2022 21:53	86.00
6/20/2022 20:44	50.02	6/20/2022 19:26	81.05	6/19/2022 17:49	16.80	6/19/2022 16:58	5.08	6/19/2022 21:54	85.79
6/20/2022 20:45	50.05	6/20/2022 19:27	81.08	6/19/2022 17:50	16.83	6/19/2022 16:59	4.97	6/19/2022 21:55	85.63
6/20/2022 20:46	50.03	6/20/2022 19:28	81.04	6/19/2022 17:51	16.83	6/19/2022 17:00	5.36	6/19/2022 21:56	85.45
6/20/2022 20:47	50.01	6/20/2022 19:29	81.05	6/19/2022 17:52	16.84	6/19/2022 17:01	5.12	6/19/2022 21:57	85.27
6/20/2022 20:48	50.00	6/20/2022 19:30	81.10	6/19/2022 17:53	16.83	6/19/2022 17:02	5.34	6/19/2022 21:58	85.11
6/20/2022 20:49	50.03	6/20/2022 19:31	81.09	6/19/2022 17:54	16.82	6/19/2022 17:03	5.13	6/19/2022 21:59	84.95
6/20/2022 20:50	50.05	6/20/2022 19:32	81.08	6/19/2022 17:55	16.82	6/19/2022 17:04	5.12	6/19/2022 22:00	84.78
6/20/2022 20:51	50.07	6/20/2022 19:33	81.06	6/19/2022 17:56	16.79	6/19/2022 17:05	5.23	6/19/2022 22:01	84.57
6/20/2022 20:52	50.05	6/20/2022 19:34	81.08	6/19/2022 17:57	16.82	6/19/2022 17:06	5.15	6/19/2022 22:02	84.42
6/20/2022 20:53	50.00	6/20/2022 19:35	81.06	6/19/2022 17:58	16.75	6/19/2022 17:07	5.18	6/19/2022 22:03	84.29
6/20/2022 20:54	50.01	6/20/2022 19:36	81.09	6/19/2022 17:59	16.83	6/19/2022 17:08	5.11	6/19/2022 22:04	84.14
6/20/2022 20:55	50.01	6/20/2022 19:37	81.05	6/19/2022 18:00	16.79	6/19/2022 17:09	5.10	6/19/2022 22:05	83.93
6/20/2022 20:56	50.01	6/20/2022 19:38	81.11	6/19/2022 18:01	16.81	6/19/2022 17:10	5.14	6/19/2022 22:06	83.77
6/20/2022 20:57	50.01	6/20/2022 19:39	81.07	6/19/2022 18:02	16.80	6/19/2022 17:11	5.10	6/19/2022 22:07	83.64
6/20/2022 20:58	50.01	6/20/2022 19:40	81.09	6/19/2022 18:03	16.77	6/19/2022 17:12	5.02	6/19/2022 22:08	83.49
6/20/2022 20:59	50.01	6/20/2022 19:41	81.03	6/19/2022 18:04	16.76	6/19/2022 17:13	4.99	6/19/2022 22:09	83.36
6/20/2022 21:00	50.01	6/20/2022 19:42	81.06	6/19/2022 18:05	16.78	6/19/2022 17:14	5.07	6/19/2022 22:10	83.18
6/20/2022 21:01	50.02	6/20/2022 19:43	81.08	6/19/2022 18:06	16.82	6/19/2022 17:15	4.99	6/19/2022 22:11	83.06
6/20/2022 21:02	50.04	6/20/2022 19:44	81.10	6/19/2022 18:07	16.77	6/19/2022 17:16	4.99	6/19/2022 22:12	82.95
6/20/2022 21:03	49.99	6/20/2022 19:45	81.08	6/19/2022 18:08	16.76	6/19/2022 17:17	4.91	6/19/2022 22:13	82.80
6/20/2022 21:04	50.02	6/20/2022 19:46	81.06	6/19/2022 18:09	16.79	6/19/2022 17:18	5.12	6/19/2022 22:14	82.60
6/20/2022 21:05	50.04	6/20/2022 19:47	81.05	6/19/2022 18:10	16.80	6/19/2022 17:19	5.18	6/19/2022 22:15	82.50
6/20/2022 21:06	49.99	6/20/2022 19:48	81.05	6/19/2022 18:11	16.81	6/19/2022 17:20	5.22	6/19/2022 22:16	82.35
6/20/2022 21:07	49.98	6/20/2022 19:49	81.07	6/19/2022 18:12	16.83	6/19/2022 17:21	5.06	6/19/2022 22:17	82.20
6/20/2022 21:08	50.02	6/20/2022 19:50	81.07	6/19/2022 18:13	16.82	6/19/2022 17:22	5.01	6/19/2022 22:18	82.07
6/20/2022 21:09	49.99	6/20/2022 19:51	81.05	6/19/2022 18:14	16.77	6/19/2022 17:23	5.04	6/19/2022 22:19	81.97
6/20/2022 21:10	50.01	6/20/2022 19:52	81.11	6/19/2022 18:15	16.75	6/19/2022 17:24	4.92	6/19/2022 22:20	81.83
6/20/2022 21:11	50.00	6/20/2022 19:53	81.11	6/19/2022 18:16	16.77	6/19/2022 17:25	5.00	6/19/2022 22:21	81.71
6/20/2022 21:12	50.02	6/20/2022 19:54	81.04	6/19/2022 18:17	16.79	6/19/2022 17:26	4.94	6/19/2022 22:22	81.56
6/20/2022 21:13	50.00	6/20/2022 19:55	81.10	6/19/2022 18:18	16.79	6/19/2022 17:27	5.03	6/19/2022 22:23	81.45
6/20/2022 21:14	50.04	6/20/2022 19:56	81.04	6/19/2022 18:19	16.77	6/19/2022 17:28	4.96	6/19/2022 22:24	81.34
6/20/2022 21:15	50.02	6/20/2022 19:57	81.08	6/19/2022 18:20	16.80	6/19/2022 17:29	4.91	6/19/2022 22:25	81.21
6/20/2022 21:16	49.99	6/20/2022 19:58	81.04	6/19/2022 18:21	16.73	6/19/2022 17:30	4.92	6/19/2022 22:26	81.10
6/20/2022 21:17	49.98	6/20/2022 19:59	81.06	6/19/2022 18:22	16.73	6/19/2022 17:31	4.92	6/19/2022 22:27	80.98
6/20/2022 21:18	50.01	6/20/2022 20:00	81.07	6/19/2022 18:23	16.77	6/19/2022 17:32	4.91	6/19/2022 22:28	80.89
6/20/2022 21:19	50.00	6/20/2022 20:01	81.07	6/19/2022 18:24	16.80	6/19/2022 17:33	4.93	6/19/2022 22:29	80.78
6/20/2022 21:20	49.97	6/20/2022 20:02	81.04	6/19/2022 18:25	16.79	6/19/2022 17:34	4.88	6/19/2022 22:30	80.70
6/20/2022 21:21	49.98	6/20/2022 20:03	81.04	6/19/2022 18:26	16.81	6/19/2022 17:35	4.98	6/19/2022 22:31	80.59
6/20/2022 21:22	49.97	6/20/2022 20:04	81.07	6/19/2022 18:27	16.74	6/19/2022 17:36	5.00	6/19/2022 22:32	80.45
6/20/2022 21:23	50.02	6/20/2022 20:05	81.09	6/19/2022 18:28	22.49	6/19/2022 17:37	5.01	6/19/2022 22:33	80.36
6/20/2022 21:24	49.98	6/20/2022 20:06	81.06	6/19/2022 18:29	25.82	6/19/2022 17:38	4.98	6/19/2022 22:34	80.23

6/20/2022 21:25	49.96	6/20/2022 20:07	81.05	6/19/2022 18:30	25.87	6/19/2022 17:39	4.93	6/19/2022 22:35	80.16
6/20/2022 21:26	49.94	6/20/2022 20:08	81.07	6/19/2022 18:31	23.18	6/19/2022 17:40	4.93	6/19/2022 22:36	80.04
6/20/2022 21:27	49.98	6/20/2022 20:09	81.06	6/19/2022 18:32	21.80	6/19/2022 17:41	4.90	6/19/2022 22:37	79.91
6/20/2022 21:28	49.99	6/20/2022 20:10	81.08	6/19/2022 18:33	20.90	6/19/2022 17:42	4.85	6/19/2022 22:38	79.80
6/20/2022 21:29	49.97	6/20/2022 20:11	81.03	6/19/2022 18:34	20.31	6/19/2022 17:43	4.86	6/19/2022 22:39	79.69
6/20/2022 21:30	49.98	6/20/2022 20:12	81.07	6/19/2022 18:35	19.91	6/19/2022 17:44	4.89	6/19/2022 22:40	79.57
6/20/2022 21:31	49.98	6/20/2022 20:13	81.07	6/19/2022 18:36	19.63	6/19/2022 17:45	4.92	6/19/2022 22:41	79.48
6/20/2022 21:32	49.97	6/20/2022 20:14	81.09	6/19/2022 18:37	19.39	6/19/2022 17:46	4.95	6/19/2022 22:42	79.38
6/20/2022 21:33	49.94	6/20/2022 20:15	81.04	6/19/2022 18:38	19.18	6/19/2022 17:47	4.87	6/19/2022 22:43	79.27
6/20/2022 21:34	49.96	6/20/2022 20:16	81.04	6/19/2022 18:39	19.06	6/19/2022 17:48	4.89	6/19/2022 22:44	79.16
6/20/2022 21:35	49.92	6/20/2022 20:17	81.06	6/19/2022 18:40	18.92	6/19/2022 17:49	4.87	6/19/2022 22:45	79.10
6/20/2022 21:36	49.96	6/20/2022 20:18	81.10	6/19/2022 18:41	18.82	6/19/2022 17:50	4.85	6/19/2022 22:46	79.02
6/20/2022 21:37	49.95	6/20/2022 20:19	81.01	6/19/2022 18:42	18.64	6/19/2022 17:51	4.83	6/19/2022 22:47	78.95
6/20/2022 21:38	49.93	6/20/2022 20:20	81.07	6/19/2022 18:43	18.57	6/19/2022 17:52	4.83	6/19/2022 22:48	78.84
6/20/2022 21:39	49.96	6/20/2022 20:21	81.06	6/19/2022 18:44	18.49	6/19/2022 17:53	4.93	6/19/2022 22:49	78.79
6/20/2022 21:40	49.97	6/20/2022 20:22	81.07	6/19/2022 18:45	18.41	6/19/2022 17:54	4.88	6/19/2022 22:50	78.71
6/20/2022 21:41	49.93	6/20/2022 20:23	81.07	6/19/2022 18:46	18.37	6/19/2022 17:55	4.86	6/19/2022 22:51	78.63
6/20/2022 21:42	49.96	6/20/2022 20:24	81.06	6/19/2022 18:47	18.28	6/19/2022 17:56	4.81	6/19/2022 22:52	78.50
6/20/2022 21:43	49.96	6/20/2022 20:25	81.03	6/19/2022 18:48	18.27	6/19/2022 17:57	5.07	6/19/2022 22:53	78.40
6/20/2022 21:44	49.92	6/20/2022 20:26	81.06	6/19/2022 18:49	18.16	6/19/2022 17:58	5.09	6/19/2022 22:54	78.33
6/20/2022 21:45	49.94	6/20/2022 20:27	81.07	6/19/2022 18:50	18.15	6/19/2022 17:59	4.91	6/19/2022 22:55	78.28
6/20/2022 21:46	49.95	6/20/2022 20:28	81.07	6/19/2022 18:51	18.01	6/19/2022 18:00	4.85	6/19/2022 22:56	78.19
6/20/2022 21:47	49.97	6/20/2022 20:29	81.06	6/19/2022 18:52	18.05	6/19/2022 18:01	4.87	6/19/2022 22:57	78.08
6/20/2022 21:48	49.94	6/20/2022 20:30	81.08	6/19/2022 18:53	18.00	6/19/2022 18:02	4.79	6/19/2022 22:58	78.01
6/20/2022 21:49	49.95	6/20/2022 20:31	81.07	6/19/2022 18:54	17.97	6/19/2022 18:03	4.79	6/19/2022 22:59	77.91
6/20/2022 21:50	49.97	6/20/2022 20:32	81.03	6/19/2022 18:55	17.87	6/19/2022 18:04	4.77	6/19/2022 23:00	77.81
6/20/2022 21:51	49.94	6/20/2022 20:33	81.09	6/19/2022 18:56	17.90	6/19/2022 18:05	4.78	6/19/2022 23:01	77.80
6/20/2022 21:52	49.91	6/20/2022 20:34	81.09	6/19/2022 18:57	17.86	6/19/2022 18:06	4.81	6/19/2022 23:02	77.64
6/20/2022 21:53	49.94	6/20/2022 20:35	83.16	6/19/2022 18:58	17.79	6/19/2022 18:07	4.74	6/19/2022 23:03	77.56
6/20/2022 21:54	49.94	6/20/2022 20:36	82.72	6/19/2022 18:59	17.73	6/19/2022 18:08	4.78	6/19/2022 23:04	77.47
6/20/2022 21:55	49.91	6/20/2022 20:37	82.46	6/19/2022 19:00	17.75	6/19/2022 18:09	4.67	6/19/2022 23:05	77.34
6/20/2022 21:56	49.97	6/20/2022 20:38	82.19	6/19/2022 19:01	17.72	6/19/2022 18:10	4.71	6/19/2022 23:06	77.29
6/20/2022 21:57	49.95	6/20/2022 20:39	82.09	6/19/2022 19:02	17.70	6/19/2022 18:11	4.78	6/19/2022 23:07	77.21
6/20/2022 21:58	49.92	6/20/2022 20:40	81.93	6/19/2022 19:03	17.66	6/19/2022 18:12	4.69	6/19/2022 23:08	77.14
6/20/2022 21:59	49.95	6/20/2022 20:41	81.86	6/19/2022 19:04	17.65	6/19/2022 18:13	4.67	6/19/2022 23:09	77.09
6/20/2022 22:00	49.93	6/20/2022 20:42	81.81	6/19/2022 19:05	17.65	6/19/2022 18:14	4.72	6/19/2022 23:10	76.95
6/20/2022 22:01	49.94	6/20/2022 20:43	81.66	6/19/2022 19:06	17.60	6/19/2022 18:15	4.64	6/19/2022 23:11	76.91
6/20/2022 22:02	49.96	6/20/2022 20:44	81.58	6/19/2022 19:07	17.58	6/19/2022 18:16	4.71	6/19/2022 23:12	76.84
6/20/2022 22:03	49.94	6/20/2022 20:45	81.53	6/19/2022 19:08	17.58	6/19/2022 18:17	4.66	6/19/2022 23:13	76.78
6/20/2022 22:04	49.90	6/20/2022 20:46	81.53	6/19/2022 19:09	17.57	6/19/2022 18:18	4.68	6/19/2022 23:14	76.67
6/20/2022 22:05	49.93	6/20/2022 20:47	81.42	6/19/2022 19:10	17.51	6/19/2022 18:19	4.70	6/19/2022 23:15	76.64
6/20/2022 22:06	49.97	6/20/2022 20:48	81.45	6/19/2022 19:11	17.49	6/19/2022 18:20	4.62	6/19/2022 23:16	76.54
6/20/2022 22:07	49.94	6/20/2022 20:49	81.41	6/19/2022 19:12	17.50	6/19/2022 18:21	4.92	6/19/2022 23:17	76.46
6/20/2022 22:08	49.93	6/20/2022 20:50	81.36	6/19/2022 19:13	17.46	6/19/2022 18:22	5.16	6/19/2022 23:18	76.39
6/20/2022 22:09	49.94	6/20/2022 20:51	81.34	6/19/2022 19:14	17.50	6/19/2022 18:23	5.34	6/19/2022 23:19	76.30
6/20/2022 22:10	49.93	6/20/2022 20:52	81.33	6/19/2022 19:15	17.45	6/19/2022 18:24	5.19	6/19/2022 23:20	76.21
6/20/2022 22:11	49.95	6/20/2022 20:53	81.30	6/19/2022 19:16	17.40	6/19/2022 18:25	5.29	6/19/2022 23:21	76.12
6/20/2022 22:12	49.91	6/20/2022 20:54	81.26	6/19/2022 19:17	17.37	6/19/2022 18:26	5.08	6/19/2022 23:22	76.06
6/20/2022 22:13	49.93	6/20/2022 20:55	81.23	6/19/2022 19:18	17.43	6/19/2022 18:27	5.19	6/19/2022 23:23	76.00
6/20/2022 22:14	49.94	6/20/2022 20:56	81.22	6/19/2022 19:19	17.35	6/19/2022 18:28	5.40	6/19/2022 23:24	75.91
6/20/2022 22:15	49.94	6/20/2022 20:57	81.25	6/19/2022 19:20	17.37	6/19/2022 18:29	5.59	6/19/2022 23:25	75.83
6/20/2022 22:16	49.92	6/20/2022 20:58	81.18	6/19/2022 19:21	17.34	6/19/2022 18:30	5.14	6/19/2022 23:26	75.74
6/20/2022 22:17	49.95	6/20/2022 20:59	81.22	6/19/2022 19:22	17.38	6/19/2022 18:31	5.06	6/19/2022 23:27	75.71
6/20/2022 22:18	49.91	6/20/2022 21:00	81.17	6/19/2022 19:23	17.33	6/19/2022 18:32	4.94	6/19/2022 23:28	75.60
6/20/2022 22:19	49.94	6/20/2022 21:01	81.17	6/19/2022 19:24	17.33	6/19/2022 18:33	5.10	6/19/2022 23:29	75.52
6/20/2022 22:20	49.90	6/20/2022 21:02	81.15	6/19/2022 19:25	17.31	6/19/2022 18:34	4.93	6/19/2022 23:30	75.45
6/20/2022 22:21	49.91	6/20/2022 21:03	81.15	6/19/2022 19:26	17.34	6/19/2022 18:35	5.41	6/19/2022 23:31	75.38
6/20/2022 22:22	49.91	6/20/2022 21:04	81.17	6/19/2022 19:27	17.24	6/19/2022 18:36	5.37	6/19/2022 23:32	75.30
6/20/2022 22:23	49.89	6/20/2022 21:05	81.18	6/19/2022 19:28	17.31	6/19/2022 18:37	5.09	6/19/2022 23:33	75.26
6/20/2022 22:24	49.90	6/20/2022 21:06	81.14	6/19/2022 19:29	17.25	6/19/2022 18:38	5.08	6/19/2022 23:34	75.17
6/20/2022 22:25	49.91	6/20/2022 21:07	81.12	6/19/2022 19:30	17.30	6/19/2022 18:39	4.94	6/19/2022 23:35	75.12
6/20/2022 22:26	49.87	6/20/2022 21:08	81.11	6/19/2022 19:31	22.47	6/19/2022 18:40	4.92	6/19/2022 23:36	75.03
6/20/2022 22:27	49.90	6/20/2022 21:09	81.14	6/19/2022 19:32	25.99	6/19/2022 18:41	4.94	6/19/2022 23:37	74.95
6/20/2022 22:28	49.93	6/20/2022 21:10	81.16	6/19/2022 19:33	28.28	6/19/2022 18:42	4.84	6/19/2022 23:38	74.89
6/20/2022 22:29	49.94	6/20/2022 21:11	81.18	6/19/2022 19:34	26.13	6/19/2022 18:43	4.85	6/19/2022 23:39	74.85
6/20/2022 22:30	49.95	6/20/2022 21:12	81.15	6/19/2022 19:35	23.87	6/19/2022 18:44	4.84	6/19/2022 23:40	74.75
6/20/2022 22:31	49.92	6/20/2022 21:13	81.15	6/19/2022 19:36	22.55	6/19/2022 18:45	4.80	6/19/2022 23:41	74.70
6/20/2022 22:32	49.92	6/20/2022 21:14	81.13	6/19/2022 19:37	21.70	6/19/2022 18:46	4.82	6/19/2022 23:42	74.63
6/20/2022 22:33	49.93	6/20/2022 21:15	81.13	6/19/2022 19:38	21.12	6/19/2022 18:47	4.72	6/19/2022 23:43	74.56
6/20/2022 22:34	49.92	6/20/2022 21:16	81.12	6/19/2022 19:39	20.71	6/19/2022 18:48	4.78	6/19/2022 23:44	74.50
6/20/2022 22:35	49.91	6/20/2022 21:17	81.12	6/19/2022 19:40	20.36	6/19/2022 18:49	4.73	6/19/2022 23:45	74.45
6/20/2022 22:36	49.92	6/20/2022 21:18	81.08	6/19/2022 19:41	20.06	6/19/2022 18:50	4.72	6/19/2022 23:46	74.37
6/20/2022 22:37	49.92	6/20/2022 21:19	81.11	6/19/2022 19:42	22.91	6/19/2022 18:51	4.78	6/19/2022 23:47	74.31
6/20/2022 22:38	49.87	6/20/2022 21:20	81.13	6/19/2022 19:43	27.08	6/19/2022 18:52	4.72	6/19/2022 23:48	74.25
6/20/2022 22:39	49.90	6/20/2022 21:21	81.11	6/19/2022 19:44	29.74	6/19/2022 18:53	4.72	6/19/2022 23:49	74.17
6/20/2022 22:40	49.91	6/20/2022 21:22	81.14	6/19/2022 19:45	30.17	6/19/2022 18:54	4.68	6/19/2022 23:50	74.11
6/20/2022 22:41	49.91	6/20/2022 21:23	81.11	6/19/2022 19:46	26.86	6/19/2022 18:55	4.68	6/19/2022 23:51	74.04
6/20/2022 22:42	49.88	6/20/2022 21:24	81.11	6/19/2022 19:47	25.01	6/19/2022 18:56	4.73	6/19/2022 23:52	73.99
6/20/2022 22:43	49.91	6/20/2022 21:25	81.09	6/19/2022 19:48	23.92	6/19/2022 18:57	4.65	6/19/2022 23:53	73.94
6/20/2022 22:44	49.87	6/20/2022 21:26	81.13	6/19/2022 19:49	23.04	6/19/2022 18:58	4.69	6/19/2022 23:54	73.85
6/20/2022 22:45	49.89	6/20/2022 21:27	81.12	6/19/2022 19:50	22.49	6/19/2022 18:59	4.73	6/19/2022 23:55	73.81
6/20/2022 22:46	49.87	6/20/2022 21:28	81.11	6/19/2022 19:51	21.99	6/19/2022 19:00	4.91	6/19/2022 23:56	73.75
6/20/2022 22:47	49.89	6/20/2022 21:29	81.13	6/19/2022 19:52	21.64	6/19/2022 19:01	4.94	6/19/2022 23:57	73.69
6/20/2022 22:48	49.89	6/20/2022 21:30	81.10	6/19/2022 19:53	21.40	6/19/2022 19:02	4.80	6/19/2022 23:58	73.65
6/20/2022 22:49	49.89	6/20/2022 21:31	81.09	6/19/2022 19:54	24.78	6/19/2022 19:03	4.91	6/19/2022 23:59	73.61
6/20/2022 22:50	49.88	6/20/2022 21:32	81.09	6/19/2022 19:55	28.69	6/19/2022 19:04	4.75	6/20/2022 0:00	73.52
6/20/2022 22:51	49.90	6/20/2022 21:33	81.10	6/19/2022 19:56	30.06	6/19/2022 19:05	4.71	6/20/2022 0:01	73.47
6/20/2022 22:52	49.90	6/20/2022 21:34	81.09	6/19/2022 19:57	26.87	6/19/2022 19:06	4.77	6/20/2022 0:02	73.44

6/20/2022 22:53	49.91	6/20/2022 21:35	81.08	6/19/2022 19:58	25.25	6/19/2022 19:07	4.96	6/20/2022 0:03	73.37
6/20/2022 22:54	49.88	6/20/2022 21:36	81.10	6/19/2022 19:59	24.15	6/19/2022 19:08	4.99	6/20/2022 0:04	73.30
6/20/2022 22:55	49.90	6/20/2022 21:37	81.06	6/19/2022 20:00	23.44	6/19/2022 19:09	5.04	6/20/2022 0:05	73.26
6/20/2022 22:56	49.89	6/20/2022 21:38	81.05	6/19/2022 20:01	22.85	6/19/2022 19:10	5.38	6/20/2022 0:06	73.22
6/20/2022 22:57	49.87	6/20/2022 21:39	81.12	6/19/2022 20:02	22.47	6/19/2022 19:11	5.25	6/20/2022 0:07	73.16
6/20/2022 22:58	49.89	6/20/2022 21:40	81.07	6/19/2022 20:03	22.10	6/19/2022 19:12	5.18	6/20/2022 0:08	73.09
6/20/2022 22:59	49.86	6/20/2022 21:41	81.10	6/19/2022 20:04	21.81	6/19/2022 19:13	4.97	6/20/2022 0:09	73.03
6/20/2022 23:00	49.88	6/20/2022 21:42	81.07	6/19/2022 20:05	21.56	6/19/2022 19:14	4.92	6/20/2022 0:10	72.98
6/20/2022 23:01	49.91	6/20/2022 21:43	81.09	6/19/2022 20:06	21.38	6/19/2022 19:15	4.92	6/20/2022 0:11	72.97
6/20/2022 23:02	49.85	6/20/2022 21:44	81.09	6/19/2022 20:07	21.19	6/19/2022 19:16	4.76	6/20/2022 0:12	72.89
6/20/2022 23:03	49.89	6/20/2022 21:45	81.09	6/19/2022 20:08	21.04	6/19/2022 19:17	4.96	6/20/2022 0:13	72.82
6/20/2022 23:04	49.87	6/20/2022 21:46	81.08	6/19/2022 20:09	20.89	6/19/2022 19:18	5.44	6/20/2022 0:14	72.79
6/20/2022 23:05	49.81	6/20/2022 21:47	81.11	6/19/2022 20:10	20.71	6/19/2022 19:19	5.12	6/20/2022 0:15	72.73
6/20/2022 23:06	49.92	6/20/2022 21:48	81.07	6/19/2022 20:11	20.63	6/19/2022 19:20	5.24	6/20/2022 0:16	72.70
6/20/2022 23:07	49.92	6/20/2022 21:49	81.09	6/19/2022 20:12	20.53	6/19/2022 19:21	5.07	6/20/2022 0:17	72.63
6/20/2022 23:08	49.86	6/20/2022 21:50	81.08	6/19/2022 20:13	20.44	6/19/2022 19:22	4.95	6/20/2022 0:18	72.60
6/20/2022 23:09	49.90	6/20/2022 21:51	81.09	6/19/2022 20:14	20.31	6/19/2022 19:23	4.96	6/20/2022 0:19	72.56
6/20/2022 23:10	49.88	6/20/2022 21:52	81.06	6/19/2022 20:15	20.15	6/19/2022 19:24	4.82	6/20/2022 0:20	72.47
6/20/2022 23:11	49.87	6/20/2022 21:53	81.07	6/19/2022 20:16	20.10	6/19/2022 19:25	4.85	6/20/2022 0:21	72.45
6/20/2022 23:12	49.89	6/20/2022 21:54	81.10	6/19/2022 20:17	20.06	6/19/2022 19:26	4.82	6/20/2022 0:22	72.40
6/20/2022 23:13	49.87	6/20/2022 21:55	81.10	6/19/2022 20:18	19.91	6/19/2022 19:27	4.76	6/20/2022 0:23	72.34
6/20/2022 23:14	49.87	6/20/2022 21:56	81.13	6/19/2022 20:19	19.87	6/19/2022 19:28	4.78	6/20/2022 0:24	72.31
6/20/2022 23:15	49.88	6/20/2022 21:57	81.08	6/19/2022 20:20	19.83	6/19/2022 19:29	4.74	6/20/2022 0:25	72.25
6/20/2022 23:16	49.90	6/20/2022 21:58	81.11	6/19/2022 20:21	19.73	6/19/2022 19:30	4.76	6/20/2022 0:26	72.22
6/20/2022 23:17	49.89	6/20/2022 21:59	81.07	6/19/2022 20:22	19.67	6/19/2022 19:31	4.77	6/20/2022 0:27	72.16
6/20/2022 23:18	49.87	6/20/2022 22:00	81.12	6/19/2022 20:23	19.56	6/19/2022 19:32	4.69	6/20/2022 0:28	72.09
6/20/2022 23:19	49.89	6/20/2022 22:01	81.07	6/19/2022 20:24	19.50	6/19/2022 19:33	4.73	6/20/2022 0:29	72.09
6/20/2022 23:20	49.87	6/20/2022 22:02	81.11	6/19/2022 20:25	19.47	6/19/2022 19:34	4.69	6/20/2022 0:30	72.04
6/20/2022 23:21	49.85	6/20/2022 22:03	81.09	6/19/2022 20:26	19.41	6/19/2022 19:35	4.83	6/20/2022 0:31	72.02
6/20/2022 23:22	49.84	6/20/2022 22:04	81.07	6/19/2022 20:27	19.43	6/19/2022 19:36	4.81	6/20/2022 0:32	71.95
6/20/2022 23:23	49.89	6/20/2022 22:05	81.04	6/19/2022 20:28	19.32	6/19/2022 19:37	4.71	6/20/2022 0:33	71.95
6/20/2022 23:24	49.89	6/20/2022 22:06	81.09	6/19/2022 20:29	19.27	6/19/2022 19:38	4.66	6/20/2022 0:34	71.86
6/20/2022 23:25	49.86	6/20/2022 22:07	81.10	6/19/2022 20:30	19.22	6/19/2022 19:39	4.72	6/20/2022 0:35	71.86
6/20/2022 23:26	49.88	6/20/2022 22:08	81.11	6/19/2022 20:31	19.17	6/19/2022 19:40	4.91	6/20/2022 0:36	71.82
6/20/2022 23:27	49.86	6/20/2022 22:09	81.09	6/19/2022 20:32	19.11	6/19/2022 19:41	4.90	6/20/2022 0:37	71.76
6/20/2022 23:28	49.90	6/20/2022 22:10	81.08	6/19/2022 20:33	19.07	6/19/2022 19:42	4.87	6/20/2022 0:38	71.73
6/20/2022 23:29	49.91	6/20/2022 22:11	81.06	6/19/2022 20:34	19.01	6/19/2022 19:43	4.77	6/20/2022 0:39	71.67
6/20/2022 23:30	49.87	6/20/2022 22:12	81.10	6/19/2022 20:35	19.01	6/19/2022 19:44	4.72	6/20/2022 0:40	71.64
6/20/2022 23:31	49.86	6/20/2022 22:13	81.07	6/19/2022 20:36	18.97	6/19/2022 19:45	4.77	6/20/2022 0:41	71.57
6/20/2022 23:32	49.87	6/20/2022 22:14	81.09	6/19/2022 20:37	18.94	6/19/2022 19:46	4.69	6/20/2022 0:42	71.55
6/20/2022 23:33	49.87	6/20/2022 22:15	81.08	6/19/2022 20:38	18.86	6/19/2022 19:47	4.64	6/20/2022 0:43	71.54
6/20/2022 23:34	49.87	6/20/2022 22:16	81.09	6/19/2022 20:39	18.84	6/19/2022 19:48	4.63	6/20/2022 0:44	71.51
6/20/2022 23:35	49.87	6/20/2022 22:17	81.10	6/19/2022 20:40	18.81	6/19/2022 19:49	4.65	6/20/2022 0:45	71.43
6/20/2022 23:36	49.87	6/20/2022 22:18	81.10	6/19/2022 20:41	18.80	6/19/2022 19:50	4.69	6/20/2022 0:46	71.41
6/20/2022 23:37	49.86	6/20/2022 22:19	81.11	6/19/2022 20:42	18.75	6/19/2022 19:51	4.83	6/20/2022 0:47	71.37
6/20/2022 23:38	49.87	6/20/2022 22:20	81.08	6/19/2022 20:43	18.67	6/19/2022 19:52	4.74	6/20/2022 0:48	71.36
6/20/2022 23:39	49.89	6/20/2022 22:21	81.10	6/19/2022 20:44	18.72	6/19/2022 19:53	4.82	6/20/2022 0:49	71.27
6/20/2022 23:40	49.88	6/20/2022 22:22	81.10	6/19/2022 20:45	18.69	6/19/2022 19:54	4.82	6/20/2022 0:50	71.26
6/20/2022 23:41	49.87	6/20/2022 22:23	81.07	6/19/2022 20:46	18.60	6/19/2022 19:55	4.82	6/20/2022 0:51	71.26
6/20/2022 23:42	49.85	6/20/2022 22:24	81.06	6/19/2022 20:47	18.60	6/19/2022 19:56	4.71	6/20/2022 0:52	71.17
6/20/2022 23:43	49.87	6/20/2022 22:25	81.10	6/19/2022 20:48	18.55	6/19/2022 19:57	4.67	6/20/2022 0:53	71.14
6/20/2022 23:44	49.87	6/20/2022 22:26	81.10	6/19/2022 20:49	18.52	6/19/2022 19:58	4.72	6/20/2022 0:54	71.10
6/20/2022 23:45	49.84	6/20/2022 22:27	81.11	6/19/2022 20:50	18.50	6/19/2022 19:59	4.66	6/20/2022 0:55	71.06
6/20/2022 23:46	49.85	6/20/2022 22:28	81.08	6/19/2022 20:51	18.50	6/19/2022 20:00	4.68	6/20/2022 0:56	71.05
6/20/2022 23:47	49.87	6/20/2022 22:29	81.12	6/19/2022 20:52	18.45	6/19/2022 20:01	4.58	6/20/2022 0:57	71.03
6/20/2022 23:48	49.87	6/20/2022 22:30	81.05	6/19/2022 20:53	18.40	6/19/2022 20:02	4.68	6/20/2022 0:58	70.99
6/20/2022 23:49	49.87	6/20/2022 22:31	81.10	6/19/2022 20:54	18.42	6/19/2022 20:03	4.60	6/20/2022 0:59	70.92
6/20/2022 23:50	49.90	6/20/2022 22:32	81.12	6/19/2022 20:55	18.35	6/19/2022 20:04	4.83	6/20/2022 1:00	70.91
6/20/2022 23:51	49.86	6/20/2022 22:33	81.10	6/19/2022 20:56	18.37	6/19/2022 20:05	4.86	6/20/2022 1:01	70.86
6/20/2022 23:52	49.86	6/20/2022 22:34	81.11	6/19/2022 20:57	18.33	6/19/2022 20:06	4.79	6/20/2022 1:02	70.85
6/20/2022 23:53	49.86	6/20/2022 22:35	81.07	6/19/2022 20:58	18.32	6/19/2022 20:07	4.73	6/20/2022 1:03	70.80
6/20/2022 23:54	49.88	6/20/2022 22:36	81.09	6/19/2022 20:59	18.29	6/19/2022 20:08	4.64	6/20/2022 1:04	70.79
6/20/2022 23:55	49.84	6/20/2022 22:37	81.10	6/19/2022 21:00	18.23	6/19/2022 20:09	4.62	6/20/2022 1:05	70.73
6/20/2022 23:56	49.84	6/20/2022 22:38	81.09	6/19/2022 21:01	18.25	6/19/2022 20:10	4.64	6/20/2022 1:06	70.72
6/20/2022 23:57	49.83	6/20/2022 22:39	81.10	6/19/2022 21:02	18.17	6/19/2022 20:11	4.59	6/20/2022 1:07	70.69
6/20/2022 23:58	49.81	6/20/2022 22:40	81.07	6/19/2022 21:03	18.19	6/19/2022 20:12	4.56	6/20/2022 1:08	70.62
6/20/2022 23:59	49.88	6/20/2022 22:41	81.06	6/19/2022 21:04	18.20	6/19/2022 20:13	4.55	6/20/2022 1:09	70.61
6/21/2022 0:00	49.86	6/20/2022 22:42	81.07	6/19/2022 21:05	18.11	6/19/2022 20:14	4.54	6/20/2022 1:10	70.56
6/21/2022 0:01	49.84	6/20/2022 22:43	81.09	6/19/2022 21:06	18.13	6/19/2022 20:15	4.55	6/20/2022 1:11	70.53
6/21/2022 0:02	49.84	6/20/2022 22:44	81.07	6/19/2022 21:07	18.14	6/19/2022 20:16	4.51	6/20/2022 1:12	70.50
6/21/2022 0:03	49.85	6/20/2022 22:45	81.08	6/19/2022 21:08	18.10	6/19/2022 20:17	4.49	6/20/2022 1:13	70.51
6/21/2022 0:04	49.86	6/20/2022 22:46	81.13	6/19/2022 21:09	18.09	6/19/2022 20:18	4.52	6/20/2022 1:14	70.47
6/21/2022 0:05	49.83	6/20/2022 22:47	81.06	6/19/2022 21:10	18.07	6/19/2022 20:19	4.56	6/20/2022 1:15	70.41
6/21/2022 0:06	49.84	6/20/2022 22:48	81.11	6/19/2022 21:11	18.03	6/19/2022 20:20	4.47	6/20/2022 1:16	70.40
6/21/2022 0:07	49.85	6/20/2022 22:49	81.05	6/19/2022 21:12	18.03	6/19/2022 20:21	4.51	6/20/2022 1:17	70.37
6/21/2022 0:08	49.86	6/20/2022 22:50	81.07	6/19/2022 21:13	18.01	6/19/2022 20:22	4.50	6/20/2022 1:18	70.32
6/21/2022 0:09	49.82	6/20/2022 22:51	81.05	6/19/2022 21:14	18.00	6/19/2022 20:23	4.45	6/20/2022 1:19	70.29
6/21/2022 0:10	49.84	6/20/2022 22:52	81.05	6/19/2022 21:15	18.00	6/19/2022 20:24	4.45	6/20/2022 1:20	70.26
6/21/2022 0:11	49.82	6/20/2022 22:53	81.08	6/19/2022 21:16	17.98	6/19/2022 20:25	4.44	6/20/2022 1:21	70.24
6/21/2022 0:12	49.83	6/20/2022 22:54	81.07	6/19/2022 21:17	17.97	6/19/2022 20:26	4.48	6/20/2022 1:22	70.20
6/21/2022 0:13	49.83	6/20/2022 22:55	81.08	6/19/2022 21:18	17.91	6/19/2022 20:27	4.43	6/20/2022 1:23	70.17
6/21/2022 0:14	49.85	6/20/2022 22:56	81.05	6/19/2022 21:19	17.93	6/19/2022 20:28	4.40	6/20/2022 1:24	70.14
6/21/2022 0:15	49.85	6/20/2022 22:57	81.06	6/19/2022 21:20	17.89	6/19/2022 20:29	4.48	6/20/2022 1:25	70.13
6/21/2022 0:16	49.84	6/20/2022 22:58	81.08	6/19/2022 21:21	17.88	6/19/2022 20:30	4.39	6/20/2022 1:26	70.08
6/21/2022 0:17	49.83	6/20/2022 22:59	81.07	6/19/2022 21:22	17.89	6/19/2022 20:31	4.48	6/20/2022 1:27	70.08
6/21/2022 0:18	49.85	6/20/2022 23:00	81.07	6/19/2022 21:23	17.88	6/19/2022 20:32	4.38	6/20/2022 1:28	70.02
6/21/2022 0:19	49.83	6/20/2022 23:01	81.06	6/19/2022 21:24	17.85	6/19/2022 20:33	4.39	6/20/2022 1:29	70.00
6/21/2022 0:20	49.84	6/20/2022 23:02	81.07	6/19/2022 21:25	17.79	6/19/2022 20:34	4.40	6/20/2022 1:30	70.01

6/21/2022 0:21	49.84	6/20/2022 23:03	81.07	6/19/2022 21:26	17.85	6/19/2022 20:35	4.40	6/20/2022 1:31	69.93
6/21/2022 0:22	49.84	6/20/2022 23:04	81.10	6/19/2022 21:27	17.82	6/19/2022 20:36	4.43	6/20/2022 1:32	69.93
6/21/2022 0:23	49.82	6/20/2022 23:05	81.07	6/19/2022 21:28	17.79	6/19/2022 20:37	4.33	6/20/2022 1:33	69.90
6/21/2022 0:24	49.85	6/20/2022 23:06	81.07	6/19/2022 21:29	17.81	6/19/2022 20:38	4.40	6/20/2022 1:34	69.87
6/21/2022 0:25	49.85	6/20/2022 23:07	81.06	6/19/2022 21:30	17.77	6/19/2022 20:39	4.35	6/20/2022 1:35	69.85
6/21/2022 0:26	49.84	6/20/2022 23:08	81.06	6/19/2022 21:31	17.80	6/19/2022 20:40	4.38	6/20/2022 1:36	69.82
6/21/2022 0:27	49.83	6/20/2022 23:09	81.08	6/19/2022 21:32	17.75	6/19/2022 20:41	4.34	6/20/2022 1:37	69.76
6/21/2022 0:28	49.86	6/20/2022 23:10	81.12	6/19/2022 21:33	17.76	6/19/2022 20:42	4.36	6/20/2022 1:38	69.76
6/21/2022 0:29	49.85	6/20/2022 23:11	81.08	6/19/2022 21:34	17.69	6/19/2022 20:43	4.37	6/20/2022 1:39	69.70
6/21/2022 0:30	49.83	6/20/2022 23:12	81.11	6/19/2022 21:35	17.71	6/19/2022 20:44	4.31	6/20/2022 1:40	69.74
6/21/2022 0:31	51.85	6/20/2022 23:13	81.09	6/19/2022 21:36	17.75	6/19/2022 20:45	4.34	6/20/2022 1:41	69.74
6/21/2022 0:32	53.66	6/20/2022 23:14	81.07	6/19/2022 21:37	17.65	6/19/2022 20:46	4.27	6/20/2022 1:42	69.67
6/21/2022 0:33	54.49	6/20/2022 23:15	81.12	6/19/2022 21:38	17.68	6/19/2022 20:47	4.30	6/20/2022 1:43	69.65
6/21/2022 0:34	55.00	6/20/2022 23:16	81.10	6/19/2022 21:39	17.70	6/19/2022 20:48	4.32	6/20/2022 1:44	69.63
6/21/2022 0:35	52.71	6/20/2022 23:17	81.09	6/19/2022 21:40	17.64	6/19/2022 20:49	4.49	6/20/2022 1:45	69.61
6/21/2022 0:36	51.75	6/20/2022 23:18	81.11	6/19/2022 21:41	17.65	6/19/2022 20:50	4.56	6/20/2022 1:46	69.57
6/21/2022 0:37	51.32	6/20/2022 23:19	81.08	6/19/2022 21:42	17.61	6/19/2022 20:51	4.65	6/20/2022 1:47	69.54
6/21/2022 0:38	51.15	6/20/2022 23:20	81.08	6/19/2022 21:43	17.59	6/19/2022 20:52	4.47	6/20/2022 1:48	69.52
6/21/2022 0:39	50.96	6/20/2022 23:21	81.09	6/19/2022 21:44	17.62	6/19/2022 20:53	4.58	6/20/2022 1:49	69.45
6/21/2022 0:40	50.85	6/20/2022 23:22	81.06	6/19/2022 21:45	17.64	6/19/2022 20:54	4.65	6/20/2022 1:50	69.48
6/21/2022 0:41	50.74	6/20/2022 23:23	81.07	6/19/2022 21:46	17.57	6/19/2022 20:55	4.70	6/20/2022 1:51	69.49
6/21/2022 0:42	50.71	6/20/2022 23:24	81.10	6/19/2022 21:47	17.59	6/19/2022 20:56	4.76	6/20/2022 1:52	69.45
6/21/2022 0:43	50.64	6/20/2022 23:25	81.07	6/19/2022 21:48	17.61	6/19/2022 20:57	4.62	6/20/2022 1:53	69.40
6/21/2022 0:44	50.62	6/20/2022 23:26	81.06	6/19/2022 21:49	17.55	6/19/2022 20:58	4.69	6/20/2022 1:54	69.39
6/21/2022 0:45	50.55	6/20/2022 23:27	81.10	6/19/2022 21:50	17.54	6/19/2022 20:59	4.70	6/20/2022 1:55	69.38
6/21/2022 0:46	50.54	6/20/2022 23:28	81.08	6/19/2022 21:51	17.56	6/19/2022 21:00	4.55	6/20/2022 1:56	69.33
6/21/2022 0:47	50.46	6/20/2022 23:29	81.09	6/19/2022 21:52	17.57	6/19/2022 21:01	4.71	6/20/2022 1:57	69.28
6/21/2022 0:48	50.50	6/20/2022 23:30	81.08	6/19/2022 21:53	17.50	6/19/2022 21:02	4.78	6/20/2022 1:58	69.28
6/21/2022 0:49	50.44	6/20/2022 23:31	81.09	6/19/2022 21:54	17.51	6/19/2022 21:03	4.63	6/20/2022 1:59	69.28
6/21/2022 0:50	50.42	6/20/2022 23:32	81.11	6/19/2022 21:55	17.53	6/19/2022 21:04	4.82	6/20/2022 2:00	75.65
6/21/2022 0:51	50.42	6/20/2022 23:33	81.12	6/19/2022 21:56	17.51	6/19/2022 21:05	4.85	6/20/2022 2:01	82.37
6/21/2022 0:52	50.39	6/20/2022 23:34	81.10	6/19/2022 21:57	17.49	6/19/2022 21:06	4.85	6/20/2022 2:02	85.58
6/21/2022 0:53	50.39	6/20/2022 23:35	81.08	6/19/2022 21:58	17.47	6/19/2022 21:07	4.84	6/20/2022 2:03	88.42
6/21/2022 0:54	50.37	6/20/2022 23:36	81.09	6/19/2022 21:59	17.45	6/19/2022 21:08	4.88	6/20/2022 2:04	94.96
6/21/2022 0:55	50.32	6/20/2022 23:37	81.09	6/19/2022 22:00	17.47	6/19/2022 21:09	4.94	6/20/2022 2:05	99.64
6/21/2022 0:56	50.36	6/20/2022 23:38	81.08	6/19/2022 22:01	17.47	6/19/2022 21:10	4.93	6/20/2022 2:06	100.24
6/21/2022 0:57	50.31	6/20/2022 23:39	81.05	6/19/2022 22:02	17.46	6/19/2022 21:11	4.90	6/20/2022 2:07	107.01
6/21/2022 0:58	50.30	6/20/2022 23:40	81.08	6/19/2022 22:03	17.44	6/19/2022 21:12	4.82	6/20/2022 2:08	113.42
6/21/2022 0:59	50.30	6/20/2022 23:41	81.03	6/19/2022 22:04	17.45	6/19/2022 21:13	4.96	6/20/2022 2:09	113.85
6/21/2022 1:00	50.29	6/20/2022 23:42	81.08	6/19/2022 22:05	17.46	6/19/2022 21:14	4.94	6/20/2022 2:10	118.41
6/21/2022 1:01	50.27	6/20/2022 23:43	81.08	6/19/2022 22:06	17.40	6/19/2022 21:15	4.98	6/20/2022 2:11	124.75
6/21/2022 1:02	50.27	6/20/2022 23:44	81.10	6/19/2022 22:07	17.39	6/19/2022 21:16	4.92	6/20/2022 2:12	130.18
6/21/2022 1:03	50.26	6/20/2022 23:45	81.09	6/19/2022 22:08	17.42	6/19/2022 21:17	4.86	6/20/2022 2:13	129.15
6/21/2022 1:04	50.24	6/20/2022 23:46	81.03	6/19/2022 22:09	17.37	6/19/2022 21:18	4.97	6/20/2022 2:14	135.32
6/21/2022 1:05	50.24	6/20/2022 23:47	81.11	6/19/2022 22:10	17.38	6/19/2022 21:19	5.01	6/20/2022 2:15	141.34
6/21/2022 1:06	50.22	6/20/2022 23:48	81.08	6/19/2022 22:11	17.39	6/19/2022 21:20	4.97	6/20/2022 2:16	145.16
6/21/2022 1:07	50.23	6/20/2022 23:49	81.08	6/19/2022 22:12	17.37	6/19/2022 21:21	5.06	6/20/2022 2:17	145.12
6/21/2022 1:08	50.19	6/20/2022 23:50	81.08	6/19/2022 22:13	17.41	6/19/2022 21:22	5.04	6/20/2022 2:18	145.12
6/21/2022 1:09	50.23	6/20/2022 23:51	81.08	6/19/2022 22:14	17.35	6/19/2022 21:23	4.85	6/20/2022 2:19	145.13
6/21/2022 1:10	50.19	6/20/2022 23:52	81.09	6/19/2022 22:15	17.34	6/19/2022 21:24	4.76	6/20/2022 2:20	145.14
6/21/2022 1:11	50.20	6/20/2022 23:53	81.08	6/19/2022 22:16	17.31	6/19/2022 21:25	4.74	6/20/2022 2:21	145.09
6/21/2022 1:12	50.21	6/20/2022 23:54	81.08	6/19/2022 22:17	17.32	6/19/2022 21:26	4.70	6/20/2022 2:22	145.11
6/21/2022 1:13	50.17	6/20/2022 23:55	81.06	6/19/2022 22:18	17.35	6/19/2022 21:27	4.62	6/20/2022 2:23	145.12
6/21/2022 1:14	50.18	6/20/2022 23:56	81.11	6/19/2022 22:19	17.26	6/19/2022 21:28	4.59	6/20/2022 2:24	145.09
6/21/2022 1:15	50.14	6/20/2022 23:57	81.08	6/19/2022 22:20	17.30	6/19/2022 21:29	4.61	6/20/2022 2:25	145.13
6/21/2022 1:16	50.14	6/20/2022 23:58	81.11	6/19/2022 22:21	17.30	6/19/2022 21:30	4.79	6/20/2022 2:26	145.15
6/21/2022 1:17	50.16	6/20/2022 23:59	81.87	6/19/2022 22:22	17.34	6/19/2022 21:31	5.15	6/20/2022 2:27	145.13
6/21/2022 1:18	50.15	6/21/2022 0:00	82.38	6/19/2022 22:23	17.29	6/19/2022 21:32	5.03	6/20/2022 2:28	145.10
6/21/2022 1:19	50.16	6/21/2022 0:01	82.17	6/19/2022 22:24	17.32	6/19/2022 21:33	4.93	6/20/2022 2:29	145.12
6/21/2022 1:20	50.16	6/21/2022 0:02	81.98	6/19/2022 22:25	17.32	6/19/2022 21:34	4.84	6/20/2022 2:30	145.16
6/21/2022 1:21	50.11	6/21/2022 0:03	81.82	6/19/2022 22:26	17.28	6/19/2022 21:35	5.07	6/20/2022 2:31	145.13
6/21/2022 1:22	50.16	6/21/2022 0:04	81.74	6/19/2022 22:27	17.24	6/19/2022 21:36	5.44	6/20/2022 2:32	145.13
6/21/2022 1:23	50.15	6/21/2022 0:05	81.66	6/19/2022 22:28	17.28	6/19/2022 21:37	5.08	6/20/2022 2:33	145.13
6/21/2022 1:24	50.13	6/21/2022 0:06	81.61	6/19/2022 22:29	17.30	6/19/2022 21:38	4.94	6/20/2022 2:34	145.11
6/21/2022 1:25	50.12	6/21/2022 0:07	81.53	6/19/2022 22:30	17.23	6/19/2022 21:39	4.82	6/20/2022 2:35	145.12
6/21/2022 1:26	50.10	6/21/2022 0:08	81.47	6/19/2022 22:31	17.29	6/19/2022 21:40	4.83	6/20/2022 2:36	145.12
6/21/2022 1:27	50.07	6/21/2022 0:09	81.48	6/19/2022 22:32	17.19	6/19/2022 21:41	4.71	6/20/2022 2:37	145.12
6/21/2022 1:28	50.10	6/21/2022 0:10	81.87	6/19/2022 22:33	17.20	6/19/2022 21:42	4.69	6/20/2022 2:38	145.12
6/21/2022 1:29	50.10	6/21/2022 0:11	82.52	6/19/2022 22:34	17.22	6/19/2022 21:43	4.78	6/20/2022 2:39	145.13
6/21/2022 1:30	50.10	6/21/2022 0:12	83.01	6/19/2022 22:35	17.19	6/19/2022 21:44	4.64	6/20/2022 2:40	145.12
6/21/2022 1:31	50.12	6/21/2022 0:13	83.64	6/19/2022 22:36	17.19	6/19/2022 21:45	4.64	6/20/2022 2:41	145.10
6/21/2022 1:32	50.07	6/21/2022 0:14	83.17	6/19/2022 22:37	17.19	6/19/2022 21:46	4.65	6/20/2022 2:42	145.12
6/21/2022 1:33	50.07	6/21/2022 0:15	83.41	6/19/2022 22:38	17.19	6/19/2022 21:47	4.87	6/20/2022 2:43	145.13
6/21/2022 1:34	50.11	6/21/2022 0:16	83.98	6/19/2022 22:39	17.14	6/19/2022 21:48	5.03	6/20/2022 2:44	145.11
6/21/2022 1:35	50.09	6/21/2022 0:17	83.53	6/19/2022 22:40	17.20	6/19/2022 21:49	4.93	6/20/2022 2:45	145.12
6/21/2022 1:36	50.08	6/21/2022 0:18	83.14	6/19/2022 22:41	17.13	6/19/2022 21:50	4.83	6/20/2022 2:46	145.12
6/21/2022 1:37	50.10	6/21/2022 0:19	82.88	6/19/2022 22:42	17.17	6/19/2022 21:51	5.05	6/20/2022 2:47	145.09
6/21/2022 1:38	50.07	6/21/2022 0:20	82.63	6/19/2022 22:43	17.16	6/19/2022 21:52	5.11	6/20/2022 2:48	145.11
6/21/2022 1:39	50.08	6/21/2022 0:21	82.47	6/19/2022 22:44	17.14	6/19/2022 21:53	4.89	6/20/2022 2:49	145.11
6/21/2022 1:40	50.07	6/21/2022 0:22	82.29	6/19/2022 22:45	17.18	6/19/2022 21:54	4.85	6/20/2022 2:50	145.12
6/21/2022 1:41	50.09	6/21/2022 0:23	82.22	6/19/2022 22:46	17.15	6/19/2022 21:55	4.72	6/20/2022 2:51	145.13
6/21/2022 1:42	50.05	6/21/2022 0:24	82.08	6/19/2022 22:47	17.13	6/19/2022 21:56	4.71	6/20/2022 2:52	145.12
6/21/2022 1:43	50.06	6/21/2022 0:25	82.00	6/19/2022 22:48	17.15	6/19/2022 21:57	4.78	6/20/2022 2:53	145.09
6/21/2022 1:44	50.08	6/21/2022 0:26	81.87	6/19/2022 22:49	17.15	6/19/2022 21:58	4.88	6/20/2022 2:54	145.11
6/21/2022 1:45	50.06	6/21/2022 0:27	81.83	6/19/2022 22:50	17.07	6/19/2022 21:59	5.34	6/20/2022 2:55	145.11
6/21/2022 1:46	50.06	6/21/2022 0:28	81.76	6/19/2022 22:51	17.12	6/19/2022 22:00	5.80	6/20/2022 2:56	145.07
6/21/2022 1:47	50.05	6/21/2022 0:29	81.69	6/19/2022 22:52	17.17	6/19/2022 22:01	6.29	6/20/2022 2:57	145.10
6/21/2022 1:48	50.07	6/21/2022 0:30	81.68	6/19/2022 22:53	17.11	6/19/2022 22:02	6.50	6/20/2022 2:58	145.13

6/21/2022 1:49	50.02	6/21/2022 0:31	81.58	6/19/2022 22:54	17.12	6/19/2022 22:03	6.77	6/20/2022 2:59	145.11
6/21/2022 1:50	50.01	6/21/2022 0:32	81.55	6/19/2022 22:55	17.11	6/19/2022 22:04	6.92	6/20/2022 3:00	145.10
6/21/2022 1:51	50.05	6/21/2022 0:33	81.56	6/19/2022 22:56	17.13	6/19/2022 22:05	7.11	6/20/2022 3:01	145.11
6/21/2022 1:52	50.05	6/21/2022 0:34	81.50	6/19/2022 22:57	17.06	6/19/2022 22:06	7.23	6/20/2022 3:02	145.11
6/21/2022 1:53	50.04	6/21/2022 0:35	81.51	6/19/2022 22:58	17.09	6/19/2022 22:07	7.33	6/20/2022 3:03	145.11
6/21/2022 1:54	50.03	6/21/2022 0:36	81.42	6/19/2022 22:59	17.11	6/19/2022 22:08	7.48	6/20/2022 3:04	145.10
6/21/2022 1:55	50.04	6/21/2022 0:37	81.41	6/19/2022 23:00	17.08	6/19/2022 22:09	7.58	6/20/2022 3:05	145.08
6/21/2022 1:56	50.03	6/21/2022 0:38	81.40	6/19/2022 23:01	17.09	6/19/2022 22:10	7.71	6/20/2022 3:06	145.07
6/21/2022 1:57	50.02	6/21/2022 0:39	81.42	6/19/2022 23:02	17.07	6/19/2022 22:11	7.72	6/20/2022 3:07	145.11
6/21/2022 1:58	50.05	6/21/2022 0:40	81.36	6/19/2022 23:03	17.05	6/19/2022 22:12	7.89	6/20/2022 3:08	145.10
6/21/2022 1:59	49.99	6/21/2022 0:41	81.36	6/19/2022 23:04	17.04	6/19/2022 22:13	7.82	6/20/2022 3:09	145.09
6/21/2022 2:00	50.01	6/21/2022 0:42	81.35	6/19/2022 23:05	17.09	6/19/2022 22:14	7.89	6/20/2022 3:10	145.09
6/21/2022 2:01	50.00	6/21/2022 0:43	81.30	6/19/2022 23:06	17.08	6/19/2022 22:15	8.03	6/20/2022 3:11	145.09
6/21/2022 2:02	50.03	6/21/2022 0:44	81.30	6/19/2022 23:07	17.01	6/19/2022 22:16	8.14	6/20/2022 3:12	145.09
6/21/2022 2:03	50.00	6/21/2022 0:45	81.29	6/19/2022 23:08	17.03	6/19/2022 22:17	8.12	6/20/2022 3:13	145.09
6/21/2022 2:04	50.02	6/21/2022 0:46	81.32	6/19/2022 23:09	16.98	6/19/2022 22:18	8.04	6/20/2022 3:14	145.12
6/21/2022 2:05	50.00	6/21/2022 0:47	81.27	6/19/2022 23:10	17.06	6/19/2022 22:19	8.01	6/20/2022 3:15	145.12
6/21/2022 2:06	50.01	6/21/2022 0:48	81.26	6/19/2022 23:11	17.07	6/19/2022 22:20	8.00	6/20/2022 3:16	145.10
6/21/2022 2:07	49.99	6/21/2022 0:49	81.25	6/19/2022 23:12	17.03	6/19/2022 22:21	8.03	6/20/2022 3:17	145.10
6/21/2022 2:08	50.00	6/21/2022 0:50	81.24	6/19/2022 23:13	17.02	6/19/2022 22:22	8.08	6/20/2022 3:18	145.10
6/21/2022 2:09	49.98	6/21/2022 0:51	81.23	6/19/2022 23:14	17.04	6/19/2022 22:23	8.10	6/20/2022 3:19	145.11
6/21/2022 2:10	50.00	6/21/2022 0:52	81.23	6/19/2022 23:15	17.03	6/19/2022 22:24	8.07	6/20/2022 3:20	145.09
6/21/2022 2:11	50.02	6/21/2022 0:53	81.26	6/19/2022 23:16	16.97	6/19/2022 22:25	7.37	6/20/2022 3:21	145.07
6/21/2022 2:12	50.00	6/21/2022 0:54	81.21	6/19/2022 23:17	17.00	6/19/2022 22:26	7.05	6/20/2022 3:22	145.06
6/21/2022 2:13	50.01	6/21/2022 0:55	81.24	6/19/2022 23:18	17.01	6/19/2022 22:27	6.87	6/20/2022 3:23	145.11
6/21/2022 2:14	50.03	6/21/2022 0:56	81.22	6/19/2022 23:19	17.00	6/19/2022 22:28	6.71	6/20/2022 3:24	145.10
6/21/2022 2:15	50.00	6/21/2022 0:57	81.22	6/19/2022 23:20	16.95	6/19/2022 22:29	6.63	6/20/2022 3:25	145.10
6/21/2022 2:16	49.99	6/21/2022 0:58	81.23	6/19/2022 23:21	17.03	6/19/2022 22:30	6.48	6/20/2022 3:26	145.14
6/21/2022 2:17	49.98	6/21/2022 0:59	81.17	6/19/2022 23:22	17.00	6/19/2022 22:31	6.57	6/20/2022 3:27	145.13
6/21/2022 2:18	50.00	6/21/2022 1:00	81.19	6/19/2022 23:23	16.98	6/19/2022 22:32	6.59	6/20/2022 3:28	145.14
6/21/2022 2:19	49.99	6/21/2022 1:01	81.19	6/19/2022 23:24	16.97	6/19/2022 22:33	6.36	6/20/2022 3:29	145.11
6/21/2022 2:20	50.00	6/21/2022 1:02	81.21	6/19/2022 23:25	16.99	6/19/2022 22:34	6.32	6/20/2022 3:30	145.14
6/21/2022 2:21	49.99	6/21/2022 1:03	81.20	6/19/2022 23:26	16.99	6/19/2022 22:35	6.29	6/20/2022 3:31	145.10
6/21/2022 2:22	49.98	6/21/2022 1:04	81.18	6/19/2022 23:27	16.93	6/19/2022 22:36	6.20	6/20/2022 3:32	145.13
6/21/2022 2:23	49.98	6/21/2022 1:05	81.23	6/19/2022 23:28	17.01	6/19/2022 22:37	6.24	6/20/2022 3:33	145.13
6/21/2022 2:24	49.99	6/21/2022 1:06	81.24	6/19/2022 23:29	16.96	6/19/2022 22:38	6.14	6/20/2022 3:34	145.10
6/21/2022 2:25	49.99	6/21/2022 1:07	81.16	6/19/2022 23:30	16.99	6/19/2022 22:39	6.12	6/20/2022 3:35	145.15
6/21/2022 2:26	49.96	6/21/2022 1:08	81.16	6/19/2022 23:31	16.97	6/19/2022 22:40	6.00	6/20/2022 3:36	145.10
6/21/2022 2:27	49.96	6/21/2022 1:09	81.16	6/19/2022 23:32	16.94	6/19/2022 22:41	6.05	6/20/2022 3:37	145.15
6/21/2022 2:28	49.96	6/21/2022 1:10	81.19	6/19/2022 23:33	16.94	6/19/2022 22:42	6.00	6/20/2022 3:38	145.15
6/21/2022 2:29	49.94	6/21/2022 1:11	81.21	6/19/2022 23:34	16.92	6/19/2022 22:43	5.99	6/20/2022 3:39	145.15
6/21/2022 2:30	49.97	6/21/2022 1:12	81.17	6/19/2022 23:35	16.92	6/19/2022 22:44	5.97	6/20/2022 3:40	145.14
6/21/2022 2:31	49.97	6/21/2022 1:13	81.12	6/19/2022 23:36	16.96	6/19/2022 22:45	5.93	6/20/2022 3:41	145.15
6/21/2022 2:32	49.97	6/21/2022 1:14	81.15	6/19/2022 23:37	16.92	6/19/2022 22:46	5.91	6/20/2022 3:42	145.12
6/21/2022 2:33	49.97	6/21/2022 1:15	81.16	6/19/2022 23:38	16.90	6/19/2022 22:47	5.87	6/20/2022 3:43	145.13
6/21/2022 2:34	49.98	6/21/2022 1:16	81.16	6/19/2022 23:39	16.95	6/19/2022 22:48	5.81	6/20/2022 3:44	145.13
6/21/2022 2:35	49.94	6/21/2022 1:17	81.16	6/19/2022 23:40	16.92	6/19/2022 22:49	5.85	6/20/2022 3:45	145.15
6/21/2022 2:36	49.96	6/21/2022 1:18	81.14	6/19/2022 23:41	16.89	6/19/2022 22:50	5.76	6/20/2022 3:46	145.14
6/21/2022 2:37	49.97	6/21/2022 1:19	81.17	6/19/2022 23:42	16.92	6/19/2022 22:51	5.77	6/20/2022 3:47	145.10
6/21/2022 2:38	49.93	6/21/2022 1:20	81.18	6/19/2022 23:43	16.90	6/19/2022 22:52	5.73	6/20/2022 3:48	145.14
6/21/2022 2:39	49.94	6/21/2022 1:21	81.15	6/19/2022 23:44	16.94	6/19/2022 22:53	5.70	6/20/2022 3:49	145.12
6/21/2022 2:40	49.92	6/21/2022 1:22	81.18	6/19/2022 23:45	16.88	6/19/2022 22:54	5.76	6/20/2022 3:50	145.13
6/21/2022 2:41	49.93	6/21/2022 1:23	81.14	6/19/2022 23:46	16.90	6/19/2022 22:55	5.70	6/20/2022 3:51	145.12
6/21/2022 2:42	49.93	6/21/2022 1:24	81.16	6/19/2022 23:47	16.92	6/19/2022 22:56	5.71	6/20/2022 3:52	145.15
6/21/2022 2:43	49.98	6/21/2022 1:25	81.16	6/19/2022 23:48	16.88	6/19/2022 22:57	5.69	6/20/2022 3:53	145.14
6/21/2022 2:44	49.94	6/21/2022 1:26	81.14	6/19/2022 23:49	16.94	6/19/2022 22:58	5.63	6/20/2022 3:54	145.16
6/21/2022 2:45	49.94	6/21/2022 1:27	81.19	6/19/2022 23:50	16.95	6/19/2022 22:59	5.68	6/20/2022 3:55	145.11
6/21/2022 2:46	49.94	6/21/2022 1:28	81.16	6/19/2022 23:51	16.93	6/19/2022 23:00	5.59	6/20/2022 3:56	145.15
6/21/2022 2:47	49.94	6/21/2022 1:29	81.16	6/19/2022 23:52	16.93	6/19/2022 23:01	5.63	6/20/2022 3:57	145.12
6/21/2022 2:48	49.95	6/21/2022 1:30	81.16	6/19/2022 23:53	16.95	6/19/2022 23:02	5.55	6/20/2022 3:58	145.14
6/21/2022 2:49	49.94	6/21/2022 1:31	81.14	6/19/2022 23:54	16.91	6/19/2022 23:03	5.54	6/20/2022 3:59	145.11
6/21/2022 2:50	49.93	6/21/2022 1:32	81.17	6/19/2022 23:55	16.89	6/19/2022 23:04	5.53	6/20/2022 4:00	145.11
6/21/2022 2:51	49.95	6/21/2022 1:33	81.17	6/19/2022 23:56	16.92	6/19/2022 23:05	5.51	6/20/2022 4:01	145.11
6/21/2022 2:52	49.94	6/21/2022 1:34	81.12	6/19/2022 23:57	16.92	6/19/2022 23:06	5.51	6/20/2022 4:02	145.09
6/21/2022 2:53	49.93	6/21/2022 1:35	81.16	6/19/2022 23:58	16.87	6/19/2022 23:07	5.48	6/20/2022 4:03	145.12
6/21/2022 2:54	49.91	6/21/2022 1:36	81.17	6/19/2022 23:59	16.90	6/19/2022 23:08	5.51	6/20/2022 4:04	145.11
6/21/2022 2:55	49.92	6/21/2022 1:37	81.16	6/20/2022 0:00	16.88	6/19/2022 23:09	5.51	6/20/2022 4:05	145.15
6/21/2022 2:56	49.97	6/21/2022 1:38	81.12	6/20/2022 0:01	16.87	6/19/2022 23:10	5.44	6/20/2022 4:06	145.09
6/21/2022 2:57	49.92	6/21/2022 1:39	81.17	6/20/2022 0:02	16.87	6/19/2022 23:11	5.47	6/20/2022 4:07	145.12
6/21/2022 2:58	49.93	6/21/2022 1:40	81.13	6/20/2022 0:03	16.88	6/19/2022 23:12	5.40	6/20/2022 4:08	145.11
6/21/2022 2:59	49.92	6/21/2022 1:41	81.11	6/20/2022 0:04	16.88	6/19/2022 23:13	5.41	6/20/2022 4:09	145.12
6/21/2022 3:00	49.93	6/21/2022 1:42	81.14	6/20/2022 0:05	16.92	6/19/2022 23:14	5.47	6/20/2022 4:10	145.11
6/21/2022 3:01	49.91	6/21/2022 1:43	81.16	6/20/2022 0:06	16.94	6/19/2022 23:15	5.35	6/20/2022 4:11	145.12
6/21/2022 3:02	49.90	6/21/2022 1:44	81.19	6/20/2022 0:07	16.89	6/19/2022 23:16	5.38	6/20/2022 4:12	145.12
6/21/2022 3:03	49.92	6/21/2022 1:45	81.15	6/20/2022 0:08	16.88	6/19/2022 23:17	5.35	6/20/2022 4:13	145.12
6/21/2022 3:04	49.95	6/21/2022 1:46	81.14	6/20/2022 0:09	16.94	6/19/2022 23:18	5.35	6/20/2022 4:14	145.12
6/21/2022 3:05	49.88	6/21/2022 1:47	81.13	6/20/2022 0:10	16.87	6/19/2022 23:19	5.32	6/20/2022 4:15	145.12
6/21/2022 3:06	49.92	6/21/2022 1:48	81.18	6/20/2022 0:11	16.88	6/19/2022 23:20	5.26	6/20/2022 4:16	145.13
6/21/2022 3:07	49.90	6/21/2022 1:49	81.12	6/20/2022 0:12	16.91	6/19/2022 23:21	5.29	6/20/2022 4:17	145.08
6/21/2022 3:08	49.87	6/21/2022 1:50	81.15	6/20/2022 0:13	16.90	6/19/2022 23:22	5.29	6/20/2022 4:18	145.14
6/21/2022 3:09	49.87	6/21/2022 1:51	81.17	6/20/2022 0:14	18.42	6/19/2022 23:23	5.32	6/20/2022 4:19	145.13
6/21/2022 3:10	49.89	6/21/2022 1:52	81.12	6/20/2022 0:15	23.41	6/19/2022 23:24	5.29	6/20/2022 4:20	145.08
6/21/2022 3:11	49.92	6/21/2022 1:53	81.16	6/20/2022 0:16	26.38	6/19/2022 23:25	5.27	6/20/2022 4:21	145.14
6/21/2022 3:12	49.89	6/21/2022 1:54	81.13	6/20/2022 0:17	24.13	6/19/2022 23:26	5.30	6/20/2022 4:22	145.11
6/21/2022 3:13	49.90	6/21/2022 1:55	81.17	6/20/2022 0:18	22.26	6/19/2022 23:27	5.19	6/20/2022 4:23	145.10
6/21/2022 3:14	49.90	6/21/2022 1:56	81.09	6/20/2022 0:19	21.18	6/19/2022 23:28	5.20	6/20/2022 4:24	145.12
6/21/2022 3:15	49.90	6/21/2022 1:57	81.12	6/20/2022 0:20	20.54	6/19/2022 23:29	5.28	6/20/2022 4:25	145.15
6/21/2022 3:16	49.91	6/21/2022 1:58	81.14	6/20/2022 0:21	20.01	6/19/2022 23:30	5.15	6/20/2022 4:26	145.11

6/21/2022 3:17	49.89	6/21/2022 1:59	81.11	6/20/2022 0:22	19.72	6/19/2022 23:31	5.19	6/20/2022 4:27	145.12
6/21/2022 3:18	49.92	6/21/2022 2:00	81.17	6/20/2022 0:23	19.49	6/19/2022 23:32	5.16	6/20/2022 4:28	145.14
6/21/2022 3:19	49.89	6/21/2022 2:01	81.12	6/20/2022 0:24	19.26	6/19/2022 23:33	5.41	6/20/2022 4:29	145.12
6/21/2022 3:20	49.90	6/21/2022 2:02	81.13	6/20/2022 0:25	19.10	6/19/2022 23:34	5.43	6/20/2022 4:30	145.14
6/21/2022 3:21	49.86	6/21/2022 2:03	81.09	6/20/2022 0:26	18.98	6/19/2022 23:35	5.27	6/20/2022 4:31	145.11
6/21/2022 3:22	49.87	6/21/2022 2:04	81.17	6/20/2022 0:27	18.85	6/19/2022 23:36	5.26	6/20/2022 4:32	145.16
6/21/2022 3:23	49.90	6/21/2022 2:05	81.11	6/20/2022 0:28	18.78	6/19/2022 23:37	5.26	6/20/2022 4:33	145.15
6/21/2022 3:24	49.91	6/21/2022 2:06	81.10	6/20/2022 0:29	18.65	6/19/2022 23:38	5.18	6/20/2022 4:34	145.08
6/21/2022 3:25	49.90	6/21/2022 2:07	81.13	6/20/2022 0:30	18.53	6/19/2022 23:39	5.19	6/20/2022 4:35	145.12
6/21/2022 3:26	49.89	6/21/2022 2:08	81.16	6/20/2022 0:31	18.47	6/19/2022 23:40	5.16	6/20/2022 4:36	145.13
6/21/2022 3:27	49.91	6/21/2022 2:09	81.11	6/20/2022 0:32	18.48	6/19/2022 23:41	5.13	6/20/2022 4:37	145.11
6/21/2022 3:28	49.86	6/21/2022 2:10	81.13	6/20/2022 0:33	18.38	6/19/2022 23:42	5.22	6/20/2022 4:38	145.10
6/21/2022 3:29	49.90	6/21/2022 2:11	81.18	6/20/2022 0:34	18.28	6/19/2022 23:43	5.13	6/20/2022 4:39	145.09
6/21/2022 3:30	49.88	6/21/2022 2:12	81.12	6/20/2022 0:35	18.22	6/19/2022 23:44	5.12	6/20/2022 4:40	145.12
6/21/2022 3:31	49.89	6/21/2022 2:13	81.13	6/20/2022 0:36	18.19	6/19/2022 23:45	5.04	6/20/2022 4:41	145.09
6/21/2022 3:32	49.92	6/21/2022 2:14	81.15	6/20/2022 0:37	18.12	6/19/2022 23:46	5.11	6/20/2022 4:42	145.12
6/21/2022 3:33	49.91	6/21/2022 2:15	81.11	6/20/2022 0:38	18.07	6/19/2022 23:47	5.06	6/20/2022 4:43	145.12
6/21/2022 3:34	49.92	6/21/2022 2:16	81.12	6/20/2022 0:39	18.03	6/19/2022 23:48	5.05	6/20/2022 4:44	145.12
6/21/2022 3:35	49.86	6/21/2022 2:17	81.13	6/20/2022 0:40	17.98	6/19/2022 23:49	5.14	6/20/2022 4:45	145.09
6/21/2022 3:36	49.89	6/21/2022 2:18	81.14	6/20/2022 0:41	17.96	6/19/2022 23:50	5.03	6/20/2022 4:46	145.11
6/21/2022 3:37	49.88	6/21/2022 2:19	81.89	6/20/2022 0:42	17.95	6/19/2022 23:51	5.07	6/20/2022 4:47	145.12
6/21/2022 3:38	49.88	6/21/2022 2:20	83.29	6/20/2022 0:43	17.92	6/19/2022 23:52	5.01	6/20/2022 4:48	145.11
6/21/2022 3:39	49.90	6/21/2022 2:21	82.87	6/20/2022 0:44	17.90	6/19/2022 23:53	5.03	6/20/2022 4:49	145.13
6/21/2022 3:40	49.86	6/21/2022 2:22	82.59	6/20/2022 0:45	17.83	6/19/2022 23:54	5.08	6/20/2022 4:50	145.11
6/21/2022 3:41	49.91	6/21/2022 2:23	82.39	6/20/2022 0:46	17.78	6/19/2022 23:55	5.00	6/20/2022 4:51	145.12
6/21/2022 3:42	49.89	6/21/2022 2:24	82.16	6/20/2022 0:47	17.77	6/19/2022 23:56	5.06	6/20/2022 4:52	145.10
6/21/2022 3:43	49.88	6/21/2022 2:25	82.02	6/20/2022 0:48	17.74	6/19/2022 23:57	4.96	6/20/2022 4:53	145.09
6/21/2022 3:44	49.90	6/21/2022 2:26	81.97	6/20/2022 0:49	17.74	6/19/2022 23:58	4.99	6/20/2022 4:54	145.10
6/21/2022 3:45	49.86	6/21/2022 2:27	81.84	6/20/2022 0:50	17.73	6/19/2022 23:59	4.90	6/20/2022 4:55	145.11
6/21/2022 3:46	49.87	6/21/2022 2:28	81.76	6/20/2022 0:51	17.67	6/20/2022 0:00	4.96	6/20/2022 4:56	145.12
6/21/2022 3:47	49.85	6/21/2022 2:29	81.76	6/20/2022 0:52	17.71	6/20/2022 0:01	4.98	6/20/2022 4:57	145.12
6/21/2022 3:48	49.86	6/21/2022 2:30	81.69	6/20/2022 0:53	17.63	6/20/2022 0:02	4.93	6/20/2022 4:58	145.10
6/21/2022 3:49	49.86	6/21/2022 2:31	81.60	6/20/2022 0:54	17.57	6/20/2022 0:03	4.93	6/20/2022 4:59	145.11
6/21/2022 3:50	49.86	6/21/2022 2:32	81.55	6/20/2022 0:55	17.60	6/20/2022 0:04	4.94	6/20/2022 5:00	145.12
6/21/2022 3:51	49.87	6/21/2022 2:33	81.58	6/20/2022 0:56	17.57	6/20/2022 0:05	5.20	6/20/2022 5:01	145.09
6/21/2022 3:52	49.87	6/21/2022 2:34	81.46	6/20/2022 0:57	17.55	6/20/2022 0:06	5.13	6/20/2022 5:02	145.07
6/21/2022 3:53	49.86	6/21/2022 2:35	81.44	6/20/2022 0:58	17.55	6/20/2022 0:07	5.09	6/20/2022 5:03	145.10
6/21/2022 3:54	49.90	6/21/2022 2:36	81.42	6/20/2022 0:59	17.56	6/20/2022 0:08	5.05	6/20/2022 5:04	145.10
6/21/2022 3:55	49.86	6/21/2022 2:37	81.37	6/20/2022 1:00	17.54	6/20/2022 0:09	5.02	6/20/2022 5:05	145.08
6/21/2022 3:56	49.83	6/21/2022 2:38	81.37	6/20/2022 1:01	17.54	6/20/2022 0:10	5.07	6/20/2022 5:06	145.09
6/21/2022 3:57	49.90	6/21/2022 2:39	81.38	6/20/2022 1:02	17.45	6/20/2022 0:11	5.06	6/20/2022 5:07	145.11
6/21/2022 3:58	49.87	6/21/2022 2:40	81.33	6/20/2022 1:03	17.53	6/20/2022 0:12	5.01	6/20/2022 5:08	145.08
6/21/2022 3:59	49.88	6/21/2022 2:41	81.30	6/20/2022 1:04	17.43	6/20/2022 0:13	5.06	6/20/2022 5:09	145.10
6/21/2022 4:00	49.85	6/21/2022 2:42	81.30	6/20/2022 1:05	17.43	6/20/2022 0:14	5.04	6/20/2022 5:10	145.14
6/21/2022 4:01	49.89	6/21/2022 2:43	81.28	6/20/2022 1:06	17.41	6/20/2022 0:15	4.96	6/20/2022 5:11	145.11
6/21/2022 4:02	49.88	6/21/2022 2:44	81.27	6/20/2022 1:07	17.39	6/20/2022 0:16	5.08	6/20/2022 5:12	145.08
6/21/2022 4:03	49.87	6/21/2022 2:45	81.28	6/20/2022 1:08	17.44	6/20/2022 0:17	5.08	6/20/2022 5:13	145.09
6/21/2022 4:04	49.85	6/21/2022 2:46	81.27	6/20/2022 1:09	17.37	6/20/2022 0:18	4.98	6/20/2022 5:14	145.08
6/21/2022 4:05	49.86	6/21/2022 2:47	81.24	6/20/2022 1:10	17.42	6/20/2022 0:19	4.97	6/20/2022 5:15	145.08
6/21/2022 4:06	49.85	6/21/2022 2:48	81.22	6/20/2022 1:11	17.36	6/20/2022 0:20	5.08	6/20/2022 5:16	145.07
6/21/2022 4:07	49.85	6/21/2022 2:49	81.26	6/20/2022 1:12	17.35	6/20/2022 0:21	5.00	6/20/2022 5:17	145.08
6/21/2022 4:08	49.88	6/21/2022 2:50	81.25	6/20/2022 1:13	17.38	6/20/2022 0:22	5.02	6/20/2022 5:18	145.07
6/21/2022 4:09	49.88	6/21/2022 2:51	81.24	6/20/2022 1:14	17.34	6/20/2022 0:23	5.11	6/20/2022 5:19	145.07
6/21/2022 4:10	49.88	6/21/2022 2:52	81.24	6/20/2022 1:15	17.38	6/20/2022 0:24	5.01	6/20/2022 5:20	145.08
6/21/2022 4:11	49.90	6/21/2022 2:53	81.26	6/20/2022 1:16	17.34	6/20/2022 0:25	4.94	6/20/2022 5:21	145.09
6/21/2022 4:12	49.84	6/21/2022 2:54	81.22	6/20/2022 1:17	17.31	6/20/2022 0:26	4.87	6/20/2022 5:22	145.09
6/21/2022 4:13	49.85	6/21/2022 2:55	81.20	6/20/2022 1:18	17.32	6/20/2022 0:27	4.89	6/20/2022 5:23	145.07
6/21/2022 4:14	49.87	6/21/2022 2:56	81.21	6/20/2022 1:19	17.30	6/20/2022 0:28	4.97	6/20/2022 5:24	145.08
6/21/2022 4:15	49.83	6/21/2022 2:57	81.22	6/20/2022 1:20	17.31	6/20/2022 0:29	4.88	6/20/2022 5:25	145.09
6/21/2022 4:16	49.87	6/21/2022 2:58	81.20	6/20/2022 1:21	17.27	6/20/2022 0:30	4.91	6/20/2022 5:26	145.07
6/21/2022 4:17	49.87	6/21/2022 2:59	81.22	6/20/2022 1:22	17.29	6/20/2022 0:31	4.85	6/20/2022 5:27	145.09
6/21/2022 4:18	49.86	6/21/2022 3:00	81.20	6/20/2022 1:23	17.30	6/20/2022 0:32	4.88	6/20/2022 5:28	145.08
6/21/2022 4:19	49.85	6/21/2022 3:01	81.21	6/20/2022 1:24	17.25	6/20/2022 0:33	4.97	6/20/2022 5:29	145.05
6/21/2022 4:20	49.84	6/21/2022 3:02	81.21	6/20/2022 1:25	17.27	6/20/2022 0:34	4.91	6/20/2022 5:30	145.05
6/21/2022 4:21	49.85	6/21/2022 3:03	81.21	6/20/2022 1:26	17.31	6/20/2022 0:35	4.86	6/20/2022 5:31	145.08
6/21/2022 4:22	49.87	6/21/2022 3:04	81.20	6/20/2022 1:27	17.26	6/20/2022 0:36	4.88	6/20/2022 5:32	145.07
6/21/2022 4:23	49.85	6/21/2022 3:05	81.18	6/20/2022 1:28	17.24	6/20/2022 0:37	4.91	6/20/2022 5:33	145.11
6/21/2022 4:24	49.87	6/21/2022 3:06	81.19	6/20/2022 1:29	17.27	6/20/2022 0:38	4.80	6/20/2022 5:34	145.04
6/21/2022 4:25	49.87	6/21/2022 3:07	81.20	6/20/2022 1:30	17.21	6/20/2022 0:39	4.84	6/20/2022 5:35	145.06
6/21/2022 4:26	49.86	6/21/2022 3:08	81.18	6/20/2022 1:31	17.23	6/20/2022 0:40	4.81	6/20/2022 5:36	145.05
6/21/2022 4:27	49.86	6/21/2022 3:09	81.17	6/20/2022 1:32	17.18	6/20/2022 0:41	5.00	6/20/2022 5:37	145.05
6/21/2022 4:28	49.86	6/21/2022 3:10	81.19	6/20/2022 1:33	17.19	6/20/2022 0:42	4.93	6/20/2022 5:38	145.07
6/21/2022 4:29	49.87	6/21/2022 3:11	81.19	6/20/2022 1:34	17.23	6/20/2022 0:43	4.81	6/20/2022 5:39	145.08
6/21/2022 4:30	49.84	6/21/2022 3:12	81.14	6/20/2022 1:35	17.17	6/20/2022 0:44	4.86	6/20/2022 5:40	145.09
6/21/2022 4:31	49.87	6/21/2022 3:13	81.13	6/20/2022 1:36	17.17	6/20/2022 0:45	4.77	6/20/2022 5:41	145.07
6/21/2022 4:32	49.85	6/21/2022 3:14	81.17	6/20/2022 1:37	17.20	6/20/2022 0:46	4.79	6/20/2022 5:42	145.05
6/21/2022 4:33	49.86	6/21/2022 3:15	81.13	6/20/2022 1:38	17.18	6/20/2022 0:47	4.82	6/20/2022 5:43	145.08
6/21/2022 4:34	49.87	6/21/2022 3:16	81.18	6/20/2022 1:39	17.19	6/20/2022 0:48	4.72	6/20/2022 5:44	145.08
6/21/2022 4:35	49.82	6/21/2022 3:17	81.16	6/20/2022 1:40	17.15	6/20/2022 0:49	4.77	6/20/2022 5:45	145.06
6/21/2022 4:36	49.89	6/21/2022 3:18	81.21	6/20/2022 1:41	17.17	6/20/2022 0:50	4.75	6/20/2022 5:46	145.08
6/21/2022 4:37	49.80	6/21/2022 3:19	81.19	6/20/2022 1:42	17.14	6/20/2022 0:51	4.79	6/20/2022 5:47	145.10
6/21/2022 4:38	49.85	6/21/2022 3:20	81.17	6/20/2022 1:43	17.19	6/20/2022 0:52	4.74	6/20/2022 5:48	145.08
6/21/2022 4:39	49.85	6/21/2022 3:21	81.20	6/20/2022 1:44	17.11	6/20/2022 0:53	4.73	6/20/2022 5:49	145.09
6/21/2022 4:40	49.88	6/21/2022 3:22	81.19	6/20/2022 1:45	17.14	6/20/2022 0:54	4.76	6/20/2022 5:50	145.06
6/21/2022 4:41	49.84	6/21/2022 3:23	81.19	6/20/2022 1:46	17.14	6/20/2022 0:55	4.72	6/20/2022 5:51	145.07
6/21/2022 4:42	49.86	6/21/2022 3:24	81.17	6/20/2022 1:47	17.08	6/20/2022 0:56	4.76	6/20/2022 5:52	145.09
6/21/2022 4:43	49.82	6/21/2022 3:25	81.19	6/20/2022 1:48	17.13	6/20/2022 0:57	4.71	6/20/2022 5:53	145.08
6/21/2022 4:44	49.83	6/21/2022 3:26	81.22	6/20/2022 1:49	17.11	6/20/2022 0:58	4.69	6/20/2022 5:54	145.07

6/21/2022 4:45	49.83	6/21/2022 3:27	81.17	6/20/2022 1:50	17.11	6/20/2022 0:59	4.68	6/20/2022 5:55	145.11
6/21/2022 4:46	49.83	6/21/2022 3:28	81.18	6/20/2022 1:51	17.06	6/20/2022 1:00	4.64	6/20/2022 5:56	145.02
6/21/2022 4:47	49.84	6/21/2022 3:29	81.18	6/20/2022 1:52	17.12	6/20/2022 1:01	4.69	6/20/2022 5:57	145.08
6/21/2022 4:48	49.85	6/21/2022 3:30	81.14	6/20/2022 1:53	17.06	6/20/2022 1:02	4.76	6/20/2022 5:58	145.05
6/21/2022 4:49	49.83	6/21/2022 3:31	81.17	6/20/2022 1:54	17.04	6/20/2022 1:03	6.38	6/20/2022 5:59	145.09
6/21/2022 4:50	49.81	6/21/2022 3:32	81.17	6/20/2022 1:55	17.06	6/20/2022 1:04	7.38	6/20/2022 6:00	145.07
6/21/2022 4:51	49.86	6/21/2022 3:33	81.16	6/20/2022 1:56	17.07	6/20/2022 1:05	7.99	6/20/2022 6:01	145.06
6/21/2022 4:52	49.88	6/21/2022 3:34	81.19	6/20/2022 1:57	17.05	6/20/2022 1:06	8.48	6/20/2022 6:02	145.07
6/21/2022 4:53	49.86	6/21/2022 3:35	81.16	6/20/2022 1:58	17.09	6/20/2022 1:07	8.89	6/20/2022 6:03	145.02
6/21/2022 4:54	49.82	6/21/2022 3:36	81.14	6/20/2022 1:59	17.05	6/20/2022 1:08	9.27	6/20/2022 6:04	145.07
6/21/2022 4:55	49.85	6/21/2022 3:37	81.18	6/20/2022 2:00	17.04	6/20/2022 1:09	9.55	6/20/2022 6:05	145.11
6/21/2022 4:56	49.85	6/21/2022 3:38	81.17	6/20/2022 2:01	17.08	6/20/2022 1:10	9.81	6/20/2022 6:06	145.06
6/21/2022 4:57	49.84	6/21/2022 3:39	81.16	6/20/2022 2:02	17.08	6/20/2022 1:11	10.00	6/20/2022 6:07	145.06
6/21/2022 4:58	49.86	6/21/2022 3:40	81.17	6/20/2022 2:03	17.03	6/20/2022 1:12	10.27	6/20/2022 6:08	145.05
6/21/2022 4:59	49.82	6/21/2022 3:41	81.16	6/20/2022 2:04	17.01	6/20/2022 1:13	10.47	6/20/2022 6:09	145.08
6/21/2022 5:00	49.85	6/21/2022 3:42	81.19	6/20/2022 2:05	17.05	6/20/2022 1:14	10.69	6/20/2022 6:10	145.05
6/21/2022 5:01	49.83	6/21/2022 3:43	81.19	6/20/2022 2:06	17.04	6/20/2022 1:15	10.92	6/20/2022 6:11	145.08
6/21/2022 5:02	49.86	6/21/2022 3:44	81.16	6/20/2022 2:07	17.02	6/20/2022 1:16	11.12	6/20/2022 6:12	145.07
6/21/2022 5:03	49.85	6/21/2022 3:45	81.15	6/20/2022 2:08	17.04	6/20/2022 1:17	11.23	6/20/2022 6:13	145.06
6/21/2022 5:04	49.82	6/21/2022 3:46	81.17	6/20/2022 2:09	17.05	6/20/2022 1:18	11.45	6/20/2022 6:14	145.06
6/21/2022 5:05	49.85	6/21/2022 3:47	81.15	6/20/2022 2:10	17.02	6/20/2022 1:19	11.57	6/20/2022 6:15	145.07
6/21/2022 5:06	49.84	6/21/2022 3:48	81.18	6/20/2022 2:11	17.00	6/20/2022 1:20	11.75	6/20/2022 6:16	145.10
6/21/2022 5:07	49.84	6/21/2022 3:49	81.18	6/20/2022 2:12	17.01	6/20/2022 1:21	11.95	6/20/2022 6:17	145.03
6/21/2022 5:08	49.85	6/21/2022 3:50	81.16	6/20/2022 2:13	17.00	6/20/2022 1:22	12.07	6/20/2022 6:18	145.03
6/21/2022 5:09	49.80	6/21/2022 3:51	81.20	6/20/2022 2:14	17.02	6/20/2022 1:23	12.47	6/20/2022 6:19	145.04
6/21/2022 5:10	49.83	6/21/2022 3:52	81.16	6/20/2022 2:15	16.99	6/20/2022 1:24	12.77	6/20/2022 6:20	145.07
6/21/2022 5:11	49.84	6/21/2022 3:53	81.20	6/20/2022 2:16	16.97	6/20/2022 1:25	13.01	6/20/2022 6:21	145.04
6/21/2022 5:12	49.85	6/21/2022 3:54	81.16	6/20/2022 2:17	16.99	6/20/2022 1:26	13.25	6/20/2022 6:22	145.05
6/21/2022 5:13	49.84	6/21/2022 3:55	81.17	6/20/2022 2:18	17.00	6/20/2022 1:27	13.43	6/20/2022 6:23	145.04
6/21/2022 5:14	49.82	6/21/2022 3:56	81.19	6/20/2022 2:19	16.97	6/20/2022 1:28	13.60	6/20/2022 6:24	145.04
6/21/2022 5:15	49.81	6/21/2022 3:57	81.19	6/20/2022 2:20	17.01	6/20/2022 1:29	13.80	6/20/2022 6:25	145.06
6/21/2022 5:16	49.80	6/21/2022 3:58	81.16	6/20/2022 2:21	17.00	6/20/2022 1:30	13.97	6/20/2022 6:26	145.06
6/21/2022 5:17	49.86	6/21/2022 3:59	81.17	6/20/2022 2:22	16.96	6/20/2022 1:31	14.15	6/20/2022 6:27	145.05
6/21/2022 5:18	49.81	6/21/2022 4:00	81.16	6/20/2022 2:23	16.98	6/20/2022 1:32	14.30	6/20/2022 6:28	145.06
6/21/2022 5:19	49.79	6/21/2022 4:01	81.14	6/20/2022 2:24	16.95	6/20/2022 1:33	14.46	6/20/2022 6:29	145.06
6/21/2022 5:20	49.80	6/21/2022 4:02	81.15	6/20/2022 2:25	16.95	6/20/2022 1:34	14.61	6/20/2022 6:30	145.07
6/21/2022 5:21	49.84	6/21/2022 4:03	81.14	6/20/2022 2:26	16.94	6/20/2022 1:35	14.77	6/20/2022 6:31	145.09
6/21/2022 5:22	49.83	6/21/2022 4:04	81.10	6/20/2022 2:27	16.96	6/20/2022 1:36	14.93	6/20/2022 6:32	145.04
6/21/2022 5:23	49.83	6/21/2022 4:05	81.17	6/20/2022 2:28	16.97	6/20/2022 1:37	15.04	6/20/2022 6:33	145.06
6/21/2022 5:24	49.81	6/21/2022 4:06	81.16	6/20/2022 2:29	17.00	6/20/2022 1:38	15.23	6/20/2022 6:34	145.05
6/21/2022 5:25	49.80	6/21/2022 4:07	81.14	6/20/2022 2:30	16.97	6/20/2022 1:39	15.34	6/20/2022 6:35	145.03
6/21/2022 5:26	49.79	6/21/2022 4:08	81.15	6/20/2022 2:31	16.94	6/20/2022 1:40	15.46	6/20/2022 6:36	145.04
6/21/2022 5:27	49.81	6/21/2022 4:09	81.16	6/20/2022 2:32	16.90	6/20/2022 1:41	15.59	6/20/2022 6:37	145.08
6/21/2022 5:28	49.86	6/21/2022 4:10	81.16	6/20/2022 2:33	16.97	6/20/2022 1:42	15.73	6/20/2022 6:38	145.03
6/21/2022 5:29	49.80	6/21/2022 4:11	81.15	6/20/2022 2:34	16.89	6/20/2022 1:43	15.88	6/20/2022 6:39	145.08
6/21/2022 5:30	49.86	6/21/2022 4:12	81.18	6/20/2022 2:35	16.92	6/20/2022 1:44	16.03	6/20/2022 6:40	145.04
6/21/2022 5:31	49.84	6/21/2022 4:13	81.19	6/20/2022 2:36	16.91	6/20/2022 1:45	16.17	6/20/2022 6:41	145.07
6/21/2022 5:32	49.84	6/21/2022 4:14	81.18	6/20/2022 2:37	16.91	6/20/2022 1:46	16.28	6/20/2022 6:42	145.05
6/21/2022 5:33	49.80	6/21/2022 4:15	81.14	6/20/2022 2:38	16.89	6/20/2022 1:47	16.35	6/20/2022 6:43	145.04
6/21/2022 5:34	49.85	6/21/2022 4:16	81.17	6/20/2022 2:39	16.88	6/20/2022 1:48	16.52	6/20/2022 6:44	145.03
6/21/2022 5:35	49.82	6/21/2022 4:17	81.14	6/20/2022 2:40	16.89	6/20/2022 1:49	16.63	6/20/2022 6:45	145.05
6/21/2022 5:36	49.82	6/21/2022 4:18	81.16	6/20/2022 2:41	16.86	6/20/2022 1:50	16.73	6/20/2022 6:46	145.03
6/21/2022 5:37	49.83	6/21/2022 4:19	81.11	6/20/2022 2:42	16.89	6/20/2022 1:51	16.89	6/20/2022 6:47	145.03
6/21/2022 5:38	49.83	6/21/2022 4:20	81.18	6/20/2022 2:43	16.88	6/20/2022 1:52	17.00	6/20/2022 6:48	145.04
6/21/2022 5:39	49.84	6/21/2022 4:21	81.22	6/20/2022 2:44	16.89	6/20/2022 1:53	17.08	6/20/2022 6:49	145.06
6/21/2022 5:40	49.83	6/21/2022 4:22	81.18	6/20/2022 2:45	16.90	6/20/2022 1:54	17.21	6/20/2022 6:50	145.04
6/21/2022 5:41	49.84	6/21/2022 4:23	81.16	6/20/2022 2:46	16.85	6/20/2022 1:55	17.39	6/20/2022 6:51	145.05
6/21/2022 5:42	49.83	6/21/2022 4:24	81.15	6/20/2022 2:47	16.89	6/20/2022 1:56	17.41	6/20/2022 6:52	145.04
6/21/2022 5:43	49.83	6/21/2022 4:25	81.16	6/20/2022 2:48	16.93	6/20/2022 1:57	17.50	6/20/2022 6:53	145.07
6/21/2022 5:44	49.82	6/21/2022 4:26	81.15	6/20/2022 2:49	16.90	6/20/2022 1:58	17.65	6/20/2022 6:54	145.02
6/21/2022 5:45	49.83	6/21/2022 4:27	81.19	6/20/2022 2:50	16.88	6/20/2022 1:59	17.78	6/20/2022 6:55	145.04
6/21/2022 5:46	49.82	6/21/2022 4:28	81.15	6/20/2022 2:51	16.85	6/20/2022 2:00	17.82	6/20/2022 6:56	145.05
6/21/2022 5:47	49.80	6/21/2022 4:29	81.15	6/20/2022 2:52	16.87	6/20/2022 2:01	17.96	6/20/2022 6:57	145.05
6/21/2022 5:48	49.83	6/21/2022 4:30	81.14	6/20/2022 2:53	16.84	6/20/2022 2:02	18.06	6/20/2022 6:58	145.04
6/21/2022 5:49	52.36	6/21/2022 4:31	81.18	6/20/2022 2:54	16.88	6/20/2022 2:03	18.16	6/20/2022 6:59	145.03
6/21/2022 5:50	53.80	6/21/2022 4:32	81.13	6/20/2022 2:55	16.84	6/20/2022 2:04	18.91	6/20/2022 7:00	145.05
6/21/2022 5:51	54.59	6/21/2022 4:33	81.15	6/20/2022 2:56	16.86	6/20/2022 2:05	19.81	6/20/2022 7:01	145.03
6/21/2022 5:52	54.49	6/21/2022 4:34	81.15	6/20/2022 2:57	16.83	6/20/2022 2:06	20.49	6/20/2022 7:02	145.07
6/21/2022 5:53	52.42	6/21/2022 4:35	81.17	6/20/2022 2:58	16.84	6/20/2022 2:07	21.02	6/20/2022 7:03	145.03
6/21/2022 5:54	51.62	6/21/2022 4:36	81.17	6/20/2022 2:59	16.83	6/20/2022 2:08	21.49	6/20/2022 7:04	145.01
6/21/2022 5:55	51.25	6/21/2022 4:37	81.18	6/20/2022 3:00	16.86	6/20/2022 2:09	21.81	6/20/2022 7:05	145.03
6/21/2022 5:56	51.07	6/21/2022 4:38	81.13	6/20/2022 3:01	16.87	6/20/2022 2:10	22.16	6/20/2022 7:06	145.05
6/21/2022 5:57	50.89	6/21/2022 4:39	81.19	6/20/2022 3:02	16.91	6/20/2022 2:11	22.56	6/20/2022 7:07	145.02
6/21/2022 5:58	50.80	6/21/2022 4:40	81.18	6/20/2022 3:03	16.85	6/20/2022 2:12	22.86	6/20/2022 7:08	145.05
6/21/2022 5:59	50.74	6/21/2022 4:41	81.18	6/20/2022 3:04	16.82	6/20/2022 2:13	23.18	6/20/2022 7:09	145.04
6/21/2022 6:00	50.68	6/21/2022 4:42	81.15	6/20/2022 3:05	16.84	6/20/2022 2:14	23.42	6/20/2022 7:10	145.06
6/21/2022 6:01	50.65	6/21/2022 4:43	81.11	6/20/2022 3:06	16.84	6/20/2022 2:15	23.73	6/20/2022 7:11	145.05
6/21/2022 6:02	50.58	6/21/2022 4:44	81.18	6/20/2022 3:07	16.85	6/20/2022 2:16	23.85	6/20/2022 7:12	145.05
6/21/2022 6:03	50.56	6/21/2022 4:45	81.15	6/20/2022 3:08	16.80	6/20/2022 2:17	24.07	6/20/2022 7:13	145.07
6/21/2022 6:04	50.53	6/21/2022 4:46	81.17	6/20/2022 3:09	16.78	6/20/2022 2:18	23.87	6/20/2022 7:14	145.06
6/21/2022 6:05	50.48	6/21/2022 4:47	81.19	6/20/2022 3:10	16.81	6/20/2022 2:19	23.32	6/20/2022 7:15	145.05
6/21/2022 6:06	50.45	6/21/2022 4:48	81.18	6/20/2022 3:11	16.84	6/20/2022 2:20	22.90	6/20/2022 7:16	145.03
6/21/2022 6:07	50.44	6/21/2022 4:49	81.15	6/20/2022 3:12	16.85	6/20/2022 2:21	22.62	6/20/2022 7:17	145.03
6/21/2022 6:08	50.41	6/21/2022 4:50	81.18	6/20/2022 3:13	16.82	6/20/2022 2:22	23.15	6/20/2022 7:18	145.02
6/21/2022 6:09	50.40	6/21/2022 4:51	81.17	6/20/2022 3:14	16.78	6/20/2022 2:23	23.55	6/20/2022 7:19	145.04
6/21/2022 6:10	50.37	6/21/2022 4:52	81.16	6/20/2022 3:15	16.81	6/20/2022 2:24	23.72	6/20/2022 7:20	145.04
6/21/2022 6:11	50.35	6/21/2022 4:53	81.18	6/20/2022 3:16	16.78	6/20/2022 2:25	24.13	6/20/2022 7:21	145.03
6/21/2022 6:12	50.38	6/21/2022 4:54	81.14	6/20/2022 3:17	16.81	6/20/2022 2:26	24.63	6/20/2022 7:22	145.04

6/21/2022 6:13	50.34	6/21/2022 4:55	81.14	6/20/2022 3:18	16.83	6/20/2022 2:27	24.99	6/20/2022 7:23	145.05
6/21/2022 6:14	50.30	6/21/2022 4:56	81.18	6/20/2022 3:19	16.78	6/20/2022 2:28	25.29	6/20/2022 7:24	145.07
6/21/2022 6:15	50.29	6/21/2022 4:57	81.17	6/20/2022 3:20	16.82	6/20/2022 2:29	25.57	6/20/2022 7:25	145.03
6/21/2022 6:16	50.28	6/21/2022 4:58	81.13	6/20/2022 3:21	16.83	6/20/2022 2:30	25.89	6/20/2022 7:26	145.05
6/21/2022 6:17	50.27	6/21/2022 4:59	81.13	6/20/2022 3:22	16.82	6/20/2022 2:31	26.05	6/20/2022 7:27	145.07
6/21/2022 6:18	50.27	6/21/2022 5:00	81.17	6/20/2022 3:23	16.84	6/20/2022 2:32	26.37	6/20/2022 7:28	145.04
6/21/2022 6:19	50.26	6/21/2022 5:01	81.16	6/20/2022 3:24	16.78	6/20/2022 2:33	26.65	6/20/2022 7:29	145.04
6/21/2022 6:20	50.25	6/21/2022 5:02	81.17	6/20/2022 3:25	16.79	6/20/2022 2:34	26.57	6/20/2022 7:30	145.06
6/21/2022 6:21	50.25	6/21/2022 5:03	81.19	6/20/2022 3:26	16.80	6/20/2022 2:35	26.34	6/20/2022 7:31	145.02
6/21/2022 6:22	50.26	6/21/2022 5:04	81.17	6/20/2022 3:27	16.80	6/20/2022 2:36	26.27	6/20/2022 7:32	145.04
6/21/2022 6:23	50.26	6/21/2022 5:05	81.15	6/20/2022 3:28	16.83	6/20/2022 2:37	26.19	6/20/2022 7:33	145.03
6/21/2022 6:24	50.26	6/21/2022 5:06	81.19	6/20/2022 3:29	16.79	6/20/2022 2:38	26.25	6/20/2022 7:34	145.04
6/21/2022 6:25	50.23	6/21/2022 5:07	81.11	6/20/2022 3:30	16.80	6/20/2022 2:39	26.25	6/20/2022 7:35	145.04
6/21/2022 6:26	50.25	6/21/2022 5:08	81.14	6/20/2022 3:31	16.77	6/20/2022 2:40	25.92	6/20/2022 7:36	145.02
6/21/2022 6:27	50.22	6/21/2022 5:09	81.13	6/20/2022 3:32	16.79	6/20/2022 2:41	25.74	6/20/2022 7:37	145.05
6/21/2022 6:28	50.17	6/21/2022 5:10	81.19	6/20/2022 3:33	16.80	6/20/2022 2:42	25.58	6/20/2022 7:38	144.98
6/21/2022 6:29	50.21	6/21/2022 5:11	81.13	6/20/2022 3:34	16.81	6/20/2022 2:43	25.63	6/20/2022 7:39	144.39
6/21/2022 6:30	50.18	6/21/2022 5:12	81.16	6/20/2022 3:35	16.77	6/20/2022 2:44	25.65	6/20/2022 7:40	143.83
6/21/2022 6:31	50.18	6/21/2022 5:13	81.14	6/20/2022 3:36	16.73	6/20/2022 2:45	25.66	6/20/2022 7:41	143.28
6/21/2022 6:32	50.16	6/21/2022 5:14	81.17	6/20/2022 3:37	16.75	6/20/2022 2:46	25.70	6/20/2022 7:42	142.73
6/21/2022 6:33	50.13	6/21/2022 5:15	81.15	6/20/2022 3:38	16.75	6/20/2022 2:47	25.79	6/20/2022 7:43	142.13
6/21/2022 6:34	50.18	6/21/2022 5:16	81.15	6/20/2022 3:39	16.79	6/20/2022 2:48	25.76	6/20/2022 7:44	143.47
6/21/2022 6:35	50.14	6/21/2022 5:17	81.15	6/20/2022 3:40	16.75	6/20/2022 2:49	25.83	6/20/2022 7:45	145.02
6/21/2022 6:36	50.19	6/21/2022 5:18	81.13	6/20/2022 3:41	16.74	6/20/2022 2:50	25.91	6/20/2022 7:46	145.03
6/21/2022 6:37	50.14	6/21/2022 5:19	81.15	6/20/2022 3:42	16.80	6/20/2022 2:51	25.98	6/20/2022 7:47	145.05
6/21/2022 6:38	50.20	6/21/2022 5:20	81.17	6/20/2022 3:43	16.73	6/20/2022 2:52	26.02	6/20/2022 7:48	145.04
6/21/2022 6:39	50.13	6/21/2022 5:21	81.13	6/20/2022 3:44	16.79	6/20/2022 2:53	26.04	6/20/2022 7:49	145.04
6/21/2022 6:40	50.14	6/21/2022 5:22	81.14	6/20/2022 3:45	16.74	6/20/2022 2:54	26.13	6/20/2022 7:50	145.05
6/21/2022 6:41	50.16	6/21/2022 5:23	81.14	6/20/2022 3:46	16.75	6/20/2022 2:55	26.24	6/20/2022 7:51	144.80
6/21/2022 6:42	50.14	6/21/2022 5:24	81.13	6/20/2022 3:47	16.76	6/20/2022 2:56	26.24	6/20/2022 7:52	144.26
6/21/2022 6:43	50.16	6/21/2022 5:25	81.21	6/20/2022 3:48	16.73	6/20/2022 2:57	26.27	6/20/2022 7:53	143.71
6/21/2022 6:44	50.08	6/21/2022 5:26	81.19	6/20/2022 3:49	16.76	6/20/2022 2:58	26.40	6/20/2022 7:54	143.15
6/21/2022 6:45	50.11	6/21/2022 5:27	81.18	6/20/2022 3:50	16.73	6/20/2022 2:59	26.45	6/20/2022 7:55	142.59
6/21/2022 6:46	50.12	6/21/2022 5:28	81.18	6/20/2022 3:51	16.78	6/20/2022 3:00	26.53	6/20/2022 7:56	142.04
6/21/2022 6:47	50.14	6/21/2022 5:29	81.17	6/20/2022 3:52	16.77	6/20/2022 3:01	26.61	6/20/2022 7:57	141.50
6/21/2022 6:48	50.12	6/21/2022 5:30	81.19	6/20/2022 3:53	16.72	6/20/2022 3:02	26.63	6/20/2022 7:58	140.98
6/21/2022 6:49	50.09	6/21/2022 5:31	81.14	6/20/2022 3:54	16.82	6/20/2022 3:03	26.48	6/20/2022 7:59	143.70
6/21/2022 6:50	50.10	6/21/2022 5:32	81.16	6/20/2022 3:55	16.76	6/20/2022 3:04	26.34	6/20/2022 8:00	145.05
6/21/2022 6:51	50.15	6/21/2022 5:33	81.14	6/20/2022 3:56	16.75	6/20/2022 3:05	26.30	6/20/2022 8:01	145.07
6/21/2022 6:52	50.08	6/21/2022 5:34	81.15	6/20/2022 3:57	16.76	6/20/2022 3:06	26.30	6/20/2022 8:02	144.75
6/21/2022 6:53	50.11	6/21/2022 5:35	81.18	6/20/2022 3:58	16.77	6/20/2022 3:07	26.31	6/20/2022 8:03	144.14
6/21/2022 6:54	50.10	6/21/2022 5:36	81.17	6/20/2022 3:59	16.74	6/20/2022 3:08	26.28	6/20/2022 8:04	143.62
6/21/2022 6:55	50.10	6/21/2022 5:37	81.18	6/20/2022 4:00	16.76	6/20/2022 3:09	26.32	6/20/2022 8:05	143.06
6/21/2022 6:56	50.13	6/21/2022 5:38	81.13	6/20/2022 4:01	16.77	6/20/2022 3:10	26.34	6/20/2022 8:06	142.46
6/21/2022 6:57	50.09	6/21/2022 5:39	81.19	6/20/2022 4:02	16.72	6/20/2022 3:11	26.39	6/20/2022 8:07	141.89
6/21/2022 6:58	50.06	6/21/2022 5:40	81.18	6/20/2022 4:03	16.74	6/20/2022 3:12	26.39	6/20/2022 8:08	141.35
6/21/2022 6:59	50.04	6/21/2022 5:41	81.18	6/20/2022 4:04	16.74	6/20/2022 3:13	26.39	6/20/2022 8:09	140.83
6/21/2022 7:00	50.08	6/21/2022 5:42	81.16	6/20/2022 4:05	16.79	6/20/2022 3:14	26.39	6/20/2022 8:10	140.26
6/21/2022 7:01	50.07	6/21/2022 5:43	81.16	6/20/2022 4:06	16.75	6/20/2022 3:15	26.43	6/20/2022 8:11	139.73
6/21/2022 7:02	50.07	6/21/2022 5:44	81.15	6/20/2022 4:07	16.74	6/20/2022 3:16	26.52	6/20/2022 8:12	139.20
6/21/2022 7:03	50.06	6/21/2022 5:45	81.16	6/20/2022 4:08	16.77	6/20/2022 3:17	26.54	6/20/2022 8:13	138.63
6/21/2022 7:04	50.10	6/21/2022 5:46	81.16	6/20/2022 4:09	16.74	6/20/2022 3:18	26.59	6/20/2022 8:14	138.12
6/21/2022 7:05	50.05	6/21/2022 5:47	81.12	6/20/2022 4:10	16.71	6/20/2022 3:19	26.59	6/20/2022 8:15	137.58
6/21/2022 7:06	50.06	6/21/2022 5:48	81.16	6/20/2022 4:11	16.75	6/20/2022 3:20	26.66	6/20/2022 8:16	137.11
6/21/2022 7:07	50.06	6/21/2022 5:49	81.13	6/20/2022 4:12	16.75	6/20/2022 3:21	26.67	6/20/2022 8:17	136.53
6/21/2022 7:08	50.05	6/21/2022 5:50	81.12	6/20/2022 4:13	16.72	6/20/2022 3:22	26.72	6/20/2022 8:18	136.00
6/21/2022 7:09	50.06	6/21/2022 5:51	81.16	6/20/2022 4:14	16.75	6/20/2022 3:23	25.87	6/20/2022 8:19	135.47
6/21/2022 7:10	50.03	6/21/2022 5:52	81.16	6/20/2022 4:15	16.74	6/20/2022 3:24	25.41	6/20/2022 8:20	135.01
6/21/2022 7:11	50.04	6/21/2022 5:53	81.16	6/20/2022 4:16	16.70	6/20/2022 3:25	25.12	6/20/2022 8:21	134.46
6/21/2022 7:12	50.01	6/21/2022 5:54	81.18	6/20/2022 4:17	16.75	6/20/2022 3:26	24.86	6/20/2022 8:22	133.99
6/21/2022 7:13	50.03	6/21/2022 5:55	81.17	6/20/2022 4:18	16.71	6/20/2022 3:27	24.61	6/20/2022 8:23	133.51
6/21/2022 7:14	50.05	6/21/2022 5:56	81.13	6/20/2022 4:19	16.76	6/20/2022 3:28	24.42	6/20/2022 8:24	133.01
6/21/2022 7:15	50.03	6/21/2022 5:57	81.16	6/20/2022 4:20	16.69	6/20/2022 3:29	24.28	6/20/2022 8:25	132.52
6/21/2022 7:16	50.05	6/21/2022 5:58	81.18	6/20/2022 4:21	16.73	6/20/2022 3:30	24.16	6/20/2022 8:26	132.01
6/21/2022 7:17	50.00	6/21/2022 5:59	81.13	6/20/2022 4:22	16.71	6/20/2022 3:31	24.08	6/20/2022 8:27	131.55
6/21/2022 7:18	50.02	6/21/2022 6:00	81.18	6/20/2022 4:23	16.66	6/20/2022 3:32	23.97	6/20/2022 8:28	131.07
6/21/2022 7:19	50.02	6/21/2022 6:01	81.15	6/20/2022 4:24	16.72	6/20/2022 3:33	23.86	6/20/2022 8:29	130.58
6/21/2022 7:20	50.05	6/21/2022 6:02	81.20	6/20/2022 4:25	16.70	6/20/2022 3:34	23.82	6/20/2022 8:30	130.09
6/21/2022 7:21	50.06	6/21/2022 6:03	81.18	6/20/2022 4:26	16.70	6/20/2022 3:35	23.84	6/20/2022 8:31	129.61
6/21/2022 7:22	50.03	6/21/2022 6:04	81.14	6/20/2022 4:27	16.69	6/20/2022 3:36	23.73	6/20/2022 8:32	129.15
6/21/2022 7:23	50.02	6/21/2022 6:05	81.13	6/20/2022 4:28	16.73	6/20/2022 3:37	23.69	6/20/2022 8:33	128.66
6/21/2022 7:24	50.04	6/21/2022 6:06	81.11	6/20/2022 4:29	16.67	6/20/2022 3:38	23.61	6/20/2022 8:34	128.19
6/21/2022 7:25	50.04	6/21/2022 6:07	81.12	6/20/2022 4:30	16.67	6/20/2022 3:39	23.54	6/20/2022 8:35	127.70
6/21/2022 7:26	50.05	6/21/2022 6:08	81.17	6/20/2022 4:31	16.69	6/20/2022 3:40	23.44	6/20/2022 8:36	127.25
6/21/2022 7:27	50.02	6/21/2022 6:09	81.16	6/20/2022 4:32	16.72	6/20/2022 3:41	23.38	6/20/2022 8:37	126.83
6/21/2022 7:28	50.02	6/21/2022 6:10	81.15	6/20/2022 4:33	16.73	6/20/2022 3:42	23.33	6/20/2022 8:38	126.31
6/21/2022 7:29	50.04	6/21/2022 6:11	81.17	6/20/2022 4:34	16.71	6/20/2022 3:43	22.44	6/20/2022 8:39	125.87
6/21/2022 7:30	50.00	6/21/2022 6:12	81.13	6/20/2022 4:35	16.72	6/20/2022 3:44	21.98	6/20/2022 8:40	125.44
6/21/2022 7:31	50.05	6/21/2022 6:13	81.18	6/20/2022 4:36	16.64	6/20/2022 3:45	21.63	6/20/2022 8:41	124.94
6/21/2022 7:32	49.99	6/21/2022 6:14	81.15	6/20/2022 4:37	16.73	6/20/2022 3:46	21.32	6/20/2022 8:42	124.53
6/21/2022 7:33	49.97	6/21/2022 6:15	81.16	6/20/2022 4:38	16.75	6/20/2022 3:47	21.05	6/20/2022 8:43	124.10
6/21/2022 7:34	50.01	6/21/2022 6:16	81.13	6/20/2022 4:39	16.73	6/20/2022 3:48	20.81	6/20/2022 8:44	123.63
6/21/2022 7:35	50.01	6/21/2022 6:17	81.17	6/20/2022 4:40	16.68	6/20/2022 3:49	20.57	6/20/2022 8:45	123.20
6/21/2022 7:36	50.00	6/21/2022 6:18	81.14	6/20/2022 4:41	16.68	6/20/2022 3:50	20.81	6/20/2022 8:46	122.75
6/21/2022 7:37	50.00	6/21/2022 6:19	81.19	6/20/2022 4:42	16.68	6/20/2022 3:51	20.92	6/20/2022 8:47	122.34
6/21/2022 7:38	49.98	6/21/2022 6:20	81.14	6/20/2022 4:43	16.66	6/20/2022 3:52	20.91	6/20/2022 8:48	121.92
6/21/2022 7:39	49.98	6/21/2022 6:21	81.15	6/20/2022 4:44	16.70	6/20/2022 3:53	20.87	6/20/2022 8:49	121.50
6/21/2022 7:40	50.04	6/21/2022 6:22	81.16	6/20/2022 4:45	16.67	6/20/2022 3:54	20.84	6/20/2022 8:50	121.07

6/21/2022 7:41	49.97	6/21/2022 6:23	81.16	6/20/2022 4:46	16.69	6/20/2022 3:55	20.83	6/20/2022 8:51	120.65
6/21/2022 7:42	50.00	6/21/2022 6:24	81.16	6/20/2022 4:47	16.71	6/20/2022 3:56	20.78	6/20/2022 8:52	120.23
6/21/2022 7:43	50.00	6/21/2022 6:25	81.17	6/20/2022 4:48	16.73	6/20/2022 3:57	20.58	6/20/2022 8:53	119.84
6/21/2022 7:44	49.95	6/21/2022 6:26	81.20	6/20/2022 4:49	16.64	6/20/2022 3:58	20.16	6/20/2022 8:54	119.42
6/21/2022 7:45	50.02	6/21/2022 6:27	81.17	6/20/2022 4:50	16.67	6/20/2022 3:59	19.82	6/20/2022 8:55	119.02
6/21/2022 7:46	49.97	6/21/2022 6:28	81.17	6/20/2022 4:51	16.68	6/20/2022 4:00	19.58	6/20/2022 8:56	118.58
6/21/2022 7:47	50.02	6/21/2022 6:29	81.18	6/20/2022 4:52	16.69	6/20/2022 4:01	19.33	6/20/2022 8:57	118.21
6/21/2022 7:48	50.03	6/21/2022 6:30	81.17	6/20/2022 4:53	16.69	6/20/2022 4:02	19.18	6/20/2022 8:58	117.83
6/21/2022 7:49	49.98	6/21/2022 6:31	81.15	6/20/2022 4:54	16.69	6/20/2022 4:03	18.99	6/20/2022 8:59	117.44
6/21/2022 7:50	49.99	6/21/2022 6:32	81.18	6/20/2022 4:55	16.65	6/20/2022 4:04	18.92	6/20/2022 9:00	117.05
6/21/2022 7:51	49.98	6/21/2022 6:33	81.14	6/20/2022 4:56	16.69	6/20/2022 4:05	18.75	6/20/2022 9:01	116.69
6/21/2022 7:52	49.97	6/21/2022 6:34	81.14	6/20/2022 4:57	16.63	6/20/2022 4:06	18.60	6/20/2022 9:02	116.28
6/21/2022 7:53	49.99	6/21/2022 6:35	81.16	6/20/2022 4:58	16.73	6/20/2022 4:07	18.48	6/20/2022 9:03	115.91
6/21/2022 7:54	49.99	6/21/2022 6:36	81.17	6/20/2022 4:59	16.69	6/20/2022 4:08	18.36	6/20/2022 9:04	115.58
6/21/2022 7:55	49.97	6/21/2022 6:37	81.17	6/20/2022 5:00	16.68	6/20/2022 4:09	18.30	6/20/2022 9:05	115.21
6/21/2022 7:56	49.97	6/21/2022 6:38	81.15	6/20/2022 5:01	16.74	6/20/2022 4:10	18.09	6/20/2022 9:06	114.82
6/21/2022 7:57	49.99	6/21/2022 6:39	81.13	6/20/2022 5:02	16.71	6/20/2022 4:11	18.02	6/20/2022 9:07	114.45
6/21/2022 7:58	50.02	6/21/2022 6:40	81.19	6/20/2022 5:03	16.70	6/20/2022 4:12	17.91	6/20/2022 9:08	114.09
6/21/2022 7:59	49.98	6/21/2022 6:41	81.19	6/20/2022 5:04	16.67	6/20/2022 4:13	17.83	6/20/2022 9:09	113.74
6/21/2022 8:00	49.98	6/21/2022 6:42	81.13	6/20/2022 5:05	16.71	6/20/2022 4:14	17.71	6/20/2022 9:10	113.39
6/21/2022 8:01	50.01	6/21/2022 6:43	81.17	6/20/2022 5:06	16.71	6/20/2022 4:15	17.58	6/20/2022 9:11	113.08
6/21/2022 8:02	49.96	6/21/2022 6:44	81.15	6/20/2022 5:07	16.72	6/20/2022 4:16	17.44	6/20/2022 9:12	112.69
6/21/2022 8:03	49.97	6/21/2022 6:45	81.17	6/20/2022 5:08	16.68	6/20/2022 4:17	17.35	6/20/2022 9:13	112.34
6/21/2022 8:04	49.95	6/21/2022 6:46	81.17	6/20/2022 5:09	16.69	6/20/2022 4:18	17.32	6/20/2022 9:14	112.05
6/21/2022 8:05	49.96	6/21/2022 6:47	81.15	6/20/2022 5:10	16.69	6/20/2022 4:19	17.22	6/20/2022 9:15	111.69
6/21/2022 8:06	49.96	6/21/2022 6:48	81.15	6/20/2022 5:11	16.71	6/20/2022 4:20	17.05	6/20/2022 9:16	111.36
6/21/2022 8:07	49.95	6/21/2022 6:49	81.17	6/20/2022 5:12	16.65	6/20/2022 4:21	16.96	6/20/2022 9:17	111.04
6/21/2022 8:08	49.94	6/21/2022 6:50	81.17	6/20/2022 5:13	16.66	6/20/2022 4:22	16.92	6/20/2022 9:18	110.69
6/21/2022 8:09	49.97	6/21/2022 6:51	81.16	6/20/2022 5:14	16.72	6/20/2022 4:23	16.84	6/20/2022 9:19	110.37
6/21/2022 8:10	49.97	6/21/2022 6:52	81.14	6/20/2022 5:15	16.72	6/20/2022 4:24	16.70	6/20/2022 9:20	110.05
6/21/2022 8:11	49.94	6/21/2022 6:53	81.20	6/20/2022 5:16	16.68	6/20/2022 4:25	16.61	6/20/2022 9:21	109.77
6/21/2022 8:12	49.96	6/21/2022 6:54	81.14	6/20/2022 5:17	16.65	6/20/2022 4:26	16.57	6/20/2022 9:22	109.42
6/21/2022 8:13	49.99	6/21/2022 6:55	81.16	6/20/2022 5:18	16.71	6/20/2022 4:27	16.47	6/20/2022 9:23	114.79
6/21/2022 8:14	49.94	6/21/2022 6:56	81.13	6/20/2022 5:19	16.68	6/20/2022 4:28	16.44	6/20/2022 9:24	114.34
6/21/2022 8:15	49.94	6/21/2022 6:57	81.15	6/20/2022 5:20	16.67	6/20/2022 4:29	16.22	6/20/2022 9:25	113.92
6/21/2022 8:16	49.93	6/21/2022 6:58	81.18	6/20/2022 5:21	16.73	6/20/2022 4:30	16.20	6/20/2022 9:26	113.53
6/21/2022 8:17	49.94	6/21/2022 6:59	81.15	6/20/2022 5:22	16.72	6/20/2022 4:31	16.11	6/20/2022 9:27	113.12
6/21/2022 8:18	49.95	6/21/2022 7:00	81.14	6/20/2022 5:23	16.68	6/20/2022 4:32	16.01	6/20/2022 9:28	112.72
6/21/2022 8:19	49.96	6/21/2022 7:01	81.13	6/20/2022 5:24	16.71	6/20/2022 4:33	15.91	6/20/2022 9:29	112.38
6/21/2022 8:20	49.93	6/21/2022 7:02	81.12	6/20/2022 5:25	16.69	6/20/2022 4:34	15.88	6/20/2022 9:30	112.02
6/21/2022 8:21	49.93	6/21/2022 7:03	81.12	6/20/2022 5:26	16.71	6/20/2022 4:35	15.83	6/20/2022 9:31	111.67
6/21/2022 8:22	49.96	6/21/2022 7:04	81.16	6/20/2022 5:27	16.75	6/20/2022 4:36	15.73	6/20/2022 9:32	111.29
6/21/2022 8:23	49.98	6/21/2022 7:05	81.20	6/20/2022 5:28	16.68	6/20/2022 4:37	15.64	6/20/2022 9:33	110.97
6/21/2022 8:24	49.94	6/21/2022 7:06	81.10	6/20/2022 5:29	16.67	6/20/2022 4:38	15.57	6/20/2022 9:34	110.58
6/21/2022 8:25	49.95	6/21/2022 7:07	81.17	6/20/2022 5:30	16.70	6/20/2022 4:39	15.48	6/20/2022 9:35	110.25
6/21/2022 8:26	49.96	6/21/2022 7:08	81.15	6/20/2022 5:31	16.74	6/20/2022 4:40	15.44	6/20/2022 9:36	109.94
6/21/2022 8:27	49.95	6/21/2022 7:09	81.17	6/20/2022 5:32	16.75	6/20/2022 4:41	15.37	6/20/2022 9:37	109.60
6/21/2022 8:28	49.94	6/21/2022 7:10	81.15	6/20/2022 5:33	16.69	6/20/2022 4:42	15.26	6/20/2022 9:38	109.27
6/21/2022 8:29	49.92	6/21/2022 7:11	81.14	6/20/2022 5:34	16.70	6/20/2022 4:43	15.22	6/20/2022 9:39	108.90
6/21/2022 8:30	49.92	6/21/2022 7:12	81.11	6/20/2022 5:35	16.67	6/20/2022 4:44	15.12	6/20/2022 9:40	108.52
6/21/2022 8:31	49.93	6/21/2022 7:13	81.14	6/20/2022 5:36	16.69	6/20/2022 4:45	15.10	6/20/2022 9:41	108.34
6/21/2022 8:32	49.89	6/21/2022 7:14	81.16	6/20/2022 5:37	16.64	6/20/2022 4:46	15.02	6/20/2022 9:42	108.02
6/21/2022 8:33	49.95	6/21/2022 7:15	81.14	6/20/2022 5:38	16.70	6/20/2022 4:47	14.92	6/20/2022 9:43	107.71
6/21/2022 8:34	49.96	6/21/2022 7:16	81.15	6/20/2022 5:39	16.66	6/20/2022 4:48	14.88	6/20/2022 9:44	107.39
6/21/2022 8:35	49.91	6/21/2022 7:17	81.21	6/20/2022 5:40	16.67	6/20/2022 4:49	14.85	6/20/2022 9:45	107.07
6/21/2022 8:36	49.89	6/21/2022 7:18	81.18	6/20/2022 5:41	16.65	6/20/2022 4:50	14.70	6/20/2022 9:46	106.78
6/21/2022 8:37	49.93	6/21/2022 7:19	81.14	6/20/2022 5:42	16.71	6/20/2022 4:51	14.69	6/20/2022 9:47	106.50
6/21/2022 8:38	49.92	6/21/2022 7:20	81.14	6/20/2022 5:43	16.62	6/20/2022 4:52	14.60	6/20/2022 9:48	106.19
6/21/2022 8:39	49.91	6/21/2022 7:21	81.14	6/20/2022 5:44	16.67	6/20/2022 4:53	14.58	6/20/2022 9:49	105.90
6/21/2022 8:40	49.91	6/21/2022 7:22	81.13	6/20/2022 5:45	16.69	6/20/2022 4:54	14.47	6/20/2022 9:50	105.65
6/21/2022 8:41	49.92	6/21/2022 7:23	81.15	6/20/2022 5:46	16.69	6/20/2022 4:55	14.42	6/20/2022 9:51	105.36
6/21/2022 8:42	49.93	6/21/2022 7:24	81.13	6/20/2022 5:47	16.70	6/20/2022 4:56	14.32	6/20/2022 9:52	105.02
6/21/2022 8:43	49.90	6/21/2022 7:25	81.17	6/20/2022 5:48	16.67	6/20/2022 4:57	14.29	6/20/2022 9:53	104.79
6/21/2022 8:44	49.91	6/21/2022 7:26	81.13	6/20/2022 5:49	16.65	6/20/2022 4:58	14.23	6/20/2022 9:54	104.49
6/21/2022 8:45	49.93	6/21/2022 7:27	81.13	6/20/2022 5:50	16.68	6/20/2022 4:59	14.17	6/20/2022 9:55	104.24
6/21/2022 8:46	49.96	6/21/2022 7:28	81.15	6/20/2022 5:51	16.67	6/20/2022 5:00	14.12	6/20/2022 9:56	109.86
6/21/2022 8:47	49.92	6/21/2022 7:29	81.17	6/20/2022 5:52	16.65	6/20/2022 5:01	14.07	6/20/2022 9:57	109.47
6/21/2022 8:48	49.92	6/21/2022 7:30	81.15	6/20/2022 5:53	16.65	6/20/2022 5:02	14.06	6/20/2022 9:58	109.02
6/21/2022 8:49	49.91	6/21/2022 7:31	81.17	6/20/2022 5:54	16.66	6/20/2022 5:03	13.91	6/20/2022 9:59	108.66
6/21/2022 8:50	49.90	6/21/2022 7:32	81.16	6/20/2022 5:55	16.70	6/20/2022 5:04	13.87	6/20/2022 10:00	108.35
6/21/2022 8:51	49.93	6/21/2022 7:33	81.13	6/20/2022 5:56	16.66	6/20/2022 5:05	13.83	6/20/2022 10:01	107.96
6/21/2022 8:52	49.91	6/21/2022 7:34	81.14	6/20/2022 5:57	16.70	6/20/2022 5:06	13.79	6/20/2022 10:02	107.66
6/21/2022 8:53	49.92	6/21/2022 7:35	81.12	6/20/2022 5:58	16.67	6/20/2022 5:07	13.79	6/20/2022 10:03	107.32
6/21/2022 8:54	49.92	6/21/2022 7:36	81.14	6/20/2022 5:59	16.66	6/20/2022 5:08	13.68	6/20/2022 10:04	106.97
6/21/2022 8:55	49.89	6/21/2022 7:37	81.16	6/20/2022 6:00	16.71	6/20/2022 5:09	13.58	6/20/2022 10:05	106.70
6/21/2022 8:56	49.89	6/21/2022 7:38	81.13	6/20/2022 6:01	16.66	6/20/2022 5:10	13.57	6/20/2022 10:06	106.38
6/21/2022 8:57	49.94	6/21/2022 7:39	81.14	6/20/2022 6:02	16.69	6/20/2022 5:11	13.54	6/20/2022 10:07	106.06
6/21/2022 8:58	49.91	6/21/2022 7:40	81.16	6/20/2022 6:03	16.71	6/20/2022 5:12	13.43	6/20/2022 10:08	105.77
6/21/2022 8:59	49.91	6/21/2022 7:41	81.14	6/20/2022 6:04	16.68	6/20/2022 5:13	13.39	6/20/2022 10:09	105.44
6/21/2022 9:00	49.93	6/21/2022 7:42	81.15	6/20/2022 6:05	16.66	6/20/2022 5:14	13.39	6/20/2022 10:10	105.13
6/21/2022 9:01	49.90	6/21/2022 7:43	81.14	6/20/2022 6:06	16.70	6/20/2022 5:15	13.36	6/20/2022 10:11	104.86
6/21/2022 9:02	49.91	6/21/2022 7:44	81.12	6/20/2022 6:07	16.67	6/20/2022 5:16	13.26	6/20/2022 10:12	104.58
6/21/2022 9:03	49.94	6/21/2022 7:45	81.17	6/20/2022 6:08	16.70	6/20/2022 5:17	13.17	6/20/2022 10:13	104.29
6/21/2022 9:04	49.91	6/21/2022 7:46	81.17	6/20/2022 6:09	16.68	6/20/2022 5:18	13.19	6/20/2022 10:14	104.07
6/21/2022 9:05	49.92	6/21/2022 7:47	81.15	6/20/2022 6:10	16.71	6/20/2022 5:19	13.13	6/20/2022 10:15	103.80
6/21/2022 9:06	49.90	6/21/2022 7:48	81.11	6/20/2022 6:11	16.67	6/20/2022 5:20	13.02	6/20/2022 10:16	103.51
6/21/2022 9:07	49.92	6/21/2022 7:49	81.17	6/20/2022 6:12	16.68	6/20/2022 5:21	13.01	6/20/2022 10:17	103.26
6/21/2022 9:08	49.86	6/21/2022 7:50	81.11	6/20/2022 6:13	16.62	6/20/2022 5:22	12.96	6/20/2022 10:18	102.96

6/21/2022 9:09	49.91	6/21/2022 7:51	81.15	6/20/2022 6:14	16.64	6/20/2022 5:23	12.93	6/20/2022 10:19	102.69
6/21/2022 9:10	49.90	6/21/2022 7:52	81.16	6/20/2022 6:15	16.69	6/20/2022 5:24	12.86	6/20/2022 10:20	102.44
6/21/2022 9:11	49.86	6/21/2022 7:53	81.17	6/20/2022 6:16	16.65	6/20/2022 5:25	12.88	6/20/2022 10:21	102.19
6/21/2022 9:12	49.94	6/21/2022 7:54	81.17	6/20/2022 6:17	16.63	6/20/2022 5:26	12.76	6/20/2022 10:22	101.89
6/21/2022 9:13	49.90	6/21/2022 7:55	81.15	6/20/2022 6:18	16.64	6/20/2022 5:27	12.72	6/20/2022 10:23	101.64
6/21/2022 9:14	49.85	6/21/2022 7:56	81.14	6/20/2022 6:19	16.60	6/20/2022 5:28	12.65	6/20/2022 10:24	101.42
6/21/2022 9:15	49.86	6/21/2022 7:57	81.15	6/20/2022 6:20	16.69	6/20/2022 5:29	12.64	6/20/2022 10:25	101.16
6/21/2022 9:16	49.86	6/21/2022 7:58	81.14	6/20/2022 6:21	16.63	6/20/2022 5:30	12.56	6/20/2022 10:26	100.89
6/21/2022 9:17	49.90	6/21/2022 7:59	81.16	6/20/2022 6:22	16.65	6/20/2022 5:31	12.55	6/20/2022 10:27	100.63
6/21/2022 9:18	49.92	6/21/2022 8:00	81.16	6/20/2022 6:23	16.65	6/20/2022 5:32	12.54	6/20/2022 10:28	100.41
6/21/2022 9:19	49.87	6/21/2022 8:01	81.19	6/20/2022 6:24	16.67	6/20/2022 5:33	12.42	6/20/2022 10:29	100.15
6/21/2022 9:20	49.89	6/21/2022 8:02	81.15	6/20/2022 6:25	16.67	6/20/2022 5:34	12.42	6/20/2022 10:30	99.93
6/21/2022 9:21	49.88	6/21/2022 8:03	81.16	6/20/2022 6:26	16.65	6/20/2022 5:35	12.39	6/20/2022 10:31	99.66
6/21/2022 9:22	49.89	6/21/2022 8:04	81.16	6/20/2022 6:27	16.68	6/20/2022 5:36	12.34	6/20/2022 10:32	99.47
6/21/2022 9:23	49.87	6/21/2022 8:05	81.15	6/20/2022 6:28	16.60	6/20/2022 5:37	12.24	6/20/2022 10:33	99.19
6/21/2022 9:24	49.90	6/21/2022 8:06	81.14	6/20/2022 6:29	16.65	6/20/2022 5:38	12.20	6/20/2022 10:34	98.98
6/21/2022 9:25	49.87	6/21/2022 8:07	81.17	6/20/2022 6:30	16.63	6/20/2022 5:39	12.15	6/20/2022 10:35	98.79
6/21/2022 9:26	49.88	6/21/2022 8:08	81.14	6/20/2022 6:31	16.66	6/20/2022 5:40	12.19	6/20/2022 10:36	98.56
6/21/2022 9:27	49.88	6/21/2022 8:09	81.15	6/20/2022 6:32	16.63	6/20/2022 5:41	12.09	6/20/2022 10:37	98.33
6/21/2022 9:28	49.87	6/21/2022 8:10	81.14	6/20/2022 6:33	16.66	6/20/2022 5:42	12.11	6/20/2022 10:38	98.11
6/21/2022 9:29	49.85	6/21/2022 8:11	81.15	6/20/2022 6:34	16.65	6/20/2022 5:43	12.05	6/20/2022 10:39	97.86
6/21/2022 9:30	49.88	6/21/2022 8:12	81.16	6/20/2022 6:35	16.70	6/20/2022 5:44	11.99	6/20/2022 10:40	97.67
6/21/2022 9:31	49.88	6/21/2022 8:13	81.13	6/20/2022 6:36	16.64	6/20/2022 5:45	11.94	6/20/2022 10:41	97.46
6/21/2022 9:32	49.90	6/21/2022 8:14	81.16	6/20/2022 6:37	16.70	6/20/2022 5:46	11.88	6/20/2022 10:42	98.39
6/21/2022 9:33	49.87	6/21/2022 8:15	81.15	6/20/2022 6:38	16.63	6/20/2022 5:47	11.87	6/20/2022 10:43	102.22
6/21/2022 9:34	49.88	6/21/2022 8:16	81.17	6/20/2022 6:39	16.64	6/20/2022 5:48	11.81	6/20/2022 10:44	101.91
6/21/2022 9:35	49.89	6/21/2022 8:17	81.13	6/20/2022 6:40	16.61	6/20/2022 5:49	11.80	6/20/2022 10:45	101.59
6/21/2022 9:36	49.85	6/21/2022 8:18	81.19	6/20/2022 6:41	16.66	6/20/2022 5:50	11.73	6/20/2022 10:46	101.31
6/21/2022 9:37	49.86	6/21/2022 8:19	81.14	6/20/2022 6:42	16.63	6/20/2022 5:51	11.72	6/20/2022 10:47	101.00
6/21/2022 9:38	49.86	6/21/2022 8:20	81.16	6/20/2022 6:43	16.64	6/20/2022 5:52	11.68	6/20/2022 10:48	100.73
6/21/2022 9:39	49.89	6/21/2022 8:21	81.12	6/20/2022 6:44	16.60	6/20/2022 5:53	11.63	6/20/2022 10:49	100.41
6/21/2022 9:40	49.87	6/21/2022 8:22	81.18	6/20/2022 6:45	16.67	6/20/2022 5:54	11.59	6/20/2022 10:50	100.20
6/21/2022 9:41	49.87	6/21/2022 8:23	81.13	6/20/2022 6:46	16.63	6/20/2022 5:55	11.58	6/20/2022 10:51	99.96
6/21/2022 9:42	49.89	6/21/2022 8:24	81.17	6/20/2022 6:47	16.63	6/20/2022 5:56	11.56	6/20/2022 10:52	99.67
6/21/2022 9:43	49.89	6/21/2022 8:25	81.15	6/20/2022 6:48	16.63	6/20/2022 5:57	11.48	6/20/2022 10:53	99.47
6/21/2022 9:44	49.90	6/21/2022 8:26	81.19	6/20/2022 6:49	16.59	6/20/2022 5:58	11.41	6/20/2022 10:54	99.18
6/21/2022 9:45	49.82	6/21/2022 8:27	81.14	6/20/2022 6:50	16.61	6/20/2022 5:59	11.35	6/20/2022 10:55	98.95
6/21/2022 9:46	49.86	6/21/2022 8:28	81.16	6/20/2022 6:51	16.70	6/20/2022 6:00	11.45	6/20/2022 10:56	98.71
6/21/2022 9:47	49.89	6/21/2022 8:29	81.15	6/20/2022 6:52	16.63	6/20/2022 6:01	11.33	6/20/2022 10:57	98.48
6/21/2022 9:48	49.88	6/21/2022 8:30	81.16	6/20/2022 6:53	16.64	6/20/2022 6:02	11.28	6/20/2022 10:58	98.22
6/21/2022 9:49	49.91	6/21/2022 8:31	81.17	6/20/2022 6:54	16.57	6/20/2022 6:03	11.27	6/20/2022 10:59	97.99
6/21/2022 9:50	49.85	6/21/2022 8:32	81.16	6/20/2022 6:55	16.65	6/20/2022 6:04	11.25	6/20/2022 11:00	97.75
6/21/2022 9:51	49.87	6/21/2022 8:33	81.17	6/20/2022 6:56	16.64	6/20/2022 6:05	11.21	6/20/2022 11:01	97.51
6/21/2022 9:52	49.87	6/21/2022 8:34	81.14	6/20/2022 6:57	16.63	6/20/2022 6:06	11.10	6/20/2022 11:02	97.29
6/21/2022 9:53	49.85	6/21/2022 8:35	81.17	6/20/2022 6:58	16.64	6/20/2022 6:07	11.09	6/20/2022 11:03	97.06
6/21/2022 9:54	49.91	6/21/2022 8:36	81.17	6/20/2022 6:59	16.61	6/20/2022 6:08	11.06	6/20/2022 11:04	96.87
6/21/2022 9:55	49.87	6/21/2022 8:37	81.13	6/20/2022 7:00	16.63	6/20/2022 6:09	11.06	6/20/2022 11:05	96.61
6/21/2022 9:56	49.85	6/21/2022 8:38	81.16	6/20/2022 7:01	16.63	6/20/2022 6:10	11.00	6/20/2022 11:06	96.38
6/21/2022 9:57	49.87	6/21/2022 8:39	81.15	6/20/2022 7:02	16.67	6/20/2022 6:11	10.97	6/20/2022 11:07	96.22
6/21/2022 9:58	49.89	6/21/2022 8:40	81.14	6/20/2022 7:03	16.65	6/20/2022 6:12	10.97	6/20/2022 11:08	96.02
6/21/2022 9:59	49.88	6/21/2022 8:41	81.18	6/20/2022 7:04	16.61	6/20/2022 6:13	10.95	6/20/2022 11:09	95.81
6/21/2022 10:00	49.88	6/21/2022 8:42	81.18	6/20/2022 7:05	16.59	6/20/2022 6:14	10.84	6/20/2022 11:10	95.58
6/21/2022 10:01	49.87	6/21/2022 8:43	81.15	6/20/2022 7:06	16.65	6/20/2022 6:15	10.81	6/20/2022 11:11	95.33
6/21/2022 10:02	49.86	6/21/2022 8:44	81.15	6/20/2022 7:07	16.64	6/20/2022 6:16	10.78	6/20/2022 11:12	95.17
6/21/2022 10:03	49.89	6/21/2022 8:45	81.15	6/20/2022 7:08	16.65	6/20/2022 6:17	10.74	6/20/2022 11:13	94.95
6/21/2022 10:04	49.87	6/21/2022 8:46	81.16	6/20/2022 7:09	16.63	6/20/2022 6:18	10.78	6/20/2022 11:14	94.77
6/21/2022 10:05	49.87	6/21/2022 8:47	81.14	6/20/2022 7:10	16.62	6/20/2022 6:19	10.69	6/20/2022 11:15	94.58
6/21/2022 10:06	49.87	6/21/2022 8:48	81.14	6/20/2022 7:11	16.69	6/20/2022 6:20	10.65	6/20/2022 11:16	94.39
6/21/2022 10:07	49.87	6/21/2022 8:49	81.15	6/20/2022 7:12	16.64	6/20/2022 6:21	10.65	6/20/2022 11:17	94.22
6/21/2022 10:08	49.86	6/21/2022 8:50	81.13	6/20/2022 7:13	16.62	6/20/2022 6:22	10.63	6/20/2022 11:18	94.07
6/21/2022 10:09	49.86	6/21/2022 8:51	81.13	6/20/2022 7:14	16.62	6/20/2022 6:23	10.57	6/20/2022 11:19	93.90
6/21/2022 10:10	49.83	6/21/2022 8:52	81.11	6/20/2022 7:15	16.62	6/20/2022 6:24	10.53	6/20/2022 11:20	93.71
6/21/2022 10:11	49.87	6/21/2022 8:53	81.13	6/20/2022 7:16	16.63	6/20/2022 6:25	10.52	6/20/2022 11:21	93.55
6/21/2022 10:12	49.87	6/21/2022 8:54	81.15	6/20/2022 7:17	16.57	6/20/2022 6:26	10.51	6/20/2022 11:22	93.38
6/21/2022 10:13	49.85	6/21/2022 8:55	81.13	6/20/2022 7:18	16.65	6/20/2022 6:27	10.42	6/20/2022 11:23	93.23
6/21/2022 10:14	49.87	6/21/2022 8:56	81.12	6/20/2022 7:19	16.62	6/20/2022 6:28	10.40	6/20/2022 11:24	93.02
6/21/2022 10:15	49.83	6/21/2022 8:57	81.15	6/20/2022 7:20	16.65	6/20/2022 6:29	10.41	6/20/2022 11:25	92.84
6/21/2022 10:16	49.91	6/21/2022 8:58	81.14	6/20/2022 7:21	16.63	6/20/2022 6:30	10.43	6/20/2022 11:26	92.68
6/21/2022 10:17	49.86	6/21/2022 8:59	81.15	6/20/2022 7:22	16.62	6/20/2022 6:31	10.30	6/20/2022 11:27	92.51
6/21/2022 10:18	49.85	6/21/2022 9:00	81.15	6/20/2022 7:23	16.62	6/20/2022 6:32	10.29	6/20/2022 11:28	92.35
6/21/2022 10:19	49.82	6/21/2022 9:01	81.16	6/20/2022 7:24	16.64	6/20/2022 6:33	10.26	6/20/2022 11:29	92.21
6/21/2022 10:20	49.88	6/21/2022 9:02	81.13	6/20/2022 7:25	16.64	6/20/2022 6:34	10.27	6/20/2022 11:30	92.07
6/21/2022 10:21	49.86	6/21/2022 9:03	81.13	6/20/2022 7:26	16.63	6/20/2022 6:35	10.18	6/20/2022 11:31	91.89
6/21/2022 10:22	49.83	6/21/2022 9:04	81.14	6/20/2022 7:27	16.63	6/20/2022 6:36	10.22	6/20/2022 11:32	91.80
6/21/2022 10:23	49.85	6/21/2022 9:05	81.15	6/20/2022 7:28	16.61	6/20/2022 6:37	10.15	6/20/2022 11:33	91.64
6/21/2022 10:24	49.84	6/21/2022 9:06	81.17	6/20/2022 7:29	16.63	6/20/2022 6:38	10.23	6/20/2022 11:34	91.55
6/21/2022 10:25	49.84	6/21/2022 9:07	81.12	6/20/2022 7:30	16.66	6/20/2022 6:39	10.26	6/20/2022 11:35	91.43
6/21/2022 10:26	49.86	6/21/2022 9:08	81.13	6/20/2022 7:31	16.57	6/20/2022 6:40	10.32	6/20/2022 11:36	91.28
6/21/2022 10:27	49.87	6/21/2022 9:09	81.16	6/20/2022 7:32	16.60	6/20/2022 6:41	10.68	6/20/2022 11:37	91.17
6/21/2022 10:28	49.86	6/21/2022 9:10	81.16	6/20/2022 7:33	16.65	6/20/2022 6:42	10.42	6/20/2022 11:38	91.01
6/21/2022 10:29	49.83	6/21/2022 9:11	81.15	6/20/2022 7:34	16.61	6/20/2022 6:43	10.39	6/20/2022 11:39	90.88
6/21/2022 10:30	49.84	6/21/2022 9:12	81.14	6/20/2022 7:35	16.63	6/20/2022 6:44	10.44	6/20/2022 11:40	90.75
6/21/2022 10:31	49.83	6/21/2022 9:13	81.14	6/20/2022 7:36	16.57	6/20/2022 6:45	10.25	6/20/2022 11:41	90.60
6/21/2022 10:32	49.84	6/21/2022 9:14	81.18	6/20/2022 7:37	16.61	6/20/2022 6:46	10.18	6/20/2022 11:42	90.47
6/21/2022 10:33	49.84	6/21/2022 9:15	81.13	6/20/2022 7:38	16.65	6/20/2022 6:47	10.09	6/20/2022 11:43	90.31
6/21/2022 10:34	49.85	6/21/2022 9:16	81.15	6/20/2022 7:39	16.62	6/20/2022 6:48	10.04	6/20/2022 11:44	90.22
6/21/2022 10:35	49.84	6/21/2022 9:17	81.17	6/20/2022 7:40	16.63	6/20/2022 6:49	10.00	6/20/2022 11:45	90.07
6/21/2022 10:36	49.82	6/21/2022 9:18	81.14	6/20/2022 7:41	16.60	6/20/2022 6:50	9.95	6/20/2022 11:46	89.96

6/21/2022 10:37	49.84	6/21/2022 9:19	81.16	6/20/2022 7:42	16.60	6/20/2022 6:51	9.90	6/20/2022 11:47	89.83
6/21/2022 10:38	49.84	6/21/2022 9:20	81.13	6/20/2022 7:43	16.63	6/20/2022 6:52	9.87	6/20/2022 11:48	89.67
6/21/2022 10:39	49.85	6/21/2022 9:21	81.15	6/20/2022 7:44	16.60	6/20/2022 6:53	10.25	6/20/2022 11:49	89.55
6/21/2022 10:40	49.82	6/21/2022 9:22	81.12	6/20/2022 7:45	16.61	6/20/2022 6:54	10.31	6/20/2022 11:50	89.43
6/21/2022 10:41	49.83	6/21/2022 9:23	81.17	6/20/2022 7:46	16.58	6/20/2022 6:55	10.04	6/20/2022 11:51	89.27
6/21/2022 10:42	49.81	6/21/2022 9:24	81.13	6/20/2022 7:47	16.59	6/20/2022 6:56	9.96	6/20/2022 11:52	89.13
6/21/2022 10:43	49.83	6/21/2022 9:25	81.13	6/20/2022 7:48	16.57	6/20/2022 6:57	9.94	6/20/2022 11:53	89.03
6/21/2022 10:44	49.88	6/21/2022 9:26	81.09	6/20/2022 7:49	16.58	6/20/2022 6:58	9.79	6/20/2022 11:54	88.91
6/21/2022 10:45	49.84	6/21/2022 9:27	81.13	6/20/2022 7:50	16.65	6/20/2022 6:59	9.76	6/20/2022 11:55	88.78
6/21/2022 10:46	49.84	6/21/2022 9:28	81.14	6/20/2022 7:51	16.63	6/20/2022 7:00	9.73	6/20/2022 11:56	88.62
6/21/2022 10:47	49.84	6/21/2022 9:29	81.11	6/20/2022 7:52	16.58	6/20/2022 7:01	9.78	6/20/2022 11:57	88.55
6/21/2022 10:48	49.84	6/21/2022 9:30	81.13	6/20/2022 7:53	16.62	6/20/2022 7:02	9.71	6/20/2022 11:58	88.42
6/21/2022 10:49	49.82	6/21/2022 9:31	81.11	6/20/2022 7:54	16.63	6/20/2022 7:03	9.68	6/20/2022 11:59	88.29
6/21/2022 10:50	49.84	6/21/2022 9:32	81.14	6/20/2022 7:55	16.63	6/20/2022 7:04	9.56	6/20/2022 12:00	88.17
6/21/2022 10:51	49.81	6/21/2022 9:33	81.09	6/20/2022 7:56	16.61	6/20/2022 7:05	9.64	6/20/2022 12:01	88.02
6/21/2022 10:52	49.82	6/21/2022 9:34	81.15	6/20/2022 7:57	16.58	6/20/2022 7:06	9.57	6/20/2022 12:02	87.92
6/21/2022 10:53	49.84	6/21/2022 9:35	81.13	6/20/2022 7:58	16.64	6/20/2022 7:07	9.51	6/20/2022 12:03	87.78
6/21/2022 10:54	49.84	6/21/2022 9:36	81.16	6/20/2022 7:59	16.61	6/20/2022 7:08	9.49	6/20/2022 12:04	87.63
6/21/2022 10:55	49.82	6/21/2022 9:37	81.13	6/20/2022 8:00	16.62	6/20/2022 7:09	9.48	6/20/2022 12:05	87.50
6/21/2022 10:56	49.81	6/21/2022 9:38	81.16	6/20/2022 8:01	16.64	6/20/2022 7:10	9.47	6/20/2022 12:06	87.39
6/21/2022 10:57	49.88	6/21/2022 9:39	81.11	6/20/2022 8:02	16.61	6/20/2022 7:11	9.40	6/20/2022 12:07	87.30
6/21/2022 10:58	49.87	6/21/2022 9:40	81.10	6/20/2022 8:03	16.60	6/20/2022 7:12	9.41	6/20/2022 12:08	87.15
6/21/2022 10:59	49.82	6/21/2022 9:41	81.16	6/20/2022 8:04	16.61	6/20/2022 7:13	9.38	6/20/2022 12:09	87.02
6/21/2022 11:00	49.82	6/21/2022 9:42	81.18	6/20/2022 8:05	16.63	6/20/2022 7:14	9.40	6/20/2022 12:10	86.91
6/21/2022 11:01	49.84	6/21/2022 9:43	81.14	6/20/2022 8:06	16.58	6/20/2022 7:15	9.30	6/20/2022 12:11	86.76
6/21/2022 11:02	49.84	6/21/2022 9:44	81.13	6/20/2022 8:07	16.55	6/20/2022 7:16	9.26	6/20/2022 12:12	86.65
6/21/2022 11:03	49.82	6/21/2022 9:45	81.11	6/20/2022 8:08	16.61	6/20/2022 7:17	9.31	6/20/2022 12:13	86.49
6/21/2022 11:04	51.10	6/21/2022 9:46	81.15	6/20/2022 8:09	16.56	6/20/2022 7:18	9.23	6/20/2022 12:14	86.43
6/21/2022 11:05	53.29	6/21/2022 9:47	81.16	6/20/2022 8:10	16.61	6/20/2022 7:19	9.19	6/20/2022 12:15	86.26
6/21/2022 11:06	54.34	6/21/2022 9:48	81.17	6/20/2022 8:11	16.59	6/20/2022 7:20	9.18	6/20/2022 12:16	86.13
6/21/2022 11:07	54.88	6/21/2022 9:49	81.16	6/20/2022 8:12	16.56	6/20/2022 7:21	9.21	6/20/2022 12:17	86.04
6/21/2022 11:08	53.11	6/21/2022 9:50	81.11	6/20/2022 8:13	16.61	6/20/2022 7:22	9.12	6/20/2022 12:18	85.91
6/21/2022 11:09	51.97	6/21/2022 9:51	81.15	6/20/2022 8:14	16.60	6/20/2022 7:23	9.12	6/20/2022 12:19	85.81
6/21/2022 11:10	51.46	6/21/2022 9:52	81.14	6/20/2022 8:15	16.57	6/20/2022 7:24	9.08	6/20/2022 12:20	85.69
6/21/2022 11:11	51.14	6/21/2022 9:53	81.18	6/20/2022 8:16	16.62	6/20/2022 7:25	9.10	6/20/2022 12:21	85.59
6/21/2022 11:12	50.98	6/21/2022 9:54	81.18	6/20/2022 8:17	16.57	6/20/2022 7:26	9.00	6/20/2022 12:22	85.46
6/21/2022 11:13	50.84	6/21/2022 9:55	81.17	6/20/2022 8:18	16.59	6/20/2022 7:27	9.01	6/20/2022 12:23	85.37
6/21/2022 11:14	50.76	6/21/2022 9:56	81.17	6/20/2022 8:19	16.61	6/20/2022 7:28	9.00	6/20/2022 12:24	85.20
6/21/2022 11:15	50.71	6/21/2022 9:57	81.14	6/20/2022 8:20	16.61	6/20/2022 7:29	8.97	6/20/2022 12:25	85.14
6/21/2022 11:16	50.65	6/21/2022 9:58	81.17	6/20/2022 8:21	16.63	6/20/2022 7:30	8.92	6/20/2022 12:26	85.03
6/21/2022 11:17	50.60	6/21/2022 9:59	81.12	6/20/2022 8:22	16.58	6/20/2022 7:31	8.92	6/20/2022 12:27	84.93
6/21/2022 11:18	50.56	6/21/2022 10:00	81.16	6/20/2022 8:23	16.58	6/20/2022 7:32	8.91	6/20/2022 12:28	84.81
6/21/2022 11:19	50.53	6/21/2022 10:01	81.14	6/20/2022 8:24	16.62	6/20/2022 7:33	8.92	6/20/2022 12:29	84.70
6/21/2022 11:20	50.48	6/21/2022 10:02	81.15	6/20/2022 8:25	16.57	6/20/2022 7:34	8.79	6/20/2022 12:30	84.59
6/21/2022 11:21	50.46	6/21/2022 10:03	81.11	6/20/2022 8:26	16.62	6/20/2022 7:35	8.79	6/20/2022 12:31	84.48
6/21/2022 11:22	50.44	6/21/2022 10:04	81.11	6/20/2022 8:27	16.58	6/20/2022 7:36	8.84	6/20/2022 12:32	84.38
6/21/2022 11:23	50.43	6/21/2022 10:05	81.14	6/20/2022 8:28	16.61	6/20/2022 7:37	8.77	6/20/2022 12:33	84.21
6/21/2022 11:24	50.41	6/21/2022 10:06	81.14	6/20/2022 8:29	16.61	6/20/2022 7:38	8.73	6/20/2022 12:34	84.14
6/21/2022 11:25	50.39	6/21/2022 10:07	81.16	6/20/2022 8:30	16.59	6/20/2022 7:39	9.39	6/20/2022 12:35	84.04
6/21/2022 11:26	50.36	6/21/2022 10:08	81.17	6/20/2022 8:31	16.64	6/20/2022 7:40	9.09	6/20/2022 12:36	84.54
6/21/2022 11:27	50.34	6/21/2022 10:09	81.15	6/20/2022 8:32	16.59	6/20/2022 7:41	8.95	6/20/2022 12:37	90.22
6/21/2022 11:28	50.34	6/21/2022 10:10	81.14	6/20/2022 8:33	16.60	6/20/2022 7:42	8.86	6/20/2022 12:38	89.94
6/21/2022 11:29	50.32	6/21/2022 10:11	81.14	6/20/2022 8:34	16.60	6/20/2022 7:43	8.79	6/20/2022 12:39	89.74
6/21/2022 11:30	50.34	6/21/2022 10:12	81.14	6/20/2022 8:35	16.59	6/20/2022 7:44	8.75	6/20/2022 12:40	89.57
6/21/2022 11:31	50.31	6/21/2022 10:13	81.17	6/20/2022 8:36	16.58	6/20/2022 7:45	8.72	6/20/2022 12:41	89.38
6/21/2022 11:32	50.33	6/21/2022 10:14	81.14	6/20/2022 8:37	16.60	6/20/2022 7:46	8.66	6/20/2022 12:42	89.16
6/21/2022 11:33	50.31	6/21/2022 10:15	81.13	6/20/2022 8:38	16.58	6/20/2022 7:47	8.72	6/20/2022 12:43	88.98
6/21/2022 11:34	50.26	6/21/2022 10:16	81.15	6/20/2022 8:39	16.67	6/20/2022 7:48	8.64	6/20/2022 12:44	88.85
6/21/2022 11:35	50.25	6/21/2022 10:17	81.16	6/20/2022 8:40	16.59	6/20/2022 7:49	8.61	6/20/2022 12:45	88.68
6/21/2022 11:36	50.28	6/21/2022 10:18	81.13	6/20/2022 8:41	16.58	6/20/2022 7:50	8.62	6/20/2022 12:46	88.53
6/21/2022 11:37	50.28	6/21/2022 10:19	81.19	6/20/2022 8:42	16.55	6/20/2022 7:51	8.58	6/20/2022 12:47	88.39
6/21/2022 11:38	50.26	6/21/2022 10:20	81.13	6/20/2022 8:43	16.58	6/20/2022 7:52	8.71	6/20/2022 12:48	88.24
6/21/2022 11:39	50.24	6/21/2022 10:21	81.15	6/20/2022 8:44	16.58	6/20/2022 7:53	8.54	6/20/2022 12:49	88.10
6/21/2022 11:40	50.20	6/21/2022 10:22	81.11	6/20/2022 8:45	16.58	6/20/2022 7:54	8.54	6/20/2022 12:50	87.90
6/21/2022 11:41	50.19	6/21/2022 10:23	81.18	6/20/2022 8:46	16.58	6/20/2022 7:55	8.57	6/20/2022 12:51	87.73
6/21/2022 11:42	50.24	6/21/2022 10:24	81.15	6/20/2022 8:47	16.59	6/20/2022 7:56	8.53	6/20/2022 12:52	87.62
6/21/2022 11:43	50.23	6/21/2022 10:25	81.12	6/20/2022 8:48	16.60	6/20/2022 7:57	8.56	6/20/2022 12:53	87.45
6/21/2022 11:44	50.21	6/21/2022 10:26	81.17	6/20/2022 8:49	16.61	6/20/2022 7:58	8.50	6/20/2022 12:54	87.27
6/21/2022 11:45	50.21	6/21/2022 10:27	81.16	6/20/2022 8:50	16.55	6/20/2022 7:59	8.54	6/20/2022 12:55	87.15
6/21/2022 11:46	50.20	6/21/2022 10:28	81.15	6/20/2022 8:51	16.56	6/20/2022 8:00	8.53	6/20/2022 12:56	87.00
6/21/2022 11:47	50.20	6/21/2022 10:29	81.15	6/20/2022 8:52	16.57	6/20/2022 8:01	8.57	6/20/2022 12:57	86.88
6/21/2022 11:48	50.19	6/21/2022 10:30	81.14	6/20/2022 8:53	16.57	6/20/2022 8:02	8.58	6/20/2022 12:58	86.72
6/21/2022 11:49	50.19	6/21/2022 10:31	81.11	6/20/2022 8:54	16.59	6/20/2022 8:03	8.46	6/20/2022 12:59	86.51
6/21/2022 11:50	50.19	6/21/2022 10:32	81.13	6/20/2022 8:55	16.58	6/20/2022 8:04	8.51	6/20/2022 13:00	86.42
6/21/2022 11:51	50.14	6/21/2022 10:33	81.15	6/20/2022 8:56	16.57	6/20/2022 8:05	8.46	6/20/2022 13:01	86.28
6/21/2022 11:52	50.15	6/21/2022 10:34	81.17	6/20/2022 8:57	16.58	6/20/2022 8:06	8.44	6/20/2022 13:02	86.13
6/21/2022 11:53	50.17	6/21/2022 10:35	81.15	6/20/2022 8:58	16.58	6/20/2022 8:07	8.44	6/20/2022 13:03	86.00
6/21/2022 11:54	50.17	6/21/2022 10:36	81.18	6/20/2022 8:59	16.59	6/20/2022 8:08	8.38	6/20/2022 13:04	85.86
6/21/2022 11:55	50.14	6/21/2022 10:37	81.16	6/20/2022 9:00	16.60	6/20/2022 8:09	8.38	6/20/2022 13:05	85.73
6/21/2022 11:56	50.13	6/21/2022 10:38	81.13	6/20/2022 9:01	16.58	6/20/2022 8:10	8.38	6/20/2022 13:06	85.58
6/21/2022 11:57	50.15	6/21/2022 10:39	81.14	6/20/2022 9:02	16.59	6/20/2022 8:11	8.38	6/20/2022 13:07	85.43
6/21/2022 11:58	50.16	6/21/2022 10:40	81.17	6/20/2022 9:03	16.60	6/20/2022 8:12	8.32	6/20/2022 13:08	85.33
6/21/2022 11:59	50.12	6/21/2022 10:41	81.17	6/20/2022 9:04	16.58	6/20/2022 8:13	8.39	6/20/2022 13:09	85.18
6/21/2022 12:00	50.16	6/21/2022 10:42	81.16	6/20/2022 9:05	16.58	6/20/2022 8:14	8.33	6/20/2022 13:10	85.04
6/21/2022 12:01	50.14	6/21/2022 10:43	81.15	6/20/2022 9:06	16.58	6/20/2022 8:15	8.34	6/20/2022 13:11	84.97
6/21/2022 12:02	50.14	6/21/2022 10:44	81.15	6/20/2022 9:07	16.57	6/20/2022 8:16	8.38	6/20/2022 13:12	84.80
6/21/2022 12:03	50.12	6/21/2022 10:45	81.15	6/20/2022 9:08	16.58	6/20/2022 8:17	8.28	6/20/2022 13:13	84.71
6/21/2022 12:04	50.08	6/21/2022 10:46	81.14	6/20/2022 9:09	16.55	6/20/2022 8:18	8.23	6/20/2022 13:14	84.58

6/21/2022 12:05	50.11	6/21/2022 10:47	81.12	6/20/2022 9:10	16.57	6/20/2022 8:19	8.32	6/20/2022 13:15	84.46
6/21/2022 12:06	50.10	6/21/2022 10:48	81.11	6/20/2022 9:11	16.58	6/20/2022 8:20	8.25	6/20/2022 13:16	84.31
6/21/2022 12:07	50.10	6/21/2022 10:49	81.19	6/20/2022 9:12	16.57	6/20/2022 8:21	8.23	6/20/2022 13:17	84.16
6/21/2022 12:08	50.10	6/21/2022 10:50	81.15	6/20/2022 9:13	16.59	6/20/2022 8:22	8.24	6/20/2022 13:18	84.08
6/21/2022 12:09	50.12	6/21/2022 10:51	81.13	6/20/2022 9:14	16.59	6/20/2022 8:23	8.21	6/20/2022 13:19	83.97
6/21/2022 12:10	50.09	6/21/2022 10:52	81.19	6/20/2022 9:15	16.60	6/20/2022 8:24	8.27	6/20/2022 13:20	83.85
6/21/2022 12:11	50.09	6/21/2022 10:53	81.16	6/20/2022 9:16	16.62	6/20/2022 8:25	8.21	6/20/2022 13:21	83.75
6/21/2022 12:12	50.09	6/21/2022 10:54	81.16	6/20/2022 9:17	16.57	6/20/2022 8:26	8.12	6/20/2022 13:22	83.63
6/21/2022 12:13	50.10	6/21/2022 10:55	81.15	6/20/2022 9:18	16.57	6/20/2022 8:27	8.19	6/20/2022 13:23	83.49
6/21/2022 12:14	50.12	6/21/2022 10:56	81.12	6/20/2022 9:19	16.60	6/20/2022 8:28	8.10	6/20/2022 13:24	83.40
6/21/2022 12:15	50.10	6/21/2022 10:57	81.11	6/20/2022 9:20	16.55	6/20/2022 8:29	8.12	6/20/2022 13:25	83.27
6/21/2022 12:16	50.11	6/21/2022 10:58	81.14	6/20/2022 9:21	16.53	6/20/2022 8:30	8.14	6/20/2022 13:26	83.15
6/21/2022 12:17	50.11	6/21/2022 10:59	81.18	6/20/2022 9:22	16.54	6/20/2022 8:31	8.15	6/20/2022 13:27	83.09
6/21/2022 12:18	50.14	6/21/2022 11:00	81.14	6/20/2022 9:23	16.57	6/20/2022 8:32	8.47	6/20/2022 13:28	82.93
6/21/2022 12:19	50.12	6/21/2022 11:01	81.17	6/20/2022 9:24	16.57	6/20/2022 8:33	8.62	6/20/2022 13:29	82.85
6/21/2022 12:20	50.08	6/21/2022 11:02	81.17	6/20/2022 9:25	16.59	6/20/2022 8:34	8.33	6/20/2022 13:30	82.79
6/21/2022 12:21	50.09	6/21/2022 11:03	81.10	6/20/2022 9:26	16.62	6/20/2022 8:35	8.32	6/20/2022 13:31	82.63
6/21/2022 12:22	50.09	6/21/2022 11:04	81.16	6/20/2022 9:27	16.53	6/20/2022 8:36	8.22	6/20/2022 13:32	82.52
6/21/2022 12:23	50.12	6/21/2022 11:05	81.15	6/20/2022 9:28	16.58	6/20/2022 8:37	8.16	6/20/2022 13:33	82.44
6/21/2022 12:24	50.08	6/21/2022 11:06	81.19	6/20/2022 9:29	16.56	6/20/2022 8:38	8.08	6/20/2022 13:34	82.32
6/21/2022 12:25	50.08	6/21/2022 11:07	81.12	6/20/2022 9:30	16.64	6/20/2022 8:39	8.02	6/20/2022 13:35	82.22
6/21/2022 12:26	50.02	6/21/2022 11:08	81.10	6/20/2022 9:31	16.59	6/20/2022 8:40	7.99	6/20/2022 13:36	82.10
6/21/2022 12:27	50.09	6/21/2022 11:09	81.16	6/20/2022 9:32	16.56	6/20/2022 8:41	8.01	6/20/2022 13:37	82.01
6/21/2022 12:28	50.06	6/21/2022 11:10	81.19	6/20/2022 9:33	16.58	6/20/2022 8:42	7.90	6/20/2022 13:38	81.93
6/21/2022 12:29	50.08	6/21/2022 11:11	81.14	6/20/2022 9:34	16.57	6/20/2022 8:43	7.93	6/20/2022 13:39	81.81
6/21/2022 12:30	50.05	6/21/2022 11:12	81.72	6/20/2022 9:35	16.58	6/20/2022 8:44	7.89	6/20/2022 13:40	81.75
6/21/2022 12:31	50.09	6/21/2022 11:13	84.80	6/20/2022 9:36	16.55	6/20/2022 8:45	7.87	6/20/2022 13:41	81.64
6/21/2022 12:32	50.10	6/21/2022 11:14	84.08	6/20/2022 9:37	16.56	6/20/2022 8:46	7.83	6/20/2022 13:42	81.53
6/21/2022 12:33	50.02	6/21/2022 11:15	83.65	6/20/2022 9:38	16.59	6/20/2022 8:47	7.82	6/20/2022 13:43	81.47
6/21/2022 12:34	50.04	6/21/2022 11:16	83.26	6/20/2022 9:39	16.58	6/20/2022 8:48	7.81	6/20/2022 13:44	81.37
6/21/2022 12:35	50.08	6/21/2022 11:17	82.92	6/20/2022 9:40	16.60	6/20/2022 8:49	7.81	6/20/2022 13:45	81.28
6/21/2022 12:36	50.02	6/21/2022 11:18	82.69	6/20/2022 9:41	16.56	6/20/2022 8:50	7.77	6/20/2022 13:46	81.20
6/21/2022 12:37	50.01	6/21/2022 11:19	82.46	6/20/2022 9:42	16.57	6/20/2022 8:51	7.77	6/20/2022 13:47	81.12
6/21/2022 12:38	50.04	6/21/2022 11:20	83.03	6/20/2022 9:43	16.57	6/20/2022 8:52	7.78	6/20/2022 13:48	81.03
6/21/2022 12:39	50.03	6/21/2022 11:21	83.52	6/20/2022 9:44	16.57	6/20/2022 8:53	7.65	6/20/2022 13:49	80.92
6/21/2022 12:40	50.05	6/21/2022 11:22	83.16	6/20/2022 9:45	16.54	6/20/2022 8:54	7.68	6/20/2022 13:50	80.88
6/21/2022 12:41	50.07	6/21/2022 11:23	83.46	6/20/2022 9:46	16.54	6/20/2022 8:55	7.68	6/20/2022 13:51	80.76
6/21/2022 12:42	50.06	6/21/2022 11:24	83.71	6/20/2022 9:47	16.58	6/20/2022 8:56	7.72	6/20/2022 13:52	80.68
6/21/2022 12:43	50.05	6/21/2022 11:25	84.33	6/20/2022 9:48	16.59	6/20/2022 8:57	7.61	6/20/2022 13:53	80.65
6/21/2022 12:44	50.03	6/21/2022 11:26	84.33	6/20/2022 9:49	16.57	6/20/2022 8:58	7.61	6/20/2022 13:54	80.61
6/21/2022 12:45	50.01	6/21/2022 11:27	84.41	6/20/2022 9:50	16.57	6/20/2022 8:59	7.60	6/20/2022 13:55	80.47
6/21/2022 12:46	50.02	6/21/2022 11:28	83.94	6/20/2022 9:51	16.60	6/20/2022 9:00	7.61	6/20/2022 13:56	80.42
6/21/2022 12:47	50.06	6/21/2022 11:29	83.54	6/20/2022 9:52	16.58	6/20/2022 9:01	7.58	6/20/2022 13:57	80.33
6/21/2022 12:48	50.05	6/21/2022 11:30	83.27	6/20/2022 9:53	16.57	6/20/2022 9:02	7.56	6/20/2022 13:58	80.25
6/21/2022 12:49	50.03	6/21/2022 11:31	83.72	6/20/2022 9:54	16.58	6/20/2022 9:03	7.52	6/20/2022 13:59	80.13
6/21/2022 12:50	50.04	6/21/2022 11:32	83.32	6/20/2022 9:55	16.63	6/20/2022 9:04	7.54	6/20/2022 14:00	80.05
6/21/2022 12:51	49.99	6/21/2022 11:33	83.65	6/20/2022 9:56	16.60	6/20/2022 9:05	7.46	6/20/2022 14:01	80.01
6/21/2022 12:52	50.06	6/21/2022 11:34	83.30	6/20/2022 9:57	16.64	6/20/2022 9:06	7.50	6/20/2022 14:02	79.87
6/21/2022 12:53	50.04	6/21/2022 11:35	83.00	6/20/2022 9:58	16.58	6/20/2022 9:07	7.50	6/20/2022 14:03	79.83
6/21/2022 12:54	50.02	6/21/2022 11:36	82.82	6/20/2022 9:59	16.64	6/20/2022 9:08	7.50	6/20/2022 14:04	79.70
6/21/2022 12:55	50.00	6/21/2022 11:37	82.66	6/20/2022 10:00	16.62	6/20/2022 9:09	7.41	6/20/2022 14:05	79.66
6/21/2022 12:56	50.02	6/21/2022 11:38	82.53	6/20/2022 10:01	16.68	6/20/2022 9:10	7.44	6/20/2022 14:06	79.58
6/21/2022 12:57	50.04	6/21/2022 11:39	82.41	6/20/2022 10:02	16.63	6/20/2022 9:11	7.43	6/20/2022 14:07	79.52
6/21/2022 12:58	50.00	6/21/2022 11:40	82.25	6/20/2022 10:03	16.62	6/20/2022 9:12	7.56	6/20/2022 14:08	79.42
6/21/2022 12:59	50.02	6/21/2022 11:41	82.16	6/20/2022 10:04	16.69	6/20/2022 9:13	7.64	6/20/2022 14:09	79.39
6/21/2022 13:00	49.99	6/21/2022 11:42	82.14	6/20/2022 10:05	16.70	6/20/2022 9:14	7.51	6/20/2022 14:10	79.31
6/21/2022 13:01	50.01	6/21/2022 11:43	82.02	6/20/2022 10:06	16.65	6/20/2022 9:15	7.41	6/20/2022 14:11	79.24
6/21/2022 13:02	50.03	6/21/2022 11:44	81.94	6/20/2022 10:07	16.73	6/20/2022 9:16	7.40	6/20/2022 14:12	79.19
6/21/2022 13:03	49.97	6/21/2022 11:45	81.86	6/20/2022 10:08	16.73	6/20/2022 9:17	7.36	6/20/2022 14:13	79.13
6/21/2022 13:04	50.02	6/21/2022 11:46	81.82	6/20/2022 10:09	16.75	6/20/2022 9:18	7.70	6/20/2022 14:14	79.09
6/21/2022 13:05	49.99	6/21/2022 11:47	81.76	6/20/2022 10:10	16.73	6/20/2022 9:19	7.75	6/20/2022 14:15	79.04
6/21/2022 13:06	50.00	6/21/2022 11:48	81.74	6/20/2022 10:11	16.79	6/20/2022 9:20	7.53	6/20/2022 14:16	78.96
6/21/2022 13:07	50.00	6/21/2022 11:49	81.69	6/20/2022 10:12	16.79	6/20/2022 9:21	7.51	6/20/2022 14:17	78.94
6/21/2022 13:08	49.99	6/21/2022 11:50	81.61	6/20/2022 10:13	16.72	6/20/2022 9:22	7.52	6/20/2022 14:18	78.92
6/21/2022 13:09	49.96	6/21/2022 11:51	81.61	6/20/2022 10:14	16.75	6/20/2022 9:23	7.60	6/20/2022 14:19	78.85
6/21/2022 13:10	50.00	6/21/2022 11:52	81.61	6/20/2022 10:15	16.77	6/20/2022 9:24	7.42	6/20/2022 14:20	78.81
6/21/2022 13:11	50.01	6/21/2022 11:53	81.59	6/20/2022 10:16	16.77	6/20/2022 9:25	7.39	6/20/2022 14:21	78.72
6/21/2022 13:12	49.98	6/21/2022 11:54	81.57	6/20/2022 10:17	16.78	6/20/2022 9:26	7.34	6/20/2022 14:22	78.69
6/21/2022 13:13	49.97	6/21/2022 11:55	81.55	6/20/2022 10:18	16.81	6/20/2022 9:27	7.36	6/20/2022 14:23	78.65
6/21/2022 13:14	50.00	6/21/2022 11:56	81.52	6/20/2022 10:19	16.81	6/20/2022 9:28	7.31	6/20/2022 14:24	78.63
6/21/2022 13:15	49.95	6/21/2022 11:57	83.65	6/20/2022 10:20	16.78	6/20/2022 9:29	7.26	6/20/2022 14:25	78.56
6/21/2022 13:16	49.98	6/21/2022 11:58	83.21	6/20/2022 10:21	16.82	6/20/2022 9:30	7.32	6/20/2022 14:26	78.51
6/21/2022 13:17	49.94	6/21/2022 11:59	82.91	6/20/2022 10:22	16.83	6/20/2022 9:31	7.26	6/20/2022 14:27	78.51
6/21/2022 13:18	49.94	6/21/2022 12:00	82.65	6/20/2022 10:23	16.81	6/20/2022 9:32	7.22	6/20/2022 14:28	78.42
6/21/2022 13:19	49.95	6/21/2022 12:01	82.44	6/20/2022 10:24	16.86	6/20/2022 9:33	7.23	6/20/2022 14:29	78.42
6/21/2022 13:20	49.94	6/21/2022 12:02	82.34	6/20/2022 10:25	16.86	6/20/2022 9:34	7.19	6/20/2022 14:30	78.38
6/21/2022 13:21	49.92	6/21/2022 12:03	82.21	6/20/2022 10:26	16.88	6/20/2022 9:35	7.19	6/20/2022 14:31	78.33
6/21/2022 13:22	49.93	6/21/2022 12:04	82.10	6/20/2022 10:27	16.88	6/20/2022 9:36	7.17	6/20/2022 14:32	78.29
6/21/2022 13:23	49.95	6/21/2022 12:05	81.97	6/20/2022 10:28	16.89	6/20/2022 9:37	7.20	6/20/2022 14:33	78.24
6/21/2022 13:24	49.95	6/21/2022 12:06	81.96	6/20/2022 10:29	16.86	6/20/2022 9:38	7.11	6/20/2022 14:34	78.21
6/21/2022 13:25	49.93	6/21/2022 12:07	81.81	6/20/2022 10:30	16.90	6/20/2022 9:39	7.20	6/20/2022 14:35	78.13
6/21/2022 13:26	49.96	6/21/2022 12:08	81.81	6/20/2022 10:31	16.92	6/20/2022 9:40	7.16	6/20/2022 14:36	78.12
6/21/2022 13:27	49.96	6/21/2022 12:09	81.77	6/20/2022 10:32	16.91	6/20/2022 9:41	7.07	6/20/2022 14:37	78.03
6/21/2022 13:28	49.96	6/21/2022 12:10	81.73	6/20/2022 10:33	17.02	6/20/2022 9:42	7.10	6/20/2022 14:38	77.99
6/21/2022 13:29	49.95	6/21/2022 12:11	81.66	6/20/2022 10:34	16.94	6/20/2022 9:43	7.10	6/20/2022 14:39	77.93
6/21/2022 13:30	49.96	6/21/2022 12:12	81.64	6/20/2022 10:35	16.98	6/20/2022 9:44	7.06	6/20/2022 14:40	77.90
6/21/2022 13:31	49.96	6/21/2022 12:13	81.59	6/20/2022 10:36	17.04	6/20/2022 9:45	7.28	6/20/2022 14:41	77.86
6/21/2022 13:32	50.00	6/21/2022 12:14	81.60	6/20/2022 10:37	17.04	6/20/2022 9:46	7.26	6/20/2022 14:42	77.78

6/21/2022 13:33	49.95	6/21/2022 12:15	81.54	6/20/2022 10:38	17.06	6/20/2022 9:47	7.18	6/20/2022 14:43	77.77
6/21/2022 13:34	49.95	6/21/2022 12:16	81.58	6/20/2022 10:39	17.06	6/20/2022 9:48	7.09	6/20/2022 14:44	77.68
6/21/2022 13:35	49.93	6/21/2022 12:17	81.54	6/20/2022 10:40	17.05	6/20/2022 9:49	7.07	6/20/2022 14:45	77.65
6/21/2022 13:36	49.95	6/21/2022 12:18	81.52	6/20/2022 10:41	17.08	6/20/2022 9:50	7.10	6/20/2022 14:46	77.60
6/21/2022 13:37	49.97	6/21/2022 12:19	81.42	6/20/2022 10:42	17.13	6/20/2022 9:51	7.09	6/20/2022 14:47	79.84
6/21/2022 13:38	49.96	6/21/2022 12:20	81.46	6/20/2022 10:43	17.13	6/20/2022 9:52	6.99	6/20/2022 14:48	82.61
6/21/2022 13:39	49.94	6/21/2022 12:21	81.48	6/20/2022 10:44	17.15	6/20/2022 9:53	7.03	6/20/2022 14:49	82.44
6/21/2022 13:40	49.94	6/21/2022 12:22	81.43	6/20/2022 10:45	17.16	6/20/2022 9:54	7.00	6/20/2022 14:50	82.26
6/21/2022 13:41	49.93	6/21/2022 12:23	81.43	6/20/2022 10:46	17.14	6/20/2022 9:55	7.07	6/20/2022 14:51	82.18
6/21/2022 13:42	49.94	6/21/2022 12:24	81.43	6/20/2022 10:47	17.19	6/20/2022 9:56	6.96	6/20/2022 14:52	81.97
6/21/2022 13:43	49.92	6/21/2022 12:25	81.42	6/20/2022 10:48	17.14	6/20/2022 9:57	6.96	6/20/2022 14:53	81.94
6/21/2022 13:44	49.95	6/21/2022 12:26	81.37	6/20/2022 10:49	17.19	6/20/2022 9:58	6.93	6/20/2022 14:54	81.79
6/21/2022 13:45	49.96	6/21/2022 12:27	81.42	6/20/2022 10:50	17.26	6/20/2022 9:59	6.95	6/20/2022 14:55	81.69
6/21/2022 13:46	49.95	6/21/2022 12:28	81.37	6/20/2022 10:51	17.24	6/20/2022 10:00	6.89	6/20/2022 14:56	81.56
6/21/2022 13:47	49.94	6/21/2022 12:29	81.36	6/20/2022 10:52	17.24	6/20/2022 10:01	6.91	6/20/2022 14:57	81.44
6/21/2022 13:48	49.95	6/21/2022 12:30	81.35	6/20/2022 10:53	17.29	6/20/2022 10:02	6.90	6/20/2022 14:58	81.37
6/21/2022 13:49	49.93	6/21/2022 12:31	81.40	6/20/2022 10:54	17.29	6/20/2022 10:03	6.95	6/20/2022 14:59	81.25
6/21/2022 13:50	49.93	6/21/2022 12:32	81.33	6/20/2022 10:55	17.29	6/20/2022 10:04	6.89	6/20/2022 15:00	81.17
6/21/2022 13:51	49.96	6/21/2022 12:33	81.35	6/20/2022 10:56	17.32	6/20/2022 10:05	6.98	6/20/2022 15:01	81.07
6/21/2022 13:52	49.89	6/21/2022 12:34	81.33	6/20/2022 10:57	17.34	6/20/2022 10:06	6.90	6/20/2022 15:02	81.01
6/21/2022 13:53	49.91	6/21/2022 12:35	81.33	6/20/2022 10:58	17.38	6/20/2022 10:07	6.85	6/20/2022 15:03	80.90
6/21/2022 13:54	49.93	6/21/2022 12:36	81.36	6/20/2022 10:59	17.38	6/20/2022 10:08	6.87	6/20/2022 15:04	80.81
6/21/2022 13:55	49.89	6/21/2022 12:37	81.33	6/20/2022 11:00	17.32	6/20/2022 10:09	6.83	6/20/2022 15:05	80.76
6/21/2022 13:56	49.94	6/21/2022 12:38	81.31	6/20/2022 11:01	17.39	6/20/2022 10:10	6.83	6/20/2022 15:06	80.64
6/21/2022 13:57	49.93	6/21/2022 12:39	81.28	6/20/2022 11:02	17.43	6/20/2022 10:11	6.87	6/20/2022 15:07	80.59
6/21/2022 13:58	49.91	6/21/2022 12:40	81.33	6/20/2022 11:03	17.45	6/20/2022 10:12	6.80	6/20/2022 15:08	80.51
6/21/2022 13:59	49.96	6/21/2022 12:41	81.31	6/20/2022 11:04	17.49	6/20/2022 10:13	6.80	6/20/2022 15:09	80.42
6/21/2022 14:00	49.95	6/21/2022 12:42	81.33	6/20/2022 11:05	17.49	6/20/2022 10:14	6.82	6/20/2022 15:10	80.33
6/21/2022 14:01	49.92	6/21/2022 12:43	81.31	6/20/2022 11:06	17.52	6/20/2022 10:15	6.81	6/20/2022 15:11	80.25
6/21/2022 14:02	49.88	6/21/2022 12:44	81.33	6/20/2022 11:07	17.56	6/20/2022 10:16	6.76	6/20/2022 15:12	80.16
6/21/2022 14:03	49.90	6/21/2022 12:45	81.32	6/20/2022 11:08	17.58	6/20/2022 10:17	6.78	6/20/2022 15:13	80.07
6/21/2022 14:04	49.89	6/21/2022 12:46	81.30	6/20/2022 11:09	17.58	6/20/2022 10:18	6.78	6/20/2022 15:14	79.99
6/21/2022 14:05	49.94	6/21/2022 12:47	81.30	6/20/2022 11:10	17.61	6/20/2022 10:19	6.67	6/20/2022 15:15	79.88
6/21/2022 14:06	49.89	6/21/2022 12:48	81.30	6/20/2022 11:11	17.58	6/20/2022 10:20	6.71	6/20/2022 15:16	79.80
6/21/2022 14:07	49.93	6/21/2022 12:49	81.30	6/20/2022 11:12	17.58	6/20/2022 10:21	6.76	6/20/2022 15:17	79.70
6/21/2022 14:08	49.85	6/21/2022 12:50	81.29	6/20/2022 11:13	17.67	6/20/2022 10:22	6.83	6/20/2022 15:18	79.62
6/21/2022 14:09	49.89	6/21/2022 12:51	81.29	6/20/2022 11:14	17.69	6/20/2022 10:23	6.67	6/20/2022 15:19	79.55
6/21/2022 14:10	49.92	6/21/2022 12:52	81.31	6/20/2022 11:15	17.69	6/20/2022 10:24	6.71	6/20/2022 15:20	79.43
6/21/2022 14:11	49.96	6/21/2022 12:53	81.27	6/20/2022 11:16	17.69	6/20/2022 10:25	6.70	6/20/2022 15:21	79.40
6/21/2022 14:12	49.90	6/21/2022 12:54	81.30	6/20/2022 11:17	17.71	6/20/2022 10:26	6.67	6/20/2022 15:22	79.32
6/21/2022 14:13	49.91	6/21/2022 12:55	81.35	6/20/2022 11:18	17.74	6/20/2022 10:27	6.63	6/20/2022 15:23	79.21
6/21/2022 14:14	49.91	6/21/2022 12:56	81.27	6/20/2022 11:19	17.69	6/20/2022 10:28	6.66	6/20/2022 15:24	79.17
6/21/2022 14:15	49.89	6/21/2022 12:57	81.32	6/20/2022 11:20	17.78	6/20/2022 10:29	6.63	6/20/2022 15:25	79.06
6/21/2022 14:16	49.87	6/21/2022 12:58	81.30	6/20/2022 11:21	17.77	6/20/2022 10:30	6.63	6/20/2022 15:26	78.98
6/21/2022 14:17	49.87	6/21/2022 12:59	81.30	6/20/2022 11:22	17.84	6/20/2022 10:31	6.60	6/20/2022 15:27	78.93
6/21/2022 14:18	49.95	6/21/2022 13:00	81.27	6/20/2022 11:23	17.84	6/20/2022 10:32	6.61	6/20/2022 15:28	78.86
6/21/2022 14:19	49.88	6/21/2022 13:01	81.24	6/20/2022 11:24	17.89	6/20/2022 10:33	6.57	6/20/2022 15:29	78.79
6/21/2022 14:20	49.92	6/21/2022 13:02	81.26	6/20/2022 11:25	17.83	6/20/2022 10:34	7.04	6/20/2022 15:30	78.78
6/21/2022 14:21	49.91	6/21/2022 13:03	81.27	6/20/2022 11:26	17.84	6/20/2022 10:35	6.80	6/20/2022 15:31	78.74
6/21/2022 14:22	49.88	6/21/2022 13:04	81.28	6/20/2022 11:27	17.92	6/20/2022 10:36	6.77	6/20/2022 15:32	78.66
6/21/2022 14:23	49.86	6/21/2022 13:05	81.26	6/20/2022 11:28	17.87	6/20/2022 10:37	6.75	6/20/2022 15:33	78.61
6/21/2022 14:24	49.89	6/21/2022 13:06	81.28	6/20/2022 11:29	17.92	6/20/2022 10:38	6.73	6/20/2022 15:34	78.57
6/21/2022 14:25	49.89	6/21/2022 13:07	81.29	6/20/2022 11:30	17.93	6/20/2022 10:39	6.64	6/20/2022 15:35	78.52
6/21/2022 14:26	49.91	6/21/2022 13:08	81.25	6/20/2022 11:31	17.94	6/20/2022 10:40	6.66	6/20/2022 15:36	78.49
6/21/2022 14:27	49.89	6/21/2022 13:09	81.26	6/20/2022 11:32	18.00	6/20/2022 10:41	6.59	6/20/2022 15:37	78.40
6/21/2022 14:28	49.89	6/21/2022 13:10	81.26	6/20/2022 11:33	17.96	6/20/2022 10:42	6.59	6/20/2022 15:38	78.41
6/21/2022 14:29	49.90	6/21/2022 13:11	81.29	6/20/2022 11:34	18.05	6/20/2022 10:43	6.56	6/20/2022 15:39	78.39
6/21/2022 14:30	49.89	6/21/2022 13:12	81.26	6/20/2022 11:35	18.02	6/20/2022 10:44	6.55	6/20/2022 15:40	78.34
6/21/2022 14:31	49.92	6/21/2022 13:13	81.29	6/20/2022 11:36	18.10	6/20/2022 10:45	6.57	6/20/2022 15:41	78.25
6/21/2022 14:32	49.88	6/21/2022 13:14	81.27	6/20/2022 11:37	18.08	6/20/2022 10:46	6.50	6/20/2022 15:42	78.21
6/21/2022 14:33	49.89	6/21/2022 13:15	81.27	6/20/2022 11:38	18.10	6/20/2022 10:47	6.52	6/20/2022 15:43	78.18
6/21/2022 14:34	49.90	6/21/2022 13:16	81.21	6/20/2022 11:39	18.12	6/20/2022 10:48	6.54	6/20/2022 15:44	78.09
6/21/2022 14:35	49.91	6/21/2022 13:17	81.30	6/20/2022 11:40	18.14	6/20/2022 10:49	6.57	6/20/2022 15:45	78.05
6/21/2022 14:36	49.90	6/21/2022 13:18	81.27	6/20/2022 11:41	18.09	6/20/2022 10:50	6.50	6/20/2022 15:46	78.02
6/21/2022 14:37	49.89	6/21/2022 13:19	81.26	6/20/2022 11:42	18.10	6/20/2022 10:51	6.50	6/20/2022 15:47	77.94
6/21/2022 14:38	49.90	6/21/2022 13:20	81.24	6/20/2022 11:43	18.09	6/20/2022 10:52	6.54	6/20/2022 15:48	77.91
6/21/2022 14:39	49.87	6/21/2022 13:21	81.25	6/20/2022 11:44	18.16	6/20/2022 10:53	6.46	6/20/2022 15:49	77.81
6/21/2022 14:40	49.90	6/21/2022 13:22	81.25	6/20/2022 11:45	18.11	6/20/2022 10:54	6.43	6/20/2022 15:50	77.74
6/21/2022 14:41	49.89	6/21/2022 13:23	81.19	6/20/2022 11:46	18.10	6/20/2022 10:55	6.48	6/20/2022 15:51	77.72
6/21/2022 14:42	49.89	6/21/2022 13:24	81.23	6/20/2022 11:47	18.20	6/20/2022 10:56	6.39	6/20/2022 15:52	77.68
6/21/2022 14:43	49.87	6/21/2022 13:25	81.28	6/20/2022 11:48	18.14	6/20/2022 10:57	6.46	6/20/2022 15:53	77.64
6/21/2022 14:44	49.88	6/21/2022 13:26	81.20	6/20/2022 11:49	18.21	6/20/2022 10:58	6.48	6/20/2022 15:54	77.57
6/21/2022 14:45	49.91	6/21/2022 13:27	81.26	6/20/2022 11:50	18.11	6/20/2022 10:59	6.47	6/20/2022 15:55	77.51
6/21/2022 14:46	49.87	6/21/2022 13:28	81.24	6/20/2022 11:51	18.14	6/20/2022 11:00	6.37	6/20/2022 15:56	77.46
6/21/2022 14:47	49.90	6/21/2022 13:29	81.20	6/20/2022 11:52	18.16	6/20/2022 11:01	6.41	6/20/2022 15:57	77.40
6/21/2022 14:48	49.90	6/21/2022 13:30	81.24	6/20/2022 11:53	18.15	6/20/2022 11:02	6.40	6/20/2022 15:58	77.33
6/21/2022 14:49	49.87	6/21/2022 13:31	81.25	6/20/2022 11:54	18.13	6/20/2022 11:03	6.35	6/20/2022 15:59	77.29
6/21/2022 14:50	49.88	6/21/2022 13:32	81.25	6/20/2022 11:55	18.16	6/20/2022 11:04	6.36	6/20/2022 16:00	77.28
6/21/2022 14:51	49.89	6/21/2022 13:33	81.25	6/20/2022 11:56	18.14	6/20/2022 11:05	6.36	6/20/2022 16:01	77.18
6/21/2022 14:52	49.88	6/21/2022 13:34	81.27	6/20/2022 11:57	18.15	6/20/2022 11:06	6.35	6/20/2022 16:02	77.15
6/21/2022 14:53	49.86	6/21/2022 13:35	81.24	6/20/2022 11:58	18.16	6/20/2022 11:07	6.30	6/20/2022 16:03	77.11
6/21/2022 14:54	49.87	6/21/2022 13:36	81.22	6/20/2022 11:59	18.15	6/20/2022 11:08	6.32	6/20/2022 16:04	77.04
6/21/2022 14:55	49.89	6/21/2022 13:37	81.29	6/20/2022 12:00	18.18	6/20/2022 11:09	6.34	6/20/2022 16:05	77.02
6/21/2022 14:56	49.86	6/21/2022 13:38	81.22	6/20/2022 12:01	18.15	6/20/2022 11:10	6.30	6/20/2022 16:06	76.95
6/21/2022 14:57	49.87	6/21/2022 13:39	81.24	6/20/2022 12:02	18.12	6/20/2022 11:11	6.32	6/20/2022 16:07	76.89
6/21/2022 14:58	49.85	6/21/2022 13:40	81.26	6/20/2022 12:03	18.13	6/20/2022 11:12	6.32	6/20/2022 16:08	76.89
6/21/2022 14:59	49.89	6/21/2022 13:41	81.29	6/20/2022 12:04	18.16	6/20/2022 11:13	6.35	6/20/2022 16:09	76.81
6/21/2022 15:00	49.88	6/21/2022 13:42	81.20	6/20/2022 12:05	18.18	6/20/2022 11:14	6.31	6/20/2022 16:10	76.79

6/21/2022 15:01	49.89	6/21/2022 13:43	81.26	6/20/2022 12:06	18.11	6/20/2022 11:15	6.51	6/20/2022 16:11	76.73
6/21/2022 15:02	49.87	6/21/2022 13:44	81.24	6/20/2022 12:07	18.10	6/20/2022 11:16	6.76	6/20/2022 16:12	76.66
6/21/2022 15:03	49.88	6/21/2022 13:45	81.21	6/20/2022 12:08	18.15	6/20/2022 11:17	6.82	6/20/2022 16:13	81.59
6/21/2022 15:04	49.84	6/21/2022 13:46	81.27	6/20/2022 12:09	18.13	6/20/2022 11:18	6.85	6/20/2022 16:14	81.40
6/21/2022 15:05	49.86	6/21/2022 13:47	81.24	6/20/2022 12:10	18.16	6/20/2022 11:19	6.93	6/20/2022 16:15	81.31
6/21/2022 15:06	49.85	6/21/2022 13:48	81.24	6/20/2022 12:11	18.13	6/20/2022 11:20	6.99	6/20/2022 16:16	81.18
6/21/2022 15:07	49.88	6/21/2022 13:49	81.26	6/20/2022 12:12	18.14	6/20/2022 11:21	6.97	6/20/2022 16:17	81.06
6/21/2022 15:08	49.85	6/21/2022 13:50	81.27	6/20/2022 12:13	18.14	6/20/2022 11:22	7.14	6/20/2022 16:18	80.97
6/21/2022 15:09	49.87	6/21/2022 13:51	81.24	6/20/2022 12:14	18.10	6/20/2022 11:23	6.83	6/20/2022 16:19	80.85
6/21/2022 15:10	49.86	6/21/2022 13:52	81.21	6/20/2022 12:15	18.13	6/20/2022 11:24	6.63	6/20/2022 16:20	80.76
6/21/2022 15:11	49.85	6/21/2022 13:53	81.26	6/20/2022 12:16	18.08	6/20/2022 11:25	6.64	6/20/2022 16:21	80.68
6/21/2022 15:12	49.87	6/21/2022 13:54	81.24	6/20/2022 12:17	18.14	6/20/2022 11:26	6.55	6/20/2022 16:22	80.62
6/21/2022 15:13	49.86	6/21/2022 13:55	81.24	6/20/2022 12:18	18.08	6/20/2022 11:27	6.48	6/20/2022 16:23	80.50
6/21/2022 15:14	49.83	6/21/2022 13:56	81.21	6/20/2022 12:19	18.05	6/20/2022 11:28	6.54	6/20/2022 16:24	80.38
6/21/2022 15:15	49.87	6/21/2022 13:57	81.21	6/20/2022 12:20	18.04	6/20/2022 11:29	6.47	6/20/2022 16:25	80.30
6/21/2022 15:16	49.88	6/21/2022 13:58	81.23	6/20/2022 12:21	18.04	6/20/2022 11:30	6.42	6/20/2022 16:26	80.21
6/21/2022 15:17	49.86	6/21/2022 13:59	81.25	6/20/2022 12:22	18.05	6/20/2022 11:31	6.50	6/20/2022 16:27	80.11
6/21/2022 15:18	49.88	6/21/2022 14:00	81.21	6/20/2022 12:23	18.06	6/20/2022 11:32	6.39	6/20/2022 16:28	80.02
6/21/2022 15:19	49.82	6/21/2022 14:01	81.23	6/20/2022 12:24	18.03	6/20/2022 11:33	6.42	6/20/2022 16:29	79.92
6/21/2022 15:20	49.89	6/21/2022 14:02	81.23	6/20/2022 12:25	18.06	6/20/2022 11:34	6.39	6/20/2022 16:30	79.83
6/21/2022 15:21	49.84	6/21/2022 14:03	81.22	6/20/2022 12:26	18.05	6/20/2022 11:35	6.34	6/20/2022 16:31	79.74
6/21/2022 15:22	49.89	6/21/2022 14:04	81.24	6/20/2022 12:27	18.01	6/20/2022 11:36	6.35	6/20/2022 16:32	79.67
6/21/2022 15:23	49.87	6/21/2022 14:05	81.24	6/20/2022 12:28	18.02	6/20/2022 11:37	6.41	6/20/2022 16:33	79.56
6/21/2022 15:24	49.84	6/21/2022 14:06	81.24	6/20/2022 12:29	18.04	6/20/2022 11:38	6.38	6/20/2022 16:34	79.47
6/21/2022 15:25	49.83	6/21/2022 14:07	81.20	6/20/2022 12:30	18.06	6/20/2022 11:39	6.33	6/20/2022 16:35	79.38
6/21/2022 15:26	49.87	6/21/2022 14:08	81.24	6/20/2022 12:31	18.03	6/20/2022 11:40	6.33	6/20/2022 16:36	79.28
6/21/2022 15:27	49.82	6/21/2022 14:09	81.21	6/20/2022 12:32	18.00	6/20/2022 11:41	6.34	6/20/2022 16:37	79.22
6/21/2022 15:28	49.82	6/21/2022 14:10	81.18	6/20/2022 12:33	17.99	6/20/2022 11:42	6.34	6/20/2022 16:38	79.14
6/21/2022 15:29	49.87	6/21/2022 14:11	81.23	6/20/2022 12:34	18.00	6/20/2022 11:43	6.33	6/20/2022 16:39	79.07
6/21/2022 15:30	49.86	6/21/2022 14:12	81.22	6/20/2022 12:35	17.99	6/20/2022 11:44	6.59	6/20/2022 16:40	78.97
6/21/2022 15:31	49.85	6/21/2022 14:13	81.26	6/20/2022 12:36	17.96	6/20/2022 11:45	6.46	6/20/2022 16:41	78.94
6/21/2022 15:32	49.85	6/21/2022 14:14	81.20	6/20/2022 12:37	17.97	6/20/2022 11:46	6.43	6/20/2022 16:42	78.83
6/21/2022 15:33	49.86	6/21/2022 14:15	81.23	6/20/2022 12:38	17.96	6/20/2022 11:47	6.33	6/20/2022 16:43	78.84
6/21/2022 15:34	49.86	6/21/2022 14:16	81.24	6/20/2022 12:39	17.94	6/20/2022 11:48	6.33	6/20/2022 16:44	78.74
6/21/2022 15:35	49.81	6/21/2022 14:17	81.23	6/20/2022 12:40	17.88	6/20/2022 11:49	6.32	6/20/2022 16:45	78.66
6/21/2022 15:36	49.84	6/21/2022 14:18	81.21	6/20/2022 12:41	17.95	6/20/2022 11:50	6.36	6/20/2022 16:46	78.63
6/21/2022 15:37	49.85	6/21/2022 14:19	81.22	6/20/2022 12:42	17.86	6/20/2022 11:51	6.25	6/20/2022 16:47	78.54
6/21/2022 15:38	49.86	6/21/2022 14:20	81.23	6/20/2022 12:43	17.93	6/20/2022 11:52	6.25	6/20/2022 16:48	78.46
6/21/2022 15:39	49.85	6/21/2022 14:21	81.26	6/20/2022 12:44	17.89	6/20/2022 11:53	6.30	6/20/2022 16:49	78.35
6/21/2022 15:40	49.84	6/21/2022 14:22	81.21	6/20/2022 12:45	17.92	6/20/2022 11:54	6.24	6/20/2022 16:50	78.32
6/21/2022 15:41	49.85	6/21/2022 14:23	81.24	6/20/2022 12:46	17.93	6/20/2022 11:55	6.22	6/20/2022 16:51	78.28
6/21/2022 15:42	49.86	6/21/2022 14:24	81.22	6/20/2022 12:47	17.89	6/20/2022 11:56	6.24	6/20/2022 16:52	78.24
6/21/2022 15:43	49.86	6/21/2022 14:25	81.22	6/20/2022 12:48	17.89	6/20/2022 11:57	6.26	6/20/2022 16:53	78.11
6/21/2022 15:44	49.82	6/21/2022 14:26	81.24	6/20/2022 12:49	17.87	6/20/2022 11:58	6.21	6/20/2022 16:54	78.08
6/21/2022 15:45	49.85	6/21/2022 14:27	81.22	6/20/2022 12:50	17.84	6/20/2022 11:59	6.21	6/20/2022 16:55	77.98
6/21/2022 15:46	49.81	6/21/2022 14:28	81.22	6/20/2022 12:51	17.85	6/20/2022 12:00	6.16	6/20/2022 16:56	77.92
6/21/2022 15:47	49.85	6/21/2022 14:29	81.24	6/20/2022 12:52	17.80	6/20/2022 12:01	6.22	6/20/2022 16:57	77.87
6/21/2022 15:48	49.84	6/21/2022 14:30	81.23	6/20/2022 12:53	17.83	6/20/2022 12:02	6.11	6/20/2022 16:58	77.78
6/21/2022 15:49	49.83	6/21/2022 14:31	81.22	6/20/2022 12:54	17.83	6/20/2022 12:03	6.16	6/20/2022 16:59	77.72
6/21/2022 15:50	49.86	6/21/2022 14:32	81.22	6/20/2022 12:55	17.84	6/20/2022 12:04	6.15	6/20/2022 17:00	77.64
6/21/2022 15:51	49.86	6/21/2022 14:33	81.20	6/20/2022 12:56	17.81	6/20/2022 12:05	6.17	6/20/2022 17:01	77.56
6/21/2022 15:52	49.86	6/21/2022 14:34	81.26	6/20/2022 12:57	17.82	6/20/2022 12:06	6.11	6/20/2022 17:02	77.50
6/21/2022 15:53	49.84	6/21/2022 14:35	81.24	6/20/2022 12:58	17.84	6/20/2022 12:07	6.08	6/20/2022 17:03	77.44
6/21/2022 15:54	49.82	6/21/2022 14:36	81.20	6/20/2022 12:59	17.85	6/20/2022 12:08	6.13	6/20/2022 17:04	77.41
6/21/2022 15:55	49.83	6/21/2022 14:37	81.20	6/20/2022 13:00	17.81	6/20/2022 12:09	6.05	6/20/2022 17:05	77.33
6/21/2022 15:56	49.81	6/21/2022 14:38	81.21	6/20/2022 13:01	17.83	6/20/2022 12:10	6.10	6/20/2022 17:06	77.29
6/21/2022 15:57	49.82	6/21/2022 14:39	81.23	6/20/2022 13:02	17.76	6/20/2022 12:11	6.09	6/20/2022 17:07	77.26
6/21/2022 15:58	49.84	6/21/2022 14:40	81.21	6/20/2022 13:03	17.77	6/20/2022 12:12	6.13	6/20/2022 17:08	77.18
6/21/2022 15:59	49.81	6/21/2022 14:41	81.23	6/20/2022 13:04	17.79	6/20/2022 12:13	6.08	6/20/2022 17:09	77.12
6/21/2022 16:00	49.87	6/21/2022 14:42	81.22	6/20/2022 13:05	17.79	6/20/2022 12:14	6.09	6/20/2022 17:10	77.09
6/21/2022 16:01	49.85	6/21/2022 14:43	81.22	6/20/2022 13:06	17.78	6/20/2022 12:15	6.08	6/20/2022 17:11	77.02
6/21/2022 16:02	49.85	6/21/2022 14:44	81.19	6/20/2022 13:07	17.72	6/20/2022 12:16	6.12	6/20/2022 17:12	77.00
6/21/2022 16:03	49.82	6/21/2022 14:45	81.23	6/20/2022 13:08	17.72	6/20/2022 12:17	6.04	6/20/2022 17:13	76.95
6/21/2022 16:04	49.87	6/21/2022 14:46	81.23	6/20/2022 13:09	17.72	6/20/2022 12:18	6.03	6/20/2022 17:14	76.89
6/21/2022 16:05	49.84	6/21/2022 14:47	81.23	6/20/2022 13:10	17.71	6/20/2022 12:19	6.13	6/20/2022 17:15	76.85
6/21/2022 16:06	49.81	6/21/2022 14:48	81.21	6/20/2022 13:11	17.68	6/20/2022 12:20	6.15	6/20/2022 17:16	81.69
6/21/2022 16:07	49.84	6/21/2022 14:49	81.22	6/20/2022 13:12	17.74	6/20/2022 12:21	6.06	6/20/2022 17:17	81.48
6/21/2022 16:08	49.85	6/21/2022 14:50	81.26	6/20/2022 13:13	17.73	6/20/2022 12:22	6.05	6/20/2022 17:18	81.35
6/21/2022 16:09	49.84	6/21/2022 14:51	81.21	6/20/2022 13:14	17.68	6/20/2022 12:23	6.04	6/20/2022 17:19	81.21
6/21/2022 16:10	49.82	6/21/2022 14:52	81.25	6/20/2022 13:15	17.69	6/20/2022 12:24	6.05	6/20/2022 17:20	81.08
6/21/2022 16:11	49.85	6/21/2022 14:53	81.24	6/20/2022 13:16	17.66	6/20/2022 12:25	6.01	6/20/2022 17:21	80.95
6/21/2022 16:12	49.78	6/21/2022 14:54	81.23	6/20/2022 13:17	17.70	6/20/2022 12:26	6.06	6/20/2022 17:22	80.88
6/21/2022 16:13	49.84	6/21/2022 14:55	81.24	6/20/2022 13:18	17.64	6/20/2022 12:27	6.02	6/20/2022 17:23	80.80
6/21/2022 16:14	49.82	6/21/2022 14:56	81.23	6/20/2022 13:19	17.65	6/20/2022 12:28	5.99	6/20/2022 17:24	80.73
6/21/2022 16:15	49.84	6/21/2022 14:57	81.26	6/20/2022 13:20	17.65	6/20/2022 12:29	6.00	6/20/2022 17:25	80.62
6/21/2022 16:16	49.83	6/21/2022 14:58	81.21	6/20/2022 13:21	17.68	6/20/2022 12:30	6.03	6/20/2022 17:26	80.50
6/21/2022 16:17	49.81	6/21/2022 14:59	81.24	6/20/2022 13:22	17.59	6/20/2022 12:31	5.96	6/20/2022 17:27	80.43
6/21/2022 16:18	49.79	6/21/2022 15:00	81.24	6/20/2022 13:23	17.66	6/20/2022 12:32	5.97	6/20/2022 17:28	80.32
6/21/2022 16:19	49.84	6/21/2022 15:01	81.20	6/20/2022 13:24	17.65	6/20/2022 12:33	6.00	6/20/2022 17:29	80.23
6/21/2022 16:20	49.80	6/21/2022 15:02	81.25	6/20/2022 13:25	17.61	6/20/2022 12:34	5.92	6/20/2022 17:30	80.10
6/21/2022 16:21	49.81	6/21/2022 15:03	81.17	6/20/2022 13:26	17.62	6/20/2022 12:35	5.90	6/20/2022 17:31	80.04
6/21/2022 16:22	49.82	6/21/2022 15:04	81.22	6/20/2022 13:27	17.60	6/20/2022 12:36	6.00	6/20/2022 17:32	79.90
6/21/2022 16:23	52.75	6/21/2022 15:05	81.23	6/20/2022 13:28	17.61	6/20/2022 12:37	5.92	6/20/2022 17:33	79.85
6/21/2022 16:24	54.02	6/21/2022 15:06	81.20	6/20/2022 13:29	17.64	6/20/2022 12:38	5.94	6/20/2022 17:34	79.73
6/21/2022 16:25	54.73	6/21/2022 15:07	81.19	6/20/2022 13:30	17.60	6/20/2022 12:39	5.96	6/20/2022 17:35	79.64
6/21/2022 16:26	53.79	6/21/2022 15:08	81.23	6/20/2022 13:31	17.61	6/20/2022 12:40	5.96	6/20/2022 17:36	79.55
6/21/2022 16:27	52.16	6/21/2022 15:09	81.21	6/20/2022 13:32	17.58	6/20/2022 12:41	6.01	6/20/2022 17:37	79.44
6/21/2022 16:28	51.49	6/21/2022 15:10	81.20	6/20/2022 13:33	17.60	6/20/2022 12:42	5.86	6/20/2022 17:38	79.35

6/21/2022 16:29	51.19	6/21/2022 15:11	81.22	6/20/2022 13:34	17.59	6/20/2022 12:43	5.89	6/20/2022 17:39	79.27
6/21/2022 16:30	51.02	6/21/2022 15:12	81.22	6/20/2022 13:35	17.57	6/20/2022 12:44	6.16	6/20/2022 17:40	79.19
6/21/2022 16:31	50.89	6/21/2022 15:13	81.25	6/20/2022 13:36	17.55	6/20/2022 12:45	6.21	6/20/2022 17:41	79.14
6/21/2022 16:32	50.82	6/21/2022 15:14	81.22	6/20/2022 13:37	17.56	6/20/2022 12:46	6.05	6/20/2022 17:42	79.07
6/21/2022 16:33	50.69	6/21/2022 15:15	81.22	6/20/2022 13:38	17.56	6/20/2022 12:47	6.03	6/20/2022 17:43	78.99
6/21/2022 16:34	50.64	6/21/2022 15:16	81.20	6/20/2022 13:39	17.52	6/20/2022 12:48	5.97	6/20/2022 17:44	78.89
6/21/2022 16:35	50.63	6/21/2022 15:17	81.18	6/20/2022 13:40	17.47	6/20/2022 12:49	6.15	6/20/2022 17:45	78.86
6/21/2022 16:36	50.55	6/21/2022 15:18	81.25	6/20/2022 13:41	17.52	6/20/2022 12:50	6.07	6/20/2022 17:46	78.75
6/21/2022 16:37	50.50	6/21/2022 15:19	81.20	6/20/2022 13:42	17.47	6/20/2022 12:51	6.08	6/20/2022 17:47	78.70
6/21/2022 16:38	50.50	6/21/2022 15:20	81.23	6/20/2022 13:43	17.50	6/20/2022 12:52	6.01	6/20/2022 17:48	78.62
6/21/2022 16:39	50.49	6/21/2022 15:21	81.25	6/20/2022 13:44	17.51	6/20/2022 12:53	6.02	6/20/2022 17:49	78.54
6/21/2022 16:40	50.44	6/21/2022 15:22	81.22	6/20/2022 13:45	17.50	6/20/2022 12:54	5.93	6/20/2022 17:50	78.48
6/21/2022 16:41	50.43	6/21/2022 15:23	81.20	6/20/2022 13:46	17.49	6/20/2022 12:55	5.96	6/20/2022 17:51	78.40
6/21/2022 16:42	50.40	6/21/2022 15:24	81.22	6/20/2022 13:47	17.46	6/20/2022 12:56	6.00	6/20/2022 17:52	78.35
6/21/2022 16:43	50.37	6/21/2022 15:25	81.23	6/20/2022 13:48	17.50	6/20/2022 12:57	5.96	6/20/2022 17:53	78.27
6/21/2022 16:44	50.35	6/21/2022 15:26	81.18	6/20/2022 13:49	17.43	6/20/2022 12:58	5.93	6/20/2022 17:54	78.20
6/21/2022 16:45	50.34	6/21/2022 15:27	81.20	6/20/2022 13:50	17.47	6/20/2022 12:59	5.87	6/20/2022 17:55	78.12
6/21/2022 16:46	50.36	6/21/2022 15:28	81.22	6/20/2022 13:51	17.46	6/20/2022 13:00	5.87	6/20/2022 17:56	78.07
6/21/2022 16:47	50.33	6/21/2022 15:29	81.21	6/20/2022 13:52	17.47	6/20/2022 13:01	5.86	6/20/2022 17:57	77.95
6/21/2022 16:48	50.29	6/21/2022 15:30	81.24	6/20/2022 13:53	17.42	6/20/2022 13:02	5.87	6/20/2022 17:58	77.90
6/21/2022 16:49	50.31	6/21/2022 15:31	81.20	6/20/2022 13:54	17.46	6/20/2022 13:03	5.88	6/20/2022 17:59	77.85
6/21/2022 16:50	50.32	6/21/2022 15:32	81.27	6/20/2022 13:55	17.46	6/20/2022 13:04	5.92	6/20/2022 18:00	77.75
6/21/2022 16:51	50.31	6/21/2022 15:33	81.25	6/20/2022 13:56	17.45	6/20/2022 13:05	5.88	6/20/2022 18:01	77.67
6/21/2022 16:52	50.25	6/21/2022 15:34	81.20	6/20/2022 13:57	17.42	6/20/2022 13:06	5.86	6/20/2022 18:02	77.64
6/21/2022 16:53	50.28	6/21/2022 15:35	81.20	6/20/2022 13:58	17.40	6/20/2022 13:07	5.81	6/20/2022 18:03	77.50
6/21/2022 16:54	50.26	6/21/2022 15:36	81.23	6/20/2022 13:59	17.42	6/20/2022 13:08	5.84	6/20/2022 18:04	77.46
6/21/2022 16:55	50.25	6/21/2022 15:37	81.21	6/20/2022 14:00	17.40	6/20/2022 13:09	5.84	6/20/2022 18:05	77.36
6/21/2022 16:56	50.27	6/21/2022 15:38	81.17	6/20/2022 14:01	17.41	6/20/2022 13:10	5.90	6/20/2022 18:06	77.28
6/21/2022 16:57	50.22	6/21/2022 15:39	81.25	6/20/2022 14:02	17.42	6/20/2022 13:11	5.78	6/20/2022 18:07	77.27
6/21/2022 16:58	50.24	6/21/2022 15:40	81.22	6/20/2022 14:03	17.41	6/20/2022 13:12	5.79	6/20/2022 18:08	77.19
6/21/2022 16:59	50.22	6/21/2022 15:41	81.23	6/20/2022 14:04	17.35	6/20/2022 13:13	5.80	6/20/2022 18:09	77.12
6/21/2022 17:00	50.20	6/21/2022 15:42	81.27	6/20/2022 14:05	17.38	6/20/2022 13:14	5.93	6/20/2022 18:10	77.04
6/21/2022 17:01	50.23	6/21/2022 15:43	81.21	6/20/2022 14:06	17.39	6/20/2022 13:15	5.78	6/20/2022 18:11	76.99
6/21/2022 17:02	50.23	6/21/2022 15:44	81.24	6/20/2022 14:07	17.36	6/20/2022 13:16	5.78	6/20/2022 18:12	76.92
6/21/2022 17:03	50.21	6/21/2022 15:45	81.24	6/20/2022 14:08	17.39	6/20/2022 13:17	5.86	6/20/2022 18:13	76.87
6/21/2022 17:04	50.22	6/21/2022 15:46	81.21	6/20/2022 14:09	17.33	6/20/2022 13:18	5.87	6/20/2022 18:14	76.84
6/21/2022 17:05	50.18	6/21/2022 15:47	81.26	6/20/2022 14:10	17.42	6/20/2022 13:19	5.98	6/20/2022 18:15	76.76
6/21/2022 17:06	50.22	6/21/2022 15:48	81.22	6/20/2022 14:11	17.36	6/20/2022 13:20	5.94	6/20/2022 18:16	76.71
6/21/2022 17:07	50.21	6/21/2022 15:49	81.20	6/20/2022 14:12	17.32	6/20/2022 13:21	5.87	6/20/2022 18:17	76.62
6/21/2022 17:08	50.17	6/21/2022 15:50	81.22	6/20/2022 14:13	17.37	6/20/2022 13:22	5.83	6/20/2022 18:18	76.60
6/21/2022 17:09	50.18	6/21/2022 15:51	83.19	6/20/2022 14:14	17.34	6/20/2022 13:23	5.81	6/20/2022 18:19	76.51
6/21/2022 17:10	50.20	6/21/2022 15:52	82.79	6/20/2022 14:15	17.34	6/20/2022 13:24	5.87	6/20/2022 18:20	76.46
6/21/2022 17:11	50.18	6/21/2022 15:53	82.49	6/20/2022 14:16	17.32	6/20/2022 13:25	5.81	6/20/2022 18:21	76.36
6/21/2022 17:12	50.17	6/21/2022 15:54	82.32	6/20/2022 14:17	17.34	6/20/2022 13:26	5.80	6/20/2022 18:22	76.32
6/21/2022 17:13	50.14	6/21/2022 15:55	82.15	6/20/2022 14:18	17.38	6/20/2022 13:27	5.80	6/20/2022 18:23	76.26
6/21/2022 17:14	50.17	6/21/2022 15:56	81.98	6/20/2022 14:19	17.38	6/20/2022 13:28	5.74	6/20/2022 18:24	76.19
6/21/2022 17:15	50.16	6/21/2022 15:57	81.92	6/20/2022 14:20	17.38	6/20/2022 13:29	5.72	6/20/2022 18:25	76.11
6/21/2022 17:16	50.17	6/21/2022 15:58	81.81	6/20/2022 14:21	17.33	6/20/2022 13:30	5.77	6/20/2022 18:26	76.06
6/21/2022 17:17	50.15	6/21/2022 15:59	81.77	6/20/2022 14:22	17.35	6/20/2022 13:31	5.75	6/20/2022 18:27	75.99
6/21/2022 17:18	50.14	6/21/2022 16:00	81.67	6/20/2022 14:23	17.32	6/20/2022 13:32	5.72	6/20/2022 18:28	75.92
6/21/2022 17:19	50.15	6/21/2022 16:01	81.66	6/20/2022 14:24	17.36	6/20/2022 13:33	5.75	6/20/2022 18:29	75.88
6/21/2022 17:20	50.13	6/21/2022 16:02	81.60	6/20/2022 14:25	17.32	6/20/2022 13:34	5.74	6/20/2022 18:30	75.83
6/21/2022 17:21	50.15	6/21/2022 16:03	81.58	6/20/2022 14:26	17.32	6/20/2022 13:35	5.67	6/20/2022 18:31	75.74
6/21/2022 17:22	50.16	6/21/2022 16:04	81.56	6/20/2022 14:27	17.32	6/20/2022 13:36	5.70	6/20/2022 18:32	75.66
6/21/2022 17:23	50.12	6/21/2022 16:05	81.49	6/20/2022 14:28	17.35	6/20/2022 13:37	5.70	6/20/2022 18:33	75.61
6/21/2022 17:24	50.17	6/21/2022 16:06	81.48	6/20/2022 14:29	17.33	6/20/2022 13:38	5.73	6/20/2022 18:34	75.56
6/21/2022 17:25	50.14	6/21/2022 16:07	81.44	6/20/2022 14:30	17.32	6/20/2022 13:39	5.71	6/20/2022 18:35	75.49
6/21/2022 17:26	50.13	6/21/2022 16:08	81.42	6/20/2022 14:31	17.30	6/20/2022 13:40	5.69	6/20/2022 18:36	75.41
6/21/2022 17:27	50.09	6/21/2022 16:09	81.41	6/20/2022 14:32	17.26	6/20/2022 13:41	5.71	6/20/2022 18:37	75.41
6/21/2022 17:28	50.11	6/21/2022 16:10	81.39	6/20/2022 14:33	17.30	6/20/2022 13:42	5.64	6/20/2022 18:38	75.34
6/21/2022 17:29	50.12	6/21/2022 16:11	81.38	6/20/2022 14:34	17.30	6/20/2022 13:43	5.67	6/20/2022 18:39	75.26
6/21/2022 17:30	50.08	6/21/2022 16:12	81.37	6/20/2022 14:35	17.28	6/20/2022 13:44	5.67	6/20/2022 18:40	75.23
6/21/2022 17:31	50.12	6/21/2022 16:13	81.33	6/20/2022 14:36	17.31	6/20/2022 13:45	5.64	6/20/2022 18:41	75.16
6/21/2022 17:32	50.14	6/21/2022 16:14	81.35	6/20/2022 14:37	17.27	6/20/2022 13:46	5.66	6/20/2022 18:42	75.12
6/21/2022 17:33	50.10	6/21/2022 16:15	81.35	6/20/2022 14:38	17.30	6/20/2022 13:47	5.64	6/20/2022 18:43	75.04
6/21/2022 17:34	50.11	6/21/2022 16:16	81.34	6/20/2022 14:39	17.28	6/20/2022 13:48	5.66	6/20/2022 18:44	80.03
6/21/2022 17:35	50.06	6/21/2022 16:17	81.33	6/20/2022 14:40	17.22	6/20/2022 13:49	5.65	6/20/2022 18:45	81.37
6/21/2022 17:36	50.11	6/21/2022 16:18	81.31	6/20/2022 14:41	17.28	6/20/2022 13:50	5.64	6/20/2022 18:46	81.18
6/21/2022 17:37	50.12	6/21/2022 16:19	81.28	6/20/2022 14:42	17.26	6/20/2022 13:51	5.66	6/20/2022 18:47	81.03
6/21/2022 17:38	50.10	6/21/2022 16:20	81.28	6/20/2022 14:43	17.26	6/20/2022 13:52	5.57	6/20/2022 18:48	80.88
6/21/2022 17:39	50.12	6/21/2022 16:21	81.32	6/20/2022 14:44	17.23	6/20/2022 13:53	5.61	6/20/2022 18:49	80.74
6/21/2022 17:40	50.09	6/21/2022 16:22	81.29	6/20/2022 14:45	17.25	6/20/2022 13:54	5.64	6/20/2022 18:50	80.66
6/21/2022 17:41	50.09	6/21/2022 16:23	81.25	6/20/2022 14:46	17.21	6/20/2022 13:55	5.70	6/20/2022 18:51	80.56
6/21/2022 17:42	50.08	6/21/2022 16:24	81.28	6/20/2022 14:47	17.26	6/20/2022 13:56	5.63	6/20/2022 18:52	80.43
6/21/2022 17:43	50.12	6/21/2022 16:25	81.30	6/20/2022 14:48	17.19	6/20/2022 13:57	5.63	6/20/2022 18:53	80.32
6/21/2022 17:44	52.54	6/21/2022 16:26	81.27	6/20/2022 14:49	17.26	6/20/2022 13:58	5.63	6/20/2022 18:54	80.16
6/21/2022 17:45	54.06	6/21/2022 16:27	81.26	6/20/2022 14:50	17.21	6/20/2022 13:59	5.57	6/20/2022 18:55	80.08
6/21/2022 17:46	54.83	6/21/2022 16:28	81.27	6/20/2022 14:51	17.25	6/20/2022 14:00	5.59	6/20/2022 18:56	79.98
6/21/2022 17:47	54.96	6/21/2022 16:29	81.24	6/20/2022 14:52	17.25	6/20/2022 14:01	5.59	6/20/2022 18:57	79.84
6/21/2022 17:48	52.72	6/21/2022 16:30	81.26	6/20/2022 14:53	17.20	6/20/2022 14:02	5.58	6/20/2022 18:58	79.72
6/21/2022 17:49	51.93	6/21/2022 16:31	81.25	6/20/2022 14:54	17.22	6/20/2022 14:03	5.55	6/20/2022 18:59	79.62
6/21/2022 17:50	51.57	6/21/2022 16:32	81.26	6/20/2022 14:55	17.21	6/20/2022 14:04	5.59	6/20/2022 19:00	79.49
6/21/2022 17:51	51.31	6/21/2022 16:33	81.26	6/20/2022 14:56	17.18	6/20/2022 14:05	5.63	6/20/2022 19:01	79.40
6/21/2022 17:52	51.19	6/21/2022 16:34	81.28	6/20/2022 14:57	17.17	6/20/2022 14:06	5.90	6/20/2022 19:02	79.28
6/21/2022 17:53	51.05	6/21/2022 16:35	81.28	6/20/2022 14:58	17.19	6/20/2022 14:07	5.67	6/20/2022 19:03	79.19
6/21/2022 17:54	51.01	6/21/2022 16:36	81.24	6/20/2022 14:59	17.22	6/20/2022 14:08	5.67	6/20/2022 19:04	79.08
6/21/2022 17:55	50.99	6/21/2022 16:37	81.22	6/20/2022 15:00	17.15	6/20/2022 14:09	5.68	6/20/2022 19:05	79.03
6/21/2022 17:56	50.92	6/21/2022 16:38	81.24	6/20/2022 15:01	17.22	6/20/2022 14:10	5.58	6/20/2022 19:06	78.96

6/21/2022 17:57	50.83	6/21/2022 16:39	81.25	6/20/2022 15:02	17.19	6/20/2022 14:11	5.62	6/20/2022 19:07	78.84
6/21/2022 17:58	50.80	6/21/2022 16:40	81.25	6/20/2022 15:03	17.18	6/20/2022 14:12	5.61	6/20/2022 19:08	78.72
6/21/2022 17:59	50.78	6/21/2022 16:41	81.22	6/20/2022 15:04	17.20	6/20/2022 14:13	5.58	6/20/2022 19:09	78.66
6/21/2022 18:00	50.74	6/21/2022 16:42	81.25	6/20/2022 15:05	17.18	6/20/2022 14:14	5.49	6/20/2022 19:10	78.61
6/21/2022 18:01	50.72	6/21/2022 16:43	81.22	6/20/2022 15:06	17.21	6/20/2022 14:15	5.95	6/20/2022 19:11	78.51
6/21/2022 18:02	50.72	6/21/2022 16:44	81.27	6/20/2022 15:07	17.16	6/20/2022 14:16	5.76	6/20/2022 19:12	78.44
6/21/2022 18:03	50.71	6/21/2022 16:45	81.24	6/20/2022 15:08	17.16	6/20/2022 14:17	5.72	6/20/2022 19:13	78.35
6/21/2022 18:04	50.63	6/21/2022 16:46	81.27	6/20/2022 15:09	17.15	6/20/2022 14:18	5.69	6/20/2022 19:14	78.29
6/21/2022 18:05	50.66	6/21/2022 16:47	81.24	6/20/2022 15:10	17.16	6/20/2022 14:19	5.72	6/20/2022 19:15	78.22
6/21/2022 18:06	50.62	6/21/2022 16:48	81.23	6/20/2022 15:11	17.17	6/20/2022 14:20	5.62	6/20/2022 19:16	78.13
6/21/2022 18:07	50.64	6/21/2022 16:49	81.24	6/20/2022 15:12	17.14	6/20/2022 14:21	5.62	6/20/2022 19:17	78.01
6/21/2022 18:08	50.59	6/21/2022 16:50	81.26	6/20/2022 15:13	17.14	6/20/2022 14:22	5.61	6/20/2022 19:18	77.94
6/21/2022 18:09	50.55	6/21/2022 16:51	81.24	6/20/2022 15:14	17.15	6/20/2022 14:23	5.59	6/20/2022 19:19	77.85
6/21/2022 18:10	50.59	6/21/2022 16:52	81.23	6/20/2022 15:15	17.17	6/20/2022 14:24	5.58	6/20/2022 19:20	77.77
6/21/2022 18:11	50.54	6/21/2022 16:53	81.23	6/20/2022 15:16	17.11	6/20/2022 14:25	5.58	6/20/2022 19:21	77.70
6/21/2022 18:12	50.50	6/21/2022 16:54	81.25	6/20/2022 15:17	17.18	6/20/2022 14:26	5.47	6/20/2022 19:22	77.62
6/21/2022 18:13	50.54	6/21/2022 16:55	81.23	6/20/2022 15:18	17.12	6/20/2022 14:27	5.55	6/20/2022 19:23	77.53
6/21/2022 18:14	50.52	6/21/2022 16:56	81.23	6/20/2022 15:19	17.11	6/20/2022 14:28	5.57	6/20/2022 19:24	77.42
6/21/2022 18:15	50.53	6/21/2022 16:57	81.28	6/20/2022 15:20	17.17	6/20/2022 14:29	5.54	6/20/2022 19:25	77.34
6/21/2022 18:16	50.49	6/21/2022 16:58	81.25	6/20/2022 15:21	17.12	6/20/2022 14:30	5.56	6/20/2022 19:26	77.27
6/21/2022 18:17	50.51	6/21/2022 16:59	81.23	6/20/2022 15:22	17.10	6/20/2022 14:31	5.53	6/20/2022 19:27	77.19
6/21/2022 18:18	50.50	6/21/2022 17:00	81.22	6/20/2022 15:23	17.17	6/20/2022 14:32	5.59	6/20/2022 19:28	77.11
6/21/2022 18:19	50.46	6/21/2022 17:01	81.25	6/20/2022 15:24	17.14	6/20/2022 14:33	5.47	6/20/2022 19:29	77.05
6/21/2022 18:20	50.48	6/21/2022 17:02	81.25	6/20/2022 15:25	17.13	6/20/2022 14:34	5.49	6/20/2022 19:30	76.96
6/21/2022 18:21	50.48	6/21/2022 17:03	81.21	6/20/2022 15:26	17.10	6/20/2022 14:35	5.48	6/20/2022 19:31	76.90
6/21/2022 18:22	50.48	6/21/2022 17:04	81.25	6/20/2022 15:27	17.14	6/20/2022 14:36	5.56	6/20/2022 19:32	76.81
6/21/2022 18:23	50.44	6/21/2022 17:05	81.26	6/20/2022 15:28	17.14	6/20/2022 14:37	5.51	6/20/2022 19:33	76.79
6/21/2022 18:24	50.42	6/21/2022 17:06	81.26	6/20/2022 15:29	17.14	6/20/2022 14:38	5.48	6/20/2022 19:34	76.69
6/21/2022 18:25	50.44	6/21/2022 17:07	81.19	6/20/2022 15:30	17.12	6/20/2022 14:39	5.49	6/20/2022 19:35	76.64
6/21/2022 18:26	50.40	6/21/2022 17:08	81.21	6/20/2022 15:31	17.09	6/20/2022 14:40	5.46	6/20/2022 19:36	76.56
6/21/2022 18:27	50.42	6/21/2022 17:09	81.26	6/20/2022 15:32	17.08	6/20/2022 14:41	5.47	6/20/2022 19:37	76.49
6/21/2022 18:28	50.43	6/21/2022 17:10	81.19	6/20/2022 15:33	17.03	6/20/2022 14:42	5.48	6/20/2022 19:38	76.40
6/21/2022 18:29	50.40	6/21/2022 17:11	81.26	6/20/2022 15:34	17.03	6/20/2022 14:43	5.46	6/20/2022 19:39	76.34
6/21/2022 18:30	50.39	6/21/2022 17:12	81.22	6/20/2022 15:35	17.14	6/20/2022 14:44	5.39	6/20/2022 19:40	76.27
6/21/2022 18:31	50.41	6/21/2022 17:13	81.24	6/20/2022 15:36	17.08	6/20/2022 14:45	5.45	6/20/2022 19:41	76.20
6/21/2022 18:32	50.39	6/21/2022 17:14	81.19	6/20/2022 15:37	17.07	6/20/2022 14:46	5.40	6/20/2022 19:42	76.11
6/21/2022 18:33	50.39	6/21/2022 17:15	81.24	6/20/2022 15:38	17.09	6/20/2022 14:47	5.46	6/20/2022 19:43	76.07
6/21/2022 18:34	50.38	6/21/2022 17:16	81.23	6/20/2022 15:39	17.07	6/20/2022 14:48	5.46	6/20/2022 19:44	75.98
6/21/2022 18:35	50.38	6/21/2022 17:17	81.24	6/20/2022 15:40	17.08	6/20/2022 14:49	5.45	6/20/2022 19:45	75.89
6/21/2022 18:36	50.38	6/21/2022 17:18	81.22	6/20/2022 15:41	17.06	6/20/2022 14:50	5.41	6/20/2022 19:46	75.87
6/21/2022 18:37	50.37	6/21/2022 17:19	81.21	6/20/2022 15:42	17.04	6/20/2022 14:51	5.73	6/20/2022 19:47	75.77
6/21/2022 18:38	50.35	6/21/2022 17:20	81.21	6/20/2022 15:43	17.05	6/20/2022 14:52	5.49	6/20/2022 19:48	80.73
6/21/2022 18:39	50.35	6/21/2022 17:21	81.24	6/20/2022 15:44	17.01	6/20/2022 14:53	5.48	6/20/2022 19:49	83.86
6/21/2022 18:40	50.34	6/21/2022 17:22	81.23	6/20/2022 15:45	17.03	6/20/2022 14:54	5.51	6/20/2022 19:50	83.62
6/21/2022 18:41	50.33	6/21/2022 17:23	81.23	6/20/2022 15:46	17.08	6/20/2022 14:55	5.65	6/20/2022 19:51	88.92
6/21/2022 18:42	50.32	6/21/2022 17:24	81.22	6/20/2022 15:47	17.02	6/20/2022 14:56	5.74	6/20/2022 19:52	91.50
6/21/2022 18:43	50.34	6/21/2022 17:25	81.26	6/20/2022 15:48	17.07	6/20/2022 14:57	5.79	6/20/2022 19:53	91.15
6/21/2022 18:44	50.36	6/21/2022 17:26	81.24	6/20/2022 15:49	17.06	6/20/2022 14:58	5.73	6/20/2022 19:54	96.26
6/21/2022 18:45	50.35	6/21/2022 17:27	81.24	6/20/2022 15:50	17.04	6/20/2022 14:59	5.66	6/20/2022 19:55	98.70
6/21/2022 18:46	50.35	6/21/2022 17:28	81.25	6/20/2022 15:51	17.04	6/20/2022 15:00	5.72	6/20/2022 19:56	98.22
6/21/2022 18:47	50.36	6/21/2022 17:29	81.22	6/20/2022 15:52	17.02	6/20/2022 15:01	5.79	6/20/2022 19:57	103.41
6/21/2022 18:48	50.35	6/21/2022 17:30	81.24	6/20/2022 15:53	17.00	6/20/2022 15:02	5.73	6/20/2022 19:58	105.85
6/21/2022 18:49	50.33	6/21/2022 17:31	81.23	6/20/2022 15:54	17.02	6/20/2022 15:03	5.64	6/20/2022 19:59	105.26
6/21/2022 18:50	50.35	6/21/2022 17:32	81.23	6/20/2022 15:55	16.99	6/20/2022 15:04	5.55	6/20/2022 20:00	110.13
6/21/2022 18:51	50.33	6/21/2022 17:33	81.22	6/20/2022 15:56	17.05	6/20/2022 15:05	5.58	6/20/2022 20:01	111.01
6/21/2022 18:52	50.33	6/21/2022 17:34	81.21	6/20/2022 15:57	17.06	6/20/2022 15:06	5.50	6/20/2022 20:02	110.40
6/21/2022 18:53	50.26	6/21/2022 17:35	81.25	6/20/2022 15:58	17.01	6/20/2022 15:07	5.61	6/20/2022 20:03	109.80
6/21/2022 18:54	50.31	6/21/2022 17:36	81.21	6/20/2022 15:59	17.00	6/20/2022 15:08	5.51	6/20/2022 20:04	109.31
6/21/2022 18:55	50.30	6/21/2022 17:37	81.26	6/20/2022 16:00	17.01	6/20/2022 15:09	5.51	6/20/2022 20:05	108.81
6/21/2022 18:56	50.29	6/21/2022 17:38	81.25	6/20/2022 16:01	17.06	6/20/2022 15:10	5.55	6/20/2022 20:06	108.27
6/21/2022 18:57	50.31	6/21/2022 17:39	81.22	6/20/2022 16:02	16.99	6/20/2022 15:11	5.53	6/20/2022 20:07	107.78
6/21/2022 18:58	50.30	6/21/2022 17:40	81.28	6/20/2022 16:03	17.03	6/20/2022 15:12	5.55	6/20/2022 20:08	107.33
6/21/2022 18:59	50.29	6/21/2022 17:41	81.22	6/20/2022 16:04	17.01	6/20/2022 15:13	5.51	6/20/2022 20:09	106.91
6/21/2022 19:00	50.31	6/21/2022 17:42	81.21	6/20/2022 16:05	17.00	6/20/2022 15:14	5.49	6/20/2022 20:10	106.43
6/21/2022 19:01	50.29	6/21/2022 17:43	81.25	6/20/2022 16:06	17.02	6/20/2022 15:15	5.57	6/20/2022 20:11	106.03
6/21/2022 19:02	50.35	6/21/2022 17:44	81.21	6/20/2022 16:07	16.97	6/20/2022 15:16	5.52	6/20/2022 20:12	105.58
6/21/2022 19:03	50.29	6/21/2022 17:45	81.19	6/20/2022 16:08	17.01	6/20/2022 15:17	5.47	6/20/2022 20:13	105.15
6/21/2022 19:04	50.28	6/21/2022 17:46	81.24	6/20/2022 16:09	16.99	6/20/2022 15:18	5.55	6/20/2022 20:14	104.79
6/21/2022 19:05	50.32	6/21/2022 17:47	81.26	6/20/2022 16:10	16.99	6/20/2022 15:19	5.53	6/20/2022 20:15	104.39
6/21/2022 19:06	50.28	6/21/2022 17:48	81.21	6/20/2022 16:11	16.97	6/20/2022 15:20	5.44	6/20/2022 20:16	104.06
6/21/2022 19:07	50.28	6/21/2022 17:49	81.25	6/20/2022 16:12	16.96	6/20/2022 15:21	5.51	6/20/2022 20:17	103.63
6/21/2022 19:08	50.26	6/21/2022 17:50	81.25	6/20/2022 16:13	17.01	6/20/2022 15:22	5.48	6/20/2022 20:18	103.29
6/21/2022 19:09	50.27	6/21/2022 17:51	81.23	6/20/2022 16:14	17.00	6/20/2022 15:23	5.49	6/20/2022 20:19	102.90
6/21/2022 19:10	50.26	6/21/2022 17:52	81.23	6/20/2022 16:15	16.97	6/20/2022 15:24	5.50	6/20/2022 20:20	102.54
6/21/2022 19:11	50.28	6/21/2022 17:53	81.21	6/20/2022 16:16	17.00	6/20/2022 15:25	5.48	6/20/2022 20:21	102.18
6/21/2022 19:12	50.26	6/21/2022 17:54	81.22	6/20/2022 16:17	16.94	6/20/2022 15:26	5.39	6/20/2022 20:22	101.82
6/21/2022 19:13	50.25	6/21/2022 17:55	81.20	6/20/2022 16:18	17.00	6/20/2022 15:27	5.52	6/20/2022 20:23	101.45
6/21/2022 19:14	50.26	6/21/2022 17:56	81.23	6/20/2022 16:19	16.96	6/20/2022 15:28	5.45	6/20/2022 20:24	101.10
6/21/2022 19:15	50.26	6/21/2022 17:57	81.19	6/20/2022 16:20	16.98	6/20/2022 15:29	5.45	6/20/2022 20:25	100.73
6/21/2022 19:16	50.24	6/21/2022 17:58	81.24	6/20/2022 16:21	16.95	6/20/2022 15:30	5.47	6/20/2022 20:26	100.42
6/21/2022 19:17	50.27	6/21/2022 17:59	81.24	6/20/2022 16:22	17.01	6/20/2022 15:31	5.45	6/20/2022 20:27	100.09
6/21/2022 19:18	50.25	6/21/2022 18:00	81.23	6/20/2022 16:23	16.97	6/20/2022 15:32	5.39	6/20/2022 20:28	99.79
6/21/2022 19:19	50.26	6/21/2022 18:01	81.22	6/20/2022 16:24	16.97	6/20/2022 15:33	5.44	6/20/2022 20:29	99.42
6/21/2022 19:20	50.25	6/21/2022 18:02	81.24	6/20/2022 16:25	16.99	6/20/2022 15:34	5.44	6/20/2022 20:30	99.13
6/21/2022 19:21	50.28	6/21/2022 18:03	81.24	6/20/2022 16:26	16.98	6/20/2022 15:35	5.42	6/20/2022 20:31	98.84
6/21/2022 19:22	50.25	6/21/2022 18:04	81.24	6/20/2022 16:27	16.98	6/20/2022 15:36	5.48	6/20/2022 20:32	98.51
6/21/2022 19:23	50.26	6/21/2022 18:05	81.24	6/20/2022 16:28	16.91	6/20/2022 15:37	5.47	6/20/2022 20:33	98.21
6/21/2022 19:24	50.26	6/21/2022 18:06	81.26	6/20/2022 16:29	16.96	6/20/2022 15:38	5.40	6/20/2022 20:34	97.88

6/21/2022 19:25	50.22	6/21/2022 18:07	81.23	6/20/2022 16:30	16.99	6/20/2022 15:39	5.50	6/20/2022 20:35	97.59
6/21/2022 19:26	50.24	6/21/2022 18:08	81.20	6/20/2022 16:31	16.95	6/20/2022 15:40	5.39	6/20/2022 20:36	97.29
6/21/2022 19:27	50.25	6/21/2022 18:09	81.24	6/20/2022 16:32	16.95	6/20/2022 15:41	5.41	6/20/2022 20:37	97.01
6/21/2022 19:28	50.23	6/21/2022 18:10	81.24	6/20/2022 16:33	17.00	6/20/2022 15:42	5.42	6/20/2022 20:38	96.71
6/21/2022 19:29	50.21	6/21/2022 18:11	81.21	6/20/2022 16:34	16.96	6/20/2022 15:43	5.35	6/20/2022 20:39	96.40
6/21/2022 19:30	50.26	6/21/2022 18:12	81.24	6/20/2022 16:35	16.97	6/20/2022 15:44	5.37	6/20/2022 20:40	96.10
6/21/2022 19:31	50.26	6/21/2022 18:13	81.20	6/20/2022 16:36	16.89	6/20/2022 15:45	5.35	6/20/2022 20:41	95.85
6/21/2022 19:32	50.25	6/21/2022 18:14	81.23	6/20/2022 16:37	16.93	6/20/2022 15:46	5.31	6/20/2022 20:42	95.59
6/21/2022 19:33	50.24	6/21/2022 18:15	81.25	6/20/2022 16:38	16.92	6/20/2022 15:47	5.32	6/20/2022 20:43	95.32
6/21/2022 19:34	50.22	6/21/2022 18:16	81.21	6/20/2022 16:39	16.92	6/20/2022 15:48	5.33	6/20/2022 20:44	95.09
6/21/2022 19:35	50.20	6/21/2022 18:17	81.22	6/20/2022 16:40	16.99	6/20/2022 15:49	5.29	6/20/2022 20:45	94.80
6/21/2022 19:36	50.20	6/21/2022 18:18	81.21	6/20/2022 16:41	16.95	6/20/2022 15:50	5.28	6/20/2022 20:46	94.59
6/21/2022 19:37	50.25	6/21/2022 18:19	81.21	6/20/2022 16:42	16.93	6/20/2022 15:51	5.27	6/20/2022 20:47	94.30
6/21/2022 19:38	50.24	6/21/2022 18:20	81.21	6/20/2022 16:43	16.92	6/20/2022 15:52	5.31	6/20/2022 20:48	94.10
6/21/2022 19:39	50.23	6/21/2022 18:21	81.22	6/20/2022 16:44	16.90	6/20/2022 15:53	5.29	6/20/2022 20:49	93.84
6/21/2022 19:40	50.23	6/21/2022 18:22	81.21	6/20/2022 16:45	16.98	6/20/2022 15:54	5.29	6/20/2022 20:50	93.65
6/21/2022 19:41	50.22	6/21/2022 18:23	81.22	6/20/2022 16:46	16.92	6/20/2022 15:55	5.61	6/20/2022 20:51	93.41
6/21/2022 19:42	50.21	6/21/2022 18:24	81.21	6/20/2022 16:47	16.90	6/20/2022 15:56	5.45	6/20/2022 20:52	93.20
6/21/2022 19:43	50.24	6/21/2022 18:25	81.21	6/20/2022 16:48	16.90	6/20/2022 15:57	5.37	6/20/2022 20:53	92.95
6/21/2022 19:44	50.24	6/21/2022 18:26	81.19	6/20/2022 16:49	16.93	6/20/2022 15:58	6.03	6/20/2022 20:54	92.69
6/21/2022 19:45	50.23	6/21/2022 18:27	81.18	6/20/2022 16:50	16.92	6/20/2022 15:59	5.68	6/20/2022 20:55	92.45
6/21/2022 19:46	50.20	6/21/2022 18:28	81.18	6/20/2022 16:51	16.94	6/20/2022 16:00	5.51	6/20/2022 20:56	92.24
6/21/2022 19:47	50.21	6/21/2022 18:29	81.24	6/20/2022 16:52	16.90	6/20/2022 16:01	5.44	6/20/2022 20:57	92.02
6/21/2022 19:48	50.23	6/21/2022 18:30	81.24	6/20/2022 16:53	16.93	6/20/2022 16:02	5.40	6/20/2022 20:58	91.77
6/21/2022 19:49	50.24	6/21/2022 18:31	81.23	6/20/2022 16:54	16.93	6/20/2022 16:03	5.41	6/20/2022 20:59	91.59
6/21/2022 19:50	50.24	6/21/2022 18:32	81.22	6/20/2022 16:55	16.95	6/20/2022 16:04	5.35	6/20/2022 21:00	91.38
6/21/2022 19:51	50.22	6/21/2022 18:33	81.21	6/20/2022 16:56	16.92	6/20/2022 16:05	5.31	6/20/2022 21:01	91.24
6/21/2022 19:52	50.21	6/21/2022 18:34	81.25	6/20/2022 16:57	16.92	6/20/2022 16:06	5.31	6/20/2022 21:02	91.01
6/21/2022 19:53	50.23	6/21/2022 18:35	81.21	6/20/2022 16:58	16.94	6/20/2022 16:07	5.34	6/20/2022 21:03	90.82
6/21/2022 19:54	50.20	6/21/2022 18:36	81.25	6/20/2022 16:59	16.90	6/20/2022 16:08	5.30	6/20/2022 21:04	90.63
6/21/2022 19:55	50.21	6/21/2022 18:37	81.21	6/20/2022 17:00	16.98	6/20/2022 16:09	5.26	6/20/2022 21:05	90.43
6/21/2022 19:56	50.21	6/21/2022 18:38	81.19	6/20/2022 17:01	16.98	6/20/2022 16:10	5.31	6/20/2022 21:06	90.24
6/21/2022 19:57	50.23	6/21/2022 18:39	81.19	6/20/2022 17:02	17.00	6/20/2022 16:11	5.28	6/20/2022 21:07	90.00
6/21/2022 19:58	50.19	6/21/2022 18:40	81.22	6/20/2022 17:03	16.98	6/20/2022 16:12	5.25	6/20/2022 21:08	89.83
6/21/2022 19:59	50.20	6/21/2022 18:41	81.21	6/20/2022 17:04	16.99	6/20/2022 16:13	5.27	6/20/2022 21:09	89.67
6/21/2022 20:00	50.20	6/21/2022 18:42	81.23	6/20/2022 17:05	16.98	6/20/2022 16:14	5.23	6/20/2022 21:10	89.45
6/21/2022 20:01	50.22	6/21/2022 18:43	81.23	6/20/2022 17:06	17.00	6/20/2022 16:15	5.29	6/20/2022 21:11	89.23
6/21/2022 20:02	50.21	6/21/2022 18:44	81.22	6/20/2022 17:07	16.99	6/20/2022 16:16	5.20	6/20/2022 21:12	89.07
6/21/2022 20:03	50.21	6/21/2022 18:45	81.22	6/20/2022 17:08	17.05	6/20/2022 16:17	5.24	6/20/2022 21:13	88.90
6/21/2022 20:04	50.20	6/21/2022 18:46	81.22	6/20/2022 17:09	16.99	6/20/2022 16:18	5.27	6/20/2022 21:14	88.70
6/21/2022 20:05	50.19	6/21/2022 18:47	81.20	6/20/2022 17:10	17.03	6/20/2022 16:19	5.27	6/20/2022 21:15	88.54
6/21/2022 20:06	50.19	6/21/2022 18:48	81.19	6/20/2022 17:11	17.02	6/20/2022 16:20	5.22	6/20/2022 21:16	88.34
6/21/2022 20:07	50.21	6/21/2022 18:49	81.23	6/20/2022 17:12	17.03	6/20/2022 16:21	5.20	6/20/2022 21:17	88.15
6/21/2022 20:08	50.19	6/21/2022 18:50	81.20	6/20/2022 17:13	17.04	6/20/2022 16:22	5.40	6/20/2022 21:18	87.99
6/21/2022 20:09	50.18	6/21/2022 18:51	81.26	6/20/2022 17:14	19.46	6/20/2022 16:23	5.27	6/20/2022 21:19	87.79
6/21/2022 20:10	50.20	6/21/2022 18:52	81.25	6/20/2022 17:15	24.12	6/20/2022 16:24	5.27	6/20/2022 21:20	87.65
6/21/2022 20:11	50.22	6/21/2022 18:53	81.24	6/20/2022 17:16	26.82	6/20/2022 16:25	5.25	6/20/2022 21:21	87.46
6/21/2022 20:12	50.20	6/21/2022 18:54	81.23	6/20/2022 17:17	23.70	6/20/2022 16:26	5.30	6/20/2022 21:22	87.26
6/21/2022 20:13	50.20	6/21/2022 18:55	81.20	6/20/2022 17:18	22.07	6/20/2022 16:27	5.22	6/20/2022 21:23	87.08
6/21/2022 20:14	50.22	6/21/2022 18:56	81.24	6/20/2022 17:19	21.16	6/20/2022 16:28	5.21	6/20/2022 21:24	86.89
6/21/2022 20:15	50.15	6/21/2022 18:57	81.22	6/20/2022 17:20	20.50	6/20/2022 16:29	5.20	6/20/2022 21:25	86.75
6/21/2022 20:16	50.16	6/21/2022 18:58	81.22	6/20/2022 17:21	20.10	6/20/2022 16:30	5.18	6/20/2022 21:26	86.56
6/21/2022 20:17	50.16	6/21/2022 18:59	81.19	6/20/2022 17:22	19.83	6/20/2022 16:31	5.21	6/20/2022 21:27	86.37
6/21/2022 20:18	50.16	6/21/2022 19:00	81.19	6/20/2022 17:23	19.62	6/20/2022 16:32	5.18	6/20/2022 21:28	86.19
6/21/2022 20:19	50.18	6/21/2022 19:01	81.18	6/20/2022 17:24	19.43	6/20/2022 16:33	5.21	6/20/2022 21:29	86.02
6/21/2022 20:20	50.19	6/21/2022 19:02	81.22	6/20/2022 17:25	19.31	6/20/2022 16:34	5.15	6/20/2022 21:30	85.86
6/21/2022 20:21	50.15	6/21/2022 19:03	81.25	6/20/2022 17:26	19.15	6/20/2022 16:35	5.17	6/20/2022 21:31	85.69
6/21/2022 20:22	50.17	6/21/2022 19:04	81.21	6/20/2022 17:27	19.08	6/20/2022 16:36	5.16	6/20/2022 21:32	85.57
6/21/2022 20:23	50.20	6/21/2022 19:05	81.23	6/20/2022 17:28	18.94	6/20/2022 16:37	5.21	6/20/2022 21:33	85.43
6/21/2022 20:24	50.20	6/21/2022 19:06	81.22	6/20/2022 17:29	18.88	6/20/2022 16:38	5.13	6/20/2022 21:34	85.24
6/21/2022 20:25	50.20	6/21/2022 19:07	81.23	6/20/2022 17:30	18.78	6/20/2022 16:39	5.11	6/20/2022 21:35	85.07
6/21/2022 20:26	50.19	6/21/2022 19:08	81.22	6/20/2022 17:31	18.79	6/20/2022 16:40	5.15	6/20/2022 21:36	84.90
6/21/2022 20:27	50.19	6/21/2022 19:09	81.26	6/20/2022 17:32	18.70	6/20/2022 16:41	5.16	6/20/2022 21:37	84.76
6/21/2022 20:28	50.17	6/21/2022 19:10	81.19	6/20/2022 17:33	18.65	6/20/2022 16:42	5.08	6/20/2022 21:38	84.61
6/21/2022 20:29	50.17	6/21/2022 19:11	81.25	6/20/2022 17:34	18.58	6/20/2022 16:43	5.08	6/20/2022 21:39	84.48
6/21/2022 20:30	50.18	6/21/2022 19:12	81.20	6/20/2022 17:35	18.55	6/20/2022 16:44	5.07	6/20/2022 21:40	84.34
6/21/2022 20:31	50.20	6/21/2022 19:13	81.22	6/20/2022 17:36	18.51	6/20/2022 16:45	5.16	6/20/2022 21:41	84.18
6/21/2022 20:32	50.19	6/21/2022 19:14	81.21	6/20/2022 17:37	18.47	6/20/2022 16:46	5.03	6/20/2022 21:42	84.04
6/21/2022 20:33	50.19	6/21/2022 19:15	81.24	6/20/2022 17:38	18.40	6/20/2022 16:47	5.07	6/20/2022 21:43	83.87
6/21/2022 20:34	50.17	6/21/2022 19:16	81.18	6/20/2022 17:39	18.43	6/20/2022 16:48	5.08	6/20/2022 21:44	83.73
6/21/2022 20:35	50.15	6/21/2022 19:17	81.21	6/20/2022 17:40	18.38	6/20/2022 16:49	5.08	6/20/2022 21:45	83.58
6/21/2022 20:36	50.17	6/21/2022 19:18	81.24	6/20/2022 17:41	18.33	6/20/2022 16:50	5.07	6/20/2022 21:46	83.45
6/21/2022 20:37	50.16	6/21/2022 19:19	81.21	6/20/2022 17:42	18.31	6/20/2022 16:51	5.08	6/20/2022 21:47	83.31
6/21/2022 20:38	50.19	6/21/2022 19:20	81.23	6/20/2022 17:43	18.30	6/20/2022 16:52	5.14	6/20/2022 21:48	83.19
6/21/2022 20:39	50.20	6/21/2022 19:21	81.23	6/20/2022 17:44	18.21	6/20/2022 16:53	5.02	6/20/2022 21:49	83.04
6/21/2022 20:40	50.18	6/21/2022 19:22	81.22	6/20/2022 17:45	18.21	6/20/2022 16:54	5.06	6/20/2022 21:50	82.89
6/21/2022 20:41	50.18	6/21/2022 19:23	81.23	6/20/2022 17:46	18.22	6/20/2022 16:55	5.08	6/20/2022 21:51	82.76
6/21/2022 20:42	50.17	6/21/2022 19:24	81.25	6/20/2022 17:47	18.18	6/20/2022 16:56	5.01	6/20/2022 21:52	82.62
6/21/2022 20:43	50.17	6/21/2022 19:25	81.20	6/20/2022 17:48	18.20	6/20/2022 16:57	5.01	6/20/2022 21:53	82.50
6/21/2022 20:44	50.19	6/21/2022 19:26	81.17	6/20/2022 17:49	18.16	6/20/2022 16:58	5.04	6/20/2022 21:54	82.35
6/21/2022 20:45	50.19	6/21/2022 19:27	81.25	6/20/2022 17:50	18.13	6/20/2022 16:59	5.05	6/20/2022 21:55	82.25
6/21/2022 20:46	50.13	6/21/2022 19:28	81.20	6/20/2022 17:51	18.11	6/20/2022 17:00	5.04	6/20/2022 21:56	82.13
6/21/2022 20:47	50.17	6/21/2022 19:29	81.22	6/20/2022 17:52	18.08	6/20/2022 17:01	5.04	6/20/2022 21:57	81.94
6/21/2022 20:48	50.17	6/21/2022 19:30	81.22	6/20/2022 17:53	18.08	6/20/2022 17:02	5.06	6/20/2022 21:58	81.85
6/21/2022 20:49	50.15	6/21/2022 19:31	81.21	6/20/2022 17:54	18.07	6/20/2022 17:03	4.94	6/20/2022 21:59	81.74
6/21/2022 20:50	50.17	6/21/2022 19:32	81.17	6/20/2022 17:55	18.05	6/20/2022 17:04	4.99	6/20/2022 22:00	81.61
6/21/2022 20:51	50.18	6/21/2022 19:33	81.22	6/20/2022 17:56	17.99	6/20/2022 17:05	5.02	6/20/2022 22:01	81.49
6/21/2022 20:52	50.13	6/21/2022 19:34	81.22	6/20/2022 17:57	18.03	6/20/2022 17:06	5.00	6/20/2022 22:02	81.39

6/21/2022 20:53	50.17	6/21/2022 19:35	81.24	6/20/2022 17:58	18.01	6/20/2022 17:07	5.00	6/20/2022 22:03	81.27
6/21/2022 20:54	50.11	6/21/2022 19:36	81.23	6/20/2022 17:59	17.97	6/20/2022 17:08	4.96	6/20/2022 22:04	81.17
6/21/2022 20:55	50.16	6/21/2022 19:37	81.22	6/20/2022 18:00	17.99	6/20/2022 17:09	5.04	6/20/2022 22:05	81.06
6/21/2022 20:56	50.11	6/21/2022 19:38	81.25	6/20/2022 18:01	17.94	6/20/2022 17:10	5.20	6/20/2022 22:06	80.93
6/21/2022 20:57	50.18	6/21/2022 19:39	81.20	6/20/2022 18:02	17.94	6/20/2022 17:11	5.89	6/20/2022 22:07	80.86
6/21/2022 20:58	50.14	6/21/2022 19:40	81.23	6/20/2022 18:03	17.95	6/20/2022 17:12	6.23	6/20/2022 22:08	80.77
6/21/2022 20:59	50.18	6/21/2022 19:41	81.21	6/20/2022 18:04	17.93	6/20/2022 17:13	6.60	6/20/2022 22:09	80.69
6/21/2022 21:00	50.18	6/21/2022 19:42	81.23	6/20/2022 18:05	17.91	6/20/2022 17:14	6.83	6/20/2022 22:10	80.55
6/21/2022 21:01	50.15	6/21/2022 19:43	81.24	6/20/2022 18:06	17.92	6/20/2022 17:15	7.12	6/20/2022 22:11	80.47
6/21/2022 21:02	50.16	6/21/2022 19:44	81.22	6/20/2022 18:07	17.82	6/20/2022 17:16	7.38	6/20/2022 22:12	80.36
6/21/2022 21:03	50.14	6/21/2022 19:45	81.21	6/20/2022 18:08	17.85	6/20/2022 17:17	7.55	6/20/2022 22:13	80.26
6/21/2022 21:04	50.15	6/21/2022 19:46	81.25	6/20/2022 18:09	17.87	6/20/2022 17:18	7.79	6/20/2022 22:14	80.17
6/21/2022 21:05	50.16	6/21/2022 19:47	81.26	6/20/2022 18:10	17.84	6/20/2022 17:19	7.91	6/20/2022 22:15	80.07
6/21/2022 21:06	50.16	6/21/2022 19:48	81.24	6/20/2022 18:11	17.87	6/20/2022 17:20	8.01	6/20/2022 22:16	79.95
6/21/2022 21:07	50.16	6/21/2022 19:49	81.21	6/20/2022 18:12	17.83	6/20/2022 17:21	8.03	6/20/2022 22:17	79.85
6/21/2022 21:08	50.17	6/21/2022 19:50	81.23	6/20/2022 18:13	17.84	6/20/2022 17:22	7.44	6/20/2022 22:18	79.75
6/21/2022 21:09	50.12	6/21/2022 19:51	81.24	6/20/2022 18:14	17.81	6/20/2022 17:23	6.87	6/20/2022 22:19	79.61
6/21/2022 21:10	50.16	6/21/2022 19:52	81.25	6/20/2022 18:15	17.79	6/20/2022 17:24	6.55	6/20/2022 22:20	79.57
6/21/2022 21:11	50.13	6/21/2022 19:53	81.23	6/20/2022 18:16	17.80	6/20/2022 17:25	6.36	6/20/2022 22:21	79.46
6/21/2022 21:12	50.16	6/21/2022 19:54	81.24	6/20/2022 18:17	17.78	6/20/2022 17:26	6.31	6/20/2022 22:22	79.33
6/21/2022 21:13	50.15	6/21/2022 19:55	81.24	6/20/2022 18:18	17.81	6/20/2022 17:27	6.17	6/20/2022 22:23	79.21
6/21/2022 21:14	50.17	6/21/2022 19:56	81.19	6/20/2022 18:19	17.77	6/20/2022 17:28	6.14	6/20/2022 22:24	79.13
6/21/2022 21:15	50.14	6/21/2022 19:57	81.25	6/20/2022 18:20	17.73	6/20/2022 17:29	6.02	6/20/2022 22:25	79.07
6/21/2022 21:16	50.20	6/21/2022 19:58	81.20	6/20/2022 18:21	17.77	6/20/2022 17:30	6.06	6/20/2022 22:26	79.00
6/21/2022 21:17	50.14	6/21/2022 19:59	81.22	6/20/2022 18:22	17.70	6/20/2022 17:31	5.94	6/20/2022 22:27	78.94
6/21/2022 21:18	50.17	6/21/2022 20:00	81.26	6/20/2022 18:23	17.71	6/20/2022 17:32	5.92	6/20/2022 22:28	78.87
6/21/2022 21:19	50.15	6/21/2022 20:01	81.24	6/20/2022 18:24	17.79	6/20/2022 17:33	5.91	6/20/2022 22:29	78.73
6/21/2022 21:20	50.17	6/21/2022 20:02	81.24	6/20/2022 18:25	17.70	6/20/2022 17:34	5.88	6/20/2022 22:30	78.68
6/21/2022 21:21	50.15	6/21/2022 20:03	81.20	6/20/2022 18:26	17.72	6/20/2022 17:35	5.86	6/20/2022 22:31	78.59
6/21/2022 21:22	50.16	6/21/2022 20:04	81.22	6/20/2022 18:27	17.69	6/20/2022 17:36	5.81	6/20/2022 22:32	78.53
6/21/2022 21:23	50.16	6/21/2022 20:05	81.24	6/20/2022 18:28	17.67	6/20/2022 17:37	5.82	6/20/2022 22:33	78.43
6/21/2022 21:24	50.18	6/21/2022 20:06	81.21	6/20/2022 18:29	17.69	6/20/2022 17:38	5.82	6/20/2022 22:34	78.40
6/21/2022 21:25	50.13	6/21/2022 20:07	81.24	6/20/2022 18:30	17.70	6/20/2022 17:39	5.81	6/20/2022 22:35	78.32
6/21/2022 21:26	50.20	6/21/2022 20:08	81.21	6/20/2022 18:31	17.68	6/20/2022 17:40	5.75	6/20/2022 22:36	78.27
6/21/2022 21:27	50.15	6/21/2022 20:09	81.21	6/20/2022 18:32	17.67	6/20/2022 17:41	6.40	6/20/2022 22:37	78.20
6/21/2022 21:28	50.14	6/21/2022 20:10	81.23	6/20/2022 18:33	17.66	6/20/2022 17:42	6.47	6/20/2022 22:38	78.11
6/21/2022 21:29	50.14	6/21/2022 20:11	81.25	6/20/2022 18:34	17.67	6/20/2022 17:43	6.17	6/20/2022 22:39	78.04
6/21/2022 21:30	50.16	6/21/2022 20:12	81.23	6/20/2022 18:35	17.65	6/20/2022 17:44	5.98	6/20/2022 22:40	78.00
6/21/2022 21:31	50.13	6/21/2022 20:13	81.24	6/20/2022 18:36	17.65	6/20/2022 17:45	5.88	6/20/2022 22:41	77.90
6/21/2022 21:32	50.14	6/21/2022 20:14	81.22	6/20/2022 18:37	17.64	6/20/2022 17:46	5.83	6/20/2022 22:42	77.83
6/21/2022 21:33	50.16	6/21/2022 20:15	81.21	6/20/2022 18:38	17.61	6/20/2022 17:47	5.85	6/20/2022 22:43	77.78
6/21/2022 21:34	50.17	6/21/2022 20:16	81.23	6/20/2022 18:39	17.60	6/20/2022 17:48	5.97	6/20/2022 22:44	77.69
6/21/2022 21:35	50.17	6/21/2022 20:17	81.24	6/20/2022 18:40	17.65	6/20/2022 17:49	5.83	6/20/2022 22:45	77.60
6/21/2022 21:36	50.17	6/21/2022 20:18	81.26	6/20/2022 18:41	17.64	6/20/2022 17:50	5.81	6/20/2022 22:46	77.57
6/21/2022 21:37	50.13	6/21/2022 20:19	81.21	6/20/2022 18:42	17.63	6/20/2022 17:51	5.79	6/20/2022 22:47	77.50
6/21/2022 21:38	50.15	6/21/2022 20:20	81.22	6/20/2022 18:43	17.58	6/20/2022 17:52	5.77	6/20/2022 22:48	77.38
6/21/2022 21:39	50.15	6/21/2022 20:21	81.20	6/20/2022 18:44	17.60	6/20/2022 17:53	5.69	6/20/2022 22:49	77.36
6/21/2022 21:40	50.15	6/21/2022 20:22	81.20	6/20/2022 18:45	17.57	6/20/2022 17:54	5.72	6/20/2022 22:50	77.32
6/21/2022 21:41	50.16	6/21/2022 20:23	81.23	6/20/2022 18:46	17.59	6/20/2022 17:55	5.67	6/20/2022 22:51	77.24
6/21/2022 21:42	50.14	6/21/2022 20:24	81.21	6/20/2022 18:47	17.59	6/20/2022 17:56	5.62	6/20/2022 22:52	77.15
6/21/2022 21:43	50.15	6/21/2022 20:25	81.21	6/20/2022 18:48	17.53	6/20/2022 17:57	5.61	6/20/2022 22:53	77.14
6/21/2022 21:44	50.11	6/21/2022 20:26	81.19	6/20/2022 18:49	17.58	6/20/2022 17:58	5.61	6/20/2022 22:54	77.03
6/21/2022 21:45	50.15	6/21/2022 20:27	81.16	6/20/2022 18:50	17.57	6/20/2022 17:59	5.67	6/20/2022 22:55	77.01
6/21/2022 21:46	50.16	6/21/2022 20:28	81.21	6/20/2022 18:51	17.55	6/20/2022 18:00	5.55	6/20/2022 22:56	76.92
6/21/2022 21:47	50.12	6/21/2022 20:29	81.19	6/20/2022 18:52	17.54	6/20/2022 18:01	5.55	6/20/2022 22:57	76.86
6/21/2022 21:48	50.18	6/21/2022 20:30	81.21	6/20/2022 18:53	17.53	6/20/2022 18:02	5.55	6/20/2022 22:58	76.81
6/21/2022 21:49	50.18	6/21/2022 20:31	81.18	6/20/2022 18:54	17.58	6/20/2022 18:03	5.52	6/20/2022 22:59	76.72
6/21/2022 21:50	50.14	6/21/2022 20:32	81.22	6/20/2022 18:55	17.51	6/20/2022 18:04	5.53	6/20/2022 23:00	76.70
6/21/2022 21:51	50.14	6/21/2022 20:33	81.19	6/20/2022 18:56	17.52	6/20/2022 18:05	5.55	6/20/2022 23:01	76.61
6/21/2022 21:52	50.14	6/21/2022 20:34	81.21	6/20/2022 18:57	17.55	6/20/2022 18:06	5.65	6/20/2022 23:02	76.59
6/21/2022 21:53	50.13	6/21/2022 20:35	81.23	6/20/2022 18:58	17.50	6/20/2022 18:07	5.49	6/20/2022 23:03	76.50
6/21/2022 21:54	50.16	6/21/2022 20:36	81.23	6/20/2022 18:59	17.54	6/20/2022 18:08	5.49	6/20/2022 23:04	76.43
6/21/2022 21:55	50.16	6/21/2022 20:37	81.18	6/20/2022 19:00	17.51	6/20/2022 18:09	5.55	6/20/2022 23:05	76.40
6/21/2022 21:56	50.15	6/21/2022 20:38	81.25	6/20/2022 19:01	17.45	6/20/2022 18:10	5.52	6/20/2022 23:06	76.33
6/21/2022 21:57	50.15	6/21/2022 20:39	81.19	6/20/2022 19:02	17.51	6/20/2022 18:11	5.49	6/20/2022 23:07	76.26
6/21/2022 21:58	50.15	6/21/2022 20:40	81.18	6/20/2022 19:03	17.46	6/20/2022 18:12	5.49	6/20/2022 23:08	76.20
6/21/2022 21:59	50.17	6/21/2022 20:41	81.22	6/20/2022 19:04	17.49	6/20/2022 18:13	5.49	6/20/2022 23:09	76.10
6/21/2022 22:00	50.14	6/21/2022 20:42	81.19	6/20/2022 19:05	17.49	6/20/2022 18:14	5.45	6/20/2022 23:10	76.08
6/21/2022 22:01	50.14	6/21/2022 20:43	81.22	6/20/2022 19:06	17.45	6/20/2022 18:15	5.43	6/20/2022 23:11	76.00
6/21/2022 22:02	50.15	6/21/2022 20:44	81.22	6/20/2022 19:07	17.46	6/20/2022 18:16	5.46	6/20/2022 23:12	75.94
6/21/2022 22:03	50.16	6/21/2022 20:45	81.19	6/20/2022 19:08	17.45	6/20/2022 18:17	5.40	6/20/2022 23:13	75.90
6/21/2022 22:04	50.13	6/21/2022 20:46	81.16	6/20/2022 19:09	17.43	6/20/2022 18:18	5.36	6/20/2022 23:14	75.82
6/21/2022 22:05	50.16	6/21/2022 20:47	81.21	6/20/2022 19:10	17.50	6/20/2022 18:19	5.39	6/20/2022 23:15	75.76
6/21/2022 22:06	50.15	6/21/2022 20:48	81.20	6/20/2022 19:11	17.47	6/20/2022 18:20	5.30	6/20/2022 23:16	75.66
6/21/2022 22:07	50.16	6/21/2022 20:49	81.19	6/20/2022 19:12	17.41	6/20/2022 18:21	5.34	6/20/2022 23:17	75.65
6/21/2022 22:08	50.16	6/21/2022 20:50	81.21	6/20/2022 19:13	17.42	6/20/2022 18:22	5.34	6/20/2022 23:18	75.59
6/21/2022 22:09	50.14	6/21/2022 20:51	81.22	6/20/2022 19:14	17.40	6/20/2022 18:23	5.29	6/20/2022 23:19	75.46
6/21/2022 22:10	50.12	6/21/2022 20:52	81.19	6/20/2022 19:15	17.44	6/20/2022 18:24	5.35	6/20/2022 23:20	75.45
6/21/2022 22:11	50.14	6/21/2022 20:53	81.16	6/20/2022 19:16	17.41	6/20/2022 18:25	5.34	6/20/2022 23:21	75.40
6/21/2022 22:12	50.15	6/21/2022 20:54	81.21	6/20/2022 19:17	17.39	6/20/2022 18:26	5.29	6/20/2022 23:22	75.33
6/21/2022 22:13	50.12	6/21/2022 20:55	81.22	6/20/2022 19:18	17.37	6/20/2022 18:27	5.31	6/20/2022 23:23	75.28
6/21/2022 22:14	50.15	6/21/2022 20:56	81.20	6/20/2022 19:19	17.38	6/20/2022 18:28	5.31	6/20/2022 23:24	75.20
6/21/2022 22:15	50.13	6/21/2022 20:57	81.22	6/20/2022 19:20	17.39	6/20/2022 18:29	5.25	6/20/2022 23:25	75.15
6/21/2022 22:16	50.11	6/21/2022 20:58	81.21	6/20/2022 19:21	17.40	6/20/2022 18:30	5.26	6/20/2022 23:26	75.11
6/21/2022 22:17	50.13	6/21/2022 20:59	81.26	6/20/2022 19:22	17.35	6/20/2022 18:31	5.27	6/20/2022 23:27	75.07
6/21/2022 22:18	50.15	6/21/2022 21:00	81.19	6/20/2022 19:23	17.42	6/20/2022 18:32	5.29	6/20/2022 23:28	74.98
6/21/2022 22:19	50.14	6/21/2022 21:01	81.22	6/20/2022 19:24	17.36	6/20/2022 18:33	5.21	6/20/2022 23:29	74.94
6/21/2022 22:20	50.14	6/21/2022 21:02	81.22	6/20/2022 19:25	17.36	6/20/2022 18:34	5.20	6/20/2022 23:30	74.87

6/21/2022 22:21	50.13	6/21/2022 21:03	81.22	6/20/2022 19:26	17.36	6/20/2022 18:35	5.22	6/20/2022 23:31	74.80
6/21/2022 22:22	50.13	6/21/2022 21:04	81.24	6/20/2022 19:27	17.37	6/20/2022 18:36	5.18	6/20/2022 23:32	74.78
6/21/2022 22:23	50.17	6/21/2022 21:05	81.23	6/20/2022 19:28	17.36	6/20/2022 18:37	5.20	6/20/2022 23:33	74.68
6/21/2022 22:24	50.17	6/21/2022 21:06	81.21	6/20/2022 19:29	17.34	6/20/2022 18:38	5.18	6/20/2022 23:34	74.63
6/21/2022 22:25	50.14	6/21/2022 21:07	81.18	6/20/2022 19:30	17.34	6/20/2022 18:39	5.18	6/20/2022 23:35	74.58
6/21/2022 22:26	50.14	6/21/2022 21:08	81.21	6/20/2022 19:31	17.31	6/20/2022 18:40	5.17	6/20/2022 23:36	74.55
6/21/2022 22:27	50.13	6/21/2022 21:09	81.22	6/20/2022 19:32	17.34	6/20/2022 18:41	5.21	6/20/2022 23:37	74.49
6/21/2022 22:28	50.13	6/21/2022 21:10	81.22	6/20/2022 19:33	17.29	6/20/2022 18:42	5.24	6/20/2022 23:38	74.45
6/21/2022 22:29	50.12	6/21/2022 21:11	81.21	6/20/2022 19:34	17.29	6/20/2022 18:43	5.13	6/20/2022 23:39	74.36
6/21/2022 22:30	50.17	6/21/2022 21:12	81.22	6/20/2022 19:35	17.34	6/20/2022 18:44	5.17	6/20/2022 23:40	74.32
6/21/2022 22:31	50.12	6/21/2022 21:13	81.24	6/20/2022 19:36	17.35	6/20/2022 18:45	5.26	6/20/2022 23:41	74.26
6/21/2022 22:32	50.15	6/21/2022 21:14	81.21	6/20/2022 19:37	19.81	6/20/2022 18:46	5.64	6/20/2022 23:42	74.25
6/21/2022 22:33	50.12	6/21/2022 21:15	81.19	6/20/2022 19:38	24.43	6/20/2022 18:47	5.32	6/20/2022 23:43	74.19
6/21/2022 22:34	50.14	6/21/2022 21:16	81.21	6/20/2022 19:39	27.29	6/20/2022 18:48	5.29	6/20/2022 23:44	74.14
6/21/2022 22:35	50.15	6/21/2022 21:17	81.28	6/20/2022 19:40	27.73	6/20/2022 18:49	5.20	6/20/2022 23:45	74.09
6/21/2022 22:36	50.14	6/21/2022 21:18	81.23	6/20/2022 19:41	24.73	6/20/2022 18:50	5.20	6/20/2022 23:46	74.07
6/21/2022 22:37	50.11	6/21/2022 21:19	81.22	6/20/2022 19:42	23.08	6/20/2022 18:51	5.24	6/20/2022 23:47	73.93
6/21/2022 22:38	50.12	6/21/2022 21:20	81.22	6/20/2022 19:43	22.08	6/20/2022 18:52	5.23	6/20/2022 23:48	73.92
6/21/2022 22:39	50.13	6/21/2022 21:21	81.22	6/20/2022 19:44	21.33	6/20/2022 18:53	5.14	6/20/2022 23:49	73.91
6/21/2022 22:40	50.14	6/21/2022 21:22	81.17	6/20/2022 19:45	20.88	6/20/2022 18:54	5.17	6/20/2022 23:50	73.87
6/21/2022 22:41	50.15	6/21/2022 21:23	81.22	6/20/2022 19:46	20.58	6/20/2022 18:55	5.13	6/20/2022 23:51	73.83
6/21/2022 22:42	50.15	6/21/2022 21:24	81.21	6/20/2022 19:47	20.28	6/20/2022 18:56	5.12	6/20/2022 23:52	73.78
6/21/2022 22:43	50.14	6/21/2022 21:25	81.24	6/20/2022 19:48	20.06	6/20/2022 18:57	5.05	6/20/2022 23:53	73.74
6/21/2022 22:44	50.17	6/21/2022 21:26	81.23	6/20/2022 19:49	23.45	6/20/2022 18:58	5.12	6/20/2022 23:54	73.65
6/21/2022 22:45	50.14	6/21/2022 21:27	81.25	6/20/2022 19:50	27.44	6/20/2022 18:59	5.11	6/20/2022 23:55	73.59
6/21/2022 22:46	50.12	6/21/2022 21:28	81.20	6/20/2022 19:51	30.02	6/20/2022 19:00	5.07	6/20/2022 23:56	73.56
6/21/2022 22:47	50.11	6/21/2022 21:29	81.17	6/20/2022 19:52	30.40	6/20/2022 19:01	5.08	6/20/2022 23:57	73.51
6/21/2022 22:48	50.17	6/21/2022 21:30	81.23	6/20/2022 19:53	27.09	6/20/2022 19:02	5.11	6/20/2022 23:58	73.49
6/21/2022 22:49	50.11	6/21/2022 21:31	81.21	6/20/2022 19:54	25.21	6/20/2022 19:03	5.11	6/20/2022 23:59	73.46
6/21/2022 22:50	50.16	6/21/2022 21:32	81.27	6/20/2022 19:55	24.08	6/20/2022 19:04	5.07	6/21/2022 0:00	73.40
6/21/2022 22:51	50.12	6/21/2022 21:33	81.22	6/20/2022 19:56	23.27	6/20/2022 19:05	5.04	6/21/2022 0:01	73.33
6/21/2022 22:52	50.11	6/21/2022 21:34	81.20	6/20/2022 19:57	22.70	6/20/2022 19:06	5.02	6/21/2022 0:02	73.30
6/21/2022 22:53	50.13	6/21/2022 21:35	81.22	6/20/2022 19:58	22.22	6/20/2022 19:07	5.04	6/21/2022 0:03	73.25
6/21/2022 22:54	50.11	6/21/2022 21:36	81.22	6/20/2022 19:59	21.90	6/20/2022 19:08	5.08	6/21/2022 0:04	73.23
6/21/2022 22:55	50.10	6/21/2022 21:37	81.25	6/20/2022 20:00	21.58	6/20/2022 19:09	5.11	6/21/2022 0:05	73.17
6/21/2022 22:56	50.13	6/21/2022 21:38	81.19	6/20/2022 20:01	21.38	6/20/2022 19:10	5.49	6/21/2022 0:06	73.12
6/21/2022 22:57	50.15	6/21/2022 21:39	81.21	6/20/2022 20:02	21.16	6/20/2022 19:11	5.18	6/21/2022 0:07	73.08
6/21/2022 22:58	50.13	6/21/2022 21:40	81.19	6/20/2022 20:03	20.90	6/20/2022 19:12	5.71	6/21/2022 0:08	73.05
6/21/2022 22:59	51.44	6/21/2022 21:41	81.23	6/20/2022 20:04	20.75	6/20/2022 19:13	5.34	6/21/2022 0:09	73.01
6/21/2022 23:00	53.59	6/21/2022 21:42	81.17	6/20/2022 20:05	26.15	6/20/2022 19:14	5.24	6/21/2022 0:10	72.99
6/21/2022 23:01	54.60	6/21/2022 21:43	81.21	6/20/2022 20:06	29.35	6/20/2022 19:15	5.31	6/21/2022 0:11	72.93
6/21/2022 23:02	55.20	6/21/2022 21:44	81.18	6/20/2022 20:07	29.71	6/20/2022 19:16	5.22	6/21/2022 0:12	72.85
6/21/2022 23:03	53.39	6/21/2022 21:45	81.20	6/20/2022 20:08	26.74	6/20/2022 19:17	5.29	6/21/2022 0:13	72.88
6/21/2022 23:04	52.17	6/21/2022 21:46	81.21	6/20/2022 20:09	25.20	6/20/2022 19:18	5.22	6/21/2022 0:14	72.82
6/21/2022 23:05	51.69	6/21/2022 21:47	81.20	6/20/2022 20:10	24.18	6/20/2022 19:19	5.15	6/21/2022 0:15	72.74
6/21/2022 23:06	51.45	6/21/2022 21:48	81.19	6/20/2022 20:11	23.45	6/20/2022 19:20	5.21	6/21/2022 0:16	72.73
6/21/2022 23:07	51.25	6/21/2022 21:49	81.19	6/20/2022 20:12	22.91	6/20/2022 19:21	5.21	6/21/2022 0:17	72.70
6/21/2022 23:08	51.17	6/21/2022 21:50	81.20	6/20/2022 20:13	22.57	6/20/2022 19:22	5.08	6/21/2022 0:18	72.68
6/21/2022 23:09	51.08	6/21/2022 21:51	81.21	6/20/2022 20:14	22.21	6/20/2022 19:23	5.13	6/21/2022 0:19	72.64
6/21/2022 23:10	51.00	6/21/2022 21:52	81.22	6/20/2022 20:15	21.94	6/20/2022 19:24	5.12	6/21/2022 0:20	72.61
6/21/2022 23:11	50.97	6/21/2022 21:53	81.21	6/20/2022 20:16	21.71	6/20/2022 19:25	5.08	6/21/2022 0:21	72.57
6/21/2022 23:12	50.90	6/21/2022 21:54	81.23	6/20/2022 20:17	21.52	6/20/2022 19:26	5.11	6/21/2022 0:22	72.52
6/21/2022 23:13	50.85	6/21/2022 21:55	81.25	6/20/2022 20:18	21.37	6/20/2022 19:27	5.03	6/21/2022 0:23	72.51
6/21/2022 23:14	50.81	6/21/2022 21:56	81.21	6/20/2022 20:19	21.19	6/20/2022 19:28	5.05	6/21/2022 0:24	72.44
6/21/2022 23:15	50.78	6/21/2022 21:57	81.20	6/20/2022 20:20	21.07	6/20/2022 19:29	5.00	6/21/2022 0:25	72.42
6/21/2022 23:16	50.76	6/21/2022 21:58	81.22	6/20/2022 20:21	20.91	6/20/2022 19:30	5.03	6/21/2022 0:26	72.39
6/21/2022 23:17	50.78	6/21/2022 21:59	81.22	6/20/2022 20:22	20.78	6/20/2022 19:31	5.04	6/21/2022 0:27	72.39
6/21/2022 23:18	50.75	6/21/2022 22:00	81.24	6/20/2022 20:23	20.68	6/20/2022 19:32	5.02	6/21/2022 0:28	72.30
6/21/2022 23:19	50.75	6/21/2022 22:01	81.62	6/20/2022 20:24	20.58	6/20/2022 19:33	5.00	6/21/2022 0:29	72.33
6/21/2022 23:20	50.70	6/21/2022 22:02	82.71	6/20/2022 20:25	20.48	6/20/2022 19:34	4.98	6/21/2022 0:30	72.27
6/21/2022 23:21	50.68	6/21/2022 22:03	82.42	6/20/2022 20:26	20.40	6/20/2022 19:35	4.98	6/21/2022 0:31	72.24
6/21/2022 23:22	50.67	6/21/2022 22:04	82.25	6/20/2022 20:27	20.32	6/20/2022 19:36	4.94	6/21/2022 0:32	72.21
6/21/2022 23:23	50.66	6/21/2022 22:05	82.08	6/20/2022 20:28	20.23	6/20/2022 19:37	4.94	6/21/2022 0:33	72.18
6/21/2022 23:24	50.69	6/21/2022 22:06	81.96	6/20/2022 20:29	20.12	6/20/2022 19:38	4.96	6/21/2022 0:34	72.17
6/21/2022 23:25	50.66	6/21/2022 22:07	81.89	6/20/2022 20:30	20.05	6/20/2022 19:39	5.00	6/21/2022 0:35	72.15
6/21/2022 23:26	50.62	6/21/2022 22:08	81.78	6/20/2022 20:31	19.96	6/20/2022 19:40	4.92	6/21/2022 0:36	72.11
6/21/2022 23:27	50.60	6/21/2022 22:09	81.70	6/20/2022 20:32	20.01	6/20/2022 19:41	4.96	6/21/2022 0:37	72.08
6/21/2022 23:28	50.60	6/21/2022 22:10	81.68	6/20/2022 20:33	19.89	6/20/2022 19:42	4.97	6/21/2022 0:38	77.01
6/21/2022 23:29	50.56	6/21/2022 22:11	81.60	6/20/2022 20:34	19.81	6/20/2022 19:43	4.94	6/21/2022 0:39	77.21
6/21/2022 23:30	50.64	6/21/2022 22:12	81.63	6/20/2022 20:35	19.77	6/20/2022 19:44	4.87	6/21/2022 0:40	77.09
6/21/2022 23:31	50.60	6/21/2022 22:13	81.53	6/20/2022 20:36	19.70	6/20/2022 19:45	4.90	6/21/2022 0:41	76.97
6/21/2022 23:32	50.56	6/21/2022 22:14	81.50	6/20/2022 20:37	19.68	6/20/2022 19:46	4.89	6/21/2022 0:42	76.90
6/21/2022 23:33	50.58	6/21/2022 22:15	81.49	6/20/2022 20:38	19.62	6/20/2022 19:47	4.89	6/21/2022 0:43	76.81
6/21/2022 23:34	50.53	6/21/2022 22:16	81.44	6/20/2022 20:39	19.54	6/20/2022 19:48	4.92	6/21/2022 0:44	76.71
6/21/2022 23:35	50.53	6/21/2022 22:17	81.39	6/20/2022 20:40	19.50	6/20/2022 19:49	4.95	6/21/2022 0:45	76.60
6/21/2022 23:36	50.54	6/21/2022 22:18	81.41	6/20/2022 20:41	19.46	6/20/2022 19:50	4.86	6/21/2022 0:46	76.58
6/21/2022 23:37	50.53	6/21/2022 22:19	81.43	6/20/2022 20:42	19.44	6/20/2022 19:51	4.78	6/21/2022 0:47	76.49
6/21/2022 23:38	50.51	6/21/2022 22:20	81.39	6/20/2022 20:43	19.38	6/20/2022 19:52	4.89	6/21/2022 0:48	76.39
6/21/2022 23:39	50.53	6/21/2022 22:21	81.36	6/20/2022 20:44	19.32	6/20/2022 19:53	4.86	6/21/2022 0:49	76.32
6/21/2022 23:40	50.49	6/21/2022 22:22	81.38	6/20/2022 20:45	19.30	6/20/2022 19:54	4.83	6/21/2022 0:50	76.24
6/21/2022 23:41	50.51	6/21/2022 22:23	81.33	6/20/2022 20:46	19.25	6/20/2022 19:55	4.90	6/21/2022 0:51	76.17
6/21/2022 23:42	50.49	6/21/2022 22:24	81.34	6/20/2022 20:47	19.21	6/20/2022 19:56	4.98	6/21/2022 0:52	76.09
6/21/2022 23:43	50.48	6/21/2022 22:25	81.32	6/20/2022 20:48	19.15	6/20/2022 19:57	4.96	6/21/2022 0:53	76.04
6/21/2022 23:44	50.46	6/21/2022 22:26	81.31	6/20/2022 20:49	19.10	6/20/2022 19:58	4.91	6/21/2022 0:54	75.95
6/21/2022 23:45	50.48	6/21/2022 22:27	81.29	6/20/2022 20:50	19.11	6/20/2022 19:59	5.05	6/21/2022 0:55	75.85
6/21/2022 23:46	50.47	6/21/2022 22:28	81.28	6/20/2022 20:51	19.06	6/20/2022 20:00	5.12	6/21/2022 0:56	75.80
6/21/2022 23:47	50.49	6/21/2022 22:29	81.29	6/20/2022 20:52	19.03	6/20/2022 20:01	5.19	6/21/2022 0:57	75.71
6/21/2022 23:48	50.47	6/21/2022 22:30	81.32	6/20/2022 20:53	19.06	6/20/2022 20:02	5.20	6/21/2022 0:58	75.67

6/21/2022 23:49	50.49	6/21/2022 22:31	81.31	6/20/2022 20:54	18.99	6/20/2022 20:03	5.13	6/21/2022 0:59	75.63
6/21/2022 23:50	50.49	6/21/2022 22:32	81.27	6/20/2022 20:55	18.91	6/20/2022 20:04	5.14	6/21/2022 1:00	75.49
6/21/2022 23:51	50.46	6/21/2022 22:33	81.28	6/20/2022 20:56	18.93	6/20/2022 20:05	4.99	6/21/2022 1:01	75.48
6/21/2022 23:52	50.45	6/21/2022 22:34	81.25	6/20/2022 20:57	18.84	6/20/2022 20:06	4.97	6/21/2022 1:02	75.38
6/21/2022 23:53	50.47	6/21/2022 22:35	81.26	6/20/2022 20:58	18.82	6/20/2022 20:07	4.96	6/21/2022 1:03	75.34
6/21/2022 23:54	50.45	6/21/2022 22:36	81.27	6/20/2022 20:59	18.81	6/20/2022 20:08	4.94	6/21/2022 1:04	75.25
6/21/2022 23:55	50.43	6/21/2022 22:37	81.26	6/20/2022 21:00	18.80	6/20/2022 20:09	4.92	6/21/2022 1:05	75.18
6/21/2022 23:56	50.42	6/21/2022 22:38	81.26	6/20/2022 21:01	18.78	6/20/2022 20:10	4.89	6/21/2022 1:06	75.13
6/21/2022 23:57	50.42	6/21/2022 22:39	81.25	6/20/2022 21:02	18.78	6/20/2022 20:11	4.92	6/21/2022 1:07	75.09
6/21/2022 23:58	50.44	6/21/2022 22:40	81.27	6/20/2022 21:03	18.74	6/20/2022 20:12	4.94	6/21/2022 1:08	75.05
6/21/2022 23:59	50.44	6/21/2022 22:41	81.28	6/20/2022 21:04	18.63	6/20/2022 20:13	4.87	6/21/2022 1:09	74.96
6/22/2022 0:00	50.42	6/21/2022 22:42	81.26	6/20/2022 21:05	18.67	6/20/2022 20:14	4.91	6/21/2022 1:10	74.89
6/22/2022 0:01	50.43	6/21/2022 22:43	81.22	6/20/2022 21:06	18.63	6/20/2022 20:15	4.89	6/21/2022 1:11	74.82
6/22/2022 0:02	50.42	6/21/2022 22:44	81.26	6/20/2022 21:07	18.62	6/20/2022 20:16	4.85	6/21/2022 1:12	74.81
6/22/2022 0:03	50.44	6/21/2022 22:45	81.22	6/20/2022 21:08	18.61	6/20/2022 20:17	4.87	6/21/2022 1:13	74.71
6/22/2022 0:04	50.43	6/21/2022 22:46	81.25	6/20/2022 21:09	18.53	6/20/2022 20:18	4.90	6/21/2022 1:14	74.63
6/22/2022 0:05	50.38	6/21/2022 22:47	81.28	6/20/2022 21:10	18.54	6/20/2022 20:19	4.88	6/21/2022 1:15	74.58
6/22/2022 0:06	50.41	6/21/2022 22:48	81.26	6/20/2022 21:11	18.54	6/20/2022 20:20	4.80	6/21/2022 1:16	74.54
6/22/2022 0:07	50.39	6/21/2022 22:49	81.22	6/20/2022 21:12	18.56	6/20/2022 20:21	4.85	6/21/2022 1:17	74.48
6/22/2022 0:08	50.40	6/21/2022 22:50	81.26	6/20/2022 21:13	18.45	6/20/2022 20:22	4.88	6/21/2022 1:18	74.38
6/22/2022 0:09	50.39	6/21/2022 22:51	81.19	6/20/2022 21:14	18.43	6/20/2022 20:23	4.86	6/21/2022 1:19	74.38
6/22/2022 0:10	50.38	6/21/2022 22:52	81.23	6/20/2022 21:15	18.46	6/20/2022 20:24	4.76	6/21/2022 1:20	74.32
6/22/2022 0:11	50.38	6/21/2022 22:53	81.23	6/20/2022 21:16	18.39	6/20/2022 20:25	4.80	6/21/2022 1:21	74.28
6/22/2022 0:12	50.43	6/21/2022 22:54	81.27	6/20/2022 21:17	18.43	6/20/2022 20:26	4.84	6/21/2022 1:22	74.19
6/22/2022 0:13	50.42	6/21/2022 22:55	81.23	6/20/2022 21:18	18.38	6/20/2022 20:27	4.87	6/21/2022 1:23	74.14
6/22/2022 0:14	50.38	6/21/2022 22:56	81.23	6/20/2022 21:19	18.38	6/20/2022 20:28	5.12	6/21/2022 1:24	74.10
6/22/2022 0:15	50.37	6/21/2022 22:57	81.26	6/20/2022 21:20	18.36	6/20/2022 20:29	4.97	6/21/2022 1:25	74.05
6/22/2022 0:16	50.36	6/21/2022 22:58	81.23	6/20/2022 21:21	18.32	6/20/2022 20:30	4.93	6/21/2022 1:26	73.99
6/22/2022 0:17	50.37	6/21/2022 22:59	81.21	6/20/2022 21:22	18.33	6/20/2022 20:31	4.84	6/21/2022 1:27	73.98
6/22/2022 0:18	50.37	6/21/2022 23:00	81.23	6/20/2022 21:23	18.25	6/20/2022 20:32	4.88	6/21/2022 1:28	73.90
6/22/2022 0:19	50.36	6/21/2022 23:01	81.25	6/20/2022 21:24	18.28	6/20/2022 20:33	4.90	6/21/2022 1:29	73.86
6/22/2022 0:20	50.41	6/21/2022 23:02	81.21	6/20/2022 21:25	18.25	6/20/2022 20:34	4.86	6/21/2022 1:30	73.78
6/22/2022 0:21	50.34	6/21/2022 23:03	81.23	6/20/2022 21:26	18.25	6/20/2022 20:35	4.86	6/21/2022 1:31	73.72
6/22/2022 0:22	50.37	6/21/2022 23:04	81.26	6/20/2022 21:27	18.22	6/20/2022 20:36	4.82	6/21/2022 1:32	73.69
6/22/2022 0:23	50.38	6/21/2022 23:05	81.20	6/20/2022 21:28	18.16	6/20/2022 20:37	4.84	6/21/2022 1:33	73.60
6/22/2022 0:24	50.34	6/21/2022 23:06	81.23	6/20/2022 21:29	18.15	6/20/2022 20:38	4.81	6/21/2022 1:34	73.59
6/22/2022 0:25	50.35	6/21/2022 23:07	81.21	6/20/2022 21:30	18.19	6/20/2022 20:39	5.01	6/21/2022 1:35	73.49
6/22/2022 0:26	50.39	6/21/2022 23:08	81.23	6/20/2022 21:31	18.18	6/20/2022 20:40	5.00	6/21/2022 1:36	73.51
6/22/2022 0:27	50.37	6/21/2022 23:09	81.19	6/20/2022 21:32	18.13	6/20/2022 20:41	4.86	6/21/2022 1:37	73.48
6/22/2022 0:28	50.35	6/21/2022 23:10	81.20	6/20/2022 21:33	18.11	6/20/2022 20:42	4.88	6/21/2022 1:38	73.38
6/22/2022 0:29	50.33	6/21/2022 23:11	81.23	6/20/2022 21:34	18.08	6/20/2022 20:43	4.86	6/21/2022 1:39	73.33
6/22/2022 0:30	50.38	6/21/2022 23:12	81.27	6/20/2022 21:35	18.08	6/20/2022 20:44	4.86	6/21/2022 1:40	73.31
6/22/2022 0:31	50.38	6/21/2022 23:13	81.24	6/20/2022 21:36	18.16	6/20/2022 20:45	4.81	6/21/2022 1:41	73.22
6/22/2022 0:32	50.33	6/21/2022 23:14	81.23	6/20/2022 21:37	18.09	6/20/2022 20:46	4.82	6/21/2022 1:42	73.20
6/22/2022 0:33	50.35	6/21/2022 23:15	81.23	6/20/2022 21:38	18.07	6/20/2022 20:47	4.81	6/21/2022 1:43	73.16
6/22/2022 0:34	50.36	6/21/2022 23:16	81.19	6/20/2022 21:39	18.03	6/20/2022 20:48	4.76	6/21/2022 1:44	73.12
6/22/2022 0:35	50.34	6/21/2022 23:17	81.27	6/20/2022 21:40	18.03	6/20/2022 20:49	4.77	6/21/2022 1:45	73.08
6/22/2022 0:36	50.33	6/21/2022 23:18	81.22	6/20/2022 21:41	18.01	6/20/2022 20:50	4.79	6/21/2022 1:46	73.04
6/22/2022 0:37	50.35	6/21/2022 23:19	81.22	6/20/2022 21:42	17.99	6/20/2022 20:51	4.86	6/21/2022 1:47	72.96
6/22/2022 0:38	50.35	6/21/2022 23:20	81.24	6/20/2022 21:43	18.00	6/20/2022 20:52	4.78	6/21/2022 1:48	72.95
6/22/2022 0:39	50.33	6/21/2022 23:21	81.21	6/20/2022 21:44	17.97	6/20/2022 20:53	4.78	6/21/2022 1:49	72.89
6/22/2022 0:40	50.32	6/21/2022 23:22	81.23	6/20/2022 21:45	17.96	6/20/2022 20:54	4.79	6/21/2022 1:50	72.84
6/22/2022 0:41	50.33	6/21/2022 23:23	81.22	6/20/2022 21:46	17.98	6/20/2022 20:55	4.78	6/21/2022 1:51	72.81
6/22/2022 0:42	50.36	6/21/2022 23:24	81.26	6/20/2022 21:47	17.95	6/20/2022 20:56	4.77	6/21/2022 1:52	72.74
6/22/2022 0:43	50.35	6/21/2022 23:25	81.22	6/20/2022 21:48	17.93	6/20/2022 20:57	4.76	6/21/2022 1:53	72.69
6/22/2022 0:44	50.34	6/21/2022 23:26	81.24	6/20/2022 21:49	17.93	6/20/2022 20:58	4.75	6/21/2022 1:54	72.67
6/22/2022 0:45	50.35	6/21/2022 23:27	81.23	6/20/2022 21:50	17.91	6/20/2022 20:59	4.76	6/21/2022 1:55	72.64
6/22/2022 0:46	50.29	6/21/2022 23:28	81.24	6/20/2022 21:51	17.89	6/20/2022 21:00	4.81	6/21/2022 1:56	72.60
6/22/2022 0:47	50.33	6/21/2022 23:29	81.25	6/20/2022 21:52	23.58	6/20/2022 21:01	4.84	6/21/2022 1:57	72.54
6/22/2022 0:48	50.33	6/21/2022 23:30	81.21	6/20/2022 21:53	26.95	6/20/2022 21:02	4.75	6/21/2022 1:58	72.53
6/22/2022 0:49	50.32	6/21/2022 23:31	81.25	6/20/2022 21:54	28.82	6/20/2022 21:03	4.76	6/21/2022 1:59	72.46
6/22/2022 0:50	50.31	6/21/2022 23:32	81.22	6/20/2022 21:55	25.36	6/20/2022 21:04	4.77	6/21/2022 2:00	73.74
6/22/2022 0:51	50.31	6/21/2022 23:33	81.23	6/20/2022 21:56	23.66	6/20/2022 21:05	4.74	6/21/2022 2:01	80.85
6/22/2022 0:52	50.31	6/21/2022 23:34	81.20	6/20/2022 21:57	22.51	6/20/2022 21:06	4.78	6/21/2022 2:02	86.91
6/22/2022 0:53	50.32	6/21/2022 23:35	81.20	6/20/2022 21:58	21.81	6/20/2022 21:07	4.76	6/21/2022 2:03	86.37
6/22/2022 0:54	50.28	6/21/2022 23:36	81.21	6/20/2022 21:59	21.34	6/20/2022 21:08	4.77	6/21/2022 2:04	93.54
6/22/2022 0:55	50.32	6/21/2022 23:37	81.22	6/20/2022 22:00	20.90	6/20/2022 21:09	4.71	6/21/2022 2:05	100.16
6/22/2022 0:56	50.32	6/21/2022 23:38	81.24	6/20/2022 22:01	20.73	6/20/2022 21:10	4.91	6/21/2022 2:06	100.61
6/22/2022 0:57	50.32	6/21/2022 23:39	81.22	6/20/2022 22:02	20.47	6/20/2022 21:11	4.80	6/21/2022 2:07	105.54
6/22/2022 0:58	50.31	6/21/2022 23:40	81.26	6/20/2022 22:03	20.28	6/20/2022 21:12	4.78	6/21/2022 2:08	112.09
6/22/2022 0:59	50.29	6/21/2022 23:41	81.23	6/20/2022 22:04	20.15	6/20/2022 21:13	4.80	6/21/2022 2:09	116.00
6/22/2022 1:00	50.30	6/21/2022 23:42	81.24	6/20/2022 22:05	19.97	6/20/2022 21:14	4.77	6/21/2022 2:10	116.85
6/22/2022 1:01	50.34	6/21/2022 23:43	81.20	6/20/2022 22:06	19.87	6/20/2022 21:15	4.71	6/21/2022 2:11	123.37
6/22/2022 1:02	50.31	6/21/2022 23:44	81.23	6/20/2022 22:07	19.75	6/20/2022 21:16	4.83	6/21/2022 2:12	129.55
6/22/2022 1:03	50.30	6/21/2022 23:45	81.24	6/20/2022 22:08	19.63	6/20/2022 21:17	5.03	6/21/2022 2:13	131.89
6/22/2022 1:04	50.29	6/21/2022 23:46	81.24	6/20/2022 22:09	19.56	6/20/2022 21:18	5.06	6/21/2022 2:14	133.82
6/22/2022 1:05	50.32	6/21/2022 23:47	81.21	6/20/2022 22:10	19.48	6/20/2022 21:19	5.10	6/21/2022 2:15	140.09
6/22/2022 1:06	50.29	6/21/2022 23:48	81.27	6/20/2022 22:11	19.44	6/20/2022 21:20	5.12	6/21/2022 2:16	145.13
6/22/2022 1:07	50.29	6/21/2022 23:49	81.20	6/20/2022 22:12	22.52	6/20/2022 21:21	5.16	6/21/2022 2:17	145.15
6/22/2022 1:08	50.30	6/21/2022 23:50	81.21	6/20/2022 22:13	26.77	6/20/2022 21:22	5.10	6/21/2022 2:18	145.13
6/22/2022 1:09	50.29	6/21/2022 23:51	81.26	6/20/2022 22:14	29.31	6/20/2022 21:23	5.14	6/21/2022 2:19	145.10
6/22/2022 1:10	50.29	6/21/2022 23:52	81.23	6/20/2022 22:15	26.65	6/20/2022 21:24	5.19	6/21/2022 2:20	145.11
6/22/2022 1:11	50.28	6/21/2022 23:53	81.26	6/20/2022 22:16	24.68	6/20/2022 21:25	5.03	6/21/2022 2:21	145.11
6/22/2022 1:12	50.31	6/21/2022 23:54	81.23	6/20/2022 22:17	23.50	6/20/2022 21:26	5.08	6/21/2022 2:22	145.10
6/22/2022 1:13	50.30	6/21/2022 23:55	81.23	6/20/2022 22:18	22.74	6/20/2022 21:27	5.23	6/21/2022 2:23	145.10
6/22/2022 1:14	50.27	6/21/2022 23:56	81.20	6/20/2022 22:19	22.20	6/20/2022 21:28	5.02	6/21/2022 2:24	145.15
6/22/2022 1:15	50.29	6/21/2022 23:57	81.22	6/20/2022 22:20	21.82	6/20/2022 21:29	4.93	6/21/2022 2:25	145.13
6/22/2022 1:16	50.28	6/21/2022 23:58	81.24	6/20/2022 22:21	21.52	6/20/2022 21:30	4.93	6/21/2022 2:26	145.08

6/22/2022 1:17	50.30	6/21/2022 23:59	81.20	6/20/2022 22:22	21.21	6/20/2022 21:31	4.92	6/21/2022 2:27	145.13
6/22/2022 1:18	50.30	6/22/2022 0:00	81.24	6/20/2022 22:23	21.02	6/20/2022 21:32	5.28	6/21/2022 2:28	145.12
6/22/2022 1:19	50.27	6/22/2022 0:01	81.25	6/20/2022 22:24	20.86	6/20/2022 21:33	5.17	6/21/2022 2:29	145.11
6/22/2022 1:20	50.27	6/22/2022 0:02	81.22	6/20/2022 22:25	20.62	6/20/2022 21:34	5.01	6/21/2022 2:30	145.12
6/22/2022 1:21	50.26	6/22/2022 0:03	81.19	6/20/2022 22:26	20.51	6/20/2022 21:35	4.94	6/21/2022 2:31	145.13
6/22/2022 1:22	50.29	6/22/2022 0:04	81.27	6/20/2022 22:27	20.36	6/20/2022 21:36	4.93	6/21/2022 2:32	145.15
6/22/2022 1:23	50.28	6/22/2022 0:05	81.22	6/20/2022 22:28	20.27	6/20/2022 21:37	5.14	6/21/2022 2:33	145.11
6/22/2022 1:24	50.30	6/22/2022 0:06	81.22	6/20/2022 22:29	20.16	6/20/2022 21:38	4.96	6/21/2022 2:34	145.14
6/22/2022 1:25	50.29	6/22/2022 0:07	81.19	6/20/2022 22:30	20.12	6/20/2022 21:39	4.98	6/21/2022 2:35	145.13
6/22/2022 1:26	50.28	6/22/2022 0:08	81.22	6/20/2022 22:31	20.03	6/20/2022 21:40	4.99	6/21/2022 2:36	145.11
6/22/2022 1:27	50.26	6/22/2022 0:09	81.22	6/20/2022 22:32	19.92	6/20/2022 21:41	4.89	6/21/2022 2:37	145.12
6/22/2022 1:28	50.26	6/22/2022 0:10	81.18	6/20/2022 22:33	19.85	6/20/2022 21:42	4.91	6/21/2022 2:38	145.08
6/22/2022 1:29	50.25	6/22/2022 0:11	81.22	6/20/2022 22:34	19.80	6/20/2022 21:43	5.11	6/21/2022 2:39	145.12
6/22/2022 1:30	50.26	6/22/2022 0:12	81.21	6/20/2022 22:35	19.68	6/20/2022 21:44	5.21	6/21/2022 2:40	145.11
6/22/2022 1:31	50.26	6/22/2022 0:13	81.45	6/20/2022 22:36	19.64	6/20/2022 21:45	5.34	6/21/2022 2:41	145.14
6/22/2022 1:32	50.27	6/22/2022 0:14	81.35	6/20/2022 22:37	19.58	6/20/2022 21:46	5.21	6/21/2022 2:42	145.10
6/22/2022 1:33	50.24	6/22/2022 0:15	81.35	6/20/2022 22:38	19.52	6/20/2022 21:47	5.29	6/21/2022 2:43	145.12
6/22/2022 1:34	50.29	6/22/2022 0:16	81.39	6/20/2022 22:39	19.44	6/20/2022 21:48	5.11	6/21/2022 2:44	145.12
6/22/2022 1:35	50.26	6/22/2022 0:17	81.33	6/20/2022 22:40	19.42	6/20/2022 21:49	5.06	6/21/2022 2:45	145.12
6/22/2022 1:36	50.23	6/22/2022 0:18	81.32	6/20/2022 22:41	19.34	6/20/2022 21:50	5.23	6/21/2022 2:46	145.09
6/22/2022 1:37	50.24	6/22/2022 0:19	81.33	6/20/2022 22:42	19.28	6/20/2022 21:51	5.10	6/21/2022 2:47	145.09
6/22/2022 1:38	50.26	6/22/2022 0:20	81.27	6/20/2022 22:43	19.25	6/20/2022 21:52	5.61	6/21/2022 2:48	145.12
6/22/2022 1:39	50.29	6/22/2022 0:21	81.29	6/20/2022 22:44	19.22	6/20/2022 21:53	6.10	6/21/2022 2:49	145.10
6/22/2022 1:40	50.26	6/22/2022 0:22	81.31	6/20/2022 22:45	19.21	6/20/2022 21:54	6.37	6/21/2022 2:50	145.12
6/22/2022 1:41	50.26	6/22/2022 0:23	81.23	6/20/2022 22:46	19.11	6/20/2022 21:55	6.78	6/21/2022 2:51	145.11
6/22/2022 1:42	50.26	6/22/2022 0:24	81.25	6/20/2022 22:47	19.08	6/20/2022 21:56	6.95	6/21/2022 2:52	145.10
6/22/2022 1:43	50.27	6/22/2022 0:25	81.28	6/20/2022 22:48	19.02	6/20/2022 21:57	7.02	6/21/2022 2:53	145.13
6/22/2022 1:44	50.27	6/22/2022 0:26	81.24	6/20/2022 22:49	18.98	6/20/2022 21:58	7.34	6/21/2022 2:54	145.11
6/22/2022 1:45	50.23	6/22/2022 0:27	81.25	6/20/2022 22:50	19.01	6/20/2022 21:59	7.40	6/21/2022 2:55	145.10
6/22/2022 1:46	50.26	6/22/2022 0:28	81.29	6/20/2022 22:51	18.94	6/20/2022 22:00	7.44	6/21/2022 2:56	145.14
6/22/2022 1:47	50.23	6/22/2022 0:29	81.25	6/20/2022 22:52	18.95	6/20/2022 22:01	7.45	6/21/2022 2:57	145.11
6/22/2022 1:48	50.27	6/22/2022 0:30	81.27	6/20/2022 22:53	18.86	6/20/2022 22:02	7.65	6/21/2022 2:58	145.11
6/22/2022 1:49	50.22	6/22/2022 0:31	81.22	6/20/2022 22:54	18.86	6/20/2022 22:03	7.12	6/21/2022 2:59	145.12
6/22/2022 1:50	50.23	6/22/2022 0:32	81.27	6/20/2022 22:55	18.81	6/20/2022 22:04	6.60	6/21/2022 3:00	145.10
6/22/2022 1:51	50.26	6/22/2022 0:33	81.26	6/20/2022 22:56	18.75	6/20/2022 22:05	6.35	6/21/2022 3:01	145.11
6/22/2022 1:52	50.23	6/22/2022 0:34	81.25	6/20/2022 22:57	18.74	6/20/2022 22:06	6.13	6/21/2022 3:02	145.12
6/22/2022 1:53	50.24	6/22/2022 0:35	81.28	6/20/2022 22:58	18.75	6/20/2022 22:07	6.06	6/21/2022 3:03	145.08
6/22/2022 1:54	50.22	6/22/2022 0:36	81.22	6/20/2022 22:59	18.67	6/20/2022 22:08	6.03	6/21/2022 3:04	145.11
6/22/2022 1:55	50.25	6/22/2022 0:37	81.25	6/20/2022 23:00	18.70	6/20/2022 22:09	6.02	6/21/2022 3:05	145.11
6/22/2022 1:56	50.24	6/22/2022 0:38	81.25	6/20/2022 23:01	18.65	6/20/2022 22:10	6.01	6/21/2022 3:06	145.12
6/22/2022 1:57	50.22	6/22/2022 0:39	81.21	6/20/2022 23:02	18.64	6/20/2022 22:11	5.89	6/21/2022 3:07	145.12
6/22/2022 1:58	50.27	6/22/2022 0:40	81.22	6/20/2022 23:03	18.60	6/20/2022 22:12	5.82	6/21/2022 3:08	145.12
6/22/2022 1:59	50.21	6/22/2022 0:41	81.21	6/20/2022 23:04	18.59	6/20/2022 22:13	6.02	6/21/2022 3:09	145.13
6/22/2022 2:00	50.26	6/22/2022 0:42	81.22	6/20/2022 23:05	18.57	6/20/2022 22:14	5.83	6/21/2022 3:10	145.10
6/22/2022 2:01	50.23	6/22/2022 0:43	81.21	6/20/2022 23:06	18.55	6/20/2022 22:15	5.77	6/21/2022 3:11	145.13
6/22/2022 2:02	50.21	6/22/2022 0:44	81.22	6/20/2022 23:07	18.56	6/20/2022 22:16	5.76	6/21/2022 3:12	145.14
6/22/2022 2:03	50.24	6/22/2022 0:45	81.24	6/20/2022 23:08	18.48	6/20/2022 22:17	5.71	6/21/2022 3:13	145.13
6/22/2022 2:04	50.26	6/22/2022 0:46	81.20	6/20/2022 23:09	18.54	6/20/2022 22:18	5.86	6/21/2022 3:14	145.12
6/22/2022 2:05	50.23	6/22/2022 0:47	81.23	6/20/2022 23:10	18.50	6/20/2022 22:19	5.84	6/21/2022 3:15	145.11
6/22/2022 2:06	50.25	6/22/2022 0:48	81.23	6/20/2022 23:11	18.43	6/20/2022 22:20	5.74	6/21/2022 3:16	145.09
6/22/2022 2:07	50.23	6/22/2022 0:49	81.26	6/20/2022 23:12	18.38	6/20/2022 22:21	5.68	6/21/2022 3:17	145.10
6/22/2022 2:08	50.24	6/22/2022 0:50	81.26	6/20/2022 23:13	18.42	6/20/2022 22:22	5.63	6/21/2022 3:18	145.15
6/22/2022 2:09	50.23	6/22/2022 0:51	81.28	6/20/2022 23:14	18.37	6/20/2022 22:23	5.62	6/21/2022 3:19	145.11
6/22/2022 2:10	50.26	6/22/2022 0:52	81.24	6/20/2022 23:15	18.36	6/20/2022 22:24	5.54	6/21/2022 3:20	145.08
6/22/2022 2:11	50.27	6/22/2022 0:53	81.28	6/20/2022 23:16	18.33	6/20/2022 22:25	5.56	6/21/2022 3:21	145.10
6/22/2022 2:12	50.24	6/22/2022 0:54	81.22	6/20/2022 23:17	18.29	6/20/2022 22:26	5.57	6/21/2022 3:22	145.12
6/22/2022 2:13	50.25	6/22/2022 0:55	81.24	6/20/2022 23:18	18.28	6/20/2022 22:27	5.52	6/21/2022 3:23	145.08
6/22/2022 2:14	50.24	6/22/2022 0:56	81.24	6/20/2022 23:19	18.30	6/20/2022 22:28	5.54	6/21/2022 3:24	145.10
6/22/2022 2:15	50.26	6/22/2022 0:57	81.25	6/20/2022 23:20	18.30	6/20/2022 22:29	5.46	6/21/2022 3:25	145.14
6/22/2022 2:16	50.23	6/22/2022 0:58	81.27	6/20/2022 23:21	18.24	6/20/2022 22:30	5.48	6/21/2022 3:26	145.11
6/22/2022 2:17	50.24	6/22/2022 0:59	81.21	6/20/2022 23:22	18.23	6/20/2022 22:31	5.49	6/21/2022 3:27	145.07
6/22/2022 2:18	50.25	6/22/2022 1:00	81.18	6/20/2022 23:23	18.22	6/20/2022 22:32	5.50	6/21/2022 3:28	145.11
6/22/2022 2:19	50.25	6/22/2022 1:01	81.22	6/20/2022 23:24	18.25	6/20/2022 22:33	5.43	6/21/2022 3:29	145.08
6/22/2022 2:20	50.24	6/22/2022 1:02	81.19	6/20/2022 23:25	18.18	6/20/2022 22:34	5.38	6/21/2022 3:30	145.10
6/22/2022 2:21	50.24	6/22/2022 1:03	81.24	6/20/2022 23:26	18.20	6/20/2022 22:35	5.60	6/21/2022 3:31	145.06
6/22/2022 2:22	50.22	6/22/2022 1:04	81.25	6/20/2022 23:27	18.16	6/20/2022 22:36	5.41	6/21/2022 3:32	145.08
6/22/2022 2:23	50.23	6/22/2022 1:05	81.24	6/20/2022 23:28	18.15	6/20/2022 22:37	5.43	6/21/2022 3:33	145.08
6/22/2022 2:24	50.26	6/22/2022 1:06	81.27	6/20/2022 23:29	18.16	6/20/2022 22:38	5.42	6/21/2022 3:34	145.12
6/22/2022 2:25	50.21	6/22/2022 1:07	81.23	6/20/2022 23:30	18.17	6/20/2022 22:39	5.36	6/21/2022 3:35	145.05
6/22/2022 2:26	50.20	6/22/2022 1:08	81.23	6/20/2022 23:31	18.14	6/20/2022 22:40	5.35	6/21/2022 3:36	145.10
6/22/2022 2:27	50.23	6/22/2022 1:09	81.25	6/20/2022 23:32	18.08	6/20/2022 22:41	5.35	6/21/2022 3:37	145.11
6/22/2022 2:28	50.20	6/22/2022 1:10	81.19	6/20/2022 23:33	18.08	6/20/2022 22:42	5.39	6/21/2022 3:38	145.10
6/22/2022 2:29	50.20	6/22/2022 1:11	81.23	6/20/2022 23:34	18.05	6/20/2022 22:43	5.30	6/21/2022 3:39	145.07
6/22/2022 2:30	50.23	6/22/2022 1:12	81.23	6/20/2022 23:35	18.06	6/20/2022 22:44	5.32	6/21/2022 3:40	145.06
6/22/2022 2:31	50.21	6/22/2022 1:13	81.23	6/20/2022 23:36	18.04	6/20/2022 22:45	5.32	6/21/2022 3:41	145.09
6/22/2022 2:32	50.23	6/22/2022 1:14	81.23	6/20/2022 23:37	18.01	6/20/2022 22:46	5.56	6/21/2022 3:42	145.07
6/22/2022 2:33	50.22	6/22/2022 1:15	81.26	6/20/2022 23:38	18.00	6/20/2022 22:47	5.38	6/21/2022 3:43	145.08
6/22/2022 2:34	50.21	6/22/2022 1:16	81.23	6/20/2022 23:39	17.98	6/20/2022 22:48	5.33	6/21/2022 3:44	145.08
6/22/2022 2:35	50.21	6/22/2022 1:17	81.22	6/20/2022 23:40	17.95	6/20/2022 22:49	5.35	6/21/2022 3:45	145.10
6/22/2022 2:36	50.21	6/22/2022 1:18	81.25	6/20/2022 23:41	17.97	6/20/2022 22:50	5.27	6/21/2022 3:46	145.08
6/22/2022 2:37	50.22	6/22/2022 1:19	81.23	6/20/2022 23:42	17.96	6/20/2022 22:51	5.28	6/21/2022 3:47	145.08
6/22/2022 2:38	50.19	6/22/2022 1:20	81.22	6/20/2022 23:43	17.90	6/20/2022 22:52	5.29	6/21/2022 3:48	145.08
6/22/2022 2:39	50.21	6/22/2022 1:21	81.22	6/20/2022 23:44	17.94	6/20/2022 22:53	5.29	6/21/2022 3:49	145.07
6/22/2022 2:40	50.19	6/22/2022 1:22	81.20	6/20/2022 23:45	17.95	6/20/2022 22:54	5.28	6/21/2022 3:50	145.06
6/22/2022 2:41	50.21	6/22/2022 1:23	81.25	6/20/2022 23:46	17.88	6/20/2022 22:55	5.20	6/21/2022 3:51	145.12
6/22/2022 2:42	50.21	6/22/2022 1:24	81.21	6/20/2022 23:47	17.91	6/20/2022 22:56	5.20	6/21/2022 3:52	145.06
6/22/2022 2:43	50.18	6/22/2022 1:25	81.21	6/20/2022 23:48	17.92	6/20/2022 22:57	5.16	6/21/2022 3:53	145.09
6/22/2022 2:44	50.18	6/22/2022 1:26	81.19	6/20/2022 23:49	17.94	6/20/2022 22:58	5.27	6/21/2022 3:54	145.11

6/22/2022 2:45	50.18	6/22/2022 1:27	81.22	6/20/2022 23:50	17.87	6/20/2022 22:59	5.16	6/21/2022 3:55	145.07
6/22/2022 2:46	50.20	6/22/2022 1:28	81.23	6/20/2022 23:51	17.85	6/20/2022 23:00	5.17	6/21/2022 3:56	145.08
6/22/2022 2:47	50.15	6/22/2022 1:29	81.23	6/20/2022 23:52	17.86	6/20/2022 23:01	5.19	6/21/2022 3:57	145.06
6/22/2022 2:48	50.22	6/22/2022 1:30	81.22	6/20/2022 23:53	17.84	6/20/2022 23:02	5.16	6/21/2022 3:58	145.10
6/22/2022 2:49	50.19	6/22/2022 1:31	81.20	6/20/2022 23:54	17.83	6/20/2022 23:03	5.13	6/21/2022 3:59	145.02
6/22/2022 2:50	50.18	6/22/2022 1:32	81.23	6/20/2022 23:55	17.85	6/20/2022 23:04	5.09	6/21/2022 4:00	145.07
6/22/2022 2:51	50.20	6/22/2022 1:33	81.24	6/20/2022 23:56	17.79	6/20/2022 23:05	5.11	6/21/2022 4:01	145.06
6/22/2022 2:52	50.20	6/22/2022 1:34	81.23	6/20/2022 23:57	17.79	6/20/2022 23:06	5.17	6/21/2022 4:02	145.07
6/22/2022 2:53	50.21	6/22/2022 1:35	81.23	6/20/2022 23:58	17.81	6/20/2022 23:07	5.18	6/21/2022 4:03	145.08
6/22/2022 2:54	50.21	6/22/2022 1:36	81.22	6/20/2022 23:59	17.81	6/20/2022 23:08	5.09	6/21/2022 4:04	145.06
6/22/2022 2:55	50.21	6/22/2022 1:37	81.21	6/21/2022 0:00	17.79	6/20/2022 23:09	5.09	6/21/2022 4:05	145.08
6/22/2022 2:56	50.19	6/22/2022 1:38	81.24	6/21/2022 0:01	17.77	6/20/2022 23:10	5.09	6/21/2022 4:06	145.10
6/22/2022 2:57	50.18	6/22/2022 1:39	81.22	6/21/2022 0:02	17.74	6/20/2022 23:11	5.15	6/21/2022 4:07	145.05
6/22/2022 2:58	50.23	6/22/2022 1:40	81.21	6/21/2022 0:03	17.79	6/20/2022 23:12	5.07	6/21/2022 4:08	145.08
6/22/2022 2:59	50.21	6/22/2022 1:41	81.24	6/21/2022 0:04	17.70	6/20/2022 23:13	5.06	6/21/2022 4:09	145.08
6/22/2022 3:00	50.19	6/22/2022 1:42	81.27	6/21/2022 0:05	17.69	6/20/2022 23:14	5.06	6/21/2022 4:10	145.09
6/22/2022 3:01	50.23	6/22/2022 1:43	81.24	6/21/2022 0:06	17.72	6/20/2022 23:15	5.06	6/21/2022 4:11	145.07
6/22/2022 3:02	50.20	6/22/2022 1:44	81.21	6/21/2022 0:07	17.68	6/20/2022 23:16	5.00	6/21/2022 4:12	145.10
6/22/2022 3:03	50.15	6/22/2022 1:45	81.23	6/21/2022 0:08	17.66	6/20/2022 23:17	5.04	6/21/2022 4:13	145.04
6/22/2022 3:04	50.20	6/22/2022 1:46	81.23	6/21/2022 0:09	17.69	6/20/2022 23:18	5.05	6/21/2022 4:14	145.03
6/22/2022 3:05	50.18	6/22/2022 1:47	81.23	6/21/2022 0:10	17.68	6/20/2022 23:19	5.06	6/21/2022 4:15	145.05
6/22/2022 3:06	50.19	6/22/2022 1:48	81.23	6/21/2022 0:11	17.65	6/20/2022 23:20	5.03	6/21/2022 4:16	145.09
6/22/2022 3:07	50.21	6/22/2022 1:49	81.20	6/21/2022 0:12	17.69	6/20/2022 23:21	4.95	6/21/2022 4:17	145.09
6/22/2022 3:08	50.20	6/22/2022 1:50	81.19	6/21/2022 0:13	17.64	6/20/2022 23:22	5.03	6/21/2022 4:18	145.06
6/22/2022 3:09	50.22	6/22/2022 1:51	81.21	6/21/2022 0:14	17.62	6/20/2022 23:23	5.03	6/21/2022 4:19	145.09
6/22/2022 3:10	50.19	6/22/2022 1:52	81.21	6/21/2022 0:15	23.36	6/20/2022 23:24	5.07	6/21/2022 4:20	145.09
6/22/2022 3:11	50.17	6/22/2022 1:53	81.23	6/21/2022 0:16	26.57	6/20/2022 23:25	4.90	6/21/2022 4:21	145.06
6/22/2022 3:12	50.18	6/22/2022 1:54	81.23	6/21/2022 0:17	24.66	6/20/2022 23:26	4.96	6/21/2022 4:22	145.05
6/22/2022 3:13	50.19	6/22/2022 1:55	81.20	6/21/2022 0:18	22.78	6/20/2022 23:27	5.00	6/21/2022 4:23	145.05
6/22/2022 3:14	50.22	6/22/2022 1:56	81.24	6/21/2022 0:19	21.71	6/20/2022 23:28	4.97	6/21/2022 4:24	145.04
6/22/2022 3:15	50.18	6/22/2022 1:57	81.25	6/21/2022 0:20	21.01	6/20/2022 23:29	4.90	6/21/2022 4:25	145.06
6/22/2022 3:16	50.18	6/22/2022 1:58	81.23	6/21/2022 0:21	20.59	6/20/2022 23:30	4.96	6/21/2022 4:26	145.07
6/22/2022 3:17	50.18	6/22/2022 1:59	81.21	6/21/2022 0:22	20.27	6/20/2022 23:31	4.97	6/21/2022 4:27	145.05
6/22/2022 3:18	50.21	6/22/2022 2:00	81.24	6/21/2022 0:23	20.01	6/20/2022 23:32	4.92	6/21/2022 4:28	145.06
6/22/2022 3:19	50.21	6/22/2022 2:01	81.23	6/21/2022 0:24	19.83	6/20/2022 23:33	5.26	6/21/2022 4:29	145.07
6/22/2022 3:20	50.21	6/22/2022 2:02	81.22	6/21/2022 0:25	19.67	6/20/2022 23:34	5.11	6/21/2022 4:30	145.05
6/22/2022 3:21	50.18	6/22/2022 2:03	81.23	6/21/2022 0:26	19.50	6/20/2022 23:35	5.08	6/21/2022 4:31	145.08
6/22/2022 3:22	50.21	6/22/2022 2:04	81.26	6/21/2022 0:27	19.36	6/20/2022 23:36	4.97	6/21/2022 4:32	145.07
6/22/2022 3:23	50.16	6/22/2022 2:05	81.24	6/21/2022 0:28	19.28	6/20/2022 23:37	4.96	6/21/2022 4:33	145.07
6/22/2022 3:24	50.18	6/22/2022 2:06	81.20	6/21/2022 0:29	19.19	6/20/2022 23:38	4.96	6/21/2022 4:34	145.06
6/22/2022 3:25	50.18	6/22/2022 2:07	81.22	6/21/2022 0:30	19.08	6/20/2022 23:39	4.96	6/21/2022 4:35	145.06
6/22/2022 3:26	50.15	6/22/2022 2:08	81.18	6/21/2022 0:31	18.95	6/20/2022 23:40	4.89	6/21/2022 4:36	145.08
6/22/2022 3:27	50.14	6/22/2022 2:09	81.20	6/21/2022 0:32	18.99	6/20/2022 23:41	4.91	6/21/2022 4:37	145.06
6/22/2022 3:28	50.17	6/22/2022 2:10	81.21	6/21/2022 0:33	18.91	6/20/2022 23:42	4.90	6/21/2022 4:38	145.07
6/22/2022 3:29	50.16	6/22/2022 2:11	81.27	6/21/2022 0:34	18.80	6/20/2022 23:43	4.91	6/21/2022 4:39	145.05
6/22/2022 3:30	50.20	6/22/2022 2:12	81.30	6/21/2022 0:35	18.77	6/20/2022 23:44	5.09	6/21/2022 4:40	145.08
6/22/2022 3:31	50.17	6/22/2022 2:13	81.23	6/21/2022 0:36	18.77	6/20/2022 23:45	4.96	6/21/2022 4:41	145.05
6/22/2022 3:32	50.16	6/22/2022 2:14	81.23	6/21/2022 0:37	18.66	6/20/2022 23:46	4.94	6/21/2022 4:42	145.03
6/22/2022 3:33	50.15	6/22/2022 2:15	81.23	6/21/2022 0:38	18.63	6/20/2022 23:47	4.90	6/21/2022 4:43	145.07
6/22/2022 3:34	50.17	6/22/2022 2:16	81.24	6/21/2022 0:39	18.57	6/20/2022 23:48	4.87	6/21/2022 4:44	145.04
6/22/2022 3:35	50.19	6/22/2022 2:17	81.19	6/21/2022 0:40	18.53	6/20/2022 23:49	4.91	6/21/2022 4:45	145.10
6/22/2022 3:36	50.15	6/22/2022 2:18	81.23	6/21/2022 0:41	18.51	6/20/2022 23:50	4.94	6/21/2022 4:46	145.07
6/22/2022 3:37	50.17	6/22/2022 2:19	81.23	6/21/2022 0:42	18.43	6/20/2022 23:51	4.83	6/21/2022 4:47	145.05
6/22/2022 3:38	50.14	6/22/2022 2:20	81.23	6/21/2022 0:43	18.41	6/20/2022 23:52	5.07	6/21/2022 4:48	145.06
6/22/2022 3:39	50.21	6/22/2022 2:21	81.22	6/21/2022 0:44	18.36	6/20/2022 23:53	4.98	6/21/2022 4:49	145.04
6/22/2022 3:40	50.17	6/22/2022 2:22	81.23	6/21/2022 0:45	18.38	6/20/2022 23:54	4.99	6/21/2022 4:50	145.09
6/22/2022 3:41	50.17	6/22/2022 2:23	81.21	6/21/2022 0:46	18.34	6/20/2022 23:55	4.89	6/21/2022 4:51	145.07
6/22/2022 3:42	50.17	6/22/2022 2:24	81.21	6/21/2022 0:47	18.25	6/20/2022 23:56	4.91	6/21/2022 4:52	145.07
6/22/2022 3:43	50.17	6/22/2022 2:25	81.21	6/21/2022 0:48	18.24	6/20/2022 23:57	4.91	6/21/2022 4:53	145.08
6/22/2022 3:44	50.16	6/22/2022 2:26	81.22	6/21/2022 0:49	18.19	6/20/2022 23:58	4.94	6/21/2022 4:54	145.03
6/22/2022 3:45	50.19	6/22/2022 2:27	81.20	6/21/2022 0:50	18.24	6/20/2022 23:59	4.84	6/21/2022 4:55	145.08
6/22/2022 3:46	50.18	6/22/2022 2:28	81.20	6/21/2022 0:51	18.20	6/21/2022 0:00	4.89	6/21/2022 4:56	145.04
6/22/2022 3:47	50.18	6/22/2022 2:29	81.27	6/21/2022 0:52	18.11	6/21/2022 0:01	4.84	6/21/2022 4:57	145.06
6/22/2022 3:48	50.18	6/22/2022 2:30	81.22	6/21/2022 0:53	18.18	6/21/2022 0:02	4.76	6/21/2022 4:58	145.06
6/22/2022 3:49	50.18	6/22/2022 2:31	81.24	6/21/2022 0:54	18.11	6/21/2022 0:03	4.83	6/21/2022 4:59	145.08
6/22/2022 3:50	50.17	6/22/2022 2:32	81.23	6/21/2022 0:55	18.12	6/21/2022 0:04	4.83	6/21/2022 5:00	145.03
6/22/2022 3:51	50.16	6/22/2022 2:33	81.20	6/21/2022 0:56	18.04	6/21/2022 0:05	5.09	6/21/2022 5:01	145.05
6/22/2022 3:52	50.18	6/22/2022 2:34	81.24	6/21/2022 0:57	18.08	6/21/2022 0:06	5.02	6/21/2022 5:02	145.03
6/22/2022 3:53	50.16	6/22/2022 2:35	81.28	6/21/2022 0:58	18.07	6/21/2022 0:07	4.96	6/21/2022 5:03	145.03
6/22/2022 3:54	50.19	6/22/2022 2:36	81.25	6/21/2022 0:59	18.04	6/21/2022 0:08	4.95	6/21/2022 5:04	145.06
6/22/2022 3:55	50.15	6/22/2022 2:37	81.22	6/21/2022 1:00	18.02	6/21/2022 0:09	4.93	6/21/2022 5:05	145.06
6/22/2022 3:56	50.15	6/22/2022 2:38	81.25	6/21/2022 1:01	18.00	6/21/2022 0:10	5.04	6/21/2022 5:06	145.04
6/22/2022 3:57	50.18	6/22/2022 2:39	81.21	6/21/2022 1:02	17.99	6/21/2022 0:11	5.00	6/21/2022 5:07	145.04
6/22/2022 3:58	50.16	6/22/2022 2:40	81.22	6/21/2022 1:03	17.96	6/21/2022 0:12	4.97	6/21/2022 5:08	145.04
6/22/2022 3:59	50.15	6/22/2022 2:41	81.18	6/21/2022 1:04	17.96	6/21/2022 0:13	4.93	6/21/2022 5:09	145.09
6/22/2022 4:00	50.15	6/22/2022 2:42	81.24	6/21/2022 1:05	17.89	6/21/2022 0:14	4.88	6/21/2022 5:10	145.07
6/22/2022 4:01	50.15	6/22/2022 2:43	81.23	6/21/2022 1:06	17.91	6/21/2022 0:15	4.95	6/21/2022 5:11	145.05
6/22/2022 4:02	50.16	6/22/2022 2:44	81.22	6/21/2022 1:07	17.88	6/21/2022 0:16	4.98	6/21/2022 5:12	145.05
6/22/2022 4:03	50.18	6/22/2022 2:45	81.23	6/21/2022 1:08	17.91	6/21/2022 0:17	4.95	6/21/2022 5:13	145.02
6/22/2022 4:04	50.15	6/22/2022 2:46	81.26	6/21/2022 1:09	17.89	6/21/2022 0:18	4.98	6/21/2022 5:14	145.05
6/22/2022 4:05	50.17	6/22/2022 2:47	81.24	6/21/2022 1:10	17.86	6/21/2022 0:19	4.97	6/21/2022 5:15	145.03
6/22/2022 4:06	50.15	6/22/2022 2:48	81.25	6/21/2022 1:11	17.86	6/21/2022 0:20	4.94	6/21/2022 5:16	145.04
6/22/2022 4:07	50.14	6/22/2022 2:49	81.24	6/21/2022 1:12	17.86	6/21/2022 0:21	4.93	6/21/2022 5:17	145.05
6/22/2022 4:08	50.17	6/22/2022 2:50	81.24	6/21/2022 1:13	17.79	6/21/2022 0:22	4.91	6/21/2022 5:18	145.08
6/22/2022 4:09	50.18	6/22/2022 2:51	81.22	6/21/2022 1:14	17.82	6/21/2022 0:23	5.01	6/21/2022 5:19	145.05
6/22/2022 4:10	50.17	6/22/2022 2:52	81.21	6/21/2022 1:15	17.78	6/21/2022 0:24	5.01	6/21/2022 5:20	145.05
6/22/2022 4:11	50.15	6/22/2022 2:53	81.23	6/21/2022 1:16	17.77	6/21/2022 0:25	4.90	6/21/2022 5:21	145.05
6/22/2022 4:12	50.15	6/22/2022 2:54	81.21	6/21/2022 1:17	17.76	6/21/2022 0:26	4.87	6/21/2022 5:22	145.06

6/22/2022 4:13	50.17	6/22/2022 2:55	81.25	6/21/2022 1:18	17.71	6/21/2022 0:27	4.88	6/21/2022 5:23	145.05
6/22/2022 4:14	50.15	6/22/2022 2:56	81.23	6/21/2022 1:19	17.75	6/21/2022 0:28	4.86	6/21/2022 5:24	145.03
6/22/2022 4:15	50.15	6/22/2022 2:57	81.21	6/21/2022 1:20	17.71	6/21/2022 0:29	4.83	6/21/2022 5:25	145.06
6/22/2022 4:16	50.91	6/22/2022 2:58	81.25	6/21/2022 1:21	17.77	6/21/2022 0:30	4.81	6/21/2022 5:26	145.07
6/22/2022 4:17	53.41	6/22/2022 2:59	81.25	6/21/2022 1:22	17.76	6/21/2022 0:31	4.81	6/21/2022 5:27	145.02
6/22/2022 4:18	54.52	6/22/2022 3:00	81.22	6/21/2022 1:23	17.77	6/21/2022 0:32	4.79	6/21/2022 5:28	145.05
6/22/2022 4:19	55.14	6/22/2022 3:01	81.24	6/21/2022 1:24	17.70	6/21/2022 0:33	4.80	6/21/2022 5:29	145.04
6/22/2022 4:20	53.66	6/22/2022 3:02	81.19	6/21/2022 1:25	17.66	6/21/2022 0:34	4.81	6/21/2022 5:30	145.10
6/22/2022 4:21	52.33	6/22/2022 3:03	81.23	6/21/2022 1:26	17.70	6/21/2022 0:35	4.85	6/21/2022 5:31	145.08
6/22/2022 4:22	51.79	6/22/2022 3:04	81.27	6/21/2022 1:27	17.65	6/21/2022 0:36	4.78	6/21/2022 5:32	145.05
6/22/2022 4:23	51.50	6/22/2022 3:05	81.26	6/21/2022 1:28	17.71	6/21/2022 0:37	4.80	6/21/2022 5:33	145.03
6/22/2022 4:24	51.28	6/22/2022 3:06	81.25	6/21/2022 1:29	17.65	6/21/2022 0:38	4.84	6/21/2022 5:34	145.04
6/22/2022 4:25	51.21	6/22/2022 3:07	81.23	6/21/2022 1:30	17.62	6/21/2022 0:39	4.89	6/21/2022 5:35	145.02
6/22/2022 4:26	51.15	6/22/2022 3:08	81.21	6/21/2022 1:31	17.63	6/21/2022 0:40	4.79	6/21/2022 5:36	145.04
6/22/2022 4:27	51.03	6/22/2022 3:09	81.22	6/21/2022 1:32	17.66	6/21/2022 0:41	4.73	6/21/2022 5:37	145.03
6/22/2022 4:28	50.97	6/22/2022 3:10	81.25	6/21/2022 1:33	17.60	6/21/2022 0:42	4.80	6/21/2022 5:38	145.06
6/22/2022 4:29	50.95	6/22/2022 3:11	81.26	6/21/2022 1:34	17.61	6/21/2022 0:43	4.82	6/21/2022 5:39	145.03
6/22/2022 4:30	50.92	6/22/2022 3:12	81.23	6/21/2022 1:35	17.59	6/21/2022 0:44	4.71	6/21/2022 5:40	145.03
6/22/2022 4:31	50.85	6/22/2022 3:13	81.19	6/21/2022 1:36	17.57	6/21/2022 0:45	4.75	6/21/2022 5:41	145.02
6/22/2022 4:32	50.85	6/22/2022 3:14	81.25	6/21/2022 1:37	17.57	6/21/2022 0:46	4.78	6/21/2022 5:42	145.03
6/22/2022 4:33	50.78	6/22/2022 3:15	81.25	6/21/2022 1:38	17.57	6/21/2022 0:47	4.71	6/21/2022 5:43	145.08
6/22/2022 4:34	50.79	6/22/2022 3:16	81.23	6/21/2022 1:39	17.54	6/21/2022 0:48	4.72	6/21/2022 5:44	145.06
6/22/2022 4:35	50.78	6/22/2022 3:17	81.24	6/21/2022 1:40	17.55	6/21/2022 0:49	4.69	6/21/2022 5:45	145.08
6/22/2022 4:36	50.76	6/22/2022 3:18	81.24	6/21/2022 1:41	17.56	6/21/2022 0:50	4.72	6/21/2022 5:46	145.07
6/22/2022 4:37	50.74	6/22/2022 3:19	81.24	6/21/2022 1:42	17.55	6/21/2022 0:51	4.69	6/21/2022 5:47	145.03
6/22/2022 4:38	50.71	6/22/2022 3:20	81.24	6/21/2022 1:43	17.55	6/21/2022 0:52	4.71	6/21/2022 5:48	145.03
6/22/2022 4:39	50.68	6/22/2022 3:21	81.27	6/21/2022 1:44	17.54	6/21/2022 0:53	4.71	6/21/2022 5:49	145.03
6/22/2022 4:40	50.67	6/22/2022 3:22	81.24	6/21/2022 1:45	17.53	6/21/2022 0:54	4.74	6/21/2022 5:50	145.06
6/22/2022 4:41	50.67	6/22/2022 3:23	81.24	6/21/2022 1:46	17.52	6/21/2022 0:55	4.67	6/21/2022 5:51	145.03
6/22/2022 4:42	50.69	6/22/2022 3:24	81.25	6/21/2022 1:47	17.52	6/21/2022 0:56	4.69	6/21/2022 5:52	145.03
6/22/2022 4:43	50.62	6/22/2022 3:25	81.28	6/21/2022 1:48	17.50	6/21/2022 0:57	4.69	6/21/2022 5:53	145.02
6/22/2022 4:44	50.63	6/22/2022 3:26	81.19	6/21/2022 1:49	17.48	6/21/2022 0:58	4.73	6/21/2022 5:54	145.07
6/22/2022 4:45	50.60	6/22/2022 3:27	81.23	6/21/2022 1:50	17.51	6/21/2022 0:59	4.65	6/21/2022 5:55	145.02
6/22/2022 4:46	50.59	6/22/2022 3:28	81.23	6/21/2022 1:51	17.45	6/21/2022 1:00	4.63	6/21/2022 5:56	145.01
6/22/2022 4:47	50.60	6/22/2022 3:29	81.23	6/21/2022 1:52	17.48	6/21/2022 1:01	4.66	6/21/2022 5:57	145.01
6/22/2022 4:48	50.57	6/22/2022 3:30	81.27	6/21/2022 1:53	17.51	6/21/2022 1:02	4.61	6/21/2022 5:58	145.03
6/22/2022 4:49	50.61	6/22/2022 3:31	81.24	6/21/2022 1:54	17.48	6/21/2022 1:03	4.57	6/21/2022 5:59	145.02
6/22/2022 4:50	50.53	6/22/2022 3:32	81.25	6/21/2022 1:55	17.42	6/21/2022 1:04	4.61	6/21/2022 6:00	145.00
6/22/2022 4:51	50.51	6/22/2022 3:33	81.24	6/21/2022 1:56	17.46	6/21/2022 1:05	4.67	6/21/2022 6:01	145.04
6/22/2022 4:52	50.54	6/22/2022 3:34	81.21	6/21/2022 1:57	17.41	6/21/2022 1:06	4.58	6/21/2022 6:02	145.03
6/22/2022 4:53	50.58	6/22/2022 3:35	81.22	6/21/2022 1:58	17.42	6/21/2022 1:07	4.58	6/21/2022 6:03	145.03
6/22/2022 4:54	50.52	6/22/2022 3:36	81.26	6/21/2022 1:59	17.39	6/21/2022 1:08	4.60	6/21/2022 6:04	145.06
6/22/2022 4:55	50.53	6/22/2022 3:37	81.25	6/21/2022 2:00	17.41	6/21/2022 1:09	4.63	6/21/2022 6:05	145.04
6/22/2022 4:56	50.54	6/22/2022 3:38	81.25	6/21/2022 2:01	17.37	6/21/2022 1:10	4.55	6/21/2022 6:06	145.05
6/22/2022 4:57	50.57	6/22/2022 3:39	81.31	6/21/2022 2:02	17.38	6/21/2022 1:11	4.61	6/21/2022 6:07	145.04
6/22/2022 4:58	50.52	6/22/2022 3:40	81.30	6/21/2022 2:03	17.36	6/21/2022 1:12	4.60	6/21/2022 6:08	145.02
6/22/2022 4:59	50.48	6/22/2022 3:41	81.25	6/21/2022 2:04	17.41	6/21/2022 1:13	4.60	6/21/2022 6:09	145.00
6/22/2022 5:00	50.52	6/22/2022 3:42	81.26	6/21/2022 2:05	17.39	6/21/2022 1:14	4.56	6/21/2022 6:10	145.02
6/22/2022 5:01	50.54	6/22/2022 3:43	81.22	6/21/2022 2:06	17.39	6/21/2022 1:15	4.54	6/21/2022 6:11	145.00
6/22/2022 5:02	50.49	6/22/2022 3:44	81.22	6/21/2022 2:07	17.37	6/21/2022 1:16	4.58	6/21/2022 6:12	145.01
6/22/2022 5:03	50.52	6/22/2022 3:45	81.27	6/21/2022 2:08	17.36	6/21/2022 1:17	4.60	6/21/2022 6:13	145.03
6/22/2022 5:04	50.48	6/22/2022 3:46	81.21	6/21/2022 2:09	17.39	6/21/2022 1:18	4.51	6/21/2022 6:14	145.04
6/22/2022 5:05	50.52	6/22/2022 3:47	81.24	6/21/2022 2:10	17.35	6/21/2022 1:19	4.56	6/21/2022 6:15	145.06
6/22/2022 5:06	50.47	6/22/2022 3:48	81.24	6/21/2022 2:11	17.32	6/21/2022 1:20	4.53	6/21/2022 6:16	145.02
6/22/2022 5:07	50.49	6/22/2022 3:49	81.26	6/21/2022 2:12	17.37	6/21/2022 1:21	4.57	6/21/2022 6:17	145.05
6/22/2022 5:08	50.48	6/22/2022 3:50	81.24	6/21/2022 2:13	17.34	6/21/2022 1:22	4.53	6/21/2022 6:18	145.00
6/22/2022 5:09	50.49	6/22/2022 3:51	81.26	6/21/2022 2:14	17.34	6/21/2022 1:23	4.48	6/21/2022 6:19	145.03
6/22/2022 5:10	50.47	6/22/2022 3:52	81.24	6/21/2022 2:15	17.33	6/21/2022 1:24	4.59	6/21/2022 6:20	145.06
6/22/2022 5:11	50.47	6/22/2022 3:53	81.22	6/21/2022 2:16	17.33	6/21/2022 1:25	4.48	6/21/2022 6:21	145.03
6/22/2022 5:12	50.47	6/22/2022 3:54	81.24	6/21/2022 2:17	17.34	6/21/2022 1:26	4.53	6/21/2022 6:22	145.01
6/22/2022 5:13	50.48	6/22/2022 3:55	81.20	6/21/2022 2:18	17.29	6/21/2022 1:27	4.50	6/21/2022 6:23	145.01
6/22/2022 5:14	50.46	6/22/2022 3:56	81.26	6/21/2022 2:19	17.34	6/21/2022 1:28	4.48	6/21/2022 6:24	145.00
6/22/2022 5:15	50.47	6/22/2022 3:57	81.23	6/21/2022 2:20	17.31	6/21/2022 1:29	4.48	6/21/2022 6:25	145.02
6/22/2022 5:16	50.46	6/22/2022 3:58	81.25	6/21/2022 2:21	17.30	6/21/2022 1:30	4.47	6/21/2022 6:26	145.01
6/22/2022 5:17	50.43	6/22/2022 3:59	81.23	6/21/2022 2:22	17.29	6/21/2022 1:31	4.47	6/21/2022 6:27	145.07
6/22/2022 5:18	50.45	6/22/2022 4:00	81.26	6/21/2022 2:23	17.27	6/21/2022 1:32	4.45	6/21/2022 6:28	145.04
6/22/2022 5:19	50.46	6/22/2022 4:01	81.22	6/21/2022 2:24	17.30	6/21/2022 1:33	4.46	6/21/2022 6:29	145.07
6/22/2022 5:20	50.42	6/22/2022 4:02	81.24	6/21/2022 2:25	17.26	6/21/2022 1:34	4.49	6/21/2022 6:30	145.00
6/22/2022 5:21	50.43	6/22/2022 4:03	81.27	6/21/2022 2:26	17.27	6/21/2022 1:35	4.46	6/21/2022 6:31	145.03
6/22/2022 5:22	50.43	6/22/2022 4:04	81.27	6/21/2022 2:27	17.24	6/21/2022 1:36	4.44	6/21/2022 6:32	145.00
6/22/2022 5:23	50.45	6/22/2022 4:05	81.21	6/21/2022 2:28	17.23	6/21/2022 1:37	4.45	6/21/2022 6:33	145.03
6/22/2022 5:24	50.43	6/22/2022 4:06	81.29	6/21/2022 2:29	17.30	6/21/2022 1:38	4.45	6/21/2022 6:34	145.01
6/22/2022 5:25	50.43	6/22/2022 4:07	81.28	6/21/2022 2:30	17.23	6/21/2022 1:39	4.42	6/21/2022 6:35	145.03
6/22/2022 5:26	50.39	6/22/2022 4:08	81.26	6/21/2022 2:31	17.24	6/21/2022 1:40	4.45	6/21/2022 6:36	145.06
6/22/2022 5:27	50.42	6/22/2022 4:09	81.27	6/21/2022 2:32	17.23	6/21/2022 1:41	4.42	6/21/2022 6:37	145.00
6/22/2022 5:28	50.37	6/22/2022 4:10	81.28	6/21/2022 2:33	17.27	6/21/2022 1:42	4.51	6/21/2022 6:38	144.99
6/22/2022 5:29	50.41	6/22/2022 4:11	81.23	6/21/2022 2:34	17.25	6/21/2022 1:43	4.46	6/21/2022 6:39	145.03
6/22/2022 5:30	50.41	6/22/2022 4:12	81.22	6/21/2022 2:35	17.25	6/21/2022 1:44	4.37	6/21/2022 6:40	145.00
6/22/2022 5:31	50.41	6/22/2022 4:13	81.30	6/21/2022 2:36	17.25	6/21/2022 1:45	4.47	6/21/2022 6:41	145.02
6/22/2022 5:32	50.39	6/22/2022 4:14	81.26	6/21/2022 2:37	17.22	6/21/2022 1:46	4.47	6/21/2022 6:42	145.02
6/22/2022 5:33	50.38	6/22/2022 4:15	81.25	6/21/2022 2:38	17.24	6/21/2022 1:47	4.43	6/21/2022 6:43	145.00
6/22/2022 5:34	50.42	6/22/2022 4:16	81.26	6/21/2022 2:39	17.20	6/21/2022 1:48	4.45	6/21/2022 6:44	145.06
6/22/2022 5:35	50.37	6/22/2022 4:17	81.26	6/21/2022 2:40	17.19	6/21/2022 1:49	4.36	6/21/2022 6:45	145.05
6/22/2022 5:36	50.43	6/22/2022 4:18	81.26	6/21/2022 2:41	17.21	6/21/2022 1:50	4.48	6/21/2022 6:46	145.02
6/22/2022 5:37	50.38	6/22/2022 4:19	81.25	6/21/2022 2:42	17.19	6/21/2022 1:51	4.38	6/21/2022 6:47	145.04
6/22/2022 5:38	50.37	6/22/2022 4:20	81.25	6/21/2022 2:43	17.20	6/21/2022 1:52	4.36	6/21/2022 6:48	145.04
6/22/2022 5:39	50.39	6/22/2022 4:21	81.22	6/21/2022 2:44	17.21	6/21/2022 1:53	4.38	6/21/2022 6:49	145.04
6/22/2022 5:40	50.39	6/22/2022 4:22	81.22	6/21/2022 2:45	17.24	6/21/2022 1:54	4.39	6/21/2022 6:50	144.99

6/22/2022 5:41	50.36	6/22/2022 4:23	81.24	6/21/2022 2:46	17.24	6/21/2022 1:55	4.40	6/21/2022 6:51	145.04
6/22/2022 5:42	50.41	6/22/2022 4:24	81.26	6/21/2022 2:47	17.18	6/21/2022 1:56	4.42	6/21/2022 6:52	145.01
6/22/2022 5:43	50.40	6/22/2022 4:25	81.26	6/21/2022 2:48	17.15	6/21/2022 1:57	4.43	6/21/2022 6:53	144.99
6/22/2022 5:44	50.38	6/22/2022 4:26	81.26	6/21/2022 2:49	17.19	6/21/2022 1:58	4.34	6/21/2022 6:54	145.04
6/22/2022 5:45	50.37	6/22/2022 4:27	81.27	6/21/2022 2:50	17.13	6/21/2022 1:59	4.36	6/21/2022 6:55	145.01
6/22/2022 5:46	50.38	6/22/2022 4:28	81.28	6/21/2022 2:51	17.20	6/21/2022 2:00	4.37	6/21/2022 6:56	145.02
6/22/2022 5:47	50.37	6/22/2022 4:29	81.26	6/21/2022 2:52	17.16	6/21/2022 2:01	4.42	6/21/2022 6:57	145.02
6/22/2022 5:48	50.40	6/22/2022 4:30	81.25	6/21/2022 2:53	17.12	6/21/2022 2:02	4.33	6/21/2022 6:58	145.04
6/22/2022 5:49	50.37	6/22/2022 4:31	81.27	6/21/2022 2:54	17.16	6/21/2022 2:03	4.35	6/21/2022 6:59	145.03
6/22/2022 5:50	50.39	6/22/2022 4:32	81.26	6/21/2022 2:55	17.15	6/21/2022 2:04	4.35	6/21/2022 7:00	145.06
6/22/2022 5:51	50.36	6/22/2022 4:33	81.25	6/21/2022 2:56	17.18	6/21/2022 2:05	4.40	6/21/2022 7:01	145.04
6/22/2022 5:52	50.39	6/22/2022 4:34	81.24	6/21/2022 2:57	17.11	6/21/2022 2:06	4.37	6/21/2022 7:02	145.03
6/22/2022 5:53	50.38	6/22/2022 4:35	81.20	6/21/2022 2:58	17.14	6/21/2022 2:07	4.38	6/21/2022 7:03	145.01
6/22/2022 5:54	50.36	6/22/2022 4:36	81.22	6/21/2022 2:59	17.14	6/21/2022 2:08	4.34	6/21/2022 7:04	144.98
6/22/2022 5:55	50.32	6/22/2022 4:37	81.29	6/21/2022 3:00	17.15	6/21/2022 2:09	4.33	6/21/2022 7:05	145.04
6/22/2022 5:56	50.37	6/22/2022 4:38	81.27	6/21/2022 3:01	17.18	6/21/2022 2:10	4.32	6/21/2022 7:06	145.03
6/22/2022 5:57	50.33	6/22/2022 4:39	81.26	6/21/2022 3:02	17.17	6/21/2022 2:11	4.37	6/21/2022 7:07	145.02
6/22/2022 5:58	50.34	6/22/2022 4:40	81.23	6/21/2022 3:03	17.12	6/21/2022 2:12	4.40	6/21/2022 7:08	145.01
6/22/2022 5:59	50.32	6/22/2022 4:41	81.25	6/21/2022 3:04	17.14	6/21/2022 2:13	4.30	6/21/2022 7:09	145.04
6/22/2022 6:00	50.37	6/22/2022 4:42	81.28	6/21/2022 3:05	17.14	6/21/2022 2:14	4.34	6/21/2022 7:10	145.01
6/22/2022 6:01	50.35	6/22/2022 4:43	81.28	6/21/2022 3:06	17.07	6/21/2022 2:15	4.34	6/21/2022 7:11	145.01
6/22/2022 6:02	50.33	6/22/2022 4:44	81.23	6/21/2022 3:07	17.08	6/21/2022 2:16	4.41	6/21/2022 7:12	145.02
6/22/2022 6:03	50.34	6/22/2022 4:45	81.22	6/21/2022 3:08	17.12	6/21/2022 2:17	4.23	6/21/2022 7:13	145.05
6/22/2022 6:04	50.40	6/22/2022 4:46	81.24	6/21/2022 3:09	17.13	6/21/2022 2:18	4.32	6/21/2022 7:14	145.01
6/22/2022 6:05	50.34	6/22/2022 4:47	81.28	6/21/2022 3:10	17.12	6/21/2022 2:19	4.34	6/21/2022 7:15	145.04
6/22/2022 6:06	50.34	6/22/2022 4:48	81.23	6/21/2022 3:11	17.16	6/21/2022 2:20	4.31	6/21/2022 7:16	145.03
6/22/2022 6:07	50.37	6/22/2022 4:49	81.23	6/21/2022 3:12	17.13	6/21/2022 2:21	4.32	6/21/2022 7:17	145.03
6/22/2022 6:08	50.37	6/22/2022 4:50	81.24	6/21/2022 3:13	17.07	6/21/2022 2:22	4.31	6/21/2022 7:18	145.01
6/22/2022 6:09	50.34	6/22/2022 4:51	81.24	6/21/2022 3:14	17.10	6/21/2022 2:23	4.32	6/21/2022 7:19	145.04
6/22/2022 6:10	50.34	6/22/2022 4:52	81.28	6/21/2022 3:15	17.10	6/21/2022 2:24	4.28	6/21/2022 7:20	145.01
6/22/2022 6:11	50.31	6/22/2022 4:53	81.24	6/21/2022 3:16	17.08	6/21/2022 2:25	4.81	6/21/2022 7:21	145.01
6/22/2022 6:12	50.32	6/22/2022 4:54	81.22	6/21/2022 3:17	17.08	6/21/2022 2:26	5.20	6/21/2022 7:22	145.03
6/22/2022 6:13	50.34	6/22/2022 4:55	81.28	6/21/2022 3:18	17.10	6/21/2022 2:27	5.32	6/21/2022 7:23	145.03
6/22/2022 6:14	50.35	6/22/2022 4:56	81.24	6/21/2022 3:19	17.08	6/21/2022 2:28	5.51	6/21/2022 7:24	145.02
6/22/2022 6:15	50.34	6/22/2022 4:57	81.28	6/21/2022 3:20	17.08	6/21/2022 2:29	5.69	6/21/2022 7:25	145.03
6/22/2022 6:16	50.36	6/22/2022 4:58	81.25	6/21/2022 3:21	17.07	6/21/2022 2:30	5.74	6/21/2022 7:26	145.02
6/22/2022 6:17	50.35	6/22/2022 4:59	81.26	6/21/2022 3:22	17.10	6/21/2022 2:31	5.81	6/21/2022 7:27	145.00
6/22/2022 6:18	50.32	6/22/2022 5:00	81.25	6/21/2022 3:23	17.09	6/21/2022 2:32	5.92	6/21/2022 7:28	145.00
6/22/2022 6:19	50.30	6/22/2022 5:01	81.25	6/21/2022 3:24	17.09	6/21/2022 2:33	6.02	6/21/2022 7:29	145.00
6/22/2022 6:20	50.32	6/22/2022 5:02	81.27	6/21/2022 3:25	17.06	6/21/2022 2:34	6.11	6/21/2022 7:30	145.01
6/22/2022 6:21	50.33	6/22/2022 5:03	81.22	6/21/2022 3:26	17.07	6/21/2022 2:35	6.14	6/21/2022 7:31	145.04
6/22/2022 6:22	50.31	6/22/2022 5:04	81.22	6/21/2022 3:27	17.09	6/21/2022 2:36	6.27	6/21/2022 7:32	145.05
6/22/2022 6:23	50.34	6/22/2022 5:05	81.24	6/21/2022 3:28	17.08	6/21/2022 2:37	6.28	6/21/2022 7:33	145.02
6/22/2022 6:24	50.33	6/22/2022 5:06	81.24	6/21/2022 3:29	17.03	6/21/2022 2:38	6.36	6/21/2022 7:34	145.02
6/22/2022 6:25	50.29	6/22/2022 5:07	81.27	6/21/2022 3:30	17.11	6/21/2022 2:39	6.42	6/21/2022 7:35	145.03
6/22/2022 6:26	50.35	6/22/2022 5:08	81.29	6/21/2022 3:31	17.04	6/21/2022 2:40	5.92	6/21/2022 7:36	145.05
6/22/2022 6:27	50.28	6/22/2022 5:09	81.27	6/21/2022 3:32	17.07	6/21/2022 2:41	5.75	6/21/2022 7:37	145.04
6/22/2022 6:28	50.31	6/22/2022 5:10	81.25	6/21/2022 3:33	17.07	6/21/2022 2:42	5.54	6/21/2022 7:38	145.02
6/22/2022 6:29	50.33	6/22/2022 5:11	81.26	6/21/2022 3:34	17.06	6/21/2022 2:43	5.42	6/21/2022 7:39	145.02
6/22/2022 6:30	50.34	6/22/2022 5:12	81.28	6/21/2022 3:35	17.06	6/21/2022 2:44	5.41	6/21/2022 7:40	145.02
6/22/2022 6:31	50.33	6/22/2022 5:13	81.26	6/21/2022 3:36	17.11	6/21/2022 2:45	5.36	6/21/2022 7:41	145.06
6/22/2022 6:32	50.31	6/22/2022 5:14	81.27	6/21/2022 3:37	17.05	6/21/2022 2:46	5.30	6/21/2022 7:42	145.01
6/22/2022 6:33	50.32	6/22/2022 5:15	81.28	6/21/2022 3:38	17.02	6/21/2022 2:47	5.30	6/21/2022 7:43	145.03
6/22/2022 6:34	50.34	6/22/2022 5:16	81.28	6/21/2022 3:39	17.04	6/21/2022 2:48	5.30	6/21/2022 7:44	145.01
6/22/2022 6:35	50.30	6/22/2022 5:17	81.28	6/21/2022 3:40	17.08	6/21/2022 2:49	5.28	6/21/2022 7:45	145.01
6/22/2022 6:36	50.32	6/22/2022 5:18	81.23	6/21/2022 3:41	17.01	6/21/2022 2:50	5.22	6/21/2022 7:46	144.99
6/22/2022 6:37	50.28	6/22/2022 5:19	81.27	6/21/2022 3:42	17.04	6/21/2022 2:51	5.16	6/21/2022 7:47	145.04
6/22/2022 6:38	50.33	6/22/2022 5:20	81.25	6/21/2022 3:43	17.02	6/21/2022 2:52	5.22	6/21/2022 7:48	145.02
6/22/2022 6:39	50.32	6/22/2022 5:21	81.28	6/21/2022 3:44	16.97	6/21/2022 2:53	5.21	6/21/2022 7:49	144.98
6/22/2022 6:40	50.32	6/22/2022 5:22	81.24	6/21/2022 3:45	17.06	6/21/2022 2:54	5.12	6/21/2022 7:50	145.03
6/22/2022 6:41	50.32	6/22/2022 5:23	81.29	6/21/2022 3:46	17.01	6/21/2022 2:55	5.11	6/21/2022 7:51	145.00
6/22/2022 6:42	50.31	6/22/2022 5:24	81.24	6/21/2022 3:47	17.04	6/21/2022 2:56	5.16	6/21/2022 7:52	145.03
6/22/2022 6:43	50.30	6/22/2022 5:25	81.24	6/21/2022 3:48	17.03	6/21/2022 2:57	5.12	6/21/2022 7:53	145.04
6/22/2022 6:44	50.37	6/22/2022 5:26	81.27	6/21/2022 3:49	17.04	6/21/2022 2:58	5.11	6/21/2022 7:54	145.01
6/22/2022 6:45	50.29	6/22/2022 5:27	81.28	6/21/2022 3:50	17.00	6/21/2022 2:59	5.05	6/21/2022 7:55	145.01
6/22/2022 6:46	50.29	6/22/2022 5:28	81.23	6/21/2022 3:51	17.01	6/21/2022 3:00	5.12	6/21/2022 7:56	145.03
6/22/2022 6:47	50.32	6/22/2022 5:29	81.29	6/21/2022 3:52	16.99	6/21/2022 3:01	5.06	6/21/2022 7:57	145.01
6/22/2022 6:48	50.31	6/22/2022 5:30	81.28	6/21/2022 3:53	17.03	6/21/2022 3:02	5.07	6/21/2022 7:58	145.01
6/22/2022 6:49	50.32	6/22/2022 5:31	81.32	6/21/2022 3:54	16.96	6/21/2022 3:03	5.09	6/21/2022 7:59	145.00
6/22/2022 6:50	50.28	6/22/2022 5:32	81.27	6/21/2022 3:55	17.01	6/21/2022 3:04	5.00	6/21/2022 8:00	145.01
6/22/2022 6:51	50.29	6/22/2022 5:33	81.24	6/21/2022 3:56	16.98	6/21/2022 3:05	5.08	6/21/2022 8:01	145.00
6/22/2022 6:52	50.27	6/22/2022 5:34	81.26	6/21/2022 3:57	17.01	6/21/2022 3:06	5.06	6/21/2022 8:02	144.99
6/22/2022 6:53	50.27	6/22/2022 5:35	81.22	6/21/2022 3:58	16.97	6/21/2022 3:07	5.02	6/21/2022 8:03	145.02
6/22/2022 6:54	50.33	6/22/2022 5:36	81.25	6/21/2022 3:59	17.02	6/21/2022 3:08	4.99	6/21/2022 8:04	145.05
6/22/2022 6:55	50.29	6/22/2022 5:37	81.26	6/21/2022 4:00	16.98	6/21/2022 3:09	5.02	6/21/2022 8:05	145.00
6/22/2022 6:56	50.29	6/22/2022 5:38	81.27	6/21/2022 4:01	16.98	6/21/2022 3:10	5.01	6/21/2022 8:06	145.01
6/22/2022 6:57	50.28	6/22/2022 5:39	81.24	6/21/2022 4:02	16.96	6/21/2022 3:11	5.00	6/21/2022 8:07	144.98
6/22/2022 6:58	50.30	6/22/2022 5:40	81.22	6/21/2022 4:03	17.03	6/21/2022 3:12	5.04	6/21/2022 8:08	145.01
6/22/2022 6:59	50.29	6/22/2022 5:41	81.30	6/21/2022 4:04	17.00	6/21/2022 3:13	5.03	6/21/2022 8:09	145.04
6/22/2022 7:00	50.29	6/22/2022 5:42	81.25	6/21/2022 4:05	16.99	6/21/2022 3:14	4.97	6/21/2022 8:10	145.01
6/22/2022 7:01	50.31	6/22/2022 5:43	81.25	6/21/2022 4:06	16.98	6/21/2022 3:15	5.05	6/21/2022 8:11	144.96
6/22/2022 7:02	50.29	6/22/2022 5:44	81.23	6/21/2022 4:07	16.99	6/21/2022 3:16	5.06	6/21/2022 8:12	144.99
6/22/2022 7:03	50.27	6/22/2022 5:45	81.28	6/21/2022 4:08	16.99	6/21/2022 3:17	4.99	6/21/2022 8:13	145.01
6/22/2022 7:04	50.29	6/22/2022 5:46	81.29	6/21/2022 4:09	16.94	6/21/2022 3:18	5.07	6/21/2022 8:14	145.02
6/22/2022 7:05	50.29	6/22/2022 5:47	81.29	6/21/2022 4:10	16.93	6/21/2022 3:19	5.05	6/21/2022 8:15	144.99
6/22/2022 7:06	50.30	6/22/2022 5:48	81.24	6/21/2022 4:11	16.98	6/21/2022 3:20	5.00	6/21/2022 8:16	145.00
6/22/2022 7:07	50.28	6/22/2022 5:49	81.26	6/21/2022 4:12	17.00	6/21/2022 3:21	5.06	6/21/2022 8:17	145.02
6/22/2022 7:08	50.28	6/22/2022 5:50	81.26	6/21/2022 4:13	16.97	6/21/2022 3:22	5.05	6/21/2022 8:18	145.00

6/22/2022 7:09	50.27	6/22/2022 5:51	81.27	6/21/2022 4:14	16.97	6/21/2022 3:23	4.98	6/21/2022 8:19	145.02
6/22/2022 7:10	50.28	6/22/2022 5:52	81.26	6/21/2022 4:15	16.97	6/21/2022 3:24	5.03	6/21/2022 8:20	145.05
6/22/2022 7:11	50.27	6/22/2022 5:53	81.26	6/21/2022 4:16	16.97	6/21/2022 3:25	5.00	6/21/2022 8:21	145.03
6/22/2022 7:12	50.26	6/22/2022 5:54	81.27	6/21/2022 4:17	16.99	6/21/2022 3:26	4.96	6/21/2022 8:22	145.03
6/22/2022 7:13	50.27	6/22/2022 5:55	81.29	6/21/2022 4:18	16.94	6/21/2022 3:27	4.99	6/21/2022 8:23	145.00
6/22/2022 7:14	50.28	6/22/2022 5:56	81.27	6/21/2022 4:19	16.94	6/21/2022 3:28	5.01	6/21/2022 8:24	145.02
6/22/2022 7:15	50.26	6/22/2022 5:57	81.23	6/21/2022 4:20	16.96	6/21/2022 3:29	4.97	6/21/2022 8:25	145.04
6/22/2022 7:16	50.28	6/22/2022 5:58	81.26	6/21/2022 4:21	16.97	6/21/2022 3:30	4.98	6/21/2022 8:26	144.99
6/22/2022 7:17	50.26	6/22/2022 5:59	81.25	6/21/2022 4:22	16.93	6/21/2022 3:31	4.98	6/21/2022 8:27	144.60
6/22/2022 7:18	50.25	6/22/2022 6:00	81.27	6/21/2022 4:23	16.92	6/21/2022 3:32	4.94	6/21/2022 8:28	144.04
6/22/2022 7:19	50.24	6/22/2022 6:01	81.23	6/21/2022 4:24	16.94	6/21/2022 3:33	4.93	6/21/2022 8:29	143.47
6/22/2022 7:20	50.26	6/22/2022 6:02	81.28	6/21/2022 4:25	16.95	6/21/2022 3:34	4.99	6/21/2022 8:30	142.93
6/22/2022 7:21	50.29	6/22/2022 6:03	81.29	6/21/2022 4:26	16.87	6/21/2022 3:35	4.93	6/21/2022 8:31	142.40
6/22/2022 7:22	50.30	6/22/2022 6:04	81.26	6/21/2022 4:27	17.00	6/21/2022 3:36	4.96	6/21/2022 8:32	141.85
6/22/2022 7:23	50.29	6/22/2022 6:05	81.26	6/21/2022 4:28	16.96	6/21/2022 3:37	4.96	6/21/2022 8:33	141.32
6/22/2022 7:24	50.28	6/22/2022 6:06	81.27	6/21/2022 4:29	16.95	6/21/2022 3:38	4.94	6/21/2022 8:34	140.80
6/22/2022 7:25	50.28	6/22/2022 6:07	81.29	6/21/2022 4:30	16.92	6/21/2022 3:39	4.96	6/21/2022 8:35	140.31
6/22/2022 7:26	50.28	6/22/2022 6:08	81.28	6/21/2022 4:31	16.92	6/21/2022 3:40	4.95	6/21/2022 8:36	139.79
6/22/2022 7:27	50.27	6/22/2022 6:09	81.28	6/21/2022 4:32	16.95	6/21/2022 3:41	4.94	6/21/2022 8:37	139.27
6/22/2022 7:28	50.28	6/22/2022 6:10	81.23	6/21/2022 4:33	16.93	6/21/2022 3:42	4.96	6/21/2022 8:38	138.75
6/22/2022 7:29	50.26	6/22/2022 6:11	81.29	6/21/2022 4:34	16.91	6/21/2022 3:43	4.99	6/21/2022 8:39	138.23
6/22/2022 7:30	50.28	6/22/2022 6:12	81.23	6/21/2022 4:35	16.94	6/21/2022 3:44	4.92	6/21/2022 8:40	137.66
6/22/2022 7:31	50.30	6/22/2022 6:13	81.26	6/21/2022 4:36	16.89	6/21/2022 3:45	4.90	6/21/2022 8:41	137.21
6/22/2022 7:32	50.26	6/22/2022 6:14	81.27	6/21/2022 4:37	16.91	6/21/2022 3:46	4.91	6/21/2022 8:42	136.69
6/22/2022 7:33	50.29	6/22/2022 6:15	81.25	6/21/2022 4:38	16.94	6/21/2022 3:47	4.92	6/21/2022 8:43	136.21
6/22/2022 7:34	50.27	6/22/2022 6:16	81.26	6/21/2022 4:39	16.91	6/21/2022 3:48	4.99	6/21/2022 8:44	135.72
6/22/2022 7:35	50.27	6/22/2022 6:17	81.25	6/21/2022 4:40	16.86	6/21/2022 3:49	4.89	6/21/2022 8:45	135.19
6/22/2022 7:36	50.29	6/22/2022 6:18	81.24	6/21/2022 4:41	16.90	6/21/2022 3:50	5.42	6/21/2022 8:46	134.71
6/22/2022 7:37	50.29	6/22/2022 6:19	81.28	6/21/2022 4:42	16.95	6/21/2022 3:51	5.68	6/21/2022 8:47	134.20
6/22/2022 7:38	50.28	6/22/2022 6:20	81.25	6/21/2022 4:43	16.90	6/21/2022 3:52	5.88	6/21/2022 8:48	133.72
6/22/2022 7:39	50.30	6/22/2022 6:21	81.21	6/21/2022 4:44	16.88	6/21/2022 3:53	6.04	6/21/2022 8:49	133.25
6/22/2022 7:40	50.28	6/22/2022 6:22	81.25	6/21/2022 4:45	16.91	6/21/2022 3:54	6.16	6/21/2022 8:50	132.74
6/22/2022 7:41	50.25	6/22/2022 6:23	81.26	6/21/2022 4:46	16.90	6/21/2022 3:55	6.22	6/21/2022 8:51	132.27
6/22/2022 7:42	50.28	6/22/2022 6:24	81.29	6/21/2022 4:47	16.93	6/21/2022 3:56	6.25	6/21/2022 8:52	131.82
6/22/2022 7:43	50.28	6/22/2022 6:25	81.24	6/21/2022 4:48	16.91	6/21/2022 3:57	6.26	6/21/2022 8:53	131.33
6/22/2022 7:44	50.25	6/22/2022 6:26	81.27	6/21/2022 4:49	16.88	6/21/2022 3:58	5.70	6/21/2022 8:54	130.86
6/22/2022 7:45	50.25	6/22/2022 6:27	81.25	6/21/2022 4:50	16.94	6/21/2022 3:59	5.55	6/21/2022 8:55	130.39
6/22/2022 7:46	50.25	6/22/2022 6:28	81.26	6/21/2022 4:51	16.93	6/21/2022 4:00	5.44	6/21/2022 8:56	129.92
6/22/2022 7:47	50.23	6/22/2022 6:29	81.24	6/21/2022 4:52	16.89	6/21/2022 4:01	5.29	6/21/2022 8:57	129.44
6/22/2022 7:48	50.25	6/22/2022 6:30	81.26	6/21/2022 4:53	16.93	6/21/2022 4:02	5.23	6/21/2022 8:58	129.01
6/22/2022 7:49	50.27	6/22/2022 6:31	81.25	6/21/2022 4:54	16.90	6/21/2022 4:03	5.20	6/21/2022 8:59	128.56
6/22/2022 7:50	50.28	6/22/2022 6:32	81.24	6/21/2022 4:55	16.90	6/21/2022 4:04	5.23	6/21/2022 9:00	128.09
6/22/2022 7:51	50.26	6/22/2022 6:33	81.27	6/21/2022 4:56	16.89	6/21/2022 4:05	5.11	6/21/2022 9:01	127.63
6/22/2022 7:52	50.28	6/22/2022 6:34	81.32	6/21/2022 4:57	16.90	6/21/2022 4:06	5.06	6/21/2022 9:02	127.17
6/22/2022 7:53	50.27	6/22/2022 6:35	81.25	6/21/2022 4:58	16.92	6/21/2022 4:07	5.10	6/21/2022 9:03	126.72
6/22/2022 7:54	50.24	6/22/2022 6:36	81.25	6/21/2022 4:59	16.89	6/21/2022 4:08	5.15	6/21/2022 9:04	126.27
6/22/2022 7:55	50.28	6/22/2022 6:37	81.28	6/21/2022 5:00	16.86	6/21/2022 4:09	5.01	6/21/2022 9:05	125.82
6/22/2022 7:56	50.23	6/22/2022 6:38	81.27	6/21/2022 5:01	16.94	6/21/2022 4:10	4.98	6/21/2022 9:06	125.38
6/22/2022 7:57	50.28	6/22/2022 6:39	81.23	6/21/2022 5:02	16.93	6/21/2022 4:11	5.03	6/21/2022 9:07	124.91
6/22/2022 7:58	50.25	6/22/2022 6:40	81.28	6/21/2022 5:03	16.89	6/21/2022 4:12	4.93	6/21/2022 9:08	124.50
6/22/2022 7:59	50.23	6/22/2022 6:41	81.25	6/21/2022 5:04	16.89	6/21/2022 4:13	4.99	6/21/2022 9:09	124.05
6/22/2022 8:00	50.27	6/22/2022 6:42	81.26	6/21/2022 5:05	16.88	6/21/2022 4:14	4.93	6/21/2022 9:10	123.64
6/22/2022 8:01	50.26	6/22/2022 6:43	81.25	6/21/2022 5:06	16.92	6/21/2022 4:15	4.88	6/21/2022 9:11	123.21
6/22/2022 8:02	50.26	6/22/2022 6:44	81.23	6/21/2022 5:07	16.89	6/21/2022 4:16	4.93	6/21/2022 9:12	122.78
6/22/2022 8:03	50.25	6/22/2022 6:45	81.23	6/21/2022 5:08	16.89	6/21/2022 4:17	4.87	6/21/2022 9:13	122.35
6/22/2022 8:04	50.26	6/22/2022 6:46	81.26	6/21/2022 5:09	16.89	6/21/2022 4:18	4.90	6/21/2022 9:14	121.93
6/22/2022 8:05	50.25	6/22/2022 6:47	81.26	6/21/2022 5:10	16.89	6/21/2022 4:19	4.82	6/21/2022 9:15	121.51
6/22/2022 8:06	50.24	6/22/2022 6:48	81.28	6/21/2022 5:11	16.91	6/21/2022 4:20	4.87	6/21/2022 9:16	126.40
6/22/2022 8:07	50.25	6/22/2022 6:49	81.26	6/21/2022 5:12	16.90	6/21/2022 4:21	4.86	6/21/2022 9:17	126.60
6/22/2022 8:08	50.25	6/22/2022 6:50	81.29	6/21/2022 5:13	16.88	6/21/2022 4:22	4.79	6/21/2022 9:18	126.05
6/22/2022 8:09	50.25	6/22/2022 6:51	81.24	6/21/2022 5:14	16.91	6/21/2022 4:23	4.81	6/21/2022 9:19	125.58
6/22/2022 8:10	50.24	6/22/2022 6:52	81.26	6/21/2022 5:15	16.85	6/21/2022 4:24	4.84	6/21/2022 9:20	125.10
6/22/2022 8:11	50.25	6/22/2022 6:53	81.30	6/21/2022 5:16	16.90	6/21/2022 4:25	4.79	6/21/2022 9:21	124.63
6/22/2022 8:12	50.22	6/22/2022 6:54	81.25	6/21/2022 5:17	16.87	6/21/2022 4:26	4.75	6/21/2022 9:22	124.14
6/22/2022 8:13	50.25	6/22/2022 6:55	81.26	6/21/2022 5:18	16.90	6/21/2022 4:27	4.72	6/21/2022 9:23	123.71
6/22/2022 8:14	50.25	6/22/2022 6:56	81.30	6/21/2022 5:19	16.88	6/21/2022 4:28	4.73	6/21/2022 9:24	123.26
6/22/2022 8:15	50.24	6/22/2022 6:57	81.27	6/21/2022 5:20	16.84	6/21/2022 4:29	4.79	6/21/2022 9:25	122.83
6/22/2022 8:16	50.20	6/22/2022 6:58	81.27	6/21/2022 5:21	16.83	6/21/2022 4:30	4.70	6/21/2022 9:26	122.37
6/22/2022 8:17	50.25	6/22/2022 6:59	81.26	6/21/2022 5:22	16.87	6/21/2022 4:31	4.73	6/21/2022 9:27	121.91
6/22/2022 8:18	50.26	6/22/2022 7:00	81.29	6/21/2022 5:23	16.91	6/21/2022 4:32	4.68	6/21/2022 9:28	121.51
6/22/2022 8:19	50.24	6/22/2022 7:01	81.28	6/21/2022 5:24	16.91	6/21/2022 4:33	4.72	6/21/2022 9:29	121.10
6/22/2022 8:20	50.25	6/22/2022 7:02	81.25	6/21/2022 5:25	16.84	6/21/2022 4:34	4.71	6/21/2022 9:30	120.70
6/22/2022 8:21	50.25	6/22/2022 7:03	81.28	6/21/2022 5:26	16.88	6/21/2022 4:35	4.67	6/21/2022 9:31	120.24
6/22/2022 8:22	50.26	6/22/2022 7:04	81.26	6/21/2022 5:27	16.87	6/21/2022 4:36	4.68	6/21/2022 9:32	119.85
6/22/2022 8:23	50.22	6/22/2022 7:05	81.25	6/21/2022 5:28	16.85	6/21/2022 4:37	4.63	6/21/2022 9:33	119.43
6/22/2022 8:24	50.22	6/22/2022 7:06	81.26	6/21/2022 5:29	16.89	6/21/2022 4:38	4.72	6/21/2022 9:34	118.99
6/22/2022 8:25	50.24	6/22/2022 7:07	81.28	6/21/2022 5:30	16.82	6/21/2022 4:39	4.65	6/21/2022 9:35	118.61
6/22/2022 8:26	50.25	6/22/2022 7:08	81.27	6/21/2022 5:31	16.83	6/21/2022 4:40	4.61	6/21/2022 9:36	118.25
6/22/2022 8:27	50.24	6/22/2022 7:09	81.24	6/21/2022 5:32	16.87	6/21/2022 4:41	4.60	6/21/2022 9:37	117.80
6/22/2022 8:28	50.25	6/22/2022 7:10	81.24	6/21/2022 5:33	16.89	6/21/2022 4:42	4.65	6/21/2022 9:38	117.43
6/22/2022 8:29	50.21	6/22/2022 7:11	81.27	6/21/2022 5:34	16.86	6/21/2022 4:43	4.59	6/21/2022 9:39	117.09
6/22/2022 8:30	50.25	6/22/2022 7:12	81.24	6/21/2022 5:35	16.84	6/21/2022 4:44	4.62	6/21/2022 9:40	116.70
6/22/2022 8:31	50.23	6/22/2022 7:13	81.26	6/21/2022 5:36	16.85	6/21/2022 4:45	4.64	6/21/2022 9:41	116.31
6/22/2022 8:32	50.24	6/22/2022 7:14	81.29	6/21/2022 5:37	16.88	6/21/2022 4:46	4.64	6/21/2022 9:42	115.94
6/22/2022 8:33	50.21	6/22/2022 7:15	81.27	6/21/2022 5:38	16.83	6/21/2022 4:47	4.58	6/21/2022 9:43	115.59
6/22/2022 8:34	50.24	6/22/2022 7:16	81.26	6/21/2022 5:39	16.85	6/21/2022 4:48	4.62	6/21/2022 9:44	115.21
6/22/2022 8:35	50.26	6/22/2022 7:17	81.26	6/21/2022 5:40	16.87	6/21/2022 4:49	4.58	6/21/2022 9:45	114.83
6/22/2022 8:36	50.21	6/22/2022 7:18	81.30	6/21/2022 5:41	16.82	6/21/2022 4:50	4.59	6/21/2022 9:46	114.50

6/22/2022 8:37	50.21	6/22/2022 7:19	81.25	6/21/2022 5:42	16.84	6/21/2022 4:51	4.61	6/21/2022 9:47	114.13
6/22/2022 8:38	50.22	6/22/2022 7:20	81.24	6/21/2022 5:43	16.78	6/21/2022 4:52	4.50	6/21/2022 9:48	113.76
6/22/2022 8:39	50.23	6/22/2022 7:21	81.22	6/21/2022 5:44	16.83	6/21/2022 4:53	4.50	6/21/2022 9:49	113.43
6/22/2022 8:40	50.25	6/22/2022 7:22	81.29	6/21/2022 5:45	16.77	6/21/2022 4:54	4.58	6/21/2022 9:50	113.05
6/22/2022 8:41	50.20	6/22/2022 7:23	81.29	6/21/2022 5:46	16.86	6/21/2022 4:55	4.54	6/21/2022 9:51	112.71
6/22/2022 8:42	50.23	6/22/2022 7:24	81.28	6/21/2022 5:47	16.89	6/21/2022 4:56	4.46	6/21/2022 9:52	112.42
6/22/2022 8:43	50.24	6/22/2022 7:25	81.28	6/21/2022 5:48	16.80	6/21/2022 4:57	4.48	6/21/2022 9:53	112.08
6/22/2022 8:44	50.22	6/22/2022 7:26	81.28	6/21/2022 5:49	16.83	6/21/2022 4:58	4.50	6/21/2022 9:54	111.74
6/22/2022 8:45	50.25	6/22/2022 7:27	81.30	6/21/2022 5:50	16.85	6/21/2022 4:59	4.53	6/21/2022 9:55	111.40
6/22/2022 8:46	50.25	6/22/2022 7:28	81.29	6/21/2022 5:51	16.85	6/21/2022 5:00	4.52	6/21/2022 9:56	111.07
6/22/2022 8:47	50.23	6/22/2022 7:29	81.28	6/21/2022 5:52	16.85	6/21/2022 5:01	4.45	6/21/2022 9:57	110.73
6/22/2022 8:48	50.21	6/22/2022 7:30	81.27	6/21/2022 5:53	16.86	6/21/2022 5:02	4.49	6/21/2022 9:58	110.43
6/22/2022 8:49	50.22	6/22/2022 7:31	81.31	6/21/2022 5:54	16.85	6/21/2022 5:03	4.47	6/21/2022 9:59	110.13
6/22/2022 8:50	50.21	6/22/2022 7:32	81.24	6/21/2022 5:55	16.81	6/21/2022 5:04	4.53	6/21/2022 10:00	109.80
6/22/2022 8:51	50.22	6/22/2022 7:33	81.27	6/21/2022 5:56	16.82	6/21/2022 5:05	4.42	6/21/2022 10:01	109.44
6/22/2022 8:52	50.22	6/22/2022 7:34	81.26	6/21/2022 5:57	16.79	6/21/2022 5:06	4.45	6/21/2022 10:02	109.17
6/22/2022 8:53	50.21	6/22/2022 7:35	81.24	6/21/2022 5:58	16.87	6/21/2022 5:07	4.49	6/21/2022 10:03	108.87
6/22/2022 8:54	50.23	6/22/2022 7:36	81.29	6/21/2022 5:59	16.83	6/21/2022 5:08	4.46	6/21/2022 10:04	108.58
6/22/2022 8:55	50.22	6/22/2022 7:37	81.25	6/21/2022 6:00	16.84	6/21/2022 5:09	4.41	6/21/2022 10:05	108.28
6/22/2022 8:56	50.22	6/22/2022 7:38	81.28	6/21/2022 6:01	16.80	6/21/2022 5:10	4.44	6/21/2022 10:06	107.96
6/22/2022 8:57	50.24	6/22/2022 7:39	81.30	6/21/2022 6:02	16.81	6/21/2022 5:11	4.45	6/21/2022 10:07	107.68
6/22/2022 8:58	50.26	6/22/2022 7:40	82.92	6/21/2022 6:03	16.83	6/21/2022 5:12	4.37	6/21/2022 10:08	107.37
6/22/2022 8:59	50.24	6/22/2022 7:41	83.61	6/21/2022 6:04	16.84	6/21/2022 5:13	4.38	6/21/2022 10:09	107.09
6/22/2022 9:00	50.22	6/22/2022 7:42	83.26	6/21/2022 6:05	16.85	6/21/2022 5:14	4.39	6/21/2022 10:10	106.83
6/22/2022 9:01	50.24	6/22/2022 7:43	82.89	6/21/2022 6:06	16.86	6/21/2022 5:15	4.45	6/21/2022 10:11	106.50
6/22/2022 9:02	50.25	6/22/2022 7:44	82.68	6/21/2022 6:07	16.85	6/21/2022 5:16	4.34	6/21/2022 10:12	106.29
6/22/2022 9:03	50.23	6/22/2022 7:45	82.48	6/21/2022 6:08	16.82	6/21/2022 5:17	4.33	6/21/2022 10:13	105.97
6/22/2022 9:04	50.21	6/22/2022 7:46	82.29	6/21/2022 6:09	16.83	6/21/2022 5:18	4.39	6/21/2022 10:14	113.09
6/22/2022 9:05	50.22	6/22/2022 7:47	82.15	6/21/2022 6:10	16.82	6/21/2022 5:19	4.38	6/21/2022 10:15	114.51
6/22/2022 9:06	50.19	6/22/2022 7:48	82.09	6/21/2022 6:11	16.80	6/21/2022 5:20	4.33	6/21/2022 10:16	114.04
6/22/2022 9:07	50.20	6/22/2022 7:49	81.98	6/21/2022 6:12	16.82	6/21/2022 5:21	4.34	6/21/2022 10:17	120.33
6/22/2022 9:08	50.25	6/22/2022 7:50	81.91	6/21/2022 6:13	16.82	6/21/2022 5:22	4.34	6/21/2022 10:18	122.01
6/22/2022 9:09	50.23	6/22/2022 7:51	81.83	6/21/2022 6:14	16.84	6/21/2022 5:23	4.40	6/21/2022 10:19	121.38
6/22/2022 9:10	50.24	6/22/2022 7:52	81.79	6/21/2022 6:15	16.81	6/21/2022 5:24	4.28	6/21/2022 10:20	127.02
6/22/2022 9:11	50.24	6/22/2022 7:53	81.75	6/21/2022 6:16	16.83	6/21/2022 5:25	4.33	6/21/2022 10:21	126.68
6/22/2022 9:12	50.23	6/22/2022 7:54	81.72	6/21/2022 6:17	16.83	6/21/2022 5:26	4.33	6/21/2022 10:22	126.07
6/22/2022 9:13	50.25	6/22/2022 7:55	81.69	6/21/2022 6:18	16.80	6/21/2022 5:27	4.25	6/21/2022 10:23	125.53
6/22/2022 9:14	50.23	6/22/2022 7:56	81.59	6/21/2022 6:19	16.83	6/21/2022 5:28	4.25	6/21/2022 10:24	124.93
6/22/2022 9:15	50.19	6/22/2022 7:57	81.60	6/21/2022 6:20	16.83	6/21/2022 5:29	4.30	6/21/2022 10:25	124.41
6/22/2022 9:16	50.23	6/22/2022 7:58	81.58	6/21/2022 6:21	16.79	6/21/2022 5:30	4.27	6/21/2022 10:26	123.85
6/22/2022 9:17	50.22	6/22/2022 7:59	81.57	6/21/2022 6:22	16.77	6/21/2022 5:31	4.26	6/21/2022 10:27	123.38
6/22/2022 9:18	50.22	6/22/2022 8:00	81.51	6/21/2022 6:23	16.83	6/21/2022 5:32	4.22	6/21/2022 10:28	122.89
6/22/2022 9:19	50.23	6/22/2022 8:01	81.48	6/21/2022 6:24	16.85	6/21/2022 5:33	4.28	6/21/2022 10:29	122.41
6/22/2022 9:20	50.25	6/22/2022 8:02	81.49	6/21/2022 6:25	16.83	6/21/2022 5:34	4.29	6/21/2022 10:30	121.91
6/22/2022 9:21	50.21	6/22/2022 8:03	81.43	6/21/2022 6:26	16.86	6/21/2022 5:35	4.23	6/21/2022 10:31	121.42
6/22/2022 9:22	50.20	6/22/2022 8:04	81.46	6/21/2022 6:27	16.82	6/21/2022 5:36	4.19	6/21/2022 10:32	120.98
6/22/2022 9:23	50.21	6/22/2022 8:05	81.42	6/21/2022 6:28	16.79	6/21/2022 5:37	4.24	6/21/2022 10:33	120.51
6/22/2022 9:24	50.25	6/22/2022 8:06	81.43	6/21/2022 6:29	16.82	6/21/2022 5:38	4.29	6/21/2022 10:34	120.02
6/22/2022 9:25	50.21	6/22/2022 8:07	81.44	6/21/2022 6:30	16.79	6/21/2022 5:39	4.23	6/21/2022 10:35	119.59
6/22/2022 9:26	50.21	6/22/2022 8:08	81.38	6/21/2022 6:31	16.84	6/21/2022 5:40	4.21	6/21/2022 10:36	119.16
6/22/2022 9:27	50.20	6/22/2022 8:09	81.41	6/21/2022 6:32	16.81	6/21/2022 5:41	4.20	6/21/2022 10:37	118.72
6/22/2022 9:28	50.19	6/22/2022 8:10	81.37	6/21/2022 6:33	16.76	6/21/2022 5:42	4.29	6/21/2022 10:38	118.27
6/22/2022 9:29	50.21	6/22/2022 8:11	81.36	6/21/2022 6:34	16.81	6/21/2022 5:43	4.22	6/21/2022 10:39	117.81
6/22/2022 9:30	50.20	6/22/2022 8:12	81.38	6/21/2022 6:35	16.79	6/21/2022 5:44	4.14	6/21/2022 10:40	117.41
6/22/2022 9:31	50.21	6/22/2022 8:13	81.36	6/21/2022 6:36	16.85	6/21/2022 5:45	4.21	6/21/2022 10:41	116.98
6/22/2022 9:32	50.23	6/22/2022 8:14	81.38	6/21/2022 6:37	16.84	6/21/2022 5:46	4.23	6/21/2022 10:42	116.60
6/22/2022 9:33	50.89	6/22/2022 8:15	81.34	6/21/2022 6:38	16.81	6/21/2022 5:47	4.17	6/21/2022 10:43	116.19
6/22/2022 9:34	53.43	6/22/2022 8:16	81.38	6/21/2022 6:39	16.82	6/21/2022 5:48	4.19	6/21/2022 10:44	115.75
6/22/2022 9:35	54.57	6/22/2022 8:17	81.31	6/21/2022 6:40	16.79	6/21/2022 5:49	4.17	6/21/2022 10:45	115.38
6/22/2022 9:36	55.23	6/22/2022 8:18	81.38	6/21/2022 6:41	16.79	6/21/2022 5:50	4.16	6/21/2022 10:46	114.97
6/22/2022 9:37	53.74	6/22/2022 8:19	81.35	6/21/2022 6:42	16.80	6/21/2022 5:51	4.13	6/21/2022 10:47	114.59
6/22/2022 9:38	52.39	6/22/2022 8:20	81.34	6/21/2022 6:43	16.84	6/21/2022 5:52	4.14	6/21/2022 10:48	114.18
6/22/2022 9:39	51.80	6/22/2022 8:21	81.34	6/21/2022 6:44	16.81	6/21/2022 5:53	4.22	6/21/2022 10:49	113.81
6/22/2022 9:40	51.57	6/22/2022 8:22	81.33	6/21/2022 6:45	16.83	6/21/2022 5:54	4.13	6/21/2022 10:50	113.43
6/22/2022 9:41	51.37	6/22/2022 8:23	81.35	6/21/2022 6:46	16.76	6/21/2022 5:55	4.14	6/21/2022 10:51	113.07
6/22/2022 9:42	51.26	6/22/2022 8:24	81.33	6/21/2022 6:47	16.80	6/21/2022 5:56	4.16	6/21/2022 10:52	112.70
6/22/2022 9:43	51.18	6/22/2022 8:25	81.32	6/21/2022 6:48	16.75	6/21/2022 5:57	4.15	6/21/2022 10:53	112.29
6/22/2022 9:44	51.08	6/22/2022 8:26	81.34	6/21/2022 6:49	16.80	6/21/2022 5:58	4.11	6/21/2022 10:54	111.96
6/22/2022 9:45	51.01	6/22/2022 8:27	81.33	6/21/2022 6:50	16.77	6/21/2022 5:59	4.13	6/21/2022 10:55	111.59
6/22/2022 9:46	50.98	6/22/2022 8:28	81.36	6/21/2022 6:51	16.75	6/21/2022 6:00	4.19	6/21/2022 10:56	111.23
6/22/2022 9:47	50.97	6/22/2022 8:29	81.29	6/21/2022 6:52	16.83	6/21/2022 6:01	4.14	6/21/2022 10:57	110.88
6/22/2022 9:48	50.94	6/22/2022 8:30	81.29	6/21/2022 6:53	16.80	6/21/2022 6:02	4.11	6/21/2022 10:58	110.53
6/22/2022 9:49	50.89	6/22/2022 8:31	81.34	6/21/2022 6:54	16.82	6/21/2022 6:03	6.31	6/21/2022 10:59	110.18
6/22/2022 9:50	50.82	6/22/2022 8:32	81.32	6/21/2022 6:55	16.76	6/21/2022 6:04	7.37	6/21/2022 11:00	109.87
6/22/2022 9:51	50.82	6/22/2022 8:33	81.33	6/21/2022 6:56	16.80	6/21/2022 6:05	8.15	6/21/2022 11:01	109.53
6/22/2022 9:52	50.79	6/22/2022 8:34	81.31	6/21/2022 6:57	16.82	6/21/2022 6:06	8.68	6/21/2022 11:02	109.18
6/22/2022 9:53	50.81	6/22/2022 8:35	81.32	6/21/2022 6:58	16.79	6/21/2022 6:07	9.62	6/21/2022 11:03	108.87
6/22/2022 9:54	50.73	6/22/2022 8:36	81.31	6/21/2022 6:59	16.80	6/21/2022 6:08	10.23	6/21/2022 11:04	108.53
6/22/2022 9:55	50.73	6/22/2022 8:37	81.33	6/21/2022 7:00	16.79	6/21/2022 6:09	10.73	6/21/2022 11:05	108.21
6/22/2022 9:56	50.74	6/22/2022 8:38	81.29	6/21/2022 7:01	16.86	6/21/2022 6:10	11.16	6/21/2022 11:06	107.91
6/22/2022 9:57	50.69	6/22/2022 8:39	81.29	6/21/2022 7:02	16.81	6/21/2022 6:11	11.56	6/21/2022 11:07	107.60
6/22/2022 9:58	50.70	6/22/2022 8:40	81.32	6/21/2022 7:03	16.80	6/21/2022 6:12	11.93	6/21/2022 11:08	107.28
6/22/2022 9:59	50.69	6/22/2022 8:41	81.30	6/21/2022 7:04	16.78	6/21/2022 6:13	12.19	6/21/2022 11:09	106.97
6/22/2022 10:00	50.69	6/22/2022 8:42	81.27	6/21/2022 7:05	16.78	6/21/2022 6:14	12.52	6/21/2022 11:10	106.70
6/22/2022 10:01	50.67	6/22/2022 8:43	81.30	6/21/2022 7:06	16.83	6/21/2022 6:15	12.80	6/21/2022 11:11	106.42
6/22/2022 10:02	50.67	6/22/2022 8:44	81.29	6/21/2022 7:07	16.84	6/21/2022 6:16	13.07	6/21/2022 11:12	106.14
6/22/2022 10:03	50.67	6/22/2022 8:45	81.31	6/21/2022 7:08	16.79	6/21/2022 6:17	12.99	6/21/2022 11:13	105.88
6/22/2022 10:04	50.64	6/22/2022 8:46	81.30	6/21/2022 7:09	16.81	6/21/2022 6:18	12.66	6/21/2022 11:14	105.60

6/22/2022 10:05	50.61	6/22/2022 8:47	81.30	6/21/2022 7:10	16.76	6/21/2022 6:19	12.44	6/21/2022 11:15	105.36
6/22/2022 10:06	50.59	6/22/2022 8:48	81.29	6/21/2022 7:11	16.77	6/21/2022 6:20	12.39	6/21/2022 11:16	105.09
6/22/2022 10:07	50.62	6/22/2022 8:49	81.29	6/21/2022 7:12	16.80	6/21/2022 6:21	12.50	6/21/2022 11:17	104.82
6/22/2022 10:08	50.61	6/22/2022 8:50	81.29	6/21/2022 7:13	16.78	6/21/2022 6:22	12.47	6/21/2022 11:18	104.60
6/22/2022 10:09	50.62	6/22/2022 8:51	81.29	6/21/2022 7:14	16.80	6/21/2022 6:23	12.70	6/21/2022 11:19	104.32
6/22/2022 10:10	50.59	6/22/2022 8:52	81.32	6/21/2022 7:15	16.79	6/21/2022 6:24	12.84	6/21/2022 11:20	104.13
6/22/2022 10:11	50.61	6/22/2022 8:53	81.28	6/21/2022 7:16	16.82	6/21/2022 6:25	12.79	6/21/2022 11:21	103.91
6/22/2022 10:12	50.58	6/22/2022 8:54	81.29	6/21/2022 7:17	16.77	6/21/2022 6:26	12.82	6/21/2022 11:22	103.68
6/22/2022 10:13	50.55	6/22/2022 8:55	81.32	6/21/2022 7:18	16.78	6/21/2022 6:27	12.88	6/21/2022 11:23	103.42
6/22/2022 10:14	50.57	6/22/2022 8:56	81.30	6/21/2022 7:19	16.72	6/21/2022 6:28	13.01	6/21/2022 11:24	103.19
6/22/2022 10:15	50.55	6/22/2022 8:57	81.27	6/21/2022 7:20	16.80	6/21/2022 6:29	13.03	6/21/2022 11:25	102.88
6/22/2022 10:16	50.56	6/22/2022 8:58	81.32	6/21/2022 7:21	16.76	6/21/2022 6:30	13.12	6/21/2022 11:26	102.72
6/22/2022 10:17	50.55	6/22/2022 8:59	81.30	6/21/2022 7:22	16.75	6/21/2022 6:31	13.20	6/21/2022 11:27	102.44
6/22/2022 10:18	50.52	6/22/2022 9:00	81.33	6/21/2022 7:23	16.83	6/21/2022 6:32	14.05	6/21/2022 11:28	102.21
6/22/2022 10:19	50.55	6/22/2022 9:01	81.27	6/21/2022 7:24	16.78	6/21/2022 6:33	14.32	6/21/2022 11:29	101.96
6/22/2022 10:20	50.54	6/22/2022 9:02	81.31	6/21/2022 7:25	16.78	6/21/2022 6:34	14.65	6/21/2022 11:30	101.75
6/22/2022 10:21	50.52	6/22/2022 9:03	81.32	6/21/2022 7:26	16.78	6/21/2022 6:35	14.85	6/21/2022 11:31	101.51
6/22/2022 10:22	50.51	6/22/2022 9:04	81.33	6/21/2022 7:27	16.81	6/21/2022 6:36	15.01	6/21/2022 11:32	101.30
6/22/2022 10:23	50.50	6/22/2022 9:05	81.29	6/21/2022 7:28	16.77	6/21/2022 6:37	15.73	6/21/2022 11:33	101.05
6/22/2022 10:24	50.50	6/22/2022 9:06	81.29	6/21/2022 7:29	16.84	6/21/2022 6:38	15.70	6/21/2022 11:34	100.81
6/22/2022 10:25	50.51	6/22/2022 9:07	81.33	6/21/2022 7:30	16.79	6/21/2022 6:39	15.75	6/21/2022 11:35	100.61
6/22/2022 10:26	50.53	6/22/2022 9:08	81.28	6/21/2022 7:31	16.78	6/21/2022 6:40	15.90	6/21/2022 11:36	100.34
6/22/2022 10:27	50.50	6/22/2022 9:09	81.31	6/21/2022 7:32	16.80	6/21/2022 6:41	16.04	6/21/2022 11:37	100.14
6/22/2022 10:28	50.47	6/22/2022 9:10	81.31	6/21/2022 7:33	16.83	6/21/2022 6:42	16.56	6/21/2022 11:38	99.95
6/22/2022 10:29	50.50	6/22/2022 9:11	81.32	6/21/2022 7:34	16.76	6/21/2022 6:43	17.18	6/21/2022 11:39	99.72
6/22/2022 10:30	50.51	6/22/2022 9:12	81.27	6/21/2022 7:35	16.80	6/21/2022 6:44	17.62	6/21/2022 11:40	99.52
6/22/2022 10:31	50.51	6/22/2022 9:13	81.32	6/21/2022 7:36	16.78	6/21/2022 6:45	17.88	6/21/2022 11:41	99.29
6/22/2022 10:32	50.48	6/22/2022 9:14	81.29	6/21/2022 7:37	16.81	6/21/2022 6:46	18.17	6/21/2022 11:42	99.08
6/22/2022 10:33	50.46	6/22/2022 9:15	81.31	6/21/2022 7:38	16.83	6/21/2022 6:47	18.79	6/21/2022 11:43	98.91
6/22/2022 10:34	50.47	6/22/2022 9:16	81.27	6/21/2022 7:39	16.78	6/21/2022 6:48	18.96	6/21/2022 11:44	98.65
6/22/2022 10:35	50.51	6/22/2022 9:17	81.30	6/21/2022 7:40	16.79	6/21/2022 6:49	19.17	6/21/2022 11:45	98.46
6/22/2022 10:36	50.47	6/22/2022 9:18	81.26	6/21/2022 7:41	16.79	6/21/2022 6:50	19.23	6/21/2022 11:46	98.26
6/22/2022 10:37	50.46	6/22/2022 9:19	81.26	6/21/2022 7:42	16.83	6/21/2022 6:51	19.33	6/21/2022 11:47	98.06
6/22/2022 10:38	50.49	6/22/2022 9:20	81.25	6/21/2022 7:43	16.76	6/21/2022 6:52	19.60	6/21/2022 11:48	97.82
6/22/2022 10:39	50.47	6/22/2022 9:21	81.30	6/21/2022 7:44	16.81	6/21/2022 6:53	19.61	6/21/2022 11:49	97.63
6/22/2022 10:40	50.49	6/22/2022 9:22	81.30	6/21/2022 7:45	16.83	6/21/2022 6:54	19.16	6/21/2022 11:50	97.44
6/22/2022 10:41	50.43	6/22/2022 9:23	81.32	6/21/2022 7:46	16.81	6/21/2022 6:55	18.94	6/21/2022 11:51	97.21
6/22/2022 10:42	50.45	6/22/2022 9:24	81.27	6/21/2022 7:47	16.84	6/21/2022 6:56	18.88	6/21/2022 11:52	97.03
6/22/2022 10:43	50.46	6/22/2022 9:25	81.28	6/21/2022 7:48	16.82	6/21/2022 6:57	18.82	6/21/2022 11:53	96.86
6/22/2022 10:44	50.47	6/22/2022 9:26	81.25	6/21/2022 7:49	16.81	6/21/2022 6:58	18.81	6/21/2022 11:54	96.63
6/22/2022 10:45	50.43	6/22/2022 9:27	81.31	6/21/2022 7:50	16.80	6/21/2022 6:59	18.95	6/21/2022 11:55	96.40
6/22/2022 10:46	50.46	6/22/2022 9:28	81.27	6/21/2022 7:51	16.80	6/21/2022 7:00	18.94	6/21/2022 11:56	96.24
6/22/2022 10:47	50.46	6/22/2022 9:29	81.28	6/21/2022 7:52	16.81	6/21/2022 7:01	18.96	6/21/2022 11:57	96.04
6/22/2022 10:48	50.43	6/22/2022 9:30	81.28	6/21/2022 7:53	16.82	6/21/2022 7:02	19.03	6/21/2022 11:58	95.90
6/22/2022 10:49	50.43	6/22/2022 9:31	81.30	6/21/2022 7:54	16.77	6/21/2022 7:03	19.03	6/21/2022 11:59	95.66
6/22/2022 10:50	50.45	6/22/2022 9:32	81.28	6/21/2022 7:55	16.84	6/21/2022 7:04	19.12	6/21/2022 12:00	95.55
6/22/2022 10:51	50.41	6/22/2022 9:33	81.29	6/21/2022 7:56	16.77	6/21/2022 7:05	19.18	6/21/2022 12:01	95.30
6/22/2022 10:52	50.48	6/22/2022 9:34	81.30	6/21/2022 7:57	16.81	6/21/2022 7:06	19.26	6/21/2022 12:02	95.13
6/22/2022 10:53	50.45	6/22/2022 9:35	81.29	6/21/2022 7:58	16.79	6/21/2022 7:07	18.75	6/21/2022 12:03	94.97
6/22/2022 10:54	50.46	6/22/2022 9:36	81.29	6/21/2022 7:59	16.75	6/21/2022 7:08	18.34	6/21/2022 12:04	94.81
6/22/2022 10:55	50.43	6/22/2022 9:37	81.29	6/21/2022 8:00	16.80	6/21/2022 7:09	17.89	6/21/2022 12:05	94.63
6/22/2022 10:56	50.46	6/22/2022 9:38	81.26	6/21/2022 8:01	16.79	6/21/2022 7:10	17.66	6/21/2022 12:06	94.43
6/22/2022 10:57	50.42	6/22/2022 9:39	81.29	6/21/2022 8:02	16.76	6/21/2022 7:11	17.39	6/21/2022 12:07	94.28
6/22/2022 10:58	50.40	6/22/2022 9:40	81.26	6/21/2022 8:03	16.83	6/21/2022 7:12	17.22	6/21/2022 12:08	94.11
6/22/2022 10:59	50.40	6/22/2022 9:41	81.28	6/21/2022 8:04	16.77	6/21/2022 7:13	17.07	6/21/2022 12:09	93.93
6/22/2022 11:00	50.40	6/22/2022 9:42	81.28	6/21/2022 8:05	16.80	6/21/2022 7:14	16.99	6/21/2022 12:10	93.78
6/22/2022 11:01	50.42	6/22/2022 9:43	81.27	6/21/2022 8:06	16.80	6/21/2022 7:15	15.92	6/21/2022 12:11	93.64
6/22/2022 11:02	50.38	6/22/2022 9:44	81.27	6/21/2022 8:07	16.75	6/21/2022 7:16	15.39	6/21/2022 12:12	93.52
6/22/2022 11:03	50.38	6/22/2022 9:45	81.28	6/21/2022 8:08	16.78	6/21/2022 7:17	14.92	6/21/2022 12:13	93.31
6/22/2022 11:04	50.42	6/22/2022 9:46	81.27	6/21/2022 8:09	16.82	6/21/2022 7:18	14.60	6/21/2022 12:14	93.15
6/22/2022 11:05	50.42	6/22/2022 9:47	81.31	6/21/2022 8:10	16.77	6/21/2022 7:19	14.52	6/21/2022 12:15	93.01
6/22/2022 11:06	50.38	6/22/2022 9:48	81.24	6/21/2022 8:11	16.78	6/21/2022 7:20	14.20	6/21/2022 12:16	92.85
6/22/2022 11:07	50.34	6/22/2022 9:49	81.30	6/21/2022 8:12	16.78	6/21/2022 7:21	13.98	6/21/2022 12:17	92.67
6/22/2022 11:08	50.38	6/22/2022 9:50	81.27	6/21/2022 8:13	16.78	6/21/2022 7:22	13.80	6/21/2022 12:18	92.52
6/22/2022 11:09	50.36	6/22/2022 9:51	81.28	6/21/2022 8:14	16.82	6/21/2022 7:23	13.63	6/21/2022 12:19	92.36
6/22/2022 11:10	50.44	6/22/2022 9:52	81.32	6/21/2022 8:15	16.81	6/21/2022 7:24	13.46	6/21/2022 12:20	92.18
6/22/2022 11:11	50.37	6/22/2022 9:53	81.27	6/21/2022 8:16	16.78	6/21/2022 7:25	13.39	6/21/2022 12:21	92.03
6/22/2022 11:12	50.36	6/22/2022 9:54	81.28	6/21/2022 8:17	16.78	6/21/2022 7:26	13.23	6/21/2022 12:22	91.89
6/22/2022 11:13	50.38	6/22/2022 9:55	81.27	6/21/2022 8:18	16.80	6/21/2022 7:27	13.11	6/21/2022 12:23	91.75
6/22/2022 11:14	50.37	6/22/2022 9:56	81.28	6/21/2022 8:19	16.78	6/21/2022 7:28	13.02	6/21/2022 12:24	91.60
6/22/2022 11:15	50.38	6/22/2022 9:57	81.30	6/21/2022 8:20	16.77	6/21/2022 7:29	12.89	6/21/2022 12:25	91.49
6/22/2022 11:16	50.38	6/22/2022 9:58	81.29	6/21/2022 8:21	16.78	6/21/2022 7:30	12.74	6/21/2022 12:26	91.34
6/22/2022 11:17	50.37	6/22/2022 9:59	81.28	6/21/2022 8:22	16.80	6/21/2022 7:31	12.69	6/21/2022 12:27	91.19
6/22/2022 11:18	50.37	6/22/2022 10:00	81.29	6/21/2022 8:23	16.78	6/21/2022 7:32	12.53	6/21/2022 12:28	91.07
6/22/2022 11:19	50.35	6/22/2022 10:01	81.30	6/21/2022 8:24	16.81	6/21/2022 7:33	12.47	6/21/2022 12:29	90.99
6/22/2022 11:20	50.38	6/22/2022 10:02	81.27	6/21/2022 8:25	16.79	6/21/2022 7:34	12.36	6/21/2022 12:30	90.82
6/22/2022 11:21	50.38	6/22/2022 10:03	81.26	6/21/2022 8:26	16.80	6/21/2022 7:35	12.31	6/21/2022 12:31	90.68
6/22/2022 11:22	50.36	6/22/2022 10:04	81.29	6/21/2022 8:27	16.81	6/21/2022 7:36	12.22	6/21/2022 12:32	90.55
6/22/2022 11:23	50.36	6/22/2022 10:05	81.28	6/21/2022 8:28	16.79	6/21/2022 7:37	12.14	6/21/2022 12:33	90.42
6/22/2022 11:24	50.37	6/22/2022 10:06	81.29	6/21/2022 8:29	16.80	6/21/2022 7:38	11.99	6/21/2022 12:34	90.26
6/22/2022 11:25	50.37	6/22/2022 10:07	81.26	6/21/2022 8:30	16.80	6/21/2022 7:39	11.99	6/21/2022 12:35	90.12
6/22/2022 11:26	50.37	6/22/2022 10:08	81.24	6/21/2022 8:31	16.78	6/21/2022 7:40	11.88	6/21/2022 12:36	90.04
6/22/2022 11:27	50.40	6/22/2022 10:09	81.28	6/21/2022 8:32	16.82	6/21/2022 7:41	11.78	6/21/2022 12:37	89.87
6/22/2022 11:28	50.39	6/22/2022 10:10	81.27	6/21/2022 8:33	16.81	6/21/2022 7:42	11.79	6/21/2022 12:38	89.75
6/22/2022 11:29	50.35	6/22/2022 10:11	81.31	6/21/2022 8:34	16.82	6/21/2022 7:43	11.64	6/21/2022 12:39	89.63
6/22/2022 11:30	50.38	6/22/2022 10:12	81.25	6/21/2022 8:35	16.80	6/21/2022 7:44	11.62	6/21/2022 12:40	89.50
6/22/2022 11:31	50.37	6/22/2022 10:13	81.27	6/21/2022 8:36	16.80	6/21/2022 7:45	11.54	6/21/2022 12:41	89.33
6/22/2022 11:32	50.38	6/22/2022 10:14	81.25	6/21/2022 8:37	16.83	6/21/2022 7:46	11.43	6/21/2022 12:42	89.22

6/22/2022 11:33	50.32	6/22/2022 10:15	81.28	6/21/2022 8:38	16.77	6/21/2022 7:47	11.33	6/21/2022 12:43	94.76
6/22/2022 11:34	50.34	6/22/2022 10:16	81.26	6/21/2022 8:39	16.80	6/21/2022 7:48	11.36	6/21/2022 12:44	94.94
6/22/2022 11:35	50.36	6/22/2022 10:17	81.26	6/21/2022 8:40	16.79	6/21/2022 7:49	11.19	6/21/2022 12:45	94.71
6/22/2022 11:36	50.34	6/22/2022 10:18	81.27	6/21/2022 8:41	16.76	6/21/2022 7:50	11.12	6/21/2022 12:46	94.45
6/22/2022 11:37	50.35	6/22/2022 10:19	81.28	6/21/2022 8:42	16.81	6/21/2022 7:51	11.07	6/21/2022 12:47	94.21
6/22/2022 11:38	50.34	6/22/2022 10:20	81.28	6/21/2022 8:43	16.81	6/21/2022 7:52	11.03	6/21/2022 12:48	94.04
6/22/2022 11:39	50.34	6/22/2022 10:21	81.30	6/21/2022 8:44	16.82	6/21/2022 7:53	10.91	6/21/2022 12:49	93.87
6/22/2022 11:40	50.35	6/22/2022 10:22	81.27	6/21/2022 8:45	16.82	6/21/2022 7:54	10.89	6/21/2022 12:50	93.71
6/22/2022 11:41	50.38	6/22/2022 10:23	81.27	6/21/2022 8:46	16.82	6/21/2022 7:55	10.83	6/21/2022 12:51	93.46
6/22/2022 11:42	50.33	6/22/2022 10:24	81.26	6/21/2022 8:47	16.80	6/21/2022 7:56	10.76	6/21/2022 12:52	93.35
6/22/2022 11:43	50.37	6/22/2022 10:25	81.28	6/21/2022 8:48	16.80	6/21/2022 7:57	10.71	6/21/2022 12:53	93.13
6/22/2022 11:44	50.32	6/22/2022 10:26	81.31	6/21/2022 8:49	16.82	6/21/2022 7:58	10.61	6/21/2022 12:54	92.92
6/22/2022 11:45	50.34	6/22/2022 10:27	81.29	6/21/2022 8:50	16.81	6/21/2022 7:59	10.58	6/21/2022 12:55	92.73
6/22/2022 11:46	50.36	6/22/2022 10:28	81.25	6/21/2022 8:51	16.79	6/21/2022 8:00	10.53	6/21/2022 12:56	92.56
6/22/2022 11:47	50.32	6/22/2022 10:29	81.29	6/21/2022 8:52	16.78	6/21/2022 8:01	10.51	6/21/2022 12:57	92.34
6/22/2022 11:48	50.33	6/22/2022 10:30	81.28	6/21/2022 8:53	16.83	6/21/2022 8:02	10.65	6/21/2022 12:58	92.14
6/22/2022 11:49	50.31	6/22/2022 10:31	81.25	6/21/2022 8:54	16.78	6/21/2022 8:03	10.42	6/21/2022 12:59	92.00
6/22/2022 11:50	50.30	6/22/2022 10:32	81.28	6/21/2022 8:55	16.80	6/21/2022 8:04	10.42	6/21/2022 13:00	91.86
6/22/2022 11:51	50.30	6/22/2022 10:33	81.29	6/21/2022 8:56	16.81	6/21/2022 8:05	10.30	6/21/2022 13:01	91.70
6/22/2022 11:52	50.37	6/22/2022 10:34	81.29	6/21/2022 8:57	16.83	6/21/2022 8:06	10.26	6/21/2022 13:02	91.51
6/22/2022 11:53	50.33	6/22/2022 10:35	81.33	6/21/2022 8:58	16.76	6/21/2022 8:07	10.22	6/21/2022 13:03	91.36
6/22/2022 11:54	50.34	6/22/2022 10:36	81.25	6/21/2022 8:59	16.81	6/21/2022 8:08	10.16	6/21/2022 13:04	91.23
6/22/2022 11:55	50.33	6/22/2022 10:37	81.29	6/21/2022 9:00	16.80	6/21/2022 8:09	10.13	6/21/2022 13:05	91.07
6/22/2022 11:56	50.33	6/22/2022 10:38	81.28	6/21/2022 9:01	16.80	6/21/2022 8:10	10.14	6/21/2022 13:06	90.93
6/22/2022 11:57	50.32	6/22/2022 10:39	81.26	6/21/2022 9:02	16.83	6/21/2022 8:11	10.06	6/21/2022 13:07	90.77
6/22/2022 11:58	50.31	6/22/2022 10:40	81.29	6/21/2022 9:03	16.82	6/21/2022 8:12	9.96	6/21/2022 13:08	90.63
6/22/2022 11:59	50.33	6/22/2022 10:41	81.30	6/21/2022 9:04	16.77	6/21/2022 8:13	9.93	6/21/2022 13:09	90.48
6/22/2022 12:00	50.33	6/22/2022 10:42	81.24	6/21/2022 9:05	22.38	6/21/2022 8:14	10.20	6/21/2022 13:10	90.31
6/22/2022 12:01	50.30	6/22/2022 10:43	81.29	6/21/2022 9:06	25.80	6/21/2022 8:15	10.05	6/21/2022 13:11	90.18
6/22/2022 12:02	50.29	6/22/2022 10:44	81.23	6/21/2022 9:07	27.31	6/21/2022 8:16	9.91	6/21/2022 13:12	90.01
6/22/2022 12:03	50.30	6/22/2022 10:45	81.28	6/21/2022 9:08	24.03	6/21/2022 8:17	9.97	6/21/2022 13:13	89.91
6/22/2022 12:04	50.32	6/22/2022 10:46	81.26	6/21/2022 9:09	22.37	6/21/2022 8:18	9.77	6/21/2022 13:14	89.72
6/22/2022 12:05	50.32	6/22/2022 10:47	81.29	6/21/2022 9:10	21.37	6/21/2022 8:19	9.76	6/21/2022 13:15	89.60
6/22/2022 12:06	50.33	6/22/2022 10:48	81.28	6/21/2022 9:11	20.71	6/21/2022 8:20	9.69	6/21/2022 13:16	89.43
6/22/2022 12:07	50.33	6/22/2022 10:49	81.26	6/21/2022 9:12	20.27	6/21/2022 8:21	9.61	6/21/2022 13:17	89.29
6/22/2022 12:08	50.34	6/22/2022 10:50	81.26	6/21/2022 9:13	19.93	6/21/2022 8:22	9.65	6/21/2022 13:18	89.18
6/22/2022 12:09	50.32	6/22/2022 10:51	81.25	6/21/2022 9:14	19.70	6/21/2022 8:23	9.54	6/21/2022 13:19	89.01
6/22/2022 12:10	50.33	6/22/2022 10:52	81.26	6/21/2022 9:15	19.48	6/21/2022 8:24	9.43	6/21/2022 13:20	88.88
6/22/2022 12:11	50.31	6/22/2022 10:53	81.27	6/21/2022 9:16	19.29	6/21/2022 8:25	9.50	6/21/2022 13:21	88.79
6/22/2022 12:12	50.29	6/22/2022 10:54	81.23	6/21/2022 9:17	19.17	6/21/2022 8:26	9.47	6/21/2022 13:22	88.62
6/22/2022 12:13	50.31	6/22/2022 10:55	81.28	6/21/2022 9:18	19.02	6/21/2022 8:27	9.44	6/21/2022 13:23	88.49
6/22/2022 12:14	50.31	6/22/2022 10:56	81.30	6/21/2022 9:19	18.92	6/21/2022 8:28	9.35	6/21/2022 13:24	88.34
6/22/2022 12:15	50.30	6/22/2022 10:57	81.26	6/21/2022 9:20	18.81	6/21/2022 8:29	9.32	6/21/2022 13:25	88.22
6/22/2022 12:16	50.29	6/22/2022 10:58	81.31	6/21/2022 9:21	24.27	6/21/2022 8:30	9.38	6/21/2022 13:26	88.06
6/22/2022 12:17	50.29	6/22/2022 10:59	81.26	6/21/2022 9:22	27.60	6/21/2022 8:31	9.24	6/21/2022 13:27	87.94
6/22/2022 12:18	50.32	6/22/2022 11:00	81.27	6/21/2022 9:23	27.42	6/21/2022 8:32	9.24	6/21/2022 13:28	87.83
6/22/2022 12:19	50.33	6/22/2022 11:01	81.25	6/21/2022 9:24	24.71	6/21/2022 8:33	9.17	6/21/2022 13:29	87.66
6/22/2022 12:20	50.28	6/22/2022 11:02	81.29	6/21/2022 9:25	23.28	6/21/2022 8:34	9.16	6/21/2022 13:30	87.53
6/22/2022 12:21	50.28	6/22/2022 11:03	81.28	6/21/2022 9:26	22.33	6/21/2022 8:35	9.08	6/21/2022 13:31	87.41
6/22/2022 12:22	50.26	6/22/2022 11:04	81.23	6/21/2022 9:27	21.73	6/21/2022 8:36	9.07	6/21/2022 13:32	87.25
6/22/2022 12:23	50.31	6/22/2022 11:05	81.24	6/21/2022 9:28	21.23	6/21/2022 8:37	9.05	6/21/2022 13:33	87.08
6/22/2022 12:24	50.32	6/22/2022 11:06	81.30	6/21/2022 9:29	20.93	6/21/2022 8:38	9.09	6/21/2022 13:34	87.01
6/22/2022 12:25	50.27	6/22/2022 11:07	81.28	6/21/2022 9:30	20.64	6/21/2022 8:39	8.97	6/21/2022 13:35	86.87
6/22/2022 12:26	50.31	6/22/2022 11:08	81.25	6/21/2022 9:31	20.40	6/21/2022 8:40	8.96	6/21/2022 13:36	86.71
6/22/2022 12:27	50.29	6/22/2022 11:09	81.28	6/21/2022 9:32	20.22	6/21/2022 8:41	8.91	6/21/2022 13:37	86.60
6/22/2022 12:28	50.29	6/22/2022 11:10	81.30	6/21/2022 9:33	20.10	6/21/2022 8:42	8.96	6/21/2022 13:38	86.50
6/22/2022 12:29	50.31	6/22/2022 11:11	81.28	6/21/2022 9:34	19.96	6/21/2022 8:43	8.84	6/21/2022 13:39	86.34
6/22/2022 12:30	50.27	6/22/2022 11:12	81.21	6/21/2022 9:35	19.79	6/21/2022 8:44	8.87	6/21/2022 13:40	86.24
6/22/2022 12:31	50.34	6/22/2022 11:13	81.25	6/21/2022 9:36	19.67	6/21/2022 8:45	8.79	6/21/2022 13:41	86.10
6/22/2022 12:32	50.29	6/22/2022 11:14	81.27	6/21/2022 9:37	19.53	6/21/2022 8:46	9.24	6/21/2022 13:42	86.01
6/22/2022 12:33	50.29	6/22/2022 11:15	81.31	6/21/2022 9:38	19.47	6/21/2022 8:47	9.33	6/21/2022 13:43	85.86
6/22/2022 12:34	50.34	6/22/2022 11:16	81.23	6/21/2022 9:39	19.32	6/21/2022 8:48	9.09	6/21/2022 13:44	85.75
6/22/2022 12:35	50.23	6/22/2022 11:17	81.26	6/21/2022 9:40	19.30	6/21/2022 8:49	8.92	6/21/2022 13:45	85.61
6/22/2022 12:36	50.30	6/22/2022 11:18	81.27	6/21/2022 9:41	19.19	6/21/2022 8:50	8.87	6/21/2022 13:46	85.52
6/22/2022 12:37	50.28	6/22/2022 11:19	81.30	6/21/2022 9:42	19.14	6/21/2022 8:51	8.83	6/21/2022 13:47	85.40
6/22/2022 12:38	50.30	6/22/2022 11:20	81.28	6/21/2022 9:43	19.04	6/21/2022 8:52	8.81	6/21/2022 13:48	85.27
6/22/2022 12:39	50.31	6/22/2022 11:21	81.23	6/21/2022 9:44	18.97	6/21/2022 8:53	8.72	6/21/2022 13:49	85.17
6/22/2022 12:40	50.29	6/22/2022 11:22	81.26	6/21/2022 9:45	18.98	6/21/2022 8:54	8.68	6/21/2022 13:50	85.03
6/22/2022 12:41	50.30	6/22/2022 11:23	81.30	6/21/2022 9:46	18.88	6/21/2022 8:55	9.19	6/21/2022 13:51	84.93
6/22/2022 12:42	50.32	6/22/2022 11:24	81.28	6/21/2022 9:47	18.83	6/21/2022 8:56	9.11	6/21/2022 13:52	84.83
6/22/2022 12:43	50.30	6/22/2022 11:25	81.26	6/21/2022 9:48	18.79	6/21/2022 8:57	9.21	6/21/2022 13:53	84.73
6/22/2022 12:44	50.27	6/22/2022 11:26	81.29	6/21/2022 9:49	18.73	6/21/2022 8:58	9.23	6/21/2022 13:54	84.60
6/22/2022 12:45	50.30	6/22/2022 11:27	81.24	6/21/2022 9:50	18.70	6/21/2022 8:59	9.06	6/21/2022 13:55	84.52
6/22/2022 12:46	50.25	6/22/2022 11:28	81.23	6/21/2022 9:51	18.64	6/21/2022 9:00	8.90	6/21/2022 13:56	84.40
6/22/2022 12:47	50.28	6/22/2022 11:29	81.27	6/21/2022 9:52	18.59	6/21/2022 9:01	8.97	6/21/2022 13:57	84.31
6/22/2022 12:48	50.26	6/22/2022 11:30	81.29	6/21/2022 9:53	18.59	6/21/2022 9:02	8.80	6/21/2022 13:58	84.18
6/22/2022 12:49	50.30	6/22/2022 11:31	81.31	6/21/2022 9:54	18.54	6/21/2022 9:03	8.73	6/21/2022 13:59	84.09
6/22/2022 12:50	50.32	6/22/2022 11:32	81.24	6/21/2022 9:55	18.49	6/21/2022 9:04	8.63	6/21/2022 14:00	83.94
6/22/2022 12:51	50.28	6/22/2022 11:33	81.26	6/21/2022 9:56	18.43	6/21/2022 9:05	8.61	6/21/2022 14:01	83.88
6/22/2022 12:52	50.28	6/22/2022 11:34	81.24	6/21/2022 9:57	18.45	6/21/2022 9:06	8.57	6/21/2022 14:02	83.77
6/22/2022 12:53	50.26	6/22/2022 11:35	81.26	6/21/2022 9:58	18.37	6/21/2022 9:07	8.55	6/21/2022 14:03	83.69
6/22/2022 12:54	50.33	6/22/2022 11:36	81.24	6/21/2022 9:59	18.37	6/21/2022 9:08	8.48	6/21/2022 14:04	83.58
6/22/2022 12:55	50.28	6/22/2022 11:37	81.25	6/21/2022 10:00	18.32	6/21/2022 9:09	8.46	6/21/2022 14:05	83.44
6/22/2022 12:56	50.31	6/22/2022 11:38	81.23	6/21/2022 10:01	18.28	6/21/2022 9:10	8.42	6/21/2022 14:06	83.36
6/22/2022 12:57	50.28	6/22/2022 11:39	81.26	6/21/2022 10:02	18.22	6/21/2022 9:11	8.45	6/21/2022 14:07	85.78
6/22/2022 12:58	50.29	6/22/2022 11:40	81.22	6/21/2022 10:03	18.22	6/21/2022 9:12	8.56	6/21/2022 14:08	89.05
6/22/2022 12:59	50.29	6/22/2022 11:41	81.26	6/21/2022 10:04	18.22	6/21/2022 9:13	8.76	6/21/2022 14:09	88.78
6/22/2022 13:00	50.30	6/22/2022 11:42	81.29	6/21/2022 10:05	18.18	6/21/2022 9:14	8.60	6/21/2022 14:10	88.55

6/22/2022 13:01	50.31	6/22/2022 11:43	81.30	6/21/2022 10:06	18.18	6/21/2022 9:15	8.49	6/21/2022 14:11	88.40
6/22/2022 13:02	50.29	6/22/2022 11:44	81.25	6/21/2022 10:07	18.11	6/21/2022 9:16	8.41	6/21/2022 14:12	88.26
6/22/2022 13:03	50.28	6/22/2022 11:45	81.23	6/21/2022 10:08	18.15	6/21/2022 9:17	8.36	6/21/2022 14:13	88.09
6/22/2022 13:04	50.28	6/22/2022 11:46	81.24	6/21/2022 10:09	18.12	6/21/2022 9:18	8.33	6/21/2022 14:14	87.93
6/22/2022 13:05	50.25	6/22/2022 11:47	81.27	6/21/2022 10:10	18.06	6/21/2022 9:19	8.29	6/21/2022 14:15	87.74
6/22/2022 13:06	50.27	6/22/2022 11:48	81.27	6/21/2022 10:11	18.06	6/21/2022 9:20	8.24	6/21/2022 14:16	87.61
6/22/2022 13:07	50.28	6/22/2022 11:49	81.28	6/21/2022 10:12	18.01	6/21/2022 9:21	8.16	6/21/2022 14:17	87.43
6/22/2022 13:08	50.31	6/22/2022 11:50	81.24	6/21/2022 10:13	18.07	6/21/2022 9:22	8.20	6/21/2022 14:18	87.27
6/22/2022 13:09	50.26	6/22/2022 11:51	81.28	6/21/2022 10:14	18.02	6/21/2022 9:23	8.18	6/21/2022 14:19	87.13
6/22/2022 13:10	50.27	6/22/2022 11:52	81.30	6/21/2022 10:15	17.96	6/21/2022 9:24	8.12	6/21/2022 14:20	86.95
6/22/2022 13:11	50.26	6/22/2022 11:53	81.25	6/21/2022 10:16	17.93	6/21/2022 9:25	8.08	6/21/2022 14:21	86.81
6/22/2022 13:12	50.31	6/22/2022 11:54	81.29	6/21/2022 10:17	21.24	6/21/2022 9:26	8.09	6/21/2022 14:22	86.63
6/22/2022 13:13	50.29	6/22/2022 11:55	81.27	6/21/2022 10:18	25.51	6/21/2022 9:27	8.08	6/21/2022 14:23	86.52
6/22/2022 13:14	50.25	6/22/2022 11:56	81.30	6/21/2022 10:19	28.12	6/21/2022 9:28	8.04	6/21/2022 14:24	86.36
6/22/2022 13:15	50.28	6/22/2022 11:57	81.26	6/21/2022 10:20	27.38	6/21/2022 9:29	7.94	6/21/2022 14:25	86.21
6/22/2022 13:16	50.22	6/22/2022 11:58	81.25	6/21/2022 10:21	24.75	6/21/2022 9:30	7.98	6/21/2022 14:26	86.06
6/22/2022 13:17	50.25	6/22/2022 11:59	81.25	6/21/2022 10:22	23.28	6/21/2022 9:31	7.97	6/21/2022 14:27	85.93
6/22/2022 13:18	50.26	6/22/2022 12:00	81.24	6/21/2022 10:23	22.37	6/21/2022 9:32	7.95	6/21/2022 14:28	85.82
6/22/2022 13:19	50.25	6/22/2022 12:01	81.29	6/21/2022 10:24	21.71	6/21/2022 9:33	7.90	6/21/2022 14:29	85.67
6/22/2022 13:20	50.24	6/22/2022 12:02	81.26	6/21/2022 10:25	21.23	6/21/2022 9:34	7.88	6/21/2022 14:30	85.55
6/22/2022 13:21	50.22	6/22/2022 12:03	81.28	6/21/2022 10:26	20.94	6/21/2022 9:35	7.85	6/21/2022 14:31	85.42
6/22/2022 13:22	50.26	6/22/2022 12:04	81.30	6/21/2022 10:27	20.68	6/21/2022 9:36	7.84	6/21/2022 14:32	85.27
6/22/2022 13:23	50.22	6/22/2022 12:05	81.30	6/21/2022 10:28	20.45	6/21/2022 9:37	7.80	6/21/2022 14:33	85.16
6/22/2022 13:24	50.25	6/22/2022 12:06	81.27	6/21/2022 10:29	20.29	6/21/2022 9:38	7.79	6/21/2022 14:34	85.01
6/22/2022 13:25	50.24	6/22/2022 12:07	81.28	6/21/2022 10:30	20.08	6/21/2022 9:39	7.80	6/21/2022 14:35	84.89
6/22/2022 13:26	50.24	6/22/2022 12:08	81.25	6/21/2022 10:31	19.96	6/21/2022 9:40	7.76	6/21/2022 14:36	84.78
6/22/2022 13:27	50.25	6/22/2022 12:09	81.26	6/21/2022 10:32	19.84	6/21/2022 9:41	7.77	6/21/2022 14:37	84.61
6/22/2022 13:28	50.25	6/22/2022 12:10	81.25	6/21/2022 10:33	19.74	6/21/2022 9:42	7.68	6/21/2022 14:38	84.53
6/22/2022 13:29	50.27	6/22/2022 12:11	81.27	6/21/2022 10:34	19.61	6/21/2022 9:43	7.69	6/21/2022 14:39	84.40
6/22/2022 13:30	50.23	6/22/2022 12:12	81.29	6/21/2022 10:35	19.51	6/21/2022 9:44	7.67	6/21/2022 14:40	84.29
6/22/2022 13:31	50.26	6/22/2022 12:13	81.28	6/21/2022 10:36	19.43	6/21/2022 9:45	7.70	6/21/2022 14:41	84.17
6/22/2022 13:32	50.23	6/22/2022 12:14	81.27	6/21/2022 10:37	19.39	6/21/2022 9:46	7.58	6/21/2022 14:42	84.02
6/22/2022 13:33	50.21	6/22/2022 12:15	81.29	6/21/2022 10:38	19.26	6/21/2022 9:47	7.57	6/21/2022 14:43	83.89
6/22/2022 13:34	50.25	6/22/2022 12:16	81.26	6/21/2022 10:39	19.24	6/21/2022 9:48	7.56	6/21/2022 14:44	83.78
6/22/2022 13:35	50.26	6/22/2022 12:17	81.25	6/21/2022 10:40	19.15	6/21/2022 9:49	7.62	6/21/2022 14:45	83.68
6/22/2022 13:36	50.26	6/22/2022 12:18	81.26	6/21/2022 10:41	19.10	6/21/2022 9:50	7.57	6/21/2022 14:46	83.60
6/22/2022 13:37	50.25	6/22/2022 12:19	81.27	6/21/2022 10:42	19.06	6/21/2022 9:51	7.51	6/21/2022 14:47	83.46
6/22/2022 13:38	50.26	6/22/2022 12:20	81.25	6/21/2022 10:43	18.98	6/21/2022 9:52	7.52	6/21/2022 14:48	83.34
6/22/2022 13:39	50.26	6/22/2022 12:21	81.28	6/21/2022 10:44	18.94	6/21/2022 9:53	7.53	6/21/2022 14:49	83.24
6/22/2022 13:40	50.24	6/22/2022 12:22	81.28	6/21/2022 10:45	18.91	6/21/2022 9:54	7.44	6/21/2022 14:50	83.10
6/22/2022 13:41	50.22	6/22/2022 12:23	81.27	6/21/2022 10:46	18.83	6/21/2022 9:55	7.47	6/21/2022 14:51	83.01
6/22/2022 13:42	50.24	6/22/2022 12:24	81.28	6/21/2022 10:47	18.73	6/21/2022 9:56	7.45	6/21/2022 14:52	82.92
6/22/2022 13:43	50.23	6/22/2022 12:25	81.24	6/21/2022 10:48	18.79	6/21/2022 9:57	7.43	6/21/2022 14:53	82.81
6/22/2022 13:44	50.22	6/22/2022 12:26	81.24	6/21/2022 10:49	18.71	6/21/2022 9:58	7.38	6/21/2022 14:54	82.68
6/22/2022 13:45	50.23	6/22/2022 12:27	81.26	6/21/2022 10:50	18.65	6/21/2022 9:59	7.39	6/21/2022 14:55	82.61
6/22/2022 13:46	50.24	6/22/2022 12:28	81.28	6/21/2022 10:51	18.60	6/21/2022 10:00	7.40	6/21/2022 14:56	82.49
6/22/2022 13:47	50.21	6/22/2022 12:29	81.28	6/21/2022 10:52	18.61	6/21/2022 10:01	7.33	6/21/2022 14:57	82.41
6/22/2022 13:48	50.21	6/22/2022 12:30	81.27	6/21/2022 10:53	18.56	6/21/2022 10:02	7.33	6/21/2022 14:58	82.25
6/22/2022 13:49	50.25	6/22/2022 12:31	81.24	6/21/2022 10:54	18.54	6/21/2022 10:03	7.33	6/21/2022 14:59	82.21
6/22/2022 13:50	50.22	6/22/2022 12:32	81.27	6/21/2022 10:55	18.47	6/21/2022 10:04	7.41	6/21/2022 15:00	82.07
6/22/2022 13:51	50.22	6/22/2022 12:33	81.26	6/21/2022 10:56	18.43	6/21/2022 10:05	7.27	6/21/2022 15:01	81.98
6/22/2022 13:52	50.21	6/22/2022 12:34	81.26	6/21/2022 10:57	18.43	6/21/2022 10:06	7.25	6/21/2022 15:02	81.92
6/22/2022 13:53	50.24	6/22/2022 12:35	81.28	6/21/2022 10:58	18.39	6/21/2022 10:07	7.26	6/21/2022 15:03	81.81
6/22/2022 13:54	50.26	6/22/2022 12:36	81.28	6/21/2022 10:59	18.34	6/21/2022 10:08	7.29	6/21/2022 15:04	81.74
6/22/2022 13:55	50.22	6/22/2022 12:37	81.26	6/21/2022 11:00	18.33	6/21/2022 10:09	7.19	6/21/2022 15:05	81.59
6/22/2022 13:56	50.19	6/22/2022 12:38	81.30	6/21/2022 11:01	18.35	6/21/2022 10:10	7.80	6/21/2022 15:06	81.52
6/22/2022 13:57	50.23	6/22/2022 12:39	81.25	6/21/2022 11:02	18.29	6/21/2022 10:11	7.44	6/21/2022 15:07	81.45
6/22/2022 13:58	50.21	6/22/2022 12:40	81.28	6/21/2022 11:03	18.29	6/21/2022 10:12	7.36	6/21/2022 15:08	81.35
6/22/2022 13:59	50.23	6/22/2022 12:41	81.26	6/21/2022 11:04	18.20	6/21/2022 10:13	7.29	6/21/2022 15:09	81.26
6/22/2022 14:00	50.20	6/22/2022 12:42	81.26	6/21/2022 11:05	18.22	6/21/2022 10:14	7.21	6/21/2022 15:10	81.20
6/22/2022 14:01	50.21	6/22/2022 12:43	81.28	6/21/2022 11:06	18.20	6/21/2022 10:15	7.25	6/21/2022 15:11	81.12
6/22/2022 14:02	50.23	6/22/2022 12:44	81.29	6/21/2022 11:07	18.14	6/21/2022 10:16	7.22	6/21/2022 15:12	80.99
6/22/2022 14:03	50.26	6/22/2022 12:45	81.23	6/21/2022 11:08	18.21	6/21/2022 10:17	7.17	6/21/2022 15:13	80.94
6/22/2022 14:04	50.23	6/22/2022 12:46	81.29	6/21/2022 11:09	18.14	6/21/2022 10:18	7.09	6/21/2022 15:14	80.83
6/22/2022 14:05	50.22	6/22/2022 12:47	81.26	6/21/2022 11:10	18.08	6/21/2022 10:19	7.13	6/21/2022 15:15	80.80
6/22/2022 14:06	50.24	6/22/2022 12:48	81.29	6/21/2022 11:11	18.09	6/21/2022 10:20	7.09	6/21/2022 15:16	80.70
6/22/2022 14:07	50.21	6/22/2022 12:49	81.24	6/21/2022 11:12	18.06	6/21/2022 10:21	7.13	6/21/2022 15:17	80.64
6/22/2022 14:08	50.24	6/22/2022 12:50	81.27	6/21/2022 11:13	18.09	6/21/2022 10:22	7.04	6/21/2022 15:18	80.54
6/22/2022 14:09	50.22	6/22/2022 12:51	81.26	6/21/2022 11:14	18.05	6/21/2022 10:23	7.04	6/21/2022 15:19	80.46
6/22/2022 14:10	50.22	6/22/2022 12:52	81.26	6/21/2022 11:15	21.69	6/21/2022 10:24	7.06	6/21/2022 15:20	80.41
6/22/2022 14:11	50.22	6/22/2022 12:53	81.25	6/21/2022 11:16	25.72	6/21/2022 10:25	7.03	6/21/2022 15:21	80.35
6/22/2022 14:12	50.24	6/22/2022 12:54	81.28	6/21/2022 11:17	27.00	6/21/2022 10:26	6.99	6/21/2022 15:22	80.27
6/22/2022 14:13	50.26	6/22/2022 12:55	81.29	6/21/2022 11:18	24.11	6/21/2022 10:27	6.98	6/21/2022 15:23	80.22
6/22/2022 14:14	50.22	6/22/2022 12:56	81.28	6/21/2022 11:19	22.69	6/21/2022 10:28	7.00	6/21/2022 15:24	80.10
6/22/2022 14:15	50.23	6/22/2022 12:57	81.28	6/21/2022 11:20	21.82	6/21/2022 10:29	7.03	6/21/2022 15:25	80.05
6/22/2022 14:16	50.24	6/22/2022 12:58	81.30	6/21/2022 11:21	21.22	6/21/2022 10:30	6.87	6/21/2022 15:26	79.94
6/22/2022 14:17	50.19	6/22/2022 12:59	81.27	6/21/2022 11:22	20.80	6/21/2022 10:31	6.92	6/21/2022 15:27	79.86
6/22/2022 14:18	50.20	6/22/2022 13:00	81.30	6/21/2022 11:23	20.50	6/21/2022 10:32	6.97	6/21/2022 15:28	79.74
6/22/2022 14:19	50.25	6/22/2022 13:01	81.28	6/21/2022 11:24	20.29	6/21/2022 10:33	6.92	6/21/2022 15:29	79.71
6/22/2022 14:20	50.21	6/22/2022 13:02	81.27	6/21/2022 11:25	20.13	6/21/2022 10:34	6.94	6/21/2022 15:30	79.66
6/22/2022 14:21	50.23	6/22/2022 13:03	81.31	6/21/2022 11:26	19.93	6/21/2022 10:35	6.88	6/21/2022 15:31	79.54
6/22/2022 14:22	50.22	6/22/2022 13:04	81.26	6/21/2022 11:27	19.80	6/21/2022 10:36	6.89	6/21/2022 15:32	79.45
6/22/2022 14:23	50.21	6/22/2022 13:05	81.28	6/21/2022 11:28	19.67	6/21/2022 10:37	6.87	6/21/2022 15:33	79.39
6/22/2022 14:24	50.21	6/22/2022 13:06	81.27	6/21/2022 11:29	19.59	6/21/2022 10:38	6.82	6/21/2022 15:34	79.33
6/22/2022 14:25	50.22	6/22/2022 13:07	81.28	6/21/2022 11:30	19.46	6/21/2022 10:39	6.82	6/21/2022 15:35	79.25
6/22/2022 14:26	50.21	6/22/2022 13:08	81.29	6/21/2022 11:31	19.36	6/21/2022 10:40	6.83	6/21/2022 15:36	79.18
6/22/2022 14:27	50.23	6/22/2022 13:09	81.31	6/21/2022 11:32	19.26	6/21/2022 10:41	6.84	6/21/2022 15:37	79.10
6/22/2022 14:28	50.23	6/22/2022 13:10	81.28	6/21/2022 11:33	19.27	6/21/2022 10:42	7.15	6/21/2022 15:38	79.07

6/22/2022 14:29	50.23	6/22/2022 13:11	81.29	6/21/2022 11:34	19.15	6/21/2022 10:43	6.90	6/21/2022 15:39	78.98
6/22/2022 14:30	50.21	6/22/2022 13:12	81.28	6/21/2022 11:35	19.12	6/21/2022 10:44	6.88	6/21/2022 15:40	78.97
6/22/2022 14:31	50.20	6/22/2022 13:13	81.32	6/21/2022 11:36	18.98	6/21/2022 10:45	6.82	6/21/2022 15:41	78.89
6/22/2022 14:32	50.20	6/22/2022 13:14	81.29	6/21/2022 11:37	18.97	6/21/2022 10:46	6.90	6/21/2022 15:42	78.80
6/22/2022 14:33	50.25	6/22/2022 13:15	81.26	6/21/2022 11:38	18.93	6/21/2022 10:47	6.77	6/21/2022 15:43	78.76
6/22/2022 14:34	50.21	6/22/2022 13:16	81.30	6/21/2022 11:39	18.84	6/21/2022 10:48	6.77	6/21/2022 15:44	78.74
6/22/2022 14:35	50.23	6/22/2022 13:17	81.25	6/21/2022 11:40	18.85	6/21/2022 10:49	6.77	6/21/2022 15:45	78.63
6/22/2022 14:36	50.23	6/22/2022 13:18	81.28	6/21/2022 11:41	18.72	6/21/2022 10:50	6.77	6/21/2022 15:46	78.61
6/22/2022 14:37	50.20	6/22/2022 13:19	81.27	6/21/2022 11:42	18.74	6/21/2022 10:51	6.71	6/21/2022 15:47	78.53
6/22/2022 14:38	50.25	6/22/2022 13:20	81.29	6/21/2022 11:43	18.67	6/21/2022 10:52	6.63	6/21/2022 15:48	78.44
6/22/2022 14:39	50.17	6/22/2022 13:21	81.27	6/21/2022 11:44	18.65	6/21/2022 10:53	6.64	6/21/2022 15:49	78.42
6/22/2022 14:40	50.25	6/22/2022 13:22	81.27	6/21/2022 11:45	18.58	6/21/2022 10:54	6.72	6/21/2022 15:50	78.35
6/22/2022 14:41	50.17	6/22/2022 13:23	81.28	6/21/2022 11:46	18.64	6/21/2022 10:55	7.09	6/21/2022 15:51	78.29
6/22/2022 14:42	50.18	6/22/2022 13:24	81.29	6/21/2022 11:47	18.56	6/21/2022 10:56	6.91	6/21/2022 15:52	78.25
6/22/2022 14:43	50.17	6/22/2022 13:25	81.28	6/21/2022 11:48	18.54	6/21/2022 10:57	6.79	6/21/2022 15:53	78.18
6/22/2022 14:44	50.20	6/22/2022 13:26	81.27	6/21/2022 11:49	18.47	6/21/2022 10:58	6.73	6/21/2022 15:54	78.13
6/22/2022 14:45	50.21	6/22/2022 13:27	81.30	6/21/2022 11:50	18.47	6/21/2022 10:59	6.69	6/21/2022 15:55	78.03
6/22/2022 14:46	50.22	6/22/2022 13:28	81.26	6/21/2022 11:51	18.40	6/21/2022 11:00	6.69	6/21/2022 15:56	78.04
6/22/2022 14:47	50.18	6/22/2022 13:29	81.26	6/21/2022 11:52	18.40	6/21/2022 11:01	6.66	6/21/2022 15:57	77.92
6/22/2022 14:48	51.03	6/22/2022 13:30	81.27	6/21/2022 11:53	18.39	6/21/2022 11:02	6.61	6/21/2022 15:58	77.87
6/22/2022 14:49	53.53	6/22/2022 13:31	81.27	6/21/2022 11:54	18.31	6/21/2022 11:03	6.61	6/21/2022 15:59	77.84
6/22/2022 14:50	54.60	6/22/2022 13:32	81.26	6/21/2022 11:55	18.33	6/21/2022 11:04	6.61	6/21/2022 16:00	77.71
6/22/2022 14:51	55.22	6/22/2022 13:33	81.27	6/21/2022 11:56	18.31	6/21/2022 11:05	6.63	6/21/2022 16:01	77.67
6/22/2022 14:52	53.67	6/22/2022 13:34	81.27	6/21/2022 11:57	18.28	6/21/2022 11:06	6.59	6/21/2022 16:02	77.59
6/22/2022 14:53	52.36	6/22/2022 13:35	81.28	6/21/2022 11:58	18.28	6/21/2022 11:07	6.56	6/21/2022 16:03	77.56
6/22/2022 14:54	51.81	6/22/2022 13:36	81.30	6/21/2022 11:59	18.24	6/21/2022 11:08	6.65	6/21/2022 16:04	77.51
6/22/2022 14:55	51.55	6/22/2022 13:37	81.28	6/21/2022 12:00	18.22	6/21/2022 11:09	7.13	6/21/2022 16:05	77.44
6/22/2022 14:56	51.33	6/22/2022 13:38	81.27	6/21/2022 12:01	18.21	6/21/2022 11:10	6.88	6/21/2022 16:06	77.37
6/22/2022 14:57	51.24	6/22/2022 13:39	81.26	6/21/2022 12:02	18.16	6/21/2022 11:11	7.10	6/21/2022 16:07	77.34
6/22/2022 14:58	51.15	6/22/2022 13:40	81.25	6/21/2022 12:03	18.15	6/21/2022 11:12	7.15	6/21/2022 16:08	77.28
6/22/2022 14:59	51.08	6/22/2022 13:41	81.29	6/21/2022 12:04	18.11	6/21/2022 11:13	6.83	6/21/2022 16:09	77.17
6/22/2022 15:00	51.03	6/22/2022 13:42	81.30	6/21/2022 12:05	18.11	6/21/2022 11:14	6.75	6/21/2022 16:10	77.14
6/22/2022 15:01	51.00	6/22/2022 13:43	81.24	6/21/2022 12:06	18.11	6/21/2022 11:15	6.79	6/21/2022 16:11	77.12
6/22/2022 15:02	50.93	6/22/2022 13:44	81.30	6/21/2022 12:07	18.11	6/21/2022 11:16	6.61	6/21/2022 16:12	77.04
6/22/2022 15:03	50.91	6/22/2022 13:45	81.26	6/21/2022 12:08	18.05	6/21/2022 11:17	6.65	6/21/2022 16:13	76.99
6/22/2022 15:04	50.88	6/22/2022 13:46	81.29	6/21/2022 12:09	18.07	6/21/2022 11:18	6.61	6/21/2022 16:14	76.94
6/22/2022 15:05	50.87	6/22/2022 13:47	81.24	6/21/2022 12:10	18.00	6/21/2022 11:19	6.62	6/21/2022 16:15	76.93
6/22/2022 15:06	50.83	6/22/2022 13:48	81.27	6/21/2022 12:11	18.00	6/21/2022 11:20	6.59	6/21/2022 16:16	76.84
6/22/2022 15:07	50.77	6/22/2022 13:49	81.24	6/21/2022 12:12	17.98	6/21/2022 11:21	6.55	6/21/2022 16:17	76.82
6/22/2022 15:08	50.82	6/22/2022 13:50	81.26	6/21/2022 12:13	17.95	6/21/2022 11:22	6.57	6/21/2022 16:18	76.75
6/22/2022 15:09	50.77	6/22/2022 13:51	81.28	6/21/2022 12:14	17.94	6/21/2022 11:23	6.57	6/21/2022 16:19	76.67
6/22/2022 15:10	50.78	6/22/2022 13:52	81.22	6/21/2022 12:15	17.96	6/21/2022 11:24	6.51	6/21/2022 16:20	76.63
6/22/2022 15:11	50.75	6/22/2022 13:53	81.29	6/21/2022 12:16	17.89	6/21/2022 11:25	6.47	6/21/2022 16:21	76.61
6/22/2022 15:12	50.75	6/22/2022 13:54	81.27	6/21/2022 12:17	17.90	6/21/2022 11:26	6.44	6/21/2022 16:22	76.55
6/22/2022 15:13	50.69	6/22/2022 13:55	81.24	6/21/2022 12:18	17.90	6/21/2022 11:27	6.49	6/21/2022 16:23	76.51
6/22/2022 15:14	50.73	6/22/2022 13:56	81.25	6/21/2022 12:19	17.85	6/21/2022 11:28	6.51	6/21/2022 16:24	76.47
6/22/2022 15:15	50.68	6/22/2022 13:57	81.26	6/21/2022 12:20	17.85	6/21/2022 11:29	6.53	6/21/2022 16:25	76.41
6/22/2022 15:16	50.65	6/22/2022 13:58	81.29	6/21/2022 12:21	17.83	6/21/2022 11:30	6.42	6/21/2022 16:26	76.34
6/22/2022 15:17	50.69	6/22/2022 13:59	81.28	6/21/2022 12:22	17.83	6/21/2022 11:31	6.44	6/21/2022 16:27	76.26
6/22/2022 15:18	50.65	6/22/2022 14:00	81.28	6/21/2022 12:23	17.81	6/21/2022 11:32	6.47	6/21/2022 16:28	76.22
6/22/2022 15:19	50.65	6/22/2022 14:01	81.25	6/21/2022 12:24	17.83	6/21/2022 11:33	6.42	6/21/2022 16:29	76.15
6/22/2022 15:20	50.60	6/22/2022 14:02	81.30	6/21/2022 12:25	17.81	6/21/2022 11:34	6.38	6/21/2022 16:30	76.10
6/22/2022 15:21	50.63	6/22/2022 14:03	81.29	6/21/2022 12:26	17.80	6/21/2022 11:35	6.44	6/21/2022 16:31	76.65
6/22/2022 15:22	50.59	6/22/2022 14:04	81.27	6/21/2022 12:27	17.74	6/21/2022 11:36	6.31	6/21/2022 16:32	81.86
6/22/2022 15:23	50.62	6/22/2022 14:05	81.24	6/21/2022 12:28	17.77	6/21/2022 11:37	6.35	6/21/2022 16:33	81.68
6/22/2022 15:24	50.60	6/22/2022 14:06	81.29	6/21/2022 12:29	17.70	6/21/2022 11:38	6.35	6/21/2022 16:34	81.53
6/22/2022 15:25	50.64	6/22/2022 14:07	81.25	6/21/2022 12:30	17.71	6/21/2022 11:39	6.45	6/21/2022 16:35	81.37
6/22/2022 15:26	50.61	6/22/2022 14:08	81.30	6/21/2022 12:31	17.74	6/21/2022 11:40	6.40	6/21/2022 16:36	81.24
6/22/2022 15:27	50.60	6/22/2022 14:09	81.24	6/21/2022 12:32	17.74	6/21/2022 11:41	6.43	6/21/2022 16:37	81.11
6/22/2022 15:28	50.58	6/22/2022 14:10	81.28	6/21/2022 12:33	17.73	6/21/2022 11:42	6.34	6/21/2022 16:38	81.03
6/22/2022 15:29	50.56	6/22/2022 14:11	81.29	6/21/2022 12:34	17.68	6/21/2022 11:43	6.37	6/21/2022 16:39	80.89
6/22/2022 15:30	50.55	6/22/2022 14:12	81.28	6/21/2022 12:35	17.68	6/21/2022 11:44	6.33	6/21/2022 16:40	80.83
6/22/2022 15:31	50.56	6/22/2022 14:13	81.22	6/21/2022 12:36	17.70	6/21/2022 11:45	6.32	6/21/2022 16:41	80.70
6/22/2022 15:32	50.59	6/22/2022 14:14	81.26	6/21/2022 12:37	17.65	6/21/2022 11:46	6.24	6/21/2022 16:42	80.60
6/22/2022 15:33	50.60	6/22/2022 14:15	81.31	6/21/2022 12:38	17.66	6/21/2022 11:47	6.29	6/21/2022 16:43	80.48
6/22/2022 15:34	50.54	6/22/2022 14:16	81.33	6/21/2022 12:39	17.68	6/21/2022 11:48	6.24	6/21/2022 16:44	80.43
6/22/2022 15:35	50.53	6/22/2022 14:17	81.28	6/21/2022 12:40	17.60	6/21/2022 11:49	6.28	6/21/2022 16:45	80.32
6/22/2022 15:36	50.56	6/22/2022 14:18	81.24	6/21/2022 12:41	17.63	6/21/2022 11:50	6.20	6/21/2022 16:46	80.21
6/22/2022 15:37	50.53	6/22/2022 14:19	81.27	6/21/2022 12:42	17.65	6/21/2022 11:51	6.26	6/21/2022 16:47	80.10
6/22/2022 15:38	50.56	6/22/2022 14:20	81.29	6/21/2022 12:43	17.61	6/21/2022 11:52	6.18	6/21/2022 16:48	79.97
6/22/2022 15:39	50.54	6/22/2022 14:21	81.26	6/21/2022 12:44	17.59	6/21/2022 11:53	6.19	6/21/2022 16:49	79.92
6/22/2022 15:40	50.49	6/22/2022 14:22	81.27	6/21/2022 12:45	17.55	6/21/2022 11:54	6.17	6/21/2022 16:50	79.78
6/22/2022 15:41	50.49	6/22/2022 14:23	81.25	6/21/2022 12:46	17.57	6/21/2022 11:55	6.16	6/21/2022 16:51	79.69
6/22/2022 15:42	50.51	6/22/2022 14:24	81.31	6/21/2022 12:47	17.54	6/21/2022 11:56	6.19	6/21/2022 16:52	79.59
6/22/2022 15:43	50.51	6/22/2022 14:25	81.28	6/21/2022 12:48	17.58	6/21/2022 11:57	6.46	6/21/2022 16:53	79.48
6/22/2022 15:44	50.47	6/22/2022 14:26	81.25	6/21/2022 12:49	17.54	6/21/2022 11:58	6.25	6/21/2022 16:54	79.42
6/22/2022 15:45	50.50	6/22/2022 14:27	81.29	6/21/2022 12:50	17.53	6/21/2022 11:59	6.18	6/21/2022 16:55	79.31
6/22/2022 15:46	50.46	6/22/2022 14:28	81.33	6/21/2022 12:51	17.52	6/21/2022 12:00	6.20	6/21/2022 16:56	79.23
6/22/2022 15:47	50.48	6/22/2022 14:29	81.28	6/21/2022 12:52	17.52	6/21/2022 12:01	6.20	6/21/2022 16:57	79.12
6/22/2022 15:48	50.48	6/22/2022 14:30	81.30	6/21/2022 12:53	17.52	6/21/2022 12:02	6.19	6/21/2022 16:58	79.08
6/22/2022 15:49	50.50	6/22/2022 14:31	81.26	6/21/2022 12:54	17.52	6/21/2022 12:03	6.14	6/21/2022 16:59	78.96
6/22/2022 15:50	50.47	6/22/2022 14:32	81.27	6/21/2022 12:55	17.50	6/21/2022 12:04	6.09	6/21/2022 17:00	78.89
6/22/2022 15:51	50.46	6/22/2022 14:33	81.29	6/21/2022 12:56	17.51	6/21/2022 12:05	6.12	6/21/2022 17:01	78.86
6/22/2022 15:52	50.46	6/22/2022 14:34	81.32	6/21/2022 12:57	17.48	6/21/2022 12:06	6.15	6/21/2022 17:02	78.79
6/22/2022 15:53	50.47	6/22/2022 14:35	81.29	6/21/2022 12:58	17.44	6/21/2022 12:07	6.11	6/21/2022 17:03	78.73
6/22/2022 15:54	50.46	6/22/2022 14:36	81.26	6/21/2022 12:59	17.48	6/21/2022 12:08	6.08	6/21/2022 17:04	78.64
6/22/2022 15:55	50.48	6/22/2022 14:37	81.31	6/21/2022 13:00	17.48	6/21/2022 12:09	6.07	6/21/2022 17:05	78.58
6/22/2022 15:56	50.45	6/22/2022 14:38	81.28	6/21/2022 13:01	17.48	6/21/2022 12:10	6.14	6/21/2022 17:06	78.50

6/22/2022 15:57	50.48	6/22/2022 14:39	81.34	6/21/2022 13:02	17.50	6/21/2022 12:11	6.11	6/21/2022 17:07	78.41
6/22/2022 15:58	50.41	6/22/2022 14:40	81.28	6/21/2022 13:03	17.47	6/21/2022 12:12	6.03	6/21/2022 17:08	78.37
6/22/2022 15:59	50.42	6/22/2022 14:41	81.29	6/21/2022 13:04	17.45	6/21/2022 12:13	6.06	6/21/2022 17:09	78.26
6/22/2022 16:00	50.44	6/22/2022 14:42	81.26	6/21/2022 13:05	17.44	6/21/2022 12:14	6.04	6/21/2022 17:10	78.20
6/22/2022 16:01	50.46	6/22/2022 14:43	81.31	6/21/2022 13:06	17.47	6/21/2022 12:15	6.00	6/21/2022 17:11	78.15
6/22/2022 16:02	50.42	6/22/2022 14:44	81.26	6/21/2022 13:07	17.42	6/21/2022 12:16	6.01	6/21/2022 17:12	78.07
6/22/2022 16:03	50.46	6/22/2022 14:45	81.27	6/21/2022 13:08	17.47	6/21/2022 12:17	6.03	6/21/2022 17:13	78.00
6/22/2022 16:04	50.44	6/22/2022 14:46	81.29	6/21/2022 13:09	17.42	6/21/2022 12:18	6.07	6/21/2022 17:14	77.92
6/22/2022 16:05	50.42	6/22/2022 14:47	81.29	6/21/2022 13:10	17.40	6/21/2022 12:19	5.98	6/21/2022 17:15	77.82
6/22/2022 16:06	50.40	6/22/2022 14:48	81.29	6/21/2022 13:11	17.36	6/21/2022 12:20	5.95	6/21/2022 17:16	77.75
6/22/2022 16:07	50.46	6/22/2022 14:49	81.25	6/21/2022 13:12	17.41	6/21/2022 12:21	5.97	6/21/2022 17:17	77.65
6/22/2022 16:08	50.40	6/22/2022 14:50	81.30	6/21/2022 13:13	17.39	6/21/2022 12:22	6.02	6/21/2022 17:18	77.63
6/22/2022 16:09	50.42	6/22/2022 14:51	81.26	6/21/2022 13:14	17.36	6/21/2022 12:23	5.93	6/21/2022 17:19	77.51
6/22/2022 16:10	50.41	6/22/2022 14:52	81.30	6/21/2022 13:15	22.85	6/21/2022 12:24	5.94	6/21/2022 17:20	77.48
6/22/2022 16:11	50.43	6/22/2022 14:53	81.31	6/21/2022 13:16	26.23	6/21/2022 12:25	6.02	6/21/2022 17:21	77.37
6/22/2022 16:12	50.40	6/22/2022 14:54	81.31	6/21/2022 13:17	26.96	6/21/2022 12:26	6.00	6/21/2022 17:22	77.31
6/22/2022 16:13	50.41	6/22/2022 14:55	81.25	6/21/2022 13:18	24.10	6/21/2022 12:27	6.00	6/21/2022 17:23	77.27
6/22/2022 16:14	50.44	6/22/2022 14:56	81.27	6/21/2022 13:19	22.55	6/21/2022 12:28	6.02	6/21/2022 17:24	77.19
6/22/2022 16:15	50.42	6/22/2022 14:57	81.29	6/21/2022 13:20	21.69	6/21/2022 12:29	5.91	6/21/2022 17:25	77.15
6/22/2022 16:16	50.39	6/22/2022 14:58	81.27	6/21/2022 13:21	21.01	6/21/2022 12:30	5.93	6/21/2022 17:26	77.04
6/22/2022 16:17	50.40	6/22/2022 14:59	81.26	6/21/2022 13:22	20.62	6/21/2022 12:31	5.90	6/21/2022 17:27	76.98
6/22/2022 16:18	50.41	6/22/2022 15:00	81.29	6/21/2022 13:23	20.28	6/21/2022 12:32	5.93	6/21/2022 17:28	76.94
6/22/2022 16:19	50.39	6/22/2022 15:01	81.27	6/21/2022 13:24	20.02	6/21/2022 12:33	5.91	6/21/2022 17:29	76.86
6/22/2022 16:20	50.36	6/22/2022 15:02	81.30	6/21/2022 13:25	19.86	6/21/2022 12:34	5.86	6/21/2022 17:30	76.82
6/22/2022 16:21	50.44	6/22/2022 15:03	81.29	6/21/2022 13:26	19.72	6/21/2022 12:35	5.87	6/21/2022 17:31	76.76
6/22/2022 16:22	50.39	6/22/2022 15:04	81.26	6/21/2022 13:27	19.54	6/21/2022 12:36	5.86	6/21/2022 17:32	76.68
6/22/2022 16:23	50.40	6/22/2022 15:05	81.32	6/21/2022 13:28	19.37	6/21/2022 12:37	6.02	6/21/2022 17:33	76.60
6/22/2022 16:24	50.40	6/22/2022 15:06	81.29	6/21/2022 13:29	19.27	6/21/2022 12:38	5.85	6/21/2022 17:34	76.55
6/22/2022 16:25	50.39	6/22/2022 15:07	81.30	6/21/2022 13:30	19.22	6/21/2022 12:39	5.88	6/21/2022 17:35	76.50
6/22/2022 16:26	50.40	6/22/2022 15:08	81.30	6/21/2022 13:31	19.10	6/21/2022 12:40	5.85	6/21/2022 17:36	76.42
6/22/2022 16:27	50.36	6/22/2022 15:09	81.33	6/21/2022 13:32	19.00	6/21/2022 12:41	5.91	6/21/2022 17:37	76.40
6/22/2022 16:28	50.39	6/22/2022 15:10	81.32	6/21/2022 13:33	18.90	6/21/2022 12:42	5.93	6/21/2022 17:38	76.32
6/22/2022 16:29	50.38	6/22/2022 15:11	81.26	6/21/2022 13:34	18.87	6/21/2022 12:43	5.83	6/21/2022 17:39	76.26
6/22/2022 16:30	50.39	6/22/2022 15:12	81.31	6/21/2022 13:35	18.83	6/21/2022 12:44	6.06	6/21/2022 17:40	76.17
6/22/2022 16:31	50.39	6/22/2022 15:13	81.34	6/21/2022 13:36	18.72	6/21/2022 12:45	6.04	6/21/2022 17:41	76.13
6/22/2022 16:32	50.35	6/22/2022 15:14	81.27	6/21/2022 13:37	18.72	6/21/2022 12:46	5.95	6/21/2022 17:42	76.05
6/22/2022 16:33	50.37	6/22/2022 15:15	81.35	6/21/2022 13:38	18.69	6/21/2022 12:47	5.98	6/21/2022 17:43	76.01
6/22/2022 16:34	50.39	6/22/2022 15:16	81.29	6/21/2022 13:39	18.57	6/21/2022 12:48	5.84	6/21/2022 17:44	75.94
6/22/2022 16:35	50.41	6/22/2022 15:17	81.27	6/21/2022 13:40	18.52	6/21/2022 12:49	5.85	6/21/2022 17:45	75.87
6/22/2022 16:36	50.37	6/22/2022 15:18	81.33	6/21/2022 13:41	18.51	6/21/2022 12:50	5.84	6/21/2022 17:46	75.84
6/22/2022 16:37	50.34	6/22/2022 15:19	81.28	6/21/2022 13:42	18.48	6/21/2022 12:51	5.88	6/21/2022 17:47	75.79
6/22/2022 16:38	50.34	6/22/2022 15:20	81.33	6/21/2022 13:43	18.45	6/21/2022 12:52	5.81	6/21/2022 17:48	75.70
6/22/2022 16:39	50.34	6/22/2022 15:21	81.30	6/21/2022 13:44	18.37	6/21/2022 12:53	5.80	6/21/2022 17:49	75.62
6/22/2022 16:40	50.34	6/22/2022 15:22	81.28	6/21/2022 13:45	18.38	6/21/2022 12:54	5.82	6/21/2022 17:50	75.57
6/22/2022 16:41	50.38	6/22/2022 15:23	81.27	6/21/2022 13:46	18.33	6/21/2022 12:55	5.83	6/21/2022 17:51	75.51
6/22/2022 16:42	50.35	6/22/2022 15:24	81.30	6/21/2022 13:47	18.29	6/21/2022 12:56	5.82	6/21/2022 17:52	75.48
6/22/2022 16:43	50.35	6/22/2022 15:25	81.31	6/21/2022 13:48	18.25	6/21/2022 12:57	5.75	6/21/2022 17:53	75.37
6/22/2022 16:44	50.38	6/22/2022 15:26	81.29	6/21/2022 13:49	18.22	6/21/2022 12:58	5.75	6/21/2022 17:54	75.36
6/22/2022 16:45	50.36	6/22/2022 15:27	81.31	6/21/2022 13:50	18.23	6/21/2022 12:59	6.09	6/21/2022 17:55	75.28
6/22/2022 16:46	50.38	6/22/2022 15:28	81.28	6/21/2022 13:51	18.18	6/21/2022 13:00	6.37	6/21/2022 17:56	75.24
6/22/2022 16:47	50.37	6/22/2022 15:29	81.29	6/21/2022 13:52	18.17	6/21/2022 13:01	6.51	6/21/2022 17:57	75.95
6/22/2022 16:48	50.35	6/22/2022 15:30	81.32	6/21/2022 13:53	18.14	6/21/2022 13:02	6.65	6/21/2022 17:58	81.32
6/22/2022 16:49	50.38	6/22/2022 15:31	81.32	6/21/2022 13:54	18.11	6/21/2022 13:03	6.73	6/21/2022 17:59	81.14
6/22/2022 16:50	50.30	6/22/2022 15:32	81.32	6/21/2022 13:55	18.09	6/21/2022 13:04	6.80	6/21/2022 18:00	80.97
6/22/2022 16:51	50.34	6/22/2022 15:33	81.28	6/21/2022 13:56	18.07	6/21/2022 13:05	6.47	6/21/2022 18:01	80.80
6/22/2022 16:52	50.31	6/22/2022 15:34	81.27	6/21/2022 13:57	18.03	6/21/2022 13:06	6.34	6/21/2022 18:02	80.70
6/22/2022 16:53	50.34	6/22/2022 15:35	81.26	6/21/2022 13:58	18.01	6/21/2022 13:07	6.14	6/21/2022 18:03	80.57
6/22/2022 16:54	50.31	6/22/2022 15:36	81.30	6/21/2022 13:59	17.99	6/21/2022 13:08	6.09	6/21/2022 18:04	80.46
6/22/2022 16:55	50.34	6/22/2022 15:37	81.26	6/21/2022 14:00	17.98	6/21/2022 13:09	6.04	6/21/2022 18:05	80.36
6/22/2022 16:56	50.32	6/22/2022 15:38	81.31	6/21/2022 14:01	17.96	6/21/2022 13:10	6.03	6/21/2022 18:06	80.24
6/22/2022 16:57	50.34	6/22/2022 15:39	81.29	6/21/2022 14:02	17.97	6/21/2022 13:11	5.97	6/21/2022 18:07	80.15
6/22/2022 16:58	50.32	6/22/2022 15:40	81.31	6/21/2022 14:03	17.87	6/21/2022 13:12	5.94	6/21/2022 18:08	79.98
6/22/2022 16:59	50.33	6/22/2022 15:41	81.27	6/21/2022 14:04	17.90	6/21/2022 13:13	5.90	6/21/2022 18:09	79.90
6/22/2022 17:00	50.33	6/22/2022 15:42	81.30	6/21/2022 14:05	17.90	6/21/2022 13:14	5.94	6/21/2022 18:10	79.78
6/22/2022 17:01	50.36	6/22/2022 15:43	81.30	6/21/2022 14:06	17.87	6/21/2022 13:15	5.94	6/21/2022 18:11	79.63
6/22/2022 17:02	50.33	6/22/2022 15:44	81.30	6/21/2022 14:07	17.83	6/21/2022 13:16	5.88	6/21/2022 18:12	79.54
6/22/2022 17:03	50.33	6/22/2022 15:45	81.30	6/21/2022 14:08	17.86	6/21/2022 13:17	5.86	6/21/2022 18:13	79.43
6/22/2022 17:04	50.35	6/22/2022 15:46	81.31	6/21/2022 14:09	17.82	6/21/2022 13:18	5.88	6/21/2022 18:14	79.39
6/22/2022 17:05	50.34	6/22/2022 15:47	81.29	6/21/2022 14:10	17.82	6/21/2022 13:19	5.93	6/21/2022 18:15	79.24
6/22/2022 17:06	50.31	6/22/2022 15:48	81.30	6/21/2022 14:11	17.83	6/21/2022 13:20	5.83	6/21/2022 18:16	79.14
6/22/2022 17:07	50.36	6/22/2022 15:49	81.30	6/21/2022 14:12	20.36	6/21/2022 13:21	5.84	6/21/2022 18:17	79.06
6/22/2022 17:08	50.34	6/22/2022 15:50	81.29	6/21/2022 14:13	24.89	6/21/2022 13:22	5.85	6/21/2022 18:18	78.98
6/22/2022 17:09	50.28	6/22/2022 15:51	81.33	6/21/2022 14:14	27.53	6/21/2022 13:23	5.85	6/21/2022 18:19	78.88
6/22/2022 17:10	50.31	6/22/2022 15:52	81.29	6/21/2022 14:15	24.77	6/21/2022 13:24	5.78	6/21/2022 18:20	78.82
6/22/2022 17:11	50.34	6/22/2022 15:53	81.31	6/21/2022 14:16	23.02	6/21/2022 13:25	5.79	6/21/2022 18:21	78.75
6/22/2022 17:12	50.34	6/22/2022 15:54	81.31	6/21/2022 14:17	21.94	6/21/2022 13:26	5.80	6/21/2022 18:22	78.64
6/22/2022 17:13	50.30	6/22/2022 15:55	81.28	6/21/2022 14:18	21.23	6/21/2022 13:27	5.79	6/21/2022 18:23	78.57
6/22/2022 17:14	50.32	6/22/2022 15:56	81.25	6/21/2022 14:19	20.84	6/21/2022 13:28	5.76	6/21/2022 18:24	78.50
6/22/2022 17:15	50.33	6/22/2022 15:57	81.33	6/21/2022 14:20	20.45	6/21/2022 13:29	5.76	6/21/2022 18:25	78.41
6/22/2022 17:16	50.33	6/22/2022 15:58	81.30	6/21/2022 14:21	20.25	6/21/2022 13:30	5.84	6/21/2022 18:26	78.35
6/22/2022 17:17	50.31	6/22/2022 15:59	84.46	6/21/2022 14:22	20.04	6/21/2022 13:31	5.78	6/21/2022 18:27	78.27
6/22/2022 17:18	50.33	6/22/2022 16:00	83.84	6/21/2022 14:23	19.87	6/21/2022 13:32	5.75	6/21/2022 18:28	78.19
6/22/2022 17:19	50.34	6/22/2022 16:01	83.43	6/21/2022 14:24	19.76	6/21/2022 13:33	5.77	6/21/2022 18:29	78.12
6/22/2022 17:20	50.33	6/22/2022 16:02	83.09	6/21/2022 14:25	19.61	6/21/2022 13:34	5.83	6/21/2022 18:30	78.02
6/22/2022 17:21	50.31	6/22/2022 16:03	82.80	6/21/2022 14:26	19.52	6/21/2022 13:35	5.71	6/21/2022 18:31	77.96
6/22/2022 17:22	50.33	6/22/2022 16:04	82.60	6/21/2022 14:27	19.39	6/21/2022 13:36	5.70	6/21/2022 18:32	77.85
6/22/2022 17:23	50.29	6/22/2022 16:05	82.41	6/21/2022 14:28	19.29	6/21/2022 13:37	5.77	6/21/2022 18:33	77.75
6/22/2022 17:24	50.31	6/22/2022 16:06	82.83	6/21/2022 14:29	19.18	6/21/2022 13:38	5.73	6/21/2022 18:34	77.69

6/22/2022 17:25	50.32	6/22/2022 16:07	83.69	6/21/2022 14:30	19.14	6/21/2022 13:39	5.70	6/21/2022 18:35	77.60
6/22/2022 17:26	50.30	6/22/2022 16:08	83.37	6/21/2022 14:31	19.09	6/21/2022 13:40	5.67	6/21/2022 18:36	77.55
6/22/2022 17:27	50.28	6/22/2022 16:09	83.02	6/21/2022 14:32	18.94	6/21/2022 13:41	5.69	6/21/2022 18:37	77.44
6/22/2022 17:28	50.32	6/22/2022 16:10	83.29	6/21/2022 14:33	18.91	6/21/2022 13:42	5.73	6/21/2022 18:38	77.35
6/22/2022 17:29	50.31	6/22/2022 16:11	83.03	6/21/2022 14:34	18.89	6/21/2022 13:43	5.64	6/21/2022 18:39	77.30
6/22/2022 17:30	50.31	6/22/2022 16:12	82.78	6/21/2022 14:35	18.81	6/21/2022 13:44	5.68	6/21/2022 18:40	77.20
6/22/2022 17:31	50.31	6/22/2022 16:13	82.61	6/21/2022 14:36	18.79	6/21/2022 13:45	5.70	6/21/2022 18:41	77.13
6/22/2022 17:32	50.28	6/22/2022 16:14	82.47	6/21/2022 14:37	18.74	6/21/2022 13:46	5.96	6/21/2022 18:42	77.05
6/22/2022 17:33	50.26	6/22/2022 16:15	82.32	6/21/2022 14:38	18.68	6/21/2022 13:47	5.83	6/21/2022 18:43	77.01
6/22/2022 17:34	50.34	6/22/2022 16:16	82.30	6/21/2022 14:39	18.64	6/21/2022 13:48	5.73	6/21/2022 18:44	76.91
6/22/2022 17:35	50.27	6/22/2022 16:17	82.13	6/21/2022 14:40	18.56	6/21/2022 13:49	5.73	6/21/2022 18:45	76.90
6/22/2022 17:36	50.25	6/22/2022 16:18	82.07	6/21/2022 14:41	18.59	6/21/2022 13:50	5.69	6/21/2022 18:46	76.79
6/22/2022 17:37	50.29	6/22/2022 16:19	81.99	6/21/2022 14:42	18.53	6/21/2022 13:51	5.64	6/21/2022 18:47	76.70
6/22/2022 17:38	50.31	6/22/2022 16:20	81.95	6/21/2022 14:43	18.47	6/21/2022 13:52	5.69	6/21/2022 18:48	76.68
6/22/2022 17:39	50.33	6/22/2022 16:21	81.88	6/21/2022 14:44	18.45	6/21/2022 13:53	5.62	6/21/2022 18:49	76.58
6/22/2022 17:40	50.29	6/22/2022 16:22	81.80	6/21/2022 14:45	18.40	6/21/2022 13:54	5.87	6/21/2022 18:50	76.54
6/22/2022 17:41	50.30	6/22/2022 16:23	81.77	6/21/2022 14:46	18.39	6/21/2022 13:55	5.76	6/21/2022 18:51	76.49
6/22/2022 17:42	50.31	6/22/2022 16:24	81.70	6/21/2022 14:47	18.37	6/21/2022 13:56	5.77	6/21/2022 18:52	76.41
6/22/2022 17:43	50.28	6/22/2022 16:25	81.73	6/21/2022 14:48	18.37	6/21/2022 13:57	5.71	6/21/2022 18:53	76.33
6/22/2022 17:44	50.28	6/22/2022 16:26	81.73	6/21/2022 14:49	18.34	6/21/2022 13:58	5.67	6/21/2022 18:54	76.24
6/22/2022 17:45	50.25	6/22/2022 16:27	81.68	6/21/2022 14:50	18.26	6/21/2022 13:59	5.66	6/21/2022 18:55	80.98
6/22/2022 17:46	50.29	6/22/2022 16:28	81.64	6/21/2022 14:51	18.25	6/21/2022 14:00	5.66	6/21/2022 18:56	80.72
6/22/2022 17:47	50.28	6/22/2022 16:29	81.59	6/21/2022 14:52	18.20	6/21/2022 14:01	5.61	6/21/2022 18:57	80.58
6/22/2022 17:48	50.31	6/22/2022 16:30	81.55	6/21/2022 14:53	18.21	6/21/2022 14:02	5.61	6/21/2022 18:58	80.48
6/22/2022 17:49	50.26	6/22/2022 16:31	81.58	6/21/2022 14:54	18.20	6/21/2022 14:03	5.60	6/21/2022 18:59	80.34
6/22/2022 17:50	50.27	6/22/2022 16:32	81.55	6/21/2022 14:55	18.19	6/21/2022 14:04	5.63	6/21/2022 19:00	80.20
6/22/2022 17:51	50.27	6/22/2022 16:33	81.56	6/21/2022 14:56	18.10	6/21/2022 14:05	5.58	6/21/2022 19:01	80.11
6/22/2022 17:52	50.27	6/22/2022 16:34	81.53	6/21/2022 14:57	18.11	6/21/2022 14:06	5.64	6/21/2022 19:02	79.96
6/22/2022 17:53	50.24	6/22/2022 16:35	81.49	6/21/2022 14:58	18.16	6/21/2022 14:07	5.61	6/21/2022 19:03	79.85
6/22/2022 17:54	50.26	6/22/2022 16:36	81.46	6/21/2022 14:59	18.08	6/21/2022 14:08	5.64	6/21/2022 19:04	79.76
6/22/2022 17:55	50.31	6/22/2022 16:37	81.46	6/21/2022 15:00	18.05	6/21/2022 14:09	5.61	6/21/2022 19:05	79.63
6/22/2022 17:56	50.27	6/22/2022 16:38	81.50	6/21/2022 15:01	18.02	6/21/2022 14:10	5.56	6/21/2022 19:06	79.55
6/22/2022 17:57	50.25	6/22/2022 16:39	81.51	6/21/2022 15:02	18.03	6/21/2022 14:11	5.55	6/21/2022 19:07	79.46
6/22/2022 17:58	50.28	6/22/2022 16:40	81.48	6/21/2022 15:03	18.01	6/21/2022 14:12	5.53	6/21/2022 19:08	79.40
6/22/2022 17:59	50.27	6/22/2022 16:41	81.50	6/21/2022 15:04	18.00	6/21/2022 14:13	5.51	6/21/2022 19:09	79.30
6/22/2022 18:00	50.32	6/22/2022 16:42	81.44	6/21/2022 15:05	17.95	6/21/2022 14:14	5.57	6/21/2022 19:10	79.18
6/22/2022 18:01	50.22	6/22/2022 16:43	81.42	6/21/2022 15:06	17.94	6/21/2022 14:15	5.57	6/21/2022 19:11	79.14
6/22/2022 18:02	50.28	6/22/2022 16:44	81.43	6/21/2022 15:07	17.94	6/21/2022 14:16	5.49	6/21/2022 19:12	79.03
6/22/2022 18:03	50.29	6/22/2022 16:45	81.40	6/21/2022 15:08	17.92	6/21/2022 14:17	5.52	6/21/2022 19:13	78.97
6/22/2022 18:04	50.32	6/22/2022 16:46	81.38	6/21/2022 15:09	17.93	6/21/2022 14:18	5.52	6/21/2022 19:14	78.89
6/22/2022 18:05	50.26	6/22/2022 16:47	81.37	6/21/2022 15:10	17.88	6/21/2022 14:19	5.53	6/21/2022 19:15	78.82
6/22/2022 18:06	50.25	6/22/2022 16:48	81.37	6/21/2022 15:11	17.90	6/21/2022 14:20	5.52	6/21/2022 19:16	78.76
6/22/2022 18:07	50.26	6/22/2022 16:49	81.38	6/21/2022 15:12	17.87	6/21/2022 14:21	5.49	6/21/2022 19:17	78.70
6/22/2022 18:08	50.27	6/22/2022 16:50	81.42	6/21/2022 15:13	17.88	6/21/2022 14:22	5.56	6/21/2022 19:18	78.63
6/22/2022 18:09	50.25	6/22/2022 16:51	81.41	6/21/2022 15:14	17.84	6/21/2022 14:23	5.48	6/21/2022 19:19	78.55
6/22/2022 18:10	50.25	6/22/2022 16:52	81.42	6/21/2022 15:15	17.81	6/21/2022 14:24	5.49	6/21/2022 19:20	78.49
6/22/2022 18:11	50.29	6/22/2022 16:53	81.42	6/21/2022 15:16	17.81	6/21/2022 14:25	5.45	6/21/2022 19:21	78.45
6/22/2022 18:12	50.24	6/22/2022 16:54	81.41	6/21/2022 15:17	17.79	6/21/2022 14:26	5.58	6/21/2022 19:22	78.34
6/22/2022 18:13	50.26	6/22/2022 16:55	81.40	6/21/2022 15:18	21.11	6/21/2022 14:27	5.45	6/21/2022 19:23	78.26
6/22/2022 18:14	50.26	6/22/2022 16:56	81.40	6/21/2022 15:19	25.33	6/21/2022 14:28	5.47	6/21/2022 19:24	78.18
6/22/2022 18:15	50.27	6/22/2022 16:57	81.37	6/21/2022 15:20	27.91	6/21/2022 14:29	5.55	6/21/2022 19:25	78.11
6/22/2022 18:16	50.25	6/22/2022 16:58	81.38	6/21/2022 15:21	25.30	6/21/2022 14:30	5.47	6/21/2022 19:26	78.04
6/22/2022 18:17	50.23	6/22/2022 16:59	81.39	6/21/2022 15:22	23.39	6/21/2022 14:31	5.47	6/21/2022 19:27	77.97
6/22/2022 18:18	50.25	6/22/2022 17:00	81.35	6/21/2022 15:23	22.27	6/21/2022 14:32	5.48	6/21/2022 19:28	77.91
6/22/2022 18:19	50.26	6/22/2022 17:01	81.95	6/21/2022 15:24	21.57	6/21/2022 14:33	5.49	6/21/2022 19:29	77.82
6/22/2022 18:20	50.24	6/22/2022 17:02	83.36	6/21/2022 15:25	21.08	6/21/2022 14:34	5.42	6/21/2022 19:30	77.78
6/22/2022 18:21	50.25	6/22/2022 17:03	82.98	6/21/2022 15:26	20.69	6/21/2022 14:35	5.45	6/21/2022 19:31	77.69
6/22/2022 18:22	50.28	6/22/2022 17:04	82.71	6/21/2022 15:27	20.42	6/21/2022 14:36	5.44	6/21/2022 19:32	77.59
6/22/2022 18:23	50.28	6/22/2022 17:05	82.45	6/21/2022 15:28	20.21	6/21/2022 14:37	5.41	6/21/2022 19:33	77.55
6/22/2022 18:24	50.27	6/22/2022 17:06	82.31	6/21/2022 15:29	20.05	6/21/2022 14:38	5.40	6/21/2022 19:34	77.44
6/22/2022 18:25	50.27	6/22/2022 17:07	82.23	6/21/2022 15:30	19.83	6/21/2022 14:39	5.41	6/21/2022 19:35	77.39
6/22/2022 18:26	50.26	6/22/2022 17:08	82.12	6/21/2022 15:31	19.72	6/21/2022 14:40	5.86	6/21/2022 19:36	77.30
6/22/2022 18:27	50.26	6/22/2022 17:09	82.03	6/21/2022 15:32	19.57	6/21/2022 14:41	5.62	6/21/2022 19:37	77.29
6/22/2022 18:28	50.24	6/22/2022 17:10	81.92	6/21/2022 15:33	19.49	6/21/2022 14:42	5.55	6/21/2022 19:38	77.20
6/22/2022 18:29	50.25	6/22/2022 17:11	81.91	6/21/2022 15:34	19.40	6/21/2022 14:43	5.54	6/21/2022 19:39	77.37
6/22/2022 18:30	50.24	6/22/2022 17:12	81.83	6/21/2022 15:35	19.30	6/21/2022 14:44	5.47	6/21/2022 19:40	84.58
6/22/2022 18:31	50.26	6/22/2022 17:13	81.82	6/21/2022 15:36	19.25	6/21/2022 14:45	5.48	6/21/2022 19:41	86.54
6/22/2022 18:32	50.25	6/22/2022 17:14	81.74	6/21/2022 15:37	23.05	6/21/2022 14:46	5.45	6/21/2022 19:42	86.27
6/22/2022 18:33	50.27	6/22/2022 17:15	81.74	6/21/2022 15:38	26.96	6/21/2022 14:47	5.46	6/21/2022 19:43	92.44
6/22/2022 18:34	50.25	6/22/2022 17:16	81.66	6/21/2022 15:39	28.73	6/21/2022 14:48	5.43	6/21/2022 19:44	93.77
6/22/2022 18:35	50.20	6/22/2022 17:17	81.62	6/21/2022 15:40	25.59	6/21/2022 14:49	5.44	6/21/2022 19:45	93.38
6/22/2022 18:36	50.24	6/22/2022 17:18	81.61	6/21/2022 15:41	23.91	6/21/2022 14:50	5.51	6/21/2022 19:46	99.94
6/22/2022 18:37	50.25	6/22/2022 17:19	81.61	6/21/2022 15:42	22.92	6/21/2022 14:51	5.42	6/21/2022 19:47	100.92
6/22/2022 18:38	50.24	6/22/2022 17:20	81.62	6/21/2022 15:43	22.26	6/21/2022 14:52	5.38	6/21/2022 19:48	100.41
6/22/2022 18:39	50.25	6/22/2022 17:21	81.57	6/21/2022 15:44	21.77	6/21/2022 14:53	5.45	6/21/2022 19:49	106.86
6/22/2022 18:40	50.26	6/22/2022 17:22	81.58	6/21/2022 15:45	21.40	6/21/2022 14:54	5.33	6/21/2022 19:50	107.91
6/22/2022 18:41	50.28	6/22/2022 17:23	81.52	6/21/2022 15:46	21.13	6/21/2022 14:55	5.38	6/21/2022 19:51	107.38
6/22/2022 18:42	50.25	6/22/2022 17:24	81.54	6/21/2022 15:47	20.89	6/21/2022 14:56	5.39	6/21/2022 19:52	113.10
6/22/2022 18:43	50.26	6/22/2022 17:25	81.54	6/21/2022 15:48	20.70	6/21/2022 14:57	5.37	6/21/2022 19:53	114.85
6/22/2022 18:44	50.28	6/22/2022 17:26	81.48	6/21/2022 15:49	20.50	6/21/2022 14:58	5.37	6/21/2022 19:54	114.10
6/22/2022 18:45	50.22	6/22/2022 17:27	81.51	6/21/2022 15:50	20.43	6/21/2022 14:59	5.38	6/21/2022 19:55	119.08
6/22/2022 18:46	50.25	6/22/2022 17:28	81.47	6/21/2022 15:51	20.25	6/21/2022 15:00	5.41	6/21/2022 19:56	121.53
6/22/2022 18:47	50.21	6/22/2022 17:29	81.50	6/21/2022 15:52	20.09	6/21/2022 15:01	5.36	6/21/2022 19:57	120.80
6/22/2022 18:48	50.29	6/22/2022 17:30	81.47	6/21/2022 15:53	20.01	6/21/2022 15:02	5.33	6/21/2022 19:58	124.76
6/22/2022 18:49	50.24	6/22/2022 17:31	81.44	6/21/2022 15:54	19.95	6/21/2022 15:03	5.38	6/21/2022 19:59	128.24
6/22/2022 18:50	50.23	6/22/2022 17:32	81.41	6/21/2022 15:55	19.83	6/21/2022 15:04	5.28	6/21/2022 20:00	127.38
6/22/2022 18:51	50.22	6/22/2022 17:33	81.41	6/21/2022 15:56	19.72	6/21/2022 15:05	5.31	6/21/2022 20:01	130.17
6/22/2022 18:52	50.25	6/22/2022 17:34	81.42	6/21/2022 15:57	19.70	6/21/2022 15:06	5.34	6/21/2022 20:02	134.88

6/22/2022 18:53	50.21	6/22/2022 17:35	81.37	6/21/2022 15:58	19.55	6/21/2022 15:07	5.35	6/21/2022 20:03	133.99
6/22/2022 18:54	50.24	6/22/2022 17:36	81.44	6/21/2022 15:59	19.49	6/21/2022 15:08	5.28	6/21/2022 20:04	135.29
6/22/2022 18:55	50.24	6/22/2022 17:37	81.40	6/21/2022 16:00	19.45	6/21/2022 15:09	5.31	6/21/2022 20:05	138.70
6/22/2022 18:56	50.23	6/22/2022 17:38	81.42	6/21/2022 16:01	19.43	6/21/2022 15:10	5.34	6/21/2022 20:06	137.82
6/22/2022 18:57	50.25	6/22/2022 17:39	81.40	6/21/2022 16:02	19.34	6/21/2022 15:11	5.36	6/21/2022 20:07	137.04
6/22/2022 18:58	50.20	6/22/2022 17:40	81.41	6/21/2022 16:03	19.27	6/21/2022 15:12	5.34	6/21/2022 20:08	136.25
6/22/2022 18:59	50.23	6/22/2022 17:41	81.42	6/21/2022 16:04	19.25	6/21/2022 15:13	5.29	6/21/2022 20:09	135.48
6/22/2022 19:00	50.24	6/22/2022 17:42	81.41	6/21/2022 16:05	19.14	6/21/2022 15:14	5.34	6/21/2022 20:10	134.76
6/22/2022 19:01	50.25	6/22/2022 17:43	81.41	6/21/2022 16:06	19.10	6/21/2022 15:15	5.25	6/21/2022 20:11	134.05
6/22/2022 19:02	50.25	6/22/2022 17:44	81.40	6/21/2022 16:07	19.06	6/21/2022 15:16	5.26	6/21/2022 20:12	133.37
6/22/2022 19:03	50.23	6/22/2022 17:45	81.42	6/21/2022 16:08	19.00	6/21/2022 15:17	5.30	6/21/2022 20:13	132.68
6/22/2022 19:04	50.23	6/22/2022 17:46	81.41	6/21/2022 16:09	19.02	6/21/2022 15:18	5.29	6/21/2022 20:14	132.04
6/22/2022 19:05	50.24	6/22/2022 17:47	81.37	6/21/2022 16:10	18.97	6/21/2022 15:19	5.21	6/21/2022 20:15	131.36
6/22/2022 19:06	50.23	6/22/2022 17:48	81.37	6/21/2022 16:11	18.99	6/21/2022 15:20	5.29	6/21/2022 20:16	130.68
6/22/2022 19:07	50.21	6/22/2022 17:49	81.42	6/21/2022 16:12	18.91	6/21/2022 15:21	5.31	6/21/2022 20:17	130.02
6/22/2022 19:08	50.22	6/22/2022 17:50	81.39	6/21/2022 16:13	18.85	6/21/2022 15:22	5.27	6/21/2022 20:18	129.37
6/22/2022 19:09	50.21	6/22/2022 17:51	81.37	6/21/2022 16:14	18.80	6/21/2022 15:23	5.23	6/21/2022 20:19	128.78
6/22/2022 19:10	50.25	6/22/2022 17:52	81.38	6/21/2022 16:15	18.75	6/21/2022 15:24	5.27	6/21/2022 20:20	128.07
6/22/2022 19:11	50.23	6/22/2022 17:53	81.38	6/21/2022 16:16	18.76	6/21/2022 15:25	5.31	6/21/2022 20:21	127.48
6/22/2022 19:12	50.25	6/22/2022 17:54	81.36	6/21/2022 16:17	18.75	6/21/2022 15:26	5.23	6/21/2022 20:22	126.90
6/22/2022 19:13	50.20	6/22/2022 17:55	81.33	6/21/2022 16:18	18.68	6/21/2022 15:27	5.24	6/21/2022 20:23	126.29
6/22/2022 19:14	50.22	6/22/2022 17:56	81.33	6/21/2022 16:19	18.68	6/21/2022 15:28	5.27	6/21/2022 20:24	125.69
6/22/2022 19:15	50.23	6/22/2022 17:57	81.39	6/21/2022 16:20	18.69	6/21/2022 15:29	5.23	6/21/2022 20:25	125.07
6/22/2022 19:16	50.24	6/22/2022 17:58	81.36	6/21/2022 16:21	18.64	6/21/2022 15:30	5.23	6/21/2022 20:26	124.48
6/22/2022 19:17	50.23	6/22/2022 17:59	81.37	6/21/2022 16:22	18.59	6/21/2022 15:31	5.59	6/21/2022 20:27	123.91
6/22/2022 19:18	50.21	6/22/2022 18:00	81.37	6/21/2022 16:23	18.61	6/21/2022 15:32	6.17	6/21/2022 20:28	123.32
6/22/2022 19:19	50.22	6/22/2022 18:01	81.35	6/21/2022 16:24	18.55	6/21/2022 15:33	6.07	6/21/2022 20:29	122.74
6/22/2022 19:20	50.26	6/22/2022 18:02	81.39	6/21/2022 16:25	18.56	6/21/2022 15:34	6.29	6/21/2022 20:30	122.22
6/22/2022 19:21	50.23	6/22/2022 18:03	81.37	6/21/2022 16:26	18.48	6/21/2022 15:35	6.39	6/21/2022 20:31	121.62
6/22/2022 19:22	50.22	6/22/2022 18:04	81.38	6/21/2022 16:27	18.47	6/21/2022 15:36	6.42	6/21/2022 20:32	121.07
6/22/2022 19:23	50.23	6/22/2022 18:05	81.36	6/21/2022 16:28	18.45	6/21/2022 15:37	6.45	6/21/2022 20:33	120.55
6/22/2022 19:24	50.19	6/22/2022 18:06	81.39	6/21/2022 16:29	18.42	6/21/2022 15:38	6.52	6/21/2022 20:34	120.06
6/22/2022 19:25	50.26	6/22/2022 18:07	81.38	6/21/2022 16:30	18.44	6/21/2022 15:39	6.52	6/21/2022 20:35	119.50
6/22/2022 19:26	50.20	6/22/2022 18:08	81.37	6/21/2022 16:31	18.38	6/21/2022 15:40	6.21	6/21/2022 20:36	118.99
6/22/2022 19:27	50.25	6/22/2022 18:09	81.36	6/21/2022 16:32	18.36	6/21/2022 15:41	5.98	6/21/2022 20:37	118.48
6/22/2022 19:28	50.21	6/22/2022 18:10	81.34	6/21/2022 16:33	18.35	6/21/2022 15:42	5.88	6/21/2022 20:38	117.96
6/22/2022 19:29	50.22	6/22/2022 18:11	81.40	6/21/2022 16:34	18.32	6/21/2022 15:43	5.83	6/21/2022 20:39	117.48
6/22/2022 19:30	50.22	6/22/2022 18:12	81.39	6/21/2022 16:35	18.35	6/21/2022 15:44	5.75	6/21/2022 20:40	116.99
6/22/2022 19:31	50.22	6/22/2022 18:13	81.36	6/21/2022 16:36	18.31	6/21/2022 15:45	5.67	6/21/2022 20:41	116.45
6/22/2022 19:32	50.21	6/22/2022 18:14	81.33	6/21/2022 16:37	18.29	6/21/2022 15:46	5.70	6/21/2022 20:42	116.05
6/22/2022 19:33	50.21	6/22/2022 18:15	81.38	6/21/2022 16:38	18.30	6/21/2022 15:47	5.67	6/21/2022 20:43	115.57
6/22/2022 19:34	50.23	6/22/2022 18:16	81.36	6/21/2022 16:39	18.27	6/21/2022 15:48	5.69	6/21/2022 20:44	115.13
6/22/2022 19:35	50.22	6/22/2022 18:17	81.38	6/21/2022 16:40	18.26	6/21/2022 15:49	5.62	6/21/2022 20:45	114.63
6/22/2022 19:36	50.21	6/22/2022 18:18	81.36	6/21/2022 16:41	18.19	6/21/2022 15:50	5.59	6/21/2022 20:46	114.18
6/22/2022 19:37	50.23	6/22/2022 18:19	81.37	6/21/2022 16:42	18.19	6/21/2022 15:51	5.76	6/21/2022 20:47	113.71
6/22/2022 19:38	50.25	6/22/2022 18:20	81.36	6/21/2022 16:43	18.23	6/21/2022 15:52	5.80	6/21/2022 20:48	113.27
6/22/2022 19:39	50.23	6/22/2022 18:21	81.38	6/21/2022 16:44	18.24	6/21/2022 15:53	5.67	6/21/2022 20:49	112.83
6/22/2022 19:40	50.23	6/22/2022 18:22	81.39	6/21/2022 16:45	18.19	6/21/2022 15:54	5.63	6/21/2022 20:50	112.39
6/22/2022 19:41	50.24	6/22/2022 18:23	81.35	6/21/2022 16:46	18.20	6/21/2022 15:55	5.57	6/21/2022 20:51	111.97
6/22/2022 19:42	50.23	6/22/2022 18:24	81.38	6/21/2022 16:47	18.19	6/21/2022 15:56	5.59	6/21/2022 20:52	111.54
6/22/2022 19:43	50.19	6/22/2022 18:25	81.34	6/21/2022 16:48	18.13	6/21/2022 15:57	5.56	6/21/2022 20:53	111.07
6/22/2022 19:44	50.23	6/22/2022 18:26	81.38	6/21/2022 16:49	18.16	6/21/2022 15:58	5.56	6/21/2022 20:54	110.71
6/22/2022 19:45	50.26	6/22/2022 18:27	81.34	6/21/2022 16:50	18.17	6/21/2022 15:59	5.59	6/21/2022 20:55	110.28
6/22/2022 19:46	50.20	6/22/2022 18:28	81.34	6/21/2022 16:51	18.09	6/21/2022 16:00	5.55	6/21/2022 20:56	109.86
6/22/2022 19:47	50.22	6/22/2022 18:29	81.34	6/21/2022 16:52	18.15	6/21/2022 16:01	5.51	6/21/2022 20:57	109.49
6/22/2022 19:48	50.23	6/22/2022 18:30	81.38	6/21/2022 16:53	18.14	6/21/2022 16:02	5.51	6/21/2022 20:58	109.07
6/22/2022 19:49	50.22	6/22/2022 18:31	81.37	6/21/2022 16:54	18.12	6/21/2022 16:03	5.52	6/21/2022 20:59	108.70
6/22/2022 19:50	50.21	6/22/2022 18:32	81.35	6/21/2022 16:55	18.11	6/21/2022 16:04	5.48	6/21/2022 21:00	108.31
6/22/2022 19:51	50.21	6/22/2022 18:33	81.33	6/21/2022 16:56	18.13	6/21/2022 16:05	5.51	6/21/2022 21:01	107.93
6/22/2022 19:52	50.20	6/22/2022 18:34	81.36	6/21/2022 16:57	18.10	6/21/2022 16:06	5.50	6/21/2022 21:02	107.54
6/22/2022 19:53	50.22	6/22/2022 18:35	81.36	6/21/2022 16:58	18.04	6/21/2022 16:07	5.47	6/21/2022 21:03	107.18
6/22/2022 19:54	50.18	6/22/2022 18:36	81.35	6/21/2022 16:59	18.05	6/21/2022 16:08	5.47	6/21/2022 21:04	106.79
6/22/2022 19:55	50.20	6/22/2022 18:37	81.31	6/21/2022 17:00	18.03	6/21/2022 16:09	5.45	6/21/2022 21:05	106.45
6/22/2022 19:56	50.22	6/22/2022 18:38	81.36	6/21/2022 17:01	18.05	6/21/2022 16:10	5.46	6/21/2022 21:06	106.10
6/22/2022 19:57	50.22	6/22/2022 18:39	81.37	6/21/2022 17:02	18.08	6/21/2022 16:11	5.46	6/21/2022 21:07	105.75
6/22/2022 19:58	50.21	6/22/2022 18:40	81.36	6/21/2022 17:03	18.05	6/21/2022 16:12	5.48	6/21/2022 21:08	105.41
6/22/2022 19:59	50.24	6/22/2022 18:41	81.37	6/21/2022 17:04	18.04	6/21/2022 16:13	5.40	6/21/2022 21:09	105.06
6/22/2022 20:00	50.20	6/22/2022 18:42	81.37	6/21/2022 17:05	18.04	6/21/2022 16:14	5.43	6/21/2022 21:10	104.66
6/22/2022 20:01	50.21	6/22/2022 18:43	81.34	6/21/2022 17:06	18.03	6/21/2022 16:15	5.77	6/21/2022 21:11	104.41
6/22/2022 20:02	50.17	6/22/2022 18:44	81.32	6/21/2022 17:07	18.02	6/21/2022 16:16	5.55	6/21/2022 21:12	104.07
6/22/2022 20:03	50.25	6/22/2022 18:45	81.35	6/21/2022 17:08	18.04	6/21/2022 16:17	5.51	6/21/2022 21:13	103.79
6/22/2022 20:04	50.20	6/22/2022 18:46	81.35	6/21/2022 17:09	18.06	6/21/2022 16:18	5.54	6/21/2022 21:14	103.43
6/22/2022 20:05	53.17	6/22/2022 18:47	81.34	6/21/2022 17:10	18.01	6/21/2022 16:19	5.60	6/21/2022 21:15	103.11
6/22/2022 20:06	54.43	6/22/2022 18:48	81.36	6/21/2022 17:11	18.00	6/21/2022 16:20	5.60	6/21/2022 21:16	102.75
6/22/2022 20:07	55.10	6/22/2022 18:49	81.36	6/21/2022 17:12	18.06	6/21/2022 16:21	5.52	6/21/2022 21:17	102.46
6/22/2022 20:08	54.17	6/22/2022 18:50	81.31	6/21/2022 17:13	17.97	6/21/2022 16:22	5.86	6/21/2022 21:18	102.12
6/22/2022 20:09	52.55	6/22/2022 18:51	81.33	6/21/2022 17:14	18.03	6/21/2022 16:23	5.64	6/21/2022 21:19	101.85
6/22/2022 20:10	51.87	6/22/2022 18:52	81.33	6/21/2022 17:15	18.03	6/21/2022 16:24	5.58	6/21/2022 21:20	101.53
6/22/2022 20:11	51.57	6/22/2022 18:53	81.33	6/21/2022 17:16	17.98	6/21/2022 16:25	5.59	6/21/2022 21:21	101.25
6/22/2022 20:12	51.42	6/22/2022 18:54	81.36	6/21/2022 17:17	17.98	6/21/2022 16:26	5.47	6/21/2022 21:22	100.90
6/22/2022 20:13	51.31	6/22/2022 18:55	81.33	6/21/2022 17:18	17.96	6/21/2022 16:27	5.49	6/21/2022 21:23	100.62
6/22/2022 20:14	51.17	6/22/2022 18:56	81.35	6/21/2022 17:19	17.95	6/21/2022 16:28	5.50	6/21/2022 21:24	100.33
6/22/2022 20:15	51.08	6/22/2022 18:57	81.36	6/21/2022 17:20	17.92	6/21/2022 16:29	5.45	6/21/2022 21:25	100.05
6/22/2022 20:16	51.04	6/22/2022 18:58	81.33	6/21/2022 17:21	17.96	6/21/2022 16:30	5.43	6/21/2022 21:26	99.78
6/22/2022 20:17	51.01	6/22/2022 18:59	81.33	6/21/2022 17:22	17.98	6/21/2022 16:31	5.43	6/21/2022 21:27	99.49
6/22/2022 20:18	50.93	6/22/2022 19:00	81.33	6/21/2022 17:23	17.96	6/21/2022 16:32	5.48	6/21/2022 21:28	99.21
6/22/2022 20:19	50.91	6/22/2022 19:01	81.34	6/21/2022 17:24	18.01	6/21/2022 16:33	5.44	6/21/2022 21:29	98.91
6/22/2022 20:20	50.89	6/22/2022 19:02	81.36	6/21/2022 17:25	17.95	6/21/2022 16:34	5.46	6/21/2022 21:30	98.64

6/22/2022 20:21	50.82	6/22/2022 19:03	81.34	6/21/2022 17:26	17.94	6/21/2022 16:35	5.52	6/21/2022 21:31	98.36
6/22/2022 20:22	50.82	6/22/2022 19:04	81.32	6/21/2022 17:27	17.94	6/21/2022 16:36	5.43	6/21/2022 21:32	98.10
6/22/2022 20:23	50.79	6/22/2022 19:05	81.30	6/21/2022 17:28	17.93	6/21/2022 16:37	5.42	6/21/2022 21:33	97.88
6/22/2022 20:24	50.78	6/22/2022 19:06	81.34	6/21/2022 17:29	17.94	6/21/2022 16:38	5.43	6/21/2022 21:34	97.58
6/22/2022 20:25	50.76	6/22/2022 19:07	81.32	6/21/2022 17:30	17.94	6/21/2022 16:39	5.42	6/21/2022 21:35	97.33
6/22/2022 20:26	50.76	6/22/2022 19:08	81.33	6/21/2022 17:31	17.93	6/21/2022 16:40	5.40	6/21/2022 21:36	97.07
6/22/2022 20:27	50.73	6/22/2022 19:09	81.34	6/21/2022 17:32	17.97	6/21/2022 16:41	5.40	6/21/2022 21:37	96.80
6/22/2022 20:28	50.74	6/22/2022 19:10	81.35	6/21/2022 17:33	18.00	6/21/2022 16:42	5.47	6/21/2022 21:38	96.57
6/22/2022 20:29	50.73	6/22/2022 19:11	81.34	6/21/2022 17:34	18.00	6/21/2022 16:43	5.36	6/21/2022 21:39	96.30
6/22/2022 20:30	50.72	6/22/2022 19:12	81.35	6/21/2022 17:35	18.02	6/21/2022 16:44	5.41	6/21/2022 21:40	96.05
6/22/2022 20:31	50.66	6/22/2022 19:13	81.30	6/21/2022 17:36	18.00	6/21/2022 16:45	5.42	6/21/2022 21:41	95.82
6/22/2022 20:32	50.72	6/22/2022 19:14	81.35	6/21/2022 17:37	17.99	6/21/2022 16:46	5.38	6/21/2022 21:42	95.59
6/22/2022 20:33	50.69	6/22/2022 19:15	81.34	6/21/2022 17:38	17.99	6/21/2022 16:47	5.32	6/21/2022 21:43	95.35
6/22/2022 20:34	50.65	6/22/2022 19:16	81.35	6/21/2022 17:39	17.99	6/21/2022 16:48	5.34	6/21/2022 21:44	95.09
6/22/2022 20:35	50.65	6/22/2022 19:17	81.32	6/21/2022 17:40	18.02	6/21/2022 16:49	5.44	6/21/2022 21:45	94.88
6/22/2022 20:36	50.67	6/22/2022 19:18	81.31	6/21/2022 17:41	18.04	6/21/2022 16:50	5.30	6/21/2022 21:46	94.66
6/22/2022 20:37	50.63	6/22/2022 19:19	81.37	6/21/2022 17:42	18.03	6/21/2022 16:51	5.35	6/21/2022 21:47	94.44
6/22/2022 20:38	50.63	6/22/2022 19:20	81.34	6/21/2022 17:43	18.05	6/21/2022 16:52	5.37	6/21/2022 21:48	94.20
6/22/2022 20:39	50.62	6/22/2022 19:21	81.32	6/21/2022 17:44	18.09	6/21/2022 16:53	5.54	6/21/2022 21:49	94.01
6/22/2022 20:40	50.62	6/22/2022 19:22	81.35	6/21/2022 17:45	18.06	6/21/2022 16:54	5.43	6/21/2022 21:50	93.83
6/22/2022 20:41	50.60	6/22/2022 19:23	81.37	6/21/2022 17:46	18.09	6/21/2022 16:55	5.43	6/21/2022 21:51	93.61
6/22/2022 20:42	50.60	6/22/2022 19:24	81.35	6/21/2022 17:47	18.13	6/21/2022 16:56	5.39	6/21/2022 21:52	93.42
6/22/2022 20:43	50.56	6/22/2022 19:25	81.35	6/21/2022 17:48	18.10	6/21/2022 16:57	5.41	6/21/2022 21:53	93.22
6/22/2022 20:44	50.60	6/22/2022 19:26	81.33	6/21/2022 17:49	18.13	6/21/2022 16:58	5.32	6/21/2022 21:54	92.99
6/22/2022 20:45	50.58	6/22/2022 19:27	81.35	6/21/2022 17:50	18.09	6/21/2022 16:59	5.35	6/21/2022 21:55	92.79
6/22/2022 20:46	50.59	6/22/2022 19:28	81.34	6/21/2022 17:51	18.15	6/21/2022 17:00	5.39	6/21/2022 21:56	92.57
6/22/2022 20:47	50.57	6/22/2022 19:29	81.34	6/21/2022 17:52	18.14	6/21/2022 17:01	5.36	6/21/2022 21:57	92.41
6/22/2022 20:48	50.52	6/22/2022 19:30	81.36	6/21/2022 17:53	18.18	6/21/2022 17:02	5.34	6/21/2022 21:58	92.15
6/22/2022 20:49	50.57	6/22/2022 19:31	81.34	6/21/2022 17:54	18.20	6/21/2022 17:03	5.40	6/21/2022 21:59	92.00
6/22/2022 20:50	50.51	6/22/2022 19:32	81.33	6/21/2022 17:55	18.18	6/21/2022 17:04	5.34	6/21/2022 22:00	91.78
6/22/2022 20:51	50.54	6/22/2022 19:33	81.34	6/21/2022 17:56	18.25	6/21/2022 17:05	5.34	6/21/2022 22:01	91.58
6/22/2022 20:52	50.54	6/22/2022 19:34	81.30	6/21/2022 17:57	18.18	6/21/2022 17:06	5.38	6/21/2022 22:02	92.89
6/22/2022 20:53	50.53	6/22/2022 19:35	81.35	6/21/2022 17:58	18.23	6/21/2022 17:07	5.31	6/21/2022 22:03	96.13
6/22/2022 20:54	50.52	6/22/2022 19:36	81.29	6/21/2022 17:59	18.22	6/21/2022 17:08	5.31	6/21/2022 22:04	95.82
6/22/2022 20:55	50.51	6/22/2022 19:37	81.33	6/21/2022 18:00	18.28	6/21/2022 17:09	5.31	6/21/2022 22:05	95.51
6/22/2022 20:56	50.54	6/22/2022 19:38	81.34	6/21/2022 18:01	18.23	6/21/2022 17:10	5.37	6/21/2022 22:06	95.24
6/22/2022 20:57	50.49	6/22/2022 19:39	81.32	6/21/2022 18:02	18.23	6/21/2022 17:11	5.34	6/21/2022 22:07	95.01
6/22/2022 20:58	50.52	6/22/2022 19:40	81.30	6/21/2022 18:03	18.27	6/21/2022 17:12	5.29	6/21/2022 22:08	94.79
6/22/2022 20:59	50.55	6/22/2022 19:41	81.31	6/21/2022 18:04	18.27	6/21/2022 17:13	5.33	6/21/2022 22:09	94.53
6/22/2022 21:00	50.53	6/22/2022 19:42	81.37	6/21/2022 18:05	18.27	6/21/2022 17:14	5.40	6/21/2022 22:10	94.30
6/22/2022 21:01	50.53	6/22/2022 19:43	81.31	6/21/2022 18:06	18.25	6/21/2022 17:15	5.31	6/21/2022 22:11	94.08
6/22/2022 21:02	50.53	6/22/2022 19:44	81.37	6/21/2022 18:07	18.26	6/21/2022 17:16	5.35	6/21/2022 22:12	93.86
6/22/2022 21:03	50.50	6/22/2022 19:45	81.33	6/21/2022 18:08	18.32	6/21/2022 17:17	5.35	6/21/2022 22:13	93.68
6/22/2022 21:04	50.49	6/22/2022 19:46	81.32	6/21/2022 18:09	18.30	6/21/2022 17:18	5.38	6/21/2022 22:14	93.45
6/22/2022 21:05	50.48	6/22/2022 19:47	81.32	6/21/2022 18:10	18.25	6/21/2022 17:19	5.32	6/21/2022 22:15	93.22
6/22/2022 21:06	50.50	6/22/2022 19:48	81.32	6/21/2022 18:11	18.29	6/21/2022 17:20	5.38	6/21/2022 22:16	92.97
6/22/2022 21:07	50.48	6/22/2022 19:49	81.34	6/21/2022 18:12	18.29	6/21/2022 17:21	5.33	6/21/2022 22:17	92.76
6/22/2022 21:08	50.51	6/22/2022 19:50	81.36	6/21/2022 18:13	18.29	6/21/2022 17:22	5.36	6/21/2022 22:18	92.57
6/22/2022 21:09	50.45	6/22/2022 19:51	81.30	6/21/2022 18:14	18.32	6/21/2022 17:23	5.30	6/21/2022 22:19	92.30
6/22/2022 21:10	50.47	6/22/2022 19:52	81.38	6/21/2022 18:15	18.31	6/21/2022 17:24	5.34	6/21/2022 22:20	92.12
6/22/2022 21:11	50.48	6/22/2022 19:53	81.32	6/21/2022 18:16	18.29	6/21/2022 17:25	5.32	6/21/2022 22:21	91.93
6/22/2022 21:12	50.47	6/22/2022 19:54	81.37	6/21/2022 18:17	18.26	6/21/2022 17:26	5.39	6/21/2022 22:22	91.73
6/22/2022 21:13	50.46	6/22/2022 19:55	81.34	6/21/2022 18:18	18.29	6/21/2022 17:27	5.38	6/21/2022 22:23	91.53
6/22/2022 21:14	50.46	6/22/2022 19:56	81.31	6/21/2022 18:19	18.27	6/21/2022 17:28	5.35	6/21/2022 22:24	91.38
6/22/2022 21:15	50.48	6/22/2022 19:57	81.32	6/21/2022 18:20	18.24	6/21/2022 17:29	5.27	6/21/2022 22:25	91.23
6/22/2022 21:16	50.47	6/22/2022 19:58	81.32	6/21/2022 18:21	18.27	6/21/2022 17:30	5.29	6/21/2022 22:26	91.01
6/22/2022 21:17	50.47	6/22/2022 19:59	81.39	6/21/2022 18:22	18.23	6/21/2022 17:31	5.35	6/21/2022 22:27	90.86
6/22/2022 21:18	50.47	6/22/2022 20:00	81.32	6/21/2022 18:23	18.24	6/21/2022 17:32	5.32	6/21/2022 22:28	90.68
6/22/2022 21:19	50.45	6/22/2022 20:01	81.31	6/21/2022 18:24	18.25	6/21/2022 17:33	5.28	6/21/2022 22:29	90.46
6/22/2022 21:20	50.43	6/22/2022 20:02	81.33	6/21/2022 18:25	18.29	6/21/2022 17:34	5.32	6/21/2022 22:30	90.30
6/22/2022 21:21	50.43	6/22/2022 20:03	81.37	6/21/2022 18:26	18.28	6/21/2022 17:35	5.28	6/21/2022 22:31	90.12
6/22/2022 21:22	50.47	6/22/2022 20:04	81.35	6/21/2022 18:27	18.25	6/21/2022 17:36	5.31	6/21/2022 22:32	89.94
6/22/2022 21:23	50.46	6/22/2022 20:05	81.37	6/21/2022 18:28	18.23	6/21/2022 17:37	5.39	6/21/2022 22:33	89.78
6/22/2022 21:24	50.47	6/22/2022 20:06	81.37	6/21/2022 18:29	18.23	6/21/2022 17:38	5.29	6/21/2022 22:34	89.60
6/22/2022 21:25	50.45	6/22/2022 20:07	81.33	6/21/2022 18:30	18.23	6/21/2022 17:39	5.41	6/21/2022 22:35	89.42
6/22/2022 21:26	50.48	6/22/2022 20:08	81.35	6/21/2022 18:31	23.86	6/21/2022 17:40	5.31	6/21/2022 22:36	89.23
6/22/2022 21:27	50.47	6/22/2022 20:09	81.28	6/21/2022 18:32	27.22	6/21/2022 17:41	5.30	6/21/2022 22:37	89.05
6/22/2022 21:28	50.46	6/22/2022 20:10	81.39	6/21/2022 18:33	27.31	6/21/2022 17:42	5.36	6/21/2022 22:38	88.91
6/22/2022 21:29	50.43	6/22/2022 20:11	81.32	6/21/2022 18:34	24.67	6/21/2022 17:43	5.27	6/21/2022 22:39	88.76
6/22/2022 21:30	50.41	6/22/2022 20:12	81.37	6/21/2022 18:35	23.27	6/21/2022 17:44	5.39	6/21/2022 22:40	88.55
6/22/2022 21:31	50.46	6/22/2022 20:13	81.34	6/21/2022 18:36	22.37	6/21/2022 17:45	5.39	6/21/2022 22:41	88.43
6/22/2022 21:32	50.46	6/22/2022 20:14	81.33	6/21/2022 18:37	21.74	6/21/2022 17:46	5.35	6/21/2022 22:42	88.26
6/22/2022 21:33	50.44	6/22/2022 20:15	81.33	6/21/2022 18:38	21.35	6/21/2022 17:47	5.57	6/21/2022 22:43	88.13
6/22/2022 21:34	50.45	6/22/2022 20:16	81.32	6/21/2022 18:39	21.05	6/21/2022 17:48	5.42	6/21/2022 22:44	87.96
6/22/2022 21:35	50.44	6/22/2022 20:17	81.30	6/21/2022 18:40	20.76	6/21/2022 17:49	5.34	6/21/2022 22:45	87.80
6/22/2022 21:36	50.44	6/22/2022 20:18	81.35	6/21/2022 18:41	20.57	6/21/2022 17:50	5.37	6/21/2022 22:46	87.61
6/22/2022 21:37	50.45	6/22/2022 20:19	81.32	6/21/2022 18:42	20.42	6/21/2022 17:51	5.34	6/21/2022 22:47	87.46
6/22/2022 21:38	50.43	6/22/2022 20:20	81.34	6/21/2022 18:43	20.34	6/21/2022 17:52	5.27	6/21/2022 22:48	87.26
6/22/2022 21:39	50.46	6/22/2022 20:21	81.34	6/21/2022 18:44	20.17	6/21/2022 17:53	5.36	6/21/2022 22:49	87.13
6/22/2022 21:40	50.40	6/22/2022 20:22	81.39	6/21/2022 18:45	20.06	6/21/2022 17:54	5.34	6/21/2022 22:50	86.94
6/22/2022 21:41	50.39	6/22/2022 20:23	81.30	6/21/2022 18:46	19.98	6/21/2022 17:55	5.35	6/21/2022 22:51	86.82
6/22/2022 21:42	50.42	6/22/2022 20:24	81.31	6/21/2022 18:47	19.87	6/21/2022 17:56	5.34	6/21/2022 22:52	86.66
6/22/2022 21:43	50.41	6/22/2022 20:25	81.34	6/21/2022 18:48	19.81	6/21/2022 17:57	5.28	6/21/2022 22:53	86.50
6/22/2022 21:44	50.44	6/22/2022 20:26	81.32	6/21/2022 18:49	19.72	6/21/2022 17:58	5.35	6/21/2022 22:54	86.36
6/22/2022 21:45	50.46	6/22/2022 20:27	81.37	6/21/2022 18:50	19.64	6/21/2022 17:59	5.27	6/21/2022 22:55	86.22
6/22/2022 21:46	50.42	6/22/2022 20:28	81.36	6/21/2022 18:51	19.58	6/21/2022 18:00	5.28	6/21/2022 22:56	86.04
6/22/2022 21:47	50.42	6/22/2022 20:29	81.36	6/21/2022 18:52	19.52	6/21/2022 18:01	5.38	6/21/2022 22:57	85.89
6/22/2022 21:48	50.42	6/22/2022 20:30	81.36	6/21/2022 18:53	19.44	6/21/2022 18:02	5.24	6/21/2022 22:58	85.75

6/22/2022 21:49	50.41	6/22/2022 20:31	81.36	6/21/2022 18:54	19.38	6/21/2022 18:03	5.26	6/21/2022 22:59	85.61
6/22/2022 21:50	50.41	6/22/2022 20:32	81.30	6/21/2022 18:55	19.32	6/21/2022 18:04	5.29	6/21/2022 23:00	85.46
6/22/2022 21:51	50.44	6/22/2022 20:33	81.31	6/21/2022 18:56	19.29	6/21/2022 18:05	5.28	6/21/2022 23:01	85.33
6/22/2022 21:52	50.47	6/22/2022 20:34	81.31	6/21/2022 18:57	19.23	6/21/2022 18:06	5.35	6/21/2022 23:02	85.18
6/22/2022 21:53	50.39	6/22/2022 20:35	81.29	6/21/2022 18:58	19.22	6/21/2022 18:07	5.31	6/21/2022 23:03	85.08
6/22/2022 21:54	50.43	6/22/2022 20:36	81.38	6/21/2022 18:59	19.16	6/21/2022 18:08	5.28	6/21/2022 23:04	84.92
6/22/2022 21:55	50.41	6/22/2022 20:37	81.34	6/21/2022 19:00	19.17	6/21/2022 18:09	5.27	6/21/2022 23:05	84.76
6/22/2022 21:56	50.41	6/22/2022 20:38	81.34	6/21/2022 19:01	19.07	6/21/2022 18:10	5.32	6/21/2022 23:06	84.63
6/22/2022 21:57	50.42	6/22/2022 20:39	81.37	6/21/2022 19:02	19.06	6/21/2022 18:11	5.22	6/21/2022 23:07	84.51
6/22/2022 21:58	50.41	6/22/2022 20:40	81.33	6/21/2022 19:03	19.06	6/21/2022 18:12	5.23	6/21/2022 23:08	84.38
6/22/2022 21:59	50.38	6/22/2022 20:41	81.34	6/21/2022 19:04	18.98	6/21/2022 18:13	5.32	6/21/2022 23:09	84.28
6/22/2022 22:00	50.41	6/22/2022 20:42	81.33	6/21/2022 19:05	18.95	6/21/2022 18:14	5.23	6/21/2022 23:10	84.10
6/22/2022 22:01	50.41	6/22/2022 20:43	81.33	6/21/2022 19:06	18.94	6/21/2022 18:15	5.25	6/21/2022 23:11	84.00
6/22/2022 22:02	50.37	6/22/2022 20:44	81.32	6/21/2022 19:07	18.87	6/21/2022 18:16	5.28	6/21/2022 23:12	83.84
6/22/2022 22:03	50.39	6/22/2022 20:45	81.37	6/21/2022 19:08	18.83	6/21/2022 18:17	5.37	6/21/2022 23:13	83.74
6/22/2022 22:04	50.39	6/22/2022 20:46	81.32	6/21/2022 19:09	18.81	6/21/2022 18:18	5.27	6/21/2022 23:14	83.61
6/22/2022 22:05	50.37	6/22/2022 20:47	81.32	6/21/2022 19:10	18.80	6/21/2022 18:19	5.23	6/21/2022 23:15	83.44
6/22/2022 22:06	50.36	6/22/2022 20:48	81.34	6/21/2022 19:11	18.77	6/21/2022 18:20	5.31	6/21/2022 23:16	83.39
6/22/2022 22:07	50.37	6/22/2022 20:49	81.30	6/21/2022 19:12	18.77	6/21/2022 18:21	5.26	6/21/2022 23:17	83.19
6/22/2022 22:08	50.41	6/22/2022 20:50	81.33	6/21/2022 19:13	18.71	6/21/2022 18:22	5.24	6/21/2022 23:18	83.12
6/22/2022 22:09	50.40	6/22/2022 20:51	81.35	6/21/2022 19:14	18.71	6/21/2022 18:23	5.16	6/21/2022 23:19	83.01
6/22/2022 22:10	50.38	6/22/2022 20:52	81.32	6/21/2022 19:15	18.71	6/21/2022 18:24	5.17	6/21/2022 23:20	82.88
6/22/2022 22:11	50.41	6/22/2022 20:53	81.34	6/21/2022 19:16	18.67	6/21/2022 18:25	5.17	6/21/2022 23:21	82.77
6/22/2022 22:12	50.39	6/22/2022 20:54	81.33	6/21/2022 19:17	18.62	6/21/2022 18:26	5.11	6/21/2022 23:22	82.65
6/22/2022 22:13	50.37	6/22/2022 20:55	81.35	6/21/2022 19:18	18.64	6/21/2022 18:27	5.25	6/21/2022 23:23	82.49
6/22/2022 22:14	50.38	6/22/2022 20:56	81.31	6/21/2022 19:19	18.60	6/21/2022 18:28	5.18	6/21/2022 23:24	82.38
6/22/2022 22:15	50.39	6/22/2022 20:57	81.35	6/21/2022 19:20	18.60	6/21/2022 18:29	5.14	6/21/2022 23:25	82.32
6/22/2022 22:16	50.37	6/22/2022 20:58	81.31	6/21/2022 19:21	18.59	6/21/2022 18:30	5.20	6/21/2022 23:26	82.17
6/22/2022 22:17	50.35	6/22/2022 20:59	81.34	6/21/2022 19:22	18.51	6/21/2022 18:31	5.27	6/21/2022 23:27	82.08
6/22/2022 22:18	50.35	6/22/2022 21:00	81.29	6/21/2022 19:23	18.50	6/21/2022 18:32	5.23	6/21/2022 23:28	81.96
6/22/2022 22:19	50.38	6/22/2022 21:01	81.31	6/21/2022 19:24	18.54	6/21/2022 18:33	5.15	6/21/2022 23:29	81.85
6/22/2022 22:20	50.37	6/22/2022 21:02	81.35	6/21/2022 19:25	18.48	6/21/2022 18:34	5.12	6/21/2022 23:30	81.75
6/22/2022 22:21	50.36	6/22/2022 21:03	81.32	6/21/2022 19:26	18.45	6/21/2022 18:35	5.16	6/21/2022 23:31	81.63
6/22/2022 22:22	50.37	6/22/2022 21:04	81.32	6/21/2022 19:27	18.48	6/21/2022 18:36	5.06	6/21/2022 23:32	81.54
6/22/2022 22:23	50.38	6/22/2022 21:05	81.34	6/21/2022 19:28	18.38	6/21/2022 18:37	5.08	6/21/2022 23:33	81.44
6/22/2022 22:24	50.37	6/22/2022 21:06	81.29	6/21/2022 19:29	18.43	6/21/2022 18:38	5.06	6/21/2022 23:34	81.32
6/22/2022 22:25	50.35	6/22/2022 21:07	81.36	6/21/2022 19:30	18.40	6/21/2022 18:39	5.10	6/21/2022 23:35	81.21
6/22/2022 22:26	50.35	6/22/2022 21:08	81.30	6/21/2022 19:31	18.43	6/21/2022 18:40	5.17	6/21/2022 23:36	81.13
6/22/2022 22:27	50.38	6/22/2022 21:09	81.30	6/21/2022 19:32	18.42	6/21/2022 18:41	5.40	6/21/2022 23:37	81.04
6/22/2022 22:28	50.38	6/22/2022 21:10	81.33	6/21/2022 19:33	18.38	6/21/2022 18:42	5.59	6/21/2022 23:38	81.00
6/22/2022 22:29	50.39	6/22/2022 21:11	81.33	6/21/2022 19:34	18.37	6/21/2022 18:43	5.42	6/21/2022 23:39	80.87
6/22/2022 22:30	50.32	6/22/2022 21:12	81.34	6/21/2022 19:35	18.33	6/21/2022 18:44	5.21	6/21/2022 23:40	80.80
6/22/2022 22:31	50.33	6/22/2022 21:13	81.34	6/21/2022 19:36	18.34	6/21/2022 18:45	5.18	6/21/2022 23:41	80.74
6/22/2022 22:32	50.37	6/22/2022 21:14	81.33	6/21/2022 19:37	18.33	6/21/2022 18:46	5.19	6/21/2022 23:42	80.64
6/22/2022 22:33	50.35	6/22/2022 21:15	81.36	6/21/2022 19:38	18.29	6/21/2022 18:47	5.16	6/21/2022 23:43	80.56
6/22/2022 22:34	50.39	6/22/2022 21:16	81.33	6/21/2022 19:39	18.31	6/21/2022 18:48	5.21	6/21/2022 23:44	80.46
6/22/2022 22:35	50.37	6/22/2022 21:17	81.31	6/21/2022 19:40	18.27	6/21/2022 18:49	5.11	6/21/2022 23:45	80.38
6/22/2022 22:36	50.34	6/22/2022 21:18	81.31	6/21/2022 19:41	18.22	6/21/2022 18:50	5.12	6/21/2022 23:46	80.27
6/22/2022 22:37	50.34	6/22/2022 21:19	81.33	6/21/2022 19:42	18.18	6/21/2022 18:51	5.20	6/21/2022 23:47	80.20
6/22/2022 22:38	50.35	6/22/2022 21:20	81.35	6/21/2022 19:43	18.25	6/21/2022 18:52	5.08	6/21/2022 23:48	80.10
6/22/2022 22:39	50.35	6/22/2022 21:21	81.32	6/21/2022 19:44	18.23	6/21/2022 18:53	5.10	6/21/2022 23:49	80.02
6/22/2022 22:40	50.34	6/22/2022 21:22	81.34	6/21/2022 19:45	18.20	6/21/2022 18:54	5.06	6/21/2022 23:50	79.90
6/22/2022 22:41	50.37	6/22/2022 21:23	81.34	6/21/2022 19:46	18.15	6/21/2022 18:55	5.08	6/21/2022 23:51	79.82
6/22/2022 22:42	50.38	6/22/2022 21:24	81.32	6/21/2022 19:47	18.14	6/21/2022 18:56	5.06	6/21/2022 23:52	79.77
6/22/2022 22:43	50.34	6/22/2022 21:25	81.32	6/21/2022 19:48	18.12	6/21/2022 18:57	5.08	6/21/2022 23:53	79.64
6/22/2022 22:44	50.36	6/22/2022 21:26	81.31	6/21/2022 19:49	18.14	6/21/2022 18:58	5.11	6/21/2022 23:54	79.55
6/22/2022 22:45	50.34	6/22/2022 21:27	81.33	6/21/2022 19:50	18.11	6/21/2022 18:59	5.02	6/21/2022 23:55	79.46
6/22/2022 22:46	50.33	6/22/2022 21:28	81.31	6/21/2022 19:51	18.05	6/21/2022 19:00	5.07	6/21/2022 23:56	79.37
6/22/2022 22:47	50.35	6/22/2022 21:29	81.34	6/21/2022 19:52	18.15	6/21/2022 19:01	4.96	6/21/2022 23:57	79.28
6/22/2022 22:48	50.33	6/22/2022 21:30	81.34	6/21/2022 19:53	18.09	6/21/2022 19:02	5.18	6/21/2022 23:58	79.24
6/22/2022 22:49	50.34	6/22/2022 21:31	81.34	6/21/2022 19:54	18.11	6/21/2022 19:03	5.27	6/21/2022 23:59	79.12
6/22/2022 22:50	50.36	6/22/2022 21:32	81.34	6/21/2022 19:55	18.09	6/21/2022 19:04	5.30	6/22/2022 0:00	79.07
6/22/2022 22:51	50.33	6/22/2022 21:33	81.33	6/21/2022 19:56	18.04	6/21/2022 19:05	5.38	6/22/2022 0:01	79.00
6/22/2022 22:52	50.35	6/22/2022 21:34	81.28	6/21/2022 19:57	18.06	6/21/2022 19:06	5.42	6/22/2022 0:02	78.97
6/22/2022 22:53	50.34	6/22/2022 21:35	81.28	6/21/2022 19:58	18.02	6/21/2022 19:07	5.33	6/22/2022 0:03	78.88
6/22/2022 22:54	50.33	6/22/2022 21:36	81.33	6/21/2022 19:59	17.99	6/21/2022 19:08	5.31	6/22/2022 0:04	78.80
6/22/2022 22:55	50.35	6/22/2022 21:37	81.33	6/21/2022 20:00	18.05	6/21/2022 19:09	5.26	6/22/2022 0:05	78.76
6/22/2022 22:56	50.33	6/22/2022 21:38	81.29	6/21/2022 20:01	18.00	6/21/2022 19:10	5.10	6/22/2022 0:06	78.66
6/22/2022 22:57	50.35	6/22/2022 21:39	81.37	6/21/2022 20:02	18.02	6/21/2022 19:11	5.12	6/22/2022 0:07	78.60
6/22/2022 22:58	50.33	6/22/2022 21:40	81.33	6/21/2022 20:03	17.98	6/21/2022 19:12	5.26	6/22/2022 0:08	78.56
6/22/2022 22:59	50.32	6/22/2022 21:41	81.36	6/21/2022 20:04	17.94	6/21/2022 19:13	5.15	6/22/2022 0:09	78.48
6/22/2022 23:00	50.32	6/22/2022 21:42	81.32	6/21/2022 20:05	17.99	6/21/2022 19:14	5.13	6/22/2022 0:10	78.41
6/22/2022 23:01	50.34	6/22/2022 21:43	81.34	6/21/2022 20:06	17.96	6/21/2022 19:15	5.06	6/22/2022 0:11	78.35
6/22/2022 23:02	50.33	6/22/2022 21:44	81.38	6/21/2022 20:07	17.92	6/21/2022 19:16	5.05	6/22/2022 0:12	78.29
6/22/2022 23:03	50.36	6/22/2022 21:45	81.34	6/21/2022 20:08	17.91	6/21/2022 19:17	5.05	6/22/2022 0:13	78.22
6/22/2022 23:04	50.34	6/22/2022 21:46	81.35	6/21/2022 20:09	17.93	6/21/2022 19:18	5.12	6/22/2022 0:14	78.14
6/22/2022 23:05	50.33	6/22/2022 21:47	81.33	6/21/2022 20:10	17.93	6/21/2022 19:19	5.02	6/22/2022 0:15	78.05
6/22/2022 23:06	50.36	6/22/2022 21:48	81.34	6/21/2022 20:11	17.91	6/21/2022 19:20	5.02	6/22/2022 0:16	77.95
6/22/2022 23:07	50.29	6/22/2022 21:49	81.33	6/21/2022 20:12	17.89	6/21/2022 19:21	5.04	6/22/2022 0:17	77.93
6/22/2022 23:08	50.32	6/22/2022 21:50	81.28	6/21/2022 20:13	17.90	6/21/2022 19:22	4.98	6/22/2022 0:18	77.87
6/22/2022 23:09	50.33	6/22/2022 21:51	81.33	6/21/2022 20:14	17.87	6/21/2022 19:23	4.98	6/22/2022 0:19	77.78
6/22/2022 23:10	50.32	6/22/2022 21:52	81.34	6/21/2022 20:15	17.85	6/21/2022 19:24	4.98	6/22/2022 0:20	77.73
6/22/2022 23:11	50.32	6/22/2022 21:53	81.36	6/21/2022 20:16	17.86	6/21/2022 19:25	5.01	6/22/2022 0:21	77.63
6/22/2022 23:12	50.32	6/22/2022 21:54	81.34	6/21/2022 20:17	17.85	6/21/2022 19:26	4.94	6/22/2022 0:22	77.56
6/22/2022 23:13	50.31	6/22/2022 21:55	81.28	6/21/2022 20:18	17.85	6/21/2022 19:27	4.92	6/22/2022 0:23	77.49
6/22/2022 23:14	50.32	6/22/2022 21:56	81.32	6/21/2022 20:19	17.80	6/21/2022 19:28	4.94	6/22/2022 0:24	77.42
6/22/2022 23:15	50.32	6/22/2022 21:57	81.35	6/21/2022 20:20	17.84	6/21/2022 19:29	5.02	6/22/2022 0:25	77.34
6/22/2022 23:16	50.31	6/22/2022 21:58	81.33	6/21/2022 20:21	17.86	6/21/2022 19:30	4.93	6/22/2022 0:26	77.31

6/22/2022 23:17	50.29	6/22/2022 21:59	81.33	6/21/2022 20:22	17.83	6/21/2022 19:31	4.94	6/22/2022 0:27	77.22
6/22/2022 23:18	50.34	6/22/2022 22:00	81.31	6/21/2022 20:23	17.78	6/21/2022 19:32	4.93	6/22/2022 0:28	77.18
6/22/2022 23:19	50.27	6/22/2022 22:01	81.36	6/21/2022 20:24	17.78	6/21/2022 19:33	4.89	6/22/2022 0:29	77.07
6/22/2022 23:20	50.32	6/22/2022 22:02	81.36	6/21/2022 20:25	17.73	6/21/2022 19:34	4.92	6/22/2022 0:30	77.05
6/22/2022 23:21	50.29	6/22/2022 22:03	81.32	6/21/2022 20:26	17.76	6/21/2022 19:35	5.34	6/22/2022 0:31	76.99
6/22/2022 23:22	50.30	6/22/2022 22:04	81.34	6/21/2022 20:27	17.76	6/21/2022 19:36	5.10	6/22/2022 0:32	76.91
6/22/2022 23:23	50.30	6/22/2022 22:05	81.33	6/21/2022 20:28	17.73	6/21/2022 19:37	5.23	6/22/2022 0:33	76.87
6/22/2022 23:24	50.31	6/22/2022 22:06	81.36	6/21/2022 20:29	17.76	6/21/2022 19:38	5.04	6/22/2022 0:34	76.81
6/22/2022 23:25	50.27	6/22/2022 22:07	81.32	6/21/2022 20:30	17.75	6/21/2022 19:39	4.97	6/22/2022 0:35	76.75
6/22/2022 23:26	50.30	6/22/2022 22:08	81.31	6/21/2022 20:31	17.76	6/21/2022 19:40	5.01	6/22/2022 0:36	76.71
6/22/2022 23:27	50.30	6/22/2022 22:09	81.33	6/21/2022 20:32	17.73	6/21/2022 19:41	5.17	6/22/2022 0:37	76.65
6/22/2022 23:28	50.33	6/22/2022 22:10	81.28	6/21/2022 20:33	17.72	6/21/2022 19:42	5.22	6/22/2022 0:38	76.59
6/22/2022 23:29	50.31	6/22/2022 22:11	81.34	6/21/2022 20:34	17.73	6/21/2022 19:43	5.26	6/22/2022 0:39	76.50
6/22/2022 23:30	50.30	6/22/2022 22:12	81.35	6/21/2022 20:35	17.72	6/21/2022 19:44	5.33	6/22/2022 0:40	76.42
6/22/2022 23:31	50.33	6/22/2022 22:13	81.35	6/21/2022 20:36	17.70	6/21/2022 19:45	5.26	6/22/2022 0:41	76.42
6/22/2022 23:32	50.31	6/22/2022 22:14	81.36	6/21/2022 20:37	17.72	6/21/2022 19:46	5.26	6/22/2022 0:42	76.36
6/22/2022 23:33	50.33	6/22/2022 22:15	81.34	6/21/2022 20:38	17.68	6/21/2022 19:47	5.34	6/22/2022 0:43	76.30
6/22/2022 23:34	50.30	6/22/2022 22:16	81.32	6/21/2022 20:39	17.66	6/21/2022 19:48	5.28	6/22/2022 0:44	76.20
6/22/2022 23:35	50.27	6/22/2022 22:17	81.32	6/21/2022 20:40	17.67	6/21/2022 19:49	5.36	6/22/2022 0:45	76.17
6/22/2022 23:36	50.28	6/22/2022 22:18	81.36	6/21/2022 20:41	17.66	6/21/2022 19:50	5.33	6/22/2022 0:46	76.08
6/22/2022 23:37	50.30	6/22/2022 22:19	81.32	6/21/2022 20:42	17.60	6/21/2022 19:51	5.18	6/22/2022 0:47	76.04
6/22/2022 23:38	50.28	6/22/2022 22:20	81.29	6/21/2022 20:43	17.64	6/21/2022 19:52	5.25	6/22/2022 0:48	75.96
6/22/2022 23:39	50.28	6/22/2022 22:21	81.31	6/21/2022 20:44	17.68	6/21/2022 19:53	5.17	6/22/2022 0:49	75.94
6/22/2022 23:40	50.30	6/22/2022 22:22	81.32	6/21/2022 20:45	17.66	6/21/2022 19:54	5.38	6/22/2022 0:50	75.86
6/22/2022 23:41	50.28	6/22/2022 22:23	81.35	6/21/2022 20:46	17.67	6/21/2022 19:55	5.33	6/22/2022 0:51	75.79
6/22/2022 23:42	50.31	6/22/2022 22:24	81.33	6/21/2022 20:47	17.62	6/21/2022 19:56	5.33	6/22/2022 0:52	75.74
6/22/2022 23:43	50.28	6/22/2022 22:25	81.32	6/21/2022 20:48	17.62	6/21/2022 19:57	5.20	6/22/2022 0:53	75.66
6/22/2022 23:44	50.33	6/22/2022 22:26	81.34	6/21/2022 20:49	17.61	6/21/2022 19:58	5.34	6/22/2022 0:54	75.60
6/22/2022 23:45	50.28	6/22/2022 22:27	81.33	6/21/2022 20:50	17.65	6/21/2022 19:59	5.37	6/22/2022 0:55	75.59
6/22/2022 23:46	50.28	6/22/2022 22:28	81.31	6/21/2022 20:51	17.67	6/21/2022 20:00	5.34	6/22/2022 0:56	75.50
6/22/2022 23:47	50.30	6/22/2022 22:29	81.29	6/21/2022 20:52	17.63	6/21/2022 20:01	5.22	6/22/2022 0:57	75.46
6/22/2022 23:48	50.29	6/22/2022 22:30	81.30	6/21/2022 20:53	17.62	6/21/2022 20:02	5.16	6/22/2022 0:58	75.38
6/22/2022 23:49	50.30	6/22/2022 22:31	81.33	6/21/2022 20:54	17.64	6/21/2022 20:03	5.16	6/22/2022 0:59	75.36
6/22/2022 23:50	50.27	6/22/2022 22:32	81.30	6/21/2022 20:55	17.54	6/21/2022 20:04	5.26	6/22/2022 1:00	75.30
6/22/2022 23:51	50.30	6/22/2022 22:33	81.36	6/21/2022 20:56	17.58	6/21/2022 20:05	5.35	6/22/2022 1:01	75.24
6/22/2022 23:52	50.26	6/22/2022 22:34	81.33	6/21/2022 20:57	17.59	6/21/2022 20:06	5.21	6/22/2022 1:02	75.17
6/22/2022 23:53	50.32	6/22/2022 22:35	81.34	6/21/2022 20:58	17.56	6/21/2022 20:07	5.10	6/22/2022 1:03	75.13
6/22/2022 23:54	50.25	6/22/2022 22:36	81.32	6/21/2022 20:59	17.56	6/21/2022 20:08	5.33	6/22/2022 1:04	75.07
6/22/2022 23:55	50.31	6/22/2022 22:37	81.33	6/21/2022 21:00	17.59	6/21/2022 20:09	5.21	6/22/2022 1:05	75.02
6/22/2022 23:56	50.28	6/22/2022 22:38	81.32	6/21/2022 21:01	17.57	6/21/2022 20:10	5.27	6/22/2022 1:06	74.96
6/22/2022 23:57	50.27	6/22/2022 22:39	81.29	6/21/2022 21:02	17.59	6/21/2022 20:11	5.11	6/22/2022 1:07	74.91
6/22/2022 23:58	50.27	6/22/2022 22:40	81.35	6/21/2022 21:03	17.55	6/21/2022 20:12	5.08	6/22/2022 1:08	74.86
6/22/2022 23:59	50.27	6/22/2022 22:41	81.34	6/21/2022 21:04	17.60	6/21/2022 20:13	5.13	6/22/2022 1:09	74.85
6/23/2022 0:00	50.26	6/22/2022 22:42	81.32	6/21/2022 21:05	17.57	6/21/2022 20:14	5.01	6/22/2022 1:10	74.74
6/23/2022 0:01	50.26	6/22/2022 22:43	81.31	6/21/2022 21:06	17.51	6/21/2022 20:15	5.01	6/22/2022 1:11	74.70
6/23/2022 0:02	50.27	6/22/2022 22:44	81.33	6/21/2022 21:07	17.51	6/21/2022 20:16	5.04	6/22/2022 1:12	74.62
6/23/2022 0:03	50.29	6/22/2022 22:45	81.34	6/21/2022 21:08	17.57	6/21/2022 20:17	4.98	6/22/2022 1:13	74.61
6/23/2022 0:04	50.26	6/22/2022 22:46	81.34	6/21/2022 21:09	17.53	6/21/2022 20:18	5.23	6/22/2022 1:14	74.55
6/23/2022 0:05	50.30	6/22/2022 22:47	81.36	6/21/2022 21:10	17.54	6/21/2022 20:19	5.09	6/22/2022 1:15	74.54
6/23/2022 0:06	50.25	6/22/2022 22:48	81.37	6/21/2022 21:11	17.57	6/21/2022 20:20	5.20	6/22/2022 1:16	74.44
6/23/2022 0:07	50.26	6/22/2022 22:49	81.32	6/21/2022 21:12	17.47	6/21/2022 20:21	5.25	6/22/2022 1:17	74.40
6/23/2022 0:08	50.29	6/22/2022 22:50	81.34	6/21/2022 21:13	17.49	6/21/2022 20:22	5.27	6/22/2022 1:18	74.37
6/23/2022 0:09	50.30	6/22/2022 22:51	81.33	6/21/2022 21:14	17.49	6/21/2022 20:23	5.31	6/22/2022 1:19	74.32
6/23/2022 0:10	50.28	6/22/2022 22:52	81.31	6/21/2022 21:15	17.46	6/21/2022 20:24	5.14	6/22/2022 1:20	74.24
6/23/2022 0:11	50.25	6/22/2022 22:53	81.38	6/21/2022 21:16	17.49	6/21/2022 20:25	5.10	6/22/2022 1:21	74.23
6/23/2022 0:12	50.31	6/22/2022 22:54	81.40	6/21/2022 21:17	17.49	6/21/2022 20:26	5.09	6/22/2022 1:22	74.16
6/23/2022 0:13	50.28	6/22/2022 22:55	81.35	6/21/2022 21:18	17.51	6/21/2022 20:27	5.23	6/22/2022 1:23	74.13
6/23/2022 0:14	50.26	6/22/2022 22:56	81.35	6/21/2022 21:19	17.50	6/21/2022 20:28	5.09	6/22/2022 1:24	74.10
6/23/2022 0:15	50.29	6/22/2022 22:57	81.35	6/21/2022 21:20	17.54	6/21/2022 20:29	5.04	6/22/2022 1:25	74.01
6/23/2022 0:16	50.29	6/22/2022 22:58	81.33	6/21/2022 21:21	17.53	6/21/2022 20:30	4.99	6/22/2022 1:26	74.00
6/23/2022 0:17	50.27	6/22/2022 22:59	81.33	6/21/2022 21:22	17.48	6/21/2022 20:31	4.97	6/22/2022 1:27	73.96
6/23/2022 0:18	50.25	6/22/2022 23:00	81.31	6/21/2022 21:23	17.46	6/21/2022 20:32	4.97	6/22/2022 1:28	73.91
6/23/2022 0:19	50.27	6/22/2022 23:01	81.35	6/21/2022 21:24	17.48	6/21/2022 20:33	4.96	6/22/2022 1:29	73.85
6/23/2022 0:20	50.24	6/22/2022 23:02	81.33	6/21/2022 21:25	17.50	6/21/2022 20:34	5.15	6/22/2022 1:30	73.80
6/23/2022 0:21	50.26	6/22/2022 23:03	81.30	6/21/2022 21:26	17.49	6/21/2022 20:35	5.09	6/22/2022 1:31	73.80
6/23/2022 0:22	50.27	6/22/2022 23:04	81.30	6/21/2022 21:27	17.48	6/21/2022 20:36	5.17	6/22/2022 1:32	73.72
6/23/2022 0:23	50.22	6/22/2022 23:05	81.35	6/21/2022 21:28	17.47	6/21/2022 20:37	5.32	6/22/2022 1:33	73.69
6/23/2022 0:24	50.24	6/22/2022 23:06	81.33	6/21/2022 21:29	17.50	6/21/2022 20:38	5.37	6/22/2022 1:34	73.60
6/23/2022 0:25	50.23	6/22/2022 23:07	81.36	6/21/2022 21:30	17.48	6/21/2022 20:39	5.23	6/22/2022 1:35	73.63
6/23/2022 0:26	50.27	6/22/2022 23:08	81.34	6/21/2022 21:31	17.44	6/21/2022 20:40	5.34	6/22/2022 1:36	73.57
6/23/2022 0:27	50.27	6/22/2022 23:09	81.36	6/21/2022 21:32	17.45	6/21/2022 20:41	5.17	6/22/2022 1:37	73.49
6/23/2022 0:28	50.29	6/22/2022 23:10	81.29	6/21/2022 21:33	17.54	6/21/2022 20:42	5.10	6/22/2022 1:38	73.48
6/23/2022 0:29	50.24	6/22/2022 23:11	81.33	6/21/2022 21:34	17.45	6/21/2022 20:43	5.10	6/22/2022 1:39	73.44
6/23/2022 0:30	50.27	6/22/2022 23:12	81.29	6/21/2022 21:35	17.44	6/21/2022 20:44	4.99	6/22/2022 1:40	73.41
6/23/2022 0:31	50.25	6/22/2022 23:13	81.31	6/21/2022 21:36	17.53	6/21/2022 20:45	4.98	6/22/2022 1:41	73.40
6/23/2022 0:32	50.29	6/22/2022 23:14	81.33	6/21/2022 21:37	17.42	6/21/2022 20:46	5.00	6/22/2022 1:42	73.33
6/23/2022 0:33	50.22	6/22/2022 23:15	81.32	6/21/2022 21:38	17.43	6/21/2022 20:47	4.99	6/22/2022 1:43	73.27
6/23/2022 0:34	50.25	6/22/2022 23:16	81.34	6/21/2022 21:39	17.42	6/21/2022 20:48	4.90	6/22/2022 1:44	73.26
6/23/2022 0:35	50.26	6/22/2022 23:17	81.33	6/21/2022 21:40	17.46	6/21/2022 20:49	4.96	6/22/2022 1:45	73.22
6/23/2022 0:36	50.27	6/22/2022 23:18	81.35	6/21/2022 21:41	17.41	6/21/2022 20:50	4.91	6/22/2022 1:46	73.15
6/23/2022 0:37	50.24	6/22/2022 23:19	81.35	6/21/2022 21:42	17.40	6/21/2022 20:51	4.94	6/22/2022 1:47	73.12
6/23/2022 0:38	50.23	6/22/2022 23:20	81.37	6/21/2022 21:43	17.42	6/21/2022 20:52	4.91	6/22/2022 1:48	73.08
6/23/2022 0:39	50.23	6/22/2022 23:21	81.33	6/21/2022 21:44	17.41	6/21/2022 20:53	4.92	6/22/2022 1:49	73.07
6/23/2022 0:40	50.29	6/22/2022 23:22	81.37	6/21/2022 21:45	17.44	6/21/2022 20:54	4.89	6/22/2022 1:50	73.02
6/23/2022 0:41	50.22	6/22/2022 23:23	81.30	6/21/2022 21:46	17.44	6/21/2022 20:55	4.94	6/22/2022 1:51	72.99
6/23/2022 0:42	50.28	6/22/2022 23:24	81.29	6/21/2022 21:47	17.42	6/21/2022 20:56	4.86	6/22/2022 1:52	72.95
6/23/2022 0:43	50.23	6/22/2022 23:25	81.36	6/21/2022 21:48	17.40	6/21/2022 20:57	5.24	6/22/2022 1:53	72.88
6/23/2022 0:44	50.23	6/22/2022 23:26	81.34	6/21/2022 21:49	17.42	6/21/2022 20:58	5.02	6/22/2022 1:54	72.84

6/23/2022 0:45	50.27	6/22/2022 23:27	81.32	6/21/2022 21:50	17.42	6/21/2022 20:59	4.93	6/22/2022 1:55	72.87
6/23/2022 0:46	50.26	6/22/2022 23:28	81.32	6/21/2022 21:51	17.39	6/21/2022 21:00	4.92	6/22/2022 1:56	72.77
6/23/2022 0:47	50.23	6/22/2022 23:29	81.34	6/21/2022 21:52	17.39	6/21/2022 21:01	4.87	6/22/2022 1:57	72.77
6/23/2022 0:48	50.23	6/22/2022 23:30	81.33	6/21/2022 21:53	17.43	6/21/2022 21:02	4.85	6/22/2022 1:58	72.73
6/23/2022 0:49	50.26	6/22/2022 23:31	81.34	6/21/2022 21:54	17.43	6/21/2022 21:03	4.89	6/22/2022 1:59	72.72
6/23/2022 0:50	50.26	6/22/2022 23:32	81.35	6/21/2022 21:55	17.40	6/21/2022 21:04	4.85	6/22/2022 2:00	72.67
6/23/2022 0:51	50.24	6/22/2022 23:33	81.34	6/21/2022 21:56	17.39	6/21/2022 21:05	4.77	6/22/2022 2:01	72.60
6/23/2022 0:52	50.25	6/22/2022 23:34	81.36	6/21/2022 21:57	17.40	6/21/2022 21:06	4.78	6/22/2022 2:02	72.61
6/23/2022 0:53	50.23	6/22/2022 23:35	81.37	6/21/2022 21:58	17.39	6/21/2022 21:07	4.83	6/22/2022 2:03	72.58
6/23/2022 0:54	50.21	6/22/2022 23:36	81.33	6/21/2022 21:59	17.41	6/21/2022 21:08	4.87	6/22/2022 2:04	72.54
6/23/2022 0:55	50.25	6/22/2022 23:37	81.34	6/21/2022 22:00	17.36	6/21/2022 21:09	4.76	6/22/2022 2:05	72.51
6/23/2022 0:56	50.29	6/22/2022 23:38	81.33	6/21/2022 22:01	17.40	6/21/2022 21:10	4.81	6/22/2022 2:06	72.45
6/23/2022 0:57	50.25	6/22/2022 23:39	81.31	6/21/2022 22:02	17.37	6/21/2022 21:11	4.81	6/22/2022 2:07	72.42
6/23/2022 0:58	50.25	6/22/2022 23:40	81.27	6/21/2022 22:03	17.38	6/21/2022 21:12	4.86	6/22/2022 2:08	72.39
6/23/2022 0:59	50.22	6/22/2022 23:41	81.33	6/21/2022 22:04	17.41	6/21/2022 21:13	4.72	6/22/2022 2:09	72.35
6/23/2022 1:00	50.25	6/22/2022 23:42	81.31	6/21/2022 22:05	17.38	6/21/2022 21:14	4.76	6/22/2022 2:10	72.29
6/23/2022 1:01	50.24	6/22/2022 23:43	81.32	6/21/2022 22:06	17.38	6/21/2022 21:15	4.74	6/22/2022 2:11	72.29
6/23/2022 1:02	50.28	6/22/2022 23:44	81.35	6/21/2022 22:07	17.34	6/21/2022 21:16	4.78	6/22/2022 2:12	72.24
6/23/2022 1:03	50.24	6/22/2022 23:45	81.33	6/21/2022 22:08	17.35	6/21/2022 21:17	4.72	6/22/2022 2:13	72.21
6/23/2022 1:04	50.24	6/22/2022 23:46	81.32	6/21/2022 22:09	17.33	6/21/2022 21:18	4.75	6/22/2022 2:14	72.16
6/23/2022 1:05	50.27	6/22/2022 23:47	81.36	6/21/2022 22:10	17.33	6/21/2022 21:19	4.77	6/22/2022 2:15	72.15
6/23/2022 1:06	50.25	6/22/2022 23:48	81.32	6/21/2022 22:11	17.33	6/21/2022 21:20	4.72	6/22/2022 2:16	72.11
6/23/2022 1:07	50.23	6/22/2022 23:49	81.33	6/21/2022 22:12	17.40	6/21/2022 21:21	4.75	6/22/2022 2:17	72.11
6/23/2022 1:08	50.23	6/22/2022 23:50	81.33	6/21/2022 22:13	17.37	6/21/2022 21:22	4.70	6/22/2022 2:18	72.05
6/23/2022 1:09	50.24	6/22/2022 23:51	81.33	6/21/2022 22:14	17.37	6/21/2022 21:23	4.72	6/22/2022 2:19	72.04
6/23/2022 1:10	50.26	6/22/2022 23:52	81.34	6/21/2022 22:15	17.35	6/21/2022 21:24	4.70	6/22/2022 2:20	72.04
6/23/2022 1:11	50.21	6/22/2022 23:53	81.27	6/21/2022 22:16	17.34	6/21/2022 21:25	4.71	6/22/2022 2:21	71.96
6/23/2022 1:12	50.22	6/22/2022 23:54	81.34	6/21/2022 22:17	17.35	6/21/2022 21:26	4.68	6/22/2022 2:22	71.92
6/23/2022 1:13	50.18	6/22/2022 23:55	81.32	6/21/2022 22:18	17.34	6/21/2022 21:27	4.60	6/22/2022 2:23	71.92
6/23/2022 1:14	50.21	6/22/2022 23:56	81.30	6/21/2022 22:19	17.33	6/21/2022 21:28	4.63	6/22/2022 2:24	71.88
6/23/2022 1:15	50.24	6/22/2022 23:57	81.35	6/21/2022 22:20	17.38	6/21/2022 21:29	4.64	6/22/2022 2:25	71.88
6/23/2022 1:16	50.23	6/22/2022 23:58	81.35	6/21/2022 22:21	17.32	6/21/2022 21:30	4.72	6/22/2022 2:26	71.82
6/23/2022 1:17	50.26	6/22/2022 23:59	81.34	6/21/2022 22:22	17.35	6/21/2022 21:31	4.58	6/22/2022 2:27	71.82
6/23/2022 1:18	50.26	6/23/2022 0:00	81.34	6/21/2022 22:23	17.30	6/21/2022 21:32	4.63	6/22/2022 2:28	71.80
6/23/2022 1:19	50.22	6/23/2022 0:01	81.33	6/21/2022 22:24	17.36	6/21/2022 21:33	4.60	6/22/2022 2:29	71.75
6/23/2022 1:20	50.22	6/23/2022 0:02	81.32	6/21/2022 22:25	17.32	6/21/2022 21:34	4.70	6/22/2022 2:30	71.72
6/23/2022 1:21	51.94	6/23/2022 0:03	81.33	6/21/2022 22:26	17.32	6/21/2022 21:35	4.62	6/22/2022 2:31	71.67
6/23/2022 1:22	53.88	6/23/2022 0:04	81.35	6/21/2022 22:27	21.83	6/21/2022 21:36	4.58	6/22/2022 2:32	71.69
6/23/2022 1:23	54.80	6/23/2022 0:05	81.32	6/21/2022 22:28	25.70	6/21/2022 21:37	4.58	6/22/2022 2:33	71.64
6/23/2022 1:24	55.34	6/23/2022 0:06	81.35	6/21/2022 22:29	28.16	6/21/2022 21:38	4.61	6/22/2022 2:34	71.60
6/23/2022 1:25	53.23	6/23/2022 0:07	81.33	6/21/2022 22:30	27.37	6/21/2022 21:39	4.55	6/22/2022 2:35	71.59
6/23/2022 1:26	52.20	6/23/2022 0:08	81.34	6/21/2022 22:31	24.66	6/21/2022 21:40	4.60	6/22/2022 2:36	71.55
6/23/2022 1:27	51.75	6/23/2022 0:09	81.31	6/21/2022 22:32	23.12	6/21/2022 21:41	4.53	6/22/2022 2:37	71.52
6/23/2022 1:28	51.51	6/23/2022 0:10	81.31	6/21/2022 22:33	22.19	6/21/2022 21:42	4.53	6/22/2022 2:38	71.49
6/23/2022 1:29	51.34	6/23/2022 0:11	81.32	6/21/2022 22:34	21.50	6/21/2022 21:43	4.55	6/22/2022 2:39	71.47
6/23/2022 1:30	51.24	6/23/2022 0:12	81.33	6/21/2022 22:35	21.09	6/21/2022 21:44	4.59	6/22/2022 2:40	71.45
6/23/2022 1:31	51.15	6/23/2022 0:13	81.30	6/21/2022 22:36	20.79	6/21/2022 21:45	4.54	6/22/2022 2:41	71.43
6/23/2022 1:32	51.09	6/23/2022 0:14	81.31	6/21/2022 22:37	20.49	6/21/2022 21:46	4.55	6/22/2022 2:42	71.41
6/23/2022 1:33	51.05	6/23/2022 0:15	81.34	6/21/2022 22:38	20.30	6/21/2022 21:47	4.50	6/22/2022 2:43	71.38
6/23/2022 1:34	51.03	6/23/2022 0:16	81.30	6/21/2022 22:39	23.08	6/21/2022 21:48	4.56	6/22/2022 2:44	71.35
6/23/2022 1:35	51.00	6/23/2022 0:17	81.33	6/21/2022 22:40	27.35	6/21/2022 21:49	4.57	6/22/2022 2:45	71.33
6/23/2022 1:36	50.92	6/23/2022 0:18	81.31	6/21/2022 22:41	29.98	6/21/2022 21:50	4.53	6/22/2022 2:46	71.29
6/23/2022 1:37	50.89	6/23/2022 0:19	81.30	6/21/2022 22:42	29.58	6/21/2022 21:51	4.57	6/22/2022 2:47	71.27
6/23/2022 1:38	50.92	6/23/2022 0:20	81.35	6/21/2022 22:43	26.66	6/21/2022 21:52	4.49	6/22/2022 2:48	71.23
6/23/2022 1:39	50.86	6/23/2022 0:21	81.35	6/21/2022 22:44	25.00	6/21/2022 21:53	4.53	6/22/2022 2:49	71.20
6/23/2022 1:40	50.82	6/23/2022 0:22	81.33	6/21/2022 22:45	23.90	6/21/2022 21:54	4.48	6/22/2022 2:50	71.19
6/23/2022 1:41	50.81	6/23/2022 0:23	81.34	6/21/2022 22:46	23.22	6/21/2022 21:55	4.49	6/22/2022 2:51	71.17
6/23/2022 1:42	50.79	6/23/2022 0:24	81.34	6/21/2022 22:47	22.67	6/21/2022 21:56	4.51	6/22/2022 2:52	71.18
6/23/2022 1:43	50.74	6/23/2022 0:25	81.28	6/21/2022 22:48	22.22	6/21/2022 21:57	4.44	6/22/2022 2:53	71.15
6/23/2022 1:44	50.71	6/23/2022 0:26	81.36	6/21/2022 22:49	21.92	6/21/2022 21:58	4.52	6/22/2022 2:54	71.08
6/23/2022 1:45	50.72	6/23/2022 0:27	81.34	6/21/2022 22:50	21.65	6/21/2022 21:59	4.44	6/22/2022 2:55	71.06
6/23/2022 1:46	50.74	6/23/2022 0:28	81.30	6/21/2022 22:51	24.82	6/21/2022 22:00	4.46	6/22/2022 2:56	71.05
6/23/2022 1:47	50.67	6/23/2022 0:29	81.31	6/21/2022 22:52	28.91	6/21/2022 22:01	4.48	6/22/2022 2:57	71.01
6/23/2022 1:48	50.76	6/23/2022 0:30	81.35	6/21/2022 22:53	31.42	6/21/2022 22:02	4.45	6/22/2022 2:58	71.00
6/23/2022 1:49	50.72	6/23/2022 0:31	81.35	6/21/2022 22:54	30.71	6/21/2022 22:03	4.45	6/22/2022 2:59	71.00
6/23/2022 1:50	50.72	6/23/2022 0:32	81.33	6/21/2022 22:55	27.78	6/21/2022 22:04	4.45	6/22/2022 3:00	70.96
6/23/2022 1:51	50.65	6/23/2022 0:33	81.30	6/21/2022 22:56	26.12	6/21/2022 22:05	4.47	6/22/2022 3:01	70.96
6/23/2022 1:52	50.67	6/23/2022 0:34	81.34	6/21/2022 22:57	25.03	6/21/2022 22:06	4.40	6/22/2022 3:02	70.93
6/23/2022 1:53	50.67	6/23/2022 0:35	81.33	6/21/2022 22:58	24.22	6/21/2022 22:07	4.39	6/22/2022 3:03	70.87
6/23/2022 1:54	50.66	6/23/2022 0:36	81.31	6/21/2022 22:59	23.66	6/21/2022 22:08	4.47	6/22/2022 3:04	70.85
6/23/2022 1:55	50.67	6/23/2022 0:37	81.32	6/21/2022 23:00	23.20	6/21/2022 22:09	4.36	6/22/2022 3:05	70.82
6/23/2022 1:56	50.66	6/23/2022 0:38	81.34	6/21/2022 23:01	22.88	6/21/2022 22:10	4.36	6/22/2022 3:06	70.80
6/23/2022 1:57	50.66	6/23/2022 0:39	81.36	6/21/2022 23:02	22.65	6/21/2022 22:11	4.40	6/22/2022 3:07	70.80
6/23/2022 1:58	50.63	6/23/2022 0:40	81.34	6/21/2022 23:03	22.35	6/21/2022 22:12	4.37	6/22/2022 3:08	70.77
6/23/2022 1:59	50.63	6/23/2022 0:41	81.32	6/21/2022 23:04	22.17	6/21/2022 22:13	4.32	6/22/2022 3:09	70.77
6/23/2022 2:00	50.56	6/23/2022 0:42	81.34	6/21/2022 23:05	21.94	6/21/2022 22:14	4.38	6/22/2022 3:10	70.75
6/23/2022 2:01	50.57	6/23/2022 0:43	81.32	6/21/2022 23:06	21.75	6/21/2022 22:15	4.36	6/22/2022 3:11	70.71
6/23/2022 2:02	50.58	6/23/2022 0:44	81.38	6/21/2022 23:07	21.61	6/21/2022 22:16	4.37	6/22/2022 3:12	70.70
6/23/2022 2:03	50.56	6/23/2022 0:45	81.34	6/21/2022 23:08	21.48	6/21/2022 22:17	4.61	6/22/2022 3:13	70.70
6/23/2022 2:04	50.58	6/23/2022 0:46	81.32	6/21/2022 23:09	21.35	6/21/2022 22:18	4.44	6/22/2022 3:14	70.68
6/23/2022 2:05	50.62	6/23/2022 0:47	81.34	6/21/2022 23:10	21.23	6/21/2022 22:19	4.39	6/22/2022 3:15	70.66
6/23/2022 2:06	50.57	6/23/2022 0:48	81.37	6/21/2022 23:11	21.11	6/21/2022 22:20	4.42	6/22/2022 3:16	70.61
6/23/2022 2:07	50.62	6/23/2022 0:49	81.33	6/21/2022 23:12	20.99	6/21/2022 22:21	4.40	6/22/2022 3:17	70.60
6/23/2022 2:08	50.56	6/23/2022 0:50	81.33	6/21/2022 23:13	20.91	6/21/2022 22:22	4.36	6/22/2022 3:18	70.55
6/23/2022 2:09	50.55	6/23/2022 0:51	81.31	6/21/2022 23:14	20.79	6/21/2022 22:23	4.36	6/22/2022 3:19	70.56
6/23/2022 2:10	50.52	6/23/2022 0:52	81.33	6/21/2022 23:15	20.73	6/21/2022 22:24	4.41	6/22/2022 3:20	70.54
6/23/2022 2:11	50.56	6/23/2022 0:53	81.38	6/21/2022 23:16	20.60	6/21/2022 22:25	4.31	6/22/2022 3:21	70.50
6/23/2022 2:12	50.54	6/23/2022 0:54	81.29	6/21/2022 23:17	20.53	6/21/2022 22:26	4.38	6/22/2022 3:22	70.44

6/23/2022 2:13	50.54	6/23/2022 0:55	81.29	6/21/2022 23:18	20.54	6/21/2022 22:27	5.12	6/22/2022 3:23	70.49
6/23/2022 2:14	50.52	6/23/2022 0:56	81.36	6/21/2022 23:19	20.41	6/21/2022 22:28	5.53	6/22/2022 3:24	70.44
6/23/2022 2:15	50.53	6/23/2022 0:57	81.32	6/21/2022 23:20	20.32	6/21/2022 22:29	5.87	6/22/2022 3:25	70.43
6/23/2022 2:16	50.52	6/23/2022 0:58	81.35	6/21/2022 23:21	20.31	6/21/2022 22:30	6.02	6/22/2022 3:26	70.39
6/23/2022 2:17	50.58	6/23/2022 0:59	81.36	6/21/2022 23:22	20.19	6/21/2022 22:31	6.19	6/22/2022 3:27	70.37
6/23/2022 2:18	50.56	6/23/2022 1:00	81.34	6/21/2022 23:23	20.19	6/21/2022 22:32	6.35	6/22/2022 3:28	70.35
6/23/2022 2:19	50.55	6/23/2022 1:01	81.31	6/21/2022 23:24	20.07	6/21/2022 22:33	6.45	6/22/2022 3:29	70.33
6/23/2022 2:20	50.51	6/23/2022 1:02	81.35	6/21/2022 23:25	20.04	6/21/2022 22:34	6.71	6/22/2022 3:30	70.34
6/23/2022 2:21	50.52	6/23/2022 1:03	81.36	6/21/2022 23:26	19.94	6/21/2022 22:35	6.76	6/22/2022 3:31	70.27
6/23/2022 2:22	50.47	6/23/2022 1:04	81.35	6/21/2022 23:27	19.95	6/21/2022 22:36	6.92	6/22/2022 3:32	70.29
6/23/2022 2:23	50.49	6/23/2022 1:05	81.33	6/21/2022 23:28	19.88	6/21/2022 22:37	6.94	6/22/2022 3:33	70.25
6/23/2022 2:24	50.52	6/23/2022 1:06	81.35	6/21/2022 23:29	19.86	6/21/2022 22:38	7.06	6/22/2022 3:34	70.23
6/23/2022 2:25	50.50	6/23/2022 1:07	81.30	6/21/2022 23:30	19.81	6/21/2022 22:39	6.38	6/22/2022 3:35	70.22
6/23/2022 2:26	50.50	6/23/2022 1:08	81.32	6/21/2022 23:31	19.80	6/21/2022 22:40	5.92	6/22/2022 3:36	70.25
6/23/2022 2:27	50.47	6/23/2022 1:09	81.33	6/21/2022 23:32	19.72	6/21/2022 22:41	5.74	6/22/2022 3:37	70.19
6/23/2022 2:28	50.49	6/23/2022 1:10	81.32	6/21/2022 23:33	19.68	6/21/2022 22:42	5.58	6/22/2022 3:38	70.16
6/23/2022 2:29	50.50	6/23/2022 1:11	81.33	6/21/2022 23:34	19.63	6/21/2022 22:43	5.47	6/22/2022 3:39	70.13
6/23/2022 2:30	50.51	6/23/2022 1:12	81.35	6/21/2022 23:35	19.61	6/21/2022 22:44	5.67	6/22/2022 3:40	70.15
6/23/2022 2:31	50.49	6/23/2022 1:13	81.32	6/21/2022 23:36	19.53	6/21/2022 22:45	5.44	6/22/2022 3:41	70.10
6/23/2022 2:32	50.45	6/23/2022 1:14	81.37	6/21/2022 23:37	19.54	6/21/2022 22:46	5.43	6/22/2022 3:42	70.08
6/23/2022 2:33	50.48	6/23/2022 1:15	81.34	6/21/2022 23:38	19.47	6/21/2022 22:47	5.26	6/22/2022 3:43	70.07
6/23/2022 2:34	50.43	6/23/2022 1:16	81.31	6/21/2022 23:39	19.42	6/21/2022 22:48	5.20	6/22/2022 3:44	70.06
6/23/2022 2:35	50.50	6/23/2022 1:17	81.34	6/21/2022 23:40	19.41	6/21/2022 22:49	5.23	6/22/2022 3:45	70.05
6/23/2022 2:36	50.48	6/23/2022 1:18	81.30	6/21/2022 23:41	19.36	6/21/2022 22:50	5.22	6/22/2022 3:46	70.02
6/23/2022 2:37	50.45	6/23/2022 1:19	81.37	6/21/2022 23:42	19.33	6/21/2022 22:51	5.12	6/22/2022 3:47	69.96
6/23/2022 2:38	50.47	6/23/2022 1:20	81.32	6/21/2022 23:43	19.30	6/21/2022 22:52	5.13	6/22/2022 3:48	69.97
6/23/2022 2:39	50.44	6/23/2022 1:21	81.30	6/21/2022 23:44	19.26	6/21/2022 22:53	5.08	6/22/2022 3:49	70.02
6/23/2022 2:40	50.43	6/23/2022 1:22	81.37	6/21/2022 23:45	19.18	6/21/2022 22:54	5.10	6/22/2022 3:50	69.94
6/23/2022 2:41	50.45	6/23/2022 1:23	81.34	6/21/2022 23:46	19.18	6/21/2022 22:55	5.00	6/22/2022 3:51	69.93
6/23/2022 2:42	50.46	6/23/2022 1:24	81.31	6/21/2022 23:47	19.20	6/21/2022 22:56	5.04	6/22/2022 3:52	69.90
6/23/2022 2:43	50.47	6/23/2022 1:25	81.31	6/21/2022 23:48	19.14	6/21/2022 22:57	5.01	6/22/2022 3:53	69.93
6/23/2022 2:44	50.44	6/23/2022 1:26	81.32	6/21/2022 23:49	19.16	6/21/2022 22:58	4.99	6/22/2022 3:54	69.89
6/23/2022 2:45	50.43	6/23/2022 1:27	81.35	6/21/2022 23:50	19.05	6/21/2022 22:59	4.91	6/22/2022 3:55	69.91
6/23/2022 2:46	50.44	6/23/2022 1:28	81.31	6/21/2022 23:51	19.04	6/21/2022 23:00	4.94	6/22/2022 3:56	69.86
6/23/2022 2:47	50.43	6/23/2022 1:29	81.32	6/21/2022 23:52	19.01	6/21/2022 23:01	5.03	6/22/2022 3:57	69.86
6/23/2022 2:48	50.43	6/23/2022 1:30	81.36	6/21/2022 23:53	19.04	6/21/2022 23:02	4.93	6/22/2022 3:58	69.85
6/23/2022 2:49	50.44	6/23/2022 1:31	81.29	6/21/2022 23:54	19.04	6/21/2022 23:03	4.92	6/22/2022 3:59	69.80
6/23/2022 2:50	50.40	6/23/2022 1:32	81.34	6/21/2022 23:55	18.93	6/21/2022 23:04	4.93	6/22/2022 4:00	69.78
6/23/2022 2:51	50.43	6/23/2022 1:33	81.34	6/21/2022 23:56	18.91	6/21/2022 23:05	4.91	6/22/2022 4:01	69.76
6/23/2022 2:52	50.40	6/23/2022 1:34	81.32	6/21/2022 23:57	18.94	6/21/2022 23:06	4.86	6/22/2022 4:02	69.76
6/23/2022 2:53	50.44	6/23/2022 1:35	81.32	6/21/2022 23:58	18.95	6/21/2022 23:07	4.83	6/22/2022 4:03	69.72
6/23/2022 2:54	50.45	6/23/2022 1:36	81.33	6/21/2022 23:59	18.87	6/21/2022 23:08	4.84	6/22/2022 4:04	69.72
6/23/2022 2:55	50.44	6/23/2022 1:37	81.33	6/22/2022 0:00	18.87	6/21/2022 23:09	4.77	6/22/2022 4:05	69.72
6/23/2022 2:56	50.41	6/23/2022 1:38	81.35	6/22/2022 0:01	18.84	6/21/2022 23:10	4.76	6/22/2022 4:06	69.71
6/23/2022 2:57	50.42	6/23/2022 1:39	81.34	6/22/2022 0:02	18.84	6/21/2022 23:11	4.80	6/22/2022 4:07	69.63
6/23/2022 2:58	50.44	6/23/2022 1:40	81.36	6/22/2022 0:03	18.79	6/21/2022 23:12	4.73	6/22/2022 4:08	69.67
6/23/2022 2:59	50.43	6/23/2022 1:41	81.31	6/22/2022 0:04	18.76	6/21/2022 23:13	4.78	6/22/2022 4:09	69.65
6/23/2022 3:00	50.43	6/23/2022 1:42	81.31	6/22/2022 0:05	18.76	6/21/2022 23:14	4.77	6/22/2022 4:10	69.60
6/23/2022 3:01	50.44	6/23/2022 1:43	81.34	6/22/2022 0:06	18.70	6/21/2022 23:15	4.82	6/22/2022 4:11	69.64
6/23/2022 3:02	50.37	6/23/2022 1:44	81.32	6/22/2022 0:07	18.77	6/21/2022 23:16	4.92	6/22/2022 4:12	69.62
6/23/2022 3:03	50.40	6/23/2022 1:45	81.34	6/22/2022 0:08	18.72	6/21/2022 23:17	4.80	6/22/2022 4:13	69.60
6/23/2022 3:04	50.41	6/23/2022 1:46	81.34	6/22/2022 0:09	18.72	6/21/2022 23:18	4.75	6/22/2022 4:14	69.57
6/23/2022 3:05	50.42	6/23/2022 1:47	81.34	6/22/2022 0:10	18.62	6/21/2022 23:19	4.75	6/22/2022 4:15	69.55
6/23/2022 3:06	50.40	6/23/2022 1:48	81.33	6/22/2022 0:11	18.65	6/21/2022 23:20	4.69	6/22/2022 4:16	69.53
6/23/2022 3:07	50.39	6/23/2022 1:49	81.35	6/22/2022 0:12	18.64	6/21/2022 23:21	4.66	6/22/2022 4:17	69.51
6/23/2022 3:08	50.39	6/23/2022 1:50	81.30	6/22/2022 0:13	18.62	6/21/2022 23:22	4.68	6/22/2022 4:18	69.54
6/23/2022 3:09	50.41	6/23/2022 1:51	81.32	6/22/2022 0:14	18.60	6/21/2022 23:23	4.65	6/22/2022 4:19	69.48
6/23/2022 3:10	50.41	6/23/2022 1:52	81.32	6/22/2022 0:15	18.60	6/21/2022 23:24	4.62	6/22/2022 4:20	69.50
6/23/2022 3:11	50.40	6/23/2022 1:53	81.34	6/22/2022 0:16	18.60	6/21/2022 23:25	4.64	6/22/2022 4:21	69.47
6/23/2022 3:12	50.42	6/23/2022 1:54	81.33	6/22/2022 0:17	18.56	6/21/2022 23:26	4.72	6/22/2022 4:22	69.47
6/23/2022 3:13	50.42	6/23/2022 1:55	81.35	6/22/2022 0:18	18.56	6/21/2022 23:27	4.62	6/22/2022 4:23	69.42
6/23/2022 3:14	50.38	6/23/2022 1:56	81.33	6/22/2022 0:19	18.51	6/21/2022 23:28	4.61	6/22/2022 4:24	69.40
6/23/2022 3:15	50.38	6/23/2022 1:57	81.31	6/22/2022 0:20	18.53	6/21/2022 23:29	4.67	6/22/2022 4:25	69.42
6/23/2022 3:16	50.40	6/23/2022 1:58	81.36	6/22/2022 0:21	18.51	6/21/2022 23:30	4.53	6/22/2022 4:26	69.37
6/23/2022 3:17	50.39	6/23/2022 1:59	81.31	6/22/2022 0:22	18.58	6/21/2022 23:31	4.56	6/22/2022 4:27	69.36
6/23/2022 3:18	50.37	6/23/2022 2:00	81.35	6/22/2022 0:23	18.53	6/21/2022 23:32	4.60	6/22/2022 4:28	69.40
6/23/2022 3:19	50.39	6/23/2022 2:01	81.34	6/22/2022 0:24	18.53	6/21/2022 23:33	4.64	6/22/2022 4:29	69.35
6/23/2022 3:20	50.40	6/23/2022 2:02	81.30	6/22/2022 0:25	18.46	6/21/2022 23:34	4.53	6/22/2022 4:30	69.36
6/23/2022 3:21	50.40	6/23/2022 2:03	81.36	6/22/2022 0:26	18.50	6/21/2022 23:35	4.55	6/22/2022 4:31	69.32
6/23/2022 3:22	50.38	6/23/2022 2:04	81.32	6/22/2022 0:27	18.46	6/21/2022 23:36	4.58	6/22/2022 4:32	69.34
6/23/2022 3:23	50.42	6/23/2022 2:05	81.34	6/22/2022 0:28	18.50	6/21/2022 23:37	4.53	6/22/2022 4:33	69.30
6/23/2022 3:24	50.37	6/23/2022 2:06	81.29	6/22/2022 0:29	18.43	6/21/2022 23:38	4.50	6/22/2022 4:34	69.27
6/23/2022 3:25	50.36	6/23/2022 2:07	81.35	6/22/2022 0:30	18.43	6/21/2022 23:39	4.50	6/22/2022 4:35	69.28
6/23/2022 3:26	50.36	6/23/2022 2:08	81.35	6/22/2022 0:31	18.48	6/21/2022 23:40	4.45	6/22/2022 4:36	69.25
6/23/2022 3:27	50.37	6/23/2022 2:09	81.34	6/22/2022 0:32	18.38	6/21/2022 23:41	4.48	6/22/2022 4:37	69.23
6/23/2022 3:28	50.36	6/23/2022 2:10	81.34	6/22/2022 0:33	18.39	6/21/2022 23:42	4.49	6/22/2022 4:38	69.20
6/23/2022 3:29	50.36	6/23/2022 2:11	81.35	6/22/2022 0:34	18.40	6/21/2022 23:43	4.46	6/22/2022 4:39	69.20
6/23/2022 3:30	50.40	6/23/2022 2:12	81.35	6/22/2022 0:35	18.38	6/21/2022 23:44	4.41	6/22/2022 4:40	69.21
6/23/2022 3:31	50.35	6/23/2022 2:13	81.33	6/22/2022 0:36	18.35	6/21/2022 23:45	4.45	6/22/2022 4:41	69.15
6/23/2022 3:32	50.38	6/23/2022 2:14	81.34	6/22/2022 0:37	18.36	6/21/2022 23:46	4.48	6/22/2022 4:42	69.17
6/23/2022 3:33	50.38	6/23/2022 2:15	81.32	6/22/2022 0:38	18.34	6/21/2022 23:47	4.44	6/22/2022 4:43	69.18
6/23/2022 3:34	50.37	6/23/2022 2:16	81.34	6/22/2022 0:39	18.30	6/21/2022 23:48	4.41	6/22/2022 4:44	69.12
6/23/2022 3:35	50.37	6/23/2022 2:17	81.36	6/22/2022 0:40	18.29	6/21/2022 23:49	4.46	6/22/2022 4:45	69.13
6/23/2022 3:36	50.35	6/23/2022 2:18	81.31	6/22/2022 0:41	18.29	6/21/2022 23:50	4.41	6/22/2022 4:46	69.11
6/23/2022 3:37	50.33	6/23/2022 2:19	81.32	6/22/2022 0:42	18.29	6/21/2022 23:51	4.40	6/22/2022 4:47	69.13
6/23/2022 3:38	50.35	6/23/2022 2:20	81.31	6/22/2022 0:43	18.25	6/21/2022 23:52	4.34	6/22/2022 4:48	69.08
6/23/2022 3:39	50.38	6/23/2022 2:21	81.32	6/22/2022 0:44	18.25	6/21/2022 23:53	4.42	6/22/2022 4:49	69.05
6/23/2022 3:40	50.37	6/23/2022 2:22	81.33	6/22/2022 0:45	18.26	6/21/2022 23:54	4.37	6/22/2022 4:50	69.07

6/23/2022 3:41	50.37	6/23/2022 2:23	81.30	6/22/2022 0:46	18.25	6/21/2022 23:55	4.37	6/22/2022 4:51	69.07
6/23/2022 3:42	50.36	6/23/2022 2:24	81.30	6/22/2022 0:47	18.23	6/21/2022 23:56	4.38	6/22/2022 4:52	69.05
6/23/2022 3:43	50.36	6/23/2022 2:25	81.34	6/22/2022 0:48	18.21	6/21/2022 23:57	4.36	6/22/2022 4:53	69.04
6/23/2022 3:44	50.36	6/23/2022 2:26	81.32	6/22/2022 0:49	18.22	6/21/2022 23:58	4.35	6/22/2022 4:54	69.02
6/23/2022 3:45	50.37	6/23/2022 2:27	81.33	6/22/2022 0:50	18.16	6/21/2022 23:59	4.34	6/22/2022 4:55	69.01
6/23/2022 3:46	50.35	6/23/2022 2:28	81.34	6/22/2022 0:51	18.23	6/22/2022 0:00	4.32	6/22/2022 4:56	68.97
6/23/2022 3:47	50.36	6/23/2022 2:29	81.32	6/22/2022 0:52	18.15	6/22/2022 0:01	4.30	6/22/2022 4:57	68.98
6/23/2022 3:48	50.34	6/23/2022 2:30	81.30	6/22/2022 0:53	18.19	6/22/2022 0:02	4.30	6/22/2022 4:58	68.98
6/23/2022 3:49	50.34	6/23/2022 2:31	81.35	6/22/2022 0:54	18.15	6/22/2022 0:03	4.34	6/22/2022 4:59	68.98
6/23/2022 3:50	50.34	6/23/2022 2:32	81.34	6/22/2022 0:55	18.16	6/22/2022 0:04	4.25	6/22/2022 5:00	68.95
6/23/2022 3:51	50.33	6/23/2022 2:33	81.37	6/22/2022 0:56	18.17	6/22/2022 0:05	4.50	6/22/2022 5:01	68.93
6/23/2022 3:52	50.37	6/23/2022 2:34	81.36	6/22/2022 0:57	18.10	6/22/2022 0:06	4.50	6/22/2022 5:02	68.90
6/23/2022 3:53	50.35	6/23/2022 2:35	81.31	6/22/2022 0:58	18.10	6/22/2022 0:07	4.46	6/22/2022 5:03	68.89
6/23/2022 3:54	50.36	6/23/2022 2:36	81.32	6/22/2022 0:59	18.10	6/22/2022 0:08	4.48	6/22/2022 5:04	68.88
6/23/2022 3:55	50.35	6/23/2022 2:37	81.34	6/22/2022 1:00	18.09	6/22/2022 0:09	4.46	6/22/2022 5:05	68.87
6/23/2022 3:56	50.34	6/23/2022 2:38	81.32	6/22/2022 1:01	18.07	6/22/2022 0:10	4.41	6/22/2022 5:06	68.86
6/23/2022 3:57	50.32	6/23/2022 2:39	81.34	6/22/2022 1:02	18.11	6/22/2022 0:11	4.38	6/22/2022 5:07	68.87
6/23/2022 3:58	50.31	6/23/2022 2:40	81.36	6/22/2022 1:03	18.08	6/22/2022 0:12	4.38	6/22/2022 5:08	68.86
6/23/2022 3:59	50.32	6/23/2022 2:41	81.35	6/22/2022 1:04	18.00	6/22/2022 0:13	4.45	6/22/2022 5:09	68.84
6/23/2022 4:00	50.34	6/23/2022 2:42	81.33	6/22/2022 1:05	18.07	6/22/2022 0:14	4.45	6/22/2022 5:10	68.83
6/23/2022 4:01	50.34	6/23/2022 2:43	81.33	6/22/2022 1:06	18.03	6/22/2022 0:15	4.42	6/22/2022 5:11	68.81
6/23/2022 4:02	50.37	6/23/2022 2:44	81.31	6/22/2022 1:07	18.01	6/22/2022 0:16	4.40	6/22/2022 5:12	68.79
6/23/2022 4:03	50.31	6/23/2022 2:45	81.33	6/22/2022 1:08	17.99	6/22/2022 0:17	4.49	6/22/2022 5:13	68.80
6/23/2022 4:04	50.33	6/23/2022 2:46	81.33	6/22/2022 1:09	17.99	6/22/2022 0:18	4.37	6/22/2022 5:14	68.76
6/23/2022 4:05	50.36	6/23/2022 2:47	81.35	6/22/2022 1:10	17.99	6/22/2022 0:19	4.42	6/22/2022 5:15	68.79
6/23/2022 4:06	50.31	6/23/2022 2:48	81.35	6/22/2022 1:11	18.01	6/22/2022 0:20	4.39	6/22/2022 5:16	68.74
6/23/2022 4:07	50.34	6/23/2022 2:49	81.35	6/22/2022 1:12	18.00	6/22/2022 0:21	4.33	6/22/2022 5:17	68.73
6/23/2022 4:08	50.31	6/23/2022 2:50	81.32	6/22/2022 1:13	17.98	6/22/2022 0:22	4.33	6/22/2022 5:18	68.74
6/23/2022 4:09	50.33	6/23/2022 2:51	81.32	6/22/2022 1:14	17.99	6/22/2022 0:23	4.43	6/22/2022 5:19	68.70
6/23/2022 4:10	50.37	6/23/2022 2:52	81.34	6/22/2022 1:15	17.95	6/22/2022 0:24	4.35	6/22/2022 5:20	68.71
6/23/2022 4:11	50.33	6/23/2022 2:53	81.34	6/22/2022 1:16	17.94	6/22/2022 0:25	4.33	6/22/2022 5:21	68.70
6/23/2022 4:12	50.33	6/23/2022 2:54	81.35	6/22/2022 1:17	17.89	6/22/2022 0:26	4.27	6/22/2022 5:22	68.67
6/23/2022 4:13	50.33	6/23/2022 2:55	81.31	6/22/2022 1:18	17.91	6/22/2022 0:27	4.35	6/22/2022 5:23	68.67
6/23/2022 4:14	50.34	6/23/2022 2:56	81.33	6/22/2022 1:19	17.91	6/22/2022 0:28	4.27	6/22/2022 5:24	68.67
6/23/2022 4:15	50.34	6/23/2022 2:57	81.38	6/22/2022 1:20	17.90	6/22/2022 0:29	4.20	6/22/2022 5:25	68.66
6/23/2022 4:16	50.36	6/23/2022 2:58	81.35	6/22/2022 1:21	17.93	6/22/2022 0:30	4.27	6/22/2022 5:26	68.65
6/23/2022 4:17	50.35	6/23/2022 2:59	81.34	6/22/2022 1:22	17.94	6/22/2022 0:31	4.19	6/22/2022 5:27	68.66
6/23/2022 4:18	50.34	6/23/2022 3:00	81.35	6/22/2022 1:23	17.88	6/22/2022 0:32	4.18	6/22/2022 5:28	68.60
6/23/2022 4:19	50.37	6/23/2022 3:01	81.33	6/22/2022 1:24	17.87	6/22/2022 0:33	4.23	6/22/2022 5:29	68.60
6/23/2022 4:20	50.33	6/23/2022 3:02	81.32	6/22/2022 1:25	17.80	6/22/2022 0:34	4.28	6/22/2022 5:30	68.58
6/23/2022 4:21	50.37	6/23/2022 3:03	81.36	6/22/2022 1:26	17.89	6/22/2022 0:35	4.19	6/22/2022 5:31	68.64
6/23/2022 4:22	50.33	6/23/2022 3:04	81.32	6/22/2022 1:27	17.80	6/22/2022 0:36	4.19	6/22/2022 5:32	68.58
6/23/2022 4:23	50.33	6/23/2022 3:05	81.37	6/22/2022 1:28	17.85	6/22/2022 0:37	4.24	6/22/2022 5:33	68.58
6/23/2022 4:24	50.33	6/23/2022 3:06	81.34	6/22/2022 1:29	17.82	6/22/2022 0:38	4.20	6/22/2022 5:34	68.60
6/23/2022 4:25	50.32	6/23/2022 3:07	81.39	6/22/2022 1:30	17.80	6/22/2022 0:39	4.18	6/22/2022 5:35	68.57
6/23/2022 4:26	50.34	6/23/2022 3:08	81.32	6/22/2022 1:31	17.85	6/22/2022 0:40	4.15	6/22/2022 5:36	68.53
6/23/2022 4:27	50.33	6/23/2022 3:09	81.34	6/22/2022 1:32	17.82	6/22/2022 0:41	4.07	6/22/2022 5:37	68.55
6/23/2022 4:28	50.35	6/23/2022 3:10	81.34	6/22/2022 1:33	17.79	6/22/2022 0:42	4.15	6/22/2022 5:38	68.50
6/23/2022 4:29	50.34	6/23/2022 3:11	81.36	6/22/2022 1:34	17.80	6/22/2022 0:43	4.13	6/22/2022 5:39	68.51
6/23/2022 4:30	50.35	6/23/2022 3:12	81.36	6/22/2022 1:35	17.80	6/22/2022 0:44	4.19	6/22/2022 5:40	68.52
6/23/2022 4:31	50.34	6/23/2022 3:13	81.35	6/22/2022 1:36	17.77	6/22/2022 0:45	4.11	6/22/2022 5:41	68.54
6/23/2022 4:32	50.38	6/23/2022 3:14	81.32	6/22/2022 1:37	17.80	6/22/2022 0:46	4.13	6/22/2022 5:42	68.50
6/23/2022 4:33	50.31	6/23/2022 3:15	81.33	6/22/2022 1:38	17.78	6/22/2022 0:47	4.14	6/22/2022 5:43	68.48
6/23/2022 4:34	50.32	6/23/2022 3:16	81.39	6/22/2022 1:39	17.79	6/22/2022 0:48	4.04	6/22/2022 5:44	68.50
6/23/2022 4:35	50.35	6/23/2022 3:17	81.33	6/22/2022 1:40	17.75	6/22/2022 0:49	4.07	6/22/2022 5:45	68.45
6/23/2022 4:36	50.33	6/23/2022 3:18	81.36	6/22/2022 1:41	17.78	6/22/2022 0:50	4.10	6/22/2022 5:46	68.42
6/23/2022 4:37	50.33	6/23/2022 3:19	81.33	6/22/2022 1:42	17.74	6/22/2022 0:51	4.10	6/22/2022 5:47	68.44
6/23/2022 4:38	50.38	6/23/2022 3:20	81.36	6/22/2022 1:43	17.76	6/22/2022 0:52	4.08	6/22/2022 5:48	68.42
6/23/2022 4:39	50.34	6/23/2022 3:21	81.36	6/22/2022 1:44	17.72	6/22/2022 0:53	4.06	6/22/2022 5:49	68.41
6/23/2022 4:40	50.34	6/23/2022 3:22	81.34	6/22/2022 1:45	17.72	6/22/2022 0:54	4.14	6/22/2022 5:50	68.44
6/23/2022 4:41	50.35	6/23/2022 3:23	81.35	6/22/2022 1:46	17.71	6/22/2022 0:55	4.06	6/22/2022 5:51	68.37
6/23/2022 4:42	50.36	6/23/2022 3:24	81.37	6/22/2022 1:47	17.71	6/22/2022 0:56	4.10	6/22/2022 5:52	68.37
6/23/2022 4:43	50.30	6/23/2022 3:25	81.38	6/22/2022 1:48	17.70	6/22/2022 0:57	4.10	6/22/2022 5:53	68.37
6/23/2022 4:44	50.34	6/23/2022 3:26	81.30	6/22/2022 1:49	17.68	6/22/2022 0:58	4.02	6/22/2022 5:54	68.39
6/23/2022 4:45	50.29	6/23/2022 3:27	81.35	6/22/2022 1:50	17.73	6/22/2022 0:59	4.04	6/22/2022 5:55	68.36
6/23/2022 4:46	50.30	6/23/2022 3:28	81.33	6/22/2022 1:51	17.64	6/22/2022 1:00	4.07	6/22/2022 5:56	68.34
6/23/2022 4:47	50.31	6/23/2022 3:29	81.34	6/22/2022 1:52	17.72	6/22/2022 1:01	4.00	6/22/2022 5:57	68.34
6/23/2022 4:48	50.32	6/23/2022 3:30	81.36	6/22/2022 1:53	17.67	6/22/2022 1:02	4.00	6/22/2022 5:58	68.34
6/23/2022 4:49	50.35	6/23/2022 3:31	81.35	6/22/2022 1:54	17.66	6/22/2022 1:03	5.82	6/22/2022 5:59	68.28
6/23/2022 4:50	50.34	6/23/2022 3:32	81.34	6/22/2022 1:55	17.60	6/22/2022 1:04	6.76	6/22/2022 6:00	68.29
6/23/2022 4:51	50.34	6/23/2022 3:33	81.31	6/22/2022 1:56	17.66	6/22/2022 1:05	7.39	6/22/2022 6:01	68.33
6/23/2022 4:52	50.33	6/23/2022 3:34	81.37	6/22/2022 1:57	17.64	6/22/2022 1:06	7.90	6/22/2022 6:02	68.31
6/23/2022 4:53	50.32	6/23/2022 3:35	81.32	6/22/2022 1:58	17.61	6/22/2022 1:07	8.33	6/22/2022 6:03	68.25
6/23/2022 4:54	50.31	6/23/2022 3:36	81.33	6/22/2022 1:59	17.64	6/22/2022 1:08	8.68	6/22/2022 6:04	68.28
6/23/2022 4:55	50.31	6/23/2022 3:37	81.31	6/22/2022 2:00	17.59	6/22/2022 1:09	8.95	6/22/2022 6:05	68.29
6/23/2022 4:56	50.35	6/23/2022 3:38	81.35	6/22/2022 2:01	17.65	6/22/2022 1:10	9.28	6/22/2022 6:06	68.28
6/23/2022 4:57	50.32	6/23/2022 3:39	81.32	6/22/2022 2:02	17.63	6/22/2022 1:11	9.46	6/22/2022 6:07	68.27
6/23/2022 4:58	50.33	6/23/2022 3:40	81.37	6/22/2022 2:03	17.55	6/22/2022 1:12	9.74	6/22/2022 6:08	68.28
6/23/2022 4:59	50.31	6/23/2022 3:41	81.32	6/22/2022 2:04	17.59	6/22/2022 1:13	9.89	6/22/2022 6:09	68.26
6/23/2022 5:00	50.33	6/23/2022 3:42	81.34	6/22/2022 2:05	17.60	6/22/2022 1:14	10.07	6/22/2022 6:10	68.24
6/23/2022 5:01	50.34	6/23/2022 3:43	81.34	6/22/2022 2:06	17.59	6/22/2022 1:15	10.32	6/22/2022 6:11	68.22
6/23/2022 5:02	50.32	6/23/2022 3:44	81.34	6/22/2022 2:07	17.56	6/22/2022 1:16	10.45	6/22/2022 6:12	68.20
6/23/2022 5:03	50.33	6/23/2022 3:45	81.37	6/22/2022 2:08	17.58	6/22/2022 1:17	10.63	6/22/2022 6:13	68.18
6/23/2022 5:04	50.32	6/23/2022 3:46	81.35	6/22/2022 2:09	17.59	6/22/2022 1:18	10.81	6/22/2022 6:14	68.19
6/23/2022 5:05	50.33	6/23/2022 3:47	81.36	6/22/2022 2:10	17.48	6/22/2022 1:19	11.02	6/22/2022 6:15	68.19
6/23/2022 5:06	50.31	6/23/2022 3:48	81.29	6/22/2022 2:11	17.55	6/22/2022 1:20	11.21	6/22/2022 6:16	68.16
6/23/2022 5:07	50.33	6/23/2022 3:49	81.38	6/22/2022 2:12	17.51	6/22/2022 1:21	11.30	6/22/2022 6:17	68.13
6/23/2022 5:08	50.32	6/23/2022 3:50	81.33	6/22/2022 2:13	17.80	6/22/2022 1:22	11.50	6/22/2022 6:18	68.15

6/23/2022 5:09	50.30	6/23/2022 3:51	81.37	6/22/2022 2:14	23.49	6/22/2022 1:23	11.89	6/22/2022 6:19	68.18
6/23/2022 5:10	50.32	6/23/2022 3:52	81.37	6/22/2022 2:15	26.69	6/22/2022 1:24	12.16	6/22/2022 6:20	68.17
6/23/2022 5:11	50.31	6/23/2022 3:53	81.38	6/22/2022 2:16	25.01	6/22/2022 1:25	12.43	6/22/2022 6:21	68.11
6/23/2022 5:12	50.33	6/23/2022 3:54	81.33	6/22/2022 2:17	22.98	6/22/2022 1:26	12.66	6/22/2022 6:22	68.12
6/23/2022 5:13	50.31	6/23/2022 3:55	81.34	6/22/2022 2:18	21.89	6/22/2022 1:27	12.84	6/22/2022 6:23	68.09
6/23/2022 5:14	50.29	6/23/2022 3:56	81.35	6/22/2022 2:19	21.14	6/22/2022 1:28	13.06	6/22/2022 6:24	68.10
6/23/2022 5:15	50.31	6/23/2022 3:57	81.38	6/22/2022 2:20	20.64	6/22/2022 1:29	13.19	6/22/2022 6:25	68.10
6/23/2022 5:16	50.32	6/23/2022 3:58	81.34	6/22/2022 2:21	20.37	6/22/2022 1:30	13.42	6/22/2022 6:26	68.09
6/23/2022 5:17	50.30	6/23/2022 3:59	81.36	6/22/2022 2:22	20.07	6/22/2022 1:31	13.55	6/22/2022 6:27	68.12
6/23/2022 5:18	50.32	6/23/2022 4:00	81.37	6/22/2022 2:23	19.85	6/22/2022 1:32	13.77	6/22/2022 6:28	68.09
6/23/2022 5:19	50.28	6/23/2022 4:01	81.37	6/22/2022 2:24	19.70	6/22/2022 1:33	13.88	6/22/2022 6:29	68.09
6/23/2022 5:20	50.32	6/23/2022 4:02	81.36	6/22/2022 2:25	19.54	6/22/2022 1:34	14.05	6/22/2022 6:30	68.08
6/23/2022 5:21	50.34	6/23/2022 4:03	81.38	6/22/2022 2:26	19.38	6/22/2022 1:35	14.23	6/22/2022 6:31	68.07
6/23/2022 5:22	50.31	6/23/2022 4:04	81.35	6/22/2022 2:27	19.37	6/22/2022 1:36	14.36	6/22/2022 6:32	68.08
6/23/2022 5:23	50.33	6/23/2022 4:05	81.39	6/22/2022 2:28	19.19	6/22/2022 1:37	14.48	6/22/2022 6:33	68.04
6/23/2022 5:24	50.33	6/23/2022 4:06	81.34	6/22/2022 2:29	19.14	6/22/2022 1:38	14.66	6/22/2022 6:34	68.02
6/23/2022 5:25	50.31	6/23/2022 4:07	81.37	6/22/2022 2:30	19.03	6/22/2022 1:39	14.80	6/22/2022 6:35	68.03
6/23/2022 5:26	50.35	6/23/2022 4:08	81.35	6/22/2022 2:31	18.97	6/22/2022 1:40	14.93	6/22/2022 6:36	68.00
6/23/2022 5:27	50.33	6/23/2022 4:09	81.35	6/22/2022 2:32	18.88	6/22/2022 1:41	15.09	6/22/2022 6:37	67.99
6/23/2022 5:28	50.30	6/23/2022 4:10	81.36	6/22/2022 2:33	18.86	6/22/2022 1:42	15.19	6/22/2022 6:38	68.01
6/23/2022 5:29	50.28	6/23/2022 4:11	81.36	6/22/2022 2:34	18.77	6/22/2022 1:43	15.30	6/22/2022 6:39	67.99
6/23/2022 5:30	50.34	6/23/2022 4:12	81.39	6/22/2022 2:35	18.73	6/22/2022 1:44	15.46	6/22/2022 6:40	67.97
6/23/2022 5:31	50.31	6/23/2022 4:13	81.39	6/22/2022 2:36	18.68	6/22/2022 1:45	15.62	6/22/2022 6:41	68.01
6/23/2022 5:32	50.32	6/23/2022 4:14	81.35	6/22/2022 2:37	18.66	6/22/2022 1:46	15.72	6/22/2022 6:42	67.94
6/23/2022 5:33	50.31	6/23/2022 4:15	81.30	6/22/2022 2:38	18.60	6/22/2022 1:47	15.88	6/22/2022 6:43	67.94
6/23/2022 5:34	50.32	6/23/2022 4:16	81.34	6/22/2022 2:39	18.58	6/22/2022 1:48	15.94	6/22/2022 6:44	67.94
6/23/2022 5:35	50.32	6/23/2022 4:17	81.42	6/22/2022 2:40	18.50	6/22/2022 1:49	16.10	6/22/2022 6:45	67.93
6/23/2022 5:36	50.33	6/23/2022 4:18	81.36	6/22/2022 2:41	18.49	6/22/2022 1:50	16.22	6/22/2022 6:46	67.92
6/23/2022 5:37	50.33	6/23/2022 4:19	81.36	6/22/2022 2:42	18.46	6/22/2022 1:51	16.37	6/22/2022 6:47	67.88
6/23/2022 5:38	50.31	6/23/2022 4:20	81.32	6/22/2022 2:43	18.45	6/22/2022 1:52	16.45	6/22/2022 6:48	67.92
6/23/2022 5:39	50.31	6/23/2022 4:21	81.41	6/22/2022 2:44	18.39	6/22/2022 1:53	16.62	6/22/2022 6:49	67.91
6/23/2022 5:40	50.30	6/23/2022 4:22	81.34	6/22/2022 2:45	18.36	6/22/2022 1:54	16.76	6/22/2022 6:50	67.92
6/23/2022 5:41	50.32	6/23/2022 4:23	81.38	6/22/2022 2:46	18.35	6/22/2022 1:55	16.83	6/22/2022 6:51	67.86
6/23/2022 5:42	50.32	6/23/2022 4:24	81.34	6/22/2022 2:47	18.27	6/22/2022 1:56	16.88	6/22/2022 6:52	67.88
6/23/2022 5:43	50.32	6/23/2022 4:25	81.34	6/22/2022 2:48	18.27	6/22/2022 1:57	17.02	6/22/2022 6:53	67.88
6/23/2022 5:44	50.32	6/23/2022 4:26	81.41	6/22/2022 2:49	18.26	6/22/2022 1:58	17.17	6/22/2022 6:54	73.22
6/23/2022 5:45	50.33	6/23/2022 4:27	81.36	6/22/2022 2:50	18.20	6/22/2022 1:59	17.23	6/22/2022 6:55	74.03
6/23/2022 5:46	50.33	6/23/2022 4:28	81.34	6/22/2022 2:51	18.18	6/22/2022 2:00	17.36	6/22/2022 6:56	73.89
6/23/2022 5:47	50.31	6/23/2022 4:29	81.37	6/22/2022 2:52	18.95	6/22/2022 2:01	17.48	6/22/2022 6:57	73.77
6/23/2022 5:48	50.32	6/23/2022 4:30	81.37	6/22/2022 2:53	24.35	6/22/2022 2:02	17.60	6/22/2022 6:58	73.64
6/23/2022 5:49	50.29	6/23/2022 4:31	81.36	6/22/2022 2:54	27.38	6/22/2022 2:03	17.72	6/22/2022 6:59	73.54
6/23/2022 5:50	50.31	6/23/2022 4:32	81.36	6/22/2022 2:55	25.60	6/22/2022 2:04	17.73	6/22/2022 7:00	73.46
6/23/2022 5:51	50.31	6/23/2022 4:33	81.38	6/22/2022 2:56	23.55	6/22/2022 2:05	17.81	6/22/2022 7:01	73.34
6/23/2022 5:52	50.32	6/23/2022 4:34	81.35	6/22/2022 2:57	22.42	6/22/2022 2:06	17.93	6/22/2022 7:02	73.29
6/23/2022 5:53	50.36	6/23/2022 4:35	81.35	6/22/2022 2:58	21.73	6/22/2022 2:07	18.07	6/22/2022 7:03	73.18
6/23/2022 5:54	50.32	6/23/2022 4:36	81.34	6/22/2022 2:59	21.18	6/22/2022 2:08	18.15	6/22/2022 7:04	73.11
6/23/2022 5:55	50.30	6/23/2022 4:37	81.37	6/22/2022 3:00	20.84	6/22/2022 2:09	18.20	6/22/2022 7:05	73.04
6/23/2022 5:56	50.34	6/23/2022 4:38	81.35	6/22/2022 3:01	20.55	6/22/2022 2:10	18.34	6/22/2022 7:06	72.97
6/23/2022 5:57	50.32	6/23/2022 4:39	81.34	6/22/2022 3:02	20.35	6/22/2022 2:11	18.45	6/22/2022 7:07	72.88
6/23/2022 5:58	50.34	6/23/2022 4:40	81.34	6/22/2022 3:03	20.15	6/22/2022 2:12	18.55	6/22/2022 7:08	72.80
6/23/2022 5:59	50.31	6/23/2022 4:41	81.35	6/22/2022 3:04	20.02	6/22/2022 2:13	18.64	6/22/2022 7:09	72.78
6/23/2022 6:00	50.34	6/23/2022 4:42	81.36	6/22/2022 3:05	19.89	6/22/2022 2:14	18.74	6/22/2022 7:10	72.68
6/23/2022 6:01	50.32	6/23/2022 4:43	81.37	6/22/2022 3:06	19.75	6/22/2022 2:15	18.83	6/22/2022 7:11	72.62
6/23/2022 6:02	50.33	6/23/2022 4:44	81.37	6/22/2022 3:07	19.68	6/22/2022 2:16	18.94	6/22/2022 7:12	72.56
6/23/2022 6:03	50.31	6/23/2022 4:45	81.36	6/22/2022 3:08	19.55	6/22/2022 2:17	19.07	6/22/2022 7:13	72.46
6/23/2022 6:04	50.31	6/23/2022 4:46	81.42	6/22/2022 3:09	19.42	6/22/2022 2:18	19.15	6/22/2022 7:14	72.40
6/23/2022 6:05	50.29	6/23/2022 4:47	81.36	6/22/2022 3:10	19.41	6/22/2022 2:19	19.19	6/22/2022 7:15	72.39
6/23/2022 6:06	50.31	6/23/2022 4:48	81.33	6/22/2022 3:11	19.29	6/22/2022 2:20	19.32	6/22/2022 7:16	72.32
6/23/2022 6:07	50.29	6/23/2022 4:49	81.32	6/22/2022 3:12	19.24	6/22/2022 2:21	19.42	6/22/2022 7:17	72.23
6/23/2022 6:08	50.30	6/23/2022 4:50	81.35	6/22/2022 3:13	19.17	6/22/2022 2:22	19.56	6/22/2022 7:18	72.15
6/23/2022 6:09	50.34	6/23/2022 4:51	81.33	6/22/2022 3:14	19.08	6/22/2022 2:23	19.68	6/22/2022 7:19	72.11
6/23/2022 6:10	50.31	6/23/2022 4:52	81.37	6/22/2022 3:15	19.07	6/22/2022 2:24	19.84	6/22/2022 7:20	72.03
6/23/2022 6:11	50.29	6/23/2022 4:53	81.36	6/22/2022 3:16	18.98	6/22/2022 2:25	20.39	6/22/2022 7:21	72.00
6/23/2022 6:12	50.32	6/23/2022 4:54	81.39	6/22/2022 3:17	18.92	6/22/2022 2:26	20.78	6/22/2022 7:22	71.88
6/23/2022 6:13	50.33	6/23/2022 4:55	81.33	6/22/2022 3:18	18.90	6/22/2022 2:27	21.11	6/22/2022 7:23	71.87
6/23/2022 6:14	50.32	6/23/2022 4:56	81.36	6/22/2022 3:19	18.86	6/22/2022 2:28	21.37	6/22/2022 7:24	71.83
6/23/2022 6:15	50.31	6/23/2022 4:57	81.38	6/22/2022 3:20	18.82	6/22/2022 2:29	21.58	6/22/2022 7:25	71.76
6/23/2022 6:16	50.31	6/23/2022 4:58	81.40	6/22/2022 3:21	18.76	6/22/2022 2:30	21.84	6/22/2022 7:26	71.72
6/23/2022 6:17	50.31	6/23/2022 4:59	81.38	6/22/2022 3:22	18.74	6/22/2022 2:31	22.01	6/22/2022 7:27	71.67
6/23/2022 6:18	50.31	6/23/2022 5:00	81.42	6/22/2022 3:23	18.72	6/22/2022 2:32	22.18	6/22/2022 7:28	71.64
6/23/2022 6:19	50.33	6/23/2022 5:01	81.41	6/22/2022 3:24	18.62	6/22/2022 2:33	22.39	6/22/2022 7:29	71.55
6/23/2022 6:20	50.31	6/23/2022 5:02	81.35	6/22/2022 3:25	18.57	6/22/2022 2:34	22.59	6/22/2022 7:30	71.51
6/23/2022 6:21	50.35	6/23/2022 5:03	81.37	6/22/2022 3:26	18.61	6/22/2022 2:35	22.73	6/22/2022 7:31	71.48
6/23/2022 6:22	50.29	6/23/2022 5:04	81.36	6/22/2022 3:27	18.57	6/22/2022 2:36	22.93	6/22/2022 7:32	71.43
6/23/2022 6:23	50.31	6/23/2022 5:05	81.33	6/22/2022 3:28	18.55	6/22/2022 2:37	23.04	6/22/2022 7:33	71.33
6/23/2022 6:24	50.31	6/23/2022 5:06	81.36	6/22/2022 3:29	22.10	6/22/2022 2:38	23.22	6/22/2022 7:34	74.88
6/23/2022 6:25	50.33	6/23/2022 5:07	81.36	6/22/2022 3:30	26.18	6/22/2022 2:39	23.39	6/22/2022 7:35	77.56
6/23/2022 6:26	50.33	6/23/2022 5:08	81.38	6/22/2022 3:31	27.63	6/22/2022 2:40	23.10	6/22/2022 7:36	77.38
6/23/2022 6:27	50.30	6/23/2022 5:09	81.36	6/22/2022 3:32	24.69	6/22/2022 2:41	23.05	6/22/2022 7:37	77.24
6/23/2022 6:28	50.31	6/23/2022 5:10	81.36	6/22/2022 3:33	23.21	6/22/2022 2:42	22.94	6/22/2022 7:38	77.09
6/23/2022 6:29	50.31	6/23/2022 5:11	81.32	6/22/2022 3:34	22.23	6/22/2022 2:43	23.06	6/22/2022 7:39	76.98
6/23/2022 6:30	50.33	6/23/2022 5:12	81.37	6/22/2022 3:35	21.69	6/22/2022 2:44	23.16	6/22/2022 7:40	76.87
6/23/2022 6:31	50.32	6/23/2022 5:13	81.36	6/22/2022 3:36	21.27	6/22/2022 2:45	23.25	6/22/2022 7:41	76.76
6/23/2022 6:32	50.32	6/23/2022 5:14	81.34	6/22/2022 3:37	26.78	6/22/2022 2:46	23.31	6/22/2022 7:42	76.63
6/23/2022 6:33	50.32	6/23/2022 5:15	81.38	6/22/2022 3:38	29.94	6/22/2022 2:47	23.36	6/22/2022 7:43	76.54
6/23/2022 6:34	50.35	6/23/2022 5:16	81.38	6/22/2022 3:39	31.99	6/22/2022 2:48	23.49	6/22/2022 7:44	76.41
6/23/2022 6:35	51.82	6/23/2022 5:17	81.36	6/22/2022 3:40	29.44	6/22/2022 2:49	23.56	6/22/2022 7:45	76.31
6/23/2022 6:36	53.87	6/23/2022 5:18	81.34	6/22/2022 3:41	26.98	6/22/2022 2:50	23.63	6/22/2022 7:46	76.21

6/23/2022 6:37	54.87	6/23/2022 5:19	81.42	6/22/2022 3:42	25.45	6/22/2022 2:51	23.69	6/22/2022 7:47	78.73
6/23/2022 6:38	55.42	6/23/2022 5:20	81.38	6/22/2022 3:43	24.41	6/22/2022 2:52	23.69	6/22/2022 7:48	81.30
6/23/2022 6:39	53.45	6/23/2022 5:21	81.38	6/22/2022 3:44	23.71	6/22/2022 2:53	23.80	6/22/2022 7:49	81.09
6/23/2022 6:40	52.34	6/23/2022 5:22	81.36	6/22/2022 3:45	23.14	6/22/2022 2:54	23.84	6/22/2022 7:50	80.93
6/23/2022 6:41	51.88	6/23/2022 5:23	81.36	6/22/2022 3:46	22.77	6/22/2022 2:55	23.88	6/22/2022 7:51	80.78
6/23/2022 6:42	51.59	6/23/2022 5:24	81.36	6/22/2022 3:47	22.40	6/22/2022 2:56	23.99	6/22/2022 7:52	80.57
6/23/2022 6:43	51.51	6/23/2022 5:25	81.37	6/22/2022 3:48	22.13	6/22/2022 2:57	24.11	6/22/2022 7:53	80.45
6/23/2022 6:44	51.35	6/23/2022 5:26	81.35	6/22/2022 3:49	21.88	6/22/2022 2:58	24.22	6/22/2022 7:54	80.31
6/23/2022 6:45	51.25	6/23/2022 5:27	81.33	6/22/2022 3:50	21.69	6/22/2022 2:59	24.26	6/22/2022 7:55	80.14
6/23/2022 6:46	51.19	6/23/2022 5:28	81.34	6/22/2022 3:51	21.48	6/22/2022 3:00	24.38	6/22/2022 7:56	80.00
6/23/2022 6:47	51.11	6/23/2022 5:29	81.36	6/22/2022 3:52	21.30	6/22/2022 3:01	24.45	6/22/2022 7:57	79.84
6/23/2022 6:48	51.09	6/23/2022 5:30	81.36	6/22/2022 3:53	21.20	6/22/2022 3:02	24.58	6/22/2022 7:58	79.73
6/23/2022 6:49	51.04	6/23/2022 5:31	81.37	6/22/2022 3:54	21.08	6/22/2022 3:03	24.39	6/22/2022 7:59	79.58
6/23/2022 6:50	51.01	6/23/2022 5:32	81.37	6/22/2022 3:55	20.92	6/22/2022 3:04	24.37	6/22/2022 8:00	79.41
6/23/2022 6:51	50.95	6/23/2022 5:33	81.38	6/22/2022 3:56	20.78	6/22/2022 3:05	24.30	6/22/2022 8:01	79.30
6/23/2022 6:52	50.95	6/23/2022 5:34	81.43	6/22/2022 3:57	20.72	6/22/2022 3:06	24.33	6/22/2022 8:02	79.15
6/23/2022 6:53	50.94	6/23/2022 5:35	81.36	6/22/2022 3:58	20.52	6/22/2022 3:07	24.30	6/22/2022 8:03	79.06
6/23/2022 6:54	50.89	6/23/2022 5:36	81.35	6/22/2022 3:59	20.47	6/22/2022 3:08	24.32	6/22/2022 8:04	78.94
6/23/2022 6:55	50.88	6/23/2022 5:37	81.37	6/22/2022 4:00	20.38	6/22/2022 3:09	24.35	6/22/2022 8:05	84.09
6/23/2022 6:56	50.88	6/23/2022 5:38	81.44	6/22/2022 4:01	20.30	6/22/2022 3:10	24.42	6/22/2022 8:06	87.01
6/23/2022 6:57	50.85	6/23/2022 5:39	81.35	6/22/2022 4:02	20.21	6/22/2022 3:11	24.52	6/22/2022 8:07	86.65
6/23/2022 6:58	50.84	6/23/2022 5:40	81.38	6/22/2022 4:03	20.12	6/22/2022 3:12	24.49	6/22/2022 8:08	92.01
6/23/2022 6:59	50.78	6/23/2022 5:41	81.40	6/22/2022 4:04	20.12	6/22/2022 3:13	24.54	6/22/2022 8:09	94.11
6/23/2022 7:00	50.80	6/23/2022 5:42	81.37	6/22/2022 4:05	19.99	6/22/2022 3:14	24.58	6/22/2022 8:10	93.72
6/23/2022 7:01	50.81	6/23/2022 5:43	81.35	6/22/2022 4:06	19.93	6/22/2022 3:15	24.62	6/22/2022 8:11	99.47
6/23/2022 7:02	50.77	6/23/2022 5:44	81.40	6/22/2022 4:07	19.91	6/22/2022 3:16	24.72	6/22/2022 8:12	100.56
6/23/2022 7:03	50.80	6/23/2022 5:45	81.39	6/22/2022 4:08	19.77	6/22/2022 3:17	24.78	6/22/2022 8:13	100.04
6/23/2022 7:04	50.76	6/23/2022 5:46	81.37	6/22/2022 4:09	19.80	6/22/2022 3:18	24.82	6/22/2022 8:14	99.57
6/23/2022 7:05	50.78	6/23/2022 5:47	81.36	6/22/2022 4:10	19.66	6/22/2022 3:19	24.87	6/22/2022 8:15	99.16
6/23/2022 7:06	50.74	6/23/2022 5:48	81.41	6/22/2022 4:11	19.70	6/22/2022 3:20	24.87	6/22/2022 8:16	98.71
6/23/2022 7:07	50.74	6/23/2022 5:49	81.39	6/22/2022 4:12	19.59	6/22/2022 3:21	24.96	6/22/2022 8:17	98.36
6/23/2022 7:08	50.71	6/23/2022 5:50	81.40	6/22/2022 4:13	19.58	6/22/2022 3:22	25.03	6/22/2022 8:18	97.92
6/23/2022 7:09	50.71	6/23/2022 5:51	81.40	6/22/2022 4:14	19.50	6/22/2022 3:23	24.22	6/22/2022 8:19	97.56
6/23/2022 7:10	50.72	6/23/2022 5:52	81.38	6/22/2022 4:15	19.48	6/22/2022 3:24	23.79	6/22/2022 8:20	97.17
6/23/2022 7:11	50.72	6/23/2022 5:53	81.37	6/22/2022 4:16	19.41	6/22/2022 3:25	23.51	6/22/2022 8:21	96.81
6/23/2022 7:12	50.74	6/23/2022 5:54	81.40	6/22/2022 4:17	19.38	6/22/2022 3:26	23.18	6/22/2022 8:22	102.09
6/23/2022 7:13	50.70	6/23/2022 5:55	81.36	6/22/2022 4:18	19.32	6/22/2022 3:27	23.02	6/22/2022 8:23	101.84
6/23/2022 7:14	50.73	6/23/2022 5:56	81.36	6/22/2022 4:19	19.34	6/22/2022 3:28	22.80	6/22/2022 8:24	101.37
6/23/2022 7:15	50.69	6/23/2022 5:57	81.38	6/22/2022 4:20	19.28	6/22/2022 3:29	22.63	6/22/2022 8:25	100.99
6/23/2022 7:16	50.70	6/23/2022 5:58	81.39	6/22/2022 4:21	19.24	6/22/2022 3:30	22.53	6/22/2022 8:26	100.52
6/23/2022 7:17	50.68	6/23/2022 5:59	81.37	6/22/2022 4:22	19.18	6/22/2022 3:31	22.43	6/22/2022 8:27	100.14
6/23/2022 7:18	50.72	6/23/2022 6:00	81.36	6/22/2022 4:23	19.16	6/22/2022 3:32	22.42	6/22/2022 8:28	99.77
6/23/2022 7:19	50.65	6/23/2022 6:01	81.36	6/22/2022 4:24	19.11	6/22/2022 3:33	22.31	6/22/2022 8:29	99.40
6/23/2022 7:20	50.68	6/23/2022 6:02	81.35	6/22/2022 4:25	19.05	6/22/2022 3:34	22.21	6/22/2022 8:30	99.01
6/23/2022 7:21	50.68	6/23/2022 6:03	81.37	6/22/2022 4:26	19.07	6/22/2022 3:35	22.16	6/22/2022 8:31	98.70
6/23/2022 7:22	50.67	6/23/2022 6:04	81.34	6/22/2022 4:27	18.99	6/22/2022 3:36	22.14	6/22/2022 8:32	98.38
6/23/2022 7:23	50.63	6/23/2022 6:05	81.39	6/22/2022 4:28	19.00	6/22/2022 3:37	22.05	6/22/2022 8:33	98.01
6/23/2022 7:24	50.63	6/23/2022 6:06	81.36	6/22/2022 4:29	18.95	6/22/2022 3:38	21.97	6/22/2022 8:34	97.67
6/23/2022 7:25	50.67	6/23/2022 6:07	81.38	6/22/2022 4:30	18.94	6/22/2022 3:39	21.93	6/22/2022 8:35	97.34
6/23/2022 7:26	50.63	6/23/2022 6:08	81.39	6/22/2022 4:31	18.94	6/22/2022 3:40	21.94	6/22/2022 8:36	97.06
6/23/2022 7:27	50.65	6/23/2022 6:09	81.38	6/22/2022 4:32	18.91	6/22/2022 3:41	21.84	6/22/2022 8:37	96.74
6/23/2022 7:28	50.65	6/23/2022 6:10	81.37	6/22/2022 4:33	18.85	6/22/2022 3:42	21.88	6/22/2022 8:38	96.44
6/23/2022 7:29	50.64	6/23/2022 6:11	81.33	6/22/2022 4:34	18.84	6/22/2022 3:43	20.98	6/22/2022 8:39	96.14
6/23/2022 7:30	50.61	6/23/2022 6:12	81.40	6/22/2022 4:35	18.79	6/22/2022 3:44	20.49	6/22/2022 8:40	97.35
6/23/2022 7:31	50.63	6/23/2022 6:13	81.42	6/22/2022 4:36	18.78	6/22/2022 3:45	20.08	6/22/2022 8:41	102.44
6/23/2022 7:32	50.63	6/23/2022 6:14	81.37	6/22/2022 4:37	18.77	6/22/2022 3:46	19.75	6/22/2022 8:42	101.96
6/23/2022 7:33	50.64	6/23/2022 6:15	81.38	6/22/2022 4:38	18.73	6/22/2022 3:47	19.51	6/22/2022 8:43	101.52
6/23/2022 7:34	50.59	6/23/2022 6:16	81.42	6/22/2022 4:39	18.70	6/22/2022 3:48	19.27	6/22/2022 8:44	101.14
6/23/2022 7:35	50.64	6/23/2022 6:17	81.39	6/22/2022 4:40	18.71	6/22/2022 3:49	19.12	6/22/2022 8:45	100.76
6/23/2022 7:36	50.60	6/23/2022 6:18	81.40	6/22/2022 4:41	18.65	6/22/2022 3:50	19.41	6/22/2022 8:46	100.38
6/23/2022 7:37	50.62	6/23/2022 6:19	81.38	6/22/2022 4:42	18.62	6/22/2022 3:51	19.49	6/22/2022 8:47	100.05
6/23/2022 7:38	50.58	6/23/2022 6:20	81.38	6/22/2022 4:43	18.67	6/22/2022 3:52	19.48	6/22/2022 8:48	99.72
6/23/2022 7:39	50.60	6/23/2022 6:21	81.38	6/22/2022 4:44	18.55	6/22/2022 3:53	19.51	6/22/2022 8:49	99.34
6/23/2022 7:40	50.59	6/23/2022 6:22	81.38	6/22/2022 4:45	18.61	6/22/2022 3:54	19.45	6/22/2022 8:50	99.01
6/23/2022 7:41	50.58	6/23/2022 6:23	81.36	6/22/2022 4:46	18.57	6/22/2022 3:55	19.40	6/22/2022 8:51	98.70
6/23/2022 7:42	50.58	6/23/2022 6:24	81.40	6/22/2022 4:47	18.59	6/22/2022 3:56	19.38	6/22/2022 8:52	98.38
6/23/2022 7:43	50.58	6/23/2022 6:25	81.41	6/22/2022 4:48	18.48	6/22/2022 3:57	19.21	6/22/2022 8:53	98.02
6/23/2022 7:44	50.58	6/23/2022 6:26	81.40	6/22/2022 4:49	18.52	6/22/2022 3:58	18.72	6/22/2022 8:54	97.70
6/23/2022 7:45	50.63	6/23/2022 6:27	81.37	6/22/2022 4:50	18.45	6/22/2022 3:59	18.40	6/22/2022 8:55	97.36
6/23/2022 7:46	50.56	6/23/2022 6:28	81.35	6/22/2022 4:51	18.41	6/22/2022 4:00	18.20	6/22/2022 8:56	97.06
6/23/2022 7:47	50.61	6/23/2022 6:29	81.41	6/22/2022 4:52	18.46	6/22/2022 4:01	18.02	6/22/2022 8:57	96.78
6/23/2022 7:48	50.57	6/23/2022 6:30	81.38	6/22/2022 4:53	18.41	6/22/2022 4:02	17.77	6/22/2022 8:58	96.45
6/23/2022 7:49	50.59	6/23/2022 6:31	81.39	6/22/2022 4:54	18.37	6/22/2022 4:03	17.71	6/22/2022 8:59	96.16
6/23/2022 7:50	50.59	6/23/2022 6:32	81.39	6/22/2022 4:55	18.36	6/22/2022 4:04	17.55	6/22/2022 9:00	95.86
6/23/2022 7:51	50.59	6/23/2022 6:33	81.39	6/22/2022 4:56	18.35	6/22/2022 4:05	17.36	6/22/2022 9:01	95.58
6/23/2022 7:52	50.56	6/23/2022 6:34	81.38	6/22/2022 4:57	18.36	6/22/2022 4:06	17.25	6/22/2022 9:02	95.25
6/23/2022 7:53	50.59	6/23/2022 6:35	81.38	6/22/2022 4:58	18.34	6/22/2022 4:07	17.05	6/22/2022 9:03	95.00
6/23/2022 7:54	50.55	6/23/2022 6:36	81.41	6/22/2022 4:59	18.32	6/22/2022 4:08	17.00	6/22/2022 9:04	94.72
6/23/2022 7:55	50.57	6/23/2022 6:37	81.42	6/22/2022 5:00	18.36	6/22/2022 4:09	16.87	6/22/2022 9:05	94.49
6/23/2022 7:56	50.57	6/23/2022 6:38	81.39	6/22/2022 5:01	18.27	6/22/2022 4:10	16.77	6/22/2022 9:06	94.20
6/23/2022 7:57	50.56	6/23/2022 6:39	81.39	6/22/2022 5:02	18.29	6/22/2022 4:11	16.68	6/22/2022 9:07	94.00
6/23/2022 7:58	50.58	6/23/2022 6:40	81.42	6/22/2022 5:03	18.28	6/22/2022 4:12	16.61	6/22/2022 9:08	93.74
6/23/2022 7:59	50.57	6/23/2022 6:41	81.41	6/22/2022 5:04	18.23	6/22/2022 4:13	16.42	6/22/2022 9:09	93.53
6/23/2022 8:00	50.57	6/23/2022 6:42	81.42	6/22/2022 5:05	18.24	6/22/2022 4:14	16.38	6/22/2022 9:10	93.28
6/23/2022 8:01	50.53	6/23/2022 6:43	81.40	6/22/2022 5:06	18.21	6/22/2022 4:15	16.22	6/22/2022 9:11	93.04
6/23/2022 8:02	50.59	6/23/2022 6:44	81.39	6/22/2022 5:07	18.23	6/22/2022 4:16	16.14	6/22/2022 9:12	92.76
6/23/2022 8:03	50.55	6/23/2022 6:45	81.39	6/22/2022 5:08	18.16	6/22/2022 4:17	16.12	6/22/2022 9:13	92.47
6/23/2022 8:04	50.52	6/23/2022 6:46	81.41	6/22/2022 5:09	18.17	6/22/2022 4:18	15.94	6/22/2022 9:14	92.24

6/23/2022 8:05	50.57	6/23/2022 6:47	81.39	6/22/2022 5:10	18.15	6/22/2022 4:19	15.84	6/22/2022 9:15	91.99
6/23/2022 8:06	50.56	6/23/2022 6:48	81.36	6/22/2022 5:11	18.14	6/22/2022 4:20	15.73	6/22/2022 9:16	91.78
6/23/2022 8:07	50.56	6/23/2022 6:49	81.39	6/22/2022 5:12	18.12	6/22/2022 4:21	15.69	6/22/2022 9:17	91.58
6/23/2022 8:08	50.52	6/23/2022 6:50	81.39	6/22/2022 5:13	18.13	6/22/2022 4:22	15.61	6/22/2022 9:18	91.35
6/23/2022 8:09	50.53	6/23/2022 6:51	81.42	6/22/2022 5:14	18.11	6/22/2022 4:23	15.55	6/22/2022 9:19	91.21
6/23/2022 8:10	50.50	6/23/2022 6:52	81.42	6/22/2022 5:15	18.10	6/22/2022 4:24	15.42	6/22/2022 9:20	90.98
6/23/2022 8:11	50.56	6/23/2022 6:53	81.41	6/22/2022 5:16	18.10	6/22/2022 4:25	15.34	6/22/2022 9:21	90.80
6/23/2022 8:12	50.52	6/23/2022 6:54	81.36	6/22/2022 5:17	18.07	6/22/2022 4:26	15.26	6/22/2022 9:22	90.52
6/23/2022 8:13	50.53	6/23/2022 6:55	81.40	6/22/2022 5:18	18.06	6/22/2022 4:27	15.17	6/22/2022 9:23	90.34
6/23/2022 8:14	50.54	6/23/2022 6:56	81.38	6/22/2022 5:19	18.04	6/22/2022 4:28	15.09	6/22/2022 9:24	90.17
6/23/2022 8:15	50.53	6/23/2022 6:57	81.41	6/22/2022 5:20	17.99	6/22/2022 4:29	15.00	6/22/2022 9:25	89.94
6/23/2022 8:16	50.57	6/23/2022 6:58	81.41	6/22/2022 5:21	18.03	6/22/2022 4:30	14.96	6/22/2022 9:26	89.69
6/23/2022 8:17	50.55	6/23/2022 6:59	81.36	6/22/2022 5:22	18.02	6/22/2022 4:31	14.94	6/22/2022 9:27	89.51
6/23/2022 8:18	50.53	6/23/2022 7:00	81.39	6/22/2022 5:23	17.98	6/22/2022 4:32	14.82	6/22/2022 9:28	89.27
6/23/2022 8:19	50.52	6/23/2022 7:01	81.39	6/22/2022 5:24	18.02	6/22/2022 4:33	14.67	6/22/2022 9:29	89.09
6/23/2022 8:20	50.47	6/23/2022 7:02	81.37	6/22/2022 5:25	17.99	6/22/2022 4:34	14.66	6/22/2022 9:30	88.91
6/23/2022 8:21	50.55	6/23/2022 7:03	81.43	6/22/2022 5:26	17.95	6/22/2022 4:35	14.58	6/22/2022 9:31	88.73
6/23/2022 8:22	50.52	6/23/2022 7:04	81.39	6/22/2022 5:27	17.90	6/22/2022 4:36	14.52	6/22/2022 9:32	88.54
6/23/2022 8:23	50.51	6/23/2022 7:05	81.39	6/22/2022 5:28	17.99	6/22/2022 4:37	14.48	6/22/2022 9:33	88.40
6/23/2022 8:24	50.53	6/23/2022 7:06	81.44	6/22/2022 5:29	17.92	6/22/2022 4:38	14.41	6/22/2022 9:34	88.15
6/23/2022 8:25	50.50	6/23/2022 7:07	81.38	6/22/2022 5:30	17.94	6/22/2022 4:39	14.34	6/22/2022 9:35	87.99
6/23/2022 8:26	50.55	6/23/2022 7:08	81.41	6/22/2022 5:31	17.96	6/22/2022 4:40	14.24	6/22/2022 9:36	87.83
6/23/2022 8:27	50.52	6/23/2022 7:09	81.43	6/22/2022 5:32	17.83	6/22/2022 4:41	14.16	6/22/2022 9:37	87.67
6/23/2022 8:28	50.51	6/23/2022 7:10	81.39	6/22/2022 5:33	17.90	6/22/2022 4:42	14.14	6/22/2022 9:38	87.50
6/23/2022 8:29	50.52	6/23/2022 7:11	81.38	6/22/2022 5:34	17.85	6/22/2022 4:43	14.07	6/22/2022 9:39	87.33
6/23/2022 8:30	50.53	6/23/2022 7:12	81.35	6/22/2022 5:35	17.84	6/22/2022 4:44	13.94	6/22/2022 9:40	87.14
6/23/2022 8:31	50.51	6/23/2022 7:13	81.38	6/22/2022 5:36	17.83	6/22/2022 4:45	13.89	6/22/2022 9:41	86.97
6/23/2022 8:32	50.52	6/23/2022 7:14	81.42	6/22/2022 5:37	17.83	6/22/2022 4:46	13.86	6/22/2022 9:42	86.81
6/23/2022 8:33	50.52	6/23/2022 7:15	81.41	6/22/2022 5:38	17.84	6/22/2022 4:47	13.82	6/22/2022 9:43	86.66
6/23/2022 8:34	50.49	6/23/2022 7:16	81.42	6/22/2022 5:39	17.83	6/22/2022 4:48	13.78	6/22/2022 9:44	86.50
6/23/2022 8:35	50.54	6/23/2022 7:17	81.38	6/22/2022 5:40	17.81	6/22/2022 4:49	13.71	6/22/2022 9:45	86.33
6/23/2022 8:36	50.52	6/23/2022 7:18	81.37	6/22/2022 5:41	17.78	6/22/2022 4:50	13.58	6/22/2022 9:46	86.15
6/23/2022 8:37	50.54	6/23/2022 7:19	81.40	6/22/2022 5:42	17.78	6/22/2022 4:51	13.55	6/22/2022 9:47	86.00
6/23/2022 8:38	50.50	6/23/2022 7:20	81.44	6/22/2022 5:43	17.77	6/22/2022 4:52	13.48	6/22/2022 9:48	85.86
6/23/2022 8:39	50.50	6/23/2022 7:21	81.40	6/22/2022 5:44	17.68	6/22/2022 4:53	13.48	6/22/2022 9:49	85.68
6/23/2022 8:40	50.49	6/23/2022 7:22	81.39	6/22/2022 5:45	17.78	6/22/2022 4:54	13.40	6/22/2022 9:50	85.53
6/23/2022 8:41	50.51	6/23/2022 7:23	81.41	6/22/2022 5:46	17.77	6/22/2022 4:55	13.31	6/22/2022 9:51	85.39
6/23/2022 8:42	50.51	6/23/2022 7:24	81.35	6/22/2022 5:47	17.72	6/22/2022 4:56	13.29	6/22/2022 9:52	85.21
6/23/2022 8:43	50.50	6/23/2022 7:25	81.40	6/22/2022 5:48	17.73	6/22/2022 4:57	13.24	6/22/2022 9:53	85.06
6/23/2022 8:44	50.50	6/23/2022 7:26	81.34	6/22/2022 5:49	17.71	6/22/2022 4:58	13.14	6/22/2022 9:54	84.91
6/23/2022 8:45	50.52	6/23/2022 7:27	81.44	6/22/2022 5:50	17.71	6/22/2022 4:59	13.06	6/22/2022 9:55	84.74
6/23/2022 8:46	50.49	6/23/2022 7:28	81.38	6/22/2022 5:51	17.69	6/22/2022 5:00	13.08	6/22/2022 9:56	84.62
6/23/2022 8:47	50.47	6/23/2022 7:29	81.41	6/22/2022 5:52	17.68	6/22/2022 5:01	12.96	6/22/2022 9:57	84.45
6/23/2022 8:48	50.49	6/23/2022 7:30	81.39	6/22/2022 5:53	17.73	6/22/2022 5:02	12.97	6/22/2022 9:58	84.33
6/23/2022 8:49	50.47	6/23/2022 7:31	81.42	6/22/2022 5:54	17.69	6/22/2022 5:03	12.91	6/22/2022 9:59	84.18
6/23/2022 8:50	50.48	6/23/2022 7:32	81.39	6/22/2022 5:55	17.70	6/22/2022 5:04	12.81	6/22/2022 10:00	84.05
6/23/2022 8:51	50.45	6/23/2022 7:33	81.37	6/22/2022 5:56	17.68	6/22/2022 5:05	12.77	6/22/2022 10:01	83.90
6/23/2022 8:52	50.49	6/23/2022 7:34	81.34	6/22/2022 5:57	17.67	6/22/2022 5:06	12.74	6/22/2022 10:02	83.76
6/23/2022 8:53	50.49	6/23/2022 7:35	81.45	6/22/2022 5:58	17.67	6/22/2022 5:07	12.72	6/22/2022 10:03	83.62
6/23/2022 8:54	50.49	6/23/2022 7:36	81.40	6/22/2022 5:59	17.63	6/22/2022 5:08	12.63	6/22/2022 10:04	83.50
6/23/2022 8:55	50.47	6/23/2022 7:37	81.39	6/22/2022 6:00	17.65	6/22/2022 5:09	12.65	6/22/2022 10:05	83.32
6/23/2022 8:56	50.51	6/23/2022 7:38	81.40	6/22/2022 6:01	17.61	6/22/2022 5:10	12.53	6/22/2022 10:06	83.18
6/23/2022 8:57	50.50	6/23/2022 7:39	81.43	6/22/2022 6:02	17.69	6/22/2022 5:11	12.48	6/22/2022 10:07	83.08
6/23/2022 8:58	50.47	6/23/2022 7:40	81.38	6/22/2022 6:03	17.62	6/22/2022 5:12	12.42	6/22/2022 10:08	82.95
6/23/2022 8:59	50.48	6/23/2022 7:41	81.39	6/22/2022 6:04	17.64	6/22/2022 5:13	12.39	6/22/2022 10:09	82.75
6/23/2022 9:00	50.51	6/23/2022 7:42	81.40	6/22/2022 6:05	17.62	6/22/2022 5:14	12.39	6/22/2022 10:10	82.64
6/23/2022 9:01	50.50	6/23/2022 7:43	81.41	6/22/2022 6:06	17.60	6/22/2022 5:15	12.26	6/22/2022 10:11	82.55
6/23/2022 9:02	50.49	6/23/2022 7:44	81.42	6/22/2022 6:07	17.58	6/22/2022 5:16	12.27	6/22/2022 10:12	82.40
6/23/2022 9:03	50.47	6/23/2022 7:45	81.41	6/22/2022 6:08	17.54	6/22/2022 5:17	12.19	6/22/2022 10:13	82.27
6/23/2022 9:04	50.49	6/23/2022 7:46	81.40	6/22/2022 6:09	17.53	6/22/2022 5:18	12.13	6/22/2022 10:14	82.16
6/23/2022 9:05	50.49	6/23/2022 7:47	81.39	6/22/2022 6:10	17.60	6/22/2022 5:19	12.16	6/22/2022 10:15	82.04
6/23/2022 9:06	50.49	6/23/2022 7:48	81.41	6/22/2022 6:11	17.57	6/22/2022 5:20	11.98	6/22/2022 10:16	81.87
6/23/2022 9:07	50.47	6/23/2022 7:49	81.39	6/22/2022 6:12	17.55	6/22/2022 5:21	12.00	6/22/2022 10:17	81.82
6/23/2022 9:08	50.44	6/23/2022 7:50	81.41	6/22/2022 6:13	17.52	6/22/2022 5:22	11.94	6/22/2022 10:18	81.67
6/23/2022 9:09	50.49	6/23/2022 7:51	81.41	6/22/2022 6:14	17.55	6/22/2022 5:23	11.94	6/22/2022 10:19	81.58
6/23/2022 9:10	50.43	6/23/2022 7:52	81.43	6/22/2022 6:15	17.54	6/22/2022 5:24	11.94	6/22/2022 10:20	81.47
6/23/2022 9:11	50.48	6/23/2022 7:53	81.42	6/22/2022 6:16	17.53	6/22/2022 5:25	11.84	6/22/2022 10:21	81.35
6/23/2022 9:12	50.47	6/23/2022 7:54	81.42	6/22/2022 6:17	17.48	6/22/2022 5:26	11.79	6/22/2022 10:22	81.22
6/23/2022 9:13	50.47	6/23/2022 7:55	81.38	6/22/2022 6:18	17.52	6/22/2022 5:27	11.76	6/22/2022 10:23	81.15
6/23/2022 9:14	50.47	6/23/2022 7:56	81.39	6/22/2022 6:19	17.52	6/22/2022 5:28	11.68	6/22/2022 10:24	81.01
6/23/2022 9:15	50.45	6/23/2022 7:57	81.40	6/22/2022 6:20	17.54	6/22/2022 5:29	11.71	6/22/2022 10:25	80.94
6/23/2022 9:16	50.46	6/23/2022 7:58	81.44	6/22/2022 6:21	17.46	6/22/2022 5:30	11.67	6/22/2022 10:26	80.83
6/23/2022 9:17	50.46	6/23/2022 7:59	81.41	6/22/2022 6:22	17.46	6/22/2022 5:31	11.57	6/22/2022 10:27	80.73
6/23/2022 9:18	50.48	6/23/2022 8:00	81.40	6/22/2022 6:23	17.47	6/22/2022 5:32	11.59	6/22/2022 10:28	80.66
6/23/2022 9:19	50.46	6/23/2022 8:01	81.41	6/22/2022 6:24	17.49	6/22/2022 5:33	11.51	6/22/2022 10:29	80.52
6/23/2022 9:20	50.48	6/23/2022 8:02	81.46	6/22/2022 6:25	17.47	6/22/2022 5:34	11.51	6/22/2022 10:30	80.45
6/23/2022 9:21	50.47	6/23/2022 8:03	81.40	6/22/2022 6:26	17.48	6/22/2022 5:35	11.46	6/22/2022 10:31	80.36
6/23/2022 9:22	50.45	6/23/2022 8:04	81.39	6/22/2022 6:27	17.44	6/22/2022 5:36	11.36	6/22/2022 10:32	80.25
6/23/2022 9:23	50.47	6/23/2022 8:05	81.42	6/22/2022 6:28	17.42	6/22/2022 5:37	11.31	6/22/2022 10:33	80.13
6/23/2022 9:24	50.43	6/23/2022 8:06	81.40	6/22/2022 6:29	17.39	6/22/2022 5:38	11.34	6/22/2022 10:34	80.04
6/23/2022 9:25	50.45	6/23/2022 8:07	81.37	6/22/2022 6:30	17.44	6/22/2022 5:39	11.33	6/22/2022 10:35	79.97
6/23/2022 9:26	50.48	6/23/2022 8:08	81.41	6/22/2022 6:31	17.43	6/22/2022 5:40	11.26	6/22/2022 10:36	79.85
6/23/2022 9:27	50.43	6/23/2022 8:09	81.42	6/22/2022 6:32	17.41	6/22/2022 5:41	11.19	6/22/2022 10:37	79.76
6/23/2022 9:28	50.43	6/23/2022 8:10	81.42	6/22/2022 6:33	17.46	6/22/2022 5:42	11.15	6/22/2022 10:38	79.61
6/23/2022 9:29	50.43	6/23/2022 8:11	81.42	6/22/2022 6:34	17.45	6/22/2022 5:43	11.09	6/22/2022 10:39	79.52
6/23/2022 9:30	50.46	6/23/2022 8:12	81.39	6/22/2022 6:35	17.39	6/22/2022 5:44	11.11	6/22/2022 10:40	79.41
6/23/2022 9:31	50.44	6/23/2022 8:13	81.38	6/22/2022 6:36	17.37	6/22/2022 5:45	11.11	6/22/2022 10:41	79.35
6/23/2022 9:32	50.47	6/23/2022 8:14	81.40	6/22/2022 6:37	17.40	6/22/2022 5:46	10.98	6/22/2022 10:42	79.27

6/23/2022 9:33	50.42	6/23/2022 8:15	81.38	6/22/2022 6:38	17.35	6/22/2022 5:47	10.97	6/22/2022 10:43	79.14
6/23/2022 9:34	50.42	6/23/2022 8:16	81.38	6/22/2022 6:39	17.39	6/22/2022 5:48	10.91	6/22/2022 10:44	79.08
6/23/2022 9:35	50.42	6/23/2022 8:17	81.40	6/22/2022 6:40	17.38	6/22/2022 5:49	10.94	6/22/2022 10:45	79.02
6/23/2022 9:36	50.42	6/23/2022 8:18	81.39	6/22/2022 6:41	17.36	6/22/2022 5:50	10.87	6/22/2022 10:46	78.95
6/23/2022 9:37	50.44	6/23/2022 8:19	81.38	6/22/2022 6:42	17.37	6/22/2022 5:51	10.79	6/22/2022 10:47	78.87
6/23/2022 9:38	50.43	6/23/2022 8:20	81.39	6/22/2022 6:43	17.39	6/22/2022 5:52	10.77	6/22/2022 10:48	78.77
6/23/2022 9:39	50.46	6/23/2022 8:21	81.39	6/22/2022 6:44	17.35	6/22/2022 5:53	10.77	6/22/2022 10:49	78.68
6/23/2022 9:40	50.42	6/23/2022 8:22	81.45	6/22/2022 6:45	17.37	6/22/2022 5:54	10.71	6/22/2022 10:50	78.66
6/23/2022 9:41	50.44	6/23/2022 8:23	81.42	6/22/2022 6:46	23.14	6/22/2022 5:55	10.72	6/22/2022 10:51	78.55
6/23/2022 9:42	50.40	6/23/2022 8:24	81.43	6/22/2022 6:47	26.49	6/22/2022 5:56	10.61	6/22/2022 10:52	78.48
6/23/2022 9:43	50.45	6/23/2022 8:25	81.39	6/22/2022 6:48	25.69	6/22/2022 5:57	10.57	6/22/2022 10:53	78.40
6/23/2022 9:44	50.43	6/23/2022 8:26	81.40	6/22/2022 6:49	23.29	6/22/2022 5:58	10.58	6/22/2022 10:54	78.31
6/23/2022 9:45	50.43	6/23/2022 8:27	81.40	6/22/2022 6:50	22.07	6/22/2022 5:59	10.59	6/22/2022 10:55	78.25
6/23/2022 9:46	50.41	6/23/2022 8:28	81.40	6/22/2022 6:51	21.25	6/22/2022 6:00	10.56	6/22/2022 10:56	78.17
6/23/2022 9:47	50.44	6/23/2022 8:29	81.40	6/22/2022 6:52	20.76	6/22/2022 6:01	10.50	6/22/2022 10:57	78.12
6/23/2022 9:48	50.43	6/23/2022 8:30	81.37	6/22/2022 6:53	20.33	6/22/2022 6:02	10.43	6/22/2022 10:58	78.01
6/23/2022 9:49	50.43	6/23/2022 8:31	81.40	6/22/2022 6:54	20.05	6/22/2022 6:03	10.44	6/22/2022 10:59	77.94
6/23/2022 9:50	50.45	6/23/2022 8:32	81.41	6/22/2022 6:55	19.88	6/22/2022 6:04	10.36	6/22/2022 11:00	77.86
6/23/2022 9:51	50.43	6/23/2022 8:33	81.39	6/22/2022 6:56	19.61	6/22/2022 6:05	10.32	6/22/2022 11:01	77.76
6/23/2022 9:52	50.43	6/23/2022 8:34	81.40	6/22/2022 6:57	19.52	6/22/2022 6:06	10.30	6/22/2022 11:02	77.66
6/23/2022 9:53	50.43	6/23/2022 8:35	81.37	6/22/2022 6:58	19.39	6/22/2022 6:07	10.29	6/22/2022 11:03	77.61
6/23/2022 9:54	50.42	6/23/2022 8:36	81.39	6/22/2022 6:59	19.23	6/22/2022 6:08	10.30	6/22/2022 11:04	77.49
6/23/2022 9:55	50.40	6/23/2022 8:37	81.39	6/22/2022 7:00	19.18	6/22/2022 6:09	10.20	6/22/2022 11:05	77.45
6/23/2022 9:56	50.42	6/23/2022 8:38	81.37	6/22/2022 7:01	19.07	6/22/2022 6:10	10.15	6/22/2022 11:06	77.34
6/23/2022 9:57	50.46	6/23/2022 8:39	81.41	6/22/2022 7:02	18.96	6/22/2022 6:11	10.12	6/22/2022 11:07	77.27
6/23/2022 9:58	50.44	6/23/2022 8:40	81.34	6/22/2022 7:03	18.95	6/22/2022 6:12	10.17	6/22/2022 11:08	77.17
6/23/2022 9:59	50.44	6/23/2022 8:41	81.43	6/22/2022 7:04	18.86	6/22/2022 6:13	10.17	6/22/2022 11:09	77.15
6/23/2022 10:00	50.42	6/23/2022 8:42	81.36	6/22/2022 7:05	18.80	6/22/2022 6:14	10.02	6/22/2022 11:10	77.04
6/23/2022 10:01	50.44	6/23/2022 8:43	81.41	6/22/2022 7:06	18.73	6/22/2022 6:15	10.04	6/22/2022 11:11	76.97
6/23/2022 10:02	50.42	6/23/2022 8:44	81.40	6/22/2022 7:07	18.64	6/22/2022 6:16	10.03	6/22/2022 11:12	76.91
6/23/2022 10:03	50.45	6/23/2022 8:45	81.40	6/22/2022 7:08	18.60	6/22/2022 6:17	10.00	6/22/2022 11:13	76.82
6/23/2022 10:04	50.44	6/23/2022 8:46	81.44	6/22/2022 7:09	18.58	6/22/2022 6:18	9.90	6/22/2022 11:14	76.77
6/23/2022 10:05	50.45	6/23/2022 8:47	81.38	6/22/2022 7:10	18.51	6/22/2022 6:19	9.93	6/22/2022 11:15	76.73
6/23/2022 10:06	50.43	6/23/2022 8:48	81.43	6/22/2022 7:11	18.46	6/22/2022 6:20	9.88	6/22/2022 11:16	76.63
6/23/2022 10:07	50.43	6/23/2022 8:49	81.39	6/22/2022 7:12	18.44	6/22/2022 6:21	9.83	6/22/2022 11:17	76.58
6/23/2022 10:08	50.42	6/23/2022 8:50	81.43	6/22/2022 7:13	18.38	6/22/2022 6:22	9.86	6/22/2022 11:18	76.55
6/23/2022 10:09	50.40	6/23/2022 8:51	81.40	6/22/2022 7:14	18.35	6/22/2022 6:23	9.75	6/22/2022 11:19	76.43
6/23/2022 10:10	50.43	6/23/2022 8:52	81.41	6/22/2022 7:15	18.31	6/22/2022 6:24	9.78	6/22/2022 11:20	76.31
6/23/2022 10:11	50.44	6/23/2022 8:53	81.37	6/22/2022 7:16	18.33	6/22/2022 6:25	9.93	6/22/2022 11:21	76.24
6/23/2022 10:12	50.38	6/23/2022 8:54	81.42	6/22/2022 7:17	18.31	6/22/2022 6:26	10.19	6/22/2022 11:22	76.21
6/23/2022 10:13	50.43	6/23/2022 8:55	81.40	6/22/2022 7:18	19.71	6/22/2022 6:27	10.31	6/22/2022 11:23	76.11
6/23/2022 10:14	50.43	6/23/2022 8:56	81.42	6/22/2022 7:19	24.74	6/22/2022 6:28	10.74	6/22/2022 11:24	76.05
6/23/2022 10:15	50.44	6/23/2022 8:57	81.42	6/22/2022 7:20	27.72	6/22/2022 6:29	11.09	6/22/2022 11:25	76.01
6/23/2022 10:16	50.42	6/23/2022 8:58	81.44	6/22/2022 7:21	26.53	6/22/2022 6:30	11.27	6/22/2022 11:26	75.90
6/23/2022 10:17	50.43	6/23/2022 8:59	81.43	6/22/2022 7:22	24.20	6/22/2022 6:31	11.45	6/22/2022 11:27	75.88
6/23/2022 10:18	50.45	6/23/2022 9:00	81.38	6/22/2022 7:23	22.89	6/22/2022 6:32	11.58	6/22/2022 11:28	75.81
6/23/2022 10:19	50.45	6/23/2022 9:01	81.43	6/22/2022 7:24	22.11	6/22/2022 6:33	11.67	6/22/2022 11:29	75.72
6/23/2022 10:20	50.43	6/23/2022 9:02	81.36	6/22/2022 7:25	21.50	6/22/2022 6:34	11.24	6/22/2022 11:30	75.68
6/23/2022 10:21	50.46	6/23/2022 9:03	81.38	6/22/2022 7:26	21.05	6/22/2022 6:35	11.48	6/22/2022 11:31	75.61
6/23/2022 10:22	50.44	6/23/2022 9:04	81.42	6/22/2022 7:27	20.79	6/22/2022 6:36	11.06	6/22/2022 11:32	75.52
6/23/2022 10:23	50.41	6/23/2022 9:05	81.42	6/22/2022 7:28	20.59	6/22/2022 6:37	10.62	6/22/2022 11:33	75.46
6/23/2022 10:24	50.44	6/23/2022 9:06	81.41	6/22/2022 7:29	20.33	6/22/2022 6:38	10.42	6/22/2022 11:34	75.41
6/23/2022 10:25	50.46	6/23/2022 9:07	81.41	6/22/2022 7:30	20.16	6/22/2022 6:39	10.50	6/22/2022 11:35	75.33
6/23/2022 10:26	50.40	6/23/2022 9:08	81.42	6/22/2022 7:31	20.06	6/22/2022 6:40	11.10	6/22/2022 11:36	75.27
6/23/2022 10:27	50.43	6/23/2022 9:09	81.42	6/22/2022 7:32	19.91	6/22/2022 6:41	11.25	6/22/2022 11:37	75.21
6/23/2022 10:28	50.41	6/23/2022 9:10	81.43	6/22/2022 7:33	19.81	6/22/2022 6:42	11.41	6/22/2022 11:38	75.14
6/23/2022 10:29	50.41	6/23/2022 9:11	81.40	6/22/2022 7:34	19.65	6/22/2022 6:43	11.56	6/22/2022 11:39	75.09
6/23/2022 10:30	50.43	6/23/2022 9:12	81.44	6/22/2022 7:35	19.58	6/22/2022 6:44	11.65	6/22/2022 11:40	75.00
6/23/2022 10:31	50.48	6/23/2022 9:13	81.40	6/22/2022 7:36	19.52	6/22/2022 6:45	11.76	6/22/2022 11:41	74.94
6/23/2022 10:32	50.42	6/23/2022 9:14	81.42	6/22/2022 7:37	19.40	6/22/2022 6:46	11.90	6/22/2022 11:42	74.88
6/23/2022 10:33	50.42	6/23/2022 9:15	81.40	6/22/2022 7:38	19.32	6/22/2022 6:47	11.90	6/22/2022 11:43	74.81
6/23/2022 10:34	50.40	6/23/2022 9:16	81.41	6/22/2022 7:39	19.31	6/22/2022 6:48	12.04	6/22/2022 11:44	74.77
6/23/2022 10:35	50.43	6/23/2022 9:17	81.34	6/22/2022 7:40	19.18	6/22/2022 6:49	11.39	6/22/2022 11:45	74.68
6/23/2022 10:36	50.44	6/23/2022 9:18	81.39	6/22/2022 7:41	19.17	6/22/2022 6:50	11.00	6/22/2022 11:46	74.66
6/23/2022 10:37	50.41	6/23/2022 9:19	81.42	6/22/2022 7:42	19.11	6/22/2022 6:51	10.84	6/22/2022 11:47	74.56
6/23/2022 10:38	50.42	6/23/2022 9:20	81.40	6/22/2022 7:43	19.06	6/22/2022 6:52	10.62	6/22/2022 11:48	74.50
6/23/2022 10:39	50.44	6/23/2022 9:21	81.38	6/22/2022 7:44	19.02	6/22/2022 6:53	10.49	6/22/2022 11:49	74.45
6/23/2022 10:40	50.43	6/23/2022 9:22	81.41	6/22/2022 7:45	18.95	6/22/2022 6:54	10.52	6/22/2022 11:50	74.43
6/23/2022 10:41	50.43	6/23/2022 9:23	81.35	6/22/2022 7:46	18.88	6/22/2022 6:55	10.38	6/22/2022 11:51	74.36
6/23/2022 10:42	50.43	6/23/2022 9:24	81.42	6/22/2022 7:47	18.88	6/22/2022 6:56	10.32	6/22/2022 11:52	74.29
6/23/2022 10:43	50.42	6/23/2022 9:25	81.41	6/22/2022 7:48	18.87	6/22/2022 6:57	10.28	6/22/2022 11:53	74.24
6/23/2022 10:44	50.44	6/23/2022 9:26	81.37	6/22/2022 7:49	18.76	6/22/2022 6:58	10.20	6/22/2022 11:54	74.19
6/23/2022 10:45	50.39	6/23/2022 9:27	81.41	6/22/2022 7:50	18.72	6/22/2022 6:59	10.07	6/22/2022 11:55	74.17
6/23/2022 10:46	50.46	6/23/2022 9:28	81.39	6/22/2022 7:51	18.71	6/22/2022 7:00	10.36	6/22/2022 11:56	74.07
6/23/2022 10:47	50.41	6/23/2022 9:29	81.42	6/22/2022 7:52	18.66	6/22/2022 7:01	10.68	6/22/2022 11:57	74.02
6/23/2022 10:48	50.45	6/23/2022 9:30	81.44	6/22/2022 7:53	18.62	6/22/2022 7:02	10.46	6/22/2022 11:58	73.97
6/23/2022 10:49	50.43	6/23/2022 9:31	81.41	6/22/2022 7:54	18.63	6/22/2022 7:03	10.19	6/22/2022 11:59	73.91
6/23/2022 10:50	50.40	6/23/2022 9:32	81.38	6/22/2022 7:55	18.57	6/22/2022 7:04	10.05	6/22/2022 12:00	73.86
6/23/2022 10:51	50.42	6/23/2022 9:33	81.41	6/22/2022 7:56	18.58	6/22/2022 7:05	10.01	6/22/2022 12:01	73.81
6/23/2022 10:52	50.41	6/23/2022 9:34	81.38	6/22/2022 7:57	18.50	6/22/2022 7:06	9.95	6/22/2022 12:02	73.77
6/23/2022 10:53	50.39	6/23/2022 9:35	81.40	6/22/2022 7:58	18.50	6/22/2022 7:07	9.91	6/22/2022 12:03	73.70
6/23/2022 10:54	50.41	6/23/2022 9:36	81.40	6/22/2022 7:59	18.50	6/22/2022 7:08	9.80	6/22/2022 12:04	73.66
6/23/2022 10:55	50.41	6/23/2022 9:37	81.38	6/22/2022 8:00	18.49	6/22/2022 7:09	9.73	6/22/2022 12:05	73.60
6/23/2022 10:56	50.37	6/23/2022 9:38	81.41	6/22/2022 8:01	18.45	6/22/2022 7:10	9.69	6/22/2022 12:06	73.57
6/23/2022 10:57	50.41	6/23/2022 9:39	81.35	6/22/2022 8:02	18.40	6/22/2022 7:11	10.23	6/22/2022 12:07	73.51
6/23/2022 10:58	50.41	6/23/2022 9:40	81.39	6/22/2022 8:03	18.37	6/22/2022 7:12	10.06	6/22/2022 12:08	73.47
6/23/2022 10:59	50.43	6/23/2022 9:41	81.43	6/22/2022 8:04	18.38	6/22/2022 7:13	10.24	6/22/2022 12:09	73.42
6/23/2022 11:00	50.41	6/23/2022 9:42	81.38	6/22/2022 8:05	18.33	6/22/2022 7:14	10.63	6/22/2022 12:10	73.36

6/23/2022 11:01	50.43	6/23/2022 9:43	81.39	6/22/2022 8:06	18.36	6/22/2022 7:15	10.27	6/22/2022 12:11	73.30
6/23/2022 11:02	50.46	6/23/2022 9:44	81.33	6/22/2022 8:07	18.27	6/22/2022 7:16	10.00	6/22/2022 12:12	73.25
6/23/2022 11:03	50.40	6/23/2022 9:45	81.41	6/22/2022 8:08	18.26	6/22/2022 7:17	9.80	6/22/2022 12:13	73.16
6/23/2022 11:04	50.42	6/23/2022 9:46	81.42	6/22/2022 8:09	18.29	6/22/2022 7:18	9.71	6/22/2022 12:14	73.15
6/23/2022 11:05	50.44	6/23/2022 9:47	81.43	6/22/2022 8:10	18.26	6/22/2022 7:19	9.71	6/22/2022 12:15	73.13
6/23/2022 11:06	50.45	6/23/2022 9:48	81.38	6/22/2022 8:11	18.23	6/22/2022 7:20	9.63	6/22/2022 12:16	73.03
6/23/2022 11:07	50.41	6/23/2022 9:49	81.39	6/22/2022 8:12	18.17	6/22/2022 7:21	9.56	6/22/2022 12:17	73.04
6/23/2022 11:08	50.42	6/23/2022 9:50	81.44	6/22/2022 8:13	18.21	6/22/2022 7:22	9.52	6/22/2022 12:18	72.99
6/23/2022 11:09	50.44	6/23/2022 9:51	81.41	6/22/2022 8:14	18.18	6/22/2022 7:23	9.49	6/22/2022 12:19	72.95
6/23/2022 11:10	50.41	6/23/2022 9:52	81.36	6/22/2022 8:15	18.20	6/22/2022 7:24	9.75	6/22/2022 12:20	72.88
6/23/2022 11:11	50.42	6/23/2022 9:53	81.35	6/22/2022 8:16	18.17	6/22/2022 7:25	9.51	6/22/2022 12:21	72.84
6/23/2022 11:12	50.39	6/23/2022 9:54	81.41	6/22/2022 8:17	18.15	6/22/2022 7:26	9.48	6/22/2022 12:22	72.79
6/23/2022 11:13	50.39	6/23/2022 9:55	81.35	6/22/2022 8:18	18.17	6/22/2022 7:27	9.43	6/22/2022 12:23	72.78
6/23/2022 11:14	50.40	6/23/2022 9:56	81.37	6/22/2022 8:19	18.11	6/22/2022 7:28	9.38	6/22/2022 12:24	72.71
6/23/2022 11:15	50.39	6/23/2022 9:57	81.37	6/22/2022 8:20	18.13	6/22/2022 7:29	9.25	6/22/2022 12:25	72.69
6/23/2022 11:16	50.40	6/23/2022 9:58	81.36	6/22/2022 8:21	18.14	6/22/2022 7:30	9.25	6/22/2022 12:26	72.61
6/23/2022 11:17	50.36	6/23/2022 9:59	81.40	6/22/2022 8:22	18.11	6/22/2022 7:31	9.25	6/22/2022 12:27	72.59
6/23/2022 11:18	50.40	6/23/2022 10:00	81.34	6/22/2022 8:23	18.10	6/22/2022 7:32	9.19	6/22/2022 12:28	72.56
6/23/2022 11:19	50.44	6/23/2022 10:01	81.41	6/22/2022 8:24	18.09	6/22/2022 7:33	9.11	6/22/2022 12:29	72.54
6/23/2022 11:20	50.40	6/23/2022 10:02	81.37	6/22/2022 8:25	18.11	6/22/2022 7:34	9.09	6/22/2022 12:30	72.49
6/23/2022 11:21	50.37	6/23/2022 10:03	81.40	6/22/2022 8:26	18.05	6/22/2022 7:35	9.05	6/22/2022 12:31	72.43
6/23/2022 11:22	50.39	6/23/2022 10:04	81.36	6/22/2022 8:27	18.06	6/22/2022 7:36	9.06	6/22/2022 12:32	72.41
6/23/2022 11:23	50.40	6/23/2022 10:05	81.38	6/22/2022 8:28	18.03	6/22/2022 7:37	9.05	6/22/2022 12:33	72.33
6/23/2022 11:24	50.40	6/23/2022 10:06	81.36	6/22/2022 8:29	18.09	6/22/2022 7:38	8.99	6/22/2022 12:34	72.34
6/23/2022 11:25	50.41	6/23/2022 10:07	81.40	6/22/2022 8:30	17.99	6/22/2022 7:39	8.97	6/22/2022 12:35	72.29
6/23/2022 11:26	50.41	6/23/2022 10:08	81.37	6/22/2022 8:31	18.04	6/22/2022 7:40	8.97	6/22/2022 12:36	72.25
6/23/2022 11:27	50.42	6/23/2022 10:09	81.38	6/22/2022 8:32	18.03	6/22/2022 7:41	8.95	6/22/2022 12:37	72.20
6/23/2022 11:28	50.42	6/23/2022 10:10	81.39	6/22/2022 8:33	18.01	6/22/2022 7:42	8.93	6/22/2022 12:38	72.16
6/23/2022 11:29	50.40	6/23/2022 10:11	81.42	6/22/2022 8:34	18.03	6/22/2022 7:43	8.85	6/22/2022 12:39	72.13
6/23/2022 11:30	50.43	6/23/2022 10:12	81.40	6/22/2022 8:35	17.97	6/22/2022 7:44	8.82	6/22/2022 12:40	72.08
6/23/2022 11:31	50.41	6/23/2022 10:13	81.35	6/22/2022 8:36	18.00	6/22/2022 7:45	8.80	6/22/2022 12:41	72.03
6/23/2022 11:32	50.42	6/23/2022 10:14	81.40	6/22/2022 8:37	17.99	6/22/2022 7:46	8.78	6/22/2022 12:42	72.01
6/23/2022 11:33	50.40	6/23/2022 10:15	81.40	6/22/2022 8:38	18.00	6/22/2022 7:47	8.79	6/22/2022 12:43	71.95
6/23/2022 11:34	50.41	6/23/2022 10:16	81.38	6/22/2022 8:39	17.99	6/22/2022 7:48	8.69	6/22/2022 12:44	71.95
6/23/2022 11:35	50.40	6/23/2022 10:17	81.45	6/22/2022 8:40	17.96	6/22/2022 7:49	8.68	6/22/2022 12:45	71.90
6/23/2022 11:36	50.41	6/23/2022 10:18	81.38	6/22/2022 8:41	17.95	6/22/2022 7:50	8.71	6/22/2022 12:46	71.87
6/23/2022 11:37	50.41	6/23/2022 10:19	81.39	6/22/2022 8:42	17.99	6/22/2022 7:51	8.68	6/22/2022 12:47	71.83
6/23/2022 11:38	50.41	6/23/2022 10:20	81.39	6/22/2022 8:43	17.99	6/22/2022 7:52	8.60	6/22/2022 12:48	71.80
6/23/2022 11:39	50.40	6/23/2022 10:21	81.43	6/22/2022 8:44	18.00	6/22/2022 7:53	8.59	6/22/2022 12:49	71.76
6/23/2022 11:40	50.39	6/23/2022 10:22	81.41	6/22/2022 8:45	17.93	6/22/2022 7:54	8.57	6/22/2022 12:50	71.74
6/23/2022 11:41	50.41	6/23/2022 10:23	81.38	6/22/2022 8:46	17.98	6/22/2022 7:55	8.61	6/22/2022 12:51	71.64
6/23/2022 11:42	50.39	6/23/2022 10:24	81.40	6/22/2022 8:47	17.92	6/22/2022 7:56	8.62	6/22/2022 12:52	71.65
6/23/2022 11:43	50.38	6/23/2022 10:25	81.37	6/22/2022 8:48	17.95	6/22/2022 7:57	8.52	6/22/2022 12:53	71.63
6/23/2022 11:44	50.37	6/23/2022 10:26	81.42	6/22/2022 8:49	17.96	6/22/2022 7:58	8.49	6/22/2022 12:54	71.58
6/23/2022 11:45	50.42	6/23/2022 10:27	81.39	6/22/2022 8:50	17.94	6/22/2022 7:59	8.45	6/22/2022 12:55	71.53
6/23/2022 11:46	50.41	6/23/2022 10:28	81.38	6/22/2022 8:51	17.92	6/22/2022 8:00	8.49	6/22/2022 12:56	71.51
6/23/2022 11:47	50.40	6/23/2022 10:29	81.32	6/22/2022 8:52	17.94	6/22/2022 8:01	8.67	6/22/2022 12:57	71.47
6/23/2022 11:48	50.37	6/23/2022 10:30	81.42	6/22/2022 8:53	17.93	6/22/2022 8:02	8.61	6/22/2022 12:58	71.43
6/23/2022 11:49	50.41	6/23/2022 10:31	81.41	6/22/2022 8:54	17.93	6/22/2022 8:03	8.45	6/22/2022 12:59	71.38
6/23/2022 11:50	50.40	6/23/2022 10:32	81.45	6/22/2022 8:55	17.91	6/22/2022 8:04	8.39	6/22/2022 13:00	71.38
6/23/2022 11:51	50.38	6/23/2022 10:33	81.41	6/22/2022 8:56	17.88	6/22/2022 8:05	8.43	6/22/2022 13:01	71.36
6/23/2022 11:52	50.38	6/23/2022 10:34	81.41	6/22/2022 8:57	17.93	6/22/2022 8:06	8.39	6/22/2022 13:02	71.34
6/23/2022 11:53	51.73	6/23/2022 10:35	81.39	6/22/2022 8:58	17.93	6/22/2022 8:07	8.40	6/22/2022 13:03	71.26
6/23/2022 11:54	53.86	6/23/2022 10:36	81.41	6/22/2022 8:59	17.91	6/22/2022 8:08	8.27	6/22/2022 13:04	71.23
6/23/2022 11:55	54.90	6/23/2022 10:37	81.38	6/22/2022 9:00	17.87	6/22/2022 8:09	8.27	6/22/2022 13:05	71.20
6/23/2022 11:56	55.43	6/23/2022 10:38	81.42	6/22/2022 9:01	17.86	6/22/2022 8:10	8.35	6/22/2022 13:06	71.18
6/23/2022 11:57	53.62	6/23/2022 10:39	81.39	6/22/2022 9:02	17.88	6/22/2022 8:11	8.28	6/22/2022 13:07	71.16
6/23/2022 11:58	52.46	6/23/2022 10:40	81.39	6/22/2022 9:03	17.88	6/22/2022 8:12	8.31	6/22/2022 13:08	71.12
6/23/2022 11:59	51.97	6/23/2022 10:41	81.40	6/22/2022 9:04	17.93	6/22/2022 8:13	8.20	6/22/2022 13:09	71.07
6/23/2022 12:00	51.73	6/23/2022 10:42	81.42	6/22/2022 9:05	17.91	6/22/2022 8:14	8.20	6/22/2022 13:10	71.04
6/23/2022 12:01	51.52	6/23/2022 10:43	81.41	6/22/2022 9:06	17.88	6/22/2022 8:15	8.15	6/22/2022 13:11	71.02
6/23/2022 12:02	51.44	6/23/2022 10:44	81.39	6/22/2022 9:07	17.91	6/22/2022 8:16	8.18	6/22/2022 13:12	71.01
6/23/2022 12:03	51.32	6/23/2022 10:45	81.37	6/22/2022 9:08	17.85	6/22/2022 8:17	8.13	6/22/2022 13:13	71.00
6/23/2022 12:04	51.27	6/23/2022 10:46	81.36	6/22/2022 9:09	17.89	6/22/2022 8:18	8.10	6/22/2022 13:14	70.94
6/23/2022 12:05	51.21	6/23/2022 10:47	81.41	6/22/2022 9:10	17.89	6/22/2022 8:19	8.12	6/22/2022 13:15	70.89
6/23/2022 12:06	51.18	6/23/2022 10:48	81.39	6/22/2022 9:11	17.93	6/22/2022 8:20	8.12	6/22/2022 13:16	70.92
6/23/2022 12:07	51.13	6/23/2022 10:49	81.38	6/22/2022 9:12	17.86	6/22/2022 8:21	8.10	6/22/2022 13:17	70.83
6/23/2022 12:08	51.07	6/23/2022 10:50	81.44	6/22/2022 9:13	17.86	6/22/2022 8:22	8.09	6/22/2022 13:18	70.82
6/23/2022 12:09	51.07	6/23/2022 10:51	81.36	6/22/2022 9:14	17.86	6/22/2022 8:23	8.15	6/22/2022 13:19	70.79
6/23/2022 12:10	51.04	6/23/2022 10:52	81.40	6/22/2022 9:15	17.88	6/22/2022 8:24	7.98	6/22/2022 13:20	70.75
6/23/2022 12:11	51.00	6/23/2022 10:53	81.40	6/22/2022 9:16	17.89	6/22/2022 8:25	7.99	6/22/2022 13:21	70.74
6/23/2022 12:12	50.98	6/23/2022 10:54	81.43	6/22/2022 9:17	17.83	6/22/2022 8:26	7.99	6/22/2022 13:22	70.71
6/23/2022 12:13	50.98	6/23/2022 10:55	81.41	6/22/2022 9:18	17.92	6/22/2022 8:27	7.90	6/22/2022 13:23	70.68
6/23/2022 12:14	50.97	6/23/2022 10:56	81.40	6/22/2022 9:19	17.87	6/22/2022 8:28	7.90	6/22/2022 13:24	70.67
6/23/2022 12:15	50.90	6/23/2022 10:57	81.44	6/22/2022 9:20	17.89	6/22/2022 8:29	7.91	6/22/2022 13:25	70.62
6/23/2022 12:16	50.88	6/23/2022 10:58	81.34	6/22/2022 9:21	17.92	6/22/2022 8:30	8.08	6/22/2022 13:26	70.60
6/23/2022 12:17	50.89	6/23/2022 10:59	81.40	6/22/2022 9:22	17.85	6/22/2022 8:31	7.94	6/22/2022 13:27	70.59
6/23/2022 12:18	50.90	6/23/2022 11:00	81.38	6/22/2022 9:23	17.91	6/22/2022 8:32	7.89	6/22/2022 13:28	70.55
6/23/2022 12:19	50.83	6/23/2022 11:01	81.41	6/22/2022 9:24	17.89	6/22/2022 8:33	7.92	6/22/2022 13:29	70.52
6/23/2022 12:20	50.85	6/23/2022 11:02	81.36	6/22/2022 9:25	17.89	6/22/2022 8:34	7.88	6/22/2022 13:30	70.49
6/23/2022 12:21	50.88	6/23/2022 11:03	81.40	6/22/2022 9:26	17.90	6/22/2022 8:35	7.80	6/22/2022 13:31	70.47
6/23/2022 12:22	50.83	6/23/2022 11:04	81.41	6/22/2022 9:27	17.86	6/22/2022 8:36	7.92	6/22/2022 13:32	70.47
6/23/2022 12:23	50.82	6/23/2022 11:05	81.41	6/22/2022 9:28	17.88	6/22/2022 8:37	7.85	6/22/2022 13:33	70.45
6/23/2022 12:24	50.79	6/23/2022 11:06	81.40	6/22/2022 9:29	17.87	6/22/2022 8:38	7.86	6/22/2022 13:34	70.41
6/23/2022 12:25	50.80	6/23/2022 11:07	81.40	6/22/2022 9:30	17.88	6/22/2022 8:39	7.75	6/22/2022 13:35	70.40
6/23/2022 12:26	50.83	6/23/2022 11:08	81.42	6/22/2022 9:31	17.87	6/22/2022 8:40	7.75	6/22/2022 13:36	70.34
6/23/2022 12:27	50.84	6/23/2022 11:09	81.41	6/22/2022 9:32	17.89	6/22/2022 8:41	7.73	6/22/2022 13:37	70.30
6/23/2022 12:28	50.80	6/23/2022 11:10	81.40	6/22/2022 9:33	17.86	6/22/2022 8:42	7.73	6/22/2022 13:38	70.30

6/23/2022 12:29	50.77	6/23/2022 11:11	81.39	6/22/2022 9:34	17.83	6/22/2022 8:43	7.68	6/22/2022 13:39	70.28
6/23/2022 12:30	50.79	6/23/2022 11:12	81.38	6/22/2022 9:35	17.85	6/22/2022 8:44	7.65	6/22/2022 13:40	70.26
6/23/2022 12:31	50.78	6/23/2022 11:13	81.39	6/22/2022 9:36	17.87	6/22/2022 8:45	7.63	6/22/2022 13:41	70.24
6/23/2022 12:32	50.79	6/23/2022 11:14	81.39	6/22/2022 9:37	17.88	6/22/2022 8:46	7.64	6/22/2022 13:42	70.22
6/23/2022 12:33	50.74	6/23/2022 11:15	81.37	6/22/2022 9:38	17.90	6/22/2022 8:47	7.68	6/22/2022 13:43	70.19
6/23/2022 12:34	50.74	6/23/2022 11:16	81.42	6/22/2022 9:39	17.83	6/22/2022 8:48	7.71	6/22/2022 13:44	70.18
6/23/2022 12:35	50.77	6/23/2022 11:17	81.41	6/22/2022 9:40	17.83	6/22/2022 8:49	7.66	6/22/2022 13:45	70.15
6/23/2022 12:36	50.76	6/23/2022 11:18	81.36	6/22/2022 9:41	17.88	6/22/2022 8:50	7.60	6/22/2022 13:46	70.10
6/23/2022 12:37	50.76	6/23/2022 11:19	81.42	6/22/2022 9:42	17.86	6/22/2022 8:51	7.60	6/22/2022 13:47	70.07
6/23/2022 12:38	50.75	6/23/2022 11:20	81.37	6/22/2022 9:43	17.88	6/22/2022 8:52	7.62	6/22/2022 13:48	70.05
6/23/2022 12:39	50.75	6/23/2022 11:21	81.41	6/22/2022 9:44	17.85	6/22/2022 8:53	7.53	6/22/2022 13:49	70.04
6/23/2022 12:40	50.76	6/23/2022 11:22	81.41	6/22/2022 9:45	17.84	6/22/2022 8:54	7.48	6/22/2022 13:50	70.02
6/23/2022 12:41	50.73	6/23/2022 11:23	82.03	6/22/2022 9:46	17.90	6/22/2022 8:55	7.49	6/22/2022 13:51	69.97
6/23/2022 12:42	50.72	6/23/2022 11:24	85.56	6/22/2022 9:47	17.84	6/22/2022 8:56	7.47	6/22/2022 13:52	69.98
6/23/2022 12:43	50.72	6/23/2022 11:25	84.82	6/22/2022 9:48	17.83	6/22/2022 8:57	7.54	6/22/2022 13:53	69.94
6/23/2022 12:44	50.71	6/23/2022 11:26	84.27	6/22/2022 9:49	17.91	6/22/2022 8:58	7.40	6/22/2022 13:54	69.91
6/23/2022 12:45	50.73	6/23/2022 11:27	83.80	6/22/2022 9:50	17.89	6/22/2022 8:59	7.54	6/22/2022 13:55	69.90
6/23/2022 12:46	50.65	6/23/2022 11:28	83.47	6/22/2022 9:51	17.90	6/22/2022 9:00	7.40	6/22/2022 13:56	69.88
6/23/2022 12:47	50.69	6/23/2022 11:29	83.17	6/22/2022 9:52	17.91	6/22/2022 9:01	7.42	6/22/2022 13:57	69.84
6/23/2022 12:48	50.69	6/23/2022 11:30	82.90	6/22/2022 9:53	17.89	6/22/2022 9:02	7.43	6/22/2022 13:58	69.81
6/23/2022 12:49	50.68	6/23/2022 11:31	82.72	6/22/2022 9:54	17.88	6/22/2022 9:03	7.38	6/22/2022 13:59	69.81
6/23/2022 12:50	50.66	6/23/2022 11:32	82.54	6/22/2022 9:55	17.89	6/22/2022 9:04	7.66	6/22/2022 14:00	69.80
6/23/2022 12:51	50.67	6/23/2022 11:33	82.44	6/22/2022 9:56	17.85	6/22/2022 9:05	7.60	6/22/2022 14:01	69.75
6/23/2022 12:52	50.71	6/23/2022 11:34	83.08	6/22/2022 9:57	17.90	6/22/2022 9:06	7.48	6/22/2022 14:02	69.69
6/23/2022 12:53	50.69	6/23/2022 11:35	82.79	6/22/2022 9:58	17.85	6/22/2022 9:07	7.45	6/22/2022 14:03	69.74
6/23/2022 12:54	50.69	6/23/2022 11:36	83.06	6/22/2022 9:59	17.91	6/22/2022 9:08	7.42	6/22/2022 14:04	69.70
6/23/2022 12:55	50.65	6/23/2022 11:37	82.87	6/22/2022 10:00	17.91	6/22/2022 9:09	7.46	6/22/2022 14:05	69.65
6/23/2022 12:56	50.65	6/23/2022 11:38	82.64	6/22/2022 10:01	17.88	6/22/2022 9:10	7.42	6/22/2022 14:06	69.66
6/23/2022 12:57	50.67	6/23/2022 11:39	82.48	6/22/2022 10:02	17.87	6/22/2022 9:11	7.40	6/22/2022 14:07	69.64
6/23/2022 12:58	50.65	6/23/2022 11:40	82.42	6/22/2022 10:03	17.88	6/22/2022 9:12	7.34	6/22/2022 14:08	69.60
6/23/2022 12:59	50.63	6/23/2022 11:41	82.28	6/22/2022 10:04	17.94	6/22/2022 9:13	7.35	6/22/2022 14:09	69.59
6/23/2022 13:00	50.61	6/23/2022 11:42	82.18	6/22/2022 10:05	17.94	6/22/2022 9:14	8.00	6/22/2022 14:10	69.56
6/23/2022 13:01	50.66	6/23/2022 11:43	82.10	6/22/2022 10:06	17.91	6/22/2022 9:15	7.70	6/22/2022 14:11	69.53
6/23/2022 13:02	50.67	6/23/2022 11:44	82.04	6/22/2022 10:07	17.85	6/22/2022 9:16	7.90	6/22/2022 14:12	69.55
6/23/2022 13:03	50.66	6/23/2022 11:45	82.02	6/22/2022 10:08	17.91	6/22/2022 9:17	8.03	6/22/2022 14:13	69.53
6/23/2022 13:04	50.66	6/23/2022 11:46	81.94	6/22/2022 10:09	17.89	6/22/2022 9:18	7.72	6/22/2022 14:14	69.48
6/23/2022 13:05	50.64	6/23/2022 11:47	81.94	6/22/2022 10:10	17.88	6/22/2022 9:19	7.56	6/22/2022 14:15	69.47
6/23/2022 13:06	50.66	6/23/2022 11:48	81.88	6/22/2022 10:11	17.92	6/22/2022 9:20	7.54	6/22/2022 14:16	69.44
6/23/2022 13:07	50.66	6/23/2022 11:49	81.83	6/22/2022 10:12	17.91	6/22/2022 9:21	7.48	6/22/2022 14:17	69.46
6/23/2022 13:08	50.62	6/23/2022 11:50	81.79	6/22/2022 10:13	17.89	6/22/2022 9:22	7.90	6/22/2022 14:18	69.38
6/23/2022 13:09	50.61	6/23/2022 11:51	81.79	6/22/2022 10:14	17.89	6/22/2022 9:23	7.99	6/22/2022 14:19	69.40
6/23/2022 13:10	50.63	6/23/2022 11:52	81.76	6/22/2022 10:15	17.88	6/22/2022 9:24	7.73	6/22/2022 14:20	69.39
6/23/2022 13:11	50.65	6/23/2022 11:53	81.69	6/22/2022 10:16	17.88	6/22/2022 9:25	7.56	6/22/2022 14:21	69.33
6/23/2022 13:12	50.63	6/23/2022 11:54	81.67	6/22/2022 10:17	17.89	6/22/2022 9:26	7.46	6/22/2022 14:22	69.33
6/23/2022 13:13	50.64	6/23/2022 11:55	81.72	6/22/2022 10:18	17.85	6/22/2022 9:27	7.54	6/22/2022 14:23	69.33
6/23/2022 13:14	50.64	6/23/2022 11:56	81.67	6/22/2022 10:19	17.90	6/22/2022 9:28	7.47	6/22/2022 14:24	69.29
6/23/2022 13:15	50.65	6/23/2022 11:57	81.62	6/22/2022 10:20	17.88	6/22/2022 9:29	7.36	6/22/2022 14:25	69.26
6/23/2022 13:16	50.65	6/23/2022 11:58	81.61	6/22/2022 10:21	17.85	6/22/2022 9:30	7.40	6/22/2022 14:26	69.28
6/23/2022 13:17	50.62	6/23/2022 11:59	81.63	6/22/2022 10:22	17.85	6/22/2022 9:31	7.34	6/22/2022 14:27	69.26
6/23/2022 13:18	50.61	6/23/2022 12:00	81.61	6/22/2022 10:23	17.87	6/22/2022 9:32	7.34	6/22/2022 14:28	69.21
6/23/2022 13:19	50.63	6/23/2022 12:01	81.57	6/22/2022 10:24	17.88	6/22/2022 9:33	7.34	6/22/2022 14:29	69.21
6/23/2022 13:20	50.59	6/23/2022 12:02	81.56	6/22/2022 10:25	17.85	6/22/2022 9:34	7.32	6/22/2022 14:30	69.17
6/23/2022 13:21	50.62	6/23/2022 12:03	81.56	6/22/2022 10:26	17.88	6/22/2022 9:35	7.35	6/22/2022 14:31	69.15
6/23/2022 13:22	50.61	6/23/2022 12:04	81.55	6/22/2022 10:27	17.84	6/22/2022 9:36	7.27	6/22/2022 14:32	69.17
6/23/2022 13:23	50.58	6/23/2022 12:05	81.55	6/22/2022 10:28	17.83	6/22/2022 9:37	7.26	6/22/2022 14:33	69.13
6/23/2022 13:24	50.63	6/23/2022 12:06	81.54	6/22/2022 10:29	17.86	6/22/2022 9:38	7.31	6/22/2022 14:34	69.11
6/23/2022 13:25	50.60	6/23/2022 12:07	81.58	6/22/2022 10:30	17.89	6/22/2022 9:39	7.23	6/22/2022 14:35	69.09
6/23/2022 13:26	50.62	6/23/2022 12:08	81.55	6/22/2022 10:31	17.85	6/22/2022 9:40	7.16	6/22/2022 14:36	69.07
6/23/2022 13:27	50.62	6/23/2022 12:09	81.53	6/22/2022 10:32	17.82	6/22/2022 9:41	7.25	6/22/2022 14:37	69.06
6/23/2022 13:28	50.61	6/23/2022 12:10	81.52	6/22/2022 10:33	17.82	6/22/2022 9:42	7.15	6/22/2022 14:38	69.05
6/23/2022 13:29	50.61	6/23/2022 12:11	81.52	6/22/2022 10:34	17.83	6/22/2022 9:43	7.14	6/22/2022 14:39	69.04
6/23/2022 13:30	50.57	6/23/2022 12:12	81.51	6/22/2022 10:35	17.83	6/22/2022 9:44	7.17	6/22/2022 14:40	69.02
6/23/2022 13:31	50.59	6/23/2022 12:13	81.48	6/22/2022 10:36	17.83	6/22/2022 9:45	7.12	6/22/2022 14:41	69.02
6/23/2022 13:32	50.60	6/23/2022 12:14	81.51	6/22/2022 10:37	17.80	6/22/2022 9:46	7.06	6/22/2022 14:42	68.98
6/23/2022 13:33	50.60	6/23/2022 12:15	81.49	6/22/2022 10:38	17.77	6/22/2022 9:47	7.14	6/22/2022 14:43	68.97
6/23/2022 13:34	50.58	6/23/2022 12:16	81.46	6/22/2022 10:39	17.82	6/22/2022 9:48	7.06	6/22/2022 14:44	68.93
6/23/2022 13:35	50.58	6/23/2022 12:17	81.48	6/22/2022 10:40	17.81	6/22/2022 9:49	7.09	6/22/2022 14:45	68.96
6/23/2022 13:36	50.64	6/23/2022 12:18	81.51	6/22/2022 10:41	17.80	6/22/2022 9:50	7.12	6/22/2022 14:46	68.91
6/23/2022 13:37	50.58	6/23/2022 12:19	81.47	6/22/2022 10:42	17.79	6/22/2022 9:51	7.04	6/22/2022 14:47	68.94
6/23/2022 13:38	50.60	6/23/2022 12:20	81.47	6/22/2022 10:43	17.84	6/22/2022 9:52	7.03	6/22/2022 14:48	68.90
6/23/2022 13:39	50.59	6/23/2022 12:21	81.47	6/22/2022 10:44	17.79	6/22/2022 9:53	6.99	6/22/2022 14:49	68.92
6/23/2022 13:40	50.60	6/23/2022 12:22	81.52	6/22/2022 10:45	17.79	6/22/2022 9:54	7.03	6/22/2022 14:50	68.84
6/23/2022 13:41	50.60	6/23/2022 12:23	81.46	6/22/2022 10:46	17.80	6/22/2022 9:55	6.99	6/22/2022 14:51	68.88
6/23/2022 13:42	50.59	6/23/2022 12:24	81.47	6/22/2022 10:47	17.77	6/22/2022 9:56	6.98	6/22/2022 14:52	68.83
6/23/2022 13:43	50.55	6/23/2022 12:25	81.49	6/22/2022 10:48	17.79	6/22/2022 9:57	6.94	6/22/2022 14:53	68.82
6/23/2022 13:44	50.56	6/23/2022 12:26	81.45	6/22/2022 10:49	17.75	6/22/2022 9:58	6.91	6/22/2022 14:54	68.84
6/23/2022 13:45	50.61	6/23/2022 12:27	81.47	6/22/2022 10:50	17.76	6/22/2022 9:59	6.88	6/22/2022 14:55	68.79
6/23/2022 13:46	50.55	6/23/2022 12:28	81.50	6/22/2022 10:51	17.81	6/22/2022 10:00	6.90	6/22/2022 14:56	68.76
6/23/2022 13:47	50.57	6/23/2022 12:29	81.46	6/22/2022 10:52	17.78	6/22/2022 10:01	6.91	6/22/2022 14:57	68.77
6/23/2022 13:48	50.57	6/23/2022 12:30	81.50	6/22/2022 10:53	17.71	6/22/2022 10:02	6.86	6/22/2022 14:58	68.79
6/23/2022 13:49	50.56	6/23/2022 12:31	81.50	6/22/2022 10:54	17.76	6/22/2022 10:03	6.82	6/22/2022 14:59	68.77
6/23/2022 13:50	50.56	6/23/2022 12:32	81.48	6/22/2022 10:55	17.78	6/22/2022 10:04	6.79	6/22/2022 15:00	68.74
6/23/2022 13:51	50.57	6/23/2022 12:33	81.40	6/22/2022 10:56	17.78	6/22/2022 10:05	6.85	6/22/2022 15:01	68.72
6/23/2022 13:52	50.57	6/23/2022 12:34	81.43	6/22/2022 10:57	17.70	6/22/2022 10:06	6.76	6/22/2022 15:02	68.72
6/23/2022 13:53	50.59	6/23/2022 12:35	81.46	6/22/2022 10:58	17.68	6/22/2022 10:07	6.70	6/22/2022 15:03	68.68
6/23/2022 13:54	50.57	6/23/2022 12:36	81.46	6/22/2022 10:59	17.72	6/22/2022 10:08	6.74	6/22/2022 15:04	68.66
6/23/2022 13:55	50.56	6/23/2022 12:37	81.47	6/22/2022 11:00	17.75	6/22/2022 10:09	6.77	6/22/2022 15:05	68.66
6/23/2022 13:56	50.59	6/23/2022 12:38	81.45	6/22/2022 11:01	17.66	6/22/2022 10:10	6.71	6/22/2022 15:06	68.67

6/23/2022 13:57	50.57	6/23/2022 12:39	81.50	6/22/2022 11:02	17.68	6/22/2022 10:11	6.71	6/22/2022 15:07	68.65
6/23/2022 13:58	50.55	6/23/2022 12:40	81.46	6/22/2022 11:03	17.67	6/22/2022 10:12	6.67	6/22/2022 15:08	68.63
6/23/2022 13:59	50.54	6/23/2022 12:41	81.44	6/22/2022 11:04	17.73	6/22/2022 10:13	6.70	6/22/2022 15:09	68.61
6/23/2022 14:00	50.55	6/23/2022 12:42	81.45	6/22/2022 11:05	17.70	6/22/2022 10:14	6.63	6/22/2022 15:10	68.58
6/23/2022 14:01	50.58	6/23/2022 12:43	81.48	6/22/2022 11:06	17.66	6/22/2022 10:15	6.68	6/22/2022 15:11	68.58
6/23/2022 14:02	50.56	6/23/2022 12:44	81.48	6/22/2022 11:07	17.66	6/22/2022 10:16	6.98	6/22/2022 15:12	68.56
6/23/2022 14:03	50.57	6/23/2022 12:45	81.42	6/22/2022 11:08	17.66	6/22/2022 10:17	7.24	6/22/2022 15:13	68.57
6/23/2022 14:04	50.55	6/23/2022 12:46	81.43	6/22/2022 11:09	17.68	6/22/2022 10:18	7.41	6/22/2022 15:14	68.56
6/23/2022 14:05	50.54	6/23/2022 12:47	81.44	6/22/2022 11:10	17.64	6/22/2022 10:19	7.53	6/22/2022 15:15	68.57
6/23/2022 14:06	50.54	6/23/2022 12:48	81.46	6/22/2022 11:11	17.63	6/22/2022 10:20	7.64	6/22/2022 15:16	68.52
6/23/2022 14:07	50.56	6/23/2022 12:49	81.43	6/22/2022 11:12	17.67	6/22/2022 10:21	7.72	6/22/2022 15:17	68.53
6/23/2022 14:08	50.54	6/23/2022 12:50	81.42	6/22/2022 11:13	17.67	6/22/2022 10:22	7.80	6/22/2022 15:18	68.54
6/23/2022 14:09	50.56	6/23/2022 12:51	81.45	6/22/2022 11:14	17.67	6/22/2022 10:23	7.66	6/22/2022 15:19	68.49
6/23/2022 14:10	50.53	6/23/2022 12:52	81.45	6/22/2022 11:15	17.63	6/22/2022 10:24	7.29	6/22/2022 15:20	68.49
6/23/2022 14:11	50.56	6/23/2022 12:53	81.44	6/22/2022 11:16	17.65	6/22/2022 10:25	7.15	6/22/2022 15:21	68.47
6/23/2022 14:12	50.55	6/23/2022 12:54	81.44	6/22/2022 11:17	17.64	6/22/2022 10:26	7.09	6/22/2022 15:22	68.44
6/23/2022 14:13	50.53	6/23/2022 12:55	81.44	6/22/2022 11:18	17.60	6/22/2022 10:27	7.03	6/22/2022 15:23	68.41
6/23/2022 14:14	50.54	6/23/2022 12:56	81.41	6/22/2022 11:19	17.61	6/22/2022 10:28	6.93	6/22/2022 15:24	68.41
6/23/2022 14:15	50.54	6/23/2022 12:57	81.41	6/22/2022 11:20	17.63	6/22/2022 10:29	6.93	6/22/2022 15:25	68.38
6/23/2022 14:16	50.54	6/23/2022 12:58	81.43	6/22/2022 11:21	17.60	6/22/2022 10:30	6.90	6/22/2022 15:26	68.42
6/23/2022 14:17	50.53	6/23/2022 12:59	81.42	6/22/2022 11:22	17.59	6/22/2022 10:31	6.90	6/22/2022 15:27	68.38
6/23/2022 14:18	50.52	6/23/2022 13:00	81.45	6/22/2022 11:23	17.59	6/22/2022 10:32	6.77	6/22/2022 15:28	68.39
6/23/2022 14:19	50.54	6/23/2022 13:01	81.44	6/22/2022 11:24	17.57	6/22/2022 10:33	6.82	6/22/2022 15:29	68.39
6/23/2022 14:20	50.51	6/23/2022 13:02	81.43	6/22/2022 11:25	17.60	6/22/2022 10:34	6.79	6/22/2022 15:30	68.35
6/23/2022 14:21	50.53	6/23/2022 13:03	81.48	6/22/2022 11:26	17.59	6/22/2022 10:35	6.80	6/22/2022 15:31	68.36
6/23/2022 14:22	50.53	6/23/2022 13:04	81.41	6/22/2022 11:27	17.56	6/22/2022 10:36	6.72	6/22/2022 15:32	73.05
6/23/2022 14:23	50.54	6/23/2022 13:05	81.43	6/22/2022 11:28	17.54	6/22/2022 10:37	6.70	6/22/2022 15:33	74.45
6/23/2022 14:24	50.56	6/23/2022 13:06	81.44	6/22/2022 11:29	17.56	6/22/2022 10:38	6.72	6/22/2022 15:34	74.24
6/23/2022 14:25	50.47	6/23/2022 13:07	81.44	6/22/2022 11:30	17.53	6/22/2022 10:39	6.72	6/22/2022 15:35	74.13
6/23/2022 14:26	50.50	6/23/2022 13:08	81.47	6/22/2022 11:31	17.61	6/22/2022 10:40	6.70	6/22/2022 15:36	74.00
6/23/2022 14:27	50.51	6/23/2022 13:09	81.44	6/22/2022 11:32	17.56	6/22/2022 10:41	6.68	6/22/2022 15:37	73.88
6/23/2022 14:28	50.53	6/23/2022 13:10	81.45	6/22/2022 11:33	17.55	6/22/2022 10:42	6.62	6/22/2022 15:38	73.80
6/23/2022 14:29	50.48	6/23/2022 13:11	81.44	6/22/2022 11:34	17.56	6/22/2022 10:43	6.65	6/22/2022 15:39	73.69
6/23/2022 14:30	50.49	6/23/2022 13:12	81.44	6/22/2022 11:35	17.55	6/22/2022 10:44	6.68	6/22/2022 15:40	73.66
6/23/2022 14:31	50.51	6/23/2022 13:13	81.47	6/22/2022 11:36	17.54	6/22/2022 10:45	6.64	6/22/2022 15:41	73.55
6/23/2022 14:32	50.49	6/23/2022 13:14	81.42	6/22/2022 11:37	17.60	6/22/2022 10:46	6.82	6/22/2022 15:42	73.50
6/23/2022 14:33	50.48	6/23/2022 13:15	81.45	6/22/2022 11:38	17.57	6/22/2022 10:47	6.72	6/22/2022 15:43	73.42
6/23/2022 14:34	50.50	6/23/2022 13:16	81.45	6/22/2022 11:39	17.57	6/22/2022 10:48	6.66	6/22/2022 15:44	73.29
6/23/2022 14:35	50.51	6/23/2022 13:17	81.46	6/22/2022 11:40	17.58	6/22/2022 10:49	6.64	6/22/2022 15:45	73.24
6/23/2022 14:36	50.52	6/23/2022 13:18	81.40	6/22/2022 11:41	17.51	6/22/2022 10:50	6.57	6/22/2022 15:46	73.17
6/23/2022 14:37	50.50	6/23/2022 13:19	81.44	6/22/2022 11:42	17.54	6/22/2022 10:51	6.57	6/22/2022 15:47	73.12
6/23/2022 14:38	50.51	6/23/2022 13:20	81.43	6/22/2022 11:43	17.56	6/22/2022 10:52	6.54	6/22/2022 15:48	73.01
6/23/2022 14:39	50.51	6/23/2022 13:21	81.42	6/22/2022 11:44	17.50	6/22/2022 10:53	6.48	6/22/2022 15:49	72.94
6/23/2022 14:40	50.48	6/23/2022 13:22	81.45	6/22/2022 11:45	17.55	6/22/2022 10:54	6.55	6/22/2022 15:50	72.89
6/23/2022 14:41	50.50	6/23/2022 13:23	81.44	6/22/2022 11:46	17.54	6/22/2022 10:55	6.52	6/22/2022 15:51	72.83
6/23/2022 14:42	50.50	6/23/2022 13:24	81.44	6/22/2022 11:47	17.52	6/22/2022 10:56	6.51	6/22/2022 15:52	72.74
6/23/2022 14:43	50.50	6/23/2022 13:25	81.45	6/22/2022 11:48	17.50	6/22/2022 10:57	6.44	6/22/2022 15:53	72.75
6/23/2022 14:44	50.50	6/23/2022 13:26	81.43	6/22/2022 11:49	17.51	6/22/2022 10:58	6.41	6/22/2022 15:54	72.63
6/23/2022 14:45	50.50	6/23/2022 13:27	81.40	6/22/2022 11:50	17.52	6/22/2022 10:59	6.44	6/22/2022 15:55	72.59
6/23/2022 14:46	50.51	6/23/2022 13:28	81.41	6/22/2022 11:51	17.50	6/22/2022 11:00	6.50	6/22/2022 15:56	72.50
6/23/2022 14:47	50.46	6/23/2022 13:29	81.38	6/22/2022 11:52	17.54	6/22/2022 11:01	6.40	6/22/2022 15:57	72.41
6/23/2022 14:48	50.49	6/23/2022 13:30	81.42	6/22/2022 11:53	17.48	6/22/2022 11:02	6.43	6/22/2022 15:58	72.38
6/23/2022 14:49	50.51	6/23/2022 13:31	81.45	6/22/2022 11:54	17.51	6/22/2022 11:03	6.41	6/22/2022 15:59	72.31
6/23/2022 14:50	50.48	6/23/2022 13:32	81.44	6/22/2022 11:55	17.57	6/22/2022 11:04	6.45	6/22/2022 16:00	72.25
6/23/2022 14:51	50.50	6/23/2022 13:33	81.42	6/22/2022 11:56	17.49	6/22/2022 11:05	6.39	6/22/2022 16:01	72.19
6/23/2022 14:52	50.49	6/23/2022 13:34	81.44	6/22/2022 11:57	17.51	6/22/2022 11:06	6.34	6/22/2022 16:02	72.14
6/23/2022 14:53	50.48	6/23/2022 13:35	81.44	6/22/2022 11:58	17.53	6/22/2022 11:07	6.36	6/22/2022 16:03	72.09
6/23/2022 14:54	50.48	6/23/2022 13:36	81.43	6/22/2022 11:59	17.47	6/22/2022 11:08	6.38	6/22/2022 16:04	72.01
6/23/2022 14:55	50.46	6/23/2022 13:37	81.40	6/22/2022 12:00	17.47	6/22/2022 11:09	6.34	6/22/2022 16:05	71.94
6/23/2022 14:56	50.45	6/23/2022 13:38	81.47	6/22/2022 12:01	17.54	6/22/2022 11:10	6.27	6/22/2022 16:06	71.94
6/23/2022 14:57	50.47	6/23/2022 13:39	81.43	6/22/2022 12:02	17.51	6/22/2022 11:11	6.28	6/22/2022 16:07	71.88
6/23/2022 14:58	50.51	6/23/2022 13:40	81.44	6/22/2022 12:03	17.47	6/22/2022 11:12	6.29	6/22/2022 16:08	71.83
6/23/2022 14:59	50.47	6/23/2022 13:41	81.45	6/22/2022 12:04	17.49	6/22/2022 11:13	6.31	6/22/2022 16:09	71.77
6/23/2022 15:00	50.46	6/23/2022 13:42	81.46	6/22/2022 12:05	17.50	6/22/2022 11:14	6.25	6/22/2022 16:10	71.72
6/23/2022 15:01	50.49	6/23/2022 13:43	81.41	6/22/2022 12:06	17.54	6/22/2022 11:15	6.32	6/22/2022 16:11	71.67
6/23/2022 15:02	50.48	6/23/2022 13:44	81.40	6/22/2022 12:07	17.48	6/22/2022 11:16	6.28	6/22/2022 16:12	71.61
6/23/2022 15:03	50.43	6/23/2022 13:45	81.44	6/22/2022 12:08	17.43	6/22/2022 11:17	6.26	6/22/2022 16:13	71.62
6/23/2022 15:04	50.48	6/23/2022 13:46	81.41	6/22/2022 12:09	17.48	6/22/2022 11:18	6.26	6/22/2022 16:14	71.53
6/23/2022 15:05	50.45	6/23/2022 13:47	81.40	6/22/2022 12:10	17.44	6/22/2022 11:19	6.24	6/22/2022 16:15	71.44
6/23/2022 15:06	50.45	6/23/2022 13:48	81.46	6/22/2022 12:11	17.46	6/22/2022 11:20	6.25	6/22/2022 16:16	71.37
6/23/2022 15:07	50.45	6/23/2022 13:49	81.41	6/22/2022 12:12	17.47	6/22/2022 11:21	6.18	6/22/2022 16:17	71.37
6/23/2022 15:08	50.44	6/23/2022 13:50	81.41	6/22/2022 12:13	17.45	6/22/2022 11:22	6.18	6/22/2022 16:18	71.34
6/23/2022 15:09	50.47	6/23/2022 13:51	81.46	6/22/2022 12:14	17.51	6/22/2022 11:23	6.17	6/22/2022 16:19	71.31
6/23/2022 15:10	50.44	6/23/2022 13:52	81.43	6/22/2022 12:15	17.48	6/22/2022 11:24	6.19	6/22/2022 16:20	71.24
6/23/2022 15:11	50.45	6/23/2022 13:53	81.43	6/22/2022 12:16	17.46	6/22/2022 11:25	6.14	6/22/2022 16:21	71.20
6/23/2022 15:12	50.39	6/23/2022 13:54	81.43	6/22/2022 12:17	17.51	6/22/2022 11:26	6.18	6/22/2022 16:22	71.18
6/23/2022 15:13	50.43	6/23/2022 13:55	81.46	6/22/2022 12:18	17.44	6/22/2022 11:27	6.12	6/22/2022 16:23	71.13
6/23/2022 15:14	50.45	6/23/2022 13:56	81.42	6/22/2022 12:19	17.45	6/22/2022 11:28	6.15	6/22/2022 16:24	71.10
6/23/2022 15:15	50.45	6/23/2022 13:57	81.40	6/22/2022 12:20	17.40	6/22/2022 11:29	6.09	6/22/2022 16:25	71.00
6/23/2022 15:16	50.43	6/23/2022 13:58	81.42	6/22/2022 12:21	17.43	6/22/2022 11:30	6.13	6/22/2022 16:26	70.99
6/23/2022 15:17	50.42	6/23/2022 13:59	81.39	6/22/2022 12:22	17.41	6/22/2022 11:31	6.12	6/22/2022 16:27	70.99
6/23/2022 15:18	50.43	6/23/2022 14:00	81.39	6/22/2022 12:23	17.41	6/22/2022 11:32	6.12	6/22/2022 16:28	70.92
6/23/2022 15:19	50.41	6/23/2022 14:01	81.40	6/22/2022 12:24	17.45	6/22/2022 11:33	6.16	6/22/2022 16:29	70.83
6/23/2022 15:20	50.44	6/23/2022 14:02	81.45	6/22/2022 12:25	17.45	6/22/2022 11:34	6.35	6/22/2022 16:30	70.83
6/23/2022 15:21	50.40	6/23/2022 14:03	81.41	6/22/2022 12:26	17.38	6/22/2022 11:35	6.28	6/22/2022 16:31	70.78
6/23/2022 15:22	50.44	6/23/2022 14:04	81.39	6/22/2022 12:27	17.43	6/22/2022 11:36	6.15	6/22/2022 16:32	70.75
6/23/2022 15:23	50.43	6/23/2022 14:05	81.44	6/22/2022 12:28	17.37	6/22/2022 11:37	6.11	6/22/2022 16:33	70.73
6/23/2022 15:24	50.40	6/23/2022 14:06	81.37	6/22/2022 12:29	17.40	6/22/2022 11:38	6.10	6/22/2022 16:34	70.69

6/23/2022 15:25	50.44	6/23/2022 14:07	81.40	6/22/2022 12:30	17.43	6/22/2022 11:39	6.09	6/22/2022 16:35	70.64
6/23/2022 15:26	50.46	6/23/2022 14:08	81.41	6/22/2022 12:31	17.39	6/22/2022 11:40	6.11	6/22/2022 16:36	70.62
6/23/2022 15:27	50.44	6/23/2022 14:09	81.41	6/22/2022 12:32	17.38	6/22/2022 11:41	6.11	6/22/2022 16:37	70.59
6/23/2022 15:28	50.42	6/23/2022 14:10	81.43	6/22/2022 12:33	17.43	6/22/2022 11:42	6.08	6/22/2022 16:38	70.55
6/23/2022 15:29	50.43	6/23/2022 14:11	81.42	6/22/2022 12:34	17.43	6/22/2022 11:43	6.03	6/22/2022 16:39	70.53
6/23/2022 15:30	50.38	6/23/2022 14:12	81.42	6/22/2022 12:35	17.49	6/22/2022 11:44	6.01	6/22/2022 16:40	70.46
6/23/2022 15:31	50.45	6/23/2022 14:13	81.43	6/22/2022 12:36	17.42	6/22/2022 11:45	6.04	6/22/2022 16:41	70.46
6/23/2022 15:32	50.41	6/23/2022 14:14	81.37	6/22/2022 12:37	17.44	6/22/2022 11:46	5.96	6/22/2022 16:42	70.38
6/23/2022 15:33	50.42	6/23/2022 14:15	81.42	6/22/2022 12:38	17.41	6/22/2022 11:47	5.98	6/22/2022 16:43	70.33
6/23/2022 15:34	50.44	6/23/2022 14:16	81.46	6/22/2022 12:39	17.38	6/22/2022 11:48	5.95	6/22/2022 16:44	70.33
6/23/2022 15:35	50.39	6/23/2022 14:17	81.38	6/22/2022 12:40	17.43	6/22/2022 11:49	5.94	6/22/2022 16:45	70.28
6/23/2022 15:36	50.42	6/23/2022 14:18	81.43	6/22/2022 12:41	17.45	6/22/2022 11:50	5.96	6/22/2022 16:46	70.27
6/23/2022 15:37	50.41	6/23/2022 14:19	81.39	6/22/2022 12:42	17.42	6/22/2022 11:51	5.91	6/22/2022 16:47	70.22
6/23/2022 15:38	50.40	6/23/2022 14:20	81.41	6/22/2022 12:43	17.46	6/22/2022 11:52	5.95	6/22/2022 16:48	70.18
6/23/2022 15:39	50.43	6/23/2022 14:21	81.40	6/22/2022 12:44	17.46	6/22/2022 11:53	5.95	6/22/2022 16:49	70.17
6/23/2022 15:40	50.40	6/23/2022 14:22	81.39	6/22/2022 12:45	17.49	6/22/2022 11:54	5.88	6/22/2022 16:50	70.11
6/23/2022 15:41	50.42	6/23/2022 14:23	81.42	6/22/2022 12:46	17.45	6/22/2022 11:55	5.86	6/22/2022 16:51	70.12
6/23/2022 15:42	50.41	6/23/2022 14:24	81.41	6/22/2022 12:47	17.42	6/22/2022 11:56	5.89	6/22/2022 16:52	70.01
6/23/2022 15:43	50.41	6/23/2022 14:25	81.42	6/22/2022 12:48	17.50	6/22/2022 11:57	5.91	6/22/2022 16:53	70.05
6/23/2022 15:44	50.38	6/23/2022 14:26	81.40	6/22/2022 12:49	17.48	6/22/2022 11:58	5.88	6/22/2022 16:54	69.99
6/23/2022 15:45	50.42	6/23/2022 14:27	81.47	6/22/2022 12:50	17.48	6/22/2022 11:59	5.91	6/22/2022 16:55	69.95
6/23/2022 15:46	50.41	6/23/2022 14:28	81.47	6/22/2022 12:51	17.48	6/22/2022 12:00	5.89	6/22/2022 16:56	69.96
6/23/2022 15:47	50.41	6/23/2022 14:29	81.46	6/22/2022 12:52	17.50	6/22/2022 12:01	5.86	6/22/2022 16:57	69.89
6/23/2022 15:48	50.42	6/23/2022 14:30	81.41	6/22/2022 12:53	17.50	6/22/2022 12:02	5.83	6/22/2022 16:58	69.90
6/23/2022 15:49	50.42	6/23/2022 14:31	81.44	6/22/2022 12:54	17.51	6/22/2022 12:03	5.82	6/22/2022 16:59	69.82
6/23/2022 15:50	50.40	6/23/2022 14:32	81.39	6/22/2022 12:55	17.56	6/22/2022 12:04	5.80	6/22/2022 17:00	69.83
6/23/2022 15:51	50.44	6/23/2022 14:33	81.42	6/22/2022 12:56	17.49	6/22/2022 12:05	5.80	6/22/2022 17:01	69.82
6/23/2022 15:52	50.40	6/23/2022 14:34	81.41	6/22/2022 12:57	17.53	6/22/2022 12:06	5.76	6/22/2022 17:02	69.77
6/23/2022 15:53	50.40	6/23/2022 14:35	81.37	6/22/2022 12:58	17.56	6/22/2022 12:07	5.73	6/22/2022 17:03	69.71
6/23/2022 15:54	50.41	6/23/2022 14:36	81.44	6/22/2022 12:59	17.53	6/22/2022 12:08	5.80	6/22/2022 17:04	69.68
6/23/2022 15:55	50.42	6/23/2022 14:37	81.45	6/22/2022 13:00	17.57	6/22/2022 12:09	5.79	6/22/2022 17:05	69.69
6/23/2022 15:56	50.41	6/23/2022 14:38	81.42	6/22/2022 13:01	17.57	6/22/2022 12:10	5.76	6/22/2022 17:06	69.67
6/23/2022 15:57	50.39	6/23/2022 14:39	81.45	6/22/2022 13:02	17.57	6/22/2022 12:11	5.79	6/22/2022 17:07	69.61
6/23/2022 15:58	50.42	6/23/2022 14:40	81.41	6/22/2022 13:03	17.55	6/22/2022 12:12	5.75	6/22/2022 17:08	69.61
6/23/2022 15:59	50.42	6/23/2022 14:41	81.44	6/22/2022 13:04	17.59	6/22/2022 12:13	5.80	6/22/2022 17:09	69.60
6/23/2022 16:00	50.39	6/23/2022 14:42	81.44	6/22/2022 13:05	17.61	6/22/2022 12:14	5.73	6/22/2022 17:10	69.55
6/23/2022 16:01	50.42	6/23/2022 14:43	81.43	6/22/2022 13:06	17.56	6/22/2022 12:15	5.72	6/22/2022 17:11	69.51
6/23/2022 16:02	50.41	6/23/2022 14:44	81.45	6/22/2022 13:07	17.60	6/22/2022 12:16	5.73	6/22/2022 17:12	69.49
6/23/2022 16:03	50.40	6/23/2022 14:45	81.43	6/22/2022 13:08	17.51	6/22/2022 12:17	5.75	6/22/2022 17:13	69.43
6/23/2022 16:04	50.40	6/23/2022 14:46	81.39	6/22/2022 13:09	17.56	6/22/2022 12:18	5.72	6/22/2022 17:14	69.46
6/23/2022 16:05	50.43	6/23/2022 14:47	81.43	6/22/2022 13:10	17.58	6/22/2022 12:19	5.65	6/22/2022 17:15	69.42
6/23/2022 16:06	50.41	6/23/2022 14:48	81.41	6/22/2022 13:11	17.54	6/22/2022 12:20	5.67	6/22/2022 17:16	69.41
6/23/2022 16:07	50.41	6/23/2022 14:49	81.41	6/22/2022 13:12	17.59	6/22/2022 12:21	5.69	6/22/2022 17:17	69.36
6/23/2022 16:08	50.39	6/23/2022 14:50	81.44	6/22/2022 13:13	17.55	6/22/2022 12:22	5.71	6/22/2022 17:18	69.35
6/23/2022 16:09	50.42	6/23/2022 14:51	81.41	6/22/2022 13:14	17.58	6/22/2022 12:23	5.68	6/22/2022 17:19	69.31
6/23/2022 16:10	50.40	6/23/2022 14:52	81.42	6/22/2022 13:15	17.63	6/22/2022 12:24	5.70	6/22/2022 17:20	69.30
6/23/2022 16:11	50.41	6/23/2022 14:53	81.43	6/22/2022 13:16	17.56	6/22/2022 12:25	5.71	6/22/2022 17:21	69.28
6/23/2022 16:12	50.39	6/23/2022 14:54	81.42	6/22/2022 13:17	17.56	6/22/2022 12:26	5.64	6/22/2022 17:22	69.23
6/23/2022 16:13	50.38	6/23/2022 14:55	81.43	6/22/2022 13:18	17.56	6/22/2022 12:27	5.59	6/22/2022 17:23	69.22
6/23/2022 16:14	50.38	6/23/2022 14:56	81.44	6/22/2022 13:19	17.56	6/22/2022 12:28	5.67	6/22/2022 17:24	69.19
6/23/2022 16:15	50.43	6/23/2022 14:57	81.40	6/22/2022 13:20	17.53	6/22/2022 12:29	5.60	6/22/2022 17:25	69.16
6/23/2022 16:16	50.40	6/23/2022 14:58	81.41	6/22/2022 13:21	17.58	6/22/2022 12:30	5.57	6/22/2022 17:26	69.15
6/23/2022 16:17	50.39	6/23/2022 14:59	81.47	6/22/2022 13:22	17.61	6/22/2022 12:31	5.66	6/22/2022 17:27	69.14
6/23/2022 16:18	50.41	6/23/2022 15:00	81.40	6/22/2022 13:23	17.58	6/22/2022 12:32	5.61	6/22/2022 17:28	69.14
6/23/2022 16:19	50.41	6/23/2022 15:01	81.41	6/22/2022 13:24	17.51	6/22/2022 12:33	5.59	6/22/2022 17:29	69.11
6/23/2022 16:20	50.39	6/23/2022 15:02	81.42	6/22/2022 13:25	17.54	6/22/2022 12:34	5.58	6/22/2022 17:30	69.09
6/23/2022 16:21	50.43	6/23/2022 15:03	81.39	6/22/2022 13:26	17.54	6/22/2022 12:35	5.58	6/22/2022 17:31	69.08
6/23/2022 16:22	50.39	6/23/2022 15:04	81.44	6/22/2022 13:27	17.53	6/22/2022 12:36	5.63	6/22/2022 17:32	69.05
6/23/2022 16:23	50.39	6/23/2022 15:05	81.45	6/22/2022 13:28	17.58	6/22/2022 12:37	5.56	6/22/2022 17:33	69.03
6/23/2022 16:24	51.76	6/23/2022 15:06	81.39	6/22/2022 13:29	17.54	6/22/2022 12:38	5.57	6/22/2022 17:34	69.02
6/23/2022 16:25	53.87	6/23/2022 15:07	81.38	6/22/2022 13:30	17.48	6/22/2022 12:39	5.57	6/22/2022 17:35	69.01
6/23/2022 16:26	54.89	6/23/2022 15:08	81.40	6/22/2022 13:31	17.58	6/22/2022 12:40	5.62	6/22/2022 17:36	68.98
6/23/2022 16:27	55.47	6/23/2022 15:09	81.39	6/22/2022 13:32	17.53	6/22/2022 12:41	5.51	6/22/2022 17:37	68.98
6/23/2022 16:28	53.56	6/23/2022 15:10	81.41	6/22/2022 13:33	17.51	6/22/2022 12:42	5.58	6/22/2022 17:38	68.93
6/23/2022 16:29	52.42	6/23/2022 15:11	81.39	6/22/2022 13:34	17.50	6/22/2022 12:43	5.58	6/22/2022 17:39	68.91
6/23/2022 16:30	51.92	6/23/2022 15:12	81.42	6/22/2022 13:35	17.49	6/22/2022 12:44	5.56	6/22/2022 17:40	68.87
6/23/2022 16:31	51.70	6/23/2022 15:13	81.39	6/22/2022 13:36	17.53	6/22/2022 12:45	5.49	6/22/2022 17:41	68.87
6/23/2022 16:32	51.56	6/23/2022 15:14	81.46	6/22/2022 13:37	17.50	6/22/2022 12:46	5.72	6/22/2022 17:42	68.86
6/23/2022 16:33	51.40	6/23/2022 15:15	81.45	6/22/2022 13:38	17.52	6/22/2022 12:47	5.80	6/22/2022 17:43	68.82
6/23/2022 16:34	51.31	6/23/2022 15:16	81.42	6/22/2022 13:39	17.46	6/22/2022 12:48	5.65	6/22/2022 17:44	68.81
6/23/2022 16:35	51.31	6/23/2022 15:17	81.38	6/22/2022 13:40	17.54	6/22/2022 12:49	5.59	6/22/2022 17:45	68.78
6/23/2022 16:36	51.18	6/23/2022 15:18	81.41	6/22/2022 13:41	17.49	6/22/2022 12:50	5.85	6/22/2022 17:46	68.76
6/23/2022 16:37	51.18	6/23/2022 15:19	81.40	6/22/2022 13:42	17.52	6/22/2022 12:51	5.66	6/22/2022 17:47	68.71
6/23/2022 16:38	51.12	6/23/2022 15:20	81.43	6/22/2022 13:43	17.50	6/22/2022 12:52	5.65	6/22/2022 17:48	68.73
6/23/2022 16:39	51.09	6/23/2022 15:21	81.41	6/22/2022 13:44	17.51	6/22/2022 12:53	5.56	6/22/2022 17:49	68.72
6/23/2022 16:40	51.03	6/23/2022 15:22	81.42	6/22/2022 13:45	17.48	6/22/2022 12:54	5.61	6/22/2022 17:50	68.71
6/23/2022 16:41	51.05	6/23/2022 15:23	81.39	6/22/2022 13:46	17.52	6/22/2022 12:55	5.55	6/22/2022 17:51	68.66
6/23/2022 16:42	51.00	6/23/2022 15:24	81.45	6/22/2022 13:47	17.47	6/22/2022 12:56	5.55	6/22/2022 17:52	68.65
6/23/2022 16:43	51.01	6/23/2022 15:25	81.43	6/22/2022 13:48	17.46	6/22/2022 12:57	5.48	6/22/2022 17:53	68.66
6/23/2022 16:44	50.96	6/23/2022 15:26	81.43	6/22/2022 13:49	17.49	6/22/2022 12:58	5.44	6/22/2022 17:54	68.61
6/23/2022 16:45	50.94	6/23/2022 15:27	81.43	6/22/2022 13:50	17.49	6/22/2022 12:59	5.50	6/22/2022 17:55	68.54
6/23/2022 16:46	50.99	6/23/2022 15:28	81.40	6/22/2022 13:51	17.44	6/22/2022 13:00	5.51	6/22/2022 17:56	68.58
6/23/2022 16:47	50.93	6/23/2022 15:29	81.42	6/22/2022 13:52	17.45	6/22/2022 13:01	5.47	6/22/2022 17:57	68.58
6/23/2022 16:48	50.89	6/23/2022 15:30	81.43	6/22/2022 13:53	17.46	6/22/2022 13:02	5.44	6/22/2022 17:58	68.56
6/23/2022 16:49	50.92	6/23/2022 15:31	81.38	6/22/2022 13:54	17.46	6/22/2022 13:03	5.47	6/22/2022 17:59	68.56
6/23/2022 16:50	50.87	6/23/2022 15:32	81.43	6/22/2022 13:55	17.44	6/22/2022 13:04	5.50	6/22/2022 18:00	68.54
6/23/2022 16:51	50.88	6/23/2022 15:33	81.40	6/22/2022 13:56	17.52	6/22/2022 13:05	5.47	6/22/2022 18:01	68.50
6/23/2022 16:52	50.85	6/23/2022 15:34	81.44	6/22/2022 13:57	17.47	6/22/2022 13:06	5.50	6/22/2022 18:02	68.51

6/23/2022 16:53	50.84	6/23/2022 15:35	81.42	6/22/2022 13:58	17.45	6/22/2022 13:07	5.48	6/22/2022 18:03	68.49
6/23/2022 16:54	50.85	6/23/2022 15:36	81.42	6/22/2022 13:59	17.43	6/22/2022 13:08	5.42	6/22/2022 18:04	68.43
6/23/2022 16:55	50.87	6/23/2022 15:37	81.43	6/22/2022 14:00	17.42	6/22/2022 13:09	5.40	6/22/2022 18:05	68.48
6/23/2022 16:56	50.81	6/23/2022 15:38	81.42	6/22/2022 14:01	17.42	6/22/2022 13:10	5.51	6/22/2022 18:06	68.42
6/23/2022 16:57	50.82	6/23/2022 15:39	81.41	6/22/2022 14:02	17.42	6/22/2022 13:11	5.40	6/22/2022 18:07	68.42
6/23/2022 16:58	50.76	6/23/2022 15:40	81.43	6/22/2022 14:03	17.41	6/22/2022 13:12	5.40	6/22/2022 18:08	68.42
6/23/2022 16:59	50.81	6/23/2022 15:41	81.42	6/22/2022 14:04	17.40	6/22/2022 13:13	5.42	6/22/2022 18:09	68.38
6/23/2022 17:00	50.77	6/23/2022 15:42	81.40	6/22/2022 14:05	17.40	6/22/2022 13:14	5.84	6/22/2022 18:10	68.36
6/23/2022 17:01	50.79	6/23/2022 15:43	81.39	6/22/2022 14:06	17.41	6/22/2022 13:15	5.78	6/22/2022 18:11	68.36
6/23/2022 17:02	50.77	6/23/2022 15:44	81.41	6/22/2022 14:07	17.40	6/22/2022 13:16	5.53	6/22/2022 18:12	68.37
6/23/2022 17:03	50.77	6/23/2022 15:45	81.44	6/22/2022 14:08	17.37	6/22/2022 13:17	5.51	6/22/2022 18:13	68.35
6/23/2022 17:04	53.22	6/23/2022 15:46	81.40	6/22/2022 14:09	17.36	6/22/2022 13:18	5.51	6/22/2022 18:14	68.30
6/23/2022 17:05	54.73	6/23/2022 15:47	81.42	6/22/2022 14:10	17.39	6/22/2022 13:19	5.55	6/22/2022 18:15	68.30
6/23/2022 17:06	55.54	6/23/2022 15:48	81.41	6/22/2022 14:11	17.37	6/22/2022 13:20	5.49	6/22/2022 18:16	68.32
6/23/2022 17:07	55.54	6/23/2022 15:49	81.40	6/22/2022 14:12	17.39	6/22/2022 13:21	5.46	6/22/2022 18:17	68.29
6/23/2022 17:08	53.33	6/23/2022 15:50	81.38	6/22/2022 14:13	17.39	6/22/2022 13:22	5.47	6/22/2022 18:18	68.27
6/23/2022 17:09	52.52	6/23/2022 15:51	81.37	6/22/2022 14:14	17.40	6/22/2022 13:23	5.48	6/22/2022 18:19	68.26
6/23/2022 17:10	52.15	6/23/2022 15:52	81.41	6/22/2022 14:15	17.41	6/22/2022 13:24	5.50	6/22/2022 18:20	68.25
6/23/2022 17:11	51.92	6/23/2022 15:53	81.37	6/22/2022 14:16	17.32	6/22/2022 13:25	5.45	6/22/2022 18:21	68.24
6/23/2022 17:12	51.82	6/23/2022 15:54	81.44	6/22/2022 14:17	17.37	6/22/2022 13:26	5.38	6/22/2022 18:22	68.23
6/23/2022 17:13	51.67	6/23/2022 15:55	81.41	6/22/2022 14:18	17.37	6/22/2022 13:27	5.43	6/22/2022 18:23	68.21
6/23/2022 17:14	51.60	6/23/2022 15:56	81.39	6/22/2022 14:19	17.35	6/22/2022 13:28	5.97	6/22/2022 18:24	68.17
6/23/2022 17:15	51.59	6/23/2022 15:57	81.43	6/22/2022 14:20	17.36	6/22/2022 13:29	5.78	6/22/2022 18:25	68.20
6/23/2022 17:16	51.50	6/23/2022 15:58	81.45	6/22/2022 14:21	17.42	6/22/2022 13:30	6.01	6/22/2022 18:26	68.15
6/23/2022 17:17	51.46	6/23/2022 15:59	81.41	6/22/2022 14:22	17.31	6/22/2022 13:31	6.06	6/22/2022 18:27	68.16
6/23/2022 17:18	51.41	6/23/2022 16:00	81.41	6/22/2022 14:23	17.34	6/22/2022 13:32	5.78	6/22/2022 18:28	68.16
6/23/2022 17:19	51.44	6/23/2022 16:01	81.44	6/22/2022 14:24	17.37	6/22/2022 13:33	5.76	6/22/2022 18:29	68.13
6/23/2022 17:20	51.33	6/23/2022 16:02	81.36	6/22/2022 14:25	17.39	6/22/2022 13:34	5.59	6/22/2022 18:30	68.09
6/23/2022 17:21	51.30	6/23/2022 16:03	81.44	6/22/2022 14:26	17.40	6/22/2022 13:35	5.64	6/22/2022 18:31	68.11
6/23/2022 17:22	51.28	6/23/2022 16:04	81.42	6/22/2022 14:27	17.36	6/22/2022 13:36	5.60	6/22/2022 18:32	74.43
6/23/2022 17:23	51.26	6/23/2022 16:05	81.45	6/22/2022 14:28	17.41	6/22/2022 13:37	5.55	6/22/2022 18:33	74.35
6/23/2022 17:24	51.23	6/23/2022 16:06	81.38	6/22/2022 14:29	17.33	6/22/2022 13:38	5.55	6/22/2022 18:34	74.17
6/23/2022 17:25	51.24	6/23/2022 16:07	81.44	6/22/2022 14:30	17.35	6/22/2022 13:39	5.50	6/22/2022 18:35	74.06
6/23/2022 17:26	51.21	6/23/2022 16:08	81.40	6/22/2022 14:31	17.39	6/22/2022 13:40	5.53	6/22/2022 18:36	73.98
6/23/2022 17:27	51.20	6/23/2022 16:09	81.39	6/22/2022 14:32	17.39	6/22/2022 13:41	5.49	6/22/2022 18:37	73.83
6/23/2022 17:28	51.19	6/23/2022 16:10	81.45	6/22/2022 14:33	17.38	6/22/2022 13:42	5.55	6/22/2022 18:38	73.72
6/23/2022 17:29	51.16	6/23/2022 16:11	81.42	6/22/2022 14:34	17.34	6/22/2022 13:43	5.48	6/22/2022 18:39	73.63
6/23/2022 17:30	51.13	6/23/2022 16:12	81.45	6/22/2022 14:35	17.37	6/22/2022 13:44	5.48	6/22/2022 18:40	73.57
6/23/2022 17:31	51.14	6/23/2022 16:13	81.42	6/22/2022 14:36	17.39	6/22/2022 13:45	5.48	6/22/2022 18:41	73.45
6/23/2022 17:32	51.14	6/23/2022 16:14	81.42	6/22/2022 14:37	17.36	6/22/2022 13:46	5.49	6/22/2022 18:42	73.37
6/23/2022 17:33	51.12	6/23/2022 16:15	81.44	6/22/2022 14:38	17.42	6/22/2022 13:47	5.41	6/22/2022 18:43	73.31
6/23/2022 17:34	51.09	6/23/2022 16:16	81.41	6/22/2022 14:39	17.37	6/22/2022 13:48	5.44	6/22/2022 18:44	73.21
6/23/2022 17:35	51.10	6/23/2022 16:17	81.44	6/22/2022 14:40	17.36	6/22/2022 13:49	5.46	6/22/2022 18:45	73.16
6/23/2022 17:36	51.08	6/23/2022 16:18	81.42	6/22/2022 14:41	17.38	6/22/2022 13:50	5.60	6/22/2022 18:46	73.10
6/23/2022 17:37	51.04	6/23/2022 16:19	81.42	6/22/2022 14:42	17.37	6/22/2022 13:51	5.72	6/22/2022 18:47	73.01
6/23/2022 17:38	51.06	6/23/2022 16:20	81.44	6/22/2022 14:43	17.38	6/22/2022 13:52	5.75	6/22/2022 18:48	72.93
6/23/2022 17:39	51.03	6/23/2022 16:21	81.45	6/22/2022 14:44	17.32	6/22/2022 13:53	5.77	6/22/2022 18:49	72.86
6/23/2022 17:40	51.01	6/23/2022 16:22	81.41	6/22/2022 14:45	17.36	6/22/2022 13:54	5.67	6/22/2022 18:50	72.77
6/23/2022 17:41	50.99	6/23/2022 16:23	81.39	6/22/2022 14:46	17.36	6/22/2022 13:55	5.60	6/22/2022 18:51	72.70
6/23/2022 17:42	51.03	6/23/2022 16:24	81.44	6/22/2022 14:47	17.37	6/22/2022 13:56	5.59	6/22/2022 18:52	72.63
6/23/2022 17:43	51.00	6/23/2022 16:25	81.41	6/22/2022 14:48	17.33	6/22/2022 13:57	5.46	6/22/2022 18:53	72.58
6/23/2022 17:44	51.03	6/23/2022 16:26	81.44	6/22/2022 14:49	17.38	6/22/2022 13:58	5.49	6/22/2022 18:54	72.53
6/23/2022 17:45	50.99	6/23/2022 16:27	81.40	6/22/2022 14:50	17.35	6/22/2022 13:59	5.46	6/22/2022 18:55	72.45
6/23/2022 17:46	50.99	6/23/2022 16:28	81.45	6/22/2022 14:51	17.39	6/22/2022 14:00	5.56	6/22/2022 18:56	72.41
6/23/2022 17:47	50.99	6/23/2022 16:29	81.44	6/22/2022 14:52	17.35	6/22/2022 14:01	5.41	6/22/2022 18:57	72.31
6/23/2022 17:48	50.98	6/23/2022 16:30	81.40	6/22/2022 14:53	17.33	6/22/2022 14:02	5.44	6/22/2022 18:58	72.25
6/23/2022 17:49	50.96	6/23/2022 16:31	81.42	6/22/2022 14:54	17.35	6/22/2022 14:03	5.86	6/22/2022 18:59	72.20
6/23/2022 17:50	50.96	6/23/2022 16:32	81.39	6/22/2022 14:55	17.28	6/22/2022 14:04	5.60	6/22/2022 19:00	72.15
6/23/2022 17:51	50.96	6/23/2022 16:33	81.41	6/22/2022 14:56	17.32	6/22/2022 14:05	5.62	6/22/2022 19:01	72.07
6/23/2022 17:52	50.95	6/23/2022 16:34	81.43	6/22/2022 14:57	17.30	6/22/2022 14:06	5.54	6/22/2022 19:02	72.05
6/23/2022 17:53	50.95	6/23/2022 16:35	81.45	6/22/2022 14:58	17.32	6/22/2022 14:07	5.44	6/22/2022 19:03	71.98
6/23/2022 17:54	50.94	6/23/2022 16:36	81.48	6/22/2022 14:59	17.34	6/22/2022 14:08	5.46	6/22/2022 19:04	71.90
6/23/2022 17:55	50.93	6/23/2022 16:37	81.41	6/22/2022 15:00	17.36	6/22/2022 14:09	5.48	6/22/2022 19:05	71.85
6/23/2022 17:56	50.92	6/23/2022 16:38	81.39	6/22/2022 15:01	17.32	6/22/2022 14:10	5.45	6/22/2022 19:06	71.77
6/23/2022 17:57	50.92	6/23/2022 16:39	81.43	6/22/2022 15:02	17.33	6/22/2022 14:11	5.43	6/22/2022 19:07	71.74
6/23/2022 17:58	50.91	6/23/2022 16:40	81.43	6/22/2022 15:03	17.31	6/22/2022 14:12	5.42	6/22/2022 19:08	71.70
6/23/2022 17:59	50.90	6/23/2022 16:41	81.41	6/22/2022 15:04	17.35	6/22/2022 14:13	5.48	6/22/2022 19:09	71.62
6/23/2022 18:00	50.90	6/23/2022 16:42	81.39	6/22/2022 15:05	17.28	6/22/2022 14:14	5.38	6/22/2022 19:10	71.57
6/23/2022 18:01	50.89	6/23/2022 16:43	81.43	6/22/2022 15:06	17.29	6/22/2022 14:15	5.37	6/22/2022 19:11	71.55
6/23/2022 18:02	50.91	6/23/2022 16:44	81.42	6/22/2022 15:07	17.29	6/22/2022 14:16	5.44	6/22/2022 19:12	71.51
6/23/2022 18:03	50.89	6/23/2022 16:45	81.45	6/22/2022 15:08	17.28	6/22/2022 14:17	5.40	6/22/2022 19:13	71.40
6/23/2022 18:04	50.91	6/23/2022 16:46	81.43	6/22/2022 15:09	17.29	6/22/2022 14:18	5.37	6/22/2022 19:14	71.37
6/23/2022 18:05	50.90	6/23/2022 16:47	81.43	6/22/2022 15:10	17.26	6/22/2022 14:19	5.49	6/22/2022 19:15	71.30
6/23/2022 18:06	50.86	6/23/2022 16:48	81.44	6/22/2022 15:11	17.28	6/22/2022 14:20	5.39	6/22/2022 19:16	71.28
6/23/2022 18:07	50.87	6/23/2022 16:49	81.43	6/22/2022 15:12	17.25	6/22/2022 14:21	5.42	6/22/2022 19:17	71.23
6/23/2022 18:08	50.89	6/23/2022 16:50	81.44	6/22/2022 15:13	17.27	6/22/2022 14:22	5.37	6/22/2022 19:18	71.20
6/23/2022 18:09	50.85	6/23/2022 16:51	81.43	6/22/2022 15:14	17.25	6/22/2022 14:23	5.34	6/22/2022 19:19	71.17
6/23/2022 18:10	50.88	6/23/2022 16:52	81.42	6/22/2022 15:15	17.25	6/22/2022 14:24	5.35	6/22/2022 19:20	71.10
6/23/2022 18:11	50.92	6/23/2022 16:53	81.42	6/22/2022 15:16	17.30	6/22/2022 14:25	5.41	6/22/2022 19:21	71.07
6/23/2022 18:12	50.85	6/23/2022 16:54	81.41	6/22/2022 15:17	17.25	6/22/2022 14:26	5.34	6/22/2022 19:22	70.99
6/23/2022 18:13	50.83	6/23/2022 16:55	81.45	6/22/2022 15:18	17.28	6/22/2022 14:27	5.31	6/22/2022 19:23	70.96
6/23/2022 18:14	50.88	6/23/2022 16:56	81.47	6/22/2022 15:19	17.29	6/22/2022 14:28	5.34	6/22/2022 19:24	70.96
6/23/2022 18:15	50.89	6/23/2022 16:57	81.40	6/22/2022 15:20	17.28	6/22/2022 14:29	5.35	6/22/2022 19:25	70.91
6/23/2022 18:16	50.84	6/23/2022 16:58	81.46	6/22/2022 15:21	17.27	6/22/2022 14:30	5.29	6/22/2022 19:26	70.86
6/23/2022 18:17	50.80	6/23/2022 16:59	81.38	6/22/2022 15:22	17.27	6/22/2022 14:31	5.30	6/22/2022 19:27	70.80
6/23/2022 18:18	50.82	6/23/2022 17:00	81.43	6/22/2022 15:23	17.25	6/22/2022 14:32	5.29	6/22/2022 19:28	70.80
6/23/2022 18:19	50.83	6/23/2022 17:01	81.42	6/22/2022 15:24	17.25	6/22/2022 14:33	5.30	6/22/2022 19:29	70.75
6/23/2022 18:20	50.83	6/23/2022 17:02	81.40	6/22/2022 15:25	17.25	6/22/2022 14:34	5.29	6/22/2022 19:30	70.69

6/23/2022 18:21	50.83	6/23/2022 17:03	81.40	6/22/2022 15:26	17.25	6/22/2022 14:35	5.30	6/22/2022 19:31	70.66
6/23/2022 18:22	50.81	6/23/2022 17:04	81.45	6/22/2022 15:27	17.25	6/22/2022 14:36	5.29	6/22/2022 19:32	70.61
6/23/2022 18:23	50.76	6/23/2022 17:05	81.39	6/22/2022 15:28	17.21	6/22/2022 14:37	5.33	6/22/2022 19:33	70.59
6/23/2022 18:24	50.81	6/23/2022 17:06	81.43	6/22/2022 15:29	17.27	6/22/2022 14:38	5.23	6/22/2022 19:34	70.55
6/23/2022 18:25	50.77	6/23/2022 17:07	81.39	6/22/2022 15:30	17.23	6/22/2022 14:39	5.25	6/22/2022 19:35	70.54
6/23/2022 18:26	50.78	6/23/2022 17:08	81.44	6/22/2022 15:31	17.22	6/22/2022 14:40	5.26	6/22/2022 19:36	70.49
6/23/2022 18:27	50.81	6/23/2022 17:09	81.40	6/22/2022 15:32	17.20	6/22/2022 14:41	5.29	6/22/2022 19:37	70.46
6/23/2022 18:28	50.79	6/23/2022 17:10	81.41	6/22/2022 15:33	17.23	6/22/2022 14:42	5.21	6/22/2022 19:38	70.43
6/23/2022 18:29	50.83	6/23/2022 17:11	81.45	6/22/2022 15:34	17.23	6/22/2022 14:43	5.31	6/22/2022 19:39	70.37
6/23/2022 18:30	50.77	6/23/2022 17:12	81.38	6/22/2022 15:35	17.23	6/22/2022 14:44	5.25	6/22/2022 19:40	70.37
6/23/2022 18:31	50.75	6/23/2022 17:13	81.41	6/22/2022 15:36	17.19	6/22/2022 14:45	5.27	6/22/2022 19:41	70.32
6/23/2022 18:32	50.81	6/23/2022 17:14	81.40	6/22/2022 15:37	17.19	6/22/2022 14:46	5.22	6/22/2022 19:42	70.31
6/23/2022 18:33	50.79	6/23/2022 17:15	81.42	6/22/2022 15:38	17.19	6/22/2022 14:47	5.19	6/22/2022 19:43	70.28
6/23/2022 18:34	50.77	6/23/2022 17:16	81.40	6/22/2022 15:39	17.20	6/22/2022 14:48	5.24	6/22/2022 19:44	70.22
6/23/2022 18:35	50.77	6/23/2022 17:17	81.43	6/22/2022 15:40	17.20	6/22/2022 14:49	5.17	6/22/2022 19:45	70.25
6/23/2022 18:36	50.79	6/23/2022 17:18	81.44	6/22/2022 15:41	17.16	6/22/2022 14:50	5.20	6/22/2022 19:46	70.22
6/23/2022 18:37	50.77	6/23/2022 17:19	81.40	6/22/2022 15:42	17.19	6/22/2022 14:51	5.17	6/22/2022 19:47	74.38
6/23/2022 18:38	50.75	6/23/2022 17:20	81.40	6/22/2022 15:43	17.19	6/22/2022 14:52	5.20	6/22/2022 19:48	75.99
6/23/2022 18:39	50.74	6/23/2022 17:21	81.45	6/22/2022 15:44	17.18	6/22/2022 14:53	5.16	6/22/2022 19:49	75.80
6/23/2022 18:40	50.75	6/23/2022 17:22	81.43	6/22/2022 15:45	17.19	6/22/2022 14:54	5.16	6/22/2022 19:50	75.71
6/23/2022 18:41	50.77	6/23/2022 17:23	81.43	6/22/2022 15:46	17.19	6/22/2022 14:55	5.12	6/22/2022 19:51	75.60
6/23/2022 18:42	50.76	6/23/2022 17:24	81.40	6/22/2022 15:47	17.19	6/22/2022 14:56	5.17	6/22/2022 19:52	75.47
6/23/2022 18:43	50.74	6/23/2022 17:25	81.42	6/22/2022 15:48	17.20	6/22/2022 14:57	5.15	6/22/2022 19:53	75.38
6/23/2022 18:44	50.74	6/23/2022 17:26	81.41	6/22/2022 15:49	17.13	6/22/2022 14:58	5.12	6/22/2022 19:54	75.25
6/23/2022 18:45	50.75	6/23/2022 17:27	81.44	6/22/2022 15:50	17.22	6/22/2022 14:59	5.19	6/22/2022 19:55	75.18
6/23/2022 18:46	50.74	6/23/2022 17:28	81.41	6/22/2022 15:51	17.16	6/22/2022 15:00	5.13	6/22/2022 19:56	77.58
6/23/2022 18:47	50.76	6/23/2022 17:29	81.42	6/22/2022 15:52	17.17	6/22/2022 15:01	5.12	6/22/2022 19:57	80.93
6/23/2022 18:48	50.76	6/23/2022 17:30	81.42	6/22/2022 15:53	17.14	6/22/2022 15:02	5.13	6/22/2022 19:58	80.70
6/23/2022 18:49	50.75	6/23/2022 17:31	81.41	6/22/2022 15:54	17.20	6/22/2022 15:03	5.11	6/22/2022 19:59	80.51
6/23/2022 18:50	50.74	6/23/2022 17:32	81.40	6/22/2022 15:55	17.17	6/22/2022 15:04	5.07	6/22/2022 20:00	80.35
6/23/2022 18:51	50.75	6/23/2022 17:33	81.43	6/22/2022 15:56	17.17	6/22/2022 15:05	5.09	6/22/2022 20:01	80.18
6/23/2022 18:52	50.71	6/23/2022 17:34	81.43	6/22/2022 15:57	17.17	6/22/2022 15:06	5.16	6/22/2022 20:02	79.97
6/23/2022 18:53	50.71	6/23/2022 17:35	81.44	6/22/2022 15:58	17.19	6/22/2022 15:07	5.16	6/22/2022 20:03	79.84
6/23/2022 18:54	50.74	6/23/2022 17:36	81.46	6/22/2022 15:59	17.15	6/22/2022 15:08	5.04	6/22/2022 20:04	79.71
6/23/2022 18:55	50.75	6/23/2022 17:37	81.43	6/22/2022 16:00	17.15	6/22/2022 15:09	5.10	6/22/2022 20:05	79.56
6/23/2022 18:56	50.73	6/23/2022 17:38	81.45	6/22/2022 16:01	17.10	6/22/2022 15:10	5.14	6/22/2022 20:06	79.41
6/23/2022 18:57	50.74	6/23/2022 17:39	81.39	6/22/2022 16:02	17.15	6/22/2022 15:11	5.19	6/22/2022 20:07	79.28
6/23/2022 18:58	50.71	6/23/2022 17:40	81.44	6/22/2022 16:03	17.15	6/22/2022 15:12	5.10	6/22/2022 20:08	79.16
6/23/2022 18:59	50.71	6/23/2022 17:41	81.42	6/22/2022 16:04	17.14	6/22/2022 15:13	5.06	6/22/2022 20:09	79.05
6/23/2022 19:00	50.69	6/23/2022 17:42	81.46	6/22/2022 16:05	17.10	6/22/2022 15:14	5.11	6/22/2022 20:10	78.96
6/23/2022 19:01	50.72	6/23/2022 17:43	81.40	6/22/2022 16:06	17.12	6/22/2022 15:15	5.04	6/22/2022 20:11	78.83
6/23/2022 19:02	50.70	6/23/2022 17:44	81.45	6/22/2022 16:07	17.15	6/22/2022 15:16	5.07	6/22/2022 20:12	78.76
6/23/2022 19:03	50.69	6/23/2022 17:45	81.41	6/22/2022 16:08	17.16	6/22/2022 15:17	5.09	6/22/2022 20:13	78.66
6/23/2022 19:04	50.67	6/23/2022 17:46	81.40	6/22/2022 16:09	17.11	6/22/2022 15:18	5.14	6/22/2022 20:14	78.55
6/23/2022 19:05	50.75	6/23/2022 17:47	81.41	6/22/2022 16:10	17.13	6/22/2022 15:19	5.09	6/22/2022 20:15	78.42
6/23/2022 19:06	50.69	6/23/2022 17:48	81.41	6/22/2022 16:11	17.09	6/22/2022 15:20	5.06	6/22/2022 20:16	78.37
6/23/2022 19:07	50.70	6/23/2022 17:49	81.40	6/22/2022 16:12	17.16	6/22/2022 15:21	5.07	6/22/2022 20:17	78.20
6/23/2022 19:08	50.70	6/23/2022 17:50	81.40	6/22/2022 16:13	17.11	6/22/2022 15:22	5.10	6/22/2022 20:18	78.14
6/23/2022 19:09	50.69	6/23/2022 17:51	81.41	6/22/2022 16:14	17.14	6/22/2022 15:23	5.07	6/22/2022 20:19	77.97
6/23/2022 19:10	50.72	6/23/2022 17:52	81.43	6/22/2022 16:15	17.16	6/22/2022 15:24	5.02	6/22/2022 20:20	77.87
6/23/2022 19:11	50.72	6/23/2022 17:53	81.40	6/22/2022 16:16	17.10	6/22/2022 15:25	5.02	6/22/2022 20:21	77.77
6/23/2022 19:12	50.71	6/23/2022 17:54	81.45	6/22/2022 16:17	17.15	6/22/2022 15:26	5.08	6/22/2022 20:22	77.65
6/23/2022 19:13	50.69	6/23/2022 17:55	81.44	6/22/2022 16:18	17.15	6/22/2022 15:27	5.04	6/22/2022 20:23	77.54
6/23/2022 19:14	50.72	6/23/2022 17:56	81.42	6/22/2022 16:19	17.08	6/22/2022 15:28	5.08	6/22/2022 20:24	77.46
6/23/2022 19:15	50.71	6/23/2022 17:57	81.43	6/22/2022 16:20	17.16	6/22/2022 15:29	5.06	6/22/2022 20:25	77.36
6/23/2022 19:16	50.72	6/23/2022 17:58	81.38	6/22/2022 16:21	17.10	6/22/2022 15:30	5.04	6/22/2022 20:26	77.28
6/23/2022 19:17	50.69	6/23/2022 17:59	81.40	6/22/2022 16:22	17.11	6/22/2022 15:31	5.00	6/22/2022 20:27	77.16
6/23/2022 19:18	50.68	6/23/2022 18:00	81.41	6/22/2022 16:23	17.11	6/22/2022 15:32	4.98	6/22/2022 20:28	77.04
6/23/2022 19:19	50.69	6/23/2022 18:01	81.45	6/22/2022 16:24	17.12	6/22/2022 15:33	5.05	6/22/2022 20:29	77.00
6/23/2022 19:20	50.70	6/23/2022 18:02	81.40	6/22/2022 16:25	17.11	6/22/2022 15:34	5.04	6/22/2022 20:30	76.87
6/23/2022 19:21	50.71	6/23/2022 18:03	81.42	6/22/2022 16:26	17.13	6/22/2022 15:35	5.03	6/22/2022 20:31	76.81
6/23/2022 19:22	50.69	6/23/2022 18:04	81.39	6/22/2022 16:27	17.11	6/22/2022 15:36	4.99	6/22/2022 20:32	79.19
6/23/2022 19:23	50.68	6/23/2022 18:05	81.40	6/22/2022 16:28	17.11	6/22/2022 15:37	5.00	6/22/2022 20:33	81.32
6/23/2022 19:24	50.71	6/23/2022 18:06	81.41	6/22/2022 16:29	17.10	6/22/2022 15:38	5.02	6/22/2022 20:34	81.15
6/23/2022 19:25	50.68	6/23/2022 18:07	81.44	6/22/2022 16:30	17.10	6/22/2022 15:39	4.96	6/22/2022 20:35	80.99
6/23/2022 19:26	50.71	6/23/2022 18:08	81.43	6/22/2022 16:31	17.11	6/22/2022 15:40	4.98	6/22/2022 20:36	80.82
6/23/2022 19:27	50.67	6/23/2022 18:09	81.41	6/22/2022 16:32	17.09	6/22/2022 15:41	4.98	6/22/2022 20:37	80.65
6/23/2022 19:28	50.68	6/23/2022 18:10	81.39	6/22/2022 16:33	17.12	6/22/2022 15:42	4.98	6/22/2022 20:38	80.54
6/23/2022 19:29	50.70	6/23/2022 18:11	81.44	6/22/2022 16:34	17.13	6/22/2022 15:43	5.00	6/22/2022 20:39	80.37
6/23/2022 19:30	50.67	6/23/2022 18:12	81.43	6/22/2022 16:35	17.12	6/22/2022 15:44	4.97	6/22/2022 20:40	80.24
6/23/2022 19:31	50.67	6/23/2022 18:13	81.41	6/22/2022 16:36	17.12	6/22/2022 15:45	4.98	6/22/2022 20:41	80.13
6/23/2022 19:32	50.68	6/23/2022 18:14	81.43	6/22/2022 16:37	17.12	6/22/2022 15:46	4.95	6/22/2022 20:42	79.94
6/23/2022 19:33	50.65	6/23/2022 18:15	81.43	6/22/2022 16:38	17.07	6/22/2022 15:47	4.92	6/22/2022 20:43	79.80
6/23/2022 19:34	50.64	6/23/2022 18:16	81.39	6/22/2022 16:39	17.10	6/22/2022 15:48	4.97	6/22/2022 20:44	79.67
6/23/2022 19:35	50.65	6/23/2022 18:17	81.41	6/22/2022 16:40	17.06	6/22/2022 15:49	4.99	6/22/2022 20:45	79.58
6/23/2022 19:36	50.67	6/23/2022 18:18	81.42	6/22/2022 16:41	17.08	6/22/2022 15:50	4.90	6/22/2022 20:46	79.42
6/23/2022 19:37	50.71	6/23/2022 18:19	81.43	6/22/2022 16:42	17.09	6/22/2022 15:51	4.93	6/22/2022 20:47	79.30
6/23/2022 19:38	50.68	6/23/2022 18:20	81.43	6/22/2022 16:43	17.10	6/22/2022 15:52	4.95	6/22/2022 20:48	79.20
6/23/2022 19:39	50.66	6/23/2022 18:21	81.43	6/22/2022 16:44	17.10	6/22/2022 15:53	4.94	6/22/2022 20:49	79.10
6/23/2022 19:40	50.66	6/23/2022 18:22	81.41	6/22/2022 16:45	17.01	6/22/2022 15:54	4.89	6/22/2022 20:50	79.01
6/23/2022 19:41	50.67	6/23/2022 18:23	81.43	6/22/2022 16:46	17.07	6/22/2022 15:55	4.91	6/22/2022 20:51	78.91
6/23/2022 19:42	50.65	6/23/2022 18:24	81.45	6/22/2022 16:47	17.10	6/22/2022 15:56	4.91	6/22/2022 20:52	78.80
6/23/2022 19:43	50.67	6/23/2022 18:25	81.42	6/22/2022 16:48	17.07	6/22/2022 15:57	5.40	6/22/2022 20:53	78.71
6/23/2022 19:44	50.65	6/23/2022 18:26	81.39	6/22/2022 16:49	17.10	6/22/2022 15:58	5.58	6/22/2022 20:54	78.57
6/23/2022 19:45	50.65	6/23/2022 18:27	81.46	6/22/2022 16:50	17.08	6/22/2022 15:59	5.79	6/22/2022 20:55	78.47
6/23/2022 19:46	50.63	6/23/2022 18:28	81.43	6/22/2022 16:51	17.08	6/22/2022 16:00	5.92	6/22/2022 20:56	78.41
6/23/2022 19:47	50.64	6/23/2022 18:29	81.41	6/22/2022 16:52	17.08	6/22/2022 16:01	6.07	6/22/2022 20:57	78.33
6/23/2022 19:48	50.65	6/23/2022 18:30	81.44	6/22/2022 16:53	17.09	6/22/2022 16:02	6.09	6/22/2022 20:58	78.20

6/23/2022 19:49	50.68	6/23/2022 18:31	81.42	6/22/2022 16:54	17.05	6/22/2022 16:03	6.22	6/22/2022 20:59	78.08
6/23/2022 19:50	50.70	6/23/2022 18:32	81.45	6/22/2022 16:55	17.09	6/22/2022 16:04	5.88	6/22/2022 21:00	77.97
6/23/2022 19:51	50.67	6/23/2022 18:33	81.42	6/22/2022 16:56	17.05	6/22/2022 16:05	5.70	6/22/2022 21:01	77.89
6/23/2022 19:52	50.66	6/23/2022 18:34	81.43	6/22/2022 16:57	17.11	6/22/2022 16:06	5.50	6/22/2022 21:02	77.76
6/23/2022 19:53	50.66	6/23/2022 18:35	81.38	6/22/2022 16:58	17.03	6/22/2022 16:07	5.38	6/22/2022 21:03	77.69
6/23/2022 19:54	50.64	6/23/2022 18:36	81.40	6/22/2022 16:59	17.09	6/22/2022 16:08	5.35	6/22/2022 21:04	77.54
6/23/2022 19:55	50.68	6/23/2022 18:37	81.39	6/22/2022 17:00	17.04	6/22/2022 16:09	5.38	6/22/2022 21:05	77.45
6/23/2022 19:56	50.66	6/23/2022 18:38	81.41	6/22/2022 17:01	17.03	6/22/2022 16:10	5.28	6/22/2022 21:06	77.36
6/23/2022 19:57	50.67	6/23/2022 18:39	81.43	6/22/2022 17:02	17.06	6/22/2022 16:11	5.27	6/22/2022 21:07	77.26
6/23/2022 19:58	50.68	6/23/2022 18:40	81.43	6/22/2022 17:03	17.03	6/22/2022 16:12	5.27	6/22/2022 21:08	77.19
6/23/2022 19:59	50.61	6/23/2022 18:41	81.42	6/22/2022 17:04	17.04	6/22/2022 16:13	5.25	6/22/2022 21:09	77.04
6/23/2022 20:00	50.63	6/23/2022 18:42	81.42	6/22/2022 17:05	17.05	6/22/2022 16:14	5.29	6/22/2022 21:10	77.00
6/23/2022 20:01	50.65	6/23/2022 18:43	81.45	6/22/2022 17:06	17.03	6/22/2022 16:15	5.21	6/22/2022 21:11	76.89
6/23/2022 20:02	50.64	6/23/2022 18:44	81.44	6/22/2022 17:07	17.02	6/22/2022 16:16	5.23	6/22/2022 21:12	76.86
6/23/2022 20:03	50.69	6/23/2022 18:45	81.40	6/22/2022 17:08	17.04	6/22/2022 16:17	5.22	6/22/2022 21:13	76.71
6/23/2022 20:04	50.64	6/23/2022 18:46	81.44	6/22/2022 17:09	17.04	6/22/2022 16:18	5.11	6/22/2022 21:14	76.62
6/23/2022 20:05	50.65	6/23/2022 18:47	81.40	6/22/2022 17:10	17.03	6/22/2022 16:19	5.43	6/22/2022 21:15	76.58
6/23/2022 20:06	50.67	6/23/2022 18:48	81.43	6/22/2022 17:11	17.03	6/22/2022 16:20	5.31	6/22/2022 21:16	76.47
6/23/2022 20:07	50.68	6/23/2022 18:49	81.44	6/22/2022 17:12	17.03	6/22/2022 16:21	5.28	6/22/2022 21:17	76.36
6/23/2022 20:08	50.65	6/23/2022 18:50	81.40	6/22/2022 17:13	17.01	6/22/2022 16:22	5.21	6/22/2022 21:18	76.27
6/23/2022 20:09	50.66	6/23/2022 18:51	81.44	6/22/2022 17:14	17.03	6/22/2022 16:23	5.17	6/22/2022 21:19	76.19
6/23/2022 20:10	50.64	6/23/2022 18:52	81.41	6/22/2022 17:15	17.00	6/22/2022 16:24	5.48	6/22/2022 21:20	76.09
6/23/2022 20:11	50.65	6/23/2022 18:53	81.41	6/22/2022 17:16	17.05	6/22/2022 16:25	5.22	6/22/2022 21:21	76.02
6/23/2022 20:12	50.65	6/23/2022 18:54	81.43	6/22/2022 17:17	16.99	6/22/2022 16:26	5.29	6/22/2022 21:22	75.96
6/23/2022 20:13	50.64	6/23/2022 18:55	81.43	6/22/2022 17:18	17.01	6/22/2022 16:27	5.23	6/22/2022 21:23	75.87
6/23/2022 20:14	50.63	6/23/2022 18:56	81.41	6/22/2022 17:19	17.03	6/22/2022 16:28	5.14	6/22/2022 21:24	75.74
6/23/2022 20:15	50.59	6/23/2022 18:57	81.40	6/22/2022 17:20	17.05	6/22/2022 16:29	5.12	6/22/2022 21:25	75.68
6/23/2022 20:16	50.60	6/23/2022 18:58	81.43	6/22/2022 17:21	17.03	6/22/2022 16:30	5.20	6/22/2022 21:26	75.58
6/23/2022 20:17	50.64	6/23/2022 18:59	81.39	6/22/2022 17:22	17.01	6/22/2022 16:31	5.18	6/22/2022 21:27	75.49
6/23/2022 20:18	50.66	6/23/2022 19:00	81.44	6/22/2022 17:23	17.03	6/22/2022 16:32	5.17	6/22/2022 21:28	75.38
6/23/2022 20:19	50.61	6/23/2022 19:01	81.44	6/22/2022 17:24	17.04	6/22/2022 16:33	5.20	6/22/2022 21:29	75.34
6/23/2022 20:20	50.66	6/23/2022 19:02	81.41	6/22/2022 17:25	17.04	6/22/2022 16:34	5.18	6/22/2022 21:30	75.29
6/23/2022 20:21	50.59	6/23/2022 19:03	81.45	6/22/2022 17:26	17.03	6/22/2022 16:35	5.16	6/22/2022 21:31	75.16
6/23/2022 20:22	50.65	6/23/2022 19:04	81.44	6/22/2022 17:27	16.95	6/22/2022 16:36	5.15	6/22/2022 21:32	75.12
6/23/2022 20:23	50.62	6/23/2022 19:05	81.38	6/22/2022 17:28	17.01	6/22/2022 16:37	5.15	6/22/2022 21:33	75.01
6/23/2022 20:24	50.65	6/23/2022 19:06	81.43	6/22/2022 17:29	17.02	6/22/2022 16:38	5.18	6/22/2022 21:34	74.92
6/23/2022 20:25	50.64	6/23/2022 19:07	81.41	6/22/2022 17:30	16.98	6/22/2022 16:39	5.14	6/22/2022 21:35	74.89
6/23/2022 20:26	50.65	6/23/2022 19:08	81.40	6/22/2022 17:31	16.98	6/22/2022 16:40	5.10	6/22/2022 21:36	74.81
6/23/2022 20:27	50.62	6/23/2022 19:09	81.39	6/22/2022 17:32	16.99	6/22/2022 16:41	5.13	6/22/2022 21:37	74.72
6/23/2022 20:28	50.63	6/23/2022 19:10	81.44	6/22/2022 17:33	16.97	6/22/2022 16:42	5.15	6/22/2022 21:38	74.62
6/23/2022 20:29	50.66	6/23/2022 19:11	81.39	6/22/2022 17:34	17.00	6/22/2022 16:43	5.07	6/22/2022 21:39	74.61
6/23/2022 20:30	50.62	6/23/2022 19:12	81.40	6/22/2022 17:35	17.00	6/22/2022 16:44	5.12	6/22/2022 21:40	74.49
6/23/2022 20:31	50.66	6/23/2022 19:13	81.44	6/22/2022 17:36	17.00	6/22/2022 16:45	5.10	6/22/2022 21:41	74.45
6/23/2022 20:32	50.58	6/23/2022 19:14	81.41	6/22/2022 17:37	17.05	6/22/2022 16:46	5.17	6/22/2022 21:42	74.37
6/23/2022 20:33	50.62	6/23/2022 19:15	81.40	6/22/2022 17:38	17.01	6/22/2022 16:47	5.12	6/22/2022 21:43	74.32
6/23/2022 20:34	50.60	6/23/2022 19:16	81.41	6/22/2022 17:39	17.04	6/22/2022 16:48	5.04	6/22/2022 21:44	74.25
6/23/2022 20:35	50.60	6/23/2022 19:17	81.35	6/22/2022 17:40	16.99	6/22/2022 16:49	5.12	6/22/2022 21:45	74.18
6/23/2022 20:36	50.63	6/23/2022 19:18	81.44	6/22/2022 17:41	16.98	6/22/2022 16:50	5.02	6/22/2022 21:46	74.10
6/23/2022 20:37	50.62	6/23/2022 19:19	81.43	6/22/2022 17:42	16.95	6/22/2022 16:51	5.09	6/22/2022 21:47	74.02
6/23/2022 20:38	50.61	6/23/2022 19:20	81.40	6/22/2022 17:43	16.98	6/22/2022 16:52	5.10	6/22/2022 21:48	73.95
6/23/2022 20:39	50.61	6/23/2022 19:21	81.42	6/22/2022 17:44	16.97	6/22/2022 16:53	5.09	6/22/2022 21:49	73.90
6/23/2022 20:40	50.63	6/23/2022 19:22	81.41	6/22/2022 17:45	17.00	6/22/2022 16:54	5.10	6/22/2022 21:50	73.84
6/23/2022 20:41	50.62	6/23/2022 19:23	81.40	6/22/2022 17:46	17.02	6/22/2022 16:55	5.10	6/22/2022 21:51	73.78
6/23/2022 20:42	50.62	6/23/2022 19:24	81.45	6/22/2022 17:47	17.01	6/22/2022 16:56	5.01	6/22/2022 21:52	73.72
6/23/2022 20:43	50.64	6/23/2022 19:25	81.41	6/22/2022 17:48	17.00	6/22/2022 16:57	5.08	6/22/2022 21:53	73.63
6/23/2022 20:44	50.63	6/23/2022 19:26	81.40	6/22/2022 17:49	16.95	6/22/2022 16:58	5.05	6/22/2022 21:54	73.61
6/23/2022 20:45	50.64	6/23/2022 19:27	81.40	6/22/2022 17:50	16.97	6/22/2022 16:59	5.12	6/22/2022 21:55	73.52
6/23/2022 20:46	50.62	6/23/2022 19:28	81.44	6/22/2022 17:51	16.97	6/22/2022 17:00	5.09	6/22/2022 21:56	73.51
6/23/2022 20:47	50.63	6/23/2022 19:29	81.39	6/22/2022 17:52	16.98	6/22/2022 17:01	5.02	6/22/2022 21:57	73.42
6/23/2022 20:48	50.62	6/23/2022 19:30	81.41	6/22/2022 17:53	16.98	6/22/2022 17:02	5.05	6/22/2022 21:58	73.38
6/23/2022 20:49	50.63	6/23/2022 19:31	81.40	6/22/2022 17:54	17.01	6/22/2022 17:03	5.08	6/22/2022 21:59	73.30
6/23/2022 20:50	50.59	6/23/2022 19:32	81.47	6/22/2022 17:55	16.97	6/22/2022 17:04	5.03	6/22/2022 22:00	73.25
6/23/2022 20:51	50.62	6/23/2022 19:33	81.40	6/22/2022 17:56	17.01	6/22/2022 17:05	5.04	6/22/2022 22:01	73.19
6/23/2022 20:52	50.59	6/23/2022 19:34	81.42	6/22/2022 17:57	17.00	6/22/2022 17:06	5.08	6/22/2022 22:02	73.14
6/23/2022 20:53	50.56	6/23/2022 19:35	81.44	6/22/2022 17:58	16.98	6/22/2022 17:07	5.08	6/22/2022 22:03	73.08
6/23/2022 20:54	50.58	6/23/2022 19:36	81.42	6/22/2022 17:59	17.00	6/22/2022 17:08	5.03	6/22/2022 22:04	73.05
6/23/2022 20:55	50.61	6/23/2022 19:37	81.47	6/22/2022 18:00	17.00	6/22/2022 17:09	5.01	6/22/2022 22:05	72.95
6/23/2022 20:56	50.60	6/23/2022 19:38	81.45	6/22/2022 18:01	16.97	6/22/2022 17:10	5.05	6/22/2022 22:06	72.95
6/23/2022 20:57	50.62	6/23/2022 19:39	81.44	6/22/2022 18:02	16.99	6/22/2022 17:11	5.06	6/22/2022 22:07	72.90
6/23/2022 20:58	50.63	6/23/2022 19:40	81.43	6/22/2022 18:03	16.98	6/22/2022 17:12	5.00	6/22/2022 22:08	72.79
6/23/2022 20:59	50.57	6/23/2022 19:41	81.43	6/22/2022 18:04	16.98	6/22/2022 17:13	5.00	6/22/2022 22:09	72.75
6/23/2022 21:00	50.59	6/23/2022 19:42	81.40	6/22/2022 18:05	16.96	6/22/2022 17:14	5.05	6/22/2022 22:10	72.72
6/23/2022 21:01	50.61	6/23/2022 19:43	81.37	6/22/2022 18:06	16.98	6/22/2022 17:15	5.04	6/22/2022 22:11	72.67
6/23/2022 21:02	50.62	6/23/2022 19:44	81.43	6/22/2022 18:07	16.99	6/22/2022 17:16	5.00	6/22/2022 22:12	72.62
6/23/2022 21:03	50.58	6/23/2022 19:45	81.42	6/22/2022 18:08	16.96	6/22/2022 17:17	4.97	6/22/2022 22:13	72.57
6/23/2022 21:04	50.59	6/23/2022 19:46	81.41	6/22/2022 18:09	16.99	6/22/2022 17:18	5.01	6/22/2022 22:14	72.55
6/23/2022 21:05	50.64	6/23/2022 19:47	81.39	6/22/2022 18:10	16.97	6/22/2022 17:19	5.08	6/22/2022 22:15	72.48
6/23/2022 21:06	50.62	6/23/2022 19:48	81.39	6/22/2022 18:11	16.96	6/22/2022 17:20	5.01	6/22/2022 22:16	72.42
6/23/2022 21:07	50.64	6/23/2022 19:49	81.41	6/22/2022 18:12	17.01	6/22/2022 17:21	4.98	6/22/2022 22:17	72.34
6/23/2022 21:08	50.57	6/23/2022 19:50	81.44	6/22/2022 18:13	16.95	6/22/2022 17:22	5.00	6/22/2022 22:18	72.34
6/23/2022 21:09	50.60	6/23/2022 19:51	81.41	6/22/2022 18:14	16.99	6/22/2022 17:23	4.97	6/22/2022 22:19	72.29
6/23/2022 21:10	50.59	6/23/2022 19:52	81.43	6/22/2022 18:15	17.05	6/22/2022 17:24	4.99	6/22/2022 22:20	72.24
6/23/2022 21:11	50.59	6/23/2022 19:53	81.40	6/22/2022 18:16	16.98	6/22/2022 17:25	5.11	6/22/2022 22:21	72.16
6/23/2022 21:12	50.58	6/23/2022 19:54	81.41	6/22/2022 18:17	16.95	6/22/2022 17:26	4.96	6/22/2022 22:22	72.17
6/23/2022 21:13	50.62	6/23/2022 19:55	81.46	6/22/2022 18:18	16.94	6/22/2022 17:27	5.00	6/22/2022 22:23	72.12
6/23/2022 21:14	50.61	6/23/2022 19:56	81.43	6/22/2022 18:19	16.99	6/22/2022 17:28	4.98	6/22/2022 22:24	72.07
6/23/2022 21:15	50.59	6/23/2022 19:57	81.41	6/22/2022 18:20	16.96	6/22/2022 17:29	4.98	6/22/2022 22:25	71.98
6/23/2022 21:16	50.60	6/23/2022 19:58	81.42	6/22/2022 18:21	16.93	6/22/2022 17:30	5.09	6/22/2022 22:26	71.98

6/23/2022 21:17	50.56	6/23/2022 19:59	81.45	6/22/2022 18:22	16.99	6/22/2022 17:31	4.98	6/22/2022 22:27	71.93
6/23/2022 21:18	50.60	6/23/2022 20:00	81.40	6/22/2022 18:23	16.94	6/22/2022 17:32	4.96	6/22/2022 22:28	71.88
6/23/2022 21:19	50.58	6/23/2022 20:01	81.41	6/22/2022 18:24	16.95	6/22/2022 17:33	4.98	6/22/2022 22:29	71.86
6/23/2022 21:20	50.59	6/23/2022 20:02	81.42	6/22/2022 18:25	16.97	6/22/2022 17:34	5.24	6/22/2022 22:30	71.81
6/23/2022 21:21	50.60	6/23/2022 20:03	81.38	6/22/2022 18:26	16.97	6/22/2022 17:35	5.04	6/22/2022 22:31	71.74
6/23/2022 21:22	50.61	6/23/2022 20:04	81.41	6/22/2022 18:27	16.97	6/22/2022 17:36	4.99	6/22/2022 22:32	71.71
6/23/2022 21:23	50.56	6/23/2022 20:05	81.41	6/22/2022 18:28	16.88	6/22/2022 17:37	5.03	6/22/2022 22:33	71.67
6/23/2022 21:24	50.59	6/23/2022 20:06	81.40	6/22/2022 18:29	16.97	6/22/2022 17:38	5.03	6/22/2022 22:34	71.65
6/23/2022 21:25	50.59	6/23/2022 20:07	81.42	6/22/2022 18:30	16.95	6/22/2022 17:39	4.98	6/22/2022 22:35	71.60
6/23/2022 21:26	50.63	6/23/2022 20:08	81.40	6/22/2022 18:31	16.88	6/22/2022 17:40	4.97	6/22/2022 22:36	71.55
6/23/2022 21:27	50.59	6/23/2022 20:09	81.44	6/22/2022 18:32	16.96	6/22/2022 17:41	4.93	6/22/2022 22:37	71.50
6/23/2022 21:28	50.62	6/23/2022 20:10	81.38	6/22/2022 18:33	16.97	6/22/2022 17:42	4.99	6/22/2022 22:38	71.47
6/23/2022 21:29	50.55	6/23/2022 20:11	81.42	6/22/2022 18:34	16.95	6/22/2022 17:43	4.94	6/22/2022 22:39	71.44
6/23/2022 21:30	50.57	6/23/2022 20:12	81.42	6/22/2022 18:35	16.93	6/22/2022 17:44	4.93	6/22/2022 22:40	71.39
6/23/2022 21:31	50.56	6/23/2022 20:13	81.37	6/22/2022 18:36	16.95	6/22/2022 17:45	4.93	6/22/2022 22:41	71.36
6/23/2022 21:32	50.60	6/23/2022 20:14	81.43	6/22/2022 18:37	16.93	6/22/2022 17:46	4.89	6/22/2022 22:42	71.31
6/23/2022 21:33	50.63	6/23/2022 20:15	81.42	6/22/2022 18:38	16.96	6/22/2022 17:47	4.87	6/22/2022 22:43	71.30
6/23/2022 21:34	50.56	6/23/2022 20:16	81.45	6/22/2022 18:39	17.00	6/22/2022 17:48	4.93	6/22/2022 22:44	71.23
6/23/2022 21:35	50.57	6/23/2022 20:17	81.40	6/22/2022 18:40	16.96	6/22/2022 17:49	4.92	6/22/2022 22:45	71.25
6/23/2022 21:36	50.58	6/23/2022 20:18	81.42	6/22/2022 18:41	16.94	6/22/2022 17:50	4.91	6/22/2022 22:46	71.18
6/23/2022 21:37	50.55	6/23/2022 20:19	81.39	6/22/2022 18:42	16.97	6/22/2022 17:51	4.89	6/22/2022 22:47	71.16
6/23/2022 21:38	50.58	6/23/2022 20:20	81.41	6/22/2022 18:43	16.92	6/22/2022 17:52	4.90	6/22/2022 22:48	71.08
6/23/2022 21:39	50.58	6/23/2022 20:21	81.42	6/22/2022 18:44	17.00	6/22/2022 17:53	4.91	6/22/2022 22:49	75.48
6/23/2022 21:40	50.58	6/23/2022 20:22	81.44	6/22/2022 18:45	16.92	6/22/2022 17:54	4.89	6/22/2022 22:50	77.50
6/23/2022 21:41	50.59	6/23/2022 20:23	81.44	6/22/2022 18:46	16.90	6/22/2022 17:55	4.87	6/22/2022 22:51	77.30
6/23/2022 21:42	50.57	6/23/2022 20:24	81.45	6/22/2022 18:47	16.90	6/22/2022 17:56	4.88	6/22/2022 22:52	77.15
6/23/2022 21:43	50.60	6/23/2022 20:25	81.40	6/22/2022 18:48	16.91	6/22/2022 17:57	4.85	6/22/2022 22:53	77.04
6/23/2022 21:44	50.56	6/23/2022 20:26	81.43	6/22/2022 18:49	16.95	6/22/2022 17:58	4.83	6/22/2022 22:54	76.93
6/23/2022 21:45	50.55	6/23/2022 20:27	81.43	6/22/2022 18:50	16.94	6/22/2022 17:59	4.92	6/22/2022 22:55	76.83
6/23/2022 21:46	50.59	6/23/2022 20:28	81.40	6/22/2022 18:51	16.94	6/22/2022 18:00	5.09	6/22/2022 22:56	76.72
6/23/2022 21:47	50.58	6/23/2022 20:29	81.44	6/22/2022 18:52	16.94	6/22/2022 18:01	4.99	6/22/2022 22:57	76.61
6/23/2022 21:48	50.58	6/23/2022 20:30	81.44	6/22/2022 18:53	16.88	6/22/2022 18:02	4.86	6/22/2022 22:58	76.50
6/23/2022 21:49	50.58	6/23/2022 20:31	81.44	6/22/2022 18:54	16.92	6/22/2022 18:03	4.89	6/22/2022 22:59	76.43
6/23/2022 21:50	50.57	6/23/2022 20:32	81.44	6/22/2022 18:55	16.96	6/22/2022 18:04	4.94	6/22/2022 23:00	76.33
6/23/2022 21:51	50.57	6/23/2022 20:33	81.39	6/22/2022 18:56	16.95	6/22/2022 18:05	4.90	6/22/2022 23:01	76.20
6/23/2022 21:52	50.57	6/23/2022 20:34	81.42	6/22/2022 18:57	16.94	6/22/2022 18:06	4.84	6/22/2022 23:02	76.14
6/23/2022 21:53	50.58	6/23/2022 20:35	81.44	6/22/2022 18:58	16.91	6/22/2022 18:07	4.86	6/22/2022 23:03	76.04
6/23/2022 21:54	50.61	6/23/2022 20:36	81.40	6/22/2022 18:59	16.90	6/22/2022 18:08	4.88	6/22/2022 23:04	75.94
6/23/2022 21:55	50.59	6/23/2022 20:37	81.45	6/22/2022 19:00	16.95	6/22/2022 18:09	4.81	6/22/2022 23:05	75.78
6/23/2022 21:56	50.62	6/23/2022 20:38	81.39	6/22/2022 19:01	16.96	6/22/2022 18:10	4.81	6/22/2022 23:06	75.73
6/23/2022 21:57	50.62	6/23/2022 20:39	81.40	6/22/2022 19:02	16.94	6/22/2022 18:11	4.84	6/22/2022 23:07	75.63
6/23/2022 21:58	50.57	6/23/2022 20:40	81.43	6/22/2022 19:03	16.91	6/22/2022 18:12	4.85	6/22/2022 23:08	75.54
6/23/2022 21:59	50.53	6/23/2022 20:41	81.41	6/22/2022 19:04	16.93	6/22/2022 18:13	4.81	6/22/2022 23:09	75.46
6/23/2022 22:00	50.56	6/23/2022 20:42	81.44	6/22/2022 19:05	16.95	6/22/2022 18:14	4.78	6/22/2022 23:10	75.36
6/23/2022 22:01	50.57	6/23/2022 20:43	81.41	6/22/2022 19:06	16.92	6/22/2022 18:15	4.78	6/22/2022 23:11	75.32
6/23/2022 22:02	50.60	6/23/2022 20:44	81.42	6/22/2022 19:07	16.92	6/22/2022 18:16	4.83	6/22/2022 23:12	75.20
6/23/2022 22:03	50.58	6/23/2022 20:45	81.38	6/22/2022 19:08	16.91	6/22/2022 18:17	4.79	6/22/2022 23:13	75.09
6/23/2022 22:04	50.57	6/23/2022 20:46	81.40	6/22/2022 19:09	16.91	6/22/2022 18:18	4.79	6/22/2022 23:14	75.03
6/23/2022 22:05	50.56	6/23/2022 20:47	81.43	6/22/2022 19:10	16.94	6/22/2022 18:19	4.78	6/22/2022 23:15	74.95
6/23/2022 22:06	50.57	6/23/2022 20:48	81.41	6/22/2022 19:11	16.96	6/22/2022 18:20	4.82	6/22/2022 23:16	74.85
6/23/2022 22:07	50.56	6/23/2022 20:49	81.41	6/22/2022 19:12	16.93	6/22/2022 18:21	4.77	6/22/2022 23:17	74.79
6/23/2022 22:08	50.54	6/23/2022 20:50	81.40	6/22/2022 19:13	16.90	6/22/2022 18:22	4.78	6/22/2022 23:18	74.69
6/23/2022 22:09	50.57	6/23/2022 20:51	81.47	6/22/2022 19:14	16.92	6/22/2022 18:23	4.74	6/22/2022 23:19	74.69
6/23/2022 22:10	50.58	6/23/2022 20:52	81.40	6/22/2022 19:15	16.91	6/22/2022 18:24	4.70	6/22/2022 23:20	74.58
6/23/2022 22:11	50.56	6/23/2022 20:53	81.42	6/22/2022 19:16	16.90	6/22/2022 18:25	4.77	6/22/2022 23:21	74.51
6/23/2022 22:12	50.55	6/23/2022 20:54	81.40	6/22/2022 19:17	16.95	6/22/2022 18:26	4.73	6/22/2022 23:22	74.43
6/23/2022 22:13	50.54	6/23/2022 20:55	81.48	6/22/2022 19:18	16.93	6/22/2022 18:27	4.80	6/22/2022 23:23	74.34
6/23/2022 22:14	50.57	6/23/2022 20:56	81.43	6/22/2022 19:19	16.94	6/22/2022 18:28	4.70	6/22/2022 23:24	74.26
6/23/2022 22:15	50.56	6/23/2022 20:57	81.42	6/22/2022 19:20	16.91	6/22/2022 18:29	4.72	6/22/2022 23:25	74.23
6/23/2022 22:16	53.16	6/23/2022 20:58	81.43	6/22/2022 19:21	16.97	6/22/2022 18:30	4.70	6/22/2022 23:26	74.10
6/23/2022 22:17	54.66	6/23/2022 20:59	81.43	6/22/2022 19:22	16.94	6/22/2022 18:31	4.77	6/22/2022 23:27	74.01
6/23/2022 22:18	55.36	6/23/2022 21:00	81.41	6/22/2022 19:23	16.91	6/22/2022 18:32	4.73	6/22/2022 23:28	73.97
6/23/2022 22:19	55.00	6/23/2022 21:01	81.41	6/22/2022 19:24	16.92	6/22/2022 18:33	4.72	6/22/2022 23:29	73.92
6/23/2022 22:20	53.05	6/23/2022 21:02	81.44	6/22/2022 19:25	16.91	6/22/2022 18:34	4.76	6/22/2022 23:30	73.82
6/23/2022 22:21	52.31	6/23/2022 21:03	81.40	6/22/2022 19:26	16.91	6/22/2022 18:35	4.74	6/22/2022 23:31	73.81
6/23/2022 22:22	51.96	6/23/2022 21:04	81.42	6/22/2022 19:27	16.96	6/22/2022 18:36	4.69	6/22/2022 23:32	73.72
6/23/2022 22:23	51.77	6/23/2022 21:05	81.41	6/22/2022 19:28	16.93	6/22/2022 18:37	4.70	6/22/2022 23:33	73.67
6/23/2022 22:24	51.61	6/23/2022 21:06	81.39	6/22/2022 19:29	16.94	6/22/2022 18:38	4.72	6/22/2022 23:34	73.61
6/23/2022 22:25	51.53	6/23/2022 21:07	81.43	6/22/2022 19:30	16.92	6/22/2022 18:39	4.71	6/22/2022 23:35	73.51
6/23/2022 22:26	51.41	6/23/2022 21:08	81.45	6/22/2022 19:31	16.92	6/22/2022 18:40	4.68	6/22/2022 23:36	73.44
6/23/2022 22:27	51.37	6/23/2022 21:09	81.40	6/22/2022 19:32	16.94	6/22/2022 18:41	4.68	6/22/2022 23:37	73.41
6/23/2022 22:28	51.33	6/23/2022 21:10	81.45	6/22/2022 19:33	16.92	6/22/2022 18:42	4.72	6/22/2022 23:38	73.32
6/23/2022 22:29	51.32	6/23/2022 21:11	81.37	6/22/2022 19:34	16.91	6/22/2022 18:43	4.75	6/22/2022 23:39	73.30
6/23/2022 22:30	51.25	6/23/2022 21:12	81.42	6/22/2022 19:35	16.93	6/22/2022 18:44	4.68	6/22/2022 23:40	73.19
6/23/2022 22:31	51.26	6/23/2022 21:13	81.43	6/22/2022 19:36	16.88	6/22/2022 18:45	4.64	6/22/2022 23:41	73.17
6/23/2022 22:32	51.18	6/23/2022 21:14	81.44	6/22/2022 19:37	16.91	6/22/2022 18:46	4.69	6/22/2022 23:42	73.11
6/23/2022 22:33	51.16	6/23/2022 21:15	81.42	6/22/2022 19:38	16.93	6/22/2022 18:47	4.67	6/22/2022 23:43	73.05
6/23/2022 22:34	51.13	6/23/2022 21:16	81.38	6/22/2022 19:39	16.94	6/22/2022 18:48	4.64	6/22/2022 23:44	73.01
6/23/2022 22:35	51.17	6/23/2022 21:17	81.45	6/22/2022 19:40	16.92	6/22/2022 18:49	4.95	6/22/2022 23:45	72.90
6/23/2022 22:36	51.12	6/23/2022 21:18	81.41	6/22/2022 19:41	16.94	6/22/2022 18:50	4.75	6/22/2022 23:46	72.83
6/23/2022 22:37	51.10	6/23/2022 21:19	81.39	6/22/2022 19:42	16.90	6/22/2022 18:51	4.75	6/22/2022 23:47	72.81
6/23/2022 22:38	51.14	6/23/2022 21:20	81.41	6/22/2022 19:43	16.91	6/22/2022 18:52	4.88	6/22/2022 23:48	72.77
6/23/2022 22:39	51.05	6/23/2022 21:21	81.41	6/22/2022 19:44	16.87	6/22/2022 18:53	4.71	6/22/2022 23:49	72.71
6/23/2022 22:40	51.05	6/23/2022 21:22	81.38	6/22/2022 19:45	16.94	6/22/2022 18:54	4.73	6/22/2022 23:50	72.67
6/23/2022 22:41	51.06	6/23/2022 21:23	81.39	6/22/2022 19:46	16.89	6/22/2022 18:55	4.75	6/22/2022 23:51	72.61
6/23/2022 22:42	51.06	6/23/2022 21:24	81.41	6/22/2022 19:47	16.90	6/22/2022 18:56	4.71	6/22/2022 23:52	72.55
6/23/2022 22:43	51.02	6/23/2022 21:25	81.42	6/22/2022 19:48	16.87	6/22/2022 18:57	4.66	6/22/2022 23:53	72.49
6/23/2022 22:44	51.02	6/23/2022 21:26	81.42	6/22/2022 19:49	16.88	6/22/2022 18:58	4.64	6/22/2022 23:54	72.47

6/23/2022 22:45	51.03	6/23/2022 21:27	81.39	6/22/2022 19:50	16.89	6/22/2022 18:59	4.71	6/22/2022 23:55	72.41
6/23/2022 22:46	50.99	6/23/2022 21:28	81.41	6/22/2022 19:51	16.88	6/22/2022 19:00	4.69	6/22/2022 23:56	72.35
6/23/2022 22:47	51.00	6/23/2022 21:29	81.41	6/22/2022 19:52	16.93	6/22/2022 19:01	4.61	6/22/2022 23:57	72.29
6/23/2022 22:48	50.98	6/23/2022 21:30	81.41	6/22/2022 19:53	16.92	6/22/2022 19:02	5.16	6/22/2022 23:58	72.25
6/23/2022 22:49	50.99	6/23/2022 21:31	81.44	6/22/2022 19:54	16.91	6/22/2022 19:03	5.21	6/22/2022 23:59	72.24
6/23/2022 22:50	50.95	6/23/2022 21:32	82.19	6/22/2022 19:55	16.94	6/22/2022 19:04	4.96	6/23/2022 0:00	72.15
6/23/2022 22:51	50.91	6/23/2022 21:33	82.07	6/22/2022 19:56	16.89	6/22/2022 19:05	4.88	6/23/2022 0:01	72.14
6/23/2022 22:52	50.95	6/23/2022 21:34	82.33	6/22/2022 19:57	16.88	6/22/2022 19:06	4.79	6/23/2022 0:02	72.06
6/23/2022 22:53	50.94	6/23/2022 21:35	82.72	6/22/2022 19:58	16.87	6/22/2022 19:07	4.76	6/23/2022 0:03	72.02
6/23/2022 22:54	50.93	6/23/2022 21:36	82.56	6/22/2022 19:59	16.89	6/22/2022 19:08	4.73	6/23/2022 0:04	71.92
6/23/2022 22:55	50.92	6/23/2022 21:37	82.32	6/22/2022 20:00	16.90	6/22/2022 19:09	4.71	6/23/2022 0:05	71.93
6/23/2022 22:56	50.93	6/23/2022 21:38	82.23	6/22/2022 20:01	16.87	6/22/2022 19:10	4.79	6/23/2022 0:06	71.90
6/23/2022 22:57	50.90	6/23/2022 21:39	82.13	6/22/2022 20:02	16.89	6/22/2022 19:11	4.73	6/23/2022 0:07	71.85
6/23/2022 22:58	50.90	6/23/2022 21:40	82.07	6/22/2022 20:03	16.90	6/22/2022 19:12	4.68	6/23/2022 0:08	71.79
6/23/2022 22:59	50.94	6/23/2022 21:41	81.97	6/22/2022 20:04	16.87	6/22/2022 19:13	4.69	6/23/2022 0:09	71.72
6/23/2022 23:00	50.90	6/23/2022 21:42	81.92	6/22/2022 20:05	16.89	6/22/2022 19:14	4.72	6/23/2022 0:10	71.72
6/23/2022 23:01	50.88	6/23/2022 21:43	81.86	6/22/2022 20:06	16.87	6/22/2022 19:15	4.62	6/23/2022 0:11	71.65
6/23/2022 23:02	50.86	6/23/2022 21:44	81.81	6/22/2022 20:07	16.92	6/22/2022 19:16	4.65	6/23/2022 0:12	71.61
6/23/2022 23:03	50.87	6/23/2022 21:45	81.83	6/22/2022 20:08	16.84	6/22/2022 19:17	4.67	6/23/2022 0:13	71.57
6/23/2022 23:04	50.87	6/23/2022 21:46	81.72	6/22/2022 20:09	16.87	6/22/2022 19:18	4.68	6/23/2022 0:14	71.54
6/23/2022 23:05	50.87	6/23/2022 21:47	81.72	6/22/2022 20:10	16.92	6/22/2022 19:19	4.62	6/23/2022 0:15	71.50
6/23/2022 23:06	50.86	6/23/2022 21:48	81.69	6/22/2022 20:11	16.92	6/22/2022 19:20	4.63	6/23/2022 0:16	71.45
6/23/2022 23:07	50.85	6/23/2022 21:49	81.69	6/22/2022 20:12	16.85	6/22/2022 19:21	4.80	6/23/2022 0:17	71.42
6/23/2022 23:08	50.85	6/23/2022 21:50	81.66	6/22/2022 20:13	16.90	6/22/2022 19:22	4.76	6/23/2022 0:18	71.38
6/23/2022 23:09	50.82	6/23/2022 21:51	81.61	6/22/2022 20:14	16.95	6/22/2022 19:23	4.71	6/23/2022 0:19	71.35
6/23/2022 23:10	50.83	6/23/2022 21:52	81.66	6/22/2022 20:15	16.91	6/22/2022 19:24	4.67	6/23/2022 0:20	71.33
6/23/2022 23:11	50.82	6/23/2022 21:53	81.61	6/22/2022 20:16	16.86	6/22/2022 19:25	4.60	6/23/2022 0:21	71.26
6/23/2022 23:12	50.85	6/23/2022 21:54	81.58	6/22/2022 20:17	16.85	6/22/2022 19:26	4.95	6/23/2022 0:22	71.19
6/23/2022 23:13	50.82	6/23/2022 21:55	81.60	6/22/2022 20:18	22.56	6/22/2022 19:27	4.97	6/23/2022 0:23	71.19
6/23/2022 23:14	50.79	6/23/2022 21:56	81.58	6/22/2022 20:19	25.96	6/22/2022 19:28	4.80	6/23/2022 0:24	71.13
6/23/2022 23:15	50.86	6/23/2022 21:57	81.52	6/22/2022 20:20	28.28	6/22/2022 19:29	4.75	6/23/2022 0:25	71.14
6/23/2022 23:16	50.83	6/23/2022 21:58	81.53	6/22/2022 20:21	26.76	6/22/2022 19:30	4.69	6/23/2022 0:26	71.06
6/23/2022 23:17	50.82	6/23/2022 21:59	81.53	6/22/2022 20:22	24.23	6/22/2022 19:31	4.71	6/23/2022 0:27	71.02
6/23/2022 23:18	50.82	6/23/2022 22:00	81.52	6/22/2022 20:23	22.73	6/22/2022 19:32	4.68	6/23/2022 0:28	71.00
6/23/2022 23:19	50.82	6/23/2022 22:01	81.58	6/22/2022 20:24	21.80	6/22/2022 19:33	4.64	6/23/2022 0:29	71.00
6/23/2022 23:20	50.82	6/23/2022 22:02	81.46	6/22/2022 20:25	21.18	6/22/2022 19:34	4.63	6/23/2022 0:30	70.93
6/23/2022 23:21	50.80	6/23/2022 22:03	81.53	6/22/2022 20:26	20.71	6/22/2022 19:35	4.66	6/23/2022 0:31	70.92
6/23/2022 23:22	50.81	6/23/2022 22:04	81.48	6/22/2022 20:27	20.34	6/22/2022 19:36	4.62	6/23/2022 0:32	70.87
6/23/2022 23:23	50.84	6/23/2022 22:05	81.52	6/22/2022 20:28	20.09	6/22/2022 19:37	4.60	6/23/2022 0:33	70.86
6/23/2022 23:24	50.82	6/23/2022 22:06	81.49	6/22/2022 20:29	19.89	6/22/2022 19:38	4.62	6/23/2022 0:34	70.78
6/23/2022 23:25	50.77	6/23/2022 22:07	81.50	6/22/2022 20:30	19.69	6/22/2022 19:39	4.64	6/23/2022 0:35	70.77
6/23/2022 23:26	50.78	6/23/2022 22:08	81.48	6/22/2022 20:31	25.27	6/22/2022 19:40	4.61	6/23/2022 0:36	70.73
6/23/2022 23:27	50.78	6/23/2022 22:09	81.47	6/22/2022 20:32	28.50	6/22/2022 19:41	4.81	6/23/2022 0:37	70.72
6/23/2022 23:28	50.79	6/23/2022 22:10	81.52	6/22/2022 20:33	30.51	6/22/2022 19:42	4.69	6/23/2022 0:38	70.65
6/23/2022 23:29	50.79	6/23/2022 22:11	81.50	6/22/2022 20:34	26.84	6/22/2022 19:43	4.65	6/23/2022 0:39	70.65
6/23/2022 23:30	50.83	6/23/2022 22:12	81.51	6/22/2022 20:35	24.94	6/22/2022 19:44	4.66	6/23/2022 0:40	70.58
6/23/2022 23:31	50.82	6/23/2022 22:13	81.50	6/22/2022 20:36	23.67	6/22/2022 19:45	4.58	6/23/2022 0:41	70.55
6/23/2022 23:32	50.80	6/23/2022 22:14	81.54	6/22/2022 20:37	22.86	6/22/2022 19:46	4.66	6/23/2022 0:42	70.52
6/23/2022 23:33	50.75	6/23/2022 22:15	81.48	6/22/2022 20:38	22.25	6/22/2022 19:47	4.60	6/23/2022 0:43	70.48
6/23/2022 23:34	50.79	6/23/2022 22:16	81.49	6/22/2022 20:39	21.83	6/22/2022 19:48	4.60	6/23/2022 0:44	70.47
6/23/2022 23:35	50.79	6/23/2022 22:17	81.51	6/22/2022 20:40	21.46	6/22/2022 19:49	4.56	6/23/2022 0:45	70.46
6/23/2022 23:36	50.79	6/23/2022 22:18	81.48	6/22/2022 20:41	21.21	6/22/2022 19:50	4.68	6/23/2022 0:46	70.41
6/23/2022 23:37	50.79	6/23/2022 22:19	81.46	6/22/2022 20:42	20.93	6/22/2022 19:51	4.53	6/23/2022 0:47	70.37
6/23/2022 23:38	50.80	6/23/2022 22:20	81.50	6/22/2022 20:43	20.77	6/22/2022 19:52	4.55	6/23/2022 0:48	70.34
6/23/2022 23:39	50.79	6/23/2022 22:21	81.47	6/22/2022 20:44	20.56	6/22/2022 19:53	4.74	6/23/2022 0:49	70.34
6/23/2022 23:40	50.76	6/23/2022 22:22	81.47	6/22/2022 20:45	20.40	6/22/2022 19:54	4.72	6/23/2022 0:50	70.31
6/23/2022 23:41	50.75	6/23/2022 22:23	81.43	6/22/2022 20:46	20.31	6/22/2022 19:55	4.82	6/23/2022 0:51	70.25
6/23/2022 23:42	50.77	6/23/2022 22:24	81.46	6/22/2022 20:47	20.15	6/22/2022 19:56	4.90	6/23/2022 0:52	70.26
6/23/2022 23:43	50.74	6/23/2022 22:25	81.44	6/22/2022 20:48	20.02	6/22/2022 19:57	4.78	6/23/2022 0:53	70.22
6/23/2022 23:44	50.73	6/23/2022 22:26	81.46	6/22/2022 20:49	19.90	6/22/2022 19:58	4.78	6/23/2022 0:54	70.16
6/23/2022 23:45	50.74	6/23/2022 22:27	81.48	6/22/2022 20:50	19.80	6/22/2022 19:59	4.66	6/23/2022 0:55	70.17
6/23/2022 23:46	50.73	6/23/2022 22:28	81.44	6/22/2022 20:51	19.76	6/22/2022 20:00	4.66	6/23/2022 0:56	70.13
6/23/2022 23:47	50.76	6/23/2022 22:29	81.45	6/22/2022 20:52	19.66	6/22/2022 20:01	4.60	6/23/2022 0:57	70.08
6/23/2022 23:48	50.76	6/23/2022 22:30	81.46	6/22/2022 20:53	19.56	6/22/2022 20:02	4.62	6/23/2022 0:58	70.04
6/23/2022 23:49	50.75	6/23/2022 22:31	81.45	6/22/2022 20:54	19.46	6/22/2022 20:03	4.61	6/23/2022 0:59	70.06
6/23/2022 23:50	50.74	6/23/2022 22:32	81.44	6/22/2022 20:55	19.44	6/22/2022 20:04	4.55	6/23/2022 1:00	70.02
6/23/2022 23:51	50.76	6/23/2022 22:33	81.46	6/22/2022 20:56	19.41	6/22/2022 20:05	4.60	6/23/2022 1:01	70.01
6/23/2022 23:52	50.76	6/23/2022 22:34	81.49	6/22/2022 20:57	19.28	6/22/2022 20:06	4.53	6/23/2022 1:02	69.96
6/23/2022 23:53	50.70	6/23/2022 22:35	81.48	6/22/2022 20:58	19.30	6/22/2022 20:07	4.60	6/23/2022 1:03	69.90
6/23/2022 23:54	50.71	6/23/2022 22:36	81.41	6/22/2022 20:59	19.25	6/22/2022 20:08	4.64	6/23/2022 1:04	69.88
6/23/2022 23:55	50.72	6/23/2022 22:37	81.46	6/22/2022 21:00	19.18	6/22/2022 20:09	4.60	6/23/2022 1:05	69.89
6/23/2022 23:56	50.70	6/23/2022 22:38	81.44	6/22/2022 21:01	19.09	6/22/2022 20:10	4.58	6/23/2022 1:06	69.85
6/23/2022 23:57	50.73	6/23/2022 22:39	81.44	6/22/2022 21:02	19.05	6/22/2022 20:11	4.55	6/23/2022 1:07	69.85
6/23/2022 23:58	50.74	6/23/2022 22:40	81.44	6/22/2022 21:03	19.02	6/22/2022 20:12	4.58	6/23/2022 1:08	69.80
6/23/2022 23:59	50.76	6/23/2022 22:41	81.47	6/22/2022 21:04	18.98	6/22/2022 20:13	4.56	6/23/2022 1:09	69.79
6/24/2022 0:00	50.72	6/23/2022 22:42	81.44	6/22/2022 21:05	19.00	6/22/2022 20:14	4.53	6/23/2022 1:10	69.79
6/24/2022 0:01	50.71	6/23/2022 22:43	81.42	6/22/2022 21:06	18.89	6/22/2022 20:15	4.58	6/23/2022 1:11	69.74
6/24/2022 0:02	50.71	6/23/2022 22:44	81.45	6/22/2022 21:07	18.86	6/22/2022 20:16	4.61	6/23/2022 1:12	69.72
6/24/2022 0:03	50.72	6/23/2022 22:45	81.43	6/22/2022 21:08	18.81	6/22/2022 20:17	4.54	6/23/2022 1:13	69.71
6/24/2022 0:04	50.71	6/23/2022 22:46	81.45	6/22/2022 21:09	18.78	6/22/2022 20:18	4.55	6/23/2022 1:14	69.66
6/24/2022 0:05	50.72	6/23/2022 22:47	81.47	6/22/2022 21:10	18.74	6/22/2022 20:19	4.55	6/23/2022 1:15	69.67
6/24/2022 0:06	50.73	6/23/2022 22:48	81.47	6/22/2022 21:11	18.79	6/22/2022 20:20	4.60	6/23/2022 1:16	69.62
6/24/2022 0:07	50.71	6/23/2022 22:49	81.44	6/22/2022 21:12	18.71	6/22/2022 20:21	4.54	6/23/2022 1:17	69.60
6/24/2022 0:08	50.70	6/23/2022 22:50	81.45	6/22/2022 21:13	18.68	6/22/2022 20:22	4.54	6/23/2022 1:18	69.56
6/24/2022 0:09	50.69	6/23/2022 22:51	81.47	6/22/2022 21:14	18.63	6/22/2022 20:23	4.56	6/23/2022 1:19	69.58
6/24/2022 0:10	50.68	6/23/2022 22:52	81.43	6/22/2022 21:15	18.65	6/22/2022 20:24	4.52	6/23/2022 1:20	69.51
6/24/2022 0:11	50.73	6/23/2022 22:53	81.45	6/22/2022 21:16	18.63	6/22/2022 20:25	4.50	6/23/2022 1:21	69.52
6/24/2022 0:12	50.73	6/23/2022 22:54	81.43	6/22/2022 21:17	18.62	6/22/2022 20:26	4.46	6/23/2022 1:22	69.52

6/24/2022 0:13	50.70	6/23/2022 22:55	81.44	6/22/2022 21:18	18.58	6/22/2022 20:27	4.51	6/23/2022 1:23	69.49
6/24/2022 0:14	50.70	6/23/2022 22:56	81.45	6/22/2022 21:19	18.53	6/22/2022 20:28	4.46	6/23/2022 1:24	69.47
6/24/2022 0:15	50.70	6/23/2022 22:57	81.45	6/22/2022 21:20	18.56	6/22/2022 20:29	4.50	6/23/2022 1:25	69.45
6/24/2022 0:16	50.69	6/23/2022 22:58	81.45	6/22/2022 21:21	18.46	6/22/2022 20:30	4.48	6/23/2022 1:26	69.41
6/24/2022 0:17	50.65	6/23/2022 22:59	81.43	6/22/2022 21:22	18.44	6/22/2022 20:31	4.52	6/23/2022 1:27	69.41
6/24/2022 0:18	50.67	6/23/2022 23:00	81.45	6/22/2022 21:23	18.45	6/22/2022 20:32	4.51	6/23/2022 1:28	69.39
6/24/2022 0:19	50.68	6/23/2022 23:01	81.46	6/22/2022 21:24	18.44	6/22/2022 20:33	4.50	6/23/2022 1:29	69.38
6/24/2022 0:20	50.67	6/23/2022 23:02	81.44	6/22/2022 21:25	18.49	6/22/2022 20:34	4.48	6/23/2022 1:30	69.32
6/24/2022 0:21	50.69	6/23/2022 23:03	81.45	6/22/2022 21:26	18.45	6/22/2022 20:35	4.54	6/23/2022 1:31	69.32
6/24/2022 0:22	50.66	6/23/2022 23:04	81.49	6/22/2022 21:27	18.42	6/22/2022 20:36	4.49	6/23/2022 1:32	69.32
6/24/2022 0:23	50.68	6/23/2022 23:05	81.47	6/22/2022 21:28	18.40	6/22/2022 20:37	4.44	6/23/2022 1:33	69.31
6/24/2022 0:24	50.71	6/23/2022 23:06	81.40	6/22/2022 21:29	18.39	6/22/2022 20:38	4.49	6/23/2022 1:34	69.25
6/24/2022 0:25	50.67	6/23/2022 23:07	81.44	6/22/2022 21:30	18.34	6/22/2022 20:39	4.47	6/23/2022 1:35	69.23
6/24/2022 0:26	50.66	6/23/2022 23:08	81.46	6/22/2022 21:31	18.38	6/22/2022 20:40	4.48	6/23/2022 1:36	69.19
6/24/2022 0:27	50.70	6/23/2022 23:09	81.42	6/22/2022 21:32	18.32	6/22/2022 20:41	4.48	6/23/2022 1:37	69.21
6/24/2022 0:28	50.67	6/23/2022 23:10	81.46	6/22/2022 21:33	18.29	6/22/2022 20:42	4.48	6/23/2022 1:38	69.15
6/24/2022 0:29	50.70	6/23/2022 23:11	81.46	6/22/2022 21:34	18.32	6/22/2022 20:43	4.45	6/23/2022 1:39	69.16
6/24/2022 0:30	50.65	6/23/2022 23:12	81.47	6/22/2022 21:35	18.30	6/22/2022 20:44	4.42	6/23/2022 1:40	69.13
6/24/2022 0:31	50.69	6/23/2022 23:13	81.42	6/22/2022 21:36	18.27	6/22/2022 20:45	4.46	6/23/2022 1:41	69.10
6/24/2022 0:32	50.65	6/23/2022 23:14	81.43	6/22/2022 21:37	18.26	6/22/2022 20:46	4.54	6/23/2022 1:42	69.08
6/24/2022 0:33	50.67	6/23/2022 23:15	81.50	6/22/2022 21:38	18.25	6/22/2022 20:47	4.67	6/23/2022 1:43	69.11
6/24/2022 0:34	50.73	6/23/2022 23:16	81.41	6/22/2022 21:39	18.22	6/22/2022 20:48	4.76	6/23/2022 1:44	69.05
6/24/2022 0:35	50.67	6/23/2022 23:17	81.41	6/22/2022 21:40	18.20	6/22/2022 20:49	4.58	6/23/2022 1:45	69.03
6/24/2022 0:36	50.65	6/23/2022 23:18	81.46	6/22/2022 21:41	18.20	6/22/2022 20:50	4.52	6/23/2022 1:46	69.05
6/24/2022 0:37	50.67	6/23/2022 23:19	81.48	6/22/2022 21:42	18.18	6/22/2022 20:51	4.59	6/23/2022 1:47	69.00
6/24/2022 0:38	50.70	6/23/2022 23:20	81.42	6/22/2022 21:43	18.17	6/22/2022 20:52	4.62	6/23/2022 1:48	69.00
6/24/2022 0:39	50.66	6/23/2022 23:21	81.44	6/22/2022 21:44	18.15	6/22/2022 20:53	4.52	6/23/2022 1:49	68.97
6/24/2022 0:40	50.65	6/23/2022 23:22	81.46	6/22/2022 21:45	18.16	6/22/2022 20:54	4.57	6/23/2022 1:50	68.96
6/24/2022 0:41	50.68	6/23/2022 23:23	81.45	6/22/2022 21:46	18.14	6/22/2022 20:55	4.55	6/23/2022 1:51	68.92
6/24/2022 0:42	50.65	6/23/2022 23:24	81.45	6/22/2022 21:47	18.12	6/22/2022 20:56	4.47	6/23/2022 1:52	68.94
6/24/2022 0:43	50.64	6/23/2022 23:25	81.47	6/22/2022 21:48	18.12	6/22/2022 20:57	4.52	6/23/2022 1:53	68.89
6/24/2022 0:44	50.64	6/23/2022 23:26	81.47	6/22/2022 21:49	18.13	6/22/2022 20:58	4.52	6/23/2022 1:54	68.88
6/24/2022 0:45	50.66	6/23/2022 23:27	81.42	6/22/2022 21:50	18.16	6/22/2022 20:59	4.49	6/23/2022 1:55	68.88
6/24/2022 0:46	50.66	6/23/2022 23:28	81.47	6/22/2022 21:51	18.14	6/22/2022 21:00	4.46	6/23/2022 1:56	68.85
6/24/2022 0:47	50.67	6/23/2022 23:29	81.46	6/22/2022 21:52	18.12	6/22/2022 21:01	4.47	6/23/2022 1:57	68.81
6/24/2022 0:48	50.66	6/23/2022 23:30	81.48	6/22/2022 21:53	18.12	6/22/2022 21:02	4.43	6/23/2022 1:58	68.84
6/24/2022 0:49	50.66	6/23/2022 23:31	81.46	6/22/2022 21:54	18.10	6/22/2022 21:03	4.55	6/23/2022 1:59	68.82
6/24/2022 0:50	50.70	6/23/2022 23:32	81.45	6/22/2022 21:55	18.12	6/22/2022 21:04	4.63	6/23/2022 2:00	68.80
6/24/2022 0:51	50.63	6/23/2022 23:33	81.44	6/22/2022 21:56	18.12	6/22/2022 21:05	4.53	6/23/2022 2:01	68.77
6/24/2022 0:52	50.64	6/23/2022 23:34	81.45	6/22/2022 21:57	18.10	6/22/2022 21:06	4.52	6/23/2022 2:02	68.74
6/24/2022 0:53	50.65	6/23/2022 23:35	81.47	6/22/2022 21:58	18.09	6/22/2022 21:07	4.49	6/23/2022 2:03	68.77
6/24/2022 0:54	50.66	6/23/2022 23:36	81.46	6/22/2022 21:59	18.07	6/22/2022 21:08	4.45	6/23/2022 2:04	68.75
6/24/2022 0:55	50.64	6/23/2022 23:37	81.42	6/22/2022 22:00	18.05	6/22/2022 21:09	4.45	6/23/2022 2:05	68.73
6/24/2022 0:56	50.69	6/23/2022 23:38	81.44	6/22/2022 22:01	18.11	6/22/2022 21:10	4.61	6/23/2022 2:06	68.88
6/24/2022 0:57	50.67	6/23/2022 23:39	81.42	6/22/2022 22:02	18.09	6/22/2022 21:11	4.60	6/23/2022 2:07	75.37
6/24/2022 0:58	50.66	6/23/2022 23:40	81.43	6/22/2022 22:03	18.04	6/22/2022 21:12	4.70	6/23/2022 2:08	75.14
6/24/2022 0:59	50.64	6/23/2022 23:41	81.44	6/22/2022 22:04	18.06	6/22/2022 21:13	4.57	6/23/2022 2:09	74.99
6/24/2022 1:00	50.68	6/23/2022 23:42	81.45	6/22/2022 22:05	18.06	6/22/2022 21:14	4.51	6/23/2022 2:10	74.89
6/24/2022 1:01	50.62	6/23/2022 23:43	81.45	6/22/2022 22:06	18.10	6/22/2022 21:15	4.47	6/23/2022 2:11	79.25
6/24/2022 1:02	50.63	6/23/2022 23:44	83.09	6/22/2022 22:07	18.07	6/22/2022 21:16	4.49	6/23/2022 2:12	80.54
6/24/2022 1:03	50.66	6/23/2022 23:45	82.81	6/22/2022 22:08	18.10	6/22/2022 21:17	4.47	6/23/2022 2:13	80.33
6/24/2022 1:04	50.61	6/23/2022 23:46	82.54	6/22/2022 22:09	18.13	6/22/2022 21:18	4.47	6/23/2022 2:14	80.11
6/24/2022 1:05	50.70	6/23/2022 23:47	82.36	6/22/2022 22:10	18.13	6/22/2022 21:19	4.48	6/23/2022 2:15	79.93
6/24/2022 1:06	50.64	6/23/2022 23:48	82.19	6/22/2022 22:11	18.09	6/22/2022 21:20	4.42	6/23/2022 2:16	79.80
6/24/2022 1:07	50.65	6/23/2022 23:49	82.13	6/22/2022 22:12	18.03	6/22/2022 21:21	4.44	6/23/2022 2:17	79.61
6/24/2022 1:08	50.64	6/23/2022 23:50	82.02	6/22/2022 22:13	18.09	6/22/2022 21:22	4.50	6/23/2022 2:18	79.45
6/24/2022 1:09	50.64	6/23/2022 23:51	81.97	6/22/2022 22:14	18.05	6/22/2022 21:23	4.39	6/23/2022 2:19	79.28
6/24/2022 1:10	50.63	6/23/2022 23:52	82.48	6/22/2022 22:15	18.11	6/22/2022 21:24	4.44	6/23/2022 2:20	79.13
6/24/2022 1:11	50.63	6/23/2022 23:53	82.83	6/22/2022 22:16	18.13	6/22/2022 21:25	4.40	6/23/2022 2:21	79.01
6/24/2022 1:12	50.64	6/23/2022 23:54	82.60	6/22/2022 22:17	18.07	6/22/2022 21:26	4.37	6/23/2022 2:22	78.93
6/24/2022 1:13	50.62	6/23/2022 23:55	82.44	6/22/2022 22:18	18.12	6/22/2022 21:27	4.39	6/23/2022 2:23	78.82
6/24/2022 1:14	50.66	6/23/2022 23:56	82.31	6/22/2022 22:19	18.13	6/22/2022 21:28	4.42	6/23/2022 2:24	78.70
6/24/2022 1:15	50.62	6/23/2022 23:57	82.20	6/22/2022 22:20	18.11	6/22/2022 21:29	4.41	6/23/2022 2:25	78.60
6/24/2022 1:16	50.61	6/23/2022 23:58	82.10	6/22/2022 22:21	18.20	6/22/2022 21:30	4.38	6/23/2022 2:26	78.51
6/24/2022 1:17	50.60	6/23/2022 23:59	82.02	6/22/2022 22:22	18.13	6/22/2022 21:31	4.40	6/23/2022 2:27	78.38
6/24/2022 1:18	50.63	6/24/2022 0:00	82.58	6/22/2022 22:23	18.07	6/22/2022 21:32	4.43	6/23/2022 2:28	78.25
6/24/2022 1:19	50.63	6/24/2022 0:01	83.11	6/22/2022 22:24	18.09	6/22/2022 21:33	4.83	6/23/2022 2:29	78.14
6/24/2022 1:20	50.61	6/24/2022 0:02	82.81	6/22/2022 22:25	18.10	6/22/2022 21:34	5.42	6/23/2022 2:30	78.02
6/24/2022 1:21	50.65	6/24/2022 0:03	83.14	6/22/2022 22:26	18.07	6/22/2022 21:35	5.70	6/23/2022 2:31	77.85
6/24/2022 1:22	50.60	6/24/2022 0:04	83.86	6/22/2022 22:27	18.19	6/22/2022 21:36	5.92	6/23/2022 2:32	77.78
6/24/2022 1:23	50.64	6/24/2022 0:05	83.61	6/22/2022 22:28	18.13	6/22/2022 21:37	6.13	6/23/2022 2:33	82.72
6/24/2022 1:24	50.62	6/24/2022 0:06	83.27	6/22/2022 22:29	18.12	6/22/2022 21:38	5.62	6/23/2022 2:34	82.41
6/24/2022 1:25	50.61	6/24/2022 0:07	82.99	6/22/2022 22:30	20.69	6/22/2022 21:39	5.26	6/23/2022 2:35	82.16
6/24/2022 1:26	50.60	6/24/2022 0:08	82.82	6/22/2022 22:31	25.23	6/22/2022 21:40	5.07	6/23/2022 2:36	82.03
6/24/2022 1:27	50.63	6/24/2022 0:09	82.64	6/22/2022 22:32	27.46	6/22/2022 21:41	4.99	6/23/2022 2:37	81.80
6/24/2022 1:28	50.59	6/24/2022 0:10	82.51	6/22/2022 22:33	24.40	6/22/2022 21:42	4.87	6/23/2022 2:38	81.66
6/24/2022 1:29	50.64	6/24/2022 0:11	82.44	6/22/2022 22:34	22.86	6/22/2022 21:43	4.81	6/23/2022 2:39	81.47
6/24/2022 1:30	50.64	6/24/2022 0:12	82.32	6/22/2022 22:35	21.95	6/22/2022 21:44	4.80	6/23/2022 2:40	81.29
6/24/2022 1:31	50.63	6/24/2022 0:13	82.23	6/22/2022 22:36	21.41	6/22/2022 21:45	4.80	6/23/2022 2:41	81.16
6/24/2022 1:32	50.63	6/24/2022 0:14	82.17	6/22/2022 22:37	20.96	6/22/2022 21:46	4.72	6/23/2022 2:42	81.02
6/24/2022 1:33	50.65	6/24/2022 0:15	82.09	6/22/2022 22:38	20.74	6/22/2022 21:47	4.69	6/23/2022 2:43	80.85
6/24/2022 1:34	50.64	6/24/2022 0:16	82.00	6/22/2022 22:39	20.48	6/22/2022 21:48	4.89	6/23/2022 2:44	80.76
6/24/2022 1:35	50.61	6/24/2022 0:17	81.99	6/22/2022 22:40	20.33	6/22/2022 21:49	4.86	6/23/2022 2:45	80.64
6/24/2022 1:36	50.60	6/24/2022 0:18	81.90	6/22/2022 22:41	20.15	6/22/2022 21:50	4.78	6/23/2022 2:46	80.48
6/24/2022 1:37	50.61	6/24/2022 0:19	81.89	6/22/2022 22:42	19.98	6/22/2022 21:51	4.70	6/23/2022 2:47	80.30
6/24/2022 1:38	50.61	6/24/2022 0:20	81.89	6/22/2022 22:43	19.91	6/22/2022 21:52	4.68	6/23/2022 2:48	80.16
6/24/2022 1:39	50.59	6/24/2022 0:21	81.81	6/22/2022 22:44	19.83	6/22/2022 21:53	4.62	6/23/2022 2:49	80.04
6/24/2022 1:40	50.64	6/24/2022 0:22	81.78	6/22/2022 22:45	19.77	6/22/2022 21:54	4.64	6/23/2022 2:50	79.90

6/24/2022 1:41	50.63	6/24/2022 0:23	81.73	6/22/2022 22:46	19.68	6/22/2022 21:55	4.64	6/23/2022 2:51	79.71
6/24/2022 1:42	50.61	6/24/2022 0:24	81.76	6/22/2022 22:47	19.59	6/22/2022 21:56	4.63	6/23/2022 2:52	84.87
6/24/2022 1:43	50.65	6/24/2022 0:25	81.71	6/22/2022 22:48	19.53	6/22/2022 21:57	4.60	6/23/2022 2:53	85.84
6/24/2022 1:44	50.62	6/24/2022 0:26	81.72	6/22/2022 22:49	19.46	6/22/2022 21:58	4.59	6/23/2022 2:54	85.57
6/24/2022 1:45	50.58	6/24/2022 0:27	81.69	6/22/2022 22:50	19.42	6/22/2022 21:59	4.58	6/23/2022 2:55	85.29
6/24/2022 1:46	50.60	6/24/2022 0:28	81.68	6/22/2022 22:51	19.37	6/22/2022 22:00	4.61	6/23/2022 2:56	87.66
6/24/2022 1:47	50.64	6/24/2022 0:29	81.65	6/22/2022 22:52	19.29	6/22/2022 22:01	4.57	6/23/2022 2:57	91.08
6/24/2022 1:48	50.59	6/24/2022 0:30	81.61	6/22/2022 22:53	19.26	6/22/2022 22:02	4.53	6/23/2022 2:58	90.65
6/24/2022 1:49	50.60	6/24/2022 0:31	81.63	6/22/2022 22:54	19.28	6/22/2022 22:03	4.53	6/23/2022 2:59	90.42
6/24/2022 1:50	50.56	6/24/2022 0:32	81.65	6/22/2022 22:55	19.13	6/22/2022 22:04	4.49	6/23/2022 3:00	90.09
6/24/2022 1:51	50.62	6/24/2022 0:33	81.62	6/22/2022 22:56	19.14	6/22/2022 22:05	4.51	6/23/2022 3:01	95.98
6/24/2022 1:52	50.61	6/24/2022 0:34	81.61	6/22/2022 22:57	19.11	6/22/2022 22:06	4.51	6/23/2022 3:02	95.51
6/24/2022 1:53	50.58	6/24/2022 0:35	81.61	6/22/2022 22:58	19.10	6/22/2022 22:07	4.51	6/23/2022 3:03	95.09
6/24/2022 1:54	50.57	6/24/2022 0:36	81.59	6/22/2022 22:59	19.03	6/22/2022 22:08	4.49	6/23/2022 3:04	94.70
6/24/2022 1:55	50.61	6/24/2022 0:37	81.56	6/22/2022 23:00	19.02	6/22/2022 22:09	4.48	6/23/2022 3:05	94.35
6/24/2022 1:56	50.57	6/24/2022 0:38	81.59	6/22/2022 23:01	18.99	6/22/2022 22:10	4.51	6/23/2022 3:06	94.08
6/24/2022 1:57	50.64	6/24/2022 0:39	81.59	6/22/2022 23:02	18.99	6/22/2022 22:11	4.56	6/23/2022 3:07	93.79
6/24/2022 1:58	50.61	6/24/2022 0:40	81.56	6/22/2022 23:03	18.96	6/22/2022 22:12	4.48	6/23/2022 3:08	93.49
6/24/2022 1:59	50.57	6/24/2022 0:41	81.55	6/22/2022 23:04	18.92	6/22/2022 22:13	4.42	6/23/2022 3:09	93.19
6/24/2022 2:00	50.60	6/24/2022 0:42	81.58	6/22/2022 23:05	18.90	6/22/2022 22:14	4.47	6/23/2022 3:10	92.88
6/24/2022 2:01	50.60	6/24/2022 0:43	81.58	6/22/2022 23:06	18.92	6/22/2022 22:15	4.43	6/23/2022 3:11	92.60
6/24/2022 2:02	50.59	6/24/2022 0:44	81.51	6/22/2022 23:07	18.88	6/22/2022 22:16	4.42	6/23/2022 3:12	92.31
6/24/2022 2:03	50.59	6/24/2022 0:45	81.53	6/22/2022 23:08	18.81	6/22/2022 22:17	4.42	6/23/2022 3:13	92.00
6/24/2022 2:04	50.57	6/24/2022 0:46	81.55	6/22/2022 23:09	18.81	6/22/2022 22:18	4.47	6/23/2022 3:14	91.75
6/24/2022 2:05	50.61	6/24/2022 0:47	81.56	6/22/2022 23:10	18.75	6/22/2022 22:19	4.42	6/23/2022 3:15	91.53
6/24/2022 2:06	50.58	6/24/2022 0:48	81.55	6/22/2022 23:11	18.74	6/22/2022 22:20	4.39	6/23/2022 3:16	91.28
6/24/2022 2:07	50.57	6/24/2022 0:49	81.55	6/22/2022 23:12	18.76	6/22/2022 22:21	4.42	6/23/2022 3:17	91.02
6/24/2022 2:08	50.61	6/24/2022 0:50	81.51	6/22/2022 23:13	18.70	6/22/2022 22:22	4.37	6/23/2022 3:18	90.77
6/24/2022 2:09	50.59	6/24/2022 0:51	81.53	6/22/2022 23:14	18.68	6/22/2022 22:23	4.40	6/23/2022 3:19	90.52
6/24/2022 2:10	50.65	6/24/2022 0:52	81.55	6/22/2022 23:15	18.71	6/22/2022 22:24	4.36	6/23/2022 3:20	90.29
6/24/2022 2:11	50.58	6/24/2022 0:53	81.53	6/22/2022 23:16	18.71	6/22/2022 22:25	4.40	6/23/2022 3:21	90.08
6/24/2022 2:12	50.58	6/24/2022 0:54	81.55	6/22/2022 23:17	18.67	6/22/2022 22:26	4.34	6/23/2022 3:22	89.84
6/24/2022 2:13	50.57	6/24/2022 0:55	81.54	6/22/2022 23:18	18.67	6/22/2022 22:27	4.35	6/23/2022 3:23	89.59
6/24/2022 2:14	50.62	6/24/2022 0:56	81.50	6/22/2022 23:19	18.65	6/22/2022 22:28	4.38	6/23/2022 3:24	89.35
6/24/2022 2:15	50.59	6/24/2022 0:57	81.49	6/22/2022 23:20	18.59	6/22/2022 22:29	4.41	6/23/2022 3:25	89.11
6/24/2022 2:16	50.57	6/24/2022 0:58	81.47	6/22/2022 23:21	18.62	6/22/2022 22:30	4.34	6/23/2022 3:26	88.87
6/24/2022 2:17	50.59	6/24/2022 0:59	81.52	6/22/2022 23:22	18.61	6/22/2022 22:31	4.36	6/23/2022 3:27	88.65
6/24/2022 2:18	50.59	6/24/2022 1:00	81.55	6/22/2022 23:23	18.57	6/22/2022 22:32	4.36	6/23/2022 3:28	88.47
6/24/2022 2:19	50.56	6/24/2022 1:01	81.50	6/22/2022 23:24	18.55	6/22/2022 22:33	4.38	6/23/2022 3:29	88.26
6/24/2022 2:20	50.59	6/24/2022 1:02	81.47	6/22/2022 23:25	18.53	6/22/2022 22:34	4.29	6/23/2022 3:30	88.03
6/24/2022 2:21	50.59	6/24/2022 1:03	81.49	6/22/2022 23:26	18.58	6/22/2022 22:35	4.34	6/23/2022 3:31	87.83
6/24/2022 2:22	50.61	6/24/2022 1:04	81.48	6/22/2022 23:27	18.53	6/22/2022 22:36	4.32	6/23/2022 3:32	87.55
6/24/2022 2:23	50.59	6/24/2022 1:05	81.50	6/22/2022 23:28	18.52	6/22/2022 22:37	4.32	6/23/2022 3:33	87.35
6/24/2022 2:24	50.60	6/24/2022 1:06	81.50	6/22/2022 23:29	18.50	6/22/2022 22:38	4.26	6/23/2022 3:34	87.18
6/24/2022 2:25	50.59	6/24/2022 1:07	81.48	6/22/2022 23:30	18.47	6/22/2022 22:39	4.29	6/23/2022 3:35	86.91
6/24/2022 2:26	50.60	6/24/2022 1:08	81.51	6/22/2022 23:31	18.47	6/22/2022 22:40	4.30	6/23/2022 3:36	86.75
6/24/2022 2:27	50.56	6/24/2022 1:09	81.49	6/22/2022 23:32	18.45	6/22/2022 22:41	4.24	6/23/2022 3:37	86.53
6/24/2022 2:28	50.58	6/24/2022 1:10	81.51	6/22/2022 23:33	18.44	6/22/2022 22:42	4.27	6/23/2022 3:38	86.31
6/24/2022 2:29	50.61	6/24/2022 1:11	81.50	6/22/2022 23:34	18.40	6/22/2022 22:43	4.27	6/23/2022 3:39	86.08
6/24/2022 2:30	50.56	6/24/2022 1:12	81.49	6/22/2022 23:35	18.44	6/22/2022 22:44	4.33	6/23/2022 3:40	85.92
6/24/2022 2:31	50.58	6/24/2022 1:13	81.47	6/22/2022 23:36	18.35	6/22/2022 22:45	4.21	6/23/2022 3:41	85.73
6/24/2022 2:32	50.56	6/24/2022 1:14	81.48	6/22/2022 23:37	18.37	6/22/2022 22:46	4.21	6/23/2022 3:42	85.54
6/24/2022 2:33	50.58	6/24/2022 1:15	81.51	6/22/2022 23:38	18.40	6/22/2022 22:47	4.28	6/23/2022 3:43	85.34
6/24/2022 2:34	50.58	6/24/2022 1:16	81.49	6/22/2022 23:39	18.40	6/22/2022 22:48	4.23	6/23/2022 3:44	85.18
6/24/2022 2:35	50.58	6/24/2022 1:17	81.47	6/22/2022 23:40	18.32	6/22/2022 22:49	4.23	6/23/2022 3:45	84.99
6/24/2022 2:36	50.59	6/24/2022 1:18	81.52	6/22/2022 23:41	18.34	6/22/2022 22:50	4.26	6/23/2022 3:46	84.78
6/24/2022 2:37	50.57	6/24/2022 1:19	81.51	6/22/2022 23:42	18.30	6/22/2022 22:51	4.28	6/23/2022 3:47	84.61
6/24/2022 2:38	50.53	6/24/2022 1:20	81.51	6/22/2022 23:43	18.30	6/22/2022 22:52	4.24	6/23/2022 3:48	84.45
6/24/2022 2:39	50.57	6/24/2022 1:21	81.49	6/22/2022 23:44	18.29	6/22/2022 22:53	4.20	6/23/2022 3:49	84.29
6/24/2022 2:40	50.58	6/24/2022 1:22	81.49	6/22/2022 23:45	18.30	6/22/2022 22:54	4.21	6/23/2022 3:50	84.06
6/24/2022 2:41	50.59	6/24/2022 1:23	81.49	6/22/2022 23:46	18.23	6/22/2022 22:55	4.29	6/23/2022 3:51	83.92
6/24/2022 2:42	50.61	6/24/2022 1:24	81.46	6/22/2022 23:47	18.25	6/22/2022 22:56	4.48	6/23/2022 3:52	83.80
6/24/2022 2:43	50.59	6/24/2022 1:25	81.50	6/22/2022 23:48	18.26	6/22/2022 22:57	4.57	6/23/2022 3:53	83.62
6/24/2022 2:44	50.60	6/24/2022 1:26	81.50	6/22/2022 23:49	18.26	6/22/2022 22:58	4.46	6/23/2022 3:54	83.38
6/24/2022 2:45	50.57	6/24/2022 1:27	81.47	6/22/2022 23:50	18.17	6/22/2022 22:59	4.32	6/23/2022 3:55	83.24
6/24/2022 2:46	50.58	6/24/2022 1:28	81.46	6/22/2022 23:51	18.25	6/22/2022 23:00	4.29	6/23/2022 3:56	83.10
6/24/2022 2:47	50.60	6/24/2022 1:29	81.55	6/22/2022 23:52	18.24	6/22/2022 23:01	4.31	6/23/2022 3:57	82.95
6/24/2022 2:48	50.56	6/24/2022 1:30	81.44	6/22/2022 23:53	18.15	6/22/2022 23:02	4.29	6/23/2022 3:58	82.83
6/24/2022 2:49	50.59	6/24/2022 1:31	81.47	6/22/2022 23:54	18.16	6/22/2022 23:03	4.29	6/23/2022 3:59	82.62
6/24/2022 2:50	50.58	6/24/2022 1:32	81.50	6/22/2022 23:55	18.22	6/22/2022 23:04	4.26	6/23/2022 4:00	82.49
6/24/2022 2:51	50.57	6/24/2022 1:33	81.50	6/22/2022 23:56	18.17	6/22/2022 23:05	4.35	6/23/2022 4:01	82.34
6/24/2022 2:52	50.57	6/24/2022 1:34	81.53	6/22/2022 23:57	18.13	6/22/2022 23:06	4.29	6/23/2022 4:02	82.20
6/24/2022 2:53	50.54	6/24/2022 1:35	81.49	6/22/2022 23:58	18.09	6/22/2022 23:07	4.28	6/23/2022 4:03	82.03
6/24/2022 2:54	50.54	6/24/2022 1:36	81.48	6/22/2022 23:59	18.12	6/22/2022 23:08	4.34	6/23/2022 4:04	81.90
6/24/2022 2:55	50.57	6/24/2022 1:37	81.49	6/23/2022 0:00	18.11	6/22/2022 23:09	4.26	6/23/2022 4:05	81.79
6/24/2022 2:56	50.56	6/24/2022 1:38	81.46	6/23/2022 0:01	18.10	6/22/2022 23:10	4.22	6/23/2022 4:06	81.63
6/24/2022 2:57	50.58	6/24/2022 1:39	81.47	6/23/2022 0:02	18.01	6/22/2022 23:11	4.27	6/23/2022 4:07	81.52
6/24/2022 2:58	50.57	6/24/2022 1:40	81.48	6/23/2022 0:03	18.00	6/22/2022 23:12	4.34	6/23/2022 4:08	81.32
6/24/2022 2:59	50.58	6/24/2022 1:41	81.50	6/23/2022 0:04	18.06	6/22/2022 23:13	4.43	6/23/2022 4:09	81.23
6/24/2022 3:00	50.58	6/24/2022 1:42	81.50	6/23/2022 0:05	18.07	6/22/2022 23:14	4.28	6/23/2022 4:10	81.14
6/24/2022 3:01	50.56	6/24/2022 1:43	81.47	6/23/2022 0:06	18.00	6/22/2022 23:15	4.29	6/23/2022 4:11	81.06
6/24/2022 3:02	50.58	6/24/2022 1:44	81.46	6/23/2022 0:07	18.00	6/22/2022 23:16	4.29	6/23/2022 4:12	80.87
6/24/2022 3:03	50.57	6/24/2022 1:45	81.49	6/23/2022 0:08	18.02	6/22/2022 23:17	4.23	6/23/2022 4:13	80.78
6/24/2022 3:04	50.55	6/24/2022 1:46	81.50	6/23/2022 0:09	18.01	6/22/2022 23:18	4.23	6/23/2022 4:14	80.67
6/24/2022 3:05	50.55	6/24/2022 1:47	81.48	6/23/2022 0:10	18.05	6/22/2022 23:19	4.20	6/23/2022 4:15	80.59
6/24/2022 3:06	50.54	6/24/2022 1:48	81.46	6/23/2022 0:11	17.98	6/22/2022 23:20	4.25	6/23/2022 4:16	80.44
6/24/2022 3:07	50.59	6/24/2022 1:49	81.46	6/23/2022 0:12	17.98	6/22/2022 23:21	4.47	6/23/2022 4:17	80.31
6/24/2022 3:08	50.55	6/24/2022 1:50	81.46	6/23/2022 0:13	17.98	6/22/2022 23:22	4.45	6/23/2022 4:18	80.18

6/24/2022 3:09	50.54	6/24/2022 1:51	81.49	6/23/2022 0:14	17.93	6/22/2022 23:23	4.85	6/23/2022 4:19	80.07
6/24/2022 3:10	50.60	6/24/2022 1:52	81.49	6/23/2022 0:15	17.97	6/22/2022 23:24	5.35	6/23/2022 4:20	79.91
6/24/2022 3:11	50.60	6/24/2022 1:53	81.49	6/23/2022 0:16	17.91	6/22/2022 23:25	5.60	6/23/2022 4:21	79.85
6/24/2022 3:12	50.56	6/24/2022 1:54	81.50	6/23/2022 0:17	17.91	6/22/2022 23:26	5.79	6/23/2022 4:22	79.69
6/24/2022 3:13	50.56	6/24/2022 1:55	81.46	6/23/2022 0:18	17.93	6/22/2022 23:27	6.05	6/23/2022 4:23	79.62
6/24/2022 3:14	50.55	6/24/2022 1:56	81.48	6/23/2022 0:19	17.92	6/22/2022 23:28	6.12	6/23/2022 4:24	79.46
6/24/2022 3:15	50.57	6/24/2022 1:57	81.48	6/23/2022 0:20	17.91	6/22/2022 23:29	6.31	6/23/2022 4:25	79.42
6/24/2022 3:16	50.58	6/24/2022 1:58	81.48	6/23/2022 0:21	17.91	6/22/2022 23:30	6.50	6/23/2022 4:26	79.25
6/24/2022 3:17	50.56	6/24/2022 1:59	81.42	6/23/2022 0:22	17.95	6/22/2022 23:31	6.57	6/23/2022 4:27	79.17
6/24/2022 3:18	50.57	6/24/2022 2:00	81.49	6/23/2022 0:23	17.86	6/22/2022 23:32	6.68	6/23/2022 4:28	79.06
6/24/2022 3:19	50.54	6/24/2022 2:01	81.48	6/23/2022 0:24	17.83	6/22/2022 23:33	6.38	6/23/2022 4:29	78.98
6/24/2022 3:20	50.52	6/24/2022 2:02	81.46	6/23/2022 0:25	17.86	6/22/2022 23:34	5.82	6/23/2022 4:30	78.92
6/24/2022 3:21	50.57	6/24/2022 2:03	81.46	6/23/2022 0:26	17.90	6/22/2022 23:35	5.58	6/23/2022 4:31	78.80
6/24/2022 3:22	50.57	6/24/2022 2:04	81.46	6/23/2022 0:27	17.85	6/22/2022 23:36	5.38	6/23/2022 4:32	78.69
6/24/2022 3:23	50.54	6/24/2022 2:05	81.50	6/23/2022 0:28	17.85	6/22/2022 23:37	5.32	6/23/2022 4:33	78.62
6/24/2022 3:24	50.57	6/24/2022 2:06	81.50	6/23/2022 0:29	17.81	6/22/2022 23:38	5.39	6/23/2022 4:34	78.51
6/24/2022 3:25	52.51	6/24/2022 2:07	81.47	6/23/2022 0:30	17.80	6/22/2022 23:39	5.25	6/23/2022 4:35	78.45
6/24/2022 3:26	54.32	6/24/2022 2:08	81.47	6/23/2022 0:31	17.84	6/22/2022 23:40	5.26	6/23/2022 4:36	78.38
6/24/2022 3:27	55.21	6/24/2022 2:09	81.45	6/23/2022 0:32	17.81	6/22/2022 23:41	5.11	6/23/2022 4:37	78.26
6/24/2022 3:28	55.69	6/24/2022 2:10	81.46	6/23/2022 0:33	17.81	6/22/2022 23:42	5.12	6/23/2022 4:38	78.15
6/24/2022 3:29	53.37	6/24/2022 2:11	81.43	6/23/2022 0:34	17.83	6/22/2022 23:43	5.08	6/23/2022 4:39	78.06
6/24/2022 3:30	52.46	6/24/2022 2:12	81.51	6/23/2022 0:35	17.80	6/22/2022 23:44	5.01	6/23/2022 4:40	77.98
6/24/2022 3:31	52.02	6/24/2022 2:13	81.49	6/23/2022 0:36	17.74	6/22/2022 23:45	4.95	6/23/2022 4:41	77.85
6/24/2022 3:32	51.81	6/24/2022 2:14	81.48	6/23/2022 0:37	17.77	6/22/2022 23:46	4.99	6/23/2022 4:42	77.78
6/24/2022 3:33	51.68	6/24/2022 2:15	81.47	6/23/2022 0:38	17.80	6/22/2022 23:47	4.99	6/23/2022 4:43	77.70
6/24/2022 3:34	51.56	6/24/2022 2:16	81.45	6/23/2022 0:39	17.73	6/22/2022 23:48	4.95	6/23/2022 4:44	77.58
6/24/2022 3:35	51.50	6/24/2022 2:17	81.47	6/23/2022 0:40	17.75	6/22/2022 23:49	4.93	6/23/2022 4:45	77.47
6/24/2022 3:36	51.39	6/24/2022 2:18	81.48	6/23/2022 0:41	17.74	6/22/2022 23:50	4.92	6/23/2022 4:46	77.41
6/24/2022 3:37	51.34	6/24/2022 2:19	81.51	6/23/2022 0:42	17.73	6/22/2022 23:51	4.91	6/23/2022 4:47	77.35
6/24/2022 3:38	51.30	6/24/2022 2:20	81.45	6/23/2022 0:43	17.70	6/22/2022 23:52	4.86	6/23/2022 4:48	77.24
6/24/2022 3:39	51.31	6/24/2022 2:21	81.48	6/23/2022 0:44	17.69	6/22/2022 23:53	4.87	6/23/2022 4:49	77.19
6/24/2022 3:40	51.27	6/24/2022 2:22	81.47	6/23/2022 0:45	17.73	6/22/2022 23:54	4.88	6/23/2022 4:50	77.09
6/24/2022 3:41	51.22	6/24/2022 2:23	81.49	6/23/2022 0:46	17.69	6/22/2022 23:55	4.84	6/23/2022 4:51	76.99
6/24/2022 3:42	51.18	6/24/2022 2:24	81.54	6/23/2022 0:47	17.70	6/22/2022 23:56	4.80	6/23/2022 4:52	76.91
6/24/2022 3:43	51.20	6/24/2022 2:25	81.49	6/23/2022 0:48	17.73	6/22/2022 23:57	4.78	6/23/2022 4:53	76.85
6/24/2022 3:44	51.13	6/24/2022 2:26	81.47	6/23/2022 0:49	17.68	6/22/2022 23:58	4.83	6/23/2022 4:54	76.74
6/24/2022 3:45	51.11	6/24/2022 2:27	81.45	6/23/2022 0:50	17.68	6/22/2022 23:59	4.85	6/23/2022 4:55	76.65
6/24/2022 3:46	51.13	6/24/2022 2:28	81.47	6/23/2022 0:51	17.70	6/23/2022 0:00	4.79	6/23/2022 4:56	76.59
6/24/2022 3:47	51.10	6/24/2022 2:29	81.47	6/23/2022 0:52	17.62	6/23/2022 0:01	4.77	6/23/2022 4:57	76.49
6/24/2022 3:48	51.05	6/24/2022 2:30	81.44	6/23/2022 0:53	17.66	6/23/2022 0:02	4.76	6/23/2022 4:58	76.44
6/24/2022 3:49	51.08	6/24/2022 2:31	81.51	6/23/2022 0:54	17.65	6/23/2022 0:03	4.81	6/23/2022 4:59	76.34
6/24/2022 3:50	51.04	6/24/2022 2:32	81.51	6/23/2022 0:55	17.63	6/23/2022 0:04	4.77	6/23/2022 5:00	76.24
6/24/2022 3:51	51.06	6/24/2022 2:33	81.48	6/23/2022 0:56	17.69	6/23/2022 0:05	5.10	6/23/2022 5:01	76.17
6/24/2022 3:52	51.02	6/24/2022 2:34	81.48	6/23/2022 0:57	17.60	6/23/2022 0:06	4.98	6/23/2022 5:02	76.09
6/24/2022 3:53	50.99	6/24/2022 2:35	81.50	6/23/2022 0:58	17.66	6/23/2022 0:07	4.96	6/23/2022 5:03	75.99
6/24/2022 3:54	51.01	6/24/2022 2:36	81.48	6/23/2022 0:59	17.64	6/23/2022 0:08	4.93	6/23/2022 5:04	75.93
6/24/2022 3:55	51.00	6/24/2022 2:37	81.46	6/23/2022 1:00	17.62	6/23/2022 0:09	5.04	6/23/2022 5:05	75.82
6/24/2022 3:56	51.01	6/24/2022 2:38	81.44	6/23/2022 1:01	17.59	6/23/2022 0:10	4.93	6/23/2022 5:06	75.77
6/24/2022 3:57	50.98	6/24/2022 2:39	81.51	6/23/2022 1:02	17.61	6/23/2022 0:11	4.92	6/23/2022 5:07	75.70
6/24/2022 3:58	50.99	6/24/2022 2:40	81.49	6/23/2022 1:03	17.61	6/23/2022 0:12	4.90	6/23/2022 5:08	75.59
6/24/2022 3:59	50.96	6/24/2022 2:41	81.49	6/23/2022 1:04	17.57	6/23/2022 0:13	4.90	6/23/2022 5:09	75.53
6/24/2022 4:00	50.97	6/24/2022 2:42	81.52	6/23/2022 1:05	17.62	6/23/2022 0:14	4.97	6/23/2022 5:10	75.47
6/24/2022 4:01	50.94	6/24/2022 2:43	81.52	6/23/2022 1:06	17.60	6/23/2022 0:15	4.92	6/23/2022 5:11	75.36
6/24/2022 4:02	50.91	6/24/2022 2:44	81.48	6/23/2022 1:07	17.54	6/23/2022 0:16	4.93	6/23/2022 5:12	75.30
6/24/2022 4:03	50.93	6/24/2022 2:45	81.43	6/23/2022 1:08	17.54	6/23/2022 0:17	4.93	6/23/2022 5:13	75.20
6/24/2022 4:04	50.93	6/24/2022 2:46	81.47	6/23/2022 1:09	17.56	6/23/2022 0:18	4.90	6/23/2022 5:14	75.15
6/24/2022 4:05	50.92	6/24/2022 2:47	81.48	6/23/2022 1:10	17.51	6/23/2022 0:19	4.88	6/23/2022 5:15	75.08
6/24/2022 4:06	50.94	6/24/2022 2:48	81.49	6/23/2022 1:11	17.56	6/23/2022 0:20	4.92	6/23/2022 5:16	74.98
6/24/2022 4:07	50.91	6/24/2022 2:49	81.45	6/23/2022 1:12	17.53	6/23/2022 0:21	4.95	6/23/2022 5:17	74.92
6/24/2022 4:08	50.91	6/24/2022 2:50	81.47	6/23/2022 1:13	17.58	6/23/2022 0:22	4.98	6/23/2022 5:18	74.86
6/24/2022 4:09	50.92	6/24/2022 2:51	81.49	6/23/2022 1:14	17.55	6/23/2022 0:23	4.93	6/23/2022 5:19	74.80
6/24/2022 4:10	50.89	6/24/2022 2:52	81.47	6/23/2022 1:15	17.52	6/23/2022 0:24	4.95	6/23/2022 5:20	74.76
6/24/2022 4:11	50.89	6/24/2022 2:53	81.49	6/23/2022 1:16	17.50	6/23/2022 0:25	4.85	6/23/2022 5:21	74.67
6/24/2022 4:12	50.85	6/24/2022 2:54	81.48	6/23/2022 1:17	17.49	6/23/2022 0:26	4.84	6/23/2022 5:22	74.54
6/24/2022 4:13	50.89	6/24/2022 2:55	81.52	6/23/2022 1:18	17.53	6/23/2022 0:27	4.84	6/23/2022 5:23	74.52
6/24/2022 4:14	50.90	6/24/2022 2:56	81.47	6/23/2022 1:19	17.50	6/23/2022 0:28	4.83	6/23/2022 5:24	74.45
6/24/2022 4:15	50.90	6/24/2022 2:57	81.47	6/23/2022 1:20	17.50	6/23/2022 0:29	4.82	6/23/2022 5:25	74.35
6/24/2022 4:16	50.87	6/24/2022 2:58	81.49	6/23/2022 1:21	17.52	6/23/2022 0:30	4.84	6/23/2022 5:26	74.33
6/24/2022 4:17	50.87	6/24/2022 2:59	81.44	6/23/2022 1:22	17.54	6/23/2022 0:31	4.81	6/23/2022 5:27	74.23
6/24/2022 4:18	50.86	6/24/2022 3:00	81.50	6/23/2022 1:23	17.47	6/23/2022 0:32	4.86	6/23/2022 5:28	74.26
6/24/2022 4:19	50.87	6/24/2022 3:01	81.44	6/23/2022 1:24	17.46	6/23/2022 0:33	4.81	6/23/2022 5:29	74.11
6/24/2022 4:20	50.83	6/24/2022 3:02	81.50	6/23/2022 1:25	17.48	6/23/2022 0:34	4.83	6/23/2022 5:30	74.04
6/24/2022 4:21	50.88	6/24/2022 3:03	81.47	6/23/2022 1:26	17.53	6/23/2022 0:35	4.80	6/23/2022 5:31	74.00
6/24/2022 4:22	50.90	6/24/2022 3:04	81.50	6/23/2022 1:27	17.49	6/23/2022 0:36	4.72	6/23/2022 5:32	73.97
6/24/2022 4:23	50.83	6/24/2022 3:05	81.50	6/23/2022 1:28	17.44	6/23/2022 0:37	4.79	6/23/2022 5:33	73.85
6/24/2022 4:24	50.87	6/24/2022 3:06	81.52	6/23/2022 1:29	17.44	6/23/2022 0:38	4.83	6/23/2022 5:34	73.82
6/24/2022 4:25	50.86	6/24/2022 3:07	81.52	6/23/2022 1:30	17.47	6/23/2022 0:39	4.85	6/23/2022 5:35	73.78
6/24/2022 4:26	50.83	6/24/2022 3:08	81.49	6/23/2022 1:31	17.46	6/23/2022 0:40	4.75	6/23/2022 5:36	73.72
6/24/2022 4:27	50.81	6/24/2022 3:09	81.50	6/23/2022 1:32	17.46	6/23/2022 0:41	4.77	6/23/2022 5:37	73.64
6/24/2022 4:28	50.81	6/24/2022 3:10	81.48	6/23/2022 1:33	17.46	6/23/2022 0:42	4.82	6/23/2022 5:38	73.58
6/24/2022 4:29	50.81	6/24/2022 3:11	81.48	6/23/2022 1:34	17.37	6/23/2022 0:43	4.77	6/23/2022 5:39	73.53
6/24/2022 4:30	50.79	6/24/2022 3:12	81.47	6/23/2022 1:35	17.45	6/23/2022 0:44	4.77	6/23/2022 5:40	73.42
6/24/2022 4:31	50.82	6/24/2022 3:13	81.53	6/23/2022 1:36	17.43	6/23/2022 0:45	4.80	6/23/2022 5:41	73.42
6/24/2022 4:32	50.81	6/24/2022 3:14	81.51	6/23/2022 1:37	17.41	6/23/2022 0:46	4.78	6/23/2022 5:42	73.36
6/24/2022 4:33	50.83	6/24/2022 3:15	81.45	6/23/2022 1:38	17.41	6/23/2022 0:47	4.69	6/23/2022 5:43	73.30
6/24/2022 4:34	50.82	6/24/2022 3:16	81.48	6/23/2022 1:39	17.39	6/23/2022 0:48	4.74	6/23/2022 5:44	73.26
6/24/2022 4:35	50.85	6/24/2022 3:17	81.46	6/23/2022 1:40	17.42	6/23/2022 0:49	4.78	6/23/2022 5:45	73.17
6/24/2022 4:36	50.79	6/24/2022 3:18	81.51	6/23/2022 1:41	17.42	6/23/2022 0:50	4.82	6/23/2022 5:46	73.13

6/24/2022 4:37	50.81	6/24/2022 3:19	81.49	6/23/2022 1:42	17.38	6/23/2022 0:51	4.77	6/23/2022 5:47	73.07
6/24/2022 4:38	50.82	6/24/2022 3:20	81.48	6/23/2022 1:43	17.38	6/23/2022 0:52	4.74	6/23/2022 5:48	73.04
6/24/2022 4:39	50.81	6/24/2022 3:21	81.47	6/23/2022 1:44	17.41	6/23/2022 0:53	4.81	6/23/2022 5:49	73.02
6/24/2022 4:40	50.81	6/24/2022 3:22	81.51	6/23/2022 1:45	17.41	6/23/2022 0:54	4.75	6/23/2022 5:50	72.94
6/24/2022 4:41	50.82	6/24/2022 3:23	81.47	6/23/2022 1:46	17.37	6/23/2022 0:55	4.80	6/23/2022 5:51	72.86
6/24/2022 4:42	50.80	6/24/2022 3:24	81.51	6/23/2022 1:47	17.39	6/23/2022 0:56	4.73	6/23/2022 5:52	72.81
6/24/2022 4:43	50.80	6/24/2022 3:25	81.47	6/23/2022 1:48	17.35	6/23/2022 0:57	4.83	6/23/2022 5:53	72.83
6/24/2022 4:44	50.80	6/24/2022 3:26	81.50	6/23/2022 1:49	17.41	6/23/2022 0:58	4.74	6/23/2022 5:54	72.72
6/24/2022 4:45	50.80	6/24/2022 3:27	81.46	6/23/2022 1:50	17.37	6/23/2022 0:59	4.77	6/23/2022 5:55	72.67
6/24/2022 4:46	50.76	6/24/2022 3:28	81.49	6/23/2022 1:51	17.36	6/23/2022 1:00	4.79	6/23/2022 5:56	72.60
6/24/2022 4:47	50.78	6/24/2022 3:29	81.51	6/23/2022 1:52	17.37	6/23/2022 1:01	4.72	6/23/2022 5:57	72.56
6/24/2022 4:48	50.74	6/24/2022 3:30	81.50	6/23/2022 1:53	17.40	6/23/2022 1:02	4.75	6/23/2022 5:58	72.54
6/24/2022 4:49	50.79	6/24/2022 3:31	81.44	6/23/2022 1:54	17.40	6/23/2022 1:03	4.75	6/23/2022 5:59	72.48
6/24/2022 4:50	50.80	6/24/2022 3:32	81.50	6/23/2022 1:55	17.37	6/23/2022 1:04	4.77	6/23/2022 6:00	72.42
6/24/2022 4:51	50.75	6/24/2022 3:33	81.46	6/23/2022 1:56	17.33	6/23/2022 1:05	4.75	6/23/2022 6:01	72.38
6/24/2022 4:52	50.77	6/24/2022 3:34	81.47	6/23/2022 1:57	17.38	6/23/2022 1:06	4.80	6/23/2022 6:02	72.34
6/24/2022 4:53	50.81	6/24/2022 3:35	81.46	6/23/2022 1:58	17.33	6/23/2022 1:07	4.79	6/23/2022 6:03	72.32
6/24/2022 4:54	50.76	6/24/2022 3:36	81.49	6/23/2022 1:59	17.33	6/23/2022 1:08	4.79	6/23/2022 6:04	72.24
6/24/2022 4:55	50.76	6/24/2022 3:37	81.45	6/23/2022 2:00	17.32	6/23/2022 1:09	4.75	6/23/2022 6:05	72.22
6/24/2022 4:56	50.73	6/24/2022 3:38	81.49	6/23/2022 2:01	17.39	6/23/2022 1:10	4.76	6/23/2022 6:06	72.16
6/24/2022 4:57	50.76	6/24/2022 3:39	81.49	6/23/2022 2:02	17.36	6/23/2022 1:11	4.80	6/23/2022 6:07	72.09
6/24/2022 4:58	50.75	6/24/2022 3:40	81.49	6/23/2022 2:03	17.35	6/23/2022 1:12	4.77	6/23/2022 6:08	72.06
6/24/2022 4:59	50.75	6/24/2022 3:41	81.48	6/23/2022 2:04	17.29	6/23/2022 1:13	4.82	6/23/2022 6:09	72.03
6/24/2022 5:00	50.76	6/24/2022 3:42	81.43	6/23/2022 2:05	17.31	6/23/2022 1:14	4.81	6/23/2022 6:10	71.97
6/24/2022 5:01	50.72	6/24/2022 3:43	81.48	6/23/2022 2:06	17.29	6/23/2022 1:15	4.81	6/23/2022 6:11	71.95
6/24/2022 5:02	50.75	6/24/2022 3:44	81.53	6/23/2022 2:07	17.32	6/23/2022 1:16	4.76	6/23/2022 6:12	71.90
6/24/2022 5:03	50.77	6/24/2022 3:45	81.49	6/23/2022 2:08	17.27	6/23/2022 1:17	4.79	6/23/2022 6:13	71.85
6/24/2022 5:04	50.74	6/24/2022 3:46	81.47	6/23/2022 2:09	17.34	6/23/2022 1:18	4.79	6/23/2022 6:14	71.80
6/24/2022 5:05	50.75	6/24/2022 3:47	81.51	6/23/2022 2:10	17.31	6/23/2022 1:19	4.75	6/23/2022 6:15	71.79
6/24/2022 5:06	50.72	6/24/2022 3:48	81.46	6/23/2022 2:11	17.30	6/23/2022 1:20	4.81	6/23/2022 6:16	71.72
6/24/2022 5:07	50.73	6/24/2022 3:49	81.51	6/23/2022 2:12	17.34	6/23/2022 1:21	4.86	6/23/2022 6:17	71.71
6/24/2022 5:08	50.77	6/24/2022 3:50	81.49	6/23/2022 2:13	17.27	6/23/2022 1:22	4.87	6/23/2022 6:18	71.66
6/24/2022 5:09	50.74	6/24/2022 3:51	81.46	6/23/2022 2:14	17.30	6/23/2022 1:23	4.79	6/23/2022 6:19	71.61
6/24/2022 5:10	50.73	6/24/2022 3:52	81.50	6/23/2022 2:15	17.27	6/23/2022 1:24	4.81	6/23/2022 6:20	71.57
6/24/2022 5:11	50.75	6/24/2022 3:53	81.51	6/23/2022 2:16	17.25	6/23/2022 1:25	4.83	6/23/2022 6:21	71.53
6/24/2022 5:12	50.75	6/24/2022 3:54	81.52	6/23/2022 2:17	17.23	6/23/2022 1:26	4.77	6/23/2022 6:22	71.46
6/24/2022 5:13	50.72	6/24/2022 3:55	81.50	6/23/2022 2:18	17.31	6/23/2022 1:27	4.79	6/23/2022 6:23	71.44
6/24/2022 5:14	50.71	6/24/2022 3:56	81.48	6/23/2022 2:19	17.22	6/23/2022 1:28	4.85	6/23/2022 6:24	71.45
6/24/2022 5:15	50.72	6/24/2022 3:57	81.48	6/23/2022 2:20	17.28	6/23/2022 1:29	4.89	6/23/2022 6:25	71.39
6/24/2022 5:16	50.72	6/24/2022 3:58	81.44	6/23/2022 2:21	17.31	6/23/2022 1:30	4.81	6/23/2022 6:26	71.35
6/24/2022 5:17	50.73	6/24/2022 3:59	81.47	6/23/2022 2:22	17.26	6/23/2022 1:31	4.80	6/23/2022 6:27	71.31
6/24/2022 5:18	50.73	6/24/2022 4:00	81.48	6/23/2022 2:23	17.26	6/23/2022 1:32	4.83	6/23/2022 6:28	71.29
6/24/2022 5:19	50.71	6/24/2022 4:01	81.51	6/23/2022 2:24	17.28	6/23/2022 1:33	4.89	6/23/2022 6:29	71.26
6/24/2022 5:20	50.72	6/24/2022 4:02	81.52	6/23/2022 2:25	17.22	6/23/2022 1:34	4.79	6/23/2022 6:30	71.24
6/24/2022 5:21	50.70	6/24/2022 4:03	81.50	6/23/2022 2:26	17.25	6/23/2022 1:35	4.83	6/23/2022 6:31	71.15
6/24/2022 5:22	50.73	6/24/2022 4:04	81.48	6/23/2022 2:27	17.18	6/23/2022 1:36	4.83	6/23/2022 6:32	71.15
6/24/2022 5:23	50.72	6/24/2022 4:05	81.52	6/23/2022 2:28	17.24	6/23/2022 1:37	4.80	6/23/2022 6:33	71.09
6/24/2022 5:24	50.73	6/24/2022 4:06	81.50	6/23/2022 2:29	17.22	6/23/2022 1:38	4.84	6/23/2022 6:34	71.08
6/24/2022 5:25	50.73	6/24/2022 4:07	81.48	6/23/2022 2:30	17.22	6/23/2022 1:39	4.83	6/23/2022 6:35	71.03
6/24/2022 5:26	50.71	6/24/2022 4:08	81.49	6/23/2022 2:31	17.20	6/23/2022 1:40	4.91	6/23/2022 6:36	71.03
6/24/2022 5:27	50.70	6/24/2022 4:09	81.52	6/23/2022 2:32	17.25	6/23/2022 1:41	4.80	6/23/2022 6:37	70.96
6/24/2022 5:28	50.70	6/24/2022 4:10	81.50	6/23/2022 2:33	17.27	6/23/2022 1:42	4.85	6/23/2022 6:38	70.95
6/24/2022 5:29	50.76	6/24/2022 4:11	81.51	6/23/2022 2:34	17.21	6/23/2022 1:43	4.88	6/23/2022 6:39	70.88
6/24/2022 5:30	50.73	6/24/2022 4:12	81.48	6/23/2022 2:35	17.22	6/23/2022 1:44	4.94	6/23/2022 6:40	70.87
6/24/2022 5:31	50.68	6/24/2022 4:13	81.46	6/23/2022 2:36	17.20	6/23/2022 1:45	4.84	6/23/2022 6:41	70.84
6/24/2022 5:32	50.71	6/24/2022 4:14	81.47	6/23/2022 2:37	17.20	6/23/2022 1:46	4.85	6/23/2022 6:42	70.77
6/24/2022 5:33	50.70	6/24/2022 4:15	81.44	6/23/2022 2:38	17.16	6/23/2022 1:47	4.91	6/23/2022 6:43	70.76
6/24/2022 5:34	50.71	6/24/2022 4:16	81.51	6/23/2022 2:39	17.20	6/23/2022 1:48	4.86	6/23/2022 6:44	70.73
6/24/2022 5:35	50.72	6/24/2022 4:17	81.48	6/23/2022 2:40	17.17	6/23/2022 1:49	4.87	6/23/2022 6:45	70.72
6/24/2022 5:36	50.73	6/24/2022 4:18	81.46	6/23/2022 2:41	17.17	6/23/2022 1:50	4.85	6/23/2022 6:46	70.68
6/24/2022 5:37	50.68	6/24/2022 4:19	81.47	6/23/2022 2:42	17.21	6/23/2022 1:51	4.94	6/23/2022 6:47	70.67
6/24/2022 5:38	50.74	6/24/2022 4:20	81.49	6/23/2022 2:43	17.17	6/23/2022 1:52	4.84	6/23/2022 6:48	70.64
6/24/2022 5:39	50.72	6/24/2022 4:21	81.51	6/23/2022 2:44	17.16	6/23/2022 1:53	4.87	6/23/2022 6:49	70.58
6/24/2022 5:40	50.68	6/24/2022 4:22	81.51	6/23/2022 2:45	17.18	6/23/2022 1:54	4.87	6/23/2022 6:50	70.57
6/24/2022 5:41	50.70	6/24/2022 4:23	81.45	6/23/2022 2:46	17.16	6/23/2022 1:55	4.84	6/23/2022 6:51	70.55
6/24/2022 5:42	50.70	6/24/2022 4:24	81.50	6/23/2022 2:47	17.15	6/23/2022 1:56	4.89	6/23/2022 6:52	70.49
6/24/2022 5:43	50.68	6/24/2022 4:25	81.50	6/23/2022 2:48	17.14	6/23/2022 1:57	4.90	6/23/2022 6:53	70.51
6/24/2022 5:44	50.69	6/24/2022 4:26	81.48	6/23/2022 2:49	17.19	6/23/2022 1:58	4.86	6/23/2022 6:54	70.44
6/24/2022 5:45	50.70	6/24/2022 4:27	81.50	6/23/2022 2:50	17.14	6/23/2022 1:59	4.87	6/23/2022 6:55	70.42
6/24/2022 5:46	50.71	6/24/2022 4:28	81.48	6/23/2022 2:51	17.15	6/23/2022 2:00	4.81	6/23/2022 6:56	70.38
6/24/2022 5:47	50.73	6/24/2022 4:29	81.46	6/23/2022 2:52	17.13	6/23/2022 2:01	4.90	6/23/2022 6:57	70.37
6/24/2022 5:48	50.68	6/24/2022 4:30	81.47	6/23/2022 2:53	17.17	6/23/2022 2:02	4.83	6/23/2022 6:58	70.32
6/24/2022 5:49	50.67	6/24/2022 4:31	81.53	6/23/2022 2:54	17.17	6/23/2022 2:03	4.89	6/23/2022 6:59	70.32
6/24/2022 5:50	50.70	6/24/2022 4:32	81.47	6/23/2022 2:55	17.14	6/23/2022 2:04	4.82	6/23/2022 7:00	70.28
6/24/2022 5:51	50.70	6/24/2022 4:33	81.47	6/23/2022 2:56	17.10	6/23/2022 2:05	4.84	6/23/2022 7:01	70.24
6/24/2022 5:52	50.69	6/24/2022 4:34	81.50	6/23/2022 2:57	17.13	6/23/2022 2:06	4.86	6/23/2022 7:02	70.22
6/24/2022 5:53	50.69	6/24/2022 4:35	81.52	6/23/2022 2:58	17.10	6/23/2022 2:07	4.83	6/23/2022 7:03	70.19
6/24/2022 5:54	50.67	6/24/2022 4:36	81.48	6/23/2022 2:59	17.18	6/23/2022 2:08	4.86	6/23/2022 7:04	70.18
6/24/2022 5:55	50.70	6/24/2022 4:37	81.50	6/23/2022 3:00	17.12	6/23/2022 2:09	4.86	6/23/2022 7:05	70.12
6/24/2022 5:56	50.70	6/24/2022 4:38	81.51	6/23/2022 3:01	17.11	6/23/2022 2:10	4.87	6/23/2022 7:06	70.11
6/24/2022 5:57	50.67	6/24/2022 4:39	81.50	6/23/2022 3:02	17.14	6/23/2022 2:11	4.82	6/23/2022 7:07	70.09
6/24/2022 5:58	50.65	6/24/2022 4:40	81.48	6/23/2022 3:03	17.12	6/23/2022 2:12	4.81	6/23/2022 7:08	70.08
6/24/2022 5:59	50.67	6/24/2022 4:41	81.50	6/23/2022 3:04	17.11	6/23/2022 2:13	4.85	6/23/2022 7:09	70.06
6/24/2022 6:00	50.67	6/24/2022 4:42	81.46	6/23/2022 3:05	17.13	6/23/2022 2:14	4.87	6/23/2022 7:10	70.02
6/24/2022 6:01	50.68	6/24/2022 4:43	81.48	6/23/2022 3:06	17.19	6/23/2022 2:15	4.86	6/23/2022 7:11	69.96
6/24/2022 6:02	50.66	6/24/2022 4:44	81.49	6/23/2022 3:07	17.12	6/23/2022 2:16	4.82	6/23/2022 7:12	69.93
6/24/2022 6:03	50.69	6/24/2022 4:45	81.47	6/23/2022 3:08	17.07	6/23/2022 2:17	4.84	6/23/2022 7:13	69.97
6/24/2022 6:04	50.62	6/24/2022 4:46	81.49	6/23/2022 3:09	17.09	6/23/2022 2:18	4.79	6/23/2022 7:14	73.28

6/24/2022 6:05	50.66	6/24/2022 4:47	81.48	6/23/2022 3:10	17.10	6/23/2022 2:19	4.79	6/23/2022 7:15	75.66
6/24/2022 6:06	50.70	6/24/2022 4:48	81.49	6/23/2022 3:11	17.11	6/23/2022 2:20	4.87	6/23/2022 7:16	75.54
6/24/2022 6:07	50.66	6/24/2022 4:49	81.51	6/23/2022 3:12	17.10	6/23/2022 2:21	4.80	6/23/2022 7:17	75.39
6/24/2022 6:08	50.70	6/24/2022 4:50	81.48	6/23/2022 3:13	17.07	6/23/2022 2:22	4.80	6/23/2022 7:18	75.24
6/24/2022 6:09	50.68	6/24/2022 4:51	81.47	6/23/2022 3:14	17.13	6/23/2022 2:23	4.79	6/23/2022 7:19	75.16
6/24/2022 6:10	50.67	6/24/2022 4:52	81.50	6/23/2022 3:15	17.12	6/23/2022 2:24	4.86	6/23/2022 7:20	75.07
6/24/2022 6:11	50.70	6/24/2022 4:53	81.48	6/23/2022 3:16	17.10	6/23/2022 2:25	5.40	6/23/2022 7:21	74.93
6/24/2022 6:12	50.65	6/24/2022 4:54	81.49	6/23/2022 3:17	17.11	6/23/2022 2:26	5.71	6/23/2022 7:22	74.83
6/24/2022 6:13	50.70	6/24/2022 4:55	81.47	6/23/2022 3:18	17.09	6/23/2022 2:27	5.89	6/23/2022 7:23	74.72
6/24/2022 6:14	50.69	6/24/2022 4:56	81.50	6/23/2022 3:19	17.12	6/23/2022 2:28	6.06	6/23/2022 7:24	74.67
6/24/2022 6:15	50.65	6/24/2022 4:57	81.49	6/23/2022 3:20	17.09	6/23/2022 2:29	6.19	6/23/2022 7:25	74.60
6/24/2022 6:16	50.67	6/24/2022 4:58	81.49	6/23/2022 3:21	17.08	6/23/2022 2:30	6.28	6/23/2022 7:26	74.49
6/24/2022 6:17	50.67	6/24/2022 4:59	81.51	6/23/2022 3:22	17.08	6/23/2022 2:31	6.39	6/23/2022 7:27	74.40
6/24/2022 6:18	50.65	6/24/2022 5:00	81.53	6/23/2022 3:23	17.06	6/23/2022 2:32	6.48	6/23/2022 7:28	74.33
6/24/2022 6:19	50.67	6/24/2022 5:01	81.55	6/23/2022 3:24	17.07	6/23/2022 2:33	6.53	6/23/2022 7:29	74.24
6/24/2022 6:20	50.67	6/24/2022 5:02	81.49	6/23/2022 3:25	17.09	6/23/2022 2:34	6.58	6/23/2022 7:30	74.14
6/24/2022 6:21	50.70	6/24/2022 5:03	81.46	6/23/2022 3:26	17.07	6/23/2022 2:35	6.63	6/23/2022 7:31	74.07
6/24/2022 6:22	50.64	6/24/2022 5:04	81.49	6/23/2022 3:27	17.07	6/23/2022 2:36	6.72	6/23/2022 7:32	74.02
6/24/2022 6:23	50.67	6/24/2022 5:05	81.49	6/23/2022 3:28	17.05	6/23/2022 2:37	6.80	6/23/2022 7:33	73.93
6/24/2022 6:24	50.66	6/24/2022 5:06	81.50	6/23/2022 3:29	17.07	6/23/2022 2:38	6.82	6/23/2022 7:34	73.84
6/24/2022 6:25	50.66	6/24/2022 5:07	81.50	6/23/2022 3:30	17.04	6/23/2022 2:39	6.97	6/23/2022 7:35	73.74
6/24/2022 6:26	50.69	6/24/2022 5:08	81.48	6/23/2022 3:31	17.05	6/23/2022 2:40	6.50	6/23/2022 7:36	73.68
6/24/2022 6:27	50.68	6/24/2022 5:09	81.50	6/23/2022 3:32	17.07	6/23/2022 2:41	6.28	6/23/2022 7:37	73.61
6/24/2022 6:28	50.64	6/24/2022 5:10	81.48	6/23/2022 3:33	17.04	6/23/2022 2:42	6.06	6/23/2022 7:38	73.58
6/24/2022 6:29	50.66	6/24/2022 5:11	81.49	6/23/2022 3:34	17.05	6/23/2022 2:43	5.93	6/23/2022 7:39	73.48
6/24/2022 6:30	50.66	6/24/2022 5:12	81.52	6/23/2022 3:35	17.06	6/23/2022 2:44	5.99	6/23/2022 7:40	73.38
6/24/2022 6:31	50.68	6/24/2022 5:13	81.53	6/23/2022 3:36	17.06	6/23/2022 2:45	5.89	6/23/2022 7:41	73.36
6/24/2022 6:32	50.67	6/24/2022 5:14	81.48	6/23/2022 3:37	17.04	6/23/2022 2:46	5.89	6/23/2022 7:42	73.29
6/24/2022 6:33	50.65	6/24/2022 5:15	81.50	6/23/2022 3:38	17.04	6/23/2022 2:47	5.87	6/23/2022 7:43	73.22
6/24/2022 6:34	50.67	6/24/2022 5:16	81.52	6/23/2022 3:39	17.06	6/23/2022 2:48	5.87	6/23/2022 7:44	73.14
6/24/2022 6:35	50.69	6/24/2022 5:17	81.50	6/23/2022 3:40	17.03	6/23/2022 2:49	5.80	6/23/2022 7:45	78.84
6/24/2022 6:36	50.66	6/24/2022 5:18	81.49	6/23/2022 3:41	17.00	6/23/2022 2:50	5.73	6/23/2022 7:46	78.91
6/24/2022 6:37	50.65	6/24/2022 5:19	81.47	6/23/2022 3:42	17.05	6/23/2022 2:51	5.83	6/23/2022 7:47	78.70
6/24/2022 6:38	50.67	6/24/2022 5:20	81.52	6/23/2022 3:43	17.02	6/23/2022 2:52	5.81	6/23/2022 7:48	78.61
6/24/2022 6:39	50.67	6/24/2022 5:21	81.51	6/23/2022 3:44	17.01	6/23/2022 2:53	5.80	6/23/2022 7:49	78.46
6/24/2022 6:40	50.65	6/24/2022 5:22	81.52	6/23/2022 3:45	17.01	6/23/2022 2:54	5.77	6/23/2022 7:50	78.35
6/24/2022 6:41	50.66	6/24/2022 5:23	81.48	6/23/2022 3:46	17.01	6/23/2022 2:55	5.82	6/23/2022 7:51	78.21
6/24/2022 6:42	50.62	6/24/2022 5:24	81.51	6/23/2022 3:47	17.01	6/23/2022 2:56	5.83	6/23/2022 7:52	78.09
6/24/2022 6:43	50.65	6/24/2022 5:25	81.51	6/23/2022 3:48	17.05	6/23/2022 2:57	5.73	6/23/2022 7:53	77.98
6/24/2022 6:44	50.68	6/24/2022 5:26	81.51	6/23/2022 3:49	17.00	6/23/2022 2:58	5.71	6/23/2022 7:54	77.84
6/24/2022 6:45	50.67	6/24/2022 5:27	81.50	6/23/2022 3:50	17.00	6/23/2022 2:59	5.74	6/23/2022 7:55	77.70
6/24/2022 6:46	50.66	6/24/2022 5:28	81.48	6/23/2022 3:51	17.02	6/23/2022 3:00	5.77	6/23/2022 7:56	77.62
6/24/2022 6:47	50.63	6/24/2022 5:29	81.48	6/23/2022 3:52	16.99	6/23/2022 3:01	5.80	6/23/2022 7:57	77.49
6/24/2022 6:48	50.63	6/24/2022 5:30	81.50	6/23/2022 3:53	17.01	6/23/2022 3:02	5.75	6/23/2022 7:58	81.63
6/24/2022 6:49	50.64	6/24/2022 5:31	81.49	6/23/2022 3:54	16.98	6/23/2022 3:03	5.74	6/23/2022 7:59	82.58
6/24/2022 6:50	50.61	6/24/2022 5:32	81.50	6/23/2022 3:55	17.00	6/23/2022 3:04	5.76	6/23/2022 8:00	82.34
6/24/2022 6:51	50.61	6/24/2022 5:33	81.50	6/23/2022 3:56	17.00	6/23/2022 3:05	5.70	6/23/2022 8:01	82.13
6/24/2022 6:52	50.64	6/24/2022 5:34	81.50	6/23/2022 3:57	17.00	6/23/2022 3:06	5.73	6/23/2022 8:02	81.92
6/24/2022 6:53	50.63	6/24/2022 5:35	81.47	6/23/2022 3:58	17.01	6/23/2022 3:07	5.81	6/23/2022 8:03	81.74
6/24/2022 6:54	50.66	6/24/2022 5:36	81.48	6/23/2022 3:59	17.03	6/23/2022 3:08	5.76	6/23/2022 8:04	88.71
6/24/2022 6:55	50.64	6/24/2022 5:37	81.48	6/23/2022 4:00	17.01	6/23/2022 3:09	5.81	6/23/2022 8:05	89.96
6/24/2022 6:56	50.63	6/24/2022 5:38	81.49	6/23/2022 4:01	16.96	6/23/2022 3:10	5.75	6/23/2022 8:06	89.14
6/24/2022 6:57	50.66	6/24/2022 5:39	81.49	6/23/2022 4:02	17.02	6/23/2022 3:11	5.79	6/23/2022 8:07	96.36
6/24/2022 6:58	50.66	6/24/2022 5:40	81.49	6/23/2022 4:03	16.96	6/23/2022 3:12	5.71	6/23/2022 8:08	96.97
6/24/2022 6:59	50.61	6/24/2022 5:41	81.50	6/23/2022 4:04	16.97	6/23/2022 3:13	5.82	6/23/2022 8:09	96.99
6/24/2022 7:00	50.65	6/24/2022 5:42	81.50	6/23/2022 4:05	17.00	6/23/2022 3:14	5.78	6/23/2022 8:10	103.90
6/24/2022 7:01	50.66	6/24/2022 5:43	81.51	6/23/2022 4:06	17.00	6/23/2022 3:15	5.73	6/23/2022 8:11	104.11
6/24/2022 7:02	50.65	6/24/2022 5:44	81.50	6/23/2022 4:07	16.97	6/23/2022 3:16	5.73	6/23/2022 8:12	103.52
6/24/2022 7:03	50.68	6/24/2022 5:45	81.49	6/23/2022 4:08	16.97	6/23/2022 3:17	5.77	6/23/2022 8:13	103.02
6/24/2022 7:04	50.63	6/24/2022 5:46	81.49	6/23/2022 4:09	17.01	6/23/2022 3:18	5.76	6/23/2022 8:14	102.53
6/24/2022 7:05	50.65	6/24/2022 5:47	81.51	6/23/2022 4:10	16.97	6/23/2022 3:19	5.73	6/23/2022 8:15	102.07
6/24/2022 7:06	50.66	6/24/2022 5:48	81.51	6/23/2022 4:11	16.94	6/23/2022 3:20	5.85	6/23/2022 8:16	101.64
6/24/2022 7:07	50.63	6/24/2022 5:49	81.49	6/23/2022 4:12	16.96	6/23/2022 3:21	5.81	6/23/2022 8:17	101.20
6/24/2022 7:08	50.65	6/24/2022 5:50	81.49	6/23/2022 4:13	17.00	6/23/2022 3:22	5.81	6/23/2022 8:18	100.79
6/24/2022 7:09	50.68	6/24/2022 5:51	81.53	6/23/2022 4:14	16.99	6/23/2022 3:23	5.72	6/23/2022 8:19	100.39
6/24/2022 7:10	50.64	6/24/2022 5:52	81.50	6/23/2022 4:15	17.00	6/23/2022 3:24	5.79	6/23/2022 8:20	100.02
6/24/2022 7:11	50.63	6/24/2022 5:53	81.49	6/23/2022 4:16	16.96	6/23/2022 3:25	5.82	6/23/2022 8:21	99.59
6/24/2022 7:12	50.64	6/24/2022 5:54	81.52	6/23/2022 4:17	16.99	6/23/2022 3:26	5.76	6/23/2022 8:22	99.19
6/24/2022 7:13	50.63	6/24/2022 5:55	81.48	6/23/2022 4:18	16.94	6/23/2022 3:27	5.85	6/23/2022 8:23	98.86
6/24/2022 7:14	50.64	6/24/2022 5:56	81.53	6/23/2022 4:19	16.96	6/23/2022 3:28	5.83	6/23/2022 8:24	98.52
6/24/2022 7:15	50.65	6/24/2022 5:57	81.49	6/23/2022 4:20	16.94	6/23/2022 3:29	5.85	6/23/2022 8:25	98.13
6/24/2022 7:16	50.64	6/24/2022 5:58	81.47	6/23/2022 4:21	16.94	6/23/2022 3:30	5.76	6/23/2022 8:26	97.78
6/24/2022 7:17	50.65	6/24/2022 5:59	81.50	6/23/2022 4:22	16.96	6/23/2022 3:31	5.87	6/23/2022 8:27	97.45
6/24/2022 7:18	50.64	6/24/2022 6:00	81.52	6/23/2022 4:23	16.97	6/23/2022 3:32	5.86	6/23/2022 8:28	97.09
6/24/2022 7:19	50.62	6/24/2022 6:01	81.51	6/23/2022 4:24	16.94	6/23/2022 3:33	5.83	6/23/2022 8:29	96.78
6/24/2022 7:20	50.65	6/24/2022 6:02	81.50	6/23/2022 4:25	16.93	6/23/2022 3:34	5.89	6/23/2022 8:30	96.44
6/24/2022 7:21	50.64	6/24/2022 6:03	81.54	6/23/2022 4:26	16.96	6/23/2022 3:35	5.83	6/23/2022 8:31	96.10
6/24/2022 7:22	50.61	6/24/2022 6:04	81.50	6/23/2022 4:27	16.93	6/23/2022 3:36	5.82	6/23/2022 8:32	95.78
6/24/2022 7:23	50.63	6/24/2022 6:05	81.52	6/23/2022 4:28	16.96	6/23/2022 3:37	5.83	6/23/2022 8:33	95.49
6/24/2022 7:24	50.62	6/24/2022 6:06	81.51	6/23/2022 4:29	16.90	6/23/2022 3:38	5.92	6/23/2022 8:34	100.34
6/24/2022 7:25	50.61	6/24/2022 6:07	81.51	6/23/2022 4:30	16.91	6/23/2022 3:39	5.95	6/23/2022 8:35	101.25
6/24/2022 7:26	50.58	6/24/2022 6:08	81.53	6/23/2022 4:31	16.91	6/23/2022 3:40	5.83	6/23/2022 8:36	100.85
6/24/2022 7:27	50.63	6/24/2022 6:09	81.55	6/23/2022 4:32	16.93	6/23/2022 3:41	5.88	6/23/2022 8:37	100.44
6/24/2022 7:28	50.63	6/24/2022 6:10	81.50	6/23/2022 4:33	16.98	6/23/2022 3:42	5.87	6/23/2022 8:38	100.05
6/24/2022 7:29	50.65	6/24/2022 6:11	81.50	6/23/2022 4:34	16.92	6/23/2022 3:43	5.85	6/23/2022 8:39	99.71
6/24/2022 7:30	50.63	6/24/2022 6:12	81.51	6/23/2022 4:35	16.95	6/23/2022 3:44	5.86	6/23/2022 8:40	99.30
6/24/2022 7:31	50.61	6/24/2022 6:13	81.47	6/23/2022 4:36	16.89	6/23/2022 3:45	5.95	6/23/2022 8:41	98.96
6/24/2022 7:32	50.64	6/24/2022 6:14	81.53	6/23/2022 4:37	16.92	6/23/2022 3:46	5.98	6/23/2022 8:42	98.58

6/24/2022 7:33	50.64	6/24/2022 6:15	81.54	6/23/2022 4:38	16.94	6/23/2022 3:47	5.94	6/23/2022 8:43	98.22
6/24/2022 7:34	50.64	6/24/2022 6:16	81.52	6/23/2022 4:39	16.92	6/23/2022 3:48	5.89	6/23/2022 8:44	97.87
6/24/2022 7:35	50.64	6/24/2022 6:17	81.51	6/23/2022 4:40	16.91	6/23/2022 3:49	5.94	6/23/2022 8:45	97.53
6/24/2022 7:36	50.62	6/24/2022 6:18	81.52	6/23/2022 4:41	16.94	6/23/2022 3:50	6.46	6/23/2022 8:46	97.22
6/24/2022 7:37	50.64	6/24/2022 6:19	81.53	6/23/2022 4:42	16.93	6/23/2022 3:51	6.78	6/23/2022 8:47	96.87
6/24/2022 7:38	50.60	6/24/2022 6:20	81.52	6/23/2022 4:43	16.92	6/23/2022 3:52	6.95	6/23/2022 8:48	96.54
6/24/2022 7:39	50.65	6/24/2022 6:21	81.50	6/23/2022 4:44	16.95	6/23/2022 3:53	7.12	6/23/2022 8:49	96.23
6/24/2022 7:40	50.64	6/24/2022 6:22	81.51	6/23/2022 4:45	16.93	6/23/2022 3:54	7.18	6/23/2022 8:50	95.95
6/24/2022 7:41	50.61	6/24/2022 6:23	81.50	6/23/2022 4:46	16.91	6/23/2022 3:55	7.33	6/23/2022 8:51	95.66
6/24/2022 7:42	50.63	6/24/2022 6:24	81.52	6/23/2022 4:47	16.95	6/23/2022 3:56	7.39	6/23/2022 8:52	95.31
6/24/2022 7:43	50.63	6/24/2022 6:25	81.52	6/23/2022 4:48	16.94	6/23/2022 3:57	7.42	6/23/2022 8:53	95.03
6/24/2022 7:44	50.62	6/24/2022 6:26	81.53	6/23/2022 4:49	16.96	6/23/2022 3:58	6.85	6/23/2022 8:54	94.76
6/24/2022 7:45	50.60	6/24/2022 6:27	81.53	6/23/2022 4:50	16.95	6/23/2022 3:59	6.62	6/23/2022 8:55	94.49
6/24/2022 7:46	50.64	6/24/2022 6:28	81.51	6/23/2022 4:51	16.89	6/23/2022 4:00	6.52	6/23/2022 8:56	94.20
6/24/2022 7:47	50.64	6/24/2022 6:29	81.52	6/23/2022 4:52	16.94	6/23/2022 4:01	6.47	6/23/2022 8:57	93.95
6/24/2022 7:48	50.60	6/24/2022 6:30	81.52	6/23/2022 4:53	16.89	6/23/2022 4:02	6.49	6/23/2022 8:58	93.72
6/24/2022 7:49	50.59	6/24/2022 6:31	81.55	6/23/2022 4:54	16.95	6/23/2022 4:03	6.35	6/23/2022 8:59	93.48
6/24/2022 7:50	50.61	6/24/2022 6:32	81.58	6/23/2022 4:55	16.90	6/23/2022 4:04	6.34	6/23/2022 9:00	93.21
6/24/2022 7:51	50.62	6/24/2022 6:33	81.53	6/23/2022 4:56	16.93	6/23/2022 4:05	6.34	6/23/2022 9:01	92.94
6/24/2022 7:52	50.59	6/24/2022 6:34	81.53	6/23/2022 4:57	16.88	6/23/2022 4:06	6.29	6/23/2022 9:02	92.68
6/24/2022 7:53	50.63	6/24/2022 6:35	81.52	6/23/2022 4:58	16.95	6/23/2022 4:07	6.32	6/23/2022 9:03	92.38
6/24/2022 7:54	50.63	6/24/2022 6:36	81.50	6/23/2022 4:59	16.95	6/23/2022 4:08	6.29	6/23/2022 9:04	92.15
6/24/2022 7:55	50.62	6/24/2022 6:37	81.55	6/23/2022 5:00	16.87	6/23/2022 4:09	6.29	6/23/2022 9:05	91.88
6/24/2022 7:56	50.63	6/24/2022 6:38	81.51	6/23/2022 5:01	16.89	6/23/2022 4:10	6.24	6/23/2022 9:06	91.70
6/24/2022 7:57	50.63	6/24/2022 6:39	81.49	6/23/2022 5:02	16.95	6/23/2022 4:11	6.27	6/23/2022 9:07	91.49
6/24/2022 7:58	50.63	6/24/2022 6:40	81.57	6/23/2022 5:03	16.87	6/23/2022 4:12	6.27	6/23/2022 9:08	91.28
6/24/2022 7:59	50.61	6/24/2022 6:41	81.51	6/23/2022 5:04	16.86	6/23/2022 4:13	6.26	6/23/2022 9:09	91.03
6/24/2022 8:00	50.63	6/24/2022 6:42	81.55	6/23/2022 5:05	16.92	6/23/2022 4:14	6.24	6/23/2022 9:10	90.83
6/24/2022 8:01	50.60	6/24/2022 6:43	81.50	6/23/2022 5:06	16.89	6/23/2022 4:15	6.21	6/23/2022 9:11	90.57
6/24/2022 8:02	50.63	6/24/2022 6:44	81.50	6/23/2022 5:07	16.96	6/23/2022 4:16	6.22	6/23/2022 9:12	90.39
6/24/2022 8:03	50.62	6/24/2022 6:45	81.52	6/23/2022 5:08	16.93	6/23/2022 4:17	6.16	6/23/2022 9:13	90.17
6/24/2022 8:04	50.66	6/24/2022 6:46	81.52	6/23/2022 5:09	16.92	6/23/2022 4:18	6.20	6/23/2022 9:14	89.92
6/24/2022 8:05	50.64	6/24/2022 6:47	81.53	6/23/2022 5:10	16.91	6/23/2022 4:19	6.18	6/23/2022 9:15	89.72
6/24/2022 8:06	50.64	6/24/2022 6:48	81.51	6/23/2022 5:11	16.90	6/23/2022 4:20	6.26	6/23/2022 9:16	89.52
6/24/2022 8:07	50.64	6/24/2022 6:49	81.51	6/23/2022 5:12	16.85	6/23/2022 4:21	6.20	6/23/2022 9:17	89.31
6/24/2022 8:08	50.61	6/24/2022 6:50	81.54	6/23/2022 5:13	16.86	6/23/2022 4:22	6.16	6/23/2022 9:18	89.09
6/24/2022 8:09	50.62	6/24/2022 6:51	81.53	6/23/2022 5:14	16.91	6/23/2022 4:23	6.17	6/23/2022 9:19	88.89
6/24/2022 8:10	50.60	6/24/2022 6:52	81.53	6/23/2022 5:15	16.89	6/23/2022 4:24	6.13	6/23/2022 9:20	88.69
6/24/2022 8:11	50.59	6/24/2022 6:53	81.52	6/23/2022 5:16	16.91	6/23/2022 4:25	6.13	6/23/2022 9:21	88.47
6/24/2022 8:12	50.59	6/24/2022 6:54	81.52	6/23/2022 5:17	16.85	6/23/2022 4:26	6.13	6/23/2022 9:22	88.30
6/24/2022 8:13	50.62	6/24/2022 6:55	81.53	6/23/2022 5:18	16.91	6/23/2022 4:27	6.23	6/23/2022 9:23	88.08
6/24/2022 8:14	50.61	6/24/2022 6:56	81.50	6/23/2022 5:19	16.91	6/23/2022 4:28	6.18	6/23/2022 9:24	87.85
6/24/2022 8:15	50.63	6/24/2022 6:57	81.53	6/23/2022 5:20	16.92	6/23/2022 4:29	6.14	6/23/2022 9:25	87.68
6/24/2022 8:16	50.61	6/24/2022 6:58	81.52	6/23/2022 5:21	16.86	6/23/2022 4:30	6.19	6/23/2022 9:26	87.48
6/24/2022 8:17	50.64	6/24/2022 6:59	81.55	6/23/2022 5:22	16.91	6/23/2022 4:31	6.10	6/23/2022 9:27	87.29
6/24/2022 8:18	50.61	6/24/2022 7:00	81.56	6/23/2022 5:23	16.87	6/23/2022 4:32	6.16	6/23/2022 9:28	87.11
6/24/2022 8:19	50.60	6/24/2022 7:01	81.53	6/23/2022 5:24	16.94	6/23/2022 4:33	6.09	6/23/2022 9:29	86.91
6/24/2022 8:20	50.60	6/24/2022 7:02	81.53	6/23/2022 5:25	16.83	6/23/2022 4:34	6.20	6/23/2022 9:30	86.66
6/24/2022 8:21	50.59	6/24/2022 7:03	81.49	6/23/2022 5:26	16.90	6/23/2022 4:35	6.11	6/23/2022 9:31	86.51
6/24/2022 8:22	50.61	6/24/2022 7:04	81.55	6/23/2022 5:27	16.90	6/23/2022 4:36	6.15	6/23/2022 9:32	86.32
6/24/2022 8:23	50.59	6/24/2022 7:05	81.53	6/23/2022 5:28	16.85	6/23/2022 4:37	6.14	6/23/2022 9:33	86.14
6/24/2022 8:24	50.59	6/24/2022 7:06	81.52	6/23/2022 5:29	16.91	6/23/2022 4:38	6.11	6/23/2022 9:34	85.96
6/24/2022 8:25	50.65	6/24/2022 7:07	81.52	6/23/2022 5:30	16.85	6/23/2022 4:39	6.14	6/23/2022 9:35	85.77
6/24/2022 8:26	50.60	6/24/2022 7:08	81.56	6/23/2022 5:31	16.84	6/23/2022 4:40	6.12	6/23/2022 9:36	85.59
6/24/2022 8:27	50.59	6/24/2022 7:09	81.51	6/23/2022 5:32	16.89	6/23/2022 4:41	6.08	6/23/2022 9:37	85.47
6/24/2022 8:28	50.58	6/24/2022 7:10	81.54	6/23/2022 5:33	16.89	6/23/2022 4:42	6.14	6/23/2022 9:38	85.24
6/24/2022 8:29	50.63	6/24/2022 7:11	81.48	6/23/2022 5:34	16.86	6/23/2022 4:43	6.10	6/23/2022 9:39	85.07
6/24/2022 8:30	50.61	6/24/2022 7:12	81.49	6/23/2022 5:35	16.82	6/23/2022 4:44	6.16	6/23/2022 9:40	84.94
6/24/2022 8:31	50.59	6/24/2022 7:13	81.53	6/23/2022 5:36	16.87	6/23/2022 4:45	6.11	6/23/2022 9:41	84.78
6/24/2022 8:32	50.58	6/24/2022 7:14	81.46	6/23/2022 5:37	16.84	6/23/2022 4:46	6.13	6/23/2022 9:42	84.60
6/24/2022 8:33	50.58	6/24/2022 7:15	81.51	6/23/2022 5:38	16.85	6/23/2022 4:47	6.13	6/23/2022 9:43	84.45
6/24/2022 8:34	50.63	6/24/2022 7:16	81.50	6/23/2022 5:39	16.87	6/23/2022 4:48	6.16	6/23/2022 9:44	84.29
6/24/2022 8:35	50.60	6/24/2022 7:17	81.55	6/23/2022 5:40	16.88	6/23/2022 4:49	6.11	6/23/2022 9:45	84.11
6/24/2022 8:36	50.59	6/24/2022 7:18	81.56	6/23/2022 5:41	16.86	6/23/2022 4:50	6.13	6/23/2022 9:46	83.95
6/24/2022 8:37	52.87	6/24/2022 7:19	81.52	6/23/2022 5:42	16.87	6/23/2022 4:51	6.11	6/23/2022 9:47	83.79
6/24/2022 8:38	54.50	6/24/2022 7:20	81.55	6/23/2022 5:43	16.88	6/23/2022 4:52	6.12	6/23/2022 9:48	83.64
6/24/2022 8:39	55.31	6/24/2022 7:21	81.52	6/23/2022 5:44	16.81	6/23/2022 4:53	6.08	6/23/2022 9:49	83.52
6/24/2022 8:40	55.63	6/24/2022 7:22	81.56	6/23/2022 5:45	16.87	6/23/2022 4:54	6.10	6/23/2022 9:50	83.31
6/24/2022 8:41	53.27	6/24/2022 7:23	81.49	6/23/2022 5:46	16.89	6/23/2022 4:55	6.15	6/23/2022 9:51	83.19
6/24/2022 8:42	52.45	6/24/2022 7:24	81.52	6/23/2022 5:47	16.83	6/23/2022 4:56	6.06	6/23/2022 9:52	83.09
6/24/2022 8:43	52.04	6/24/2022 7:25	81.52	6/23/2022 5:48	16.85	6/23/2022 4:57	6.07	6/23/2022 9:53	82.92
6/24/2022 8:44	51.82	6/24/2022 7:26	81.54	6/23/2022 5:49	16.84	6/23/2022 4:58	6.08	6/23/2022 9:54	82.78
6/24/2022 8:45	51.66	6/24/2022 7:27	81.53	6/23/2022 5:50	16.87	6/23/2022 4:59	6.08	6/23/2022 9:55	82.62
6/24/2022 8:46	51.56	6/24/2022 7:28	81.50	6/23/2022 5:51	16.85	6/23/2022 5:00	6.02	6/23/2022 9:56	82.51
6/24/2022 8:47	51.51	6/24/2022 7:29	81.52	6/23/2022 5:52	16.87	6/23/2022 5:01	6.07	6/23/2022 9:57	82.35
6/24/2022 8:48	51.45	6/24/2022 7:30	81.53	6/23/2022 5:53	16.81	6/23/2022 5:02	6.13	6/23/2022 9:58	82.21
6/24/2022 8:49	51.37	6/24/2022 7:31	81.53	6/23/2022 5:54	16.85	6/23/2022 5:03	6.05	6/23/2022 9:59	82.08
6/24/2022 8:50	51.31	6/24/2022 7:32	81.56	6/23/2022 5:55	16.82	6/23/2022 5:04	6.04	6/23/2022 10:00	81.93
6/24/2022 8:51	51.31	6/24/2022 7:33	81.55	6/23/2022 5:56	16.84	6/23/2022 5:05	6.06	6/23/2022 10:01	81.80
6/24/2022 8:52	51.27	6/24/2022 7:34	81.57	6/23/2022 5:57	16.86	6/23/2022 5:06	6.06	6/23/2022 10:02	81.70
6/24/2022 8:53	51.21	6/24/2022 7:35	81.51	6/23/2022 5:58	16.85	6/23/2022 5:07	6.00	6/23/2022 10:03	81.54
6/24/2022 8:54	51.21	6/24/2022 7:36	81.52	6/23/2022 5:59	16.85	6/23/2022 5:08	6.01	6/23/2022 10:04	81.46
6/24/2022 8:55	51.17	6/24/2022 7:37	81.56	6/23/2022 6:00	16.86	6/23/2022 5:09	6.08	6/23/2022 10:05	81.33
6/24/2022 8:56	51.16	6/24/2022 7:38	81.54	6/23/2022 6:01	16.82	6/23/2022 5:10	5.98	6/23/2022 10:06	81.19
6/24/2022 8:57	51.16	6/24/2022 7:39	81.54	6/23/2022 6:02	16.86	6/23/2022 5:11	6.01	6/23/2022 10:07	81.10
6/24/2022 8:58	51.12	6/24/2022 7:40	81.48	6/23/2022 6:03	16.83	6/23/2022 5:12	6.03	6/23/2022 10:08	80.98
6/24/2022 8:59	51.12	6/24/2022 7:41	81.47	6/23/2022 6:04	16.86	6/23/2022 5:13	5.98	6/23/2022 10:09	80.88
6/24/2022 9:00	51.12	6/24/2022 7:42	81.52	6/23/2022 6:05	16.86	6/23/2022 5:14	5.99	6/23/2022 10:10	80.75

6/24/2022 9:01	51.08	6/24/2022 7:43	81.54	6/23/2022 6:06	16.81	6/23/2022 5:15	5.96	6/23/2022 10:11	80.63
6/24/2022 9:02	51.05	6/24/2022 7:44	81.52	6/23/2022 6:07	16.85	6/23/2022 5:16	6.03	6/23/2022 10:12	80.57
6/24/2022 9:03	51.07	6/24/2022 7:45	81.52	6/23/2022 6:08	16.84	6/23/2022 5:17	5.95	6/23/2022 10:13	80.47
6/24/2022 9:04	51.09	6/24/2022 7:46	81.56	6/23/2022 6:09	16.85	6/23/2022 5:18	5.97	6/23/2022 10:14	80.36
6/24/2022 9:05	51.07	6/24/2022 7:47	81.55	6/23/2022 6:10	16.79	6/23/2022 5:19	6.01	6/23/2022 10:15	80.23
6/24/2022 9:06	51.05	6/24/2022 7:48	81.53	6/23/2022 6:11	16.83	6/23/2022 5:20	6.00	6/23/2022 10:16	80.12
6/24/2022 9:07	51.04	6/24/2022 7:49	81.52	6/23/2022 6:12	16.80	6/23/2022 5:21	5.93	6/23/2022 10:17	79.98
6/24/2022 9:08	51.04	6/24/2022 7:50	81.49	6/23/2022 6:13	16.89	6/23/2022 5:22	5.95	6/23/2022 10:18	79.87
6/24/2022 9:09	51.04	6/24/2022 7:51	81.52	6/23/2022 6:14	16.86	6/23/2022 5:23	5.96	6/23/2022 10:19	79.77
6/24/2022 9:10	51.03	6/24/2022 7:52	81.54	6/23/2022 6:15	16.81	6/23/2022 5:24	5.95	6/23/2022 10:20	79.66
6/24/2022 9:11	51.02	6/24/2022 7:53	81.51	6/23/2022 6:16	16.82	6/23/2022 5:25	5.94	6/23/2022 10:21	79.53
6/24/2022 9:12	51.00	6/24/2022 7:54	81.50	6/23/2022 6:17	16.83	6/23/2022 5:26	5.89	6/23/2022 10:22	79.44
6/24/2022 9:13	50.99	6/24/2022 7:55	81.53	6/23/2022 6:18	16.83	6/23/2022 5:27	5.94	6/23/2022 10:23	79.28
6/24/2022 9:14	50.97	6/24/2022 7:56	81.54	6/23/2022 6:19	16.86	6/23/2022 5:28	5.91	6/23/2022 10:24	79.23
6/24/2022 9:15	50.96	6/24/2022 7:57	81.51	6/23/2022 6:20	16.82	6/23/2022 5:29	5.89	6/23/2022 10:25	79.15
6/24/2022 9:16	50.95	6/24/2022 7:58	81.53	6/23/2022 6:21	16.80	6/23/2022 5:30	5.90	6/23/2022 10:26	79.07
6/24/2022 9:17	51.00	6/24/2022 7:59	81.54	6/23/2022 6:22	16.80	6/23/2022 5:31	5.85	6/23/2022 10:27	79.00
6/24/2022 9:18	50.96	6/24/2022 8:00	81.52	6/23/2022 6:23	16.84	6/23/2022 5:32	5.90	6/23/2022 10:28	78.92
6/24/2022 9:19	50.93	6/24/2022 8:01	81.50	6/23/2022 6:24	16.80	6/23/2022 5:33	5.88	6/23/2022 10:29	78.80
6/24/2022 9:20	50.92	6/24/2022 8:02	81.52	6/23/2022 6:25	16.86	6/23/2022 5:34	5.93	6/23/2022 10:30	78.75
6/24/2022 9:21	50.95	6/24/2022 8:03	81.50	6/23/2022 6:26	16.82	6/23/2022 5:35	5.84	6/23/2022 10:31	78.64
6/24/2022 9:22	50.93	6/24/2022 8:04	81.56	6/23/2022 6:27	16.84	6/23/2022 5:36	5.87	6/23/2022 10:32	78.54
6/24/2022 9:23	50.92	6/24/2022 8:05	81.55	6/23/2022 6:28	16.85	6/23/2022 5:37	5.85	6/23/2022 10:33	78.50
6/24/2022 9:24	50.95	6/24/2022 8:06	81.53	6/23/2022 6:29	16.81	6/23/2022 5:38	5.83	6/23/2022 10:34	78.38
6/24/2022 9:25	50.91	6/24/2022 8:07	81.54	6/23/2022 6:30	16.84	6/23/2022 5:39	5.82	6/23/2022 10:35	78.29
6/24/2022 9:26	50.90	6/24/2022 8:08	81.52	6/23/2022 6:31	16.81	6/23/2022 5:40	5.82	6/23/2022 10:36	78.19
6/24/2022 9:27	50.91	6/24/2022 8:09	81.57	6/23/2022 6:32	16.81	6/23/2022 5:41	5.84	6/23/2022 10:37	78.09
6/24/2022 9:28	50.90	6/24/2022 8:10	81.57	6/23/2022 6:33	16.81	6/23/2022 5:42	5.76	6/23/2022 10:38	78.03
6/24/2022 9:29	50.90	6/24/2022 8:11	81.53	6/23/2022 6:34	16.85	6/23/2022 5:43	5.77	6/23/2022 10:39	77.97
6/24/2022 9:30	50.92	6/24/2022 8:12	81.51	6/23/2022 6:35	16.79	6/23/2022 5:44	5.83	6/23/2022 10:40	77.82
6/24/2022 9:31	50.93	6/24/2022 8:13	81.54	6/23/2022 6:36	16.82	6/23/2022 5:45	5.75	6/23/2022 10:41	77.73
6/24/2022 9:32	50.93	6/24/2022 8:14	81.54	6/23/2022 6:37	16.83	6/23/2022 5:46	5.75	6/23/2022 10:42	77.66
6/24/2022 9:33	50.86	6/24/2022 8:15	81.53	6/23/2022 6:38	16.80	6/23/2022 5:47	5.77	6/23/2022 10:43	77.59
6/24/2022 9:34	50.88	6/24/2022 8:16	81.51	6/23/2022 6:39	16.83	6/23/2022 5:48	5.78	6/23/2022 10:44	77.50
6/24/2022 9:35	50.91	6/24/2022 8:17	81.53	6/23/2022 6:40	16.80	6/23/2022 5:49	5.75	6/23/2022 10:45	77.38
6/24/2022 9:36	50.91	6/24/2022 8:18	81.51	6/23/2022 6:41	16.86	6/23/2022 5:50	5.81	6/23/2022 10:46	77.29
6/24/2022 9:37	50.87	6/24/2022 8:19	81.55	6/23/2022 6:42	16.81	6/23/2022 5:51	5.78	6/23/2022 10:47	77.25
6/24/2022 9:38	50.86	6/24/2022 8:20	81.53	6/23/2022 6:43	16.79	6/23/2022 5:52	5.84	6/23/2022 10:48	77.16
6/24/2022 9:39	50.86	6/24/2022 8:21	81.52	6/23/2022 6:44	16.84	6/23/2022 5:53	5.74	6/23/2022 10:49	77.09
6/24/2022 9:40	50.85	6/24/2022 8:22	81.53	6/23/2022 6:45	16.81	6/23/2022 5:54	5.70	6/23/2022 10:50	76.99
6/24/2022 9:41	50.85	6/24/2022 8:23	81.56	6/23/2022 6:46	16.78	6/23/2022 5:55	5.72	6/23/2022 10:51	76.94
6/24/2022 9:42	50.84	6/24/2022 8:24	81.53	6/23/2022 6:47	16.85	6/23/2022 5:56	5.69	6/23/2022 10:52	76.86
6/24/2022 9:43	50.83	6/24/2022 8:25	81.48	6/23/2022 6:48	16.83	6/23/2022 5:57	5.71	6/23/2022 10:53	76.75
6/24/2022 9:44	50.88	6/24/2022 8:26	81.52	6/23/2022 6:49	16.79	6/23/2022 5:58	5.69	6/23/2022 10:54	76.70
6/24/2022 9:45	50.85	6/24/2022 8:27	81.53	6/23/2022 6:50	16.83	6/23/2022 5:59	5.72	6/23/2022 10:55	76.65
6/24/2022 9:46	50.84	6/24/2022 8:28	81.53	6/23/2022 6:51	16.86	6/23/2022 6:00	5.72	6/23/2022 10:56	76.53
6/24/2022 9:47	50.87	6/24/2022 8:29	81.56	6/23/2022 6:52	16.85	6/23/2022 6:01	5.68	6/23/2022 10:57	76.46
6/24/2022 9:48	50.84	6/24/2022 8:30	81.53	6/23/2022 6:53	16.86	6/23/2022 6:02	5.73	6/23/2022 10:58	76.37
6/24/2022 9:49	50.87	6/24/2022 8:31	81.53	6/23/2022 6:54	16.82	6/23/2022 6:03	7.94	6/23/2022 10:59	76.32
6/24/2022 9:50	50.85	6/24/2022 8:32	81.49	6/23/2022 6:55	16.86	6/23/2022 6:04	8.97	6/23/2022 11:00	76.21
6/24/2022 9:51	50.84	6/24/2022 8:33	81.53	6/23/2022 6:56	16.86	6/23/2022 6:05	9.66	6/23/2022 11:01	76.12
6/24/2022 9:52	50.82	6/24/2022 8:34	81.51	6/23/2022 6:57	16.82	6/23/2022 6:06	10.24	6/23/2022 11:02	76.08
6/24/2022 9:53	50.84	6/24/2022 8:35	81.55	6/23/2022 6:58	16.80	6/23/2022 6:07	11.21	6/23/2022 11:03	75.95
6/24/2022 9:54	50.86	6/24/2022 8:36	81.53	6/23/2022 6:59	16.83	6/23/2022 6:08	11.74	6/23/2022 11:04	75.95
6/24/2022 9:55	50.84	6/24/2022 8:37	81.55	6/23/2022 7:00	16.81	6/23/2022 6:09	12.21	6/23/2022 11:05	75.81
6/24/2022 9:56	50.81	6/24/2022 8:38	81.51	6/23/2022 7:01	16.83	6/23/2022 6:10	12.66	6/23/2022 11:06	75.75
6/24/2022 9:57	50.82	6/24/2022 8:39	81.53	6/23/2022 7:02	16.84	6/23/2022 6:11	13.05	6/23/2022 11:07	75.68
6/24/2022 9:58	50.84	6/24/2022 8:40	81.54	6/23/2022 7:03	16.84	6/23/2022 6:12	13.38	6/23/2022 11:08	75.61
6/24/2022 9:59	50.81	6/24/2022 8:41	81.50	6/23/2022 7:04	16.81	6/23/2022 6:13	13.74	6/23/2022 11:09	75.51
6/24/2022 10:00	50.81	6/24/2022 8:42	81.50	6/23/2022 7:05	16.85	6/23/2022 6:14	14.03	6/23/2022 11:10	75.47
6/24/2022 10:01	50.83	6/24/2022 8:43	81.54	6/23/2022 7:06	16.84	6/23/2022 6:15	14.30	6/23/2022 11:11	75.41
6/24/2022 10:02	50.84	6/24/2022 8:44	81.50	6/23/2022 7:07	16.81	6/23/2022 6:16	14.51	6/23/2022 11:12	75.30
6/24/2022 10:03	50.81	6/24/2022 8:45	81.49	6/23/2022 7:08	16.88	6/23/2022 6:17	14.27	6/23/2022 11:13	75.22
6/24/2022 10:04	50.82	6/24/2022 8:46	81.49	6/23/2022 7:09	16.80	6/23/2022 6:18	13.98	6/23/2022 11:14	75.15
6/24/2022 10:05	50.81	6/24/2022 8:47	81.51	6/23/2022 7:10	16.83	6/23/2022 6:19	13.82	6/23/2022 11:15	75.07
6/24/2022 10:06	50.84	6/24/2022 8:48	81.50	6/23/2022 7:11	16.79	6/23/2022 6:20	13.79	6/23/2022 11:16	75.00
6/24/2022 10:07	50.87	6/24/2022 8:49	81.55	6/23/2022 7:12	16.81	6/23/2022 6:21	13.80	6/23/2022 11:17	74.95
6/24/2022 10:08	50.82	6/24/2022 8:50	81.56	6/23/2022 7:13	16.83	6/23/2022 6:22	13.84	6/23/2022 11:18	74.90
6/24/2022 10:09	50.78	6/24/2022 8:51	81.55	6/23/2022 7:14	16.85	6/23/2022 6:23	14.28	6/23/2022 11:19	74.84
6/24/2022 10:10	50.80	6/24/2022 8:52	81.52	6/23/2022 7:15	16.85	6/23/2022 6:24	14.15	6/23/2022 11:20	74.76
6/24/2022 10:11	50.81	6/24/2022 8:53	81.55	6/23/2022 7:16	16.83	6/23/2022 6:25	14.20	6/23/2022 11:21	74.71
6/24/2022 10:12	50.78	6/24/2022 8:54	81.57	6/23/2022 7:17	16.81	6/23/2022 6:26	14.22	6/23/2022 11:22	74.62
6/24/2022 10:13	50.80	6/24/2022 8:55	81.53	6/23/2022 7:18	16.83	6/23/2022 6:27	14.28	6/23/2022 11:23	74.56
6/24/2022 10:14	50.81	6/24/2022 8:56	81.54	6/23/2022 7:19	16.87	6/23/2022 6:28	14.36	6/23/2022 11:24	74.48
6/24/2022 10:15	50.81	6/24/2022 8:57	81.59	6/23/2022 7:20	16.84	6/23/2022 6:29	14.99	6/23/2022 11:25	74.39
6/24/2022 10:16	50.82	6/24/2022 8:58	81.57	6/23/2022 7:21	16.87	6/23/2022 6:30	14.88	6/23/2022 11:26	74.35
6/24/2022 10:17	50.80	6/24/2022 8:59	81.53	6/23/2022 7:22	16.82	6/23/2022 6:31	14.85	6/23/2022 11:27	74.30
6/24/2022 10:18	50.79	6/24/2022 9:00	81.55	6/23/2022 7:23	16.78	6/23/2022 6:32	15.69	6/23/2022 11:28	74.24
6/24/2022 10:19	50.79	6/24/2022 9:01	81.52	6/23/2022 7:24	16.80	6/23/2022 6:33	15.91	6/23/2022 11:29	74.20
6/24/2022 10:20	50.75	6/24/2022 9:02	81.51	6/23/2022 7:25	16.81	6/23/2022 6:34	16.15	6/23/2022 11:30	74.12
6/24/2022 10:21	50.76	6/24/2022 9:03	81.53	6/23/2022 7:26	16.80	6/23/2022 6:35	16.61	6/23/2022 11:31	74.07
6/24/2022 10:22	50.79	6/24/2022 9:04	81.59	6/23/2022 7:27	16.81	6/23/2022 6:36	17.29	6/23/2022 11:32	74.03
6/24/2022 10:23	50.78	6/24/2022 9:05	81.56	6/23/2022 7:28	16.80	6/23/2022 6:37	17.71	6/23/2022 11:33	73.91
6/24/2022 10:24	50.79	6/24/2022 9:06	81.58	6/23/2022 7:29	18.07	6/23/2022 6:38	18.11	6/23/2022 11:34	73.89
6/24/2022 10:25	50.77	6/24/2022 9:07	81.50	6/23/2022 7:30	23.24	6/23/2022 6:39	18.45	6/23/2022 11:35	73.82
6/24/2022 10:26	50.76	6/24/2022 9:08	81.54	6/23/2022 7:31	26.34	6/23/2022 6:40	18.77	6/23/2022 11:36	73.73
6/24/2022 10:27	50.75	6/24/2022 9:09	81.52	6/23/2022 7:32	26.16	6/23/2022 6:41	19.04	6/23/2022 11:37	73.71
6/24/2022 10:28	50.76	6/24/2022 9:10	81.54	6/23/2022 7:33	23.50	6/23/2022 6:42	19.28	6/23/2022 11:38	73.64

6/24/2022 10:29	50.74	6/24/2022 9:11	81.53	6/23/2022 7:34	22.02	6/23/2022 6:43	19.56	6/23/2022 11:39	73.59
6/24/2022 10:30	50.73	6/24/2022 9:12	81.56	6/23/2022 7:35	21.12	6/23/2022 6:44	19.77	6/23/2022 11:40	73.51
6/24/2022 10:31	50.79	6/24/2022 9:13	81.53	6/23/2022 7:36	20.54	6/23/2022 6:45	20.10	6/23/2022 11:41	73.47
6/24/2022 10:32	50.76	6/24/2022 9:14	81.49	6/23/2022 7:37	20.12	6/23/2022 6:46	20.28	6/23/2022 11:42	73.42
6/24/2022 10:33	50.74	6/24/2022 9:15	81.53	6/23/2022 7:38	19.82	6/23/2022 6:47	20.41	6/23/2022 11:43	73.37
6/24/2022 10:34	50.77	6/24/2022 9:16	81.53	6/23/2022 7:39	19.58	6/23/2022 6:48	19.95	6/23/2022 11:44	73.34
6/24/2022 10:35	50.75	6/24/2022 9:17	81.54	6/23/2022 7:40	19.38	6/23/2022 6:49	19.74	6/23/2022 11:45	73.24
6/24/2022 10:36	50.74	6/24/2022 9:18	81.52	6/23/2022 7:41	19.24	6/23/2022 6:50	19.59	6/23/2022 11:46	73.24
6/24/2022 10:37	50.71	6/24/2022 9:19	81.55	6/23/2022 7:42	19.11	6/23/2022 6:51	19.57	6/23/2022 11:47	73.17
6/24/2022 10:38	50.75	6/24/2022 9:20	81.55	6/23/2022 7:43	19.01	6/23/2022 6:52	19.69	6/23/2022 11:48	73.12
6/24/2022 10:39	50.74	6/24/2022 9:21	81.52	6/23/2022 7:44	18.86	6/23/2022 6:53	19.67	6/23/2022 11:49	73.06
6/24/2022 10:40	50.76	6/24/2022 9:22	81.56	6/23/2022 7:45	18.79	6/23/2022 6:54	19.67	6/23/2022 11:50	73.02
6/24/2022 10:41	50.75	6/24/2022 9:23	81.50	6/23/2022 7:46	18.69	6/23/2022 6:55	19.62	6/23/2022 11:51	72.98
6/24/2022 10:42	50.74	6/24/2022 9:24	81.54	6/23/2022 7:47	18.57	6/23/2022 6:56	19.67	6/23/2022 11:52	72.92
6/24/2022 10:43	50.76	6/24/2022 9:25	81.53	6/23/2022 7:48	18.54	6/23/2022 6:57	19.75	6/23/2022 11:53	72.91
6/24/2022 10:44	50.76	6/24/2022 9:26	81.51	6/23/2022 7:49	18.45	6/23/2022 6:58	19.79	6/23/2022 11:54	72.83
6/24/2022 10:45	50.73	6/24/2022 9:27	81.55	6/23/2022 7:50	18.41	6/23/2022 6:59	19.91	6/23/2022 11:55	72.76
6/24/2022 10:46	50.77	6/24/2022 9:28	81.53	6/23/2022 7:51	18.34	6/23/2022 7:00	19.97	6/23/2022 11:56	72.74
6/24/2022 10:47	50.71	6/24/2022 9:29	81.53	6/23/2022 7:52	18.28	6/23/2022 7:01	20.03	6/23/2022 11:57	72.70
6/24/2022 10:48	50.74	6/24/2022 9:30	81.55	6/23/2022 7:53	18.22	6/23/2022 7:02	20.09	6/23/2022 11:58	72.63
6/24/2022 10:49	50.73	6/24/2022 9:31	81.57	6/23/2022 7:54	18.18	6/23/2022 7:03	20.13	6/23/2022 11:59	72.62
6/24/2022 10:50	50.76	6/24/2022 9:32	81.55	6/23/2022 7:55	18.17	6/23/2022 7:04	20.22	6/23/2022 12:00	72.56
6/24/2022 10:51	50.74	6/24/2022 9:33	81.53	6/23/2022 7:56	18.06	6/23/2022 7:05	20.35	6/23/2022 12:01	72.50
6/24/2022 10:52	50.72	6/24/2022 9:34	81.53	6/23/2022 7:57	18.02	6/23/2022 7:06	20.60	6/23/2022 12:02	72.47
6/24/2022 10:53	50.68	6/24/2022 9:35	81.52	6/23/2022 7:58	18.08	6/23/2022 7:07	20.04	6/23/2022 12:03	72.42
6/24/2022 10:54	50.74	6/24/2022 9:36	81.51	6/23/2022 7:59	18.02	6/23/2022 7:08	19.48	6/23/2022 12:04	72.37
6/24/2022 10:55	50.74	6/24/2022 9:37	81.53	6/23/2022 8:00	18.00	6/23/2022 7:09	19.08	6/23/2022 12:05	72.32
6/24/2022 10:56	50.71	6/24/2022 9:38	81.52	6/23/2022 8:01	17.92	6/23/2022 7:10	18.79	6/23/2022 12:06	72.28
6/24/2022 10:57	50.75	6/24/2022 9:39	81.55	6/23/2022 8:02	17.92	6/23/2022 7:11	18.57	6/23/2022 12:07	72.29
6/24/2022 10:58	50.71	6/24/2022 9:40	81.49	6/23/2022 8:03	17.87	6/23/2022 7:12	18.38	6/23/2022 12:08	72.18
6/24/2022 10:59	50.73	6/24/2022 9:41	81.53	6/23/2022 8:04	17.83	6/23/2022 7:13	18.26	6/23/2022 12:09	72.17
6/24/2022 11:00	50.69	6/24/2022 9:42	81.56	6/23/2022 8:05	17.83	6/23/2022 7:14	18.22	6/23/2022 12:10	72.10
6/24/2022 11:01	50.72	6/24/2022 9:43	81.53	6/23/2022 8:06	17.78	6/23/2022 7:15	17.29	6/23/2022 12:11	72.08
6/24/2022 11:02	50.72	6/24/2022 9:44	81.51	6/23/2022 8:07	17.79	6/23/2022 7:16	16.64	6/23/2022 12:12	72.06
6/24/2022 11:03	50.74	6/24/2022 9:45	81.55	6/23/2022 8:08	17.73	6/23/2022 7:17	16.21	6/23/2022 12:13	71.99
6/24/2022 11:04	50.73	6/24/2022 9:46	81.55	6/23/2022 8:09	17.77	6/23/2022 7:18	15.87	6/23/2022 12:14	71.99
6/24/2022 11:05	50.71	6/24/2022 9:47	81.50	6/23/2022 8:10	17.78	6/23/2022 7:19	15.60	6/23/2022 12:15	71.90
6/24/2022 11:06	50.71	6/24/2022 9:48	81.54	6/23/2022 8:11	17.71	6/23/2022 7:20	15.37	6/23/2022 12:16	71.89
6/24/2022 11:07	50.72	6/24/2022 9:49	81.53	6/23/2022 8:12	17.71	6/23/2022 7:21	15.27	6/23/2022 12:17	71.86
6/24/2022 11:08	50.72	6/24/2022 9:50	81.49	6/23/2022 8:13	17.66	6/23/2022 7:22	15.02	6/23/2022 12:18	71.79
6/24/2022 11:09	50.69	6/24/2022 9:51	81.53	6/23/2022 8:14	17.63	6/23/2022 7:23	15.21	6/23/2022 12:19	74.71
6/24/2022 11:10	50.72	6/24/2022 9:52	81.53	6/23/2022 8:15	17.62	6/23/2022 7:24	15.08	6/23/2022 12:20	77.05
6/24/2022 11:11	50.72	6/24/2022 9:53	81.57	6/23/2022 8:16	17.64	6/23/2022 7:25	14.99	6/23/2022 12:21	76.90
6/24/2022 11:12	50.70	6/24/2022 9:54	81.53	6/23/2022 8:17	17.62	6/23/2022 7:26	14.74	6/23/2022 12:22	76.78
6/24/2022 11:13	50.69	6/24/2022 9:55	81.49	6/23/2022 8:18	17.59	6/23/2022 7:27	14.57	6/23/2022 12:23	76.66
6/24/2022 11:14	50.68	6/24/2022 9:56	81.50	6/23/2022 8:19	17.57	6/23/2022 7:28	14.47	6/23/2022 12:24	76.58
6/24/2022 11:15	50.71	6/24/2022 9:57	81.54	6/23/2022 8:20	17.56	6/23/2022 7:29	14.23	6/23/2022 12:25	76.42
6/24/2022 11:16	50.69	6/24/2022 9:58	81.54	6/23/2022 8:21	17.55	6/23/2022 7:30	14.60	6/23/2022 12:26	76.32
6/24/2022 11:17	50.70	6/24/2022 9:59	81.51	6/23/2022 8:22	17.54	6/23/2022 7:31	14.24	6/23/2022 12:27	76.25
6/24/2022 11:18	50.72	6/24/2022 10:00	81.56	6/23/2022 8:23	17.52	6/23/2022 7:32	14.13	6/23/2022 12:28	76.14
6/24/2022 11:19	50.67	6/24/2022 10:01	81.51	6/23/2022 8:24	17.53	6/23/2022 7:33	13.99	6/23/2022 12:29	76.04
6/24/2022 11:20	50.68	6/24/2022 10:02	81.55	6/23/2022 8:25	17.52	6/23/2022 7:34	13.83	6/23/2022 12:30	75.95
6/24/2022 11:21	50.70	6/24/2022 10:03	81.58	6/23/2022 8:26	17.52	6/23/2022 7:35	13.72	6/23/2022 12:31	75.86
6/24/2022 11:22	50.67	6/24/2022 10:04	81.56	6/23/2022 8:27	17.49	6/23/2022 7:36	13.61	6/23/2022 12:32	75.74
6/24/2022 11:23	50.71	6/24/2022 10:05	81.54	6/23/2022 8:28	17.46	6/23/2022 7:37	13.47	6/23/2022 12:33	75.65
6/24/2022 11:24	50.71	6/24/2022 10:06	81.53	6/23/2022 8:29	17.38	6/23/2022 7:38	13.45	6/23/2022 12:34	75.60
6/24/2022 11:25	50.71	6/24/2022 10:07	81.53	6/23/2022 8:30	17.46	6/23/2022 7:39	13.34	6/23/2022 12:35	75.47
6/24/2022 11:26	50.68	6/24/2022 10:08	81.53	6/23/2022 8:31	17.41	6/23/2022 7:40	13.22	6/23/2022 12:36	75.36
6/24/2022 11:27	50.68	6/24/2022 10:09	81.53	6/23/2022 8:32	17.42	6/23/2022 7:41	13.12	6/23/2022 12:37	75.31
6/24/2022 11:28	50.70	6/24/2022 10:10	81.55	6/23/2022 8:33	17.42	6/23/2022 7:42	13.07	6/23/2022 12:38	75.24
6/24/2022 11:29	50.69	6/24/2022 10:11	81.53	6/23/2022 8:34	17.42	6/23/2022 7:43	12.97	6/23/2022 12:39	75.12
6/24/2022 11:30	50.73	6/24/2022 10:12	81.53	6/23/2022 8:35	17.40	6/23/2022 7:44	12.91	6/23/2022 12:40	75.08
6/24/2022 11:31	50.68	6/24/2022 10:13	81.54	6/23/2022 8:36	17.38	6/23/2022 7:45	12.89	6/23/2022 12:41	74.94
6/24/2022 11:32	50.68	6/24/2022 10:14	81.48	6/23/2022 8:37	17.39	6/23/2022 7:46	12.77	6/23/2022 12:42	74.91
6/24/2022 11:33	50.70	6/24/2022 10:15	81.55	6/23/2022 8:38	17.36	6/23/2022 7:47	12.64	6/23/2022 12:43	74.87
6/24/2022 11:34	50.70	6/24/2022 10:16	83.75	6/23/2022 8:39	17.38	6/23/2022 7:48	12.60	6/23/2022 12:44	74.75
6/24/2022 11:35	50.66	6/24/2022 10:17	83.35	6/23/2022 8:40	17.37	6/23/2022 7:49	12.57	6/23/2022 12:45	74.69
6/24/2022 11:36	50.68	6/24/2022 10:18	83.02	6/23/2022 8:41	17.36	6/23/2022 7:50	12.54	6/23/2022 12:46	74.57
6/24/2022 11:37	50.70	6/24/2022 10:19	82.79	6/23/2022 8:42	17.33	6/23/2022 7:51	12.39	6/23/2022 12:47	74.53
6/24/2022 11:38	50.68	6/24/2022 10:20	82.61	6/23/2022 8:43	17.37	6/23/2022 7:52	12.40	6/23/2022 12:48	74.41
6/24/2022 11:39	50.67	6/24/2022 10:21	82.48	6/23/2022 8:44	17.38	6/23/2022 7:53	12.34	6/23/2022 12:49	74.35
6/24/2022 11:40	50.69	6/24/2022 10:22	82.33	6/23/2022 8:45	17.35	6/23/2022 7:54	12.25	6/23/2022 12:50	74.28
6/24/2022 11:41	50.68	6/24/2022 10:23	82.20	6/23/2022 8:46	17.33	6/23/2022 7:55	12.17	6/23/2022 12:51	74.23
6/24/2022 11:42	50.69	6/24/2022 10:24	82.16	6/23/2022 8:47	17.31	6/23/2022 7:56	12.16	6/23/2022 12:52	74.15
6/24/2022 11:43	50.69	6/24/2022 10:25	82.07	6/23/2022 8:48	17.27	6/23/2022 7:57	12.08	6/23/2022 12:53	74.08
6/24/2022 11:44	50.71	6/24/2022 10:26	82.01	6/23/2022 8:49	17.26	6/23/2022 7:58	12.09	6/23/2022 12:54	74.04
6/24/2022 11:45	50.65	6/24/2022 10:27	81.97	6/23/2022 8:50	17.31	6/23/2022 7:59	11.97	6/23/2022 12:55	73.96
6/24/2022 11:46	50.69	6/24/2022 10:28	81.95	6/23/2022 8:51	17.27	6/23/2022 8:00	12.02	6/23/2022 12:56	73.88
6/24/2022 11:47	50.71	6/24/2022 10:29	81.84	6/23/2022 8:52	17.28	6/23/2022 8:01	11.90	6/23/2022 12:57	73.81
6/24/2022 11:48	50.67	6/24/2022 10:30	81.88	6/23/2022 8:53	17.27	6/23/2022 8:02	11.86	6/23/2022 12:58	73.76
6/24/2022 11:49	50.68	6/24/2022 10:31	81.87	6/23/2022 8:54	17.26	6/23/2022 8:03	11.85	6/23/2022 12:59	73.66
6/24/2022 11:50	50.68	6/24/2022 10:32	81.80	6/23/2022 8:55	17.26	6/23/2022 8:04	12.03	6/23/2022 13:00	73.60
6/24/2022 11:51	50.66	6/24/2022 10:33	81.80	6/23/2022 8:56	17.24	6/23/2022 8:05	11.79	6/23/2022 13:01	73.57
6/24/2022 11:52	50.68	6/24/2022 10:34	81.80	6/23/2022 8:57	17.29	6/23/2022 8:06	11.79	6/23/2022 13:02	73.48
6/24/2022 11:53	50.62	6/24/2022 10:35	81.81	6/23/2022 8:58	17.26	6/23/2022 8:07	11.67	6/23/2022 13:03	73.45
6/24/2022 11:54	50.69	6/24/2022 10:36	81.72	6/23/2022 8:59	17.29	6/23/2022 8:08	11.62	6/23/2022 13:04	73.38
6/24/2022 11:55	50.66	6/24/2022 10:37	81.75	6/23/2022 9:00	17.23	6/23/2022 8:09	11.61	6/23/2022 13:05	73.31
6/24/2022 11:56	50.66	6/24/2022 10:38	81.71	6/23/2022 9:01	17.29	6/23/2022 8:10	11.56	6/23/2022 13:06	73.22

6/24/2022 11:57	50.69	6/24/2022 10:39	81.68	6/23/2022 9:02	17.22	6/23/2022 8:11	11.55	6/23/2022 13:07	73.21
6/24/2022 11:58	50.66	6/24/2022 10:40	81.67	6/23/2022 9:03	17.19	6/23/2022 8:12	11.42	6/23/2022 13:08	73.11
6/24/2022 11:59	50.67	6/24/2022 10:41	81.63	6/23/2022 9:04	17.19	6/23/2022 8:13	11.44	6/23/2022 13:09	73.05
6/24/2022 12:00	50.67	6/24/2022 10:42	81.67	6/23/2022 9:05	17.17	6/23/2022 8:14	11.36	6/23/2022 13:10	73.01
6/24/2022 12:01	50.68	6/24/2022 10:43	81.59	6/23/2022 9:06	17.21	6/23/2022 8:15	11.26	6/23/2022 13:11	72.95
6/24/2022 12:02	50.65	6/24/2022 10:44	81.66	6/23/2022 9:07	17.19	6/23/2022 8:16	11.32	6/23/2022 13:12	72.90
6/24/2022 12:03	50.68	6/24/2022 10:45	81.64	6/23/2022 9:08	17.22	6/23/2022 8:17	11.24	6/23/2022 13:13	72.86
6/24/2022 12:04	50.65	6/24/2022 10:46	81.61	6/23/2022 9:09	17.20	6/23/2022 8:18	11.17	6/23/2022 13:14	72.81
6/24/2022 12:05	50.64	6/24/2022 10:47	81.63	6/23/2022 9:10	17.16	6/23/2022 8:19	11.11	6/23/2022 13:15	72.72
6/24/2022 12:06	50.69	6/24/2022 10:48	81.59	6/23/2022 9:11	17.18	6/23/2022 8:20	11.11	6/23/2022 13:16	72.69
6/24/2022 12:07	50.65	6/24/2022 10:49	81.59	6/23/2022 9:12	17.18	6/23/2022 8:21	11.17	6/23/2022 13:17	72.66
6/24/2022 12:08	50.65	6/24/2022 10:50	81.58	6/23/2022 9:13	17.14	6/23/2022 8:22	11.09	6/23/2022 13:18	72.57
6/24/2022 12:09	50.66	6/24/2022 10:51	81.62	6/23/2022 9:14	17.17	6/23/2022 8:23	11.07	6/23/2022 13:19	72.52
6/24/2022 12:10	50.67	6/24/2022 10:52	81.64	6/23/2022 9:15	17.14	6/23/2022 8:24	10.99	6/23/2022 13:20	72.46
6/24/2022 12:11	50.69	6/24/2022 10:53	81.60	6/23/2022 9:16	17.17	6/23/2022 8:25	10.95	6/23/2022 13:21	72.43
6/24/2022 12:12	50.62	6/24/2022 10:54	81.58	6/23/2022 9:17	17.17	6/23/2022 8:26	10.92	6/23/2022 13:22	72.36
6/24/2022 12:13	50.65	6/24/2022 10:55	81.59	6/23/2022 9:18	17.14	6/23/2022 8:27	10.86	6/23/2022 13:23	72.32
6/24/2022 12:14	50.65	6/24/2022 10:56	81.60	6/23/2022 9:19	17.10	6/23/2022 8:28	10.90	6/23/2022 13:24	72.25
6/24/2022 12:15	50.68	6/24/2022 10:57	81.57	6/23/2022 9:20	17.13	6/23/2022 8:29	11.16	6/23/2022 13:25	72.27
6/24/2022 12:16	50.68	6/24/2022 10:58	81.60	6/23/2022 9:21	17.10	6/23/2022 8:30	11.29	6/23/2022 13:26	72.18
6/24/2022 12:17	50.64	6/24/2022 10:59	81.61	6/23/2022 9:22	17.13	6/23/2022 8:31	10.94	6/23/2022 13:27	72.14
6/24/2022 12:18	50.67	6/24/2022 11:00	81.59	6/23/2022 9:23	17.05	6/23/2022 8:32	10.82	6/23/2022 13:28	72.04
6/24/2022 12:19	50.65	6/24/2022 11:01	81.59	6/23/2022 9:24	17.13	6/23/2022 8:33	10.81	6/23/2022 13:29	72.04
6/24/2022 12:20	50.66	6/24/2022 11:02	81.58	6/23/2022 9:25	17.13	6/23/2022 8:34	10.65	6/23/2022 13:30	71.97
6/24/2022 12:21	50.65	6/24/2022 11:03	81.54	6/23/2022 9:26	17.08	6/23/2022 8:35	10.59	6/23/2022 13:31	71.96
6/24/2022 12:22	50.67	6/24/2022 11:04	81.59	6/23/2022 9:27	17.10	6/23/2022 8:36	10.60	6/23/2022 13:32	71.87
6/24/2022 12:23	50.64	6/24/2022 11:05	81.57	6/23/2022 9:28	17.10	6/23/2022 8:37	10.57	6/23/2022 13:33	71.84
6/24/2022 12:24	50.67	6/24/2022 11:06	81.59	6/23/2022 9:29	17.08	6/23/2022 8:38	10.97	6/23/2022 13:34	71.79
6/24/2022 12:25	50.67	6/24/2022 11:07	81.58	6/23/2022 9:30	17.07	6/23/2022 8:39	11.13	6/23/2022 13:35	72.94
6/24/2022 12:26	50.64	6/24/2022 11:08	82.55	6/23/2022 9:31	17.10	6/23/2022 8:40	10.90	6/23/2022 13:36	78.05
6/24/2022 12:27	50.65	6/24/2022 11:09	82.31	6/23/2022 9:32	17.08	6/23/2022 8:41	10.87	6/23/2022 13:37	77.82
6/24/2022 12:28	50.67	6/24/2022 11:10	83.60	6/23/2022 9:33	17.09	6/23/2022 8:42	10.96	6/23/2022 13:38	77.68
6/24/2022 12:29	50.64	6/24/2022 11:11	83.23	6/23/2022 9:34	17.01	6/23/2022 8:43	10.71	6/23/2022 13:39	77.51
6/24/2022 12:30	50.66	6/24/2022 11:12	83.58	6/23/2022 9:35	17.12	6/23/2022 8:44	10.80	6/23/2022 13:40	77.41
6/24/2022 12:31	50.67	6/24/2022 11:13	84.06	6/23/2022 9:36	17.04	6/23/2022 8:45	10.54	6/23/2022 13:41	77.28
6/24/2022 12:32	50.60	6/24/2022 11:14	83.63	6/23/2022 9:37	17.06	6/23/2022 8:46	10.51	6/23/2022 13:42	77.15
6/24/2022 12:33	50.64	6/24/2022 11:15	85.05	6/23/2022 9:38	17.12	6/23/2022 8:47	10.87	6/23/2022 13:43	77.10
6/24/2022 12:34	50.66	6/24/2022 11:16	84.52	6/23/2022 9:39	17.08	6/23/2022 8:48	11.12	6/23/2022 13:44	76.97
6/24/2022 12:35	50.69	6/24/2022 11:17	84.09	6/23/2022 9:40	17.08	6/23/2022 8:49	10.79	6/23/2022 13:45	76.88
6/24/2022 12:36	50.62	6/24/2022 11:18	83.72	6/23/2022 9:41	17.03	6/23/2022 8:50	11.05	6/23/2022 13:46	76.74
6/24/2022 12:37	50.64	6/24/2022 11:19	84.22	6/23/2022 9:42	17.05	6/23/2022 8:51	11.07	6/23/2022 13:47	76.66
6/24/2022 12:38	50.66	6/24/2022 11:20	83.88	6/23/2022 9:43	17.03	6/23/2022 8:52	10.67	6/23/2022 13:48	76.59
6/24/2022 12:39	50.64	6/24/2022 11:21	83.55	6/23/2022 9:44	17.03	6/23/2022 8:53	10.54	6/23/2022 13:49	76.49
6/24/2022 12:40	50.63	6/24/2022 11:22	83.31	6/23/2022 9:45	17.06	6/23/2022 8:54	10.46	6/23/2022 13:50	76.37
6/24/2022 12:41	50.64	6/24/2022 11:23	83.05	6/23/2022 9:46	17.03	6/23/2022 8:55	10.33	6/23/2022 13:51	76.25
6/24/2022 12:42	50.67	6/24/2022 11:24	82.90	6/23/2022 9:47	17.07	6/23/2022 8:56	10.29	6/23/2022 13:52	76.15
6/24/2022 12:43	50.61	6/24/2022 11:25	82.74	6/23/2022 9:48	17.04	6/23/2022 8:57	10.24	6/23/2022 13:53	76.06
6/24/2022 12:44	50.58	6/24/2022 11:26	82.61	6/23/2022 9:49	17.05	6/23/2022 8:58	10.23	6/23/2022 13:54	75.96
6/24/2022 12:45	50.65	6/24/2022 11:27	82.53	6/23/2022 9:50	17.02	6/23/2022 8:59	10.11	6/23/2022 13:55	75.85
6/24/2022 12:46	50.63	6/24/2022 11:28	82.43	6/23/2022 9:51	17.02	6/23/2022 9:00	10.09	6/23/2022 13:56	75.79
6/24/2022 12:47	50.62	6/24/2022 11:29	82.36	6/23/2022 9:52	17.05	6/23/2022 9:01	10.07	6/23/2022 13:57	75.68
6/24/2022 12:48	50.66	6/24/2022 11:30	82.27	6/23/2022 9:53	17.06	6/23/2022 9:02	10.08	6/23/2022 13:58	75.58
6/24/2022 12:49	50.61	6/24/2022 11:31	82.25	6/23/2022 9:54	17.06	6/23/2022 9:03	9.94	6/23/2022 13:59	75.51
6/24/2022 12:50	50.62	6/24/2022 11:32	82.16	6/23/2022 9:55	17.02	6/23/2022 9:04	9.95	6/23/2022 14:00	75.44
6/24/2022 12:51	50.64	6/24/2022 11:33	82.14	6/23/2022 9:56	16.96	6/23/2022 9:05	9.92	6/23/2022 14:01	75.33
6/24/2022 12:52	50.64	6/24/2022 11:34	82.05	6/23/2022 9:57	17.07	6/23/2022 9:06	9.91	6/23/2022 14:02	75.22
6/24/2022 12:53	50.63	6/24/2022 11:35	82.08	6/23/2022 9:58	17.01	6/23/2022 9:07	10.25	6/23/2022 14:03	75.16
6/24/2022 12:54	50.59	6/24/2022 11:36	81.96	6/23/2022 9:59	17.00	6/23/2022 9:08	10.02	6/23/2022 14:04	75.08
6/24/2022 12:55	50.63	6/24/2022 11:37	81.95	6/23/2022 10:00	16.97	6/23/2022 9:09	9.96	6/23/2022 14:05	74.99
6/24/2022 12:56	50.62	6/24/2022 11:38	81.91	6/23/2022 10:01	17.02	6/23/2022 9:10	10.35	6/23/2022 14:06	74.90
6/24/2022 12:57	50.66	6/24/2022 11:39	81.94	6/23/2022 10:02	17.02	6/23/2022 9:11	10.30	6/23/2022 14:07	74.80
6/24/2022 12:58	50.65	6/24/2022 11:40	81.88	6/23/2022 10:03	17.00	6/23/2022 9:12	10.03	6/23/2022 14:08	74.76
6/24/2022 12:59	50.61	6/24/2022 11:41	81.83	6/23/2022 10:04	17.02	6/23/2022 9:13	9.88	6/23/2022 14:09	74.65
6/24/2022 13:00	50.62	6/24/2022 11:42	81.81	6/23/2022 10:05	17.04	6/23/2022 9:14	9.89	6/23/2022 14:10	74.59
6/24/2022 13:01	50.63	6/24/2022 11:43	81.80	6/23/2022 10:06	16.99	6/23/2022 9:15	9.73	6/23/2022 14:11	74.50
6/24/2022 13:02	50.60	6/24/2022 11:44	81.83	6/23/2022 10:07	17.03	6/23/2022 9:16	9.72	6/23/2022 14:12	74.43
6/24/2022 13:03	50.63	6/24/2022 11:45	81.81	6/23/2022 10:08	16.97	6/23/2022 9:17	9.69	6/23/2022 14:13	74.38
6/24/2022 13:04	50.65	6/24/2022 11:46	81.77	6/23/2022 10:09	17.02	6/23/2022 9:18	9.73	6/23/2022 14:14	74.26
6/24/2022 13:05	50.56	6/24/2022 11:47	81.75	6/23/2022 10:10	17.00	6/23/2022 9:19	9.63	6/23/2022 14:15	74.21
6/24/2022 13:06	50.60	6/24/2022 11:48	81.75	6/23/2022 10:11	17.01	6/23/2022 9:20	9.58	6/23/2022 14:16	74.11
6/24/2022 13:07	50.61	6/24/2022 11:49	81.73	6/23/2022 10:12	16.98	6/23/2022 9:21	9.55	6/23/2022 14:17	74.05
6/24/2022 13:08	50.60	6/24/2022 11:50	81.72	6/23/2022 10:13	17.00	6/23/2022 9:22	9.93	6/23/2022 14:18	74.00
6/24/2022 13:09	50.62	6/24/2022 11:51	81.72	6/23/2022 10:14	17.02	6/23/2022 9:23	9.92	6/23/2022 14:19	73.94
6/24/2022 13:10	50.60	6/24/2022 11:52	81.74	6/23/2022 10:15	16.95	6/23/2022 9:24	9.88	6/23/2022 14:20	73.83
6/24/2022 13:11	50.61	6/24/2022 11:53	81.68	6/23/2022 10:16	17.02	6/23/2022 9:25	9.95	6/23/2022 14:21	73.75
6/24/2022 13:12	50.59	6/24/2022 11:54	81.73	6/23/2022 10:17	16.99	6/23/2022 9:26	10.03	6/23/2022 14:22	73.71
6/24/2022 13:13	50.60	6/24/2022 11:55	81.69	6/23/2022 10:18	16.95	6/23/2022 9:27	9.75	6/23/2022 14:23	73.61
6/24/2022 13:14	50.63	6/24/2022 11:56	81.66	6/23/2022 10:19	16.98	6/23/2022 9:28	9.61	6/23/2022 14:24	73.58
6/24/2022 13:15	50.64	6/24/2022 11:57	81.68	6/23/2022 10:20	16.99	6/23/2022 9:29	9.59	6/23/2022 14:25	73.48
6/24/2022 13:16	50.60	6/24/2022 11:58	81.67	6/23/2022 10:21	17.01	6/23/2022 9:30	9.50	6/23/2022 14:26	73.44
6/24/2022 13:17	50.60	6/24/2022 11:59	81.68	6/23/2022 10:22	16.94	6/23/2022 9:31	9.45	6/23/2022 14:27	73.37
6/24/2022 13:18	50.64	6/24/2022 12:00	81.63	6/23/2022 10:23	16.97	6/23/2022 9:32	9.46	6/23/2022 14:28	73.35
6/24/2022 13:19	50.61	6/24/2022 12:01	81.66	6/23/2022 10:24	16.95	6/23/2022 9:33	9.42	6/23/2022 14:29	73.24
6/24/2022 13:20	50.66	6/24/2022 12:02	81.68	6/23/2022 10:25	16.94	6/23/2022 9:34	9.32	6/23/2022 14:30	73.17
6/24/2022 13:21	50.59	6/24/2022 12:03	81.63	6/23/2022 10:26	16.96	6/23/2022 9:35	9.31	6/23/2022 14:31	73.11
6/24/2022 13:22	50.62	6/24/2022 12:04	81.63	6/23/2022 10:27	16.95	6/23/2022 9:36	9.29	6/23/2022 14:32	73.07
6/24/2022 13:23	50.60	6/24/2022 12:05	81.65	6/23/2022 10:28	17.00	6/23/2022 9:37	9.31	6/23/2022 14:33	73.03
6/24/2022 13:24	50.63	6/24/2022 12:06	81.64	6/23/2022 10:29	16.95	6/23/2022 9:38	9.22	6/23/2022 14:34	72.90

6/24/2022 13:25	50.60	6/24/2022 12:07	81.65	6/23/2022 10:30	17.00	6/23/2022 9:39	9.22	6/23/2022 14:35	72.88
6/24/2022 13:26	50.63	6/24/2022 12:08	81.66	6/23/2022 10:31	16.91	6/23/2022 9:40	9.18	6/23/2022 14:36	72.83
6/24/2022 13:27	50.63	6/24/2022 12:09	81.65	6/23/2022 10:32	16.95	6/23/2022 9:41	9.13	6/23/2022 14:37	72.78
6/24/2022 13:28	50.60	6/24/2022 12:10	81.62	6/23/2022 10:33	16.98	6/23/2022 9:42	9.11	6/23/2022 14:38	72.69
6/24/2022 13:29	50.59	6/24/2022 12:11	81.61	6/23/2022 10:34	16.98	6/23/2022 9:43	9.09	6/23/2022 14:39	72.63
6/24/2022 13:30	50.58	6/24/2022 12:12	81.63	6/23/2022 10:35	17.02	6/23/2022 9:44	9.04	6/23/2022 14:40	72.61
6/24/2022 13:31	50.63	6/24/2022 12:13	81.66	6/23/2022 10:36	17.03	6/23/2022 9:45	9.10	6/23/2022 14:41	72.55
6/24/2022 13:32	50.63	6/24/2022 12:14	81.63	6/23/2022 10:37	16.99	6/23/2022 9:46	9.02	6/23/2022 14:42	72.44
6/24/2022 13:33	50.59	6/24/2022 12:15	81.61	6/23/2022 10:38	17.00	6/23/2022 9:47	9.01	6/23/2022 14:43	72.46
6/24/2022 13:34	50.63	6/24/2022 12:16	81.63	6/23/2022 10:39	16.96	6/23/2022 9:48	8.99	6/23/2022 14:44	72.37
6/24/2022 13:35	50.59	6/24/2022 12:17	81.60	6/23/2022 10:40	17.04	6/23/2022 9:49	8.96	6/23/2022 14:45	72.29
6/24/2022 13:36	50.57	6/24/2022 12:18	81.60	6/23/2022 10:41	17.06	6/23/2022 9:50	8.94	6/23/2022 14:46	72.29
6/24/2022 13:37	50.57	6/24/2022 12:19	81.63	6/23/2022 10:42	17.01	6/23/2022 9:51	8.87	6/23/2022 14:47	72.23
6/24/2022 13:38	50.57	6/24/2022 12:20	81.59	6/23/2022 10:43	17.11	6/23/2022 9:52	8.86	6/23/2022 14:48	72.19
6/24/2022 13:39	50.58	6/24/2022 12:21	81.58	6/23/2022 10:44	17.07	6/23/2022 9:53	8.90	6/23/2022 14:49	72.15
6/24/2022 13:40	50.61	6/24/2022 12:22	81.63	6/23/2022 10:45	17.09	6/23/2022 9:54	8.84	6/23/2022 14:50	72.08
6/24/2022 13:41	50.62	6/24/2022 12:23	81.60	6/23/2022 10:46	17.07	6/23/2022 9:55	8.80	6/23/2022 14:51	71.98
6/24/2022 13:42	50.59	6/24/2022 12:24	81.62	6/23/2022 10:47	17.11	6/23/2022 9:56	8.81	6/23/2022 14:52	72.00
6/24/2022 13:43	50.57	6/24/2022 12:25	81.59	6/23/2022 10:48	17.04	6/23/2022 9:57	8.84	6/23/2022 14:53	71.93
6/24/2022 13:44	50.63	6/24/2022 12:26	81.60	6/23/2022 10:49	17.11	6/23/2022 9:58	8.73	6/23/2022 14:54	71.88
6/24/2022 13:45	50.60	6/24/2022 12:27	81.61	6/23/2022 10:50	17.11	6/23/2022 9:59	8.75	6/23/2022 14:55	71.83
6/24/2022 13:46	50.54	6/24/2022 12:28	81.58	6/23/2022 10:51	17.06	6/23/2022 10:00	8.70	6/23/2022 14:56	71.77
6/24/2022 13:47	50.60	6/24/2022 12:29	81.61	6/23/2022 10:52	17.14	6/23/2022 10:01	8.75	6/23/2022 14:57	71.74
6/24/2022 13:48	50.55	6/24/2022 12:30	81.58	6/23/2022 10:53	17.13	6/23/2022 10:02	8.68	6/23/2022 14:58	71.69
6/24/2022 13:49	51.44	6/24/2022 12:31	81.63	6/23/2022 10:54	17.13	6/23/2022 10:03	8.66	6/23/2022 14:59	71.66
6/24/2022 13:50	53.86	6/24/2022 12:32	81.59	6/23/2022 10:55	17.14	6/23/2022 10:04	8.66	6/23/2022 15:00	71.60
6/24/2022 13:51	54.96	6/24/2022 12:33	81.62	6/23/2022 10:56	17.09	6/23/2022 10:05	8.68	6/23/2022 15:01	71.57
6/24/2022 13:52	55.61	6/24/2022 12:34	81.57	6/23/2022 10:57	17.17	6/23/2022 10:06	8.58	6/23/2022 15:02	71.52
6/24/2022 13:53	53.97	6/24/2022 12:35	81.57	6/23/2022 10:58	17.15	6/23/2022 10:07	8.58	6/23/2022 15:03	71.46
6/24/2022 13:54	52.70	6/24/2022 12:36	81.60	6/23/2022 10:59	17.15	6/23/2022 10:08	8.60	6/23/2022 15:04	71.44
6/24/2022 13:55	52.19	6/24/2022 12:37	81.59	6/23/2022 11:00	17.18	6/23/2022 10:09	8.57	6/23/2022 15:05	71.40
6/24/2022 13:56	51.87	6/24/2022 12:38	81.59	6/23/2022 11:01	17.20	6/23/2022 10:10	8.55	6/23/2022 15:06	71.37
6/24/2022 13:57	51.74	6/24/2022 12:39	81.58	6/23/2022 11:02	17.20	6/23/2022 10:11	8.48	6/23/2022 15:07	71.36
6/24/2022 13:58	51.61	6/24/2022 12:40	81.59	6/23/2022 11:03	17.21	6/23/2022 10:12	8.57	6/23/2022 15:08	71.27
6/24/2022 13:59	51.51	6/24/2022 12:41	81.57	6/23/2022 11:04	17.20	6/23/2022 10:13	8.46	6/23/2022 15:09	71.21
6/24/2022 14:00	51.45	6/24/2022 12:42	81.63	6/23/2022 11:05	17.23	6/23/2022 10:14	8.40	6/23/2022 15:10	71.23
6/24/2022 14:01	51.36	6/24/2022 12:43	81.57	6/23/2022 11:06	17.22	6/23/2022 10:15	8.42	6/23/2022 15:11	71.15
6/24/2022 14:02	51.36	6/24/2022 12:44	81.55	6/23/2022 11:07	17.27	6/23/2022 10:16	8.46	6/23/2022 15:12	71.09
6/24/2022 14:03	51.32	6/24/2022 12:45	81.59	6/23/2022 11:08	17.23	6/23/2022 10:17	8.40	6/23/2022 15:13	71.14
6/24/2022 14:04	51.29	6/24/2022 12:46	81.61	6/23/2022 11:09	17.28	6/23/2022 10:18	8.36	6/23/2022 15:14	71.07
6/24/2022 14:05	51.26	6/24/2022 12:47	81.57	6/23/2022 11:10	17.28	6/23/2022 10:19	8.36	6/23/2022 15:15	70.97
6/24/2022 14:06	51.28	6/24/2022 12:48	81.59	6/23/2022 11:11	17.28	6/23/2022 10:20	8.39	6/23/2022 15:16	70.97
6/24/2022 14:07	51.22	6/24/2022 12:49	81.57	6/23/2022 11:12	17.30	6/23/2022 10:21	8.33	6/23/2022 15:17	70.90
6/24/2022 14:08	51.17	6/24/2022 12:50	81.58	6/23/2022 11:13	17.29	6/23/2022 10:22	8.34	6/23/2022 15:18	70.87
6/24/2022 14:09	51.21	6/24/2022 12:51	81.60	6/23/2022 11:14	17.31	6/23/2022 10:23	8.31	6/23/2022 15:19	70.87
6/24/2022 14:10	51.15	6/24/2022 12:52	81.58	6/23/2022 11:15	17.31	6/23/2022 10:24	8.32	6/23/2022 15:20	70.82
6/24/2022 14:11	51.14	6/24/2022 12:53	81.59	6/23/2022 11:16	17.32	6/23/2022 10:25	8.23	6/23/2022 15:21	70.77
6/24/2022 14:12	51.09	6/24/2022 12:54	81.56	6/23/2022 11:17	17.32	6/23/2022 10:26	8.27	6/23/2022 15:22	70.74
6/24/2022 14:13	51.11	6/24/2022 12:55	81.59	6/23/2022 11:18	17.37	6/23/2022 10:27	8.23	6/23/2022 15:23	70.71
6/24/2022 14:14	51.09	6/24/2022 12:56	81.59	6/23/2022 11:19	17.39	6/23/2022 10:28	8.27	6/23/2022 15:24	70.68
6/24/2022 14:15	51.06	6/24/2022 12:57	81.57	6/23/2022 11:20	17.32	6/23/2022 10:29	8.16	6/23/2022 15:25	70.63
6/24/2022 14:16	51.05	6/24/2022 12:58	81.55	6/23/2022 11:21	17.37	6/23/2022 10:30	8.18	6/23/2022 15:26	70.60
6/24/2022 14:17	51.04	6/24/2022 12:59	81.55	6/23/2022 11:22	17.36	6/23/2022 10:31	8.20	6/23/2022 15:27	70.57
6/24/2022 14:18	51.01	6/24/2022 13:00	81.58	6/23/2022 11:23	17.34	6/23/2022 10:32	8.18	6/23/2022 15:28	70.54
6/24/2022 14:19	51.05	6/24/2022 13:01	81.60	6/23/2022 11:24	17.39	6/23/2022 10:33	8.14	6/23/2022 15:29	70.48
6/24/2022 14:20	51.03	6/24/2022 13:02	81.57	6/23/2022 11:25	17.38	6/23/2022 10:34	8.14	6/23/2022 15:30	70.44
6/24/2022 14:21	51.01	6/24/2022 13:03	81.60	6/23/2022 11:26	17.32	6/23/2022 10:35	8.14	6/23/2022 15:31	70.43
6/24/2022 14:22	51.00	6/24/2022 13:04	81.56	6/23/2022 11:27	17.34	6/23/2022 10:36	8.10	6/23/2022 15:32	70.39
6/24/2022 14:23	51.00	6/24/2022 13:05	81.57	6/23/2022 11:28	17.35	6/23/2022 10:37	8.10	6/23/2022 15:33	70.40
6/24/2022 14:24	50.97	6/24/2022 13:06	81.56	6/23/2022 11:29	17.40	6/23/2022 10:38	8.07	6/23/2022 15:34	70.32
6/24/2022 14:25	50.95	6/24/2022 13:07	81.58	6/23/2022 11:30	17.40	6/23/2022 10:39	8.12	6/23/2022 15:35	70.30
6/24/2022 14:26	50.99	6/24/2022 13:08	81.53	6/23/2022 11:31	17.39	6/23/2022 10:40	8.05	6/23/2022 15:36	70.28
6/24/2022 14:27	50.98	6/24/2022 13:09	81.53	6/23/2022 11:32	17.39	6/23/2022 10:41	8.07	6/23/2022 15:37	70.27
6/24/2022 14:28	50.92	6/24/2022 13:10	81.55	6/23/2022 11:33	17.39	6/23/2022 10:42	8.01	6/23/2022 15:38	70.20
6/24/2022 14:29	50.98	6/24/2022 13:11	81.55	6/23/2022 11:34	17.40	6/23/2022 10:43	8.02	6/23/2022 15:39	70.16
6/24/2022 14:30	50.97	6/24/2022 13:12	81.58	6/23/2022 11:35	17.38	6/23/2022 10:44	7.95	6/23/2022 15:40	70.15
6/24/2022 14:31	50.97	6/24/2022 13:13	81.56	6/23/2022 11:36	17.41	6/23/2022 10:45	7.92	6/23/2022 15:41	70.14
6/24/2022 14:32	50.94	6/24/2022 13:14	81.58	6/23/2022 11:37	17.43	6/23/2022 10:46	7.98	6/23/2022 15:42	70.10
6/24/2022 14:33	50.96	6/24/2022 13:15	81.55	6/23/2022 11:38	17.40	6/23/2022 10:47	7.95	6/23/2022 15:43	70.09
6/24/2022 14:34	50.95	6/24/2022 13:16	81.58	6/23/2022 11:39	17.41	6/23/2022 10:48	7.91	6/23/2022 15:44	70.03
6/24/2022 14:35	50.94	6/24/2022 13:17	81.56	6/23/2022 11:40	17.38	6/23/2022 10:49	7.91	6/23/2022 15:45	70.01
6/24/2022 14:36	50.92	6/24/2022 13:18	81.52	6/23/2022 11:41	17.37	6/23/2022 10:50	7.97	6/23/2022 15:46	69.94
6/24/2022 14:37	50.94	6/24/2022 13:19	81.56	6/23/2022 11:42	17.41	6/23/2022 10:51	7.93	6/23/2022 15:47	69.95
6/24/2022 14:38	50.89	6/24/2022 13:20	81.56	6/23/2022 11:43	17.38	6/23/2022 10:52	7.84	6/23/2022 15:48	69.91
6/24/2022 14:39	50.93	6/24/2022 13:21	81.59	6/23/2022 11:44	17.39	6/23/2022 10:53	7.84	6/23/2022 15:49	69.86
6/24/2022 14:40	50.89	6/24/2022 13:22	81.57	6/23/2022 11:45	17.40	6/23/2022 10:54	7.85	6/23/2022 15:50	69.86
6/24/2022 14:41	50.89	6/24/2022 13:23	81.56	6/23/2022 11:46	17.39	6/23/2022 10:55	7.88	6/23/2022 15:51	69.82
6/24/2022 14:42	50.90	6/24/2022 13:24	81.52	6/23/2022 11:47	17.33	6/23/2022 10:56	7.79	6/23/2022 15:52	74.30
6/24/2022 14:43	50.88	6/24/2022 13:25	81.55	6/23/2022 11:48	17.38	6/23/2022 10:57	7.84	6/23/2022 15:53	75.08
6/24/2022 14:44	50.89	6/24/2022 13:26	81.55	6/23/2022 11:49	17.34	6/23/2022 10:58	7.75	6/23/2022 15:54	74.91
6/24/2022 14:45	50.91	6/24/2022 13:27	81.57	6/23/2022 11:50	17.37	6/23/2022 10:59	7.83	6/23/2022 15:55	74.77
6/24/2022 14:46	50.88	6/24/2022 13:28	81.57	6/23/2022 11:51	17.35	6/23/2022 11:00	7.82	6/23/2022 15:56	74.62
6/24/2022 14:47	50.94	6/24/2022 13:29	81.57	6/23/2022 11:52	17.41	6/23/2022 11:01	7.79	6/23/2022 15:57	74.56
6/24/2022 14:48	50.87	6/24/2022 13:30	81.54	6/23/2022 11:53	17.38	6/23/2022 11:02	7.71	6/23/2022 15:58	74.45
6/24/2022 14:49	50.85	6/24/2022 13:31	81.57	6/23/2022 11:54	17.37	6/23/2022 11:03	7.74	6/23/2022 15:59	74.35
6/24/2022 14:50	50.88	6/24/2022 13:32	81.54	6/23/2022 11:55	17.37	6/23/2022 11:04	7.72	6/23/2022 16:00	74.25
6/24/2022 14:51	50.86	6/24/2022 13:33	81.56	6/23/2022 11:56	17.41	6/23/2022 11:05	7.66	6/23/2022 16:01	74.15
6/24/2022 14:52	50.84	6/24/2022 13:34	81.55	6/23/2022 11:57	17.37	6/23/2022 11:06	7.65	6/23/2022 16:02	74.07

6/24/2022 14:53	50.86	6/24/2022 13:35	81.58	6/23/2022 11:58	17.35	6/23/2022 11:07	7.74	6/23/2022 16:03	73.98
6/24/2022 14:54	50.87	6/24/2022 13:36	81.57	6/23/2022 11:59	17.34	6/23/2022 11:08	7.97	6/23/2022 16:04	73.91
6/24/2022 14:55	50.89	6/24/2022 13:37	81.50	6/23/2022 12:00	17.37	6/23/2022 11:09	7.92	6/23/2022 16:05	73.82
6/24/2022 14:56	50.86	6/24/2022 13:38	81.57	6/23/2022 12:01	17.35	6/23/2022 11:10	7.79	6/23/2022 16:06	73.70
6/24/2022 14:57	50.85	6/24/2022 13:39	81.55	6/23/2022 12:02	17.30	6/23/2022 11:11	7.68	6/23/2022 16:07	73.68
6/24/2022 14:58	50.84	6/24/2022 13:40	81.56	6/23/2022 12:03	17.32	6/23/2022 11:12	7.71	6/23/2022 16:08	73.58
6/24/2022 14:59	50.85	6/24/2022 13:41	81.57	6/23/2022 12:04	17.35	6/23/2022 11:13	7.67	6/23/2022 16:09	73.50
6/24/2022 15:00	50.84	6/24/2022 13:42	81.57	6/23/2022 12:05	17.32	6/23/2022 11:14	7.67	6/23/2022 16:10	73.41
6/24/2022 15:01	50.86	6/24/2022 13:43	81.52	6/23/2022 12:06	17.33	6/23/2022 11:15	7.64	6/23/2022 16:11	73.34
6/24/2022 15:02	50.83	6/24/2022 13:44	81.60	6/23/2022 12:07	17.28	6/23/2022 11:16	7.59	6/23/2022 16:12	73.26
6/24/2022 15:03	50.86	6/24/2022 13:45	81.55	6/23/2022 12:08	17.35	6/23/2022 11:17	7.78	6/23/2022 16:13	73.23
6/24/2022 15:04	50.81	6/24/2022 13:46	81.55	6/23/2022 12:09	17.29	6/23/2022 11:18	8.04	6/23/2022 16:14	73.12
6/24/2022 15:05	50.81	6/24/2022 13:47	81.56	6/23/2022 12:10	17.29	6/23/2022 11:19	8.19	6/23/2022 16:15	73.05
6/24/2022 15:06	50.84	6/24/2022 13:48	81.56	6/23/2022 12:11	17.32	6/23/2022 11:20	8.35	6/23/2022 16:16	73.01
6/24/2022 15:07	50.86	6/24/2022 13:49	81.55	6/23/2022 12:12	17.35	6/23/2022 11:21	8.47	6/23/2022 16:17	72.94
6/24/2022 15:08	50.83	6/24/2022 13:50	81.55	6/23/2022 12:13	17.32	6/23/2022 11:22	8.54	6/23/2022 16:18	72.85
6/24/2022 15:09	50.82	6/24/2022 13:51	81.53	6/23/2022 12:14	17.33	6/23/2022 11:23	8.64	6/23/2022 16:19	72.80
6/24/2022 15:10	50.83	6/24/2022 13:52	81.55	6/23/2022 12:15	17.31	6/23/2022 11:24	8.66	6/23/2022 16:20	72.74
6/24/2022 15:11	50.82	6/24/2022 13:53	81.55	6/23/2022 12:16	17.37	6/23/2022 11:25	8.49	6/23/2022 16:21	72.69
6/24/2022 15:12	50.84	6/24/2022 13:54	81.55	6/23/2022 12:17	17.28	6/23/2022 11:26	8.17	6/23/2022 16:22	72.57
6/24/2022 15:13	50.81	6/24/2022 13:55	81.56	6/23/2022 12:18	17.31	6/23/2022 11:27	8.06	6/23/2022 16:23	72.58
6/24/2022 15:14	50.81	6/24/2022 13:56	81.52	6/23/2022 12:19	17.31	6/23/2022 11:28	7.95	6/23/2022 16:24	72.52
6/24/2022 15:15	50.80	6/24/2022 13:57	81.53	6/23/2022 12:20	17.31	6/23/2022 11:29	7.88	6/23/2022 16:25	72.43
6/24/2022 15:16	50.80	6/24/2022 13:58	81.52	6/23/2022 12:21	17.26	6/23/2022 11:30	7.87	6/23/2022 16:26	72.37
6/24/2022 15:17	50.77	6/24/2022 13:59	81.51	6/23/2022 12:22	17.30	6/23/2022 11:31	7.77	6/23/2022 16:27	72.30
6/24/2022 15:18	50.80	6/24/2022 14:00	81.53	6/23/2022 12:23	17.27	6/23/2022 11:32	7.76	6/23/2022 16:28	72.28
6/24/2022 15:19	50.75	6/24/2022 14:01	81.54	6/23/2022 12:24	17.31	6/23/2022 11:33	7.68	6/23/2022 16:29	72.25
6/24/2022 15:20	50.81	6/24/2022 14:02	81.53	6/23/2022 12:25	17.25	6/23/2022 11:34	7.67	6/23/2022 16:30	72.15
6/24/2022 15:21	50.81	6/24/2022 14:03	81.54	6/23/2022 12:26	17.25	6/23/2022 11:35	7.65	6/23/2022 16:31	72.08
6/24/2022 15:22	50.78	6/24/2022 14:04	81.54	6/23/2022 12:27	17.24	6/23/2022 11:36	8.00	6/23/2022 16:32	72.02
6/24/2022 15:23	50.83	6/24/2022 14:05	81.55	6/23/2022 12:28	17.28	6/23/2022 11:37	7.81	6/23/2022 16:33	71.97
6/24/2022 15:24	50.83	6/24/2022 14:06	81.55	6/23/2022 12:29	17.29	6/23/2022 11:38	7.72	6/23/2022 16:34	71.93
6/24/2022 15:25	50.78	6/24/2022 14:07	81.56	6/23/2022 12:30	17.20	6/23/2022 11:39	7.69	6/23/2022 16:35	71.88
6/24/2022 15:26	50.79	6/24/2022 14:08	81.57	6/23/2022 12:31	17.25	6/23/2022 11:40	7.65	6/23/2022 16:36	71.84
6/24/2022 15:27	50.79	6/24/2022 14:09	81.55	6/23/2022 12:32	17.25	6/23/2022 11:41	7.62	6/23/2022 16:37	71.76
6/24/2022 15:28	50.77	6/24/2022 14:10	81.53	6/23/2022 12:33	17.24	6/23/2022 11:42	7.57	6/23/2022 16:38	71.74
6/24/2022 15:29	50.78	6/24/2022 14:11	81.55	6/23/2022 12:34	17.22	6/23/2022 11:43	7.62	6/23/2022 16:39	71.69
6/24/2022 15:30	50.77	6/24/2022 14:12	81.52	6/23/2022 12:35	17.26	6/23/2022 11:44	7.52	6/23/2022 16:40	71.64
6/24/2022 15:31	50.74	6/24/2022 14:13	81.51	6/23/2022 12:36	17.25	6/23/2022 11:45	7.49	6/23/2022 16:41	71.57
6/24/2022 15:32	50.80	6/24/2022 14:14	81.54	6/23/2022 12:37	17.24	6/23/2022 11:46	7.53	6/23/2022 16:42	71.53
6/24/2022 15:33	50.79	6/24/2022 14:15	81.54	6/23/2022 12:38	17.24	6/23/2022 11:47	7.50	6/23/2022 16:43	71.50
6/24/2022 15:34	50.78	6/24/2022 14:16	81.53	6/23/2022 12:39	17.23	6/23/2022 11:48	7.48	6/23/2022 16:44	71.44
6/24/2022 15:35	50.78	6/24/2022 14:17	81.51	6/23/2022 12:40	17.20	6/23/2022 11:49	7.46	6/23/2022 16:45	71.38
6/24/2022 15:36	50.73	6/24/2022 14:18	81.57	6/23/2022 12:41	17.22	6/23/2022 11:50	7.47	6/23/2022 16:46	71.39
6/24/2022 15:37	50.76	6/24/2022 14:19	81.49	6/23/2022 12:42	17.23	6/23/2022 11:51	7.39	6/23/2022 16:47	71.33
6/24/2022 15:38	50.78	6/24/2022 14:20	81.55	6/23/2022 12:43	17.20	6/23/2022 11:52	7.40	6/23/2022 16:48	71.26
6/24/2022 15:39	50.75	6/24/2022 14:21	81.55	6/23/2022 12:44	17.17	6/23/2022 11:53	7.41	6/23/2022 16:49	71.21
6/24/2022 15:40	50.78	6/24/2022 14:22	81.50	6/23/2022 12:45	17.23	6/23/2022 11:54	7.34	6/23/2022 16:50	71.20
6/24/2022 15:41	50.76	6/24/2022 14:23	81.56	6/23/2022 12:46	17.21	6/23/2022 11:55	7.34	6/23/2022 16:51	71.14
6/24/2022 15:42	50.77	6/24/2022 14:24	81.54	6/23/2022 12:47	17.20	6/23/2022 11:56	7.38	6/23/2022 16:52	71.10
6/24/2022 15:43	50.73	6/24/2022 14:25	81.53	6/23/2022 12:48	17.20	6/23/2022 11:57	7.38	6/23/2022 16:53	71.04
6/24/2022 15:44	50.77	6/24/2022 14:26	81.55	6/23/2022 12:49	17.18	6/23/2022 11:58	7.31	6/23/2022 16:54	71.05
6/24/2022 15:45	50.77	6/24/2022 14:27	81.57	6/23/2022 12:50	17.18	6/23/2022 11:59	7.31	6/23/2022 16:55	70.96
6/24/2022 15:46	50.74	6/24/2022 14:28	81.54	6/23/2022 12:51	17.18	6/23/2022 12:00	7.27	6/23/2022 16:56	70.93
6/24/2022 15:47	50.74	6/24/2022 14:29	81.49	6/23/2022 12:52	17.20	6/23/2022 12:01	7.34	6/23/2022 16:57	70.87
6/24/2022 15:48	50.78	6/24/2022 14:30	81.54	6/23/2022 12:53	17.17	6/23/2022 12:02	7.23	6/23/2022 16:58	70.87
6/24/2022 15:49	50.75	6/24/2022 14:31	81.53	6/23/2022 12:54	17.19	6/23/2022 12:03	7.27	6/23/2022 16:59	70.82
6/24/2022 15:50	50.70	6/24/2022 14:32	81.54	6/23/2022 12:55	17.18	6/23/2022 12:04	7.24	6/23/2022 17:00	70.82
6/24/2022 15:51	50.77	6/24/2022 14:33	81.52	6/23/2022 12:56	17.14	6/23/2022 12:05	7.27	6/23/2022 17:01	70.77
6/24/2022 15:52	50.79	6/24/2022 14:34	81.52	6/23/2022 12:57	17.19	6/23/2022 12:06	7.15	6/23/2022 17:02	70.72
6/24/2022 15:53	50.73	6/24/2022 14:35	81.54	6/23/2022 12:58	17.16	6/23/2022 12:07	7.17	6/23/2022 17:03	70.67
6/24/2022 15:54	50.72	6/24/2022 14:36	81.52	6/23/2022 12:59	17.16	6/23/2022 12:08	7.16	6/23/2022 17:04	70.63
6/24/2022 15:55	50.75	6/24/2022 14:37	81.53	6/23/2022 13:00	17.16	6/23/2022 12:09	7.17	6/23/2022 17:05	70.61
6/24/2022 15:56	50.74	6/24/2022 14:38	81.53	6/23/2022 13:01	17.19	6/23/2022 12:10	7.13	6/23/2022 17:06	70.60
6/24/2022 15:57	50.74	6/24/2022 14:39	81.51	6/23/2022 13:02	17.10	6/23/2022 12:11	7.11	6/23/2022 17:07	70.54
6/24/2022 15:58	50.77	6/24/2022 14:40	81.49	6/23/2022 13:03	17.15	6/23/2022 12:12	7.12	6/23/2022 17:08	70.51
6/24/2022 15:59	50.75	6/24/2022 14:41	81.54	6/23/2022 13:04	17.14	6/23/2022 12:13	7.14	6/23/2022 17:09	70.47
6/24/2022 16:00	50.74	6/24/2022 14:42	81.56	6/23/2022 13:05	17.16	6/23/2022 12:14	7.10	6/23/2022 17:10	70.45
6/24/2022 16:01	50.76	6/24/2022 14:43	81.53	6/23/2022 13:06	17.15	6/23/2022 12:15	7.06	6/23/2022 17:11	70.42
6/24/2022 16:02	50.74	6/24/2022 14:44	81.55	6/23/2022 13:07	17.19	6/23/2022 12:16	7.11	6/23/2022 17:12	70.35
6/24/2022 16:03	50.72	6/24/2022 14:45	81.54	6/23/2022 13:08	17.15	6/23/2022 12:17	7.08	6/23/2022 17:13	70.35
6/24/2022 16:04	50.71	6/24/2022 14:46	81.55	6/23/2022 13:09	17.14	6/23/2022 12:18	7.03	6/23/2022 17:14	70.35
6/24/2022 16:05	50.72	6/24/2022 14:47	81.53	6/23/2022 13:10	17.17	6/23/2022 12:19	6.99	6/23/2022 17:15	70.31
6/24/2022 16:06	50.73	6/24/2022 14:48	81.54	6/23/2022 13:11	17.10	6/23/2022 12:20	7.33	6/23/2022 17:16	70.25
6/24/2022 16:07	50.72	6/24/2022 14:49	81.54	6/23/2022 13:12	17.17	6/23/2022 12:21	7.30	6/23/2022 17:17	70.20
6/24/2022 16:08	50.71	6/24/2022 14:50	81.53	6/23/2022 13:13	17.07	6/23/2022 12:22	7.13	6/23/2022 17:18	70.19
6/24/2022 16:09	50.70	6/24/2022 14:51	81.52	6/23/2022 13:14	17.13	6/23/2022 12:23	7.09	6/23/2022 17:19	70.15
6/24/2022 16:10	53.56	6/24/2022 14:52	81.54	6/23/2022 13:15	17.13	6/23/2022 12:24	7.08	6/23/2022 17:20	70.15
6/24/2022 16:11	54.95	6/24/2022 14:53	81.52	6/23/2022 13:16	17.13	6/23/2022 12:25	7.06	6/23/2022 17:21	70.12
6/24/2022 16:12	55.70	6/24/2022 14:54	81.56	6/23/2022 13:17	17.10	6/23/2022 12:26	6.97	6/23/2022 17:22	70.07
6/24/2022 16:13	56.14	6/24/2022 14:55	81.53	6/23/2022 13:18	17.12	6/23/2022 12:27	6.92	6/23/2022 17:23	70.10
6/24/2022 16:14	56.53	6/24/2022 14:56	81.57	6/23/2022 13:19	17.15	6/23/2022 12:28	6.99	6/23/2022 17:24	70.04
6/24/2022 16:15	54.92	6/24/2022 14:57	81.54	6/23/2022 13:20	17.12	6/23/2022 12:29	6.95	6/23/2022 17:25	70.02
6/24/2022 16:16	53.45	6/24/2022 14:58	81.57	6/23/2022 13:21	17.09	6/23/2022 12:30	6.98	6/23/2022 17:26	69.98
6/24/2022 16:17	52.83	6/24/2022 14:59	81.56	6/23/2022 13:22	17.13	6/23/2022 12:31	6.92	6/23/2022 17:27	69.91
6/24/2022 16:18	52.52	6/24/2022 15:00	81.52	6/23/2022 13:23	17.08	6/23/2022 12:32	6.91	6/23/2022 17:28	69.90
6/24/2022 16:19	52.28	6/24/2022 15:01	81.54	6/23/2022 13:24	17.11	6/23/2022 12:33	6.87	6/23/2022 17:29	69.88
6/24/2022 16:20	52.16	6/24/2022 15:02	81.51	6/23/2022 13:25	17.13	6/23/2022 12:34	6.91	6/23/2022 17:30	69.85

6/24/2022 16:21	52.04	6/24/2022 15:03	81.55	6/23/2022 13:26	17.11	6/23/2022 12:35	6.85	6/23/2022 17:31	69.81
6/24/2022 16:22	51.97	6/24/2022 15:04	81.56	6/23/2022 13:27	17.10	6/23/2022 12:36	6.82	6/23/2022 17:32	69.82
6/24/2022 16:23	51.93	6/24/2022 15:05	81.60	6/23/2022 13:28	17.07	6/23/2022 12:37	6.88	6/23/2022 17:33	69.77
6/24/2022 16:24	51.84	6/24/2022 15:06	81.55	6/23/2022 13:29	17.14	6/23/2022 12:38	6.84	6/23/2022 17:34	69.75
6/24/2022 16:25	51.73	6/24/2022 15:07	81.54	6/23/2022 13:30	17.12	6/23/2022 12:39	6.80	6/23/2022 17:35	69.74
6/24/2022 16:26	51.71	6/24/2022 15:08	81.56	6/23/2022 13:31	17.07	6/23/2022 12:40	6.86	6/23/2022 17:36	69.70
6/24/2022 16:27	51.67	6/24/2022 15:09	81.49	6/23/2022 13:32	17.08	6/23/2022 12:41	6.90	6/23/2022 17:37	69.69
6/24/2022 16:28	51.60	6/24/2022 15:10	81.53	6/23/2022 13:33	17.10	6/23/2022 12:42	6.76	6/23/2022 17:38	69.64
6/24/2022 16:29	51.59	6/24/2022 15:11	81.53	6/23/2022 13:34	17.09	6/23/2022 12:43	6.76	6/23/2022 17:39	69.61
6/24/2022 16:30	51.58	6/24/2022 15:12	81.50	6/23/2022 13:35	17.12	6/23/2022 12:44	6.80	6/23/2022 17:40	69.61
6/24/2022 16:31	51.54	6/24/2022 15:13	81.52	6/23/2022 13:36	17.08	6/23/2022 12:45	6.75	6/23/2022 17:41	69.58
6/24/2022 16:32	51.49	6/24/2022 15:14	81.51	6/23/2022 13:37	17.07	6/23/2022 12:46	6.77	6/23/2022 17:42	69.57
6/24/2022 16:33	51.44	6/24/2022 15:15	81.57	6/23/2022 13:38	17.15	6/23/2022 12:47	6.82	6/23/2022 17:43	69.51
6/24/2022 16:34	51.48	6/24/2022 15:16	81.49	6/23/2022 13:39	17.04	6/23/2022 12:48	6.76	6/23/2022 17:44	69.53
6/24/2022 16:35	51.45	6/24/2022 15:17	81.56	6/23/2022 13:40	17.09	6/23/2022 12:49	6.74	6/23/2022 17:45	69.47
6/24/2022 16:36	51.45	6/24/2022 15:18	81.53	6/23/2022 13:41	17.09	6/23/2022 12:50	6.86	6/23/2022 17:46	69.45
6/24/2022 16:37	51.45	6/24/2022 15:19	81.55	6/23/2022 13:42	17.06	6/23/2022 12:51	6.98	6/23/2022 17:47	69.42
6/24/2022 16:38	51.38	6/24/2022 15:20	81.55	6/23/2022 13:43	17.11	6/23/2022 12:52	6.94	6/23/2022 17:48	69.42
6/24/2022 16:39	51.38	6/24/2022 15:21	81.56	6/23/2022 13:44	16.99	6/23/2022 12:53	6.91	6/23/2022 17:49	69.36
6/24/2022 16:40	51.38	6/24/2022 15:22	81.56	6/23/2022 13:45	17.05	6/23/2022 12:54	6.77	6/23/2022 17:50	69.35
6/24/2022 16:41	51.35	6/24/2022 15:23	81.56	6/23/2022 13:46	17.02	6/23/2022 12:55	6.75	6/23/2022 17:51	69.33
6/24/2022 16:42	51.34	6/24/2022 15:24	81.55	6/23/2022 13:47	17.00	6/23/2022 12:56	6.90	6/23/2022 17:52	69.29
6/24/2022 16:43	51.33	6/24/2022 15:25	81.56	6/23/2022 13:48	17.02	6/23/2022 12:57	6.76	6/23/2022 17:53	69.28
6/24/2022 16:44	51.29	6/24/2022 15:26	81.54	6/23/2022 13:49	17.09	6/23/2022 12:58	6.91	6/23/2022 17:54	69.29
6/24/2022 16:45	51.29	6/24/2022 15:27	81.54	6/23/2022 13:50	17.03	6/23/2022 12:59	7.17	6/23/2022 17:55	69.22
6/24/2022 16:46	51.30	6/24/2022 15:28	81.54	6/23/2022 13:51	17.06	6/23/2022 13:00	6.96	6/23/2022 17:56	69.54
6/24/2022 16:47	51.26	6/24/2022 15:29	81.57	6/23/2022 13:52	17.00	6/23/2022 13:01	6.87	6/23/2022 17:57	75.84
6/24/2022 16:48	51.27	6/24/2022 15:30	81.54	6/23/2022 13:53	17.05	6/23/2022 13:02	6.78	6/23/2022 17:58	75.64
6/24/2022 16:49	51.26	6/24/2022 15:31	81.56	6/23/2022 13:54	17.04	6/23/2022 13:03	6.72	6/23/2022 17:59	75.50
6/24/2022 16:50	51.24	6/24/2022 15:32	81.51	6/23/2022 13:55	17.04	6/23/2022 13:04	7.05	6/23/2022 18:00	75.37
6/24/2022 16:51	51.26	6/24/2022 15:33	81.51	6/23/2022 13:56	17.00	6/23/2022 13:05	6.87	6/23/2022 18:01	75.18
6/24/2022 16:52	51.22	6/24/2022 15:34	81.53	6/23/2022 13:57	17.08	6/23/2022 13:06	6.83	6/23/2022 18:02	75.13
6/24/2022 16:53	51.25	6/24/2022 15:35	81.55	6/23/2022 13:58	17.05	6/23/2022 13:07	6.82	6/23/2022 18:03	74.99
6/24/2022 16:54	51.22	6/24/2022 15:36	81.57	6/23/2022 13:59	17.04	6/23/2022 13:08	6.69	6/23/2022 18:04	74.92
6/24/2022 16:55	51.20	6/24/2022 15:37	81.53	6/23/2022 14:00	17.01	6/23/2022 13:09	6.74	6/23/2022 18:05	74.78
6/24/2022 16:56	51.19	6/24/2022 15:38	81.55	6/23/2022 14:01	17.02	6/23/2022 13:10	6.69	6/23/2022 18:06	74.70
6/24/2022 16:57	51.18	6/24/2022 15:39	81.55	6/23/2022 14:02	17.03	6/23/2022 13:11	6.69	6/23/2022 18:07	74.58
6/24/2022 16:58	51.20	6/24/2022 15:40	81.53	6/23/2022 14:03	17.02	6/23/2022 13:12	6.80	6/23/2022 18:08	74.48
6/24/2022 16:59	51.20	6/24/2022 15:41	81.53	6/23/2022 14:04	17.04	6/23/2022 13:13	6.73	6/23/2022 18:09	74.44
6/24/2022 17:00	51.20	6/24/2022 15:42	81.56	6/23/2022 14:05	17.02	6/23/2022 13:14	6.75	6/23/2022 18:10	74.30
6/24/2022 17:01	51.18	6/24/2022 15:43	81.58	6/23/2022 14:06	17.00	6/23/2022 13:15	6.64	6/23/2022 18:11	74.24
6/24/2022 17:02	51.14	6/24/2022 15:44	81.52	6/23/2022 14:07	16.98	6/23/2022 13:16	6.63	6/23/2022 18:12	74.15
6/24/2022 17:03	51.14	6/24/2022 15:45	81.51	6/23/2022 14:08	16.98	6/23/2022 13:17	6.61	6/23/2022 18:13	74.07
6/24/2022 17:04	51.16	6/24/2022 15:46	81.54	6/23/2022 14:09	17.01	6/23/2022 13:18	6.58	6/23/2022 18:14	73.99
6/24/2022 17:05	51.11	6/24/2022 15:47	81.54	6/23/2022 14:10	16.97	6/23/2022 13:19	6.56	6/23/2022 18:15	73.87
6/24/2022 17:06	51.14	6/24/2022 15:48	81.50	6/23/2022 14:11	17.06	6/23/2022 13:20	6.55	6/23/2022 18:16	73.83
6/24/2022 17:07	51.11	6/24/2022 15:49	81.53	6/23/2022 14:12	17.02	6/23/2022 13:21	6.61	6/23/2022 18:17	73.77
6/24/2022 17:08	51.11	6/24/2022 15:50	81.53	6/23/2022 14:13	16.99	6/23/2022 13:22	6.50	6/23/2022 18:18	73.64
6/24/2022 17:09	51.10	6/24/2022 15:51	81.51	6/23/2022 14:14	17.04	6/23/2022 13:23	6.56	6/23/2022 18:19	73.58
6/24/2022 17:10	51.07	6/24/2022 15:52	81.54	6/23/2022 14:15	16.98	6/23/2022 13:24	6.49	6/23/2022 18:20	73.50
6/24/2022 17:11	51.14	6/24/2022 15:53	81.56	6/23/2022 14:16	17.01	6/23/2022 13:25	6.51	6/23/2022 18:21	73.46
6/24/2022 17:12	51.15	6/24/2022 15:54	81.57	6/23/2022 14:17	16.97	6/23/2022 13:26	6.47	6/23/2022 18:22	78.78
6/24/2022 17:13	51.12	6/24/2022 15:55	81.58	6/23/2022 14:18	16.97	6/23/2022 13:27	6.47	6/23/2022 18:23	78.59
6/24/2022 17:14	51.07	6/24/2022 15:56	81.52	6/23/2022 14:19	17.03	6/23/2022 13:28	6.52	6/23/2022 18:24	78.44
6/24/2022 17:15	51.08	6/24/2022 15:57	81.52	6/23/2022 14:20	17.03	6/23/2022 13:29	6.46	6/23/2022 18:25	78.31
6/24/2022 17:16	51.06	6/24/2022 15:58	81.55	6/23/2022 14:21	16.98	6/23/2022 13:30	6.43	6/23/2022 18:26	78.16
6/24/2022 17:17	51.07	6/24/2022 15:59	81.57	6/23/2022 14:22	17.05	6/23/2022 13:31	6.50	6/23/2022 18:27	78.05
6/24/2022 17:18	51.08	6/24/2022 16:00	81.55	6/23/2022 14:23	16.96	6/23/2022 13:32	6.40	6/23/2022 18:28	77.89
6/24/2022 17:19	51.10	6/24/2022 16:01	81.53	6/23/2022 14:24	17.02	6/23/2022 13:33	6.40	6/23/2022 18:29	77.77
6/24/2022 17:20	51.08	6/24/2022 16:02	81.54	6/23/2022 14:25	17.03	6/23/2022 13:34	6.45	6/23/2022 18:30	77.66
6/24/2022 17:21	51.06	6/24/2022 16:03	81.56	6/23/2022 14:26	17.01	6/23/2022 13:35	6.33	6/23/2022 18:31	77.49
6/24/2022 17:22	51.06	6/24/2022 16:04	81.55	6/23/2022 14:27	17.02	6/23/2022 13:36	6.39	6/23/2022 18:32	83.30
6/24/2022 17:23	51.07	6/24/2022 16:05	81.53	6/23/2022 14:28	17.01	6/23/2022 13:37	6.40	6/23/2022 18:33	85.25
6/24/2022 17:24	51.06	6/24/2022 16:06	81.55	6/23/2022 14:29	16.97	6/23/2022 13:38	6.46	6/23/2022 18:34	86.00
6/24/2022 17:25	51.04	6/24/2022 16:07	81.54	6/23/2022 14:30	16.97	6/23/2022 13:39	6.32	6/23/2022 18:35	92.75
6/24/2022 17:26	51.09	6/24/2022 16:08	81.51	6/23/2022 14:31	17.04	6/23/2022 13:40	6.32	6/23/2022 18:36	92.24
6/24/2022 17:27	51.03	6/24/2022 16:09	81.53	6/23/2022 14:32	17.02	6/23/2022 13:41	6.37	6/23/2022 18:37	91.87
6/24/2022 17:28	51.03	6/24/2022 16:10	81.54	6/23/2022 14:33	16.99	6/23/2022 13:42	6.33	6/23/2022 18:38	91.54
6/24/2022 17:29	51.08	6/24/2022 16:11	81.53	6/23/2022 14:34	17.05	6/23/2022 13:43	6.31	6/23/2022 18:39	91.29
6/24/2022 17:30	51.00	6/24/2022 16:12	81.54	6/23/2022 14:35	17.04	6/23/2022 13:44	6.28	6/23/2022 18:40	90.94
6/24/2022 17:31	50.98	6/24/2022 16:13	81.52	6/23/2022 14:36	16.98	6/23/2022 13:45	6.33	6/23/2022 18:41	90.68
6/24/2022 17:32	51.00	6/24/2022 16:14	81.54	6/23/2022 14:37	17.01	6/23/2022 13:46	6.24	6/23/2022 18:42	90.38
6/24/2022 17:33	51.04	6/24/2022 16:15	81.51	6/23/2022 14:38	16.98	6/23/2022 13:47	6.30	6/23/2022 18:43	90.13
6/24/2022 17:34	51.00	6/24/2022 16:16	81.53	6/23/2022 14:39	17.04	6/23/2022 13:48	6.25	6/23/2022 18:44	89.89
6/24/2022 17:35	51.02	6/24/2022 16:17	81.56	6/23/2022 14:40	16.97	6/23/2022 13:49	6.25	6/23/2022 18:45	89.61
6/24/2022 17:36	51.03	6/24/2022 16:18	81.57	6/23/2022 14:41	17.04	6/23/2022 13:50	6.25	6/23/2022 18:46	93.78
6/24/2022 17:37	50.97	6/24/2022 16:19	81.52	6/23/2022 14:42	17.03	6/23/2022 13:51	6.24	6/23/2022 18:47	94.78
6/24/2022 17:38	51.03	6/24/2022 16:20	81.57	6/23/2022 14:43	17.08	6/23/2022 13:52	6.28	6/23/2022 18:48	94.39
6/24/2022 17:39	51.00	6/24/2022 16:21	81.51	6/23/2022 14:44	17.01	6/23/2022 13:53	6.24	6/23/2022 18:49	94.06
6/24/2022 17:40	51.00	6/24/2022 16:22	81.56	6/23/2022 14:45	16.99	6/23/2022 13:54	6.25	6/23/2022 18:50	93.80
6/24/2022 17:41	51.00	6/24/2022 16:23	81.51	6/23/2022 14:46	17.02	6/23/2022 13:55	6.23	6/23/2022 18:51	93.47
6/24/2022 17:42	50.96	6/24/2022 16:24	81.54	6/23/2022 14:47	17.05	6/23/2022 13:56	6.29	6/23/2022 18:52	93.15
6/24/2022 17:43	50.98	6/24/2022 16:25	81.55	6/23/2022 14:48	17.05	6/23/2022 13:57	6.20	6/23/2022 18:53	92.87
6/24/2022 17:44	50.99	6/24/2022 16:26	81.56	6/23/2022 14:49	17.04	6/23/2022 13:58	6.20	6/23/2022 18:54	92.51
6/24/2022 17:45	50.98	6/24/2022 16:27	81.54	6/23/2022 14:50	17.00	6/23/2022 13:59	6.20	6/23/2022 18:55	92.22
6/24/2022 17:46	50.99	6/24/2022 16:28	81.52	6/23/2022 14:51	17.03	6/23/2022 14:00	6.20	6/23/2022 18:56	91.95
6/24/2022 17:47	50.99	6/24/2022 16:29	81.49	6/23/2022 14:52	17.06	6/23/2022 14:01	6.15	6/23/2022 18:57	91.72
6/24/2022 17:48	50.99	6/24/2022 16:30	81.55	6/23/2022 14:53	17.02	6/23/2022 14:02	6.17	6/23/2022 18:58	95.08

6/24/2022 17:49	50.99	6/24/2022 16:31	81.53	6/23/2022 14:54	17.03	6/23/2022 14:03	6.20	6/23/2022 18:59	97.77
6/24/2022 17:50	50.99	6/24/2022 16:32	81.52	6/23/2022 14:55	17.02	6/23/2022 14:04	6.12	6/23/2022 19:00	97.35
6/24/2022 17:51	50.98	6/24/2022 16:33	81.54	6/23/2022 14:56	17.01	6/23/2022 14:05	6.13	6/23/2022 19:01	96.92
6/24/2022 17:52	51.01	6/24/2022 16:34	81.58	6/23/2022 14:57	17.02	6/23/2022 14:06	6.12	6/23/2022 19:02	96.53
6/24/2022 17:53	50.97	6/24/2022 16:35	81.55	6/23/2022 14:58	16.98	6/23/2022 14:07	6.09	6/23/2022 19:03	96.21
6/24/2022 17:54	50.98	6/24/2022 16:36	81.54	6/23/2022 14:59	17.04	6/23/2022 14:08	6.09	6/23/2022 19:04	95.84
6/24/2022 17:55	50.94	6/24/2022 16:37	81.55	6/23/2022 15:00	17.00	6/23/2022 14:09	6.11	6/23/2022 19:05	95.53
6/24/2022 17:56	50.94	6/24/2022 16:38	81.56	6/23/2022 15:01	17.03	6/23/2022 14:10	6.17	6/23/2022 19:06	95.20
6/24/2022 17:57	50.96	6/24/2022 16:39	81.55	6/23/2022 15:02	17.01	6/23/2022 14:11	6.04	6/23/2022 19:07	94.89
6/24/2022 17:58	50.96	6/24/2022 16:40	81.56	6/23/2022 15:03	17.06	6/23/2022 14:12	6.10	6/23/2022 19:08	99.78
6/24/2022 17:59	50.96	6/24/2022 16:41	81.51	6/23/2022 15:04	17.06	6/23/2022 14:13	6.05	6/23/2022 19:09	103.04
6/24/2022 18:00	50.91	6/24/2022 16:42	81.56	6/23/2022 15:05	17.00	6/23/2022 14:14	6.09	6/23/2022 19:10	102.54
6/24/2022 18:01	50.92	6/24/2022 16:43	81.55	6/23/2022 15:06	17.02	6/23/2022 14:15	6.03	6/23/2022 19:11	107.06
6/24/2022 18:02	50.91	6/24/2022 16:44	81.51	6/23/2022 15:07	17.01	6/23/2022 14:16	6.05	6/23/2022 19:12	110.46
6/24/2022 18:03	50.97	6/24/2022 16:45	81.56	6/23/2022 15:08	17.02	6/23/2022 14:17	6.39	6/23/2022 19:13	109.81
6/24/2022 18:04	50.98	6/24/2022 16:46	81.56	6/23/2022 15:09	17.08	6/23/2022 14:18	6.18	6/23/2022 19:14	113.57
6/24/2022 18:05	50.96	6/24/2022 16:47	81.51	6/23/2022 15:10	16.98	6/23/2022 14:19	6.12	6/23/2022 19:15	117.49
6/24/2022 18:06	50.97	6/24/2022 16:48	81.56	6/23/2022 15:11	16.99	6/23/2022 14:20	6.05	6/23/2022 19:16	116.73
6/24/2022 18:07	50.91	6/24/2022 16:49	81.53	6/23/2022 15:12	17.01	6/23/2022 14:21	6.21	6/23/2022 19:17	119.91
6/24/2022 18:08	50.93	6/24/2022 16:50	81.52	6/23/2022 15:13	17.00	6/23/2022 14:22	6.40	6/23/2022 19:18	124.40
6/24/2022 18:09	50.94	6/24/2022 16:51	81.54	6/23/2022 15:14	16.99	6/23/2022 14:23	6.19	6/23/2022 19:19	123.58
6/24/2022 18:10	50.95	6/24/2022 16:52	81.56	6/23/2022 15:15	17.00	6/23/2022 14:24	6.12	6/23/2022 19:20	125.96
6/24/2022 18:11	50.91	6/24/2022 16:53	81.54	6/23/2022 15:16	16.98	6/23/2022 14:25	6.12	6/23/2022 19:21	131.59
6/24/2022 18:12	50.92	6/24/2022 16:54	81.53	6/23/2022 15:17	16.99	6/23/2022 14:26	6.04	6/23/2022 19:22	130.64
6/24/2022 18:13	50.91	6/24/2022 16:55	81.56	6/23/2022 15:18	17.02	6/23/2022 14:27	6.08	6/23/2022 19:23	130.78
6/24/2022 18:14	50.94	6/24/2022 16:56	81.53	6/23/2022 15:19	16.98	6/23/2022 14:28	6.06	6/23/2022 19:24	135.19
6/24/2022 18:15	50.93	6/24/2022 16:57	81.53	6/23/2022 15:20	16.93	6/23/2022 14:29	6.04	6/23/2022 19:25	134.28
6/24/2022 18:16	50.92	6/24/2022 16:58	81.53	6/23/2022 15:21	16.97	6/23/2022 14:30	6.02	6/23/2022 19:26	133.50
6/24/2022 18:17	50.92	6/24/2022 16:59	81.53	6/23/2022 15:22	16.97	6/23/2022 14:31	6.03	6/23/2022 19:27	132.75
6/24/2022 18:18	50.92	6/24/2022 17:00	81.51	6/23/2022 15:23	16.98	6/23/2022 14:32	6.00	6/23/2022 19:28	131.97
6/24/2022 18:19	50.92	6/24/2022 17:01	81.50	6/23/2022 15:24	17.00	6/23/2022 14:33	5.94	6/23/2022 19:29	131.24
6/24/2022 18:20	50.93	6/24/2022 17:02	81.55	6/23/2022 15:25	16.99	6/23/2022 14:34	5.98	6/23/2022 19:30	130.51
6/24/2022 18:21	50.91	6/24/2022 17:03	81.55	6/23/2022 15:26	16.95	6/23/2022 14:35	5.95	6/23/2022 19:31	129.78
6/24/2022 18:22	50.89	6/24/2022 17:04	81.54	6/23/2022 15:27	16.99	6/23/2022 14:36	6.04	6/23/2022 19:32	129.12
6/24/2022 18:23	50.90	6/24/2022 17:05	81.56	6/23/2022 15:28	16.98	6/23/2022 14:37	5.98	6/23/2022 19:33	128.42
6/24/2022 18:24	50.92	6/24/2022 17:06	81.53	6/23/2022 15:29	16.96	6/23/2022 14:38	5.99	6/23/2022 19:34	127.74
6/24/2022 18:25	50.93	6/24/2022 17:07	81.53	6/23/2022 15:30	16.97	6/23/2022 14:39	6.00	6/23/2022 19:35	127.03
6/24/2022 18:26	50.89	6/24/2022 17:08	81.55	6/23/2022 15:31	16.97	6/23/2022 14:40	5.95	6/23/2022 19:36	126.41
6/24/2022 18:27	50.93	6/24/2022 17:09	81.55	6/23/2022 15:32	17.00	6/23/2022 14:41	5.93	6/23/2022 19:37	125.77
6/24/2022 18:28	50.92	6/24/2022 17:10	81.57	6/23/2022 15:33	16.98	6/23/2022 14:42	5.97	6/23/2022 19:38	125.12
6/24/2022 18:29	50.89	6/24/2022 17:11	81.54	6/23/2022 15:34	17.00	6/23/2022 14:43	5.99	6/23/2022 19:39	124.54
6/24/2022 18:30	50.87	6/24/2022 17:12	81.55	6/23/2022 15:35	17.01	6/23/2022 14:44	5.88	6/23/2022 19:40	123.87
6/24/2022 18:31	50.92	6/24/2022 17:13	81.51	6/23/2022 15:36	16.96	6/23/2022 14:45	5.92	6/23/2022 19:41	123.27
6/24/2022 18:32	50.89	6/24/2022 17:14	81.55	6/23/2022 15:37	16.96	6/23/2022 14:46	5.94	6/23/2022 19:42	122.67
6/24/2022 18:33	50.86	6/24/2022 17:15	81.53	6/23/2022 15:38	17.01	6/23/2022 14:47	5.88	6/23/2022 19:43	122.03
6/24/2022 18:34	50.89	6/24/2022 17:16	81.53	6/23/2022 15:39	16.94	6/23/2022 14:48	5.89	6/23/2022 19:44	121.47
6/24/2022 18:35	50.87	6/24/2022 17:17	81.56	6/23/2022 15:40	16.95	6/23/2022 14:49	6.01	6/23/2022 19:45	120.89
6/24/2022 18:36	50.91	6/24/2022 17:18	81.56	6/23/2022 15:41	16.96	6/23/2022 14:50	5.93	6/23/2022 19:46	120.29
6/24/2022 18:37	50.88	6/24/2022 17:19	81.54	6/23/2022 15:42	17.00	6/23/2022 14:51	5.88	6/23/2022 19:47	119.71
6/24/2022 18:38	50.90	6/24/2022 17:20	81.57	6/23/2022 15:43	16.99	6/23/2022 14:52	5.82	6/23/2022 19:48	119.20
6/24/2022 18:39	50.88	6/24/2022 17:21	81.56	6/23/2022 15:44	17.00	6/23/2022 14:53	5.85	6/23/2022 19:49	118.60
6/24/2022 18:40	50.88	6/24/2022 17:22	81.54	6/23/2022 15:45	17.02	6/23/2022 14:54	5.82	6/23/2022 19:50	118.05
6/24/2022 18:41	50.86	6/24/2022 17:23	81.55	6/23/2022 15:46	16.93	6/23/2022 14:55	5.87	6/23/2022 19:51	117.56
6/24/2022 18:42	50.87	6/24/2022 17:24	81.57	6/23/2022 15:47	16.96	6/23/2022 14:56	5.86	6/23/2022 19:52	117.05
6/24/2022 18:43	50.91	6/24/2022 17:25	81.53	6/23/2022 15:48	17.02	6/23/2022 14:57	5.89	6/23/2022 19:53	116.49
6/24/2022 18:44	50.86	6/24/2022 17:26	81.53	6/23/2022 15:49	16.98	6/23/2022 14:58	5.94	6/23/2022 19:54	115.97
6/24/2022 18:45	50.86	6/24/2022 17:27	81.54	6/23/2022 15:50	16.97	6/23/2022 14:59	5.84	6/23/2022 19:55	115.50
6/24/2022 18:46	50.88	6/24/2022 17:28	81.56	6/23/2022 15:51	16.91	6/23/2022 15:00	5.85	6/23/2022 19:56	114.97
6/24/2022 18:47	50.86	6/24/2022 17:29	81.57	6/23/2022 15:52	16.97	6/23/2022 15:01	5.82	6/23/2022 19:57	114.47
6/24/2022 18:48	50.90	6/24/2022 17:30	81.59	6/23/2022 15:53	16.96	6/23/2022 15:02	5.83	6/23/2022 19:58	114.01
6/24/2022 18:49	50.87	6/24/2022 17:31	81.54	6/23/2022 15:54	16.99	6/23/2022 15:03	5.82	6/23/2022 19:59	113.50
6/24/2022 18:50	50.87	6/24/2022 17:32	81.57	6/23/2022 15:55	16.98	6/23/2022 15:04	5.85	6/23/2022 20:00	113.02
6/24/2022 18:51	50.90	6/24/2022 17:33	81.56	6/23/2022 15:56	22.80	6/23/2022 15:05	5.82	6/23/2022 20:01	112.53
6/24/2022 18:52	50.88	6/24/2022 17:34	81.56	6/23/2022 15:57	25.98	6/23/2022 15:06	5.74	6/23/2022 20:02	112.09
6/24/2022 18:53	50.87	6/24/2022 17:35	81.55	6/23/2022 15:58	24.07	6/23/2022 15:07	5.76	6/23/2022 20:03	111.63
6/24/2022 18:54	50.87	6/24/2022 17:36	81.54	6/23/2022 15:59	22.20	6/23/2022 15:08	5.74	6/23/2022 20:04	111.17
6/24/2022 18:55	50.89	6/24/2022 17:37	81.53	6/23/2022 16:00	21.12	6/23/2022 15:09	5.78	6/23/2022 20:05	110.74
6/24/2022 18:56	50.85	6/24/2022 17:38	81.55	6/23/2022 16:01	20.50	6/23/2022 15:10	5.70	6/23/2022 20:06	110.30
6/24/2022 18:57	50.88	6/24/2022 17:39	81.57	6/23/2022 16:02	20.05	6/23/2022 15:11	5.72	6/23/2022 20:07	109.85
6/24/2022 18:58	50.83	6/24/2022 17:40	81.53	6/23/2022 16:03	19.73	6/23/2022 15:12	5.73	6/23/2022 20:08	109.45
6/24/2022 18:59	50.88	6/24/2022 17:41	81.56	6/23/2022 16:04	19.46	6/23/2022 15:13	5.77	6/23/2022 20:09	108.98
6/24/2022 19:00	50.88	6/24/2022 17:42	81.54	6/23/2022 16:05	19.25	6/23/2022 15:14	5.67	6/23/2022 20:10	108.57
6/24/2022 19:01	50.84	6/24/2022 17:43	81.56	6/23/2022 16:06	19.10	6/23/2022 15:15	5.71	6/23/2022 20:11	108.15
6/24/2022 19:02	50.87	6/24/2022 17:44	81.56	6/23/2022 16:07	18.99	6/23/2022 15:16	5.69	6/23/2022 20:12	107.71
6/24/2022 19:03	50.84	6/24/2022 17:45	81.55	6/23/2022 16:08	18.89	6/23/2022 15:17	5.73	6/23/2022 20:13	107.33
6/24/2022 19:04	50.84	6/24/2022 17:46	81.55	6/23/2022 16:09	18.81	6/23/2022 15:18	5.65	6/23/2022 20:14	106.96
6/24/2022 19:05	50.83	6/24/2022 17:47	81.58	6/23/2022 16:10	18.66	6/23/2022 15:19	5.67	6/23/2022 20:15	106.53
6/24/2022 19:06	50.86	6/24/2022 17:48	81.53	6/23/2022 16:11	18.59	6/23/2022 15:20	5.70	6/23/2022 20:16	106.17
6/24/2022 19:07	50.86	6/24/2022 17:49	81.55	6/23/2022 16:12	18.52	6/23/2022 15:21	5.76	6/23/2022 20:17	105.79
6/24/2022 19:08	50.87	6/24/2022 17:50	81.54	6/23/2022 16:13	18.47	6/23/2022 15:22	5.67	6/23/2022 20:18	105.40
6/24/2022 19:09	50.86	6/24/2022 17:51	81.55	6/23/2022 16:14	18.42	6/23/2022 15:23	5.66	6/23/2022 20:19	104.99
6/24/2022 19:10	50.85	6/24/2022 17:52	81.56	6/23/2022 16:15	18.38	6/23/2022 15:24	5.67	6/23/2022 20:20	104.60
6/24/2022 19:11	50.83	6/24/2022 17:53	81.56	6/23/2022 16:16	18.31	6/23/2022 15:25	5.72	6/23/2022 20:21	104.33
6/24/2022 19:12	50.87	6/24/2022 17:54	81.53	6/23/2022 16:17	18.27	6/23/2022 15:26	5.59	6/23/2022 20:22	104.01
6/24/2022 19:13	50.85	6/24/2022 17:55	81.56	6/23/2022 16:18	18.25	6/23/2022 15:27	5.64	6/23/2022 20:23	103.63
6/24/2022 19:14	50.87	6/24/2022 17:56	81.60	6/23/2022 16:19	18.16	6/23/2022 15:28	5.61	6/23/2022 20:24	103.26
6/24/2022 19:15	50.84	6/24/2022 17:57	81.53	6/23/2022 16:20	18.13	6/23/2022 15:29	5.63	6/23/2022 20:25	102.92
6/24/2022 19:16	50.84	6/24/2022 17:58	81.52	6/23/2022 16:21	18.12	6/23/2022 15:30	5.59	6/23/2022 20:26	102.56

6/24/2022 19:17	50.90	6/24/2022 17:59	81.56	6/23/2022 16:22	18.09	6/23/2022 15:31	5.55	6/23/2022 20:27	102.22
6/24/2022 19:18	50.84	6/24/2022 18:00	81.56	6/23/2022 16:23	18.07	6/23/2022 15:32	5.59	6/23/2022 20:28	101.89
6/24/2022 19:19	50.82	6/24/2022 18:01	81.54	6/23/2022 16:24	18.00	6/23/2022 15:33	5.59	6/23/2022 20:29	101.56
6/24/2022 19:20	50.82	6/24/2022 18:02	81.57	6/23/2022 16:25	18.01	6/23/2022 15:34	5.58	6/23/2022 20:30	101.22
6/24/2022 19:21	50.84	6/24/2022 18:03	81.56	6/23/2022 16:26	18.01	6/23/2022 15:35	5.58	6/23/2022 20:31	100.85
6/24/2022 19:22	50.83	6/24/2022 18:04	81.52	6/23/2022 16:27	17.99	6/23/2022 15:36	5.93	6/23/2022 20:32	100.55
6/24/2022 19:23	50.85	6/24/2022 18:05	81.54	6/23/2022 16:28	17.98	6/23/2022 15:37	6.23	6/23/2022 20:33	100.30
6/24/2022 19:24	50.84	6/24/2022 18:06	81.56	6/23/2022 16:29	17.96	6/23/2022 15:38	6.43	6/23/2022 20:34	99.97
6/24/2022 19:25	50.81	6/24/2022 18:07	81.55	6/23/2022 16:30	17.93	6/23/2022 15:39	6.56	6/23/2022 20:35	99.67
6/24/2022 19:26	50.86	6/24/2022 18:08	81.59	6/23/2022 16:31	17.93	6/23/2022 15:40	6.69	6/23/2022 20:36	99.31
6/24/2022 19:27	50.84	6/24/2022 18:09	81.55	6/23/2022 16:32	17.87	6/23/2022 15:41	6.76	6/23/2022 20:37	99.04
6/24/2022 19:28	50.84	6/24/2022 18:10	81.56	6/23/2022 16:33	17.88	6/23/2022 15:42	6.81	6/23/2022 20:38	98.75
6/24/2022 19:29	50.83	6/24/2022 18:11	81.57	6/23/2022 16:34	17.82	6/23/2022 15:43	6.93	6/23/2022 20:39	98.44
6/24/2022 19:30	50.81	6/24/2022 18:12	81.56	6/23/2022 16:35	17.86	6/23/2022 15:44	6.96	6/23/2022 20:40	98.15
6/24/2022 19:31	50.87	6/24/2022 18:13	81.55	6/23/2022 16:36	17.88	6/23/2022 15:45	7.03	6/23/2022 20:41	97.86
6/24/2022 19:32	50.85	6/24/2022 18:14	81.57	6/23/2022 16:37	17.81	6/23/2022 15:46	6.78	6/23/2022 20:42	97.57
6/24/2022 19:33	50.80	6/24/2022 18:15	81.54	6/23/2022 16:38	17.80	6/23/2022 15:47	6.44	6/23/2022 20:43	97.28
6/24/2022 19:34	50.79	6/24/2022 18:16	81.56	6/23/2022 16:39	17.82	6/23/2022 15:48	6.31	6/23/2022 20:44	96.98
6/24/2022 19:35	50.84	6/24/2022 18:17	81.59	6/23/2022 16:40	17.79	6/23/2022 15:49	6.25	6/23/2022 20:45	96.71
6/24/2022 19:36	50.86	6/24/2022 18:18	81.55	6/23/2022 16:41	17.76	6/23/2022 15:50	6.17	6/23/2022 20:46	96.41
6/24/2022 19:37	50.85	6/24/2022 18:19	81.58	6/23/2022 16:42	17.75	6/23/2022 15:51	6.03	6/23/2022 20:47	96.21
6/24/2022 19:38	50.81	6/24/2022 18:20	81.53	6/23/2022 16:43	17.77	6/23/2022 15:52	6.01	6/23/2022 20:48	95.91
6/24/2022 19:39	50.82	6/24/2022 18:21	81.56	6/23/2022 16:44	17.76	6/23/2022 15:53	6.01	6/23/2022 20:49	95.63
6/24/2022 19:40	50.86	6/24/2022 18:22	81.58	6/23/2022 16:45	17.72	6/23/2022 15:54	6.05	6/23/2022 20:50	95.38
6/24/2022 19:41	50.80	6/24/2022 18:23	81.53	6/23/2022 16:46	17.75	6/23/2022 15:55	5.94	6/23/2022 20:51	95.11
6/24/2022 19:42	50.80	6/24/2022 18:24	81.55	6/23/2022 16:47	17.77	6/23/2022 15:56	5.93	6/23/2022 20:52	94.83
6/24/2022 19:43	50.83	6/24/2022 18:25	81.58	6/23/2022 16:48	17.71	6/23/2022 15:57	5.91	6/23/2022 20:53	94.65
6/24/2022 19:44	50.82	6/24/2022 18:26	81.58	6/23/2022 16:49	17.71	6/23/2022 15:58	5.86	6/23/2022 20:54	94.39
6/24/2022 19:45	50.79	6/24/2022 18:27	81.58	6/23/2022 16:50	17.70	6/23/2022 15:59	5.88	6/23/2022 20:55	94.15
6/24/2022 19:46	50.82	6/24/2022 18:28	81.53	6/23/2022 16:51	17.68	6/23/2022 16:00	5.90	6/23/2022 20:56	93.96
6/24/2022 19:47	50.85	6/24/2022 18:29	81.55	6/23/2022 16:52	17.74	6/23/2022 16:01	5.91	6/23/2022 20:57	93.75
6/24/2022 19:48	50.82	6/24/2022 18:30	81.56	6/23/2022 16:53	17.65	6/23/2022 16:02	5.82	6/23/2022 20:58	93.52
6/24/2022 19:49	50.79	6/24/2022 18:31	81.56	6/23/2022 16:54	17.64	6/23/2022 16:03	5.79	6/23/2022 20:59	93.30
6/24/2022 19:50	50.82	6/24/2022 18:32	81.59	6/23/2022 16:55	17.67	6/23/2022 16:04	5.81	6/23/2022 21:00	93.06
6/24/2022 19:51	50.79	6/24/2022 18:33	81.59	6/23/2022 16:56	17.66	6/23/2022 16:05	5.83	6/23/2022 21:01	92.80
6/24/2022 19:52	50.84	6/24/2022 18:34	81.60	6/23/2022 16:57	17.65	6/23/2022 16:06	5.74	6/23/2022 21:02	92.56
6/24/2022 19:53	50.81	6/24/2022 18:35	81.57	6/23/2022 16:58	17.67	6/23/2022 16:07	5.80	6/23/2022 21:03	92.36
6/24/2022 19:54	50.83	6/24/2022 18:36	81.57	6/23/2022 16:59	17.61	6/23/2022 16:08	5.78	6/23/2022 21:04	92.12
6/24/2022 19:55	50.79	6/24/2022 18:37	81.57	6/23/2022 17:00	17.63	6/23/2022 16:09	5.86	6/23/2022 21:05	91.90
6/24/2022 19:56	50.83	6/24/2022 18:38	81.56	6/23/2022 17:01	17.61	6/23/2022 16:10	5.67	6/23/2022 21:06	91.72
6/24/2022 19:57	50.84	6/24/2022 18:39	81.56	6/23/2022 17:02	17.59	6/23/2022 16:11	5.77	6/23/2022 21:07	91.57
6/24/2022 19:58	50.80	6/24/2022 18:40	81.57	6/23/2022 17:03	17.57	6/23/2022 16:12	5.71	6/23/2022 21:08	91.34
6/24/2022 19:59	50.82	6/24/2022 18:41	81.57	6/23/2022 17:04	17.58	6/23/2022 16:13	5.76	6/23/2022 21:09	91.13
6/24/2022 20:00	50.85	6/24/2022 18:42	81.55	6/23/2022 17:05	17.58	6/23/2022 16:14	5.67	6/23/2022 21:10	90.95
6/24/2022 20:01	50.84	6/24/2022 18:43	81.52	6/23/2022 17:06	17.62	6/23/2022 16:15	5.68	6/23/2022 21:11	90.78
6/24/2022 20:02	50.82	6/24/2022 18:44	81.52	6/23/2022 17:07	17.56	6/23/2022 16:16	5.72	6/23/2022 21:12	90.56
6/24/2022 20:03	50.78	6/24/2022 18:45	81.58	6/23/2022 17:08	17.56	6/23/2022 16:17	5.68	6/23/2022 21:13	90.37
6/24/2022 20:04	50.80	6/24/2022 18:46	81.59	6/23/2022 17:09	17.55	6/23/2022 16:18	5.66	6/23/2022 21:14	90.18
6/24/2022 20:05	50.84	6/24/2022 18:47	81.58	6/23/2022 17:10	17.56	6/23/2022 16:19	5.69	6/23/2022 21:15	89.98
6/24/2022 20:06	50.80	6/24/2022 18:48	81.59	6/23/2022 17:11	17.53	6/23/2022 16:20	5.62	6/23/2022 21:16	89.80
6/24/2022 20:07	50.82	6/24/2022 18:49	81.56	6/23/2022 17:12	17.55	6/23/2022 16:21	5.62	6/23/2022 21:17	89.60
6/24/2022 20:08	50.78	6/24/2022 18:50	81.54	6/23/2022 17:13	17.53	6/23/2022 16:22	5.70	6/23/2022 21:18	89.39
6/24/2022 20:09	50.78	6/24/2022 18:51	81.54	6/23/2022 17:14	17.52	6/23/2022 16:23	5.61	6/23/2022 21:19	89.21
6/24/2022 20:10	50.80	6/24/2022 18:52	81.55	6/23/2022 17:15	17.52	6/23/2022 16:24	5.60	6/23/2022 21:20	89.04
6/24/2022 20:11	50.82	6/24/2022 18:53	81.56	6/23/2022 17:16	17.51	6/23/2022 16:25	5.63	6/23/2022 21:21	88.86
6/24/2022 20:12	50.78	6/24/2022 18:54	81.58	6/23/2022 17:17	17.52	6/23/2022 16:26	5.59	6/23/2022 21:22	88.65
6/24/2022 20:13	50.81	6/24/2022 18:55	81.56	6/23/2022 17:18	17.52	6/23/2022 16:27	5.60	6/23/2022 21:23	88.54
6/24/2022 20:14	50.80	6/24/2022 18:56	81.59	6/23/2022 17:19	17.47	6/23/2022 16:28	5.70	6/23/2022 21:24	88.27
6/24/2022 20:15	50.78	6/24/2022 18:57	81.57	6/23/2022 17:20	17.48	6/23/2022 16:29	5.85	6/23/2022 21:25	88.17
6/24/2022 20:16	50.79	6/24/2022 18:58	81.58	6/23/2022 17:21	17.50	6/23/2022 16:30	5.65	6/23/2022 21:26	87.99
6/24/2022 20:17	50.80	6/24/2022 18:59	81.57	6/23/2022 17:22	17.49	6/23/2022 16:31	5.66	6/23/2022 21:27	87.78
6/24/2022 20:18	50.79	6/24/2022 19:00	81.58	6/23/2022 17:23	17.46	6/23/2022 16:32	5.66	6/23/2022 21:28	87.59
6/24/2022 20:19	50.80	6/24/2022 19:01	81.57	6/23/2022 17:24	17.47	6/23/2022 16:33	5.60	6/23/2022 21:29	87.42
6/24/2022 20:20	50.81	6/24/2022 19:02	81.54	6/23/2022 17:25	17.47	6/23/2022 16:34	5.57	6/23/2022 21:30	87.25
6/24/2022 20:21	50.79	6/24/2022 19:03	81.58	6/23/2022 17:26	17.46	6/23/2022 16:35	5.61	6/23/2022 21:31	87.10
6/24/2022 20:22	50.76	6/24/2022 19:04	81.58	6/23/2022 17:27	17.43	6/23/2022 16:36	5.54	6/23/2022 21:32	86.91
6/24/2022 20:23	50.79	6/24/2022 19:05	81.58	6/23/2022 17:28	17.46	6/23/2022 16:37	5.52	6/23/2022 21:33	86.71
6/24/2022 20:24	53.66	6/24/2022 19:06	81.55	6/23/2022 17:29	17.44	6/23/2022 16:38	5.53	6/23/2022 21:34	86.55
6/24/2022 20:25	54.93	6/24/2022 19:07	81.57	6/23/2022 17:30	17.42	6/23/2022 16:39	5.50	6/23/2022 21:35	86.36
6/24/2022 20:26	55.66	6/24/2022 19:08	81.56	6/23/2022 17:31	17.43	6/23/2022 16:40	5.68	6/23/2022 21:36	86.25
6/24/2022 20:27	54.84	6/24/2022 19:09	81.54	6/23/2022 17:32	17.38	6/23/2022 16:41	5.62	6/23/2022 21:37	86.04
6/24/2022 20:28	53.14	6/24/2022 19:10	81.58	6/23/2022 17:33	17.40	6/23/2022 16:42	5.61	6/23/2022 21:38	85.89
6/24/2022 20:29	52.48	6/24/2022 19:11	81.56	6/23/2022 17:34	17.40	6/23/2022 16:43	5.52	6/23/2022 21:39	85.77
6/24/2022 20:30	52.16	6/24/2022 19:12	81.59	6/23/2022 17:35	17.35	6/23/2022 16:44	5.48	6/23/2022 21:40	85.62
6/24/2022 20:31	51.98	6/24/2022 19:13	81.54	6/23/2022 17:36	17.35	6/23/2022 16:45	5.58	6/23/2022 21:41	85.42
6/24/2022 20:32	51.84	6/24/2022 19:14	81.57	6/23/2022 17:37	17.41	6/23/2022 16:46	5.49	6/23/2022 21:42	85.30
6/24/2022 20:33	51.78	6/24/2022 19:15	81.55	6/23/2022 17:38	17.37	6/23/2022 16:47	5.47	6/23/2022 21:43	85.12
6/24/2022 20:34	51.66	6/24/2022 19:16	81.58	6/23/2022 17:39	17.41	6/23/2022 16:48	5.53	6/23/2022 21:44	84.97
6/24/2022 20:35	51.64	6/24/2022 19:17	81.58	6/23/2022 17:40	17.41	6/23/2022 16:49	5.58	6/23/2022 21:45	84.84
6/24/2022 20:36	51.56	6/24/2022 19:18	81.59	6/23/2022 17:41	17.39	6/23/2022 16:50	5.44	6/23/2022 21:46	84.67
6/24/2022 20:37	51.50	6/24/2022 19:19	81.55	6/23/2022 17:42	17.39	6/23/2022 16:51	5.48	6/23/2022 21:47	84.53
6/24/2022 20:38	51.50	6/24/2022 19:20	81.55	6/23/2022 17:43	17.37	6/23/2022 16:52	5.49	6/23/2022 21:48	84.41
6/24/2022 20:39	51.51	6/24/2022 19:21	81.54	6/23/2022 17:44	17.30	6/23/2022 16:53	5.41	6/23/2022 21:49	84.25
6/24/2022 20:40	51.46	6/24/2022 19:22	81.59	6/23/2022 17:45	17.36	6/23/2022 16:54	5.46	6/23/2022 21:50	84.14
6/24/2022 20:41	51.39	6/24/2022 19:23	81.56	6/23/2022 17:46	17.35	6/23/2022 16:55	5.44	6/23/2022 21:51	83.97
6/24/2022 20:42	51.40	6/24/2022 19:24	81.61	6/23/2022 17:47	17.39	6/23/2022 16:56	5.39	6/23/2022 21:52	83.83
6/24/2022 20:43	51.36	6/24/2022 19:25	81.57	6/23/2022 17:48	17.36	6/23/2022 16:57	5.35	6/23/2022 21:53	83.71
6/24/2022 20:44	51.36	6/24/2022 19:26	81.56	6/23/2022 17:49	17.32	6/23/2022 16:58	5.42	6/23/2022 21:54	83.51

6/24/2022 20:45	51.37	6/24/2022 19:27	81.58	6/23/2022 17:50	17.37	6/23/2022 16:59	5.44	6/23/2022 21:55	83.41
6/24/2022 20:46	51.29	6/24/2022 19:28	81.54	6/23/2022 17:51	17.35	6/23/2022 17:00	5.37	6/23/2022 21:56	83.29
6/24/2022 20:47	51.33	6/24/2022 19:29	81.61	6/23/2022 17:52	17.31	6/23/2022 17:01	5.40	6/23/2022 21:57	83.15
6/24/2022 20:48	51.27	6/24/2022 19:30	81.59	6/23/2022 17:53	17.30	6/23/2022 17:02	5.40	6/23/2022 21:58	83.03
6/24/2022 20:49	51.28	6/24/2022 19:31	81.57	6/23/2022 17:54	17.33	6/23/2022 17:03	5.35	6/23/2022 21:59	82.87
6/24/2022 20:50	51.28	6/24/2022 19:32	81.58	6/23/2022 17:55	17.30	6/23/2022 17:04	5.36	6/23/2022 22:00	82.77
6/24/2022 20:51	51.20	6/24/2022 19:33	81.57	6/23/2022 17:56	17.30	6/23/2022 17:05	5.38	6/23/2022 22:01	82.61
6/24/2022 20:52	51.22	6/24/2022 19:34	81.59	6/23/2022 17:57	17.35	6/23/2022 17:06	5.36	6/23/2022 22:02	82.49
6/24/2022 20:53	51.20	6/24/2022 19:35	81.61	6/23/2022 17:58	17.29	6/23/2022 17:07	5.35	6/23/2022 22:03	82.39
6/24/2022 20:54	51.21	6/24/2022 19:36	81.57	6/23/2022 17:59	17.32	6/23/2022 17:08	5.33	6/23/2022 22:04	82.23
6/24/2022 20:55	51.19	6/24/2022 19:37	81.57	6/23/2022 18:00	17.30	6/23/2022 17:09	5.41	6/23/2022 22:05	82.11
6/24/2022 20:56	51.18	6/24/2022 19:38	81.60	6/23/2022 18:01	17.28	6/23/2022 17:10	5.32	6/23/2022 22:06	82.04
6/24/2022 20:57	51.19	6/24/2022 19:39	81.53	6/23/2022 18:02	17.30	6/23/2022 17:11	5.31	6/23/2022 22:07	81.88
6/24/2022 20:58	51.20	6/24/2022 19:40	81.59	6/23/2022 18:03	17.33	6/23/2022 17:12	5.31	6/23/2022 22:08	81.80
6/24/2022 20:59	51.16	6/24/2022 19:41	81.56	6/23/2022 18:04	17.30	6/23/2022 17:13	5.33	6/23/2022 22:09	81.65
6/24/2022 21:00	51.17	6/24/2022 19:42	81.55	6/23/2022 18:05	17.27	6/23/2022 17:14	5.30	6/23/2022 22:10	81.57
6/24/2022 21:01	51.19	6/24/2022 19:43	81.61	6/23/2022 18:06	17.27	6/23/2022 17:15	5.57	6/23/2022 22:11	81.49
6/24/2022 21:02	51.16	6/24/2022 19:44	81.56	6/23/2022 18:07	17.34	6/23/2022 17:16	5.40	6/23/2022 22:12	81.34
6/24/2022 21:03	51.16	6/24/2022 19:45	81.57	6/23/2022 18:08	17.34	6/23/2022 17:17	5.36	6/23/2022 22:13	81.24
6/24/2022 21:04	51.13	6/24/2022 19:46	81.58	6/23/2022 18:09	17.33	6/23/2022 17:18	5.39	6/23/2022 22:14	81.14
6/24/2022 21:05	51.15	6/24/2022 19:47	81.57	6/23/2022 18:10	17.34	6/23/2022 17:19	5.42	6/23/2022 22:15	81.05
6/24/2022 21:06	51.16	6/24/2022 19:48	81.56	6/23/2022 18:11	17.36	6/23/2022 17:20	5.33	6/23/2022 22:16	80.96
6/24/2022 21:07	51.16	6/24/2022 19:49	81.61	6/23/2022 18:12	17.32	6/23/2022 17:21	5.31	6/23/2022 22:17	80.87
6/24/2022 21:08	51.13	6/24/2022 19:50	81.61	6/23/2022 18:13	17.31	6/23/2022 17:22	5.33	6/23/2022 22:18	80.75
6/24/2022 21:09	51.14	6/24/2022 19:51	81.55	6/23/2022 18:14	17.36	6/23/2022 17:23	5.36	6/23/2022 22:19	80.69
6/24/2022 21:10	51.13	6/24/2022 19:52	81.60	6/23/2022 18:15	17.32	6/23/2022 17:24	5.25	6/23/2022 22:20	80.54
6/24/2022 21:11	51.12	6/24/2022 19:53	81.53	6/23/2022 18:16	17.42	6/23/2022 17:25	5.29	6/23/2022 22:21	80.50
6/24/2022 21:12	51.10	6/24/2022 19:54	81.57	6/23/2022 18:17	17.39	6/23/2022 17:26	5.34	6/23/2022 22:22	80.36
6/24/2022 21:13	51.10	6/24/2022 19:55	81.57	6/23/2022 18:18	17.37	6/23/2022 17:27	5.37	6/23/2022 22:23	80.30
6/24/2022 21:14	51.09	6/24/2022 19:56	81.57	6/23/2022 18:19	17.39	6/23/2022 17:28	5.79	6/23/2022 22:24	80.16
6/24/2022 21:15	51.07	6/24/2022 19:57	81.56	6/23/2022 18:20	17.40	6/23/2022 17:29	5.62	6/23/2022 22:25	80.09
6/24/2022 21:16	51.10	6/24/2022 19:58	81.55	6/23/2022 18:21	17.40	6/23/2022 17:30	5.46	6/23/2022 22:26	79.95
6/24/2022 21:17	51.05	6/24/2022 19:59	81.54	6/23/2022 18:22	17.42	6/23/2022 17:31	5.41	6/23/2022 22:27	79.89
6/24/2022 21:18	51.07	6/24/2022 20:00	81.58	6/23/2022 18:23	17.38	6/23/2022 17:32	5.35	6/23/2022 22:28	79.77
6/24/2022 21:19	51.06	6/24/2022 20:01	81.57	6/23/2022 18:24	17.42	6/23/2022 17:33	5.36	6/23/2022 22:29	79.66
6/24/2022 21:20	51.05	6/24/2022 20:02	81.58	6/23/2022 18:25	17.46	6/23/2022 17:34	5.30	6/23/2022 22:30	79.58
6/24/2022 21:21	51.09	6/24/2022 20:03	81.60	6/23/2022 18:26	17.46	6/23/2022 17:35	5.35	6/23/2022 22:31	79.45
6/24/2022 21:22	51.06	6/24/2022 20:04	81.54	6/23/2022 18:27	17.47	6/23/2022 17:36	5.31	6/23/2022 22:32	79.39
6/24/2022 21:23	51.07	6/24/2022 20:05	81.56	6/23/2022 18:28	17.46	6/23/2022 17:37	5.54	6/23/2022 22:33	79.28
6/24/2022 21:24	51.09	6/24/2022 20:06	81.55	6/23/2022 18:29	17.51	6/23/2022 17:38	5.36	6/23/2022 22:34	79.20
6/24/2022 21:25	51.06	6/24/2022 20:07	81.57	6/23/2022 18:30	17.46	6/23/2022 17:39	5.33	6/23/2022 22:35	79.13
6/24/2022 21:26	51.04	6/24/2022 20:08	81.58	6/23/2022 18:31	17.48	6/23/2022 17:40	5.34	6/23/2022 22:36	79.08
6/24/2022 21:27	51.04	6/24/2022 20:09	81.59	6/23/2022 18:32	17.49	6/23/2022 17:41	5.25	6/23/2022 22:37	78.97
6/24/2022 21:28	51.03	6/24/2022 20:10	81.59	6/23/2022 18:33	17.45	6/23/2022 17:42	5.25	6/23/2022 22:38	78.89
6/24/2022 21:29	51.02	6/24/2022 20:11	81.59	6/23/2022 18:34	17.48	6/23/2022 17:43	5.28	6/23/2022 22:39	78.85
6/24/2022 21:30	51.06	6/24/2022 20:12	81.58	6/23/2022 18:35	17.52	6/23/2022 17:44	5.32	6/23/2022 22:40	78.75
6/24/2022 21:31	51.04	6/24/2022 20:13	81.56	6/23/2022 18:36	17.51	6/23/2022 17:45	5.21	6/23/2022 22:41	78.68
6/24/2022 21:32	51.02	6/24/2022 20:14	81.57	6/23/2022 18:37	17.54	6/23/2022 17:46	5.26	6/23/2022 22:42	78.61
6/24/2022 21:33	51.01	6/24/2022 20:15	81.58	6/23/2022 18:38	17.60	6/23/2022 17:47	5.27	6/23/2022 22:43	78.55
6/24/2022 21:34	51.02	6/24/2022 20:16	81.57	6/23/2022 18:39	17.56	6/23/2022 17:48	5.26	6/23/2022 22:44	78.46
6/24/2022 21:35	51.03	6/24/2022 20:17	81.61	6/23/2022 18:40	17.63	6/23/2022 17:49	5.14	6/23/2022 22:45	78.40
6/24/2022 21:36	51.02	6/24/2022 20:18	81.57	6/23/2022 18:41	17.60	6/23/2022 17:50	5.15	6/23/2022 22:46	78.34
6/24/2022 21:37	51.01	6/24/2022 20:19	81.60	6/23/2022 18:42	17.63	6/23/2022 17:51	5.23	6/23/2022 22:47	78.27
6/24/2022 21:38	51.02	6/24/2022 20:20	81.58	6/23/2022 18:43	17.66	6/23/2022 17:52	5.22	6/23/2022 22:48	78.20
6/24/2022 21:39	51.01	6/24/2022 20:21	81.54	6/23/2022 18:44	17.64	6/23/2022 17:53	5.20	6/23/2022 22:49	78.09
6/24/2022 21:40	51.00	6/24/2022 20:22	81.55	6/23/2022 18:45	17.70	6/23/2022 17:54	5.18	6/23/2022 22:50	78.01
6/24/2022 21:41	51.01	6/24/2022 20:23	81.56	6/23/2022 18:46	17.64	6/23/2022 17:55	5.18	6/23/2022 22:51	77.91
6/24/2022 21:42	50.98	6/24/2022 20:24	81.63	6/23/2022 18:47	17.65	6/23/2022 17:56	5.16	6/23/2022 22:52	77.84
6/24/2022 21:43	51.00	6/24/2022 20:25	81.57	6/23/2022 18:48	17.75	6/23/2022 17:57	5.13	6/23/2022 22:53	77.77
6/24/2022 21:44	51.01	6/24/2022 20:26	81.58	6/23/2022 18:49	17.69	6/23/2022 17:58	5.18	6/23/2022 22:54	77.67
6/24/2022 21:45	51.00	6/24/2022 20:27	81.57	6/23/2022 18:50	17.73	6/23/2022 17:59	5.19	6/23/2022 22:55	77.57
6/24/2022 21:46	51.02	6/24/2022 20:28	81.57	6/23/2022 18:51	17.71	6/23/2022 18:00	5.11	6/23/2022 22:56	77.52
6/24/2022 21:47	51.02	6/24/2022 20:29	81.59	6/23/2022 18:52	17.73	6/23/2022 18:01	5.16	6/23/2022 22:57	77.44
6/24/2022 21:48	50.98	6/24/2022 20:30	81.57	6/23/2022 18:53	17.73	6/23/2022 18:02	5.17	6/23/2022 22:58	77.34
6/24/2022 21:49	51.00	6/24/2022 20:31	81.56	6/23/2022 18:54	17.74	6/23/2022 18:03	5.14	6/23/2022 22:59	77.28
6/24/2022 21:50	51.00	6/24/2022 20:32	81.59	6/23/2022 18:55	17.76	6/23/2022 18:04	5.11	6/23/2022 23:00	77.23
6/24/2022 21:51	50.99	6/24/2022 20:33	81.61	6/23/2022 18:56	17.79	6/23/2022 18:05	5.13	6/23/2022 23:01	77.18
6/24/2022 21:52	50.97	6/24/2022 20:34	81.60	6/23/2022 18:57	17.78	6/23/2022 18:06	5.14	6/23/2022 23:02	77.08
6/24/2022 21:53	50.99	6/24/2022 20:35	81.61	6/23/2022 18:58	17.77	6/23/2022 18:07	5.15	6/23/2022 23:03	77.01
6/24/2022 21:54	50.99	6/24/2022 20:36	81.59	6/23/2022 18:59	17.79	6/23/2022 18:08	5.04	6/23/2022 23:04	76.95
6/24/2022 21:55	50.96	6/24/2022 20:37	81.58	6/23/2022 19:00	17.88	6/23/2022 18:09	5.03	6/23/2022 23:05	76.88
6/24/2022 21:56	50.98	6/24/2022 20:38	81.60	6/23/2022 19:01	17.83	6/23/2022 18:10	5.12	6/23/2022 23:06	76.81
6/24/2022 21:57	50.96	6/24/2022 20:39	81.56	6/23/2022 19:02	17.86	6/23/2022 18:11	5.04	6/23/2022 23:07	76.75
6/24/2022 21:58	50.94	6/24/2022 20:40	81.56	6/23/2022 19:03	17.87	6/23/2022 18:12	5.05	6/23/2022 23:08	76.71
6/24/2022 21:59	50.95	6/24/2022 20:41	81.55	6/23/2022 19:04	17.88	6/23/2022 18:13	5.04	6/23/2022 23:09	76.64
6/24/2022 22:00	50.93	6/24/2022 20:42	81.59	6/23/2022 19:05	17.91	6/23/2022 18:14	5.08	6/23/2022 23:10	76.58
6/24/2022 22:01	50.94	6/24/2022 20:43	81.60	6/23/2022 19:06	17.88	6/23/2022 18:15	5.00	6/23/2022 23:11	76.47
6/24/2022 22:02	50.98	6/24/2022 20:44	81.60	6/23/2022 19:07	17.92	6/23/2022 18:16	5.00	6/23/2022 23:12	76.42
6/24/2022 22:03	50.98	6/24/2022 20:45	81.58	6/23/2022 19:08	17.88	6/23/2022 18:17	5.03	6/23/2022 23:13	76.31
6/24/2022 22:04	50.93	6/24/2022 20:46	81.60	6/23/2022 19:09	17.92	6/23/2022 18:18	5.09	6/23/2022 23:14	76.31
6/24/2022 22:05	50.97	6/24/2022 20:47	81.59	6/23/2022 19:10	17.93	6/23/2022 18:19	5.01	6/23/2022 23:15	76.22
6/24/2022 22:06	50.99	6/24/2022 20:48	81.55	6/23/2022 19:11	17.94	6/23/2022 18:20	4.99	6/23/2022 23:16	76.12
6/24/2022 22:07	50.97	6/24/2022 20:49	81.59	6/23/2022 19:12	17.92	6/23/2022 18:21	5.01	6/23/2022 23:17	76.10
6/24/2022 22:08	50.96	6/24/2022 20:50	81.57	6/23/2022 19:13	17.98	6/23/2022 18:22	4.96	6/23/2022 23:18	81.23
6/24/2022 22:09	50.94	6/24/2022 20:51	81.61	6/23/2022 19:14	17.98	6/23/2022 18:23	5.01	6/23/2022 23:19	81.01
6/24/2022 22:10	50.98	6/24/2022 20:52	81.60	6/23/2022 19:15	18.00	6/23/2022 18:24	4.97	6/23/2022 23:20	80.87
6/24/2022 22:11	50.99	6/24/2022 20:53	81.61	6/23/2022 19:16	17.93	6/23/2022 18:25	5.02	6/23/2022 23:21	80.72
6/24/2022 22:12	50.96	6/24/2022 20:54	81.55	6/23/2022 19:17	18.04	6/23/2022 18:26	4.97	6/23/2022 23:22	80.59

6/24/2022 22:13	50.94	6/24/2022 20:55	81.55	6/23/2022 19:18	18.05	6/23/2022 18:27	4.99	6/23/2022 23:23	80.46
6/24/2022 22:14	50.94	6/24/2022 20:56	81.63	6/23/2022 19:19	18.04	6/23/2022 18:28	4.97	6/23/2022 23:24	80.31
6/24/2022 22:15	50.92	6/24/2022 20:57	81.57	6/23/2022 19:20	18.05	6/23/2022 18:29	5.03	6/23/2022 23:25	80.20
6/24/2022 22:16	50.93	6/24/2022 20:58	81.58	6/23/2022 19:21	18.06	6/23/2022 18:30	4.92	6/23/2022 23:26	80.08
6/24/2022 22:17	50.91	6/24/2022 20:59	81.57	6/23/2022 19:22	18.03	6/23/2022 18:31	4.91	6/23/2022 23:27	79.97
6/24/2022 22:18	50.97	6/24/2022 21:00	81.54	6/23/2022 19:23	18.08	6/23/2022 18:32	4.95	6/23/2022 23:28	79.85
6/24/2022 22:19	50.93	6/24/2022 21:01	81.56	6/23/2022 19:24	18.07	6/23/2022 18:33	4.92	6/23/2022 23:29	79.73
6/24/2022 22:20	50.98	6/24/2022 21:02	81.59	6/23/2022 19:25	18.05	6/23/2022 18:34	4.91	6/23/2022 23:30	79.62
6/24/2022 22:21	50.94	6/24/2022 21:03	81.58	6/23/2022 19:26	18.09	6/23/2022 18:35	4.94	6/23/2022 23:31	79.51
6/24/2022 22:22	50.97	6/24/2022 21:04	81.56	6/23/2022 19:27	18.09	6/23/2022 18:36	4.94	6/23/2022 23:32	79.38
6/24/2022 22:23	50.93	6/24/2022 21:05	81.55	6/23/2022 19:28	18.09	6/23/2022 18:37	4.88	6/23/2022 23:33	79.28
6/24/2022 22:24	50.94	6/24/2022 21:06	81.58	6/23/2022 19:29	18.13	6/23/2022 18:38	4.92	6/23/2022 23:34	79.19
6/24/2022 22:25	50.93	6/24/2022 21:07	81.61	6/23/2022 19:30	18.16	6/23/2022 18:39	4.92	6/23/2022 23:35	79.14
6/24/2022 22:26	50.90	6/24/2022 21:08	81.58	6/23/2022 19:31	18.10	6/23/2022 18:40	4.97	6/23/2022 23:36	79.00
6/24/2022 22:27	50.92	6/24/2022 21:09	81.55	6/23/2022 19:32	18.15	6/23/2022 18:41	4.92	6/23/2022 23:37	78.96
6/24/2022 22:28	50.92	6/24/2022 21:10	81.54	6/23/2022 19:33	18.15	6/23/2022 18:42	4.89	6/23/2022 23:38	78.85
6/24/2022 22:29	50.93	6/24/2022 21:11	81.54	6/23/2022 19:34	18.16	6/23/2022 18:43	4.92	6/23/2022 23:39	78.75
6/24/2022 22:30	50.92	6/24/2022 21:12	81.61	6/23/2022 19:35	18.18	6/23/2022 18:44	4.89	6/23/2022 23:40	78.67
6/24/2022 22:31	50.90	6/24/2022 21:13	81.57	6/23/2022 19:36	18.19	6/23/2022 18:45	4.89	6/23/2022 23:41	78.58
6/24/2022 22:32	50.90	6/24/2022 21:14	81.57	6/23/2022 19:37	18.19	6/23/2022 18:46	4.87	6/23/2022 23:42	78.55
6/24/2022 22:33	50.91	6/24/2022 21:15	81.58	6/23/2022 19:38	18.22	6/23/2022 18:47	4.92	6/23/2022 23:43	78.45
6/24/2022 22:34	50.93	6/24/2022 21:16	81.60	6/23/2022 19:39	18.24	6/23/2022 18:48	4.84	6/23/2022 23:44	78.37
6/24/2022 22:35	50.91	6/24/2022 21:17	81.60	6/23/2022 19:40	18.20	6/23/2022 18:49	4.79	6/23/2022 23:45	78.25
6/24/2022 22:36	50.90	6/24/2022 21:18	81.55	6/23/2022 19:41	18.19	6/23/2022 18:50	4.94	6/23/2022 23:46	78.13
6/24/2022 22:37	50.91	6/24/2022 21:19	81.56	6/23/2022 19:42	18.20	6/23/2022 18:51	4.89	6/23/2022 23:47	78.07
6/24/2022 22:38	50.94	6/24/2022 21:20	81.56	6/23/2022 19:43	18.29	6/23/2022 18:52	4.82	6/23/2022 23:48	78.01
6/24/2022 22:39	50.93	6/24/2022 21:21	81.56	6/23/2022 19:44	18.28	6/23/2022 18:53	4.88	6/23/2022 23:49	77.86
6/24/2022 22:40	50.90	6/24/2022 21:22	81.60	6/23/2022 19:45	18.26	6/23/2022 18:54	4.89	6/23/2022 23:50	77.79
6/24/2022 22:41	50.90	6/24/2022 21:23	81.58	6/23/2022 19:46	18.25	6/23/2022 18:55	4.79	6/23/2022 23:51	77.68
6/24/2022 22:42	50.90	6/24/2022 21:24	81.59	6/23/2022 19:47	18.24	6/23/2022 18:56	4.81	6/23/2022 23:52	77.61
6/24/2022 22:43	50.93	6/24/2022 21:25	81.56	6/23/2022 19:48	18.26	6/23/2022 18:57	4.80	6/23/2022 23:53	77.52
6/24/2022 22:44	50.93	6/24/2022 21:26	81.56	6/23/2022 19:49	18.32	6/23/2022 18:58	4.85	6/23/2022 23:54	77.44
6/24/2022 22:45	50.90	6/24/2022 21:27	81.57	6/23/2022 19:50	18.32	6/23/2022 18:59	4.80	6/23/2022 23:55	77.33
6/24/2022 22:46	50.90	6/24/2022 21:28	81.58	6/23/2022 19:51	18.29	6/23/2022 19:00	4.82	6/23/2022 23:56	77.27
6/24/2022 22:47	50.91	6/24/2022 21:29	81.60	6/23/2022 19:52	18.27	6/23/2022 19:01	4.77	6/23/2022 23:57	77.19
6/24/2022 22:48	50.89	6/24/2022 21:30	81.57	6/23/2022 19:53	18.29	6/23/2022 19:02	4.84	6/23/2022 23:58	77.12
6/24/2022 22:49	50.90	6/24/2022 21:31	81.56	6/23/2022 19:54	18.31	6/23/2022 19:03	4.77	6/23/2022 23:59	77.05
6/24/2022 22:50	50.91	6/24/2022 21:32	81.57	6/23/2022 19:55	18.33	6/23/2022 19:04	4.79	6/24/2022 0:00	76.99
6/24/2022 22:51	50.87	6/24/2022 21:33	81.62	6/23/2022 19:56	18.31	6/23/2022 19:05	4.80	6/24/2022 0:01	76.91
6/24/2022 22:52	50.90	6/24/2022 21:34	81.59	6/23/2022 19:57	18.39	6/23/2022 19:06	4.83	6/24/2022 0:02	76.84
6/24/2022 22:53	50.91	6/24/2022 21:35	81.59	6/23/2022 19:58	18.40	6/23/2022 19:07	4.74	6/24/2022 0:03	76.77
6/24/2022 22:54	50.91	6/24/2022 21:36	81.59	6/23/2022 19:59	18.39	6/23/2022 19:08	4.80	6/24/2022 0:04	76.71
6/24/2022 22:55	50.90	6/24/2022 21:37	81.59	6/23/2022 20:00	18.38	6/23/2022 19:09	4.72	6/24/2022 0:05	76.62
6/24/2022 22:56	50.91	6/24/2022 21:38	81.57	6/23/2022 20:01	18.40	6/23/2022 19:10	4.79	6/24/2022 0:06	76.54
6/24/2022 22:57	50.86	6/24/2022 21:39	81.58	6/23/2022 20:02	18.38	6/23/2022 19:11	4.74	6/24/2022 0:07	76.45
6/24/2022 22:58	50.89	6/24/2022 21:40	81.57	6/23/2022 20:03	18.39	6/23/2022 19:12	4.75	6/24/2022 0:08	76.36
6/24/2022 22:59	50.87	6/24/2022 21:41	81.58	6/23/2022 20:04	18.37	6/23/2022 19:13	4.77	6/24/2022 0:09	76.31
6/24/2022 23:00	50.87	6/24/2022 21:42	81.62	6/23/2022 20:05	18.45	6/23/2022 19:14	4.81	6/24/2022 0:10	76.18
6/24/2022 23:01	50.86	6/24/2022 21:43	81.61	6/23/2022 20:06	18.42	6/23/2022 19:15	4.72	6/24/2022 0:11	76.13
6/24/2022 23:02	50.90	6/24/2022 21:44	81.58	6/23/2022 20:07	18.39	6/23/2022 19:16	4.73	6/24/2022 0:12	76.06
6/24/2022 23:03	50.89	6/24/2022 21:45	81.57	6/23/2022 20:08	18.46	6/23/2022 19:17	4.78	6/24/2022 0:13	75.99
6/24/2022 23:04	50.86	6/24/2022 21:46	81.58	6/23/2022 20:09	18.48	6/23/2022 19:18	4.98	6/24/2022 0:14	75.90
6/24/2022 23:05	50.88	6/24/2022 21:47	81.57	6/23/2022 20:10	18.46	6/23/2022 19:19	4.76	6/24/2022 0:15	75.86
6/24/2022 23:06	50.88	6/24/2022 21:48	81.56	6/23/2022 20:11	18.48	6/23/2022 19:20	4.76	6/24/2022 0:16	75.78
6/24/2022 23:07	50.89	6/24/2022 21:49	81.61	6/23/2022 20:12	18.47	6/23/2022 19:21	4.82	6/24/2022 0:17	75.70
6/24/2022 23:08	50.86	6/24/2022 21:50	81.57	6/23/2022 20:13	18.46	6/23/2022 19:22	4.83	6/24/2022 0:18	75.65
6/24/2022 23:09	50.87	6/24/2022 21:51	81.62	6/23/2022 20:14	18.44	6/23/2022 19:23	4.76	6/24/2022 0:19	75.58
6/24/2022 23:10	50.86	6/24/2022 21:52	81.59	6/23/2022 20:15	18.48	6/23/2022 19:24	4.78	6/24/2022 0:20	75.55
6/24/2022 23:11	50.89	6/24/2022 21:53	81.57	6/23/2022 20:16	18.49	6/23/2022 19:25	4.77	6/24/2022 0:21	75.43
6/24/2022 23:12	50.87	6/24/2022 21:54	81.62	6/23/2022 20:17	18.46	6/23/2022 19:26	4.81	6/24/2022 0:22	75.37
6/24/2022 23:13	50.87	6/24/2022 21:55	81.58	6/23/2022 20:18	18.47	6/23/2022 19:27	4.66	6/24/2022 0:23	75.29
6/24/2022 23:14	50.87	6/24/2022 21:56	81.63	6/23/2022 20:19	18.50	6/23/2022 19:28	4.74	6/24/2022 0:24	75.28
6/24/2022 23:15	50.87	6/24/2022 21:57	81.61	6/23/2022 20:20	18.50	6/23/2022 19:29	5.10	6/24/2022 0:25	75.20
6/24/2022 23:16	50.87	6/24/2022 21:58	81.61	6/23/2022 20:21	18.47	6/23/2022 19:30	4.87	6/24/2022 0:26	75.14
6/24/2022 23:17	50.85	6/24/2022 21:59	81.58	6/23/2022 20:22	18.53	6/23/2022 19:31	4.82	6/24/2022 0:27	75.07
6/24/2022 23:18	50.88	6/24/2022 22:00	81.62	6/23/2022 20:23	18.51	6/23/2022 19:32	4.74	6/24/2022 0:28	75.01
6/24/2022 23:19	50.86	6/24/2022 22:01	81.60	6/23/2022 20:24	18.52	6/23/2022 19:33	4.73	6/24/2022 0:29	74.94
6/24/2022 23:20	50.90	6/24/2022 22:02	81.60	6/23/2022 20:25	18.53	6/23/2022 19:34	4.73	6/24/2022 0:30	74.91
6/24/2022 23:21	50.85	6/24/2022 22:03	81.58	6/23/2022 20:26	18.56	6/23/2022 19:35	4.77	6/24/2022 0:31	74.86
6/24/2022 23:22	50.87	6/24/2022 22:04	81.58	6/23/2022 20:27	18.56	6/23/2022 19:36	4.70	6/24/2022 0:32	74.77
6/24/2022 23:23	50.88	6/24/2022 22:05	81.59	6/23/2022 20:28	18.54	6/23/2022 19:37	4.67	6/24/2022 0:33	74.75
6/24/2022 23:24	50.85	6/24/2022 22:06	81.56	6/23/2022 20:29	18.54	6/23/2022 19:38	4.72	6/24/2022 0:34	74.69
6/24/2022 23:25	50.86	6/24/2022 22:07	81.57	6/23/2022 20:30	18.51	6/23/2022 19:39	4.68	6/24/2022 0:35	74.64
6/24/2022 23:26	50.83	6/24/2022 22:08	81.59	6/23/2022 20:31	18.51	6/23/2022 19:40	4.71	6/24/2022 0:36	74.58
6/24/2022 23:27	50.86	6/24/2022 22:09	81.64	6/23/2022 20:32	18.52	6/23/2022 19:41	4.68	6/24/2022 0:37	74.54
6/24/2022 23:28	50.89	6/24/2022 22:10	81.60	6/23/2022 20:33	18.50	6/23/2022 19:42	4.71	6/24/2022 0:38	74.48
6/24/2022 23:29	50.86	6/24/2022 22:11	81.59	6/23/2022 20:34	18.53	6/23/2022 19:43	4.68	6/24/2022 0:39	74.40
6/24/2022 23:30	50.86	6/24/2022 22:12	81.59	6/23/2022 20:35	18.53	6/23/2022 19:44	4.68	6/24/2022 0:40	74.36
6/24/2022 23:31	50.87	6/24/2022 22:13	81.60	6/23/2022 20:36	18.52	6/23/2022 19:45	4.71	6/24/2022 0:41	74.30
6/24/2022 23:32	50.89	6/24/2022 22:14	81.56	6/23/2022 20:37	18.55	6/23/2022 19:46	4.63	6/24/2022 0:42	74.25
6/24/2022 23:33	50.85	6/24/2022 22:15	81.62	6/23/2022 20:38	18.50	6/23/2022 19:47	4.77	6/24/2022 0:43	74.21
6/24/2022 23:34	50.85	6/24/2022 22:16	81.59	6/23/2022 20:39	18.53	6/23/2022 19:48	4.74	6/24/2022 0:44	74.16
6/24/2022 23:35	50.84	6/24/2022 22:17	81.60	6/23/2022 20:40	18.52	6/23/2022 19:49	4.66	6/24/2022 0:45	74.11
6/24/2022 23:36	50.83	6/24/2022 22:18	81.62	6/23/2022 20:41	18.53	6/23/2022 19:50	4.65	6/24/2022 0:46	74.09
6/24/2022 23:37	50.86	6/24/2022 22:19	81.58	6/23/2022 20:42	18.48	6/23/2022 19:51	4.66	6/24/2022 0:47	74.05
6/24/2022 23:38	50.87	6/24/2022 22:20	81.60	6/23/2022 20:43	18.48	6/23/2022 19:52	4.67	6/24/2022 0:48	73.98
6/24/2022 23:39	50.84	6/24/2022 22:21	81.57	6/23/2022 20:44	18.50	6/23/2022 19:53	4.68	6/24/2022 0:49	73.96
6/24/2022 23:40	50.85	6/24/2022 22:22	81.59	6/23/2022 20:45	18.42	6/23/2022 19:54	4.68	6/24/2022 0:50	73.93

6/24/2022 23:41	50.83	6/24/2022 22:23	81.62	6/23/2022 20:46	18.44	6/23/2022 19:55	4.72	6/24/2022 0:51	73.84
6/24/2022 23:42	50.87	6/24/2022 22:24	81.57	6/23/2022 20:47	18.47	6/23/2022 19:56	4.65	6/24/2022 0:52	73.83
6/24/2022 23:43	50.82	6/24/2022 22:25	81.59	6/23/2022 20:48	18.44	6/23/2022 19:57	4.63	6/24/2022 0:53	73.77
6/24/2022 23:44	50.88	6/24/2022 22:26	81.59	6/23/2022 20:49	18.43	6/23/2022 19:58	4.68	6/24/2022 0:54	73.73
6/24/2022 23:45	50.87	6/24/2022 22:27	81.62	6/23/2022 20:50	18.41	6/23/2022 19:59	4.64	6/24/2022 0:55	73.69
6/24/2022 23:46	50.85	6/24/2022 22:28	81.63	6/23/2022 20:51	18.40	6/23/2022 20:00	4.62	6/24/2022 0:56	73.61
6/24/2022 23:47	50.85	6/24/2022 22:29	81.59	6/23/2022 20:52	18.41	6/23/2022 20:01	4.62	6/24/2022 0:57	73.59
6/24/2022 23:48	50.85	6/24/2022 22:30	81.55	6/23/2022 20:53	18.38	6/23/2022 20:02	4.64	6/24/2022 0:58	73.57
6/24/2022 23:49	50.83	6/24/2022 22:31	81.62	6/23/2022 20:54	18.40	6/23/2022 20:03	4.63	6/24/2022 0:59	73.50
6/24/2022 23:50	50.85	6/24/2022 22:32	81.59	6/23/2022 20:55	18.45	6/23/2022 20:04	4.60	6/24/2022 1:00	73.47
6/24/2022 23:51	50.84	6/24/2022 22:33	81.63	6/23/2022 20:56	18.42	6/23/2022 20:05	4.65	6/24/2022 1:01	73.43
6/24/2022 23:52	50.83	6/24/2022 22:34	81.58	6/23/2022 20:57	18.39	6/23/2022 20:06	4.62	6/24/2022 1:02	73.39
6/24/2022 23:53	50.86	6/24/2022 22:35	81.56	6/23/2022 20:58	18.37	6/23/2022 20:07	4.62	6/24/2022 1:03	73.35
6/24/2022 23:54	50.82	6/24/2022 22:36	81.54	6/23/2022 20:59	18.41	6/23/2022 20:08	4.63	6/24/2022 1:04	73.30
6/24/2022 23:55	50.80	6/24/2022 22:37	81.61	6/23/2022 21:00	18.35	6/23/2022 20:09	4.58	6/24/2022 1:05	73.25
6/24/2022 23:56	50.81	6/24/2022 22:38	81.59	6/23/2022 21:01	18.35	6/23/2022 20:10	4.57	6/24/2022 1:06	73.21
6/24/2022 23:57	50.82	6/24/2022 22:39	81.62	6/23/2022 21:02	18.38	6/23/2022 20:11	4.63	6/24/2022 1:07	73.20
6/24/2022 23:58	50.84	6/24/2022 22:40	81.59	6/23/2022 21:03	18.31	6/23/2022 20:12	4.71	6/24/2022 1:08	73.13
6/24/2022 23:59	50.81	6/24/2022 22:41	81.58	6/23/2022 21:04	18.34	6/23/2022 20:13	4.61	6/24/2022 1:09	73.10
6/25/2022 0:00	50.82	6/24/2022 22:42	81.59	6/23/2022 21:05	18.30	6/23/2022 20:14	4.63	6/24/2022 1:10	73.09
6/25/2022 0:01	50.84	6/24/2022 22:43	81.60	6/23/2022 21:06	18.32	6/23/2022 20:15	4.78	6/24/2022 1:11	73.06
6/25/2022 0:02	50.83	6/24/2022 22:44	81.60	6/23/2022 21:07	18.31	6/23/2022 20:16	4.80	6/24/2022 1:12	72.99
6/25/2022 0:03	50.79	6/24/2022 22:45	81.59	6/23/2022 21:08	18.36	6/23/2022 20:17	4.68	6/24/2022 1:13	72.96
6/25/2022 0:04	50.80	6/24/2022 22:46	81.59	6/23/2022 21:09	18.25	6/23/2022 20:18	4.63	6/24/2022 1:14	72.94
6/25/2022 0:05	50.84	6/24/2022 22:47	81.60	6/23/2022 21:10	18.23	6/23/2022 20:19	4.64	6/24/2022 1:15	72.88
6/25/2022 0:06	50.84	6/24/2022 22:48	81.60	6/23/2022 21:11	18.28	6/23/2022 20:20	4.76	6/24/2022 1:16	72.84
6/25/2022 0:07	50.85	6/24/2022 22:49	81.61	6/23/2022 21:12	18.28	6/23/2022 20:21	4.84	6/24/2022 1:17	72.80
6/25/2022 0:08	50.81	6/24/2022 22:50	81.59	6/23/2022 21:13	18.27	6/23/2022 20:22	4.98	6/24/2022 1:18	72.79
6/25/2022 0:09	50.83	6/24/2022 22:51	81.59	6/23/2022 21:14	18.21	6/23/2022 20:23	4.98	6/24/2022 1:19	72.72
6/25/2022 0:10	50.83	6/24/2022 22:52	81.60	6/23/2022 21:15	18.23	6/23/2022 20:24	5.03	6/24/2022 1:20	72.70
6/25/2022 0:11	50.83	6/24/2022 22:53	81.60	6/23/2022 21:16	18.25	6/23/2022 20:25	5.05	6/24/2022 1:21	72.67
6/25/2022 0:12	50.83	6/24/2022 22:54	81.58	6/23/2022 21:17	18.20	6/23/2022 20:26	4.84	6/24/2022 1:22	72.65
6/25/2022 0:13	50.83	6/24/2022 22:55	81.57	6/23/2022 21:18	18.17	6/23/2022 20:27	4.84	6/24/2022 1:23	72.57
6/25/2022 0:14	50.83	6/24/2022 22:56	81.59	6/23/2022 21:19	18.21	6/23/2022 20:28	4.79	6/24/2022 1:24	72.57
6/25/2022 0:15	50.82	6/24/2022 22:57	81.62	6/23/2022 21:20	18.19	6/23/2022 20:29	4.80	6/24/2022 1:25	72.52
6/25/2022 0:16	50.83	6/24/2022 22:58	81.60	6/23/2022 21:21	18.20	6/23/2022 20:30	4.80	6/24/2022 1:26	72.49
6/25/2022 0:17	50.83	6/24/2022 22:59	81.60	6/23/2022 21:22	18.15	6/23/2022 20:31	4.79	6/24/2022 1:27	72.48
6/25/2022 0:18	50.85	6/24/2022 23:00	81.62	6/23/2022 21:23	18.18	6/23/2022 20:32	4.96	6/24/2022 1:28	72.44
6/25/2022 0:19	50.83	6/24/2022 23:01	81.60	6/23/2022 21:24	18.14	6/23/2022 20:33	4.86	6/24/2022 1:29	72.40
6/25/2022 0:20	50.82	6/24/2022 23:02	81.62	6/23/2022 21:25	18.13	6/23/2022 20:34	4.83	6/24/2022 1:30	72.35
6/25/2022 0:21	50.83	6/24/2022 23:03	81.61	6/23/2022 21:26	18.12	6/23/2022 20:35	4.86	6/24/2022 1:31	72.28
6/25/2022 0:22	50.80	6/24/2022 23:04	81.60	6/23/2022 21:27	18.12	6/23/2022 20:36	4.99	6/24/2022 1:32	72.32
6/25/2022 0:23	50.80	6/24/2022 23:05	81.62	6/23/2022 21:28	18.12	6/23/2022 20:37	5.02	6/24/2022 1:33	72.26
6/25/2022 0:24	50.81	6/24/2022 23:06	81.60	6/23/2022 21:29	18.14	6/23/2022 20:38	4.82	6/24/2022 1:34	72.24
6/25/2022 0:25	50.80	6/24/2022 23:07	81.58	6/23/2022 21:30	18.12	6/23/2022 20:39	5.02	6/24/2022 1:35	72.22
6/25/2022 0:26	50.82	6/24/2022 23:08	81.59	6/23/2022 21:31	18.11	6/23/2022 20:40	5.08	6/24/2022 1:36	72.19
6/25/2022 0:27	50.83	6/24/2022 23:09	81.62	6/23/2022 21:32	18.11	6/23/2022 20:41	4.98	6/24/2022 1:37	72.13
6/25/2022 0:28	50.84	6/24/2022 23:10	81.63	6/23/2022 21:33	18.11	6/23/2022 20:42	5.11	6/24/2022 1:38	72.13
6/25/2022 0:29	50.82	6/24/2022 23:11	81.59	6/23/2022 21:34	18.08	6/23/2022 20:43	4.93	6/24/2022 1:39	72.08
6/25/2022 0:30	50.84	6/24/2022 23:12	81.57	6/23/2022 21:35	18.09	6/23/2022 20:44	4.86	6/24/2022 1:40	72.04
6/25/2022 0:31	50.78	6/24/2022 23:13	81.59	6/23/2022 21:36	18.09	6/23/2022 20:45	4.85	6/24/2022 1:41	72.02
6/25/2022 0:32	50.82	6/24/2022 23:14	81.64	6/23/2022 21:37	18.09	6/23/2022 20:46	5.03	6/24/2022 1:42	72.00
6/25/2022 0:33	50.81	6/24/2022 23:15	81.58	6/23/2022 21:38	18.04	6/23/2022 20:47	4.96	6/24/2022 1:43	71.97
6/25/2022 0:34	50.82	6/24/2022 23:16	81.61	6/23/2022 21:39	18.07	6/23/2022 20:48	4.83	6/24/2022 1:44	71.95
6/25/2022 0:35	50.83	6/24/2022 23:17	81.61	6/23/2022 21:40	18.05	6/23/2022 20:49	4.88	6/24/2022 1:45	71.92
6/25/2022 0:36	50.80	6/24/2022 23:18	81.59	6/23/2022 21:41	18.00	6/23/2022 20:50	4.93	6/24/2022 1:46	71.87
6/25/2022 0:37	50.79	6/24/2022 23:19	81.59	6/23/2022 21:42	18.02	6/23/2022 20:51	5.02	6/24/2022 1:47	71.89
6/25/2022 0:38	50.83	6/24/2022 23:20	81.62	6/23/2022 21:43	18.05	6/23/2022 20:52	4.90	6/24/2022 1:48	71.85
6/25/2022 0:39	50.79	6/24/2022 23:21	81.60	6/23/2022 21:44	18.03	6/23/2022 20:53	5.10	6/24/2022 1:49	71.80
6/25/2022 0:40	50.79	6/24/2022 23:22	81.59	6/23/2022 21:45	18.03	6/23/2022 20:54	4.91	6/24/2022 1:50	71.78
6/25/2022 0:41	50.78	6/24/2022 23:23	81.59	6/23/2022 21:46	17.99	6/23/2022 20:55	4.92	6/24/2022 1:51	71.75
6/25/2022 0:42	50.82	6/24/2022 23:24	81.62	6/23/2022 21:47	18.03	6/23/2022 20:56	4.85	6/24/2022 1:52	71.74
6/25/2022 0:43	50.78	6/24/2022 23:25	81.57	6/23/2022 21:48	17.98	6/23/2022 20:57	4.82	6/24/2022 1:53	71.66
6/25/2022 0:44	50.81	6/24/2022 23:26	81.58	6/23/2022 21:49	17.98	6/23/2022 20:58	4.81	6/24/2022 1:54	71.69
6/25/2022 0:45	50.78	6/24/2022 23:27	81.59	6/23/2022 21:50	17.94	6/23/2022 20:59	4.85	6/24/2022 1:55	71.63
6/25/2022 0:46	50.79	6/24/2022 23:28	81.62	6/23/2022 21:51	17.99	6/23/2022 21:00	4.94	6/24/2022 1:56	71.63
6/25/2022 0:47	50.79	6/24/2022 23:29	81.61	6/23/2022 21:52	17.95	6/23/2022 21:01	5.12	6/24/2022 1:57	71.60
6/25/2022 0:48	50.81	6/24/2022 23:30	81.56	6/23/2022 21:53	17.95	6/23/2022 21:02	5.27	6/24/2022 1:58	71.60
6/25/2022 0:49	50.78	6/24/2022 23:31	81.60	6/23/2022 21:54	17.94	6/23/2022 21:03	5.71	6/24/2022 1:59	71.55
6/25/2022 0:50	50.82	6/24/2022 23:32	81.64	6/23/2022 21:55	17.96	6/23/2022 21:04	5.31	6/24/2022 2:00	71.53
6/25/2022 0:51	50.82	6/24/2022 23:33	81.55	6/23/2022 21:56	17.94	6/23/2022 21:05	5.19	6/24/2022 2:01	71.46
6/25/2022 0:52	50.80	6/24/2022 23:34	81.60	6/23/2022 21:57	17.93	6/23/2022 21:06	5.04	6/24/2022 2:02	71.46
6/25/2022 0:53	50.77	6/24/2022 23:35	81.59	6/23/2022 21:58	17.91	6/23/2022 21:07	5.22	6/24/2022 2:03	71.48
6/25/2022 0:54	50.79	6/24/2022 23:36	81.57	6/23/2022 21:59	17.89	6/23/2022 21:08	5.69	6/24/2022 2:04	71.41
6/25/2022 0:55	50.79	6/24/2022 23:37	81.58	6/23/2022 22:00	17.94	6/23/2022 21:09	5.54	6/24/2022 2:05	71.41
6/25/2022 0:56	50.84	6/24/2022 23:38	81.59	6/23/2022 22:01	17.90	6/23/2022 21:10	5.75	6/24/2022 2:06	71.42
6/25/2022 0:57	50.78	6/24/2022 23:39	81.58	6/23/2022 22:02	17.92	6/23/2022 21:11	5.97	6/24/2022 2:07	71.34
6/25/2022 0:58	50.80	6/24/2022 23:40	81.56	6/23/2022 22:03	17.90	6/23/2022 21:12	5.77	6/24/2022 2:08	71.33
6/25/2022 0:59	50.81	6/24/2022 23:41	81.60	6/23/2022 22:04	17.94	6/23/2022 21:13	5.42	6/24/2022 2:09	71.31
6/25/2022 1:00	50.83	6/24/2022 23:42	81.62	6/23/2022 22:05	17.89	6/23/2022 21:14	5.33	6/24/2022 2:10	71.28
6/25/2022 1:01	50.80	6/24/2022 23:43	81.63	6/23/2022 22:06	17.83	6/23/2022 21:15	5.22	6/24/2022 2:11	71.27
6/25/2022 1:02	50.77	6/24/2022 23:44	81.59	6/23/2022 22:07	17.86	6/23/2022 21:16	5.35	6/24/2022 2:12	71.27
6/25/2022 1:03	50.78	6/24/2022 23:45	81.60	6/23/2022 22:08	17.89	6/23/2022 21:17	5.42	6/24/2022 2:13	71.18
6/25/2022 1:04	50.76	6/24/2022 23:46	81.63	6/23/2022 22:09	17.85	6/23/2022 21:18	5.47	6/24/2022 2:14	71.20
6/25/2022 1:05	50.78	6/24/2022 23:47	81.60	6/23/2022 22:10	17.87	6/23/2022 21:19	5.39	6/24/2022 2:15	71.19
6/25/2022 1:06	50.77	6/24/2022 23:48	81.65	6/23/2022 22:11	17.91	6/23/2022 21:20	5.24	6/24/2022 2:16	71.14
6/25/2022 1:07	50.81	6/24/2022 23:49	81.58	6/23/2022 22:12	17.85	6/23/2022 21:21	5.19	6/24/2022 2:17	71.12
6/25/2022 1:08	50.78	6/24/2022 23:50	81.61	6/23/2022 22:13	17.85	6/23/2022 21:22	5.13	6/24/2022 2:18	71.11

6/25/2022 1:09	50.77	6/24/2022 23:51	81.61	6/23/2022 22:14	17.86	6/23/2022 21:23	5.17	6/24/2022 2:19	71.07
6/25/2022 1:10	50.79	6/24/2022 23:52	81.60	6/23/2022 22:15	17.79	6/23/2022 21:24	5.10	6/24/2022 2:20	71.06
6/25/2022 1:11	50.78	6/24/2022 23:53	81.59	6/23/2022 22:16	17.82	6/23/2022 21:25	5.04	6/24/2022 2:21	71.04
6/25/2022 1:12	50.79	6/24/2022 23:54	81.63	6/23/2022 22:17	17.83	6/23/2022 21:26	5.06	6/24/2022 2:22	71.04
6/25/2022 1:13	50.81	6/24/2022 23:55	81.62	6/23/2022 22:18	17.81	6/23/2022 21:27	5.11	6/24/2022 2:23	71.01
6/25/2022 1:14	50.78	6/24/2022 23:56	81.61	6/23/2022 22:19	17.80	6/23/2022 21:28	5.04	6/24/2022 2:24	70.96
6/25/2022 1:15	50.76	6/24/2022 23:57	81.54	6/23/2022 22:20	17.83	6/23/2022 21:29	5.01	6/24/2022 2:25	70.96
6/25/2022 1:16	50.76	6/24/2022 23:58	81.59	6/23/2022 22:21	17.81	6/23/2022 21:30	5.13	6/24/2022 2:26	70.96
6/25/2022 1:17	50.73	6/24/2022 23:59	81.62	6/23/2022 22:22	17.80	6/23/2022 21:31	5.28	6/24/2022 2:27	70.88
6/25/2022 1:18	50.80	6/25/2022 0:00	81.60	6/23/2022 22:23	17.81	6/23/2022 21:32	5.28	6/24/2022 2:28	70.90
6/25/2022 1:19	50.77	6/25/2022 0:01	81.56	6/23/2022 22:24	17.80	6/23/2022 21:33	5.33	6/24/2022 2:29	70.87
6/25/2022 1:20	50.74	6/25/2022 0:02	81.60	6/23/2022 22:25	17.78	6/23/2022 21:34	5.22	6/24/2022 2:30	70.87
6/25/2022 1:21	50.77	6/25/2022 0:03	81.59	6/23/2022 22:26	17.82	6/23/2022 21:35	5.21	6/24/2022 2:31	70.86
6/25/2022 1:22	50.79	6/25/2022 0:04	81.58	6/23/2022 22:27	17.76	6/23/2022 21:36	5.09	6/24/2022 2:32	70.84
6/25/2022 1:23	50.77	6/25/2022 0:05	81.59	6/23/2022 22:28	17.77	6/23/2022 21:37	5.08	6/24/2022 2:33	70.81
6/25/2022 1:24	50.78	6/25/2022 0:06	81.60	6/23/2022 22:29	17.77	6/23/2022 21:38	5.02	6/24/2022 2:34	70.78
6/25/2022 1:25	50.77	6/25/2022 0:07	81.59	6/23/2022 22:30	17.71	6/23/2022 21:39	5.06	6/24/2022 2:35	70.77
6/25/2022 1:26	50.76	6/25/2022 0:08	81.56	6/23/2022 22:31	17.79	6/23/2022 21:40	4.99	6/24/2022 2:36	70.73
6/25/2022 1:27	50.73	6/25/2022 0:09	81.63	6/23/2022 22:32	17.81	6/23/2022 21:41	5.05	6/24/2022 2:37	70.74
6/25/2022 1:28	50.77	6/25/2022 0:10	81.59	6/23/2022 22:33	17.74	6/23/2022 21:42	5.02	6/24/2022 2:38	70.72
6/25/2022 1:29	50.76	6/25/2022 0:11	81.61	6/23/2022 22:34	17.78	6/23/2022 21:43	4.96	6/24/2022 2:39	70.67
6/25/2022 1:30	50.76	6/25/2022 0:12	81.61	6/23/2022 22:35	17.76	6/23/2022 21:44	4.95	6/24/2022 2:40	70.66
6/25/2022 1:31	50.78	6/25/2022 0:13	81.56	6/23/2022 22:36	17.73	6/23/2022 21:45	4.94	6/24/2022 2:41	70.64
6/25/2022 1:32	50.75	6/25/2022 0:14	81.58	6/23/2022 22:37	17.71	6/23/2022 21:46	4.98	6/24/2022 2:42	70.66
6/25/2022 1:33	50.78	6/25/2022 0:15	81.61	6/23/2022 22:38	17.68	6/23/2022 21:47	4.90	6/24/2022 2:43	70.62
6/25/2022 1:34	53.11	6/25/2022 0:16	81.58	6/23/2022 22:39	17.69	6/23/2022 21:48	4.90	6/24/2022 2:44	70.59
6/25/2022 1:35	54.67	6/25/2022 0:17	81.59	6/23/2022 22:40	17.70	6/23/2022 21:49	4.93	6/24/2022 2:45	70.56
6/25/2022 1:36	55.50	6/25/2022 0:18	81.55	6/23/2022 22:41	17.76	6/23/2022 21:50	4.97	6/24/2022 2:46	70.52
6/25/2022 1:37	55.74	6/25/2022 0:19	81.61	6/23/2022 22:42	17.74	6/23/2022 21:51	4.91	6/24/2022 2:47	70.53
6/25/2022 1:38	53.44	6/25/2022 0:20	81.58	6/23/2022 22:43	17.62	6/23/2022 21:52	4.92	6/24/2022 2:48	70.52
6/25/2022 1:39	52.59	6/25/2022 0:21	81.61	6/23/2022 22:44	17.67	6/23/2022 21:53	4.88	6/24/2022 2:49	70.50
6/25/2022 1:40	52.22	6/25/2022 0:22	81.56	6/23/2022 22:45	17.71	6/23/2022 21:54	4.87	6/24/2022 2:50	70.51
6/25/2022 1:41	51.96	6/25/2022 0:23	81.60	6/23/2022 22:46	17.73	6/23/2022 21:55	4.89	6/24/2022 2:51	70.49
6/25/2022 1:42	51.81	6/25/2022 0:24	81.57	6/23/2022 22:47	17.69	6/23/2022 21:56	4.89	6/24/2022 2:52	70.45
6/25/2022 1:43	51.73	6/25/2022 0:25	81.58	6/23/2022 22:48	17.70	6/23/2022 21:57	4.90	6/24/2022 2:53	70.42
6/25/2022 1:44	51.68	6/25/2022 0:26	81.58	6/23/2022 22:49	17.66	6/23/2022 21:58	4.82	6/24/2022 2:54	70.41
6/25/2022 1:45	51.61	6/25/2022 0:27	81.58	6/23/2022 22:50	17.72	6/23/2022 21:59	4.87	6/24/2022 2:55	70.38
6/25/2022 1:46	51.51	6/25/2022 0:28	81.60	6/23/2022 22:51	17.68	6/23/2022 22:00	4.86	6/24/2022 2:56	70.37
6/25/2022 1:47	51.54	6/25/2022 0:29	81.59	6/23/2022 22:52	17.64	6/23/2022 22:01	4.83	6/24/2022 2:57	70.37
6/25/2022 1:48	51.45	6/25/2022 0:30	81.61	6/23/2022 22:53	17.65	6/23/2022 22:02	4.79	6/24/2022 2:58	70.34
6/25/2022 1:49	51.45	6/25/2022 0:31	81.59	6/23/2022 22:54	17.67	6/23/2022 22:03	4.81	6/24/2022 2:59	70.34
6/25/2022 1:50	51.41	6/25/2022 0:32	81.63	6/23/2022 22:55	17.67	6/23/2022 22:04	4.82	6/24/2022 3:00	70.29
6/25/2022 1:51	51.38	6/25/2022 0:33	81.59	6/23/2022 22:56	17.66	6/23/2022 22:05	4.79	6/24/2022 3:01	70.30
6/25/2022 1:52	51.41	6/25/2022 0:34	81.59	6/23/2022 22:57	17.67	6/23/2022 22:06	4.78	6/24/2022 3:02	70.30
6/25/2022 1:53	51.39	6/25/2022 0:35	81.63	6/23/2022 22:58	17.65	6/23/2022 22:07	4.79	6/24/2022 3:03	70.26
6/25/2022 1:54	51.36	6/25/2022 0:36	81.59	6/23/2022 22:59	17.65	6/23/2022 22:08	4.83	6/24/2022 3:04	70.25
6/25/2022 1:55	51.30	6/25/2022 0:37	81.63	6/23/2022 23:00	17.64	6/23/2022 22:09	4.72	6/24/2022 3:05	70.24
6/25/2022 1:56	51.31	6/25/2022 0:38	81.59	6/23/2022 23:01	17.61	6/23/2022 22:10	4.71	6/24/2022 3:06	70.24
6/25/2022 1:57	51.26	6/25/2022 0:39	81.64	6/23/2022 23:02	17.64	6/23/2022 22:11	4.78	6/24/2022 3:07	70.18
6/25/2022 1:58	51.27	6/25/2022 0:40	81.59	6/23/2022 23:03	17.63	6/23/2022 22:12	4.87	6/24/2022 3:08	70.18
6/25/2022 1:59	51.25	6/25/2022 0:41	81.59	6/23/2022 23:04	17.64	6/23/2022 22:13	4.72	6/24/2022 3:09	70.17
6/25/2022 2:00	51.25	6/25/2022 0:42	81.59	6/23/2022 23:05	17.64	6/23/2022 22:14	4.80	6/24/2022 3:10	70.17
6/25/2022 2:01	51.22	6/25/2022 0:43	81.59	6/23/2022 23:06	17.67	6/23/2022 22:15	4.93	6/24/2022 3:11	70.12
6/25/2022 2:02	51.26	6/25/2022 0:44	81.58	6/23/2022 23:07	17.70	6/23/2022 22:16	4.99	6/24/2022 3:12	70.14
6/25/2022 2:03	51.19	6/25/2022 0:45	81.61	6/23/2022 23:08	17.68	6/23/2022 22:17	4.89	6/24/2022 3:13	70.11
6/25/2022 2:04	51.24	6/25/2022 0:46	81.60	6/23/2022 23:09	17.60	6/23/2022 22:18	4.76	6/24/2022 3:14	70.05
6/25/2022 2:05	51.20	6/25/2022 0:47	81.61	6/23/2022 23:10	17.70	6/23/2022 22:19	4.77	6/24/2022 3:15	70.06
6/25/2022 2:06	51.18	6/25/2022 0:48	81.59	6/23/2022 23:11	17.65	6/23/2022 22:20	4.71	6/24/2022 3:16	70.03
6/25/2022 2:07	51.17	6/25/2022 0:49	81.59	6/23/2022 23:12	17.67	6/23/2022 22:21	4.76	6/24/2022 3:17	70.06
6/25/2022 2:08	51.15	6/25/2022 0:50	81.61	6/23/2022 23:13	17.65	6/23/2022 22:22	4.76	6/24/2022 3:18	70.05
6/25/2022 2:09	51.18	6/25/2022 0:51	81.64	6/23/2022 23:14	17.67	6/23/2022 22:23	4.77	6/24/2022 3:19	70.01
6/25/2022 2:10	51.17	6/25/2022 0:52	81.62	6/23/2022 23:15	17.69	6/23/2022 22:24	4.68	6/24/2022 3:20	69.99
6/25/2022 2:11	51.17	6/25/2022 0:53	81.60	6/23/2022 23:16	17.71	6/23/2022 22:25	4.73	6/24/2022 3:21	69.99
6/25/2022 2:12	51.13	6/25/2022 0:54	81.64	6/23/2022 23:17	17.68	6/23/2022 22:26	4.68	6/24/2022 3:22	69.98
6/25/2022 2:13	51.15	6/25/2022 0:55	81.64	6/23/2022 23:18	17.73	6/23/2022 22:27	4.72	6/24/2022 3:23	69.93
6/25/2022 2:14	51.13	6/25/2022 0:56	81.63	6/23/2022 23:19	17.71	6/23/2022 22:28	4.69	6/24/2022 3:24	69.91
6/25/2022 2:15	51.11	6/25/2022 0:57	81.57	6/23/2022 23:20	17.72	6/23/2022 22:29	4.70	6/24/2022 3:25	69.89
6/25/2022 2:16	51.17	6/25/2022 0:58	81.65	6/23/2022 23:21	17.74	6/23/2022 22:30	4.69	6/24/2022 3:26	69.90
6/25/2022 2:17	51.11	6/25/2022 0:59	81.59	6/23/2022 23:22	17.72	6/23/2022 22:31	4.73	6/24/2022 3:27	69.88
6/25/2022 2:18	51.09	6/25/2022 1:00	81.62	6/23/2022 23:23	17.74	6/23/2022 22:32	4.64	6/24/2022 3:28	69.85
6/25/2022 2:19	51.12	6/25/2022 1:01	81.60	6/23/2022 23:24	17.72	6/23/2022 22:33	4.68	6/24/2022 3:29	69.88
6/25/2022 2:20	51.12	6/25/2022 1:02	81.63	6/23/2022 23:25	17.71	6/23/2022 22:34	4.67	6/24/2022 3:30	69.83
6/25/2022 2:21	51.13	6/25/2022 1:03	81.59	6/23/2022 23:26	17.73	6/23/2022 22:35	4.71	6/24/2022 3:31	69.78
6/25/2022 2:22	51.06	6/25/2022 1:04	81.59	6/23/2022 23:27	17.74	6/23/2022 22:36	4.63	6/24/2022 3:32	69.80
6/25/2022 2:23	51.08	6/25/2022 1:05	81.56	6/23/2022 23:28	17.74	6/23/2022 22:37	4.64	6/24/2022 3:33	69.80
6/25/2022 2:24	51.09	6/25/2022 1:06	81.60	6/23/2022 23:29	17.77	6/23/2022 22:38	4.64	6/24/2022 3:34	69.76
6/25/2022 2:25	51.08	6/25/2022 1:07	81.59	6/23/2022 23:30	17.74	6/23/2022 22:39	4.65	6/24/2022 3:35	69.77
6/25/2022 2:26	51.08	6/25/2022 1:08	81.59	6/23/2022 23:31	17.75	6/23/2022 22:40	4.63	6/24/2022 3:36	69.76
6/25/2022 2:27	51.09	6/25/2022 1:09	81.57	6/23/2022 23:32	17.78	6/23/2022 22:41	4.61	6/24/2022 3:37	69.76
6/25/2022 2:28	51.06	6/25/2022 1:10	81.59	6/23/2022 23:33	17.73	6/23/2022 22:42	4.63	6/24/2022 3:38	69.72
6/25/2022 2:29	51.07	6/25/2022 1:11	81.58	6/23/2022 23:34	17.79	6/23/2022 22:43	4.62	6/24/2022 3:39	69.71
6/25/2022 2:30	51.05	6/25/2022 1:12	81.78	6/23/2022 23:35	17.81	6/23/2022 22:44	4.60	6/24/2022 3:40	69.69
6/25/2022 2:31	51.01	6/25/2022 1:13	82.52	6/23/2022 23:36	17.80	6/23/2022 22:45	4.64	6/24/2022 3:41	69.68
6/25/2022 2:32	51.06	6/25/2022 1:14	82.33	6/23/2022 23:37	17.84	6/23/2022 22:46	4.65	6/24/2022 3:42	69.72
6/25/2022 2:33	51.04	6/25/2022 1:15	82.23	6/23/2022 23:38	17.77	6/23/2022 22:47	4.67	6/24/2022 3:43	69.65
6/25/2022 2:34	51.06	6/25/2022 1:16	82.16	6/23/2022 23:39	17.80	6/23/2022 22:48	4.61	6/24/2022 3:44	69.63
6/25/2022 2:35	51.04	6/25/2022 1:17	82.08	6/23/2022 23:40	17.81	6/23/2022 22:49	4.62	6/24/2022 3:45	69.64
6/25/2022 2:36	51.06	6/25/2022 1:18	82.02	6/23/2022 23:41	17.79	6/23/2022 22:50	4.61	6/24/2022 3:46	69.61

6/25/2022 2:37	51.05	6/25/2022 1:19	81.94	6/23/2022 23:42	17.78	6/23/2022 22:51	4.51	6/24/2022 3:47	69.61
6/25/2022 2:38	51.02	6/25/2022 1:20	81.92	6/23/2022 23:43	17.78	6/23/2022 22:52	4.60	6/24/2022 3:48	69.59
6/25/2022 2:39	51.03	6/25/2022 1:21	81.86	6/23/2022 23:44	17.82	6/23/2022 22:53	4.83	6/24/2022 3:49	69.58
6/25/2022 2:40	51.07	6/25/2022 1:22	81.85	6/23/2022 23:45	17.81	6/23/2022 22:54	4.92	6/24/2022 3:50	69.58
6/25/2022 2:41	51.04	6/25/2022 1:23	81.84	6/23/2022 23:46	17.78	6/23/2022 22:55	5.09	6/24/2022 3:51	69.53
6/25/2022 2:42	51.02	6/25/2022 1:24	81.84	6/23/2022 23:47	17.84	6/23/2022 22:56	5.22	6/24/2022 3:52	69.54
6/25/2022 2:43	51.03	6/25/2022 1:25	81.76	6/23/2022 23:48	17.83	6/23/2022 22:57	5.37	6/24/2022 3:53	69.51
6/25/2022 2:44	51.02	6/25/2022 1:26	81.75	6/23/2022 23:49	17.83	6/23/2022 22:58	5.95	6/24/2022 3:54	69.50
6/25/2022 2:45	51.02	6/25/2022 1:27	81.76	6/23/2022 23:50	17.83	6/23/2022 22:59	6.22	6/24/2022 3:55	69.53
6/25/2022 2:46	51.01	6/25/2022 1:28	81.71	6/23/2022 23:51	17.84	6/23/2022 23:00	6.49	6/24/2022 3:56	69.48
6/25/2022 2:47	51.02	6/25/2022 1:29	81.73	6/23/2022 23:52	17.82	6/23/2022 23:01	6.53	6/24/2022 3:57	69.48
6/25/2022 2:48	51.00	6/25/2022 1:30	81.75	6/23/2022 23:53	17.77	6/23/2022 23:02	6.60	6/24/2022 3:58	69.49
6/25/2022 2:49	51.00	6/25/2022 1:31	81.71	6/23/2022 23:54	17.84	6/23/2022 23:03	6.75	6/24/2022 3:59	69.42
6/25/2022 2:50	50.98	6/25/2022 1:32	81.67	6/23/2022 23:55	17.82	6/23/2022 23:04	6.92	6/24/2022 4:00	69.47
6/25/2022 2:51	50.99	6/25/2022 1:33	81.64	6/23/2022 23:56	17.82	6/23/2022 23:05	6.98	6/24/2022 4:01	69.41
6/25/2022 2:52	51.04	6/25/2022 1:34	81.69	6/23/2022 23:57	17.82	6/23/2022 23:06	7.06	6/24/2022 4:02	69.41
6/25/2022 2:53	51.02	6/25/2022 1:35	81.67	6/23/2022 23:58	17.87	6/23/2022 23:07	7.18	6/24/2022 4:03	69.40
6/25/2022 2:54	51.00	6/25/2022 1:36	81.66	6/23/2022 23:59	17.84	6/23/2022 23:08	7.20	6/24/2022 4:04	69.39
6/25/2022 2:55	50.98	6/25/2022 1:37	81.70	6/24/2022 0:00	17.80	6/23/2022 23:09	6.62	6/24/2022 4:05	69.35
6/25/2022 2:56	51.02	6/25/2022 1:38	81.66	6/24/2022 0:01	17.82	6/23/2022 23:10	6.15	6/24/2022 4:06	69.34
6/25/2022 2:57	50.99	6/25/2022 1:39	81.66	6/24/2022 0:02	17.85	6/23/2022 23:11	6.02	6/24/2022 4:07	69.35
6/25/2022 2:58	51.04	6/25/2022 1:40	81.66	6/24/2022 0:03	17.85	6/23/2022 23:12	5.95	6/24/2022 4:08	69.34
6/25/2022 2:59	51.00	6/25/2022 1:41	81.68	6/24/2022 0:04	17.83	6/23/2022 23:13	5.87	6/24/2022 4:09	69.32
6/25/2022 3:00	50.98	6/25/2022 1:42	81.67	6/24/2022 0:05	17.78	6/23/2022 23:14	5.73	6/24/2022 4:10	69.33
6/25/2022 3:01	50.98	6/25/2022 1:43	81.66	6/24/2022 0:06	17.82	6/23/2022 23:15	5.70	6/24/2022 4:11	69.33
6/25/2022 3:02	50.99	6/25/2022 1:44	81.65	6/24/2022 0:07	17.77	6/23/2022 23:16	5.69	6/24/2022 4:12	69.30
6/25/2022 3:03	51.01	6/25/2022 1:45	81.61	6/24/2022 0:08	20.35	6/23/2022 23:17	5.74	6/24/2022 4:13	69.26
6/25/2022 3:04	50.98	6/25/2022 1:46	81.69	6/24/2022 0:09	24.90	6/23/2022 23:18	5.61	6/24/2022 4:14	69.26
6/25/2022 3:05	50.98	6/25/2022 1:47	81.69	6/24/2022 0:10	27.63	6/23/2022 23:19	5.58	6/24/2022 4:15	69.31
6/25/2022 3:06	50.97	6/25/2022 1:48	81.62	6/24/2022 0:11	24.54	6/23/2022 23:20	5.51	6/24/2022 4:16	69.25
6/25/2022 3:07	50.97	6/25/2022 1:49	81.65	6/24/2022 0:12	22.83	6/23/2022 23:21	5.52	6/24/2022 4:17	69.24
6/25/2022 3:08	51.00	6/25/2022 1:50	81.66	6/24/2022 0:13	21.89	6/23/2022 23:22	5.50	6/24/2022 4:18	69.23
6/25/2022 3:09	50.97	6/25/2022 1:51	81.65	6/24/2022 0:14	21.24	6/23/2022 23:23	5.37	6/24/2022 4:19	69.22
6/25/2022 3:10	50.99	6/25/2022 1:52	81.63	6/24/2022 0:15	20.80	6/23/2022 23:24	5.45	6/24/2022 4:20	69.17
6/25/2022 3:11	50.96	6/25/2022 1:53	81.67	6/24/2022 0:16	20.49	6/23/2022 23:25	5.40	6/24/2022 4:21	69.19
6/25/2022 3:12	50.94	6/25/2022 1:54	81.64	6/24/2022 0:17	20.22	6/23/2022 23:26	5.35	6/24/2022 4:22	69.24
6/25/2022 3:13	50.98	6/25/2022 1:55	81.65	6/24/2022 0:18	20.09	6/23/2022 23:27	5.37	6/24/2022 4:23	69.18
6/25/2022 3:14	50.96	6/25/2022 1:56	81.67	6/24/2022 0:19	19.96	6/23/2022 23:28	5.33	6/24/2022 4:24	69.20
6/25/2022 3:15	50.93	6/25/2022 1:57	81.63	6/24/2022 0:20	19.78	6/23/2022 23:29	5.35	6/24/2022 4:25	69.14
6/25/2022 3:16	50.97	6/25/2022 1:58	81.67	6/24/2022 0:21	19.65	6/23/2022 23:30	5.42	6/24/2022 4:26	69.14
6/25/2022 3:17	50.95	6/25/2022 1:59	81.67	6/24/2022 0:22	19.58	6/23/2022 23:31	5.31	6/24/2022 4:27	69.12
6/25/2022 3:18	50.96	6/25/2022 2:00	81.70	6/24/2022 0:23	19.46	6/23/2022 23:32	5.26	6/24/2022 4:28	69.12
6/25/2022 3:19	50.94	6/25/2022 2:01	81.68	6/24/2022 0:24	19.38	6/23/2022 23:33	5.31	6/24/2022 4:29	69.11
6/25/2022 3:20	50.98	6/25/2022 2:02	81.65	6/24/2022 0:25	19.25	6/23/2022 23:34	5.20	6/24/2022 4:30	69.08
6/25/2022 3:21	50.91	6/25/2022 2:03	81.63	6/24/2022 0:26	19.20	6/23/2022 23:35	5.22	6/24/2022 4:31	69.08
6/25/2022 3:22	50.96	6/25/2022 2:04	81.60	6/24/2022 0:27	19.15	6/23/2022 23:36	5.20	6/24/2022 4:32	69.08
6/25/2022 3:23	50.92	6/25/2022 2:05	81.65	6/24/2022 0:28	19.09	6/23/2022 23:37	5.54	6/24/2022 4:33	69.04
6/25/2022 3:24	50.92	6/25/2022 2:06	81.57	6/24/2022 0:29	19.02	6/23/2022 23:38	5.35	6/24/2022 4:34	69.01
6/25/2022 3:25	50.97	6/25/2022 2:07	81.67	6/24/2022 0:30	19.00	6/23/2022 23:39	5.33	6/24/2022 4:35	69.04
6/25/2022 3:26	50.95	6/25/2022 2:08	81.65	6/24/2022 0:31	18.92	6/23/2022 23:40	5.25	6/24/2022 4:36	69.04
6/25/2022 3:27	50.95	6/25/2022 2:09	81.66	6/24/2022 0:32	18.91	6/23/2022 23:41	5.24	6/24/2022 4:37	68.99
6/25/2022 3:28	50.94	6/25/2022 2:10	81.65	6/24/2022 0:33	18.80	6/23/2022 23:42	5.19	6/24/2022 4:38	68.99
6/25/2022 3:29	50.92	6/25/2022 2:11	81.62	6/24/2022 0:34	18.82	6/23/2022 23:43	5.24	6/24/2022 4:39	68.99
6/25/2022 3:30	50.90	6/25/2022 2:12	81.62	6/24/2022 0:35	18.74	6/23/2022 23:44	5.10	6/24/2022 4:40	68.99
6/25/2022 3:31	50.97	6/25/2022 2:13	81.62	6/24/2022 0:36	21.29	6/23/2022 23:45	5.16	6/24/2022 4:41	68.98
6/25/2022 3:32	50.95	6/25/2022 2:14	81.61	6/24/2022 0:37	25.82	6/23/2022 23:46	5.12	6/24/2022 4:42	68.96
6/25/2022 3:33	50.96	6/25/2022 2:15	81.61	6/24/2022 0:38	28.63	6/23/2022 23:47	5.19	6/24/2022 4:43	68.97
6/25/2022 3:34	50.94	6/25/2022 2:16	81.61	6/24/2022 0:39	28.42	6/23/2022 23:48	5.05	6/24/2022 4:44	68.95
6/25/2022 3:35	50.95	6/25/2022 2:17	81.61	6/24/2022 0:40	25.67	6/23/2022 23:49	5.08	6/24/2022 4:45	68.96
6/25/2022 3:36	50.93	6/25/2022 2:18	81.65	6/24/2022 0:41	24.04	6/23/2022 23:50	5.09	6/24/2022 4:46	68.93
6/25/2022 3:37	50.95	6/25/2022 2:19	81.66	6/24/2022 0:42	23.04	6/23/2022 23:51	5.09	6/24/2022 4:47	68.88
6/25/2022 3:38	50.92	6/25/2022 2:20	81.68	6/24/2022 0:43	22.40	6/23/2022 23:52	5.05	6/24/2022 4:48	68.90
6/25/2022 3:39	50.93	6/25/2022 2:21	81.62	6/24/2022 0:44	21.94	6/23/2022 23:53	5.27	6/24/2022 4:49	68.88
6/25/2022 3:40	50.95	6/25/2022 2:22	81.60	6/24/2022 0:45	21.54	6/23/2022 23:54	5.09	6/24/2022 4:50	68.87
6/25/2022 3:41	50.93	6/25/2022 2:23	81.64	6/24/2022 0:46	21.28	6/23/2022 23:55	5.06	6/24/2022 4:51	68.90
6/25/2022 3:42	50.89	6/25/2022 2:24	81.62	6/24/2022 0:47	21.09	6/23/2022 23:56	5.03	6/24/2022 4:52	68.89
6/25/2022 3:43	50.89	6/25/2022 2:25	81.58	6/24/2022 0:48	20.85	6/23/2022 23:57	5.00	6/24/2022 4:53	68.86
6/25/2022 3:44	50.91	6/25/2022 2:26	81.66	6/24/2022 0:49	26.20	6/23/2022 23:58	4.99	6/24/2022 4:54	68.84
6/25/2022 3:45	50.91	6/25/2022 2:27	81.63	6/24/2022 0:50	29.44	6/23/2022 23:59	5.02	6/24/2022 4:55	68.82
6/25/2022 3:46	50.93	6/25/2022 2:28	81.63	6/24/2022 0:51	31.53	6/24/2022 0:00	5.01	6/24/2022 4:56	68.82
6/25/2022 3:47	50.91	6/25/2022 2:29	81.62	6/24/2022 0:52	28.15	6/24/2022 0:01	4.95	6/24/2022 4:57	68.84
6/25/2022 3:48	50.93	6/25/2022 2:30	81.65	6/24/2022 0:53	26.13	6/24/2022 0:02	4.93	6/24/2022 4:58	68.79
6/25/2022 3:49	50.96	6/25/2022 2:31	81.61	6/24/2022 0:54	24.87	6/24/2022 0:03	4.94	6/24/2022 4:59	68.78
6/25/2022 3:50	50.89	6/25/2022 2:32	81.64	6/24/2022 0:55	24.04	6/24/2022 0:04	4.96	6/24/2022 5:00	68.84
6/25/2022 3:51	50.95	6/25/2022 2:33	81.61	6/24/2022 0:56	23.38	6/24/2022 0:05	5.25	6/24/2022 5:01	68.79
6/25/2022 3:52	50.96	6/25/2022 2:34	81.63	6/24/2022 0:57	22.93	6/24/2022 0:06	5.13	6/24/2022 5:02	68.75
6/25/2022 3:53	50.92	6/25/2022 2:35	81.62	6/24/2022 0:58	22.55	6/24/2022 0:07	5.12	6/24/2022 5:03	68.76
6/25/2022 3:54	50.87	6/25/2022 2:36	81.62	6/24/2022 0:59	22.25	6/24/2022 0:08	5.09	6/24/2022 5:04	68.77
6/25/2022 3:55	50.92	6/25/2022 2:37	81.62	6/24/2022 1:00	22.00	6/24/2022 0:09	5.03	6/24/2022 5:05	68.72
6/25/2022 3:56	50.88	6/25/2022 2:38	81.60	6/24/2022 1:01	21.85	6/24/2022 0:10	5.08	6/24/2022 5:06	68.76
6/25/2022 3:57	50.91	6/25/2022 2:39	81.64	6/24/2022 1:02	21.62	6/24/2022 0:11	4.99	6/24/2022 5:07	68.75
6/25/2022 3:58	50.90	6/25/2022 2:40	81.61	6/24/2022 1:03	21.46	6/24/2022 0:12	5.09	6/24/2022 5:08	68.75
6/25/2022 3:59	50.96	6/25/2022 2:41	81.61	6/24/2022 1:04	21.33	6/24/2022 0:13	5.07	6/24/2022 5:09	68.68
6/25/2022 4:00	50.92	6/25/2022 2:42	81.60	6/24/2022 1:05	21.15	6/24/2022 0:14	5.01	6/24/2022 5:10	68.69
6/25/2022 4:01	50.88	6/25/2022 2:43	81.65	6/24/2022 1:06	21.01	6/24/2022 0:15	5.08	6/24/2022 5:11	68.69
6/25/2022 4:02	50.91	6/25/2022 2:44	81.64	6/24/2022 1:07	20.87	6/24/2022 0:16	5.02	6/24/2022 5:12	68.70
6/25/2022 4:03	50.93	6/25/2022 2:45	81.65	6/24/2022 1:08	20.82	6/24/2022 0:17	5.01	6/24/2022 5:13	68.66
6/25/2022 4:04	50.88	6/25/2022 2:46	81.61	6/24/2022 1:09	20.70	6/24/2022 0:18	4.98	6/24/2022 5:14	68.66

6/25/2022 4:05	50.88	6/25/2022 2:47	81.61	6/24/2022 1:10	20.65	6/24/2022 0:19	5.06	6/24/2022 5:15	68.68
6/25/2022 4:06	50.91	6/25/2022 2:48	81.64	6/24/2022 1:11	20.57	6/24/2022 0:20	5.01	6/24/2022 5:16	68.64
6/25/2022 4:07	50.89	6/25/2022 2:49	81.61	6/24/2022 1:12	20.46	6/24/2022 0:21	4.95	6/24/2022 5:17	68.64
6/25/2022 4:08	50.90	6/25/2022 2:50	81.62	6/24/2022 1:13	20.38	6/24/2022 0:22	5.03	6/24/2022 5:18	68.62
6/25/2022 4:09	50.92	6/25/2022 2:51	81.59	6/24/2022 1:14	20.26	6/24/2022 0:23	4.97	6/24/2022 5:19	68.58
6/25/2022 4:10	50.91	6/25/2022 2:52	81.61	6/24/2022 1:15	20.22	6/24/2022 0:24	5.05	6/24/2022 5:20	68.63
6/25/2022 4:11	50.90	6/25/2022 2:53	81.63	6/24/2022 1:16	20.19	6/24/2022 0:25	4.92	6/24/2022 5:21	68.59
6/25/2022 4:12	50.89	6/25/2022 2:54	81.64	6/24/2022 1:17	20.10	6/24/2022 0:26	4.97	6/24/2022 5:22	68.57
6/25/2022 4:13	50.88	6/25/2022 2:55	81.63	6/24/2022 1:18	20.02	6/24/2022 0:27	4.88	6/24/2022 5:23	68.56
6/25/2022 4:14	50.91	6/25/2022 2:56	81.57	6/24/2022 1:19	19.93	6/24/2022 0:28	4.93	6/24/2022 5:24	68.53
6/25/2022 4:15	50.88	6/25/2022 2:57	81.62	6/24/2022 1:20	19.91	6/24/2022 0:29	4.94	6/24/2022 5:25	68.51
6/25/2022 4:16	50.89	6/25/2022 2:58	81.64	6/24/2022 1:21	19.84	6/24/2022 0:30	4.89	6/24/2022 5:26	68.51
6/25/2022 4:17	50.88	6/25/2022 2:59	81.62	6/24/2022 1:22	19.80	6/24/2022 0:31	4.81	6/24/2022 5:27	68.52
6/25/2022 4:18	50.89	6/25/2022 3:00	81.62	6/24/2022 1:23	19.74	6/24/2022 0:32	4.83	6/24/2022 5:28	68.51
6/25/2022 4:19	50.87	6/25/2022 3:01	81.59	6/24/2022 1:24	19.68	6/24/2022 0:33	4.82	6/24/2022 5:29	68.54
6/25/2022 4:20	50.89	6/25/2022 3:02	81.60	6/24/2022 1:25	19.63	6/24/2022 0:34	4.80	6/24/2022 5:30	68.51
6/25/2022 4:21	50.85	6/25/2022 3:03	81.66	6/24/2022 1:26	19.60	6/24/2022 0:35	4.80	6/24/2022 5:31	68.52
6/25/2022 4:22	50.87	6/25/2022 3:04	81.61	6/24/2022 1:27	19.54	6/24/2022 0:36	4.80	6/24/2022 5:32	68.48
6/25/2022 4:23	50.89	6/25/2022 3:05	81.62	6/24/2022 1:28	19.54	6/24/2022 0:37	4.82	6/24/2022 5:33	68.50
6/25/2022 4:24	50.94	6/25/2022 3:06	81.61	6/24/2022 1:29	19.45	6/24/2022 0:38	4.78	6/24/2022 5:34	68.51
6/25/2022 4:25	50.89	6/25/2022 3:07	81.64	6/24/2022 1:30	19.44	6/24/2022 0:39	4.78	6/24/2022 5:35	68.48
6/25/2022 4:26	50.88	6/25/2022 3:08	81.63	6/24/2022 1:31	19.43	6/24/2022 0:40	4.79	6/24/2022 5:36	68.47
6/25/2022 4:27	50.88	6/25/2022 3:09	81.62	6/24/2022 1:32	19.33	6/24/2022 0:41	4.84	6/24/2022 5:37	68.46
6/25/2022 4:28	50.88	6/25/2022 3:10	81.63	6/24/2022 1:33	19.31	6/24/2022 0:42	4.74	6/24/2022 5:38	68.45
6/25/2022 4:29	50.87	6/25/2022 3:11	81.64	6/24/2022 1:34	19.25	6/24/2022 0:43	4.75	6/24/2022 5:39	68.44
6/25/2022 4:30	50.88	6/25/2022 3:12	81.61	6/24/2022 1:35	19.22	6/24/2022 0:44	4.71	6/24/2022 5:40	68.41
6/25/2022 4:31	50.89	6/25/2022 3:13	81.65	6/24/2022 1:36	19.21	6/24/2022 0:45	4.77	6/24/2022 5:41	68.46
6/25/2022 4:32	50.90	6/25/2022 3:14	81.64	6/24/2022 1:37	19.19	6/24/2022 0:46	4.73	6/24/2022 5:42	68.43
6/25/2022 4:33	50.84	6/25/2022 3:15	81.62	6/24/2022 1:38	19.10	6/24/2022 0:47	4.73	6/24/2022 5:43	68.44
6/25/2022 4:34	50.87	6/25/2022 3:16	81.59	6/24/2022 1:39	19.12	6/24/2022 0:48	4.77	6/24/2022 5:44	68.43
6/25/2022 4:35	50.88	6/25/2022 3:17	81.63	6/24/2022 1:40	19.09	6/24/2022 0:49	4.68	6/24/2022 5:45	68.42
6/25/2022 4:36	50.89	6/25/2022 3:18	81.63	6/24/2022 1:41	19.06	6/24/2022 0:50	4.70	6/24/2022 5:46	68.41
6/25/2022 4:37	50.90	6/25/2022 3:19	81.64	6/24/2022 1:42	19.03	6/24/2022 0:51	4.68	6/24/2022 5:47	68.37
6/25/2022 4:38	50.87	6/25/2022 3:20	81.60	6/24/2022 1:43	18.98	6/24/2022 0:52	4.72	6/24/2022 5:48	68.38
6/25/2022 4:39	50.87	6/25/2022 3:21	81.61	6/24/2022 1:44	18.95	6/24/2022 0:53	4.62	6/24/2022 5:49	68.37
6/25/2022 4:40	50.87	6/25/2022 3:22	81.58	6/24/2022 1:45	18.90	6/24/2022 0:54	4.62	6/24/2022 5:50	68.36
6/25/2022 4:41	50.89	6/25/2022 3:23	81.59	6/24/2022 1:46	18.91	6/24/2022 0:55	4.69	6/24/2022 5:51	68.36
6/25/2022 4:42	50.88	6/25/2022 3:24	81.63	6/24/2022 1:47	18.85	6/24/2022 0:56	4.70	6/24/2022 5:52	68.36
6/25/2022 4:43	50.87	6/25/2022 3:25	81.60	6/24/2022 1:48	18.85	6/24/2022 0:57	4.62	6/24/2022 5:53	68.38
6/25/2022 4:44	50.88	6/25/2022 3:26	82.36	6/24/2022 1:49	18.80	6/24/2022 0:58	4.65	6/24/2022 5:54	68.33
6/25/2022 4:45	50.85	6/25/2022 3:27	82.19	6/24/2022 1:50	18.82	6/24/2022 0:59	4.63	6/24/2022 5:55	68.30
6/25/2022 4:46	50.88	6/25/2022 3:28	82.12	6/24/2022 1:51	18.82	6/24/2022 1:00	4.62	6/24/2022 5:56	68.37
6/25/2022 4:47	50.88	6/25/2022 3:29	82.04	6/24/2022 1:52	18.76	6/24/2022 1:01	4.59	6/24/2022 5:57	68.30
6/25/2022 4:48	50.86	6/25/2022 3:30	81.99	6/24/2022 1:53	18.72	6/24/2022 1:02	4.61	6/24/2022 5:58	68.30
6/25/2022 4:49	50.89	6/25/2022 3:31	81.97	6/24/2022 1:54	18.73	6/24/2022 1:03	6.39	6/24/2022 5:59	68.31
6/25/2022 4:50	50.89	6/25/2022 3:32	81.91	6/24/2022 1:55	18.71	6/24/2022 1:04	7.32	6/24/2022 6:00	68.28
6/25/2022 4:51	50.86	6/25/2022 3:33	81.89	6/24/2022 1:56	18.68	6/24/2022 1:05	7.99	6/24/2022 6:01	68.28
6/25/2022 4:52	50.87	6/25/2022 3:34	81.84	6/24/2022 1:57	18.65	6/24/2022 1:06	8.46	6/24/2022 6:02	68.26
6/25/2022 4:53	50.85	6/25/2022 3:35	81.81	6/24/2022 1:58	18.60	6/24/2022 1:07	8.83	6/24/2022 6:03	68.25
6/25/2022 4:54	50.85	6/25/2022 3:36	81.83	6/24/2022 1:59	18.61	6/24/2022 1:08	9.21	6/24/2022 6:04	68.26
6/25/2022 4:55	50.87	6/25/2022 3:37	81.79	6/24/2022 2:00	18.57	6/24/2022 1:09	9.49	6/24/2022 6:05	68.24
6/25/2022 4:56	50.88	6/25/2022 3:38	81.80	6/24/2022 2:01	18.57	6/24/2022 1:10	9.76	6/24/2022 6:06	68.25
6/25/2022 4:57	50.86	6/25/2022 3:39	81.77	6/24/2022 2:02	18.56	6/24/2022 1:11	9.94	6/24/2022 6:07	68.21
6/25/2022 4:58	50.84	6/25/2022 3:40	81.72	6/24/2022 2:03	18.56	6/24/2022 1:12	10.21	6/24/2022 6:08	68.24
6/25/2022 4:59	50.86	6/25/2022 3:41	81.72	6/24/2022 2:04	18.50	6/24/2022 1:13	10.44	6/24/2022 6:09	68.21
6/25/2022 5:00	50.87	6/25/2022 3:42	81.76	6/24/2022 2:05	18.50	6/24/2022 1:14	10.67	6/24/2022 6:10	68.22
6/25/2022 5:01	50.87	6/25/2022 3:43	81.72	6/24/2022 2:06	18.46	6/24/2022 1:15	10.84	6/24/2022 6:11	68.22
6/25/2022 5:02	50.86	6/25/2022 3:44	81.73	6/24/2022 2:07	18.43	6/24/2022 1:16	11.03	6/24/2022 6:12	68.18
6/25/2022 5:03	50.84	6/25/2022 3:45	81.72	6/24/2022 2:08	18.48	6/24/2022 1:17	11.20	6/24/2022 6:13	68.21
6/25/2022 5:04	50.85	6/25/2022 3:46	81.71	6/24/2022 2:09	18.46	6/24/2022 1:18	11.40	6/24/2022 6:14	68.17
6/25/2022 5:05	50.86	6/25/2022 3:47	81.73	6/24/2022 2:10	18.38	6/24/2022 1:19	11.54	6/24/2022 6:15	68.18
6/25/2022 5:06	50.85	6/25/2022 3:48	81.67	6/24/2022 2:11	18.41	6/24/2022 1:20	11.71	6/24/2022 6:16	68.15
6/25/2022 5:07	50.88	6/25/2022 3:49	81.69	6/24/2022 2:12	18.33	6/24/2022 1:21	11.88	6/24/2022 6:17	68.16
6/25/2022 5:08	50.88	6/25/2022 3:50	81.69	6/24/2022 2:13	18.39	6/24/2022 1:22	12.04	6/24/2022 6:18	68.16
6/25/2022 5:09	50.86	6/25/2022 3:51	81.68	6/24/2022 2:14	18.36	6/24/2022 1:23	12.42	6/24/2022 6:19	68.14
6/25/2022 5:10	50.85	6/25/2022 3:52	81.66	6/24/2022 2:15	18.37	6/24/2022 1:24	12.68	6/24/2022 6:20	68.13
6/25/2022 5:11	50.89	6/25/2022 3:53	81.71	6/24/2022 2:16	18.32	6/24/2022 1:25	12.93	6/24/2022 6:21	68.13
6/25/2022 5:12	50.86	6/25/2022 3:54	81.68	6/24/2022 2:17	18.33	6/24/2022 1:26	13.16	6/24/2022 6:22	68.11
6/25/2022 5:13	50.89	6/25/2022 3:55	81.67	6/24/2022 2:18	18.30	6/24/2022 1:27	13.37	6/24/2022 6:23	68.13
6/25/2022 5:14	50.89	6/25/2022 3:56	81.70	6/24/2022 2:19	18.25	6/24/2022 1:28	13.53	6/24/2022 6:24	68.11
6/25/2022 5:15	50.87	6/25/2022 3:57	81.63	6/24/2022 2:20	18.28	6/24/2022 1:29	13.75	6/24/2022 6:25	68.08
6/25/2022 5:16	50.85	6/25/2022 3:58	81.67	6/24/2022 2:21	18.27	6/24/2022 1:30	13.92	6/24/2022 6:26	68.06
6/25/2022 5:17	50.82	6/25/2022 3:59	81.67	6/24/2022 2:22	18.21	6/24/2022 1:31	14.10	6/24/2022 6:27	68.08
6/25/2022 5:18	50.86	6/25/2022 4:00	81.69	6/24/2022 2:23	18.26	6/24/2022 1:32	14.27	6/24/2022 6:28	68.08
6/25/2022 5:19	50.86	6/25/2022 4:01	81.67	6/24/2022 2:24	18.21	6/24/2022 1:33	14.43	6/24/2022 6:29	68.09
6/25/2022 5:20	50.80	6/25/2022 4:02	81.61	6/24/2022 2:25	18.15	6/24/2022 1:34	14.57	6/24/2022 6:30	68.07
6/25/2022 5:21	50.81	6/25/2022 4:03	81.65	6/24/2022 2:26	18.20	6/24/2022 1:35	14.66	6/24/2022 6:31	68.06
6/25/2022 5:22	50.81	6/25/2022 4:04	81.67	6/24/2022 2:27	18.19	6/24/2022 1:36	14.86	6/24/2022 6:32	68.06
6/25/2022 5:23	50.84	6/25/2022 4:05	81.63	6/24/2022 2:28	18.15	6/24/2022 1:37	15.03	6/24/2022 6:33	68.05
6/25/2022 5:24	50.85	6/25/2022 4:06	81.66	6/24/2022 2:29	18.15	6/24/2022 1:38	15.18	6/24/2022 6:34	68.06
6/25/2022 5:25	50.84	6/25/2022 4:07	81.68	6/24/2022 2:30	18.10	6/24/2022 1:39	15.32	6/24/2022 6:35	68.06
6/25/2022 5:26	50.83	6/25/2022 4:08	81.64	6/24/2022 2:31	18.10	6/24/2022 1:40	15.41	6/24/2022 6:36	68.03
6/25/2022 5:27	50.85	6/25/2022 4:09	81.67	6/24/2022 2:32	18.11	6/24/2022 1:41	15.53	6/24/2022 6:37	68.01
6/25/2022 5:28	50.85	6/25/2022 4:10	81.64	6/24/2022 2:33	18.10	6/24/2022 1:42	15.68	6/24/2022 6:38	68.02
6/25/2022 5:29	50.85	6/25/2022 4:11	81.66	6/24/2022 2:34	18.10	6/24/2022 1:43	15.82	6/24/2022 6:39	68.00
6/25/2022 5:30	50.87	6/25/2022 4:12	81.62	6/24/2022 2:35	18.05	6/24/2022 1:44	15.97	6/24/2022 6:40	67.99
6/25/2022 5:31	50.86	6/25/2022 4:13	81.68	6/24/2022 2:36	18.05	6/24/2022 1:45	16.09	6/24/2022 6:41	68.01
6/25/2022 5:32	50.88	6/25/2022 4:14	81.68	6/24/2022 2:37	18.04	6/24/2022 1:46	16.25	6/24/2022 6:42	67.98

6/25/2022 5:33	50.88	6/25/2022 4:15	81.65	6/24/2022 2:38	17.97	6/24/2022 1:47	16.35	6/24/2022 6:43	67.99
6/25/2022 5:34	50.86	6/25/2022 4:16	81.69	6/24/2022 2:39	18.05	6/24/2022 1:48	16.50	6/24/2022 6:44	67.98
6/25/2022 5:35	50.80	6/25/2022 4:17	81.67	6/24/2022 2:40	18.06	6/24/2022 1:49	16.66	6/24/2022 6:45	67.93
6/25/2022 5:36	50.82	6/25/2022 4:18	81.67	6/24/2022 2:41	17.97	6/24/2022 1:50	16.72	6/24/2022 6:46	67.93
6/25/2022 5:37	50.84	6/25/2022 4:19	81.63	6/24/2022 2:42	18.02	6/24/2022 1:51	16.89	6/24/2022 6:47	67.99
6/25/2022 5:38	50.85	6/25/2022 4:20	81.65	6/24/2022 2:43	17.95	6/24/2022 1:52	16.99	6/24/2022 6:48	67.96
6/25/2022 5:39	50.87	6/25/2022 4:21	81.67	6/24/2022 2:44	17.94	6/24/2022 1:53	17.06	6/24/2022 6:49	67.93
6/25/2022 5:40	50.83	6/25/2022 4:22	81.64	6/24/2022 2:45	17.96	6/24/2022 1:54	17.21	6/24/2022 6:50	67.91
6/25/2022 5:41	50.85	6/25/2022 4:23	81.70	6/24/2022 2:46	17.92	6/24/2022 1:55	17.25	6/24/2022 6:51	67.95
6/25/2022 5:42	50.85	6/25/2022 4:24	81.64	6/24/2022 2:47	17.94	6/24/2022 1:56	17.43	6/24/2022 6:52	67.91
6/25/2022 5:43	50.84	6/25/2022 4:25	81.68	6/24/2022 2:48	17.89	6/24/2022 1:57	17.54	6/24/2022 6:53	67.95
6/25/2022 5:44	50.86	6/25/2022 4:26	81.66	6/24/2022 2:49	17.91	6/24/2022 1:58	17.64	6/24/2022 6:54	67.89
6/25/2022 5:45	50.84	6/25/2022 4:27	81.67	6/24/2022 2:50	17.92	6/24/2022 1:59	17.72	6/24/2022 6:55	67.89
6/25/2022 5:46	50.85	6/25/2022 4:28	81.64	6/24/2022 2:51	17.89	6/24/2022 2:00	17.82	6/24/2022 6:56	67.89
6/25/2022 5:47	50.85	6/25/2022 4:29	81.64	6/24/2022 2:52	17.89	6/24/2022 2:01	17.92	6/24/2022 6:57	67.90
6/25/2022 5:48	50.87	6/25/2022 4:30	81.66	6/24/2022 2:53	17.91	6/24/2022 2:02	18.02	6/24/2022 6:58	67.87
6/25/2022 5:49	50.84	6/25/2022 4:31	81.67	6/24/2022 2:54	17.93	6/24/2022 2:03	18.13	6/24/2022 6:59	67.88
6/25/2022 5:50	50.84	6/25/2022 4:32	81.68	6/24/2022 2:55	17.84	6/24/2022 2:04	18.22	6/24/2022 7:00	67.87
6/25/2022 5:51	50.85	6/25/2022 4:33	81.66	6/24/2022 2:56	17.87	6/24/2022 2:05	18.35	6/24/2022 7:01	67.89
6/25/2022 5:52	50.79	6/25/2022 4:34	81.65	6/24/2022 2:57	17.84	6/24/2022 2:06	18.35	6/24/2022 7:02	67.86
6/25/2022 5:53	50.87	6/25/2022 4:35	81.68	6/24/2022 2:58	17.85	6/24/2022 2:07	18.52	6/24/2022 7:03	67.85
6/25/2022 5:54	50.85	6/25/2022 4:36	81.64	6/24/2022 2:59	17.85	6/24/2022 2:08	18.59	6/24/2022 7:04	67.86
6/25/2022 5:55	50.85	6/25/2022 4:37	81.66	6/24/2022 3:00	17.80	6/24/2022 2:09	18.76	6/24/2022 7:05	67.86
6/25/2022 5:56	50.85	6/25/2022 4:38	81.64	6/24/2022 3:01	17.79	6/24/2022 2:10	18.81	6/24/2022 7:06	67.86
6/25/2022 5:57	50.87	6/25/2022 4:39	81.68	6/24/2022 3:02	17.81	6/24/2022 2:11	18.97	6/24/2022 7:07	67.80
6/25/2022 5:58	50.84	6/25/2022 4:40	81.67	6/24/2022 3:03	17.77	6/24/2022 2:12	19.03	6/24/2022 7:08	67.85
6/25/2022 5:59	50.82	6/25/2022 4:41	81.66	6/24/2022 3:04	17.79	6/24/2022 2:13	19.14	6/24/2022 7:09	67.84
6/25/2022 6:00	50.84	6/25/2022 4:42	81.67	6/24/2022 3:05	17.76	6/24/2022 2:14	19.22	6/24/2022 7:10	67.82
6/25/2022 6:01	50.84	6/25/2022 4:43	81.68	6/24/2022 3:06	17.77	6/24/2022 2:15	19.34	6/24/2022 7:11	67.77
6/25/2022 6:02	50.89	6/25/2022 4:44	81.64	6/24/2022 3:07	17.79	6/24/2022 2:16	19.40	6/24/2022 7:12	67.80
6/25/2022 6:03	50.90	6/25/2022 4:45	81.64	6/24/2022 3:08	17.76	6/24/2022 2:17	19.54	6/24/2022 7:13	67.79
6/25/2022 6:04	50.83	6/25/2022 4:46	81.68	6/24/2022 3:09	17.78	6/24/2022 2:18	19.62	6/24/2022 7:14	67.80
6/25/2022 6:05	50.79	6/25/2022 4:47	81.69	6/24/2022 3:10	17.78	6/24/2022 2:19	19.74	6/24/2022 7:15	67.78
6/25/2022 6:06	50.83	6/25/2022 4:48	81.63	6/24/2022 3:11	17.76	6/24/2022 2:20	19.78	6/24/2022 7:16	67.80
6/25/2022 6:07	50.81	6/25/2022 4:49	81.64	6/24/2022 3:12	17.74	6/24/2022 2:21	19.88	6/24/2022 7:17	67.74
6/25/2022 6:08	50.81	6/25/2022 4:50	81.66	6/24/2022 3:13	17.73	6/24/2022 2:22	19.99	6/24/2022 7:18	67.79
6/25/2022 6:09	50.84	6/25/2022 4:51	81.69	6/24/2022 3:14	17.68	6/24/2022 2:23	20.17	6/24/2022 7:19	67.76
6/25/2022 6:10	50.85	6/25/2022 4:52	81.65	6/24/2022 3:15	17.70	6/24/2022 2:24	20.28	6/24/2022 7:20	67.74
6/25/2022 6:11	50.86	6/25/2022 4:53	81.68	6/24/2022 3:16	17.69	6/24/2022 2:25	20.86	6/24/2022 7:21	67.73
6/25/2022 6:12	50.83	6/25/2022 4:54	81.66	6/24/2022 3:17	17.71	6/24/2022 2:26	21.27	6/24/2022 7:22	67.73
6/25/2022 6:13	50.85	6/25/2022 4:55	81.66	6/24/2022 3:18	17.68	6/24/2022 2:27	21.58	6/24/2022 7:23	67.74
6/25/2022 6:14	50.84	6/25/2022 4:56	81.68	6/24/2022 3:19	17.71	6/24/2022 2:28	21.82	6/24/2022 7:24	67.73
6/25/2022 6:15	50.84	6/25/2022 4:57	81.66	6/24/2022 3:20	17.69	6/24/2022 2:29	22.07	6/24/2022 7:25	67.71
6/25/2022 6:16	50.84	6/25/2022 4:58	81.63	6/24/2022 3:21	17.71	6/24/2022 2:30	22.26	6/24/2022 7:26	67.74
6/25/2022 6:17	50.85	6/25/2022 4:59	81.68	6/24/2022 3:22	17.66	6/24/2022 2:31	22.47	6/24/2022 7:27	67.73
6/25/2022 6:18	50.87	6/25/2022 5:00	81.62	6/24/2022 3:23	17.66	6/24/2022 2:32	22.71	6/24/2022 7:28	67.70
6/25/2022 6:19	50.82	6/25/2022 5:01	81.71	6/24/2022 3:24	17.68	6/24/2022 2:33	22.88	6/24/2022 7:29	67.70
6/25/2022 6:20	50.84	6/25/2022 5:02	81.64	6/24/2022 3:25	17.65	6/24/2022 2:34	23.06	6/24/2022 7:30	67.73
6/25/2022 6:21	50.84	6/25/2022 5:03	81.66	6/24/2022 3:26	17.61	6/24/2022 2:35	23.23	6/24/2022 7:31	67.70
6/25/2022 6:22	50.84	6/25/2022 5:04	81.65	6/24/2022 3:27	17.65	6/24/2022 2:36	23.37	6/24/2022 7:32	67.68
6/25/2022 6:23	50.82	6/25/2022 5:05	81.70	6/24/2022 3:28	17.63	6/24/2022 2:37	23.57	6/24/2022 7:33	67.66
6/25/2022 6:24	50.83	6/25/2022 5:06	81.66	6/24/2022 3:29	17.67	6/24/2022 2:38	23.72	6/24/2022 7:34	73.62
6/25/2022 6:25	50.85	6/25/2022 5:07	81.65	6/24/2022 3:30	17.60	6/24/2022 2:39	23.77	6/24/2022 7:35	73.56
6/25/2022 6:26	50.85	6/25/2022 5:08	81.67	6/24/2022 3:31	17.61	6/24/2022 2:40	23.54	6/24/2022 7:36	73.44
6/25/2022 6:27	50.79	6/25/2022 5:09	81.67	6/24/2022 3:32	17.61	6/24/2022 2:41	23.42	6/24/2022 7:37	73.28
6/25/2022 6:28	50.86	6/25/2022 5:10	81.68	6/24/2022 3:33	17.58	6/24/2022 2:42	23.38	6/24/2022 7:38	73.16
6/25/2022 6:29	50.87	6/25/2022 5:11	81.65	6/24/2022 3:34	17.61	6/24/2022 2:43	23.50	6/24/2022 7:39	73.13
6/25/2022 6:30	50.85	6/25/2022 5:12	81.67	6/24/2022 3:35	17.57	6/24/2022 2:44	23.64	6/24/2022 7:40	73.04
6/25/2022 6:31	50.81	6/25/2022 5:13	81.67	6/24/2022 3:36	17.59	6/24/2022 2:45	23.72	6/24/2022 7:41	72.93
6/25/2022 6:32	50.85	6/25/2022 5:14	81.67	6/24/2022 3:37	17.56	6/24/2022 2:46	23.75	6/24/2022 7:42	72.84
6/25/2022 6:33	50.82	6/25/2022 5:15	81.70	6/24/2022 3:38	17.53	6/24/2022 2:47	23.75	6/24/2022 7:43	72.73
6/25/2022 6:34	50.84	6/25/2022 5:16	81.66	6/24/2022 3:39	17.61	6/24/2022 2:48	23.84	6/24/2022 7:44	72.67
6/25/2022 6:35	50.82	6/25/2022 5:17	81.64	6/24/2022 3:40	17.58	6/24/2022 2:49	23.93	6/24/2022 7:45	72.61
6/25/2022 6:36	50.79	6/25/2022 5:18	81.69	6/24/2022 3:41	17.51	6/24/2022 2:50	23.95	6/24/2022 7:46	72.56
6/25/2022 6:37	50.82	6/25/2022 5:19	81.70	6/24/2022 3:42	17.60	6/24/2022 2:51	24.03	6/24/2022 7:47	72.45
6/25/2022 6:38	50.82	6/25/2022 5:20	81.67	6/24/2022 3:43	17.53	6/24/2022 2:52	24.14	6/24/2022 7:48	72.43
6/25/2022 6:39	50.83	6/25/2022 5:21	81.70	6/24/2022 3:44	17.54	6/24/2022 2:53	24.26	6/24/2022 7:49	78.12
6/25/2022 6:40	50.79	6/25/2022 5:22	81.69	6/24/2022 3:45	17.54	6/24/2022 2:54	24.40	6/24/2022 7:50	78.18
6/25/2022 6:41	50.79	6/25/2022 5:23	81.63	6/24/2022 3:46	17.58	6/24/2022 2:55	24.49	6/24/2022 7:51	78.00
6/25/2022 6:42	50.82	6/25/2022 5:24	81.68	6/24/2022 3:47	17.51	6/24/2022 2:56	24.57	6/24/2022 7:52	77.85
6/25/2022 6:43	50.79	6/25/2022 5:25	81.69	6/24/2022 3:48	17.48	6/24/2022 2:57	24.62	6/24/2022 7:53	77.70
6/25/2022 6:44	50.83	6/25/2022 5:26	81.68	6/24/2022 3:49	17.49	6/24/2022 2:58	24.75	6/24/2022 7:54	77.56
6/25/2022 6:45	50.82	6/25/2022 5:27	81.67	6/24/2022 3:50	17.47	6/24/2022 2:59	24.82	6/24/2022 7:55	77.45
6/25/2022 6:46	50.80	6/25/2022 5:28	81.67	6/24/2022 3:51	17.49	6/24/2022 3:00	24.91	6/24/2022 7:56	77.31
6/25/2022 6:47	52.24	6/25/2022 5:29	81.68	6/24/2022 3:52	17.51	6/24/2022 3:01	24.99	6/24/2022 7:57	77.19
6/25/2022 6:48	54.32	6/25/2022 5:30	81.69	6/24/2022 3:53	17.47	6/24/2022 3:02	25.13	6/24/2022 7:58	77.08
6/25/2022 6:49	55.32	6/25/2022 5:31	81.68	6/24/2022 3:54	17.49	6/24/2022 3:03	24.97	6/24/2022 7:59	76.98
6/25/2022 6:50	55.89	6/25/2022 5:32	81.67	6/24/2022 3:55	17.53	6/24/2022 3:04	24.84	6/24/2022 8:00	76.86
6/25/2022 6:51	53.93	6/25/2022 5:33	81.71	6/24/2022 3:56	17.51	6/24/2022 3:05	24.81	6/24/2022 8:01	76.77
6/25/2022 6:52	52.85	6/25/2022 5:34	81.67	6/24/2022 3:57	17.48	6/24/2022 3:06	24.83	6/24/2022 8:02	78.88
6/25/2022 6:53	52.34	6/25/2022 5:35	81.69	6/24/2022 3:58	17.44	6/24/2022 3:07	24.90	6/24/2022 8:03	82.52
6/25/2022 6:54	52.11	6/25/2022 5:36	81.66	6/24/2022 3:59	17.45	6/24/2022 3:08	24.86	6/24/2022 8:04	82.26
6/25/2022 6:55	51.96	6/25/2022 5:37	81.67	6/24/2022 4:00	17.44	6/24/2022 3:09	24.87	6/24/2022 8:05	82.05
6/25/2022 6:56	51.82	6/25/2022 5:38	81.68	6/24/2022 4:01	17.48	6/24/2022 3:10	24.90	6/24/2022 8:06	81.84
6/25/2022 6:57	51.76	6/25/2022 5:39	81.68	6/24/2022 4:02	17.43	6/24/2022 3:11	24.95	6/24/2022 8:07	81.64
6/25/2022 6:58	51.68	6/25/2022 5:40	81.66	6/24/2022 4:03	17.46	6/24/2022 3:12	25.01	6/24/2022 8:08	81.48
6/25/2022 6:59	51.62	6/25/2022 5:41	81.65	6/24/2022 4:04	17.38	6/24/2022 3:13	25.06	6/24/2022 8:09	81.31
6/25/2022 7:00	51.56	6/25/2022 5:42	81.68	6/24/2022 4:05	17.46	6/24/2022 3:14	25.11	6/24/2022 8:10	81.16

6/25/2022 7:01	51.51	6/25/2022 5:43	81.71	6/24/2022 4:06	17.45	6/24/2022 3:15	25.14	6/24/2022 8:11	81.01
6/25/2022 7:02	51.53	6/25/2022 5:44	81.62	6/24/2022 4:07	17.43	6/24/2022 3:16	25.18	6/24/2022 8:12	80.89
6/25/2022 7:03	51.48	6/25/2022 5:45	81.67	6/24/2022 4:08	17.42	6/24/2022 3:17	25.28	6/24/2022 8:13	80.70
6/25/2022 7:04	51.47	6/25/2022 5:46	81.67	6/24/2022 4:09	17.42	6/24/2022 3:18	25.32	6/24/2022 8:14	80.57
6/25/2022 7:05	51.44	6/25/2022 5:47	81.70	6/24/2022 4:10	17.38	6/24/2022 3:19	25.36	6/24/2022 8:15	80.46
6/25/2022 7:06	51.43	6/25/2022 5:48	81.71	6/24/2022 4:11	17.41	6/24/2022 3:20	25.40	6/24/2022 8:16	80.30
6/25/2022 7:07	51.37	6/25/2022 5:49	81.67	6/24/2022 4:12	17.36	6/24/2022 3:21	25.42	6/24/2022 8:17	80.13
6/25/2022 7:08	51.35	6/25/2022 5:50	81.70	6/24/2022 4:13	17.43	6/24/2022 3:22	25.53	6/24/2022 8:18	80.03
6/25/2022 7:09	51.36	6/25/2022 5:51	81.66	6/24/2022 4:14	17.37	6/24/2022 3:23	24.70	6/24/2022 8:19	79.86
6/25/2022 7:10	51.37	6/25/2022 5:52	81.66	6/24/2022 4:15	17.40	6/24/2022 3:24	24.17	6/24/2022 8:20	79.72
6/25/2022 7:11	51.31	6/25/2022 5:53	81.65	6/24/2022 4:16	17.43	6/24/2022 3:25	23.87	6/24/2022 8:21	79.60
6/25/2022 7:12	51.30	6/25/2022 5:54	81.65	6/24/2022 4:17	17.38	6/24/2022 3:26	23.75	6/24/2022 8:22	79.45
6/25/2022 7:13	51.30	6/25/2022 5:55	81.66	6/24/2022 4:18	17.37	6/24/2022 3:27	23.54	6/24/2022 8:23	79.32
6/25/2022 7:14	51.30	6/25/2022 5:56	81.69	6/24/2022 4:19	17.40	6/24/2022 3:28	23.34	6/24/2022 8:24	79.22
6/25/2022 7:15	51.30	6/25/2022 5:57	81.65	6/24/2022 4:20	17.35	6/24/2022 3:29	23.26	6/24/2022 8:25	79.10
6/25/2022 7:16	51.23	6/25/2022 5:58	81.66	6/24/2022 4:21	17.39	6/24/2022 3:30	23.12	6/24/2022 8:26	78.98
6/25/2022 7:17	51.27	6/25/2022 5:59	81.70	6/24/2022 4:22	17.38	6/24/2022 3:31	22.92	6/24/2022 8:27	78.88
6/25/2022 7:18	51.22	6/25/2022 6:00	81.66	6/24/2022 4:23	17.38	6/24/2022 3:32	22.93	6/24/2022 8:28	78.80
6/25/2022 7:19	51.23	6/25/2022 6:01	81.68	6/24/2022 4:24	17.32	6/24/2022 3:33	22.79	6/24/2022 8:29	78.70
6/25/2022 7:20	51.26	6/25/2022 6:02	81.67	6/24/2022 4:25	17.37	6/24/2022 3:34	22.70	6/24/2022 8:30	78.61
6/25/2022 7:21	51.24	6/25/2022 6:03	81.67	6/24/2022 4:26	17.29	6/24/2022 3:35	22.70	6/24/2022 8:31	78.48
6/25/2022 7:22	51.23	6/25/2022 6:04	81.68	6/24/2022 4:27	17.32	6/24/2022 3:36	22.57	6/24/2022 8:32	78.40
6/25/2022 7:23	51.21	6/25/2022 6:05	81.69	6/24/2022 4:28	17.32	6/24/2022 3:37	22.56	6/24/2022 8:33	78.31
6/25/2022 7:24	51.22	6/25/2022 6:06	81.72	6/24/2022 4:29	17.29	6/24/2022 3:38	22.46	6/24/2022 8:34	81.70
6/25/2022 7:25	51.20	6/25/2022 6:07	81.65	6/24/2022 4:30	17.36	6/24/2022 3:39	22.43	6/24/2022 8:35	82.90
6/25/2022 7:26	51.18	6/25/2022 6:08	81.71	6/24/2022 4:31	17.30	6/24/2022 3:40	22.35	6/24/2022 8:36	82.66
6/25/2022 7:27	51.19	6/25/2022 6:09	81.69	6/24/2022 4:32	17.31	6/24/2022 3:41	22.38	6/24/2022 8:37	82.47
6/25/2022 7:28	51.18	6/25/2022 6:10	81.70	6/24/2022 4:33	17.33	6/24/2022 3:42	22.27	6/24/2022 8:38	82.28
6/25/2022 7:29	51.16	6/25/2022 6:11	81.70	6/24/2022 4:34	17.29	6/24/2022 3:43	21.55	6/24/2022 8:39	82.10
6/25/2022 7:30	51.18	6/25/2022 6:12	81.67	6/24/2022 4:35	17.30	6/24/2022 3:44	21.04	6/24/2022 8:40	87.80
6/25/2022 7:31	51.15	6/25/2022 6:13	81.67	6/24/2022 4:36	17.27	6/24/2022 3:45	20.56	6/24/2022 8:41	88.19
6/25/2022 7:32	51.18	6/25/2022 6:14	81.67	6/24/2022 4:37	17.35	6/24/2022 3:46	20.30	6/24/2022 8:42	87.90
6/25/2022 7:33	51.18	6/25/2022 6:15	81.70	6/24/2022 4:38	17.32	6/24/2022 3:47	20.01	6/24/2022 8:43	87.56
6/25/2022 7:34	51.18	6/25/2022 6:16	81.65	6/24/2022 4:39	17.32	6/24/2022 3:48	19.78	6/24/2022 8:44	87.32
6/25/2022 7:35	51.13	6/25/2022 6:17	81.68	6/24/2022 4:40	17.32	6/24/2022 3:49	19.64	6/24/2022 8:45	87.09
6/25/2022 7:36	51.14	6/25/2022 6:18	81.72	6/24/2022 4:41	17.29	6/24/2022 3:50	19.89	6/24/2022 8:46	86.85
6/25/2022 7:37	51.11	6/25/2022 6:19	81.72	6/24/2022 4:42	17.30	6/24/2022 3:51	19.92	6/24/2022 8:47	86.58
6/25/2022 7:38	51.15	6/25/2022 6:20	81.70	6/24/2022 4:43	17.26	6/24/2022 3:52	20.01	6/24/2022 8:48	86.35
6/25/2022 7:39	51.15	6/25/2022 6:21	81.67	6/24/2022 4:44	17.25	6/24/2022 3:53	19.97	6/24/2022 8:49	86.13
6/25/2022 7:40	51.12	6/25/2022 6:22	81.68	6/24/2022 4:45	17.27	6/24/2022 3:54	19.99	6/24/2022 8:50	85.90
6/25/2022 7:41	51.13	6/25/2022 6:23	81.69	6/24/2022 4:46	17.33	6/24/2022 3:55	19.90	6/24/2022 8:51	85.68
6/25/2022 7:42	51.13	6/25/2022 6:24	81.65	6/24/2022 4:47	17.27	6/24/2022 3:56	19.86	6/24/2022 8:52	85.53
6/25/2022 7:43	51.12	6/25/2022 6:25	81.71	6/24/2022 4:48	17.25	6/24/2022 3:57	19.71	6/24/2022 8:53	85.31
6/25/2022 7:44	51.08	6/25/2022 6:26	81.72	6/24/2022 4:49	17.25	6/24/2022 3:58	19.17	6/24/2022 8:54	85.08
6/25/2022 7:45	51.12	6/25/2022 6:27	81.71	6/24/2022 4:50	17.28	6/24/2022 3:59	18.91	6/24/2022 8:55	84.94
6/25/2022 7:46	51.10	6/25/2022 6:28	81.68	6/24/2022 4:51	17.27	6/24/2022 4:00	18.65	6/24/2022 8:56	84.74
6/25/2022 7:47	51.14	6/25/2022 6:29	81.66	6/24/2022 4:52	17.22	6/24/2022 4:01	18.49	6/24/2022 8:57	84.52
6/25/2022 7:48	51.10	6/25/2022 6:30	81.70	6/24/2022 4:53	17.22	6/24/2022 4:02	18.34	6/24/2022 8:58	84.34
6/25/2022 7:49	51.08	6/25/2022 6:31	81.67	6/24/2022 4:54	17.25	6/24/2022 4:03	18.19	6/24/2022 8:59	84.11
6/25/2022 7:50	51.07	6/25/2022 6:32	81.69	6/24/2022 4:55	17.22	6/24/2022 4:04	18.04	6/24/2022 9:00	83.96
6/25/2022 7:51	51.08	6/25/2022 6:33	81.66	6/24/2022 4:56	17.23	6/24/2022 4:05	17.88	6/24/2022 9:01	88.10
6/25/2022 7:52	51.08	6/25/2022 6:34	81.67	6/24/2022 4:57	17.25	6/24/2022 4:06	17.78	6/24/2022 9:02	90.10
6/25/2022 7:53	51.07	6/25/2022 6:35	81.70	6/24/2022 4:58	17.24	6/24/2022 4:07	17.63	6/24/2022 9:03	89.80
6/25/2022 7:54	51.06	6/25/2022 6:36	81.69	6/24/2022 4:59	17.23	6/24/2022 4:08	17.57	6/24/2022 9:04	89.51
6/25/2022 7:55	51.09	6/25/2022 6:37	81.68	6/24/2022 5:00	17.24	6/24/2022 4:09	17.46	6/24/2022 9:05	89.20
6/25/2022 7:56	51.06	6/25/2022 6:38	81.73	6/24/2022 5:01	17.21	6/24/2022 4:10	17.29	6/24/2022 9:06	89.00
6/25/2022 7:57	51.07	6/25/2022 6:39	81.66	6/24/2022 5:02	17.24	6/24/2022 4:11	17.10	6/24/2022 9:07	88.72
6/25/2022 7:58	51.07	6/25/2022 6:40	81.72	6/24/2022 5:03	17.22	6/24/2022 4:12	17.06	6/24/2022 9:08	88.51
6/25/2022 7:59	51.07	6/25/2022 6:41	81.66	6/24/2022 5:04	17.20	6/24/2022 4:13	16.97	6/24/2022 9:09	88.28
6/25/2022 8:00	51.06	6/25/2022 6:42	81.68	6/24/2022 5:05	17.22	6/24/2022 4:14	16.83	6/24/2022 9:10	88.05
6/25/2022 8:01	51.06	6/25/2022 6:43	81.70	6/24/2022 5:06	17.22	6/24/2022 4:15	16.77	6/24/2022 9:11	87.82
6/25/2022 8:02	51.07	6/25/2022 6:44	81.70	6/24/2022 5:07	17.21	6/24/2022 4:16	16.68	6/24/2022 9:12	87.61
6/25/2022 8:03	51.04	6/25/2022 6:45	81.69	6/24/2022 5:08	17.21	6/24/2022 4:17	16.54	6/24/2022 9:13	87.38
6/25/2022 8:04	51.08	6/25/2022 6:46	81.71	6/24/2022 5:09	17.22	6/24/2022 4:18	16.49	6/24/2022 9:14	87.18
6/25/2022 8:05	51.06	6/25/2022 6:47	81.70	6/24/2022 5:10	17.21	6/24/2022 4:19	16.37	6/24/2022 9:15	86.90
6/25/2022 8:06	51.06	6/25/2022 6:48	81.68	6/24/2022 5:11	17.20	6/24/2022 4:20	16.32	6/24/2022 9:16	86.70
6/25/2022 8:07	51.06	6/25/2022 6:49	81.72	6/24/2022 5:12	17.20	6/24/2022 4:21	16.28	6/24/2022 9:17	86.50
6/25/2022 8:08	51.03	6/25/2022 6:50	81.67	6/24/2022 5:13	17.19	6/24/2022 4:22	16.12	6/24/2022 9:18	86.27
6/25/2022 8:09	51.05	6/25/2022 6:51	81.71	6/24/2022 5:14	17.18	6/24/2022 4:23	16.05	6/24/2022 9:19	86.10
6/25/2022 8:10	51.06	6/25/2022 6:52	81.66	6/24/2022 5:15	17.21	6/24/2022 4:24	15.95	6/24/2022 9:20	85.86
6/25/2022 8:11	51.07	6/25/2022 6:53	81.66	6/24/2022 5:16	17.18	6/24/2022 4:25	15.85	6/24/2022 9:21	85.64
6/25/2022 8:12	51.05	6/25/2022 6:54	81.69	6/24/2022 5:17	17.19	6/24/2022 4:26	15.77	6/24/2022 9:22	85.48
6/25/2022 8:13	51.04	6/25/2022 6:55	81.68	6/24/2022 5:18	17.18	6/24/2022 4:27	15.78	6/24/2022 9:23	85.30
6/25/2022 8:14	51.06	6/25/2022 6:56	81.69	6/24/2022 5:19	17.14	6/24/2022 4:28	15.62	6/24/2022 9:24	85.11
6/25/2022 8:15	51.05	6/25/2022 6:57	81.68	6/24/2022 5:20	17.20	6/24/2022 4:29	15.53	6/24/2022 9:25	84.92
6/25/2022 8:16	51.01	6/25/2022 6:58	81.69	6/24/2022 5:21	17.21	6/24/2022 4:30	15.48	6/24/2022 9:26	84.78
6/25/2022 8:17	51.06	6/25/2022 6:59	81.70	6/24/2022 5:22	17.13	6/24/2022 4:31	15.44	6/24/2022 9:27	84.57
6/25/2022 8:18	51.01	6/25/2022 7:00	81.69	6/24/2022 5:23	17.18	6/24/2022 4:32	15.36	6/24/2022 9:28	84.39
6/25/2022 8:19	50.98	6/25/2022 7:01	81.67	6/24/2022 5:24	17.17	6/24/2022 4:33	15.27	6/24/2022 9:29	84.20
6/25/2022 8:20	51.01	6/25/2022 7:02	81.69	6/24/2022 5:25	17.15	6/24/2022 4:34	15.22	6/24/2022 9:30	84.04
6/25/2022 8:21	51.02	6/25/2022 7:03	81.73	6/24/2022 5:26	17.12	6/24/2022 4:35	15.11	6/24/2022 9:31	83.87
6/25/2022 8:22	51.04	6/25/2022 7:04	81.71	6/24/2022 5:27	17.21	6/24/2022 4:36	15.07	6/24/2022 9:32	83.69
6/25/2022 8:23	50.98	6/25/2022 7:05	81.70	6/24/2022 5:28	17.12	6/24/2022 4:37	14.95	6/24/2022 9:33	83.50
6/25/2022 8:24	51.01	6/25/2022 7:06	81.68	6/24/2022 5:29	17.15	6/24/2022 4:38	14.86	6/24/2022 9:34	83.35
6/25/2022 8:25	51.02	6/25/2022 7:07	81.68	6/24/2022 5:30	17.16	6/24/2022 4:39	14.87	6/24/2022 9:35	83.21
6/25/2022 8:26	51.03	6/25/2022 7:08	81.69	6/24/2022 5:31	17.16	6/24/2022 4:40	14.75	6/24/2022 9:36	83.05
6/25/2022 8:27	51.02	6/25/2022 7:09	81.68	6/24/2022 5:32	17.14	6/24/2022 4:41	14.70	6/24/2022 9:37	82.87
6/25/2022 8:28	50.97	6/25/2022 7:10	81.61	6/24/2022 5:33	17.12	6/24/2022 4:42	14.66	6/24/2022 9:38	82.70

6/25/2022 8:29	50.99	6/25/2022 7:11	81.69	6/24/2022 5:34	17.14	6/24/2022 4:43	14.59	6/24/2022 9:39	82.54
6/25/2022 8:30	51.04	6/25/2022 7:12	81.73	6/24/2022 5:35	17.14	6/24/2022 4:44	14.53	6/24/2022 9:40	82.44
6/25/2022 8:31	51.03	6/25/2022 7:13	81.70	6/24/2022 5:36	17.15	6/24/2022 4:45	14.44	6/24/2022 9:41	82.26
6/25/2022 8:32	51.00	6/25/2022 7:14	81.70	6/24/2022 5:37	17.11	6/24/2022 4:46	14.45	6/24/2022 9:42	82.14
6/25/2022 8:33	50.98	6/25/2022 7:15	81.71	6/24/2022 5:38	17.13	6/24/2022 4:47	14.35	6/24/2022 9:43	82.00
6/25/2022 8:34	51.02	6/25/2022 7:16	81.66	6/24/2022 5:39	17.13	6/24/2022 4:48	14.21	6/24/2022 9:44	81.83
6/25/2022 8:35	51.00	6/25/2022 7:17	81.68	6/24/2022 5:40	17.11	6/24/2022 4:49	14.20	6/24/2022 9:45	81.70
6/25/2022 8:36	51.00	6/25/2022 7:18	81.67	6/24/2022 5:41	17.12	6/24/2022 4:50	14.18	6/24/2022 9:46	81.57
6/25/2022 8:37	51.00	6/25/2022 7:19	81.67	6/24/2022 5:42	17.11	6/24/2022 4:51	14.11	6/24/2022 9:47	81.41
6/25/2022 8:38	51.00	6/25/2022 7:20	81.66	6/24/2022 5:43	17.13	6/24/2022 4:52	14.05	6/24/2022 9:48	81.28
6/25/2022 8:39	51.03	6/25/2022 7:21	81.68	6/24/2022 5:44	17.09	6/24/2022 4:53	14.03	6/24/2022 9:49	81.14
6/25/2022 8:40	51.01	6/25/2022 7:22	81.70	6/24/2022 5:45	17.12	6/24/2022 4:54	13.86	6/24/2022 9:50	81.06
6/25/2022 8:41	51.02	6/25/2022 7:23	81.71	6/24/2022 5:46	17.11	6/24/2022 4:55	13.84	6/24/2022 9:51	80.92
6/25/2022 8:42	50.97	6/25/2022 7:24	81.70	6/24/2022 5:47	17.06	6/24/2022 4:56	13.75	6/24/2022 9:52	80.86
6/25/2022 8:43	50.99	6/25/2022 7:25	81.73	6/24/2022 5:48	17.14	6/24/2022 4:57	13.71	6/24/2022 9:53	80.69
6/25/2022 8:44	50.96	6/25/2022 7:26	81.68	6/24/2022 5:49	17.15	6/24/2022 4:58	13.69	6/24/2022 9:54	80.59
6/25/2022 8:45	50.98	6/25/2022 7:27	81.71	6/24/2022 5:50	17.16	6/24/2022 4:59	13.70	6/24/2022 9:55	80.48
6/25/2022 8:46	50.97	6/25/2022 7:28	81.73	6/24/2022 5:51	17.10	6/24/2022 5:00	13.56	6/24/2022 9:56	80.36
6/25/2022 8:47	50.99	6/25/2022 7:29	81.69	6/24/2022 5:52	17.18	6/24/2022 5:01	13.51	6/24/2022 9:57	80.23
6/25/2022 8:48	50.99	6/25/2022 7:30	81.66	6/24/2022 5:53	17.09	6/24/2022 5:02	13.46	6/24/2022 9:58	80.14
6/25/2022 8:49	50.96	6/25/2022 7:31	81.74	6/24/2022 5:54	17.14	6/24/2022 5:03	13.44	6/24/2022 9:59	79.97
6/25/2022 8:50	50.95	6/25/2022 7:32	81.69	6/24/2022 5:55	17.14	6/24/2022 5:04	13.42	6/24/2022 10:00	79.88
6/25/2022 8:51	50.98	6/25/2022 7:33	81.69	6/24/2022 5:56	17.08	6/24/2022 5:05	13.36	6/24/2022 10:01	79.73
6/25/2022 8:52	50.95	6/25/2022 7:34	81.69	6/24/2022 5:57	17.05	6/24/2022 5:06	13.27	6/24/2022 10:02	79.61
6/25/2022 8:53	50.97	6/25/2022 7:35	81.66	6/24/2022 5:58	17.10	6/24/2022 5:07	13.19	6/24/2022 10:03	79.50
6/25/2022 8:54	50.93	6/25/2022 7:36	81.74	6/24/2022 5:59	17.14	6/24/2022 5:08	13.17	6/24/2022 10:04	79.40
6/25/2022 8:55	50.97	6/25/2022 7:37	81.66	6/24/2022 6:00	17.15	6/24/2022 5:09	13.15	6/24/2022 10:05	79.30
6/25/2022 8:56	50.96	6/25/2022 7:38	81.73	6/24/2022 6:01	17.12	6/24/2022 5:10	13.08	6/24/2022 10:06	79.18
6/25/2022 8:57	50.96	6/25/2022 7:39	81.71	6/24/2022 6:02	17.08	6/24/2022 5:11	13.08	6/24/2022 10:07	79.07
6/25/2022 8:58	51.00	6/25/2022 7:40	81.72	6/24/2022 6:03	17.08	6/24/2022 5:12	12.96	6/24/2022 10:08	79.02
6/25/2022 8:59	50.92	6/25/2022 7:41	81.70	6/24/2022 6:04	17.05	6/24/2022 5:13	12.91	6/24/2022 10:09	78.90
6/25/2022 9:00	50.95	6/25/2022 7:42	81.70	6/24/2022 6:05	17.10	6/24/2022 5:14	12.89	6/24/2022 10:10	78.85
6/25/2022 9:01	50.98	6/25/2022 7:43	81.73	6/24/2022 6:06	17.11	6/24/2022 5:15	12.79	6/24/2022 10:11	78.75
6/25/2022 9:02	50.99	6/25/2022 7:44	81.71	6/24/2022 6:07	17.09	6/24/2022 5:16	12.80	6/24/2022 10:12	78.65
6/25/2022 9:03	51.00	6/25/2022 7:45	81.66	6/24/2022 6:08	17.10	6/24/2022 5:17	12.78	6/24/2022 10:13	78.56
6/25/2022 9:04	50.99	6/25/2022 7:46	81.67	6/24/2022 6:09	17.06	6/24/2022 5:18	12.67	6/24/2022 10:14	78.47
6/25/2022 9:05	50.97	6/25/2022 7:47	81.70	6/24/2022 6:10	17.07	6/24/2022 5:19	12.64	6/24/2022 10:15	78.39
6/25/2022 9:06	50.98	6/25/2022 7:48	81.73	6/24/2022 6:11	17.04	6/24/2022 5:20	12.58	6/24/2022 10:16	78.26
6/25/2022 9:07	50.94	6/25/2022 7:49	81.66	6/24/2022 6:12	17.11	6/24/2022 5:21	12.55	6/24/2022 10:17	78.22
6/25/2022 9:08	50.94	6/25/2022 7:50	81.67	6/24/2022 6:13	17.08	6/24/2022 5:22	12.48	6/24/2022 10:18	78.11
6/25/2022 9:09	50.94	6/25/2022 7:51	81.72	6/24/2022 6:14	17.07	6/24/2022 5:23	12.50	6/24/2022 10:19	78.03
6/25/2022 9:10	50.94	6/25/2022 7:52	81.72	6/24/2022 6:15	17.05	6/24/2022 5:24	12.43	6/24/2022 10:20	77.90
6/25/2022 9:11	50.97	6/25/2022 7:53	81.69	6/24/2022 6:16	17.03	6/24/2022 5:25	12.33	6/24/2022 10:21	77.80
6/25/2022 9:12	50.98	6/25/2022 7:54	81.69	6/24/2022 6:17	17.07	6/24/2022 5:26	12.32	6/24/2022 10:22	77.70
6/25/2022 9:13	50.96	6/25/2022 7:55	81.69	6/24/2022 6:18	17.05	6/24/2022 5:27	12.31	6/24/2022 10:23	77.60
6/25/2022 9:14	50.93	6/25/2022 7:56	81.71	6/24/2022 6:19	17.05	6/24/2022 5:28	12.31	6/24/2022 10:24	77.48
6/25/2022 9:15	50.94	6/25/2022 7:57	81.72	6/24/2022 6:20	17.01	6/24/2022 5:29	12.20	6/24/2022 10:25	77.43
6/25/2022 9:16	50.96	6/25/2022 7:58	81.70	6/24/2022 6:21	17.05	6/24/2022 5:30	12.13	6/24/2022 10:26	77.35
6/25/2022 9:17	50.95	6/25/2022 7:59	81.68	6/24/2022 6:22	17.04	6/24/2022 5:31	12.09	6/24/2022 10:27	77.25
6/25/2022 9:18	50.95	6/25/2022 8:00	81.71	6/24/2022 6:23	17.09	6/24/2022 5:32	12.06	6/24/2022 10:28	77.14
6/25/2022 9:19	50.96	6/25/2022 8:01	81.71	6/24/2022 6:24	17.02	6/24/2022 5:33	12.06	6/24/2022 10:29	77.08
6/25/2022 9:20	50.96	6/25/2022 8:02	81.72	6/24/2022 6:25	17.09	6/24/2022 5:34	12.02	6/24/2022 10:30	77.01
6/25/2022 9:21	50.95	6/25/2022 8:03	81.68	6/24/2022 6:26	17.00	6/24/2022 5:35	11.91	6/24/2022 10:31	76.94
6/25/2022 9:22	50.95	6/25/2022 8:04	81.69	6/24/2022 6:27	17.00	6/24/2022 5:36	11.89	6/24/2022 10:32	76.85
6/25/2022 9:23	50.97	6/25/2022 8:05	81.64	6/24/2022 6:28	17.06	6/24/2022 5:37	11.87	6/24/2022 10:33	76.77
6/25/2022 9:24	50.95	6/25/2022 8:06	81.74	6/24/2022 6:29	17.04	6/24/2022 5:38	11.86	6/24/2022 10:34	76.66
6/25/2022 9:25	50.94	6/25/2022 8:07	81.73	6/24/2022 6:30	17.02	6/24/2022 5:39	11.84	6/24/2022 10:35	76.62
6/25/2022 9:26	50.92	6/25/2022 8:08	81.70	6/24/2022 6:31	17.02	6/24/2022 5:40	11.79	6/24/2022 10:36	76.52
6/25/2022 9:27	50.95	6/25/2022 8:09	81.70	6/24/2022 6:32	17.00	6/24/2022 5:41	11.71	6/24/2022 10:37	76.41
6/25/2022 9:28	50.98	6/25/2022 8:10	81.72	6/24/2022 6:33	17.09	6/24/2022 5:42	11.70	6/24/2022 10:38	76.35
6/25/2022 9:29	50.91	6/25/2022 8:11	81.72	6/24/2022 6:34	17.02	6/24/2022 5:43	11.65	6/24/2022 10:39	76.26
6/25/2022 9:30	50.89	6/25/2022 8:12	81.73	6/24/2022 6:35	17.09	6/24/2022 5:44	11.63	6/24/2022 10:40	76.17
6/25/2022 9:31	50.93	6/25/2022 8:13	81.72	6/24/2022 6:36	17.03	6/24/2022 5:45	11.59	6/24/2022 10:41	76.11
6/25/2022 9:32	50.99	6/25/2022 8:14	81.70	6/24/2022 6:37	17.02	6/24/2022 5:46	11.49	6/24/2022 10:42	75.99
6/25/2022 9:33	50.95	6/25/2022 8:15	81.71	6/24/2022 6:38	17.02	6/24/2022 5:47	11.48	6/24/2022 10:43	75.93
6/25/2022 9:34	50.89	6/25/2022 8:16	81.69	6/24/2022 6:39	17.05	6/24/2022 5:48	11.50	6/24/2022 10:44	75.84
6/25/2022 9:35	50.95	6/25/2022 8:17	81.70	6/24/2022 6:40	17.01	6/24/2022 5:49	11.44	6/24/2022 10:45	75.78
6/25/2022 9:36	50.96	6/25/2022 8:18	81.70	6/24/2022 6:41	17.00	6/24/2022 5:50	11.43	6/24/2022 10:46	75.70
6/25/2022 9:37	50.92	6/25/2022 8:19	81.76	6/24/2022 6:42	17.06	6/24/2022 5:51	11.43	6/24/2022 10:47	75.64
6/25/2022 9:38	50.94	6/25/2022 8:20	81.67	6/24/2022 6:43	16.98	6/24/2022 5:52	11.30	6/24/2022 10:48	75.56
6/25/2022 9:39	50.96	6/25/2022 8:21	81.73	6/24/2022 6:44	17.03	6/24/2022 5:53	11.27	6/24/2022 10:49	75.43
6/25/2022 9:40	50.91	6/25/2022 8:22	81.69	6/24/2022 6:45	17.02	6/24/2022 5:54	11.23	6/24/2022 10:50	75.39
6/25/2022 9:41	50.93	6/25/2022 8:23	81.72	6/24/2022 6:46	16.99	6/24/2022 5:55	11.25	6/24/2022 10:51	75.29
6/25/2022 9:42	50.90	6/25/2022 8:24	81.72	6/24/2022 6:47	17.00	6/24/2022 5:56	11.22	6/24/2022 10:52	75.22
6/25/2022 9:43	50.91	6/25/2022 8:25	81.69	6/24/2022 6:48	16.99	6/24/2022 5:57	11.18	6/24/2022 10:53	75.15
6/25/2022 9:44	50.92	6/25/2022 8:26	81.68	6/24/2022 6:49	16.99	6/24/2022 5:58	11.08	6/24/2022 10:54	75.11
6/25/2022 9:45	50.92	6/25/2022 8:27	81.71	6/24/2022 6:50	17.02	6/24/2022 5:59	11.11	6/24/2022 10:55	75.02
6/25/2022 9:46	50.91	6/25/2022 8:28	81.71	6/24/2022 6:51	16.98	6/24/2022 6:00	11.05	6/24/2022 10:56	74.92
6/25/2022 9:47	50.92	6/25/2022 8:29	81.69	6/24/2022 6:52	17.04	6/24/2022 6:01	11.07	6/24/2022 10:57	74.89
6/25/2022 9:48	50.90	6/25/2022 8:30	81.70	6/24/2022 6:53	17.01	6/24/2022 6:02	10.99	6/24/2022 10:58	74.81
6/25/2022 9:49	50.92	6/25/2022 8:31	81.71	6/24/2022 6:54	17.02	6/24/2022 6:03	10.93	6/24/2022 10:59	74.75
6/25/2022 9:50	50.91	6/25/2022 8:32	81.75	6/24/2022 6:55	16.98	6/24/2022 6:04	10.91	6/24/2022 11:00	74.65
6/25/2022 9:51	50.91	6/25/2022 8:33	81.74	6/24/2022 6:56	17.01	6/24/2022 6:05	10.86	6/24/2022 11:01	74.58
6/25/2022 9:52	50.92	6/25/2022 8:34	81.68	6/24/2022 6:57	17.00	6/24/2022 6:06	10.89	6/24/2022 11:02	74.48
6/25/2022 9:53	50.92	6/25/2022 8:35	81.70	6/24/2022 6:58	17.02	6/24/2022 6:07	10.85	6/24/2022 11:03	74.42
6/25/2022 9:54	50.92	6/25/2022 8:36	81.66	6/24/2022 6:59	16.98	6/24/2022 6:08	10.81	6/24/2022 11:04	74.36
6/25/2022 9:55	50.92	6/25/2022 8:37	81.66	6/24/2022 7:00	17.03	6/24/2022 6:09	10.72	6/24/2022 11:05	74.34
6/25/2022 9:56	50.91	6/25/2022 8:38	81.71	6/24/2022 7:01	17.04	6/24/2022 6:10	10.69	6/24/2022 11:06	74.25

6/25/2022 9:57	50.91	6/25/2022 8:39	81.70	6/24/2022 7:02	17.00	6/24/2022 6:11	10.66	6/24/2022 11:07	74.18
6/25/2022 9:58	50.90	6/25/2022 8:40	81.66	6/24/2022 7:03	17.03	6/24/2022 6:12	10.64	6/24/2022 11:08	74.09
6/25/2022 9:59	50.92	6/25/2022 8:41	81.72	6/24/2022 7:04	17.01	6/24/2022 6:13	10.67	6/24/2022 11:09	74.06
6/25/2022 10:00	50.90	6/25/2022 8:42	81.66	6/24/2022 7:05	16.99	6/24/2022 6:14	10.62	6/24/2022 11:10	73.97
6/25/2022 10:01	50.89	6/25/2022 8:43	81.69	6/24/2022 7:06	16.96	6/24/2022 6:15	10.57	6/24/2022 11:11	73.95
6/25/2022 10:02	50.89	6/25/2022 8:44	81.69	6/24/2022 7:07	16.99	6/24/2022 6:16	10.57	6/24/2022 11:12	73.87
6/25/2022 10:03	50.94	6/25/2022 8:45	81.74	6/24/2022 7:08	17.01	6/24/2022 6:17	10.52	6/24/2022 11:13	73.81
6/25/2022 10:04	50.93	6/25/2022 8:46	81.73	6/24/2022 7:09	17.00	6/24/2022 6:18	10.45	6/24/2022 11:14	73.73
6/25/2022 10:05	50.90	6/25/2022 8:47	81.70	6/24/2022 7:10	16.94	6/24/2022 6:19	10.48	6/24/2022 11:15	73.68
6/25/2022 10:06	50.90	6/25/2022 8:48	81.71	6/24/2022 7:11	16.96	6/24/2022 6:20	10.41	6/24/2022 11:16	73.61
6/25/2022 10:07	50.93	6/25/2022 8:49	81.72	6/24/2022 7:12	16.98	6/24/2022 6:21	10.41	6/24/2022 11:17	73.56
6/25/2022 10:08	50.87	6/25/2022 8:50	81.68	6/24/2022 7:13	17.00	6/24/2022 6:22	10.38	6/24/2022 11:18	73.54
6/25/2022 10:09	50.88	6/25/2022 8:51	81.65	6/24/2022 7:14	17.00	6/24/2022 6:23	10.36	6/24/2022 11:19	73.42
6/25/2022 10:10	50.90	6/25/2022 8:52	81.71	6/24/2022 7:15	17.03	6/24/2022 6:24	10.34	6/24/2022 11:20	73.39
6/25/2022 10:11	50.87	6/25/2022 8:53	81.71	6/24/2022 7:16	17.03	6/24/2022 6:25	10.22	6/24/2022 11:21	73.31
6/25/2022 10:12	50.90	6/25/2022 8:54	81.67	6/24/2022 7:17	16.96	6/24/2022 6:26	10.24	6/24/2022 11:22	73.28
6/25/2022 10:13	50.90	6/25/2022 8:55	81.66	6/24/2022 7:18	17.02	6/24/2022 6:27	10.31	6/24/2022 11:23	73.26
6/25/2022 10:14	50.90	6/25/2022 8:56	81.68	6/24/2022 7:19	16.97	6/24/2022 6:28	10.33	6/24/2022 11:24	73.15
6/25/2022 10:15	50.91	6/25/2022 8:57	81.68	6/24/2022 7:20	16.97	6/24/2022 6:29	10.19	6/24/2022 11:25	73.12
6/25/2022 10:16	50.87	6/25/2022 8:58	81.72	6/24/2022 7:21	16.97	6/24/2022 6:30	10.38	6/24/2022 11:26	73.06
6/25/2022 10:17	50.91	6/25/2022 8:59	81.69	6/24/2022 7:22	16.99	6/24/2022 6:31	10.32	6/24/2022 11:27	73.03
6/25/2022 10:18	50.87	6/25/2022 9:00	81.70	6/24/2022 7:23	17.01	6/24/2022 6:32	10.35	6/24/2022 11:28	72.94
6/25/2022 10:19	50.87	6/25/2022 9:01	81.69	6/24/2022 7:24	16.99	6/24/2022 6:33	10.23	6/24/2022 11:29	72.91
6/25/2022 10:20	50.93	6/25/2022 9:02	81.73	6/24/2022 7:25	16.97	6/24/2022 6:34	10.18	6/24/2022 11:30	72.86
6/25/2022 10:21	50.91	6/25/2022 9:03	81.74	6/24/2022 7:26	16.97	6/24/2022 6:35	10.11	6/24/2022 11:31	72.85
6/25/2022 10:22	50.88	6/25/2022 9:04	81.71	6/24/2022 7:27	17.00	6/24/2022 6:36	10.08	6/24/2022 11:32	72.75
6/25/2022 10:23	50.88	6/25/2022 9:05	81.71	6/24/2022 7:28	16.97	6/24/2022 6:37	10.16	6/24/2022 11:33	72.71
6/25/2022 10:24	50.91	6/25/2022 9:06	81.72	6/24/2022 7:29	16.96	6/24/2022 6:38	10.57	6/24/2022 11:34	72.63
6/25/2022 10:25	50.87	6/25/2022 9:07	81.72	6/24/2022 7:30	17.00	6/24/2022 6:39	10.36	6/24/2022 11:35	72.60
6/25/2022 10:26	50.86	6/25/2022 9:08	81.68	6/24/2022 7:31	16.96	6/24/2022 6:40	10.26	6/24/2022 11:36	72.56
6/25/2022 10:27	50.89	6/25/2022 9:09	81.69	6/24/2022 7:32	16.95	6/24/2022 6:41	10.12	6/24/2022 11:37	72.56
6/25/2022 10:28	50.90	6/25/2022 9:10	81.72	6/24/2022 7:33	17.01	6/24/2022 6:42	10.05	6/24/2022 11:38	72.49
6/25/2022 10:29	50.90	6/25/2022 9:11	81.71	6/24/2022 7:34	16.98	6/24/2022 6:43	9.95	6/24/2022 11:39	72.43
6/25/2022 10:30	50.89	6/25/2022 9:12	81.71	6/24/2022 7:35	16.97	6/24/2022 6:44	9.94	6/24/2022 11:40	72.40
6/25/2022 10:31	50.89	6/25/2022 9:13	81.76	6/24/2022 7:36	16.98	6/24/2022 6:45	10.02	6/24/2022 11:41	72.31
6/25/2022 10:32	50.90	6/25/2022 9:14	81.67	6/24/2022 7:37	17.02	6/24/2022 6:46	10.06	6/24/2022 11:42	72.27
6/25/2022 10:33	50.88	6/25/2022 9:15	81.71	6/24/2022 7:38	17.04	6/24/2022 6:47	9.95	6/24/2022 11:43	72.28
6/25/2022 10:34	50.86	6/25/2022 9:16	81.72	6/24/2022 7:39	16.94	6/24/2022 6:48	9.89	6/24/2022 11:44	72.22
6/25/2022 10:35	50.86	6/25/2022 9:17	81.70	6/24/2022 7:40	16.98	6/24/2022 6:49	9.81	6/24/2022 11:45	72.18
6/25/2022 10:36	50.88	6/25/2022 9:18	81.71	6/24/2022 7:41	16.99	6/24/2022 6:50	9.77	6/24/2022 11:46	72.16
6/25/2022 10:37	50.85	6/25/2022 9:19	81.68	6/24/2022 7:42	16.98	6/24/2022 6:51	9.72	6/24/2022 11:47	72.07
6/25/2022 10:38	50.87	6/25/2022 9:20	81.72	6/24/2022 7:43	17.00	6/24/2022 6:52	9.72	6/24/2022 11:48	72.06
6/25/2022 10:39	50.87	6/25/2022 9:21	81.73	6/24/2022 7:44	16.99	6/24/2022 6:53	9.71	6/24/2022 11:49	75.52
6/25/2022 10:40	50.89	6/25/2022 9:22	81.72	6/24/2022 7:45	17.02	6/24/2022 6:54	9.64	6/24/2022 11:50	80.11
6/25/2022 10:41	50.88	6/25/2022 9:23	81.73	6/24/2022 7:46	16.96	6/24/2022 6:55	9.65	6/24/2022 11:51	79.87
6/25/2022 10:42	50.87	6/25/2022 9:24	81.68	6/24/2022 7:47	16.97	6/24/2022 6:56	9.61	6/24/2022 11:52	83.12
6/25/2022 10:43	50.88	6/25/2022 9:25	81.73	6/24/2022 7:48	16.95	6/24/2022 6:57	9.59	6/24/2022 11:53	85.10
6/25/2022 10:44	50.87	6/25/2022 9:26	81.74	6/24/2022 7:49	16.94	6/24/2022 6:58	9.60	6/24/2022 11:54	84.82
6/25/2022 10:45	50.84	6/25/2022 9:27	81.68	6/24/2022 7:50	16.98	6/24/2022 6:59	9.54	6/24/2022 11:55	84.48
6/25/2022 10:46	50.85	6/25/2022 9:28	81.68	6/24/2022 7:51	16.98	6/24/2022 7:00	9.60	6/24/2022 11:56	84.30
6/25/2022 10:47	50.89	6/25/2022 9:29	81.70	6/24/2022 7:52	16.99	6/24/2022 7:01	9.57	6/24/2022 11:57	84.05
6/25/2022 10:48	50.85	6/25/2022 9:30	81.73	6/24/2022 7:53	16.95	6/24/2022 7:02	9.58	6/24/2022 11:58	83.88
6/25/2022 10:49	50.90	6/25/2022 9:31	81.70	6/24/2022 7:54	16.99	6/24/2022 7:03	9.51	6/24/2022 11:59	83.65
6/25/2022 10:50	50.90	6/25/2022 9:32	81.69	6/24/2022 7:55	17.01	6/24/2022 7:04	9.61	6/24/2022 12:00	83.45
6/25/2022 10:51	50.86	6/25/2022 9:33	81.68	6/24/2022 7:56	16.98	6/24/2022 7:05	9.54	6/24/2022 12:01	83.25
6/25/2022 10:52	50.88	6/25/2022 9:34	81.71	6/24/2022 7:57	16.96	6/24/2022 7:06	9.47	6/24/2022 12:02	83.06
6/25/2022 10:53	50.86	6/25/2022 9:35	81.73	6/24/2022 7:58	16.98	6/24/2022 7:07	9.47	6/24/2022 12:03	82.91
6/25/2022 10:54	50.83	6/25/2022 9:36	81.74	6/24/2022 7:59	16.96	6/24/2022 7:08	9.37	6/24/2022 12:04	82.76
6/25/2022 10:55	50.86	6/25/2022 9:37	81.66	6/24/2022 8:00	16.94	6/24/2022 7:09	9.60	6/24/2022 12:05	82.52
6/25/2022 10:56	50.87	6/25/2022 9:38	81.68	6/24/2022 8:01	16.96	6/24/2022 7:10	9.79	6/24/2022 12:06	82.38
6/25/2022 10:57	50.83	6/25/2022 9:39	81.73	6/24/2022 8:02	16.96	6/24/2022 7:11	9.59	6/24/2022 12:07	82.22
6/25/2022 10:58	50.87	6/25/2022 9:40	81.72	6/24/2022 8:03	16.95	6/24/2022 7:12	9.45	6/24/2022 12:08	82.00
6/25/2022 10:59	50.84	6/25/2022 9:41	81.71	6/24/2022 8:04	16.94	6/24/2022 7:13	9.48	6/24/2022 12:09	81.86
6/25/2022 11:00	50.86	6/25/2022 9:42	81.69	6/24/2022 8:05	16.98	6/24/2022 7:14	9.37	6/24/2022 12:10	81.74
6/25/2022 11:01	50.87	6/25/2022 9:43	81.69	6/24/2022 8:06	17.00	6/24/2022 7:15	9.36	6/24/2022 12:11	81.61
6/25/2022 11:02	50.84	6/25/2022 9:44	81.70	6/24/2022 8:07	16.99	6/24/2022 7:16	9.37	6/24/2022 12:12	81.42
6/25/2022 11:03	50.81	6/25/2022 9:45	81.69	6/24/2022 8:08	16.99	6/24/2022 7:17	9.24	6/24/2022 12:13	81.28
6/25/2022 11:04	50.86	6/25/2022 9:46	81.69	6/24/2022 8:09	16.98	6/24/2022 7:18	9.27	6/24/2022 12:14	81.17
6/25/2022 11:05	50.84	6/25/2022 9:47	81.74	6/24/2022 8:10	16.95	6/24/2022 7:19	9.34	6/24/2022 12:15	81.03
6/25/2022 11:06	50.89	6/25/2022 9:48	81.69	6/24/2022 8:11	17.00	6/24/2022 7:20	9.45	6/24/2022 12:16	80.89
6/25/2022 11:07	50.86	6/25/2022 9:49	81.70	6/24/2022 8:12	16.95	6/24/2022 7:21	9.46	6/24/2022 12:17	80.80
6/25/2022 11:08	50.89	6/25/2022 9:50	81.72	6/24/2022 8:13	16.94	6/24/2022 7:22	9.39	6/24/2022 12:18	80.66
6/25/2022 11:09	50.82	6/25/2022 9:51	81.72	6/24/2022 8:14	16.97	6/24/2022 7:23	9.28	6/24/2022 12:19	80.50
6/25/2022 11:10	50.88	6/25/2022 9:52	81.71	6/24/2022 8:15	17.00	6/24/2022 7:24	9.35	6/24/2022 12:20	80.44
6/25/2022 11:11	50.86	6/25/2022 9:53	81.73	6/24/2022 8:16	16.97	6/24/2022 7:25	9.25	6/24/2022 12:21	80.26
6/25/2022 11:12	50.86	6/25/2022 9:54	81.67	6/24/2022 8:17	16.96	6/24/2022 7:26	9.29	6/24/2022 12:22	80.12
6/25/2022 11:13	50.83	6/25/2022 9:55	81.70	6/24/2022 8:18	16.99	6/24/2022 7:27	9.16	6/24/2022 12:23	80.00
6/25/2022 11:14	50.83	6/25/2022 9:56	81.69	6/24/2022 8:19	16.95	6/24/2022 7:28	9.17	6/24/2022 12:24	79.90
6/25/2022 11:15	50.85	6/25/2022 9:57	81.69	6/24/2022 8:20	16.99	6/24/2022 7:29	9.12	6/24/2022 12:25	79.75
6/25/2022 11:16	50.85	6/25/2022 9:58	81.67	6/24/2022 8:21	16.93	6/24/2022 7:30	9.11	6/24/2022 12:26	79.63
6/25/2022 11:17	50.87	6/25/2022 9:59	81.71	6/24/2022 8:22	20.76	6/24/2022 7:31	9.11	6/24/2022 12:27	79.48
6/25/2022 11:18	50.88	6/25/2022 10:00	81.73	6/24/2022 8:23	24.85	6/24/2022 7:32	9.06	6/24/2022 12:28	79.36
6/25/2022 11:19	50.85	6/25/2022 10:01	81.69	6/24/2022 8:24	27.37	6/24/2022 7:33	9.07	6/24/2022 12:29	79.25
6/25/2022 11:20	50.83	6/25/2022 10:02	81.73	6/24/2022 8:25	25.00	6/24/2022 7:34	8.97	6/24/2022 12:30	79.15
6/25/2022 11:21	50.84	6/25/2022 10:03	81.70	6/24/2022 8:26	22.98	6/24/2022 7:35	8.92	6/24/2022 12:31	79.04
6/25/2022 11:22	50.87	6/25/2022 10:04	81.72	6/24/2022 8:27	21.80	6/24/2022 7:36	9.03	6/24/2022 12:32	78.98
6/25/2022 11:23	50.87	6/25/2022 10:05	81.69	6/24/2022 8:28	21.10	6/24/2022 7:37	8.97	6/24/2022 12:33	78.87
6/25/2022 11:24	50.85	6/25/2022 10:06	81.73	6/24/2022 8:29	20.51	6/24/2022 7:38	8.88	6/24/2022 12:34	78.77

6/25/2022 11:25	50.85	6/25/2022 10:07	81.71	6/24/2022 8:30	20.17	6/24/2022 7:39	8.86	6/24/2022 12:35	78.69
6/25/2022 11:26	50.88	6/25/2022 10:08	81.70	6/24/2022 8:31	19.89	6/24/2022 7:40	8.86	6/24/2022 12:36	78.60
6/25/2022 11:27	50.84	6/25/2022 10:09	81.69	6/24/2022 8:32	19.69	6/24/2022 7:41	8.93	6/24/2022 12:37	78.51
6/25/2022 11:28	50.86	6/25/2022 10:10	81.68	6/24/2022 8:33	19.47	6/24/2022 7:42	8.85	6/24/2022 12:38	78.38
6/25/2022 11:29	50.86	6/25/2022 10:11	81.71	6/24/2022 8:34	19.36	6/24/2022 7:43	8.83	6/24/2022 12:39	78.27
6/25/2022 11:30	50.80	6/25/2022 10:12	81.74	6/24/2022 8:35	19.19	6/24/2022 7:44	8.85	6/24/2022 12:40	78.16
6/25/2022 11:31	50.84	6/25/2022 10:13	81.69	6/24/2022 8:36	19.07	6/24/2022 7:45	8.76	6/24/2022 12:41	78.13
6/25/2022 11:32	50.85	6/25/2022 10:14	81.69	6/24/2022 8:37	18.97	6/24/2022 7:46	8.82	6/24/2022 12:42	77.99
6/25/2022 11:33	50.86	6/25/2022 10:15	81.71	6/24/2022 8:38	18.89	6/24/2022 7:47	8.80	6/24/2022 12:43	77.88
6/25/2022 11:34	50.83	6/25/2022 10:16	81.73	6/24/2022 8:39	18.84	6/24/2022 7:48	8.70	6/24/2022 12:44	77.77
6/25/2022 11:35	50.83	6/25/2022 10:17	81.71	6/24/2022 8:40	18.71	6/24/2022 7:49	8.77	6/24/2022 12:45	77.70
6/25/2022 11:36	50.86	6/25/2022 10:18	81.74	6/24/2022 8:41	18.64	6/24/2022 7:50	8.69	6/24/2022 12:46	77.60
6/25/2022 11:37	50.86	6/25/2022 10:19	81.69	6/24/2022 8:42	18.58	6/24/2022 7:51	8.64	6/24/2022 12:47	77.45
6/25/2022 11:38	50.84	6/25/2022 10:20	81.70	6/24/2022 8:43	18.53	6/24/2022 7:52	9.01	6/24/2022 12:48	77.40
6/25/2022 11:39	50.83	6/25/2022 10:21	81.72	6/24/2022 8:44	18.48	6/24/2022 7:53	8.74	6/24/2022 12:49	77.29
6/25/2022 11:40	50.83	6/25/2022 10:22	81.69	6/24/2022 8:45	18.49	6/24/2022 7:54	8.69	6/24/2022 12:50	77.21
6/25/2022 11:41	50.83	6/25/2022 10:23	81.71	6/24/2022 8:46	18.38	6/24/2022 7:55	8.68	6/24/2022 12:51	77.15
6/25/2022 11:42	50.85	6/25/2022 10:24	81.68	6/24/2022 8:47	18.32	6/24/2022 7:56	8.58	6/24/2022 12:52	77.03
6/25/2022 11:43	50.85	6/25/2022 10:25	81.73	6/24/2022 8:48	18.30	6/24/2022 7:57	8.60	6/24/2022 12:53	76.97
6/25/2022 11:44	50.85	6/25/2022 10:26	81.72	6/24/2022 8:49	18.26	6/24/2022 7:58	8.64	6/24/2022 12:54	76.90
6/25/2022 11:45	50.84	6/25/2022 10:27	81.76	6/24/2022 8:50	18.18	6/24/2022 7:59	8.57	6/24/2022 12:55	76.78
6/25/2022 11:46	50.85	6/25/2022 10:28	81.70	6/24/2022 8:51	18.17	6/24/2022 8:00	8.56	6/24/2022 12:56	76.67
6/25/2022 11:47	50.84	6/25/2022 10:29	81.68	6/24/2022 8:52	18.08	6/24/2022 8:01	8.51	6/24/2022 12:57	76.67
6/25/2022 11:48	50.84	6/25/2022 10:30	81.63	6/24/2022 8:53	18.14	6/24/2022 8:02	8.54	6/24/2022 12:58	76.56
6/25/2022 11:49	50.83	6/25/2022 10:31	81.74	6/24/2022 8:54	18.08	6/24/2022 8:03	8.56	6/24/2022 12:59	76.46
6/25/2022 11:50	50.88	6/25/2022 10:32	81.71	6/24/2022 8:55	18.05	6/24/2022 8:04	8.41	6/24/2022 13:00	76.35
6/25/2022 11:51	50.85	6/25/2022 10:33	81.69	6/24/2022 8:56	18.01	6/24/2022 8:05	8.45	6/24/2022 13:01	76.25
6/25/2022 11:52	50.90	6/25/2022 10:34	81.68	6/24/2022 8:57	17.95	6/24/2022 8:06	8.46	6/24/2022 13:02	76.20
6/25/2022 11:53	50.85	6/25/2022 10:35	81.68	6/24/2022 8:58	17.99	6/24/2022 8:07	8.37	6/24/2022 13:03	76.07
6/25/2022 11:54	50.84	6/25/2022 10:36	81.70	6/24/2022 8:59	17.98	6/24/2022 8:08	8.38	6/24/2022 13:04	76.01
6/25/2022 11:55	50.82	6/25/2022 10:37	81.68	6/24/2022 9:00	17.95	6/24/2022 8:09	8.38	6/24/2022 13:05	75.90
6/25/2022 11:56	50.87	6/25/2022 10:38	81.74	6/24/2022 9:01	17.88	6/24/2022 8:10	8.36	6/24/2022 13:06	75.83
6/25/2022 11:57	50.84	6/25/2022 10:39	81.71	6/24/2022 9:02	17.89	6/24/2022 8:11	8.29	6/24/2022 13:07	75.75
6/25/2022 11:58	50.85	6/25/2022 10:40	81.76	6/24/2022 9:03	17.86	6/24/2022 8:12	8.30	6/24/2022 13:08	75.65
6/25/2022 11:59	50.86	6/25/2022 10:41	81.69	6/24/2022 9:04	17.85	6/24/2022 8:13	8.30	6/24/2022 13:09	75.59
6/25/2022 12:00	50.83	6/25/2022 10:42	81.74	6/24/2022 9:05	17.83	6/24/2022 8:14	8.34	6/24/2022 13:10	75.48
6/25/2022 12:01	50.84	6/25/2022 10:43	81.70	6/24/2022 9:06	17.84	6/24/2022 8:15	8.38	6/24/2022 13:11	75.43
6/25/2022 12:02	53.64	6/25/2022 10:44	81.68	6/24/2022 9:07	17.78	6/24/2022 8:16	8.18	6/24/2022 13:12	75.36
6/25/2022 12:03	54.98	6/25/2022 10:45	81.69	6/24/2022 9:08	17.74	6/24/2022 8:17	8.27	6/24/2022 13:13	75.26
6/25/2022 12:04	55.69	6/25/2022 10:46	83.82	6/24/2022 9:09	17.76	6/24/2022 8:18	8.27	6/24/2022 13:14	75.16
6/25/2022 12:05	54.98	6/25/2022 10:47	86.31	6/24/2022 9:10	17.70	6/24/2022 8:19	8.27	6/24/2022 13:15	75.12
6/25/2022 12:06	53.24	6/25/2022 10:48	85.56	6/24/2022 9:11	17.74	6/24/2022 8:20	8.23	6/24/2022 13:16	75.05
6/25/2022 12:07	52.54	6/25/2022 10:49	84.93	6/24/2022 9:12	17.68	6/24/2022 8:21	8.20	6/24/2022 13:17	74.97
6/25/2022 12:08	52.23	6/25/2022 10:50	84.47	6/24/2022 9:13	17.69	6/24/2022 8:22	8.23	6/24/2022 13:18	74.87
6/25/2022 12:09	52.02	6/25/2022 10:51	84.03	6/24/2022 9:14	17.68	6/24/2022 8:23	8.12	6/24/2022 13:19	74.83
6/25/2022 12:10	51.89	6/25/2022 10:52	83.74	6/24/2022 9:15	17.67	6/24/2022 8:24	8.15	6/24/2022 13:20	74.74
6/25/2022 12:11	51.77	6/25/2022 10:53	83.42	6/24/2022 9:16	17.63	6/24/2022 8:25	8.24	6/24/2022 13:21	74.62
6/25/2022 12:12	51.69	6/25/2022 10:54	85.14	6/24/2022 9:17	17.66	6/24/2022 8:26	8.24	6/24/2022 13:22	74.58
6/25/2022 12:13	51.61	6/25/2022 10:55	84.58	6/24/2022 9:18	17.66	6/24/2022 8:27	8.16	6/24/2022 13:23	74.48
6/25/2022 12:14	51.55	6/25/2022 10:56	84.15	6/24/2022 9:19	17.61	6/24/2022 8:28	8.10	6/24/2022 13:24	74.45
6/25/2022 12:15	51.54	6/25/2022 10:57	83.82	6/24/2022 9:20	17.60	6/24/2022 8:29	8.10	6/24/2022 13:25	74.34
6/25/2022 12:16	51.55	6/25/2022 10:58	83.56	6/24/2022 9:21	17.57	6/24/2022 8:30	8.14	6/24/2022 13:26	74.29
6/25/2022 12:17	51.53	6/25/2022 10:59	83.84	6/24/2022 9:22	17.62	6/24/2022 8:31	8.05	6/24/2022 13:27	74.21
6/25/2022 12:18	51.49	6/25/2022 11:00	83.56	6/24/2022 9:23	17.57	6/24/2022 8:32	8.05	6/24/2022 13:28	74.15
6/25/2022 12:19	51.43	6/25/2022 11:01	83.34	6/24/2022 9:24	17.59	6/24/2022 8:33	8.10	6/24/2022 13:29	74.06
6/25/2022 12:20	51.42	6/25/2022 11:02	83.17	6/24/2022 9:25	17.57	6/24/2022 8:34	8.08	6/24/2022 13:30	77.12
6/25/2022 12:21	51.41	6/25/2022 11:03	82.97	6/24/2022 9:26	17.47	6/24/2022 8:35	8.18	6/24/2022 13:31	80.69
6/25/2022 12:22	51.41	6/25/2022 11:04	82.85	6/24/2022 9:27	22.43	6/24/2022 8:36	8.51	6/24/2022 13:32	80.49
6/25/2022 12:23	51.34	6/25/2022 11:05	82.75	6/24/2022 9:28	25.99	6/24/2022 8:37	8.29	6/24/2022 13:33	80.30
6/25/2022 12:24	51.37	6/25/2022 11:06	82.64	6/24/2022 9:29	25.59	6/24/2022 8:38	8.16	6/24/2022 13:34	80.16
6/25/2022 12:25	51.34	6/25/2022 11:07	82.53	6/24/2022 9:30	23.21	6/24/2022 8:39	8.16	6/24/2022 13:35	79.98
6/25/2022 12:26	51.33	6/25/2022 11:08	82.47	6/24/2022 9:31	21.96	6/24/2022 8:40	8.29	6/24/2022 13:36	79.78
6/25/2022 12:27	51.33	6/25/2022 11:09	82.44	6/24/2022 9:32	21.21	6/24/2022 8:41	8.34	6/24/2022 13:37	79.67
6/25/2022 12:28	51.28	6/25/2022 11:10	82.34	6/24/2022 9:33	20.63	6/24/2022 8:42	8.30	6/24/2022 13:38	79.50
6/25/2022 12:29	51.29	6/25/2022 11:11	82.30	6/24/2022 9:34	20.31	6/24/2022 8:43	8.39	6/24/2022 13:39	79.39
6/25/2022 12:30	51.31	6/25/2022 11:12	82.25	6/24/2022 9:35	20.05	6/24/2022 8:44	8.11	6/24/2022 13:40	79.25
6/25/2022 12:31	51.27	6/25/2022 11:13	82.20	6/24/2022 9:36	19.84	6/24/2022 8:45	8.13	6/24/2022 13:41	79.15
6/25/2022 12:32	51.26	6/25/2022 11:14	82.17	6/24/2022 9:37	19.64	6/24/2022 8:46	8.14	6/24/2022 13:42	79.02
6/25/2022 12:33	51.26	6/25/2022 11:15	82.10	6/24/2022 9:38	19.51	6/24/2022 8:47	7.99	6/24/2022 13:43	78.94
6/25/2022 12:34	51.25	6/25/2022 11:16	82.11	6/24/2022 9:39	19.34	6/24/2022 8:48	8.62	6/24/2022 13:44	78.82
6/25/2022 12:35	51.27	6/25/2022 11:17	82.08	6/24/2022 9:40	19.22	6/24/2022 8:49	8.29	6/24/2022 13:45	78.75
6/25/2022 12:36	51.23	6/25/2022 11:18	82.11	6/24/2022 9:41	19.14	6/24/2022 8:50	8.56	6/24/2022 13:46	78.65
6/25/2022 12:37	51.22	6/25/2022 11:19	82.09	6/24/2022 9:42	19.08	6/24/2022 8:51	8.61	6/24/2022 13:47	78.53
6/25/2022 12:38	51.21	6/25/2022 11:20	82.02	6/24/2022 9:43	18.98	6/24/2022 8:52	8.31	6/24/2022 13:48	78.44
6/25/2022 12:39	51.24	6/25/2022 11:21	82.01	6/24/2022 9:44	18.86	6/24/2022 8:53	8.23	6/24/2022 13:49	78.32
6/25/2022 12:40	51.22	6/25/2022 11:22	82.02	6/24/2022 9:45	18.83	6/24/2022 8:54	8.12	6/24/2022 13:50	78.24
6/25/2022 12:41	51.23	6/25/2022 11:23	81.96	6/24/2022 9:46	18.75	6/24/2022 8:55	8.08	6/24/2022 13:51	78.10
6/25/2022 12:42	51.17	6/25/2022 11:24	81.96	6/24/2022 9:47	18.66	6/24/2022 8:56	8.06	6/24/2022 13:52	78.01
6/25/2022 12:43	51.21	6/25/2022 11:25	81.96	6/24/2022 9:48	18.68	6/24/2022 8:57	8.05	6/24/2022 13:53	77.89
6/25/2022 12:44	51.17	6/25/2022 11:26	81.95	6/24/2022 9:49	18.60	6/24/2022 8:58	7.98	6/24/2022 13:54	77.77
6/25/2022 12:45	51.16	6/25/2022 11:27	81.93	6/24/2022 9:50	18.58	6/24/2022 8:59	7.93	6/24/2022 13:55	77.67
6/25/2022 12:46	51.20	6/25/2022 11:28	81.89	6/24/2022 9:51	18.51	6/24/2022 9:00	7.97	6/24/2022 13:56	77.59
6/25/2022 12:47	51.15	6/25/2022 11:29	81.90	6/24/2022 9:52	18.48	6/24/2022 9:01	7.94	6/24/2022 13:57	77.48
6/25/2022 12:48	51.13	6/25/2022 11:30	81.90	6/24/2022 9:53	18.46	6/24/2022 9:02	7.91	6/24/2022 13:58	77.40
6/25/2022 12:49	51.15	6/25/2022 11:31	81.87	6/24/2022 9:54	18.38	6/24/2022 9:03	7.88	6/24/2022 13:59	77.31
6/25/2022 12:50	51.15	6/25/2022 11:32	81.90	6/24/2022 9:55	18.32	6/24/2022 9:04	8.44	6/24/2022 14:00	77.18
6/25/2022 12:51	51.14	6/25/2022 11:33	81.81	6/24/2022 9:56	18.26	6/24/2022 9:05	8.16	6/24/2022 14:01	77.12
6/25/2022 12:52	51.16	6/25/2022 11:34	81.87	6/24/2022 9:57	18.27	6/24/2022 9:06	8.01	6/24/2022 14:02	77.00

6/25/2022 12:53	51.14	6/25/2022 11:35	81.85	6/24/2022 9:58	18.26	6/24/2022 9:07	7.98	6/24/2022 14:03	76.94
6/25/2022 12:54	51.11	6/25/2022 11:36	81.87	6/24/2022 9:59	18.20	6/24/2022 9:08	7.94	6/24/2022 14:04	76.85
6/25/2022 12:55	51.12	6/25/2022 11:37	81.81	6/24/2022 10:00	18.18	6/24/2022 9:09	7.89	6/24/2022 14:05	76.73
6/25/2022 12:56	51.15	6/25/2022 11:38	81.81	6/24/2022 10:01	18.15	6/24/2022 9:10	7.92	6/24/2022 14:06	76.68
6/25/2022 12:57	51.13	6/25/2022 11:39	81.82	6/24/2022 10:02	18.13	6/24/2022 9:11	7.81	6/24/2022 14:07	76.57
6/25/2022 12:58	51.13	6/25/2022 11:40	81.80	6/24/2022 10:03	18.09	6/24/2022 9:12	7.78	6/24/2022 14:08	76.50
6/25/2022 12:59	51.06	6/25/2022 11:41	81.83	6/24/2022 10:04	18.04	6/24/2022 9:13	7.82	6/24/2022 14:09	76.41
6/25/2022 13:00	51.13	6/25/2022 11:42	81.80	6/24/2022 10:05	18.06	6/24/2022 9:14	7.78	6/24/2022 14:10	76.32
6/25/2022 13:01	51.09	6/25/2022 11:43	81.81	6/24/2022 10:06	18.01	6/24/2022 9:15	7.75	6/24/2022 14:11	76.18
6/25/2022 13:02	51.11	6/25/2022 11:44	81.81	6/24/2022 10:07	17.98	6/24/2022 9:16	7.69	6/24/2022 14:12	76.09
6/25/2022 13:03	51.10	6/25/2022 11:45	81.78	6/24/2022 10:08	17.99	6/24/2022 9:17	7.67	6/24/2022 14:13	76.04
6/25/2022 13:04	51.10	6/25/2022 11:46	81.78	6/24/2022 10:09	17.95	6/24/2022 9:18	7.69	6/24/2022 14:14	75.92
6/25/2022 13:05	51.09	6/25/2022 11:47	81.82	6/24/2022 10:10	17.95	6/24/2022 9:19	7.82	6/24/2022 14:15	75.89
6/25/2022 13:06	51.12	6/25/2022 11:48	81.82	6/24/2022 10:11	17.93	6/24/2022 9:20	7.94	6/24/2022 14:16	75.73
6/25/2022 13:07	51.10	6/25/2022 11:49	81.80	6/24/2022 10:12	17.91	6/24/2022 9:21	8.21	6/24/2022 14:17	75.67
6/25/2022 13:08	51.09	6/25/2022 11:50	81.78	6/24/2022 10:13	17.89	6/24/2022 9:22	7.95	6/24/2022 14:18	75.61
6/25/2022 13:09	51.07	6/25/2022 11:51	81.72	6/24/2022 10:14	17.85	6/24/2022 9:23	7.85	6/24/2022 14:19	75.47
6/25/2022 13:10	51.08	6/25/2022 11:52	81.79	6/24/2022 10:15	17.92	6/24/2022 9:24	7.80	6/24/2022 14:20	75.42
6/25/2022 13:11	51.09	6/25/2022 11:53	81.78	6/24/2022 10:16	17.87	6/24/2022 9:25	7.79	6/24/2022 14:21	75.32
6/25/2022 13:12	51.09	6/25/2022 11:54	81.78	6/24/2022 10:17	17.85	6/24/2022 9:26	7.74	6/24/2022 14:22	75.25
6/25/2022 13:13	51.09	6/25/2022 11:55	81.79	6/24/2022 10:18	17.84	6/24/2022 9:27	7.68	6/24/2022 14:23	75.19
6/25/2022 13:14	51.08	6/25/2022 11:56	81.82	6/24/2022 10:19	17.82	6/24/2022 9:28	7.63	6/24/2022 14:24	75.09
6/25/2022 13:15	51.11	6/25/2022 11:57	81.82	6/24/2022 10:20	17.77	6/24/2022 9:29	7.62	6/24/2022 14:25	75.01
6/25/2022 13:16	51.10	6/25/2022 11:58	81.76	6/24/2022 10:21	17.77	6/24/2022 9:30	7.59	6/24/2022 14:26	74.92
6/25/2022 13:17	51.07	6/25/2022 11:59	81.75	6/24/2022 10:22	17.77	6/24/2022 9:31	7.65	6/24/2022 14:27	74.88
6/25/2022 13:18	51.07	6/25/2022 12:00	81.74	6/24/2022 10:23	17.76	6/24/2022 9:32	7.57	6/24/2022 14:28	74.75
6/25/2022 13:19	51.05	6/25/2022 12:01	81.81	6/24/2022 10:24	17.75	6/24/2022 9:33	7.59	6/24/2022 14:29	74.70
6/25/2022 13:20	51.00	6/25/2022 12:02	81.79	6/24/2022 10:25	17.77	6/24/2022 9:34	7.56	6/24/2022 14:30	74.60
6/25/2022 13:21	51.04	6/25/2022 12:03	81.78	6/24/2022 10:26	17.71	6/24/2022 9:35	7.51	6/24/2022 14:31	74.53
6/25/2022 13:22	51.03	6/25/2022 12:04	81.74	6/24/2022 10:27	17.73	6/24/2022 9:36	7.48	6/24/2022 14:32	74.45
6/25/2022 13:23	51.03	6/25/2022 12:05	81.77	6/24/2022 10:28	17.69	6/24/2022 9:37	7.53	6/24/2022 14:33	74.37
6/25/2022 13:24	51.05	6/25/2022 12:06	81.78	6/24/2022 10:29	17.68	6/24/2022 9:38	7.53	6/24/2022 14:34	74.33
6/25/2022 13:25	51.06	6/25/2022 12:07	81.79	6/24/2022 10:30	17.68	6/24/2022 9:39	7.44	6/24/2022 14:35	74.26
6/25/2022 13:26	51.04	6/25/2022 12:08	81.77	6/24/2022 10:31	17.65	6/24/2022 9:40	7.45	6/24/2022 14:36	74.17
6/25/2022 13:27	51.08	6/25/2022 12:09	81.76	6/24/2022 10:32	17.66	6/24/2022 9:41	7.43	6/24/2022 14:37	74.10
6/25/2022 13:28	51.04	6/25/2022 12:10	81.77	6/24/2022 10:33	17.65	6/24/2022 9:42	7.48	6/24/2022 14:38	74.06
6/25/2022 13:29	51.02	6/25/2022 12:11	81.75	6/24/2022 10:34	17.64	6/24/2022 9:43	7.41	6/24/2022 14:39	73.97
6/25/2022 13:30	51.02	6/25/2022 12:12	81.82	6/24/2022 10:35	17.57	6/24/2022 9:44	7.46	6/24/2022 14:40	73.88
6/25/2022 13:31	51.02	6/25/2022 12:13	81.74	6/24/2022 10:36	17.62	6/24/2022 9:45	7.42	6/24/2022 14:41	73.82
6/25/2022 13:32	51.03	6/25/2022 12:14	81.75	6/24/2022 10:37	17.56	6/24/2022 9:46	7.40	6/24/2022 14:42	73.73
6/25/2022 13:33	51.04	6/25/2022 12:15	81.73	6/24/2022 10:38	17.59	6/24/2022 9:47	7.42	6/24/2022 14:43	78.76
6/25/2022 13:34	50.98	6/25/2022 12:16	81.77	6/24/2022 10:39	17.54	6/24/2022 9:48	7.38	6/24/2022 14:44	78.63
6/25/2022 13:35	51.04	6/25/2022 12:17	81.73	6/24/2022 10:40	17.53	6/24/2022 9:49	7.29	6/24/2022 14:45	78.47
6/25/2022 13:36	51.01	6/25/2022 12:18	81.79	6/24/2022 10:41	17.54	6/24/2022 9:50	7.35	6/24/2022 14:46	78.38
6/25/2022 13:37	50.99	6/25/2022 12:19	81.77	6/24/2022 10:42	17.55	6/24/2022 9:51	7.31	6/24/2022 14:47	78.23
6/25/2022 13:38	51.06	6/25/2022 12:20	81.78	6/24/2022 10:43	17.52	6/24/2022 9:52	7.32	6/24/2022 14:48	78.11
6/25/2022 13:39	51.05	6/25/2022 12:21	81.74	6/24/2022 10:44	17.55	6/24/2022 9:53	7.51	6/24/2022 14:49	77.96
6/25/2022 13:40	51.04	6/25/2022 12:22	81.77	6/24/2022 10:45	17.53	6/24/2022 9:54	7.37	6/24/2022 14:50	77.86
6/25/2022 13:41	51.02	6/25/2022 12:23	81.73	6/24/2022 10:46	17.54	6/24/2022 9:55	7.48	6/24/2022 14:51	77.73
6/25/2022 13:42	50.97	6/25/2022 12:24	81.77	6/24/2022 10:47	17.44	6/24/2022 9:56	7.77	6/24/2022 14:52	77.63
6/25/2022 13:43	51.02	6/25/2022 12:25	81.77	6/24/2022 10:48	17.46	6/24/2022 9:57	7.50	6/24/2022 14:53	77.48
6/25/2022 13:44	50.99	6/25/2022 12:26	81.72	6/24/2022 10:49	17.47	6/24/2022 9:58	7.44	6/24/2022 14:54	77.39
6/25/2022 13:45	51.01	6/25/2022 12:27	81.70	6/24/2022 10:50	17.49	6/24/2022 9:59	7.36	6/24/2022 14:55	77.29
6/25/2022 13:46	51.02	6/25/2022 12:28	81.79	6/24/2022 10:51	17.44	6/24/2022 10:00	7.30	6/24/2022 14:56	77.21
6/25/2022 13:47	51.01	6/25/2022 12:29	81.73	6/24/2022 10:52	17.45	6/24/2022 10:01	7.31	6/24/2022 14:57	77.12
6/25/2022 13:48	51.00	6/25/2022 12:30	81.73	6/24/2022 10:53	17.42	6/24/2022 10:02	7.31	6/24/2022 14:58	77.02
6/25/2022 13:49	51.02	6/25/2022 12:31	81.76	6/24/2022 10:54	17.45	6/24/2022 10:03	7.26	6/24/2022 14:59	76.93
6/25/2022 13:50	51.03	6/25/2022 12:32	81.75	6/24/2022 10:55	17.45	6/24/2022 10:04	7.27	6/24/2022 15:00	76.84
6/25/2022 13:51	51.00	6/25/2022 12:33	81.77	6/24/2022 10:56	17.39	6/24/2022 10:05	7.21	6/24/2022 15:01	76.76
6/25/2022 13:52	50.97	6/25/2022 12:34	81.74	6/24/2022 10:57	17.42	6/24/2022 10:06	7.27	6/24/2022 15:02	76.66
6/25/2022 13:53	50.99	6/25/2022 12:35	81.75	6/24/2022 10:58	17.43	6/24/2022 10:07	7.28	6/24/2022 15:03	76.54
6/25/2022 13:54	50.96	6/25/2022 12:36	81.73	6/24/2022 10:59	17.39	6/24/2022 10:08	7.14	6/24/2022 15:04	76.44
6/25/2022 13:55	50.98	6/25/2022 12:37	81.72	6/24/2022 11:00	17.36	6/24/2022 10:09	7.20	6/24/2022 15:05	76.38
6/25/2022 13:56	50.99	6/25/2022 12:38	81.76	6/24/2022 11:01	17.37	6/24/2022 10:10	7.16	6/24/2022 15:06	76.29
6/25/2022 13:57	50.95	6/25/2022 12:39	81.74	6/24/2022 11:02	17.37	6/24/2022 10:11	7.17	6/24/2022 15:07	76.14
6/25/2022 13:58	51.00	6/25/2022 12:40	81.76	6/24/2022 11:03	17.36	6/24/2022 10:12	7.27	6/24/2022 15:08	76.08
6/25/2022 13:59	50.99	6/25/2022 12:41	81.76	6/24/2022 11:04	17.36	6/24/2022 10:13	7.40	6/24/2022 15:09	75.94
6/25/2022 14:00	50.99	6/25/2022 12:42	81.75	6/24/2022 11:05	17.36	6/24/2022 10:14	7.48	6/24/2022 15:10	75.90
6/25/2022 14:01	50.97	6/25/2022 12:43	81.73	6/24/2022 11:06	17.34	6/24/2022 10:15	7.51	6/24/2022 15:11	75.78
6/25/2022 14:02	50.97	6/25/2022 12:44	81.74	6/24/2022 11:07	17.35	6/24/2022 10:16	7.69	6/24/2022 15:12	75.69
6/25/2022 14:03	50.96	6/25/2022 12:45	81.69	6/24/2022 11:08	17.31	6/24/2022 10:17	7.98	6/24/2022 15:13	75.63
6/25/2022 14:04	50.94	6/25/2022 12:46	81.73	6/24/2022 11:09	17.34	6/24/2022 10:18	7.53	6/24/2022 15:14	75.53
6/25/2022 14:05	50.96	6/25/2022 12:47	81.71	6/24/2022 11:10	17.36	6/24/2022 10:19	7.54	6/24/2022 15:15	75.44
6/25/2022 14:06	50.97	6/25/2022 12:48	81.72	6/24/2022 11:11	17.29	6/24/2022 10:20	7.81	6/24/2022 15:16	75.39
6/25/2022 14:07	50.95	6/25/2022 12:49	81.72	6/24/2022 11:12	17.34	6/24/2022 10:21	7.53	6/24/2022 15:17	75.32
6/25/2022 14:08	51.00	6/25/2022 12:50	81.73	6/24/2022 11:13	17.29	6/24/2022 10:22	7.39	6/24/2022 15:18	75.19
6/25/2022 14:09	50.96	6/25/2022 12:51	81.75	6/24/2022 11:14	17.32	6/24/2022 10:23	7.34	6/24/2022 15:19	75.14
6/25/2022 14:10	50.95	6/25/2022 12:52	81.72	6/24/2022 11:15	17.28	6/24/2022 10:24	7.58	6/24/2022 15:20	75.02
6/25/2022 14:11	50.96	6/25/2022 12:53	81.73	6/24/2022 11:16	17.30	6/24/2022 10:25	7.45	6/24/2022 15:21	74.96
6/25/2022 14:12	50.95	6/25/2022 12:54	81.73	6/24/2022 11:17	17.30	6/24/2022 10:26	7.37	6/24/2022 15:22	74.86
6/25/2022 14:13	50.97	6/25/2022 12:55	81.71	6/24/2022 11:18	17.31	6/24/2022 10:27	7.25	6/24/2022 15:23	74.82
6/25/2022 14:14	50.99	6/25/2022 12:56	81.74	6/24/2022 11:19	17.31	6/24/2022 10:28	7.41	6/24/2022 15:24	74.72
6/25/2022 14:15	50.95	6/25/2022 12:57	81.72	6/24/2022 11:20	17.28	6/24/2022 10:29	7.50	6/24/2022 15:25	74.63
6/25/2022 14:16	50.93	6/25/2022 12:58	81.74	6/24/2022 11:21	17.30	6/24/2022 10:30	7.58	6/24/2022 15:26	74.56
6/25/2022 14:17	50.96	6/25/2022 12:59	81.74	6/24/2022 11:22	17.22	6/24/2022 10:31	7.35	6/24/2022 15:27	74.51
6/25/2022 14:18	50.95	6/25/2022 13:00	81.78	6/24/2022 11:23	17.26	6/24/2022 10:32	7.30	6/24/2022 15:28	74.42
6/25/2022 14:19	50.95	6/25/2022 13:01	81.69	6/24/2022 11:24	17.26	6/24/2022 10:33	7.22	6/24/2022 15:29	74.32
6/25/2022 14:20	50.95	6/25/2022 13:02	81.71	6/24/2022 11:25	17.24	6/24/2022 10:34	7.20	6/24/2022 15:30	74.23

6/25/2022 14:21	50.94	6/25/2022 13:03	81.77	6/24/2022 11:26	17.29	6/24/2022 10:35	7.61	6/24/2022 15:31	74.19
6/25/2022 14:22	50.93	6/25/2022 13:04	81.76	6/24/2022 11:27	17.23	6/24/2022 10:36	7.50	6/24/2022 15:32	74.15
6/25/2022 14:23	50.94	6/25/2022 13:05	81.76	6/24/2022 11:28	17.23	6/24/2022 10:37	7.53	6/24/2022 15:33	74.04
6/25/2022 14:24	50.92	6/25/2022 13:06	81.72	6/24/2022 11:29	17.27	6/24/2022 10:38	7.38	6/24/2022 15:34	78.17
6/25/2022 14:25	50.92	6/25/2022 13:07	81.77	6/24/2022 11:30	17.24	6/24/2022 10:39	7.29	6/24/2022 15:35	78.84
6/25/2022 14:26	50.95	6/25/2022 13:08	81.69	6/24/2022 11:31	17.25	6/24/2022 10:40	7.19	6/24/2022 15:36	78.69
6/25/2022 14:27	50.94	6/25/2022 13:09	81.75	6/24/2022 11:32	17.21	6/24/2022 10:41	7.15	6/24/2022 15:37	78.56
6/25/2022 14:28	50.93	6/25/2022 13:10	81.75	6/24/2022 11:33	17.22	6/24/2022 10:42	7.17	6/24/2022 15:38	78.44
6/25/2022 14:29	50.93	6/25/2022 13:11	81.71	6/24/2022 11:34	17.24	6/24/2022 10:43	7.13	6/24/2022 15:39	78.33
6/25/2022 14:30	50.94	6/25/2022 13:12	81.76	6/24/2022 11:35	17.23	6/24/2022 10:44	7.19	6/24/2022 15:40	78.23
6/25/2022 14:31	50.93	6/25/2022 13:13	81.76	6/24/2022 11:36	17.18	6/24/2022 10:45	7.07	6/24/2022 15:41	78.15
6/25/2022 14:32	50.96	6/25/2022 13:14	81.74	6/24/2022 11:37	17.19	6/24/2022 10:46	7.27	6/24/2022 15:42	77.97
6/25/2022 14:33	50.93	6/25/2022 13:15	81.75	6/24/2022 11:38	17.22	6/24/2022 10:47	7.32	6/24/2022 15:43	77.86
6/25/2022 14:34	50.94	6/25/2022 13:16	81.72	6/24/2022 11:39	17.21	6/24/2022 10:48	7.41	6/24/2022 15:44	77.75
6/25/2022 14:35	50.96	6/25/2022 13:17	81.73	6/24/2022 11:40	17.16	6/24/2022 10:49	7.34	6/24/2022 15:45	77.66
6/25/2022 14:36	50.91	6/25/2022 13:18	81.72	6/24/2022 11:41	17.23	6/24/2022 10:50	7.15	6/24/2022 15:46	77.53
6/25/2022 14:37	50.95	6/25/2022 13:19	81.72	6/24/2022 11:42	17.17	6/24/2022 10:51	7.20	6/24/2022 15:47	77.40
6/25/2022 14:38	50.91	6/25/2022 13:20	81.69	6/24/2022 11:43	17.22	6/24/2022 10:52	7.08	6/24/2022 15:48	77.33
6/25/2022 14:39	50.90	6/25/2022 13:21	81.73	6/24/2022 11:44	17.22	6/24/2022 10:53	7.03	6/24/2022 15:49	77.21
6/25/2022 14:40	50.94	6/25/2022 13:22	81.73	6/24/2022 11:45	17.21	6/24/2022 10:54	7.00	6/24/2022 15:50	77.10
6/25/2022 14:41	50.94	6/25/2022 13:23	81.74	6/24/2022 11:46	17.18	6/24/2022 10:55	7.11	6/24/2022 15:51	77.05
6/25/2022 14:42	50.92	6/25/2022 13:24	81.74	6/24/2022 11:47	17.17	6/24/2022 10:56	7.07	6/24/2022 15:52	76.96
6/25/2022 14:43	50.93	6/25/2022 13:25	81.69	6/24/2022 11:48	17.16	6/24/2022 10:57	7.04	6/24/2022 15:53	76.86
6/25/2022 14:44	50.93	6/25/2022 13:26	81.76	6/24/2022 11:49	17.18	6/24/2022 10:58	7.04	6/24/2022 15:54	76.76
6/25/2022 14:45	50.94	6/25/2022 13:27	81.73	6/24/2022 11:50	17.17	6/24/2022 10:59	6.94	6/24/2022 15:55	76.68
6/25/2022 14:46	50.94	6/25/2022 13:28	81.74	6/24/2022 11:51	17.13	6/24/2022 11:00	6.94	6/24/2022 15:56	76.56
6/25/2022 14:47	50.92	6/25/2022 13:29	81.76	6/24/2022 11:52	17.16	6/24/2022 11:01	6.94	6/24/2022 15:57	76.46
6/25/2022 14:48	50.91	6/25/2022 13:30	81.72	6/24/2022 11:53	17.18	6/24/2022 11:02	6.89	6/24/2022 15:58	76.39
6/25/2022 14:49	50.90	6/25/2022 13:31	81.73	6/24/2022 11:54	17.14	6/24/2022 11:03	6.91	6/24/2022 15:59	76.25
6/25/2022 14:50	50.96	6/25/2022 13:32	81.75	6/24/2022 11:55	17.10	6/24/2022 11:04	6.94	6/24/2022 16:00	76.15
6/25/2022 14:51	50.95	6/25/2022 13:33	81.73	6/24/2022 11:56	17.15	6/24/2022 11:05	6.93	6/24/2022 16:01	76.12
6/25/2022 14:52	50.88	6/25/2022 13:34	81.72	6/24/2022 11:57	17.10	6/24/2022 11:06	6.88	6/24/2022 16:02	76.05
6/25/2022 14:53	50.93	6/25/2022 13:35	81.70	6/24/2022 11:58	17.16	6/24/2022 11:07	6.82	6/24/2022 16:03	75.92
6/25/2022 14:54	50.91	6/25/2022 13:36	81.74	6/24/2022 11:59	17.15	6/24/2022 11:08	6.84	6/24/2022 16:04	75.82
6/25/2022 14:55	50.92	6/25/2022 13:37	81.74	6/24/2022 12:00	17.10	6/24/2022 11:09	6.89	6/24/2022 16:05	75.72
6/25/2022 14:56	50.96	6/25/2022 13:38	81.73	6/24/2022 12:01	17.10	6/24/2022 11:10	6.82	6/24/2022 16:06	75.61
6/25/2022 14:57	50.92	6/25/2022 13:39	81.72	6/24/2022 12:02	17.07	6/24/2022 11:11	6.77	6/24/2022 16:07	75.51
6/25/2022 14:58	50.90	6/25/2022 13:40	81.74	6/24/2022 12:03	17.10	6/24/2022 11:12	6.97	6/24/2022 16:08	75.44
6/25/2022 14:59	50.94	6/25/2022 13:41	81.75	6/24/2022 12:04	17.15	6/24/2022 11:13	6.96	6/24/2022 16:09	75.38
6/25/2022 15:00	50.95	6/25/2022 13:42	81.73	6/24/2022 12:05	17.09	6/24/2022 11:14	7.05	6/24/2022 16:10	75.29
6/25/2022 15:01	50.93	6/25/2022 13:43	81.71	6/24/2022 12:06	17.12	6/24/2022 11:15	6.85	6/24/2022 16:11	75.22
6/25/2022 15:02	50.89	6/25/2022 13:44	81.75	6/24/2022 12:07	17.12	6/24/2022 11:16	6.96	6/24/2022 16:12	75.12
6/25/2022 15:03	50.90	6/25/2022 13:45	81.74	6/24/2022 12:08	17.06	6/24/2022 11:17	7.05	6/24/2022 16:13	75.05
6/25/2022 15:04	50.89	6/25/2022 13:46	81.73	6/24/2022 12:09	17.14	6/24/2022 11:18	7.10	6/24/2022 16:14	74.96
6/25/2022 15:05	50.89	6/25/2022 13:47	81.71	6/24/2022 12:10	17.08	6/24/2022 11:19	6.98	6/24/2022 16:15	74.88
6/25/2022 15:06	50.90	6/25/2022 13:48	81.71	6/24/2022 12:11	17.08	6/24/2022 11:20	6.92	6/24/2022 16:16	74.81
6/25/2022 15:07	50.93	6/25/2022 13:49	81.73	6/24/2022 12:12	17.11	6/24/2022 11:21	6.86	6/24/2022 16:17	74.74
6/25/2022 15:08	50.88	6/25/2022 13:50	81.74	6/24/2022 12:13	17.11	6/24/2022 11:22	6.79	6/24/2022 16:18	74.65
6/25/2022 15:09	50.88	6/25/2022 13:51	81.71	6/24/2022 12:14	17.09	6/24/2022 11:23	6.80	6/24/2022 16:19	74.58
6/25/2022 15:10	50.93	6/25/2022 13:52	81.72	6/24/2022 12:15	17.07	6/24/2022 11:24	6.85	6/24/2022 16:20	74.47
6/25/2022 15:11	50.91	6/25/2022 13:53	81.74	6/24/2022 12:16	17.07	6/24/2022 11:25	6.75	6/24/2022 16:21	74.37
6/25/2022 15:12	50.92	6/25/2022 13:54	81.74	6/24/2022 12:17	17.08	6/24/2022 11:26	6.72	6/24/2022 16:22	74.36
6/25/2022 15:13	50.89	6/25/2022 13:55	81.74	6/24/2022 12:18	17.05	6/24/2022 11:27	6.73	6/24/2022 16:23	74.27
6/25/2022 15:14	50.89	6/25/2022 13:56	81.72	6/24/2022 12:19	17.04	6/24/2022 11:28	6.77	6/24/2022 16:24	74.22
6/25/2022 15:15	50.92	6/25/2022 13:57	81.74	6/24/2022 12:20	17.11	6/24/2022 11:29	7.10	6/24/2022 16:25	74.12
6/25/2022 15:16	50.92	6/25/2022 13:58	81.75	6/24/2022 12:21	17.04	6/24/2022 11:30	6.81	6/24/2022 16:26	74.07
6/25/2022 15:17	50.91	6/25/2022 13:59	81.70	6/24/2022 12:22	17.07	6/24/2022 11:31	6.78	6/24/2022 16:27	74.02
6/25/2022 15:18	50.90	6/25/2022 14:00	81.71	6/24/2022 12:23	17.07	6/24/2022 11:32	6.80	6/24/2022 16:28	73.94
6/25/2022 15:19	50.91	6/25/2022 14:01	81.73	6/24/2022 12:24	17.07	6/24/2022 11:33	6.69	6/24/2022 16:29	73.83
6/25/2022 15:20	50.88	6/25/2022 14:02	81.72	6/24/2022 12:25	17.05	6/24/2022 11:34	6.70	6/24/2022 16:30	73.78
6/25/2022 15:21	50.91	6/25/2022 14:03	81.72	6/24/2022 12:26	17.05	6/24/2022 11:35	6.68	6/24/2022 16:31	73.74
6/25/2022 15:22	50.90	6/25/2022 14:04	81.73	6/24/2022 12:27	17.07	6/24/2022 11:36	6.63	6/24/2022 16:32	73.63
6/25/2022 15:23	50.87	6/25/2022 14:05	81.70	6/24/2022 12:28	17.03	6/24/2022 11:37	6.67	6/24/2022 16:33	73.59
6/25/2022 15:24	50.86	6/25/2022 14:06	81.71	6/24/2022 12:29	17.06	6/24/2022 11:38	6.68	6/24/2022 16:34	73.53
6/25/2022 15:25	50.90	6/25/2022 14:07	81.73	6/24/2022 12:30	17.07	6/24/2022 11:39	6.70	6/24/2022 16:35	73.47
6/25/2022 15:26	50.92	6/25/2022 14:08	81.68	6/24/2022 12:31	17.07	6/24/2022 11:40	6.58	6/24/2022 16:36	73.37
6/25/2022 15:27	50.88	6/25/2022 14:09	81.73	6/24/2022 12:32	17.03	6/24/2022 11:41	6.61	6/24/2022 16:37	73.34
6/25/2022 15:28	50.89	6/25/2022 14:10	81.75	6/24/2022 12:33	17.06	6/24/2022 11:42	6.59	6/24/2022 16:38	73.33
6/25/2022 15:29	50.91	6/25/2022 14:11	81.73	6/24/2022 12:34	17.00	6/24/2022 11:43	6.61	6/24/2022 16:39	73.18
6/25/2022 15:30	50.89	6/25/2022 14:12	81.77	6/24/2022 12:35	17.03	6/24/2022 11:44	6.58	6/24/2022 16:40	73.14
6/25/2022 15:31	50.89	6/25/2022 14:13	81.71	6/24/2022 12:36	17.07	6/24/2022 11:45	6.59	6/24/2022 16:41	73.09
6/25/2022 15:32	50.90	6/25/2022 14:14	81.75	6/24/2022 12:37	17.05	6/24/2022 11:46	6.57	6/24/2022 16:42	73.04
6/25/2022 15:33	50.88	6/25/2022 14:15	81.71	6/24/2022 12:38	17.02	6/24/2022 11:47	6.54	6/24/2022 16:43	72.99
6/25/2022 15:34	50.91	6/25/2022 14:16	81.73	6/24/2022 12:39	17.02	6/24/2022 11:48	6.54	6/24/2022 16:44	72.95
6/25/2022 15:35	50.91	6/25/2022 14:17	81.75	6/24/2022 12:40	17.04	6/24/2022 11:49	6.53	6/24/2022 16:45	72.86
6/25/2022 15:36	50.92	6/25/2022 14:18	81.74	6/24/2022 12:41	17.04	6/24/2022 11:50	6.55	6/24/2022 16:46	72.82
6/25/2022 15:37	50.88	6/25/2022 14:19	81.72	6/24/2022 12:42	17.00	6/24/2022 11:51	6.52	6/24/2022 16:47	72.77
6/25/2022 15:38	50.91	6/25/2022 14:20	81.73	6/24/2022 12:43	17.06	6/24/2022 11:52	6.50	6/24/2022 16:48	72.74
6/25/2022 15:39	50.88	6/25/2022 14:21	81.73	6/24/2022 12:44	17.01	6/24/2022 11:53	6.55	6/24/2022 16:49	72.66
6/25/2022 15:40	50.90	6/25/2022 14:22	81.71	6/24/2022 12:45	17.08	6/24/2022 11:54	6.68	6/24/2022 16:50	72.61
6/25/2022 15:41	50.86	6/25/2022 14:23	81.70	6/24/2022 12:46	17.04	6/24/2022 11:55	6.52	6/24/2022 16:51	72.54
6/25/2022 15:42	50.88	6/25/2022 14:24	81.71	6/24/2022 12:47	17.04	6/24/2022 11:56	6.57	6/24/2022 16:52	72.50
6/25/2022 15:43	50.88	6/25/2022 14:25	81.71	6/24/2022 12:48	17.01	6/24/2022 11:57	6.52	6/24/2022 16:53	72.48
6/25/2022 15:44	50.90	6/25/2022 14:26	81.74	6/24/2022 12:49	17.02	6/24/2022 11:58	6.49	6/24/2022 16:54	72.35
6/25/2022 15:45	50.91	6/25/2022 14:27	81.66	6/24/2022 12:50	17.01	6/24/2022 11:59	6.69	6/24/2022 16:55	72.36
6/25/2022 15:46	50.86	6/25/2022 14:28	81.73	6/24/2022 12:51	16.99	6/24/2022 12:00	6.66	6/24/2022 16:56	72.27
6/25/2022 15:47	50.87	6/25/2022 14:29	81.66	6/24/2022 12:52	17.05	6/24/2022 12:01	6.59	6/24/2022 16:57	72.23
6/25/2022 15:48	50.90	6/25/2022 14:30	81.67	6/24/2022 12:53	17.02	6/24/2022 12:02	6.50	6/24/2022 16:58	72.16

6/25/2022 15:49	50.85	6/25/2022 14:31	81.73	6/24/2022 12:54	17.04	6/24/2022 12:03	6.50	6/24/2022 16:59	72.15
6/25/2022 15:50	50.88	6/25/2022 14:32	81.71	6/24/2022 12:55	17.03	6/24/2022 12:04	6.48	6/24/2022 17:00	72.07
6/25/2022 15:51	50.90	6/25/2022 14:33	81.72	6/24/2022 12:56	17.00	6/24/2022 12:05	6.53	6/24/2022 17:01	72.04
6/25/2022 15:52	50.89	6/25/2022 14:34	81.71	6/24/2022 12:57	17.04	6/24/2022 12:06	6.45	6/24/2022 17:02	72.01
6/25/2022 15:53	50.88	6/25/2022 14:35	81.66	6/24/2022 12:58	17.07	6/24/2022 12:07	6.42	6/24/2022 17:03	71.96
6/25/2022 15:54	50.91	6/25/2022 14:36	81.72	6/24/2022 12:59	17.03	6/24/2022 12:08	6.78	6/24/2022 17:04	71.90
6/25/2022 15:55	50.87	6/25/2022 14:37	81.74	6/24/2022 13:00	17.04	6/24/2022 12:09	6.60	6/24/2022 17:05	71.83
6/25/2022 15:56	50.89	6/25/2022 14:38	81.72	6/24/2022 13:01	17.00	6/24/2022 12:10	6.55	6/24/2022 17:06	71.78
6/25/2022 15:57	50.89	6/25/2022 14:39	81.73	6/24/2022 13:02	17.01	6/24/2022 12:11	6.50	6/24/2022 17:07	71.71
6/25/2022 15:58	50.90	6/25/2022 14:40	81.73	6/24/2022 13:03	16.99	6/24/2022 12:12	6.46	6/24/2022 17:08	71.71
6/25/2022 15:59	50.88	6/25/2022 14:41	81.67	6/24/2022 13:04	16.99	6/24/2022 12:13	6.45	6/24/2022 17:09	71.69
6/25/2022 16:00	50.88	6/25/2022 14:42	81.73	6/24/2022 13:05	17.04	6/24/2022 12:14	6.50	6/24/2022 17:10	71.62
6/25/2022 16:01	50.89	6/25/2022 14:43	81.75	6/24/2022 13:06	17.00	6/24/2022 12:15	6.42	6/24/2022 17:11	71.60
6/25/2022 16:02	50.86	6/25/2022 14:44	81.70	6/24/2022 13:07	17.01	6/24/2022 12:16	6.38	6/24/2022 17:12	71.56
6/25/2022 16:03	50.89	6/25/2022 14:45	81.69	6/24/2022 13:08	16.97	6/24/2022 12:17	6.36	6/24/2022 17:13	71.49
6/25/2022 16:04	50.86	6/25/2022 14:46	81.80	6/24/2022 13:09	17.02	6/24/2022 12:18	6.42	6/24/2022 17:14	71.41
6/25/2022 16:05	50.88	6/25/2022 14:47	81.73	6/24/2022 13:10	16.99	6/24/2022 12:19	6.35	6/24/2022 17:15	71.39
6/25/2022 16:06	50.84	6/25/2022 14:48	81.75	6/24/2022 13:11	17.00	6/24/2022 12:20	6.39	6/24/2022 17:16	71.35
6/25/2022 16:07	50.84	6/25/2022 14:49	81.75	6/24/2022 13:12	17.00	6/24/2022 12:21	6.35	6/24/2022 17:17	71.87
6/25/2022 16:08	50.88	6/25/2022 14:50	81.76	6/24/2022 13:13	17.00	6/24/2022 12:22	6.31	6/24/2022 17:18	76.91
6/25/2022 16:09	50.90	6/25/2022 14:51	81.73	6/24/2022 13:14	16.99	6/24/2022 12:23	6.33	6/24/2022 17:19	76.79
6/25/2022 16:10	50.86	6/25/2022 14:52	81.70	6/24/2022 13:15	17.00	6/24/2022 12:24	6.36	6/24/2022 17:20	76.60
6/25/2022 16:11	50.87	6/25/2022 14:53	81.73	6/24/2022 13:16	17.03	6/24/2022 12:25	6.31	6/24/2022 17:21	76.47
6/25/2022 16:12	50.83	6/25/2022 14:54	81.74	6/24/2022 13:17	17.00	6/24/2022 12:26	6.33	6/24/2022 17:22	76.33
6/25/2022 16:13	50.86	6/25/2022 14:55	81.75	6/24/2022 13:18	16.99	6/24/2022 12:27	6.30	6/24/2022 17:23	76.26
6/25/2022 16:14	50.84	6/25/2022 14:56	81.72	6/24/2022 13:19	21.57	6/24/2022 12:28	6.34	6/24/2022 17:24	76.12
6/25/2022 16:15	50.87	6/25/2022 14:57	81.75	6/24/2022 13:20	25.31	6/24/2022 12:29	6.26	6/24/2022 17:25	76.04
6/25/2022 16:16	50.87	6/25/2022 14:58	81.72	6/24/2022 13:21	27.70	6/24/2022 12:30	6.27	6/24/2022 17:26	75.89
6/25/2022 16:17	50.87	6/25/2022 14:59	81.71	6/24/2022 13:22	26.31	6/24/2022 12:31	6.26	6/24/2022 17:27	75.80
6/25/2022 16:18	50.88	6/25/2022 15:00	81.75	6/24/2022 13:23	23.89	6/24/2022 12:32	6.20	6/24/2022 17:28	75.70
6/25/2022 16:19	50.84	6/25/2022 15:01	81.74	6/24/2022 13:24	22.46	6/24/2022 12:33	6.22	6/24/2022 17:29	75.61
6/25/2022 16:20	50.85	6/25/2022 15:02	81.77	6/24/2022 13:25	21.58	6/24/2022 12:34	6.28	6/24/2022 17:30	75.50
6/25/2022 16:21	50.86	6/25/2022 15:03	81.71	6/24/2022 13:26	20.99	6/24/2022 12:35	6.31	6/24/2022 17:31	75.41
6/25/2022 16:22	50.84	6/25/2022 15:04	81.71	6/24/2022 13:27	20.59	6/24/2022 12:36	6.24	6/24/2022 17:32	75.28
6/25/2022 16:23	50.87	6/25/2022 15:05	81.77	6/24/2022 13:28	20.24	6/24/2022 12:37	6.23	6/24/2022 17:33	75.21
6/25/2022 16:24	50.87	6/25/2022 15:06	81.71	6/24/2022 13:29	19.97	6/24/2022 12:38	6.28	6/24/2022 17:34	75.12
6/25/2022 16:25	50.87	6/25/2022 15:07	81.77	6/24/2022 13:30	19.82	6/24/2022 12:39	6.23	6/24/2022 17:35	75.04
6/25/2022 16:26	50.83	6/25/2022 15:08	81.71	6/24/2022 13:31	23.42	6/24/2022 12:40	6.20	6/24/2022 17:36	74.91
6/25/2022 16:27	50.88	6/25/2022 15:09	81.72	6/24/2022 13:32	27.27	6/24/2022 12:41	6.21	6/24/2022 17:37	74.85
6/25/2022 16:28	50.83	6/25/2022 15:10	81.73	6/24/2022 13:33	29.71	6/24/2022 12:42	6.20	6/24/2022 17:38	74.77
6/25/2022 16:29	50.88	6/25/2022 15:11	81.77	6/24/2022 13:34	28.92	6/24/2022 12:43	6.15	6/24/2022 17:39	74.68
6/25/2022 16:30	50.86	6/25/2022 15:12	81.71	6/24/2022 13:35	26.15	6/24/2022 12:44	6.16	6/24/2022 17:40	74.63
6/25/2022 16:31	50.86	6/25/2022 15:13	81.75	6/24/2022 13:36	24.58	6/24/2022 12:45	6.20	6/24/2022 17:41	74.53
6/25/2022 16:32	50.84	6/25/2022 15:14	81.73	6/24/2022 13:37	23.45	6/24/2022 12:46	6.17	6/24/2022 17:42	74.44
6/25/2022 16:33	50.84	6/25/2022 15:15	81.79	6/24/2022 13:38	22.73	6/24/2022 12:47	6.14	6/24/2022 17:43	74.37
6/25/2022 16:34	50.85	6/25/2022 15:16	81.74	6/24/2022 13:39	22.23	6/24/2022 12:48	6.14	6/24/2022 17:44	74.30
6/25/2022 16:35	50.87	6/25/2022 15:17	81.71	6/24/2022 13:40	21.81	6/24/2022 12:49	6.15	6/24/2022 17:45	74.19
6/25/2022 16:36	50.84	6/25/2022 15:18	81.72	6/24/2022 13:41	21.47	6/24/2022 12:50	6.11	6/24/2022 17:46	74.15
6/25/2022 16:37	50.83	6/25/2022 15:19	81.76	6/24/2022 13:42	21.16	6/24/2022 12:51	6.12	6/24/2022 17:47	74.05
6/25/2022 16:38	50.81	6/25/2022 15:20	81.77	6/24/2022 13:43	23.09	6/24/2022 12:52	6.11	6/24/2022 17:48	73.99
6/25/2022 16:39	50.88	6/25/2022 15:21	81.75	6/24/2022 13:44	27.63	6/24/2022 12:53	6.18	6/24/2022 17:49	73.89
6/25/2022 16:40	50.84	6/25/2022 15:22	81.73	6/24/2022 13:45	30.37	6/24/2022 12:54	6.12	6/24/2022 17:50	73.82
6/25/2022 16:41	50.83	6/25/2022 15:23	81.72	6/24/2022 13:46	31.45	6/24/2022 12:55	6.12	6/24/2022 17:51	73.74
6/25/2022 16:42	50.84	6/25/2022 15:24	81.74	6/24/2022 13:47	27.89	6/24/2022 12:56	6.12	6/24/2022 17:52	73.70
6/25/2022 16:43	50.87	6/25/2022 15:25	81.71	6/24/2022 13:48	25.98	6/24/2022 12:57	6.04	6/24/2022 17:53	73.62
6/25/2022 16:44	50.88	6/25/2022 15:26	81.75	6/24/2022 13:49	24.83	6/24/2022 12:58	6.04	6/24/2022 17:54	73.57
6/25/2022 16:45	50.83	6/25/2022 15:27	81.74	6/24/2022 13:50	23.95	6/24/2022 12:59	6.11	6/24/2022 17:55	73.48
6/25/2022 16:46	50.86	6/25/2022 15:28	81.74	6/24/2022 13:51	23.37	6/24/2022 13:00	6.11	6/24/2022 17:56	73.44
6/25/2022 16:47	50.85	6/25/2022 15:29	81.75	6/24/2022 13:52	22.92	6/24/2022 13:01	6.05	6/24/2022 17:57	73.40
6/25/2022 16:48	50.84	6/25/2022 15:30	81.74	6/24/2022 13:53	22.49	6/24/2022 13:02	6.03	6/24/2022 17:58	73.30
6/25/2022 16:49	50.85	6/25/2022 15:31	81.71	6/24/2022 13:54	22.19	6/24/2022 13:03	6.04	6/24/2022 17:59	73.21
6/25/2022 16:50	50.84	6/25/2022 15:32	81.70	6/24/2022 13:55	21.97	6/24/2022 13:04	6.09	6/24/2022 18:00	73.17
6/25/2022 16:51	50.84	6/25/2022 15:33	81.69	6/24/2022 13:56	27.14	6/24/2022 13:05	6.01	6/24/2022 18:01	73.08
6/25/2022 16:52	50.89	6/25/2022 15:34	81.70	6/24/2022 13:57	30.33	6/24/2022 13:06	6.00	6/24/2022 18:02	72.97
6/25/2022 16:53	50.82	6/25/2022 15:35	81.71	6/24/2022 13:58	32.43	6/24/2022 13:07	5.98	6/24/2022 18:03	72.97
6/25/2022 16:54	50.85	6/25/2022 15:36	81.70	6/24/2022 13:59	29.68	6/24/2022 13:08	5.94	6/24/2022 18:04	72.89
6/25/2022 16:55	50.87	6/25/2022 15:37	81.76	6/24/2022 14:00	27.41	6/24/2022 13:09	5.99	6/24/2022 18:05	72.84
6/25/2022 16:56	50.88	6/25/2022 15:38	81.76	6/24/2022 14:01	26.01	6/24/2022 13:10	5.99	6/24/2022 18:06	72.79
6/25/2022 16:57	50.85	6/25/2022 15:39	81.74	6/24/2022 14:02	25.02	6/24/2022 13:11	6.04	6/24/2022 18:07	72.73
6/25/2022 16:58	50.89	6/25/2022 15:40	81.77	6/24/2022 14:03	24.35	6/24/2022 13:12	5.94	6/24/2022 18:08	76.39
6/25/2022 16:59	50.86	6/25/2022 15:41	81.75	6/24/2022 14:04	23.81	6/24/2022 13:13	5.94	6/24/2022 18:09	77.66
6/25/2022 17:00	50.89	6/25/2022 15:42	81.67	6/24/2022 14:05	23.39	6/24/2022 13:14	6.00	6/24/2022 18:10	77.47
6/25/2022 17:01	50.88	6/25/2022 15:43	81.72	6/24/2022 14:06	23.03	6/24/2022 13:15	5.99	6/24/2022 18:11	77.31
6/25/2022 17:02	50.86	6/25/2022 15:44	81.72	6/24/2022 14:07	22.70	6/24/2022 13:16	5.96	6/24/2022 18:12	77.21
6/25/2022 17:03	50.86	6/25/2022 15:45	81.73	6/24/2022 14:08	24.85	6/24/2022 13:17	5.86	6/24/2022 18:13	77.10
6/25/2022 17:04	50.87	6/25/2022 15:46	81.77	6/24/2022 14:09	29.31	6/24/2022 13:18	5.94	6/24/2022 18:14	76.96
6/25/2022 17:05	50.84	6/25/2022 15:47	81.70	6/24/2022 14:10	31.93	6/24/2022 13:19	5.93	6/24/2022 18:15	76.89
6/25/2022 17:06	50.85	6/25/2022 15:48	81.69	6/24/2022 14:11	32.37	6/24/2022 13:20	5.89	6/24/2022 18:16	76.80
6/25/2022 17:07	50.86	6/25/2022 15:49	81.77	6/24/2022 14:12	29.11	6/24/2022 13:21	5.90	6/24/2022 18:17	76.69
6/25/2022 17:08	50.85	6/25/2022 15:50	81.71	6/24/2022 14:13	27.27	6/24/2022 13:22	5.93	6/24/2022 18:18	76.56
6/25/2022 17:09	50.85	6/25/2022 15:51	81.76	6/24/2022 14:14	26.08	6/24/2022 13:23	5.81	6/24/2022 18:19	76.46
6/25/2022 17:10	50.87	6/25/2022 15:52	81.76	6/24/2022 14:15	25.23	6/24/2022 13:24	5.86	6/24/2022 18:20	76.42
6/25/2022 17:11	50.85	6/25/2022 15:53	81.75	6/24/2022 14:16	24.60	6/24/2022 13:25	5.86	6/24/2022 18:21	76.25
6/25/2022 17:12	51.89	6/25/2022 15:54	81.69	6/24/2022 14:17	24.16	6/24/2022 13:26	5.90	6/24/2022 18:22	76.19
6/25/2022 17:13	54.23	6/25/2022 15:55	81.74	6/24/2022 14:18	23.77	6/24/2022 13:27	5.84	6/24/2022 18:23	76.05
6/25/2022 17:14	55.26	6/25/2022 15:56	81.72	6/24/2022 14:19	23.42	6/24/2022 13:28	5.85	6/24/2022 18:24	75.97
6/25/2022 17:15	55.84	6/25/2022 15:57	81.74	6/24/2022 14:20	23.18	6/24/2022 13:29	5.88	6/24/2022 18:25	75.85
6/25/2022 17:16	54.21	6/25/2022 15:58	81.74	6/24/2022 14:21	27.23	6/24/2022 13:30	5.88	6/24/2022 18:26	75.74

6/25/2022 17:17	52.99	6/25/2022 15:59	81.76	6/24/2022 14:22	30.90	6/24/2022 13:31	5.85	6/24/2022 18:27	75.69
6/25/2022 17:18	52.44	6/25/2022 16:00	81.73	6/24/2022 14:23	33.11	6/24/2022 13:32	5.82	6/24/2022 18:28	75.61
6/25/2022 17:19	52.18	6/25/2022 16:01	81.76	6/24/2022 14:24	31.35	6/24/2022 13:33	5.90	6/24/2022 18:29	75.48
6/25/2022 17:20	51.98	6/25/2022 16:02	81.77	6/24/2022 14:25	28.78	6/24/2022 13:34	5.82	6/24/2022 18:30	75.43
6/25/2022 17:21	51.86	6/25/2022 16:03	81.73	6/24/2022 14:26	27.20	6/24/2022 13:35	5.79	6/24/2022 18:31	75.32
6/25/2022 17:22	51.82	6/25/2022 16:04	81.77	6/24/2022 14:27	26.18	6/24/2022 13:36	5.79	6/24/2022 18:32	75.23
6/25/2022 17:23	51.74	6/25/2022 16:05	81.75	6/24/2022 14:28	25.46	6/24/2022 13:37	5.86	6/24/2022 18:33	75.13
6/25/2022 17:24	51.68	6/25/2022 16:06	81.73	6/24/2022 14:29	24.88	6/24/2022 13:38	5.79	6/24/2022 18:34	75.04
6/25/2022 17:25	51.60	6/25/2022 16:07	81.73	6/24/2022 14:30	24.41	6/24/2022 13:39	5.76	6/24/2022 18:35	74.97
6/25/2022 17:26	51.57	6/25/2022 16:08	81.75	6/24/2022 14:31	24.02	6/24/2022 13:40	5.79	6/24/2022 18:36	74.89
6/25/2022 17:27	51.51	6/25/2022 16:09	81.71	6/24/2022 14:32	23.70	6/24/2022 13:41	5.85	6/24/2022 18:37	74.81
6/25/2022 17:28	51.52	6/25/2022 16:10	81.71	6/24/2022 14:33	23.47	6/24/2022 13:42	5.73	6/24/2022 18:38	74.71
6/25/2022 17:29	51.49	6/25/2022 16:11	81.76	6/24/2022 14:34	28.84	6/24/2022 13:43	5.76	6/24/2022 18:39	74.64
6/25/2022 17:30	51.47	6/25/2022 16:12	81.75	6/24/2022 14:35	32.01	6/24/2022 13:44	5.75	6/24/2022 18:40	74.53
6/25/2022 17:31	51.44	6/25/2022 16:13	81.75	6/24/2022 14:36	33.95	6/24/2022 13:45	5.78	6/24/2022 18:41	74.43
6/25/2022 17:32	51.42	6/25/2022 16:14	81.71	6/24/2022 14:37	30.58	6/24/2022 13:46	5.73	6/24/2022 18:42	74.42
6/25/2022 17:33	51.42	6/25/2022 16:15	81.71	6/24/2022 14:38	28.54	6/24/2022 13:47	5.73	6/24/2022 18:43	74.32
6/25/2022 17:34	51.39	6/25/2022 16:16	81.75	6/24/2022 14:39	27.24	6/24/2022 13:48	5.74	6/24/2022 18:44	74.23
6/25/2022 17:35	51.38	6/25/2022 16:17	81.78	6/24/2022 14:40	26.29	6/24/2022 13:49	5.71	6/24/2022 18:45	74.20
6/25/2022 17:36	51.35	6/25/2022 16:18	81.70	6/24/2022 14:41	25.57	6/24/2022 13:50	5.74	6/24/2022 18:46	74.11
6/25/2022 17:37	51.34	6/25/2022 16:19	81.76	6/24/2022 14:42	25.07	6/24/2022 13:51	5.71	6/24/2022 18:47	73.99
6/25/2022 17:38	51.36	6/25/2022 16:20	81.78	6/24/2022 14:43	24.59	6/24/2022 13:52	5.74	6/24/2022 18:48	73.97
6/25/2022 17:39	51.33	6/25/2022 16:21	81.74	6/24/2022 14:44	24.27	6/24/2022 13:53	5.70	6/24/2022 18:49	73.90
6/25/2022 17:40	51.28	6/25/2022 16:22	81.76	6/24/2022 14:45	24.00	6/24/2022 13:54	5.69	6/24/2022 18:50	73.79
6/25/2022 17:41	51.28	6/25/2022 16:23	81.72	6/24/2022 14:46	24.79	6/24/2022 13:55	5.71	6/24/2022 18:51	73.74
6/25/2022 17:42	51.30	6/25/2022 16:24	81.73	6/24/2022 14:47	29.72	6/24/2022 13:56	5.73	6/24/2022 18:52	73.64
6/25/2022 17:43	51.30	6/25/2022 16:25	81.73	6/24/2022 14:48	32.68	6/24/2022 13:57	5.67	6/24/2022 18:53	73.58
6/25/2022 17:44	51.29	6/25/2022 16:26	81.72	6/24/2022 14:49	34.09	6/24/2022 13:58	5.65	6/24/2022 18:54	73.55
6/25/2022 17:45	51.26	6/25/2022 16:27	81.78	6/24/2022 14:50	30.48	6/24/2022 13:59	5.66	6/24/2022 18:55	73.49
6/25/2022 17:46	51.28	6/25/2022 16:28	81.71	6/24/2022 14:51	28.51	6/24/2022 14:00	5.71	6/24/2022 18:56	73.36
6/25/2022 17:47	51.25	6/25/2022 16:29	81.72	6/24/2022 14:52	27.29	6/24/2022 14:01	5.65	6/24/2022 18:57	73.31
6/25/2022 17:48	51.24	6/25/2022 16:30	81.76	6/24/2022 14:53	26.42	6/24/2022 14:02	5.62	6/24/2022 18:58	73.23
6/25/2022 17:49	51.23	6/25/2022 16:31	81.73	6/24/2022 14:54	25.74	6/24/2022 14:03	5.65	6/24/2022 18:59	73.21
6/25/2022 17:50	51.26	6/25/2022 16:32	81.74	6/24/2022 14:55	25.24	6/24/2022 14:04	5.69	6/24/2022 19:00	73.16
6/25/2022 17:51	51.25	6/25/2022 16:33	81.72	6/24/2022 14:56	24.84	6/24/2022 14:05	5.63	6/24/2022 19:01	73.06
6/25/2022 17:52	51.22	6/25/2022 16:34	81.75	6/24/2022 14:57	24.50	6/24/2022 14:06	5.63	6/24/2022 19:02	72.99
6/25/2022 17:53	51.22	6/25/2022 16:35	81.71	6/24/2022 14:58	24.17	6/24/2022 14:07	5.65	6/24/2022 19:03	72.93
6/25/2022 17:54	51.22	6/25/2022 16:36	81.76	6/24/2022 14:59	25.05	6/24/2022 14:08	5.65	6/24/2022 19:04	72.88
6/25/2022 17:55	51.21	6/25/2022 16:37	81.70	6/24/2022 15:00	30.08	6/24/2022 14:09	5.58	6/24/2022 19:05	72.82
6/25/2022 17:56	51.22	6/25/2022 16:38	81.71	6/24/2022 15:01	32.96	6/24/2022 14:10	5.87	6/24/2022 19:06	72.77
6/25/2022 17:57	51.18	6/25/2022 16:39	81.70	6/24/2022 15:02	34.26	6/24/2022 14:11	5.74	6/24/2022 19:07	72.73
6/25/2022 17:58	51.19	6/25/2022 16:40	81.78	6/24/2022 15:03	30.67	6/24/2022 14:12	6.24	6/24/2022 19:08	72.67
6/25/2022 17:59	51.18	6/25/2022 16:41	81.71	6/24/2022 15:04	28.76	6/24/2022 14:13	6.07	6/24/2022 19:09	72.58
6/25/2022 18:00	51.17	6/25/2022 16:42	81.73	6/24/2022 15:05	27.52	6/24/2022 14:14	6.05	6/24/2022 19:10	72.57
6/25/2022 18:01	51.13	6/25/2022 16:43	81.67	6/24/2022 15:06	26.62	6/24/2022 14:15	5.87	6/24/2022 19:11	72.49
6/25/2022 18:02	51.15	6/25/2022 16:44	81.75	6/24/2022 15:07	25.96	6/24/2022 14:16	6.01	6/24/2022 19:12	72.44
6/25/2022 18:03	51.17	6/25/2022 16:45	81.73	6/24/2022 15:08	25.50	6/24/2022 14:17	6.11	6/24/2022 19:13	72.37
6/25/2022 18:04	51.18	6/25/2022 16:46	81.75	6/24/2022 15:09	25.08	6/24/2022 14:18	6.13	6/24/2022 19:14	72.34
6/25/2022 18:05	51.15	6/25/2022 16:47	81.77	6/24/2022 15:10	24.71	6/24/2022 14:19	6.08	6/24/2022 19:15	72.24
6/25/2022 18:06	51.14	6/25/2022 16:48	81.72	6/24/2022 15:11	24.44	6/24/2022 14:20	6.56	6/24/2022 19:16	72.26
6/25/2022 18:07	51.13	6/25/2022 16:49	81.74	6/24/2022 15:12	27.50	6/24/2022 14:21	6.27	6/24/2022 19:17	72.18
6/25/2022 18:08	51.13	6/25/2022 16:50	81.78	6/24/2022 15:13	31.51	6/24/2022 14:22	6.13	6/24/2022 19:18	72.07
6/25/2022 18:09	51.17	6/25/2022 16:51	81.77	6/24/2022 15:14	33.92	6/24/2022 14:23	6.35	6/24/2022 19:19	72.05
6/25/2022 18:10	51.17	6/25/2022 16:52	81.71	6/24/2022 15:15	33.35	6/24/2022 14:24	6.29	6/24/2022 19:20	71.99
6/25/2022 18:11	51.16	6/25/2022 16:53	81.75	6/24/2022 15:16	30.36	6/24/2022 14:25	6.18	6/24/2022 19:21	71.95
6/25/2022 18:12	51.95	6/25/2022 16:54	81.76	6/24/2022 15:17	28.67	6/24/2022 14:26	6.04	6/24/2022 19:22	71.90
6/25/2022 18:13	54.39	6/25/2022 16:55	81.75	6/24/2022 15:18	27.57	6/24/2022 14:27	5.94	6/24/2022 19:23	72.24
6/25/2022 18:14	55.55	6/25/2022 16:56	81.76	6/24/2022 15:19	26.78	6/24/2022 14:28	6.03	6/24/2022 19:24	77.10
6/25/2022 18:15	56.15	6/25/2022 16:57	81.74	6/24/2022 15:20	26.13	6/24/2022 14:29	5.94	6/24/2022 19:25	76.94
6/25/2022 18:16	55.60	6/25/2022 16:58	81.76	6/24/2022 15:21	25.66	6/24/2022 14:30	5.94	6/24/2022 19:26	76.84
6/25/2022 18:17	53.66	6/25/2022 16:59	81.75	6/24/2022 15:22	25.28	6/24/2022 14:31	5.95	6/24/2022 19:27	76.65
6/25/2022 18:18	52.91	6/25/2022 17:00	81.78	6/24/2022 15:23	24.91	6/24/2022 14:32	5.91	6/24/2022 19:28	76.57
6/25/2022 18:19	52.59	6/25/2022 17:01	81.76	6/24/2022 15:24	24.62	6/24/2022 14:33	5.88	6/24/2022 19:29	76.47
6/25/2022 18:20	52.39	6/25/2022 17:02	81.74	6/24/2022 15:25	24.39	6/24/2022 14:34	5.95	6/24/2022 19:30	76.36
6/25/2022 18:21	52.22	6/25/2022 17:03	81.75	6/24/2022 15:26	24.18	6/24/2022 14:35	6.37	6/24/2022 19:31	76.24
6/25/2022 18:22	52.12	6/25/2022 17:04	81.73	6/24/2022 15:27	23.88	6/24/2022 14:36	6.30	6/24/2022 19:32	76.11
6/25/2022 18:23	52.06	6/25/2022 17:05	81.75	6/24/2022 15:28	23.72	6/24/2022 14:37	6.13	6/24/2022 19:33	76.01
6/25/2022 18:24	51.98	6/25/2022 17:06	81.79	6/24/2022 15:29	23.58	6/24/2022 14:38	6.50	6/24/2022 19:34	75.91
6/25/2022 18:25	51.95	6/25/2022 17:07	81.74	6/24/2022 15:30	23.45	6/24/2022 14:39	6.57	6/24/2022 19:35	75.78
6/25/2022 18:26	51.93	6/25/2022 17:08	81.76	6/24/2022 15:31	23.27	6/24/2022 14:40	6.24	6/24/2022 19:36	75.69
6/25/2022 18:27	51.85	6/25/2022 17:09	81.73	6/24/2022 15:32	23.17	6/24/2022 14:41	6.16	6/24/2022 19:37	75.60
6/25/2022 18:28	51.82	6/25/2022 17:10	81.74	6/24/2022 15:33	23.02	6/24/2022 14:42	6.06	6/24/2022 19:38	75.54
6/25/2022 18:29	51.79	6/25/2022 17:11	81.75	6/24/2022 15:34	22.91	6/24/2022 14:43	6.05	6/24/2022 19:39	75.39
6/25/2022 18:30	51.75	6/25/2022 17:12	81.75	6/24/2022 15:35	22.78	6/24/2022 14:44	6.00	6/24/2022 19:40	75.29
6/25/2022 18:31	51.73	6/25/2022 17:13	81.75	6/24/2022 15:36	22.71	6/24/2022 14:45	6.06	6/24/2022 19:41	75.24
6/25/2022 18:32	51.70	6/25/2022 17:14	81.78	6/24/2022 15:37	22.59	6/24/2022 14:46	5.96	6/24/2022 19:42	75.09
6/25/2022 18:33	51.69	6/25/2022 17:15	81.75	6/24/2022 15:38	22.48	6/24/2022 14:47	5.93	6/24/2022 19:43	75.05
6/25/2022 18:34	51.66	6/25/2022 17:16	81.77	6/24/2022 15:39	22.38	6/24/2022 14:48	5.98	6/24/2022 19:44	74.98
6/25/2022 18:35	51.66	6/25/2022 17:17	81.73	6/24/2022 15:40	22.32	6/24/2022 14:49	5.93	6/24/2022 19:45	74.83
6/25/2022 18:36	51.65	6/25/2022 17:18	81.77	6/24/2022 15:41	22.20	6/24/2022 14:50	5.90	6/24/2022 19:46	74.77
6/25/2022 18:37	51.59	6/25/2022 17:19	81.80	6/24/2022 15:42	22.14	6/24/2022 14:51	5.96	6/24/2022 19:47	74.69
6/25/2022 18:38	51.62	6/25/2022 17:20	81.76	6/24/2022 15:43	22.12	6/24/2022 14:52	5.91	6/24/2022 19:48	74.62
6/25/2022 18:39	51.58	6/25/2022 17:21	81.74	6/24/2022 15:44	22.05	6/24/2022 14:53	5.91	6/24/2022 19:49	74.53
6/25/2022 18:40	51.55	6/25/2022 17:22	81.77	6/24/2022 15:45	21.97	6/24/2022 14:54	5.89	6/24/2022 19:50	74.44
6/25/2022 18:41	51.55	6/25/2022 17:23	81.82	6/24/2022 15:46	21.91	6/24/2022 14:55	5.93	6/24/2022 19:51	74.35
6/25/2022 18:42	51.58	6/25/2022 17:24	81.74	6/24/2022 15:47	21.81	6/24/2022 14:56	5.88	6/24/2022 19:52	74.28
6/25/2022 18:43	51.51	6/25/2022 17:25	81.77	6/24/2022 15:48	21.76	6/24/2022 14:57	5.88	6/24/2022 19:53	74.21
6/25/2022 18:44	51.52	6/25/2022 17:26	81.78	6/24/2022 15:49	21.71	6/24/2022 14:58	5.85	6/24/2022 19:54	74.12

6/25/2022 18:45	51.50	6/25/2022 17:27	81.79	6/24/2022 15:50	21.65	6/24/2022 14:59	5.88	6/24/2022 19:55	74.11
6/25/2022 18:46	51.52	6/25/2022 17:28	81.73	6/24/2022 15:51	21.65	6/24/2022 15:00	5.81	6/24/2022 19:56	73.98
6/25/2022 18:47	51.48	6/25/2022 17:29	81.76	6/24/2022 15:52	21.56	6/24/2022 15:01	5.93	6/24/2022 19:57	73.89
6/25/2022 18:48	51.49	6/25/2022 17:30	81.75	6/24/2022 15:53	21.53	6/24/2022 15:02	5.87	6/24/2022 19:58	73.83
6/25/2022 18:49	51.50	6/25/2022 17:31	81.73	6/24/2022 15:54	21.44	6/24/2022 15:03	5.82	6/24/2022 19:59	73.78
6/25/2022 18:50	51.44	6/25/2022 17:32	81.74	6/24/2022 15:55	21.35	6/24/2022 15:04	5.82	6/24/2022 20:00	73.69
6/25/2022 18:51	51.48	6/25/2022 17:33	81.80	6/24/2022 15:56	21.31	6/24/2022 15:05	5.78	6/24/2022 20:01	73.64
6/25/2022 18:52	51.45	6/25/2022 17:34	81.76	6/24/2022 15:57	21.28	6/24/2022 15:06	5.75	6/24/2022 20:02	73.52
6/25/2022 18:53	51.46	6/25/2022 17:35	81.73	6/24/2022 15:58	21.22	6/24/2022 15:07	5.79	6/24/2022 20:03	73.49
6/25/2022 18:54	51.46	6/25/2022 17:36	81.77	6/24/2022 15:59	21.16	6/24/2022 15:08	5.80	6/24/2022 20:04	73.41
6/25/2022 18:55	51.42	6/25/2022 17:37	81.76	6/24/2022 16:00	21.14	6/24/2022 15:09	5.70	6/24/2022 20:05	73.32
6/25/2022 18:56	51.44	6/25/2022 17:38	81.79	6/24/2022 16:01	21.11	6/24/2022 15:10	5.74	6/24/2022 20:06	73.30
6/25/2022 18:57	51.42	6/25/2022 17:39	81.76	6/24/2022 16:02	20.98	6/24/2022 15:11	5.72	6/24/2022 20:07	73.21
6/25/2022 18:58	51.40	6/25/2022 17:40	81.77	6/24/2022 16:03	20.98	6/24/2022 15:12	5.76	6/24/2022 20:08	73.14
6/25/2022 18:59	51.41	6/25/2022 17:41	81.78	6/24/2022 16:04	20.97	6/24/2022 15:13	5.71	6/24/2022 20:09	73.07
6/25/2022 19:00	51.39	6/25/2022 17:42	81.77	6/24/2022 16:05	20.94	6/24/2022 15:14	5.66	6/24/2022 20:10	73.00
6/25/2022 19:01	51.40	6/25/2022 17:43	81.78	6/24/2022 16:06	20.82	6/24/2022 15:15	5.67	6/24/2022 20:11	72.96
6/25/2022 19:02	51.37	6/25/2022 17:44	81.80	6/24/2022 16:07	20.81	6/24/2022 15:16	5.68	6/24/2022 20:12	72.92
6/25/2022 19:03	51.35	6/25/2022 17:45	81.78	6/24/2022 16:08	20.75	6/24/2022 15:17	5.65	6/24/2022 20:13	72.84
6/25/2022 19:04	51.34	6/25/2022 17:46	81.79	6/24/2022 16:09	20.71	6/24/2022 15:18	5.66	6/24/2022 20:14	72.73
6/25/2022 19:05	51.38	6/25/2022 17:47	81.74	6/24/2022 16:10	20.69	6/24/2022 15:19	5.62	6/24/2022 20:15	72.71
6/25/2022 19:06	51.35	6/25/2022 17:48	81.76	6/24/2022 16:11	20.64	6/24/2022 15:20	5.65	6/24/2022 20:16	72.67
6/25/2022 19:07	51.35	6/25/2022 17:49	81.77	6/24/2022 16:12	20.59	6/24/2022 15:21	5.58	6/24/2022 20:17	72.62
6/25/2022 19:08	51.36	6/25/2022 17:50	81.80	6/24/2022 16:13	20.57	6/24/2022 15:22	5.58	6/24/2022 20:18	72.53
6/25/2022 19:09	51.36	6/25/2022 17:51	81.77	6/24/2022 16:14	20.53	6/24/2022 15:23	5.63	6/24/2022 20:19	72.51
6/25/2022 19:10	51.34	6/25/2022 17:52	81.79	6/24/2022 16:15	20.51	6/24/2022 15:24	5.63	6/24/2022 20:20	72.46
6/25/2022 19:11	51.33	6/25/2022 17:53	81.77	6/24/2022 16:16	20.50	6/24/2022 15:25	5.59	6/24/2022 20:21	72.38
6/25/2022 19:12	51.31	6/25/2022 17:54	81.77	6/24/2022 16:17	20.39	6/24/2022 15:26	5.52	6/24/2022 20:22	72.31
6/25/2022 19:13	51.31	6/25/2022 17:55	81.79	6/24/2022 16:18	20.43	6/24/2022 15:27	5.56	6/24/2022 20:23	72.29
6/25/2022 19:14	51.33	6/25/2022 17:56	81.81	6/24/2022 16:19	20.36	6/24/2022 15:28	5.60	6/24/2022 20:24	72.21
6/25/2022 19:15	51.30	6/25/2022 17:57	81.77	6/24/2022 16:20	20.28	6/24/2022 15:29	5.60	6/24/2022 20:25	72.11
6/25/2022 19:16	51.31	6/25/2022 17:58	81.82	6/24/2022 16:21	20.27	6/24/2022 15:30	5.55	6/24/2022 20:26	72.10
6/25/2022 19:17	51.34	6/25/2022 17:59	81.79	6/24/2022 16:22	20.27	6/24/2022 15:31	5.54	6/24/2022 20:27	72.04
6/25/2022 19:18	51.29	6/25/2022 18:00	81.76	6/24/2022 16:23	20.22	6/24/2022 15:32	5.57	6/24/2022 20:28	72.00
6/25/2022 19:19	51.30	6/25/2022 18:01	81.77	6/24/2022 16:24	20.19	6/24/2022 15:33	5.59	6/24/2022 20:29	71.91
6/25/2022 19:20	51.28	6/25/2022 18:02	81.79	6/24/2022 16:25	20.14	6/24/2022 15:34	5.47	6/24/2022 20:30	71.86
6/25/2022 19:21	51.31	6/25/2022 18:03	81.79	6/24/2022 16:26	20.12	6/24/2022 15:35	5.53	6/24/2022 20:31	71.84
6/25/2022 19:22	51.28	6/25/2022 18:04	81.80	6/24/2022 16:27	20.11	6/24/2022 15:36	5.55	6/24/2022 20:32	71.76
6/25/2022 19:23	51.29	6/25/2022 18:05	81.78	6/24/2022 16:28	20.02	6/24/2022 15:37	5.54	6/24/2022 20:33	71.75
6/25/2022 19:24	51.32	6/25/2022 18:06	81.77	6/24/2022 16:29	20.01	6/24/2022 15:38	5.50	6/24/2022 20:34	71.70
6/25/2022 19:25	51.31	6/25/2022 18:07	81.76	6/24/2022 16:30	20.00	6/24/2022 15:39	5.52	6/24/2022 20:35	71.66
6/25/2022 19:26	51.26	6/25/2022 18:08	81.79	6/24/2022 16:31	19.99	6/24/2022 15:40	5.46	6/24/2022 20:36	71.61
6/25/2022 19:27	51.29	6/25/2022 18:09	81.79	6/24/2022 16:32	19.94	6/24/2022 15:41	5.47	6/24/2022 20:37	71.56
6/25/2022 19:28	51.32	6/25/2022 18:10	81.80	6/24/2022 16:33	19.95	6/24/2022 15:42	5.51	6/24/2022 20:38	71.49
6/25/2022 19:29	51.29	6/25/2022 18:11	81.79	6/24/2022 16:34	19.89	6/24/2022 15:43	5.47	6/24/2022 20:39	71.47
6/25/2022 19:30	51.29	6/25/2022 18:12	81.76	6/24/2022 16:35	19.84	6/24/2022 15:44	5.47	6/24/2022 20:40	71.42
6/25/2022 19:31	51.26	6/25/2022 18:13	81.82	6/24/2022 16:36	19.83	6/24/2022 15:45	5.43	6/24/2022 20:41	71.34
6/25/2022 19:32	51.23	6/25/2022 18:14	81.76	6/24/2022 16:37	19.83	6/24/2022 15:46	5.38	6/24/2022 20:42	71.31
6/25/2022 19:33	51.28	6/25/2022 18:15	81.77	6/24/2022 16:38	19.80	6/24/2022 15:47	5.43	6/24/2022 20:43	71.26
6/25/2022 19:34	51.25	6/25/2022 18:16	81.74	6/24/2022 16:39	19.75	6/24/2022 15:48	5.46	6/24/2022 20:44	71.22
6/25/2022 19:35	51.25	6/25/2022 18:17	81.81	6/24/2022 16:40	19.74	6/24/2022 15:49	5.43	6/24/2022 20:45	71.18
6/25/2022 19:36	51.26	6/25/2022 18:18	81.77	6/24/2022 16:41	19.67	6/24/2022 15:50	5.43	6/24/2022 20:46	71.13
6/25/2022 19:37	51.21	6/25/2022 18:19	81.80	6/24/2022 16:42	19.67	6/24/2022 15:51	5.41	6/24/2022 20:47	71.10
6/25/2022 19:38	51.23	6/25/2022 18:20	81.77	6/24/2022 16:43	19.70	6/24/2022 15:52	5.44	6/24/2022 20:48	71.06
6/25/2022 19:39	51.25	6/25/2022 18:21	81.80	6/24/2022 16:44	19.64	6/24/2022 15:53	5.40	6/24/2022 20:49	71.05
6/25/2022 19:40	51.21	6/25/2022 18:22	81.73	6/24/2022 16:45	19.64	6/24/2022 15:54	5.39	6/24/2022 20:50	70.99
6/25/2022 19:41	51.25	6/25/2022 18:23	81.82	6/24/2022 16:46	19.59	6/24/2022 15:55	5.45	6/24/2022 20:51	70.96
6/25/2022 19:42	51.27	6/25/2022 18:24	81.76	6/24/2022 16:47	19.60	6/24/2022 15:56	5.38	6/24/2022 20:52	70.88
6/25/2022 19:43	51.24	6/25/2022 18:25	81.83	6/24/2022 16:48	19.55	6/24/2022 15:57	5.37	6/24/2022 20:53	70.86
6/25/2022 19:44	51.20	6/25/2022 18:26	81.80	6/24/2022 16:49	19.50	6/24/2022 15:58	5.40	6/24/2022 20:54	70.82
6/25/2022 19:45	51.19	6/25/2022 18:27	81.78	6/24/2022 16:50	19.51	6/24/2022 15:59	5.42	6/24/2022 20:55	70.77
6/25/2022 19:46	51.21	6/25/2022 18:28	81.80	6/24/2022 16:51	19.46	6/24/2022 16:00	5.32	6/24/2022 20:56	70.74
6/25/2022 19:47	51.25	6/25/2022 18:29	81.77	6/24/2022 16:52	19.50	6/24/2022 16:01	5.34	6/24/2022 20:57	70.71
6/25/2022 19:48	51.23	6/25/2022 18:30	81.80	6/24/2022 16:53	19.44	6/24/2022 16:02	5.33	6/24/2022 20:58	70.69
6/25/2022 19:49	51.23	6/25/2022 18:31	81.78	6/24/2022 16:54	19.39	6/24/2022 16:03	5.36	6/24/2022 20:59	70.63
6/25/2022 19:50	51.22	6/25/2022 18:32	81.83	6/24/2022 16:55	19.38	6/24/2022 16:04	5.33	6/24/2022 21:00	70.58
6/25/2022 19:51	51.22	6/25/2022 18:33	81.80	6/24/2022 16:56	19.36	6/24/2022 16:05	5.33	6/24/2022 21:01	70.56
6/25/2022 19:52	51.20	6/25/2022 18:34	81.76	6/24/2022 16:57	19.33	6/24/2022 16:06	5.34	6/24/2022 21:02	70.55
6/25/2022 19:53	51.18	6/25/2022 18:35	81.84	6/24/2022 16:58	19.31	6/24/2022 16:07	5.38	6/24/2022 21:03	70.51
6/25/2022 19:54	51.18	6/25/2022 18:36	81.74	6/24/2022 16:59	19.30	6/24/2022 16:08	5.32	6/24/2022 21:04	70.49
6/25/2022 19:55	51.23	6/25/2022 18:37	81.79	6/24/2022 17:00	19.24	6/24/2022 16:09	5.33	6/24/2022 21:05	70.42
6/25/2022 19:56	51.23	6/25/2022 18:38	81.77	6/24/2022 17:01	19.26	6/24/2022 16:10	5.38	6/24/2022 21:06	70.39
6/25/2022 19:57	51.25	6/25/2022 18:39	81.84	6/24/2022 17:02	19.23	6/24/2022 16:11	5.34	6/24/2022 21:07	70.37
6/25/2022 19:58	51.21	6/25/2022 18:40	81.82	6/24/2022 17:03	19.26	6/24/2022 16:12	5.41	6/24/2022 21:08	70.36
6/25/2022 19:59	51.21	6/25/2022 18:41	81.77	6/24/2022 17:04	19.24	6/24/2022 16:13	5.59	6/24/2022 21:09	70.30
6/25/2022 20:00	51.17	6/25/2022 18:42	81.82	6/24/2022 17:05	19.18	6/24/2022 16:14	5.44	6/24/2022 21:10	70.26
6/25/2022 20:01	51.17	6/25/2022 18:43	81.79	6/24/2022 17:06	19.17	6/24/2022 16:15	5.50	6/24/2022 21:11	70.25
6/25/2022 20:02	51.17	6/25/2022 18:44	81.79	6/24/2022 17:07	19.14	6/24/2022 16:16	5.37	6/24/2022 21:12	70.22
6/25/2022 20:03	51.17	6/25/2022 18:45	81.78	6/24/2022 17:08	19.12	6/24/2022 16:17	5.34	6/24/2022 21:13	70.20
6/25/2022 20:04	51.18	6/25/2022 18:46	81.82	6/24/2022 17:09	19.11	6/24/2022 16:18	5.33	6/24/2022 21:14	70.14
6/25/2022 20:05	51.20	6/25/2022 18:47	81.82	6/24/2022 17:10	19.05	6/24/2022 16:19	5.38	6/24/2022 21:15	70.12
6/25/2022 20:06	51.21	6/25/2022 18:48	81.84	6/24/2022 17:11	19.07	6/24/2022 16:20	5.35	6/24/2022 21:16	70.12
6/25/2022 20:07	51.18	6/25/2022 18:49	81.75	6/24/2022 17:12	19.07	6/24/2022 16:21	5.32	6/24/2022 21:17	70.08
6/25/2022 20:08	51.19	6/25/2022 18:50	81.81	6/24/2022 17:13	19.05	6/24/2022 16:22	5.29	6/24/2022 21:18	70.02
6/25/2022 20:09	51.18	6/25/2022 18:51	81.77	6/24/2022 17:14	18.99	6/24/2022 16:23	5.36	6/24/2022 21:19	70.02
6/25/2022 20:10	51.18	6/25/2022 18:52	81.82	6/24/2022 17:15	19.00	6/24/2022 16:24	5.29	6/24/2022 21:20	69.99
6/25/2022 20:11	51.17	6/25/2022 18:53	81.81	6/24/2022 17:16	18.98	6/24/2022 16:25	5.27	6/24/2022 21:21	69.94
6/25/2022 20:12	51.17	6/25/2022 18:54	81.81	6/24/2022 17:17	22.34	6/24/2022 16:26	5.31	6/24/2022 21:22	69.90

6/25/2022 20:13	51.13	6/25/2022 18:55	81.74	6/24/2022 17:18	26.55	6/24/2022 16:27	5.32	6/24/2022 21:23	69.90
6/25/2022 20:14	51.14	6/25/2022 18:56	81.82	6/24/2022 17:19	29.07	6/24/2022 16:28	5.24	6/24/2022 21:24	72.54
6/25/2022 20:15	51.19	6/25/2022 18:57	81.81	6/24/2022 17:20	26.20	6/24/2022 16:29	5.26	6/24/2022 21:25	76.12
6/25/2022 20:16	51.18	6/25/2022 18:58	81.78	6/24/2022 17:21	24.39	6/24/2022 16:30	5.31	6/24/2022 21:26	75.91
6/25/2022 20:17	51.18	6/25/2022 18:59	81.80	6/24/2022 17:22	23.29	6/24/2022 16:31	5.33	6/24/2022 21:27	81.01
6/25/2022 20:18	51.19	6/25/2022 19:00	81.79	6/24/2022 17:23	22.61	6/24/2022 16:32	5.29	6/24/2022 21:28	83.48
6/25/2022 20:19	51.14	6/25/2022 19:01	81.81	6/24/2022 17:24	22.14	6/24/2022 16:33	5.27	6/24/2022 21:29	83.15
6/25/2022 20:20	51.19	6/25/2022 19:02	81.84	6/24/2022 17:25	21.77	6/24/2022 16:34	5.23	6/24/2022 21:30	88.93
6/25/2022 20:21	51.14	6/25/2022 19:03	81.81	6/24/2022 17:26	21.51	6/24/2022 16:35	5.20	6/24/2022 21:31	90.89
6/25/2022 20:22	51.21	6/25/2022 19:04	81.86	6/24/2022 17:27	21.29	6/24/2022 16:36	5.27	6/24/2022 21:32	90.47
6/25/2022 20:23	51.19	6/25/2022 19:05	81.82	6/24/2022 17:28	21.12	6/24/2022 16:37	5.19	6/24/2022 21:33	90.16
6/25/2022 20:24	51.14	6/25/2022 19:06	81.79	6/24/2022 17:29	20.91	6/24/2022 16:38	5.20	6/24/2022 21:34	89.81
6/25/2022 20:25	51.20	6/25/2022 19:07	81.81	6/24/2022 17:30	20.84	6/24/2022 16:39	5.19	6/24/2022 21:35	89.53
6/25/2022 20:26	51.15	6/25/2022 19:08	81.76	6/24/2022 17:31	20.63	6/24/2022 16:40	5.23	6/24/2022 21:36	89.24
6/25/2022 20:27	51.18	6/25/2022 19:09	81.81	6/24/2022 17:32	20.57	6/24/2022 16:41	5.13	6/24/2022 21:37	88.98
6/25/2022 20:28	51.19	6/25/2022 19:10	81.76	6/24/2022 17:33	20.50	6/24/2022 16:42	5.19	6/24/2022 21:38	88.65
6/25/2022 20:29	51.13	6/25/2022 19:11	81.80	6/24/2022 17:34	20.40	6/24/2022 16:43	5.22	6/24/2022 21:39	88.42
6/25/2022 20:30	51.18	6/25/2022 19:12	81.84	6/24/2022 17:35	20.25	6/24/2022 16:44	5.13	6/24/2022 21:40	88.17
6/25/2022 20:31	51.14	6/25/2022 19:13	81.83	6/24/2022 17:36	20.21	6/24/2022 16:45	5.17	6/24/2022 21:41	87.93
6/25/2022 20:32	51.18	6/25/2022 19:14	81.83	6/24/2022 17:37	20.15	6/24/2022 16:46	5.16	6/24/2022 21:42	87.69
6/25/2022 20:33	51.15	6/25/2022 19:15	81.79	6/24/2022 17:38	23.94	6/24/2022 16:47	5.20	6/24/2022 21:43	87.45
6/25/2022 20:34	51.19	6/25/2022 19:16	81.83	6/24/2022 17:39	27.83	6/24/2022 16:48	5.17	6/24/2022 21:44	87.18
6/25/2022 20:35	51.13	6/25/2022 19:17	81.80	6/24/2022 17:40	29.03	6/24/2022 16:49	5.13	6/24/2022 21:45	86.95
6/25/2022 20:36	51.13	6/25/2022 19:18	81.80	6/24/2022 17:41	26.11	6/24/2022 16:50	5.13	6/24/2022 21:46	86.72
6/25/2022 20:37	51.19	6/25/2022 19:19	81.81	6/24/2022 17:42	24.54	6/24/2022 16:51	5.14	6/24/2022 21:47	86.45
6/25/2022 20:38	51.08	6/25/2022 19:20	81.81	6/24/2022 17:43	23.66	6/24/2022 16:52	5.17	6/24/2022 21:48	86.25
6/25/2022 20:39	51.16	6/25/2022 19:21	81.77	6/24/2022 17:44	23.03	6/24/2022 16:53	5.10	6/24/2022 21:49	86.03
6/25/2022 20:40	51.16	6/25/2022 19:22	81.80	6/24/2022 17:45	22.53	6/24/2022 16:54	5.13	6/24/2022 21:50	85.80
6/25/2022 20:41	51.13	6/25/2022 19:23	81.82	6/24/2022 17:46	22.22	6/24/2022 16:55	5.18	6/24/2022 21:51	85.57
6/25/2022 20:42	51.12	6/25/2022 19:24	81.82	6/24/2022 17:47	21.97	6/24/2022 16:56	5.13	6/24/2022 21:52	85.43
6/25/2022 20:43	51.13	6/25/2022 19:25	81.78	6/24/2022 17:48	21.75	6/24/2022 16:57	5.09	6/24/2022 21:53	85.21
6/25/2022 20:44	51.13	6/25/2022 19:26	81.80	6/24/2022 17:49	21.55	6/24/2022 16:58	5.09	6/24/2022 21:54	85.00
6/25/2022 20:45	51.14	6/25/2022 19:27	81.82	6/24/2022 17:50	21.47	6/24/2022 16:59	5.17	6/24/2022 21:55	84.82
6/25/2022 20:46	51.15	6/25/2022 19:28	81.83	6/24/2022 17:51	21.20	6/24/2022 17:00	5.09	6/24/2022 21:56	84.61
6/25/2022 20:47	51.13	6/25/2022 19:29	81.79	6/24/2022 17:52	21.10	6/24/2022 17:01	5.11	6/24/2022 21:57	84.39
6/25/2022 20:48	51.11	6/25/2022 19:30	81.80	6/24/2022 17:53	20.97	6/24/2022 17:02	5.09	6/24/2022 21:58	84.19
6/25/2022 20:49	51.12	6/25/2022 19:31	81.84	6/24/2022 17:54	20.92	6/24/2022 17:03	5.11	6/24/2022 21:59	84.05
6/25/2022 20:50	51.13	6/25/2022 19:32	81.83	6/24/2022 17:55	20.73	6/24/2022 17:04	5.07	6/24/2022 22:00	83.83
6/25/2022 20:51	51.13	6/25/2022 19:33	81.86	6/24/2022 17:56	20.67	6/24/2022 17:05	5.10	6/24/2022 22:01	83.64
6/25/2022 20:52	51.10	6/25/2022 19:34	81.80	6/24/2022 17:57	20.54	6/24/2022 17:06	5.11	6/24/2022 22:02	83.47
6/25/2022 20:53	51.11	6/25/2022 19:35	81.79	6/24/2022 17:58	20.53	6/24/2022 17:07	5.07	6/24/2022 22:03	83.33
6/25/2022 20:54	51.11	6/25/2022 19:36	81.79	6/24/2022 17:59	20.44	6/24/2022 17:08	5.01	6/24/2022 22:04	83.14
6/25/2022 20:55	51.16	6/25/2022 19:37	81.83	6/24/2022 18:00	20.36	6/24/2022 17:09	5.08	6/24/2022 22:05	82.97
6/25/2022 20:56	51.10	6/25/2022 19:38	81.79	6/24/2022 18:01	20.27	6/24/2022 17:10	5.09	6/24/2022 22:06	82.79
6/25/2022 20:57	51.09	6/25/2022 19:39	81.82	6/24/2022 18:02	20.19	6/24/2022 17:11	5.04	6/24/2022 22:07	82.65
6/25/2022 20:58	51.11	6/25/2022 19:40	81.82	6/24/2022 18:03	20.15	6/24/2022 17:12	5.02	6/24/2022 22:08	82.46
6/25/2022 20:59	51.12	6/25/2022 19:41	81.84	6/24/2022 18:04	20.10	6/24/2022 17:13	5.06	6/24/2022 22:09	82.31
6/25/2022 21:00	51.11	6/25/2022 19:42	81.84	6/24/2022 18:05	20.10	6/24/2022 17:14	5.11	6/24/2022 22:10	82.15
6/25/2022 21:01	51.12	6/25/2022 19:43	81.82	6/24/2022 18:06	19.99	6/24/2022 17:15	5.04	6/24/2022 22:11	82.00
6/25/2022 21:02	51.15	6/25/2022 19:44	81.85	6/24/2022 18:07	19.94	6/24/2022 17:16	5.03	6/24/2022 22:12	81.81
6/25/2022 21:03	51.12	6/25/2022 19:45	81.79	6/24/2022 18:08	19.88	6/24/2022 17:17	5.07	6/24/2022 22:13	81.70
6/25/2022 21:04	51.11	6/25/2022 19:46	81.82	6/24/2022 18:09	19.85	6/24/2022 17:18	5.05	6/24/2022 22:14	81.61
6/25/2022 21:05	51.12	6/25/2022 19:47	81.78	6/24/2022 18:10	19.80	6/24/2022 17:19	5.00	6/24/2022 22:15	81.39
6/25/2022 21:06	51.14	6/25/2022 19:48	81.83	6/24/2022 18:11	19.76	6/24/2022 17:20	5.01	6/24/2022 22:16	81.27
6/25/2022 21:07	51.09	6/25/2022 19:49	81.83	6/24/2022 18:12	19.70	6/24/2022 17:21	4.94	6/24/2022 22:17	81.14
6/25/2022 21:08	51.12	6/25/2022 19:50	81.77	6/24/2022 18:13	19.68	6/24/2022 17:22	5.10	6/24/2022 22:18	81.01
6/25/2022 21:09	51.11	6/25/2022 19:51	81.77	6/24/2022 18:14	19.61	6/24/2022 17:23	5.00	6/24/2022 22:19	80.88
6/25/2022 21:10	51.11	6/25/2022 19:52	81.81	6/24/2022 18:15	19.59	6/24/2022 17:24	5.22	6/24/2022 22:20	80.81
6/25/2022 21:11	51.09	6/25/2022 19:53	81.82	6/24/2022 18:16	19.59	6/24/2022 17:25	5.12	6/24/2022 22:21	80.69
6/25/2022 21:12	51.09	6/25/2022 19:54	81.82	6/24/2022 18:17	19.54	6/24/2022 17:26	5.05	6/24/2022 22:22	80.54
6/25/2022 21:13	51.13	6/25/2022 19:55	81.80	6/24/2022 18:18	19.52	6/24/2022 17:27	5.19	6/24/2022 22:23	80.40
6/25/2022 21:14	51.10	6/25/2022 19:56	81.80	6/24/2022 18:19	19.47	6/24/2022 17:28	5.09	6/24/2022 22:24	80.27
6/25/2022 21:15	51.12	6/25/2022 19:57	81.84	6/24/2022 18:20	19.43	6/24/2022 17:29	5.05	6/24/2022 22:25	80.15
6/25/2022 21:16	51.14	6/25/2022 19:58	81.80	6/24/2022 18:21	19.43	6/24/2022 17:30	5.06	6/24/2022 22:26	80.00
6/25/2022 21:17	51.04	6/25/2022 19:59	81.81	6/24/2022 18:22	19.45	6/24/2022 17:31	5.05	6/24/2022 22:27	79.86
6/25/2022 21:18	51.10	6/25/2022 20:00	81.81	6/24/2022 18:23	19.42	6/24/2022 17:32	5.03	6/24/2022 22:28	79.78
6/25/2022 21:19	51.08	6/25/2022 20:01	81.82	6/24/2022 18:24	19.33	6/24/2022 17:33	5.01	6/24/2022 22:29	79.66
6/25/2022 21:20	51.11	6/25/2022 20:02	81.80	6/24/2022 18:25	19.32	6/24/2022 17:34	5.06	6/24/2022 22:30	79.52
6/25/2022 21:21	51.12	6/25/2022 20:03	81.80	6/24/2022 18:26	19.30	6/24/2022 17:35	4.99	6/24/2022 22:31	79.38
6/25/2022 21:22	51.09	6/25/2022 20:04	81.80	6/24/2022 18:27	19.28	6/24/2022 17:36	4.99	6/24/2022 22:32	79.28
6/25/2022 21:23	51.09	6/25/2022 20:05	81.86	6/24/2022 18:28	19.31	6/24/2022 17:37	5.07	6/24/2022 22:33	79.21
6/25/2022 21:24	51.06	6/25/2022 20:06	81.82	6/24/2022 18:29	19.29	6/24/2022 17:38	4.99	6/24/2022 22:34	79.08
6/25/2022 21:25	51.08	6/25/2022 20:07	81.81	6/24/2022 18:30	19.27	6/24/2022 17:39	4.95	6/24/2022 22:35	79.01
6/25/2022 21:26	51.10	6/25/2022 20:08	81.84	6/24/2022 18:31	19.25	6/24/2022 17:40	5.00	6/24/2022 22:36	78.90
6/25/2022 21:27	51.05	6/25/2022 20:09	81.84	6/24/2022 18:32	19.26	6/24/2022 17:41	5.00	6/24/2022 22:37	78.81
6/25/2022 21:28	51.08	6/25/2022 20:10	81.82	6/24/2022 18:33	19.27	6/24/2022 17:42	5.07	6/24/2022 22:38	78.72
6/25/2022 21:29	51.11	6/25/2022 20:11	81.84	6/24/2022 18:34	19.22	6/24/2022 17:43	4.94	6/24/2022 22:39	78.60
6/25/2022 21:30	51.08	6/25/2022 20:12	81.82	6/24/2022 18:35	19.18	6/24/2022 17:44	4.98	6/24/2022 22:40	78.54
6/25/2022 21:31	51.11	6/25/2022 20:13	81.84	6/24/2022 18:36	19.20	6/24/2022 17:45	4.99	6/24/2022 22:41	78.44
6/25/2022 21:32	51.10	6/25/2022 20:14	81.84	6/24/2022 18:37	19.15	6/24/2022 17:46	4.92	6/24/2022 22:42	78.32
6/25/2022 21:33	51.10	6/25/2022 20:15	81.83	6/24/2022 18:38	19.17	6/24/2022 17:47	4.98	6/24/2022 22:43	78.26
6/25/2022 21:34	51.08	6/25/2022 20:16	81.87	6/24/2022 18:39	19.13	6/24/2022 17:48	4.95	6/24/2022 22:44	78.14
6/25/2022 21:35	51.08	6/25/2022 20:17	81.84	6/24/2022 18:40	19.13	6/24/2022 17:49	5.00	6/24/2022 22:45	78.03
6/25/2022 21:36	51.10	6/25/2022 20:18	81.85	6/24/2022 18:41	19.12	6/24/2022 17:50	4.91	6/24/2022 22:46	77.91
6/25/2022 21:37	51.07	6/25/2022 20:19	81.83	6/24/2022 18:42	19.08	6/24/2022 17:51	4.95	6/24/2022 22:47	77.84
6/25/2022 21:38	51.11	6/25/2022 20:20	81.81	6/24/2022 18:43	19.09	6/24/2022 17:52	4.94	6/24/2022 22:48	77.73
6/25/2022 21:39	51.09	6/25/2022 20:21	81.83	6/24/2022 18:44	19.12	6/24/2022 17:53	4.95	6/24/2022 22:49	77.62
6/25/2022 21:40	51.08	6/25/2022 20:22	81.81	6/24/2022 18:45	19.05	6/24/2022 17:54	4.93	6/24/2022 22:50	77.54

6/25/2022 21:41	51.09	6/25/2022 20:23	81.78	6/24/2022 18:46	19.06	6/24/2022 17:55	4.93	6/24/2022 22:51	77.41
6/25/2022 21:42	51.08	6/25/2022 20:24	81.85	6/24/2022 18:47	19.07	6/24/2022 17:56	4.94	6/24/2022 22:52	77.35
6/25/2022 21:43	51.08	6/25/2022 20:25	81.80	6/24/2022 18:48	19.10	6/24/2022 17:57	4.97	6/24/2022 22:53	77.27
6/25/2022 21:44	51.10	6/25/2022 20:26	81.83	6/24/2022 18:49	19.07	6/24/2022 17:58	4.91	6/24/2022 22:54	77.14
6/25/2022 21:45	51.04	6/25/2022 20:27	81.80	6/24/2022 18:50	19.08	6/24/2022 17:59	4.90	6/24/2022 22:55	77.08
6/25/2022 21:46	51.09	6/25/2022 20:28	81.85	6/24/2022 18:51	19.02	6/24/2022 18:00	4.91	6/24/2022 22:56	77.01
6/25/2022 21:47	51.09	6/25/2022 20:29	81.86	6/24/2022 18:52	19.07	6/24/2022 18:01	4.89	6/24/2022 22:57	76.94
6/25/2022 21:48	51.12	6/25/2022 20:30	81.86	6/24/2022 18:53	19.08	6/24/2022 18:02	4.85	6/24/2022 22:58	76.79
6/25/2022 21:49	51.07	6/25/2022 20:31	81.85	6/24/2022 18:54	19.05	6/24/2022 18:03	4.90	6/24/2022 22:59	76.73
6/25/2022 21:50	51.10	6/25/2022 20:32	81.85	6/24/2022 18:55	19.01	6/24/2022 18:04	4.88	6/24/2022 23:00	76.66
6/25/2022 21:51	51.09	6/25/2022 20:33	81.82	6/24/2022 18:56	19.03	6/24/2022 18:05	4.87	6/24/2022 23:01	76.57
6/25/2022 21:52	51.08	6/25/2022 20:34	81.85	6/24/2022 18:57	19.02	6/24/2022 18:06	4.89	6/24/2022 23:02	76.49
6/25/2022 21:53	51.07	6/25/2022 20:35	81.84	6/24/2022 18:58	19.00	6/24/2022 18:07	5.28	6/24/2022 23:03	76.40
6/25/2022 21:54	51.09	6/25/2022 20:36	81.83	6/24/2022 18:59	18.98	6/24/2022 18:08	5.59	6/24/2022 23:04	76.34
6/25/2022 21:55	51.10	6/25/2022 20:37	81.82	6/24/2022 19:00	18.99	6/24/2022 18:09	5.74	6/24/2022 23:05	76.24
6/25/2022 21:56	51.11	6/25/2022 20:38	83.94	6/24/2022 19:01	18.95	6/24/2022 18:10	5.29	6/24/2022 23:06	76.13
6/25/2022 21:57	51.10	6/25/2022 20:39	83.53	6/24/2022 19:02	18.95	6/24/2022 18:11	5.17	6/24/2022 23:07	76.08
6/25/2022 21:58	51.08	6/25/2022 20:40	83.23	6/24/2022 19:03	18.95	6/24/2022 18:12	5.15	6/24/2022 23:08	75.96
6/25/2022 21:59	51.07	6/25/2022 20:41	82.97	6/24/2022 19:04	18.93	6/24/2022 18:13	5.12	6/24/2022 23:09	75.88
6/25/2022 22:00	51.10	6/25/2022 20:42	82.87	6/24/2022 19:05	18.93	6/24/2022 18:14	4.99	6/24/2022 23:10	75.81
6/25/2022 22:01	51.06	6/25/2022 20:43	82.73	6/24/2022 19:06	18.94	6/24/2022 18:15	5.34	6/24/2022 23:11	75.71
6/25/2022 22:02	51.05	6/25/2022 20:44	82.59	6/24/2022 19:07	18.91	6/24/2022 18:16	5.64	6/24/2022 23:12	75.64
6/25/2022 22:03	51.11	6/25/2022 20:45	82.52	6/24/2022 19:08	18.87	6/24/2022 18:17	5.31	6/24/2022 23:13	75.57
6/25/2022 22:04	51.06	6/25/2022 20:46	82.44	6/24/2022 19:09	18.89	6/24/2022 18:18	5.56	6/24/2022 23:14	75.49
6/25/2022 22:05	51.05	6/25/2022 20:47	82.35	6/24/2022 19:10	18.87	6/24/2022 18:19	5.36	6/24/2022 23:15	75.41
6/25/2022 22:06	51.10	6/25/2022 20:48	82.30	6/24/2022 19:11	18.83	6/24/2022 18:20	5.34	6/24/2022 23:16	75.29
6/25/2022 22:07	51.06	6/25/2022 20:49	82.28	6/24/2022 19:12	18.83	6/24/2022 18:21	5.60	6/24/2022 23:17	75.20
6/25/2022 22:08	51.10	6/25/2022 20:50	82.24	6/24/2022 19:13	18.82	6/24/2022 18:22	5.75	6/24/2022 23:18	75.14
6/25/2022 22:09	51.15	6/25/2022 20:51	82.19	6/24/2022 19:14	18.81	6/24/2022 18:23	5.82	6/24/2022 23:19	75.04
6/25/2022 22:10	51.09	6/25/2022 20:52	82.14	6/24/2022 19:15	18.78	6/24/2022 18:24	5.54	6/24/2022 23:20	75.02
6/25/2022 22:11	51.09	6/25/2022 20:53	82.12	6/24/2022 19:16	18.80	6/24/2022 18:25	5.35	6/24/2022 23:21	74.92
6/25/2022 22:12	51.08	6/25/2022 20:54	82.09	6/24/2022 19:17	18.78	6/24/2022 18:26	5.33	6/24/2022 23:22	74.84
6/25/2022 22:13	51.07	6/25/2022 20:55	82.14	6/24/2022 19:18	18.78	6/24/2022 18:27	5.22	6/24/2022 23:23	74.76
6/25/2022 22:14	51.07	6/25/2022 20:56	82.09	6/24/2022 19:19	18.75	6/24/2022 18:28	5.22	6/24/2022 23:24	74.75
6/25/2022 22:15	51.07	6/25/2022 20:57	82.04	6/24/2022 19:20	18.78	6/24/2022 18:29	5.20	6/24/2022 23:25	74.65
6/25/2022 22:16	51.07	6/25/2022 20:58	82.03	6/24/2022 19:21	18.75	6/24/2022 18:30	5.15	6/24/2022 23:26	74.55
6/25/2022 22:17	51.03	6/25/2022 20:59	82.02	6/24/2022 19:22	18.75	6/24/2022 18:31	5.15	6/24/2022 23:27	74.47
6/25/2022 22:18	51.07	6/25/2022 21:00	82.03	6/24/2022 19:23	18.69	6/24/2022 18:32	5.08	6/24/2022 23:28	74.43
6/25/2022 22:19	51.07	6/25/2022 21:01	82.01	6/24/2022 19:24	18.70	6/24/2022 18:33	5.08	6/24/2022 23:29	74.31
6/25/2022 22:20	51.07	6/25/2022 21:02	82.02	6/24/2022 19:25	18.71	6/24/2022 18:34	5.08	6/24/2022 23:30	74.27
6/25/2022 22:21	51.08	6/25/2022 21:03	81.97	6/24/2022 19:26	18.70	6/24/2022 18:35	5.06	6/24/2022 23:31	74.22
6/25/2022 22:22	51.08	6/25/2022 21:04	81.95	6/24/2022 19:27	18.66	6/24/2022 18:36	5.13	6/24/2022 23:32	74.16
6/25/2022 22:23	51.11	6/25/2022 21:05	81.97	6/24/2022 19:28	18.68	6/24/2022 18:37	5.03	6/24/2022 23:33	74.07
6/25/2022 22:24	51.06	6/25/2022 21:06	81.95	6/24/2022 19:29	18.66	6/24/2022 18:38	5.09	6/24/2022 23:34	73.97
6/25/2022 22:25	51.03	6/25/2022 21:07	81.97	6/24/2022 19:30	18.66	6/24/2022 18:39	5.10	6/24/2022 23:35	73.93
6/25/2022 22:26	51.09	6/25/2022 21:08	81.99	6/24/2022 19:31	18.64	6/24/2022 18:40	5.14	6/24/2022 23:36	73.86
6/25/2022 22:27	51.07	6/25/2022 21:09	81.92	6/24/2022 19:32	18.63	6/24/2022 18:41	5.08	6/24/2022 23:37	73.79
6/25/2022 22:28	51.06	6/25/2022 21:10	81.91	6/24/2022 19:33	18.61	6/24/2022 18:42	5.05	6/24/2022 23:38	73.70
6/25/2022 22:29	51.06	6/25/2022 21:11	81.94	6/24/2022 19:34	18.60	6/24/2022 18:43	5.07	6/24/2022 23:39	73.67
6/25/2022 22:30	51.05	6/25/2022 21:12	81.93	6/24/2022 19:35	18.57	6/24/2022 18:44	5.07	6/24/2022 23:40	73.63
6/25/2022 22:31	51.06	6/25/2022 21:13	81.94	6/24/2022 19:36	18.59	6/24/2022 18:45	5.07	6/24/2022 23:41	73.57
6/25/2022 22:32	51.06	6/25/2022 21:14	81.93	6/24/2022 19:37	18.59	6/24/2022 18:46	5.00	6/24/2022 23:42	73.46
6/25/2022 22:33	51.05	6/25/2022 21:15	81.92	6/24/2022 19:38	18.51	6/24/2022 18:47	5.45	6/24/2022 23:43	73.42
6/25/2022 22:34	51.09	6/25/2022 21:16	81.92	6/24/2022 19:39	18.58	6/24/2022 18:48	5.27	6/24/2022 23:44	73.36
6/25/2022 22:35	51.07	6/25/2022 21:17	81.95	6/24/2022 19:40	18.58	6/24/2022 18:49	5.21	6/24/2022 23:45	73.31
6/25/2022 22:36	51.05	6/25/2022 21:18	81.91	6/24/2022 19:41	18.58	6/24/2022 18:50	5.18	6/24/2022 23:46	73.25
6/25/2022 22:37	51.03	6/25/2022 21:19	81.91	6/24/2022 19:42	18.50	6/24/2022 18:51	5.73	6/24/2022 23:47	73.17
6/25/2022 22:38	51.08	6/25/2022 21:20	81.88	6/24/2022 19:43	18.48	6/24/2022 18:52	5.77	6/24/2022 23:48	73.12
6/25/2022 22:39	51.07	6/25/2022 21:21	81.91	6/24/2022 19:44	18.52	6/24/2022 18:53	5.43	6/24/2022 23:49	73.09
6/25/2022 22:40	51.06	6/25/2022 21:22	81.87	6/24/2022 19:45	18.51	6/24/2022 18:54	5.35	6/24/2022 23:50	73.01
6/25/2022 22:41	51.06	6/25/2022 21:23	81.92	6/24/2022 19:46	18.48	6/24/2022 18:55	5.25	6/24/2022 23:51	72.93
6/25/2022 22:42	51.06	6/25/2022 21:24	81.93	6/24/2022 19:47	18.47	6/24/2022 18:56	5.16	6/24/2022 23:52	72.91
6/25/2022 22:43	51.07	6/25/2022 21:25	81.90	6/24/2022 19:48	18.46	6/24/2022 18:57	5.18	6/24/2022 23:53	72.87
6/25/2022 22:44	51.06	6/25/2022 21:26	81.91	6/24/2022 19:49	18.45	6/24/2022 18:58	5.22	6/24/2022 23:54	72.81
6/25/2022 22:45	51.10	6/25/2022 21:27	81.88	6/24/2022 19:50	18.46	6/24/2022 18:59	5.33	6/24/2022 23:55	72.76
6/25/2022 22:46	51.06	6/25/2022 21:28	81.92	6/24/2022 19:51	18.45	6/24/2022 19:00	5.40	6/24/2022 23:56	72.71
6/25/2022 22:47	51.06	6/25/2022 21:29	81.90	6/24/2022 19:52	18.39	6/24/2022 19:01	5.46	6/24/2022 23:57	72.64
6/25/2022 22:48	51.01	6/25/2022 21:30	81.87	6/24/2022 19:53	18.48	6/24/2022 19:02	5.48	6/24/2022 23:58	72.58
6/25/2022 22:49	51.03	6/25/2022 21:31	81.91	6/24/2022 19:54	18.38	6/24/2022 19:03	5.51	6/24/2022 23:59	72.51
6/25/2022 22:50	51.08	6/25/2022 21:32	81.87	6/24/2022 19:55	18.37	6/24/2022 19:04	5.57	6/25/2022 0:00	72.49
6/25/2022 22:51	51.06	6/25/2022 21:33	81.88	6/24/2022 19:56	18.43	6/24/2022 19:05	5.60	6/25/2022 0:01	72.42
6/25/2022 22:52	51.04	6/25/2022 21:34	81.91	6/24/2022 19:57	18.39	6/24/2022 19:06	5.57	6/25/2022 0:02	72.38
6/25/2022 22:53	51.02	6/25/2022 21:35	81.87	6/24/2022 19:58	18.35	6/24/2022 19:07	5.63	6/25/2022 0:03	72.33
6/25/2022 22:54	51.06	6/25/2022 21:36	81.89	6/24/2022 19:59	18.32	6/24/2022 19:08	5.48	6/25/2022 0:04	72.29
6/25/2022 22:55	51.03	6/25/2022 21:37	81.85	6/24/2022 20:00	18.41	6/24/2022 19:09	5.55	6/25/2022 0:05	72.23
6/25/2022 22:56	51.08	6/25/2022 21:38	81.91	6/24/2022 20:01	18.32	6/24/2022 19:10	5.53	6/25/2022 0:06	72.20
6/25/2022 22:57	51.06	6/25/2022 21:39	81.88	6/24/2022 20:02	18.29	6/24/2022 19:11	5.58	6/25/2022 0:07	72.13
6/25/2022 22:58	51.08	6/25/2022 21:40	81.88	6/24/2022 20:03	18.34	6/24/2022 19:12	5.58	6/25/2022 0:08	72.08
6/25/2022 22:59	51.05	6/25/2022 21:41	81.89	6/24/2022 20:04	18.30	6/24/2022 19:13	5.57	6/25/2022 0:09	72.01
6/25/2022 23:00	51.06	6/25/2022 21:42	81.91	6/24/2022 20:05	18.29	6/24/2022 19:14	5.58	6/25/2022 0:10	71.98
6/25/2022 23:01	51.06	6/25/2022 21:43	81.95	6/24/2022 20:06	18.30	6/24/2022 19:15	5.66	6/25/2022 0:11	71.98
6/25/2022 23:02	51.07	6/25/2022 21:44	81.89	6/24/2022 20:07	18.30	6/24/2022 19:16	5.69	6/25/2022 0:12	71.89
6/25/2022 23:03	51.08	6/25/2022 21:45	81.88	6/24/2022 20:08	18.27	6/24/2022 19:17	5.67	6/25/2022 0:13	71.84
6/25/2022 23:04	51.05	6/25/2022 21:46	81.91	6/24/2022 20:09	18.28	6/24/2022 19:18	5.46	6/25/2022 0:14	71.83
6/25/2022 23:05	51.08	6/25/2022 21:47	81.90	6/24/2022 20:10	18.26	6/24/2022 19:19	5.74	6/25/2022 0:15	71.79
6/25/2022 23:06	51.04	6/25/2022 21:48	81.89	6/24/2022 20:11	18.28	6/24/2022 19:20	5.87	6/25/2022 0:16	71.73
6/25/2022 23:07	51.04	6/25/2022 21:49	81.87	6/24/2022 20:12	18.24	6/24/2022 19:21	6.16	6/25/2022 0:17	71.69
6/25/2022 23:08	51.03	6/25/2022 21:50	81.85	6/24/2022 20:13	18.29	6/24/2022 19:22	5.74	6/25/2022 0:18	71.66

6/25/2022 23:09	51.07	6/25/2022 21:51	81.91	6/24/2022 20:14	18.23	6/24/2022 19:23	5.56	6/25/2022 0:19	71.59
6/25/2022 23:10	51.03	6/25/2022 21:52	81.90	6/24/2022 20:15	18.21	6/24/2022 19:24	5.55	6/25/2022 0:20	71.57
6/25/2022 23:11	51.07	6/25/2022 21:53	81.86	6/24/2022 20:16	18.25	6/24/2022 19:25	5.34	6/25/2022 0:21	71.51
6/25/2022 23:12	51.06	6/25/2022 21:54	81.90	6/24/2022 20:17	18.18	6/24/2022 19:26	5.35	6/25/2022 0:22	71.48
6/25/2022 23:13	51.05	6/25/2022 21:55	81.87	6/24/2022 20:18	18.21	6/24/2022 19:27	5.41	6/25/2022 0:23	71.45
6/25/2022 23:14	51.03	6/25/2022 21:56	81.87	6/24/2022 20:19	18.18	6/24/2022 19:28	5.40	6/25/2022 0:24	71.41
6/25/2022 23:15	51.04	6/25/2022 21:57	81.89	6/24/2022 20:20	18.22	6/24/2022 19:29	5.28	6/25/2022 0:25	71.33
6/25/2022 23:16	51.08	6/25/2022 21:58	81.85	6/24/2022 20:21	18.12	6/24/2022 19:30	5.31	6/25/2022 0:26	71.33
6/25/2022 23:17	51.08	6/25/2022 21:59	81.87	6/24/2022 20:22	18.14	6/24/2022 19:31	5.29	6/25/2022 0:27	71.26
6/25/2022 23:18	51.04	6/25/2022 22:00	81.90	6/24/2022 20:23	18.12	6/24/2022 19:32	5.17	6/25/2022 0:28	71.25
6/25/2022 23:19	53.91	6/25/2022 22:01	81.89	6/24/2022 20:24	18.15	6/24/2022 19:33	5.25	6/25/2022 0:29	71.22
6/25/2022 23:20	55.24	6/25/2022 22:02	81.88	6/24/2022 20:25	18.13	6/24/2022 19:34	5.21	6/25/2022 0:30	71.14
6/25/2022 23:21	55.93	6/25/2022 22:03	81.89	6/24/2022 20:26	18.12	6/24/2022 19:35	5.22	6/25/2022 0:31	71.11
6/25/2022 23:22	55.05	6/25/2022 22:04	81.89	6/24/2022 20:27	18.12	6/24/2022 19:36	5.15	6/25/2022 0:32	71.11
6/25/2022 23:23	53.39	6/25/2022 22:05	81.87	6/24/2022 20:28	18.10	6/24/2022 19:37	5.19	6/25/2022 0:33	71.04
6/25/2022 23:24	52.77	6/25/2022 22:06	81.88	6/24/2022 20:29	18.05	6/24/2022 19:38	5.18	6/25/2022 0:34	70.97
6/25/2022 23:25	52.37	6/25/2022 22:07	81.90	6/24/2022 20:30	18.09	6/24/2022 19:39	5.21	6/25/2022 0:35	70.95
6/25/2022 23:26	52.21	6/25/2022 22:08	81.87	6/24/2022 20:31	18.05	6/24/2022 19:40	5.16	6/25/2022 0:36	70.89
6/25/2022 23:27	52.10	6/25/2022 22:09	81.88	6/24/2022 20:32	18.06	6/24/2022 19:41	5.07	6/25/2022 0:37	70.88
6/25/2022 23:28	51.98	6/25/2022 22:10	81.90	6/24/2022 20:33	18.07	6/24/2022 19:42	5.13	6/25/2022 0:38	70.85
6/25/2022 23:29	51.91	6/25/2022 22:11	81.87	6/24/2022 20:34	18.03	6/24/2022 19:43	5.17	6/25/2022 0:39	70.86
6/25/2022 23:30	51.87	6/25/2022 22:12	81.88	6/24/2022 20:35	17.99	6/24/2022 19:44	5.13	6/25/2022 0:40	70.75
6/25/2022 23:31	51.82	6/25/2022 22:13	81.89	6/24/2022 20:36	18.05	6/24/2022 19:45	5.13	6/25/2022 0:41	70.73
6/25/2022 23:32	51.76	6/25/2022 22:14	81.89	6/24/2022 20:37	18.03	6/24/2022 19:46	5.22	6/25/2022 0:42	70.73
6/25/2022 23:33	51.75	6/25/2022 22:15	81.91	6/24/2022 20:38	18.04	6/24/2022 19:47	5.34	6/25/2022 0:43	70.65
6/25/2022 23:34	51.71	6/25/2022 22:16	81.89	6/24/2022 20:39	17.96	6/24/2022 19:48	5.26	6/25/2022 0:44	70.66
6/25/2022 23:35	51.68	6/25/2022 22:17	81.88	6/24/2022 20:40	18.02	6/24/2022 19:49	5.23	6/25/2022 0:45	70.60
6/25/2022 23:36	51.66	6/25/2022 22:18	81.88	6/24/2022 20:41	18.01	6/24/2022 19:50	5.31	6/25/2022 0:46	70.57
6/25/2022 23:37	51.63	6/25/2022 22:19	81.87	6/24/2022 20:42	18.04	6/24/2022 19:51	5.26	6/25/2022 0:47	70.52
6/25/2022 23:38	51.60	6/25/2022 22:20	81.90	6/24/2022 20:43	17.99	6/24/2022 19:52	5.17	6/25/2022 0:48	70.52
6/25/2022 23:39	51.63	6/25/2022 22:21	81.90	6/24/2022 20:44	17.98	6/24/2022 19:53	5.13	6/25/2022 0:49	70.51
6/25/2022 23:40	51.61	6/25/2022 22:22	81.92	6/24/2022 20:45	17.98	6/24/2022 19:54	5.15	6/25/2022 0:50	70.40
6/25/2022 23:41	51.58	6/25/2022 22:23	81.88	6/24/2022 20:46	17.97	6/24/2022 19:55	5.11	6/25/2022 0:51	70.40
6/25/2022 23:42	51.57	6/25/2022 22:24	81.91	6/24/2022 20:47	17.96	6/24/2022 19:56	5.06	6/25/2022 0:52	70.35
6/25/2022 23:43	51.54	6/25/2022 22:25	81.87	6/24/2022 20:48	17.94	6/24/2022 19:57	5.09	6/25/2022 0:53	70.30
6/25/2022 23:44	51.54	6/25/2022 22:26	81.86	6/24/2022 20:49	17.95	6/24/2022 19:58	5.06	6/25/2022 0:54	70.31
6/25/2022 23:45	51.56	6/25/2022 22:27	81.85	6/24/2022 20:50	17.92	6/24/2022 19:59	5.13	6/25/2022 0:55	70.29
6/25/2022 23:46	51.48	6/25/2022 22:28	81.89	6/24/2022 20:51	17.94	6/24/2022 20:00	5.15	6/25/2022 0:56	70.25
6/25/2022 23:47	51.51	6/25/2022 22:29	81.90	6/24/2022 20:52	17.93	6/24/2022 20:01	5.02	6/25/2022 0:57	70.25
6/25/2022 23:48	51.49	6/25/2022 22:30	81.92	6/24/2022 20:53	17.89	6/24/2022 20:02	5.04	6/25/2022 0:58	70.18
6/25/2022 23:49	51.47	6/25/2022 22:31	81.90	6/24/2022 20:54	17.90	6/24/2022 20:03	4.99	6/25/2022 0:59	70.13
6/25/2022 23:50	51.44	6/25/2022 22:32	81.87	6/24/2022 20:55	17.91	6/24/2022 20:04	4.99	6/25/2022 1:00	70.15
6/25/2022 23:51	51.46	6/25/2022 22:33	81.88	6/24/2022 20:56	17.93	6/24/2022 20:05	5.02	6/25/2022 1:01	70.09
6/25/2022 23:52	51.48	6/25/2022 22:34	81.88	6/24/2022 20:57	17.91	6/24/2022 20:06	4.98	6/25/2022 1:02	70.09
6/25/2022 23:53	51.43	6/25/2022 22:35	81.91	6/24/2022 20:58	17.90	6/24/2022 20:07	4.98	6/25/2022 1:03	70.06
6/25/2022 23:54	51.42	6/25/2022 22:36	81.89	6/24/2022 20:59	17.89	6/24/2022 20:08	4.97	6/25/2022 1:04	69.98
6/25/2022 23:55	51.41	6/25/2022 22:37	81.85	6/24/2022 21:00	17.93	6/24/2022 20:09	4.98	6/25/2022 1:05	70.01
6/25/2022 23:56	51.44	6/25/2022 22:38	81.86	6/24/2022 21:01	17.83	6/24/2022 20:10	4.98	6/25/2022 1:06	69.95
6/25/2022 23:57	51.39	6/25/2022 22:39	81.90	6/24/2022 21:02	17.85	6/24/2022 20:11	5.00	6/25/2022 1:07	69.92
6/25/2022 23:58	51.38	6/25/2022 22:40	81.87	6/24/2022 21:03	17.87	6/24/2022 20:12	4.93	6/25/2022 1:08	69.89
6/25/2022 23:59	51.39	6/25/2022 22:41	81.87	6/24/2022 21:04	17.85	6/24/2022 20:13	4.94	6/25/2022 1:09	69.87
6/26/2022 0:00	51.38	6/25/2022 22:42	81.88	6/24/2022 21:05	17.84	6/24/2022 20:14	5.14	6/25/2022 1:10	69.86
6/26/2022 0:01	51.39	6/25/2022 22:43	81.93	6/24/2022 21:06	17.82	6/24/2022 20:15	5.26	6/25/2022 1:11	69.80
6/26/2022 0:02	51.40	6/25/2022 22:44	81.87	6/24/2022 21:07	17.82	6/24/2022 20:16	5.28	6/25/2022 1:12	69.83
6/26/2022 0:03	51.38	6/25/2022 22:45	81.88	6/24/2022 21:08	19.27	6/24/2022 20:17	5.30	6/25/2022 1:13	69.74
6/26/2022 0:04	51.39	6/25/2022 22:46	81.89	6/24/2022 21:09	24.39	6/24/2022 20:18	5.34	6/25/2022 1:14	69.75
6/26/2022 0:05	51.39	6/25/2022 22:47	81.94	6/24/2022 21:10	27.33	6/24/2022 20:19	5.40	6/25/2022 1:15	69.73
6/26/2022 0:06	51.39	6/25/2022 22:48	81.90	6/24/2022 21:11	25.90	6/24/2022 20:20	5.42	6/25/2022 1:16	69.68
6/26/2022 0:07	51.37	6/25/2022 22:49	81.89	6/24/2022 21:12	23.72	6/24/2022 20:21	5.16	6/25/2022 1:17	69.66
6/26/2022 0:08	51.37	6/25/2022 22:50	81.88	6/24/2022 21:13	22.46	6/24/2022 20:22	5.18	6/25/2022 1:18	69.64
6/26/2022 0:09	51.33	6/25/2022 22:51	81.91	6/24/2022 21:14	21.71	6/24/2022 20:23	5.35	6/25/2022 1:19	69.58
6/26/2022 0:10	51.36	6/25/2022 22:52	81.91	6/24/2022 21:15	21.22	6/24/2022 20:24	5.24	6/25/2022 1:20	69.58
6/26/2022 0:11	51.34	6/25/2022 22:53	81.92	6/24/2022 21:16	20.81	6/24/2022 20:25	5.17	6/25/2022 1:21	69.52
6/26/2022 0:12	51.35	6/25/2022 22:54	81.92	6/24/2022 21:17	20.56	6/24/2022 20:26	5.09	6/25/2022 1:22	69.52
6/26/2022 0:13	51.31	6/25/2022 22:55	81.89	6/24/2022 21:18	20.34	6/24/2022 20:27	5.08	6/25/2022 1:23	69.51
6/26/2022 0:14	51.32	6/25/2022 22:56	81.88	6/24/2022 21:19	20.11	6/24/2022 20:28	5.09	6/25/2022 1:24	69.48
6/26/2022 0:15	51.33	6/25/2022 22:57	81.89	6/24/2022 21:20	20.01	6/24/2022 20:29	5.05	6/25/2022 1:25	69.44
6/26/2022 0:16	51.31	6/25/2022 22:58	81.87	6/24/2022 21:21	19.88	6/24/2022 20:30	5.07	6/25/2022 1:26	69.42
6/26/2022 0:17	51.36	6/25/2022 22:59	81.91	6/24/2022 21:22	19.77	6/24/2022 20:31	5.00	6/25/2022 1:27	69.44
6/26/2022 0:18	51.33	6/25/2022 23:00	81.88	6/24/2022 21:23	19.64	6/24/2022 20:32	5.08	6/25/2022 1:28	69.38
6/26/2022 0:19	51.32	6/25/2022 23:01	81.88	6/24/2022 21:24	19.55	6/24/2022 20:33	4.98	6/25/2022 1:29	69.34
6/26/2022 0:20	51.32	6/25/2022 23:02	81.86	6/24/2022 21:25	19.46	6/24/2022 20:34	5.01	6/25/2022 1:30	69.33
6/26/2022 0:21	51.29	6/25/2022 23:03	81.88	6/24/2022 21:26	19.38	6/24/2022 20:35	4.99	6/25/2022 1:31	69.32
6/26/2022 0:22	51.33	6/25/2022 23:04	81.93	6/24/2022 21:27	19.30	6/24/2022 20:36	4.98	6/25/2022 1:32	69.27
6/26/2022 0:23	51.29	6/25/2022 23:05	81.87	6/24/2022 21:28	19.24	6/24/2022 20:37	4.96	6/25/2022 1:33	69.28
6/26/2022 0:24	51.30	6/25/2022 23:06	81.90	6/24/2022 21:29	19.19	6/24/2022 20:38	5.53	6/25/2022 1:34	69.26
6/26/2022 0:25	51.29	6/25/2022 23:07	81.88	6/24/2022 21:30	19.11	6/24/2022 20:39	6.36	6/25/2022 1:35	69.23
6/26/2022 0:26	51.31	6/25/2022 23:08	81.89	6/24/2022 21:31	19.06	6/24/2022 20:40	6.55	6/25/2022 1:36	69.25
6/26/2022 0:27	51.31	6/25/2022 23:09	81.88	6/24/2022 21:32	19.05	6/24/2022 20:41	6.70	6/25/2022 1:37	69.23
6/26/2022 0:28	51.27	6/25/2022 23:10	81.90	6/24/2022 21:33	18.99	6/24/2022 20:42	6.90	6/25/2022 1:38	69.18
6/26/2022 0:29	51.32	6/25/2022 23:11	81.92	6/24/2022 21:34	18.96	6/24/2022 20:43	6.23	6/25/2022 1:39	69.17
6/26/2022 0:30	51.28	6/25/2022 23:12	81.85	6/24/2022 21:35	18.92	6/24/2022 20:44	5.91	6/25/2022 1:40	69.12
6/26/2022 0:31	51.28	6/25/2022 23:13	81.88	6/24/2022 21:36	18.87	6/24/2022 20:45	5.71	6/25/2022 1:41	69.11
6/26/2022 0:32	51.29	6/25/2022 23:14	81.89	6/24/2022 21:37	18.83	6/24/2022 20:46	5.65	6/25/2022 1:42	69.09
6/26/2022 0:33	51.26	6/25/2022 23:15	81.89	6/24/2022 21:38	18.82	6/24/2022 20:47	5.53	6/25/2022 1:43	69.07
6/26/2022 0:34	51.29	6/25/2022 23:16	81.91	6/24/2022 21:39	18.79	6/24/2022 20:48	5.48	6/25/2022 1:44	69.03
6/26/2022 0:35	51.26	6/25/2022 23:17	81.93	6/24/2022 21:40	18.75	6/24/2022 20:49	5.43	6/25/2022 1:45	69.02
6/26/2022 0:36	51.27	6/25/2022 23:18	81.87	6/24/2022 21:41	18.74	6/24/2022 20:50	5.38	6/25/2022 1:46	69.00

6/26/2022 0:37	51.24	6/25/2022 23:19	81.88	6/24/2022 21:42	18.74	6/24/2022 20:51	5.78	6/25/2022 1:47	68.97
6/26/2022 0:38	51.26	6/25/2022 23:20	81.87	6/24/2022 21:43	18.64	6/24/2022 20:52	5.59	6/25/2022 1:48	68.95
6/26/2022 0:39	51.26	6/25/2022 23:21	81.90	6/24/2022 21:44	18.64	6/24/2022 20:53	5.50	6/25/2022 1:49	68.95
6/26/2022 0:40	51.27	6/25/2022 23:22	81.90	6/24/2022 21:45	18.61	6/24/2022 20:54	5.44	6/25/2022 1:50	68.89
6/26/2022 0:41	51.27	6/25/2022 23:23	81.90	6/24/2022 21:46	18.56	6/24/2022 20:55	5.41	6/25/2022 1:51	68.90
6/26/2022 0:42	51.24	6/25/2022 23:24	81.86	6/24/2022 21:47	18.57	6/24/2022 20:56	5.34	6/25/2022 1:52	68.87
6/26/2022 0:43	51.22	6/25/2022 23:25	81.87	6/24/2022 21:48	18.52	6/24/2022 20:57	5.32	6/25/2022 1:53	68.90
6/26/2022 0:44	51.26	6/25/2022 23:26	81.83	6/24/2022 21:49	18.56	6/24/2022 20:58	5.34	6/25/2022 1:54	68.83
6/26/2022 0:45	51.22	6/25/2022 23:27	81.88	6/24/2022 21:50	18.53	6/24/2022 20:59	5.29	6/25/2022 1:55	68.78
6/26/2022 0:46	51.21	6/25/2022 23:28	81.91	6/24/2022 21:51	18.48	6/24/2022 21:00	5.27	6/25/2022 1:56	68.81
6/26/2022 0:47	51.26	6/25/2022 23:29	81.90	6/24/2022 21:52	18.42	6/24/2022 21:01	5.27	6/25/2022 1:57	68.77
6/26/2022 0:48	51.28	6/25/2022 23:30	81.87	6/24/2022 21:53	18.44	6/24/2022 21:02	5.27	6/25/2022 1:58	68.78
6/26/2022 0:49	51.26	6/25/2022 23:31	81.89	6/24/2022 21:54	18.40	6/24/2022 21:03	5.26	6/25/2022 1:59	68.73
6/26/2022 0:50	51.26	6/25/2022 23:32	81.90	6/24/2022 21:55	18.43	6/24/2022 21:04	5.24	6/25/2022 2:00	68.70
6/26/2022 0:51	51.22	6/25/2022 23:33	81.86	6/24/2022 21:56	18.38	6/24/2022 21:05	5.48	6/25/2022 2:01	68.70
6/26/2022 0:52	51.23	6/25/2022 23:34	81.87	6/24/2022 21:57	18.40	6/24/2022 21:06	5.58	6/25/2022 2:02	68.71
6/26/2022 0:53	51.24	6/25/2022 23:35	81.88	6/24/2022 21:58	18.36	6/24/2022 21:07	5.45	6/25/2022 2:03	68.65
6/26/2022 0:54	51.25	6/25/2022 23:36	81.87	6/24/2022 21:59	18.32	6/24/2022 21:08	5.55	6/25/2022 2:04	68.66
6/26/2022 0:55	51.24	6/25/2022 23:37	81.84	6/24/2022 22:00	18.39	6/24/2022 21:09	5.52	6/25/2022 2:05	68.65
6/26/2022 0:56	51.25	6/25/2022 23:38	81.86	6/24/2022 22:01	24.21	6/24/2022 21:10	5.64	6/25/2022 2:06	68.63
6/26/2022 0:57	51.24	6/25/2022 23:39	81.89	6/24/2022 22:02	27.40	6/24/2022 21:11	5.40	6/25/2022 2:07	68.57
6/26/2022 0:58	51.25	6/25/2022 23:40	81.86	6/24/2022 22:03	28.76	6/24/2022 21:12	5.38	6/25/2022 2:08	68.58
6/26/2022 0:59	51.23	6/25/2022 23:41	81.87	6/24/2022 22:04	25.52	6/24/2022 21:13	5.36	6/25/2022 2:09	68.57
6/26/2022 1:00	51.22	6/25/2022 23:42	81.89	6/24/2022 22:05	23.81	6/24/2022 21:14	5.34	6/25/2022 2:10	68.54
6/26/2022 1:01	51.21	6/25/2022 23:43	81.86	6/24/2022 22:06	22.79	6/24/2022 21:15	5.25	6/25/2022 2:11	68.53
6/26/2022 1:02	51.22	6/25/2022 23:44	81.82	6/24/2022 22:07	22.11	6/24/2022 21:16	5.25	6/25/2022 2:12	68.47
6/26/2022 1:03	51.22	6/25/2022 23:45	81.87	6/24/2022 22:08	21.69	6/24/2022 21:17	5.25	6/25/2022 2:13	68.49
6/26/2022 1:04	51.21	6/25/2022 23:46	81.86	6/24/2022 22:09	21.29	6/24/2022 21:18	5.23	6/25/2022 2:14	68.51
6/26/2022 1:05	51.25	6/25/2022 23:47	81.85	6/24/2022 22:10	21.03	6/24/2022 21:19	5.22	6/25/2022 2:15	68.41
6/26/2022 1:06	51.21	6/25/2022 23:48	81.85	6/24/2022 22:11	20.82	6/24/2022 21:20	5.17	6/25/2022 2:16	68.43
6/26/2022 1:07	51.20	6/25/2022 23:49	81.88	6/24/2022 22:12	20.66	6/24/2022 21:21	5.21	6/25/2022 2:17	68.42
6/26/2022 1:08	51.22	6/25/2022 23:50	81.88	6/24/2022 22:13	20.49	6/24/2022 21:22	5.23	6/25/2022 2:18	68.41
6/26/2022 1:09	51.21	6/25/2022 23:51	81.86	6/24/2022 22:14	25.65	6/24/2022 21:23	5.16	6/25/2022 2:19	68.40
6/26/2022 1:10	51.22	6/25/2022 23:52	81.91	6/24/2022 22:15	29.00	6/24/2022 21:24	5.15	6/25/2022 2:20	68.37
6/26/2022 1:11	51.19	6/25/2022 23:53	81.90	6/24/2022 22:16	31.11	6/24/2022 21:25	5.17	6/25/2022 2:21	68.38
6/26/2022 1:12	51.20	6/25/2022 23:54	81.91	6/24/2022 22:17	27.44	6/24/2022 21:26	5.14	6/25/2022 2:22	68.33
6/26/2022 1:13	51.21	6/25/2022 23:55	81.88	6/24/2022 22:18	25.51	6/24/2022 21:27	5.16	6/25/2022 2:23	68.33
6/26/2022 1:14	51.20	6/25/2022 23:56	81.89	6/24/2022 22:19	24.44	6/24/2022 21:28	5.16	6/25/2022 2:24	68.31
6/26/2022 1:15	51.20	6/25/2022 23:57	81.87	6/24/2022 22:20	23.56	6/24/2022 21:29	5.09	6/25/2022 2:25	68.33
6/26/2022 1:16	51.19	6/25/2022 23:58	81.90	6/24/2022 22:21	23.04	6/24/2022 21:30	5.15	6/25/2022 2:26	68.28
6/26/2022 1:17	51.23	6/25/2022 23:59	81.87	6/24/2022 22:22	22.58	6/24/2022 21:31	5.22	6/25/2022 2:27	68.28
6/26/2022 1:18	51.21	6/26/2022 0:00	81.88	6/24/2022 22:23	22.20	6/24/2022 21:32	5.09	6/25/2022 2:28	68.27
6/26/2022 1:19	51.18	6/26/2022 0:01	81.80	6/24/2022 22:24	21.93	6/24/2022 21:33	5.02	6/25/2022 2:29	68.26
6/26/2022 1:20	51.19	6/26/2022 0:02	81.88	6/24/2022 22:25	21.75	6/24/2022 21:34	5.12	6/25/2022 2:30	68.21
6/26/2022 1:21	51.21	6/26/2022 0:03	81.86	6/24/2022 22:26	21.54	6/24/2022 21:35	5.12	6/25/2022 2:31	68.24
6/26/2022 1:22	51.21	6/26/2022 0:04	81.86	6/24/2022 22:27	21.39	6/24/2022 21:36	5.09	6/25/2022 2:32	68.24
6/26/2022 1:23	51.23	6/26/2022 0:05	81.84	6/24/2022 22:28	21.23	6/24/2022 21:37	5.09	6/25/2022 2:33	68.25
6/26/2022 1:24	51.21	6/26/2022 0:06	81.88	6/24/2022 22:29	21.09	6/24/2022 21:38	5.07	6/25/2022 2:34	68.21
6/26/2022 1:25	51.16	6/26/2022 0:07	81.86	6/24/2022 22:30	20.97	6/24/2022 21:39	5.09	6/25/2022 2:35	68.22
6/26/2022 1:26	51.20	6/26/2022 0:08	81.89	6/24/2022 22:31	20.85	6/24/2022 21:40	5.06	6/25/2022 2:36	68.18
6/26/2022 1:27	51.20	6/26/2022 0:09	81.86	6/24/2022 22:32	20.69	6/24/2022 21:41	5.00	6/25/2022 2:37	68.14
6/26/2022 1:28	51.19	6/26/2022 0:10	81.84	6/24/2022 22:33	20.66	6/24/2022 21:42	5.06	6/25/2022 2:38	68.17
6/26/2022 1:29	51.16	6/26/2022 0:11	81.83	6/24/2022 22:34	20.57	6/24/2022 21:43	5.08	6/25/2022 2:39	68.16
6/26/2022 1:30	51.19	6/26/2022 0:12	81.88	6/24/2022 22:35	20.42	6/24/2022 21:44	4.99	6/25/2022 2:40	68.14
6/26/2022 1:31	51.17	6/26/2022 0:13	81.85	6/24/2022 22:36	20.39	6/24/2022 21:45	5.00	6/25/2022 2:41	68.12
6/26/2022 1:32	51.18	6/26/2022 0:14	81.88	6/24/2022 22:37	20.30	6/24/2022 21:46	5.04	6/25/2022 2:42	68.11
6/26/2022 1:33	51.21	6/26/2022 0:15	81.90	6/24/2022 22:38	20.19	6/24/2022 21:47	5.04	6/25/2022 2:43	68.10
6/26/2022 1:34	51.18	6/26/2022 0:16	81.89	6/24/2022 22:39	20.14	6/24/2022 21:48	4.99	6/25/2022 2:44	68.10
6/26/2022 1:35	51.15	6/26/2022 0:17	81.86	6/24/2022 22:40	20.07	6/24/2022 21:49	4.98	6/25/2022 2:45	68.13
6/26/2022 1:36	51.19	6/26/2022 0:18	81.87	6/24/2022 22:41	20.03	6/24/2022 21:50	4.98	6/25/2022 2:46	68.12
6/26/2022 1:37	51.17	6/26/2022 0:19	81.82	6/24/2022 22:42	20.00	6/24/2022 21:51	5.01	6/25/2022 2:47	68.07
6/26/2022 1:38	51.17	6/26/2022 0:20	81.88	6/24/2022 22:43	19.90	6/24/2022 21:52	5.04	6/25/2022 2:48	68.88
6/26/2022 1:39	51.20	6/26/2022 0:21	81.88	6/24/2022 22:44	19.84	6/24/2022 21:53	5.01	6/25/2022 2:49	74.74
6/26/2022 1:40	51.14	6/26/2022 0:22	81.83	6/24/2022 22:45	19.77	6/24/2022 21:54	4.95	6/25/2022 2:50	74.53
6/26/2022 1:41	51.18	6/26/2022 0:23	81.88	6/24/2022 22:46	19.73	6/24/2022 21:55	5.01	6/25/2022 2:51	74.38
6/26/2022 1:42	51.15	6/26/2022 0:24	81.87	6/24/2022 22:47	19.67	6/24/2022 21:56	5.01	6/25/2022 2:52	74.25
6/26/2022 1:43	51.20	6/26/2022 0:25	81.87	6/24/2022 22:48	19.61	6/24/2022 21:57	5.05	6/25/2022 2:53	74.18
6/26/2022 1:44	51.19	6/26/2022 0:26	81.90	6/24/2022 22:49	19.60	6/24/2022 21:58	5.04	6/25/2022 2:54	74.04
6/26/2022 1:45	51.16	6/26/2022 0:27	81.88	6/24/2022 22:50	19.55	6/24/2022 21:59	4.89	6/25/2022 2:55	73.94
6/26/2022 1:46	51.15	6/26/2022 0:28	81.85	6/24/2022 22:51	19.54	6/24/2022 22:00	4.92	6/25/2022 2:56	73.85
6/26/2022 1:47	51.19	6/26/2022 0:29	81.88	6/24/2022 22:52	19.45	6/24/2022 22:01	4.94	6/25/2022 2:57	73.77
6/26/2022 1:48	51.13	6/26/2022 0:30	81.83	6/24/2022 22:53	19.45	6/24/2022 22:02	4.98	6/25/2022 2:58	73.69
6/26/2022 1:49	51.16	6/26/2022 0:31	81.89	6/24/2022 22:54	19.40	6/24/2022 22:03	4.94	6/25/2022 2:59	73.59
6/26/2022 1:50	51.15	6/26/2022 0:32	81.93	6/24/2022 22:55	19.38	6/24/2022 22:04	4.92	6/25/2022 3:00	73.53
6/26/2022 1:51	51.13	6/26/2022 0:33	81.91	6/24/2022 22:56	19.35	6/24/2022 22:05	4.97	6/25/2022 3:01	73.46
6/26/2022 1:52	51.15	6/26/2022 0:34	81.89	6/24/2022 22:57	19.27	6/24/2022 22:06	5.63	6/25/2022 3:02	73.37
6/26/2022 1:53	51.14	6/26/2022 0:35	81.91	6/24/2022 22:58	19.28	6/24/2022 22:07	6.05	6/25/2022 3:03	73.30
6/26/2022 1:54	51.19	6/26/2022 0:36	81.86	6/24/2022 22:59	19.21	6/24/2022 22:08	6.37	6/25/2022 3:04	73.20
6/26/2022 1:55	51.13	6/26/2022 0:37	81.85	6/24/2022 23:00	19.23	6/24/2022 22:09	6.56	6/25/2022 3:05	73.16
6/26/2022 1:56	51.19	6/26/2022 0:38	81.87	6/24/2022 23:01	19.20	6/24/2022 22:10	6.78	6/25/2022 3:06	73.07
6/26/2022 1:57	51.19	6/26/2022 0:39	81.88	6/24/2022 23:02	19.11	6/24/2022 22:11	6.95	6/25/2022 3:07	72.99
6/26/2022 1:58	51.18	6/26/2022 0:40	81.87	6/24/2022 23:03	19.12	6/24/2022 22:12	7.06	6/25/2022 3:08	72.94
6/26/2022 1:59	51.15	6/26/2022 0:41	81.84	6/24/2022 23:04	19.07	6/24/2022 22:13	7.16	6/25/2022 3:09	72.83
6/26/2022 2:00	51.16	6/26/2022 0:42	81.88	6/24/2022 23:05	19.13	6/24/2022 22:14	7.24	6/25/2022 3:10	72.79
6/26/2022 2:01	51.17	6/26/2022 0:43	81.85	6/24/2022 23:06	19.07	6/24/2022 22:15	7.51	6/25/2022 3:11	72.78
6/26/2022 2:02	51.18	6/26/2022 0:44	81.85	6/24/2022 23:07	18.99	6/24/2022 22:16	7.49	6/25/2022 3:12	72.67
6/26/2022 2:03	51.15	6/26/2022 0:45	81.91	6/24/2022 23:08	18.98	6/24/2022 22:17	7.58	6/25/2022 3:13	72.60
6/26/2022 2:04	51.15	6/26/2022 0:46	81.84	6/24/2022 23:09	19.01	6/24/2022 22:18	7.21	6/25/2022 3:14	72.52

6/26/2022 2:05	51.18	6/26/2022 0:47	81.88	6/24/2022 23:10	18.92	6/24/2022 22:19	6.67	6/25/2022 3:15	72.46
6/26/2022 2:06	51.15	6/26/2022 0:48	81.85	6/24/2022 23:11	18.93	6/24/2022 22:20	6.38	6/25/2022 3:16	72.43
6/26/2022 2:07	51.16	6/26/2022 0:49	81.90	6/24/2022 23:12	18.86	6/24/2022 22:21	6.31	6/25/2022 3:17	72.36
6/26/2022 2:08	51.18	6/26/2022 0:50	81.85	6/24/2022 23:13	18.85	6/24/2022 22:22	6.29	6/25/2022 3:18	72.28
6/26/2022 2:09	51.15	6/26/2022 0:51	81.84	6/24/2022 23:14	18.82	6/24/2022 22:23	6.20	6/25/2022 3:19	72.25
6/26/2022 2:10	51.15	6/26/2022 0:52	81.86	6/24/2022 23:15	18.81	6/24/2022 22:24	6.01	6/25/2022 3:20	72.14
6/26/2022 2:11	51.14	6/26/2022 0:53	81.81	6/24/2022 23:16	18.79	6/24/2022 22:25	6.02	6/25/2022 3:21	72.12
6/26/2022 2:12	51.14	6/26/2022 0:54	81.88	6/24/2022 23:17	18.78	6/24/2022 22:26	5.98	6/25/2022 3:22	72.07
6/26/2022 2:13	51.14	6/26/2022 0:55	81.88	6/24/2022 23:18	18.73	6/24/2022 22:27	5.88	6/25/2022 3:23	71.99
6/26/2022 2:14	51.11	6/26/2022 0:56	81.88	6/24/2022 23:19	18.68	6/24/2022 22:28	5.89	6/25/2022 3:24	71.94
6/26/2022 2:15	51.19	6/26/2022 0:57	81.86	6/24/2022 23:20	18.66	6/24/2022 22:29	5.86	6/25/2022 3:25	71.92
6/26/2022 2:16	51.13	6/26/2022 0:58	81.88	6/24/2022 23:21	18.71	6/24/2022 22:30	5.84	6/25/2022 3:26	71.84
6/26/2022 2:17	51.11	6/26/2022 0:59	81.87	6/24/2022 23:22	18.65	6/24/2022 22:31	5.73	6/25/2022 3:27	71.84
6/26/2022 2:18	51.15	6/26/2022 1:00	81.86	6/24/2022 23:23	18.63	6/24/2022 22:32	5.77	6/25/2022 3:28	71.75
6/26/2022 2:19	51.15	6/26/2022 1:01	81.85	6/24/2022 23:24	18.61	6/24/2022 22:33	5.76	6/25/2022 3:29	71.73
6/26/2022 2:20	51.12	6/26/2022 1:02	81.85	6/24/2022 23:25	18.65	6/24/2022 22:34	5.64	6/25/2022 3:30	71.65
6/26/2022 2:21	51.14	6/26/2022 1:03	81.87	6/24/2022 23:26	18.64	6/24/2022 22:35	5.69	6/25/2022 3:31	71.60
6/26/2022 2:22	51.15	6/26/2022 1:04	81.86	6/24/2022 23:27	18.61	6/24/2022 22:36	5.69	6/25/2022 3:32	71.57
6/26/2022 2:23	51.17	6/26/2022 1:05	81.91	6/24/2022 23:28	18.59	6/24/2022 22:37	5.72	6/25/2022 3:33	71.54
6/26/2022 2:24	51.17	6/26/2022 1:06	81.87	6/24/2022 23:29	18.54	6/24/2022 22:38	5.64	6/25/2022 3:34	71.48
6/26/2022 2:25	51.13	6/26/2022 1:07	81.85	6/24/2022 23:30	18.55	6/24/2022 22:39	5.65	6/25/2022 3:35	71.43
6/26/2022 2:26	51.14	6/26/2022 1:08	81.87	6/24/2022 23:31	18.48	6/24/2022 22:40	5.69	6/25/2022 3:36	71.36
6/26/2022 2:27	51.16	6/26/2022 1:09	81.86	6/24/2022 23:32	18.50	6/24/2022 22:41	5.60	6/25/2022 3:37	71.33
6/26/2022 2:28	51.14	6/26/2022 1:10	81.84	6/24/2022 23:33	18.52	6/24/2022 22:42	5.57	6/25/2022 3:38	71.30
6/26/2022 2:29	51.13	6/26/2022 1:11	81.90	6/24/2022 23:34	18.47	6/24/2022 22:43	5.58	6/25/2022 3:39	71.27
6/26/2022 2:30	51.12	6/26/2022 1:12	81.87	6/24/2022 23:35	18.43	6/24/2022 22:44	5.59	6/25/2022 3:40	71.23
6/26/2022 2:31	51.17	6/26/2022 1:13	81.87	6/24/2022 23:36	18.41	6/24/2022 22:45	5.50	6/25/2022 3:41	71.20
6/26/2022 2:32	51.14	6/26/2022 1:14	81.85	6/24/2022 23:37	18.45	6/24/2022 22:46	5.53	6/25/2022 3:42	71.14
6/26/2022 2:33	51.06	6/26/2022 1:15	81.92	6/24/2022 23:38	18.45	6/24/2022 22:47	5.50	6/25/2022 3:43	71.07
6/26/2022 2:34	51.12	6/26/2022 1:16	81.88	6/24/2022 23:39	18.36	6/24/2022 22:48	5.48	6/25/2022 3:44	71.04
6/26/2022 2:35	51.13	6/26/2022 1:17	81.85	6/24/2022 23:40	18.39	6/24/2022 22:49	5.46	6/25/2022 3:45	71.01
6/26/2022 2:36	51.10	6/26/2022 1:18	81.91	6/24/2022 23:41	18.38	6/24/2022 22:50	5.49	6/25/2022 3:46	70.97
6/26/2022 2:37	51.18	6/26/2022 1:19	81.88	6/24/2022 23:42	18.31	6/24/2022 22:51	5.53	6/25/2022 3:47	70.92
6/26/2022 2:38	51.09	6/26/2022 1:20	81.87	6/24/2022 23:43	18.36	6/24/2022 22:52	5.41	6/25/2022 3:48	70.91
6/26/2022 2:39	51.13	6/26/2022 1:21	81.85	6/24/2022 23:44	18.30	6/24/2022 22:53	5.42	6/25/2022 3:49	70.82
6/26/2022 2:40	51.12	6/26/2022 1:22	81.86	6/24/2022 23:45	18.25	6/24/2022 22:54	5.42	6/25/2022 3:50	70.84
6/26/2022 2:41	51.16	6/26/2022 1:23	81.88	6/24/2022 23:46	18.28	6/24/2022 22:55	5.49	6/25/2022 3:51	70.81
6/26/2022 2:42	51.06	6/26/2022 1:24	81.85	6/24/2022 23:47	18.25	6/24/2022 22:56	5.37	6/25/2022 3:52	70.80
6/26/2022 2:43	51.11	6/26/2022 1:25	81.89	6/24/2022 23:48	18.25	6/24/2022 22:57	5.40	6/25/2022 3:53	70.73
6/26/2022 2:44	51.16	6/26/2022 1:26	81.84	6/24/2022 23:49	18.26	6/24/2022 22:58	5.43	6/25/2022 3:54	70.67
6/26/2022 2:45	51.13	6/26/2022 1:27	81.89	6/24/2022 23:50	18.25	6/24/2022 22:59	5.37	6/25/2022 3:55	70.64
6/26/2022 2:46	51.13	6/26/2022 1:28	81.89	6/24/2022 23:51	18.18	6/24/2022 23:00	5.38	6/25/2022 3:56	70.61
6/26/2022 2:47	51.12	6/26/2022 1:29	81.91	6/24/2022 23:52	18.20	6/24/2022 23:01	5.40	6/25/2022 3:57	70.60
6/26/2022 2:48	51.10	6/26/2022 1:30	81.86	6/24/2022 23:53	18.20	6/24/2022 23:02	5.42	6/25/2022 3:58	70.58
6/26/2022 2:49	51.11	6/26/2022 1:31	81.90	6/24/2022 23:54	18.19	6/24/2022 23:03	5.34	6/25/2022 3:59	70.51
6/26/2022 2:50	51.09	6/26/2022 1:32	81.88	6/24/2022 23:55	18.13	6/24/2022 23:04	5.58	6/25/2022 4:00	70.49
6/26/2022 2:51	51.08	6/26/2022 1:33	81.86	6/24/2022 23:56	18.16	6/24/2022 23:05	5.43	6/25/2022 4:01	70.49
6/26/2022 2:52	51.07	6/26/2022 1:34	81.89	6/24/2022 23:57	18.13	6/24/2022 23:06	5.38	6/25/2022 4:02	70.45
6/26/2022 2:53	51.12	6/26/2022 1:35	81.91	6/24/2022 23:58	18.11	6/24/2022 23:07	5.39	6/25/2022 4:03	70.39
6/26/2022 2:54	51.10	6/26/2022 1:36	81.92	6/24/2022 23:59	18.12	6/24/2022 23:08	5.39	6/25/2022 4:04	70.37
6/26/2022 2:55	51.10	6/26/2022 1:37	81.85	6/25/2022 0:00	18.12	6/24/2022 23:09	5.35	6/25/2022 4:05	70.32
6/26/2022 2:56	51.08	6/26/2022 1:38	81.90	6/25/2022 0:01	18.10	6/24/2022 23:10	5.31	6/25/2022 4:06	70.31
6/26/2022 2:57	51.12	6/26/2022 1:39	81.86	6/25/2022 0:02	18.15	6/24/2022 23:11	5.35	6/25/2022 4:07	70.26
6/26/2022 2:58	51.13	6/26/2022 1:40	81.87	6/25/2022 0:03	18.11	6/24/2022 23:12	5.29	6/25/2022 4:08	70.27
6/26/2022 2:59	51.05	6/26/2022 1:41	81.85	6/25/2022 0:04	18.08	6/24/2022 23:13	5.34	6/25/2022 4:09	70.18
6/26/2022 3:00	51.10	6/26/2022 1:42	81.91	6/25/2022 0:05	18.03	6/24/2022 23:14	5.33	6/25/2022 4:10	70.15
6/26/2022 3:01	51.10	6/26/2022 1:43	81.84	6/25/2022 0:06	18.12	6/24/2022 23:15	5.28	6/25/2022 4:11	70.17
6/26/2022 3:02	51.10	6/26/2022 1:44	81.88	6/25/2022 0:07	18.01	6/24/2022 23:16	5.27	6/25/2022 4:12	70.10
6/26/2022 3:03	51.10	6/26/2022 1:45	81.87	6/25/2022 0:08	18.05	6/24/2022 23:17	5.26	6/25/2022 4:13	70.06
6/26/2022 3:04	51.13	6/26/2022 1:46	81.85	6/25/2022 0:09	18.03	6/24/2022 23:18	5.27	6/25/2022 4:14	70.09
6/26/2022 3:05	51.14	6/26/2022 1:47	81.86	6/25/2022 0:10	18.01	6/24/2022 23:19	5.27	6/25/2022 4:15	70.02
6/26/2022 3:06	51.11	6/26/2022 1:48	81.86	6/25/2022 0:11	17.98	6/24/2022 23:20	5.27	6/25/2022 4:16	70.02
6/26/2022 3:07	51.10	6/26/2022 1:49	81.88	6/25/2022 0:12	17.98	6/24/2022 23:21	5.26	6/25/2022 4:17	69.97
6/26/2022 3:08	51.09	6/26/2022 1:50	81.85	6/25/2022 0:13	17.98	6/24/2022 23:22	5.27	6/25/2022 4:18	69.98
6/26/2022 3:09	51.11	6/26/2022 1:51	81.87	6/25/2022 0:14	17.98	6/24/2022 23:23	5.22	6/25/2022 4:19	69.90
6/26/2022 3:10	51.12	6/26/2022 1:52	81.86	6/25/2022 0:15	18.01	6/24/2022 23:24	5.23	6/25/2022 4:20	69.91
6/26/2022 3:11	51.08	6/26/2022 1:53	81.87	6/25/2022 0:16	17.96	6/24/2022 23:25	5.26	6/25/2022 4:21	69.87
6/26/2022 3:12	51.11	6/26/2022 1:54	81.84	6/25/2022 0:17	17.94	6/24/2022 23:26	5.20	6/25/2022 4:22	69.81
6/26/2022 3:13	51.11	6/26/2022 1:55	81.88	6/25/2022 0:18	17.93	6/24/2022 23:27	5.24	6/25/2022 4:23	69.81
6/26/2022 3:14	51.13	6/26/2022 1:56	81.85	6/25/2022 0:19	17.94	6/24/2022 23:28	5.23	6/25/2022 4:24	69.80
6/26/2022 3:15	51.12	6/26/2022 1:57	81.85	6/25/2022 0:20	17.95	6/24/2022 23:29	5.24	6/25/2022 4:25	69.75
6/26/2022 3:16	51.09	6/26/2022 1:58	81.89	6/25/2022 0:21	17.96	6/24/2022 23:30	5.18	6/25/2022 4:26	69.70
6/26/2022 3:17	51.07	6/26/2022 1:59	81.84	6/25/2022 0:22	17.91	6/24/2022 23:31	5.17	6/25/2022 4:27	69.72
6/26/2022 3:18	51.13	6/26/2022 2:00	81.87	6/25/2022 0:23	17.90	6/24/2022 23:32	5.18	6/25/2022 4:28	69.64
6/26/2022 3:19	51.12	6/26/2022 2:01	81.85	6/25/2022 0:24	17.89	6/24/2022 23:33	5.24	6/25/2022 4:29	69.66
6/26/2022 3:20	51.11	6/26/2022 2:02	81.86	6/25/2022 0:25	17.88	6/24/2022 23:34	5.16	6/25/2022 4:30	69.62
6/26/2022 3:21	51.09	6/26/2022 2:03	81.85	6/25/2022 0:26	17.86	6/24/2022 23:35	5.19	6/25/2022 4:31	69.61
6/26/2022 3:22	51.10	6/26/2022 2:04	81.86	6/25/2022 0:27	17.85	6/24/2022 23:36	5.23	6/25/2022 4:32	69.57
6/26/2022 3:23	51.08	6/26/2022 2:05	81.87	6/25/2022 0:28	17.91	6/24/2022 23:37	5.18	6/25/2022 4:33	69.53
6/26/2022 3:24	51.10	6/26/2022 2:06	81.91	6/25/2022 0:29	17.84	6/24/2022 23:38	5.19	6/25/2022 4:34	69.53
6/26/2022 3:25	51.11	6/26/2022 2:07	81.85	6/25/2022 0:30	17.88	6/24/2022 23:39	5.18	6/25/2022 4:35	69.51
6/26/2022 3:26	51.10	6/26/2022 2:08	81.92	6/25/2022 0:31	17.83	6/24/2022 23:40	5.20	6/25/2022 4:36	69.46
6/26/2022 3:27	51.08	6/26/2022 2:09	81.87	6/25/2022 0:32	17.86	6/24/2022 23:41	5.15	6/25/2022 4:37	69.41
6/26/2022 3:28	51.12	6/26/2022 2:10	81.87	6/25/2022 0:33	17.86	6/24/2022 23:42	5.09	6/25/2022 4:38	69.42
6/26/2022 3:29	51.13	6/26/2022 2:11	81.88	6/25/2022 0:34	17.81	6/24/2022 23:43	5.18	6/25/2022 4:39	69.40
6/26/2022 3:30	51.12	6/26/2022 2:12	81.87	6/25/2022 0:35	17.85	6/24/2022 23:44	5.23	6/25/2022 4:40	69.39
6/26/2022 3:31	51.14	6/26/2022 2:13	81.87	6/25/2022 0:36	17.82	6/24/2022 23:45	5.13	6/25/2022 4:41	69.35
6/26/2022 3:32	51.08	6/26/2022 2:14	81.85	6/25/2022 0:37	17.82	6/24/2022 23:46	5.07	6/25/2022 4:42	69.30

6/26/2022 3:33	51.08	6/26/2022 2:15	81.90	6/25/2022 0:38	17.81	6/24/2022 23:47	5.16	6/25/2022 4:43	69.31
6/26/2022 3:34	51.08	6/26/2022 2:16	81.87	6/25/2022 0:39	17.81	6/24/2022 23:48	5.11	6/25/2022 4:44	69.30
6/26/2022 3:35	51.12	6/26/2022 2:17	81.85	6/25/2022 0:40	20.79	6/24/2022 23:49	5.16	6/25/2022 4:45	69.24
6/26/2022 3:36	51.10	6/26/2022 2:18	81.88	6/25/2022 0:41	25.10	6/24/2022 23:50	5.12	6/25/2022 4:46	69.21
6/26/2022 3:37	51.09	6/26/2022 2:19	81.87	6/25/2022 0:42	26.60	6/24/2022 23:51	5.14	6/25/2022 4:47	69.19
6/26/2022 3:38	51.06	6/26/2022 2:20	81.87	6/25/2022 0:43	23.76	6/24/2022 23:52	5.06	6/25/2022 4:48	69.20
6/26/2022 3:39	51.11	6/26/2022 2:21	81.92	6/25/2022 0:44	22.36	6/24/2022 23:53	5.14	6/25/2022 4:49	69.19
6/26/2022 3:40	51.10	6/26/2022 2:22	81.90	6/25/2022 0:45	21.51	6/24/2022 23:54	5.11	6/25/2022 4:50	69.16
6/26/2022 3:41	51.11	6/26/2022 2:23	81.81	6/25/2022 0:46	20.94	6/24/2022 23:55	5.15	6/25/2022 4:51	69.13
6/26/2022 3:42	51.12	6/26/2022 2:24	81.90	6/25/2022 0:47	20.61	6/24/2022 23:56	5.10	6/25/2022 4:52	69.11
6/26/2022 3:43	51.06	6/26/2022 2:25	81.85	6/25/2022 0:48	20.30	6/24/2022 23:57	5.10	6/25/2022 4:53	69.08
6/26/2022 3:44	51.08	6/26/2022 2:26	81.90	6/25/2022 0:49	20.06	6/24/2022 23:58	5.14	6/25/2022 4:54	69.08
6/26/2022 3:45	51.07	6/26/2022 2:27	81.87	6/25/2022 0:50	19.89	6/24/2022 23:59	5.04	6/25/2022 4:55	69.05
6/26/2022 3:46	51.11	6/26/2022 2:28	81.88	6/25/2022 0:51	19.70	6/25/2022 0:00	5.08	6/25/2022 4:56	69.01
6/26/2022 3:47	51.09	6/26/2022 2:29	81.83	6/25/2022 0:52	19.60	6/25/2022 0:01	5.07	6/25/2022 4:57	69.00
6/26/2022 3:48	51.07	6/26/2022 2:30	81.84	6/25/2022 0:53	19.50	6/25/2022 0:02	5.11	6/25/2022 4:58	68.97
6/26/2022 3:49	51.12	6/26/2022 2:31	81.90	6/25/2022 0:54	19.42	6/25/2022 0:03	5.08	6/25/2022 4:59	68.98
6/26/2022 3:50	51.10	6/26/2022 2:32	81.90	6/25/2022 0:55	19.30	6/25/2022 0:04	5.04	6/25/2022 5:00	68.92
6/26/2022 3:51	51.12	6/26/2022 2:33	81.90	6/25/2022 0:56	19.24	6/25/2022 0:05	5.48	6/25/2022 5:01	68.92
6/26/2022 3:52	51.09	6/26/2022 2:34	81.87	6/25/2022 0:57	19.18	6/25/2022 0:06	5.30	6/25/2022 5:02	68.91
6/26/2022 3:53	51.09	6/26/2022 2:35	81.90	6/25/2022 0:58	19.11	6/25/2022 0:07	5.29	6/25/2022 5:03	68.85
6/26/2022 3:54	51.10	6/26/2022 2:36	81.91	6/25/2022 0:59	19.00	6/25/2022 0:08	5.25	6/25/2022 5:04	68.87
6/26/2022 3:55	51.07	6/26/2022 2:37	81.87	6/25/2022 1:00	18.98	6/25/2022 0:09	5.27	6/25/2022 5:05	68.85
6/26/2022 3:56	51.05	6/26/2022 2:38	81.85	6/25/2022 1:01	18.91	6/25/2022 0:10	5.22	6/25/2022 5:06	68.82
6/26/2022 3:57	51.09	6/26/2022 2:39	81.86	6/25/2022 1:02	18.83	6/25/2022 0:11	5.24	6/25/2022 5:07	68.80
6/26/2022 3:58	51.05	6/26/2022 2:40	81.87	6/25/2022 1:03	18.81	6/25/2022 0:12	5.31	6/25/2022 5:08	68.75
6/26/2022 3:59	51.11	6/26/2022 2:41	81.86	6/25/2022 1:04	18.77	6/25/2022 0:13	5.29	6/25/2022 5:09	68.78
6/26/2022 4:00	51.07	6/26/2022 2:42	81.87	6/25/2022 1:05	18.73	6/25/2022 0:14	5.28	6/25/2022 5:10	68.70
6/26/2022 4:01	51.04	6/26/2022 2:43	81.87	6/25/2022 1:06	18.69	6/25/2022 0:15	5.28	6/25/2022 5:11	68.72
6/26/2022 4:02	51.09	6/26/2022 2:44	81.91	6/25/2022 1:07	18.62	6/25/2022 0:16	5.22	6/25/2022 5:12	68.70
6/26/2022 4:03	51.10	6/26/2022 2:45	81.89	6/25/2022 1:08	18.61	6/25/2022 0:17	5.30	6/25/2022 5:13	68.66
6/26/2022 4:04	51.07	6/26/2022 2:46	81.89	6/25/2022 1:09	18.54	6/25/2022 0:18	5.30	6/25/2022 5:14	68.65
6/26/2022 4:05	51.11	6/26/2022 2:47	81.85	6/25/2022 1:10	18.59	6/25/2022 0:19	5.27	6/25/2022 5:15	68.65
6/26/2022 4:06	51.10	6/26/2022 2:48	81.86	6/25/2022 1:11	18.50	6/25/2022 0:20	5.30	6/25/2022 5:16	68.64
6/26/2022 4:07	51.09	6/26/2022 2:49	81.89	6/25/2022 1:12	18.50	6/25/2022 0:21	5.35	6/25/2022 5:17	68.59
6/26/2022 4:08	51.07	6/26/2022 2:50	81.88	6/25/2022 1:13	18.50	6/25/2022 0:22	5.35	6/25/2022 5:18	68.61
6/26/2022 4:09	51.09	6/26/2022 2:51	81.88	6/25/2022 1:14	18.42	6/25/2022 0:23	5.36	6/25/2022 5:19	68.58
6/26/2022 4:10	51.07	6/26/2022 2:52	81.93	6/25/2022 1:15	18.41	6/25/2022 0:24	5.33	6/25/2022 5:20	68.55
6/26/2022 4:11	51.11	6/26/2022 2:53	81.85	6/25/2022 1:16	18.37	6/25/2022 0:25	5.26	6/25/2022 5:21	68.54
6/26/2022 4:12	51.05	6/26/2022 2:54	81.87	6/25/2022 1:17	18.32	6/25/2022 0:26	5.22	6/25/2022 5:22	68.53
6/26/2022 4:13	51.09	6/26/2022 2:55	81.89	6/25/2022 1:18	18.35	6/25/2022 0:27	5.23	6/25/2022 5:23	68.52
6/26/2022 4:14	51.10	6/26/2022 2:56	81.88	6/25/2022 1:19	18.32	6/25/2022 0:28	5.31	6/25/2022 5:24	68.48
6/26/2022 4:15	51.12	6/26/2022 2:57	81.90	6/25/2022 1:20	18.24	6/25/2022 0:29	5.19	6/25/2022 5:25	68.48
6/26/2022 4:16	51.10	6/26/2022 2:58	81.85	6/25/2022 1:21	18.23	6/25/2022 0:30	5.21	6/25/2022 5:26	68.46
6/26/2022 4:17	51.08	6/26/2022 2:59	81.89	6/25/2022 1:22	18.22	6/25/2022 0:31	5.20	6/25/2022 5:27	68.43
6/26/2022 4:18	51.09	6/26/2022 3:00	81.86	6/25/2022 1:23	18.23	6/25/2022 0:32	5.29	6/25/2022 5:28	68.42
6/26/2022 4:19	51.07	6/26/2022 3:01	81.86	6/25/2022 1:24	18.26	6/25/2022 0:33	5.23	6/25/2022 5:29	68.40
6/26/2022 4:20	51.10	6/26/2022 3:02	81.91	6/25/2022 1:25	18.23	6/25/2022 0:34	5.23	6/25/2022 5:30	68.38
6/26/2022 4:21	51.08	6/26/2022 3:03	81.91	6/25/2022 1:26	18.20	6/25/2022 0:35	5.20	6/25/2022 5:31	68.41
6/26/2022 4:22	51.07	6/26/2022 3:04	81.87	6/25/2022 1:27	18.14	6/25/2022 0:36	5.25	6/25/2022 5:32	68.36
6/26/2022 4:23	51.11	6/26/2022 3:05	81.89	6/25/2022 1:28	18.15	6/25/2022 0:37	5.23	6/25/2022 5:33	68.35
6/26/2022 4:24	51.12	6/26/2022 3:06	81.92	6/25/2022 1:29	18.15	6/25/2022 0:38	5.25	6/25/2022 5:34	68.34
6/26/2022 4:25	51.09	6/26/2022 3:07	81.84	6/25/2022 1:30	18.14	6/25/2022 0:39	5.22	6/25/2022 5:35	68.31
6/26/2022 4:26	51.12	6/26/2022 3:08	81.90	6/25/2022 1:31	18.09	6/25/2022 0:40	5.20	6/25/2022 5:36	68.28
6/26/2022 4:27	51.10	6/26/2022 3:09	81.89	6/25/2022 1:32	18.10	6/25/2022 0:41	5.18	6/25/2022 5:37	68.27
6/26/2022 4:28	51.08	6/26/2022 3:10	81.89	6/25/2022 1:33	18.11	6/25/2022 0:42	5.17	6/25/2022 5:38	68.25
6/26/2022 4:29	53.08	6/26/2022 3:11	81.87	6/25/2022 1:34	18.09	6/25/2022 0:43	5.28	6/25/2022 5:39	68.25
6/26/2022 4:30	54.84	6/26/2022 3:12	81.86	6/25/2022 1:35	18.06	6/25/2022 0:44	5.23	6/25/2022 5:40	68.24
6/26/2022 4:31	55.71	6/26/2022 3:13	81.91	6/25/2022 1:36	18.07	6/25/2022 0:45	5.20	6/25/2022 5:41	68.26
6/26/2022 4:32	56.23	6/26/2022 3:14	81.85	6/25/2022 1:37	18.02	6/25/2022 0:46	5.26	6/25/2022 5:42	68.21
6/26/2022 4:33	53.89	6/26/2022 3:15	81.90	6/25/2022 1:38	18.01	6/25/2022 0:47	5.19	6/25/2022 5:43	68.18
6/26/2022 4:34	52.96	6/26/2022 3:16	81.91	6/25/2022 1:39	18.01	6/25/2022 0:48	5.20	6/25/2022 5:44	68.20
6/26/2022 4:35	52.58	6/26/2022 3:17	81.89	6/25/2022 1:40	18.00	6/25/2022 0:49	5.25	6/25/2022 5:45	68.15
6/26/2022 4:36	52.31	6/26/2022 3:18	81.90	6/25/2022 1:41	17.96	6/25/2022 0:50	5.25	6/25/2022 5:46	68.14
6/26/2022 4:37	52.18	6/26/2022 3:19	81.87	6/25/2022 1:42	18.02	6/25/2022 0:51	5.25	6/25/2022 5:47	68.16
6/26/2022 4:38	52.06	6/26/2022 3:20	81.87	6/25/2022 1:43	17.94	6/25/2022 0:52	5.24	6/25/2022 5:48	68.13
6/26/2022 4:39	52.02	6/26/2022 3:21	81.89	6/25/2022 1:44	17.92	6/25/2022 0:53	5.24	6/25/2022 5:49	68.09
6/26/2022 4:40	51.94	6/26/2022 3:22	81.91	6/25/2022 1:45	17.90	6/25/2022 0:54	5.29	6/25/2022 5:50	68.07
6/26/2022 4:41	51.87	6/26/2022 3:23	81.88	6/25/2022 1:46	17.90	6/25/2022 0:55	5.22	6/25/2022 5:51	68.07
6/26/2022 4:42	51.86	6/26/2022 3:24	81.90	6/25/2022 1:47	17.91	6/25/2022 0:56	5.25	6/25/2022 5:52	68.05
6/26/2022 4:43	51.77	6/26/2022 3:25	81.86	6/25/2022 1:48	17.90	6/25/2022 0:57	5.32	6/25/2022 5:53	68.07
6/26/2022 4:44	51.76	6/26/2022 3:26	81.87	6/25/2022 1:49	17.93	6/25/2022 0:58	5.21	6/25/2022 5:54	68.04
6/26/2022 4:45	51.73	6/26/2022 3:27	81.88	6/25/2022 1:50	17.89	6/25/2022 0:59	5.30	6/25/2022 5:55	67.99
6/26/2022 4:46	51.74	6/26/2022 3:28	81.88	6/25/2022 1:51	17.83	6/25/2022 1:00	5.23	6/25/2022 5:56	68.01
6/26/2022 4:47	51.71	6/26/2022 3:29	81.88	6/25/2022 1:52	17.82	6/25/2022 1:01	5.33	6/25/2022 5:57	67.99
6/26/2022 4:48	51.69	6/26/2022 3:30	81.89	6/25/2022 1:53	17.82	6/25/2022 1:02	5.26	6/25/2022 5:58	67.99
6/26/2022 4:49	51.65	6/26/2022 3:31	81.87	6/25/2022 1:54	17.83	6/25/2022 1:03	5.23	6/25/2022 5:59	67.94
6/26/2022 4:50	51.67	6/26/2022 3:32	81.89	6/25/2022 1:55	17.81	6/25/2022 1:04	5.30	6/25/2022 6:00	67.93
6/26/2022 4:51	51.61	6/26/2022 3:33	81.85	6/25/2022 1:56	17.84	6/25/2022 1:05	5.29	6/25/2022 6:01	67.90
6/26/2022 4:52	51.58	6/26/2022 3:34	81.88	6/25/2022 1:57	17.77	6/25/2022 1:06	5.25	6/25/2022 6:02	67.92
6/26/2022 4:53	51.59	6/26/2022 3:35	81.90	6/25/2022 1:58	17.80	6/25/2022 1:07	5.27	6/25/2022 6:03	67.91
6/26/2022 4:54	51.59	6/26/2022 3:36	81.85	6/25/2022 1:59	17.80	6/25/2022 1:08	5.26	6/25/2022 6:04	67.87
6/26/2022 4:55	51.60	6/26/2022 3:37	81.93	6/25/2022 2:00	17.76	6/25/2022 1:09	5.26	6/25/2022 6:05	67.90
6/26/2022 4:56	51.56	6/26/2022 3:38	81.91	6/25/2022 2:01	17.77	6/25/2022 1:10	5.27	6/25/2022 6:06	67.88
6/26/2022 4:57	51.56	6/26/2022 3:39	81.89	6/25/2022 2:02	17.75	6/25/2022 1:11	5.25	6/25/2022 6:07	67.85
6/26/2022 4:58	51.53	6/26/2022 3:40	81.83	6/25/2022 2:03	17.74	6/25/2022 1:12	5.37	6/25/2022 6:08	67.84
6/26/2022 4:59	51.52	6/26/2022 3:41	81.84	6/25/2022 2:04	17.72	6/25/2022 1:13	5.29	6/25/2022 6:09	67.84
6/26/2022 5:00	51.54	6/26/2022 3:42	81.87	6/25/2022 2:05	17.70	6/25/2022 1:14	5.28	6/25/2022 6:10	67.82

6/26/2022 5:01	51.53	6/26/2022 3:43	81.89	6/25/2022 2:06	17.73	6/25/2022 1:15	5.34	6/25/2022 6:11	67.79
6/26/2022 5:02	51.52	6/26/2022 3:44	81.90	6/25/2022 2:07	17.74	6/25/2022 1:16	5.35	6/25/2022 6:12	67.80
6/26/2022 5:03	51.50	6/26/2022 3:45	81.86	6/25/2022 2:08	17.70	6/25/2022 1:17	5.27	6/25/2022 6:13	67.78
6/26/2022 5:04	51.50	6/26/2022 3:46	81.87	6/25/2022 2:09	17.70	6/25/2022 1:18	5.28	6/25/2022 6:14	67.77
6/26/2022 5:05	51.50	6/26/2022 3:47	81.88	6/25/2022 2:10	17.74	6/25/2022 1:19	5.39	6/25/2022 6:15	67.76
6/26/2022 5:06	51.48	6/26/2022 3:48	81.93	6/25/2022 2:11	17.67	6/25/2022 1:20	5.29	6/25/2022 6:16	67.74
6/26/2022 5:07	51.46	6/26/2022 3:49	81.88	6/25/2022 2:12	17.69	6/25/2022 1:21	5.30	6/25/2022 6:17	67.76
6/26/2022 5:08	51.46	6/26/2022 3:50	81.91	6/25/2022 2:13	17.68	6/25/2022 1:22	5.36	6/25/2022 6:18	67.70
6/26/2022 5:09	51.50	6/26/2022 3:51	81.93	6/25/2022 2:14	17.65	6/25/2022 1:23	5.43	6/25/2022 6:19	67.73
6/26/2022 5:10	51.45	6/26/2022 3:52	81.92	6/25/2022 2:15	17.62	6/25/2022 1:24	5.31	6/25/2022 6:20	67.68
6/26/2022 5:11	51.46	6/26/2022 3:53	81.89	6/25/2022 2:16	17.60	6/25/2022 1:25	5.33	6/25/2022 6:21	67.71
6/26/2022 5:12	51.43	6/26/2022 3:54	81.92	6/25/2022 2:17	20.86	6/25/2022 1:26	5.33	6/25/2022 6:22	67.66
6/26/2022 5:13	51.47	6/26/2022 3:55	81.92	6/25/2022 2:18	25.18	6/25/2022 1:27	5.30	6/25/2022 6:23	67.67
6/26/2022 5:14	51.43	6/26/2022 3:56	81.89	6/25/2022 2:19	27.13	6/25/2022 1:28	5.33	6/25/2022 6:24	67.64
6/26/2022 5:15	51.44	6/26/2022 3:57	81.87	6/25/2022 2:20	24.03	6/25/2022 1:29	5.39	6/25/2022 6:25	67.67
6/26/2022 5:16	51.43	6/26/2022 3:58	81.84	6/25/2022 2:21	22.49	6/25/2022 1:30	5.43	6/25/2022 6:26	67.62
6/26/2022 5:17	51.43	6/26/2022 3:59	81.87	6/25/2022 2:22	21.57	6/25/2022 1:31	5.34	6/25/2022 6:27	67.64
6/26/2022 5:18	51.42	6/26/2022 4:00	81.91	6/25/2022 2:23	20.94	6/25/2022 1:32	5.37	6/25/2022 6:28	67.61
6/26/2022 5:19	51.41	6/26/2022 4:01	81.87	6/25/2022 2:24	20.59	6/25/2022 1:33	5.41	6/25/2022 6:29	67.61
6/26/2022 5:20	51.45	6/26/2022 4:02	81.90	6/25/2022 2:25	20.31	6/25/2022 1:34	5.34	6/25/2022 6:30	67.60
6/26/2022 5:21	51.40	6/26/2022 4:03	81.86	6/25/2022 2:26	20.05	6/25/2022 1:35	5.37	6/25/2022 6:31	67.58
6/26/2022 5:22	51.41	6/26/2022 4:04	81.87	6/25/2022 2:27	19.87	6/25/2022 1:36	5.41	6/25/2022 6:32	67.60
6/26/2022 5:23	51.39	6/26/2022 4:05	81.85	6/25/2022 2:28	19.71	6/25/2022 1:37	5.42	6/25/2022 6:33	67.58
6/26/2022 5:24	51.44	6/26/2022 4:06	81.86	6/25/2022 2:29	19.58	6/25/2022 1:38	5.38	6/25/2022 6:34	67.58
6/26/2022 5:25	51.37	6/26/2022 4:07	81.89	6/25/2022 2:30	19.45	6/25/2022 1:39	5.39	6/25/2022 6:35	67.56
6/26/2022 5:26	51.39	6/26/2022 4:08	81.87	6/25/2022 2:31	19.33	6/25/2022 1:40	5.44	6/25/2022 6:36	67.56
6/26/2022 5:27	51.36	6/26/2022 4:09	81.92	6/25/2022 2:32	19.28	6/25/2022 1:41	5.38	6/25/2022 6:37	67.55
6/26/2022 5:28	51.40	6/26/2022 4:10	81.87	6/25/2022 2:33	19.20	6/25/2022 1:42	5.43	6/25/2022 6:38	67.54
6/26/2022 5:29	51.40	6/26/2022 4:11	81.89	6/25/2022 2:34	19.09	6/25/2022 1:43	5.43	6/25/2022 6:39	67.50
6/26/2022 5:30	51.38	6/26/2022 4:12	81.92	6/25/2022 2:35	18.99	6/25/2022 1:44	5.50	6/25/2022 6:40	67.51
6/26/2022 5:31	51.39	6/26/2022 4:13	81.89	6/25/2022 2:36	18.91	6/25/2022 1:45	5.44	6/25/2022 6:41	67.51
6/26/2022 5:32	51.37	6/26/2022 4:14	81.86	6/25/2022 2:37	18.91	6/25/2022 1:46	5.46	6/25/2022 6:42	67.49
6/26/2022 5:33	51.37	6/26/2022 4:15	81.89	6/25/2022 2:38	18.81	6/25/2022 1:47	5.43	6/25/2022 6:43	67.47
6/26/2022 5:34	51.41	6/26/2022 4:16	81.86	6/25/2022 2:39	18.76	6/25/2022 1:48	5.43	6/25/2022 6:44	67.47
6/26/2022 5:35	51.36	6/26/2022 4:17	81.89	6/25/2022 2:40	18.72	6/25/2022 1:49	5.45	6/25/2022 6:45	67.47
6/26/2022 5:36	51.33	6/26/2022 4:18	81.89	6/25/2022 2:41	18.68	6/25/2022 1:50	5.46	6/25/2022 6:46	67.46
6/26/2022 5:37	51.36	6/26/2022 4:19	81.87	6/25/2022 2:42	18.63	6/25/2022 1:51	5.44	6/25/2022 6:47	67.45
6/26/2022 5:38	51.36	6/26/2022 4:20	81.88	6/25/2022 2:43	18.64	6/25/2022 1:52	5.42	6/25/2022 6:48	67.43
6/26/2022 5:39	51.36	6/26/2022 4:21	81.85	6/25/2022 2:44	18.51	6/25/2022 1:53	5.45	6/25/2022 6:49	67.43
6/26/2022 5:40	51.36	6/26/2022 4:22	81.93	6/25/2022 2:45	18.53	6/25/2022 1:54	5.44	6/25/2022 6:50	67.42
6/26/2022 5:41	51.38	6/26/2022 4:23	81.84	6/25/2022 2:46	18.49	6/25/2022 1:55	5.53	6/25/2022 6:51	67.43
6/26/2022 5:42	51.37	6/26/2022 4:24	81.96	6/25/2022 2:47	18.47	6/25/2022 1:56	5.45	6/25/2022 6:52	67.40
6/26/2022 5:43	51.42	6/26/2022 4:25	81.88	6/25/2022 2:48	18.44	6/25/2022 1:57	5.47	6/25/2022 6:53	67.44
6/26/2022 5:44	51.38	6/26/2022 4:26	81.88	6/25/2022 2:49	18.39	6/25/2022 1:58	5.52	6/25/2022 6:54	67.39
6/26/2022 5:45	51.35	6/26/2022 4:27	81.89	6/25/2022 2:50	18.37	6/25/2022 1:59	5.48	6/25/2022 6:55	67.37
6/26/2022 5:46	51.36	6/26/2022 4:28	81.89	6/25/2022 2:51	18.34	6/25/2022 2:00	5.50	6/25/2022 6:56	67.40
6/26/2022 5:47	51.34	6/26/2022 4:29	81.89	6/25/2022 2:52	18.30	6/25/2022 2:01	5.50	6/25/2022 6:57	67.39
6/26/2022 5:48	51.31	6/26/2022 4:30	81.87	6/25/2022 2:53	18.31	6/25/2022 2:02	5.56	6/25/2022 6:58	67.39
6/26/2022 5:49	51.34	6/26/2022 4:31	81.89	6/25/2022 2:54	18.27	6/25/2022 2:03	5.49	6/25/2022 6:59	67.36
6/26/2022 5:50	51.31	6/26/2022 4:32	81.91	6/25/2022 2:55	18.25	6/25/2022 2:04	5.53	6/25/2022 7:00	67.37
6/26/2022 5:51	51.33	6/26/2022 4:33	81.89	6/25/2022 2:56	21.03	6/25/2022 2:05	5.55	6/25/2022 7:01	67.34
6/26/2022 5:52	51.33	6/26/2022 4:34	81.91	6/25/2022 2:57	25.53	6/25/2022 2:06	5.58	6/25/2022 7:02	67.32
6/26/2022 5:53	51.37	6/26/2022 4:35	81.94	6/25/2022 2:58	28.12	6/25/2022 2:07	5.52	6/25/2022 7:03	67.32
6/26/2022 5:54	51.33	6/26/2022 4:36	81.92	6/25/2022 2:59	24.76	6/25/2022 2:08	5.51	6/25/2022 7:04	67.35
6/26/2022 5:55	51.32	6/26/2022 4:37	81.88	6/25/2022 3:00	23.12	6/25/2022 2:09	5.59	6/25/2022 7:05	67.36
6/26/2022 5:56	51.36	6/26/2022 4:38	81.91	6/25/2022 3:01	22.16	6/25/2022 2:10	5.54	6/25/2022 7:06	67.32
6/26/2022 5:57	51.33	6/26/2022 4:39	81.88	6/25/2022 3:02	21.56	6/25/2022 2:11	5.54	6/25/2022 7:07	67.34
6/26/2022 5:58	51.30	6/26/2022 4:40	81.92	6/25/2022 3:03	21.08	6/25/2022 2:12	5.54	6/25/2022 7:08	67.27
6/26/2022 5:59	51.31	6/26/2022 4:41	81.90	6/25/2022 3:04	20.77	6/25/2022 2:13	5.59	6/25/2022 7:09	67.29
6/26/2022 6:00	51.35	6/26/2022 4:42	81.88	6/25/2022 3:05	20.53	6/25/2022 2:14	5.56	6/25/2022 7:10	67.29
6/26/2022 6:01	51.31	6/26/2022 4:43	81.88	6/25/2022 3:06	20.31	6/25/2022 2:15	5.56	6/25/2022 7:11	67.24
6/26/2022 6:02	51.29	6/26/2022 4:44	81.84	6/25/2022 3:07	20.17	6/25/2022 2:16	5.60	6/25/2022 7:12	67.23
6/26/2022 6:03	51.30	6/26/2022 4:45	81.89	6/25/2022 3:08	19.98	6/25/2022 2:17	5.61	6/25/2022 7:13	67.25
6/26/2022 6:04	51.28	6/26/2022 4:46	81.91	6/25/2022 3:09	19.86	6/25/2022 2:18	5.52	6/25/2022 7:14	67.22
6/26/2022 6:05	51.33	6/26/2022 4:47	81.87	6/25/2022 3:10	19.75	6/25/2022 2:19	5.58	6/25/2022 7:15	67.21
6/26/2022 6:06	51.29	6/26/2022 4:48	81.92	6/25/2022 3:11	19.64	6/25/2022 2:20	5.59	6/25/2022 7:16	67.26
6/26/2022 6:07	51.29	6/26/2022 4:49	81.97	6/25/2022 3:12	19.56	6/25/2022 2:21	5.55	6/25/2022 7:17	67.24
6/26/2022 6:08	51.33	6/26/2022 4:50	81.87	6/25/2022 3:13	19.47	6/25/2022 2:22	5.57	6/25/2022 7:18	67.24
6/26/2022 6:09	51.33	6/26/2022 4:51	81.89	6/25/2022 3:14	19.42	6/25/2022 2:23	5.58	6/25/2022 7:19	67.18
6/26/2022 6:10	51.30	6/26/2022 4:52	81.89	6/25/2022 3:15	19.29	6/25/2022 2:24	5.59	6/25/2022 7:20	67.23
6/26/2022 6:11	51.30	6/26/2022 4:53	81.88	6/25/2022 3:16	19.22	6/25/2022 2:25	6.21	6/25/2022 7:21	67.19
6/26/2022 6:12	51.34	6/26/2022 4:54	81.95	6/25/2022 3:17	19.21	6/25/2022 2:26	6.50	6/25/2022 7:22	67.16
6/26/2022 6:13	51.31	6/26/2022 4:55	81.86	6/25/2022 3:18	19.18	6/25/2022 2:27	6.68	6/25/2022 7:23	67.19
6/26/2022 6:14	51.33	6/26/2022 4:56	81.89	6/25/2022 3:19	19.12	6/25/2022 2:28	6.89	6/25/2022 7:24	67.14
6/26/2022 6:15	51.29	6/26/2022 4:57	81.90	6/25/2022 3:20	19.00	6/25/2022 2:29	6.92	6/25/2022 7:25	67.20
6/26/2022 6:16	51.34	6/26/2022 4:58	81.87	6/25/2022 3:21	19.03	6/25/2022 2:30	7.06	6/25/2022 7:26	67.12
6/26/2022 6:17	51.31	6/26/2022 4:59	81.88	6/25/2022 3:22	18.91	6/25/2022 2:31	7.15	6/25/2022 7:27	67.14
6/26/2022 6:18	51.34	6/26/2022 5:00	81.91	6/25/2022 3:23	18.90	6/25/2022 2:32	7.26	6/25/2022 7:28	67.12
6/26/2022 6:19	51.28	6/26/2022 5:01	81.91	6/25/2022 3:24	18.88	6/25/2022 2:33	7.30	6/25/2022 7:29	67.15
6/26/2022 6:20	51.31	6/26/2022 5:02	81.91	6/25/2022 3:25	18.81	6/25/2022 2:34	7.40	6/25/2022 7:30	67.07
6/26/2022 6:21	51.30	6/26/2022 5:03	81.87	6/25/2022 3:26	18.74	6/25/2022 2:35	7.47	6/25/2022 7:31	67.11
6/26/2022 6:22	51.32	6/26/2022 5:04	81.88	6/25/2022 3:27	18.72	6/25/2022 2:36	7.55	6/25/2022 7:32	67.11
6/26/2022 6:23	51.32	6/26/2022 5:05	81.87	6/25/2022 3:28	18.71	6/25/2022 2:37	7.58	6/25/2022 7:33	67.12
6/26/2022 6:24	51.26	6/26/2022 5:06	81.90	6/25/2022 3:29	18.70	6/25/2022 2:38	7.63	6/25/2022 7:34	67.12
6/26/2022 6:25	51.29	6/26/2022 5:07	81.91	6/25/2022 3:30	18.63	6/25/2022 2:39	7.76	6/25/2022 7:35	67.10
6/26/2022 6:26	51.31	6/26/2022 5:08	81.87	6/25/2022 3:31	18.62	6/25/2022 2:40	7.24	6/25/2022 7:36	67.08
6/26/2022 6:27	51.27	6/26/2022 5:09	81.91	6/25/2022 3:32	19.32	6/25/2022 2:41	7.00	6/25/2022 7:37	67.08
6/26/2022 6:28	51.29	6/26/2022 5:10	81.92	6/25/2022 3:33	24.74	6/25/2022 2:42	6.86	6/25/2022 7:38	67.11

6/26/2022 6:29	51.29	6/26/2022 5:11	81.90	6/25/2022 3:34	28.00	6/25/2022 2:43	6.80	6/25/2022 7:39	67.07
6/26/2022 6:30	51.26	6/26/2022 5:12	81.87	6/25/2022 3:35	30.21	6/25/2022 2:44	6.73	6/25/2022 7:40	67.06
6/26/2022 6:31	51.28	6/26/2022 5:13	81.95	6/25/2022 3:36	30.58	6/25/2022 2:45	6.70	6/25/2022 7:41	67.06
6/26/2022 6:32	51.30	6/26/2022 5:14	81.91	6/25/2022 3:37	27.14	6/25/2022 2:46	6.66	6/25/2022 7:42	67.05
6/26/2022 6:33	51.25	6/26/2022 5:15	81.92	6/25/2022 3:38	25.25	6/25/2022 2:47	6.71	6/25/2022 7:43	67.04
6/26/2022 6:34	51.23	6/26/2022 5:16	81.89	6/25/2022 3:39	24.04	6/25/2022 2:48	6.67	6/25/2022 7:44	67.04
6/26/2022 6:35	51.27	6/26/2022 5:17	81.92	6/25/2022 3:40	23.22	6/25/2022 2:49	6.63	6/25/2022 7:45	67.03
6/26/2022 6:36	51.28	6/26/2022 5:18	81.93	6/25/2022 3:41	22.68	6/25/2022 2:50	6.54	6/25/2022 7:46	66.99
6/26/2022 6:37	51.29	6/26/2022 5:19	81.88	6/25/2022 3:42	22.29	6/25/2022 2:51	6.62	6/25/2022 7:47	67.03
6/26/2022 6:38	51.28	6/26/2022 5:20	81.89	6/25/2022 3:43	21.84	6/25/2022 2:52	6.63	6/25/2022 7:48	67.04
6/26/2022 6:39	51.23	6/26/2022 5:21	81.88	6/25/2022 3:44	21.61	6/25/2022 2:53	6.61	6/25/2022 7:49	67.02
6/26/2022 6:40	51.25	6/26/2022 5:22	81.89	6/25/2022 3:45	21.37	6/25/2022 2:54	6.53	6/25/2022 7:50	66.99
6/26/2022 6:41	51.30	6/26/2022 5:23	81.89	6/25/2022 3:46	21.21	6/25/2022 2:55	6.52	6/25/2022 7:51	66.98
6/26/2022 6:42	51.28	6/26/2022 5:24	81.89	6/25/2022 3:47	20.95	6/25/2022 2:56	6.61	6/25/2022 7:52	66.98
6/26/2022 6:43	51.27	6/26/2022 5:25	81.93	6/25/2022 3:48	20.86	6/25/2022 2:57	6.59	6/25/2022 7:53	66.97
6/26/2022 6:44	51.25	6/26/2022 5:26	81.90	6/25/2022 3:49	20.66	6/25/2022 2:58	6.58	6/25/2022 7:54	66.98
6/26/2022 6:45	51.23	6/26/2022 5:27	81.92	6/25/2022 3:50	20.56	6/25/2022 2:59	6.60	6/25/2022 7:55	66.97
6/26/2022 6:46	51.25	6/26/2022 5:28	81.85	6/25/2022 3:51	20.51	6/25/2022 3:00	6.63	6/25/2022 7:56	66.95
6/26/2022 6:47	51.24	6/26/2022 5:29	81.89	6/25/2022 3:52	20.37	6/25/2022 3:01	6.57	6/25/2022 7:57	66.95
6/26/2022 6:48	51.24	6/26/2022 5:30	81.87	6/25/2022 3:53	20.23	6/25/2022 3:02	6.51	6/25/2022 7:58	66.92
6/26/2022 6:49	51.24	6/26/2022 5:31	81.92	6/25/2022 3:54	20.18	6/25/2022 3:03	6.56	6/25/2022 7:59	66.95
6/26/2022 6:50	51.27	6/26/2022 5:32	81.90	6/25/2022 3:55	20.09	6/25/2022 3:04	6.59	6/25/2022 8:00	66.96
6/26/2022 6:51	51.25	6/26/2022 5:33	81.93	6/25/2022 3:56	20.03	6/25/2022 3:05	6.60	6/25/2022 8:01	66.95
6/26/2022 6:52	51.22	6/26/2022 5:34	81.90	6/25/2022 3:57	19.91	6/25/2022 3:06	6.59	6/25/2022 8:02	66.95
6/26/2022 6:53	51.24	6/26/2022 5:35	81.92	6/25/2022 3:58	19.85	6/25/2022 3:07	6.63	6/25/2022 8:03	66.89
6/26/2022 6:54	51.24	6/26/2022 5:36	81.88	6/25/2022 3:59	19.78	6/25/2022 3:08	6.60	6/25/2022 8:04	66.92
6/26/2022 6:55	51.28	6/26/2022 5:37	81.89	6/25/2022 4:00	19.70	6/25/2022 3:09	6.54	6/25/2022 8:05	66.90
6/26/2022 6:56	51.25	6/26/2022 5:38	81.96	6/25/2022 4:01	19.61	6/25/2022 3:10	6.61	6/25/2022 8:06	66.91
6/26/2022 6:57	51.24	6/26/2022 5:39	81.92	6/25/2022 4:02	19.59	6/25/2022 3:11	6.58	6/25/2022 8:07	66.92
6/26/2022 6:58	51.24	6/26/2022 5:40	81.94	6/25/2022 4:03	19.53	6/25/2022 3:12	6.58	6/25/2022 8:08	66.90
6/26/2022 6:59	51.23	6/26/2022 5:41	81.89	6/25/2022 4:04	19.52	6/25/2022 3:13	6.55	6/25/2022 8:09	66.91
6/26/2022 7:00	51.28	6/26/2022 5:42	81.91	6/25/2022 4:05	19.47	6/25/2022 3:14	6.61	6/25/2022 8:10	66.86
6/26/2022 7:01	51.24	6/26/2022 5:43	81.89	6/25/2022 4:06	19.41	6/25/2022 3:15	6.64	6/25/2022 8:11	66.86
6/26/2022 7:02	51.23	6/26/2022 5:44	81.91	6/25/2022 4:07	19.33	6/25/2022 3:16	6.60	6/25/2022 8:12	66.89
6/26/2022 7:03	51.24	6/26/2022 5:45	81.92	6/25/2022 4:08	19.27	6/25/2022 3:17	6.63	6/25/2022 8:13	66.86
6/26/2022 7:04	51.29	6/26/2022 5:46	81.91	6/25/2022 4:09	19.30	6/25/2022 3:18	6.64	6/25/2022 8:14	66.82
6/26/2022 7:05	51.21	6/26/2022 5:47	81.84	6/25/2022 4:10	19.18	6/25/2022 3:19	6.59	6/25/2022 8:15	66.85
6/26/2022 7:06	51.25	6/26/2022 5:48	81.92	6/25/2022 4:11	19.20	6/25/2022 3:20	6.65	6/25/2022 8:16	66.83
6/26/2022 7:07	51.24	6/26/2022 5:49	81.90	6/25/2022 4:12	19.17	6/25/2022 3:21	6.66	6/25/2022 8:17	66.84
6/26/2022 7:08	51.26	6/26/2022 5:50	81.95	6/25/2022 4:13	19.12	6/25/2022 3:22	6.57	6/25/2022 8:18	66.83
6/26/2022 7:09	51.25	6/26/2022 5:51	81.95	6/25/2022 4:14	19.09	6/25/2022 3:23	6.64	6/25/2022 8:19	66.82
6/26/2022 7:10	51.21	6/26/2022 5:52	81.92	6/25/2022 4:15	19.05	6/25/2022 3:24	6.70	6/25/2022 8:20	66.83
6/26/2022 7:11	51.22	6/26/2022 5:53	81.91	6/25/2022 4:16	19.00	6/25/2022 3:25	6.63	6/25/2022 8:21	66.83
6/26/2022 7:12	51.25	6/26/2022 5:54	81.90	6/25/2022 4:17	18.92	6/25/2022 3:26	6.69	6/25/2022 8:22	66.82
6/26/2022 7:13	51.26	6/26/2022 5:55	81.92	6/25/2022 4:18	18.94	6/25/2022 3:27	6.71	6/25/2022 8:23	66.83
6/26/2022 7:14	51.23	6/26/2022 5:56	81.91	6/25/2022 4:19	18.89	6/25/2022 3:28	6.65	6/25/2022 8:24	66.83
6/26/2022 7:15	51.21	6/26/2022 5:57	81.91	6/25/2022 4:20	18.93	6/25/2022 3:29	6.68	6/25/2022 8:25	66.80
6/26/2022 7:16	51.27	6/26/2022 5:58	81.88	6/25/2022 4:21	18.83	6/25/2022 3:30	6.66	6/25/2022 8:26	66.78
6/26/2022 7:17	51.26	6/26/2022 5:59	81.88	6/25/2022 4:22	18.78	6/25/2022 3:31	6.71	6/25/2022 8:27	66.78
6/26/2022 7:18	51.25	6/26/2022 6:00	81.92	6/25/2022 4:23	18.77	6/25/2022 3:32	6.70	6/25/2022 8:28	66.79
6/26/2022 7:19	51.24	6/26/2022 6:01	81.91	6/25/2022 4:24	18.69	6/25/2022 3:33	6.66	6/25/2022 8:29	66.80
6/26/2022 7:20	51.24	6/26/2022 6:02	81.92	6/25/2022 4:25	18.74	6/25/2022 3:34	6.75	6/25/2022 8:30	66.76
6/26/2022 7:21	51.25	6/26/2022 6:03	81.91	6/25/2022 4:26	18.74	6/25/2022 3:35	6.70	6/25/2022 8:31	66.75
6/26/2022 7:22	51.27	6/26/2022 6:04	81.89	6/25/2022 4:27	18.66	6/25/2022 3:36	6.69	6/25/2022 8:32	66.76
6/26/2022 7:23	51.24	6/26/2022 6:05	81.93	6/25/2022 4:28	18.67	6/25/2022 3:37	6.76	6/25/2022 8:33	66.74
6/26/2022 7:24	51.18	6/26/2022 6:06	81.92	6/25/2022 4:29	18.67	6/25/2022 3:38	6.70	6/25/2022 8:34	66.73
6/26/2022 7:25	51.22	6/26/2022 6:07	81.89	6/25/2022 4:30	18.62	6/25/2022 3:39	6.73	6/25/2022 8:35	66.75
6/26/2022 7:26	51.21	6/26/2022 6:08	81.91	6/25/2022 4:31	18.59	6/25/2022 3:40	6.77	6/25/2022 8:36	66.70
6/26/2022 7:27	51.24	6/26/2022 6:09	81.91	6/25/2022 4:32	18.56	6/25/2022 3:41	6.79	6/25/2022 8:37	69.45
6/26/2022 7:28	51.21	6/26/2022 6:10	81.90	6/25/2022 4:33	18.51	6/25/2022 3:42	6.77	6/25/2022 8:38	72.60
6/26/2022 7:29	51.23	6/26/2022 6:11	81.89	6/25/2022 4:34	18.48	6/25/2022 3:43	6.79	6/25/2022 8:39	72.41
6/26/2022 7:30	51.27	6/26/2022 6:12	81.91	6/25/2022 4:35	18.49	6/25/2022 3:44	6.80	6/25/2022 8:40	72.30
6/26/2022 7:31	51.24	6/26/2022 6:13	81.89	6/25/2022 4:36	18.50	6/25/2022 3:45	6.76	6/25/2022 8:41	72.21
6/26/2022 7:32	51.22	6/26/2022 6:14	81.94	6/25/2022 4:37	18.49	6/25/2022 3:46	6.82	6/25/2022 8:42	72.13
6/26/2022 7:33	51.19	6/26/2022 6:15	81.95	6/25/2022 4:38	18.42	6/25/2022 3:47	6.82	6/25/2022 8:43	72.05
6/26/2022 7:34	51.21	6/26/2022 6:16	81.94	6/25/2022 4:39	18.42	6/25/2022 3:48	6.83	6/25/2022 8:44	71.91
6/26/2022 7:35	51.27	6/26/2022 6:17	81.92	6/25/2022 4:40	18.38	6/25/2022 3:49	6.94	6/25/2022 8:45	71.85
6/26/2022 7:36	51.23	6/26/2022 6:18	81.95	6/25/2022 4:41	18.38	6/25/2022 3:50	7.40	6/25/2022 8:46	71.80
6/26/2022 7:37	51.22	6/26/2022 6:19	81.90	6/25/2022 4:42	18.40	6/25/2022 3:51	7.64	6/25/2022 8:47	71.71
6/26/2022 7:38	51.22	6/26/2022 6:20	81.93	6/25/2022 4:43	18.33	6/25/2022 3:52	7.86	6/25/2022 8:48	71.65
6/26/2022 7:39	51.22	6/26/2022 6:21	81.93	6/25/2022 4:44	18.37	6/25/2022 3:53	8.03	6/25/2022 8:49	71.59
6/26/2022 7:40	51.24	6/26/2022 6:22	81.97	6/25/2022 4:45	18.36	6/25/2022 3:54	8.11	6/25/2022 8:50	71.52
6/26/2022 7:41	51.23	6/26/2022 6:23	81.96	6/25/2022 4:46	18.32	6/25/2022 3:55	8.20	6/25/2022 8:51	71.46
6/26/2022 7:42	51.24	6/26/2022 6:24	81.95	6/25/2022 4:47	18.27	6/25/2022 3:56	8.26	6/25/2022 8:52	71.37
6/26/2022 7:43	51.20	6/26/2022 6:25	81.93	6/25/2022 4:48	18.29	6/25/2022 3:57	8.07	6/25/2022 8:53	71.33
6/26/2022 7:44	51.22	6/26/2022 6:26	81.95	6/25/2022 4:49	18.26	6/25/2022 3:58	7.63	6/25/2022 8:54	71.26
6/26/2022 7:45	51.18	6/26/2022 6:27	81.90	6/25/2022 4:50	18.25	6/25/2022 3:59	7.47	6/25/2022 8:55	71.22
6/26/2022 7:46	51.20	6/26/2022 6:28	81.92	6/25/2022 4:51	18.26	6/25/2022 4:00	7.44	6/25/2022 8:56	71.12
6/26/2022 7:47	51.22	6/26/2022 6:29	81.90	6/25/2022 4:52	18.19	6/25/2022 4:01	7.34	6/25/2022 8:57	71.10
6/26/2022 7:48	51.25	6/26/2022 6:30	81.90	6/25/2022 4:53	18.18	6/25/2022 4:02	7.25	6/25/2022 8:58	71.00
6/26/2022 7:49	51.25	6/26/2022 6:31	81.88	6/25/2022 4:54	18.20	6/25/2022 4:03	7.25	6/25/2022 8:59	70.98
6/26/2022 7:50	51.22	6/26/2022 6:32	81.95	6/25/2022 4:55	18.14	6/25/2022 4:04	7.25	6/25/2022 9:00	70.92
6/26/2022 7:51	51.23	6/26/2022 6:33	81.92	6/25/2022 4:56	18.18	6/25/2022 4:05	7.18	6/25/2022 9:01	70.85
6/26/2022 7:52	51.26	6/26/2022 6:34	81.94	6/25/2022 4:57	18.11	6/25/2022 4:06	7.21	6/25/2022 9:02	70.80
6/26/2022 7:53	51.23	6/26/2022 6:35	81.94	6/25/2022 4:58	18.14	6/25/2022 4:07	7.15	6/25/2022 9:03	70.75
6/26/2022 7:54	51.20	6/26/2022 6:36	81.96	6/25/2022 4:59	18.14	6/25/2022 4:08	7.14	6/25/2022 9:04	70.70
6/26/2022 7:55	51.19	6/26/2022 6:37	81.94	6/25/2022 5:00	18.13	6/25/2022 4:09	7.11	6/25/2022 9:05	70.64
6/26/2022 7:56	51.23	6/26/2022 6:38	81.95	6/25/2022 5:01	18.14	6/25/2022 4:10	7.11	6/25/2022 9:06	70.60

6/26/2022 7:57	51.22	6/26/2022 6:39	81.90	6/25/2022 5:02	18.07	6/25/2022 4:11	7.11	6/25/2022 9:07	70.54
6/26/2022 7:58	51.22	6/26/2022 6:40	81.92	6/25/2022 5:03	18.07	6/25/2022 4:12	7.13	6/25/2022 9:08	70.50
6/26/2022 7:59	51.21	6/26/2022 6:41	81.91	6/25/2022 5:04	18.05	6/25/2022 4:13	7.10	6/25/2022 9:09	70.46
6/26/2022 8:00	51.21	6/26/2022 6:42	81.94	6/25/2022 5:05	18.03	6/25/2022 4:14	7.14	6/25/2022 9:10	70.39
6/26/2022 8:01	51.23	6/26/2022 6:43	81.90	6/25/2022 5:06	18.04	6/25/2022 4:15	7.06	6/25/2022 9:11	70.35
6/26/2022 8:02	51.23	6/26/2022 6:44	81.93	6/25/2022 5:07	18.02	6/25/2022 4:16	7.13	6/25/2022 9:12	70.31
6/26/2022 8:03	51.21	6/26/2022 6:45	81.91	6/25/2022 5:08	18.03	6/25/2022 4:17	7.05	6/25/2022 9:13	70.26
6/26/2022 8:04	51.22	6/26/2022 6:46	81.89	6/25/2022 5:09	18.03	6/25/2022 4:18	7.10	6/25/2022 9:14	70.21
6/26/2022 8:05	51.24	6/26/2022 6:47	81.93	6/25/2022 5:10	17.93	6/25/2022 4:19	7.06	6/25/2022 9:15	70.17
6/26/2022 8:06	51.23	6/26/2022 6:48	81.91	6/25/2022 5:11	17.97	6/25/2022 4:20	7.12	6/25/2022 9:16	70.15
6/26/2022 8:07	51.18	6/26/2022 6:49	81.93	6/25/2022 5:12	17.98	6/25/2022 4:21	7.02	6/25/2022 9:17	70.09
6/26/2022 8:08	51.19	6/26/2022 6:50	81.95	6/25/2022 5:13	17.96	6/25/2022 4:22	7.05	6/25/2022 9:18	70.03
6/26/2022 8:09	51.18	6/26/2022 6:51	81.94	6/25/2022 5:14	17.97	6/25/2022 4:23	7.05	6/25/2022 9:19	70.03
6/26/2022 8:10	51.23	6/26/2022 6:52	81.95	6/25/2022 5:15	17.92	6/25/2022 4:24	7.10	6/25/2022 9:20	69.97
6/26/2022 8:11	51.18	6/26/2022 6:53	81.98	6/25/2022 5:16	17.91	6/25/2022 4:25	7.07	6/25/2022 9:21	69.95
6/26/2022 8:12	51.21	6/26/2022 6:54	81.98	6/25/2022 5:17	17.94	6/25/2022 4:26	7.04	6/25/2022 9:22	69.86
6/26/2022 8:13	51.21	6/26/2022 6:55	81.93	6/25/2022 5:18	17.87	6/25/2022 4:27	7.08	6/25/2022 9:23	69.88
6/26/2022 8:14	51.21	6/26/2022 6:56	81.95	6/25/2022 5:19	17.91	6/25/2022 4:28	7.07	6/25/2022 9:24	69.81
6/26/2022 8:15	51.18	6/26/2022 6:57	81.93	6/25/2022 5:20	17.90	6/25/2022 4:29	7.07	6/25/2022 9:25	69.79
6/26/2022 8:16	51.19	6/26/2022 6:58	81.92	6/25/2022 5:21	17.86	6/25/2022 4:30	7.05	6/25/2022 9:26	69.75
6/26/2022 8:17	51.19	6/26/2022 6:59	81.93	6/25/2022 5:22	17.84	6/25/2022 4:31	7.07	6/25/2022 9:27	69.72
6/26/2022 8:18	51.24	6/26/2022 7:00	81.94	6/25/2022 5:23	17.84	6/25/2022 4:32	7.03	6/25/2022 9:28	69.66
6/26/2022 8:19	51.21	6/26/2022 7:01	81.94	6/25/2022 5:24	17.85	6/25/2022 4:33	7.07	6/25/2022 9:29	69.63
6/26/2022 8:20	51.21	6/26/2022 7:02	81.92	6/25/2022 5:25	17.83	6/25/2022 4:34	7.06	6/25/2022 9:30	75.11
6/26/2022 8:21	51.19	6/26/2022 7:03	81.92	6/25/2022 5:26	17.82	6/25/2022 4:35	7.08	6/25/2022 9:31	75.01
6/26/2022 8:22	51.19	6/26/2022 7:04	81.97	6/25/2022 5:27	17.81	6/25/2022 4:36	7.03	6/25/2022 9:32	74.88
6/26/2022 8:23	51.20	6/26/2022 7:05	82.00	6/25/2022 5:28	17.80	6/25/2022 4:37	7.04	6/25/2022 9:33	74.74
6/26/2022 8:24	51.19	6/26/2022 7:06	81.94	6/25/2022 5:29	17.85	6/25/2022 4:38	7.03	6/25/2022 9:34	74.62
6/26/2022 8:25	51.19	6/26/2022 7:07	81.91	6/25/2022 5:30	17.82	6/25/2022 4:39	7.09	6/25/2022 9:35	74.52
6/26/2022 8:26	51.20	6/26/2022 7:08	81.93	6/25/2022 5:31	17.81	6/25/2022 4:40	7.05	6/25/2022 9:36	74.37
6/26/2022 8:27	51.18	6/26/2022 7:09	81.92	6/25/2022 5:32	17.76	6/25/2022 4:41	7.03	6/25/2022 9:37	74.33
6/26/2022 8:28	51.15	6/26/2022 7:10	81.95	6/25/2022 5:33	17.76	6/25/2022 4:42	7.06	6/25/2022 9:38	74.21
6/26/2022 8:29	51.19	6/26/2022 7:11	81.94	6/25/2022 5:34	17.76	6/25/2022 4:43	7.09	6/25/2022 9:39	74.07
6/26/2022 8:30	51.16	6/26/2022 7:12	81.93	6/25/2022 5:35	17.73	6/25/2022 4:44	6.98	6/25/2022 9:40	74.02
6/26/2022 8:31	51.18	6/26/2022 7:13	81.94	6/25/2022 5:36	17.74	6/25/2022 4:45	6.99	6/25/2022 9:41	73.90
6/26/2022 8:32	51.21	6/26/2022 7:14	81.94	6/25/2022 5:37	17.72	6/25/2022 4:46	7.08	6/25/2022 9:42	73.80
6/26/2022 8:33	51.20	6/26/2022 7:15	81.91	6/25/2022 5:38	17.73	6/25/2022 4:47	7.08	6/25/2022 9:43	73.71
6/26/2022 8:34	51.18	6/26/2022 7:16	81.91	6/25/2022 5:39	17.68	6/25/2022 4:48	7.00	6/25/2022 9:44	73.63
6/26/2022 8:35	51.19	6/26/2022 7:17	81.96	6/25/2022 5:40	17.73	6/25/2022 4:49	7.04	6/25/2022 9:45	73.53
6/26/2022 8:36	51.22	6/26/2022 7:18	81.92	6/25/2022 5:41	17.73	6/25/2022 4:50	7.05	6/25/2022 9:46	73.45
6/26/2022 8:37	51.19	6/26/2022 7:19	81.95	6/25/2022 5:42	17.69	6/25/2022 4:51	7.08	6/25/2022 9:47	73.38
6/26/2022 8:38	51.21	6/26/2022 7:20	81.95	6/25/2022 5:43	17.71	6/25/2022 4:52	7.03	6/25/2022 9:48	73.33
6/26/2022 8:39	51.18	6/26/2022 7:21	81.94	6/25/2022 5:44	17.72	6/25/2022 4:53	7.05	6/25/2022 9:49	73.21
6/26/2022 8:40	51.22	6/26/2022 7:22	81.95	6/25/2022 5:45	17.71	6/25/2022 4:54	7.02	6/25/2022 9:50	73.14
6/26/2022 8:41	51.19	6/26/2022 7:23	81.98	6/25/2022 5:46	17.65	6/25/2022 4:55	7.10	6/25/2022 9:51	73.07
6/26/2022 8:42	51.20	6/26/2022 7:24	81.96	6/25/2022 5:47	17.69	6/25/2022 4:56	7.11	6/25/2022 9:52	72.98
6/26/2022 8:43	51.22	6/26/2022 7:25	81.98	6/25/2022 5:48	17.71	6/25/2022 4:57	7.06	6/25/2022 9:53	72.93
6/26/2022 8:44	51.19	6/26/2022 7:26	81.97	6/25/2022 5:49	17.62	6/25/2022 4:58	7.08	6/25/2022 9:54	79.43
6/26/2022 8:45	51.21	6/26/2022 7:27	81.94	6/25/2022 5:50	17.61	6/25/2022 4:59	7.12	6/25/2022 9:55	78.75
6/26/2022 8:46	51.20	6/26/2022 7:28	81.97	6/25/2022 5:51	17.63	6/25/2022 5:00	7.04	6/25/2022 9:56	78.57
6/26/2022 8:47	51.18	6/26/2022 7:29	81.96	6/25/2022 5:52	17.64	6/25/2022 5:01	7.08	6/25/2022 9:57	78.42
6/26/2022 8:48	51.21	6/26/2022 7:30	81.98	6/25/2022 5:53	17.68	6/25/2022 5:02	7.06	6/25/2022 9:58	78.30
6/26/2022 8:49	51.24	6/26/2022 7:31	81.93	6/25/2022 5:54	17.60	6/25/2022 5:03	7.09	6/25/2022 9:59	78.17
6/26/2022 8:50	51.15	6/26/2022 7:32	81.95	6/25/2022 5:55	17.58	6/25/2022 5:04	7.06	6/25/2022 10:00	78.01
6/26/2022 8:51	51.17	6/26/2022 7:33	81.99	6/25/2022 5:56	17.63	6/25/2022 5:05	7.02	6/25/2022 10:01	77.92
6/26/2022 8:52	51.15	6/26/2022 7:34	81.96	6/25/2022 5:57	17.61	6/25/2022 5:06	7.08	6/25/2022 10:02	77.75
6/26/2022 8:53	51.19	6/26/2022 7:35	81.94	6/25/2022 5:58	17.62	6/25/2022 5:07	7.02	6/25/2022 10:03	77.62
6/26/2022 8:54	51.18	6/26/2022 7:36	81.96	6/25/2022 5:59	17.57	6/25/2022 5:08	7.09	6/25/2022 10:04	77.49
6/26/2022 8:55	51.20	6/26/2022 7:37	81.96	6/25/2022 6:00	17.64	6/25/2022 5:09	7.07	6/25/2022 10:05	77.36
6/26/2022 8:56	51.18	6/26/2022 7:38	81.97	6/25/2022 6:01	17.55	6/25/2022 5:10	7.04	6/25/2022 10:06	77.26
6/26/2022 8:57	51.15	6/26/2022 7:39	81.97	6/25/2022 6:02	17.55	6/25/2022 5:11	7.06	6/25/2022 10:07	77.13
6/26/2022 8:58	51.16	6/26/2022 7:40	81.94	6/25/2022 6:03	17.60	6/25/2022 5:12	7.06	6/25/2022 10:08	76.99
6/26/2022 8:59	51.17	6/26/2022 7:41	81.97	6/25/2022 6:04	17.57	6/25/2022 5:13	7.09	6/25/2022 10:09	76.88
6/26/2022 9:00	51.16	6/26/2022 7:42	81.95	6/25/2022 6:05	17.53	6/25/2022 5:14	7.01	6/25/2022 10:10	76.81
6/26/2022 9:01	51.17	6/26/2022 7:43	81.93	6/25/2022 6:06	17.56	6/25/2022 5:15	7.05	6/25/2022 10:11	76.69
6/26/2022 9:02	51.17	6/26/2022 7:44	81.94	6/25/2022 6:07	17.57	6/25/2022 5:16	7.06	6/25/2022 10:12	76.62
6/26/2022 9:03	51.19	6/26/2022 7:45	81.94	6/25/2022 6:08	17.53	6/25/2022 5:17	7.01	6/25/2022 10:13	76.49
6/26/2022 9:04	51.19	6/26/2022 7:46	81.98	6/25/2022 6:09	17.52	6/25/2022 5:18	7.06	6/25/2022 10:14	76.39
6/26/2022 9:05	51.19	6/26/2022 7:47	81.97	6/25/2022 6:10	17.55	6/25/2022 5:19	7.02	6/25/2022 10:15	76.26
6/26/2022 9:06	51.16	6/26/2022 7:48	81.91	6/25/2022 6:11	17.50	6/25/2022 5:20	7.06	6/25/2022 10:16	76.18
6/26/2022 9:07	51.16	6/26/2022 7:49	81.96	6/25/2022 6:12	17.51	6/25/2022 5:21	6.99	6/25/2022 10:17	76.10
6/26/2022 9:08	51.21	6/26/2022 7:50	81.97	6/25/2022 6:13	17.54	6/25/2022 5:22	7.05	6/25/2022 10:18	75.96
6/26/2022 9:09	51.19	6/26/2022 7:51	81.97	6/25/2022 6:14	17.50	6/25/2022 5:23	7.05	6/25/2022 10:19	75.86
6/26/2022 9:10	51.17	6/26/2022 7:52	81.99	6/25/2022 6:15	17.52	6/25/2022 5:24	7.10	6/25/2022 10:20	75.77
6/26/2022 9:11	51.18	6/26/2022 7:53	82.00	6/25/2022 6:16	17.49	6/25/2022 5:25	7.01	6/25/2022 10:21	75.64
6/26/2022 9:12	51.18	6/26/2022 7:54	81.92	6/25/2022 6:17	17.52	6/25/2022 5:26	7.03	6/25/2022 10:22	75.53
6/26/2022 9:13	51.16	6/26/2022 7:55	81.96	6/25/2022 6:18	17.50	6/25/2022 5:27	7.09	6/25/2022 10:23	75.48
6/26/2022 9:14	51.16	6/26/2022 7:56	81.94	6/25/2022 6:19	17.49	6/25/2022 5:28	7.03	6/25/2022 10:24	75.32
6/26/2022 9:15	51.19	6/26/2022 7:57	81.92	6/25/2022 6:20	17.53	6/25/2022 5:29	7.00	6/25/2022 10:25	75.25
6/26/2022 9:16	51.19	6/26/2022 7:58	81.97	6/25/2022 6:21	17.44	6/25/2022 5:30	7.01	6/25/2022 10:26	75.14
6/26/2022 9:17	51.15	6/26/2022 7:59	81.94	6/25/2022 6:22	17.44	6/25/2022 5:31	7.01	6/25/2022 10:27	75.06
6/26/2022 9:18	51.15	6/26/2022 8:00	81.95	6/25/2022 6:23	17.47	6/25/2022 5:32	6.98	6/25/2022 10:28	74.97
6/26/2022 9:19	51.17	6/26/2022 8:01	81.98	6/25/2022 6:24	17.48	6/25/2022 5:33	7.01	6/25/2022 10:29	74.87
6/26/2022 9:20	51.17	6/26/2022 8:02	81.98	6/25/2022 6:25	17.46	6/25/2022 5:34	7.01	6/25/2022 10:30	74.78
6/26/2022 9:21	51.15	6/26/2022 8:03	81.94	6/25/2022 6:26	17.46	6/25/2022 5:35	7.07	6/25/2022 10:31	74.70
6/26/2022 9:22	51.15	6/26/2022 8:04	81.93	6/25/2022 6:27	17.53	6/25/2022 5:36	7.01	6/25/2022 10:32	74.59
6/26/2022 9:23	51.19	6/26/2022 8:05	81.97	6/25/2022 6:28	17.41	6/25/2022 5:37	7.01	6/25/2022 10:33	74.49
6/26/2022 9:24	51.19	6/26/2022 8:06	81.93	6/25/2022 6:29	17.45	6/25/2022 5:38	7.01	6/25/2022 10:34	74.43

6/26/2022 9:25	51.16	6/26/2022 8:07	81.95	6/25/2022 6:30	17.46	6/25/2022 5:39	6.97	6/25/2022 10:35	74.34
6/26/2022 9:26	51.17	6/26/2022 8:08	81.97	6/25/2022 6:31	17.44	6/25/2022 5:40	7.01	6/25/2022 10:36	74.28
6/26/2022 9:27	51.15	6/26/2022 8:09	81.97	6/25/2022 6:32	17.43	6/25/2022 5:41	7.01	6/25/2022 10:37	74.19
6/26/2022 9:28	51.19	6/26/2022 8:10	81.93	6/25/2022 6:33	17.43	6/25/2022 5:42	7.07	6/25/2022 10:38	74.07
6/26/2022 9:29	51.16	6/26/2022 8:11	81.98	6/25/2022 6:34	17.41	6/25/2022 5:43	6.97	6/25/2022 10:39	73.99
6/26/2022 9:30	51.20	6/26/2022 8:12	81.94	6/25/2022 6:35	17.46	6/25/2022 5:44	6.96	6/25/2022 10:40	73.90
6/26/2022 9:31	51.20	6/26/2022 8:13	82.00	6/25/2022 6:36	17.41	6/25/2022 5:45	6.92	6/25/2022 10:41	73.86
6/26/2022 9:32	51.16	6/26/2022 8:14	81.96	6/25/2022 6:37	17.39	6/25/2022 5:46	6.96	6/25/2022 10:42	73.76
6/26/2022 9:33	51.14	6/26/2022 8:15	81.97	6/25/2022 6:38	17.44	6/25/2022 5:47	6.90	6/25/2022 10:43	73.68
6/26/2022 9:34	51.16	6/26/2022 8:16	81.98	6/25/2022 6:39	17.38	6/25/2022 5:48	6.98	6/25/2022 10:44	73.60
6/26/2022 9:35	51.16	6/26/2022 8:17	81.94	6/25/2022 6:40	17.42	6/25/2022 5:49	6.99	6/25/2022 10:45	73.54
6/26/2022 9:36	51.16	6/26/2022 8:18	81.97	6/25/2022 6:41	17.40	6/25/2022 5:50	6.92	6/25/2022 10:46	73.44
6/26/2022 9:37	51.16	6/26/2022 8:19	81.96	6/25/2022 6:42	17.37	6/25/2022 5:51	6.92	6/25/2022 10:47	73.36
6/26/2022 9:38	51.12	6/26/2022 8:20	81.94	6/25/2022 6:43	17.41	6/25/2022 5:52	6.96	6/25/2022 10:48	73.32
6/26/2022 9:39	53.19	6/26/2022 8:21	81.95	6/25/2022 6:44	17.40	6/25/2022 5:53	6.92	6/25/2022 10:49	73.23
6/26/2022 9:40	54.98	6/26/2022 8:22	81.99	6/25/2022 6:45	17.39	6/25/2022 5:54	6.93	6/25/2022 10:50	73.18
6/26/2022 9:41	55.79	6/26/2022 8:23	81.95	6/25/2022 6:46	17.35	6/25/2022 5:55	6.93	6/25/2022 10:51	73.10
6/26/2022 9:42	56.27	6/26/2022 8:24	81.99	6/25/2022 6:47	17.38	6/25/2022 5:56	6.94	6/25/2022 10:52	73.04
6/26/2022 9:43	53.90	6/26/2022 8:25	81.95	6/25/2022 6:48	17.36	6/25/2022 5:57	6.92	6/25/2022 10:53	72.98
6/26/2022 9:44	53.04	6/26/2022 8:26	81.97	6/25/2022 6:49	17.36	6/25/2022 5:58	6.90	6/25/2022 10:54	72.91
6/26/2022 9:45	52.63	6/26/2022 8:27	81.95	6/25/2022 6:50	17.40	6/25/2022 5:59	6.90	6/25/2022 10:55	72.83
6/26/2022 9:46	52.40	6/26/2022 8:28	81.95	6/25/2022 6:51	17.36	6/25/2022 6:00	6.94	6/25/2022 10:56	72.74
6/26/2022 9:47	52.26	6/26/2022 8:29	81.95	6/25/2022 6:52	17.40	6/25/2022 6:01	7.29	6/25/2022 10:57	72.69
6/26/2022 9:48	52.14	6/26/2022 8:30	81.94	6/25/2022 6:53	17.36	6/25/2022 6:02	7.16	6/25/2022 10:58	72.60
6/26/2022 9:49	52.07	6/26/2022 8:31	81.96	6/25/2022 6:54	17.37	6/25/2022 6:03	9.34	6/25/2022 10:59	72.58
6/26/2022 9:50	51.99	6/26/2022 8:32	81.99	6/25/2022 6:55	17.36	6/25/2022 6:04	10.33	6/25/2022 11:00	72.46
6/26/2022 9:51	51.94	6/26/2022 8:33	81.96	6/25/2022 6:56	17.36	6/25/2022 6:05	10.94	6/25/2022 11:01	72.45
6/26/2022 9:52	51.86	6/26/2022 8:34	81.98	6/25/2022 6:57	17.37	6/25/2022 6:06	11.52	6/25/2022 11:02	72.39
6/26/2022 9:53	51.86	6/26/2022 8:35	81.95	6/25/2022 6:58	17.34	6/25/2022 6:07	12.40	6/25/2022 11:03	72.34
6/26/2022 9:54	51.83	6/26/2022 8:36	81.92	6/25/2022 6:59	17.32	6/25/2022 6:08	12.98	6/25/2022 11:04	72.24
6/26/2022 9:55	51.77	6/26/2022 8:37	81.95	6/25/2022 7:00	17.32	6/25/2022 6:09	13.40	6/25/2022 11:05	72.17
6/26/2022 9:56	51.77	6/26/2022 8:38	81.92	6/25/2022 7:01	17.34	6/25/2022 6:10	13.85	6/25/2022 11:06	72.10
6/26/2022 9:57	51.74	6/26/2022 8:39	81.94	6/25/2022 7:02	17.35	6/25/2022 6:11	14.22	6/25/2022 11:07	72.05
6/26/2022 9:58	51.74	6/26/2022 8:40	81.99	6/25/2022 7:03	17.32	6/25/2022 6:12	14.57	6/25/2022 11:08	71.98
6/26/2022 9:59	51.67	6/26/2022 8:41	81.98	6/25/2022 7:04	17.29	6/25/2022 6:13	14.89	6/25/2022 11:09	71.95
6/26/2022 10:00	51.69	6/26/2022 8:42	81.98	6/25/2022 7:05	17.38	6/25/2022 6:14	15.21	6/25/2022 11:10	71.88
6/26/2022 10:01	51.68	6/26/2022 8:43	81.97	6/25/2022 7:06	17.32	6/25/2022 6:15	15.41	6/25/2022 11:11	71.85
6/26/2022 10:02	51.68	6/26/2022 8:44	81.98	6/25/2022 7:07	17.32	6/25/2022 6:16	15.75	6/25/2022 11:12	71.79
6/26/2022 10:03	51.65	6/26/2022 8:45	81.97	6/25/2022 7:08	17.34	6/25/2022 6:17	15.48	6/25/2022 11:13	71.72
6/26/2022 10:04	51.67	6/26/2022 8:46	81.97	6/25/2022 7:09	17.32	6/25/2022 6:18	15.53	6/25/2022 11:14	71.67
6/26/2022 10:05	51.66	6/26/2022 8:47	81.99	6/25/2022 7:10	17.27	6/25/2022 6:19	15.34	6/25/2022 11:15	71.63
6/26/2022 10:06	51.59	6/26/2022 8:48	81.95	6/25/2022 7:11	17.35	6/25/2022 6:20	15.33	6/25/2022 11:16	71.56
6/26/2022 10:07	51.61	6/26/2022 8:49	81.96	6/25/2022 7:12	17.31	6/25/2022 6:21	15.36	6/25/2022 11:17	71.50
6/26/2022 10:08	51.58	6/26/2022 8:50	82.01	6/25/2022 7:13	17.30	6/25/2022 6:22	15.32	6/25/2022 11:18	71.49
6/26/2022 10:09	51.58	6/26/2022 8:51	81.99	6/25/2022 7:14	17.29	6/25/2022 6:23	15.30	6/25/2022 11:19	71.43
6/26/2022 10:10	51.58	6/26/2022 8:52	81.99	6/25/2022 7:15	17.31	6/25/2022 6:24	15.28	6/25/2022 11:20	71.35
6/26/2022 10:11	51.55	6/26/2022 8:53	81.96	6/25/2022 7:16	17.30	6/25/2022 6:25	15.33	6/25/2022 11:21	71.30
6/26/2022 10:12	51.55	6/26/2022 8:54	81.95	6/25/2022 7:17	17.27	6/25/2022 6:26	15.41	6/25/2022 11:22	71.25
6/26/2022 10:13	51.56	6/26/2022 8:55	82.00	6/25/2022 7:18	17.27	6/25/2022 6:27	15.50	6/25/2022 11:23	71.17
6/26/2022 10:14	51.54	6/26/2022 8:56	81.95	6/25/2022 7:19	17.31	6/25/2022 6:28	15.57	6/25/2022 11:24	71.14
6/26/2022 10:15	51.52	6/26/2022 8:57	81.93	6/25/2022 7:20	17.27	6/25/2022 6:29	15.67	6/25/2022 11:25	71.10
6/26/2022 10:16	51.50	6/26/2022 8:58	81.95	6/25/2022 7:21	17.25	6/25/2022 6:30	15.74	6/25/2022 11:26	71.08
6/26/2022 10:17	51.55	6/26/2022 8:59	81.98	6/25/2022 7:22	17.29	6/25/2022 6:31	15.86	6/25/2022 11:27	71.02
6/26/2022 10:18	51.51	6/26/2022 9:00	82.01	6/25/2022 7:23	17.30	6/25/2022 6:32	16.68	6/25/2022 11:28	70.96
6/26/2022 10:19	51.55	6/26/2022 9:01	81.96	6/25/2022 7:24	17.29	6/25/2022 6:33	16.96	6/25/2022 11:29	70.93
6/26/2022 10:20	51.50	6/26/2022 9:02	81.96	6/25/2022 7:25	17.26	6/25/2022 6:34	17.20	6/25/2022 11:30	70.87
6/26/2022 10:21	51.50	6/26/2022 9:03	81.94	6/25/2022 7:26	17.29	6/25/2022 6:35	17.48	6/25/2022 11:31	70.83
6/26/2022 10:22	51.47	6/26/2022 9:04	81.99	6/25/2022 7:27	17.29	6/25/2022 6:36	17.61	6/25/2022 11:32	70.78
6/26/2022 10:23	51.51	6/26/2022 9:05	81.95	6/25/2022 7:28	17.26	6/25/2022 6:37	17.76	6/25/2022 11:33	70.75
6/26/2022 10:24	51.48	6/26/2022 9:06	81.94	6/25/2022 7:29	17.25	6/25/2022 6:38	17.92	6/25/2022 11:34	70.67
6/26/2022 10:25	51.46	6/26/2022 9:07	81.92	6/25/2022 7:30	17.25	6/25/2022 6:39	18.08	6/25/2022 11:35	70.63
6/26/2022 10:26	51.49	6/26/2022 9:08	81.96	6/25/2022 7:31	17.25	6/25/2022 6:40	18.21	6/25/2022 11:36	70.58
6/26/2022 10:27	51.46	6/26/2022 9:09	81.96	6/25/2022 7:32	17.23	6/25/2022 6:41	18.40	6/25/2022 11:37	70.55
6/26/2022 10:28	51.47	6/26/2022 9:10	81.96	6/25/2022 7:33	17.28	6/25/2022 6:42	18.53	6/25/2022 11:38	70.50
6/26/2022 10:29	51.50	6/26/2022 9:11	82.01	6/25/2022 7:34	17.30	6/25/2022 6:43	18.72	6/25/2022 11:39	70.46
6/26/2022 10:30	51.50	6/26/2022 9:12	81.95	6/25/2022 7:35	17.23	6/25/2022 6:44	18.84	6/25/2022 11:40	70.43
6/26/2022 10:31	51.45	6/26/2022 9:13	81.95	6/25/2022 7:36	17.24	6/25/2022 6:45	18.98	6/25/2022 11:41	70.37
6/26/2022 10:32	51.43	6/26/2022 9:14	82.00	6/25/2022 7:37	17.24	6/25/2022 6:46	19.15	6/25/2022 11:42	70.34
6/26/2022 10:33	51.45	6/26/2022 9:15	81.95	6/25/2022 7:38	17.22	6/25/2022 6:47	19.71	6/25/2022 11:43	70.30
6/26/2022 10:34	51.45	6/26/2022 9:16	81.93	6/25/2022 7:39	17.26	6/25/2022 6:48	19.54	6/25/2022 11:44	70.28
6/26/2022 10:35	51.43	6/26/2022 9:17	81.93	6/25/2022 7:40	17.19	6/25/2022 6:49	19.50	6/25/2022 11:45	70.22
6/26/2022 10:36	51.45	6/26/2022 9:18	81.97	6/25/2022 7:41	17.20	6/25/2022 6:50	19.62	6/25/2022 11:46	70.20
6/26/2022 10:37	51.38	6/26/2022 9:19	81.96	6/25/2022 7:42	17.22	6/25/2022 6:51	19.62	6/25/2022 11:47	70.15
6/26/2022 10:38	51.41	6/26/2022 9:20	81.93	6/25/2022 7:43	17.24	6/25/2022 6:52	19.68	6/25/2022 11:48	70.13
6/26/2022 10:39	51.42	6/26/2022 9:21	81.97	6/25/2022 7:44	20.06	6/25/2022 6:53	19.75	6/25/2022 11:49	70.07
6/26/2022 10:40	51.43	6/26/2022 9:22	81.97	6/25/2022 7:45	24.50	6/25/2022 6:54	19.84	6/25/2022 11:50	70.05
6/26/2022 10:41	51.41	6/26/2022 9:23	81.97	6/25/2022 7:46	27.15	6/25/2022 6:55	19.93	6/25/2022 11:51	70.00
6/26/2022 10:42	51.41	6/26/2022 9:24	81.97	6/25/2022 7:47	24.60	6/25/2022 6:56	20.03	6/25/2022 11:52	69.97
6/26/2022 10:43	51.39	6/26/2022 9:25	81.97	6/25/2022 7:48	22.77	6/25/2022 6:57	20.62	6/25/2022 11:53	69.96
6/26/2022 10:44	51.42	6/26/2022 9:26	81.98	6/25/2022 7:49	21.67	6/25/2022 6:58	20.52	6/25/2022 11:54	69.87
6/26/2022 10:45	51.37	6/26/2022 9:27	82.00	6/25/2022 7:50	21.00	6/25/2022 6:59	20.55	6/25/2022 11:55	69.89
6/26/2022 10:46	51.39	6/26/2022 9:28	81.94	6/25/2022 7:51	20.46	6/25/2022 7:00	20.56	6/25/2022 11:56	69.82
6/26/2022 10:47	51.38	6/26/2022 9:29	81.93	6/25/2022 7:52	20.13	6/25/2022 7:01	20.67	6/25/2022 11:57	69.82
6/26/2022 10:48	51.37	6/26/2022 9:30	81.93	6/25/2022 7:53	19.92	6/25/2022 7:02	20.67	6/25/2022 11:58	69.76
6/26/2022 10:49	51.39	6/26/2022 9:31	81.96	6/25/2022 7:54	19.66	6/25/2022 7:03	20.78	6/25/2022 11:59	69.72
6/26/2022 10:50	51.40	6/26/2022 9:32	81.95	6/25/2022 7:55	19.49	6/25/2022 7:04	20.85	6/25/2022 12:00	69.71
6/26/2022 10:51	51.36	6/26/2022 9:33	81.94	6/25/2022 7:56	19.37	6/25/2022 7:05	20.98	6/25/2022 12:01	69.68
6/26/2022 10:52	51.40	6/26/2022 9:34	81.96	6/25/2022 7:57	19.23	6/25/2022 7:06	21.04	6/25/2022 12:02	69.65

6/26/2022 10:53	51.37	6/26/2022 9:35	81.91	6/25/2022 7:58	19.14	6/25/2022 7:07	20.25	6/25/2022 12:03	69.62
6/26/2022 10:54	51.41	6/26/2022 9:36	81.97	6/25/2022 7:59	19.06	6/25/2022 7:08	19.84	6/25/2022 12:04	69.59
6/26/2022 10:55	51.37	6/26/2022 9:37	81.97	6/25/2022 8:00	18.94	6/25/2022 7:09	19.51	6/25/2022 12:05	69.56
6/26/2022 10:56	51.36	6/26/2022 9:38	81.95	6/25/2022 8:01	18.92	6/25/2022 7:10	19.29	6/25/2022 12:06	69.54
6/26/2022 10:57	51.30	6/26/2022 9:39	82.00	6/25/2022 8:02	18.82	6/25/2022 7:11	19.12	6/25/2022 12:07	69.48
6/26/2022 10:58	51.36	6/26/2022 9:40	81.97	6/25/2022 8:03	18.76	6/25/2022 7:12	18.98	6/25/2022 12:08	69.47
6/26/2022 10:59	51.33	6/26/2022 9:41	81.99	6/25/2022 8:04	23.82	6/25/2022 7:13	18.90	6/25/2022 12:09	69.47
6/26/2022 11:00	51.36	6/26/2022 9:42	81.94	6/25/2022 8:05	27.16	6/25/2022 7:14	18.83	6/25/2022 12:10	69.40
6/26/2022 11:01	51.34	6/26/2022 9:43	81.95	6/25/2022 8:06	25.74	6/25/2022 7:15	17.99	6/25/2022 12:11	69.39
6/26/2022 11:02	51.36	6/26/2022 9:44	82.00	6/25/2022 8:07	23.71	6/25/2022 7:16	17.45	6/25/2022 12:12	69.35
6/26/2022 11:03	51.40	6/26/2022 9:45	81.91	6/25/2022 8:08	22.55	6/25/2022 7:17	17.00	6/25/2022 12:13	69.33
6/26/2022 11:04	51.38	6/26/2022 9:46	81.94	6/25/2022 8:09	21.83	6/25/2022 7:18	16.64	6/25/2022 12:14	69.32
6/26/2022 11:05	51.36	6/26/2022 9:47	81.93	6/25/2022 8:10	21.28	6/25/2022 7:19	16.32	6/25/2022 12:15	69.26
6/26/2022 11:06	51.35	6/26/2022 9:48	82.00	6/25/2022 8:11	20.90	6/25/2022 7:20	16.15	6/25/2022 12:16	69.26
6/26/2022 11:07	51.36	6/26/2022 9:49	81.97	6/25/2022 8:12	20.70	6/25/2022 7:21	15.91	6/25/2022 12:17	69.22
6/26/2022 11:08	51.34	6/26/2022 9:50	81.99	6/25/2022 8:13	20.40	6/25/2022 7:22	15.74	6/25/2022 12:18	69.21
6/26/2022 11:09	51.28	6/26/2022 9:51	81.98	6/25/2022 8:14	20.29	6/25/2022 7:23	15.62	6/25/2022 12:19	69.21
6/26/2022 11:10	51.34	6/26/2022 9:52	81.94	6/25/2022 8:15	20.11	6/25/2022 7:24	15.53	6/25/2022 12:20	69.18
6/26/2022 11:11	51.29	6/26/2022 9:53	81.94	6/25/2022 8:16	19.92	6/25/2022 7:25	15.36	6/25/2022 12:21	69.17
6/26/2022 11:12	51.34	6/26/2022 9:54	81.97	6/25/2022 8:17	19.86	6/25/2022 7:26	15.22	6/25/2022 12:22	69.12
6/26/2022 11:13	51.34	6/26/2022 9:55	81.98	6/25/2022 8:18	19.70	6/25/2022 7:27	15.09	6/25/2022 12:23	69.10
6/26/2022 11:14	51.32	6/26/2022 9:56	81.94	6/25/2022 8:19	19.65	6/25/2022 7:28	15.02	6/25/2022 12:24	69.06
6/26/2022 11:15	51.35	6/26/2022 9:57	84.84	6/25/2022 8:20	19.58	6/25/2022 7:29	14.88	6/25/2022 12:25	69.03
6/26/2022 11:16	51.28	6/26/2022 9:58	86.84	6/25/2022 8:21	19.45	6/25/2022 7:30	14.83	6/25/2022 12:26	69.03
6/26/2022 11:17	51.34	6/26/2022 9:59	86.02	6/25/2022 8:22	19.33	6/25/2022 7:31	14.69	6/25/2022 12:27	69.02
6/26/2022 11:18	51.37	6/26/2022 10:00	85.40	6/25/2022 8:23	19.33	6/25/2022 7:32	14.59	6/25/2022 12:28	68.97
6/26/2022 11:19	51.34	6/26/2022 10:01	84.83	6/25/2022 8:24	19.28	6/25/2022 7:33	14.48	6/25/2022 12:29	68.96
6/26/2022 11:20	51.33	6/26/2022 10:02	84.43	6/25/2022 8:25	19.22	6/25/2022 7:34	14.88	6/25/2022 12:30	68.93
6/26/2022 11:21	51.30	6/26/2022 10:03	84.09	6/25/2022 8:26	19.17	6/25/2022 7:35	14.54	6/25/2022 12:31	68.92
6/26/2022 11:22	51.32	6/26/2022 10:04	83.82	6/25/2022 8:27	19.11	6/25/2022 7:36	14.38	6/25/2022 12:32	68.93
6/26/2022 11:23	51.32	6/26/2022 10:05	83.59	6/25/2022 8:28	19.05	6/25/2022 7:37	14.42	6/25/2022 12:33	68.88
6/26/2022 11:24	51.30	6/26/2022 10:06	83.90	6/25/2022 8:29	18.98	6/25/2022 7:38	14.28	6/25/2022 12:34	68.85
6/26/2022 11:25	51.29	6/26/2022 10:07	84.58	6/25/2022 8:30	18.94	6/25/2022 7:39	14.16	6/25/2022 12:35	68.84
6/26/2022 11:26	51.31	6/26/2022 10:08	83.94	6/25/2022 8:31	18.91	6/25/2022 7:40	14.04	6/25/2022 12:36	68.85
6/26/2022 11:27	51.32	6/26/2022 10:09	83.69	6/25/2022 8:32	18.83	6/25/2022 7:41	13.93	6/25/2022 12:37	68.79
6/26/2022 11:28	51.30	6/26/2022 10:10	83.44	6/25/2022 8:33	18.83	6/25/2022 7:42	13.87	6/25/2022 12:38	68.78
6/26/2022 11:29	51.30	6/26/2022 10:11	83.29	6/25/2022 8:34	18.81	6/25/2022 7:43	13.86	6/25/2022 12:39	68.75
6/26/2022 11:30	51.35	6/26/2022 10:12	83.10	6/25/2022 8:35	18.82	6/25/2022 7:44	13.78	6/25/2022 12:40	68.72
6/26/2022 11:31	51.32	6/26/2022 10:13	82.99	6/25/2022 8:36	18.75	6/25/2022 7:45	13.60	6/25/2022 12:41	68.70
6/26/2022 11:32	51.28	6/26/2022 10:14	82.86	6/25/2022 8:37	18.72	6/25/2022 7:46	13.57	6/25/2022 12:42	68.72
6/26/2022 11:33	51.29	6/26/2022 10:15	82.78	6/25/2022 8:38	18.69	6/25/2022 7:47	13.51	6/25/2022 12:43	68.67
6/26/2022 11:34	51.31	6/26/2022 10:16	82.73	6/25/2022 8:39	18.63	6/25/2022 7:48	13.47	6/25/2022 12:44	68.62
6/26/2022 11:35	51.30	6/26/2022 10:17	82.64	6/25/2022 8:40	18.59	6/25/2022 7:49	13.43	6/25/2022 12:45	68.66
6/26/2022 11:36	51.29	6/26/2022 10:18	82.60	6/25/2022 8:41	18.58	6/25/2022 7:50	13.30	6/25/2022 12:46	68.67
6/26/2022 11:37	51.27	6/26/2022 10:19	82.57	6/25/2022 8:42	18.59	6/25/2022 7:51	13.32	6/25/2022 12:47	68.61
6/26/2022 11:38	51.30	6/26/2022 10:20	82.54	6/25/2022 8:43	18.56	6/25/2022 7:52	13.24	6/25/2022 12:48	68.65
6/26/2022 11:39	51.31	6/26/2022 10:21	82.49	6/25/2022 8:44	18.55	6/25/2022 7:53	13.15	6/25/2022 12:49	68.59
6/26/2022 11:40	51.33	6/26/2022 10:22	82.42	6/25/2022 8:45	18.56	6/25/2022 7:54	13.08	6/25/2022 12:50	68.53
6/26/2022 11:41	51.27	6/26/2022 10:23	82.39	6/25/2022 8:46	18.46	6/25/2022 7:55	13.00	6/25/2022 12:51	68.56
6/26/2022 11:42	51.29	6/26/2022 10:24	82.38	6/25/2022 8:47	18.45	6/25/2022 7:56	13.02	6/25/2022 12:52	68.53
6/26/2022 11:43	51.28	6/26/2022 10:25	82.33	6/25/2022 8:48	18.43	6/25/2022 7:57	12.94	6/25/2022 12:53	71.29
6/26/2022 11:44	51.29	6/26/2022 10:26	82.27	6/25/2022 8:49	18.41	6/25/2022 7:58	12.86	6/25/2022 12:54	73.85
6/26/2022 11:45	51.29	6/26/2022 10:27	82.27	6/25/2022 8:50	18.43	6/25/2022 7:59	12.78	6/25/2022 12:55	73.72
6/26/2022 11:46	51.29	6/26/2022 10:28	82.24	6/25/2022 8:51	18.42	6/25/2022 8:00	12.74	6/25/2022 12:56	73.57
6/26/2022 11:47	51.29	6/26/2022 10:29	82.25	6/25/2022 8:52	18.42	6/25/2022 8:01	12.71	6/25/2022 12:57	73.48
6/26/2022 11:48	51.28	6/26/2022 10:30	82.22	6/25/2022 8:53	18.35	6/25/2022 8:02	12.69	6/25/2022 12:58	73.44
6/26/2022 11:49	51.29	6/26/2022 10:31	82.22	6/25/2022 8:54	18.40	6/25/2022 8:03	12.60	6/25/2022 12:59	73.33
6/26/2022 11:50	51.29	6/26/2022 10:32	82.23	6/25/2022 8:55	18.34	6/25/2022 8:04	12.53	6/25/2022 13:00	73.20
6/26/2022 11:51	51.31	6/26/2022 10:33	82.17	6/25/2022 8:56	18.31	6/25/2022 8:05	12.52	6/25/2022 13:01	73.13
6/26/2022 11:52	51.26	6/26/2022 10:34	82.19	6/25/2022 8:57	18.33	6/25/2022 8:06	12.47	6/25/2022 13:02	73.04
6/26/2022 11:53	51.30	6/26/2022 10:35	82.18	6/25/2022 8:58	18.29	6/25/2022 8:07	12.51	6/25/2022 13:03	72.97
6/26/2022 11:54	51.30	6/26/2022 10:36	82.17	6/25/2022 8:59	18.30	6/25/2022 8:08	12.40	6/25/2022 13:04	72.87
6/26/2022 11:55	51.30	6/26/2022 10:37	82.14	6/25/2022 9:00	18.29	6/25/2022 8:09	12.34	6/25/2022 13:05	72.81
6/26/2022 11:56	51.29	6/26/2022 10:38	82.12	6/25/2022 9:01	18.23	6/25/2022 8:10	12.43	6/25/2022 13:06	72.73
6/26/2022 11:57	51.29	6/26/2022 10:39	82.17	6/25/2022 9:02	18.28	6/25/2022 8:11	12.57	6/25/2022 13:07	72.67
6/26/2022 11:58	51.24	6/26/2022 10:40	82.09	6/25/2022 9:03	18.25	6/25/2022 8:12	12.40	6/25/2022 13:08	72.62
6/26/2022 11:59	51.25	6/26/2022 10:41	82.09	6/25/2022 9:04	18.20	6/25/2022 8:13	12.32	6/25/2022 13:09	72.52
6/26/2022 12:00	51.26	6/26/2022 10:42	82.05	6/25/2022 9:05	18.18	6/25/2022 8:14	12.19	6/25/2022 13:10	72.48
6/26/2022 12:01	51.26	6/26/2022 10:43	82.09	6/25/2022 9:06	18.22	6/25/2022 8:15	12.21	6/25/2022 13:11	72.37
6/26/2022 12:02	51.28	6/26/2022 10:44	82.10	6/25/2022 9:07	18.19	6/25/2022 8:16	12.09	6/25/2022 13:12	72.33
6/26/2022 12:03	51.28	6/26/2022 10:45	82.10	6/25/2022 9:08	18.16	6/25/2022 8:17	12.01	6/25/2022 13:13	72.28
6/26/2022 12:04	51.30	6/26/2022 10:46	82.09	6/25/2022 9:09	18.17	6/25/2022 8:18	11.95	6/25/2022 13:14	72.23
6/26/2022 12:05	51.28	6/26/2022 10:47	82.06	6/25/2022 9:10	18.18	6/25/2022 8:19	11.95	6/25/2022 13:15	72.18
6/26/2022 12:06	51.21	6/26/2022 10:48	82.12	6/25/2022 9:11	18.17	6/25/2022 8:20	11.89	6/25/2022 13:16	72.12
6/26/2022 12:07	51.27	6/26/2022 10:49	82.04	6/25/2022 9:12	18.16	6/25/2022 8:21	11.82	6/25/2022 13:17	72.05
6/26/2022 12:08	51.24	6/26/2022 10:50	82.09	6/25/2022 9:13	18.17	6/25/2022 8:22	11.87	6/25/2022 13:18	72.01
6/26/2022 12:09	51.25	6/26/2022 10:51	82.04	6/25/2022 9:14	18.14	6/25/2022 8:23	11.79	6/25/2022 13:19	71.93
6/26/2022 12:10	51.24	6/26/2022 10:52	82.08	6/25/2022 9:15	18.12	6/25/2022 8:24	11.75	6/25/2022 13:20	71.90
6/26/2022 12:11	51.26	6/26/2022 10:53	82.05	6/25/2022 9:16	18.09	6/25/2022 8:25	11.77	6/25/2022 13:21	71.84
6/26/2022 12:12	51.24	6/26/2022 10:54	82.07	6/25/2022 9:17	18.14	6/25/2022 8:26	12.12	6/25/2022 13:22	71.76
6/26/2022 12:13	51.24	6/26/2022 10:55	82.07	6/25/2022 9:18	18.09	6/25/2022 8:27	11.90	6/25/2022 13:23	71.73
6/26/2022 12:14	51.26	6/26/2022 10:56	82.08	6/25/2022 9:19	18.06	6/25/2022 8:28	11.76	6/25/2022 13:24	71.66
6/26/2022 12:15	51.25	6/26/2022 10:57	82.04	6/25/2022 9:20	18.08	6/25/2022 8:29	11.65	6/25/2022 13:25	71.64
6/26/2022 12:16	51.26	6/26/2022 10:58	82.04	6/25/2022 9:21	18.00	6/25/2022 8:30	11.71	6/25/2022 13:26	71.56
6/26/2022 12:17	51.28	6/26/2022 10:59	82.01	6/25/2022 9:22	18.08	6/25/2022 8:31	11.57	6/25/2022 13:27	71.52
6/26/2022 12:18	51.24	6/26/2022 11:00	82.06	6/25/2022 9:23	18.06	6/25/2022 8:32	11.60	6/25/2022 13:28	71.47
6/26/2022 12:19	51.24	6/26/2022 11:01	82.03	6/25/2022 9:24	18.06	6/25/2022 8:33	11.53	6/25/2022 13:29	71.45
6/26/2022 12:20	51.24	6/26/2022 11:02	82.01	6/25/2022 9:25	18.06	6/25/2022 8:34	11.48	6/25/2022 13:30	71.39

6/26/2022 12:21	51.24	6/26/2022 11:03	82.06	6/25/2022 9:26	18.03	6/25/2022 8:35	11.46	6/25/2022 13:31	71.33
6/26/2022 12:22	51.24	6/26/2022 11:04	82.03	6/25/2022 9:27	18.03	6/25/2022 8:36	11.47	6/25/2022 13:32	71.27
6/26/2022 12:23	51.26	6/26/2022 11:05	82.03	6/25/2022 9:28	18.02	6/25/2022 8:37	11.41	6/25/2022 13:33	71.21
6/26/2022 12:24	51.24	6/26/2022 11:06	82.04	6/25/2022 9:29	18.07	6/25/2022 8:38	11.32	6/25/2022 13:34	71.20
6/26/2022 12:25	51.24	6/26/2022 11:07	82.00	6/25/2022 9:30	18.00	6/25/2022 8:39	11.32	6/25/2022 13:35	71.13
6/26/2022 12:26	51.22	6/26/2022 11:08	82.05	6/25/2022 9:31	17.98	6/25/2022 8:40	11.29	6/25/2022 13:36	71.13
6/26/2022 12:27	51.22	6/26/2022 11:09	82.03	6/25/2022 9:32	17.98	6/25/2022 8:41	11.21	6/25/2022 13:37	71.07
6/26/2022 12:28	51.21	6/26/2022 11:10	82.04	6/25/2022 9:33	18.02	6/25/2022 8:42	11.28	6/25/2022 13:38	70.99
6/26/2022 12:29	51.25	6/26/2022 11:11	82.02	6/25/2022 9:34	18.01	6/25/2022 8:43	11.18	6/25/2022 13:39	70.99
6/26/2022 12:30	51.23	6/26/2022 11:12	82.02	6/25/2022 9:35	17.99	6/25/2022 8:44	11.17	6/25/2022 13:40	70.95
6/26/2022 12:31	51.26	6/26/2022 11:13	81.98	6/25/2022 9:36	17.96	6/25/2022 8:45	11.17	6/25/2022 13:41	70.90
6/26/2022 12:32	51.23	6/26/2022 11:14	82.04	6/25/2022 9:37	17.99	6/25/2022 8:46	11.08	6/25/2022 13:42	70.84
6/26/2022 12:33	51.23	6/26/2022 11:15	81.97	6/25/2022 9:38	17.97	6/25/2022 8:47	11.10	6/25/2022 13:43	70.81
6/26/2022 12:34	51.19	6/26/2022 11:16	82.00	6/25/2022 9:39	18.04	6/25/2022 8:48	11.02	6/25/2022 13:44	70.78
6/26/2022 12:35	51.24	6/26/2022 11:17	82.01	6/25/2022 9:40	17.99	6/25/2022 8:49	11.00	6/25/2022 13:45	70.72
6/26/2022 12:36	51.24	6/26/2022 11:18	82.03	6/25/2022 9:41	17.95	6/25/2022 8:50	11.06	6/25/2022 13:46	70.74
6/26/2022 12:37	51.22	6/26/2022 11:19	82.03	6/25/2022 9:42	17.98	6/25/2022 8:51	10.92	6/25/2022 13:47	70.69
6/26/2022 12:38	51.21	6/26/2022 11:20	82.00	6/25/2022 9:43	17.98	6/25/2022 8:52	10.94	6/25/2022 13:48	70.60
6/26/2022 12:39	51.22	6/26/2022 11:21	82.01	6/25/2022 9:44	17.94	6/25/2022 8:53	10.95	6/25/2022 13:49	70.59
6/26/2022 12:40	51.24	6/26/2022 11:22	81.98	6/25/2022 9:45	17.94	6/25/2022 8:54	10.84	6/25/2022 13:50	70.56
6/26/2022 12:41	51.20	6/26/2022 11:23	82.06	6/25/2022 9:46	17.96	6/25/2022 8:55	10.84	6/25/2022 13:51	70.50
6/26/2022 12:42	51.20	6/26/2022 11:24	82.00	6/25/2022 9:47	17.96	6/25/2022 8:56	10.85	6/25/2022 13:52	70.45
6/26/2022 12:43	51.24	6/26/2022 11:25	82.00	6/25/2022 9:48	17.91	6/25/2022 8:57	10.75	6/25/2022 13:53	70.45
6/26/2022 12:44	51.23	6/26/2022 11:26	81.97	6/25/2022 9:49	17.91	6/25/2022 8:58	10.77	6/25/2022 13:54	70.40
6/26/2022 12:45	51.26	6/26/2022 11:27	82.05	6/25/2022 9:50	17.89	6/25/2022 8:59	10.79	6/25/2022 13:55	70.36
6/26/2022 12:46	51.25	6/26/2022 11:28	81.97	6/25/2022 9:51	17.98	6/25/2022 9:00	10.70	6/25/2022 13:56	70.32
6/26/2022 12:47	51.17	6/26/2022 11:29	82.00	6/25/2022 9:52	17.95	6/25/2022 9:01	10.68	6/25/2022 13:57	70.30
6/26/2022 12:48	51.20	6/26/2022 11:30	81.99	6/25/2022 9:53	17.90	6/25/2022 9:02	10.71	6/25/2022 13:58	70.28
6/26/2022 12:49	51.21	6/26/2022 11:31	81.99	6/25/2022 9:54	17.93	6/25/2022 9:03	10.65	6/25/2022 13:59	70.21
6/26/2022 12:50	51.21	6/26/2022 11:32	82.02	6/25/2022 9:55	17.89	6/25/2022 9:04	10.59	6/25/2022 14:00	70.19
6/26/2022 12:51	51.23	6/26/2022 11:33	81.98	6/25/2022 9:56	17.91	6/25/2022 9:05	10.62	6/25/2022 14:01	70.16
6/26/2022 12:52	51.22	6/26/2022 11:34	81.99	6/25/2022 9:57	17.95	6/25/2022 9:06	10.54	6/25/2022 14:02	70.15
6/26/2022 12:53	51.18	6/26/2022 11:35	82.00	6/25/2022 9:58	17.93	6/25/2022 9:07	10.44	6/25/2022 14:03	70.12
6/26/2022 12:54	51.20	6/26/2022 11:36	81.99	6/25/2022 9:59	17.89	6/25/2022 9:08	10.42	6/25/2022 14:04	70.07
6/26/2022 12:55	51.19	6/26/2022 11:37	81.99	6/25/2022 10:00	17.90	6/25/2022 9:09	10.46	6/25/2022 14:05	70.05
6/26/2022 12:56	51.20	6/26/2022 11:38	81.98	6/25/2022 10:01	17.92	6/25/2022 9:10	10.42	6/25/2022 14:06	70.01
6/26/2022 12:57	51.18	6/26/2022 11:39	82.04	6/25/2022 10:02	17.93	6/25/2022 9:11	10.38	6/25/2022 14:07	69.96
6/26/2022 12:58	51.20	6/26/2022 11:40	81.98	6/25/2022 10:03	17.91	6/25/2022 9:12	10.33	6/25/2022 14:08	69.97
6/26/2022 12:59	51.17	6/26/2022 11:41	82.00	6/25/2022 10:04	17.93	6/25/2022 9:13	10.32	6/25/2022 14:09	69.91
6/26/2022 13:00	51.21	6/26/2022 11:42	81.99	6/25/2022 10:05	17.90	6/25/2022 9:14	10.31	6/25/2022 14:10	69.89
6/26/2022 13:01	51.21	6/26/2022 11:43	82.02	6/25/2022 10:06	17.88	6/25/2022 9:15	10.28	6/25/2022 14:11	69.85
6/26/2022 13:02	51.23	6/26/2022 11:44	82.01	6/25/2022 10:07	17.92	6/25/2022 9:16	10.18	6/25/2022 14:12	69.80
6/26/2022 13:03	51.19	6/26/2022 11:45	81.93	6/25/2022 10:08	17.92	6/25/2022 9:17	10.20	6/25/2022 14:13	69.79
6/26/2022 13:04	51.18	6/26/2022 11:46	82.00	6/25/2022 10:09	17.92	6/25/2022 9:18	10.17	6/25/2022 14:14	69.77
6/26/2022 13:05	51.18	6/26/2022 11:47	81.99	6/25/2022 10:10	17.90	6/25/2022 9:19	10.21	6/25/2022 14:15	69.75
6/26/2022 13:06	51.16	6/26/2022 11:48	82.01	6/25/2022 10:11	17.89	6/25/2022 9:20	10.11	6/25/2022 14:16	69.69
6/26/2022 13:07	51.21	6/26/2022 11:49	82.00	6/25/2022 10:12	17.90	6/25/2022 9:21	10.09	6/25/2022 14:17	69.69
6/26/2022 13:08	51.18	6/26/2022 11:50	81.97	6/25/2022 10:13	17.89	6/25/2022 9:22	10.09	6/25/2022 14:18	69.68
6/26/2022 13:09	51.18	6/26/2022 11:51	82.00	6/25/2022 10:14	17.92	6/25/2022 9:23	10.09	6/25/2022 14:19	69.65
6/26/2022 13:10	51.17	6/26/2022 11:52	81.98	6/25/2022 10:15	17.91	6/25/2022 9:24	10.00	6/25/2022 14:20	69.66
6/26/2022 13:11	51.21	6/26/2022 11:53	82.00	6/25/2022 10:16	17.86	6/25/2022 9:25	9.97	6/25/2022 14:21	69.59
6/26/2022 13:12	51.15	6/26/2022 11:54	81.99	6/25/2022 10:17	17.89	6/25/2022 9:26	10.05	6/25/2022 14:22	69.56
6/26/2022 13:13	51.21	6/26/2022 11:55	81.96	6/25/2022 10:18	17.87	6/25/2022 9:27	10.01	6/25/2022 14:23	69.53
6/26/2022 13:14	51.20	6/26/2022 11:56	81.93	6/25/2022 10:19	17.87	6/25/2022 9:28	9.92	6/25/2022 14:24	69.53
6/26/2022 13:15	51.21	6/26/2022 11:57	81.95	6/25/2022 10:20	17.83	6/25/2022 9:29	9.91	6/25/2022 14:25	69.48
6/26/2022 13:16	51.17	6/26/2022 11:58	82.00	6/25/2022 10:21	17.84	6/25/2022 9:30	9.90	6/25/2022 14:26	69.43
6/26/2022 13:17	51.21	6/26/2022 11:59	81.98	6/25/2022 10:22	17.84	6/25/2022 9:31	9.95	6/25/2022 14:27	69.45
6/26/2022 13:18	51.20	6/26/2022 12:00	81.97	6/25/2022 10:23	17.80	6/25/2022 9:32	9.83	6/25/2022 14:28	69.43
6/26/2022 13:19	51.16	6/26/2022 12:01	81.97	6/25/2022 10:24	17.84	6/25/2022 9:33	9.85	6/25/2022 14:29	69.40
6/26/2022 13:20	51.19	6/26/2022 12:02	82.03	6/25/2022 10:25	17.85	6/25/2022 9:34	9.81	6/25/2022 14:30	69.36
6/26/2022 13:21	51.17	6/26/2022 12:03	81.96	6/25/2022 10:26	17.82	6/25/2022 9:35	9.86	6/25/2022 14:31	69.33
6/26/2022 13:22	51.19	6/26/2022 12:04	81.91	6/25/2022 10:27	17.86	6/25/2022 9:36	9.76	6/25/2022 14:32	69.30
6/26/2022 13:23	51.19	6/26/2022 12:05	81.99	6/25/2022 10:28	17.80	6/25/2022 9:37	9.78	6/25/2022 14:33	69.31
6/26/2022 13:24	51.16	6/26/2022 12:06	81.97	6/25/2022 10:29	17.83	6/25/2022 9:38	9.74	6/25/2022 14:34	69.27
6/26/2022 13:25	51.18	6/26/2022 12:07	82.00	6/25/2022 10:30	17.81	6/25/2022 9:39	9.72	6/25/2022 14:35	69.25
6/26/2022 13:26	51.15	6/26/2022 12:08	81.99	6/25/2022 10:31	17.75	6/25/2022 9:40	9.68	6/25/2022 14:36	69.21
6/26/2022 13:27	51.20	6/26/2022 12:09	81.95	6/25/2022 10:32	17.81	6/25/2022 9:41	9.65	6/25/2022 14:37	69.19
6/26/2022 13:28	51.16	6/26/2022 12:10	81.99	6/25/2022 10:33	17.77	6/25/2022 9:42	9.63	6/25/2022 14:38	69.19
6/26/2022 13:29	51.18	6/26/2022 12:11	81.98	6/25/2022 10:34	17.75	6/25/2022 9:43	9.67	6/25/2022 14:39	69.18
6/26/2022 13:30	51.17	6/26/2022 12:12	81.98	6/25/2022 10:35	17.77	6/25/2022 9:44	9.55	6/25/2022 14:40	69.14
6/26/2022 13:31	51.16	6/26/2022 12:13	81.93	6/25/2022 10:36	17.76	6/25/2022 9:45	9.55	6/25/2022 14:41	69.10
6/26/2022 13:32	51.15	6/26/2022 12:14	81.96	6/25/2022 10:37	17.80	6/25/2022 9:46	9.55	6/25/2022 14:42	69.10
6/26/2022 13:33	51.19	6/26/2022 12:15	81.98	6/25/2022 10:38	17.75	6/25/2022 9:47	9.57	6/25/2022 14:43	69.09
6/26/2022 13:34	51.17	6/26/2022 12:16	82.00	6/25/2022 10:39	17.79	6/25/2022 9:48	9.49	6/25/2022 14:44	69.02
6/26/2022 13:35	51.16	6/26/2022 12:17	81.97	6/25/2022 10:40	17.78	6/25/2022 9:49	9.47	6/25/2022 14:45	69.03
6/26/2022 13:36	51.15	6/26/2022 12:18	81.96	6/25/2022 10:41	17.78	6/25/2022 9:50	9.45	6/25/2022 14:46	69.04
6/26/2022 13:37	51.17	6/26/2022 12:19	81.96	6/25/2022 10:42	17.76	6/25/2022 9:51	9.45	6/25/2022 14:47	69.01
6/26/2022 13:38	51.19	6/26/2022 12:20	81.94	6/25/2022 10:43	17.74	6/25/2022 9:52	9.41	6/25/2022 14:48	68.96
6/26/2022 13:39	51.17	6/26/2022 12:21	81.98	6/25/2022 10:44	17.82	6/25/2022 9:53	9.42	6/25/2022 14:49	68.93
6/26/2022 13:40	51.14	6/26/2022 12:22	81.93	6/25/2022 10:45	17.79	6/25/2022 9:54	9.37	6/25/2022 14:50	68.90
6/26/2022 13:41	51.21	6/26/2022 12:23	81.99	6/25/2022 10:46	17.76	6/25/2022 9:55	9.36	6/25/2022 14:51	68.89
6/26/2022 13:42	51.18	6/26/2022 12:24	81.92	6/25/2022 10:47	17.82	6/25/2022 9:56	9.41	6/25/2022 14:52	68.91
6/26/2022 13:43	51.14	6/26/2022 12:25	81.99	6/25/2022 10:48	17.80	6/25/2022 9:57	9.33	6/25/2022 14:53	68.90
6/26/2022 13:44	51.16	6/26/2022 12:26	81.96	6/25/2022 10:49	17.82	6/25/2022 9:58	9.25	6/25/2022 14:54	68.86
6/26/2022 13:45	51.15	6/26/2022 12:27	82.02	6/25/2022 10:50	17.78	6/25/2022 9:59	9.21	6/25/2022 14:55	68.84
6/26/2022 13:46	51.18	6/26/2022 12:28	81.96	6/25/2022 10:51	17.81	6/25/2022 10:00	9.34	6/25/2022 14:56	68.82
6/26/2022 13:47	51.17	6/26/2022 12:29	82.01	6/25/2022 10:52	17.82	6/25/2022 10:01	9.19	6/25/2022 14:57	68.82
6/26/2022 13:48	51.19	6/26/2022 12:30	81.98	6/25/2022 10:53	17.81	6/25/2022 10:02	9.21	6/25/2022 14:58	68.80

6/26/2022 13:49	51.19	6/26/2022 12:31	81.97	6/25/2022 10:54	17.83	6/25/2022 10:03	9.23	6/25/2022 14:59	68.73
6/26/2022 13:50	51.15	6/26/2022 12:32	81.94	6/25/2022 10:55	17.80	6/25/2022 10:04	9.20	6/25/2022 15:00	68.75
6/26/2022 13:51	51.13	6/26/2022 12:33	81.99	6/25/2022 10:56	17.82	6/25/2022 10:05	9.15	6/25/2022 15:01	68.72
6/26/2022 13:52	51.16	6/26/2022 12:34	82.00	6/25/2022 10:57	17.85	6/25/2022 10:06	9.19	6/25/2022 15:02	68.69
6/26/2022 13:53	51.17	6/26/2022 12:35	81.98	6/25/2022 10:58	17.87	6/25/2022 10:07	9.10	6/25/2022 15:03	68.71
6/26/2022 13:54	51.16	6/26/2022 12:36	82.03	6/25/2022 10:59	17.85	6/25/2022 10:08	9.13	6/25/2022 15:04	68.69
6/26/2022 13:55	51.16	6/26/2022 12:37	81.98	6/25/2022 11:00	17.87	6/25/2022 10:09	9.04	6/25/2022 15:05	68.68
6/26/2022 13:56	51.14	6/26/2022 12:38	81.94	6/25/2022 11:01	17.84	6/25/2022 10:10	9.01	6/25/2022 15:06	68.70
6/26/2022 13:57	51.17	6/26/2022 12:39	81.94	6/25/2022 11:02	17.87	6/25/2022 10:11	9.03	6/25/2022 15:07	68.61
6/26/2022 13:58	51.13	6/26/2022 12:40	81.98	6/25/2022 11:03	17.91	6/25/2022 10:12	9.06	6/25/2022 15:08	68.63
6/26/2022 13:59	51.15	6/26/2022 12:41	81.94	6/25/2022 11:04	17.90	6/25/2022 10:13	9.04	6/25/2022 15:09	68.61
6/26/2022 14:00	51.11	6/26/2022 12:42	81.97	6/25/2022 11:05	17.91	6/25/2022 10:14	8.98	6/25/2022 15:10	68.57
6/26/2022 14:01	51.15	6/26/2022 12:43	81.94	6/25/2022 11:06	17.88	6/25/2022 10:15	8.93	6/25/2022 15:11	68.55
6/26/2022 14:02	51.13	6/26/2022 12:44	81.95	6/25/2022 11:07	17.92	6/25/2022 10:16	8.97	6/25/2022 15:12	68.55
6/26/2022 14:03	51.14	6/26/2022 12:45	81.95	6/25/2022 11:08	17.93	6/25/2022 10:17	8.95	6/25/2022 15:13	68.54
6/26/2022 14:04	51.15	6/26/2022 12:46	81.97	6/25/2022 11:09	17.92	6/25/2022 10:18	8.87	6/25/2022 15:14	68.49
6/26/2022 14:05	51.15	6/26/2022 12:47	81.96	6/25/2022 11:10	17.91	6/25/2022 10:19	8.84	6/25/2022 15:15	68.51
6/26/2022 14:06	51.15	6/26/2022 12:48	81.97	6/25/2022 11:11	17.93	6/25/2022 10:20	8.86	6/25/2022 15:16	68.50
6/26/2022 14:07	51.10	6/26/2022 12:49	81.94	6/25/2022 11:12	17.96	6/25/2022 10:21	8.84	6/25/2022 15:17	68.50
6/26/2022 14:08	51.17	6/26/2022 12:50	81.98	6/25/2022 11:13	17.94	6/25/2022 10:22	8.83	6/25/2022 15:18	68.46
6/26/2022 14:09	51.13	6/26/2022 12:51	81.99	6/25/2022 11:14	17.96	6/25/2022 10:23	8.79	6/25/2022 15:19	68.46
6/26/2022 14:10	51.17	6/26/2022 12:52	81.92	6/25/2022 11:15	17.99	6/25/2022 10:24	8.80	6/25/2022 15:20	68.43
6/26/2022 14:11	51.16	6/26/2022 12:53	81.93	6/25/2022 11:16	17.95	6/25/2022 10:25	8.81	6/25/2022 15:21	68.43
6/26/2022 14:12	51.14	6/26/2022 12:54	81.92	6/25/2022 11:17	18.05	6/25/2022 10:26	8.74	6/25/2022 15:22	68.41
6/26/2022 14:13	51.11	6/26/2022 12:55	81.97	6/25/2022 11:18	18.04	6/25/2022 10:27	8.70	6/25/2022 15:23	68.42
6/26/2022 14:14	51.13	6/26/2022 12:56	81.94	6/25/2022 11:19	18.00	6/25/2022 10:28	8.77	6/25/2022 15:24	68.40
6/26/2022 14:15	51.13	6/26/2022 12:57	81.96	6/25/2022 11:20	18.02	6/25/2022 10:29	8.79	6/25/2022 15:25	68.35
6/26/2022 14:16	51.12	6/26/2022 12:58	81.93	6/25/2022 11:21	18.05	6/25/2022 10:30	8.68	6/25/2022 15:26	68.32
6/26/2022 14:17	51.17	6/26/2022 12:59	81.93	6/25/2022 11:22	18.06	6/25/2022 10:31	8.71	6/25/2022 15:27	68.33
6/26/2022 14:18	51.12	6/26/2022 13:00	82.00	6/25/2022 11:23	18.07	6/25/2022 10:32	8.69	6/25/2022 15:28	68.31
6/26/2022 14:19	51.14	6/26/2022 13:01	81.95	6/25/2022 11:24	18.04	6/25/2022 10:33	8.69	6/25/2022 15:29	68.31
6/26/2022 14:20	51.14	6/26/2022 13:02	81.98	6/25/2022 11:25	18.06	6/25/2022 10:34	8.60	6/25/2022 15:30	68.29
6/26/2022 14:21	51.13	6/26/2022 13:03	81.96	6/25/2022 11:26	18.08	6/25/2022 10:35	8.58	6/25/2022 15:31	68.31
6/26/2022 14:22	51.09	6/26/2022 13:04	81.95	6/25/2022 11:27	18.10	6/25/2022 10:36	8.62	6/25/2022 15:32	68.27
6/26/2022 14:23	51.13	6/26/2022 13:05	81.93	6/25/2022 11:28	18.07	6/25/2022 10:37	8.59	6/25/2022 15:33	68.24
6/26/2022 14:24	51.16	6/26/2022 13:06	81.96	6/25/2022 11:29	18.13	6/25/2022 10:38	8.63	6/25/2022 15:34	68.21
6/26/2022 14:25	51.12	6/26/2022 13:07	81.97	6/25/2022 11:30	18.12	6/25/2022 10:39	8.57	6/25/2022 15:35	68.22
6/26/2022 14:26	51.12	6/26/2022 13:08	81.99	6/25/2022 11:31	18.12	6/25/2022 10:40	8.52	6/25/2022 15:36	68.19
6/26/2022 14:27	51.12	6/26/2022 13:09	81.94	6/25/2022 11:32	18.13	6/25/2022 10:41	8.55	6/25/2022 15:37	68.18
6/26/2022 14:28	51.16	6/26/2022 13:10	81.97	6/25/2022 11:33	18.18	6/25/2022 10:42	8.60	6/25/2022 15:38	68.16
6/26/2022 14:29	51.15	6/26/2022 13:11	81.95	6/25/2022 11:34	18.15	6/25/2022 10:43	8.46	6/25/2022 15:39	68.15
6/26/2022 14:30	51.14	6/26/2022 13:12	81.97	6/25/2022 11:35	18.13	6/25/2022 10:44	8.51	6/25/2022 15:40	68.15
6/26/2022 14:31	51.13	6/26/2022 13:13	81.96	6/25/2022 11:36	18.18	6/25/2022 10:45	8.51	6/25/2022 15:41	68.12
6/26/2022 14:32	51.15	6/26/2022 13:14	81.95	6/25/2022 11:37	18.17	6/25/2022 10:46	8.56	6/25/2022 15:42	68.17
6/26/2022 14:33	51.16	6/26/2022 13:15	81.95	6/25/2022 11:38	18.16	6/25/2022 10:47	8.49	6/25/2022 15:43	68.14
6/26/2022 14:34	51.14	6/26/2022 13:16	81.97	6/25/2022 11:39	18.17	6/25/2022 10:48	8.48	6/25/2022 15:44	68.11
6/26/2022 14:35	51.14	6/26/2022 13:17	81.94	6/25/2022 11:40	18.22	6/25/2022 10:49	8.49	6/25/2022 15:45	68.08
6/26/2022 14:36	51.14	6/26/2022 13:18	81.95	6/25/2022 11:41	18.14	6/25/2022 10:50	8.40	6/25/2022 15:46	68.10
6/26/2022 14:37	51.12	6/26/2022 13:19	81.95	6/25/2022 11:42	18.19	6/25/2022 10:51	8.37	6/25/2022 15:47	68.07
6/26/2022 14:38	51.14	6/26/2022 13:20	81.93	6/25/2022 11:43	18.24	6/25/2022 10:52	8.41	6/25/2022 15:48	68.05
6/26/2022 14:39	51.08	6/26/2022 13:21	81.96	6/25/2022 11:44	18.19	6/25/2022 10:53	8.44	6/25/2022 15:49	68.05
6/26/2022 14:40	51.14	6/26/2022 13:22	81.95	6/25/2022 11:45	18.26	6/25/2022 10:54	8.35	6/25/2022 15:50	68.03
6/26/2022 14:41	51.13	6/26/2022 13:23	81.90	6/25/2022 11:46	18.22	6/25/2022 10:55	8.41	6/25/2022 15:51	68.03
6/26/2022 14:42	51.16	6/26/2022 13:24	81.96	6/25/2022 11:47	18.22	6/25/2022 10:56	8.36	6/25/2022 15:52	68.04
6/26/2022 14:43	51.16	6/26/2022 13:25	81.92	6/25/2022 11:48	18.23	6/25/2022 10:57	8.38	6/25/2022 15:53	68.03
6/26/2022 14:44	51.12	6/26/2022 13:26	81.95	6/25/2022 11:49	18.25	6/25/2022 10:58	8.35	6/25/2022 15:54	68.03
6/26/2022 14:45	51.13	6/26/2022 13:27	81.94	6/25/2022 11:50	18.26	6/25/2022 10:59	8.29	6/25/2022 15:55	67.97
6/26/2022 14:46	51.12	6/26/2022 13:28	81.90	6/25/2022 11:51	18.28	6/25/2022 11:00	8.29	6/25/2022 15:56	67.95
6/26/2022 14:47	51.83	6/26/2022 13:29	81.94	6/25/2022 11:52	18.31	6/25/2022 11:01	8.27	6/25/2022 15:57	67.94
6/26/2022 14:48	54.32	6/26/2022 13:30	81.93	6/25/2022 11:53	18.27	6/25/2022 11:02	8.33	6/25/2022 15:58	67.95
6/26/2022 14:49	55.50	6/26/2022 13:31	81.96	6/25/2022 11:54	18.32	6/25/2022 11:03	8.23	6/25/2022 15:59	70.26
6/26/2022 14:50	56.09	6/26/2022 13:32	81.91	6/25/2022 11:55	18.29	6/25/2022 11:04	8.24	6/25/2022 16:00	73.29
6/26/2022 14:51	54.66	6/26/2022 13:33	81.95	6/25/2022 11:56	18.30	6/25/2022 11:05	8.18	6/25/2022 16:01	73.12
6/26/2022 14:52	53.30	6/26/2022 13:34	81.96	6/25/2022 11:57	18.32	6/25/2022 11:06	8.23	6/25/2022 16:02	73.02
6/26/2022 14:53	52.72	6/26/2022 13:35	81.93	6/25/2022 11:58	18.33	6/25/2022 11:07	8.16	6/25/2022 16:03	72.89
6/26/2022 14:54	52.42	6/26/2022 13:36	81.91	6/25/2022 11:59	18.30	6/25/2022 11:08	8.18	6/25/2022 16:04	72.78
6/26/2022 14:55	52.25	6/26/2022 13:37	81.95	6/25/2022 12:00	18.30	6/25/2022 11:09	8.16	6/25/2022 16:05	72.75
6/26/2022 14:56	52.15	6/26/2022 13:38	81.96	6/25/2022 12:01	18.31	6/25/2022 11:10	8.17	6/25/2022 16:06	72.64
6/26/2022 14:57	52.06	6/26/2022 13:39	81.94	6/25/2022 12:02	18.36	6/25/2022 11:11	8.11	6/25/2022 16:07	72.54
6/26/2022 14:58	51.99	6/26/2022 13:40	81.96	6/25/2022 12:03	18.33	6/25/2022 11:12	8.11	6/25/2022 16:08	72.49
6/26/2022 14:59	51.93	6/26/2022 13:41	81.96	6/25/2022 12:04	18.38	6/25/2022 11:13	8.09	6/25/2022 16:09	72.41
6/26/2022 15:00	51.84	6/26/2022 13:42	81.91	6/25/2022 12:05	18.35	6/25/2022 11:14	8.13	6/25/2022 16:10	72.32
6/26/2022 15:01	51.83	6/26/2022 13:43	81.94	6/25/2022 12:06	18.39	6/25/2022 11:15	8.09	6/25/2022 16:11	72.29
6/26/2022 15:02	51.79	6/26/2022 13:44	81.94	6/25/2022 12:07	18.40	6/25/2022 11:16	8.02	6/25/2022 16:12	72.18
6/26/2022 15:03	51.75	6/26/2022 13:45	81.95	6/25/2022 12:08	18.37	6/25/2022 11:17	8.04	6/25/2022 16:13	72.13
6/26/2022 15:04	51.73	6/26/2022 13:46	81.96	6/25/2022 12:09	18.43	6/25/2022 11:18	8.06	6/25/2022 16:14	72.08
6/26/2022 15:05	51.73	6/26/2022 13:47	81.92	6/25/2022 12:10	18.36	6/25/2022 11:19	8.06	6/25/2022 16:15	71.97
6/26/2022 15:06	51.70	6/26/2022 13:48	81.96	6/25/2022 12:11	18.37	6/25/2022 11:20	8.00	6/25/2022 16:16	71.94
6/26/2022 15:07	51.66	6/26/2022 13:49	81.96	6/25/2022 12:12	18.37	6/25/2022 11:21	7.97	6/25/2022 16:17	71.88
6/26/2022 15:08	51.67	6/26/2022 13:50	81.95	6/25/2022 12:13	18.37	6/25/2022 11:22	8.03	6/25/2022 16:18	71.85
6/26/2022 15:09	51.62	6/26/2022 13:51	81.94	6/25/2022 12:14	18.40	6/25/2022 11:23	8.04	6/25/2022 16:19	71.75
6/26/2022 15:10	51.62	6/26/2022 13:52	81.96	6/25/2022 12:15	18.42	6/25/2022 11:24	7.96	6/25/2022 16:20	71.72
6/26/2022 15:11	51.63	6/26/2022 13:53	81.97	6/25/2022 12:16	18.41	6/25/2022 11:25	7.95	6/25/2022 16:21	71.67
6/26/2022 15:12	51.59	6/26/2022 13:54	81.96	6/25/2022 12:17	18.40	6/25/2022 11:26	7.96	6/25/2022 16:22	71.62
6/26/2022 15:13	51.57	6/26/2022 13:55	81.96	6/25/2022 12:18	18.35	6/25/2022 11:27	7.97	6/25/2022 16:23	71.54
6/26/2022 15:14	51.56	6/26/2022 13:56	81.96	6/25/2022 12:19	18.37	6/25/2022 11:28	7.91	6/25/2022 16:24	71.52
6/26/2022 15:15	51.55	6/26/2022 13:57	81.92	6/25/2022 12:20	18.32	6/25/2022 11:29	7.88	6/25/2022 16:25	71.44
6/26/2022 15:16	51.57	6/26/2022 13:58	81.92	6/25/2022 12:21	18.38	6/25/2022 11:30	7.94	6/25/2022 16:26	71.40

6/26/2022 15:17	51.57	6/26/2022 13:59	81.94	6/25/2022 12:22	18.38	6/25/2022 11:31	7.90	6/25/2022 16:27	71.38
6/26/2022 15:18	51.53	6/26/2022 14:00	81.96	6/25/2022 12:23	18.37	6/25/2022 11:32	7.83	6/25/2022 16:28	71.31
6/26/2022 15:19	51.52	6/26/2022 14:01	81.95	6/25/2022 12:24	18.39	6/25/2022 11:33	7.85	6/25/2022 16:29	71.23
6/26/2022 15:20	51.53	6/26/2022 14:02	81.92	6/25/2022 12:25	18.33	6/25/2022 11:34	7.89	6/25/2022 16:30	71.23
6/26/2022 15:21	51.53	6/26/2022 14:03	81.94	6/25/2022 12:26	18.36	6/25/2022 11:35	7.85	6/25/2022 16:31	71.14
6/26/2022 15:22	51.49	6/26/2022 14:04	81.92	6/25/2022 12:27	18.40	6/25/2022 11:36	7.80	6/25/2022 16:32	71.12
6/26/2022 15:23	51.50	6/26/2022 14:05	81.93	6/25/2022 12:28	18.33	6/25/2022 11:37	7.79	6/25/2022 16:33	71.06
6/26/2022 15:24	51.48	6/26/2022 14:06	81.94	6/25/2022 12:29	18.37	6/25/2022 11:38	7.84	6/25/2022 16:34	71.03
6/26/2022 15:25	51.50	6/26/2022 14:07	81.92	6/25/2022 12:30	18.36	6/25/2022 11:39	7.83	6/25/2022 16:35	70.97
6/26/2022 15:26	51.49	6/26/2022 14:08	81.94	6/25/2022 12:31	18.34	6/25/2022 11:40	7.81	6/25/2022 16:36	70.94
6/26/2022 15:27	51.46	6/26/2022 14:09	81.91	6/25/2022 12:32	18.35	6/25/2022 11:41	7.76	6/25/2022 16:37	70.92
6/26/2022 15:28	51.45	6/26/2022 14:10	81.92	6/25/2022 12:33	18.31	6/25/2022 11:42	7.78	6/25/2022 16:38	70.86
6/26/2022 15:29	51.46	6/26/2022 14:11	81.92	6/25/2022 12:34	18.32	6/25/2022 11:43	7.76	6/25/2022 16:39	70.83
6/26/2022 15:30	51.45	6/26/2022 14:12	81.92	6/25/2022 12:35	18.35	6/25/2022 11:44	7.81	6/25/2022 16:40	70.76
6/26/2022 15:31	51.45	6/26/2022 14:13	81.89	6/25/2022 12:36	18.35	6/25/2022 11:45	7.73	6/25/2022 16:41	70.73
6/26/2022 15:32	51.45	6/26/2022 14:14	81.93	6/25/2022 12:37	18.32	6/25/2022 11:46	7.73	6/25/2022 16:42	70.71
6/26/2022 15:33	51.41	6/26/2022 14:15	81.91	6/25/2022 12:38	18.33	6/25/2022 11:47	7.72	6/25/2022 16:43	70.64
6/26/2022 15:34	51.42	6/26/2022 14:16	81.97	6/25/2022 12:39	18.29	6/25/2022 11:48	7.74	6/25/2022 16:44	70.63
6/26/2022 15:35	51.42	6/26/2022 14:17	81.95	6/25/2022 12:40	18.31	6/25/2022 11:49	7.92	6/25/2022 16:45	70.58
6/26/2022 15:36	51.43	6/26/2022 14:18	81.89	6/25/2022 12:41	18.28	6/25/2022 11:50	8.10	6/25/2022 16:46	70.52
6/26/2022 15:37	51.43	6/26/2022 14:19	81.90	6/25/2022 12:42	18.31	6/25/2022 11:51	7.93	6/25/2022 16:47	70.47
6/26/2022 15:38	51.43	6/26/2022 14:20	81.92	6/25/2022 12:43	18.30	6/25/2022 11:52	7.85	6/25/2022 16:48	70.45
6/26/2022 15:39	51.44	6/26/2022 14:21	81.94	6/25/2022 12:44	18.31	6/25/2022 11:53	7.79	6/25/2022 16:49	70.41
6/26/2022 15:40	51.43	6/26/2022 14:22	81.96	6/25/2022 12:45	18.26	6/25/2022 11:54	7.68	6/25/2022 16:50	70.40
6/26/2022 15:41	51.39	6/26/2022 14:23	81.91	6/25/2022 12:46	18.22	6/25/2022 11:55	7.78	6/25/2022 16:51	70.37
6/26/2022 15:42	51.39	6/26/2022 14:24	81.96	6/25/2022 12:47	18.29	6/25/2022 11:56	7.93	6/25/2022 16:52	70.32
6/26/2022 15:43	51.39	6/26/2022 14:25	81.96	6/25/2022 12:48	18.26	6/25/2022 11:57	7.86	6/25/2022 16:53	70.28
6/26/2022 15:44	51.38	6/26/2022 14:26	81.92	6/25/2022 12:49	18.22	6/25/2022 11:58	7.74	6/25/2022 16:54	70.25
6/26/2022 15:45	51.37	6/26/2022 14:27	81.93	6/25/2022 12:50	18.24	6/25/2022 11:59	7.73	6/25/2022 16:55	70.19
6/26/2022 15:46	51.40	6/26/2022 14:28	81.94	6/25/2022 12:51	18.24	6/25/2022 12:00	7.75	6/25/2022 16:56	70.17
6/26/2022 15:47	51.41	6/26/2022 14:29	81.91	6/25/2022 12:52	18.24	6/25/2022 12:01	7.65	6/25/2022 16:57	70.14
6/26/2022 15:48	51.41	6/26/2022 14:30	81.94	6/25/2022 12:53	18.21	6/25/2022 12:02	7.66	6/25/2022 16:58	70.10
6/26/2022 15:49	51.43	6/26/2022 14:31	81.93	6/25/2022 12:54	18.25	6/25/2022 12:03	7.67	6/25/2022 16:59	70.04
6/26/2022 15:50	51.41	6/26/2022 14:32	81.95	6/25/2022 12:55	18.24	6/25/2022 12:04	7.65	6/25/2022 17:00	70.03
6/26/2022 15:51	51.40	6/26/2022 14:33	81.90	6/25/2022 12:56	18.21	6/25/2022 12:05	7.67	6/25/2022 17:01	70.02
6/26/2022 15:52	51.37	6/26/2022 14:34	81.94	6/25/2022 12:57	18.19	6/25/2022 12:06	7.58	6/25/2022 17:02	69.96
6/26/2022 15:53	51.37	6/26/2022 14:35	81.92	6/25/2022 12:58	18.20	6/25/2022 12:07	7.54	6/25/2022 17:03	69.96
6/26/2022 15:54	51.39	6/26/2022 14:36	81.92	6/25/2022 12:59	18.21	6/25/2022 12:08	7.61	6/25/2022 17:04	69.92
6/26/2022 15:55	51.40	6/26/2022 14:37	81.93	6/25/2022 13:00	18.21	6/25/2022 12:09	7.59	6/25/2022 17:05	69.90
6/26/2022 15:56	51.37	6/26/2022 14:38	81.91	6/25/2022 13:01	18.17	6/25/2022 12:10	7.54	6/25/2022 17:06	69.85
6/26/2022 15:57	51.39	6/26/2022 14:39	81.91	6/25/2022 13:02	18.19	6/25/2022 12:11	7.52	6/25/2022 17:07	69.84
6/26/2022 15:58	51.35	6/26/2022 14:40	81.88	6/25/2022 13:03	18.18	6/25/2022 12:12	7.52	6/25/2022 17:08	69.75
6/26/2022 15:59	51.37	6/26/2022 14:41	81.91	6/25/2022 13:04	18.07	6/25/2022 12:13	7.55	6/25/2022 17:09	69.76
6/26/2022 16:00	51.37	6/26/2022 14:42	81.95	6/25/2022 13:05	18.16	6/25/2022 12:14	7.47	6/25/2022 17:10	69.76
6/26/2022 16:01	51.36	6/26/2022 14:43	81.93	6/25/2022 13:06	18.09	6/25/2022 12:15	7.48	6/25/2022 17:11	69.71
6/26/2022 16:02	51.34	6/26/2022 14:44	81.95	6/25/2022 13:07	18.11	6/25/2022 12:16	7.45	6/25/2022 17:12	69.67
6/26/2022 16:03	51.34	6/26/2022 14:45	81.88	6/25/2022 13:08	18.14	6/25/2022 12:17	7.50	6/25/2022 17:13	69.67
6/26/2022 16:04	51.33	6/26/2022 14:46	81.90	6/25/2022 13:09	18.14	6/25/2022 12:18	7.48	6/25/2022 17:14	69.62
6/26/2022 16:05	51.35	6/26/2022 14:47	81.96	6/25/2022 13:10	18.07	6/25/2022 12:19	7.42	6/25/2022 17:15	69.56
6/26/2022 16:06	51.35	6/26/2022 14:48	81.96	6/25/2022 13:11	18.06	6/25/2022 12:20	7.40	6/25/2022 17:16	69.59
6/26/2022 16:07	51.36	6/26/2022 14:49	81.92	6/25/2022 13:12	18.09	6/25/2022 12:21	7.48	6/25/2022 17:17	69.55
6/26/2022 16:08	51.36	6/26/2022 14:50	81.93	6/25/2022 13:13	18.09	6/25/2022 12:22	7.54	6/25/2022 17:18	69.53
6/26/2022 16:09	51.33	6/26/2022 14:51	81.93	6/25/2022 13:14	18.06	6/25/2022 12:23	7.47	6/25/2022 17:19	69.48
6/26/2022 16:10	51.36	6/26/2022 14:52	81.91	6/25/2022 13:15	18.09	6/25/2022 12:24	7.45	6/25/2022 17:20	69.47
6/26/2022 16:11	51.32	6/26/2022 14:53	81.89	6/25/2022 13:16	18.04	6/25/2022 12:25	7.47	6/25/2022 17:21	69.42
6/26/2022 16:12	51.34	6/26/2022 14:54	81.90	6/25/2022 13:17	18.08	6/25/2022 12:26	7.41	6/25/2022 17:22	69.42
6/26/2022 16:13	51.36	6/26/2022 14:55	81.89	6/25/2022 13:18	18.10	6/25/2022 12:27	7.34	6/25/2022 17:23	69.37
6/26/2022 16:14	51.34	6/26/2022 14:56	81.92	6/25/2022 13:19	18.06	6/25/2022 12:28	7.33	6/25/2022 17:24	69.38
6/26/2022 16:15	51.29	6/26/2022 14:57	81.92	6/25/2022 13:20	18.05	6/25/2022 12:29	7.34	6/25/2022 17:25	69.35
6/26/2022 16:16	51.35	6/26/2022 14:58	81.93	6/25/2022 13:21	18.08	6/25/2022 12:30	7.38	6/25/2022 17:26	69.34
6/26/2022 16:17	51.34	6/26/2022 14:59	81.92	6/25/2022 13:22	18.07	6/25/2022 12:31	7.27	6/25/2022 17:27	69.31
6/26/2022 16:18	51.31	6/26/2022 15:00	81.91	6/25/2022 13:23	18.07	6/25/2022 12:32	7.26	6/25/2022 17:28	69.27
6/26/2022 16:19	51.35	6/26/2022 15:01	81.95	6/25/2022 13:24	18.09	6/25/2022 12:33	7.24	6/25/2022 17:29	69.25
6/26/2022 16:20	51.31	6/26/2022 15:02	81.87	6/25/2022 13:25	18.06	6/25/2022 12:34	7.37	6/25/2022 17:30	69.20
6/26/2022 16:21	51.30	6/26/2022 15:03	81.94	6/25/2022 13:26	18.13	6/25/2022 12:35	7.50	6/25/2022 17:31	69.19
6/26/2022 16:22	51.33	6/26/2022 15:04	81.91	6/25/2022 13:27	18.12	6/25/2022 12:36	7.37	6/25/2022 17:32	69.16
6/26/2022 16:23	51.30	6/26/2022 15:05	81.91	6/25/2022 13:28	18.14	6/25/2022 12:37	7.34	6/25/2022 17:33	69.18
6/26/2022 16:24	51.33	6/26/2022 15:06	81.91	6/25/2022 13:29	18.10	6/25/2022 12:38	7.28	6/25/2022 17:34	69.15
6/26/2022 16:25	51.27	6/26/2022 15:07	81.94	6/25/2022 13:30	18.08	6/25/2022 12:39	7.31	6/25/2022 17:35	69.10
6/26/2022 16:26	51.30	6/26/2022 15:08	81.89	6/25/2022 13:31	18.16	6/25/2022 12:40	7.24	6/25/2022 17:36	69.11
6/26/2022 16:27	51.33	6/26/2022 15:09	81.93	6/25/2022 13:32	18.19	6/25/2022 12:41	7.20	6/25/2022 17:37	69.06
6/26/2022 16:28	51.32	6/26/2022 15:10	81.89	6/25/2022 13:33	18.16	6/25/2022 12:42	7.27	6/25/2022 17:38	69.03
6/26/2022 16:29	51.27	6/26/2022 15:11	81.94	6/25/2022 13:34	18.17	6/25/2022 12:43	7.29	6/25/2022 17:39	69.04
6/26/2022 16:30	51.32	6/26/2022 15:12	81.97	6/25/2022 13:35	18.18	6/25/2022 12:44	7.20	6/25/2022 17:40	69.02
6/26/2022 16:31	51.32	6/26/2022 15:13	81.91	6/25/2022 13:36	18.27	6/25/2022 12:45	7.23	6/25/2022 17:41	69.02
6/26/2022 16:32	51.32	6/26/2022 15:14	81.91	6/25/2022 13:37	18.22	6/25/2022 12:46	7.19	6/25/2022 17:42	68.99
6/26/2022 16:33	51.27	6/26/2022 15:15	81.91	6/25/2022 13:38	18.24	6/25/2022 12:47	7.68	6/25/2022 17:43	68.93
6/26/2022 16:34	51.30	6/26/2022 15:16	81.93	6/25/2022 13:39	18.21	6/25/2022 12:48	7.54	6/25/2022 17:44	68.93
6/26/2022 16:35	51.31	6/26/2022 15:17	81.93	6/25/2022 13:40	18.22	6/25/2022 12:49	7.36	6/25/2022 17:45	68.89
6/26/2022 16:36	51.31	6/26/2022 15:18	81.93	6/25/2022 13:41	18.24	6/25/2022 12:50	7.32	6/25/2022 17:46	68.91
6/26/2022 16:37	51.26	6/26/2022 15:19	81.92	6/25/2022 13:42	18.22	6/25/2022 12:51	7.26	6/25/2022 17:47	68.83
6/26/2022 16:38	51.30	6/26/2022 15:20	81.94	6/25/2022 13:43	18.23	6/25/2022 12:52	7.23	6/25/2022 17:48	68.85
6/26/2022 16:39	51.28	6/26/2022 15:21	81.89	6/25/2022 13:44	18.26	6/25/2022 12:53	7.23	6/25/2022 17:49	68.79
6/26/2022 16:40	51.32	6/26/2022 15:22	81.93	6/25/2022 13:45	18.25	6/25/2022 12:54	7.25	6/25/2022 17:50	68.78
6/26/2022 16:41	51.25	6/26/2022 15:23	81.92	6/25/2022 13:46	18.28	6/25/2022 12:55	7.20	6/25/2022 17:51	68.78
6/26/2022 16:42	51.31	6/26/2022 15:24	81.94	6/25/2022 13:47	18.27	6/25/2022 12:56	7.21	6/25/2022 17:52	68.78
6/26/2022 16:43	51.29	6/26/2022 15:25	81.93	6/25/2022 13:48	18.25	6/25/2022 12:57	7.18	6/25/2022 17:53	68.74
6/26/2022 16:44	51.32	6/26/2022 15:26	81.90	6/25/2022 13:49	18.26	6/25/2022 12:58	7.10	6/25/2022 17:54	68.73

6/26/2022 16:45	51.28	6/26/2022 15:27	81.91	6/25/2022 13:50	18.28	6/25/2022 12:59	7.16	6/25/2022 17:55	68.71
6/26/2022 16:46	51.30	6/26/2022 15:28	81.97	6/25/2022 13:51	18.26	6/25/2022 13:00	7.14	6/25/2022 17:56	68.72
6/26/2022 16:47	51.25	6/26/2022 15:29	81.93	6/25/2022 13:52	18.26	6/25/2022 13:01	7.13	6/25/2022 17:57	68.68
6/26/2022 16:48	51.27	6/26/2022 15:30	81.90	6/25/2022 13:53	18.24	6/25/2022 13:02	7.21	6/25/2022 17:58	68.67
6/26/2022 16:49	51.29	6/26/2022 15:31	81.91	6/25/2022 13:54	18.30	6/25/2022 13:03	7.36	6/25/2022 17:59	68.63
6/26/2022 16:50	51.26	6/26/2022 15:32	81.93	6/25/2022 13:55	18.27	6/25/2022 13:04	7.41	6/25/2022 18:00	68.66
6/26/2022 16:51	51.28	6/26/2022 15:33	81.92	6/25/2022 13:56	18.31	6/25/2022 13:05	7.32	6/25/2022 18:01	68.64
6/26/2022 16:52	51.32	6/26/2022 15:34	81.93	6/25/2022 13:57	18.27	6/25/2022 13:06	7.43	6/25/2022 18:02	68.60
6/26/2022 16:53	51.28	6/26/2022 15:35	81.90	6/25/2022 13:58	18.25	6/25/2022 13:07	7.47	6/25/2022 18:03	68.57
6/26/2022 16:54	51.24	6/26/2022 15:36	81.91	6/25/2022 13:59	18.28	6/25/2022 13:08	7.52	6/25/2022 18:04	68.55
6/26/2022 16:55	51.24	6/26/2022 15:37	81.93	6/25/2022 14:00	18.31	6/25/2022 13:09	7.48	6/25/2022 18:05	68.55
6/26/2022 16:56	51.26	6/26/2022 15:38	81.92	6/25/2022 14:01	18.24	6/25/2022 13:10	7.54	6/25/2022 18:06	68.53
6/26/2022 16:57	51.28	6/26/2022 15:39	81.93	6/25/2022 14:02	18.25	6/25/2022 13:11	7.36	6/25/2022 18:07	68.52
6/26/2022 16:58	51.29	6/26/2022 15:40	81.97	6/25/2022 14:03	18.29	6/25/2022 13:12	7.32	6/25/2022 18:08	68.51
6/26/2022 16:59	51.27	6/26/2022 15:41	81.94	6/25/2022 14:04	18.26	6/25/2022 13:13	7.33	6/25/2022 18:09	68.49
6/26/2022 17:00	51.30	6/26/2022 15:42	81.95	6/25/2022 14:05	18.33	6/25/2022 13:14	7.27	6/25/2022 18:10	68.51
6/26/2022 17:01	51.28	6/26/2022 15:43	81.94	6/25/2022 14:06	18.32	6/25/2022 13:15	7.23	6/25/2022 18:11	68.42
6/26/2022 17:02	51.24	6/26/2022 15:44	81.92	6/25/2022 14:07	18.30	6/25/2022 13:16	7.22	6/25/2022 18:12	68.40
6/26/2022 17:03	51.30	6/26/2022 15:45	81.89	6/25/2022 14:08	18.27	6/25/2022 13:17	7.59	6/25/2022 18:13	68.43
6/26/2022 17:04	51.25	6/26/2022 15:46	81.87	6/25/2022 14:09	18.23	6/25/2022 13:18	7.29	6/25/2022 18:14	68.40
6/26/2022 17:05	51.26	6/26/2022 15:47	81.95	6/25/2022 14:10	18.24	6/25/2022 13:19	7.27	6/25/2022 18:15	73.93
6/26/2022 17:06	51.27	6/26/2022 15:48	81.90	6/25/2022 14:11	18.22	6/25/2022 13:20	7.18	6/25/2022 18:16	73.76
6/26/2022 17:07	51.26	6/26/2022 15:49	81.93	6/25/2022 14:12	18.22	6/25/2022 13:21	7.17	6/25/2022 18:17	73.61
6/26/2022 17:08	51.24	6/26/2022 15:50	81.93	6/25/2022 14:13	18.26	6/25/2022 13:22	7.23	6/25/2022 18:18	73.50
6/26/2022 17:09	51.24	6/26/2022 15:51	81.95	6/25/2022 14:14	18.22	6/25/2022 13:23	7.14	6/25/2022 18:19	73.40
6/26/2022 17:10	51.27	6/26/2022 15:52	81.91	6/25/2022 14:15	18.24	6/25/2022 13:24	7.18	6/25/2022 18:20	75.96
6/26/2022 17:11	51.27	6/26/2022 15:53	81.90	6/25/2022 14:16	18.25	6/25/2022 13:25	7.16	6/25/2022 18:21	78.25
6/26/2022 17:12	51.28	6/26/2022 15:54	81.94	6/25/2022 14:17	18.20	6/25/2022 13:26	7.11	6/25/2022 18:22	78.06
6/26/2022 17:13	51.25	6/26/2022 15:55	81.93	6/25/2022 14:18	18.24	6/25/2022 13:27	7.06	6/25/2022 18:23	77.85
6/26/2022 17:14	51.22	6/26/2022 15:56	81.91	6/25/2022 14:19	18.23	6/25/2022 13:28	7.10	6/25/2022 18:24	77.76
6/26/2022 17:15	51.25	6/26/2022 15:57	81.89	6/25/2022 14:20	18.19	6/25/2022 13:29	7.01	6/25/2022 18:25	77.58
6/26/2022 17:16	51.28	6/26/2022 15:58	81.91	6/25/2022 14:21	18.24	6/25/2022 13:30	7.09	6/25/2022 18:26	77.45
6/26/2022 17:17	51.27	6/26/2022 15:59	81.90	6/25/2022 14:22	18.17	6/25/2022 13:31	6.99	6/25/2022 18:27	77.26
6/26/2022 17:18	51.27	6/26/2022 16:00	81.91	6/25/2022 14:23	18.21	6/25/2022 13:32	7.04	6/25/2022 18:28	77.21
6/26/2022 17:19	51.31	6/26/2022 16:01	81.92	6/25/2022 14:24	18.18	6/25/2022 13:33	7.00	6/25/2022 18:29	77.07
6/26/2022 17:20	51.19	6/26/2022 16:02	81.90	6/25/2022 14:25	18.19	6/25/2022 13:34	7.02	6/25/2022 18:30	76.99
6/26/2022 17:21	51.21	6/26/2022 16:03	81.93	6/25/2022 14:26	18.19	6/25/2022 13:35	6.98	6/25/2022 18:31	76.85
6/26/2022 17:22	51.23	6/26/2022 16:04	81.94	6/25/2022 14:27	18.12	6/25/2022 13:36	7.03	6/25/2022 18:32	76.75
6/26/2022 17:23	51.25	6/26/2022 16:05	81.91	6/25/2022 14:28	18.17	6/25/2022 13:37	6.96	6/25/2022 18:33	76.66
6/26/2022 17:24	51.26	6/26/2022 16:06	81.90	6/25/2022 14:29	18.18	6/25/2022 13:38	6.92	6/25/2022 18:34	76.53
6/26/2022 17:25	51.23	6/26/2022 16:07	81.91	6/25/2022 14:30	18.16	6/25/2022 13:39	7.37	6/25/2022 18:35	76.41
6/26/2022 17:26	51.25	6/26/2022 16:08	81.91	6/25/2022 14:31	18.13	6/25/2022 13:40	7.20	6/25/2022 18:36	76.32
6/26/2022 17:27	51.27	6/26/2022 16:09	81.88	6/25/2022 14:32	18.10	6/25/2022 13:41	7.12	6/25/2022 18:37	76.22
6/26/2022 17:28	51.24	6/26/2022 16:10	81.92	6/25/2022 14:33	18.11	6/25/2022 13:42	7.46	6/25/2022 18:38	76.09
6/26/2022 17:29	51.23	6/26/2022 16:11	81.91	6/25/2022 14:34	18.14	6/25/2022 13:43	7.28	6/25/2022 18:39	75.98
6/26/2022 17:30	51.24	6/26/2022 16:12	81.95	6/25/2022 14:35	18.13	6/25/2022 13:44	7.13	6/25/2022 18:40	75.90
6/26/2022 17:31	51.24	6/26/2022 16:13	81.94	6/25/2022 14:36	18.09	6/25/2022 13:45	7.03	6/25/2022 18:41	75.77
6/26/2022 17:32	51.22	6/26/2022 16:14	81.91	6/25/2022 14:37	18.07	6/25/2022 13:46	7.01	6/25/2022 18:42	75.69
6/26/2022 17:33	51.21	6/26/2022 16:15	81.96	6/25/2022 14:38	18.08	6/25/2022 13:47	7.00	6/25/2022 18:43	75.58
6/26/2022 17:34	51.26	6/26/2022 16:16	81.97	6/25/2022 14:39	18.11	6/25/2022 13:48	7.06	6/25/2022 18:44	75.48
6/26/2022 17:35	51.25	6/26/2022 16:17	81.95	6/25/2022 14:40	18.10	6/25/2022 13:49	6.99	6/25/2022 18:45	75.41
6/26/2022 17:36	51.24	6/26/2022 16:18	81.91	6/25/2022 14:41	18.12	6/25/2022 13:50	6.95	6/25/2022 18:46	75.32
6/26/2022 17:37	51.22	6/26/2022 16:19	81.95	6/25/2022 14:42	18.08	6/25/2022 13:51	6.92	6/25/2022 18:47	75.18
6/26/2022 17:38	51.27	6/26/2022 16:20	81.92	6/25/2022 14:43	18.09	6/25/2022 13:52	6.95	6/25/2022 18:48	75.13
6/26/2022 17:39	51.21	6/26/2022 16:21	81.93	6/25/2022 14:44	18.04	6/25/2022 13:53	6.87	6/25/2022 18:49	75.00
6/26/2022 17:40	51.25	6/26/2022 16:22	81.91	6/25/2022 14:45	18.06	6/25/2022 13:54	6.92	6/25/2022 18:50	74.96
6/26/2022 17:41	51.19	6/26/2022 16:23	81.91	6/25/2022 14:46	18.06	6/25/2022 13:55	6.89	6/25/2022 18:51	74.82
6/26/2022 17:42	51.23	6/26/2022 16:24	81.93	6/25/2022 14:47	18.02	6/25/2022 13:56	6.86	6/25/2022 18:52	74.76
6/26/2022 17:43	51.23	6/26/2022 16:25	81.91	6/25/2022 14:48	18.04	6/25/2022 13:57	6.81	6/25/2022 18:53	74.67
6/26/2022 17:44	51.26	6/26/2022 16:26	81.92	6/25/2022 14:49	18.02	6/25/2022 13:58	6.84	6/25/2022 18:54	74.58
6/26/2022 17:45	51.21	6/26/2022 16:27	81.95	6/25/2022 14:50	18.04	6/25/2022 13:59	6.84	6/25/2022 18:55	74.50
6/26/2022 17:46	53.28	6/26/2022 16:28	81.94	6/25/2022 14:51	18.00	6/25/2022 14:00	7.08	6/25/2022 18:56	75.68
6/26/2022 17:47	55.09	6/26/2022 16:29	81.96	6/25/2022 14:52	17.99	6/25/2022 14:01	7.02	6/25/2022 18:57	81.21
6/26/2022 17:48	55.94	6/26/2022 16:30	81.94	6/25/2022 14:53	18.02	6/25/2022 14:02	7.10	6/25/2022 18:58	80.96
6/26/2022 17:49	56.46	6/26/2022 16:31	81.91	6/25/2022 14:54	18.01	6/25/2022 14:03	7.15	6/25/2022 18:59	80.81
6/26/2022 17:50	56.50	6/26/2022 16:32	81.89	6/25/2022 14:55	17.94	6/25/2022 14:04	7.17	6/25/2022 19:00	80.58
6/26/2022 17:51	54.15	6/26/2022 16:33	81.95	6/25/2022 14:56	18.01	6/25/2022 14:05	7.21	6/25/2022 19:01	80.43
6/26/2022 17:52	53.29	6/26/2022 16:34	81.92	6/25/2022 14:57	18.00	6/25/2022 14:06	7.18	6/25/2022 19:02	80.27
6/26/2022 17:53	52.90	6/26/2022 16:35	81.88	6/25/2022 14:58	17.93	6/25/2022 14:07	6.98	6/25/2022 19:03	80.13
6/26/2022 17:54	52.63	6/26/2022 16:36	81.93	6/25/2022 14:59	17.98	6/25/2022 14:08	7.02	6/25/2022 19:04	79.98
6/26/2022 17:55	52.46	6/26/2022 16:37	81.97	6/25/2022 15:00	17.92	6/25/2022 14:09	6.88	6/25/2022 19:05	79.81
6/26/2022 17:56	52.36	6/26/2022 16:38	81.97	6/25/2022 15:01	17.98	6/25/2022 14:10	6.85	6/25/2022 19:06	79.65
6/26/2022 17:57	52.26	6/26/2022 16:39	81.95	6/25/2022 15:02	18.02	6/25/2022 14:11	6.90	6/25/2022 19:07	79.49
6/26/2022 17:58	52.22	6/26/2022 16:40	81.97	6/25/2022 15:03	17.96	6/25/2022 14:12	6.81	6/25/2022 19:08	79.38
6/26/2022 17:59	52.18	6/26/2022 16:41	81.96	6/25/2022 15:04	17.93	6/25/2022 14:13	6.93	6/25/2022 19:09	79.23
6/26/2022 18:00	52.15	6/26/2022 16:42	81.95	6/25/2022 15:05	17.97	6/25/2022 14:14	7.01	6/25/2022 19:10	79.13
6/26/2022 18:01	52.06	6/26/2022 16:43	81.95	6/25/2022 15:06	17.99	6/25/2022 14:15	6.89	6/25/2022 19:11	78.97
6/26/2022 18:02	52.04	6/26/2022 16:44	81.97	6/25/2022 15:07	17.97	6/25/2022 14:16	6.89	6/25/2022 19:12	78.89
6/26/2022 18:03	52.01	6/26/2022 16:45	81.95	6/25/2022 15:08	17.92	6/25/2022 14:17	6.79	6/25/2022 19:13	78.79
6/26/2022 18:04	51.96	6/26/2022 16:46	81.93	6/25/2022 15:09	18.01	6/25/2022 14:18	6.78	6/25/2022 19:14	78.72
6/26/2022 18:05	51.91	6/26/2022 16:47	81.96	6/25/2022 15:10	17.96	6/25/2022 14:19	6.73	6/25/2022 19:15	78.56
6/26/2022 18:06	51.93	6/26/2022 16:48	81.93	6/25/2022 15:11	17.97	6/25/2022 14:20	6.67	6/25/2022 19:16	78.48
6/26/2022 18:07	51.87	6/26/2022 16:49	81.95	6/25/2022 15:12	18.01	6/25/2022 14:21	6.72	6/25/2022 19:17	78.37
6/26/2022 18:08	51.84	6/26/2022 16:50	81.90	6/25/2022 15:13	17.97	6/25/2022 14:22	6.71	6/25/2022 19:18	78.23
6/26/2022 18:09	51.87	6/26/2022 16:51	81.93	6/25/2022 15:14	18.05	6/25/2022 14:23	6.79	6/25/2022 19:19	78.13
6/26/2022 18:10	51.85	6/26/2022 16:52	81.96	6/25/2022 15:15	18.02	6/25/2022 14:24	6.66	6/25/2022 19:20	78.05
6/26/2022 18:11	51.80	6/26/2022 16:53	81.95	6/25/2022 15:16	18.02	6/25/2022 14:25	6.70	6/25/2022 19:21	77.89
6/26/2022 18:12	51.80	6/26/2022 16:54	81.94	6/25/2022 15:17	18.01	6/25/2022 14:26	6.71	6/25/2022 19:22	77.82

6/26/2022 18:13	51.78	6/26/2022 16:55	81.92	6/25/2022 15:18	18.02	6/25/2022 14:27	6.65	6/25/2022 19:23	77.66
6/26/2022 18:14	51.82	6/26/2022 16:56	81.91	6/25/2022 15:19	18.01	6/25/2022 14:28	6.67	6/25/2022 19:24	77.59
6/26/2022 18:15	51.76	6/26/2022 16:57	81.94	6/25/2022 15:20	18.02	6/25/2022 14:29	6.66	6/25/2022 19:25	77.47
6/26/2022 18:16	51.75	6/26/2022 16:58	81.94	6/25/2022 15:21	18.01	6/25/2022 14:30	6.68	6/25/2022 19:26	77.40
6/26/2022 18:17	51.74	6/26/2022 16:59	81.92	6/25/2022 15:22	18.08	6/25/2022 14:31	6.58	6/25/2022 19:27	77.23
6/26/2022 18:18	51.74	6/26/2022 17:00	81.92	6/25/2022 15:23	18.08	6/25/2022 14:32	6.61	6/25/2022 19:28	77.12
6/26/2022 18:19	51.72	6/26/2022 17:01	81.94	6/25/2022 15:24	18.14	6/25/2022 14:33	6.59	6/25/2022 19:29	77.09
6/26/2022 18:20	51.70	6/26/2022 17:02	81.94	6/25/2022 15:25	18.09	6/25/2022 14:34	6.60	6/25/2022 19:30	76.95
6/26/2022 18:21	51.70	6/26/2022 17:03	81.92	6/25/2022 15:26	18.03	6/25/2022 14:35	6.89	6/25/2022 19:31	76.87
6/26/2022 18:22	51.67	6/26/2022 17:04	81.94	6/25/2022 15:27	18.08	6/25/2022 14:36	6.97	6/25/2022 19:32	76.77
6/26/2022 18:23	51.73	6/26/2022 17:05	81.96	6/25/2022 15:28	18.08	6/25/2022 14:37	6.78	6/25/2022 19:33	76.69
6/26/2022 18:24	51.67	6/26/2022 17:06	81.95	6/25/2022 15:29	18.07	6/25/2022 14:38	6.72	6/25/2022 19:34	76.64
6/26/2022 18:25	51.70	6/26/2022 17:07	82.00	6/25/2022 15:30	18.13	6/25/2022 14:39	6.98	6/25/2022 19:35	76.48
6/26/2022 18:26	51.66	6/26/2022 17:08	81.95	6/25/2022 15:31	18.10	6/25/2022 14:40	6.82	6/25/2022 19:36	76.42
6/26/2022 18:27	51.62	6/26/2022 17:09	81.98	6/25/2022 15:32	18.12	6/25/2022 14:41	6.75	6/25/2022 19:37	76.35
6/26/2022 18:28	51.68	6/26/2022 17:10	81.97	6/25/2022 15:33	18.09	6/25/2022 14:42	6.68	6/25/2022 19:38	76.21
6/26/2022 18:29	51.62	6/26/2022 17:11	81.93	6/25/2022 15:34	18.11	6/25/2022 14:43	6.65	6/25/2022 19:39	76.10
6/26/2022 18:30	51.59	6/26/2022 17:12	81.95	6/25/2022 15:35	18.13	6/25/2022 14:44	6.63	6/25/2022 19:40	76.02
6/26/2022 18:31	51.62	6/26/2022 17:13	81.89	6/25/2022 15:36	18.11	6/25/2022 14:45	6.58	6/25/2022 19:41	75.95
6/26/2022 18:32	51.61	6/26/2022 17:14	81.89	6/25/2022 15:37	18.11	6/25/2022 14:46	6.63	6/25/2022 19:42	75.88
6/26/2022 18:33	51.60	6/26/2022 17:15	81.93	6/25/2022 15:38	18.14	6/25/2022 14:47	6.57	6/25/2022 19:43	75.75
6/26/2022 18:34	51.63	6/26/2022 17:16	81.94	6/25/2022 15:39	18.08	6/25/2022 14:48	6.52	6/25/2022 19:44	75.71
6/26/2022 18:35	51.62	6/26/2022 17:17	81.90	6/25/2022 15:40	18.14	6/25/2022 14:49	6.56	6/25/2022 19:45	75.58
6/26/2022 18:36	51.61	6/26/2022 17:18	81.90	6/25/2022 15:41	18.10	6/25/2022 14:50	6.85	6/25/2022 19:46	75.50
6/26/2022 18:37	51.59	6/26/2022 17:19	81.91	6/25/2022 15:42	18.08	6/25/2022 14:51	6.97	6/25/2022 19:47	75.39
6/26/2022 18:38	51.55	6/26/2022 17:20	81.94	6/25/2022 15:43	18.09	6/25/2022 14:52	6.79	6/25/2022 19:48	75.29
6/26/2022 18:39	51.55	6/26/2022 17:21	81.92	6/25/2022 15:44	18.08	6/25/2022 14:53	6.86	6/25/2022 19:49	75.20
6/26/2022 18:40	51.57	6/26/2022 17:22	81.91	6/25/2022 15:45	18.11	6/25/2022 14:54	6.85	6/25/2022 19:50	75.14
6/26/2022 18:41	51.56	6/26/2022 17:23	81.89	6/25/2022 15:46	18.09	6/25/2022 14:55	6.92	6/25/2022 19:51	75.06
6/26/2022 18:42	51.55	6/26/2022 17:24	81.93	6/25/2022 15:47	18.06	6/25/2022 14:56	6.76	6/25/2022 19:52	74.97
6/26/2022 18:43	51.58	6/26/2022 17:25	81.94	6/25/2022 15:48	18.05	6/25/2022 14:57	6.67	6/25/2022 19:53	74.88
6/26/2022 18:44	51.55	6/26/2022 17:26	81.90	6/25/2022 15:49	18.05	6/25/2022 14:58	6.63	6/25/2022 19:54	74.80
6/26/2022 18:45	51.55	6/26/2022 17:27	81.92	6/25/2022 15:50	18.09	6/25/2022 14:59	6.62	6/25/2022 19:55	74.72
6/26/2022 18:46	51.54	6/26/2022 17:28	81.90	6/25/2022 15:51	18.06	6/25/2022 15:00	6.57	6/25/2022 19:56	74.61
6/26/2022 18:47	51.54	6/26/2022 17:29	81.90	6/25/2022 15:52	18.04	6/25/2022 15:01	6.53	6/25/2022 19:57	81.19
6/26/2022 18:48	51.55	6/26/2022 17:30	81.89	6/25/2022 15:53	18.07	6/25/2022 15:02	6.59	6/25/2022 19:58	82.54
6/26/2022 18:49	51.53	6/26/2022 17:31	81.92	6/25/2022 15:54	18.05	6/25/2022 15:03	6.54	6/25/2022 19:59	82.30
6/26/2022 18:50	51.56	6/26/2022 17:32	81.92	6/25/2022 15:55	18.06	6/25/2022 15:04	6.49	6/25/2022 20:00	89.26
6/26/2022 18:51	51.54	6/26/2022 17:33	81.91	6/25/2022 15:56	18.06	6/25/2022 15:05	6.48	6/25/2022 20:01	90.18
6/26/2022 18:52	51.51	6/26/2022 17:34	81.90	6/25/2022 15:57	18.08	6/25/2022 15:06	6.49	6/25/2022 20:02	89.85
6/26/2022 18:53	51.55	6/26/2022 17:35	81.93	6/25/2022 15:58	18.04	6/25/2022 15:07	6.45	6/25/2022 20:03	96.28
6/26/2022 18:54	51.53	6/26/2022 17:36	81.95	6/25/2022 15:59	18.00	6/25/2022 15:08	6.50	6/25/2022 20:04	97.19
6/26/2022 18:55	51.52	6/26/2022 17:37	81.91	6/25/2022 16:00	17.99	6/25/2022 15:09	6.41	6/25/2022 20:05	96.75
6/26/2022 18:56	51.51	6/26/2022 17:38	81.90	6/25/2022 16:01	18.00	6/25/2022 15:10	6.44	6/25/2022 20:06	103.24
6/26/2022 18:57	51.49	6/26/2022 17:39	81.90	6/25/2022 16:02	18.02	6/25/2022 15:11	6.39	6/25/2022 20:07	104.33
6/26/2022 18:58	51.52	6/26/2022 17:40	81.93	6/25/2022 16:03	18.03	6/25/2022 15:12	6.36	6/25/2022 20:08	103.81
6/26/2022 18:59	51.54	6/26/2022 17:41	81.90	6/25/2022 16:04	18.03	6/25/2022 15:13	6.43	6/25/2022 20:09	109.78
6/26/2022 19:00	51.52	6/26/2022 17:42	81.91	6/25/2022 16:05	18.02	6/25/2022 15:14	6.40	6/25/2022 20:10	111.42
6/26/2022 19:01	51.50	6/26/2022 17:43	81.89	6/25/2022 16:06	18.04	6/25/2022 15:15	6.38	6/25/2022 20:11	110.75
6/26/2022 19:02	51.48	6/26/2022 17:44	81.96	6/25/2022 16:07	17.95	6/25/2022 15:16	6.37	6/25/2022 20:12	116.14
6/26/2022 19:03	51.50	6/26/2022 17:45	81.88	6/25/2022 16:08	17.96	6/25/2022 15:17	6.31	6/25/2022 20:13	119.20
6/26/2022 19:04	51.51	6/26/2022 17:46	81.90	6/25/2022 16:09	17.97	6/25/2022 15:18	6.37	6/25/2022 20:14	118.44
6/26/2022 19:05	51.50	6/26/2022 17:47	81.89	6/25/2022 16:10	17.92	6/25/2022 15:19	6.34	6/25/2022 20:15	117.72
6/26/2022 19:06	51.51	6/26/2022 17:48	81.93	6/25/2022 16:11	17.94	6/25/2022 15:20	6.34	6/25/2022 20:16	117.04
6/26/2022 19:07	51.53	6/26/2022 17:49	81.95	6/25/2022 16:12	17.95	6/25/2022 15:21	6.27	6/25/2022 20:17	116.42
6/26/2022 19:08	51.50	6/26/2022 17:50	81.92	6/25/2022 16:13	17.93	6/25/2022 15:22	6.33	6/25/2022 20:18	115.79
6/26/2022 19:09	51.44	6/26/2022 17:51	81.94	6/25/2022 16:14	17.95	6/25/2022 15:23	6.33	6/25/2022 20:19	115.22
6/26/2022 19:10	51.48	6/26/2022 17:52	81.91	6/25/2022 16:15	17.92	6/25/2022 15:24	6.28	6/25/2022 20:20	114.62
6/26/2022 19:11	51.49	6/26/2022 17:53	81.92	6/25/2022 16:16	17.95	6/25/2022 15:25	6.26	6/25/2022 20:21	114.10
6/26/2022 19:12	51.47	6/26/2022 17:54	81.94	6/25/2022 16:17	17.92	6/25/2022 15:26	6.29	6/25/2022 20:22	113.51
6/26/2022 19:13	51.49	6/26/2022 17:55	81.91	6/25/2022 16:18	17.93	6/25/2022 15:27	6.29	6/25/2022 20:23	112.95
6/26/2022 19:14	51.47	6/26/2022 17:56	81.93	6/25/2022 16:19	17.87	6/25/2022 15:28	6.19	6/25/2022 20:24	112.38
6/26/2022 19:15	51.46	6/26/2022 17:57	81.96	6/25/2022 16:20	17.90	6/25/2022 15:29	6.24	6/25/2022 20:25	111.89
6/26/2022 19:16	51.46	6/26/2022 17:58	81.99	6/25/2022 16:21	17.86	6/25/2022 15:30	6.22	6/25/2022 20:26	111.38
6/26/2022 19:17	51.46	6/26/2022 17:59	81.93	6/25/2022 16:22	17.88	6/25/2022 15:31	6.28	6/25/2022 20:27	110.86
6/26/2022 19:18	51.46	6/26/2022 18:00	81.93	6/25/2022 16:23	17.91	6/25/2022 15:32	6.21	6/25/2022 20:28	110.35
6/26/2022 19:19	51.48	6/26/2022 18:01	81.92	6/25/2022 16:24	17.90	6/25/2022 15:33	6.17	6/25/2022 20:29	109.89
6/26/2022 19:20	51.44	6/26/2022 18:02	81.94	6/25/2022 16:25	17.87	6/25/2022 15:34	6.23	6/25/2022 20:30	109.38
6/26/2022 19:21	51.47	6/26/2022 18:03	81.91	6/25/2022 16:26	17.91	6/25/2022 15:35	6.23	6/25/2022 20:31	108.92
6/26/2022 19:22	51.44	6/26/2022 18:04	81.90	6/25/2022 16:27	17.88	6/25/2022 15:36	6.12	6/25/2022 20:32	108.45
6/26/2022 19:23	51.43	6/26/2022 18:05	81.98	6/25/2022 16:28	17.89	6/25/2022 15:37	6.15	6/25/2022 20:33	107.99
6/26/2022 19:24	51.46	6/26/2022 18:06	81.91	6/25/2022 16:29	17.87	6/25/2022 15:38	6.19	6/25/2022 20:34	107.54
6/26/2022 19:25	51.42	6/26/2022 18:07	81.91	6/25/2022 16:30	17.84	6/25/2022 15:39	6.21	6/25/2022 20:35	107.09
6/26/2022 19:26	51.44	6/26/2022 18:08	81.90	6/25/2022 16:31	17.86	6/25/2022 15:40	6.14	6/25/2022 20:36	106.65
6/26/2022 19:27	51.41	6/26/2022 18:09	81.92	6/25/2022 16:32	17.85	6/25/2022 15:41	6.12	6/25/2022 20:37	106.26
6/26/2022 19:28	51.43	6/26/2022 18:10	81.93	6/25/2022 16:33	17.87	6/25/2022 15:42	6.16	6/25/2022 20:38	105.81
6/26/2022 19:29	51.44	6/26/2022 18:11	81.92	6/25/2022 16:34	17.86	6/25/2022 15:43	6.17	6/25/2022 20:39	105.39
6/26/2022 19:30	51.45	6/26/2022 18:12	81.94	6/25/2022 16:35	17.82	6/25/2022 15:44	6.09	6/25/2022 20:40	104.96
6/26/2022 19:31	51.43	6/26/2022 18:13	81.93	6/25/2022 16:36	17.84	6/25/2022 15:45	6.20	6/25/2022 20:41	104.56
6/26/2022 19:32	51.42	6/26/2022 18:14	81.94	6/25/2022 16:37	17.75	6/25/2022 15:46	6.37	6/25/2022 20:42	104.24
6/26/2022 19:33	51.42	6/26/2022 18:15	81.97	6/25/2022 16:38	17.82	6/25/2022 15:47	6.63	6/25/2022 20:43	103.85
6/26/2022 19:34	51.37	6/26/2022 18:16	81.94	6/25/2022 16:39	17.84	6/25/2022 15:48	6.35	6/25/2022 20:44	103.46
6/26/2022 19:35	51.42	6/26/2022 18:17	82.00	6/25/2022 16:40	17.79	6/25/2022 15:49	6.23	6/25/2022 20:45	103.06
6/26/2022 19:36	51.42	6/26/2022 18:18	81.95	6/25/2022 16:41	17.74	6/25/2022 15:50	6.47	6/25/2022 20:46	102.68
6/26/2022 19:37	51.41	6/26/2022 18:19	81.95	6/25/2022 16:42	17.79	6/25/2022 15:51	6.34	6/25/2022 20:47	102.30
6/26/2022 19:38	51.41	6/26/2022 18:20	81.92	6/25/2022 16:43	17.81	6/25/2022 15:52	6.25	6/25/2022 20:48	101.91
6/26/2022 19:39	51.44	6/26/2022 18:21	81.96	6/25/2022 16:44	17.78	6/25/2022 15:53	6.24	6/25/2022 20:49	101.55
6/26/2022 19:40	51.43	6/26/2022 18:22	81.94	6/25/2022 16:45	17.67	6/25/2022 15:54	6.61	6/25/2022 20:50	101.20

6/26/2022 19:41	51.41	6/26/2022 18:23	81.99	6/25/2022 16:46	17.80	6/25/2022 15:55	6.35	6/25/2022 20:51	100.84
6/26/2022 19:42	51.39	6/26/2022 18:24	81.96	6/25/2022 16:47	17.74	6/25/2022 15:56	6.28	6/25/2022 20:52	100.46
6/26/2022 19:43	51.39	6/26/2022 18:25	81.95	6/25/2022 16:48	17.79	6/25/2022 15:57	6.26	6/25/2022 20:53	100.15
6/26/2022 19:44	51.40	6/26/2022 18:26	81.93	6/25/2022 16:49	17.78	6/25/2022 15:58	6.24	6/25/2022 20:54	99.80
6/26/2022 19:45	51.42	6/26/2022 18:27	81.97	6/25/2022 16:50	17.71	6/25/2022 15:59	6.16	6/25/2022 20:55	99.46
6/26/2022 19:46	51.40	6/26/2022 18:28	81.90	6/25/2022 16:51	17.71	6/25/2022 16:00	6.20	6/25/2022 20:56	99.15
6/26/2022 19:47	51.40	6/26/2022 18:29	81.96	6/25/2022 16:52	17.76	6/25/2022 16:01	6.37	6/25/2022 20:57	98.83
6/26/2022 19:48	51.42	6/26/2022 18:30	81.96	6/25/2022 16:53	17.70	6/25/2022 16:02	6.57	6/25/2022 20:58	98.52
6/26/2022 19:49	51.39	6/26/2022 18:31	81.94	6/25/2022 16:54	17.73	6/25/2022 16:03	6.43	6/25/2022 20:59	98.14
6/26/2022 19:50	51.37	6/26/2022 18:32	81.91	6/25/2022 16:55	17.76	6/25/2022 16:04	6.38	6/25/2022 21:00	97.88
6/26/2022 19:51	51.41	6/26/2022 18:33	81.94	6/25/2022 16:56	17.75	6/25/2022 16:05	6.48	6/25/2022 21:01	97.54
6/26/2022 19:52	51.37	6/26/2022 18:34	81.92	6/25/2022 16:57	17.68	6/25/2022 16:06	6.55	6/25/2022 21:02	97.25
6/26/2022 19:53	51.42	6/26/2022 18:35	81.93	6/25/2022 16:58	17.69	6/25/2022 16:07	6.38	6/25/2022 21:03	96.90
6/26/2022 19:54	51.38	6/26/2022 18:36	81.95	6/25/2022 16:59	17.65	6/25/2022 16:08	6.32	6/25/2022 21:04	96.61
6/26/2022 19:55	51.41	6/26/2022 18:37	81.94	6/25/2022 17:00	17.64	6/25/2022 16:09	6.28	6/25/2022 21:05	96.30
6/26/2022 19:56	51.41	6/26/2022 18:38	81.94	6/25/2022 17:01	17.68	6/25/2022 16:10	6.21	6/25/2022 21:06	96.01
6/26/2022 19:57	51.41	6/26/2022 18:39	81.94	6/25/2022 17:02	17.70	6/25/2022 16:11	6.21	6/25/2022 21:07	95.74
6/26/2022 19:58	51.42	6/26/2022 18:40	81.94	6/25/2022 17:03	17.71	6/25/2022 16:12	6.22	6/25/2022 21:08	95.49
6/26/2022 19:59	51.38	6/26/2022 18:41	81.96	6/25/2022 17:04	17.63	6/25/2022 16:13	6.36	6/25/2022 21:09	95.15
6/26/2022 20:00	51.40	6/26/2022 18:42	81.92	6/25/2022 17:05	17.69	6/25/2022 16:14	6.44	6/25/2022 21:10	94.92
6/26/2022 20:01	51.37	6/26/2022 18:43	81.95	6/25/2022 17:06	17.64	6/25/2022 16:15	6.38	6/25/2022 21:11	94.62
6/26/2022 20:02	51.37	6/26/2022 18:44	81.92	6/25/2022 17:07	17.66	6/25/2022 16:16	6.28	6/25/2022 21:12	94.38
6/26/2022 20:03	51.37	6/26/2022 18:45	81.95	6/25/2022 17:08	17.64	6/25/2022 16:17	6.23	6/25/2022 21:13	94.16
6/26/2022 20:04	51.35	6/26/2022 18:46	81.97	6/25/2022 17:09	17.66	6/25/2022 16:18	6.21	6/25/2022 21:14	93.87
6/26/2022 20:05	51.42	6/26/2022 18:47	81.90	6/25/2022 17:10	17.65	6/25/2022 16:19	6.11	6/25/2022 21:15	93.68
6/26/2022 20:06	51.37	6/26/2022 18:48	81.96	6/25/2022 17:11	17.61	6/25/2022 16:20	6.19	6/25/2022 21:16	93.44
6/26/2022 20:07	51.40	6/26/2022 18:49	81.95	6/25/2022 17:12	17.65	6/25/2022 16:21	6.09	6/25/2022 21:17	93.19
6/26/2022 20:08	51.39	6/26/2022 18:50	81.97	6/25/2022 17:13	17.67	6/25/2022 16:22	6.15	6/25/2022 21:18	92.95
6/26/2022 20:09	51.35	6/26/2022 18:51	81.95	6/25/2022 17:14	17.64	6/25/2022 16:23	6.07	6/25/2022 21:19	92.70
6/26/2022 20:10	51.36	6/26/2022 18:52	81.91	6/25/2022 17:15	17.63	6/25/2022 16:24	6.13	6/25/2022 21:20	92.41
6/26/2022 20:11	51.38	6/26/2022 18:53	82.01	6/25/2022 17:16	17.68	6/25/2022 16:25	6.09	6/25/2022 21:21	92.18
6/26/2022 20:12	51.38	6/26/2022 18:54	81.97	6/25/2022 17:17	17.58	6/25/2022 16:26	6.06	6/25/2022 21:22	91.90
6/26/2022 20:13	51.34	6/26/2022 18:55	81.92	6/25/2022 17:18	17.61	6/25/2022 16:27	6.10	6/25/2022 21:23	91.72
6/26/2022 20:14	51.35	6/26/2022 18:56	81.94	6/25/2022 17:19	17.65	6/25/2022 16:28	6.09	6/25/2022 21:24	91.51
6/26/2022 20:15	51.38	6/26/2022 18:57	81.97	6/25/2022 17:20	17.59	6/25/2022 16:29	6.10	6/25/2022 21:25	91.29
6/26/2022 20:16	51.35	6/26/2022 18:58	81.94	6/25/2022 17:21	17.65	6/25/2022 16:30	6.02	6/25/2022 21:26	91.10
6/26/2022 20:17	51.37	6/26/2022 18:59	81.96	6/25/2022 17:22	17.60	6/25/2022 16:31	6.02	6/25/2022 21:27	90.95
6/26/2022 20:18	51.34	6/26/2022 19:00	81.96	6/25/2022 17:23	17.61	6/25/2022 16:32	6.03	6/25/2022 21:28	90.67
6/26/2022 20:19	51.34	6/26/2022 19:01	81.94	6/25/2022 17:24	17.59	6/25/2022 16:33	6.03	6/25/2022 21:29	90.44
6/26/2022 20:20	51.39	6/26/2022 19:02	81.95	6/25/2022 17:25	17.57	6/25/2022 16:34	6.04	6/25/2022 21:30	90.27
6/26/2022 20:21	51.34	6/26/2022 19:03	81.94	6/25/2022 17:26	17.61	6/25/2022 16:35	6.02	6/25/2022 21:31	90.05
6/26/2022 20:22	51.37	6/26/2022 19:04	81.95	6/25/2022 17:27	17.57	6/25/2022 16:36	6.03	6/25/2022 21:32	89.85
6/26/2022 20:23	51.35	6/26/2022 19:05	81.96	6/25/2022 17:28	17.55	6/25/2022 16:37	5.97	6/25/2022 21:33	89.63
6/26/2022 20:24	51.35	6/26/2022 19:06	81.95	6/25/2022 17:29	17.59	6/25/2022 16:38	6.02	6/25/2022 21:34	89.43
6/26/2022 20:25	51.32	6/26/2022 19:07	81.95	6/25/2022 17:30	17.56	6/25/2022 16:39	6.03	6/25/2022 21:35	89.24
6/26/2022 20:26	51.35	6/26/2022 19:08	81.91	6/25/2022 17:31	17.54	6/25/2022 16:40	5.97	6/25/2022 21:36	89.03
6/26/2022 20:27	51.36	6/26/2022 19:09	81.95	6/25/2022 17:32	17.56	6/25/2022 16:41	5.93	6/25/2022 21:37	88.85
6/26/2022 20:28	51.34	6/26/2022 19:10	81.97	6/25/2022 17:33	17.54	6/25/2022 16:42	5.97	6/25/2022 21:38	88.65
6/26/2022 20:29	51.35	6/26/2022 19:11	81.96	6/25/2022 17:34	17.60	6/25/2022 16:43	5.97	6/25/2022 21:39	88.44
6/26/2022 20:30	51.33	6/26/2022 19:12	82.01	6/25/2022 17:35	17.52	6/25/2022 16:44	5.95	6/25/2022 21:40	88.30
6/26/2022 20:31	51.32	6/26/2022 19:13	81.99	6/25/2022 17:36	17.54	6/25/2022 16:45	5.93	6/25/2022 21:41	88.07
6/26/2022 20:32	51.40	6/26/2022 19:14	81.96	6/25/2022 17:37	17.59	6/25/2022 16:46	5.96	6/25/2022 21:42	87.88
6/26/2022 20:33	51.38	6/26/2022 19:15	81.95	6/25/2022 17:38	17.55	6/25/2022 16:47	6.34	6/25/2022 21:43	87.69
6/26/2022 20:34	51.36	6/26/2022 19:16	81.98	6/25/2022 17:39	17.53	6/25/2022 16:48	6.62	6/25/2022 21:44	87.48
6/26/2022 20:35	51.36	6/26/2022 19:17	81.96	6/25/2022 17:40	17.56	6/25/2022 16:49	6.83	6/25/2022 21:45	87.27
6/26/2022 20:36	51.32	6/26/2022 19:18	81.93	6/25/2022 17:41	17.51	6/25/2022 16:50	7.01	6/25/2022 21:46	87.08
6/26/2022 20:37	51.36	6/26/2022 19:19	81.94	6/25/2022 17:42	17.50	6/25/2022 16:51	7.08	6/25/2022 21:47	86.95
6/26/2022 20:38	51.36	6/26/2022 19:20	81.98	6/25/2022 17:43	17.52	6/25/2022 16:52	6.93	6/25/2022 21:48	86.78
6/26/2022 20:39	51.30	6/26/2022 19:21	82.00	6/25/2022 17:44	17.53	6/25/2022 16:53	6.55	6/25/2022 21:49	86.57
6/26/2022 20:40	51.34	6/26/2022 19:22	81.95	6/25/2022 17:45	17.49	6/25/2022 16:54	6.43	6/25/2022 21:50	86.37
6/26/2022 20:41	51.34	6/26/2022 19:23	82.02	6/25/2022 17:46	17.51	6/25/2022 16:55	6.42	6/25/2022 21:51	86.21
6/26/2022 20:42	51.37	6/26/2022 19:24	81.99	6/25/2022 17:47	17.54	6/25/2022 16:56	6.25	6/25/2022 21:52	86.01
6/26/2022 20:43	51.32	6/26/2022 19:25	81.96	6/25/2022 17:48	17.49	6/25/2022 16:57	6.23	6/25/2022 21:53	85.83
6/26/2022 20:44	51.33	6/26/2022 19:26	81.93	6/25/2022 17:49	17.52	6/25/2022 16:58	6.20	6/25/2022 21:54	85.65
6/26/2022 20:45	51.34	6/26/2022 19:27	81.95	6/25/2022 17:50	17.51	6/25/2022 16:59	6.16	6/25/2022 21:55	85.46
6/26/2022 20:46	51.34	6/26/2022 19:28	81.98	6/25/2022 17:51	17.50	6/25/2022 17:00	6.15	6/25/2022 21:56	85.38
6/26/2022 20:47	51.33	6/26/2022 19:29	81.98	6/25/2022 17:52	17.55	6/25/2022 17:01	6.15	6/25/2022 21:57	85.17
6/26/2022 20:48	51.34	6/26/2022 19:30	81.98	6/25/2022 17:53	17.51	6/25/2022 17:02	6.17	6/25/2022 21:58	84.99
6/26/2022 20:49	51.32	6/26/2022 19:31	81.96	6/25/2022 17:54	17.54	6/25/2022 17:03	6.09	6/25/2022 21:59	84.84
6/26/2022 20:50	51.36	6/26/2022 19:32	81.97	6/25/2022 17:55	17.47	6/25/2022 17:04	6.11	6/25/2022 22:00	84.67
6/26/2022 20:51	51.29	6/26/2022 19:33	81.98	6/25/2022 17:56	17.49	6/25/2022 17:05	6.11	6/25/2022 22:01	84.55
6/26/2022 20:52	51.31	6/26/2022 19:34	81.95	6/25/2022 17:57	17.54	6/25/2022 17:06	6.04	6/25/2022 22:02	84.33
6/26/2022 20:53	51.35	6/26/2022 19:35	81.98	6/25/2022 17:58	17.50	6/25/2022 17:07	6.11	6/25/2022 22:03	84.21
6/26/2022 20:54	51.32	6/26/2022 19:36	81.99	6/25/2022 17:59	17.44	6/25/2022 17:08	6.05	6/25/2022 22:04	84.03
6/26/2022 20:55	51.35	6/26/2022 19:37	81.97	6/25/2022 18:00	17.49	6/25/2022 17:09	6.07	6/25/2022 22:05	83.92
6/26/2022 20:56	51.30	6/26/2022 19:38	81.99	6/25/2022 18:01	17.46	6/25/2022 17:10	6.02	6/25/2022 22:06	83.77
6/26/2022 20:57	51.32	6/26/2022 19:39	81.91	6/25/2022 18:02	17.50	6/25/2022 17:11	6.04	6/25/2022 22:07	83.59
6/26/2022 20:58	51.32	6/26/2022 19:40	81.94	6/25/2022 18:03	17.46	6/25/2022 17:12	6.03	6/25/2022 22:08	83.47
6/26/2022 20:59	51.35	6/26/2022 19:41	81.95	6/25/2022 18:04	17.47	6/25/2022 17:13	6.28	6/25/2022 22:09	83.31
6/26/2022 21:00	51.30	6/26/2022 19:42	81.99	6/25/2022 18:05	17.45	6/25/2022 17:14	6.33	6/25/2022 22:10	83.14
6/26/2022 21:01	51.34	6/26/2022 19:43	81.95	6/25/2022 18:06	17.48	6/25/2022 17:15	6.12	6/25/2022 22:11	83.01
6/26/2022 21:02	51.34	6/26/2022 19:44	81.97	6/25/2022 18:07	17.47	6/25/2022 17:16	6.10	6/25/2022 22:12	82.89
6/26/2022 21:03	51.34	6/26/2022 19:45	81.97	6/25/2022 18:08	17.47	6/25/2022 17:17	6.17	6/25/2022 22:13	82.71
6/26/2022 21:04	51.29	6/26/2022 19:46	81.98	6/25/2022 18:09	17.46	6/25/2022 17:18	6.10	6/25/2022 22:14	82.56
6/26/2022 21:05	51.33	6/26/2022 19:47	81.97	6/25/2022 18:10	17.44	6/25/2022 17:19	6.02	6/25/2022 22:15	82.44
6/26/2022 21:06	51.33	6/26/2022 19:48	81.98	6/25/2022 18:11	17.45	6/25/2022 17:20	6.05	6/25/2022 22:16	82.31
6/26/2022 21:07	51.27	6/26/2022 19:49	81.98	6/25/2022 18:12	17.45	6/25/2022 17:21	6.04	6/25/2022 22:17	82.21
6/26/2022 21:08	51.31	6/26/2022 19:50	81.98	6/25/2022 18:13	17.46	6/25/2022 17:22	5.97	6/25/2022 22:18	82.06

6/26/2022 21:09	51.33	6/26/2022 19:51	81.99	6/25/2022 18:14	17.47	6/25/2022 17:23	5.94	6/25/2022 22:19	81.92
6/26/2022 21:10	51.32	6/26/2022 19:52	82.00	6/25/2022 18:15	17.46	6/25/2022 17:24	5.95	6/25/2022 22:20	81.80
6/26/2022 21:11	51.30	6/26/2022 19:53	81.96	6/25/2022 18:16	17.44	6/25/2022 17:25	6.03	6/25/2022 22:21	81.70
6/26/2022 21:12	51.31	6/26/2022 19:54	81.98	6/25/2022 18:17	17.47	6/25/2022 17:26	5.92	6/25/2022 22:22	81.53
6/26/2022 21:13	51.30	6/26/2022 19:55	81.99	6/25/2022 18:18	17.41	6/25/2022 17:27	5.92	6/25/2022 22:23	81.45
6/26/2022 21:14	51.30	6/26/2022 19:56	81.97	6/25/2022 18:19	17.41	6/25/2022 17:28	5.94	6/25/2022 22:24	81.30
6/26/2022 21:15	51.32	6/26/2022 19:57	81.99	6/25/2022 18:20	17.42	6/25/2022 17:29	5.87	6/25/2022 22:25	81.23
6/26/2022 21:16	51.32	6/26/2022 19:58	82.00	6/25/2022 18:21	17.43	6/25/2022 17:30	5.93	6/25/2022 22:26	81.10
6/26/2022 21:17	51.32	6/26/2022 19:59	81.97	6/25/2022 18:22	17.43	6/25/2022 17:31	5.90	6/25/2022 22:27	80.98
6/26/2022 21:18	51.36	6/26/2022 20:00	81.98	6/25/2022 18:23	17.40	6/25/2022 17:32	5.93	6/25/2022 22:28	80.90
6/26/2022 21:19	51.33	6/26/2022 20:01	82.00	6/25/2022 18:24	17.44	6/25/2022 17:33	5.84	6/25/2022 22:29	80.77
6/26/2022 21:20	51.34	6/26/2022 20:02	81.98	6/25/2022 18:25	17.41	6/25/2022 17:34	5.87	6/25/2022 22:30	80.68
6/26/2022 21:21	51.31	6/26/2022 20:03	81.94	6/25/2022 18:26	17.41	6/25/2022 17:35	5.83	6/25/2022 22:31	80.56
6/26/2022 21:22	51.33	6/26/2022 20:04	81.97	6/25/2022 18:27	17.39	6/25/2022 17:36	5.80	6/25/2022 22:32	80.44
6/26/2022 21:23	51.31	6/26/2022 20:05	81.96	6/25/2022 18:28	17.42	6/25/2022 17:37	5.77	6/25/2022 22:33	80.36
6/26/2022 21:24	51.32	6/26/2022 20:06	81.99	6/25/2022 18:29	17.40	6/25/2022 17:38	5.83	6/25/2022 22:34	80.25
6/26/2022 21:25	51.33	6/26/2022 20:07	82.00	6/25/2022 18:30	17.42	6/25/2022 17:39	5.88	6/25/2022 22:35	80.13
6/26/2022 21:26	51.30	6/26/2022 20:08	82.00	6/25/2022 18:31	17.42	6/25/2022 17:40	5.78	6/25/2022 22:36	80.03
6/26/2022 21:27	51.31	6/26/2022 20:09	81.98	6/25/2022 18:32	17.41	6/25/2022 17:41	5.77	6/25/2022 22:37	79.93
6/26/2022 21:28	51.32	6/26/2022 20:10	81.93	6/25/2022 18:33	17.39	6/25/2022 17:42	5.82	6/25/2022 22:38	79.80
6/26/2022 21:29	51.33	6/26/2022 20:11	81.94	6/25/2022 18:34	17.42	6/25/2022 17:43	5.83	6/25/2022 22:39	79.69
6/26/2022 21:30	51.34	6/26/2022 20:12	81.98	6/25/2022 18:35	17.37	6/25/2022 17:44	5.80	6/25/2022 22:40	79.58
6/26/2022 21:31	51.34	6/26/2022 20:13	81.96	6/25/2022 18:36	17.38	6/25/2022 17:45	5.74	6/25/2022 22:41	79.51
6/26/2022 21:32	51.30	6/26/2022 20:14	81.96	6/25/2022 18:37	17.39	6/25/2022 17:46	5.80	6/25/2022 22:42	79.36
6/26/2022 21:33	51.32	6/26/2022 20:15	82.01	6/25/2022 18:38	17.42	6/25/2022 17:47	5.82	6/25/2022 22:43	79.26
6/26/2022 21:34	51.30	6/26/2022 20:16	81.94	6/25/2022 18:39	17.41	6/25/2022 17:48	5.74	6/25/2022 22:44	79.19
6/26/2022 21:35	51.33	6/26/2022 20:17	81.95	6/25/2022 18:40	17.42	6/25/2022 17:49	5.77	6/25/2022 22:45	79.09
6/26/2022 21:36	51.34	6/26/2022 20:18	82.00	6/25/2022 18:41	17.43	6/25/2022 17:50	5.91	6/25/2022 22:46	79.04
6/26/2022 21:37	51.33	6/26/2022 20:19	81.97	6/25/2022 18:42	17.44	6/25/2022 17:51	6.00	6/25/2022 22:47	78.94
6/26/2022 21:38	51.30	6/26/2022 20:20	81.97	6/25/2022 18:43	17.45	6/25/2022 17:52	6.03	6/25/2022 22:48	78.85
6/26/2022 21:39	51.33	6/26/2022 20:21	81.99	6/25/2022 18:44	17.39	6/25/2022 17:53	6.01	6/25/2022 22:49	78.80
6/26/2022 21:40	51.32	6/26/2022 20:22	81.95	6/25/2022 18:45	17.48	6/25/2022 17:54	6.15	6/25/2022 22:50	78.68
6/26/2022 21:41	51.30	6/26/2022 20:23	82.00	6/25/2022 18:46	17.41	6/25/2022 17:55	6.08	6/25/2022 22:51	78.62
6/26/2022 21:42	51.34	6/26/2022 20:24	81.97	6/25/2022 18:47	17.44	6/25/2022 17:56	6.10	6/25/2022 22:52	78.56
6/26/2022 21:43	51.30	6/26/2022 20:25	82.02	6/25/2022 18:48	17.43	6/25/2022 17:57	6.17	6/25/2022 22:53	78.44
6/26/2022 21:44	51.30	6/26/2022 20:26	81.99	6/25/2022 18:49	17.46	6/25/2022 17:58	5.99	6/25/2022 22:54	78.40
6/26/2022 21:45	51.31	6/26/2022 20:27	81.98	6/25/2022 18:50	17.47	6/25/2022 17:59	5.95	6/25/2022 22:55	78.28
6/26/2022 21:46	51.31	6/26/2022 20:28	81.99	6/25/2022 18:51	17.44	6/25/2022 18:00	5.95	6/25/2022 22:56	78.16
6/26/2022 21:47	51.32	6/26/2022 20:29	82.00	6/25/2022 18:52	17.50	6/25/2022 18:01	5.91	6/25/2022 22:57	78.13
6/26/2022 21:48	51.28	6/26/2022 20:30	81.98	6/25/2022 18:53	17.53	6/25/2022 18:02	6.66	6/25/2022 22:58	78.02
6/26/2022 21:49	53.29	6/26/2022 20:31	81.95	6/25/2022 18:54	17.50	6/25/2022 18:03	7.03	6/25/2022 22:59	77.92
6/26/2022 21:50	55.05	6/26/2022 20:32	81.98	6/25/2022 18:55	17.53	6/25/2022 18:04	7.50	6/25/2022 23:00	77.87
6/26/2022 21:51	55.89	6/26/2022 20:33	81.99	6/25/2022 18:56	17.49	6/25/2022 18:05	7.60	6/25/2022 23:01	77.75
6/26/2022 21:52	56.37	6/26/2022 20:34	82.03	6/25/2022 18:57	17.53	6/25/2022 18:06	7.67	6/25/2022 23:02	77.72
6/26/2022 21:53	54.11	6/26/2022 20:35	81.97	6/25/2022 18:58	17.56	6/25/2022 18:07	7.81	6/25/2022 23:03	77.54
6/26/2022 21:54	53.16	6/26/2022 20:36	82.01	6/25/2022 18:59	17.55	6/25/2022 18:08	8.14	6/25/2022 23:04	77.51
6/26/2022 21:55	52.79	6/26/2022 20:37	82.00	6/25/2022 19:00	17.53	6/25/2022 18:09	8.25	6/25/2022 23:05	77.45
6/26/2022 21:56	52.52	6/26/2022 20:38	82.00	6/25/2022 19:01	17.52	6/25/2022 18:10	8.16	6/25/2022 23:06	77.34
6/26/2022 21:57	52.37	6/26/2022 20:39	81.95	6/25/2022 19:02	17.58	6/25/2022 18:11	7.72	6/25/2022 23:07	77.24
6/26/2022 21:58	52.27	6/26/2022 20:40	82.00	6/25/2022 19:03	17.58	6/25/2022 18:12	7.23	6/25/2022 23:08	77.17
6/26/2022 21:59	52.21	6/26/2022 20:41	82.01	6/25/2022 19:04	17.58	6/25/2022 18:13	7.11	6/25/2022 23:09	77.09
6/26/2022 22:00	52.13	6/26/2022 20:42	81.97	6/25/2022 19:05	17.58	6/25/2022 18:14	6.80	6/25/2022 23:10	76.99
6/26/2022 22:01	52.05	6/26/2022 20:43	82.00	6/25/2022 19:06	17.59	6/25/2022 18:15	6.76	6/25/2022 23:11	76.96
6/26/2022 22:02	52.00	6/26/2022 20:44	81.96	6/25/2022 19:07	17.59	6/25/2022 18:16	6.68	6/25/2022 23:12	76.86
6/26/2022 22:03	51.96	6/26/2022 20:45	81.95	6/25/2022 19:08	17.69	6/25/2022 18:17	6.63	6/25/2022 23:13	76.79
6/26/2022 22:04	51.97	6/26/2022 20:46	82.05	6/25/2022 19:09	17.61	6/25/2022 18:18	6.53	6/25/2022 23:14	76.73
6/26/2022 22:05	51.91	6/26/2022 20:47	82.02	6/25/2022 19:10	17.65	6/25/2022 18:19	6.50	6/25/2022 23:15	76.65
6/26/2022 22:06	51.93	6/26/2022 20:48	82.01	6/25/2022 19:11	17.67	6/25/2022 18:20	6.50	6/25/2022 23:16	76.60
6/26/2022 22:07	51.87	6/26/2022 20:49	81.99	6/25/2022 19:12	17.65	6/25/2022 18:21	6.42	6/25/2022 23:17	76.50
6/26/2022 22:08	51.86	6/26/2022 20:50	81.97	6/25/2022 19:13	17.63	6/25/2022 18:22	6.46	6/25/2022 23:18	76.45
6/26/2022 22:09	51.86	6/26/2022 20:51	81.99	6/25/2022 19:14	17.66	6/25/2022 18:23	6.38	6/25/2022 23:19	76.38
6/26/2022 22:10	51.79	6/26/2022 20:52	82.00	6/25/2022 19:15	17.69	6/25/2022 18:24	6.35	6/25/2022 23:20	76.28
6/26/2022 22:11	51.81	6/26/2022 20:53	82.01	6/25/2022 19:16	17.65	6/25/2022 18:25	6.37	6/25/2022 23:21	76.23
6/26/2022 22:12	51.79	6/26/2022 20:54	81.96	6/25/2022 19:17	17.67	6/25/2022 18:26	6.37	6/25/2022 23:22	76.11
6/26/2022 22:13	51.78	6/26/2022 20:55	82.01	6/25/2022 19:18	17.67	6/25/2022 18:27	6.24	6/25/2022 23:23	76.04
6/26/2022 22:14	51.76	6/26/2022 20:56	81.97	6/25/2022 19:19	17.68	6/25/2022 18:28	6.28	6/25/2022 23:24	75.99
6/26/2022 22:15	51.75	6/26/2022 20:57	82.03	6/25/2022 19:20	17.69	6/25/2022 18:29	6.34	6/25/2022 23:25	75.91
6/26/2022 22:16	51.74	6/26/2022 20:58	82.00	6/25/2022 19:21	17.68	6/25/2022 18:30	6.30	6/25/2022 23:26	75.80
6/26/2022 22:17	51.73	6/26/2022 20:59	81.98	6/25/2022 19:22	17.68	6/25/2022 18:31	6.24	6/25/2022 23:27	75.76
6/26/2022 22:18	51.71	6/26/2022 21:00	81.99	6/25/2022 19:23	17.76	6/25/2022 18:32	6.23	6/25/2022 23:28	75.71
6/26/2022 22:19	51.71	6/26/2022 21:01	81.96	6/25/2022 19:24	17.73	6/25/2022 18:33	6.27	6/25/2022 23:29	75.62
6/26/2022 22:20	51.73	6/26/2022 21:02	82.03	6/25/2022 19:25	17.71	6/25/2022 18:34	6.22	6/25/2022 23:30	75.56
6/26/2022 22:21	51.70	6/26/2022 21:03	81.99	6/25/2022 19:26	17.67	6/25/2022 18:35	6.18	6/25/2022 23:31	75.45
6/26/2022 22:22	51.71	6/26/2022 21:04	82.01	6/25/2022 19:27	17.73	6/25/2022 18:36	6.20	6/25/2022 23:32	75.38
6/26/2022 22:23	51.68	6/26/2022 21:05	82.00	6/25/2022 19:28	17.73	6/25/2022 18:37	6.23	6/25/2022 23:33	75.34
6/26/2022 22:24	51.69	6/26/2022 21:06	82.03	6/25/2022 19:29	17.71	6/25/2022 18:38	6.16	6/25/2022 23:34	75.27
6/26/2022 22:25	51.71	6/26/2022 21:07	81.97	6/25/2022 19:30	17.71	6/25/2022 18:39	6.13	6/25/2022 23:35	75.19
6/26/2022 22:26	51.68	6/26/2022 21:08	81.99	6/25/2022 19:31	17.71	6/25/2022 18:40	6.16	6/25/2022 23:36	75.12
6/26/2022 22:27	51.66	6/26/2022 21:09	82.01	6/25/2022 19:32	17.72	6/25/2022 18:41	6.11	6/25/2022 23:37	75.06
6/26/2022 22:28	51.62	6/26/2022 21:10	82.01	6/25/2022 19:33	17.71	6/25/2022 18:42	6.08	6/25/2022 23:38	75.02
6/26/2022 22:29	51.61	6/26/2022 21:11	81.98	6/25/2022 19:34	17.72	6/25/2022 18:43	6.11	6/25/2022 23:39	74.91
6/26/2022 22:30	51.63	6/26/2022 21:12	81.97	6/25/2022 19:35	17.70	6/25/2022 18:44	6.10	6/25/2022 23:40	74.83
6/26/2022 22:31	51.63	6/26/2022 21:13	82.00	6/25/2022 19:36	17.72	6/25/2022 18:45	6.06	6/25/2022 23:41	74.77
6/26/2022 22:32	51.64	6/26/2022 21:14	82.03	6/25/2022 19:37	17.72	6/25/2022 18:46	6.07	6/25/2022 23:42	74.72
6/26/2022 22:33	51.63	6/26/2022 21:15	81.98	6/25/2022 19:38	17.71	6/25/2022 18:47	6.07	6/25/2022 23:43	74.66
6/26/2022 22:34	51.63	6/26/2022 21:16	82.03	6/25/2022 19:39	17.74	6/25/2022 18:48	6.32	6/25/2022 23:44	74.60
6/26/2022 22:35	51.63	6/26/2022 21:17	81.97	6/25/2022 19:40	17.75	6/25/2022 18:49	6.55	6/25/2022 23:45	74.51
6/26/2022 22:36	51.60	6/26/2022 21:18	81.94	6/25/2022 19:41	17.74	6/25/2022 18:50	6.73	6/25/2022 23:46	74.44

6/26/2022 22:37	51.58	6/26/2022 21:19	82.00	6/25/2022 19:42	17.70	6/25/2022 18:51	6.33	6/25/2022 23:47	74.41
6/26/2022 22:38	51.59	6/26/2022 21:20	82.01	6/25/2022 19:43	17.80	6/25/2022 18:52	6.28	6/25/2022 23:48	74.36
6/26/2022 22:39	51.59	6/26/2022 21:21	82.00	6/25/2022 19:44	17.72	6/25/2022 18:53	6.44	6/25/2022 23:49	74.31
6/26/2022 22:40	51.58	6/26/2022 21:22	81.98	6/25/2022 19:45	17.73	6/25/2022 18:54	6.36	6/25/2022 23:50	74.23
6/26/2022 22:41	51.59	6/26/2022 21:23	81.96	6/25/2022 19:46	17.77	6/25/2022 18:55	6.90	6/25/2022 23:51	74.15
6/26/2022 22:42	51.57	6/26/2022 21:24	82.03	6/25/2022 19:47	17.74	6/25/2022 18:56	6.44	6/25/2022 23:52	74.12
6/26/2022 22:43	51.58	6/26/2022 21:25	81.96	6/25/2022 19:48	17.74	6/25/2022 18:57	6.36	6/25/2022 23:53	74.03
6/26/2022 22:44	51.60	6/26/2022 21:26	82.00	6/25/2022 19:49	17.70	6/25/2022 18:58	6.24	6/25/2022 23:54	73.99
6/26/2022 22:45	51.59	6/26/2022 21:27	81.95	6/25/2022 19:50	17.71	6/25/2022 18:59	6.23	6/25/2022 23:55	73.93
6/26/2022 22:46	51.54	6/26/2022 21:28	81.97	6/25/2022 19:51	17.73	6/25/2022 19:00	6.17	6/25/2022 23:56	73.89
6/26/2022 22:47	51.54	6/26/2022 21:29	82.00	6/25/2022 19:52	17.70	6/25/2022 19:01	6.16	6/25/2022 23:57	73.83
6/26/2022 22:48	51.56	6/26/2022 21:30	81.98	6/25/2022 19:53	17.73	6/25/2022 19:02	6.10	6/25/2022 23:58	73.77
6/26/2022 22:49	51.55	6/26/2022 21:31	82.01	6/25/2022 19:54	17.72	6/25/2022 19:03	6.15	6/25/2022 23:59	73.69
6/26/2022 22:50	51.51	6/26/2022 21:32	81.94	6/25/2022 19:55	17.69	6/25/2022 19:04	6.31	6/26/2022 0:00	73.67
6/26/2022 22:51	51.55	6/26/2022 21:33	81.97	6/25/2022 19:56	17.70	6/25/2022 19:05	6.57	6/26/2022 0:01	73.61
6/26/2022 22:52	51.55	6/26/2022 21:34	81.96	6/25/2022 19:57	17.71	6/25/2022 19:06	6.31	6/26/2022 0:02	73.54
6/26/2022 22:53	51.54	6/26/2022 21:35	81.98	6/25/2022 19:58	17.69	6/25/2022 19:07	6.31	6/26/2022 0:03	73.53
6/26/2022 22:54	51.52	6/26/2022 21:36	82.00	6/25/2022 19:59	17.70	6/25/2022 19:08	6.42	6/26/2022 0:04	73.44
6/26/2022 22:55	51.54	6/26/2022 21:37	82.00	6/25/2022 20:00	17.70	6/25/2022 19:09	6.48	6/26/2022 0:05	73.44
6/26/2022 22:56	51.52	6/26/2022 21:38	82.01	6/25/2022 20:01	17.69	6/25/2022 19:10	6.26	6/26/2022 0:06	73.35
6/26/2022 22:57	51.54	6/26/2022 21:39	82.00	6/25/2022 20:02	17.69	6/25/2022 19:11	6.23	6/26/2022 0:07	73.33
6/26/2022 22:58	51.53	6/26/2022 21:40	82.00	6/25/2022 20:03	17.72	6/25/2022 19:12	6.21	6/26/2022 0:08	73.24
6/26/2022 22:59	51.49	6/26/2022 21:41	82.02	6/25/2022 20:04	17.69	6/25/2022 19:13	6.10	6/26/2022 0:09	73.18
6/26/2022 23:00	51.52	6/26/2022 21:42	82.03	6/25/2022 20:05	17.74	6/25/2022 19:14	6.11	6/26/2022 0:10	73.14
6/26/2022 23:01	51.50	6/26/2022 21:43	82.04	6/25/2022 20:06	17.69	6/25/2022 19:15	6.08	6/26/2022 0:11	73.10
6/26/2022 23:02	51.50	6/26/2022 21:44	81.98	6/25/2022 20:07	17.66	6/25/2022 19:16	6.16	6/26/2022 0:12	73.02
6/26/2022 23:03	51.51	6/26/2022 21:45	82.00	6/25/2022 20:08	17.67	6/25/2022 19:17	6.03	6/26/2022 0:13	72.99
6/26/2022 23:04	51.52	6/26/2022 21:46	82.01	6/25/2022 20:09	17.68	6/25/2022 19:18	6.04	6/26/2022 0:14	72.98
6/26/2022 23:05	51.52	6/26/2022 21:47	82.03	6/25/2022 20:10	17.67	6/25/2022 19:19	6.02	6/26/2022 0:15	72.88
6/26/2022 23:06	51.51	6/26/2022 21:48	82.02	6/25/2022 20:11	17.66	6/25/2022 19:20	6.02	6/26/2022 0:16	72.83
6/26/2022 23:07	51.50	6/26/2022 21:49	81.98	6/25/2022 20:12	17.70	6/25/2022 19:21	6.03	6/26/2022 0:17	72.80
6/26/2022 23:08	51.50	6/26/2022 21:50	82.01	6/25/2022 20:13	17.68	6/25/2022 19:22	6.03	6/26/2022 0:18	72.77
6/26/2022 23:09	51.47	6/26/2022 21:51	81.94	6/25/2022 20:14	17.68	6/25/2022 19:23	5.99	6/26/2022 0:19	72.67
6/26/2022 23:10	51.50	6/26/2022 21:52	81.95	6/25/2022 20:15	17.65	6/25/2022 19:24	5.92	6/26/2022 0:20	72.66
6/26/2022 23:11	51.48	6/26/2022 21:53	82.00	6/25/2022 20:16	17.66	6/25/2022 19:25	5.91	6/26/2022 0:21	72.64
6/26/2022 23:12	51.49	6/26/2022 21:54	81.96	6/25/2022 20:17	17.66	6/25/2022 19:26	5.94	6/26/2022 0:22	72.57
6/26/2022 23:13	51.46	6/26/2022 21:55	81.99	6/25/2022 20:18	17.65	6/25/2022 19:27	6.01	6/26/2022 0:23	72.55
6/26/2022 23:14	51.48	6/26/2022 21:56	82.03	6/25/2022 20:19	17.61	6/25/2022 19:28	5.94	6/26/2022 0:24	72.51
6/26/2022 23:15	51.49	6/26/2022 21:57	82.01	6/25/2022 20:20	17.67	6/25/2022 19:29	5.85	6/26/2022 0:25	72.44
6/26/2022 23:16	51.46	6/26/2022 21:58	81.99	6/25/2022 20:21	17.67	6/25/2022 19:30	5.88	6/26/2022 0:26	72.39
6/26/2022 23:17	51.51	6/26/2022 21:59	81.98	6/25/2022 20:22	17.62	6/25/2022 19:31	5.81	6/26/2022 0:27	72.34
6/26/2022 23:18	51.47	6/26/2022 22:00	81.99	6/25/2022 20:23	17.63	6/25/2022 19:32	5.85	6/26/2022 0:28	72.32
6/26/2022 23:19	51.48	6/26/2022 22:01	82.00	6/25/2022 20:24	17.66	6/25/2022 19:33	5.91	6/26/2022 0:29	72.26
6/26/2022 23:20	51.46	6/26/2022 22:02	81.99	6/25/2022 20:25	17.64	6/25/2022 19:34	5.93	6/26/2022 0:30	72.25
6/26/2022 23:21	51.46	6/26/2022 22:03	81.96	6/25/2022 20:26	17.63	6/25/2022 19:35	5.84	6/26/2022 0:31	72.19
6/26/2022 23:22	51.45	6/26/2022 22:04	82.03	6/25/2022 20:27	17.64	6/25/2022 19:36	5.85	6/26/2022 0:32	72.14
6/26/2022 23:23	51.46	6/26/2022 22:05	81.99	6/25/2022 20:28	17.60	6/25/2022 19:37	5.83	6/26/2022 0:33	72.08
6/26/2022 23:24	51.47	6/26/2022 22:06	82.01	6/25/2022 20:29	17.62	6/25/2022 19:38	5.76	6/26/2022 0:34	72.04
6/26/2022 23:25	51.47	6/26/2022 22:07	82.00	6/25/2022 20:30	17.60	6/25/2022 19:39	5.79	6/26/2022 0:35	72.78
6/26/2022 23:26	51.49	6/26/2022 22:08	82.00	6/25/2022 20:31	17.64	6/25/2022 19:40	5.86	6/26/2022 0:36	77.31
6/26/2022 23:27	51.43	6/26/2022 22:09	81.98	6/25/2022 20:32	17.59	6/25/2022 19:41	5.80	6/26/2022 0:37	77.10
6/26/2022 23:28	51.42	6/26/2022 22:10	82.00	6/25/2022 20:33	17.62	6/25/2022 19:42	6.00	6/26/2022 0:38	76.99
6/26/2022 23:29	51.44	6/26/2022 22:11	82.00	6/25/2022 20:34	17.67	6/25/2022 19:43	6.02	6/26/2022 0:39	76.90
6/26/2022 23:30	51.44	6/26/2022 22:12	82.01	6/25/2022 20:35	17.71	6/25/2022 19:44	6.11	6/26/2022 0:40	76.78
6/26/2022 23:31	51.45	6/26/2022 22:13	81.95	6/25/2022 20:36	17.60	6/25/2022 19:45	6.13	6/26/2022 0:41	76.67
6/26/2022 23:32	51.43	6/26/2022 22:14	82.02	6/25/2022 20:37	17.60	6/25/2022 19:46	6.17	6/26/2022 0:42	76.61
6/26/2022 23:33	51.41	6/26/2022 22:15	81.99	6/25/2022 20:38	17.64	6/25/2022 19:47	6.07	6/26/2022 0:43	76.46
6/26/2022 23:34	51.46	6/26/2022 22:16	81.98	6/25/2022 20:39	17.58	6/25/2022 19:48	6.04	6/26/2022 0:44	76.43
6/26/2022 23:35	51.43	6/26/2022 22:17	82.00	6/25/2022 20:40	17.60	6/25/2022 19:49	5.96	6/26/2022 0:45	76.30
6/26/2022 23:36	51.45	6/26/2022 22:18	82.03	6/25/2022 20:41	17.62	6/25/2022 19:50	5.99	6/26/2022 0:46	76.22
6/26/2022 23:37	51.44	6/26/2022 22:19	82.02	6/25/2022 20:42	17.60	6/25/2022 19:51	5.90	6/26/2022 0:47	76.11
6/26/2022 23:38	51.42	6/26/2022 22:20	82.02	6/25/2022 20:43	17.61	6/25/2022 19:52	5.84	6/26/2022 0:48	76.00
6/26/2022 23:39	51.46	6/26/2022 22:21	81.96	6/25/2022 20:44	17.58	6/25/2022 19:53	5.86	6/26/2022 0:49	75.91
6/26/2022 23:40	51.44	6/26/2022 22:22	82.00	6/25/2022 20:45	17.59	6/25/2022 19:54	5.79	6/26/2022 0:50	75.79
6/26/2022 23:41	51.44	6/26/2022 22:23	82.00	6/25/2022 20:46	17.57	6/25/2022 19:55	5.82	6/26/2022 0:51	75.78
6/26/2022 23:42	51.40	6/26/2022 22:24	81.99	6/25/2022 20:47	17.61	6/25/2022 19:56	5.86	6/26/2022 0:52	75.61
6/26/2022 23:43	51.42	6/26/2022 22:25	81.95	6/25/2022 20:48	17.57	6/25/2022 19:57	5.86	6/26/2022 0:53	75.55
6/26/2022 23:44	51.42	6/26/2022 22:26	81.98	6/25/2022 20:49	17.57	6/25/2022 19:58	5.81	6/26/2022 0:54	75.49
6/26/2022 23:45	51.40	6/26/2022 22:27	82.03	6/25/2022 20:50	17.57	6/25/2022 19:59	5.76	6/26/2022 0:55	75.40
6/26/2022 23:46	51.42	6/26/2022 22:28	81.99	6/25/2022 20:51	17.57	6/25/2022 20:00	5.82	6/26/2022 0:56	75.31
6/26/2022 23:47	51.41	6/26/2022 22:29	82.02	6/25/2022 20:52	17.56	6/25/2022 20:01	5.72	6/26/2022 0:57	75.24
6/26/2022 23:48	51.43	6/26/2022 22:30	81.97	6/25/2022 20:53	17.58	6/25/2022 20:02	5.76	6/26/2022 0:58	75.14
6/26/2022 23:49	51.40	6/26/2022 22:31	81.99	6/25/2022 20:54	17.53	6/25/2022 20:03	5.74	6/26/2022 0:59	75.07
6/26/2022 23:50	51.39	6/26/2022 22:32	82.00	6/25/2022 20:55	17.56	6/25/2022 20:04	5.83	6/26/2022 1:00	74.95
6/26/2022 23:51	51.46	6/26/2022 22:33	81.99	6/25/2022 20:56	17.60	6/25/2022 20:05	5.76	6/26/2022 1:01	74.92
6/26/2022 23:52	51.42	6/26/2022 22:34	82.00	6/25/2022 20:57	17.56	6/25/2022 20:06	5.75	6/26/2022 1:02	74.83
6/26/2022 23:53	51.40	6/26/2022 22:35	82.02	6/25/2022 20:58	17.58	6/25/2022 20:07	5.71	6/26/2022 1:03	74.73
6/26/2022 23:54	51.39	6/26/2022 22:36	82.02	6/25/2022 20:59	17.58	6/25/2022 20:08	5.76	6/26/2022 1:04	74.70
6/26/2022 23:55	51.38	6/26/2022 22:37	82.00	6/25/2022 21:00	17.56	6/25/2022 20:09	5.69	6/26/2022 1:05	74.60
6/26/2022 23:56	51.40	6/26/2022 22:38	82.00	6/25/2022 21:01	17.59	6/25/2022 20:10	5.71	6/26/2022 1:06	74.54
6/26/2022 23:57	51.42	6/26/2022 22:39	81.96	6/25/2022 21:02	17.55	6/25/2022 20:11	5.77	6/26/2022 1:07	74.47
6/26/2022 23:58	51.37	6/26/2022 22:40	81.95	6/25/2022 21:03	17.53	6/25/2022 20:12	5.60	6/26/2022 1:08	74.39
6/26/2022 23:59	51.38	6/26/2022 22:41	82.00	6/25/2022 21:04	17.59	6/25/2022 20:13	5.63	6/26/2022 1:09	74.31
6/27/2022 0:00	51.40	6/26/2022 22:42	81.97	6/25/2022 21:05	17.57	6/25/2022 20:14	5.67	6/26/2022 1:10	74.25
6/27/2022 0:01	51.43	6/26/2022 22:43	82.00	6/25/2022 21:06	17.55	6/25/2022 20:15	5.68	6/26/2022 1:11	74.19
6/27/2022 0:02	51.40	6/26/2022 22:44	81.97	6/25/2022 21:07	17.48	6/25/2022 20:16	5.61	6/26/2022 1:12	74.10
6/27/2022 0:03	51.41	6/26/2022 22:45	81.98	6/25/2022 21:08	17.53	6/25/2022 20:17	5.66	6/26/2022 1:13	74.09
6/27/2022 0:04	51.42	6/26/2022 22:46	81.96	6/25/2022 21:09	17.54	6/25/2022 20:18	5.66	6/26/2022 1:14	73.96

6/27/2022 0:05	51.38	6/26/2022 22:47	82.02	6/25/2022 21:10	17.54	6/25/2022 20:19	5.79	6/26/2022 1:15	73.94
6/27/2022 0:06	51.39	6/26/2022 22:48	82.01	6/25/2022 21:11	17.50	6/25/2022 20:20	5.81	6/26/2022 1:16	73.86
6/27/2022 0:07	51.40	6/26/2022 22:49	81.97	6/25/2022 21:12	17.55	6/25/2022 20:21	5.85	6/26/2022 1:17	73.80
6/27/2022 0:08	51.40	6/26/2022 22:50	81.96	6/25/2022 21:13	17.52	6/25/2022 20:22	5.80	6/26/2022 1:18	73.75
6/27/2022 0:09	51.34	6/26/2022 22:51	81.98	6/25/2022 21:14	17.57	6/25/2022 20:23	5.85	6/26/2022 1:19	73.69
6/27/2022 0:10	51.39	6/26/2022 22:52	82.04	6/25/2022 21:15	17.55	6/25/2022 20:24	5.71	6/26/2022 1:20	73.61
6/27/2022 0:11	51.38	6/26/2022 22:53	82.03	6/25/2022 21:16	17.57	6/25/2022 20:25	5.77	6/26/2022 1:21	73.57
6/27/2022 0:12	51.36	6/26/2022 22:54	81.96	6/25/2022 21:17	17.53	6/25/2022 20:26	5.86	6/26/2022 1:22	73.46
6/27/2022 0:13	51.37	6/26/2022 22:55	82.00	6/25/2022 21:18	17.58	6/25/2022 20:27	5.95	6/26/2022 1:23	73.43
6/27/2022 0:14	51.38	6/26/2022 22:56	81.99	6/25/2022 21:19	17.54	6/25/2022 20:28	5.72	6/26/2022 1:24	73.42
6/27/2022 0:15	51.37	6/26/2022 22:57	82.02	6/25/2022 21:20	17.55	6/25/2022 20:29	5.78	6/26/2022 1:25	73.33
6/27/2022 0:16	51.41	6/26/2022 22:58	81.96	6/25/2022 21:21	17.54	6/25/2022 20:30	5.64	6/26/2022 1:26	73.28
6/27/2022 0:17	51.40	6/26/2022 22:59	82.00	6/25/2022 21:22	17.53	6/25/2022 20:31	5.73	6/26/2022 1:27	73.24
6/27/2022 0:18	51.42	6/26/2022 23:00	81.99	6/25/2022 21:23	17.55	6/25/2022 20:32	5.68	6/26/2022 1:28	73.14
6/27/2022 0:19	51.36	6/26/2022 23:01	81.99	6/25/2022 21:24	17.54	6/25/2022 20:33	5.69	6/26/2022 1:29	73.09
6/27/2022 0:20	51.38	6/26/2022 23:02	81.98	6/25/2022 21:25	17.59	6/25/2022 20:34	5.61	6/26/2022 1:30	73.00
6/27/2022 0:21	51.38	6/26/2022 23:03	81.95	6/25/2022 21:26	17.58	6/25/2022 20:35	5.61	6/26/2022 1:31	73.00
6/27/2022 0:22	51.37	6/26/2022 23:04	82.02	6/25/2022 21:27	17.59	6/25/2022 20:36	5.65	6/26/2022 1:32	72.89
6/27/2022 0:23	51.40	6/26/2022 23:05	82.03	6/25/2022 21:28	17.58	6/25/2022 20:37	5.55	6/26/2022 1:33	72.83
6/27/2022 0:24	51.40	6/26/2022 23:06	81.96	6/25/2022 21:29	17.57	6/25/2022 20:38	5.57	6/26/2022 1:34	72.82
6/27/2022 0:25	51.39	6/26/2022 23:07	82.01	6/25/2022 21:30	17.52	6/25/2022 20:39	5.62	6/26/2022 1:35	72.80
6/27/2022 0:26	51.35	6/26/2022 23:08	82.03	6/25/2022 21:31	17.61	6/25/2022 20:40	5.61	6/26/2022 1:36	72.71
6/27/2022 0:27	51.39	6/26/2022 23:09	82.04	6/25/2022 21:32	17.58	6/25/2022 20:41	5.51	6/26/2022 1:37	72.67
6/27/2022 0:28	51.33	6/26/2022 23:10	82.01	6/25/2022 21:33	17.59	6/25/2022 20:42	5.56	6/26/2022 1:38	72.61
6/27/2022 0:29	51.37	6/26/2022 23:11	82.02	6/25/2022 21:34	17.58	6/25/2022 20:43	5.58	6/26/2022 1:39	72.54
6/27/2022 0:30	51.38	6/26/2022 23:12	81.98	6/25/2022 21:35	17.61	6/25/2022 20:44	5.56	6/26/2022 1:40	72.48
6/27/2022 0:31	51.38	6/26/2022 23:13	81.99	6/25/2022 21:36	17.62	6/25/2022 20:45	5.52	6/26/2022 1:41	72.47
6/27/2022 0:32	51.37	6/26/2022 23:14	82.01	6/25/2022 21:37	17.59	6/25/2022 20:46	5.51	6/26/2022 1:42	72.43
6/27/2022 0:33	51.36	6/26/2022 23:15	82.01	6/25/2022 21:38	17.56	6/25/2022 20:47	5.49	6/26/2022 1:43	72.38
6/27/2022 0:34	51.38	6/26/2022 23:16	81.99	6/25/2022 21:39	17.59	6/25/2022 20:48	5.51	6/26/2022 1:44	72.32
6/27/2022 0:35	51.37	6/26/2022 23:17	82.01	6/25/2022 21:40	17.57	6/25/2022 20:49	5.55	6/26/2022 1:45	72.30
6/27/2022 0:36	51.37	6/26/2022 23:18	81.99	6/25/2022 21:41	17.55	6/25/2022 20:50	5.53	6/26/2022 1:46	72.21
6/27/2022 0:37	51.35	6/26/2022 23:19	82.00	6/25/2022 21:42	17.55	6/25/2022 20:51	5.50	6/26/2022 1:47	72.20
6/27/2022 0:38	51.37	6/26/2022 23:20	81.96	6/25/2022 21:43	17.60	6/25/2022 20:52	5.49	6/26/2022 1:48	72.13
6/27/2022 0:39	51.35	6/26/2022 23:21	81.97	6/25/2022 21:44	17.60	6/25/2022 20:53	5.49	6/26/2022 1:49	72.09
6/27/2022 0:40	51.35	6/26/2022 23:22	82.00	6/25/2022 21:45	17.57	6/25/2022 20:54	5.47	6/26/2022 1:50	72.00
6/27/2022 0:41	51.34	6/26/2022 23:23	82.02	6/25/2022 21:46	17.56	6/25/2022 20:55	5.47	6/26/2022 1:51	71.98
6/27/2022 0:42	51.38	6/26/2022 23:24	82.00	6/25/2022 21:47	17.56	6/25/2022 20:56	5.47	6/26/2022 1:52	71.93
6/27/2022 0:43	51.37	6/26/2022 23:25	82.06	6/25/2022 21:48	17.58	6/25/2022 20:57	5.51	6/26/2022 1:53	71.91
6/27/2022 0:44	51.38	6/26/2022 23:26	82.01	6/25/2022 21:49	17.57	6/25/2022 20:58	5.83	6/26/2022 1:54	71.85
6/27/2022 0:45	51.34	6/26/2022 23:27	82.00	6/25/2022 21:50	17.56	6/25/2022 20:59	5.67	6/26/2022 1:55	71.84
6/27/2022 0:46	51.35	6/26/2022 23:28	82.01	6/25/2022 21:51	17.60	6/25/2022 21:00	5.56	6/26/2022 1:56	71.78
6/27/2022 0:47	51.37	6/26/2022 23:29	82.01	6/25/2022 21:52	17.59	6/25/2022 21:01	5.59	6/26/2022 1:57	71.74
6/27/2022 0:48	51.37	6/26/2022 23:30	82.01	6/25/2022 21:53	17.55	6/25/2022 21:02	5.51	6/26/2022 1:58	71.68
6/27/2022 0:49	51.35	6/26/2022 23:31	82.04	6/25/2022 21:54	17.55	6/25/2022 21:03	5.56	6/26/2022 1:59	71.68
6/27/2022 0:50	51.33	6/26/2022 23:32	81.97	6/25/2022 21:55	17.57	6/25/2022 21:04	5.45	6/26/2022 2:00	71.62
6/27/2022 0:51	51.35	6/26/2022 23:33	82.02	6/25/2022 21:56	17.54	6/25/2022 21:05	5.61	6/26/2022 2:01	71.59
6/27/2022 0:52	51.34	6/26/2022 23:34	82.01	6/25/2022 21:57	17.57	6/25/2022 21:06	5.50	6/26/2022 2:02	71.52
6/27/2022 0:53	51.36	6/26/2022 23:35	81.95	6/25/2022 21:58	17.52	6/25/2022 21:07	5.47	6/26/2022 2:03	71.49
6/27/2022 0:54	51.36	6/26/2022 23:36	82.01	6/25/2022 21:59	17.54	6/25/2022 21:08	5.40	6/26/2022 2:04	71.45
6/27/2022 0:55	51.32	6/26/2022 23:37	81.97	6/25/2022 22:00	17.60	6/25/2022 21:09	5.39	6/26/2022 2:05	71.44
6/27/2022 0:56	51.34	6/26/2022 23:38	82.02	6/25/2022 22:01	17.59	6/25/2022 21:10	5.44	6/26/2022 2:06	71.37
6/27/2022 0:57	51.34	6/26/2022 23:39	81.98	6/25/2022 22:02	17.54	6/25/2022 21:11	5.45	6/26/2022 2:07	71.38
6/27/2022 0:58	51.32	6/26/2022 23:40	82.30	6/25/2022 22:03	17.56	6/25/2022 21:12	5.40	6/26/2022 2:08	71.31
6/27/2022 0:59	51.32	6/26/2022 23:41	82.54	6/25/2022 22:04	17.54	6/25/2022 21:13	5.41	6/26/2022 2:09	71.31
6/27/2022 1:00	51.36	6/26/2022 23:42	82.64	6/25/2022 22:05	17.55	6/25/2022 21:14	5.41	6/26/2022 2:10	71.21
6/27/2022 1:01	51.36	6/26/2022 23:43	82.54	6/25/2022 22:06	17.55	6/25/2022 21:15	5.47	6/26/2022 2:11	71.21
6/27/2022 1:02	51.35	6/26/2022 23:44	82.45	6/25/2022 22:07	17.57	6/25/2022 21:16	5.39	6/26/2022 2:12	71.17
6/27/2022 1:03	51.35	6/26/2022 23:45	82.37	6/25/2022 22:08	17.58	6/25/2022 21:17	5.36	6/26/2022 2:13	71.14
6/27/2022 1:04	51.37	6/26/2022 23:46	82.31	6/25/2022 22:09	17.57	6/25/2022 21:18	5.39	6/26/2022 2:14	71.11
6/27/2022 1:05	51.36	6/26/2022 23:47	82.24	6/25/2022 22:10	17.56	6/25/2022 21:19	5.44	6/26/2022 2:15	71.03
6/27/2022 1:06	51.35	6/26/2022 23:48	82.26	6/25/2022 22:11	17.54	6/25/2022 21:20	5.35	6/26/2022 2:16	71.04
6/27/2022 1:07	51.34	6/26/2022 23:49	82.24	6/25/2022 22:12	17.53	6/25/2022 21:21	5.38	6/26/2022 2:17	71.01
6/27/2022 1:08	51.34	6/26/2022 23:50	82.21	6/25/2022 22:13	17.52	6/25/2022 21:22	5.35	6/26/2022 2:18	70.94
6/27/2022 1:09	51.31	6/26/2022 23:51	82.19	6/25/2022 22:14	17.53	6/25/2022 21:23	5.36	6/26/2022 2:19	70.93
6/27/2022 1:10	51.34	6/26/2022 23:52	82.14	6/25/2022 22:15	17.56	6/25/2022 21:24	5.34	6/26/2022 2:20	70.91
6/27/2022 1:11	51.32	6/26/2022 23:53	82.13	6/25/2022 22:16	17.53	6/25/2022 21:25	5.33	6/26/2022 2:21	70.84
6/27/2022 1:12	51.31	6/26/2022 23:54	82.15	6/25/2022 22:17	17.55	6/25/2022 21:26	5.38	6/26/2022 2:22	70.81
6/27/2022 1:13	51.29	6/26/2022 23:55	82.10	6/25/2022 22:18	17.55	6/25/2022 21:27	5.36	6/26/2022 2:23	70.79
6/27/2022 1:14	51.37	6/26/2022 23:56	82.09	6/25/2022 22:19	17.48	6/25/2022 21:28	5.27	6/26/2022 2:24	70.76
6/27/2022 1:15	51.33	6/26/2022 23:57	82.10	6/25/2022 22:20	17.55	6/25/2022 21:29	5.29	6/26/2022 2:25	70.74
6/27/2022 1:16	51.34	6/26/2022 23:58	82.08	6/25/2022 22:21	17.53	6/25/2022 21:30	5.38	6/26/2022 2:26	70.72
6/27/2022 1:17	51.31	6/26/2022 23:59	82.11	6/25/2022 22:22	17.56	6/25/2022 21:31	5.29	6/26/2022 2:27	70.67
6/27/2022 1:18	51.35	6/27/2022 0:00	82.09	6/25/2022 22:23	17.54	6/25/2022 21:32	5.27	6/26/2022 2:28	70.65
6/27/2022 1:19	51.36	6/27/2022 0:01	82.09	6/25/2022 22:24	17.48	6/25/2022 21:33	5.28	6/26/2022 2:29	70.59
6/27/2022 1:20	51.30	6/27/2022 0:02	82.07	6/25/2022 22:25	17.47	6/25/2022 21:34	5.33	6/26/2022 2:30	70.60
6/27/2022 1:21	51.34	6/27/2022 0:03	82.06	6/25/2022 22:26	17.49	6/25/2022 21:35	5.26	6/26/2022 2:31	70.52
6/27/2022 1:22	51.33	6/27/2022 0:04	82.04	6/25/2022 22:27	17.52	6/25/2022 21:36	5.24	6/26/2022 2:32	70.50
6/27/2022 1:23	51.34	6/27/2022 0:05	82.04	6/25/2022 22:28	17.47	6/25/2022 21:37	5.28	6/26/2022 2:33	70.44
6/27/2022 1:24	51.33	6/27/2022 0:06	82.02	6/25/2022 22:29	17.48	6/25/2022 21:38	5.24	6/26/2022 2:34	70.41
6/27/2022 1:25	51.32	6/27/2022 0:07	82.07	6/25/2022 22:30	17.50	6/25/2022 21:39	5.24	6/26/2022 2:35	70.45
6/27/2022 1:26	51.34	6/27/2022 0:08	82.06	6/25/2022 22:31	17.48	6/25/2022 21:40	5.26	6/26/2022 2:36	70.39
6/27/2022 1:27	51.30	6/27/2022 0:09	82.01	6/25/2022 22:32	17.50	6/25/2022 21:41	5.30	6/26/2022 2:37	70.35
6/27/2022 1:28	51.32	6/27/2022 0:10	82.08	6/25/2022 22:33	17.44	6/25/2022 21:42	5.22	6/26/2022 2:38	70.34
6/27/2022 1:29	51.35	6/27/2022 0:11	82.05	6/25/2022 22:34	17.43	6/25/2022 21:43	5.23	6/26/2022 2:39	70.33
6/27/2022 1:30	51.32	6/27/2022 0:12	82.03	6/25/2022 22:35	17.49	6/25/2022 21:44	5.25	6/26/2022 2:40	70.30
6/27/2022 1:31	51.33	6/27/2022 0:13	82.07	6/25/2022 22:36	17.49	6/25/2022 21:45	5.21	6/26/2022 2:41	70.27
6/27/2022 1:32	51.32	6/27/2022 0:14	82.07	6/25/2022 22:37	17.50	6/25/2022 21:46	5.23	6/26/2022 2:42	70.24

6/27/2022 1:33	51.35	6/27/2022 0:15	82.06	6/25/2022 22:38	17.45	6/25/2022 21:47	5.23	6/26/2022 2:43	70.23
6/27/2022 1:34	51.28	6/27/2022 0:16	82.03	6/25/2022 22:39	17.43	6/25/2022 21:48	5.23	6/26/2022 2:44	70.20
6/27/2022 1:35	51.30	6/27/2022 0:17	82.03	6/25/2022 22:40	17.50	6/25/2022 21:49	5.21	6/26/2022 2:45	70.18
6/27/2022 1:36	51.34	6/27/2022 0:18	82.05	6/25/2022 22:41	17.50	6/25/2022 21:50	5.23	6/26/2022 2:46	70.10
6/27/2022 1:37	51.32	6/27/2022 0:19	82.01	6/25/2022 22:42	17.47	6/25/2022 21:51	5.22	6/26/2022 2:47	70.08
6/27/2022 1:38	51.32	6/27/2022 0:20	82.08	6/25/2022 22:43	17.46	6/25/2022 21:52	5.19	6/26/2022 2:48	70.07
6/27/2022 1:39	51.32	6/27/2022 0:21	82.00	6/25/2022 22:44	17.48	6/25/2022 21:53	5.15	6/26/2022 2:49	70.05
6/27/2022 1:40	51.31	6/27/2022 0:22	82.00	6/25/2022 22:45	17.43	6/25/2022 21:54	5.21	6/26/2022 2:50	70.01
6/27/2022 1:41	51.32	6/27/2022 0:23	81.98	6/25/2022 22:46	17.49	6/25/2022 21:55	5.15	6/26/2022 2:51	69.98
6/27/2022 1:42	51.30	6/27/2022 0:24	82.01	6/25/2022 22:47	17.41	6/25/2022 21:56	5.14	6/26/2022 2:52	70.00
6/27/2022 1:43	51.31	6/27/2022 0:25	82.03	6/25/2022 22:48	17.45	6/25/2022 21:57	5.17	6/26/2022 2:53	69.97
6/27/2022 1:44	51.34	6/27/2022 0:26	82.00	6/25/2022 22:49	17.43	6/25/2022 21:58	5.25	6/26/2022 2:54	69.96
6/27/2022 1:45	51.30	6/27/2022 0:27	82.05	6/25/2022 22:50	17.46	6/25/2022 21:59	5.13	6/26/2022 2:55	69.92
6/27/2022 1:46	51.29	6/27/2022 0:28	82.00	6/25/2022 22:51	17.42	6/25/2022 22:00	5.14	6/26/2022 2:56	69.87
6/27/2022 1:47	51.31	6/27/2022 0:29	82.02	6/25/2022 22:52	17.43	6/25/2022 22:01	5.15	6/26/2022 2:57	69.86
6/27/2022 1:48	51.33	6/27/2022 0:30	82.00	6/25/2022 22:53	17.40	6/25/2022 22:02	5.12	6/26/2022 2:58	69.87
6/27/2022 1:49	51.33	6/27/2022 0:31	82.01	6/25/2022 22:54	17.41	6/25/2022 22:03	5.15	6/26/2022 2:59	69.80
6/27/2022 1:50	51.34	6/27/2022 0:32	82.06	6/25/2022 22:55	17.44	6/25/2022 22:04	5.16	6/26/2022 3:00	69.77
6/27/2022 1:51	51.29	6/27/2022 0:33	81.98	6/25/2022 22:56	17.41	6/25/2022 22:05	5.17	6/26/2022 3:01	69.74
6/27/2022 1:52	51.32	6/27/2022 0:34	82.04	6/25/2022 22:57	17.45	6/25/2022 22:06	5.11	6/26/2022 3:02	69.76
6/27/2022 1:53	51.29	6/27/2022 0:35	82.01	6/25/2022 22:58	17.39	6/25/2022 22:07	5.15	6/26/2022 3:03	69.71
6/27/2022 1:54	51.31	6/27/2022 0:36	82.00	6/25/2022 22:59	17.44	6/25/2022 22:08	5.60	6/26/2022 3:04	69.74
6/27/2022 1:55	51.28	6/27/2022 0:37	82.00	6/25/2022 23:00	17.42	6/25/2022 22:09	5.49	6/26/2022 3:05	69.67
6/27/2022 1:56	51.34	6/27/2022 0:38	82.05	6/25/2022 23:01	17.43	6/25/2022 22:10	5.42	6/26/2022 3:06	69.65
6/27/2022 1:57	51.28	6/27/2022 0:39	82.02	6/25/2022 23:02	17.44	6/25/2022 22:11	5.24	6/26/2022 3:07	69.67
6/27/2022 1:58	51.27	6/27/2022 0:40	81.99	6/25/2022 23:03	17.38	6/25/2022 22:12	5.19	6/26/2022 3:08	69.60
6/27/2022 1:59	51.32	6/27/2022 0:41	82.02	6/25/2022 23:04	17.40	6/25/2022 22:13	5.23	6/26/2022 3:09	69.61
6/27/2022 2:00	51.29	6/27/2022 0:42	81.99	6/25/2022 23:05	17.40	6/25/2022 22:14	5.46	6/26/2022 3:10	69.57
6/27/2022 2:01	51.31	6/27/2022 0:43	82.07	6/25/2022 23:06	17.42	6/25/2022 22:15	5.50	6/26/2022 3:11	69.59
6/27/2022 2:02	51.31	6/27/2022 0:44	82.02	6/25/2022 23:07	17.43	6/25/2022 22:16	5.66	6/26/2022 3:12	69.54
6/27/2022 2:03	51.30	6/27/2022 0:45	82.06	6/25/2022 23:08	17.39	6/25/2022 22:17	5.61	6/26/2022 3:13	69.54
6/27/2022 2:04	51.32	6/27/2022 0:46	82.01	6/25/2022 23:09	17.38	6/25/2022 22:18	5.41	6/26/2022 3:14	69.50
6/27/2022 2:05	51.31	6/27/2022 0:47	82.03	6/25/2022 23:10	17.35	6/25/2022 22:19	5.89	6/26/2022 3:15	69.49
6/27/2022 2:06	51.27	6/27/2022 0:48	82.02	6/25/2022 23:11	17.43	6/25/2022 22:20	5.64	6/26/2022 3:16	69.42
6/27/2022 2:07	51.27	6/27/2022 0:49	82.03	6/25/2022 23:12	17.36	6/25/2022 22:21	5.86	6/26/2022 3:17	69.44
6/27/2022 2:08	51.31	6/27/2022 0:50	82.00	6/25/2022 23:13	17.37	6/25/2022 22:22	6.17	6/26/2022 3:18	69.40
6/27/2022 2:09	51.28	6/27/2022 0:51	82.04	6/25/2022 23:14	17.38	6/25/2022 22:23	5.82	6/26/2022 3:19	69.43
6/27/2022 2:10	51.25	6/27/2022 0:52	81.99	6/25/2022 23:15	17.37	6/25/2022 22:24	5.69	6/26/2022 3:20	69.39
6/27/2022 2:11	51.32	6/27/2022 0:53	82.06	6/25/2022 23:16	17.42	6/25/2022 22:25	5.52	6/26/2022 3:21	69.37
6/27/2022 2:12	51.31	6/27/2022 0:54	82.03	6/25/2022 23:17	17.41	6/25/2022 22:26	5.51	6/26/2022 3:22	69.35
6/27/2022 2:13	51.31	6/27/2022 0:55	82.01	6/25/2022 23:18	17.40	6/25/2022 22:27	5.50	6/26/2022 3:23	69.37
6/27/2022 2:14	51.33	6/27/2022 0:56	82.03	6/25/2022 23:19	17.41	6/25/2022 22:28	5.40	6/26/2022 3:24	69.30
6/27/2022 2:15	51.29	6/27/2022 0:57	82.00	6/25/2022 23:20	17.34	6/25/2022 22:29	5.42	6/26/2022 3:25	69.31
6/27/2022 2:16	51.30	6/27/2022 0:58	81.99	6/25/2022 23:21	17.39	6/25/2022 22:30	5.42	6/26/2022 3:26	69.28
6/27/2022 2:17	51.27	6/27/2022 0:59	82.03	6/25/2022 23:22	17.39	6/25/2022 22:31	5.41	6/26/2022 3:27	69.27
6/27/2022 2:18	51.26	6/27/2022 1:00	82.03	6/25/2022 23:23	17.32	6/25/2022 22:32	5.31	6/26/2022 3:28	69.27
6/27/2022 2:19	51.27	6/27/2022 1:01	81.98	6/25/2022 23:24	17.37	6/25/2022 22:33	5.32	6/26/2022 3:29	69.25
6/27/2022 2:20	51.27	6/27/2022 1:02	81.99	6/25/2022 23:25	17.34	6/25/2022 22:34	5.38	6/26/2022 3:30	69.20
6/27/2022 2:21	51.29	6/27/2022 1:03	82.04	6/25/2022 23:26	17.42	6/25/2022 22:35	5.32	6/26/2022 3:31	69.20
6/27/2022 2:22	51.27	6/27/2022 1:04	82.02	6/25/2022 23:27	17.36	6/25/2022 22:36	5.29	6/26/2022 3:32	69.17
6/27/2022 2:23	51.31	6/27/2022 1:05	82.00	6/25/2022 23:28	17.34	6/25/2022 22:37	5.31	6/26/2022 3:33	69.14
6/27/2022 2:24	51.26	6/27/2022 1:06	82.00	6/25/2022 23:29	17.33	6/25/2022 22:38	5.29	6/26/2022 3:34	69.14
6/27/2022 2:25	51.26	6/27/2022 1:07	82.02	6/25/2022 23:30	17.34	6/25/2022 22:39	5.26	6/26/2022 3:35	69.14
6/27/2022 2:26	51.29	6/27/2022 1:08	81.99	6/25/2022 23:31	17.37	6/25/2022 22:40	5.27	6/26/2022 3:36	69.10
6/27/2022 2:27	51.28	6/27/2022 1:09	82.01	6/25/2022 23:32	17.37	6/25/2022 22:41	5.24	6/26/2022 3:37	69.08
6/27/2022 2:28	51.27	6/27/2022 1:10	81.97	6/25/2022 23:33	17.38	6/25/2022 22:42	5.30	6/26/2022 3:38	69.07
6/27/2022 2:29	51.27	6/27/2022 1:11	82.05	6/25/2022 23:34	17.37	6/25/2022 22:43	5.24	6/26/2022 3:39	69.04
6/27/2022 2:30	51.29	6/27/2022 1:12	82.02	6/25/2022 23:35	17.35	6/25/2022 22:44	5.24	6/26/2022 3:40	69.04
6/27/2022 2:31	51.30	6/27/2022 1:13	82.03	6/25/2022 23:36	17.38	6/25/2022 22:45	5.25	6/26/2022 3:41	69.02
6/27/2022 2:32	51.29	6/27/2022 1:14	82.02	6/25/2022 23:37	17.32	6/25/2022 22:46	5.21	6/26/2022 3:42	69.02
6/27/2022 2:33	51.31	6/27/2022 1:15	82.03	6/25/2022 23:38	17.34	6/25/2022 22:47	5.18	6/26/2022 3:43	69.01
6/27/2022 2:34	51.26	6/27/2022 1:16	82.04	6/25/2022 23:39	17.37	6/25/2022 22:48	5.24	6/26/2022 3:44	68.97
6/27/2022 2:35	51.26	6/27/2022 1:17	82.06	6/25/2022 23:40	17.34	6/25/2022 22:49	5.18	6/26/2022 3:45	68.97
6/27/2022 2:36	51.28	6/27/2022 1:18	82.03	6/25/2022 23:41	17.34	6/25/2022 22:50	5.21	6/26/2022 3:46	68.93
6/27/2022 2:37	51.25	6/27/2022 1:19	82.04	6/25/2022 23:42	17.35	6/25/2022 22:51	5.18	6/26/2022 3:47	68.94
6/27/2022 2:38	51.27	6/27/2022 1:20	82.01	6/25/2022 23:43	17.28	6/25/2022 22:52	5.20	6/26/2022 3:48	68.91
6/27/2022 2:39	51.30	6/27/2022 1:21	81.99	6/25/2022 23:44	17.35	6/25/2022 22:53	5.20	6/26/2022 3:49	68.94
6/27/2022 2:40	51.29	6/27/2022 1:22	81.98	6/25/2022 23:45	17.32	6/25/2022 22:54	5.27	6/26/2022 3:50	68.90
6/27/2022 2:41	51.25	6/27/2022 1:23	82.04	6/25/2022 23:46	17.32	6/25/2022 22:55	5.16	6/26/2022 3:51	68.85
6/27/2022 2:42	51.26	6/27/2022 1:24	82.02	6/25/2022 23:47	17.29	6/25/2022 22:56	5.13	6/26/2022 3:52	68.84
6/27/2022 2:43	51.28	6/27/2022 1:25	82.00	6/25/2022 23:48	17.32	6/25/2022 22:57	5.21	6/26/2022 3:53	68.85
6/27/2022 2:44	51.26	6/27/2022 1:26	81.97	6/25/2022 23:49	17.29	6/25/2022 22:58	5.22	6/26/2022 3:54	68.84
6/27/2022 2:45	51.24	6/27/2022 1:27	82.01	6/25/2022 23:50	17.26	6/25/2022 22:59	5.17	6/26/2022 3:55	68.83
6/27/2022 2:46	51.31	6/27/2022 1:28	82.06	6/25/2022 23:51	17.30	6/25/2022 23:00	5.32	6/26/2022 3:56	68.80
6/27/2022 2:47	51.25	6/27/2022 1:29	81.98	6/25/2022 23:52	17.29	6/25/2022 23:01	5.25	6/26/2022 3:57	68.83
6/27/2022 2:48	51.31	6/27/2022 1:30	82.03	6/25/2022 23:53	17.28	6/25/2022 23:02	5.82	6/26/2022 3:58	68.79
6/27/2022 2:49	51.25	6/27/2022 1:31	83.96	6/25/2022 23:54	17.32	6/25/2022 23:03	6.28	6/26/2022 3:59	68.78
6/27/2022 2:50	51.24	6/27/2022 1:32	83.55	6/25/2022 23:55	17.32	6/25/2022 23:04	6.66	6/26/2022 4:00	68.79
6/27/2022 2:51	51.28	6/27/2022 1:33	83.28	6/25/2022 23:56	17.27	6/25/2022 23:05	6.92	6/26/2022 4:01	68.72
6/27/2022 2:52	51.24	6/27/2022 1:34	83.07	6/25/2022 23:57	17.28	6/25/2022 23:06	7.17	6/26/2022 4:02	68.73
6/27/2022 2:53	51.25	6/27/2022 1:35	82.91	6/25/2022 23:58	17.27	6/25/2022 23:07	7.12	6/26/2022 4:03	68.73
6/27/2022 2:54	51.25	6/27/2022 1:36	82.77	6/25/2022 23:59	17.29	6/25/2022 23:08	6.58	6/26/2022 4:04	68.72
6/27/2022 2:55	51.29	6/27/2022 1:37	82.75	6/26/2022 0:00	17.36	6/25/2022 23:09	6.80	6/26/2022 4:05	68.73
6/27/2022 2:56	51.29	6/27/2022 1:38	82.64	6/26/2022 0:01	17.33	6/25/2022 23:10	6.99	6/26/2022 4:06	68.68
6/27/2022 2:57	51.25	6/27/2022 1:39	82.53	6/26/2022 0:02	17.24	6/25/2022 23:11	7.16	6/26/2022 4:07	68.66
6/27/2022 2:58	52.43	6/27/2022 1:40	82.50	6/26/2022 0:03	17.29	6/25/2022 23:12	7.24	6/26/2022 4:08	68.66
6/27/2022 2:59	54.69	6/27/2022 1:41	82.44	6/26/2022 0:04	17.28	6/25/2022 23:13	7.31	6/26/2022 4:09	68.65
6/27/2022 3:00	55.68	6/27/2022 1:42	82.40	6/26/2022 0:05	17.24	6/25/2022 23:14	7.41	6/26/2022 4:10	68.66

6/27/2022 3:01	56.25	6/27/2022 1:43	82.32	6/26/2022 0:06	17.27	6/25/2022 23:15	7.47	6/26/2022 4:11	68.61
6/27/2022 3:02	54.46	6/27/2022 1:44	82.35	6/26/2022 0:07	17.28	6/25/2022 23:16	7.58	6/26/2022 4:12	68.58
6/27/2022 3:03	53.29	6/27/2022 1:45	82.26	6/26/2022 0:08	17.21	6/25/2022 23:17	7.85	6/26/2022 4:13	68.57
6/27/2022 3:04	52.81	6/27/2022 1:46	82.29	6/26/2022 0:09	17.29	6/25/2022 23:18	7.77	6/26/2022 4:14	68.61
6/27/2022 3:05	52.53	6/27/2022 1:47	82.21	6/26/2022 0:10	17.31	6/25/2022 23:19	7.14	6/26/2022 4:15	68.58
6/27/2022 3:06	52.40	6/27/2022 1:48	82.24	6/26/2022 0:11	17.24	6/25/2022 23:20	6.84	6/26/2022 4:16	68.57
6/27/2022 3:07	52.30	6/27/2022 1:49	82.20	6/26/2022 0:12	17.29	6/25/2022 23:21	6.57	6/26/2022 4:17	68.56
6/27/2022 3:08	52.19	6/27/2022 1:50	82.21	6/26/2022 0:13	17.23	6/25/2022 23:22	6.46	6/26/2022 4:18	68.54
6/27/2022 3:09	52.12	6/27/2022 1:51	82.17	6/26/2022 0:14	17.23	6/25/2022 23:23	6.39	6/26/2022 4:19	68.56
6/27/2022 3:10	52.06	6/27/2022 1:52	82.18	6/26/2022 0:15	17.24	6/25/2022 23:24	6.29	6/26/2022 4:20	68.51
6/27/2022 3:11	52.02	6/27/2022 1:53	82.19	6/26/2022 0:16	17.23	6/25/2022 23:25	6.28	6/26/2022 4:21	68.50
6/27/2022 3:12	52.01	6/27/2022 1:54	82.13	6/26/2022 0:17	17.25	6/25/2022 23:26	6.34	6/26/2022 4:22	68.50
6/27/2022 3:13	51.89	6/27/2022 1:55	82.11	6/26/2022 0:18	17.26	6/25/2022 23:27	6.49	6/26/2022 4:23	68.47
6/27/2022 3:14	51.91	6/27/2022 1:56	82.12	6/26/2022 0:19	17.24	6/25/2022 23:28	6.26	6/26/2022 4:24	68.50
6/27/2022 3:15	51.86	6/27/2022 1:57	82.10	6/26/2022 0:20	17.25	6/25/2022 23:29	6.24	6/26/2022 4:25	68.45
6/27/2022 3:16	51.85	6/27/2022 1:58	82.15	6/26/2022 0:21	17.26	6/25/2022 23:30	6.20	6/26/2022 4:26	68.46
6/27/2022 3:17	51.84	6/27/2022 1:59	82.11	6/26/2022 0:22	17.25	6/25/2022 23:31	6.08	6/26/2022 4:27	68.44
6/27/2022 3:18	51.80	6/27/2022 2:00	82.11	6/26/2022 0:23	17.27	6/25/2022 23:32	6.05	6/26/2022 4:28	68.42
6/27/2022 3:19	51.81	6/27/2022 2:01	82.08	6/26/2022 0:24	17.19	6/25/2022 23:33	6.11	6/26/2022 4:29	68.46
6/27/2022 3:20	51.75	6/27/2022 2:02	82.08	6/26/2022 0:25	17.26	6/25/2022 23:34	5.98	6/26/2022 4:30	68.43
6/27/2022 3:21	51.77	6/27/2022 2:03	82.08	6/26/2022 0:26	17.27	6/25/2022 23:35	6.03	6/26/2022 4:31	68.39
6/27/2022 3:22	51.75	6/27/2022 2:04	82.08	6/26/2022 0:27	17.23	6/25/2022 23:36	5.97	6/26/2022 4:32	68.38
6/27/2022 3:23	51.74	6/27/2022 2:05	82.08	6/26/2022 0:28	17.25	6/25/2022 23:37	5.93	6/26/2022 4:33	68.40
6/27/2022 3:24	51.75	6/27/2022 2:06	82.07	6/26/2022 0:29	17.26	6/25/2022 23:38	5.85	6/26/2022 4:34	68.38
6/27/2022 3:25	51.73	6/27/2022 2:07	82.07	6/26/2022 0:30	17.22	6/25/2022 23:39	5.92	6/26/2022 4:35	68.37
6/27/2022 3:26	51.72	6/27/2022 2:08	82.03	6/26/2022 0:31	17.22	6/25/2022 23:40	5.94	6/26/2022 4:36	68.37
6/27/2022 3:27	51.73	6/27/2022 2:09	82.05	6/26/2022 0:32	17.23	6/25/2022 23:41	5.83	6/26/2022 4:37	68.35
6/27/2022 3:28	51.68	6/27/2022 2:10	82.07	6/26/2022 0:33	17.23	6/25/2022 23:42	5.79	6/26/2022 4:38	68.31
6/27/2022 3:29	51.66	6/27/2022 2:11	82.06	6/26/2022 0:34	17.24	6/25/2022 23:43	5.85	6/26/2022 4:39	68.31
6/27/2022 3:30	51.70	6/27/2022 2:12	82.09	6/26/2022 0:35	17.17	6/25/2022 23:44	5.83	6/26/2022 4:40	68.33
6/27/2022 3:31	51.66	6/27/2022 2:13	82.04	6/26/2022 0:36	17.25	6/25/2022 23:45	5.76	6/26/2022 4:41	68.35
6/27/2022 3:32	51.66	6/27/2022 2:14	82.00	6/26/2022 0:37	17.19	6/25/2022 23:46	5.81	6/26/2022 4:42	68.32
6/27/2022 3:33	51.65	6/27/2022 2:15	82.07	6/26/2022 0:38	17.23	6/25/2022 23:47	5.75	6/26/2022 4:43	68.26
6/27/2022 3:34	51.63	6/27/2022 2:16	82.02	6/26/2022 0:39	17.21	6/25/2022 23:48	5.71	6/26/2022 4:44	68.28
6/27/2022 3:35	51.60	6/27/2022 2:17	82.00	6/26/2022 0:40	17.26	6/25/2022 23:49	5.73	6/26/2022 4:45	68.28
6/27/2022 3:36	51.63	6/27/2022 2:18	82.04	6/26/2022 0:41	17.19	6/25/2022 23:50	5.78	6/26/2022 4:46	68.28
6/27/2022 3:37	51.57	6/27/2022 2:19	82.06	6/26/2022 0:42	17.22	6/25/2022 23:51	5.73	6/26/2022 4:47	68.28
6/27/2022 3:38	51.62	6/27/2022 2:20	82.06	6/26/2022 0:43	17.16	6/25/2022 23:52	5.65	6/26/2022 4:48	68.25
6/27/2022 3:39	51.65	6/27/2022 2:21	82.04	6/26/2022 0:44	17.20	6/25/2022 23:53	5.70	6/26/2022 4:49	68.25
6/27/2022 3:40	51.60	6/27/2022 2:22	82.03	6/26/2022 0:45	17.20	6/25/2022 23:54	5.65	6/26/2022 4:50	68.20
6/27/2022 3:41	51.57	6/27/2022 2:23	82.03	6/26/2022 0:46	17.17	6/25/2022 23:55	5.60	6/26/2022 4:51	68.21
6/27/2022 3:42	51.60	6/27/2022 2:24	82.05	6/26/2022 0:47	17.23	6/25/2022 23:56	5.66	6/26/2022 4:52	68.18
6/27/2022 3:43	51.58	6/27/2022 2:25	82.02	6/26/2022 0:48	17.17	6/25/2022 23:57	5.62	6/26/2022 4:53	68.20
6/27/2022 3:44	51.58	6/27/2022 2:26	82.07	6/26/2022 0:49	17.19	6/25/2022 23:58	5.71	6/26/2022 4:54	68.21
6/27/2022 3:45	51.52	6/27/2022 2:27	82.04	6/26/2022 0:50	17.17	6/25/2022 23:59	5.76	6/26/2022 4:55	68.21
6/27/2022 3:46	51.55	6/27/2022 2:28	82.05	6/26/2022 0:51	17.18	6/26/2022 0:00	5.63	6/26/2022 4:56	68.17
6/27/2022 3:47	51.57	6/27/2022 2:29	82.04	6/26/2022 0:52	17.19	6/26/2022 0:01	5.62	6/26/2022 4:57	68.13
6/27/2022 3:48	51.54	6/27/2022 2:30	82.00	6/26/2022 0:53	17.19	6/26/2022 0:02	5.61	6/26/2022 4:58	68.14
6/27/2022 3:49	51.52	6/27/2022 2:31	82.00	6/26/2022 0:54	17.18	6/26/2022 0:03	5.51	6/26/2022 4:59	68.17
6/27/2022 3:50	51.53	6/27/2022 2:32	82.00	6/26/2022 0:55	17.19	6/26/2022 0:04	5.58	6/26/2022 5:00	68.16
6/27/2022 3:51	51.52	6/27/2022 2:33	82.00	6/26/2022 0:56	17.15	6/26/2022 0:05	5.93	6/26/2022 5:01	68.14
6/27/2022 3:52	51.53	6/27/2022 2:34	82.03	6/26/2022 0:57	17.15	6/26/2022 0:06	5.77	6/26/2022 5:02	68.10
6/27/2022 3:53	51.53	6/27/2022 2:35	82.00	6/26/2022 0:58	17.16	6/26/2022 0:07	5.74	6/26/2022 5:03	68.11
6/27/2022 3:54	51.55	6/27/2022 2:36	81.99	6/26/2022 0:59	17.16	6/26/2022 0:08	5.73	6/26/2022 5:04	68.10
6/27/2022 3:55	51.50	6/27/2022 2:37	82.04	6/26/2022 1:00	17.16	6/26/2022 0:09	5.63	6/26/2022 5:05	68.09
6/27/2022 3:56	51.53	6/27/2022 2:38	82.03	6/26/2022 1:01	17.18	6/26/2022 0:10	5.68	6/26/2022 5:06	68.04
6/27/2022 3:57	51.55	6/27/2022 2:39	82.04	6/26/2022 1:02	17.14	6/26/2022 0:11	5.63	6/26/2022 5:07	68.07
6/27/2022 3:58	51.53	6/27/2022 2:40	81.99	6/26/2022 1:03	17.17	6/26/2022 0:12	5.61	6/26/2022 5:08	68.07
6/27/2022 3:59	51.53	6/27/2022 2:41	82.04	6/26/2022 1:04	17.20	6/26/2022 0:13	5.64	6/26/2022 5:09	68.05
6/27/2022 4:00	51.47	6/27/2022 2:42	82.03	6/26/2022 1:05	17.18	6/26/2022 0:14	5.65	6/26/2022 5:10	67.97
6/27/2022 4:01	51.50	6/27/2022 2:43	82.04	6/26/2022 1:06	17.15	6/26/2022 0:15	5.65	6/26/2022 5:11	68.05
6/27/2022 4:02	51.49	6/27/2022 2:44	82.03	6/26/2022 1:07	17.14	6/26/2022 0:16	5.67	6/26/2022 5:12	68.04
6/27/2022 4:03	51.51	6/27/2022 2:45	81.96	6/26/2022 1:08	17.19	6/26/2022 0:17	5.59	6/26/2022 5:13	68.04
6/27/2022 4:04	51.49	6/27/2022 2:46	82.00	6/26/2022 1:09	17.20	6/26/2022 0:18	5.60	6/26/2022 5:14	68.03
6/27/2022 4:05	51.49	6/27/2022 2:47	82.02	6/26/2022 1:10	17.18	6/26/2022 0:19	5.55	6/26/2022 5:15	68.00
6/27/2022 4:06	51.48	6/27/2022 2:48	82.06	6/26/2022 1:11	17.14	6/26/2022 0:20	5.58	6/26/2022 5:16	68.01
6/27/2022 4:07	51.48	6/27/2022 2:49	82.00	6/26/2022 1:12	17.17	6/26/2022 0:21	5.57	6/26/2022 5:17	68.00
6/27/2022 4:08	51.50	6/27/2022 2:50	82.01	6/26/2022 1:13	17.18	6/26/2022 0:22	5.60	6/26/2022 5:18	67.99
6/27/2022 4:09	51.48	6/27/2022 2:51	81.97	6/26/2022 1:14	17.20	6/26/2022 0:23	5.61	6/26/2022 5:19	67.98
6/27/2022 4:10	51.48	6/27/2022 2:52	82.01	6/26/2022 1:15	17.17	6/26/2022 0:24	5.61	6/26/2022 5:20	67.98
6/27/2022 4:11	51.47	6/27/2022 2:53	82.03	6/26/2022 1:16	17.19	6/26/2022 0:25	5.53	6/26/2022 5:21	67.97
6/27/2022 4:12	51.43	6/27/2022 2:54	82.00	6/26/2022 1:17	17.16	6/26/2022 0:26	5.52	6/26/2022 5:22	67.95
6/27/2022 4:13	51.46	6/27/2022 2:55	82.03	6/26/2022 1:18	17.18	6/26/2022 0:27	5.54	6/26/2022 5:23	67.95
6/27/2022 4:14	51.49	6/27/2022 2:56	82.05	6/26/2022 1:19	17.16	6/26/2022 0:28	5.45	6/26/2022 5:24	67.99
6/27/2022 4:15	51.49	6/27/2022 2:57	82.00	6/26/2022 1:20	17.16	6/26/2022 0:29	5.45	6/26/2022 5:25	67.94
6/27/2022 4:16	51.44	6/27/2022 2:58	82.03	6/26/2022 1:21	17.15	6/26/2022 0:30	5.49	6/26/2022 5:26	67.92
6/27/2022 4:17	51.49	6/27/2022 2:59	82.00	6/26/2022 1:22	17.16	6/26/2022 0:31	5.41	6/26/2022 5:27	67.90
6/27/2022 4:18	51.46	6/27/2022 3:00	82.00	6/26/2022 1:23	17.15	6/26/2022 0:32	5.44	6/26/2022 5:28	67.91
6/27/2022 4:19	51.43	6/27/2022 3:01	82.02	6/26/2022 1:24	17.12	6/26/2022 0:33	5.46	6/26/2022 5:29	67.92
6/27/2022 4:20	51.48	6/27/2022 3:02	82.02	6/26/2022 1:25	17.10	6/26/2022 0:34	5.47	6/26/2022 5:30	67.89
6/27/2022 4:21	51.45	6/27/2022 3:03	82.02	6/26/2022 1:26	17.14	6/26/2022 0:35	5.43	6/26/2022 5:31	67.87
6/27/2022 4:22	51.46	6/27/2022 3:04	82.04	6/26/2022 1:27	17.14	6/26/2022 0:36	5.42	6/26/2022 5:32	67.87
6/27/2022 4:23	51.45	6/27/2022 3:05	82.01	6/26/2022 1:28	17.17	6/26/2022 0:37	5.40	6/26/2022 5:33	67.89
6/27/2022 4:24	51.47	6/27/2022 3:06	82.04	6/26/2022 1:29	17.13	6/26/2022 0:38	5.35	6/26/2022 5:34	67.85
6/27/2022 4:25	51.44	6/27/2022 3:07	82.01	6/26/2022 1:30	17.15	6/26/2022 0:39	5.34	6/26/2022 5:35	67.86
6/27/2022 4:26	51.49	6/27/2022 3:08	82.02	6/26/2022 1:31	17.16	6/26/2022 0:40	5.40	6/26/2022 5:36	67.84
6/27/2022 4:27	51.44	6/27/2022 3:09	82.00	6/26/2022 1:32	17.11	6/26/2022 0:41	5.37	6/26/2022 5:37	67.84
6/27/2022 4:28	51.43	6/27/2022 3:10	82.01	6/26/2022 1:33	17.17	6/26/2022 0:42	5.32	6/26/2022 5:38	67.83

6/27/2022 4:29	51.44	6/27/2022 3:11	82.00	6/26/2022 1:34	17.12	6/26/2022 0:43	5.33	6/26/2022 5:39	67.84
6/27/2022 4:30	51.42	6/27/2022 3:12	82.02	6/26/2022 1:35	17.15	6/26/2022 0:44	5.36	6/26/2022 5:40	67.80
6/27/2022 4:31	51.42	6/27/2022 3:13	82.02	6/26/2022 1:36	17.12	6/26/2022 0:45	5.28	6/26/2022 5:41	67.81
6/27/2022 4:32	51.40	6/27/2022 3:14	82.02	6/26/2022 1:37	17.12	6/26/2022 0:46	5.27	6/26/2022 5:42	67.80
6/27/2022 4:33	51.44	6/27/2022 3:15	82.01	6/26/2022 1:38	17.13	6/26/2022 0:47	5.37	6/26/2022 5:43	67.76
6/27/2022 4:34	51.45	6/27/2022 3:16	82.03	6/26/2022 1:39	17.13	6/26/2022 0:48	5.30	6/26/2022 5:44	67.80
6/27/2022 4:35	51.46	6/27/2022 3:17	82.01	6/26/2022 1:40	17.15	6/26/2022 0:49	5.28	6/26/2022 5:45	67.80
6/27/2022 4:36	51.43	6/27/2022 3:18	82.01	6/26/2022 1:41	17.16	6/26/2022 0:50	5.27	6/26/2022 5:46	67.77
6/27/2022 4:37	51.42	6/27/2022 3:19	82.04	6/26/2022 1:42	17.12	6/26/2022 0:51	5.26	6/26/2022 5:47	67.78
6/27/2022 4:38	51.42	6/27/2022 3:20	82.05	6/26/2022 1:43	17.21	6/26/2022 0:52	5.26	6/26/2022 5:48	67.77
6/27/2022 4:39	51.44	6/27/2022 3:21	82.01	6/26/2022 1:44	17.12	6/26/2022 0:53	5.26	6/26/2022 5:49	67.77
6/27/2022 4:40	51.42	6/27/2022 3:22	82.00	6/26/2022 1:45	17.14	6/26/2022 0:54	5.29	6/26/2022 5:50	67.78
6/27/2022 4:41	51.41	6/27/2022 3:23	82.01	6/26/2022 1:46	17.13	6/26/2022 0:55	5.24	6/26/2022 5:51	67.76
6/27/2022 4:42	51.42	6/27/2022 3:24	82.03	6/26/2022 1:47	17.18	6/26/2022 0:56	5.21	6/26/2022 5:52	67.75
6/27/2022 4:43	51.43	6/27/2022 3:25	82.03	6/26/2022 1:48	17.14	6/26/2022 0:57	5.23	6/26/2022 5:53	67.71
6/27/2022 4:44	51.42	6/27/2022 3:26	82.02	6/26/2022 1:49	17.13	6/26/2022 0:58	5.17	6/26/2022 5:54	67.71
6/27/2022 4:45	51.42	6/27/2022 3:27	82.05	6/26/2022 1:50	17.17	6/26/2022 0:59	5.19	6/26/2022 5:55	67.71
6/27/2022 4:46	51.41	6/27/2022 3:28	82.00	6/26/2022 1:51	17.12	6/26/2022 1:00	5.18	6/26/2022 5:56	67.72
6/27/2022 4:47	51.40	6/27/2022 3:29	81.98	6/26/2022 1:52	17.14	6/26/2022 1:01	5.24	6/26/2022 5:57	67.73
6/27/2022 4:48	51.40	6/27/2022 3:30	82.00	6/26/2022 1:53	17.13	6/26/2022 1:02	5.13	6/26/2022 5:58	67.68
6/27/2022 4:49	51.43	6/27/2022 3:31	82.05	6/26/2022 1:54	17.14	6/26/2022 1:03	7.02	6/26/2022 5:59	67.71
6/27/2022 4:50	51.39	6/27/2022 3:32	82.04	6/26/2022 1:55	17.14	6/26/2022 1:04	7.97	6/26/2022 6:00	67.71
6/27/2022 4:51	51.37	6/27/2022 3:33	81.99	6/26/2022 1:56	17.14	6/26/2022 1:05	8.55	6/26/2022 6:01	67.68
6/27/2022 4:52	51.41	6/27/2022 3:34	82.05	6/26/2022 1:57	17.12	6/26/2022 1:06	9.00	6/26/2022 6:02	67.69
6/27/2022 4:53	51.40	6/27/2022 3:35	82.03	6/26/2022 1:58	17.12	6/26/2022 1:07	9.37	6/26/2022 6:03	67.66
6/27/2022 4:54	51.40	6/27/2022 3:36	82.00	6/26/2022 1:59	17.11	6/26/2022 1:08	9.76	6/26/2022 6:04	67.67
6/27/2022 4:55	51.39	6/27/2022 3:37	82.02	6/26/2022 2:00	17.09	6/26/2022 1:09	10.06	6/26/2022 6:05	67.68
6/27/2022 4:56	51.38	6/27/2022 3:38	81.99	6/26/2022 2:01	17.13	6/26/2022 1:10	10.38	6/26/2022 6:06	67.67
6/27/2022 4:57	51.38	6/27/2022 3:39	82.00	6/26/2022 2:02	17.12	6/26/2022 1:11	10.53	6/26/2022 6:07	67.66
6/27/2022 4:58	51.38	6/27/2022 3:40	82.01	6/26/2022 2:03	17.11	6/26/2022 1:12	10.77	6/26/2022 6:08	67.62
6/27/2022 4:59	51.40	6/27/2022 3:41	81.99	6/26/2022 2:04	17.11	6/26/2022 1:13	11.02	6/26/2022 6:09	67.64
6/27/2022 5:00	51.39	6/27/2022 3:42	81.97	6/26/2022 2:05	17.12	6/26/2022 1:14	11.20	6/26/2022 6:10	67.64
6/27/2022 5:01	51.34	6/27/2022 3:43	81.99	6/26/2022 2:06	17.10	6/26/2022 1:15	11.46	6/26/2022 6:11	67.60
6/27/2022 5:02	51.38	6/27/2022 3:44	82.01	6/26/2022 2:07	17.17	6/26/2022 1:16	11.53	6/26/2022 6:12	67.61
6/27/2022 5:03	51.42	6/27/2022 3:45	81.98	6/26/2022 2:08	17.12	6/26/2022 1:17	11.74	6/26/2022 6:13	67.63
6/27/2022 5:04	51.40	6/27/2022 3:46	81.97	6/26/2022 2:09	17.11	6/26/2022 1:18	11.90	6/26/2022 6:14	67.59
6/27/2022 5:05	51.37	6/27/2022 3:47	81.99	6/26/2022 2:10	17.08	6/26/2022 1:19	12.06	6/26/2022 6:15	67.56
6/27/2022 5:06	51.38	6/27/2022 3:48	82.02	6/26/2022 2:11	17.16	6/26/2022 1:20	12.27	6/26/2022 6:16	67.61
6/27/2022 5:07	51.39	6/27/2022 3:49	82.00	6/26/2022 2:12	17.09	6/26/2022 1:21	12.39	6/26/2022 6:17	67.59
6/27/2022 5:08	51.41	6/27/2022 3:50	82.02	6/26/2022 2:13	17.10	6/26/2022 1:22	12.51	6/26/2022 6:18	67.59
6/27/2022 5:09	51.39	6/27/2022 3:51	81.96	6/26/2022 2:14	17.16	6/26/2022 1:23	12.96	6/26/2022 6:19	67.58
6/27/2022 5:10	51.37	6/27/2022 3:52	82.00	6/26/2022 2:15	17.13	6/26/2022 1:24	13.25	6/26/2022 6:20	67.61
6/27/2022 5:11	51.34	6/27/2022 3:53	82.03	6/26/2022 2:16	17.12	6/26/2022 1:25	13.47	6/26/2022 6:21	67.57
6/27/2022 5:12	51.37	6/27/2022 3:54	82.02	6/26/2022 2:17	17.12	6/26/2022 1:26	13.75	6/26/2022 6:22	67.53
6/27/2022 5:13	51.36	6/27/2022 3:55	81.99	6/26/2022 2:18	17.14	6/26/2022 1:27	13.93	6/26/2022 6:23	67.58
6/27/2022 5:14	51.35	6/27/2022 3:56	82.02	6/26/2022 2:19	17.08	6/26/2022 1:28	14.07	6/26/2022 6:24	67.52
6/27/2022 5:15	51.38	6/27/2022 3:57	82.00	6/26/2022 2:20	17.08	6/26/2022 1:29	14.27	6/26/2022 6:25	67.55
6/27/2022 5:16	51.37	6/27/2022 3:58	81.99	6/26/2022 2:21	17.11	6/26/2022 1:30	14.47	6/26/2022 6:26	67.56
6/27/2022 5:17	51.36	6/27/2022 3:59	82.00	6/26/2022 2:22	17.12	6/26/2022 1:31	14.64	6/26/2022 6:27	67.55
6/27/2022 5:18	51.35	6/27/2022 4:00	82.02	6/26/2022 2:23	17.07	6/26/2022 1:32	14.75	6/26/2022 6:28	67.53
6/27/2022 5:19	51.34	6/27/2022 4:01	81.99	6/26/2022 2:24	17.11	6/26/2022 1:33	14.97	6/26/2022 6:29	67.54
6/27/2022 5:20	51.38	6/27/2022 4:02	82.02	6/26/2022 2:25	17.09	6/26/2022 1:34	15.09	6/26/2022 6:30	67.53
6/27/2022 5:21	51.41	6/27/2022 4:03	82.03	6/26/2022 2:26	17.08	6/26/2022 1:35	15.20	6/26/2022 6:31	67.52
6/27/2022 5:22	51.35	6/27/2022 4:04	81.97	6/26/2022 2:27	17.11	6/26/2022 1:36	15.43	6/26/2022 6:32	67.51
6/27/2022 5:23	51.34	6/27/2022 4:05	82.01	6/26/2022 2:28	17.05	6/26/2022 1:37	15.57	6/26/2022 6:33	67.51
6/27/2022 5:24	51.37	6/27/2022 4:06	82.00	6/26/2022 2:29	17.09	6/26/2022 1:38	15.69	6/26/2022 6:34	67.51
6/27/2022 5:25	51.32	6/27/2022 4:07	82.01	6/26/2022 2:30	17.14	6/26/2022 1:39	15.83	6/26/2022 6:35	67.51
6/27/2022 5:26	51.36	6/27/2022 4:08	82.02	6/26/2022 2:31	17.07	6/26/2022 1:40	15.96	6/26/2022 6:36	67.50
6/27/2022 5:27	51.35	6/27/2022 4:09	82.01	6/26/2022 2:32	17.05	6/26/2022 1:41	16.09	6/26/2022 6:37	67.46
6/27/2022 5:28	51.35	6/27/2022 4:10	82.03	6/26/2022 2:33	17.11	6/26/2022 1:42	16.18	6/26/2022 6:38	67.44
6/27/2022 5:29	51.35	6/27/2022 4:11	81.99	6/26/2022 2:34	17.06	6/26/2022 1:43	16.37	6/26/2022 6:39	67.43
6/27/2022 5:30	51.34	6/27/2022 4:12	82.00	6/26/2022 2:35	17.08	6/26/2022 1:44	16.49	6/26/2022 6:40	67.48
6/27/2022 5:31	51.36	6/27/2022 4:13	82.03	6/26/2022 2:36	17.11	6/26/2022 1:45	16.67	6/26/2022 6:41	67.44
6/27/2022 5:32	51.38	6/27/2022 4:14	81.97	6/26/2022 2:37	17.08	6/26/2022 1:46	16.76	6/26/2022 6:42	67.45
6/27/2022 5:33	51.35	6/27/2022 4:15	82.02	6/26/2022 2:38	17.09	6/26/2022 1:47	16.91	6/26/2022 6:43	67.45
6/27/2022 5:34	51.39	6/27/2022 4:16	82.02	6/26/2022 2:39	17.08	6/26/2022 1:48	17.04	6/26/2022 6:44	67.42
6/27/2022 5:35	51.32	6/27/2022 4:17	82.00	6/26/2022 2:40	17.06	6/26/2022 1:49	17.14	6/26/2022 6:45	67.44
6/27/2022 5:36	51.34	6/27/2022 4:18	82.00	6/26/2022 2:41	17.08	6/26/2022 1:50	17.24	6/26/2022 6:46	67.45
6/27/2022 5:37	51.35	6/27/2022 4:19	82.00	6/26/2022 2:42	17.07	6/26/2022 1:51	17.39	6/26/2022 6:47	67.44
6/27/2022 5:38	51.32	6/27/2022 4:20	82.01	6/26/2022 2:43	17.07	6/26/2022 1:52	17.47	6/26/2022 6:48	67.41
6/27/2022 5:39	51.33	6/27/2022 4:21	81.97	6/26/2022 2:44	17.08	6/26/2022 1:53	17.60	6/26/2022 6:49	67.42
6/27/2022 5:40	51.35	6/27/2022 4:22	82.00	6/26/2022 2:45	17.09	6/26/2022 1:54	17.66	6/26/2022 6:50	67.37
6/27/2022 5:41	51.36	6/27/2022 4:23	82.01	6/26/2022 2:46	17.13	6/26/2022 1:55	17.79	6/26/2022 6:51	67.38
6/27/2022 5:42	51.36	6/27/2022 4:24	82.03	6/26/2022 2:47	17.11	6/26/2022 1:56	17.88	6/26/2022 6:52	67.42
6/27/2022 5:43	51.36	6/27/2022 4:25	82.01	6/26/2022 2:48	17.05	6/26/2022 1:57	17.95	6/26/2022 6:53	67.39
6/27/2022 5:44	51.35	6/27/2022 4:26	82.01	6/26/2022 2:49	17.05	6/26/2022 1:58	18.13	6/26/2022 6:54	67.37
6/27/2022 5:45	51.31	6/27/2022 4:27	82.06	6/26/2022 2:50	17.08	6/26/2022 1:59	18.21	6/26/2022 6:55	68.55
6/27/2022 5:46	51.32	6/27/2022 4:28	81.99	6/26/2022 2:51	17.08	6/26/2022 2:00	18.28	6/26/2022 6:56	72.92
6/27/2022 5:47	51.35	6/27/2022 4:29	82.03	6/26/2022 2:52	17.10	6/26/2022 2:01	18.39	6/26/2022 6:57	72.74
6/27/2022 5:48	51.35	6/27/2022 4:30	81.99	6/26/2022 2:53	17.11	6/26/2022 2:02	18.49	6/26/2022 6:58	72.61
6/27/2022 5:49	51.35	6/27/2022 4:31	82.00	6/26/2022 2:54	17.02	6/26/2022 2:03	18.64	6/26/2022 6:59	72.52
6/27/2022 5:50	51.35	6/27/2022 4:32	81.99	6/26/2022 2:55	17.03	6/26/2022 2:04	18.73	6/26/2022 7:00	72.45
6/27/2022 5:51	51.35	6/27/2022 4:33	82.00	6/26/2022 2:56	17.10	6/26/2022 2:05	18.84	6/26/2022 7:01	72.34
6/27/2022 5:52	51.33	6/27/2022 4:34	82.05	6/26/2022 2:57	17.06	6/26/2022 2:06	18.90	6/26/2022 7:02	72.30
6/27/2022 5:53	51.36	6/27/2022 4:35	82.04	6/26/2022 2:58	17.06	6/26/2022 2:07	19.08	6/26/2022 7:03	72.20
6/27/2022 5:54	51.36	6/27/2022 4:36	81.99	6/26/2022 2:59	17.10	6/26/2022 2:08	19.14	6/26/2022 7:04	72.14
6/27/2022 5:55	51.37	6/27/2022 4:37	81.99	6/26/2022 3:00	17.05	6/26/2022 2:09	19.26	6/26/2022 7:05	72.06
6/27/2022 5:56	51.37	6/27/2022 4:38	81.99	6/26/2022 3:01	17.08	6/26/2022 2:10	19.36	6/26/2022 7:06	71.98

6/27/2022 5:57	51.33	6/27/2022 4:39	81.98	6/26/2022 3:02	17.05	6/26/2022 2:11	19.44	6/26/2022 7:07	71.92
6/27/2022 5:58	51.35	6/27/2022 4:40	82.02	6/26/2022 3:03	17.06	6/26/2022 2:12	19.58	6/26/2022 7:08	71.82
6/27/2022 5:59	51.37	6/27/2022 4:41	81.98	6/26/2022 3:04	17.08	6/26/2022 2:13	19.63	6/26/2022 7:09	71.79
6/27/2022 6:00	51.38	6/27/2022 4:42	82.03	6/26/2022 3:05	17.07	6/26/2022 2:14	19.79	6/26/2022 7:10	71.75
6/27/2022 6:01	51.35	6/27/2022 4:43	81.99	6/26/2022 3:06	17.07	6/26/2022 2:15	19.84	6/26/2022 7:11	71.67
6/27/2022 6:02	51.33	6/27/2022 4:44	81.96	6/26/2022 3:07	17.03	6/26/2022 2:16	19.92	6/26/2022 7:12	71.59
6/27/2022 6:03	51.33	6/27/2022 4:45	81.98	6/26/2022 3:08	17.07	6/26/2022 2:17	20.03	6/26/2022 7:13	71.56
6/27/2022 6:04	51.37	6/27/2022 4:46	81.99	6/26/2022 3:09	17.06	6/26/2022 2:18	20.12	6/26/2022 7:14	71.51
6/27/2022 6:05	51.34	6/27/2022 4:47	82.01	6/26/2022 3:10	17.03	6/26/2022 2:19	20.20	6/26/2022 7:15	71.45
6/27/2022 6:06	51.35	6/27/2022 4:48	82.00	6/26/2022 3:11	17.04	6/26/2022 2:20	20.33	6/26/2022 7:16	71.36
6/27/2022 6:07	51.32	6/27/2022 4:49	81.99	6/26/2022 3:12	17.08	6/26/2022 2:21	20.38	6/26/2022 7:17	71.30
6/27/2022 6:08	51.33	6/27/2022 4:50	82.00	6/26/2022 3:13	17.05	6/26/2022 2:22	20.49	6/26/2022 7:18	71.30
6/27/2022 6:09	51.31	6/27/2022 4:51	82.02	6/26/2022 3:14	17.02	6/26/2022 2:23	20.70	6/26/2022 7:19	71.24
6/27/2022 6:10	51.34	6/27/2022 4:52	82.01	6/26/2022 3:15	17.03	6/26/2022 2:24	20.81	6/26/2022 7:20	71.18
6/27/2022 6:11	51.32	6/27/2022 4:53	82.00	6/26/2022 3:16	17.09	6/26/2022 2:25	21.41	6/26/2022 7:21	71.14
6/27/2022 6:12	51.30	6/27/2022 4:54	82.00	6/26/2022 3:17	17.02	6/26/2022 2:26	21.78	6/26/2022 7:22	71.03
6/27/2022 6:13	51.31	6/27/2022 4:55	81.99	6/26/2022 3:18	17.07	6/26/2022 2:27	22.01	6/26/2022 7:23	71.05
6/27/2022 6:14	51.37	6/27/2022 4:56	82.02	6/26/2022 3:19	17.04	6/26/2022 2:28	22.32	6/26/2022 7:24	70.96
6/27/2022 6:15	51.31	6/27/2022 4:57	81.99	6/26/2022 3:20	17.03	6/26/2022 2:29	22.60	6/26/2022 7:25	70.96
6/27/2022 6:16	51.30	6/27/2022 4:58	82.00	6/26/2022 3:21	17.06	6/26/2022 2:30	22.80	6/26/2022 7:26	70.91
6/27/2022 6:17	51.30	6/27/2022 4:59	82.00	6/26/2022 3:22	17.02	6/26/2022 2:31	23.09	6/26/2022 7:27	70.81
6/27/2022 6:18	51.32	6/27/2022 5:00	82.00	6/26/2022 3:23	17.06	6/26/2022 2:32	23.20	6/26/2022 7:28	70.79
6/27/2022 6:19	51.31	6/27/2022 5:01	81.97	6/26/2022 3:24	17.05	6/26/2022 2:33	23.37	6/26/2022 7:29	70.74
6/27/2022 6:20	51.33	6/27/2022 5:02	81.99	6/26/2022 3:25	17.09	6/26/2022 2:34	23.57	6/26/2022 7:30	70.68
6/27/2022 6:21	51.31	6/27/2022 5:03	81.98	6/26/2022 3:26	17.05	6/26/2022 2:35	23.67	6/26/2022 7:31	70.66
6/27/2022 6:22	51.31	6/27/2022 5:04	82.02	6/26/2022 3:27	17.04	6/26/2022 2:36	23.77	6/26/2022 7:32	70.61
6/27/2022 6:23	51.33	6/27/2022 5:05	82.00	6/26/2022 3:28	17.10	6/26/2022 2:37	23.90	6/26/2022 7:33	70.59
6/27/2022 6:24	51.31	6/27/2022 5:06	81.98	6/26/2022 3:29	17.05	6/26/2022 2:38	24.07	6/26/2022 7:34	70.51
6/27/2022 6:25	51.31	6/27/2022 5:07	82.00	6/26/2022 3:30	17.03	6/26/2022 2:39	24.21	6/26/2022 7:35	70.46
6/27/2022 6:26	51.29	6/27/2022 5:08	82.01	6/26/2022 3:31	17.09	6/26/2022 2:40	23.91	6/26/2022 7:36	70.48
6/27/2022 6:27	51.32	6/27/2022 5:09	81.97	6/26/2022 3:32	17.06	6/26/2022 2:41	23.84	6/26/2022 7:37	70.42
6/27/2022 6:28	51.31	6/27/2022 5:10	81.99	6/26/2022 3:33	17.06	6/26/2022 2:42	23.84	6/26/2022 7:38	70.33
6/27/2022 6:29	51.34	6/27/2022 5:11	82.00	6/26/2022 3:34	17.00	6/26/2022 2:43	23.94	6/26/2022 7:39	70.33
6/27/2022 6:30	51.34	6/27/2022 5:12	81.98	6/26/2022 3:35	17.04	6/26/2022 2:44	24.02	6/26/2022 7:40	70.28
6/27/2022 6:31	51.32	6/27/2022 5:13	82.03	6/26/2022 3:36	17.06	6/26/2022 2:45	24.02	6/26/2022 7:41	70.28
6/27/2022 6:32	51.31	6/27/2022 5:14	82.02	6/26/2022 3:37	17.05	6/26/2022 2:46	24.15	6/26/2022 7:42	70.17
6/27/2022 6:33	51.28	6/27/2022 5:15	82.01	6/26/2022 3:38	17.03	6/26/2022 2:47	24.23	6/26/2022 7:43	70.16
6/27/2022 6:34	51.33	6/27/2022 5:16	81.99	6/26/2022 3:39	17.04	6/26/2022 2:48	24.33	6/26/2022 7:44	70.12
6/27/2022 6:35	51.36	6/27/2022 5:17	82.03	6/26/2022 3:40	17.03	6/26/2022 2:49	24.40	6/26/2022 7:45	70.11
6/27/2022 6:36	51.30	6/27/2022 5:18	82.00	6/26/2022 3:41	17.04	6/26/2022 2:50	24.53	6/26/2022 7:46	70.08
6/27/2022 6:37	51.33	6/27/2022 5:19	82.00	6/26/2022 3:42	17.04	6/26/2022 2:51	24.57	6/26/2022 7:47	70.04
6/27/2022 6:38	51.31	6/27/2022 5:20	82.04	6/26/2022 3:43	17.02	6/26/2022 2:52	24.71	6/26/2022 7:48	70.01
6/27/2022 6:39	51.34	6/27/2022 5:21	82.06	6/26/2022 3:44	17.04	6/26/2022 2:53	24.74	6/26/2022 7:49	69.91
6/27/2022 6:40	51.35	6/27/2022 5:22	82.02	6/26/2022 3:45	17.02	6/26/2022 2:54	24.86	6/26/2022 7:50	69.94
6/27/2022 6:41	51.30	6/27/2022 5:23	82.04	6/26/2022 3:46	17.01	6/26/2022 2:55	24.94	6/26/2022 7:51	69.94
6/27/2022 6:42	51.31	6/27/2022 5:24	82.01	6/26/2022 3:47	17.02	6/26/2022 2:56	25.07	6/26/2022 7:52	69.85
6/27/2022 6:43	51.30	6/27/2022 5:25	81.99	6/26/2022 3:48	17.03	6/26/2022 2:57	25.14	6/26/2022 7:53	69.83
6/27/2022 6:44	51.30	6/27/2022 5:26	82.02	6/26/2022 3:49	17.07	6/26/2022 2:58	25.19	6/26/2022 7:54	69.79
6/27/2022 6:45	51.30	6/27/2022 5:27	82.04	6/26/2022 3:50	17.00	6/26/2022 2:59	25.28	6/26/2022 7:55	69.75
6/27/2022 6:46	51.35	6/27/2022 5:28	82.00	6/26/2022 3:51	17.08	6/26/2022 3:00	25.34	6/26/2022 7:56	69.74
6/27/2022 6:47	51.32	6/27/2022 5:29	82.01	6/26/2022 3:52	17.03	6/26/2022 3:01	25.43	6/26/2022 7:57	69.72
6/27/2022 6:48	51.32	6/27/2022 5:30	82.01	6/26/2022 3:53	17.06	6/26/2022 3:02	25.52	6/26/2022 7:58	69.69
6/27/2022 6:49	51.33	6/27/2022 5:31	81.99	6/26/2022 3:54	17.03	6/26/2022 3:03	25.34	6/26/2022 7:59	69.63
6/27/2022 6:50	51.31	6/27/2022 5:32	82.01	6/26/2022 3:55	17.00	6/26/2022 3:04	25.27	6/26/2022 8:00	69.62
6/27/2022 6:51	51.34	6/27/2022 5:33	82.02	6/26/2022 3:56	17.05	6/26/2022 3:05	25.26	6/26/2022 8:01	69.56
6/27/2022 6:52	51.33	6/27/2022 5:34	82.01	6/26/2022 3:57	17.04	6/26/2022 3:06	25.30	6/26/2022 8:02	69.57
6/27/2022 6:53	51.30	6/27/2022 5:35	82.03	6/26/2022 3:58	17.06	6/26/2022 3:07	25.31	6/26/2022 8:03	69.53
6/27/2022 6:54	51.32	6/27/2022 5:36	81.99	6/26/2022 3:59	17.04	6/26/2022 3:08	25.33	6/26/2022 8:04	69.50
6/27/2022 6:55	51.33	6/27/2022 5:37	82.02	6/26/2022 4:00	17.03	6/26/2022 3:09	25.32	6/26/2022 8:05	69.45
6/27/2022 6:56	51.27	6/27/2022 5:38	82.07	6/26/2022 4:01	16.99	6/26/2022 3:10	25.32	6/26/2022 8:06	69.44
6/27/2022 6:57	51.31	6/27/2022 5:39	82.03	6/26/2022 4:02	17.04	6/26/2022 3:11	25.39	6/26/2022 8:07	69.39
6/27/2022 6:58	51.29	6/27/2022 5:40	82.00	6/26/2022 4:03	17.03	6/26/2022 3:12	25.46	6/26/2022 8:08	69.38
6/27/2022 6:59	51.33	6/27/2022 5:41	82.02	6/26/2022 4:04	17.00	6/26/2022 3:13	25.53	6/26/2022 8:09	69.35
6/27/2022 7:00	51.31	6/27/2022 5:42	82.03	6/26/2022 4:05	17.02	6/26/2022 3:14	25.51	6/26/2022 8:10	69.31
6/27/2022 7:01	51.30	6/27/2022 5:43	82.02	6/26/2022 4:06	17.01	6/26/2022 3:15	25.60	6/26/2022 8:11	69.30
6/27/2022 7:02	51.33	6/27/2022 5:44	82.02	6/26/2022 4:07	17.03	6/26/2022 3:16	25.63	6/26/2022 8:12	69.28
6/27/2022 7:03	51.30	6/27/2022 5:45	82.03	6/26/2022 4:08	17.00	6/26/2022 3:17	25.69	6/26/2022 8:13	69.21
6/27/2022 7:04	51.27	6/27/2022 5:46	82.03	6/26/2022 4:09	17.00	6/26/2022 3:18	25.78	6/26/2022 8:14	69.20
6/27/2022 7:05	51.25	6/27/2022 5:47	82.02	6/26/2022 4:10	17.00	6/26/2022 3:19	25.83	6/26/2022 8:15	69.19
6/27/2022 7:06	51.30	6/27/2022 5:48	82.02	6/26/2022 4:11	17.01	6/26/2022 3:20	25.81	6/26/2022 8:16	69.35
6/27/2022 7:07	51.34	6/27/2022 5:49	82.05	6/26/2022 4:12	16.98	6/26/2022 3:21	25.90	6/26/2022 8:17	75.81
6/27/2022 7:08	51.31	6/27/2022 5:50	82.03	6/26/2022 4:13	17.00	6/26/2022 3:22	25.91	6/26/2022 8:18	75.57
6/27/2022 7:09	51.35	6/27/2022 5:51	82.01	6/26/2022 4:14	17.01	6/26/2022 3:23	25.16	6/26/2022 8:19	75.40
6/27/2022 7:10	51.31	6/27/2022 5:52	82.02	6/26/2022 4:15	16.98	6/26/2022 3:24	24.61	6/26/2022 8:20	75.28
6/27/2022 7:11	51.31	6/27/2022 5:53	81.99	6/26/2022 4:16	17.02	6/26/2022 3:25	24.30	6/26/2022 8:21	75.14
6/27/2022 7:12	51.33	6/27/2022 5:54	82.00	6/26/2022 4:17	17.02	6/26/2022 3:26	24.04	6/26/2022 8:22	75.03
6/27/2022 7:13	51.31	6/27/2022 5:55	81.99	6/26/2022 4:18	17.02	6/26/2022 3:27	23.81	6/26/2022 8:23	74.91
6/27/2022 7:14	51.32	6/27/2022 5:56	82.04	6/26/2022 4:19	16.97	6/26/2022 3:28	23.75	6/26/2022 8:24	74.77
6/27/2022 7:15	51.29	6/27/2022 5:57	82.00	6/26/2022 4:20	17.01	6/26/2022 3:29	23.69	6/26/2022 8:25	74.69
6/27/2022 7:16	51.30	6/27/2022 5:58	81.98	6/26/2022 4:21	17.05	6/26/2022 3:30	23.53	6/26/2022 8:26	74.58
6/27/2022 7:17	51.30	6/27/2022 5:59	82.01	6/26/2022 4:22	17.01	6/26/2022 3:31	23.43	6/26/2022 8:27	74.53
6/27/2022 7:18	51.32	6/27/2022 6:00	82.03	6/26/2022 4:23	17.03	6/26/2022 3:32	23.31	6/26/2022 8:28	74.40
6/27/2022 7:19	51.32	6/27/2022 6:01	82.00	6/26/2022 4:24	17.00	6/26/2022 3:33	23.18	6/26/2022 8:29	74.31
6/27/2022 7:20	51.30	6/27/2022 6:02	82.01	6/26/2022 4:25	17.03	6/26/2022 3:34	23.14	6/26/2022 8:30	74.22
6/27/2022 7:21	51.28	6/27/2022 6:03	82.00	6/26/2022 4:26	16.99	6/26/2022 3:35	23.07	6/26/2022 8:31	74.15
6/27/2022 7:22	51.31	6/27/2022 6:04	82.00	6/26/2022 4:27	17.01	6/26/2022 3:36	23.04	6/26/2022 8:32	74.01
6/27/2022 7:23	51.32	6/27/2022 6:05	82.04	6/26/2022 4:28	16.98	6/26/2022 3:37	22.98	6/26/2022 8:33	73.96
6/27/2022 7:24	51.36	6/27/2022 6:06	81.99	6/26/2022 4:29	17.04	6/26/2022 3:38	22.94	6/26/2022 8:34	73.84

6/27/2022 7:25	51.28	6/27/2022 6:07	81.99	6/26/2022 4:30	16.99	6/26/2022 3:39	22.90	6/26/2022 8:35	73.78
6/27/2022 7:26	51.31	6/27/2022 6:08	82.01	6/26/2022 4:31	17.03	6/26/2022 3:40	22.85	6/26/2022 8:36	73.67
6/27/2022 7:27	51.27	6/27/2022 6:09	81.96	6/26/2022 4:32	17.04	6/26/2022 3:41	22.77	6/26/2022 8:37	73.63
6/27/2022 7:28	51.28	6/27/2022 6:10	82.01	6/26/2022 4:33	17.01	6/26/2022 3:42	22.73	6/26/2022 8:38	73.53
6/27/2022 7:29	51.31	6/27/2022 6:11	81.99	6/26/2022 4:34	17.03	6/26/2022 3:43	21.83	6/26/2022 8:39	73.46
6/27/2022 7:30	51.28	6/27/2022 6:12	82.01	6/26/2022 4:35	17.00	6/26/2022 3:44	21.42	6/26/2022 8:40	73.37
6/27/2022 7:31	51.28	6/27/2022 6:13	82.01	6/26/2022 4:36	16.98	6/26/2022 3:45	21.01	6/26/2022 8:41	73.32
6/27/2022 7:32	51.30	6/27/2022 6:14	82.05	6/26/2022 4:37	16.96	6/26/2022 3:46	20.67	6/26/2022 8:42	73.24
6/27/2022 7:33	51.31	6/27/2022 6:15	82.01	6/26/2022 4:38	16.99	6/26/2022 3:47	20.45	6/26/2022 8:43	73.19
6/27/2022 7:34	51.28	6/27/2022 6:16	82.05	6/26/2022 4:39	17.00	6/26/2022 3:48	20.17	6/26/2022 8:44	73.07
6/27/2022 7:35	51.30	6/27/2022 6:17	82.00	6/26/2022 4:40	16.99	6/26/2022 3:49	20.09	6/26/2022 8:45	73.05
6/27/2022 7:36	51.34	6/27/2022 6:18	81.99	6/26/2022 4:41	17.00	6/26/2022 3:50	20.30	6/26/2022 8:46	72.97
6/27/2022 7:37	51.31	6/27/2022 6:19	82.04	6/26/2022 4:42	16.98	6/26/2022 3:51	20.37	6/26/2022 8:47	72.86
6/27/2022 7:38	51.29	6/27/2022 6:20	82.05	6/26/2022 4:43	17.01	6/26/2022 3:52	20.41	6/26/2022 8:48	72.82
6/27/2022 7:39	51.29	6/27/2022 6:21	81.99	6/26/2022 4:44	16.96	6/26/2022 3:53	20.37	6/26/2022 8:49	72.75
6/27/2022 7:40	51.29	6/27/2022 6:22	82.05	6/26/2022 4:45	17.03	6/26/2022 3:54	20.35	6/26/2022 8:50	72.71
6/27/2022 7:41	51.29	6/27/2022 6:23	82.03	6/26/2022 4:46	17.00	6/26/2022 3:55	20.32	6/26/2022 8:51	72.64
6/27/2022 7:42	51.30	6/27/2022 6:24	82.04	6/26/2022 4:47	17.00	6/26/2022 3:56	20.26	6/26/2022 8:52	72.55
6/27/2022 7:43	51.29	6/27/2022 6:25	82.07	6/26/2022 4:48	17.00	6/26/2022 3:57	20.06	6/26/2022 8:53	72.54
6/27/2022 7:44	51.30	6/27/2022 6:26	82.02	6/26/2022 4:49	17.03	6/26/2022 3:58	19.57	6/26/2022 8:54	72.45
6/27/2022 7:45	51.27	6/27/2022 6:27	81.99	6/26/2022 4:50	17.02	6/26/2022 3:59	19.30	6/26/2022 8:55	72.38
6/27/2022 7:46	51.33	6/27/2022 6:28	82.03	6/26/2022 4:51	16.97	6/26/2022 4:00	19.02	6/26/2022 8:56	72.33
6/27/2022 7:47	51.28	6/27/2022 6:29	82.04	6/26/2022 4:52	16.94	6/26/2022 4:01	18.81	6/26/2022 8:57	72.27
6/27/2022 7:48	51.31	6/27/2022 6:30	82.02	6/26/2022 4:53	16.97	6/26/2022 4:02	18.67	6/26/2022 8:58	72.20
6/27/2022 7:49	51.31	6/27/2022 6:31	82.03	6/26/2022 4:54	16.98	6/26/2022 4:03	18.54	6/26/2022 8:59	72.14
6/27/2022 7:50	51.27	6/27/2022 6:32	82.01	6/26/2022 4:55	16.96	6/26/2022 4:04	18.42	6/26/2022 9:00	72.07
6/27/2022 7:51	51.32	6/27/2022 6:33	82.03	6/26/2022 4:56	16.99	6/26/2022 4:05	18.29	6/26/2022 9:01	72.04
6/27/2022 7:52	51.32	6/27/2022 6:34	82.02	6/26/2022 4:57	16.95	6/26/2022 4:06	18.14	6/26/2022 9:02	72.01
6/27/2022 7:53	51.26	6/27/2022 6:35	82.01	6/26/2022 4:58	16.99	6/26/2022 4:07	18.06	6/26/2022 9:03	71.92
6/27/2022 7:54	51.29	6/27/2022 6:36	82.05	6/26/2022 4:59	16.97	6/26/2022 4:08	17.91	6/26/2022 9:04	71.86
6/27/2022 7:55	51.31	6/27/2022 6:37	82.05	6/26/2022 5:00	17.00	6/26/2022 4:09	17.77	6/26/2022 9:05	71.80
6/27/2022 7:56	51.31	6/27/2022 6:38	82.07	6/26/2022 5:01	16.99	6/26/2022 4:10	17.69	6/26/2022 9:06	71.73
6/27/2022 7:57	51.30	6/27/2022 6:39	82.06	6/26/2022 5:02	16.98	6/26/2022 4:11	17.57	6/26/2022 9:07	71.74
6/27/2022 7:58	51.32	6/27/2022 6:40	82.04	6/26/2022 5:03	16.98	6/26/2022 4:12	17.44	6/26/2022 9:08	71.67
6/27/2022 7:59	51.28	6/27/2022 6:41	82.05	6/26/2022 5:04	16.99	6/26/2022 4:13	17.32	6/26/2022 9:09	71.61
6/27/2022 8:00	51.31	6/27/2022 6:42	82.01	6/26/2022 5:05	16.97	6/26/2022 4:14	17.26	6/26/2022 9:10	71.56
6/27/2022 8:01	51.26	6/27/2022 6:43	82.03	6/26/2022 5:06	16.99	6/26/2022 4:15	17.17	6/26/2022 9:11	76.67
6/27/2022 8:02	51.27	6/27/2022 6:44	82.07	6/26/2022 5:07	16.96	6/26/2022 4:16	17.00	6/26/2022 9:12	77.95
6/27/2022 8:03	51.30	6/27/2022 6:45	82.05	6/26/2022 5:08	16.95	6/26/2022 4:17	16.94	6/26/2022 9:13	77.76
6/27/2022 8:04	51.29	6/27/2022 6:46	82.06	6/26/2022 5:09	16.99	6/26/2022 4:18	16.87	6/26/2022 9:14	77.59
6/27/2022 8:05	51.31	6/27/2022 6:47	82.02	6/26/2022 5:10	16.99	6/26/2022 4:19	16.75	6/26/2022 9:15	77.44
6/27/2022 8:06	51.31	6/27/2022 6:48	82.02	6/26/2022 5:11	16.99	6/26/2022 4:20	16.62	6/26/2022 9:16	77.30
6/27/2022 8:07	52.64	6/27/2022 6:49	82.05	6/26/2022 5:12	16.94	6/26/2022 4:21	16.60	6/26/2022 9:17	77.20
6/27/2022 8:08	54.73	6/27/2022 6:50	82.07	6/26/2022 5:13	16.96	6/26/2022 4:22	16.52	6/26/2022 9:18	77.05
6/27/2022 8:09	55.75	6/27/2022 6:51	82.04	6/26/2022 5:14	17.01	6/26/2022 4:23	16.44	6/26/2022 9:19	76.96
6/27/2022 8:10	56.28	6/27/2022 6:52	82.02	6/26/2022 5:15	17.00	6/26/2022 4:24	16.39	6/26/2022 9:20	76.85
6/27/2022 8:11	54.41	6/27/2022 6:53	82.05	6/26/2022 5:16	16.98	6/26/2022 4:25	16.25	6/26/2022 9:21	76.76
6/27/2022 8:12	53.28	6/27/2022 6:54	82.02	6/26/2022 5:17	17.03	6/26/2022 4:26	16.14	6/26/2022 9:22	76.68
6/27/2022 8:13	52.84	6/27/2022 6:55	82.06	6/26/2022 5:18	17.02	6/26/2022 4:27	16.08	6/26/2022 9:23	76.55
6/27/2022 8:14	52.57	6/27/2022 6:56	82.03	6/26/2022 5:19	16.96	6/26/2022 4:28	16.05	6/26/2022 9:24	76.45
6/27/2022 8:15	52.40	6/27/2022 6:57	82.03	6/26/2022 5:20	17.00	6/26/2022 4:29	15.89	6/26/2022 9:25	76.34
6/27/2022 8:16	52.30	6/27/2022 6:58	82.06	6/26/2022 5:21	16.96	6/26/2022 4:30	15.80	6/26/2022 9:26	76.23
6/27/2022 8:17	52.17	6/27/2022 6:59	82.03	6/26/2022 5:22	16.99	6/26/2022 4:31	15.81	6/26/2022 9:27	76.11
6/27/2022 8:18	52.12	6/27/2022 7:00	82.04	6/26/2022 5:23	16.95	6/26/2022 4:32	15.72	6/26/2022 9:28	76.03
6/27/2022 8:19	52.08	6/27/2022 7:01	82.03	6/26/2022 5:24	16.97	6/26/2022 4:33	15.67	6/26/2022 9:29	75.90
6/27/2022 8:20	52.03	6/27/2022 7:02	82.03	6/26/2022 5:25	16.93	6/26/2022 4:34	15.54	6/26/2022 9:30	75.85
6/27/2022 8:21	51.97	6/27/2022 7:03	82.00	6/26/2022 5:26	16.97	6/26/2022 4:35	15.48	6/26/2022 9:31	75.73
6/27/2022 8:22	51.99	6/27/2022 7:04	82.04	6/26/2022 5:27	16.96	6/26/2022 4:36	15.42	6/26/2022 9:32	75.64
6/27/2022 8:23	51.94	6/27/2022 7:05	82.05	6/26/2022 5:28	16.99	6/26/2022 4:37	15.34	6/26/2022 9:33	75.58
6/27/2022 8:24	51.90	6/27/2022 7:06	82.04	6/26/2022 5:29	16.95	6/26/2022 4:38	15.30	6/26/2022 9:34	75.45
6/27/2022 8:25	51.87	6/27/2022 7:07	82.05	6/26/2022 5:30	17.03	6/26/2022 4:39	15.18	6/26/2022 9:35	75.36
6/27/2022 8:26	51.87	6/27/2022 7:08	82.05	6/26/2022 5:31	16.93	6/26/2022 4:40	15.15	6/26/2022 9:36	75.25
6/27/2022 8:27	51.88	6/27/2022 7:09	82.04	6/26/2022 5:32	16.95	6/26/2022 4:41	15.04	6/26/2022 9:37	75.13
6/27/2022 8:28	51.80	6/27/2022 7:10	82.03	6/26/2022 5:33	16.98	6/26/2022 4:42	15.05	6/26/2022 9:38	75.10
6/27/2022 8:29	51.80	6/27/2022 7:11	82.04	6/26/2022 5:34	16.96	6/26/2022 4:43	14.96	6/26/2022 9:39	74.99
6/27/2022 8:30	51.79	6/27/2022 7:12	82.05	6/26/2022 5:35	16.95	6/26/2022 4:44	14.88	6/26/2022 9:40	74.88
6/27/2022 8:31	51.75	6/27/2022 7:13	82.03	6/26/2022 5:36	16.94	6/26/2022 4:45	14.82	6/26/2022 9:41	74.82
6/27/2022 8:32	51.75	6/27/2022 7:14	82.04	6/26/2022 5:37	16.96	6/26/2022 4:46	14.73	6/26/2022 9:42	74.69
6/27/2022 8:33	51.74	6/27/2022 7:15	82.05	6/26/2022 5:38	16.98	6/26/2022 4:47	14.69	6/26/2022 9:43	74.66
6/27/2022 8:34	51.71	6/27/2022 7:16	82.04	6/26/2022 5:39	16.98	6/26/2022 4:48	14.67	6/26/2022 9:44	74.54
6/27/2022 8:35	51.75	6/27/2022 7:17	82.07	6/26/2022 5:40	16.91	6/26/2022 4:49	14.57	6/26/2022 9:45	74.48
6/27/2022 8:36	51.71	6/27/2022 7:18	82.05	6/26/2022 5:41	16.90	6/26/2022 4:50	14.47	6/26/2022 9:46	74.36
6/27/2022 8:37	51.71	6/27/2022 7:19	82.07	6/26/2022 5:42	16.98	6/26/2022 4:51	14.44	6/26/2022 9:47	74.33
6/27/2022 8:38	51.68	6/27/2022 7:20	82.07	6/26/2022 5:43	16.96	6/26/2022 4:52	14.39	6/26/2022 9:48	74.24
6/27/2022 8:39	51.68	6/27/2022 7:21	82.02	6/26/2022 5:44	16.93	6/26/2022 4:53	14.40	6/26/2022 9:49	74.14
6/27/2022 8:40	51.67	6/27/2022 7:22	82.04	6/26/2022 5:45	16.96	6/26/2022 4:54	14.25	6/26/2022 9:50	74.08
6/27/2022 8:41	51.68	6/27/2022 7:23	82.06	6/26/2022 5:46	16.91	6/26/2022 4:55	14.21	6/26/2022 9:51	73.98
6/27/2022 8:42	51.67	6/27/2022 7:24	82.03	6/26/2022 5:47	16.97	6/26/2022 4:56	14.18	6/26/2022 9:52	73.94
6/27/2022 8:43	51.69	6/27/2022 7:25	82.05	6/26/2022 5:48	16.91	6/26/2022 4:57	14.12	6/26/2022 9:53	73.84
6/27/2022 8:44	51.66	6/27/2022 7:26	82.01	6/26/2022 5:49	16.98	6/26/2022 4:58	14.09	6/26/2022 9:54	73.81
6/27/2022 8:45	51.67	6/27/2022 7:27	82.03	6/26/2022 5:50	16.92	6/26/2022 4:59	13.98	6/26/2022 9:55	73.72
6/27/2022 8:46	51.67	6/27/2022 7:28	82.05	6/26/2022 5:51	16.98	6/26/2022 5:00	13.92	6/26/2022 9:56	73.62
6/27/2022 8:47	51.62	6/27/2022 7:29	82.06	6/26/2022 5:52	16.97	6/26/2022 5:01	13.89	6/26/2022 9:57	73.60
6/27/2022 8:48	51.65	6/27/2022 7:30	82.05	6/26/2022 5:53	16.98	6/26/2022 5:02	13.86	6/26/2022 9:58	73.53
6/27/2022 8:49	51.60	6/27/2022 7:31	82.04	6/26/2022 5:54	16.95	6/26/2022 5:03	13.80	6/26/2022 9:59	73.45
6/27/2022 8:50	51.64	6/27/2022 7:32	82.06	6/26/2022 5:55	16.97	6/26/2022 5:04	13.70	6/26/2022 10:00	73.37
6/27/2022 8:51	51.60	6/27/2022 7:33	81.99	6/26/2022 5:56	16.97	6/26/2022 5:05	13.61	6/26/2022 10:01	73.29
6/27/2022 8:52	51.60	6/27/2022 7:34	82.03	6/26/2022 5:57	16.97	6/26/2022 5:06	13.63	6/26/2022 10:02	73.23

6/27/2022 8:53	51.60	6/27/2022 7:35	82.04	6/26/2022 5:58	16.97	6/26/2022 5:07	13.57	6/26/2022 10:03	73.18
6/27/2022 8:54	51.56	6/27/2022 7:36	82.10	6/26/2022 5:59	16.96	6/26/2022 5:08	13.56	6/26/2022 10:04	73.08
6/27/2022 8:55	51.58	6/27/2022 7:37	82.09	6/26/2022 6:00	16.98	6/26/2022 5:09	13.47	6/26/2022 10:05	79.26
6/27/2022 8:56	51.59	6/27/2022 7:38	82.08	6/26/2022 6:01	16.92	6/26/2022 5:10	13.40	6/26/2022 10:06	79.08
6/27/2022 8:57	51.56	6/27/2022 7:39	82.06	6/26/2022 6:02	16.97	6/26/2022 5:11	13.43	6/26/2022 10:07	78.91
6/27/2022 8:58	51.62	6/27/2022 7:40	82.03	6/26/2022 6:03	16.97	6/26/2022 5:12	13.36	6/26/2022 10:08	78.78
6/27/2022 8:59	51.57	6/27/2022 7:41	82.01	6/26/2022 6:04	16.99	6/26/2022 5:13	13.26	6/26/2022 10:09	78.67
6/27/2022 9:00	51.58	6/27/2022 7:42	82.04	6/26/2022 6:05	16.91	6/26/2022 5:14	13.18	6/26/2022 10:10	78.52
6/27/2022 9:01	51.56	6/27/2022 7:43	82.03	6/26/2022 6:06	16.95	6/26/2022 5:15	13.17	6/26/2022 10:11	78.40
6/27/2022 9:02	51.59	6/27/2022 7:44	82.05	6/26/2022 6:07	16.96	6/26/2022 5:16	13.15	6/26/2022 10:12	78.32
6/27/2022 9:03	51.57	6/27/2022 7:45	82.03	6/26/2022 6:08	16.93	6/26/2022 5:17	13.13	6/26/2022 10:13	78.20
6/27/2022 9:04	51.55	6/27/2022 7:46	82.03	6/26/2022 6:09	16.96	6/26/2022 5:18	13.02	6/26/2022 10:14	78.08
6/27/2022 9:05	51.57	6/27/2022 7:47	82.03	6/26/2022 6:10	16.94	6/26/2022 5:19	12.98	6/26/2022 10:15	77.92
6/27/2022 9:06	51.56	6/27/2022 7:48	82.06	6/26/2022 6:11	16.96	6/26/2022 5:20	12.95	6/26/2022 10:16	77.81
6/27/2022 9:07	51.56	6/27/2022 7:49	82.04	6/26/2022 6:12	16.96	6/26/2022 5:21	12.93	6/26/2022 10:17	77.72
6/27/2022 9:08	51.53	6/27/2022 7:50	82.06	6/26/2022 6:13	16.92	6/26/2022 5:22	12.88	6/26/2022 10:18	77.58
6/27/2022 9:09	51.54	6/27/2022 7:51	82.06	6/26/2022 6:14	16.93	6/26/2022 5:23	12.79	6/26/2022 10:19	77.48
6/27/2022 9:10	51.58	6/27/2022 7:52	82.06	6/26/2022 6:15	16.95	6/26/2022 5:24	12.75	6/26/2022 10:20	77.37
6/27/2022 9:11	51.53	6/27/2022 7:53	82.05	6/26/2022 6:16	16.93	6/26/2022 5:25	12.73	6/26/2022 10:21	77.25
6/27/2022 9:12	51.55	6/27/2022 7:54	82.07	6/26/2022 6:17	16.98	6/26/2022 5:26	12.69	6/26/2022 10:22	77.17
6/27/2022 9:13	51.50	6/27/2022 7:55	82.06	6/26/2022 6:18	16.95	6/26/2022 5:27	12.72	6/26/2022 10:23	77.08
6/27/2022 9:14	51.55	6/27/2022 7:56	82.08	6/26/2022 6:19	16.97	6/26/2022 5:28	12.62	6/26/2022 10:24	76.93
6/27/2022 9:15	51.56	6/27/2022 7:57	82.05	6/26/2022 6:20	16.95	6/26/2022 5:29	12.65	6/26/2022 10:25	76.86
6/27/2022 9:16	51.54	6/27/2022 7:58	82.05	6/26/2022 6:21	16.95	6/26/2022 5:30	12.68	6/26/2022 10:26	76.79
6/27/2022 9:17	51.56	6/27/2022 7:59	82.09	6/26/2022 6:22	16.99	6/26/2022 5:31	12.60	6/26/2022 10:27	76.72
6/27/2022 9:18	51.52	6/27/2022 8:00	82.08	6/26/2022 6:23	16.95	6/26/2022 5:32	12.62	6/26/2022 10:28	76.62
6/27/2022 9:19	51.52	6/27/2022 8:01	82.03	6/26/2022 6:24	17.00	6/26/2022 5:33	12.58	6/26/2022 10:29	76.50
6/27/2022 9:20	51.54	6/27/2022 8:02	82.07	6/26/2022 6:25	16.92	6/26/2022 5:34	12.58	6/26/2022 10:30	76.40
6/27/2022 9:21	51.55	6/27/2022 8:03	82.07	6/26/2022 6:26	16.95	6/26/2022 5:35	12.56	6/26/2022 10:31	76.29
6/27/2022 9:22	51.50	6/27/2022 8:04	82.01	6/26/2022 6:27	16.94	6/26/2022 5:36	12.32	6/26/2022 10:32	76.18
6/27/2022 9:23	51.51	6/27/2022 8:05	82.04	6/26/2022 6:28	16.96	6/26/2022 5:37	12.32	6/26/2022 10:33	76.14
6/27/2022 9:24	51.50	6/27/2022 8:06	82.07	6/26/2022 6:29	16.93	6/26/2022 5:38	12.26	6/26/2022 10:34	76.02
6/27/2022 9:25	51.49	6/27/2022 8:07	82.07	6/26/2022 6:30	16.99	6/26/2022 5:39	12.21	6/26/2022 10:35	75.90
6/27/2022 9:26	51.50	6/27/2022 8:08	82.03	6/26/2022 6:31	16.96	6/26/2022 5:40	12.19	6/26/2022 10:36	75.84
6/27/2022 9:27	51.49	6/27/2022 8:09	82.07	6/26/2022 6:32	16.93	6/26/2022 5:41	12.13	6/26/2022 10:37	75.75
6/27/2022 9:28	51.52	6/27/2022 8:10	82.07	6/26/2022 6:33	16.95	6/26/2022 5:42	12.11	6/26/2022 10:38	75.65
6/27/2022 9:29	51.52	6/27/2022 8:11	82.04	6/26/2022 6:34	16.98	6/26/2022 5:43	12.13	6/26/2022 10:39	75.60
6/27/2022 9:30	51.48	6/27/2022 8:12	82.08	6/26/2022 6:35	16.98	6/26/2022 5:44	12.00	6/26/2022 10:40	75.46
6/27/2022 9:31	51.51	6/27/2022 8:13	82.08	6/26/2022 6:36	16.98	6/26/2022 5:45	11.95	6/26/2022 10:41	75.39
6/27/2022 9:32	51.48	6/27/2022 8:14	82.07	6/26/2022 6:37	16.94	6/26/2022 5:46	11.95	6/26/2022 10:42	75.33
6/27/2022 9:33	51.49	6/27/2022 8:15	82.07	6/26/2022 6:38	16.91	6/26/2022 5:47	11.89	6/26/2022 10:43	75.20
6/27/2022 9:34	51.49	6/27/2022 8:16	82.06	6/26/2022 6:39	16.95	6/26/2022 5:48	11.93	6/26/2022 10:44	75.13
6/27/2022 9:35	51.51	6/27/2022 8:17	82.05	6/26/2022 6:40	16.92	6/26/2022 5:49	11.78	6/26/2022 10:45	75.02
6/27/2022 9:36	51.50	6/27/2022 8:18	82.06	6/26/2022 6:41	16.93	6/26/2022 5:50	11.81	6/26/2022 10:46	75.00
6/27/2022 9:37	51.49	6/27/2022 8:19	82.05	6/26/2022 6:42	16.96	6/26/2022 5:51	11.75	6/26/2022 10:47	74.94
6/27/2022 9:38	51.47	6/27/2022 8:20	82.06	6/26/2022 6:43	16.91	6/26/2022 5:52	11.73	6/26/2022 10:48	74.82
6/27/2022 9:39	51.47	6/27/2022 8:21	82.10	6/26/2022 6:44	16.95	6/26/2022 5:53	11.68	6/26/2022 10:49	74.71
6/27/2022 9:40	51.48	6/27/2022 8:22	82.04	6/26/2022 6:45	16.91	6/26/2022 5:54	11.61	6/26/2022 10:50	74.64
6/27/2022 9:41	51.52	6/27/2022 8:23	82.07	6/26/2022 6:46	16.93	6/26/2022 5:55	11.62	6/26/2022 10:51	74.57
6/27/2022 9:42	51.47	6/27/2022 8:24	82.05	6/26/2022 6:47	16.93	6/26/2022 5:56	11.59	6/26/2022 10:52	74.53
6/27/2022 9:43	51.46	6/27/2022 8:25	82.06	6/26/2022 6:48	16.93	6/26/2022 5:57	11.60	6/26/2022 10:53	74.44
6/27/2022 9:44	51.47	6/27/2022 8:26	82.08	6/26/2022 6:49	16.95	6/26/2022 5:58	11.45	6/26/2022 10:54	78.70
6/27/2022 9:45	51.44	6/27/2022 8:27	82.06	6/26/2022 6:50	16.94	6/26/2022 5:59	11.42	6/26/2022 10:55	81.37
6/27/2022 9:46	51.48	6/27/2022 8:28	82.03	6/26/2022 6:51	16.94	6/26/2022 6:00	11.43	6/26/2022 10:56	81.10
6/27/2022 9:47	51.47	6/27/2022 8:29	82.06	6/26/2022 6:52	16.91	6/26/2022 6:01	11.43	6/26/2022 10:57	81.53
6/27/2022 9:48	51.46	6/27/2022 8:30	82.06	6/26/2022 6:53	16.92	6/26/2022 6:02	11.39	6/26/2022 10:58	88.20
6/27/2022 9:49	51.45	6/27/2022 8:31	82.07	6/26/2022 6:54	16.93	6/26/2022 6:03	11.39	6/26/2022 10:59	87.79
6/27/2022 9:50	51.46	6/27/2022 8:32	82.06	6/26/2022 6:55	16.91	6/26/2022 6:04	11.31	6/26/2022 11:00	87.46
6/27/2022 9:51	51.45	6/27/2022 8:33	82.06	6/26/2022 6:56	16.91	6/26/2022 6:05	11.26	6/26/2022 11:01	91.61
6/27/2022 9:52	51.46	6/27/2022 8:34	82.09	6/26/2022 6:57	16.94	6/26/2022 6:06	11.64	6/26/2022 11:02	93.89
6/27/2022 9:53	51.44	6/27/2022 8:35	82.07	6/26/2022 6:58	16.92	6/26/2022 6:07	11.37	6/26/2022 11:03	93.51
6/27/2022 9:54	51.44	6/27/2022 8:36	82.06	6/26/2022 6:59	16.95	6/26/2022 6:08	11.30	6/26/2022 11:04	94.03
6/27/2022 9:55	51.46	6/27/2022 8:37	82.09	6/26/2022 7:00	16.95	6/26/2022 6:09	11.22	6/26/2022 11:05	100.17
6/27/2022 9:56	51.43	6/27/2022 8:38	82.03	6/26/2022 7:01	16.93	6/26/2022 6:10	11.14	6/26/2022 11:06	99.62
6/27/2022 9:57	51.48	6/27/2022 8:39	82.08	6/26/2022 7:02	16.92	6/26/2022 6:11	11.11	6/26/2022 11:07	99.12
6/27/2022 9:58	51.44	6/27/2022 8:40	82.05	6/26/2022 7:03	16.94	6/26/2022 6:12	11.15	6/26/2022 11:08	103.30
6/27/2022 9:59	51.47	6/27/2022 8:41	82.07	6/26/2022 7:04	16.92	6/26/2022 6:13	11.05	6/26/2022 11:09	105.82
6/27/2022 10:00	51.45	6/27/2022 8:42	82.07	6/26/2022 7:05	16.95	6/26/2022 6:14	11.00	6/26/2022 11:10	105.21
6/27/2022 10:01	51.45	6/27/2022 8:43	82.07	6/26/2022 7:06	16.96	6/26/2022 6:15	10.98	6/26/2022 11:11	105.06
6/27/2022 10:02	51.46	6/27/2022 8:44	82.06	6/26/2022 7:07	16.96	6/26/2022 6:16	10.99	6/26/2022 11:12	111.83
6/27/2022 10:03	51.42	6/27/2022 8:45	82.05	6/26/2022 7:08	16.92	6/26/2022 6:17	10.98	6/26/2022 11:13	111.16
6/27/2022 10:04	51.42	6/27/2022 8:46	82.07	6/26/2022 7:09	16.95	6/26/2022 6:18	10.97	6/26/2022 11:14	110.55
6/27/2022 10:05	51.45	6/27/2022 8:47	82.11	6/26/2022 7:10	16.99	6/26/2022 6:19	10.84	6/26/2022 11:15	114.42
6/27/2022 10:06	51.42	6/27/2022 8:48	82.03	6/26/2022 7:11	16.95	6/26/2022 6:20	10.84	6/26/2022 11:16	117.06
6/27/2022 10:07	51.44	6/27/2022 8:49	82.11	6/26/2022 7:12	16.93	6/26/2022 6:21	10.81	6/26/2022 11:17	116.33
6/27/2022 10:08	51.44	6/27/2022 8:50	82.05	6/26/2022 7:13	16.97	6/26/2022 6:22	10.80	6/26/2022 11:18	115.67
6/27/2022 10:09	51.45	6/27/2022 8:51	82.07	6/26/2022 7:14	16.99	6/26/2022 6:23	10.76	6/26/2022 11:19	122.28
6/27/2022 10:10	51.41	6/27/2022 8:52	82.01	6/26/2022 7:15	16.94	6/26/2022 6:24	10.71	6/26/2022 11:20	122.03
6/27/2022 10:11	51.42	6/27/2022 8:53	82.09	6/26/2022 7:16	16.97	6/26/2022 6:25	10.68	6/26/2022 11:21	122.67
6/27/2022 10:12	51.42	6/27/2022 8:54	82.07	6/26/2022 7:17	16.96	6/26/2022 6:26	10.64	6/26/2022 11:22	126.59
6/27/2022 10:13	51.44	6/27/2022 8:55	82.05	6/26/2022 7:18	16.94	6/26/2022 6:27	10.60	6/26/2022 11:23	125.80
6/27/2022 10:14	51.42	6/27/2022 8:56	82.09	6/26/2022 7:19	16.88	6/26/2022 6:28	10.61	6/26/2022 11:24	125.02
6/27/2022 10:15	51.41	6/27/2022 8:57	82.06	6/26/2022 7:20	16.94	6/26/2022 6:29	10.56	6/26/2022 11:25	124.31
6/27/2022 10:16	51.45	6/27/2022 8:58	82.07	6/26/2022 7:21	16.95	6/26/2022 6:30	10.54	6/26/2022 11:26	123.64
6/27/2022 10:17	51.41	6/27/2022 8:59	82.10	6/26/2022 7:22	16.90	6/26/2022 6:31	10.50	6/26/2022 11:27	122.94
6/27/2022 10:18	51.41	6/27/2022 9:00	82.07	6/26/2022 7:23	16.91	6/26/2022 6:32	10.50	6/26/2022 11:28	122.28
6/27/2022 10:19	51.39	6/27/2022 9:01	82.04	6/26/2022 7:24	16.94	6/26/2022 6:33	10.47	6/26/2022 11:29	121.70
6/27/2022 10:20	51.44	6/27/2022 9:02	82.09	6/26/2022 7:25	16.92	6/26/2022 6:34	10.39	6/26/2022 11:30	121.03

6/27/2022 10:21	51.40	6/27/2022 9:03	82.08	6/26/2022 7:26	16.94	6/26/2022 6:35	10.33	6/26/2022 11:31	120.45
6/27/2022 10:22	51.40	6/27/2022 9:04	82.06	6/26/2022 7:27	16.96	6/26/2022 6:36	10.40	6/26/2022 11:32	119.83
6/27/2022 10:23	51.41	6/27/2022 9:05	82.07	6/26/2022 7:28	16.94	6/26/2022 6:37	10.35	6/26/2022 11:33	119.23
6/27/2022 10:24	51.40	6/27/2022 9:06	82.08	6/26/2022 7:29	16.91	6/26/2022 6:38	10.32	6/26/2022 11:34	118.68
6/27/2022 10:25	51.40	6/27/2022 9:07	82.09	6/26/2022 7:30	16.95	6/26/2022 6:39	10.31	6/26/2022 11:35	118.08
6/27/2022 10:26	51.40	6/27/2022 9:08	82.05	6/26/2022 7:31	16.91	6/26/2022 6:40	10.24	6/26/2022 11:36	117.49
6/27/2022 10:27	51.42	6/27/2022 9:09	82.07	6/26/2022 7:32	16.93	6/26/2022 6:41	10.57	6/26/2022 11:37	116.97
6/27/2022 10:28	51.40	6/27/2022 9:10	82.04	6/26/2022 7:33	16.94	6/26/2022 6:42	10.44	6/26/2022 11:38	116.44
6/27/2022 10:29	51.41	6/27/2022 9:11	82.07	6/26/2022 7:34	16.96	6/26/2022 6:43	10.36	6/26/2022 11:39	115.90
6/27/2022 10:30	51.40	6/27/2022 9:12	82.09	6/26/2022 7:35	16.99	6/26/2022 6:44	10.20	6/26/2022 11:40	115.36
6/27/2022 10:31	51.38	6/27/2022 9:13	82.01	6/26/2022 7:36	16.96	6/26/2022 6:45	10.20	6/26/2022 11:41	114.87
6/27/2022 10:32	51.42	6/27/2022 9:14	82.08	6/26/2022 7:37	16.97	6/26/2022 6:46	10.14	6/26/2022 11:42	114.33
6/27/2022 10:33	51.43	6/27/2022 9:15	82.05	6/26/2022 7:38	16.94	6/26/2022 6:47	10.12	6/26/2022 11:43	113.84
6/27/2022 10:34	51.43	6/27/2022 9:16	82.07	6/26/2022 7:39	16.95	6/26/2022 6:48	10.13	6/26/2022 11:44	113.35
6/27/2022 10:35	51.41	6/27/2022 9:17	82.06	6/26/2022 7:40	16.93	6/26/2022 6:49	10.08	6/26/2022 11:45	112.84
6/27/2022 10:36	51.38	6/27/2022 9:18	82.08	6/26/2022 7:41	16.96	6/26/2022 6:50	10.03	6/26/2022 11:46	112.38
6/27/2022 10:37	51.41	6/27/2022 9:19	82.08	6/26/2022 7:42	16.91	6/26/2022 6:51	10.01	6/26/2022 11:47	111.88
6/27/2022 10:38	51.41	6/27/2022 9:20	82.11	6/26/2022 7:43	16.91	6/26/2022 6:52	10.05	6/26/2022 11:48	111.40
6/27/2022 10:39	51.40	6/27/2022 9:21	82.08	6/26/2022 7:44	16.98	6/26/2022 6:53	10.01	6/26/2022 11:49	110.95
6/27/2022 10:40	51.41	6/27/2022 9:22	82.05	6/26/2022 7:45	16.97	6/26/2022 6:54	9.92	6/26/2022 11:50	110.46
6/27/2022 10:41	51.41	6/27/2022 9:23	82.09	6/26/2022 7:46	16.93	6/26/2022 6:55	9.93	6/26/2022 11:51	110.02
6/27/2022 10:42	51.39	6/27/2022 9:24	82.04	6/26/2022 7:47	16.93	6/26/2022 6:56	9.89	6/26/2022 11:52	109.55
6/27/2022 10:43	51.38	6/27/2022 9:25	82.08	6/26/2022 7:48	16.92	6/26/2022 6:57	9.97	6/26/2022 11:53	109.10
6/27/2022 10:44	51.39	6/27/2022 9:26	82.07	6/26/2022 7:49	16.92	6/26/2022 6:58	9.91	6/26/2022 11:54	108.76
6/27/2022 10:45	51.38	6/27/2022 9:27	82.07	6/26/2022 7:50	16.94	6/26/2022 6:59	9.85	6/26/2022 11:55	108.27
6/27/2022 10:46	51.41	6/27/2022 9:28	82.05	6/26/2022 7:51	16.95	6/26/2022 7:00	9.88	6/26/2022 11:56	107.86
6/27/2022 10:47	51.38	6/27/2022 9:29	82.03	6/26/2022 7:52	16.95	6/26/2022 7:01	9.84	6/26/2022 11:57	107.42
6/27/2022 10:48	51.37	6/27/2022 9:30	82.05	6/26/2022 7:53	16.96	6/26/2022 7:02	9.87	6/26/2022 11:58	107.02
6/27/2022 10:49	51.39	6/27/2022 9:31	82.08	6/26/2022 7:54	16.92	6/26/2022 7:03	9.79	6/26/2022 11:59	106.62
6/27/2022 10:50	51.37	6/27/2022 9:32	82.09	6/26/2022 7:55	16.89	6/26/2022 7:04	9.77	6/26/2022 12:00	106.23
6/27/2022 10:51	51.37	6/27/2022 9:33	82.13	6/26/2022 7:56	16.94	6/26/2022 7:05	9.75	6/26/2022 12:01	105.80
6/27/2022 10:52	51.36	6/27/2022 9:34	82.06	6/26/2022 7:57	16.90	6/26/2022 7:06	9.83	6/26/2022 12:02	105.45
6/27/2022 10:53	51.41	6/27/2022 9:35	82.05	6/26/2022 7:58	16.92	6/26/2022 7:07	9.74	6/26/2022 12:03	105.07
6/27/2022 10:54	51.39	6/27/2022 9:36	82.06	6/26/2022 7:59	16.91	6/26/2022 7:08	9.69	6/26/2022 12:04	104.67
6/27/2022 10:55	51.40	6/27/2022 9:37	82.07	6/26/2022 8:00	16.93	6/26/2022 7:09	9.68	6/26/2022 12:05	104.30
6/27/2022 10:56	51.36	6/27/2022 9:38	82.05	6/26/2022 8:01	16.91	6/26/2022 7:10	9.65	6/26/2022 12:06	104.01
6/27/2022 10:57	51.38	6/27/2022 9:39	82.04	6/26/2022 8:02	16.94	6/26/2022 7:11	9.69	6/26/2022 12:07	103.65
6/27/2022 10:58	51.38	6/27/2022 9:40	82.04	6/26/2022 8:03	16.92	6/26/2022 7:12	9.66	6/26/2022 12:08	103.24
6/27/2022 10:59	51.38	6/27/2022 9:41	82.07	6/26/2022 8:04	16.88	6/26/2022 7:13	9.59	6/26/2022 12:09	102.94
6/27/2022 11:00	51.42	6/27/2022 9:42	82.09	6/26/2022 8:05	16.86	6/26/2022 7:14	9.58	6/26/2022 12:10	102.54
6/27/2022 11:01	51.37	6/27/2022 9:43	82.10	6/26/2022 8:06	16.90	6/26/2022 7:15	9.60	6/26/2022 12:11	102.17
6/27/2022 11:02	51.36	6/27/2022 9:44	82.10	6/26/2022 8:07	16.94	6/26/2022 7:16	9.55	6/26/2022 12:12	101.88
6/27/2022 11:03	51.34	6/27/2022 9:45	82.07	6/26/2022 8:08	16.89	6/26/2022 7:17	9.53	6/26/2022 12:13	101.49
6/27/2022 11:04	51.39	6/27/2022 9:46	82.04	6/26/2022 8:09	16.88	6/26/2022 7:18	9.49	6/26/2022 12:14	101.16
6/27/2022 11:05	51.40	6/27/2022 9:47	82.08	6/26/2022 8:10	16.96	6/26/2022 7:19	9.54	6/26/2022 12:15	100.83
6/27/2022 11:06	51.38	6/27/2022 9:48	82.02	6/26/2022 8:11	16.92	6/26/2022 7:20	9.52	6/26/2022 12:16	100.47
6/27/2022 11:07	51.38	6/27/2022 9:49	82.07	6/26/2022 8:12	16.90	6/26/2022 7:21	9.37	6/26/2022 12:17	100.18
6/27/2022 11:08	51.35	6/27/2022 9:50	82.08	6/26/2022 8:13	16.89	6/26/2022 7:22	9.45	6/26/2022 12:18	99.91
6/27/2022 11:09	51.39	6/27/2022 9:51	82.07	6/26/2022 8:14	16.97	6/26/2022 7:23	9.42	6/26/2022 12:19	99.56
6/27/2022 11:10	51.34	6/27/2022 9:52	82.09	6/26/2022 8:15	16.88	6/26/2022 7:24	9.41	6/26/2022 12:20	99.27
6/27/2022 11:11	51.38	6/27/2022 9:53	82.10	6/26/2022 8:16	16.91	6/26/2022 7:25	9.38	6/26/2022 12:21	104.26
6/27/2022 11:12	51.38	6/27/2022 9:54	82.04	6/26/2022 8:17	16.89	6/26/2022 7:26	9.35	6/26/2022 12:22	103.84
6/27/2022 11:13	51.37	6/27/2022 9:55	82.07	6/26/2022 8:18	16.92	6/26/2022 7:27	9.38	6/26/2022 12:23	103.42
6/27/2022 11:14	51.38	6/27/2022 9:56	82.08	6/26/2022 8:19	16.89	6/26/2022 7:28	9.30	6/26/2022 12:24	103.06
6/27/2022 11:15	51.37	6/27/2022 9:57	82.08	6/26/2022 8:20	16.96	6/26/2022 7:29	9.33	6/26/2022 12:25	102.63
6/27/2022 11:16	51.40	6/27/2022 9:58	82.04	6/26/2022 8:21	16.90	6/26/2022 7:30	9.30	6/26/2022 12:26	102.30
6/27/2022 11:17	51.38	6/27/2022 9:59	82.08	6/26/2022 8:22	16.91	6/26/2022 7:31	9.23	6/26/2022 12:27	101.93
6/27/2022 11:18	51.37	6/27/2022 10:00	82.07	6/26/2022 8:23	16.93	6/26/2022 7:32	9.30	6/26/2022 12:28	101.58
6/27/2022 11:19	51.37	6/27/2022 10:01	82.09	6/26/2022 8:24	16.93	6/26/2022 7:33	9.25	6/26/2022 12:29	101.20
6/27/2022 11:20	51.37	6/27/2022 10:02	82.09	6/26/2022 8:25	16.88	6/26/2022 7:34	9.19	6/26/2022 12:30	100.86
6/27/2022 11:21	51.38	6/27/2022 10:03	82.10	6/26/2022 8:26	16.89	6/26/2022 7:35	9.22	6/26/2022 12:31	100.54
6/27/2022 11:22	51.37	6/27/2022 10:04	82.02	6/26/2022 8:27	16.94	6/26/2022 7:36	9.20	6/26/2022 12:32	100.22
6/27/2022 11:23	51.37	6/27/2022 10:05	82.06	6/26/2022 8:28	16.90	6/26/2022 7:37	9.18	6/26/2022 12:33	99.92
6/27/2022 11:24	51.36	6/27/2022 10:06	82.08	6/26/2022 8:29	16.92	6/26/2022 7:38	9.20	6/26/2022 12:34	99.60
6/27/2022 11:25	51.35	6/27/2022 10:07	82.04	6/26/2022 8:30	16.90	6/26/2022 7:39	9.12	6/26/2022 12:35	99.28
6/27/2022 11:26	51.35	6/27/2022 10:08	82.07	6/26/2022 8:31	16.89	6/26/2022 7:40	9.19	6/26/2022 12:36	98.97
6/27/2022 11:27	51.34	6/27/2022 10:09	82.07	6/26/2022 8:32	16.91	6/26/2022 7:41	9.70	6/26/2022 12:37	98.66
6/27/2022 11:28	51.34	6/27/2022 10:10	82.05	6/26/2022 8:33	16.92	6/26/2022 7:42	9.40	6/26/2022 12:38	98.34
6/27/2022 11:29	51.36	6/27/2022 10:11	82.13	6/26/2022 8:34	16.95	6/26/2022 7:43	9.32	6/26/2022 12:39	98.05
6/27/2022 11:30	51.39	6/27/2022 10:12	82.09	6/26/2022 8:35	16.94	6/26/2022 7:44	9.14	6/26/2022 12:40	97.73
6/27/2022 11:31	51.36	6/27/2022 10:13	82.06	6/26/2022 8:36	16.95	6/26/2022 7:45	9.11	6/26/2022 12:41	97.48
6/27/2022 11:32	51.35	6/27/2022 10:14	82.08	6/26/2022 8:37	16.87	6/26/2022 7:46	9.08	6/26/2022 12:42	97.18
6/27/2022 11:33	51.38	6/27/2022 10:15	82.07	6/26/2022 8:38	16.92	6/26/2022 7:47	9.07	6/26/2022 12:43	96.89
6/27/2022 11:34	51.37	6/27/2022 10:16	82.05	6/26/2022 8:39	16.90	6/26/2022 7:48	9.02	6/26/2022 12:44	96.57
6/27/2022 11:35	51.40	6/27/2022 10:17	82.09	6/26/2022 8:40	16.90	6/26/2022 7:49	9.05	6/26/2022 12:45	96.31
6/27/2022 11:36	51.34	6/27/2022 10:18	82.06	6/26/2022 8:41	16.91	6/26/2022 7:50	8.93	6/26/2022 12:46	96.06
6/27/2022 11:37	51.41	6/27/2022 10:19	82.07	6/26/2022 8:42	16.91	6/26/2022 7:51	9.13	6/26/2022 12:47	95.77
6/27/2022 11:38	51.35	6/27/2022 10:20	82.07	6/26/2022 8:43	16.93	6/26/2022 7:52	9.00	6/26/2022 12:48	95.51
6/27/2022 11:39	51.34	6/27/2022 10:21	82.12	6/26/2022 8:44	16.91	6/26/2022 7:53	9.00	6/26/2022 12:49	95.24
6/27/2022 11:40	51.34	6/27/2022 10:22	82.08	6/26/2022 8:45	16.90	6/26/2022 7:54	8.85	6/26/2022 12:50	95.01
6/27/2022 11:41	51.37	6/27/2022 10:23	82.09	6/26/2022 8:46	16.90	6/26/2022 7:55	8.86	6/26/2022 12:51	94.76
6/27/2022 11:42	51.36	6/27/2022 10:24	82.08	6/26/2022 8:47	16.93	6/26/2022 7:56	8.82	6/26/2022 12:52	94.48
6/27/2022 11:43	51.34	6/27/2022 10:25	82.08	6/26/2022 8:48	16.99	6/26/2022 7:57	8.87	6/26/2022 12:53	94.23
6/27/2022 11:44	51.35	6/27/2022 10:26	82.05	6/26/2022 8:49	16.93	6/26/2022 7:58	8.77	6/26/2022 12:54	94.02
6/27/2022 11:45	51.37	6/27/2022 10:27	82.06	6/26/2022 8:50	16.92	6/26/2022 7:59	8.79	6/26/2022 12:55	93.79
6/27/2022 11:46	51.35	6/27/2022 10:28	82.04	6/26/2022 8:51	16.85	6/26/2022 8:00	8.74	6/26/2022 12:56	93.58
6/27/2022 11:47	51.36	6/27/2022 10:29	82.10	6/26/2022 8:52	16.93	6/26/2022 8:01	8.74	6/26/2022 12:57	93.34
6/27/2022 11:48	51.37	6/27/2022 10:30	82.09	6/26/2022 8:53	16.97	6/26/2022 8:02	8.72	6/26/2022 12:58	93.14

6/27/2022 11:49	51.34	6/27/2022 10:31	82.05	6/26/2022 8:54	16.94	6/26/2022 8:03	8.70	6/26/2022 12:59	92.88
6/27/2022 11:50	51.39	6/27/2022 10:32	82.49	6/26/2022 8:55	16.91	6/26/2022 8:04	8.66	6/26/2022 13:00	92.64
6/27/2022 11:51	51.35	6/27/2022 10:33	84.59	6/26/2022 8:56	16.92	6/26/2022 8:05	8.72	6/26/2022 13:01	92.40
6/27/2022 11:52	51.35	6/27/2022 10:34	84.12	6/26/2022 8:57	16.95	6/26/2022 8:06	8.62	6/26/2022 13:02	92.17
6/27/2022 11:53	51.39	6/27/2022 10:35	83.80	6/26/2022 8:58	16.95	6/26/2022 8:07	8.60	6/26/2022 13:03	91.98
6/27/2022 11:54	51.38	6/27/2022 10:36	83.51	6/26/2022 8:59	16.88	6/26/2022 8:08	8.58	6/26/2022 13:04	91.75
6/27/2022 11:55	51.36	6/27/2022 10:37	84.62	6/26/2022 9:00	16.91	6/26/2022 8:09	8.66	6/26/2022 13:05	91.55
6/27/2022 11:56	51.35	6/27/2022 10:38	84.19	6/26/2022 9:01	16.94	6/26/2022 8:10	8.57	6/26/2022 13:06	91.41
6/27/2022 11:57	51.35	6/27/2022 10:39	85.19	6/26/2022 9:02	16.93	6/26/2022 8:11	8.56	6/26/2022 13:07	91.20
6/27/2022 11:58	51.37	6/27/2022 10:40	84.71	6/26/2022 9:03	16.95	6/26/2022 8:12	8.52	6/26/2022 13:08	91.01
6/27/2022 11:59	51.36	6/27/2022 10:41	85.54	6/26/2022 9:04	16.93	6/26/2022 8:13	8.54	6/26/2022 13:09	90.80
6/27/2022 12:00	51.33	6/27/2022 10:42	84.92	6/26/2022 9:05	16.96	6/26/2022 8:14	8.54	6/26/2022 13:10	90.59
6/27/2022 12:01	51.38	6/27/2022 10:43	85.70	6/26/2022 9:06	17.00	6/26/2022 8:15	8.41	6/26/2022 13:11	90.42
6/27/2022 12:02	51.34	6/27/2022 10:44	85.17	6/26/2022 9:07	16.96	6/26/2022 8:16	8.40	6/26/2022 13:12	90.23
6/27/2022 12:03	51.36	6/27/2022 10:45	85.88	6/26/2022 9:08	16.88	6/26/2022 8:17	8.43	6/26/2022 13:13	90.02
6/27/2022 12:04	51.34	6/27/2022 10:46	85.29	6/26/2022 9:09	16.94	6/26/2022 8:18	8.46	6/26/2022 13:14	89.85
6/27/2022 12:05	51.37	6/27/2022 10:47	84.85	6/26/2022 9:10	16.92	6/26/2022 8:19	8.38	6/26/2022 13:15	89.68
6/27/2022 12:06	51.35	6/27/2022 10:48	84.92	6/26/2022 9:11	16.92	6/26/2022 8:20	8.53	6/26/2022 13:16	89.45
6/27/2022 12:07	51.35	6/27/2022 10:49	85.15	6/26/2022 9:12	16.93	6/26/2022 8:21	8.39	6/26/2022 13:17	89.24
6/27/2022 12:08	51.38	6/27/2022 10:50	84.54	6/26/2022 9:13	16.95	6/26/2022 8:22	8.34	6/26/2022 13:18	89.09
6/27/2022 12:09	51.33	6/27/2022 10:51	84.25	6/26/2022 9:14	16.93	6/26/2022 8:23	8.36	6/26/2022 13:19	88.88
6/27/2022 12:10	51.35	6/27/2022 10:52	83.97	6/26/2022 9:15	16.93	6/26/2022 8:24	8.40	6/26/2022 13:20	88.73
6/27/2022 12:11	51.36	6/27/2022 10:53	83.75	6/26/2022 9:16	16.95	6/26/2022 8:25	8.24	6/26/2022 13:21	91.77
6/27/2022 12:12	51.36	6/27/2022 10:54	83.60	6/26/2022 9:17	16.94	6/26/2022 8:26	8.33	6/26/2022 13:22	93.42
6/27/2022 12:13	51.34	6/27/2022 10:55	83.40	6/26/2022 9:18	16.99	6/26/2022 8:27	8.29	6/26/2022 13:23	93.15
6/27/2022 12:14	51.38	6/27/2022 10:56	83.28	6/26/2022 9:19	16.93	6/26/2022 8:28	8.27	6/26/2022 13:24	92.87
		6/27/2022 10:57	83.15	6/26/2022 9:20	17.00	6/26/2022 8:29	8.24	6/26/2022 13:25	92.57
		6/27/2022 10:58	83.06	6/26/2022 9:21	16.97	6/26/2022 8:30	8.22	6/26/2022 13:26	92.32
		6/27/2022 10:59	82.96	6/26/2022 9:22	16.99	6/26/2022 8:31	8.32	6/26/2022 13:27	92.08
		6/27/2022 11:00	82.94	6/26/2022 9:23	16.98	6/26/2022 8:32	8.26	6/26/2022 13:28	91.86
		6/27/2022 11:01	82.82	6/26/2022 9:24	16.98	6/26/2022 8:33	8.24	6/26/2022 13:29	91.66
		6/27/2022 11:02	82.77	6/26/2022 9:25	16.95	6/26/2022 8:34	8.19	6/26/2022 13:30	91.44
		6/27/2022 11:03	82.75	6/26/2022 9:26	16.93	6/26/2022 8:35	8.22	6/26/2022 13:31	91.26
		6/27/2022 11:04	82.69	6/26/2022 9:27	16.95	6/26/2022 8:36	8.19	6/26/2022 13:32	91.05
		6/27/2022 11:05	82.63	6/26/2022 9:28	16.95	6/26/2022 8:37	8.13	6/26/2022 13:33	90.84
		6/27/2022 11:06	82.58	6/26/2022 9:29	16.97	6/26/2022 8:38	8.09	6/26/2022 13:34	90.62
		6/27/2022 11:07	82.56	6/26/2022 9:30	16.94	6/26/2022 8:39	8.14	6/26/2022 13:35	90.40
		6/27/2022 11:08	82.53	6/26/2022 9:31	16.93	6/26/2022 8:40	8.13	6/26/2022 13:36	90.16
		6/27/2022 11:09	82.46	6/26/2022 9:32	16.91	6/26/2022 8:41	8.05	6/26/2022 13:37	89.99
		6/27/2022 11:10	82.48	6/26/2022 9:33	16.93	6/26/2022 8:42	8.04	6/26/2022 13:38	89.81
		6/27/2022 11:11	83.01	6/26/2022 9:34	16.98	6/26/2022 8:43	8.10	6/26/2022 13:39	89.65
		6/27/2022 11:12	83.21	6/26/2022 9:35	16.99	6/26/2022 8:44	8.06	6/26/2022 13:40	89.42
		6/27/2022 11:13	83.01	6/26/2022 9:36	16.95	6/26/2022 8:45	7.99	6/26/2022 13:41	95.71
		6/27/2022 11:14	82.91	6/26/2022 9:37	17.04	6/26/2022 8:46	7.97	6/26/2022 13:42	97.33
		6/27/2022 11:15	82.80	6/26/2022 9:38	16.96	6/26/2022 8:47	8.26	6/26/2022 13:43	96.97
		6/27/2022 11:16	82.77	6/26/2022 9:39	16.90	6/26/2022 8:48	8.44	6/26/2022 13:44	103.05
		6/27/2022 11:17	82.66	6/26/2022 9:40	16.95	6/26/2022 8:49	8.28	6/26/2022 13:45	104.79
		6/27/2022 11:18	82.61	6/26/2022 9:41	17.00	6/26/2022 8:50	8.11	6/26/2022 13:46	104.30
		6/27/2022 11:19	82.61	6/26/2022 9:42	16.97	6/26/2022 8:51	8.33	6/26/2022 13:47	103.92
		6/27/2022 11:20	82.52	6/26/2022 9:43	16.98	6/26/2022 8:52	8.21	6/26/2022 13:48	103.44
		6/27/2022 11:21	82.50	6/26/2022 9:44	16.97	6/26/2022 8:53	8.22	6/26/2022 13:49	103.06
		6/27/2022 11:22	82.48	6/26/2022 9:45	16.96	6/26/2022 8:54	8.21	6/26/2022 13:50	102.61
		6/27/2022 11:23	82.42	6/26/2022 9:46	16.93	6/26/2022 8:55	8.22	6/26/2022 13:51	102.28
		6/27/2022 11:24	82.41	6/26/2022 9:47	16.95	6/26/2022 8:56	8.05	6/26/2022 13:52	101.88
		6/27/2022 11:25	82.39	6/26/2022 9:48	16.99	6/26/2022 8:57	8.03	6/26/2022 13:53	101.50
		6/27/2022 11:26	82.39	6/26/2022 9:49	16.97	6/26/2022 8:58	8.03	6/26/2022 13:54	101.13
		6/27/2022 11:27	82.33	6/26/2022 9:50	16.91	6/26/2022 8:59	7.96	6/26/2022 13:55	100.80
		6/27/2022 11:28	82.38	6/26/2022 9:51	16.99	6/26/2022 9:00	8.01	6/26/2022 13:56	100.44
		6/27/2022 11:29	82.34	6/26/2022 9:52	17.03	6/26/2022 9:01	7.94	6/26/2022 13:57	100.12
		6/27/2022 11:30	82.32	6/26/2022 9:53	17.03	6/26/2022 9:02	7.96	6/26/2022 13:58	99.78
		6/27/2022 11:31	82.32	6/26/2022 9:54	17.01	6/26/2022 9:03	7.86	6/26/2022 13:59	99.48
		6/27/2022 11:32	82.30	6/26/2022 9:55	16.99	6/26/2022 9:04	7.89	6/26/2022 14:00	99.14
				6/26/2022 9:56	17.01	6/26/2022 9:05	7.85	6/26/2022 14:01	98.82
				6/26/2022 9:57	16.95	6/26/2022 9:06	7.88	6/26/2022 14:02	98.50
				6/26/2022 9:58	17.01	6/26/2022 9:07	7.79	6/26/2022 14:03	98.19
				6/26/2022 9:59	16.96	6/26/2022 9:08	7.82	6/26/2022 14:04	97.84
				6/26/2022 10:00	17.04	6/26/2022 9:09	7.79	6/26/2022 14:05	97.54
				6/26/2022 10:01	16.99	6/26/2022 9:10	8.24	6/26/2022 14:06	97.29
				6/26/2022 10:02	16.98	6/26/2022 9:11	7.98	6/26/2022 14:07	96.98
				6/26/2022 10:03	16.99	6/26/2022 9:12	7.91	6/26/2022 14:08	96.70
				6/26/2022 10:04	17.02	6/26/2022 9:13	8.52	6/26/2022 14:09	96.39
				6/26/2022 10:05	17.00	6/26/2022 9:14	8.88	6/26/2022 14:10	96.10
				6/26/2022 10:06	17.00	6/26/2022 9:15	9.14	6/26/2022 14:11	95.84
				6/26/2022 10:07	16.98	6/26/2022 9:16	9.31	6/26/2022 14:12	95.58
				6/26/2022 10:08	19.44	6/26/2022 9:17	9.46	6/26/2022 14:13	95.31
				6/26/2022 10:09	24.11	6/26/2022 9:18	9.68	6/26/2022 14:14	95.03
				6/26/2022 10:10	26.91	6/26/2022 9:19	9.87	6/26/2022 14:15	94.76
				6/26/2022 10:11	25.58	6/26/2022 9:20	9.26	6/26/2022 14:16	94.52
				6/26/2022 10:12	23.29	6/26/2022 9:21	8.90	6/26/2022 14:17	94.28
				6/26/2022 10:13	21.95	6/26/2022 9:22	8.79	6/26/2022 14:18	94.05
				6/26/2022 10:14	21.17	6/26/2022 9:23	8.80	6/26/2022 14:19	93.84
				6/26/2022 10:15	20.64	6/26/2022 9:24	8.69	6/26/2022 14:20	93.61
				6/26/2022 10:16	20.27	6/26/2022 9:25	8.48	6/26/2022 14:21	93.34
				6/26/2022 10:17	19.94	6/26/2022 9:26	8.40	6/26/2022 14:22	93.12
				6/26/2022 10:18	19.76	6/26/2022 9:27	8.26	6/26/2022 14:23	92.86
				6/26/2022 10:19	19.53	6/26/2022 9:28	8.24	6/26/2022 14:24	92.63
				6/26/2022 10:20	19.42	6/26/2022 9:29	8.19	6/26/2022 14:25	92.44
				6/26/2022 10:21	19.28	6/26/2022 9:30	8.10	6/26/2022 14:26	92.22

6/26/2022 10:22	19.05	6/26/2022 9:31	8.18	6/26/2022 14:27	91.96
6/26/2022 10:23	19.04	6/26/2022 9:32	8.11	6/26/2022 14:28	91.75
6/26/2022 10:24	18.93	6/26/2022 9:33	8.06	6/26/2022 14:29	91.54
6/26/2022 10:25	18.87	6/26/2022 9:34	8.06	6/26/2022 14:30	91.38
6/26/2022 10:26	18.72	6/26/2022 9:35	8.03	6/26/2022 14:31	91.20
6/26/2022 10:27	18.68	6/26/2022 9:36	8.04	6/26/2022 14:32	90.96
6/26/2022 10:28	18.64	6/26/2022 9:37	8.09	6/26/2022 14:33	90.77
6/26/2022 10:29	18.53	6/26/2022 9:38	8.07	6/26/2022 14:34	90.57
6/26/2022 10:30	18.52	6/26/2022 9:39	8.03	6/26/2022 14:35	90.37
6/26/2022 10:31	18.46	6/26/2022 9:40	8.15	6/26/2022 14:36	90.20
6/26/2022 10:32	18.39	6/26/2022 9:41	8.01	6/26/2022 14:37	90.02
6/26/2022 10:33	18.37	6/26/2022 9:42	7.96	6/26/2022 14:38	89.81
6/26/2022 10:34	18.31	6/26/2022 9:43	7.94	6/26/2022 14:39	89.59
6/26/2022 10:35	18.27	6/26/2022 9:44	7.86	6/26/2022 14:40	89.40
6/26/2022 10:36	18.23	6/26/2022 9:45	7.86	6/26/2022 14:41	89.20
6/26/2022 10:37	18.23	6/26/2022 9:46	7.85	6/26/2022 14:42	89.02
6/26/2022 10:38	18.16	6/26/2022 9:47	8.00	6/26/2022 14:43	88.91
6/26/2022 10:39	18.13	6/26/2022 9:48	7.84	6/26/2022 14:44	88.67
6/26/2022 10:40	18.13	6/26/2022 9:49	7.99	6/26/2022 14:45	88.51
6/26/2022 10:41	18.11	6/26/2022 9:50	8.02	6/26/2022 14:46	88.31
6/26/2022 10:42	18.06	6/26/2022 9:51	7.90	6/26/2022 14:47	88.18
6/26/2022 10:43	18.00	6/26/2022 9:52	7.87	6/26/2022 14:48	87.96
6/26/2022 10:44	18.03	6/26/2022 9:53	7.78	6/26/2022 14:49	87.80
6/26/2022 10:45	18.01	6/26/2022 9:54	7.81	6/26/2022 14:50	87.63
6/26/2022 10:46	17.92	6/26/2022 9:55	7.76	6/26/2022 14:51	87.38
6/26/2022 10:47	17.96	6/26/2022 9:56	7.87	6/26/2022 14:52	87.20
6/26/2022 10:48	17.95	6/26/2022 9:57	7.74	6/26/2022 14:53	87.05
6/26/2022 10:49	17.85	6/26/2022 9:58	7.73	6/26/2022 14:54	86.89
6/26/2022 10:50	17.85	6/26/2022 9:59	7.71	6/26/2022 14:55	86.70
6/26/2022 10:51	17.84	6/26/2022 10:00	7.66	6/26/2022 14:56	86.55
6/26/2022 10:52	21.62	6/26/2022 10:01	7.65	6/26/2022 14:57	86.38
6/26/2022 10:53	25.67	6/26/2022 10:02	7.61	6/26/2022 14:58	86.22
6/26/2022 10:54	28.14	6/26/2022 10:03	7.62	6/26/2022 14:59	86.07
6/26/2022 10:55	25.64	6/26/2022 10:04	7.57	6/26/2022 15:00	85.91
6/26/2022 10:56	23.66	6/26/2022 10:05	7.68	6/26/2022 15:01	85.73
6/26/2022 10:57	22.47	6/26/2022 10:06	7.62	6/26/2022 15:02	85.60
6/26/2022 10:58	21.72	6/26/2022 10:07	7.65	6/26/2022 15:03	85.40
6/26/2022 10:59	21.18	6/26/2022 10:08	7.60	6/26/2022 15:04	85.25
6/26/2022 11:00	20.83	6/26/2022 10:09	7.63	6/26/2022 15:05	85.10
6/26/2022 11:01	20.48	6/26/2022 10:10	7.81	6/26/2022 15:06	84.94
6/26/2022 11:02	20.32	6/26/2022 10:11	7.71	6/26/2022 15:07	84.79
6/26/2022 11:03	20.09	6/26/2022 10:12	7.77	6/26/2022 15:08	84.69
6/26/2022 11:04	19.93	6/26/2022 10:13	7.60	6/26/2022 15:09	84.54
6/26/2022 11:05	19.76	6/26/2022 10:14	7.62	6/26/2022 15:10	84.40
6/26/2022 11:06	19.66	6/26/2022 10:15	7.62	6/26/2022 15:11	84.22
6/26/2022 11:07	19.59	6/26/2022 10:16	7.52	6/26/2022 15:12	84.06
6/26/2022 11:08	19.47	6/26/2022 10:17	7.64	6/26/2022 15:13	83.96
6/26/2022 11:09	19.35	6/26/2022 10:18	7.58	6/26/2022 15:14	83.77
6/26/2022 11:10	19.30	6/26/2022 10:19	7.63	6/26/2022 15:15	83.68
6/26/2022 11:11	19.23	6/26/2022 10:20	7.55	6/26/2022 15:16	83.51
6/26/2022 11:12	19.13	6/26/2022 10:21	7.53	6/26/2022 15:17	83.38
6/26/2022 11:13	19.03	6/26/2022 10:22	7.54	6/26/2022 15:18	83.27
6/26/2022 11:14	19.02	6/26/2022 10:23	7.75	6/26/2022 15:19	83.14
6/26/2022 11:15	18.98	6/26/2022 10:24	7.74	6/26/2022 15:20	82.98
6/26/2022 11:16	18.89	6/26/2022 10:25	7.60	6/26/2022 15:21	82.86
6/26/2022 11:17	18.84	6/26/2022 10:26	7.54	6/26/2022 15:22	82.73
6/26/2022 11:18	18.82	6/26/2022 10:27	7.56	6/26/2022 15:23	82.59
6/26/2022 11:19	18.73	6/26/2022 10:28	7.53	6/26/2022 15:24	82.49
6/26/2022 11:20	18.76	6/26/2022 10:29	7.50	6/26/2022 15:25	82.34
6/26/2022 11:21	18.70	6/26/2022 10:30	7.47	6/26/2022 15:26	82.19
6/26/2022 11:22	18.68	6/26/2022 10:31	7.48	6/26/2022 15:27	82.09
6/26/2022 11:23	18.60	6/26/2022 10:32	7.48	6/26/2022 15:28	81.98
6/26/2022 11:24	18.55	6/26/2022 10:33	7.62	6/26/2022 15:29	81.88
6/26/2022 11:25	18.56	6/26/2022 10:34	7.84	6/26/2022 15:30	81.75
6/26/2022 11:26	18.51	6/26/2022 10:35	7.66	6/26/2022 15:31	81.64
6/26/2022 11:27	18.46	6/26/2022 10:36	7.52	6/26/2022 15:32	81.53
6/26/2022 11:28	18.44	6/26/2022 10:37	7.57	6/26/2022 15:33	81.42
6/26/2022 11:29	18.40	6/26/2022 10:38	7.53	6/26/2022 15:34	81.32
6/26/2022 11:30	18.34	6/26/2022 10:39	7.42	6/26/2022 15:35	81.18
6/26/2022 11:31	18.35	6/26/2022 10:40	7.52	6/26/2022 15:36	81.12
6/26/2022 11:32	18.32	6/26/2022 10:41	7.40	6/26/2022 15:37	81.02
6/26/2022 11:33	18.26	6/26/2022 10:42	7.39	6/26/2022 15:38	80.88
6/26/2022 11:34	18.23	6/26/2022 10:43	7.42	6/26/2022 15:39	80.87
6/26/2022 11:35	18.21	6/26/2022 10:44	7.42	6/26/2022 15:40	80.72
6/26/2022 11:36	18.14	6/26/2022 10:45	7.36	6/26/2022 15:41	80.62
6/26/2022 11:37	18.22	6/26/2022 10:46	7.37	6/26/2022 15:42	80.54
6/26/2022 11:38	18.18	6/26/2022 10:47	7.39	6/26/2022 15:43	80.45
6/26/2022 11:39	18.15	6/26/2022 10:48	7.38	6/26/2022 15:44	80.35
6/26/2022 11:40	18.18	6/26/2022 10:49	7.31	6/26/2022 15:45	80.20
6/26/2022 11:41	18.10	6/26/2022 10:50	7.34	6/26/2022 15:46	80.14
6/26/2022 11:42	18.10	6/26/2022 10:51	7.30	6/26/2022 15:47	80.05
6/26/2022 11:43	18.10	6/26/2022 10:52	7.35	6/26/2022 15:48	79.93
6/26/2022 11:44	18.06	6/26/2022 10:53	7.30	6/26/2022 15:49	79.81
6/26/2022 11:45	17.99	6/26/2022 10:54	7.34	6/26/2022 15:50	79.71
6/26/2022 11:46	18.00	6/26/2022 10:55	7.29	6/26/2022 15:51	79.58
6/26/2022 11:47	17.95	6/26/2022 10:56	7.23	6/26/2022 15:52	79.51
6/26/2022 11:48	18.02	6/26/2022 10:57	7.32	6/26/2022 15:53	79.44
6/26/2022 11:49	17.99	6/26/2022 10:58	7.19	6/26/2022 15:54	79.36

6/26/2022 11:50	17.98	6/26/2022 10:59	7.19	6/26/2022 15:55	79.27
6/26/2022 11:51	17.94	6/26/2022 11:00	7.26	6/26/2022 15:56	79.17
6/26/2022 11:52	17.94	6/26/2022 11:01	7.23	6/26/2022 15:57	79.11
6/26/2022 11:53	17.89	6/26/2022 11:02	7.18	6/26/2022 15:58	79.06
6/26/2022 11:54	17.86	6/26/2022 11:03	7.25	6/26/2022 15:59	78.98
6/26/2022 11:55	17.88	6/26/2022 11:04	7.22	6/26/2022 16:00	78.89
6/26/2022 11:56	17.88	6/26/2022 11:05	7.16	6/26/2022 16:01	78.81
6/26/2022 11:57	17.84	6/26/2022 11:06	7.15	6/26/2022 16:02	78.70
6/26/2022 11:58	17.87	6/26/2022 11:07	7.09	6/26/2022 16:03	78.64
6/26/2022 11:59	17.85	6/26/2022 11:08	7.09	6/26/2022 16:04	78.59
6/26/2022 12:00	17.79	6/26/2022 11:09	7.09	6/26/2022 16:05	78.50
6/26/2022 12:01	17.82	6/26/2022 11:10	7.10	6/26/2022 16:06	78.44
6/26/2022 12:02	17.77	6/26/2022 11:11	7.12	6/26/2022 16:07	78.36
6/26/2022 12:03	17.79	6/26/2022 11:12	7.04	6/26/2022 16:08	78.25
6/26/2022 12:04	17.83	6/26/2022 11:13	7.05	6/26/2022 16:09	78.22
6/26/2022 12:05	17.76	6/26/2022 11:14	7.07	6/26/2022 16:10	78.11
6/26/2022 12:06	17.72	6/26/2022 11:15	7.13	6/26/2022 16:11	78.02
6/26/2022 12:07	17.71	6/26/2022 11:16	7.02	6/26/2022 16:12	77.98
6/26/2022 12:08	17.72	6/26/2022 11:17	7.01	6/26/2022 16:13	77.79
6/26/2022 12:09	17.73	6/26/2022 11:18	7.00	6/26/2022 16:14	77.80
6/26/2022 12:10	17.65	6/26/2022 11:19	7.01	6/26/2022 16:15	77.70
6/26/2022 12:11	17.69	6/26/2022 11:20	6.98	6/26/2022 16:16	77.63
6/26/2022 12:12	17.64	6/26/2022 11:21	6.98	6/26/2022 16:17	79.58
6/26/2022 12:13	17.66	6/26/2022 11:22	6.96	6/26/2022 16:18	84.40
6/26/2022 12:14	17.66	6/26/2022 11:23	6.99	6/26/2022 16:19	84.13
6/26/2022 12:15	17.61	6/26/2022 11:24	6.93	6/26/2022 16:20	83.92
6/26/2022 12:16	17.74	6/26/2022 11:25	6.94	6/26/2022 16:21	83.70
6/26/2022 12:17	17.62	6/26/2022 11:26	6.97	6/26/2022 16:22	83.52
6/26/2022 12:18	17.61	6/26/2022 11:27	6.98	6/26/2022 16:23	83.35
6/26/2022 12:19	17.66	6/26/2022 11:28	6.95	6/26/2022 16:24	83.20
6/26/2022 12:20	17.57	6/26/2022 11:29	6.91	6/26/2022 16:25	83.05
6/26/2022 12:21	17.61	6/26/2022 11:30	6.94	6/26/2022 16:26	82.88
6/26/2022 12:22	17.62	6/26/2022 11:31	6.90	6/26/2022 16:27	82.70
6/26/2022 12:23	17.64	6/26/2022 11:32	6.96	6/26/2022 16:28	82.53
6/26/2022 12:24	17.58	6/26/2022 11:33	6.86	6/26/2022 16:29	82.39
6/26/2022 12:25	17.55	6/26/2022 11:34	6.85	6/26/2022 16:30	82.27
6/26/2022 12:26	17.54	6/26/2022 11:35	6.92	6/26/2022 16:31	82.11
6/26/2022 12:27	17.55	6/26/2022 11:36	6.87	6/26/2022 16:32	81.95
6/26/2022 12:28	17.55	6/26/2022 11:37	6.80	6/26/2022 16:33	81.81
6/26/2022 12:29	17.55	6/26/2022 11:38	6.83	6/26/2022 16:34	81.74
6/26/2022 12:30	17.61	6/26/2022 11:39	6.83	6/26/2022 16:35	81.59
6/26/2022 12:31	17.50	6/26/2022 11:40	6.89	6/26/2022 16:36	81.45
6/26/2022 12:32	17.54	6/26/2022 11:41	6.83	6/26/2022 16:37	81.36
6/26/2022 12:33	17.54	6/26/2022 11:42	6.86	6/26/2022 16:38	81.24
6/26/2022 12:34	17.48	6/26/2022 11:43	6.84	6/26/2022 16:39	81.10
6/26/2022 12:35	17.49	6/26/2022 11:44	6.93	6/26/2022 16:40	80.99
6/26/2022 12:36	17.53	6/26/2022 11:45	6.79	6/26/2022 16:41	80.90
6/26/2022 12:37	17.48	6/26/2022 11:46	6.77	6/26/2022 16:42	80.79
6/26/2022 12:38	17.46	6/26/2022 11:47	6.77	6/26/2022 16:43	80.71
6/26/2022 12:39	17.47	6/26/2022 11:48	6.80	6/26/2022 16:44	80.58
6/26/2022 12:40	17.48	6/26/2022 11:49	6.86	6/26/2022 16:45	80.49
6/26/2022 12:41	17.47	6/26/2022 11:50	6.74	6/26/2022 16:46	80.38
6/26/2022 12:42	17.49	6/26/2022 11:51	6.78	6/26/2022 16:47	80.25
6/26/2022 12:43	17.42	6/26/2022 11:52	6.74	6/26/2022 16:48	80.14
6/26/2022 12:44	17.43	6/26/2022 11:53	6.80	6/26/2022 16:49	80.01
6/26/2022 12:45	17.47	6/26/2022 11:54	6.70	6/26/2022 16:50	79.90
6/26/2022 12:46	17.47	6/26/2022 11:55	6.76	6/26/2022 16:51	79.81
6/26/2022 12:47	17.42	6/26/2022 11:56	6.74	6/26/2022 16:52	79.71
6/26/2022 12:48	17.42	6/26/2022 11:57	6.76	6/26/2022 16:53	79.59
6/26/2022 12:49	17.42	6/26/2022 11:58	6.72	6/26/2022 16:54	79.47
6/26/2022 12:50	17.45	6/26/2022 11:59	6.66	6/26/2022 16:55	79.42
6/26/2022 12:51	17.41	6/26/2022 12:00	6.66	6/26/2022 16:56	79.29
6/26/2022 12:52	17.45	6/26/2022 12:01	6.72	6/26/2022 16:57	79.23
6/26/2022 12:53	17.43	6/26/2022 12:02	6.64	6/26/2022 16:58	79.11
6/26/2022 12:54	17.40	6/26/2022 12:03	6.66	6/26/2022 16:59	79.04
6/26/2022 12:55	17.40	6/26/2022 12:04	6.69	6/26/2022 17:00	78.97
6/26/2022 12:56	17.43	6/26/2022 12:05	6.71	6/26/2022 17:01	78.85
6/26/2022 12:57	17.38	6/26/2022 12:06	6.66	6/26/2022 17:02	78.77
6/26/2022 12:58	17.33	6/26/2022 12:07	6.63	6/26/2022 17:03	78.68
6/26/2022 12:59	17.35	6/26/2022 12:08	6.69	6/26/2022 17:04	78.64
6/26/2022 13:00	17.40	6/26/2022 12:09	6.67	6/26/2022 17:05	78.57
6/26/2022 13:01	17.36	6/26/2022 12:10	6.59	6/26/2022 17:06	78.46
6/26/2022 13:02	17.40	6/26/2022 12:11	6.63	6/26/2022 17:07	78.40
6/26/2022 13:03	17.33	6/26/2022 12:12	6.61	6/26/2022 17:08	78.30
6/26/2022 13:04	17.32	6/26/2022 12:13	6.60	6/26/2022 17:09	78.23
6/26/2022 13:05	17.33	6/26/2022 12:14	6.61	6/26/2022 17:10	78.10
6/26/2022 13:06	17.35	6/26/2022 12:15	6.62	6/26/2022 17:11	78.07
6/26/2022 13:07	17.33	6/26/2022 12:16	6.59	6/26/2022 17:12	77.96
6/26/2022 13:08	17.34	6/26/2022 12:17	6.59	6/26/2022 17:13	77.87
6/26/2022 13:09	17.27	6/26/2022 12:18	6.63	6/26/2022 17:14	77.82
6/26/2022 13:10	17.32	6/26/2022 12:19	6.55	6/26/2022 17:15	77.72
6/26/2022 13:11	17.33	6/26/2022 12:20	6.63	6/26/2022 17:16	77.60
6/26/2022 13:12	17.34	6/26/2022 12:21	6.58	6/26/2022 17:17	77.53
6/26/2022 13:13	17.32	6/26/2022 12:22	6.62	6/26/2022 17:18	77.48
6/26/2022 13:14	17.27	6/26/2022 12:23	6.54	6/26/2022 17:19	77.38
6/26/2022 13:15	17.27	6/26/2022 12:24	6.53	6/26/2022 17:20	77.29
6/26/2022 13:16	17.29	6/26/2022 12:25	6.53	6/26/2022 17:21	77.21
6/26/2022 13:17	17.32	6/26/2022 12:26	6.57	6/26/2022 17:22	77.19

6/26/2022 13:18	17.30	6/26/2022 12:27	6.54	6/26/2022 17:23	77.10
6/26/2022 13:19	17.28	6/26/2022 12:28	6.52	6/26/2022 17:24	77.00
6/26/2022 13:20	17.24	6/26/2022 12:29	6.57	6/26/2022 17:25	76.94
6/26/2022 13:21	17.26	6/26/2022 12:30	6.53	6/26/2022 17:26	76.89
6/26/2022 13:22	17.25	6/26/2022 12:31	6.53	6/26/2022 17:27	76.84
6/26/2022 13:23	17.24	6/26/2022 12:32	6.51	6/26/2022 17:28	76.77
6/26/2022 13:24	17.34	6/26/2022 12:33	6.50	6/26/2022 17:29	76.64
6/26/2022 13:25	17.29	6/26/2022 12:34	6.54	6/26/2022 17:30	76.61
6/26/2022 13:26	17.26	6/26/2022 12:35	6.42	6/26/2022 17:31	76.55
6/26/2022 13:27	17.22	6/26/2022 12:36	6.50	6/26/2022 17:32	76.45
6/26/2022 13:28	17.24	6/26/2022 12:37	6.49	6/26/2022 17:33	76.38
6/26/2022 13:29	17.22	6/26/2022 12:38	6.51	6/26/2022 17:34	76.34
6/26/2022 13:30	17.25	6/26/2022 12:39	6.53	6/26/2022 17:35	76.28
6/26/2022 13:31	17.26	6/26/2022 12:40	6.44	6/26/2022 17:36	76.18
6/26/2022 13:32	17.22	6/26/2022 12:41	6.46	6/26/2022 17:37	76.15
6/26/2022 13:33	17.23	6/26/2022 12:42	6.46	6/26/2022 17:38	76.04
6/26/2022 13:34	17.20	6/26/2022 12:43	6.50	6/26/2022 17:39	75.99
6/26/2022 13:35	17.23	6/26/2022 12:44	6.42	6/26/2022 17:40	75.94
6/26/2022 13:36	17.21	6/26/2022 12:45	6.41	6/26/2022 17:41	75.86
6/26/2022 13:37	17.22	6/26/2022 12:46	6.44	6/26/2022 17:42	75.80
6/26/2022 13:38	17.24	6/26/2022 12:47	6.43	6/26/2022 17:43	75.76
6/26/2022 13:39	17.25	6/26/2022 12:48	6.43	6/26/2022 17:44	75.65
6/26/2022 13:40	17.24	6/26/2022 12:49	6.38	6/26/2022 17:45	75.60
6/26/2022 13:41	17.22	6/26/2022 12:50	6.44	6/26/2022 17:46	75.55
6/26/2022 13:42	17.19	6/26/2022 12:51	6.46	6/26/2022 17:47	75.48
6/26/2022 13:43	17.20	6/26/2022 12:52	6.40	6/26/2022 17:48	78.36
6/26/2022 13:44	17.26	6/26/2022 12:53	6.42	6/26/2022 17:49	80.41
6/26/2022 13:45	17.20	6/26/2022 12:54	6.43	6/26/2022 17:50	80.23
6/26/2022 13:46	17.18	6/26/2022 12:55	6.44	6/26/2022 17:51	80.08
6/26/2022 13:47	17.21	6/26/2022 12:56	6.37	6/26/2022 17:52	79.95
6/26/2022 13:48	17.19	6/26/2022 12:57	6.36	6/26/2022 17:53	79.78
6/26/2022 13:49	17.25	6/26/2022 12:58	6.38	6/26/2022 17:54	79.69
6/26/2022 13:50	17.30	6/26/2022 12:59	6.36	6/26/2022 17:55	79.62
6/26/2022 13:51	17.23	6/26/2022 13:00	6.34	6/26/2022 17:56	79.43
6/26/2022 13:52	17.28	6/26/2022 13:01	6.35	6/26/2022 17:57	79.31
6/26/2022 13:53	17.27	6/26/2022 13:02	6.35	6/26/2022 17:58	79.24
6/26/2022 13:54	17.29	6/26/2022 13:03	6.34	6/26/2022 17:59	79.15
6/26/2022 13:55	17.28	6/26/2022 13:04	6.34	6/26/2022 18:00	79.06
6/26/2022 13:56	17.29	6/26/2022 13:05	6.33	6/26/2022 18:01	78.95
6/26/2022 13:57	17.37	6/26/2022 13:06	6.32	6/26/2022 18:02	78.87
6/26/2022 13:58	17.26	6/26/2022 13:07	6.30	6/26/2022 18:03	78.81
6/26/2022 13:59	17.33	6/26/2022 13:08	6.35	6/26/2022 18:04	78.74
6/26/2022 14:00	17.33	6/26/2022 13:09	6.27	6/26/2022 18:05	78.63
6/26/2022 14:01	17.33	6/26/2022 13:10	6.27	6/26/2022 18:06	78.53
6/26/2022 14:02	17.34	6/26/2022 13:11	6.30	6/26/2022 18:07	78.46
6/26/2022 14:03	17.31	6/26/2022 13:12	6.31	6/26/2022 18:08	78.37
6/26/2022 14:04	17.33	6/26/2022 13:13	6.29	6/26/2022 18:09	78.31
6/26/2022 14:05	17.35	6/26/2022 13:14	6.27	6/26/2022 18:10	78.24
6/26/2022 14:06	17.37	6/26/2022 13:15	6.27	6/26/2022 18:11	78.14
6/26/2022 14:07	17.38	6/26/2022 13:16	6.31	6/26/2022 18:12	77.99
6/26/2022 14:08	17.37	6/26/2022 13:17	6.27	6/26/2022 18:13	77.94
6/26/2022 14:09	17.43	6/26/2022 13:18	6.20	6/26/2022 18:14	77.84
6/26/2022 14:10	17.39	6/26/2022 13:19	6.24	6/26/2022 18:15	77.77
6/26/2022 14:11	17.40	6/26/2022 13:20	6.22	6/26/2022 18:16	77.72
6/26/2022 14:12	17.36	6/26/2022 13:21	6.19	6/26/2022 18:17	77.60
6/26/2022 14:13	17.42	6/26/2022 13:22	6.22	6/26/2022 18:18	77.52
6/26/2022 14:14	17.42	6/26/2022 13:23	6.20	6/26/2022 18:19	77.42
6/26/2022 14:15	17.43	6/26/2022 13:24	6.26	6/26/2022 18:20	77.35
6/26/2022 14:16	17.48	6/26/2022 13:25	6.25	6/26/2022 18:21	77.28
6/26/2022 14:17	17.43	6/26/2022 13:26	6.22	6/26/2022 18:22	77.21
6/26/2022 14:18	17.43	6/26/2022 13:27	6.21	6/26/2022 18:23	77.13
6/26/2022 14:19	17.49	6/26/2022 13:28	6.13	6/26/2022 18:24	77.04
6/26/2022 14:20	17.45	6/26/2022 13:29	6.16	6/26/2022 18:25	76.98
6/26/2022 14:21	17.48	6/26/2022 13:30	6.13	6/26/2022 18:26	76.91
6/26/2022 14:22	17.50	6/26/2022 13:31	6.13	6/26/2022 18:27	76.83
6/26/2022 14:23	17.51	6/26/2022 13:32	6.19	6/26/2022 18:28	76.78
6/26/2022 14:24	17.53	6/26/2022 13:33	6.22	6/26/2022 18:29	76.69
6/26/2022 14:25	17.52	6/26/2022 13:34	6.10	6/26/2022 18:30	76.64
6/26/2022 14:26	17.54	6/26/2022 13:35	6.10	6/26/2022 18:31	76.53
6/26/2022 14:27	17.53	6/26/2022 13:36	6.13	6/26/2022 18:32	76.49
6/26/2022 14:28	17.55	6/26/2022 13:37	6.19	6/26/2022 18:33	76.42
6/26/2022 14:29	17.56	6/26/2022 13:38	6.08	6/26/2022 18:34	76.34
6/26/2022 14:30	17.57	6/26/2022 13:39	6.11	6/26/2022 18:35	76.27
6/26/2022 14:31	17.56	6/26/2022 13:40	6.09	6/26/2022 18:36	76.17
6/26/2022 14:32	17.58	6/26/2022 13:41	6.13	6/26/2022 18:37	76.14
6/26/2022 14:33	17.58	6/26/2022 13:42	6.06	6/26/2022 18:38	76.08
6/26/2022 14:34	17.62	6/26/2022 13:43	6.09	6/26/2022 18:39	75.99
6/26/2022 14:35	17.62	6/26/2022 13:44	6.09	6/26/2022 18:40	75.91
6/26/2022 14:36	17.64	6/26/2022 13:45	6.09	6/26/2022 18:41	75.83
6/26/2022 14:37	17.68	6/26/2022 13:46	6.04	6/26/2022 18:42	75.81
6/26/2022 14:38	17.67	6/26/2022 13:47	6.06	6/26/2022 18:43	75.72
6/26/2022 14:39	17.70	6/26/2022 13:48	6.05	6/26/2022 18:44	75.64
6/26/2022 14:40	17.72	6/26/2022 13:49	6.11	6/26/2022 18:45	75.57
6/26/2022 14:41	17.73	6/26/2022 13:50	6.01	6/26/2022 18:46	75.54
6/26/2022 14:42	17.69	6/26/2022 13:51	6.11	6/26/2022 18:47	75.44
6/26/2022 14:43	17.77	6/26/2022 13:52	6.01	6/26/2022 18:48	75.38
6/26/2022 14:44	17.73	6/26/2022 13:53	6.03	6/26/2022 18:49	75.33
6/26/2022 14:45	17.76	6/26/2022 13:54	6.02	6/26/2022 18:50	75.26

6/26/2022 14:46	17.74	6/26/2022 13:55	6.02	6/26/2022 18:51	75.17
6/26/2022 14:47	17.74	6/26/2022 13:56	6.04	6/26/2022 18:52	75.14
6/26/2022 14:48	17.83	6/26/2022 13:57	6.02	6/26/2022 18:53	75.06
6/26/2022 14:49	17.75	6/26/2022 13:58	5.99	6/26/2022 18:54	75.00
6/26/2022 14:50	17.77	6/26/2022 13:59	5.97	6/26/2022 18:55	74.93
6/26/2022 14:51	17.77	6/26/2022 14:00	5.97	6/26/2022 18:56	74.90
6/26/2022 14:52	17.74	6/26/2022 14:01	5.97	6/26/2022 18:57	74.81
6/26/2022 14:53	17.78	6/26/2022 14:02	6.71	6/26/2022 18:58	74.77
6/26/2022 14:54	17.78	6/26/2022 14:03	6.87	6/26/2022 18:59	74.72
6/26/2022 14:55	17.81	6/26/2022 14:04	7.04	6/26/2022 19:00	74.66
6/26/2022 14:56	17.81	6/26/2022 14:05	7.13	6/26/2022 19:01	74.61
6/26/2022 14:57	17.74	6/26/2022 14:06	7.14	6/26/2022 19:02	74.55
6/26/2022 14:58	17.75	6/26/2022 14:07	6.68	6/26/2022 19:03	74.50
6/26/2022 14:59	17.81	6/26/2022 14:08	6.53	6/26/2022 19:04	77.78
6/26/2022 15:00	17.80	6/26/2022 14:09	6.50	6/26/2022 19:05	79.36
6/26/2022 15:01	17.76	6/26/2022 14:10	6.36	6/26/2022 19:06	79.15
6/26/2022 15:02	17.81	6/26/2022 14:11	6.33	6/26/2022 19:07	79.10
6/26/2022 15:03	17.76	6/26/2022 14:12	6.33	6/26/2022 19:08	78.95
6/26/2022 15:04	17.84	6/26/2022 14:13	6.26	6/26/2022 19:09	78.86
6/26/2022 15:05	17.83	6/26/2022 14:14	6.28	6/26/2022 19:10	78.74
6/26/2022 15:06	17.77	6/26/2022 14:15	6.17	6/26/2022 19:11	78.70
6/26/2022 15:07	17.78	6/26/2022 14:16	6.20	6/26/2022 19:12	78.62
6/26/2022 15:08	17.78	6/26/2022 14:17	6.23	6/26/2022 19:13	78.52
6/26/2022 15:09	17.77	6/26/2022 14:18	6.08	6/26/2022 19:14	78.45
6/26/2022 15:10	17.77	6/26/2022 14:19	6.16	6/26/2022 19:15	78.31
6/26/2022 15:11	17.77	6/26/2022 14:20	6.16	6/26/2022 19:16	78.21
6/26/2022 15:12	17.72	6/26/2022 14:21	6.12	6/26/2022 19:17	78.16
6/26/2022 15:13	17.77	6/26/2022 14:22	6.13	6/26/2022 19:18	78.08
6/26/2022 15:14	17.75	6/26/2022 14:23	6.12	6/26/2022 19:19	77.95
6/26/2022 15:15	17.76	6/26/2022 14:24	6.11	6/26/2022 19:20	77.88
6/26/2022 15:16	17.74	6/26/2022 14:25	6.04	6/26/2022 19:21	77.77
6/26/2022 15:17	17.80	6/26/2022 14:26	6.07	6/26/2022 19:22	77.65
6/26/2022 15:18	17.70	6/26/2022 14:27	6.03	6/26/2022 19:23	77.57
6/26/2022 15:19	17.71	6/26/2022 14:28	6.11	6/26/2022 19:24	82.97
6/26/2022 15:20	17.78	6/26/2022 14:29	6.02	6/26/2022 19:25	82.66
6/26/2022 15:21	17.73	6/26/2022 14:30	6.26	6/26/2022 19:26	82.43
6/26/2022 15:22	17.74	6/26/2022 14:31	6.17	6/26/2022 19:27	82.21
6/26/2022 15:23	17.75	6/26/2022 14:32	6.16	6/26/2022 19:28	82.07
6/26/2022 15:24	17.78	6/26/2022 14:33	6.15	6/26/2022 19:29	81.93
6/26/2022 15:25	17.75	6/26/2022 14:34	6.29	6/26/2022 19:30	81.77
6/26/2022 15:26	17.71	6/26/2022 14:35	6.39	6/26/2022 19:31	81.64
6/26/2022 15:27	17.74	6/26/2022 14:36	6.37	6/26/2022 19:32	81.49
6/26/2022 15:28	17.72	6/26/2022 14:37	6.27	6/26/2022 19:33	81.37
6/26/2022 15:29	17.79	6/26/2022 14:38	6.16	6/26/2022 19:34	81.22
6/26/2022 15:30	17.71	6/26/2022 14:39	6.14	6/26/2022 19:35	81.10
6/26/2022 15:31	17.74	6/26/2022 14:40	6.14	6/26/2022 19:36	80.99
6/26/2022 15:32	17.70	6/26/2022 14:41	6.09	6/26/2022 19:37	80.87
6/26/2022 15:33	17.73	6/26/2022 14:42	6.04	6/26/2022 19:38	80.76
6/26/2022 15:34	17.74	6/26/2022 14:43	6.08	6/26/2022 19:39	80.66
6/26/2022 15:35	17.67	6/26/2022 14:44	6.06	6/26/2022 19:40	80.53
6/26/2022 15:36	17.69	6/26/2022 14:45	6.04	6/26/2022 19:41	80.44
6/26/2022 15:37	17.65	6/26/2022 14:46	6.05	6/26/2022 19:42	80.32
6/26/2022 15:38	17.68	6/26/2022 14:47	6.07	6/26/2022 19:43	80.19
6/26/2022 15:39	17.68	6/26/2022 14:48	6.01	6/26/2022 19:44	84.59
6/26/2022 15:40	17.64	6/26/2022 14:49	6.00	6/26/2022 19:45	86.26
6/26/2022 15:41	17.68	6/26/2022 14:50	6.02	6/26/2022 19:46	85.98
6/26/2022 15:42	17.66	6/26/2022 14:51	6.11	6/26/2022 19:47	85.76
6/26/2022 15:43	17.66	6/26/2022 14:52	5.99	6/26/2022 19:48	85.52
6/26/2022 15:44	17.66	6/26/2022 14:53	6.00	6/26/2022 19:49	85.34
6/26/2022 15:45	17.67	6/26/2022 14:54	5.94	6/26/2022 19:50	85.15
6/26/2022 15:46	17.66	6/26/2022 14:55	5.90	6/26/2022 19:51	84.95
6/26/2022 15:47	17.67	6/26/2022 14:56	5.94	6/26/2022 19:52	84.73
6/26/2022 15:48	17.63	6/26/2022 14:57	6.01	6/26/2022 19:53	84.58
6/26/2022 15:49	17.63	6/26/2022 14:58	6.04	6/26/2022 19:54	84.39
6/26/2022 15:50	17.66	6/26/2022 14:59	5.90	6/26/2022 19:55	84.27
6/26/2022 15:51	17.63	6/26/2022 15:00	5.94	6/26/2022 19:56	84.02
6/26/2022 15:52	17.62	6/26/2022 15:01	5.94	6/26/2022 19:57	83.87
6/26/2022 15:53	17.64	6/26/2022 15:02	5.92	6/26/2022 19:58	83.70
6/26/2022 15:54	17.64	6/26/2022 15:03	5.88	6/26/2022 19:59	83.60
6/26/2022 15:55	17.65	6/26/2022 15:04	5.90	6/26/2022 20:00	83.44
6/26/2022 15:56	17.59	6/26/2022 15:05	5.93	6/26/2022 20:01	83.25
6/26/2022 15:57	17.63	6/26/2022 15:06	5.92	6/26/2022 20:02	83.07
6/26/2022 15:58	17.61	6/26/2022 15:07	5.89	6/26/2022 20:03	82.94
6/26/2022 15:59	17.61	6/26/2022 15:08	5.92	6/26/2022 20:04	82.80
6/26/2022 16:00	17.62	6/26/2022 15:09	5.90	6/26/2022 20:05	82.69
6/26/2022 16:01	17.64	6/26/2022 15:10	5.85	6/26/2022 20:06	82.54
6/26/2022 16:02	17.63	6/26/2022 15:11	5.87	6/26/2022 20:07	82.39
6/26/2022 16:03	17.60	6/26/2022 15:12	5.85	6/26/2022 20:08	82.27
6/26/2022 16:04	17.65	6/26/2022 15:13	5.90	6/26/2022 20:09	82.09
6/26/2022 16:05	17.64	6/26/2022 15:14	5.79	6/26/2022 20:10	81.99
6/26/2022 16:06	17.60	6/26/2022 15:15	6.07	6/26/2022 20:11	81.83
6/26/2022 16:07	17.66	6/26/2022 15:16	6.34	6/26/2022 20:12	81.72
6/26/2022 16:08	17.64	6/26/2022 15:17	6.07	6/26/2022 20:13	81.61
6/26/2022 16:09	17.61	6/26/2022 15:18	6.00	6/26/2022 20:14	81.48
6/26/2022 16:10	17.59	6/26/2022 15:19	5.92	6/26/2022 20:15	81.38
6/26/2022 16:11	17.60	6/26/2022 15:20	5.92	6/26/2022 20:16	81.22
6/26/2022 16:12	17.67	6/26/2022 15:21	5.91	6/26/2022 20:17	81.11
6/26/2022 16:13	17.58	6/26/2022 15:22	5.88	6/26/2022 20:18	81.02

6/26/2022 16:14	17.61	6/26/2022 15:23	5.86	6/26/2022 20:19	80.92
6/26/2022 16:15	17.59	6/26/2022 15:24	5.80	6/26/2022 20:20	80.81
6/26/2022 16:16	17.58	6/26/2022 15:25	5.86	6/26/2022 20:21	80.71
6/26/2022 16:17	17.62	6/26/2022 15:26	5.86	6/26/2022 20:22	80.59
6/26/2022 16:18	17.66	6/26/2022 15:27	5.79	6/26/2022 20:23	80.53
6/26/2022 16:19	17.65	6/26/2022 15:28	5.81	6/26/2022 20:24	80.43
6/26/2022 16:20	17.57	6/26/2022 15:29	5.81	6/26/2022 20:25	80.28
6/26/2022 16:21	17.62	6/26/2022 15:30	5.85	6/26/2022 20:26	80.19
6/26/2022 16:22	17.60	6/26/2022 15:31	5.75	6/26/2022 20:27	80.08
6/26/2022 16:23	17.59	6/26/2022 15:32	5.77	6/26/2022 20:28	79.96
6/26/2022 16:24	17.56	6/26/2022 15:33	5.78	6/26/2022 20:29	79.89
6/26/2022 16:25	17.62	6/26/2022 15:34	5.74	6/26/2022 20:30	79.77
6/26/2022 16:26	17.62	6/26/2022 15:35	5.72	6/26/2022 20:31	79.63
6/26/2022 16:27	17.62	6/26/2022 15:36	5.73	6/26/2022 20:32	79.54
6/26/2022 16:28	17.61	6/26/2022 15:37	5.73	6/26/2022 20:33	79.46
6/26/2022 16:29	17.55	6/26/2022 15:38	5.67	6/26/2022 20:34	79.38
6/26/2022 16:30	17.59	6/26/2022 15:39	5.71	6/26/2022 20:35	79.24
6/26/2022 16:31	17.59	6/26/2022 15:40	5.74	6/26/2022 20:36	79.15
6/26/2022 16:32	17.61	6/26/2022 15:41	5.69	6/26/2022 20:37	79.11
6/26/2022 16:33	17.62	6/26/2022 15:42	5.72	6/26/2022 20:38	79.01
6/26/2022 16:34	17.59	6/26/2022 15:43	5.67	6/26/2022 20:39	78.91
6/26/2022 16:35	17.61	6/26/2022 15:44	5.72	6/26/2022 20:40	78.85
6/26/2022 16:36	17.56	6/26/2022 15:45	5.70	6/26/2022 20:41	78.81
6/26/2022 16:37	17.53	6/26/2022 15:46	5.68	6/26/2022 20:42	78.70
6/26/2022 16:38	17.57	6/26/2022 15:47	5.69	6/26/2022 20:43	78.61
6/26/2022 16:39	17.57	6/26/2022 15:48	5.67	6/26/2022 20:44	78.58
6/26/2022 16:40	17.58	6/26/2022 15:49	5.65	6/26/2022 20:45	78.49
6/26/2022 16:41	17.59	6/26/2022 15:50	5.64	6/26/2022 20:46	78.39
6/26/2022 16:42	17.59	6/26/2022 15:51	5.64	6/26/2022 20:47	78.32
6/26/2022 16:43	17.56	6/26/2022 15:52	5.64	6/26/2022 20:48	78.23
6/26/2022 16:44	17.59	6/26/2022 15:53	5.69	6/26/2022 20:49	78.16
6/26/2022 16:45	17.58	6/26/2022 15:54	5.61	6/26/2022 20:50	78.04
6/26/2022 16:46	17.55	6/26/2022 15:55	5.66	6/26/2022 20:51	77.94
6/26/2022 16:47	17.58	6/26/2022 15:56	5.65	6/26/2022 20:52	77.91
6/26/2022 16:48	17.56	6/26/2022 15:57	5.61	6/26/2022 20:53	77.81
6/26/2022 16:49	17.57	6/26/2022 15:58	5.60	6/26/2022 20:54	77.70
6/26/2022 16:50	17.55	6/26/2022 15:59	5.63	6/26/2022 20:55	77.64
6/26/2022 16:51	17.58	6/26/2022 16:00	5.60	6/26/2022 20:56	77.57
6/26/2022 16:52	17.60	6/26/2022 16:01	5.64	6/26/2022 20:57	77.49
6/26/2022 16:53	17.54	6/26/2022 16:02	5.59	6/26/2022 20:58	77.39
6/26/2022 16:54	17.52	6/26/2022 16:03	5.60	6/26/2022 20:59	77.34
6/26/2022 16:55	17.55	6/26/2022 16:04	5.57	6/26/2022 21:00	77.27
6/26/2022 16:56	17.53	6/26/2022 16:05	5.59	6/26/2022 21:01	77.18
6/26/2022 16:57	17.55	6/26/2022 16:06	5.61	6/26/2022 21:02	77.13
6/26/2022 16:58	17.54	6/26/2022 16:07	5.61	6/26/2022 21:03	77.07
6/26/2022 16:59	17.54	6/26/2022 16:08	5.58	6/26/2022 21:04	77.00
6/26/2022 17:00	17.52	6/26/2022 16:09	5.54	6/26/2022 21:05	76.90
6/26/2022 17:01	17.49	6/26/2022 16:10	5.62	6/26/2022 21:06	76.81
6/26/2022 17:02	17.52	6/26/2022 16:11	5.56	6/26/2022 21:07	76.77
6/26/2022 17:03	17.50	6/26/2022 16:12	5.56	6/26/2022 21:08	76.73
6/26/2022 17:04	17.54	6/26/2022 16:13	5.53	6/26/2022 21:09	76.65
6/26/2022 17:05	17.57	6/26/2022 16:14	5.57	6/26/2022 21:10	76.58
6/26/2022 17:06	17.51	6/26/2022 16:15	5.53	6/26/2022 21:11	76.50
6/26/2022 17:07	17.56	6/26/2022 16:16	5.53	6/26/2022 21:12	76.42
6/26/2022 17:08	17.52	6/26/2022 16:17	5.54	6/26/2022 21:13	76.38
6/26/2022 17:09	17.51	6/26/2022 16:18	5.56	6/26/2022 21:14	76.24
6/26/2022 17:10	17.55	6/26/2022 16:19	5.52	6/26/2022 21:15	76.21
6/26/2022 17:11	17.50	6/26/2022 16:20	5.49	6/26/2022 21:16	76.12
6/26/2022 17:12	17.47	6/26/2022 16:21	5.54	6/26/2022 21:17	76.10
6/26/2022 17:13	17.49	6/26/2022 16:22	5.51	6/26/2022 21:18	76.00
6/26/2022 17:14	17.53	6/26/2022 16:23	5.50	6/26/2022 21:19	75.92
6/26/2022 17:15	17.50	6/26/2022 16:24	5.55	6/26/2022 21:20	75.87
6/26/2022 17:16	17.47	6/26/2022 16:25	5.55	6/26/2022 21:21	75.78
6/26/2022 17:17	17.49	6/26/2022 16:26	5.48	6/26/2022 21:22	75.74
6/26/2022 17:18	17.49	6/26/2022 16:27	5.49	6/26/2022 21:23	75.68
6/26/2022 17:19	17.47	6/26/2022 16:28	5.51	6/26/2022 21:24	75.59
6/26/2022 17:20	17.48	6/26/2022 16:29	5.57	6/26/2022 21:25	75.56
6/26/2022 17:21	17.49	6/26/2022 16:30	5.50	6/26/2022 21:26	75.47
6/26/2022 17:22	17.48	6/26/2022 16:31	5.45	6/26/2022 21:27	75.42
6/26/2022 17:23	17.46	6/26/2022 16:32	5.53	6/26/2022 21:28	75.39
6/26/2022 17:24	17.47	6/26/2022 16:33	5.47	6/26/2022 21:29	75.27
6/26/2022 17:25	17.48	6/26/2022 16:34	5.49	6/26/2022 21:30	75.23
6/26/2022 17:26	17.44	6/26/2022 16:35	5.49	6/26/2022 21:31	75.15
6/26/2022 17:27	17.46	6/26/2022 16:36	5.52	6/26/2022 21:32	75.11
6/26/2022 17:28	17.46	6/26/2022 16:37	5.41	6/26/2022 21:33	75.04
6/26/2022 17:29	17.42	6/26/2022 16:38	5.47	6/26/2022 21:34	75.01
6/26/2022 17:30	17.42	6/26/2022 16:39	5.48	6/26/2022 21:35	74.95
6/26/2022 17:31	17.42	6/26/2022 16:40	5.54	6/26/2022 21:36	74.87
6/26/2022 17:32	17.46	6/26/2022 16:41	5.42	6/26/2022 21:37	74.80
6/26/2022 17:33	17.42	6/26/2022 16:42	5.45	6/26/2022 21:38	74.77
6/26/2022 17:34	17.41	6/26/2022 16:43	5.49	6/26/2022 21:39	74.70
6/26/2022 17:35	17.48	6/26/2022 16:44	5.43	6/26/2022 21:40	74.64
6/26/2022 17:36	17.40	6/26/2022 16:45	5.40	6/26/2022 21:41	74.64
6/26/2022 17:37	17.39	6/26/2022 16:46	5.41	6/26/2022 21:42	74.57
6/26/2022 17:38	17.39	6/26/2022 16:47	5.46	6/26/2022 21:43	74.46
6/26/2022 17:39	17.44	6/26/2022 16:48	5.44	6/26/2022 21:44	74.42
6/26/2022 17:40	17.42	6/26/2022 16:49	5.39	6/26/2022 21:45	74.38
6/26/2022 17:41	17.36	6/26/2022 16:50	5.42	6/26/2022 21:46	74.31

6/26/2022 17:42	17.43	6/26/2022 16:51	5.44	6/26/2022 21:47	74.30
6/26/2022 17:43	17.44	6/26/2022 16:52	5.38	6/26/2022 21:48	74.22
6/26/2022 17:44	17.37	6/26/2022 16:53	5.37	6/26/2022 21:49	74.17
6/26/2022 17:45	17.42	6/26/2022 16:54	5.43	6/26/2022 21:50	74.10
6/26/2022 17:46	17.42	6/26/2022 16:55	5.48	6/26/2022 21:51	74.04
6/26/2022 17:47	17.40	6/26/2022 16:56	5.37	6/26/2022 21:52	74.00
6/26/2022 17:48	17.42	6/26/2022 16:57	5.40	6/26/2022 21:53	73.98
6/26/2022 17:49	17.40	6/26/2022 16:58	5.40	6/26/2022 21:54	73.92
6/26/2022 17:50	17.39	6/26/2022 16:59	5.44	6/26/2022 21:55	73.86
6/26/2022 17:51	17.38	6/26/2022 17:00	5.32	6/26/2022 21:56	73.86
6/26/2022 17:52	17.38	6/26/2022 17:01	5.33	6/26/2022 21:57	73.79
6/26/2022 17:53	17.38	6/26/2022 17:02	5.74	6/26/2022 21:58	73.73
6/26/2022 17:54	17.36	6/26/2022 17:03	5.70	6/26/2022 21:59	73.69
6/26/2022 17:55	17.36	6/26/2022 17:04	5.56	6/26/2022 22:00	73.64
6/26/2022 17:56	17.36	6/26/2022 17:05	5.53	6/26/2022 22:01	73.64
6/26/2022 17:57	17.40	6/26/2022 17:06	5.42	6/26/2022 22:02	73.54
6/26/2022 17:58	17.39	6/26/2022 17:07	5.43	6/26/2022 22:03	73.53
6/26/2022 17:59	17.33	6/26/2022 17:08	5.41	6/26/2022 22:04	73.46
6/26/2022 18:00	17.38	6/26/2022 17:09	5.43	6/26/2022 22:05	73.42
6/26/2022 18:01	17.37	6/26/2022 17:10	5.38	6/26/2022 22:06	73.35
6/26/2022 18:02	17.35	6/26/2022 17:11	5.41	6/26/2022 22:07	73.35
6/26/2022 18:03	17.36	6/26/2022 17:12	5.35	6/26/2022 22:08	73.30
6/26/2022 18:04	17.34	6/26/2022 17:13	5.40	6/26/2022 22:09	73.24
6/26/2022 18:05	17.30	6/26/2022 17:14	5.37	6/26/2022 22:10	73.26
6/26/2022 18:06	17.38	6/26/2022 17:15	5.38	6/26/2022 22:11	73.16
6/26/2022 18:07	17.32	6/26/2022 17:16	5.39	6/26/2022 22:12	73.09
6/26/2022 18:08	17.35	6/26/2022 17:17	5.33	6/26/2022 22:13	73.05
6/26/2022 18:09	17.35	6/26/2022 17:18	5.36	6/26/2022 22:14	73.09
6/26/2022 18:10	17.35	6/26/2022 17:19	5.37	6/26/2022 22:15	73.01
6/26/2022 18:11	17.30	6/26/2022 17:20	5.39	6/26/2022 22:16	72.97
6/26/2022 18:12	17.37	6/26/2022 17:21	5.33	6/26/2022 22:17	72.94
6/26/2022 18:13	17.33	6/26/2022 17:22	5.32	6/26/2022 22:18	72.89
6/26/2022 18:14	17.32	6/26/2022 17:23	5.34	6/26/2022 22:19	72.88
6/26/2022 18:15	17.31	6/26/2022 17:24	5.36	6/26/2022 22:20	72.83
6/26/2022 18:16	17.28	6/26/2022 17:25	5.28	6/26/2022 22:21	72.78
6/26/2022 18:17	17.33	6/26/2022 17:26	5.30	6/26/2022 22:22	72.77
6/26/2022 18:18	17.31	6/26/2022 17:27	5.31	6/26/2022 22:23	72.70
6/26/2022 18:19	17.28	6/26/2022 17:28	5.30	6/26/2022 22:24	72.66
6/26/2022 18:20	17.27	6/26/2022 17:29	5.25	6/26/2022 22:25	72.63
6/26/2022 18:21	17.28	6/26/2022 17:30	5.31	6/26/2022 22:26	72.63
6/26/2022 18:22	17.33	6/26/2022 17:31	5.30	6/26/2022 22:27	72.57
6/26/2022 18:23	17.36	6/26/2022 17:32	5.31	6/26/2022 22:28	72.51
6/26/2022 18:24	17.29	6/26/2022 17:33	5.29	6/26/2022 22:29	72.48
6/26/2022 18:25	17.33	6/26/2022 17:34	5.24	6/26/2022 22:30	72.47
6/26/2022 18:26	17.34	6/26/2022 17:35	5.26	6/26/2022 22:31	72.42
6/26/2022 18:27	17.28	6/26/2022 17:36	5.34	6/26/2022 22:32	72.45
6/26/2022 18:28	17.25	6/26/2022 17:37	5.33	6/26/2022 22:33	72.36
6/26/2022 18:29	17.32	6/26/2022 17:38	5.27	6/26/2022 22:34	72.33
6/26/2022 18:30	17.27	6/26/2022 17:39	5.22	6/26/2022 22:35	72.33
6/26/2022 18:31	17.29	6/26/2022 17:40	5.23	6/26/2022 22:36	72.29
6/26/2022 18:32	17.27	6/26/2022 17:41	5.34	6/26/2022 22:37	72.26
6/26/2022 18:33	17.31	6/26/2022 17:42	5.23	6/26/2022 22:38	72.21
6/26/2022 18:34	17.27	6/26/2022 17:43	5.19	6/26/2022 22:39	72.19
6/26/2022 18:35	17.25	6/26/2022 17:44	5.28	6/26/2022 22:40	72.15
6/26/2022 18:36	17.23	6/26/2022 17:45	5.30	6/26/2022 22:41	72.10
6/26/2022 18:37	17.27	6/26/2022 17:46	5.27	6/26/2022 22:42	72.12
6/26/2022 18:38	17.25	6/26/2022 17:47	5.27	6/26/2022 22:43	72.04
6/26/2022 18:39	17.29	6/26/2022 17:48	5.24	6/26/2022 22:44	72.00
6/26/2022 18:40	17.26	6/26/2022 17:49	5.20	6/26/2022 22:45	71.97
6/26/2022 18:41	17.27	6/26/2022 17:50	5.25	6/26/2022 22:46	71.99
6/26/2022 18:42	17.22	6/26/2022 17:51	5.19	6/26/2022 22:47	71.95
6/26/2022 18:43	17.24	6/26/2022 17:52	5.20	6/26/2022 22:48	71.93
6/26/2022 18:44	17.26	6/26/2022 17:53	5.24	6/26/2022 22:49	71.90
6/26/2022 18:45	17.28	6/26/2022 17:54	5.22	6/26/2022 22:50	71.83
6/26/2022 18:46	17.23	6/26/2022 17:55	5.20	6/26/2022 22:51	71.86
6/26/2022 18:47	17.25	6/26/2022 17:56	5.24	6/26/2022 22:52	71.79
6/26/2022 18:48	17.23	6/26/2022 17:57	5.24	6/26/2022 22:53	71.73
6/26/2022 18:49	17.22	6/26/2022 17:58	5.19	6/26/2022 22:54	71.73
6/26/2022 18:50	17.21	6/26/2022 17:59	5.12	6/26/2022 22:55	71.73
6/26/2022 18:51	17.22	6/26/2022 18:00	5.16	6/26/2022 22:56	71.66
6/26/2022 18:52	17.26	6/26/2022 18:01	5.18	6/26/2022 22:57	71.69
6/26/2022 18:53	17.22	6/26/2022 18:02	5.18	6/26/2022 22:58	71.66
6/26/2022 18:54	17.17	6/26/2022 18:03	5.22	6/26/2022 22:59	71.60
6/26/2022 18:55	17.25	6/26/2022 18:04	5.23	6/26/2022 23:00	71.57
6/26/2022 18:56	17.21	6/26/2022 18:05	5.25	6/26/2022 23:01	71.56
6/26/2022 18:57	17.26	6/26/2022 18:06	5.25	6/26/2022 23:02	71.56
6/26/2022 18:58	17.21	6/26/2022 18:07	5.19	6/26/2022 23:03	71.50
6/26/2022 18:59	17.20	6/26/2022 18:08	5.31	6/26/2022 23:04	71.45
6/26/2022 19:00	17.24	6/26/2022 18:09	5.14	6/26/2022 23:05	71.42
6/26/2022 19:01	17.18	6/26/2022 18:10	5.31	6/26/2022 23:06	71.43
6/26/2022 19:02	17.25	6/26/2022 18:11	5.44	6/26/2022 23:07	71.36
6/26/2022 19:03	17.18	6/26/2022 18:12	5.45	6/26/2022 23:08	71.36
6/26/2022 19:04	17.18	6/26/2022 18:13	5.57	6/26/2022 23:09	71.36
6/26/2022 19:05	17.15	6/26/2022 18:14	5.59	6/26/2022 23:10	71.32
6/26/2022 19:06	17.19	6/26/2022 18:15	5.50	6/26/2022 23:11	71.32
6/26/2022 19:07	17.17	6/26/2022 18:16	5.39	6/26/2022 23:12	71.25
6/26/2022 19:08	17.17	6/26/2022 18:17	5.59	6/26/2022 23:13	71.25
6/26/2022 19:09	17.19	6/26/2022 18:18	5.39	6/26/2022 23:14	71.23

6/26/2022 19:10	17.20	6/26/2022 18:19	5.35	6/26/2022 23:15	71.19
6/26/2022 19:11	17.21	6/26/2022 18:20	5.29	6/26/2022 23:16	71.17
6/26/2022 19:12	17.16	6/26/2022 18:21	5.30	6/26/2022 23:17	71.14
6/26/2022 19:13	17.16	6/26/2022 18:22	5.28	6/26/2022 23:18	71.17
6/26/2022 19:14	17.20	6/26/2022 18:23	5.29	6/26/2022 23:19	71.10
6/26/2022 19:15	17.19	6/26/2022 18:24	5.26	6/26/2022 23:20	71.09
6/26/2022 19:16	17.17	6/26/2022 18:25	5.25	6/26/2022 23:21	71.07
6/26/2022 19:17	17.19	6/26/2022 18:26	5.20	6/26/2022 23:22	71.03
6/26/2022 19:18	17.18	6/26/2022 18:27	5.61	6/26/2022 23:23	71.01
6/26/2022 19:19	17.16	6/26/2022 18:28	6.30	6/26/2022 23:24	70.96
6/26/2022 19:20	17.17	6/26/2022 18:29	6.60	6/26/2022 23:25	70.97
6/26/2022 19:21	17.18	6/26/2022 18:30	7.03	6/26/2022 23:26	70.94
6/26/2022 19:22	17.18	6/26/2022 18:31	7.34	6/26/2022 23:27	70.94
6/26/2022 19:23	17.11	6/26/2022 18:32	7.63	6/26/2022 23:28	70.90
6/26/2022 19:24	17.18	6/26/2022 18:33	7.81	6/26/2022 23:29	70.85
6/26/2022 19:25	17.17	6/26/2022 18:34	7.91	6/26/2022 23:30	70.86
6/26/2022 19:26	17.16	6/26/2022 18:35	8.10	6/26/2022 23:31	70.83
6/26/2022 19:27	17.16	6/26/2022 18:36	8.17	6/26/2022 23:32	70.79
6/26/2022 19:28	17.13	6/26/2022 18:37	8.32	6/26/2022 23:33	70.77
6/26/2022 19:29	17.14	6/26/2022 18:38	7.69	6/26/2022 23:34	70.79
6/26/2022 19:30	17.14	6/26/2022 18:39	7.13	6/26/2022 23:35	70.76
6/26/2022 19:31	17.17	6/26/2022 18:40	6.81	6/26/2022 23:36	70.69
6/26/2022 19:32	17.15	6/26/2022 18:41	6.61	6/26/2022 23:37	70.71
6/26/2022 19:33	17.13	6/26/2022 18:42	6.48	6/26/2022 23:38	70.69
6/26/2022 19:34	17.17	6/26/2022 18:43	6.48	6/26/2022 23:39	70.68
6/26/2022 19:35	17.16	6/26/2022 18:44	6.37	6/26/2022 23:40	70.66
6/26/2022 19:36	17.11	6/26/2022 18:45	6.30	6/26/2022 23:41	70.63
6/26/2022 19:37	17.17	6/26/2022 18:46	6.25	6/26/2022 23:42	70.63
6/26/2022 19:38	17.13	6/26/2022 18:47	6.17	6/26/2022 23:43	70.59
6/26/2022 19:39	17.18	6/26/2022 18:48	6.18	6/26/2022 23:44	70.57
6/26/2022 19:40	17.12	6/26/2022 18:49	6.11	6/26/2022 23:45	70.53
6/26/2022 19:41	17.14	6/26/2022 18:50	6.13	6/26/2022 23:46	70.52
6/26/2022 19:42	17.15	6/26/2022 18:51	6.10	6/26/2022 23:47	70.52
6/26/2022 19:43	17.10	6/26/2022 18:52	6.04	6/26/2022 23:48	70.47
6/26/2022 19:44	17.13	6/26/2022 18:53	5.98	6/26/2022 23:49	70.49
6/26/2022 19:45	17.12	6/26/2022 18:54	6.03	6/26/2022 23:50	70.46
6/26/2022 19:46	17.09	6/26/2022 18:55	5.98	6/26/2022 23:51	70.46
6/26/2022 19:47	17.16	6/26/2022 18:56	5.95	6/26/2022 23:52	70.41
6/26/2022 19:48	17.13	6/26/2022 18:57	5.91	6/26/2022 23:53	70.40
6/26/2022 19:49	17.14	6/26/2022 18:58	6.13	6/26/2022 23:54	70.39
6/26/2022 19:50	17.16	6/26/2022 18:59	6.04	6/26/2022 23:55	70.35
6/26/2022 19:51	17.10	6/26/2022 19:00	6.18	6/26/2022 23:56	70.37
6/26/2022 19:52	17.10	6/26/2022 19:01	6.26	6/26/2022 23:57	70.32
6/26/2022 19:53	17.10	6/26/2022 19:02	6.26	6/26/2022 23:58	70.30
6/26/2022 19:54	17.12	6/26/2022 19:03	6.20	6/26/2022 23:59	70.30
6/26/2022 19:55	17.09	6/26/2022 19:04	6.08	6/27/2022 0:00	70.30
6/26/2022 19:56	17.11	6/26/2022 19:05	6.02	6/27/2022 0:01	70.27
6/26/2022 19:57	17.13	6/26/2022 19:06	5.94	6/27/2022 0:02	70.28
6/26/2022 19:58	17.10	6/26/2022 19:07	5.99	6/27/2022 0:03	70.23
6/26/2022 19:59	17.14	6/26/2022 19:08	5.88	6/27/2022 0:04	70.23
6/26/2022 20:00	17.11	6/26/2022 19:09	5.97	6/27/2022 0:05	70.19
6/26/2022 20:01	17.13	6/26/2022 19:10	6.04	6/27/2022 0:06	70.15
6/26/2022 20:02	17.15	6/26/2022 19:11	6.01	6/27/2022 0:07	70.16
6/26/2022 20:03	17.10	6/26/2022 19:12	5.95	6/27/2022 0:08	70.14
6/26/2022 20:04	17.07	6/26/2022 19:13	5.91	6/27/2022 0:09	70.16
6/26/2022 20:05	17.14	6/26/2022 19:14	6.35	6/27/2022 0:10	70.11
6/26/2022 20:06	17.10	6/26/2022 19:15	6.27	6/27/2022 0:11	70.08
6/26/2022 20:07	17.13	6/26/2022 19:16	6.06	6/27/2022 0:12	70.08
6/26/2022 20:08	17.11	6/26/2022 19:17	6.15	6/27/2022 0:13	70.06
6/26/2022 20:09	17.08	6/26/2022 19:18	6.16	6/27/2022 0:14	70.04
6/26/2022 20:10	17.08	6/26/2022 19:19	6.02	6/27/2022 0:15	70.01
6/26/2022 20:11	17.10	6/26/2022 19:20	6.00	6/27/2022 0:16	70.01
6/26/2022 20:12	17.09	6/26/2022 19:21	5.87	6/27/2022 0:17	70.01
6/26/2022 20:13	17.14	6/26/2022 19:22	5.87	6/27/2022 0:18	70.02
6/26/2022 20:14	17.12	6/26/2022 19:23	5.81	6/27/2022 0:19	70.02
6/26/2022 20:15	17.07	6/26/2022 19:24	5.84	6/27/2022 0:20	70.00
6/26/2022 20:16	17.06	6/26/2022 19:25	5.83	6/27/2022 0:21	69.98
6/26/2022 20:17	17.09	6/26/2022 19:26	5.74	6/27/2022 0:22	69.99
6/26/2022 20:18	17.08	6/26/2022 19:27	5.73	6/27/2022 0:23	69.96
6/26/2022 20:19	17.09	6/26/2022 19:28	5.78	6/27/2022 0:24	69.93
6/26/2022 20:20	17.11	6/26/2022 19:29	5.79	6/27/2022 0:25	69.94
6/26/2022 20:21	17.12	6/26/2022 19:30	5.70	6/27/2022 0:26	69.92
6/26/2022 20:22	17.09	6/26/2022 19:31	5.76	6/27/2022 0:27	69.91
6/26/2022 20:23	17.07	6/26/2022 19:32	5.71	6/27/2022 0:28	69.92
6/26/2022 20:24	17.12	6/26/2022 19:33	5.90	6/27/2022 0:29	69.91
6/26/2022 20:25	17.10	6/26/2022 19:34	5.94	6/27/2022 0:30	69.91
6/26/2022 20:26	17.04	6/26/2022 19:35	6.02	6/27/2022 0:31	69.89
6/26/2022 20:27	17.10	6/26/2022 19:36	5.97	6/27/2022 0:32	69.87
6/26/2022 20:28	17.05	6/26/2022 19:37	5.85	6/27/2022 0:33	69.93
6/26/2022 20:29	17.05	6/26/2022 19:38	5.87	6/27/2022 0:34	69.86
6/26/2022 20:30	17.06	6/26/2022 19:39	5.79	6/27/2022 0:35	69.88
6/26/2022 20:31	17.08	6/26/2022 19:40	5.75	6/27/2022 0:36	69.86
6/26/2022 20:32	17.12	6/26/2022 19:41	5.79	6/27/2022 0:37	69.83
6/26/2022 20:33	17.10	6/26/2022 19:42	5.76	6/27/2022 0:38	69.84
6/26/2022 20:34	17.12	6/26/2022 19:43	5.75	6/27/2022 0:39	69.85
6/26/2022 20:35	17.10	6/26/2022 19:44	5.72	6/27/2022 0:40	69.84
6/26/2022 20:36	17.07	6/26/2022 19:45	5.76	6/27/2022 0:41	69.78
6/26/2022 20:37	17.12	6/26/2022 19:46	5.74	6/27/2022 0:42	69.80

6/26/2022 20:38	17.03	6/26/2022 19:47	5.73	6/27/2022 0:43	69.84
6/26/2022 20:39	17.07	6/26/2022 19:48	5.66	6/27/2022 0:44	69.80
6/26/2022 20:40	17.08	6/26/2022 19:49	5.70	6/27/2022 0:45	69.81
6/26/2022 20:41	17.10	6/26/2022 19:50	5.69	6/27/2022 0:46	69.81
6/26/2022 20:42	17.05	6/26/2022 19:51	5.77	6/27/2022 0:47	69.80
6/26/2022 20:43	17.12	6/26/2022 19:52	5.75	6/27/2022 0:48	69.81
6/26/2022 20:44	17.09	6/26/2022 19:53	5.72	6/27/2022 0:49	69.78
6/26/2022 20:45	17.09	6/26/2022 19:54	5.81	6/27/2022 0:50	69.78
6/26/2022 20:46	17.06	6/26/2022 19:55	5.81	6/27/2022 0:51	69.76
6/26/2022 20:47	17.09	6/26/2022 19:56	5.84	6/27/2022 0:52	69.76
6/26/2022 20:48	17.06	6/26/2022 19:57	5.85	6/27/2022 0:53	69.77
6/26/2022 20:49	17.02	6/26/2022 19:58	5.96	6/27/2022 0:54	69.80
6/26/2022 20:50	17.07	6/26/2022 19:59	6.38	6/27/2022 0:55	69.77
6/26/2022 20:51	17.10	6/26/2022 20:00	6.10	6/27/2022 0:56	69.74
6/26/2022 20:52	17.08	6/26/2022 20:01	6.13	6/27/2022 0:57	69.73
6/26/2022 20:53	17.04	6/26/2022 20:02	6.09	6/27/2022 0:58	69.75
6/26/2022 20:54	17.05	6/26/2022 20:03	6.02	6/27/2022 0:59	69.76
6/26/2022 20:55	17.11	6/26/2022 20:04	5.94	6/27/2022 1:00	69.73
6/26/2022 20:56	17.05	6/26/2022 20:05	5.92	6/27/2022 1:01	69.71
6/26/2022 20:57	17.08	6/26/2022 20:06	6.04	6/27/2022 1:02	69.76
6/26/2022 20:58	17.10	6/26/2022 20:07	6.02	6/27/2022 1:03	69.73
6/26/2022 20:59	17.11	6/26/2022 20:08	6.05	6/27/2022 1:04	69.75
6/26/2022 21:00	17.05	6/26/2022 20:09	5.85	6/27/2022 1:05	69.68
6/26/2022 21:01	17.07	6/26/2022 20:10	5.80	6/27/2022 1:06	69.74
6/26/2022 21:02	17.06	6/26/2022 20:11	5.81	6/27/2022 1:07	69.75
6/26/2022 21:03	17.06	6/26/2022 20:12	5.69	6/27/2022 1:08	69.73
6/26/2022 21:04	17.05	6/26/2022 20:13	5.91	6/27/2022 1:09	69.65
6/26/2022 21:05	17.03	6/26/2022 20:14	6.10	6/27/2022 1:10	69.69
6/26/2022 21:06	17.02	6/26/2022 20:15	5.94	6/27/2022 1:11	69.69
6/26/2022 21:07	17.06	6/26/2022 20:16	5.90	6/27/2022 1:12	69.67
6/26/2022 21:08	17.04	6/26/2022 20:17	6.17	6/27/2022 1:13	69.71
6/26/2022 21:09	17.04	6/26/2022 20:18	6.08	6/27/2022 1:14	69.68
6/26/2022 21:10	17.06	6/26/2022 20:19	5.92	6/27/2022 1:15	69.64
6/26/2022 21:11	17.03	6/26/2022 20:20	5.83	6/27/2022 1:16	69.68
6/26/2022 21:12	17.07	6/26/2022 20:21	5.79	6/27/2022 1:17	69.69
6/26/2022 21:13	17.00	6/26/2022 20:22	5.79	6/27/2022 1:18	69.63
6/26/2022 21:14	17.03	6/26/2022 20:23	5.71	6/27/2022 1:19	69.65
6/26/2022 21:15	17.05	6/26/2022 20:24	5.68	6/27/2022 1:20	69.65
6/26/2022 21:16	17.06	6/26/2022 20:25	5.67	6/27/2022 1:21	69.62
6/26/2022 21:17	17.04	6/26/2022 20:26	5.68	6/27/2022 1:22	69.65
6/26/2022 21:18	17.04	6/26/2022 20:27	5.60	6/27/2022 1:23	69.62
6/26/2022 21:19	17.00	6/26/2022 20:28	5.62	6/27/2022 1:24	69.63
6/26/2022 21:20	17.12	6/26/2022 20:29	5.58	6/27/2022 1:25	69.62
6/26/2022 21:21	17.04	6/26/2022 20:30	5.62	6/27/2022 1:26	69.61
6/26/2022 21:22	17.07	6/26/2022 20:31	5.57	6/27/2022 1:27	69.59
6/26/2022 21:23	17.06	6/26/2022 20:32	5.55	6/27/2022 1:28	69.58
6/26/2022 21:24	17.07	6/26/2022 20:33	5.60	6/27/2022 1:29	69.60
6/26/2022 21:25	17.07	6/26/2022 20:34	5.57	6/27/2022 1:30	75.12
6/26/2022 21:26	17.09	6/26/2022 20:35	5.48	6/27/2022 1:31	74.99
6/26/2022 21:27	17.04	6/26/2022 20:36	5.51	6/27/2022 1:32	74.85
6/26/2022 21:28	17.06	6/26/2022 20:37	5.51	6/27/2022 1:33	74.74
6/26/2022 21:29	17.09	6/26/2022 20:38	5.52	6/27/2022 1:34	74.67
6/26/2022 21:30	17.08	6/26/2022 20:39	5.53	6/27/2022 1:35	74.58
6/26/2022 21:31	17.03	6/26/2022 20:40	5.43	6/27/2022 1:36	74.49
6/26/2022 21:32	17.02	6/26/2022 20:41	5.50	6/27/2022 1:37	74.42
6/26/2022 21:33	17.05	6/26/2022 20:42	5.52	6/27/2022 1:38	74.30
6/26/2022 21:34	17.09	6/26/2022 20:43	5.46	6/27/2022 1:39	74.26
6/26/2022 21:35	17.11	6/26/2022 20:44	5.47	6/27/2022 1:40	74.18
6/26/2022 21:36	17.07	6/26/2022 20:45	5.43	6/27/2022 1:41	74.11
6/26/2022 21:37	17.08	6/26/2022 20:46	5.45	6/27/2022 1:42	74.06
6/26/2022 21:38	17.10	6/26/2022 20:47	5.42	6/27/2022 1:43	73.96
6/26/2022 21:39	16.98	6/26/2022 20:48	5.38	6/27/2022 1:44	73.93
6/26/2022 21:40	17.12	6/26/2022 20:49	5.39	6/27/2022 1:45	73.87
6/26/2022 21:41	17.07	6/26/2022 20:50	5.42	6/27/2022 1:46	73.80
6/26/2022 21:42	17.06	6/26/2022 20:51	5.47	6/27/2022 1:47	73.74
6/26/2022 21:43	17.09	6/26/2022 20:52	5.36	6/27/2022 1:48	73.69
6/26/2022 21:44	17.09	6/26/2022 20:53	5.37	6/27/2022 1:49	73.57
6/26/2022 21:45	17.04	6/26/2022 20:54	5.41	6/27/2022 1:50	73.55
6/26/2022 21:46	17.11	6/26/2022 20:55	5.33	6/27/2022 1:51	73.50
6/26/2022 21:47	17.08	6/26/2022 20:56	5.36	6/27/2022 1:52	73.46
6/26/2022 21:48	17.11	6/26/2022 20:57	5.40	6/27/2022 1:53	73.42
6/26/2022 21:49	17.07	6/26/2022 20:58	5.41	6/27/2022 1:54	73.31
6/26/2022 21:50	17.11	6/26/2022 20:59	5.27	6/27/2022 1:55	73.31
6/26/2022 21:51	17.11	6/26/2022 21:00	5.36	6/27/2022 1:56	73.24
6/26/2022 21:52	17.10	6/26/2022 21:01	5.33	6/27/2022 1:57	73.17
6/26/2022 21:53	17.10	6/26/2022 21:02	5.36	6/27/2022 1:58	73.14
6/26/2022 21:54	17.02	6/26/2022 21:03	5.31	6/27/2022 1:59	73.06
6/26/2022 21:55	17.12	6/26/2022 21:04	5.29	6/27/2022 2:00	73.03
6/26/2022 21:56	17.10	6/26/2022 21:05	5.36	6/27/2022 2:01	73.02
6/26/2022 21:57	17.07	6/26/2022 21:06	5.41	6/27/2022 2:02	72.94
6/26/2022 21:58	17.07	6/26/2022 21:07	5.25	6/27/2022 2:03	72.90
6/26/2022 21:59	17.12	6/26/2022 21:08	5.28	6/27/2022 2:04	72.85
6/26/2022 22:00	17.11	6/26/2022 21:09	5.30	6/27/2022 2:05	72.81
6/26/2022 22:01	17.09	6/26/2022 21:10	5.32	6/27/2022 2:06	72.72
6/26/2022 22:02	17.11	6/26/2022 21:11	5.28	6/27/2022 2:07	72.71
6/26/2022 22:03	17.11	6/26/2022 21:12	5.26	6/27/2022 2:08	72.64
6/26/2022 22:04	17.11	6/26/2022 21:13	5.30	6/27/2022 2:09	72.60
6/26/2022 22:05	17.16	6/26/2022 21:14	5.31	6/27/2022 2:10	72.59

6/26/2022 22:06	17.10	6/26/2022 21:15	5.25	6/27/2022 2:11	72.51
6/26/2022 22:07	17.13	6/26/2022 21:16	5.26	6/27/2022 2:12	72.50
6/26/2022 22:08	17.08	6/26/2022 21:17	5.29	6/27/2022 2:13	72.43
6/26/2022 22:09	17.09	6/26/2022 21:18	5.27	6/27/2022 2:14	72.42
6/26/2022 22:10	17.09	6/26/2022 21:19	5.21	6/27/2022 2:15	72.32
6/26/2022 22:11	17.05	6/26/2022 21:20	5.23	6/27/2022 2:16	72.33
6/26/2022 22:12	17.09	6/26/2022 21:21	5.24	6/27/2022 2:17	72.26
6/26/2022 22:13	17.07	6/26/2022 21:22	5.23	6/27/2022 2:18	72.22
6/26/2022 22:14	17.05	6/26/2022 21:23	5.21	6/27/2022 2:19	72.19
6/26/2022 22:15	17.08	6/26/2022 21:24	5.20	6/27/2022 2:20	72.15
6/26/2022 22:16	17.08	6/26/2022 21:25	5.20	6/27/2022 2:21	72.10
6/26/2022 22:17	17.09	6/26/2022 21:26	5.17	6/27/2022 2:22	72.05
6/26/2022 22:18	17.07	6/26/2022 21:27	5.20	6/27/2022 2:23	72.02
6/26/2022 22:19	17.09	6/26/2022 21:28	5.22	6/27/2022 2:24	72.01
6/26/2022 22:20	17.08	6/26/2022 21:29	5.15	6/27/2022 2:25	71.96
6/26/2022 22:21	17.06	6/26/2022 21:30	5.21	6/27/2022 2:26	71.92
6/26/2022 22:22	17.10	6/26/2022 21:31	5.19	6/27/2022 2:27	71.88
6/26/2022 22:23	17.05	6/26/2022 21:32	5.18	6/27/2022 2:28	71.83
6/26/2022 22:24	17.08	6/26/2022 21:33	5.19	6/27/2022 2:29	71.84
6/26/2022 22:25	17.11	6/26/2022 21:34	5.18	6/27/2022 2:30	71.78
6/26/2022 22:26	17.08	6/26/2022 21:35	5.16	6/27/2022 2:31	71.74
6/26/2022 22:27	17.09	6/26/2022 21:36	5.18	6/27/2022 2:32	71.70
6/26/2022 22:28	17.13	6/26/2022 21:37	5.15	6/27/2022 2:33	71.69
6/26/2022 22:29	17.09	6/26/2022 21:38	5.08	6/27/2022 2:34	71.62
6/26/2022 22:30	17.11	6/26/2022 21:39	5.13	6/27/2022 2:35	71.61
6/26/2022 22:31	17.17	6/26/2022 21:40	5.15	6/27/2022 2:36	71.60
6/26/2022 22:32	17.13	6/26/2022 21:41	5.15	6/27/2022 2:37	71.55
6/26/2022 22:33	17.13	6/26/2022 21:42	5.13	6/27/2022 2:38	71.49
6/26/2022 22:34	17.16	6/26/2022 21:43	5.09	6/27/2022 2:39	71.48
6/26/2022 22:35	17.17	6/26/2022 21:44	5.10	6/27/2022 2:40	71.44
6/26/2022 22:36	17.12	6/26/2022 21:45	5.14	6/27/2022 2:41	71.44
6/26/2022 22:37	17.21	6/26/2022 21:46	5.09	6/27/2022 2:42	71.38
6/26/2022 22:38	17.18	6/26/2022 21:47	5.12	6/27/2022 2:43	71.33
6/26/2022 22:39	17.18	6/26/2022 21:48	5.13	6/27/2022 2:44	71.35
6/26/2022 22:40	17.20	6/26/2022 21:49	5.17	6/27/2022 2:45	71.26
6/26/2022 22:41	17.16	6/26/2022 21:50	5.11	6/27/2022 2:46	71.27
6/26/2022 22:42	17.18	6/26/2022 21:51	5.11	6/27/2022 2:47	71.24
6/26/2022 22:43	17.17	6/26/2022 21:52	5.16	6/27/2022 2:48	71.22
6/26/2022 22:44	17.18	6/26/2022 21:53	5.06	6/27/2022 2:49	71.20
6/26/2022 22:45	17.25	6/26/2022 21:54	5.08	6/27/2022 2:50	71.14
6/26/2022 22:46	17.20	6/26/2022 21:55	5.13	6/27/2022 2:51	71.14
6/26/2022 22:47	17.18	6/26/2022 21:56	5.07	6/27/2022 2:52	71.06
6/26/2022 22:48	17.21	6/26/2022 21:57	5.06	6/27/2022 2:53	71.05
6/26/2022 22:49	17.20	6/26/2022 21:58	5.08	6/27/2022 2:54	71.03
6/26/2022 22:50	17.16	6/26/2022 21:59	5.16	6/27/2022 2:55	70.98
6/26/2022 22:51	17.22	6/26/2022 22:00	5.08	6/27/2022 2:56	70.98
6/26/2022 22:52	17.25	6/26/2022 22:01	5.03	6/27/2022 2:57	70.95
6/26/2022 22:53	17.25	6/26/2022 22:02	5.06	6/27/2022 2:58	70.91
6/26/2022 22:54	17.27	6/26/2022 22:03	5.03	6/27/2022 2:59	70.87
6/26/2022 22:55	17.28	6/26/2022 22:04	5.00	6/27/2022 3:00	70.84
6/26/2022 22:56	17.32	6/26/2022 22:05	5.10	6/27/2022 3:01	70.85
6/26/2022 22:57	17.27	6/26/2022 22:06	5.02	6/27/2022 3:02	70.76
6/26/2022 22:58	17.27	6/26/2022 22:07	5.07	6/27/2022 3:03	70.78
6/26/2022 22:59	17.32	6/26/2022 22:08	5.07	6/27/2022 3:04	70.76
6/26/2022 23:00	17.28	6/26/2022 22:09	5.10	6/27/2022 3:05	70.74
6/26/2022 23:01	17.31	6/26/2022 22:10	5.02	6/27/2022 3:06	70.70
6/26/2022 23:02	17.33	6/26/2022 22:11	5.08	6/27/2022 3:07	70.68
6/26/2022 23:03	17.30	6/26/2022 22:12	5.06	6/27/2022 3:08	70.65
6/26/2022 23:04	17.30	6/26/2022 22:13	5.02	6/27/2022 3:09	70.65
6/26/2022 23:05	17.24	6/26/2022 22:14	5.03	6/27/2022 3:10	70.60
6/26/2022 23:06	17.32	6/26/2022 22:15	5.05	6/27/2022 3:11	70.59
6/26/2022 23:07	17.30	6/26/2022 22:16	5.03	6/27/2022 3:12	70.56
6/26/2022 23:08	17.37	6/26/2022 22:17	5.00	6/27/2022 3:13	70.51
6/26/2022 23:09	17.32	6/26/2022 22:18	5.01	6/27/2022 3:14	70.52
6/26/2022 23:10	17.37	6/26/2022 22:19	5.01	6/27/2022 3:15	70.50
6/26/2022 23:11	17.30	6/26/2022 22:20	5.06	6/27/2022 3:16	70.46
6/26/2022 23:12	17.34	6/26/2022 22:21	5.04	6/27/2022 3:17	70.46
6/26/2022 23:13	17.31	6/26/2022 22:22	4.97	6/27/2022 3:18	70.44
6/26/2022 23:14	17.32	6/26/2022 22:23	5.03	6/27/2022 3:19	70.40
6/26/2022 23:15	17.37	6/26/2022 22:24	4.99	6/27/2022 3:20	70.42
6/26/2022 23:16	17.34	6/26/2022 22:25	5.00	6/27/2022 3:21	70.35
6/26/2022 23:17	17.33	6/26/2022 22:26	5.06	6/27/2022 3:22	70.36
6/26/2022 23:18	17.32	6/26/2022 22:27	5.04	6/27/2022 3:23	70.35
6/26/2022 23:19	17.38	6/26/2022 22:28	4.98	6/27/2022 3:24	70.32
6/26/2022 23:20	17.34	6/26/2022 22:29	5.06	6/27/2022 3:25	70.26
6/26/2022 23:21	17.33	6/26/2022 22:30	4.94	6/27/2022 3:26	70.27
6/26/2022 23:22	17.32	6/26/2022 22:31	5.23	6/27/2022 3:27	70.22
6/26/2022 23:23	17.36	6/26/2022 22:32	5.12	6/27/2022 3:28	70.22
6/26/2022 23:24	17.35	6/26/2022 22:33	5.07	6/27/2022 3:29	70.21
6/26/2022 23:25	17.33	6/26/2022 22:34	5.70	6/27/2022 3:30	70.18
6/26/2022 23:26	17.34	6/26/2022 22:35	6.10	6/27/2022 3:31	70.17
6/26/2022 23:27	17.34	6/26/2022 22:36	6.38	6/27/2022 3:32	70.12
6/26/2022 23:28	17.33	6/26/2022 22:37	6.57	6/27/2022 3:33	70.13
6/26/2022 23:29	17.31	6/26/2022 22:38	6.74	6/27/2022 3:34	70.08
6/26/2022 23:30	17.33	6/26/2022 22:39	6.90	6/27/2022 3:35	70.08
6/26/2022 23:31	17.35	6/26/2022 22:40	7.03	6/27/2022 3:36	70.04
6/26/2022 23:32	17.35	6/26/2022 22:41	7.29	6/27/2022 3:37	70.05
6/26/2022 23:33	17.37	6/26/2022 22:42	7.33	6/27/2022 3:38	70.02

6/26/2022 23:34	17.42	6/26/2022 22:43	7.50	6/27/2022 3:39	69.97
6/26/2022 23:35	17.36	6/26/2022 22:44	7.14	6/27/2022 3:40	69.96
6/26/2022 23:36	17.40	6/26/2022 22:45	6.59	6/27/2022 3:41	69.98
6/26/2022 23:37	17.40	6/26/2022 22:46	6.37	6/27/2022 3:42	69.95
6/26/2022 23:38	17.41	6/26/2022 22:47	6.15	6/27/2022 3:43	69.93
6/26/2022 23:39	17.41	6/26/2022 22:48	6.27	6/27/2022 3:44	69.93
6/26/2022 23:40	17.46	6/26/2022 22:49	6.29	6/27/2022 3:45	69.87
6/26/2022 23:41	17.46	6/26/2022 22:50	6.09	6/27/2022 3:46	69.91
6/26/2022 23:42	17.47	6/26/2022 22:51	6.00	6/27/2022 3:47	69.84
6/26/2022 23:43	17.44	6/26/2022 22:52	6.17	6/27/2022 3:48	69.83
6/26/2022 23:44	17.50	6/26/2022 22:53	6.48	6/27/2022 3:49	69.82
6/26/2022 23:45	17.52	6/26/2022 22:54	6.11	6/27/2022 3:50	69.83
6/26/2022 23:46	17.46	6/26/2022 22:55	6.02	6/27/2022 3:51	69.79
6/26/2022 23:47	17.52	6/26/2022 22:56	5.97	6/27/2022 3:52	69.77
6/26/2022 23:48	17.50	6/26/2022 22:57	5.88	6/27/2022 3:53	69.75
6/26/2022 23:49	17.54	6/26/2022 22:58	5.86	6/27/2022 3:54	69.72
6/26/2022 23:50	17.57	6/26/2022 22:59	5.84	6/27/2022 3:55	69.71
6/26/2022 23:51	17.56	6/26/2022 23:00	5.81	6/27/2022 3:56	69.69
6/26/2022 23:52	17.51	6/26/2022 23:01	5.77	6/27/2022 3:57	69.66
6/26/2022 23:53	17.61	6/26/2022 23:02	5.78	6/27/2022 3:58	69.67
6/26/2022 23:54	17.57	6/26/2022 23:03	5.76	6/27/2022 3:59	69.68
6/26/2022 23:55	17.64	6/26/2022 23:04	5.78	6/27/2022 4:00	69.63
6/26/2022 23:56	17.53	6/26/2022 23:05	5.70	6/27/2022 4:01	69.66
6/26/2022 23:57	17.63	6/26/2022 23:06	5.71	6/27/2022 4:02	69.59
6/26/2022 23:58	17.64	6/26/2022 23:07	5.71	6/27/2022 4:03	69.55
6/26/2022 23:59	17.63	6/26/2022 23:08	5.65	6/27/2022 4:04	69.55
6/27/2022 0:00	17.65	6/26/2022 23:09	5.67	6/27/2022 4:05	69.56
6/27/2022 0:01	17.68	6/26/2022 23:10	5.65	6/27/2022 4:06	69.53
6/27/2022 0:02	17.70	6/26/2022 23:11	5.65	6/27/2022 4:07	69.52
6/27/2022 0:03	17.69	6/26/2022 23:12	5.59	6/27/2022 4:08	69.51
6/27/2022 0:04	17.71	6/26/2022 23:13	5.63	6/27/2022 4:09	69.49
6/27/2022 0:05	17.73	6/26/2022 23:14	5.59	6/27/2022 4:10	69.48
6/27/2022 0:06	17.74	6/26/2022 23:15	5.58	6/27/2022 4:11	69.46
6/27/2022 0:07	17.75	6/26/2022 23:16	5.60	6/27/2022 4:12	69.42
6/27/2022 0:08	17.73	6/26/2022 23:17	5.60	6/27/2022 4:13	69.42
6/27/2022 0:09	17.73	6/26/2022 23:18	5.64	6/27/2022 4:14	69.42
6/27/2022 0:10	17.73	6/26/2022 23:19	5.50	6/27/2022 4:15	69.38
6/27/2022 0:11	17.76	6/26/2022 23:20	5.58	6/27/2022 4:16	69.39
6/27/2022 0:12	17.78	6/26/2022 23:21	5.62	6/27/2022 4:17	69.35
6/27/2022 0:13	17.73	6/26/2022 23:22	5.53	6/27/2022 4:18	69.36
6/27/2022 0:14	17.74	6/26/2022 23:23	5.50	6/27/2022 4:19	69.30
6/27/2022 0:15	17.79	6/26/2022 23:24	5.56	6/27/2022 4:20	69.33
6/27/2022 0:16	17.73	6/26/2022 23:25	5.60	6/27/2022 4:21	69.30
6/27/2022 0:17	17.72	6/26/2022 23:26	5.50	6/27/2022 4:22	69.31
6/27/2022 0:18	17.76	6/26/2022 23:27	5.64	6/27/2022 4:23	69.31
6/27/2022 0:19	17.76	6/26/2022 23:28	5.64	6/27/2022 4:24	69.26
6/27/2022 0:20	17.76	6/26/2022 23:29	5.57	6/27/2022 4:25	69.24
6/27/2022 0:21	17.70	6/26/2022 23:30	5.52	6/27/2022 4:26	69.28
6/27/2022 0:22	17.74	6/26/2022 23:31	5.56	6/27/2022 4:27	69.23
6/27/2022 0:23	17.76	6/26/2022 23:32	5.58	6/27/2022 4:28	69.22
6/27/2022 0:24	17.77	6/26/2022 23:33	5.51	6/27/2022 4:29	69.22
6/27/2022 0:25	17.78	6/26/2022 23:34	5.47	6/27/2022 4:30	69.18
6/27/2022 0:26	17.76	6/26/2022 23:35	5.53	6/27/2022 4:31	69.17
6/27/2022 0:27	17.74	6/26/2022 23:36	5.45	6/27/2022 4:32	69.19
6/27/2022 0:28	17.78	6/26/2022 23:37	5.48	6/27/2022 4:33	69.15
6/27/2022 0:29	17.76	6/26/2022 23:38	5.48	6/27/2022 4:34	69.18
6/27/2022 0:30	17.72	6/26/2022 23:39	5.52	6/27/2022 4:35	69.12
6/27/2022 0:31	17.72	6/26/2022 23:40	5.47	6/27/2022 4:36	69.13
6/27/2022 0:32	17.76	6/26/2022 23:41	5.51	6/27/2022 4:37	69.09
6/27/2022 0:33	17.72	6/26/2022 23:42	5.46	6/27/2022 4:38	69.13
6/27/2022 0:34	17.71	6/26/2022 23:43	5.48	6/27/2022 4:39	69.10
6/27/2022 0:35	17.79	6/26/2022 23:44	5.46	6/27/2022 4:40	69.08
6/27/2022 0:36	17.71	6/26/2022 23:45	5.49	6/27/2022 4:41	69.07
6/27/2022 0:37	17.75	6/26/2022 23:46	5.46	6/27/2022 4:42	69.07
6/27/2022 0:38	17.73	6/26/2022 23:47	5.45	6/27/2022 4:43	69.05
6/27/2022 0:39	17.72	6/26/2022 23:48	5.44	6/27/2022 4:44	69.04
6/27/2022 0:40	17.73	6/26/2022 23:49	5.42	6/27/2022 4:45	69.03
6/27/2022 0:41	17.73	6/26/2022 23:50	5.50	6/27/2022 4:46	69.02
6/27/2022 0:42	17.78	6/26/2022 23:51	5.38	6/27/2022 4:47	69.00
6/27/2022 0:43	17.74	6/26/2022 23:52	5.44	6/27/2022 4:48	68.99
6/27/2022 0:44	17.74	6/26/2022 23:53	5.49	6/27/2022 4:49	68.96
6/27/2022 0:45	17.75	6/26/2022 23:54	5.43	6/27/2022 4:50	68.97
6/27/2022 0:46	17.71	6/26/2022 23:55	5.39	6/27/2022 4:51	68.94
6/27/2022 0:47	17.68	6/26/2022 23:56	5.42	6/27/2022 4:52	68.90
6/27/2022 0:48	17.67	6/26/2022 23:57	5.49	6/27/2022 4:53	68.91
6/27/2022 0:49	17.67	6/26/2022 23:58	5.40	6/27/2022 4:54	68.93
6/27/2022 0:50	17.68	6/26/2022 23:59	5.44	6/27/2022 4:55	68.90
6/27/2022 0:51	17.70	6/27/2022 0:00	5.43	6/27/2022 4:56	68.87
6/27/2022 0:52	17.71	6/27/2022 0:01	5.41	6/27/2022 4:57	68.87
6/27/2022 0:53	17.60	6/27/2022 0:02	5.37	6/27/2022 4:58	68.91
6/27/2022 0:54	17.71	6/27/2022 0:03	5.39	6/27/2022 4:59	68.87
6/27/2022 0:55	17.72	6/27/2022 0:04	5.41	6/27/2022 5:00	68.87
6/27/2022 0:56	17.68	6/27/2022 0:05	5.77	6/27/2022 5:01	68.83
6/27/2022 0:57	17.69	6/27/2022 0:06	5.63	6/27/2022 5:02	68.85
6/27/2022 0:58	17.70	6/27/2022 0:07	5.62	6/27/2022 5:03	68.84
6/27/2022 0:59	17.70	6/27/2022 0:08	5.56	6/27/2022 5:04	68.81
6/27/2022 1:00	17.65	6/27/2022 0:09	5.59	6/27/2022 5:05	68.79
6/27/2022 1:01	17.63	6/27/2022 0:10	5.63	6/27/2022 5:06	68.77

6/27/2022 1:02	17.64	6/27/2022 0:11	5.61	6/27/2022 5:07	68.79
6/27/2022 1:03	17.63	6/27/2022 0:12	5.62	6/27/2022 5:08	68.73
6/27/2022 1:04	17.64	6/27/2022 0:13	5.62	6/27/2022 5:09	68.76
6/27/2022 1:05	17.64	6/27/2022 0:14	5.59	6/27/2022 5:10	68.73
6/27/2022 1:06	17.62	6/27/2022 0:15	5.67	6/27/2022 5:11	68.76
6/27/2022 1:07	17.63	6/27/2022 0:16	5.69	6/27/2022 5:12	68.74
6/27/2022 1:08	17.67	6/27/2022 0:17	5.58	6/27/2022 5:13	68.68
6/27/2022 1:09	17.58	6/27/2022 0:18	5.57	6/27/2022 5:14	68.69
6/27/2022 1:10	17.64	6/27/2022 0:19	5.62	6/27/2022 5:15	68.71
6/27/2022 1:11	17.59	6/27/2022 0:20	5.64	6/27/2022 5:16	68.67
6/27/2022 1:12	17.64	6/27/2022 0:21	5.68	6/27/2022 5:17	68.65
6/27/2022 1:13	17.59	6/27/2022 0:22	5.63	6/27/2022 5:18	68.70
6/27/2022 1:14	17.61	6/27/2022 0:23	5.67	6/27/2022 5:19	68.66
6/27/2022 1:15	17.61	6/27/2022 0:24	5.68	6/27/2022 5:20	68.65
6/27/2022 1:16	17.60	6/27/2022 0:25	5.61	6/27/2022 5:21	68.65
6/27/2022 1:17	17.58	6/27/2022 0:26	5.57	6/27/2022 5:22	68.62
6/27/2022 1:18	17.58	6/27/2022 0:27	5.60	6/27/2022 5:23	68.61
6/27/2022 1:19	17.58	6/27/2022 0:28	5.54	6/27/2022 5:24	68.63
6/27/2022 1:20	17.55	6/27/2022 0:29	5.60	6/27/2022 5:25	68.59
6/27/2022 1:21	17.59	6/27/2022 0:30	5.56	6/27/2022 5:26	68.58
6/27/2022 1:22	17.56	6/27/2022 0:31	5.61	6/27/2022 5:27	68.56
6/27/2022 1:23	17.53	6/27/2022 0:32	5.58	6/27/2022 5:28	68.58
6/27/2022 1:24	17.55	6/27/2022 0:33	5.56	6/27/2022 5:29	68.55
6/27/2022 1:25	17.55	6/27/2022 0:34	5.62	6/27/2022 5:30	68.56
6/27/2022 1:26	17.60	6/27/2022 0:35	5.55	6/27/2022 5:31	68.54
6/27/2022 1:27	17.57	6/27/2022 0:36	5.57	6/27/2022 5:32	68.57
6/27/2022 1:28	17.56	6/27/2022 0:37	5.58	6/27/2022 5:33	68.57
6/27/2022 1:29	17.56	6/27/2022 0:38	5.55	6/27/2022 5:34	68.51
6/27/2022 1:30	17.54	6/27/2022 0:39	5.59	6/27/2022 5:35	68.55
6/27/2022 1:31	17.48	6/27/2022 0:40	5.59	6/27/2022 5:36	68.54
6/27/2022 1:32	17.51	6/27/2022 0:41	5.67	6/27/2022 5:37	68.50
6/27/2022 1:33	17.55	6/27/2022 0:42	5.56	6/27/2022 5:38	68.50
6/27/2022 1:34	17.53	6/27/2022 0:43	5.55	6/27/2022 5:39	68.50
6/27/2022 1:35	17.51	6/27/2022 0:44	5.56	6/27/2022 5:40	68.47
6/27/2022 1:36	17.50	6/27/2022 0:45	5.53	6/27/2022 5:41	68.44
6/27/2022 1:37	17.50	6/27/2022 0:46	5.61	6/27/2022 5:42	68.48
6/27/2022 1:38	17.50	6/27/2022 0:47	5.62	6/27/2022 5:43	68.44
6/27/2022 1:39	17.47	6/27/2022 0:48	5.63	6/27/2022 5:44	68.43
6/27/2022 1:40	17.48	6/27/2022 0:49	5.54	6/27/2022 5:45	68.43
6/27/2022 1:41	17.51	6/27/2022 0:50	5.60	6/27/2022 5:46	68.47
6/27/2022 1:42	17.48	6/27/2022 0:51	5.60	6/27/2022 5:47	68.44
6/27/2022 1:43	17.48	6/27/2022 0:52	5.54	6/27/2022 5:48	68.38
6/27/2022 1:44	17.45	6/27/2022 0:53	5.56	6/27/2022 5:49	68.40
6/27/2022 1:45	17.49	6/27/2022 0:54	5.59	6/27/2022 5:50	68.39
6/27/2022 1:46	17.52	6/27/2022 0:55	5.63	6/27/2022 5:51	68.34
6/27/2022 1:47	17.45	6/27/2022 0:56	5.55	6/27/2022 5:52	68.35
6/27/2022 1:48	17.49	6/27/2022 0:57	5.58	6/27/2022 5:53	68.37
6/27/2022 1:49	17.45	6/27/2022 0:58	5.59	6/27/2022 5:54	68.38
6/27/2022 1:50	17.45	6/27/2022 0:59	5.60	6/27/2022 5:55	68.32
6/27/2022 1:51	17.45	6/27/2022 1:00	5.60	6/27/2022 5:56	68.33
6/27/2022 1:52	17.43	6/27/2022 1:01	5.58	6/27/2022 5:57	68.32
6/27/2022 1:53	17.44	6/27/2022 1:02	5.62	6/27/2022 5:58	68.35
6/27/2022 1:54	17.48	6/27/2022 1:03	7.42	6/27/2022 5:59	68.34
6/27/2022 1:55	17.39	6/27/2022 1:04	8.35	6/27/2022 6:00	68.32
6/27/2022 1:56	17.44	6/27/2022 1:05	8.94	6/27/2022 6:01	68.30
6/27/2022 1:57	17.45	6/27/2022 1:06	9.49	6/27/2022 6:02	68.28
6/27/2022 1:58	17.42	6/27/2022 1:07	9.90	6/27/2022 6:03	68.31
6/27/2022 1:59	17.49	6/27/2022 1:08	10.24	6/27/2022 6:04	68.26
6/27/2022 2:00	17.47	6/27/2022 1:09	10.51	6/27/2022 6:05	68.26
6/27/2022 2:01	17.44	6/27/2022 1:10	10.79	6/27/2022 6:06	68.25
6/27/2022 2:02	17.46	6/27/2022 1:11	11.04	6/27/2022 6:07	68.27
6/27/2022 2:03	17.41	6/27/2022 1:12	11.28	6/27/2022 6:08	68.27
6/27/2022 2:04	17.43	6/27/2022 1:13	11.50	6/27/2022 6:09	68.24
6/27/2022 2:05	17.39	6/27/2022 1:14	11.70	6/27/2022 6:10	68.22
6/27/2022 2:06	17.41	6/27/2022 1:15	11.93	6/27/2022 6:11	68.26
6/27/2022 2:07	17.38	6/27/2022 1:16	12.09	6/27/2022 6:12	68.19
6/27/2022 2:08	17.42	6/27/2022 1:17	12.27	6/27/2022 6:13	68.21
6/27/2022 2:09	17.43	6/27/2022 1:18	12.48	6/27/2022 6:14	68.23
6/27/2022 2:10	17.38	6/27/2022 1:19	12.60	6/27/2022 6:15	68.19
6/27/2022 2:11	17.38	6/27/2022 1:20	12.82	6/27/2022 6:16	68.18
6/27/2022 2:12	17.41	6/27/2022 1:21	12.96	6/27/2022 6:17	68.17
6/27/2022 2:13	17.41	6/27/2022 1:22	13.13	6/27/2022 6:18	68.16
6/27/2022 2:14	17.36	6/27/2022 1:23	13.56	6/27/2022 6:19	68.15
6/27/2022 2:15	17.35	6/27/2022 1:24	13.90	6/27/2022 6:20	68.15
6/27/2022 2:16	17.43	6/27/2022 1:25	14.12	6/27/2022 6:21	68.15
6/27/2022 2:17	17.36	6/27/2022 1:26	14.34	6/27/2022 6:22	68.15
6/27/2022 2:18	17.36	6/27/2022 1:27	14.54	6/27/2022 6:23	68.15
6/27/2022 2:19	17.35	6/27/2022 1:28	14.71	6/27/2022 6:24	68.11
6/27/2022 2:20	17.32	6/27/2022 1:29	14.96	6/27/2022 6:25	68.16
6/27/2022 2:21	17.36	6/27/2022 1:30	15.08	6/27/2022 6:26	68.13
6/27/2022 2:22	17.37	6/27/2022 1:31	15.28	6/27/2022 6:27	68.13
6/27/2022 2:23	17.33	6/27/2022 1:32	15.46	6/27/2022 6:28	68.11
6/27/2022 2:24	17.37	6/27/2022 1:33	15.58	6/27/2022 6:29	68.10
6/27/2022 2:25	17.32	6/27/2022 1:34	15.78	6/27/2022 6:30	68.10
6/27/2022 2:26	17.31	6/27/2022 1:35	15.93	6/27/2022 6:31	68.09
6/27/2022 2:27	17.34	6/27/2022 1:36	16.11	6/27/2022 6:32	68.07
6/27/2022 2:28	17.37	6/27/2022 1:37	16.22	6/27/2022 6:33	68.07
6/27/2022 2:29	17.31	6/27/2022 1:38	16.43	6/27/2022 6:34	68.03

6/27/2022 2:30	17.32	6/27/2022 1:39	16.52	6/27/2022 6:35	68.04
6/27/2022 2:31	17.39	6/27/2022 1:40	16.74	6/27/2022 6:36	68.06
6/27/2022 2:32	17.33	6/27/2022 1:41	16.78	6/27/2022 6:37	68.05
6/27/2022 2:33	17.33	6/27/2022 1:42	17.02	6/27/2022 6:38	68.02
6/27/2022 2:34	17.34	6/27/2022 1:43	17.10	6/27/2022 6:39	68.05
6/27/2022 2:35	17.29	6/27/2022 1:44	17.26	6/27/2022 6:40	68.03
6/27/2022 2:36	17.31	6/27/2022 1:45	17.39	6/27/2022 6:41	68.06
6/27/2022 2:37	17.32	6/27/2022 1:46	17.50	6/27/2022 6:42	68.02
6/27/2022 2:38	17.34	6/27/2022 1:47	17.64	6/27/2022 6:43	68.01
6/27/2022 2:39	17.35	6/27/2022 1:48	17.77	6/27/2022 6:44	68.01
6/27/2022 2:40	17.32	6/27/2022 1:49	17.91	6/27/2022 6:45	67.99
6/27/2022 2:41	17.28	6/27/2022 1:50	18.02	6/27/2022 6:46	68.01
6/27/2022 2:42	17.29	6/27/2022 1:51	18.09	6/27/2022 6:47	68.00
6/27/2022 2:43	17.29	6/27/2022 1:52	18.23	6/27/2022 6:48	68.03
6/27/2022 2:44	17.28	6/27/2022 1:53	18.41	6/27/2022 6:49	68.02
6/27/2022 2:45	17.31	6/27/2022 1:54	18.52	6/27/2022 6:50	68.00
6/27/2022 2:46	17.32	6/27/2022 1:55	18.65	6/27/2022 6:51	68.00
6/27/2022 2:47	17.28	6/27/2022 1:56	18.75	6/27/2022 6:52	68.01
6/27/2022 2:48	17.28	6/27/2022 1:57	18.91	6/27/2022 6:53	68.02
6/27/2022 2:49	17.27	6/27/2022 1:58	18.97	6/27/2022 6:54	67.98
6/27/2022 2:50	17.29	6/27/2022 1:59	19.14	6/27/2022 6:55	67.99
6/27/2022 2:51	17.23	6/27/2022 2:00	19.28	6/27/2022 6:56	68.02
6/27/2022 2:52	17.30	6/27/2022 2:01	19.35	6/27/2022 6:57	68.00
6/27/2022 2:53	17.27	6/27/2022 2:02	19.46	6/27/2022 6:58	68.00
6/27/2022 2:54	17.26	6/27/2022 2:03	19.64	6/27/2022 6:59	67.97
6/27/2022 2:55	17.28	6/27/2022 2:04	20.60	6/27/2022 7:00	67.95
6/27/2022 2:56	17.27	6/27/2022 2:05	21.49	6/27/2022 7:01	67.96
6/27/2022 2:57	17.34	6/27/2022 2:06	22.02	6/27/2022 7:02	67.97
6/27/2022 2:58	17.25	6/27/2022 2:07	22.57	6/27/2022 7:03	67.95
6/27/2022 2:59	17.28	6/27/2022 2:08	23.04	6/27/2022 7:04	67.95
6/27/2022 3:00	17.26	6/27/2022 2:09	23.46	6/27/2022 7:05	67.95
6/27/2022 3:01	17.21	6/27/2022 2:10	23.71	6/27/2022 7:06	68.01
6/27/2022 3:02	17.27	6/27/2022 2:11	24.00	6/27/2022 7:07	67.96
6/27/2022 3:03	17.29	6/27/2022 2:12	24.31	6/27/2022 7:08	67.95
6/27/2022 3:04	17.28	6/27/2022 2:13	24.61	6/27/2022 7:09	67.92
6/27/2022 3:05	17.24	6/27/2022 2:14	24.90	6/27/2022 7:10	67.94
6/27/2022 3:06	17.25	6/27/2022 2:15	25.20	6/27/2022 7:11	67.93
6/27/2022 3:07	17.29	6/27/2022 2:16	25.49	6/27/2022 7:12	67.92
6/27/2022 3:08	17.29	6/27/2022 2:17	25.77	6/27/2022 7:13	67.93
6/27/2022 3:09	17.25	6/27/2022 2:18	25.26	6/27/2022 7:14	67.94
6/27/2022 3:10	17.26	6/27/2022 2:19	24.67	6/27/2022 7:15	67.92
6/27/2022 3:11	17.23	6/27/2022 2:20	24.33	6/27/2022 7:16	67.92
6/27/2022 3:12	17.25	6/27/2022 2:21	24.32	6/27/2022 7:17	67.94
6/27/2022 3:13	17.23	6/27/2022 2:22	24.81	6/27/2022 7:18	67.92
6/27/2022 3:14	17.28	6/27/2022 2:23	25.21	6/27/2022 7:19	67.91
6/27/2022 3:15	17.25	6/27/2022 2:24	25.54	6/27/2022 7:20	67.89
6/27/2022 3:16	17.21	6/27/2022 2:25	26.09	6/27/2022 7:21	67.90
6/27/2022 3:17	17.21	6/27/2022 2:26	26.44	6/27/2022 7:22	67.90
6/27/2022 3:18	17.23	6/27/2022 2:27	26.80	6/27/2022 7:23	67.89
6/27/2022 3:19	17.21	6/27/2022 2:28	27.08	6/27/2022 7:24	67.88
6/27/2022 3:20	17.24	6/27/2022 2:29	27.36	6/27/2022 7:25	67.93
6/27/2022 3:21	17.20	6/27/2022 2:30	27.63	6/27/2022 7:26	67.87
6/27/2022 3:22	17.19	6/27/2022 2:31	27.84	6/27/2022 7:27	67.88
6/27/2022 3:23	17.25	6/27/2022 2:32	28.12	6/27/2022 7:28	72.96
6/27/2022 3:24	17.17	6/27/2022 2:33	28.31	6/27/2022 7:29	74.64
6/27/2022 3:25	17.21	6/27/2022 2:34	28.12	6/27/2022 7:30	74.45
6/27/2022 3:26	17.19	6/27/2022 2:35	27.95	6/27/2022 7:31	74.31
6/27/2022 3:27	17.22	6/27/2022 2:36	27.87	6/27/2022 7:32	74.22
6/27/2022 3:28	17.24	6/27/2022 2:37	27.91	6/27/2022 7:33	74.09
6/27/2022 3:29	17.14	6/27/2022 2:38	27.88	6/27/2022 7:34	74.00
6/27/2022 3:30	17.17	6/27/2022 2:39	27.92	6/27/2022 7:35	77.32
6/27/2022 3:31	17.22	6/27/2022 2:40	27.58	6/27/2022 7:36	79.45
6/27/2022 3:32	17.18	6/27/2022 2:41	27.33	6/27/2022 7:37	79.24
6/27/2022 3:33	17.19	6/27/2022 2:42	27.21	6/27/2022 7:38	79.07
6/27/2022 3:34	17.21	6/27/2022 2:43	27.32	6/27/2022 7:39	78.99
6/27/2022 3:35	17.17	6/27/2022 2:44	27.33	6/27/2022 7:40	78.80
6/27/2022 3:36	17.19	6/27/2022 2:45	27.37	6/27/2022 7:41	78.64
6/27/2022 3:37	17.16	6/27/2022 2:46	27.38	6/27/2022 7:42	78.58
6/27/2022 3:38	17.20	6/27/2022 2:47	27.46	6/27/2022 7:43	78.80
6/27/2022 3:39	17.17	6/27/2022 2:48	27.45	6/27/2022 7:44	83.38
6/27/2022 3:40	17.21	6/27/2022 2:49	27.58	6/27/2022 7:45	83.12
6/27/2022 3:41	17.17	6/27/2022 2:50	27.68	6/27/2022 7:46	82.88
6/27/2022 3:42	17.19	6/27/2022 2:51	27.71	6/27/2022 7:47	82.65
6/27/2022 3:43	17.17	6/27/2022 2:52	27.75	6/27/2022 7:48	82.45
6/27/2022 3:44	17.16	6/27/2022 2:53	27.81	6/27/2022 7:49	82.23
6/27/2022 3:45	17.21	6/27/2022 2:54	27.92	6/27/2022 7:50	84.20
6/27/2022 3:46	17.19	6/27/2022 2:55	27.95	6/27/2022 7:51	90.64
6/27/2022 3:47	17.17	6/27/2022 2:56	28.03	6/27/2022 7:52	90.23
6/27/2022 3:48	17.18	6/27/2022 2:57	28.08	6/27/2022 7:53	93.14
6/27/2022 3:49	17.19	6/27/2022 2:58	28.18	6/27/2022 7:54	99.85
6/27/2022 3:50	17.09	6/27/2022 2:59	28.22	6/27/2022 7:55	100.15
6/27/2022 3:51	17.13	6/27/2022 3:00	28.30	6/27/2022 7:56	99.66
6/27/2022 3:52	17.14	6/27/2022 3:01	28.36	6/27/2022 7:57	106.38
6/27/2022 3:53	17.17	6/27/2022 3:02	28.48	6/27/2022 7:58	108.15
6/27/2022 3:54	17.21	6/27/2022 3:03	28.29	6/27/2022 7:59	107.52
6/27/2022 3:55	17.18	6/27/2022 3:04	28.24	6/27/2022 8:00	106.98
6/27/2022 3:56	17.17	6/27/2022 3:05	28.16	6/27/2022 8:01	106.41
6/27/2022 3:57	17.17	6/27/2022 3:06	28.18	6/27/2022 8:02	105.87

6/27/2022 3:58	17.17	6/27/2022 3:07	28.18	6/27/2022 8:03	105.37
6/27/2022 3:59	17.12	6/27/2022 3:08	28.19	6/27/2022 8:04	104.88
6/27/2022 4:00	17.11	6/27/2022 3:09	28.23	6/27/2022 8:05	104.45
6/27/2022 4:01	17.16	6/27/2022 3:10	28.22	6/27/2022 8:06	104.05
6/27/2022 4:02	17.14	6/27/2022 3:11	28.27	6/27/2022 8:07	103.62
6/27/2022 4:03	17.17	6/27/2022 3:12	28.30	6/27/2022 8:08	103.21
6/27/2022 4:04	17.15	6/27/2022 3:13	28.35	6/27/2022 8:09	102.76
6/27/2022 4:05	17.13	6/27/2022 3:14	28.37	6/27/2022 8:10	102.34
6/27/2022 4:06	17.10	6/27/2022 3:15	28.38	6/27/2022 8:11	101.93
6/27/2022 4:07	17.14	6/27/2022 3:16	28.50	6/27/2022 8:12	101.51
6/27/2022 4:08	17.14	6/27/2022 3:17	28.53	6/27/2022 8:13	107.07
6/27/2022 4:09	17.10	6/27/2022 3:18	28.57	6/27/2022 8:14	106.42
6/27/2022 4:10	17.14	6/27/2022 3:19	28.61	6/27/2022 8:15	105.91
6/27/2022 4:11	17.14	6/27/2022 3:20	28.65	6/27/2022 8:16	105.39
6/27/2022 4:12	17.10	6/27/2022 3:21	28.69	6/27/2022 8:17	104.96
6/27/2022 4:13	17.14	6/27/2022 3:22	28.79	6/27/2022 8:18	104.56
6/27/2022 4:14	17.12	6/27/2022 3:23	27.90	6/27/2022 8:19	104.16
6/27/2022 4:15	17.17	6/27/2022 3:24	27.49	6/27/2022 8:20	103.75
6/27/2022 4:16	17.16	6/27/2022 3:25	27.15	6/27/2022 8:21	103.33
6/27/2022 4:17	17.13	6/27/2022 3:26	26.88	6/27/2022 8:22	102.92
6/27/2022 4:18	17.11	6/27/2022 3:27	26.70	6/27/2022 8:23	102.52
6/27/2022 4:19	17.08	6/27/2022 3:28	26.51	6/27/2022 8:24	102.11
6/27/2022 4:20	17.20	6/27/2022 3:29	26.40	6/27/2022 8:25	101.72
6/27/2022 4:21	17.16	6/27/2022 3:30	26.33	6/27/2022 8:26	101.37
6/27/2022 4:22	17.15	6/27/2022 3:31	26.20	6/27/2022 8:27	101.02
6/27/2022 4:23	17.13	6/27/2022 3:32	26.13	6/27/2022 8:28	100.57
6/27/2022 4:24	17.12	6/27/2022 3:33	26.04	6/27/2022 8:29	100.23
6/27/2022 4:25	17.10	6/27/2022 3:34	25.97	6/27/2022 8:30	99.89
6/27/2022 4:26	17.09	6/27/2022 3:35	25.94	6/27/2022 8:31	99.55
6/27/2022 4:27	17.14	6/27/2022 3:36	25.84	6/27/2022 8:32	99.22
6/27/2022 4:28	17.11	6/27/2022 3:37	25.78	6/27/2022 8:33	98.86
6/27/2022 4:29	17.14	6/27/2022 3:38	25.73	6/27/2022 8:34	98.54
6/27/2022 4:30	17.08	6/27/2022 3:39	25.71	6/27/2022 8:35	98.19
6/27/2022 4:31	17.08	6/27/2022 3:40	25.72	6/27/2022 8:36	97.83
6/27/2022 4:32	17.12	6/27/2022 3:41	25.66	6/27/2022 8:37	97.52
6/27/2022 4:33	17.12	6/27/2022 3:42	25.61	6/27/2022 8:38	97.24
6/27/2022 4:34	17.11	6/27/2022 3:43	24.61	6/27/2022 8:39	96.89
6/27/2022 4:35	17.14	6/27/2022 3:44	24.14	6/27/2022 8:40	96.57
6/27/2022 4:36	17.14	6/27/2022 3:45	23.83	6/27/2022 8:41	96.29
6/27/2022 4:37	17.09	6/27/2022 3:46	23.70	6/27/2022 8:42	95.96
6/27/2022 4:38	17.11	6/27/2022 3:47	23.47	6/27/2022 8:43	95.68
6/27/2022 4:39	17.04	6/27/2022 3:48	23.16	6/27/2022 8:44	95.38
6/27/2022 4:40	17.08	6/27/2022 3:49	23.19	6/27/2022 8:45	95.11
6/27/2022 4:41	17.09	6/27/2022 3:50	23.33	6/27/2022 8:46	94.83
6/27/2022 4:42	17.12	6/27/2022 3:51	23.41	6/27/2022 8:47	94.55
6/27/2022 4:43	17.15	6/27/2022 3:52	23.34	6/27/2022 8:48	94.31
6/27/2022 4:44	17.10	6/27/2022 3:53	23.35	6/27/2022 8:49	94.09
6/27/2022 4:45	17.08	6/27/2022 3:54	23.33	6/27/2022 8:50	93.82
6/27/2022 4:46	17.10	6/27/2022 3:55	23.28	6/27/2022 8:51	93.60
6/27/2022 4:47	17.09	6/27/2022 3:56	23.28	6/27/2022 8:52	93.34
6/27/2022 4:48	17.10	6/27/2022 3:57	22.87	6/27/2022 8:53	93.07
6/27/2022 4:49	17.12	6/27/2022 3:58	22.46	6/27/2022 8:54	92.82
6/27/2022 4:50	17.04	6/27/2022 3:59	22.25	6/27/2022 8:55	92.52
6/27/2022 4:51	17.08	6/27/2022 4:00	22.03	6/27/2022 8:56	92.27
6/27/2022 4:52	17.08	6/27/2022 4:01	21.88	6/27/2022 8:57	92.05
6/27/2022 4:53	17.08	6/27/2022 4:02	21.67	6/27/2022 8:58	91.81
6/27/2022 4:54	17.03	6/27/2022 4:03	21.52	6/27/2022 8:59	91.62
6/27/2022 4:55	17.07	6/27/2022 4:04	21.43	6/27/2022 9:00	91.40
6/27/2022 4:56	17.07	6/27/2022 4:05	21.26	6/27/2022 9:01	91.22
6/27/2022 4:57	17.04	6/27/2022 4:06	21.19	6/27/2022 9:02	91.00
6/27/2022 4:58	17.10	6/27/2022 4:07	21.06	6/27/2022 9:03	90.77
6/27/2022 4:59	17.10	6/27/2022 4:08	20.95	6/27/2022 9:04	90.54
6/27/2022 5:00	17.08	6/27/2022 4:09	20.83	6/27/2022 9:05	90.38
6/27/2022 5:01	17.06	6/27/2022 4:10	20.69	6/27/2022 9:06	90.12
6/27/2022 5:02	17.04	6/27/2022 4:11	20.57	6/27/2022 9:07	89.91
6/27/2022 5:03	17.09	6/27/2022 4:12	20.49	6/27/2022 9:08	89.70
6/27/2022 5:04	17.05	6/27/2022 4:13	20.38	6/27/2022 9:09	89.50
6/27/2022 5:05	17.05	6/27/2022 4:14	20.31	6/27/2022 9:10	89.27
6/27/2022 5:06	17.05	6/27/2022 4:15	20.16	6/27/2022 9:11	89.07
6/27/2022 5:07	17.09	6/27/2022 4:16	20.15	6/27/2022 9:12	88.89
6/27/2022 5:08	17.06	6/27/2022 4:17	20.14	6/27/2022 9:13	88.70
6/27/2022 5:09	17.02	6/27/2022 4:18	19.91	6/27/2022 9:14	88.52
6/27/2022 5:10	17.07	6/27/2022 4:19	19.89	6/27/2022 9:15	88.31
6/27/2022 5:11	17.01	6/27/2022 4:20	19.76	6/27/2022 9:16	88.14
6/27/2022 5:12	17.07	6/27/2022 4:21	19.72	6/27/2022 9:17	87.92
6/27/2022 5:13	17.06	6/27/2022 4:22	19.61	6/27/2022 9:18	87.72
6/27/2022 5:14	17.06	6/27/2022 4:23	19.52	6/27/2022 9:19	87.54
6/27/2022 5:15	17.08	6/27/2022 4:24	19.51	6/27/2022 9:20	87.32
6/27/2022 5:16	17.03	6/27/2022 4:25	19.47	6/27/2022 9:21	87.12
6/27/2022 5:17	17.04	6/27/2022 4:26	19.31	6/27/2022 9:22	86.95
6/27/2022 5:18	17.09	6/27/2022 4:27	19.21	6/27/2022 9:23	86.76
6/27/2022 5:19	17.06	6/27/2022 4:28	19.21	6/27/2022 9:24	86.57
6/27/2022 5:20	17.00	6/27/2022 4:29	19.12	6/27/2022 9:25	86.37
6/27/2022 5:21	17.04	6/27/2022 4:30	19.02	6/27/2022 9:26	86.20
6/27/2022 5:22	17.06	6/27/2022 4:31	18.97	6/27/2022 9:27	86.03
6/27/2022 5:23	17.08	6/27/2022 4:32	18.92	6/27/2022 9:28	85.88
6/27/2022 5:24	17.07	6/27/2022 4:33	18.89	6/27/2022 9:29	85.68
6/27/2022 5:25	17.09	6/27/2022 4:34	18.72	6/27/2022 9:30	85.50

6/27/2022 5:26	17.08	6/27/2022 4:35	18.72	6/27/2022 9:31	85.38
6/27/2022 5:27	17.01	6/27/2022 4:36	18.59	6/27/2022 9:32	85.15
6/27/2022 5:28	17.10	6/27/2022 4:37	18.58	6/27/2022 9:33	85.02
6/27/2022 5:29	17.09	6/27/2022 4:38	18.53	6/27/2022 9:34	84.87
6/27/2022 5:30	17.05	6/27/2022 4:39	18.42	6/27/2022 9:35	84.71
6/27/2022 5:31	17.05	6/27/2022 4:40	18.36	6/27/2022 9:36	84.53
6/27/2022 5:32	17.00	6/27/2022 4:41	18.35	6/27/2022 9:37	84.36
6/27/2022 5:33	17.05	6/27/2022 4:42	18.25	6/27/2022 9:38	84.24
6/27/2022 5:34	17.07	6/27/2022 4:43	18.23	6/27/2022 9:39	84.05
6/27/2022 5:35	17.07	6/27/2022 4:44	18.13	6/27/2022 9:40	83.88
6/27/2022 5:36	17.03	6/27/2022 4:45	18.12	6/27/2022 9:41	83.74
6/27/2022 5:37	17.04	6/27/2022 4:46	18.09	6/27/2022 9:42	83.59
6/27/2022 5:38	17.02	6/27/2022 4:47	17.96	6/27/2022 9:43	83.48
6/27/2022 5:39	17.05	6/27/2022 4:48	17.93	6/27/2022 9:44	83.33
6/27/2022 5:40	17.04	6/27/2022 4:49	17.90	6/27/2022 9:45	83.16
6/27/2022 5:41	17.02	6/27/2022 4:50	17.87	6/27/2022 9:46	83.00
6/27/2022 5:42	17.06	6/27/2022 4:51	17.80	6/27/2022 9:47	82.88
6/27/2022 5:43	17.05	6/27/2022 4:52	17.72	6/27/2022 9:48	82.70
6/27/2022 5:44	17.07	6/27/2022 4:53	17.65	6/27/2022 9:49	82.61
6/27/2022 5:45	17.05	6/27/2022 4:54	17.65	6/27/2022 9:50	82.45
6/27/2022 5:46	17.08	6/27/2022 4:55	17.55	6/27/2022 9:51	82.32
6/27/2022 5:47	17.04	6/27/2022 4:56	17.51	6/27/2022 9:52	82.21
6/27/2022 5:48	17.06	6/27/2022 4:57	17.48	6/27/2022 9:53	82.06
6/27/2022 5:49	16.99	6/27/2022 4:58	17.40	6/27/2022 9:54	81.95
6/27/2022 5:50	17.06	6/27/2022 4:59	17.40	6/27/2022 9:55	81.82
6/27/2022 5:51	17.00	6/27/2022 5:00	17.32	6/27/2022 9:56	81.70
6/27/2022 5:52	17.08	6/27/2022 5:01	17.31	6/27/2022 9:57	81.56
6/27/2022 5:53	17.05	6/27/2022 5:02	17.17	6/27/2022 9:58	81.45
6/27/2022 5:54	17.06	6/27/2022 5:03	17.13	6/27/2022 9:59	81.31
6/27/2022 5:55	17.02	6/27/2022 5:04	17.12	6/27/2022 10:00	81.20
6/27/2022 5:56	17.04	6/27/2022 5:05	17.02	6/27/2022 10:01	81.10
6/27/2022 5:57	17.05	6/27/2022 5:06	16.99	6/27/2022 10:02	80.98
6/27/2022 5:58	17.05	6/27/2022 5:07	16.94	6/27/2022 10:03	80.89
6/27/2022 5:59	17.05	6/27/2022 5:08	16.94	6/27/2022 10:04	80.82
6/27/2022 6:00	17.07	6/27/2022 5:09	16.84	6/27/2022 10:05	80.69
6/27/2022 6:01	17.05	6/27/2022 5:10	16.78	6/27/2022 10:06	80.60
6/27/2022 6:02	17.09	6/27/2022 5:11	16.78	6/27/2022 10:07	80.45
6/27/2022 6:03	17.03	6/27/2022 5:12	16.75	6/27/2022 10:08	80.37
6/27/2022 6:04	17.04	6/27/2022 5:13	16.65	6/27/2022 10:09	80.23
6/27/2022 6:05	17.05	6/27/2022 5:14	16.61	6/27/2022 10:10	80.12
6/27/2022 6:06	17.05	6/27/2022 5:15	16.56	6/27/2022 10:11	80.02
6/27/2022 6:07	17.05	6/27/2022 5:16	16.58	6/27/2022 10:12	79.90
6/27/2022 6:08	17.03	6/27/2022 5:17	16.47	6/27/2022 10:13	79.81
6/27/2022 6:09	17.04	6/27/2022 5:18	16.46	6/27/2022 10:14	79.71
6/27/2022 6:10	17.06	6/27/2022 5:19	16.35	6/27/2022 10:15	79.60
6/27/2022 6:11	17.07	6/27/2022 5:20	16.38	6/27/2022 10:16	79.50
6/27/2022 6:12	17.05	6/27/2022 5:21	16.26	6/27/2022 10:17	79.39
6/27/2022 6:13	17.07	6/27/2022 5:22	16.24	6/27/2022 10:18	79.31
6/27/2022 6:14	17.05	6/27/2022 5:23	16.22	6/27/2022 10:19	79.21
6/27/2022 6:15	17.00	6/27/2022 5:24	16.18	6/27/2022 10:20	79.18
6/27/2022 6:16	17.01	6/27/2022 5:25	16.12	6/27/2022 10:21	79.07
6/27/2022 6:17	17.02	6/27/2022 5:26	16.08	6/27/2022 10:22	79.02
6/27/2022 6:18	17.05	6/27/2022 5:27	16.06	6/27/2022 10:23	78.87
6/27/2022 6:19	16.99	6/27/2022 5:28	15.97	6/27/2022 10:24	78.81
6/27/2022 6:20	17.06	6/27/2022 5:29	15.94	6/27/2022 10:25	78.72
6/27/2022 6:21	17.04	6/27/2022 5:30	15.97	6/27/2022 10:26	78.66
6/27/2022 6:22	17.05	6/27/2022 5:31	15.98	6/27/2022 10:27	78.58
6/27/2022 6:23	17.07	6/27/2022 5:32	15.97	6/27/2022 10:28	78.49
6/27/2022 6:24	17.05	6/27/2022 5:33	15.82	6/27/2022 10:29	78.39
6/27/2022 6:25	17.06	6/27/2022 5:34	15.76	6/27/2022 10:30	78.33
6/27/2022 6:26	17.02	6/27/2022 5:35	15.71	6/27/2022 10:31	78.23
6/27/2022 6:27	17.06	6/27/2022 5:36	15.76	6/27/2022 10:32	78.15
6/27/2022 6:28	17.04	6/27/2022 5:37	15.62	6/27/2022 10:33	78.05
6/27/2022 6:29	17.06	6/27/2022 5:38	15.63	6/27/2022 10:34	77.95
6/27/2022 6:30	17.00	6/27/2022 5:39	15.57	6/27/2022 10:35	77.89
6/27/2022 6:31	17.01	6/27/2022 5:40	15.58	6/27/2022 10:36	77.81
6/27/2022 6:32	17.04	6/27/2022 5:41	15.49	6/27/2022 10:37	77.72
6/27/2022 6:33	16.95	6/27/2022 5:42	15.46	6/27/2022 10:38	77.66
6/27/2022 6:34	17.07	6/27/2022 5:43	15.41	6/27/2022 10:39	77.53
6/27/2022 6:35	17.06	6/27/2022 5:44	15.35	6/27/2022 10:40	77.48
6/27/2022 6:36	17.03	6/27/2022 5:45	15.34	6/27/2022 10:41	77.39
6/27/2022 6:37	17.06	6/27/2022 5:46	15.31	6/27/2022 10:42	77.28
6/27/2022 6:38	16.99	6/27/2022 5:47	15.24	6/27/2022 10:43	77.26
6/27/2022 6:39	17.05	6/27/2022 5:48	15.24	6/27/2022 10:44	77.13
6/27/2022 6:40	17.02	6/27/2022 5:49	15.15	6/27/2022 10:45	77.11
6/27/2022 6:41	17.01	6/27/2022 5:50	15.16	6/27/2022 10:46	77.01
6/27/2022 6:42	17.00	6/27/2022 5:51	15.10	6/27/2022 10:47	76.98
6/27/2022 6:43	16.98	6/27/2022 5:52	15.09	6/27/2022 10:48	76.85
6/27/2022 6:44	17.00	6/27/2022 5:53	14.97	6/27/2022 10:49	76.77
6/27/2022 6:45	17.04	6/27/2022 5:54	14.98	6/27/2022 10:50	76.74
6/27/2022 6:46	17.03	6/27/2022 5:55	14.99	6/27/2022 10:51	76.63
6/27/2022 6:47	17.07	6/27/2022 5:56	14.96	6/27/2022 10:52	76.58
6/27/2022 6:48	17.07	6/27/2022 5:57	14.86	6/27/2022 10:53	76.53
6/27/2022 6:49	16.99	6/27/2022 5:58	14.82	6/27/2022 10:54	76.44
6/27/2022 6:50	17.02	6/27/2022 5:59	14.80	6/27/2022 10:55	76.34
6/27/2022 6:51	17.07	6/27/2022 6:00	14.76	6/27/2022 10:56	76.28
6/27/2022 6:52	17.03	6/27/2022 6:01	14.69	6/27/2022 10:57	76.21
6/27/2022 6:53	16.99	6/27/2022 6:02	14.70	6/27/2022 10:58	76.15

6/27/2022 6:54	17.03	6/27/2022 6:03	14.63	6/27/2022 10:59	76.07
6/27/2022 6:55	17.01	6/27/2022 6:04	14.64	6/27/2022 11:00	76.00
6/27/2022 6:56	17.00	6/27/2022 6:05	14.57	6/27/2022 11:01	75.92
6/27/2022 6:57	16.98	6/27/2022 6:06	14.57	6/27/2022 11:02	76.42
6/27/2022 6:58	17.05	6/27/2022 6:07	14.54	6/27/2022 11:03	81.11
6/27/2022 6:59	17.03	6/27/2022 6:08	14.54	6/27/2022 11:04	80.93
6/27/2022 7:00	17.02	6/27/2022 6:09	14.44	6/27/2022 11:05	80.81
6/27/2022 7:01	17.05	6/27/2022 6:10	14.39	6/27/2022 11:06	80.65
6/27/2022 7:02	17.06	6/27/2022 6:11	14.41	6/27/2022 11:07	80.47
6/27/2022 7:03	17.03	6/27/2022 6:12	14.35	6/27/2022 11:08	80.36
6/27/2022 7:04	17.01	6/27/2022 6:13	14.30	6/27/2022 11:09	80.24
6/27/2022 7:05	17.01	6/27/2022 6:14	14.27	6/27/2022 11:10	80.10
6/27/2022 7:06	17.03	6/27/2022 6:15	14.21	6/27/2022 11:11	79.96
6/27/2022 7:07	17.01	6/27/2022 6:16	14.25	6/27/2022 11:12	79.87
6/27/2022 7:08	16.96	6/27/2022 6:17	14.11	6/27/2022 11:13	79.72
6/27/2022 7:09	17.03	6/27/2022 6:18	14.09	6/27/2022 11:14	79.61
6/27/2022 7:10	17.04	6/27/2022 6:19	14.12	6/27/2022 11:15	79.47
6/27/2022 7:11	17.00	6/27/2022 6:20	14.00	6/27/2022 11:16	79.37
6/27/2022 7:12	16.99	6/27/2022 6:21	14.01	6/27/2022 11:17	79.28
6/27/2022 7:13	16.99	6/27/2022 6:22	14.04	6/27/2022 11:18	79.21
6/27/2022 7:14	17.02	6/27/2022 6:23	13.89	6/27/2022 11:19	79.13
6/27/2022 7:15	17.02	6/27/2022 6:24	13.87	6/27/2022 11:20	79.03
6/27/2022 7:16	17.04	6/27/2022 6:25	13.90	6/27/2022 11:21	78.94
6/27/2022 7:17	16.96	6/27/2022 6:26	13.88	6/27/2022 11:22	78.84
6/27/2022 7:18	17.02	6/27/2022 6:27	13.82	6/27/2022 11:23	78.75
6/27/2022 7:19	17.05	6/27/2022 6:28	13.78	6/27/2022 11:24	78.69
6/27/2022 7:20	17.02	6/27/2022 6:29	13.72	6/27/2022 11:25	78.61
6/27/2022 7:21	16.99	6/27/2022 6:30	13.75	6/27/2022 11:26	78.50
6/27/2022 7:22	17.02	6/27/2022 6:31	13.64	6/27/2022 11:27	78.45
6/27/2022 7:23	16.99	6/27/2022 6:32	13.68	6/27/2022 11:28	78.33
6/27/2022 7:24	17.03	6/27/2022 6:33	13.63	6/27/2022 11:29	78.24
6/27/2022 7:25	17.06	6/27/2022 6:34	13.71	6/27/2022 11:30	78.16
6/27/2022 7:26	17.03	6/27/2022 6:35	13.54	6/27/2022 11:31	78.07
6/27/2022 7:27	16.99	6/27/2022 6:36	13.52	6/27/2022 11:32	77.96
6/27/2022 7:28	16.97	6/27/2022 6:37	13.50	6/27/2022 11:33	77.89
6/27/2022 7:29	16.98	6/27/2022 6:38	13.53	6/27/2022 11:34	77.82
6/27/2022 7:30	17.03	6/27/2022 6:39	13.39	6/27/2022 11:35	77.72
6/27/2022 7:31	17.00	6/27/2022 6:40	13.41	6/27/2022 11:36	77.66
6/27/2022 7:32	17.02	6/27/2022 6:41	13.33	6/27/2022 11:37	77.56
6/27/2022 7:33	17.03	6/27/2022 6:42	13.34	6/27/2022 11:38	77.44
6/27/2022 7:34	17.01	6/27/2022 6:43	13.32	6/27/2022 11:39	77.38
6/27/2022 7:35	17.03	6/27/2022 6:44	13.28	6/27/2022 11:40	77.35
6/27/2022 7:36	17.03	6/27/2022 6:45	13.28	6/27/2022 11:41	77.22
6/27/2022 7:37	17.04	6/27/2022 6:46	13.66	6/27/2022 11:42	77.15
6/27/2022 7:38	17.00	6/27/2022 6:47	13.43	6/27/2022 11:43	77.08
6/27/2022 7:39	17.03	6/27/2022 6:48	13.37	6/27/2022 11:44	76.99
6/27/2022 7:40	17.01	6/27/2022 6:49	13.25	6/27/2022 11:45	76.94
6/27/2022 7:41	17.04	6/27/2022 6:50	13.23	6/27/2022 11:46	76.85
6/27/2022 7:42	17.03	6/27/2022 6:51	13.19	6/27/2022 11:47	76.81
6/27/2022 7:43	16.98	6/27/2022 6:52	13.17	6/27/2022 11:48	76.73
6/27/2022 7:44	17.00	6/27/2022 6:53	13.09	6/27/2022 11:49	76.64
6/27/2022 7:45	17.01	6/27/2022 6:54	13.06	6/27/2022 11:50	76.56
6/27/2022 7:46	17.03	6/27/2022 6:55	13.01	6/27/2022 11:51	76.49
6/27/2022 7:47	17.07	6/27/2022 6:56	12.98	6/27/2022 11:52	76.42
6/27/2022 7:48	17.05	6/27/2022 6:57	12.92	6/27/2022 11:53	76.35
6/27/2022 7:49	17.04	6/27/2022 6:58	12.94	6/27/2022 11:54	76.29
6/27/2022 7:50	17.02	6/27/2022 6:59	12.93	6/27/2022 11:55	76.18
6/27/2022 7:51	17.05	6/27/2022 7:00	12.88	6/27/2022 11:56	76.11
6/27/2022 7:52	17.04	6/27/2022 7:01	12.84	6/27/2022 11:57	76.08
6/27/2022 7:53	17.04	6/27/2022 7:02	12.84	6/27/2022 11:58	75.96
6/27/2022 7:54	17.03	6/27/2022 7:03	12.87	6/27/2022 11:59	75.89
6/27/2022 7:55	17.03	6/27/2022 7:04	12.76	6/27/2022 12:00	75.83
6/27/2022 7:56	17.04	6/27/2022 7:05	12.73	6/27/2022 12:01	75.75
6/27/2022 7:57	17.04	6/27/2022 7:06	12.71	6/27/2022 12:02	75.69
6/27/2022 7:58	17.04	6/27/2022 7:07	12.66	6/27/2022 12:03	75.60
6/27/2022 7:59	17.03	6/27/2022 7:08	12.71	6/27/2022 12:04	75.50
6/27/2022 8:00	17.09	6/27/2022 7:09	12.71	6/27/2022 12:05	75.47
6/27/2022 8:01	17.04	6/27/2022 7:10	12.73	6/27/2022 12:06	75.36
6/27/2022 8:02	17.06	6/27/2022 7:11	12.73	6/27/2022 12:07	75.31
6/27/2022 8:03	17.06	6/27/2022 7:12	12.69	6/27/2022 12:08	75.22
6/27/2022 8:04	17.04	6/27/2022 7:13	12.69	6/27/2022 12:09	75.20
6/27/2022 8:05	17.09	6/27/2022 7:14	12.55	6/27/2022 12:10	75.11
6/27/2022 8:06	17.04	6/27/2022 7:15	12.49	6/27/2022 12:11	75.07
6/27/2022 8:07	17.04	6/27/2022 7:16	12.51	6/27/2022 12:12	75.00
6/27/2022 8:08	17.06	6/27/2022 7:17	12.53	6/27/2022 12:13	74.92
6/27/2022 8:09	17.09	6/27/2022 7:18	12.45	6/27/2022 12:14	74.89
6/27/2022 8:10	17.04	6/27/2022 7:19	12.35	6/27/2022 12:15	74.82
6/27/2022 8:11	17.02	6/27/2022 7:20	12.41	6/27/2022 12:16	74.75
6/27/2022 8:12	17.03	6/27/2022 7:21	12.44	6/27/2022 12:17	74.68
6/27/2022 8:13	17.03	6/27/2022 7:22	12.34	6/27/2022 12:18	74.63
6/27/2022 8:14	17.08	6/27/2022 7:23	12.31	6/27/2022 12:19	74.56
6/27/2022 8:15	17.10	6/27/2022 7:24	12.34	6/27/2022 12:20	74.48
6/27/2022 8:16	17.06	6/27/2022 7:25	12.25	6/27/2022 12:21	74.42
6/27/2022 8:17	17.12	6/27/2022 7:26	12.22	6/27/2022 12:22	74.40
6/27/2022 8:18	17.08	6/27/2022 7:27	12.21	6/27/2022 12:23	74.30
6/27/2022 8:19	17.08	6/27/2022 7:28	12.28	6/27/2022 12:24	74.30
6/27/2022 8:20	17.06	6/27/2022 7:29	12.23	6/27/2022 12:25	74.21
6/27/2022 8:21	17.07	6/27/2022 7:30	12.43	6/27/2022 12:26	74.17

6/27/2022 8:22	17.08
6/27/2022 8:23	17.03
6/27/2022 8:24	17.08
6/27/2022 8:25	17.07
6/27/2022 8:26	17.11
6/27/2022 8:27	17.11
6/27/2022 8:28	17.11
6/27/2022 8:29	17.11
6/27/2022 8:30	17.17
6/27/2022 8:31	17.17
6/27/2022 8:32	17.14
6/27/2022 8:33	17.12
6/27/2022 8:34	17.15
6/27/2022 8:35	17.16
6/27/2022 8:36	17.13
6/27/2022 8:37	17.13
6/27/2022 8:38	17.15
6/27/2022 8:39	17.12
6/27/2022 8:40	17.15
6/27/2022 8:41	17.14
6/27/2022 8:42	17.19
6/27/2022 8:43	17.12
6/27/2022 8:44	17.16
6/27/2022 8:45	17.20
6/27/2022 8:46	17.15
6/27/2022 8:47	17.14
6/27/2022 8:48	17.16
6/27/2022 8:49	17.15
6/27/2022 8:50	17.20
6/27/2022 8:51	17.18
6/27/2022 8:52	17.22
6/27/2022 8:53	17.20
6/27/2022 8:54	17.21
6/27/2022 8:55	17.16
6/27/2022 8:56	17.21
6/27/2022 8:57	17.17
6/27/2022 8:58	17.21
6/27/2022 8:59	17.18
6/27/2022 9:00	17.22
6/27/2022 9:01	17.25
6/27/2022 9:02	17.24
6/27/2022 9:03	17.22
6/27/2022 9:04	17.27
6/27/2022 9:05	17.27
6/27/2022 9:06	17.20
6/27/2022 9:07	17.26
6/27/2022 9:08	17.28
6/27/2022 9:09	17.24
6/27/2022 9:10	17.23
6/27/2022 9:11	17.27
6/27/2022 9:12	17.27
6/27/2022 9:13	17.31
6/27/2022 9:14	17.29

6/27/2022 7:31	12.25
6/27/2022 7:32	12.15
6/27/2022 7:33	12.16
6/27/2022 7:34	12.10
6/27/2022 7:35	12.06
6/27/2022 7:36	12.13
6/27/2022 7:37	12.04
6/27/2022 7:38	12.00
6/27/2022 7:39	11.93
6/27/2022 7:40	11.97
6/27/2022 7:41	11.93
6/27/2022 7:42	11.89
6/27/2022 7:43	11.86
6/27/2022 7:44	11.88
6/27/2022 7:45	12.32
6/27/2022 7:46	12.34
6/27/2022 7:47	12.51
6/27/2022 7:48	12.22
6/27/2022 7:49	12.03
6/27/2022 7:50	11.97
6/27/2022 7:51	11.90
6/27/2022 7:52	11.89
6/27/2022 7:53	11.84
6/27/2022 7:54	11.78
6/27/2022 7:55	11.83
6/27/2022 7:56	11.74
6/27/2022 7:57	11.75
6/27/2022 7:58	11.75
6/27/2022 7:59	11.73
6/27/2022 8:00	11.74
6/27/2022 8:01	11.73
6/27/2022 8:02	11.60
6/27/2022 8:03	11.79
6/27/2022 8:04	11.80
6/27/2022 8:05	11.67
6/27/2022 8:06	11.68
6/27/2022 8:07	11.74
6/27/2022 8:08	11.72
6/27/2022 8:09	11.71
6/27/2022 8:10	11.70
6/27/2022 8:11	11.58
6/27/2022 8:12	11.52
6/27/2022 8:13	11.57
6/27/2022 8:14	11.45
6/27/2022 8:15	11.43
6/27/2022 8:16	11.56
6/27/2022 8:17	11.45
6/27/2022 8:18	11.40
6/27/2022 8:19	11.44
6/27/2022 8:20	11.38
6/27/2022 8:21	11.37
6/27/2022 8:22	11.38
6/27/2022 8:23	11.35
6/27/2022 8:24	11.28
6/27/2022 8:25	11.26
6/27/2022 8:26	11.34
6/27/2022 8:27	11.25
6/27/2022 8:28	11.19
6/27/2022 8:29	11.21
6/27/2022 8:30	11.27
6/27/2022 8:31	11.19
6/27/2022 8:32	11.19
6/27/2022 8:33	11.14
6/27/2022 8:34	11.10
6/27/2022 8:35	11.08
6/27/2022 8:36	11.09
6/27/2022 8:37	11.06
6/27/2022 8:38	11.29
6/27/2022 8:39	11.17
6/27/2022 8:40	11.07
6/27/2022 8:41	11.24
6/27/2022 8:42	11.13
6/27/2022 8:43	11.11
6/27/2022 8:44	11.00
6/27/2022 8:45	11.01
6/27/2022 8:46	10.96
6/27/2022 8:47	10.97
6/27/2022 8:48	10.89
6/27/2022 8:49	10.92
6/27/2022 8:50	10.84
6/27/2022 8:51	10.87
6/27/2022 8:52	10.90
6/27/2022 8:53	10.83
6/27/2022 8:54	11.24
6/27/2022 8:55	11.06
6/27/2022 8:56	10.92
6/27/2022 8:57	10.87
6/27/2022 8:58	10.82

6/27/2022 12:27	74.13
6/27/2022 12:28	74.10
6/27/2022 12:29	73.98
6/27/2022 12:30	73.96

6/27/2022 8:59	10.83
6/27/2022 9:00	10.74
6/27/2022 9:01	10.71
6/27/2022 9:02	10.72
6/27/2022 9:03	10.66
6/27/2022 9:04	10.83
6/27/2022 9:05	11.31
6/27/2022 9:06	10.93
6/27/2022 9:07	11.10
6/27/2022 9:08	11.16
6/27/2022 9:09	10.90
6/27/2022 9:10	10.85
6/27/2022 9:11	10.73
6/27/2022 9:12	10.74
6/27/2022 9:13	10.68
6/27/2022 9:14	10.65
6/27/2022 9:15	10.54
6/27/2022 9:16	10.59
6/27/2022 9:17	10.60
6/27/2022 9:18	10.60
6/27/2022 9:19	10.54
6/27/2022 9:20	10.48
6/27/2022 9:21	10.53
6/27/2022 9:22	10.54
6/27/2022 9:23	10.47
6/27/2022 9:24	10.48
6/27/2022 9:25	10.50
6/27/2022 9:26	10.37
6/27/2022 9:27	10.41
6/27/2022 9:28	10.45
6/27/2022 9:29	10.34
6/27/2022 9:30	10.33
6/27/2022 9:31	10.78
6/27/2022 9:32	10.60
6/27/2022 9:33	10.49
6/27/2022 9:34	10.41
6/27/2022 9:35	10.34
6/27/2022 9:36	10.32
6/27/2022 9:37	10.32
6/27/2022 9:38	10.37
6/27/2022 9:39	10.28
6/27/2022 9:40	10.34
6/27/2022 9:41	10.30
6/27/2022 9:42	10.31
6/27/2022 9:43	10.19
6/27/2022 9:44	10.18
6/27/2022 9:45	10.35
6/27/2022 9:46	10.29
6/27/2022 9:47	10.30
6/27/2022 9:48	10.21
6/27/2022 9:49	10.15
6/27/2022 9:50	10.15
6/27/2022 9:51	10.07
6/27/2022 9:52	10.08
6/27/2022 9:53	10.08
6/27/2022 9:54	9.98
6/27/2022 9:55	10.05
6/27/2022 9:56	9.96
6/27/2022 9:57	10.01
6/27/2022 9:58	9.95
6/27/2022 9:59	9.99
6/27/2022 10:00	10.01
6/27/2022 10:01	9.86
6/27/2022 10:02	9.89
6/27/2022 10:03	9.92
6/27/2022 10:04	9.90
6/27/2022 10:05	9.86
6/27/2022 10:06	10.07
6/27/2022 10:07	9.99
6/27/2022 10:08	9.89
6/27/2022 10:09	9.84
6/27/2022 10:10	9.86
6/27/2022 10:11	9.92
6/27/2022 10:12	9.83
6/27/2022 10:13	9.75
6/27/2022 10:14	9.80
6/27/2022 10:15	9.74
6/27/2022 10:16	9.84
6/27/2022 10:17	9.73
6/27/2022 10:18	9.74
6/27/2022 10:19	9.73
6/27/2022 10:20	9.73
6/27/2022 10:21	9.66
6/27/2022 10:22	9.62
6/27/2022 10:23	9.69
6/27/2022 10:24	9.57
6/27/2022 10:25	9.60
6/27/2022 10:26	9.56

6/27/2022 10:27	9.80
6/27/2022 10:28	9.65
6/27/2022 10:29	10.05
6/27/2022 10:30	9.74
6/27/2022 10:31	9.68
6/27/2022 10:32	9.64
6/27/2022 10:33	9.59
6/27/2022 10:34	9.60
6/27/2022 10:35	9.56
6/27/2022 10:36	9.51
6/27/2022 10:37	9.51
6/27/2022 10:38	9.51
6/27/2022 10:39	9.49
6/27/2022 10:40	9.44
6/27/2022 10:41	9.49
6/27/2022 10:42	9.45
6/27/2022 10:43	9.40
6/27/2022 10:44	9.43
6/27/2022 10:45	9.44
6/27/2022 10:46	9.43
6/27/2022 10:47	9.37
6/27/2022 10:48	9.38
6/27/2022 10:49	9.38
6/27/2022 10:50	9.40
6/27/2022 10:51	9.33
6/27/2022 10:52	9.33
6/27/2022 10:53	9.32
6/27/2022 10:54	9.25
6/27/2022 10:55	9.26
6/27/2022 10:56	9.29
6/27/2022 10:57	9.26
6/27/2022 10:58	9.25
6/27/2022 10:59	9.52
6/27/2022 11:00	9.37
6/27/2022 11:01	9.32
6/27/2022 11:02	9.28
6/27/2022 11:03	9.24
6/27/2022 11:04	9.21
6/27/2022 11:05	9.17
6/27/2022 11:06	9.24
6/27/2022 11:07	9.20
6/27/2022 11:08	9.14
6/27/2022 11:09	9.19
6/27/2022 11:10	9.18
6/27/2022 11:11	9.10
6/27/2022 11:12	9.09
6/27/2022 11:13	9.12
6/27/2022 11:14	9.11
6/27/2022 11:15	9.06
6/27/2022 11:16	9.04
6/27/2022 11:17	9.10
6/27/2022 11:18	9.47
6/27/2022 11:19	9.19
6/27/2022 11:20	9.20
6/27/2022 11:21	9.08
6/27/2022 11:22	9.07
6/27/2022 11:23	9.12
6/27/2022 11:24	8.98
6/27/2022 11:25	8.96
6/27/2022 11:26	9.00
6/27/2022 11:27	9.03
6/27/2022 11:28	8.97
6/27/2022 11:29	8.96
6/27/2022 11:30	9.03
6/27/2022 11:31	8.99
6/27/2022 11:32	8.93
6/27/2022 11:33	8.85
6/27/2022 11:34	8.95
6/27/2022 11:35	8.85
6/27/2022 11:36	8.88
6/27/2022 11:37	8.88
6/27/2022 11:38	8.86
6/27/2022 11:39	8.87
6/27/2022 11:40	8.84
6/27/2022 11:41	8.82
6/27/2022 11:42	9.17
6/27/2022 11:43	8.94
6/27/2022 11:44	8.93
6/27/2022 11:45	8.86
6/27/2022 11:46	8.80
6/27/2022 11:47	8.83
6/27/2022 11:48	8.81
6/27/2022 11:49	8.73
6/27/2022 11:50	8.81
6/27/2022 11:51	8.80
6/27/2022 11:52	8.71
6/27/2022 11:53	8.73
6/27/2022 11:54	8.70

6/27/2022 11:55	8.78
6/27/2022 11:56	8.70
6/27/2022 11:57	8.70
6/27/2022 11:58	8.67
6/27/2022 11:59	8.66
6/27/2022 12:00	8.64
6/27/2022 12:01	8.70
6/27/2022 12:02	8.67
6/27/2022 12:03	8.62
6/27/2022 12:04	8.63
6/27/2022 12:05	8.65
6/27/2022 12:06	8.59
6/27/2022 12:07	8.63
6/27/2022 12:08	8.59
6/27/2022 12:09	8.90
6/27/2022 12:10	8.73
6/27/2022 12:11	8.63
6/27/2022 12:12	8.56
6/27/2022 12:13	8.65
6/27/2022 12:14	8.55
6/27/2022 12:15	8.61
6/27/2022 12:16	8.54
6/27/2022 12:17	8.53
6/27/2022 12:18	8.68
6/27/2022 12:19	8.54
6/27/2022 12:20	8.56
6/27/2022 12:21	8.58
6/27/2022 12:22	8.58
6/27/2022 12:23	8.53
6/27/2022 12:24	8.53
6/27/2022 12:25	8.51
6/27/2022 12:26	8.43
6/27/2022 12:27	8.51
6/27/2022 12:28	8.50
6/27/2022 12:29	8.46
6/27/2022 12:30	8.43
6/27/2022 12:31	8.42
6/27/2022 12:32	8.52
6/27/2022 12:33	8.44
6/27/2022 12:34	8.41
6/27/2022 12:35	8.37
6/27/2022 12:36	8.49
6/27/2022 12:37	8.38
6/27/2022 12:38	8.38
6/27/2022 12:39	8.60
6/27/2022 12:40	8.91
6/27/2022 12:41	9.00
6/27/2022 12:42	8.67
6/27/2022 12:43	8.72
6/27/2022 12:44	9.01
6/27/2022 12:45	9.13
6/27/2022 12:46	9.23
6/27/2022 12:47	8.84
6/27/2022 12:48	8.69
6/27/2022 12:49	8.61
6/27/2022 12:50	8.76
6/27/2022 12:51	8.64
6/27/2022 12:52	8.63
6/27/2022 12:53	8.50
6/27/2022 12:54	8.52
6/27/2022 12:55	8.46
6/27/2022 12:56	8.46
6/27/2022 12:57	8.45
6/27/2022 12:58	8.42
6/27/2022 12:59	8.44
6/27/2022 13:00	8.37
6/27/2022 13:01	8.36
6/27/2022 13:02	8.32
6/27/2022 13:03	8.30
6/27/2022 13:04	8.30
6/27/2022 13:05	8.38
6/27/2022 13:06	8.25
6/27/2022 13:07	8.26
6/27/2022 13:08	8.26
6/27/2022 13:09	8.24
6/27/2022 13:10	8.36
6/27/2022 13:11	8.28

10 Byram Hill Road		10 Willow Pond Lane		11 Blair Road		14 Willow Pond Lane		30 Blair Road	
Date/Time	Level Depth to Water (ft)	Date/Time	Level Depth to Water (ft)	Date/Time	Level Depth to Water (ft)	Date/Time	Level Depth to Water (ft)	Date/Time	Level Depth to Water (ft)
6/15/2022 13:07	83.49	6/14/2022 12:25	-0.02	6/14/2022 12:55	9.99	6/14/2022 11:42	0.23	6/14/2022 13:25	28.48
6/15/2022 13:08	83.55	6/14/2022 12:26	-0.01	6/14/2022 12:56	9.99	6/14/2022 11:43	0.20	6/14/2022 13:26	28.50
6/15/2022 13:09	83.54	6/14/2022 12:27	0.03	6/14/2022 12:57	9.99	6/14/2022 11:44	0.22	6/14/2022 13:27	28.52
6/15/2022 13:10	83.51	6/14/2022 12:28	-0.01	6/14/2022 12:58	10.00	6/14/2022 11:45	0.22	6/14/2022 13:28	28.54
6/15/2022 13:11	83.53	6/14/2022 12:29	0.02	6/14/2022 12:59	9.99	6/14/2022 11:46	0.28	6/14/2022 13:29	28.51
6/15/2022 13:12	83.52	6/14/2022 12:30	0.03	6/14/2022 13:00	10.02	6/14/2022 11:47	0.32	6/14/2022 13:30	28.52
6/15/2022 13:13	83.54	6/14/2022 12:31	0.02	6/14/2022 13:01	9.99	6/14/2022 11:48	0.34	6/14/2022 13:31	28.54
6/15/2022 13:14	83.53	6/14/2022 12:32	0.01	6/14/2022 13:02	9.99	6/14/2022 11:49	0.33	6/14/2022 13:32	28.53
6/15/2022 13:15	83.51	6/14/2022 12:33	0.03	6/14/2022 13:03	10.01	6/14/2022 11:50	0.32	6/14/2022 13:33	28.53
6/15/2022 13:16	83.51	6/14/2022 12:34	0.04	6/14/2022 13:04	10.00	6/14/2022 11:51	0.29	6/14/2022 13:34	28.48
6/15/2022 13:17	83.56	6/14/2022 12:35	0.03	6/14/2022 13:05	9.97	6/14/2022 11:52	0.26	6/14/2022 13:35	28.50
6/15/2022 13:18	83.47	6/14/2022 12:36	0.02	6/14/2022 13:06	9.97	6/14/2022 11:53	0.26	6/14/2022 13:36	28.53
6/15/2022 13:19	83.49	6/14/2022 12:37	2.12	6/14/2022 13:07	9.95	6/14/2022 11:54	0.31	6/14/2022 13:37	28.54
6/15/2022 13:20	83.50	6/14/2022 12:38	7.56	6/14/2022 13:08	9.93	6/14/2022 11:55	0.25	6/14/2022 13:38	28.51
6/15/2022 13:21	83.50	6/14/2022 12:39	7.34	6/14/2022 13:09	9.97	6/14/2022 11:56	0.29	6/14/2022 13:39	28.52
6/15/2022 13:22	83.52	6/14/2022 12:40	6.03	6/14/2022 13:10	9.97	6/14/2022 11:57	0.30	6/14/2022 13:40	28.50
6/15/2022 13:23	83.43	6/14/2022 12:41	5.01	6/14/2022 13:11	9.96	6/14/2022 11:58	0.25	6/14/2022 13:41	28.49
6/15/2022 13:24	83.45	6/14/2022 12:42	4.14	6/14/2022 13:12	9.97	6/14/2022 11:59	0.27	6/14/2022 13:42	28.50
6/15/2022 13:25	83.47	6/14/2022 12:43	3.39	6/14/2022 13:13	9.97	6/14/2022 12:00	0.23	6/14/2022 13:43	28.50
6/15/2022 13:26	83.51	6/14/2022 12:44	2.77	6/14/2022 13:14	9.99	6/14/2022 12:01	0.23	6/14/2022 13:44	28.50
6/15/2022 13:27	83.48	6/14/2022 12:45	2.34	6/14/2022 13:15	9.95	6/14/2022 12:02	0.24	6/14/2022 13:45	28.50
6/15/2022 13:28	83.46	6/14/2022 12:46	1.93	6/14/2022 13:16	9.96	6/14/2022 12:03	0.21	6/14/2022 13:46	28.46
6/15/2022 13:29	83.45	6/14/2022 12:47	1.57	6/14/2022 13:17	9.96	6/14/2022 12:04	0.29	6/14/2022 13:47	28.50
6/15/2022 13:30	83.47	6/14/2022 12:48	1.27	6/14/2022 13:18	10.00	6/14/2022 12:05	0.30	6/14/2022 13:48	28.47
6/15/2022 13:31	83.42	6/14/2022 12:49	1.03	6/14/2022 13:19	10.01	6/14/2022 12:06	0.30	6/14/2022 13:49	28.49
6/15/2022 13:32	83.46	6/14/2022 12:50	0.77	6/14/2022 13:20	10.02	6/14/2022 12:07	0.34	6/14/2022 13:50	28.51
6/15/2022 13:33	83.47	6/14/2022 12:51	0.59	6/14/2022 13:21	10.02	6/14/2022 12:08	0.31	6/14/2022 13:51	28.46
6/15/2022 13:34	83.43	6/14/2022 12:52	0.37	6/14/2022 13:22	10.04	6/14/2022 12:09	0.29	6/14/2022 13:52	28.47
6/15/2022 13:35	83.41	6/14/2022 12:53	0.25	6/14/2022 13:23	10.03	6/14/2022 12:10	0.23	6/14/2022 13:53	28.51
6/15/2022 13:36	83.45	6/14/2022 12:54	0.09	6/14/2022 13:24	10.04	6/14/2022 12:11	0.22	6/14/2022 13:54	28.47
6/15/2022 13:37	83.42	6/14/2022 12:55	0.02	6/14/2022 13:25	10.02	6/14/2022 12:12	0.24	6/14/2022 13:55	28.51
6/15/2022 13:38	83.43	6/14/2022 12:56	0.00	6/14/2022 13:26	10.04	6/14/2022 12:13	0.26	6/14/2022 13:56	28.46
6/15/2022 13:39	83.45	6/14/2022 12:57	-0.01	6/14/2022 13:27	10.04	6/14/2022 12:14	0.32	6/14/2022 13:57	28.48
6/15/2022 13:40	83.38	6/14/2022 12:58	0.02	6/14/2022 13:28	10.04	6/14/2022 12:15	0.32	6/14/2022 13:58	28.51
6/15/2022 13:41	83.40	6/14/2022 12:59	0.01	6/14/2022 13:29	10.05	6/14/2022 12:16	0.31	6/14/2022 13:59	28.48
6/15/2022 13:42	83.41	6/14/2022 13:00	0.01	6/14/2022 13:30	10.03	6/14/2022 12:17	0.35	6/14/2022 14:00	28.47
6/15/2022 13:43	83.41	6/14/2022 13:01	0.02	6/14/2022 13:31	9.98	6/14/2022 12:18	0.31	6/14/2022 14:01	28.48
6/15/2022 13:44	83.39	6/14/2022 13:02	0.01	6/14/2022 13:32	10.01	6/14/2022 12:19	0.24	6/14/2022 14:02	28.48
6/15/2022 13:45	83.40	6/14/2022 13:03	0.05	6/14/2022 13:33	10.04	6/14/2022 12:20	0.22	6/14/2022 14:03	28.49
6/15/2022 13:46	83.41	6/14/2022 13:04	0.03	6/14/2022 13:34	10.01	6/14/2022 12:21	0.22	6/14/2022 14:04	28.49
6/15/2022 13:47	83.39	6/14/2022 13:05	0.01	6/14/2022 13:35	10.06	6/14/2022 12:22	0.24	6/14/2022 14:05	30.83
6/15/2022 13:48	83.45	6/14/2022 13:06	0.01	6/14/2022 13:36	10.05	6/14/2022 12:23	0.31	6/14/2022 14:06	29.48
6/15/2022 13:49	83.42	6/14/2022 13:07	0.01	6/14/2022 13:37	10.06	6/14/2022 12:24	0.32	6/14/2022 14:07	28.87
6/15/2022 13:50	83.45	6/14/2022 13:08	-0.01	6/14/2022 13:38	10.08	6/14/2022 12:25	0.33	6/14/2022 14:08	28.67
6/15/2022 13:51	83.39	6/14/2022 13:09	0.00	6/14/2022 13:39	10.08	6/14/2022 12:26	0.31	6/14/2022 14:09	28.57
6/15/2022 13:52	83.40	6/14/2022 13:10	0.03	6/14/2022 13:40	10.06	6/14/2022 12:27	0.23	6/14/2022 14:10	28.53
6/15/2022 13:53	83.38	6/14/2022 13:11	0.00	6/14/2022 13:41	10.09	6/14/2022 12:28	0.26	6/14/2022 14:11	28.50
6/15/2022 13:54	83.44	6/14/2022 13:12	0.00	6/14/2022 13:42	10.08	6/14/2022 12:29	0.22	6/14/2022 14:12	28.50
6/15/2022 13:55	83.38	6/14/2022 13:13	-0.01	6/14/2022 13:43	10.09	6/14/2022 12:30	0.25	6/14/2022 14:13	28.51
6/15/2022 13:56	83.40	6/14/2022 13:14	0.01	6/14/2022 13:44	10.07	6/14/2022 12:31	0.24	6/14/2022 14:14	28.52
6/15/2022 13:57	83.41	6/14/2022 13:15	-0.02	6/14/2022 13:45	10.05	6/14/2022 12:32	0.27	6/14/2022 14:15	28.52
6/15/2022 13:58	83.36	6/14/2022 13:16	0.00	6/14/2022 13:46	10.08	6/14/2022 12:33	0.32	6/14/2022 14:16	28.47
6/15/2022 13:59	83.36	6/14/2022 13:17	0.00	6/14/2022 13:47	10.06	6/14/2022 12:34	0.32	6/14/2022 14:17	28.50
6/15/2022 14:00	83.40	6/14/2022 13:18	0.02	6/14/2022 13:48	10.04	6/14/2022 12:35	0.33	6/14/2022 14:18	28.48
6/15/2022 14:01	83.40	6/14/2022 13:19	0.02	6/14/2022 13:49	10.09	6/14/2022 12:36	0.28	6/14/2022 14:19	28.51
6/15/2022 14:02	83.39	6/14/2022 13:20	0.04	6/14/2022 13:50	10.04	6/14/2022 12:37	0.23	6/14/2022 14:20	28.48
6/15/2022 14:03	83.36	6/14/2022 13:21	5.76	6/14/2022 13:51	10.04	6/14/2022 12:38	0.23	6/14/2022 14:21	28.49
6/15/2022 14:04	83.36	6/14/2022 13:22	6.25	6/14/2022 13:52	10.01	6/14/2022 12:39	0.21	6/14/2022 14:22	28.50
6/15/2022 14:05	83.41	6/14/2022 13:23	5.14	6/14/2022 13:53	10.02	6/14/2022 12:40	0.21	6/14/2022 14:23	28.49
6/15/2022 14:06	83.32	6/14/2022 13:24	4.26	6/14/2022 13:54	10.00	6/14/2022 12:41	0.24	6/14/2022 14:24	28.49
6/15/2022 14:07	83.38	6/14/2022 13:25	3.52	6/14/2022 13:55	9.99	6/14/2022 12:42	0.22	6/14/2022 14:25	28.48
6/15/2022 14:08	83.35	6/14/2022 13:26	2.91	6/14/2022 13:56	10.02	6/14/2022 12:43	0.22	6/14/2022 14:26	28.46
6/15/2022 14:09	83.37	6/14/2022 13:27	2.38	6/14/2022 13:57	9.95	6/14/2022 12:44	0.22	6/14/2022 14:27	28.46
6/15/2022 14:10	83.38	6/14/2022 13:28	1.95	6/14/2022 13:58	9.99	6/14/2022 12:45	0.25	6/14/2022 14:28	28.49
6/15/2022 14:11	83.43	6/14/2022 13:29	1.58	6/14/2022 13:59	9.96	6/14/2022 12:46	0.26	6/14/2022 14:29	28.47
6/15/2022 14:12	83.30	6/14/2022 13:30	1.29	6/14/2022 14:00	10.00	6/14/2022 12:47	0.26	6/14/2022 14:30	28.48
6/15/2022 14:13	83.37	6/14/2022 13:31	1.03	6/14/2022 14:01	9.99	6/14/2022 12:48	0.30	6/14/2022 14:31	28.50
6/15/2022 14:14	83.40	6/14/2022 13:32	0.80	6/14/2022 14:02	9.94	6/14/2022 12:49	0.33	6/14/2022 14:32	28.46
6/15/2022 14:15	83.33	6/14/2022 13:33	0.58	6/14/2022 14:03	9.98	6/14/2022 12:50	0.33	6/14/2022 14:33	28.46
6/15/2022 14:16	83.32	6/14/2022 13:34	0.42	6/14/2022 14:04	9.95	6/14/2022 12:51	0.32	6/14/2022 14:34	28.49
6/15/2022 14:17	83.38	6/14/2022 13:35	0.25	6/14/2022 14:05	9.94	6/14/2022 12:52	0.29	6/14/2022 14:35	28.46
6/15/2022 14:18	83.34	6/14/2022 13:36	0.17	6/14/2022 14:06	9.98	6/14/2022 12:53	0.24	6/14/2022 14:36	28.50
6/15/2022 14:19	83.30	6/14/2022 13:37	0.02	6/14/2022 14:07	9.98	6/14/2022 12:54	0.20	6/14/2022 14:37	28.49
6/15/2022 14:20	83.34	6/14/2022 13:38	0.00	6/14/2022 14:08	10.02	6/14/2022 12:55	0.25	6/14/2022 14:38	28.45
6/15/2022 14:21	83.35	6/14/2022 13:39	0.00	6/14/2022 14:09	10.02	6/14/2022 12:56	0.25	6/14/2022 14:39	28.49
6/15/2022 14:22	83.35	6/14/2022 13:40	-0.02	6/14/2022 14:10	10.02	6/14/2022 12:57	0.23	6/14/2022 14:40	28.44
6/15/2022 14:23	83.30	6/14/2022 13:41	0.03	6/14/2022 14:11	10.05	6/14/2022 12:58	0.28	6/14/2022 14:41	28.47
6/15/2022 14:24	83.32	6/14/2022 13:42	0.00	6/14/2022 14:12	10.02	6/14/2022 12:59	0.30	6/14/2022 14:42	28.44
6/15/2022 14:25	83.31	6/14/2022 13:43	-0.01	6/14/2022 14:13	10.05	6/14/2022 13:00	0.34	6/14/2022 14:43	28.48
6/15/2022 14:26	83.30	6/14/2022 13:44	0.02	6/14/2022 14:14	10.03	6/14/2022 13:01	0.30	6/14/2022 14:44	28.45
6/15/2022 14:27	83.34	6/14/2022 13:45	0.01	6/14/2022 14:15	10.05	6/14/2022 13:02	0.28	6/14/2022 14:45	28.47
6/15/2022 14:28	83.32	6/14/2022 13:46	0.01	6/14/2022 14:16	10.01	6/14/2022 13:03	0.25	6/14/2022 14:46	28.47

6/15/2022 14:29	83.30	6/14/2022 13:47	0.03	6/14/2022 14:17	10.04	6/14/2022 13:04	0.22	6/14/2022 14:47	28.45
6/15/2022 14:30	83.38	6/14/2022 13:48	0.00	6/14/2022 14:18	10.02	6/14/2022 13:05	0.22	6/14/2022 14:48	28.48
6/15/2022 14:31	83.27	6/14/2022 13:49	-0.01	6/14/2022 14:19	10.04	6/14/2022 13:06	0.22	6/14/2022 14:49	28.46
6/15/2022 14:32	83.33	6/14/2022 13:50	0.01	6/14/2022 14:20	10.03	6/14/2022 13:07	0.26	6/14/2022 14:50	28.46
6/15/2022 14:33	83.31	6/14/2022 13:51	0.01	6/14/2022 14:21	10.01	6/14/2022 13:08	0.30	6/14/2022 14:51	28.47
6/15/2022 14:34	83.28	6/14/2022 13:52	-0.01	6/14/2022 14:22	10.01	6/14/2022 13:09	0.33	6/14/2022 14:52	28.45
6/15/2022 14:35	83.30	6/14/2022 13:53	-0.02	6/14/2022 14:23	10.05	6/14/2022 13:10	0.33	6/14/2022 14:53	28.49
6/15/2022 14:36	83.33	6/14/2022 13:54	0.03	6/14/2022 14:24	10.01	6/14/2022 13:11	0.31	6/14/2022 14:54	28.48
6/15/2022 14:37	83.33	6/14/2022 13:55	0.00	6/14/2022 14:25	10.05	6/14/2022 13:12	0.26	6/14/2022 14:55	28.46
6/15/2022 14:38	83.29	6/14/2022 13:56	0.00	6/14/2022 14:26	10.07	6/14/2022 13:13	0.26	6/14/2022 14:56	28.43
6/15/2022 14:39	83.35	6/14/2022 13:57	-0.03	6/14/2022 14:27	10.09	6/14/2022 13:14	0.23	6/14/2022 14:57	28.47
6/15/2022 14:40	83.33	6/14/2022 13:58	-0.05	6/14/2022 14:28	10.08	6/14/2022 13:15	0.23	6/14/2022 14:58	28.46
6/15/2022 14:41	83.32	6/14/2022 13:59	0.00	6/14/2022 14:29	10.08	6/14/2022 13:16	0.21	6/14/2022 14:59	28.43
6/15/2022 14:42	83.28	6/14/2022 14:00	0.02	6/14/2022 14:30	10.10	6/14/2022 13:17	0.27	6/14/2022 15:00	28.45
6/15/2022 14:43	83.26	6/14/2022 14:01	0.00	6/14/2022 14:31	10.05	6/14/2022 13:18	0.33	6/14/2022 15:01	28.45
6/15/2022 14:44	83.30	6/14/2022 14:02	0.01	6/14/2022 14:32	10.07	6/14/2022 13:19	0.32	6/14/2022 15:02	28.45
6/15/2022 14:45	83.29	6/14/2022 14:03	0.01	6/14/2022 14:33	10.05	6/14/2022 13:20	0.29	6/14/2022 15:03	30.49
6/15/2022 14:46	83.29	6/14/2022 14:04	-0.01	6/14/2022 14:34	10.06	6/14/2022 13:21	0.28	6/14/2022 15:04	29.41
6/15/2022 14:47	83.31	6/14/2022 14:05	0.00	6/14/2022 14:35	10.08	6/14/2022 13:22	0.27	6/14/2022 15:05	28.82
6/15/2022 14:48	83.31	6/14/2022 14:06	-0.01	6/14/2022 14:36	10.04	6/14/2022 13:23	0.22	6/14/2022 15:06	28.59
6/15/2022 14:49	83.30	6/14/2022 14:07	0.01	6/14/2022 14:37	10.04	6/14/2022 13:24	0.22	6/14/2022 15:07	28.53
6/15/2022 14:50	83.26	6/14/2022 14:08	0.04	6/14/2022 14:38	10.07	6/14/2022 13:25	0.23	6/14/2022 15:08	28.48
6/15/2022 14:51	83.31	6/14/2022 14:09	-0.01	6/14/2022 14:39	10.06	6/14/2022 13:26	0.22	6/14/2022 15:09	28.48
6/15/2022 14:52	83.23	6/14/2022 14:10	0.01	6/14/2022 14:40	10.06	6/14/2022 13:27	0.21	6/14/2022 15:10	28.48
6/15/2022 14:53	83.29	6/14/2022 14:11	-0.02	6/14/2022 14:41	10.03	6/14/2022 13:28	0.19	6/14/2022 15:11	28.45
6/15/2022 14:54	83.30	6/14/2022 14:12	2.61	6/14/2022 14:42	10.06	6/14/2022 13:29	0.25	6/14/2022 15:12	28.45
6/15/2022 14:55	83.31	6/14/2022 14:13	7.17	6/14/2022 14:43	10.05	6/14/2022 13:30	0.26	6/14/2022 15:13	28.52
6/15/2022 14:56	83.28	6/14/2022 14:14	5.87	6/14/2022 14:44	10.00	6/14/2022 13:31	0.27	6/14/2022 15:14	28.49
6/15/2022 14:57	83.27	6/14/2022 14:15	4.83	6/14/2022 14:45	10.01	6/14/2022 13:32	0.30	6/14/2022 15:15	28.48
6/15/2022 14:58	83.28	6/14/2022 14:16	4.03	6/14/2022 14:46	9.99	6/14/2022 13:33	0.33	6/14/2022 15:16	28.46
6/15/2022 14:59	83.27	6/14/2022 14:17	3.31	6/14/2022 14:47	10.01	6/14/2022 13:34	0.29	6/14/2022 15:17	28.48
6/15/2022 15:00	83.29	6/14/2022 14:18	2.71	6/14/2022 14:48	9.98	6/14/2022 13:35	0.29	6/14/2022 15:18	28.51
6/15/2022 15:01	83.27	6/14/2022 14:19	2.27	6/14/2022 14:49	9.95	6/14/2022 13:36	0.22	6/14/2022 15:19	28.47
6/15/2022 15:02	83.28	6/14/2022 14:20	1.83	6/14/2022 14:50	10.01	6/14/2022 13:37	0.21	6/14/2022 15:20	28.45
6/15/2022 15:03	83.28	6/14/2022 14:21	1.51	6/14/2022 14:51	9.97	6/14/2022 13:38	0.22	6/14/2022 15:21	28.45
6/15/2022 15:04	83.28	6/14/2022 14:22	1.22	6/14/2022 14:52	9.98	6/14/2022 13:39	0.25	6/14/2022 15:22	28.46
6/15/2022 15:05	84.80	6/14/2022 14:23	0.97	6/14/2022 14:53	9.97	6/14/2022 13:40	0.28	6/14/2022 15:23	28.46
6/15/2022 15:06	87.55	6/14/2022 14:24	0.76	6/14/2022 14:54	9.96	6/14/2022 13:41	0.33	6/14/2022 15:24	28.44
6/15/2022 15:07	90.19	6/14/2022 14:25	0.54	6/14/2022 14:55	9.97	6/14/2022 13:42	0.36	6/14/2022 15:25	28.49
6/15/2022 15:08	91.77	6/14/2022 14:26	0.39	6/14/2022 14:56	10.01	6/14/2022 13:43	0.31	6/14/2022 15:26	28.47
6/15/2022 15:09	92.72	6/14/2022 14:27	0.22	6/14/2022 14:57	10.01	6/14/2022 13:44	0.24	6/14/2022 15:27	28.43
6/15/2022 15:10	89.84	6/14/2022 14:28	0.06	6/14/2022 14:58	10.04	6/14/2022 13:45	0.20	6/14/2022 15:28	28.46
6/15/2022 15:11	87.90	6/14/2022 14:29	-0.02	6/14/2022 14:59	10.06	6/14/2022 13:46	0.23	6/14/2022 15:29	28.45
6/15/2022 15:12	86.57	6/14/2022 14:30	0.01	6/14/2022 15:00	10.04	6/14/2022 13:47	0.23	6/14/2022 15:30	28.45
6/15/2022 15:13	85.78	6/14/2022 14:31	-0.02	6/14/2022 15:01	10.05	6/14/2022 13:48	0.24	6/14/2022 15:31	28.46
6/15/2022 15:14	85.20	6/14/2022 14:32	0.00	6/14/2022 15:02	10.06	6/14/2022 13:49	0.27	6/14/2022 15:32	28.46
6/15/2022 15:15	84.84	6/14/2022 14:33	-0.02	6/14/2022 15:03	10.04	6/14/2022 13:50	0.34	6/14/2022 15:33	28.44
6/15/2022 15:16	84.61	6/14/2022 14:34	-0.02	6/14/2022 15:04	10.04	6/14/2022 13:51	0.31	6/14/2022 15:34	28.44
6/15/2022 15:17	84.45	6/14/2022 14:35	0.01	6/14/2022 15:05	10.02	6/14/2022 13:52	0.28	6/14/2022 15:35	28.48
6/15/2022 15:18	84.28	6/14/2022 14:36	-0.02	6/14/2022 15:06	10.08	6/14/2022 13:53	0.24	6/14/2022 15:36	28.42
6/15/2022 15:19	84.18	6/14/2022 14:37	0.03	6/14/2022 15:07	10.01	6/14/2022 13:54	0.20	6/14/2022 15:37	28.44
6/15/2022 15:20	84.09	6/14/2022 14:38	0.02	6/14/2022 15:08	10.03	6/14/2022 13:55	0.20	6/14/2022 15:38	28.46
6/15/2022 15:21	86.81	6/14/2022 14:39	0.00	6/14/2022 15:09	10.01	6/14/2022 13:56	0.26	6/14/2022 15:39	28.45
6/15/2022 15:22	90.08	6/14/2022 14:40	-0.01	6/14/2022 15:10	10.05	6/14/2022 13:57	0.26	6/14/2022 15:40	28.45
6/15/2022 15:23	92.06	6/14/2022 14:41	0.02	6/14/2022 15:11	10.00	6/14/2022 13:58	0.32	6/14/2022 15:41	28.46
6/15/2022 15:24	93.25	6/14/2022 14:42	0.01	6/14/2022 15:12	9.98	6/14/2022 13:59	0.32	6/14/2022 15:42	30.61
6/15/2022 15:25	93.97	6/14/2022 14:43	-0.06	6/14/2022 15:13	10.02	6/14/2022 14:00	0.29	6/14/2022 15:43	29.59
6/15/2022 15:26	90.99	6/14/2022 14:44	0.00	6/14/2022 15:14	10.00	6/14/2022 14:01	0.28	6/14/2022 15:44	28.88
6/15/2022 15:27	88.83	6/14/2022 14:45	-0.02	6/14/2022 15:15	10.00	6/14/2022 14:02	0.23	6/14/2022 15:45	28.64
6/15/2022 15:28	87.56	6/14/2022 14:46	-0.02	6/14/2022 15:16	10.00	6/14/2022 14:03	0.20	6/14/2022 15:46	28.50
6/15/2022 15:29	86.61	6/14/2022 14:47	-0.02	6/14/2022 15:17	10.05	6/14/2022 14:04	0.23	6/14/2022 15:47	28.50
6/15/2022 15:30	86.04	6/14/2022 14:48	-0.01	6/14/2022 15:18	10.00	6/14/2022 14:05	0.25	6/14/2022 15:48	28.46
6/15/2022 15:31	85.60	6/14/2022 14:49	-0.01	6/14/2022 15:19	10.05	6/14/2022 14:06	0.31	6/14/2022 15:49	28.46
6/15/2022 15:32	85.30	6/14/2022 14:50	0.04	6/14/2022 15:20	10.07	6/14/2022 14:07	0.34	6/14/2022 15:50	28.46
6/15/2022 15:33	85.13	6/14/2022 14:51	0.03	6/14/2022 15:21	10.08	6/14/2022 14:08	0.31	6/14/2022 15:51	28.46
6/15/2022 15:34	84.93	6/14/2022 14:52	-0.02	6/14/2022 15:22	10.07	6/14/2022 14:09	0.28	6/14/2022 15:52	28.45
6/15/2022 15:35	84.83	6/14/2022 14:53	-0.03	6/14/2022 15:23	10.10	6/14/2022 14:10	0.27	6/14/2022 15:53	28.45
6/15/2022 15:36	84.75	6/14/2022 14:54	0.01	6/14/2022 15:24	10.07	6/14/2022 14:11	0.20	6/14/2022 15:54	28.44
6/15/2022 15:37	84.63	6/14/2022 14:55	-0.04	6/14/2022 15:25	10.10	6/14/2022 14:12	0.27	6/14/2022 15:55	28.49
6/15/2022 15:38	84.59	6/14/2022 14:56	0.04	6/14/2022 15:26	10.07	6/14/2022 14:13	0.30	6/14/2022 15:56	28.45
6/15/2022 15:39	84.50	6/14/2022 14:57	0.01	6/14/2022 15:27	10.07	6/14/2022 14:14	0.29	6/14/2022 15:57	28.46
6/15/2022 15:40	84.45	6/14/2022 14:58	-0.04	6/14/2022 15:28	10.09	6/14/2022 14:15	0.31	6/14/2022 15:58	28.45
6/15/2022 15:41	84.39	6/14/2022 14:59	-0.01	6/14/2022 15:29	10.08	6/14/2022 14:16	0.35	6/14/2022 15:59	28.44
6/15/2022 15:42	84.38	6/14/2022 15:00	0.00	6/14/2022 15:30	10.06	6/14/2022 14:17	0.38	6/14/2022 16:00	28.46
6/15/2022 15:43	84.36	6/14/2022 15:01	0.01	6/14/2022 15:31	10.06	6/14/2022 14:18	0.34	6/14/2022 16:01	28.44
6/15/2022 15:44	84.25	6/14/2022 15:02	0.01	6/14/2022 15:32	10.04	6/14/2022 14:19	0.37	6/14/2022 16:02	28.45
6/15/2022 15:45	84.22	6/14/2022 15:03	1.46	6/14/2022 15:33	10.06	6/14/2022 14:20	0.37	6/14/2022 16:03	28.44
6/15/2022 15:46	84.18	6/14/2022 15:04	6.91	6/14/2022 15:34	10.03	6/14/2022 14:21	0.39	6/14/2022 16:04	28.41
6/15/2022 15:47	84.17	6/14/2022 15:05	5.97	6/14/2022 15:35	10.02	6/14/2022 14:22	0.36	6/14/2022 16:05	28.44
6/15/2022 15:48	84.17	6/14/2022 15:06	4.87	6/14/2022 15:36	10.05	6/14/2022 14:23	0.34	6/14/2022 16:06	28.44
6/15/2022 15:49	84.14	6/14/2022 15:07	4.08	6/14/2022 15:37	10.00	6/14/2022 14:24	0.32	6/14/2022 16:07	28.42
6/15/2022 15:50	84.14	6/14/2022 15:08	3.34	6/14/2022 15:38	9.99	6/14/2022 14:25	0.31	6/14/2022 16:08	28.44
6/15/2022 15:51	84.09	6/14/2022 15:09	2.75	6/14/2022 15:39	10.02	6/14/2022 14:26	0.25	6/14/2022 16:09	28.44
6/15/2022 15:52	84.10	6/14/2022 15:10	2.23	6/14/2022 15:40	10.01	6/14/2022 14:27	0.30	6/14/2022 16:10	28.43
6/15/2022 15:53	84.02	6/14/2022 15:11	1.86	6/14/2022 15:41	10.01	6/14/2022 14:28	0.32	6/14/2022 16:11	28.41
6/15/2022 15:54	84.04	6/14/2022 15:12	1.47	6/14/2022 15:42	10.04	6/14/2022 14:29	0.34	6/14/2022 16:12	28.43
6/15/2022 15:55	83.98	6/14/2022 15:13	1.22	6/14/2022 15:43	10.06	6/14/2022 14:30	0.41	6/14/2022 16:13	28.40
6/15/2022 15:56	83.94	6/14/2022 15:14	0.96	6/14/2022 15:44	10.06	6/14/2022 14:31	0.43	6/14/2022 16:14	28.41

6/15/2022 15:57	83.96	6/14/2022 15:15	0.70	6/14/2022 15:45	10.05	6/14/2022 14:32	0.41	6/14/2022 16:15	28.41
6/15/2022 15:58	83.95	6/14/2022 15:16	0.53	6/14/2022 15:46	10.08	6/14/2022 14:33	0.34	6/14/2022 16:16	28.40
6/15/2022 15:59	83.94	6/14/2022 15:17	0.36	6/14/2022 15:47	10.11	6/14/2022 14:34	0.32	6/14/2022 16:17	28.44
6/15/2022 16:00	83.96	6/14/2022 15:18	0.21	6/14/2022 15:48	10.09	6/14/2022 14:35	0.30	6/14/2022 16:18	28.43
6/15/2022 16:01	83.91	6/14/2022 15:19	0.08	6/14/2022 15:49	10.10	6/14/2022 14:36	0.30	6/14/2022 16:19	28.42
6/15/2022 16:02	83.91	6/14/2022 15:20	0.00	6/14/2022 15:50	10.09	6/14/2022 14:37	0.39	6/14/2022 16:20	28.43
6/15/2022 16:03	83.89	6/14/2022 15:21	-0.03	6/14/2022 15:51	10.10	6/14/2022 14:38	0.45	6/14/2022 16:21	28.45
6/15/2022 16:04	83.90	6/14/2022 15:22	0.00	6/14/2022 15:52	10.08	6/14/2022 14:39	0.47	6/14/2022 16:22	28.43
6/15/2022 16:05	83.86	6/14/2022 15:23	0.02	6/14/2022 15:53	10.10	6/14/2022 14:40	0.44	6/14/2022 16:23	28.40
6/15/2022 16:06	83.91	6/14/2022 15:24	-0.02	6/14/2022 15:54	10.05	6/14/2022 14:41	0.37	6/14/2022 16:24	28.42
6/15/2022 16:07	83.85	6/14/2022 15:25	-0.04	6/14/2022 15:55	10.07	6/14/2022 14:42	0.35	6/14/2022 16:25	28.41
6/15/2022 16:08	83.83	6/14/2022 15:26	0.00	6/14/2022 15:56	10.05	6/14/2022 14:43	0.38	6/14/2022 16:26	28.43
6/15/2022 16:09	83.81	6/14/2022 15:27	-0.02	6/14/2022 15:57	10.06	6/14/2022 14:44	0.35	6/14/2022 16:27	28.41
6/15/2022 16:10	83.83	6/14/2022 15:28	-0.02	6/14/2022 15:58	10.04	6/14/2022 14:45	0.37	6/14/2022 16:28	30.58
6/15/2022 16:11	83.79	6/14/2022 15:29	0.03	6/14/2022 15:59	10.05	6/14/2022 14:46	0.48	6/14/2022 16:29	32.07
6/15/2022 16:12	83.83	6/14/2022 15:30	-0.02	6/14/2022 16:00	10.07	6/14/2022 14:47	0.44	6/14/2022 16:30	32.29
6/15/2022 16:13	83.84	6/14/2022 15:31	-0.04	6/14/2022 16:01	10.04	6/14/2022 14:48	0.49	6/14/2022 16:31	32.13
6/15/2022 16:14	83.75	6/14/2022 15:32	-0.02	6/14/2022 16:02	10.04	6/14/2022 14:49	0.48	6/14/2022 16:32	31.80
6/15/2022 16:15	83.73	6/14/2022 15:33	0.00	6/14/2022 16:03	10.11	6/14/2022 14:50	0.45	6/14/2022 16:33	31.71
6/15/2022 16:16	83.77	6/14/2022 15:34	0.01	6/14/2022 16:04	10.10	6/14/2022 14:51	0.38	6/14/2022 16:34	30.02
6/15/2022 16:17	83.76	6/14/2022 15:35	0.03	6/14/2022 16:05	10.11	6/14/2022 14:52	0.45	6/14/2022 16:35	29.18
6/15/2022 16:18	83.71	6/14/2022 15:36	-0.02	6/14/2022 16:06	10.11	6/14/2022 14:53	0.43	6/14/2022 16:36	28.85
6/15/2022 16:19	83.76	6/14/2022 15:37	-0.01	6/14/2022 16:07	10.10	6/14/2022 14:54	0.47	6/14/2022 16:37	28.66
6/15/2022 16:20	83.70	6/14/2022 15:38	-0.01	6/14/2022 16:08	10.14	6/14/2022 14:55	0.47	6/14/2022 16:38	28.59
6/15/2022 16:21	83.72	6/14/2022 15:39	0.02	6/14/2022 16:09	10.14	6/14/2022 14:56	0.52	6/14/2022 16:39	28.58
6/15/2022 16:22	83.75	6/14/2022 15:40	0.00	6/14/2022 16:10	10.14	6/14/2022 14:57	0.51	6/14/2022 16:40	28.60
6/15/2022 16:23	83.72	6/14/2022 15:41	-0.02	6/14/2022 16:11	10.11	6/14/2022 14:58	0.45	6/14/2022 16:41	28.57
6/15/2022 16:24	83.70	6/14/2022 15:42	0.03	6/14/2022 16:12	10.13	6/14/2022 14:59	0.39	6/14/2022 16:42	28.56
6/15/2022 16:25	83.71	6/14/2022 15:43	-0.01	6/14/2022 16:13	10.14	6/14/2022 15:00	0.36	6/14/2022 16:43	28.54
6/15/2022 16:26	83.69	6/14/2022 15:44	-0.01	6/14/2022 16:14	10.13	6/14/2022 15:01	0.43	6/14/2022 16:44	28.51
6/15/2022 16:27	83.67	6/14/2022 15:45	-0.01	6/14/2022 16:15	10.10	6/14/2022 15:02	0.45	6/14/2022 16:45	28.55
6/15/2022 16:28	83.69	6/14/2022 15:46	-0.03	6/14/2022 16:16	10.09	6/14/2022 15:03	0.51	6/14/2022 16:46	28.54
6/15/2022 16:29	83.66	6/14/2022 15:47	-0.02	6/14/2022 16:17	10.10	6/14/2022 15:04	0.52	6/14/2022 16:47	28.52
6/15/2022 16:30	83.66	6/14/2022 15:48	-0.04	6/14/2022 16:18	10.09	6/14/2022 15:05	0.53	6/14/2022 16:48	28.50
6/15/2022 16:31	83.66	6/14/2022 15:49	-0.02	6/14/2022 16:19	10.07	6/14/2022 15:06	0.53	6/14/2022 16:49	28.51
6/15/2022 16:32	83.65	6/14/2022 15:50	0.01	6/14/2022 16:20	10.09	6/14/2022 15:07	0.54	6/14/2022 16:50	28.49
6/15/2022 16:33	83.61	6/14/2022 15:51	0.02	6/14/2022 16:21	10.04	6/14/2022 15:08	0.49	6/14/2022 16:51	28.49
6/15/2022 16:34	83.62	6/14/2022 15:52	-0.03	6/14/2022 16:22	10.07	6/14/2022 15:09	0.48	6/14/2022 16:52	28.49
6/15/2022 16:35	83.63	6/14/2022 15:53	-0.04	6/14/2022 16:23	10.03	6/14/2022 15:10	0.47	6/14/2022 16:53	28.48
6/15/2022 16:36	83.58	6/14/2022 15:54	4.66	6/14/2022 16:24	10.00	6/14/2022 15:11	0.44	6/14/2022 16:54	28.50
6/15/2022 16:37	83.65	6/14/2022 15:55	6.47	6/14/2022 16:25	10.02	6/14/2022 15:12	0.45	6/14/2022 16:55	28.51
6/15/2022 16:38	83.58	6/14/2022 15:56	5.34	6/14/2022 16:26	10.01	6/14/2022 15:13	0.41	6/14/2022 16:56	28.49
6/15/2022 16:39	83.57	6/14/2022 15:57	4.43	6/14/2022 16:27	10.02	6/14/2022 15:14	0.44	6/14/2022 16:57	28.46
6/15/2022 16:40	83.59	6/14/2022 15:58	3.64	6/14/2022 16:28	10.01	6/14/2022 15:15	0.44	6/14/2022 16:58	28.47
6/15/2022 16:41	83.59	6/14/2022 15:59	2.94	6/14/2022 16:29	9.99	6/14/2022 15:16	0.50	6/14/2022 16:59	28.49
6/15/2022 16:42	83.56	6/14/2022 16:00	2.41	6/14/2022 16:30	9.97	6/14/2022 15:17	0.55	6/14/2022 17:00	28.42
6/15/2022 16:43	83.39	6/14/2022 16:01	2.02	6/14/2022 16:31	9.96	6/14/2022 15:18	0.53	6/14/2022 17:01	28.45
6/15/2022 16:44	87.33	6/14/2022 16:02	1.61	6/14/2022 16:32	9.97	6/14/2022 15:19	0.47	6/14/2022 17:02	28.44
6/15/2022 16:45	89.64	6/14/2022 16:03	1.31	6/14/2022 16:33	9.99	6/14/2022 15:20	0.48	6/14/2022 17:03	28.47
6/15/2022 16:46	89.97	6/14/2022 16:04	1.06	6/14/2022 16:34	10.02	6/14/2022 15:21	0.44	6/14/2022 17:04	28.44
6/15/2022 16:47	87.44	6/14/2022 16:05	0.79	6/14/2022 16:35	9.99	6/14/2022 15:22	0.38	6/14/2022 17:05	28.46
6/15/2022 16:48	85.86	6/14/2022 16:06	0.60	6/14/2022 16:36	10.02	6/14/2022 15:23	0.36	6/14/2022 17:06	28.40
6/15/2022 16:49	84.89	6/14/2022 16:07	0.43	6/14/2022 16:37	10.03	6/14/2022 15:24	0.49	6/14/2022 17:07	28.44
6/15/2022 16:50	84.26	6/14/2022 16:08	0.28	6/14/2022 16:38	10.04	6/14/2022 15:25	0.48	6/14/2022 17:08	28.44
6/15/2022 16:51	83.89	6/14/2022 16:09	0.14	6/14/2022 16:39	10.05	6/14/2022 15:26	0.54	6/14/2022 17:09	28.45
6/15/2022 16:52	83.67	6/14/2022 16:10	0.03	6/14/2022 16:40	10.05	6/14/2022 15:27	0.55	6/14/2022 17:10	28.43
6/15/2022 16:53	83.45	6/14/2022 16:11	-0.01	6/14/2022 16:41	10.06	6/14/2022 15:28	0.45	6/14/2022 17:11	28.44
6/15/2022 16:54	83.31	6/14/2022 16:12	-0.05	6/14/2022 16:42	10.02	6/14/2022 15:29	0.44	6/14/2022 17:12	28.44
6/15/2022 16:55	83.18	6/14/2022 16:13	-0.05	6/14/2022 16:43	10.04	6/14/2022 15:30	0.42	6/14/2022 17:13	28.46
6/15/2022 16:56	83.13	6/14/2022 16:14	0.02	6/14/2022 16:44	10.04	6/14/2022 15:31	0.42	6/14/2022 17:14	28.46
6/15/2022 16:57	83.05	6/14/2022 16:15	-0.05	6/14/2022 16:45	10.02	6/14/2022 15:32	0.43	6/14/2022 17:15	28.43
6/15/2022 16:58	82.96	6/14/2022 16:16	-0.04	6/14/2022 16:46	10.03	6/14/2022 15:33	0.46	6/14/2022 17:16	28.45
6/15/2022 16:59	82.94	6/14/2022 16:17	-0.02	6/14/2022 16:47	10.03	6/14/2022 15:34	0.51	6/14/2022 17:17	28.45
6/15/2022 17:00	82.94	6/14/2022 16:18	-0.04	6/14/2022 16:48	10.01	6/14/2022 15:35	0.58	6/14/2022 17:18	28.44
6/15/2022 17:01	82.88	6/14/2022 16:19	0.00	6/14/2022 16:49	10.04	6/14/2022 15:36	0.53	6/14/2022 17:19	28.43
6/15/2022 17:02	82.83	6/14/2022 16:20	-0.01	6/14/2022 16:50	10.02	6/14/2022 15:37	0.46	6/14/2022 17:20	28.41
6/15/2022 17:03	82.83	6/14/2022 16:21	0.00	6/14/2022 16:51	10.01	6/14/2022 15:38	0.41	6/14/2022 17:21	28.41
6/15/2022 17:04	82.78	6/14/2022 16:22	0.00	6/14/2022 16:52	10.01	6/14/2022 15:39	0.40	6/14/2022 17:22	28.43
6/15/2022 17:05	82.78	6/14/2022 16:23	-0.04	6/14/2022 16:53	9.99	6/14/2022 15:40	0.43	6/14/2022 17:23	28.42
6/15/2022 17:06	82.76	6/14/2022 16:24	-0.03	6/14/2022 16:54	10.03	6/14/2022 15:41	0.48	6/14/2022 17:24	28.40
6/15/2022 17:07	82.74	6/14/2022 16:25	-0.02	6/14/2022 16:55	9.97	6/14/2022 15:42	0.52	6/14/2022 17:25	28.42
6/15/2022 17:08	82.71	6/14/2022 16:26	0.01	6/14/2022 16:56	9.98	6/14/2022 15:43	0.57	6/14/2022 17:26	28.42
6/15/2022 17:09	82.69	6/14/2022 16:27	0.04	6/14/2022 16:57	9.96	6/14/2022 15:44	0.52	6/14/2022 17:27	28.43
6/15/2022 17:10	82.71	6/14/2022 16:28	-0.03	6/14/2022 16:58	9.99	6/14/2022 15:45	0.49	6/14/2022 17:28	28.41
6/15/2022 17:11	82.70	6/14/2022 16:29	-0.02	6/14/2022 16:59	9.99	6/14/2022 15:46	0.47	6/14/2022 17:29	28.39
6/15/2022 17:12	82.68	6/14/2022 16:30	0.01	6/14/2022 17:00	9.99	6/14/2022 15:47	0.44	6/14/2022 17:30	28.41
6/15/2022 17:13	82.60	6/14/2022 16:31	-0.01	6/14/2022 17:01	10.01	6/14/2022 15:48	0.45	6/14/2022 17:31	28.41
6/15/2022 17:14	82.61	6/14/2022 16:32	0.00	6/14/2022 17:02	10.00	6/14/2022 15:49	0.46	6/14/2022 17:32	28.41
6/15/2022 17:15	82.65	6/14/2022 16:33	0.05	6/14/2022 17:03	10.04	6/14/2022 15:50	0.51	6/14/2022 17:33	28.40
6/15/2022 17:16	82.61	6/14/2022 16:34	0.01	6/14/2022 17:04	10.04	6/14/2022 15:51	0.55	6/14/2022 17:34	28.43
6/15/2022 17:17	82.60	6/14/2022 16:35	-0.02	6/14/2022 17:05	10.06	6/14/2022 15:52	0.54	6/14/2022 17:35	28.37
6/15/2022 17:18	82.56	6/14/2022 16:36	-0.02	6/14/2022 17:06	10.05	6/14/2022 15:53	0.48	6/14/2022 17:36	28.41
6/15/2022 17:19	82.57	6/14/2022 16:37	-0.03	6/14/2022 17:07	10.06	6/14/2022 15:54	0.46	6/14/2022 17:37	28.41
6/15/2022 17:20	82.57	6/14/2022 16:38	-0.03	6/14/2022 17:08	10.03	6/14/2022 15:55	0.46	6/14/2022 17:38	28.39
6/15/2022 17:21	82.57	6/14/2022 16:39	-0.01	6/14/2022 17:09	10.04	6/14/2022 15:56	0.44	6/14/2022 17:39	28.40
6/15/2022 17:22	82.55	6/14/2022 16:40	-0.05	6/14/2022 17:10	10.02	6/14/2022 15:57	0.45	6/14/2022 17:40	28.42
6/15/2022 17:23	82.53	6/14/2022 16:41	0.01	6/14/2022 17:11	10.06	6/14/2022 15:58	0.42	6/14/2022 17:41	28.42
6/15/2022 17:24	82.52	6/14/2022 16:42	-0.02	6/14/2022 17:12	10.01	6/14/2022 15:59	0.46	6/14/2022 17:42	28.40

6/15/2022 17:25	82.56	6/14/2022 16:43	-0.05	6/14/2022 17:13	10.01	6/14/2022 16:00	0.47	6/14/2022 17:43	28.40
6/15/2022 17:26	82.54	6/14/2022 16:44	4.31	6/14/2022 17:14	10.02	6/14/2022 16:01	0.47	6/14/2022 17:44	28.45
6/15/2022 17:27	82.53	6/14/2022 16:45	6.80	6/14/2022 17:15	10.03	6/14/2022 16:02	0.51	6/14/2022 17:45	28.42
6/15/2022 17:28	82.51	6/14/2022 16:46	5.56	6/14/2022 17:16	9.98	6/14/2022 16:03	0.51	6/14/2022 17:46	28.41
6/15/2022 17:29	82.49	6/14/2022 16:47	4.67	6/14/2022 17:17	10.01	6/14/2022 16:04	0.55	6/14/2022 17:47	28.38
6/15/2022 17:30	82.55	6/14/2022 16:48	3.90	6/14/2022 17:18	10.00	6/14/2022 16:05	0.55	6/14/2022 17:48	28.43
6/15/2022 17:31	82.50	6/14/2022 16:49	3.24	6/14/2022 17:19	9.99	6/14/2022 16:06	0.53	6/14/2022 17:49	28.38
6/15/2022 17:32	82.54	6/14/2022 16:50	2.64	6/14/2022 17:20	9.98	6/14/2022 16:07	0.47	6/14/2022 17:50	28.38
6/15/2022 17:33	82.46	6/14/2022 16:51	2.24	6/14/2022 17:21	9.99	6/14/2022 16:08	0.43	6/14/2022 17:51	28.40
6/15/2022 17:34	82.47	6/14/2022 16:52	1.83	6/14/2022 17:22	9.97	6/14/2022 16:09	0.43	6/14/2022 17:52	28.40
6/15/2022 17:35	82.48	6/14/2022 16:53	1.52	6/14/2022 17:23	10.02	6/14/2022 16:10	0.45	6/14/2022 17:53	28.39
6/15/2022 17:36	82.42	6/14/2022 16:54	1.31	6/14/2022 17:24	9.97	6/14/2022 16:11	0.48	6/14/2022 17:54	28.41
6/15/2022 17:37	82.41	6/14/2022 16:55	1.07	6/14/2022 17:25	9.99	6/14/2022 16:12	0.55	6/14/2022 17:55	28.37
6/15/2022 17:38	82.46	6/14/2022 16:56	0.85	6/14/2022 17:26	10.04	6/14/2022 16:13	0.54	6/14/2022 17:56	28.42
6/15/2022 17:39	82.43	6/14/2022 16:57	0.61	6/14/2022 17:27	10.06	6/14/2022 16:14	0.51	6/14/2022 17:57	28.41
6/15/2022 17:40	82.43	6/14/2022 16:58	0.45	6/14/2022 17:28	10.03	6/14/2022 16:15	0.49	6/14/2022 17:58	28.40
6/15/2022 17:41	82.43	6/14/2022 16:59	0.29	6/14/2022 17:29	10.05	6/14/2022 16:16	0.42	6/14/2022 17:59	28.42
6/15/2022 17:42	82.44	6/14/2022 17:00	0.11	6/14/2022 17:30	10.05	6/14/2022 16:17	0.44	6/14/2022 18:00	28.41
6/15/2022 17:43	82.43	6/14/2022 17:01	0.02	6/14/2022 17:31	10.03	6/14/2022 16:18	0.49	6/14/2022 18:01	28.40
6/15/2022 17:44	82.39	6/14/2022 17:02	-0.03	6/14/2022 17:32	10.03	6/14/2022 16:19	0.49	6/14/2022 18:02	28.39
6/15/2022 17:45	82.41	6/14/2022 17:03	-0.03	6/14/2022 17:33	10.06	6/14/2022 16:20	0.53	6/14/2022 18:03	28.38
6/15/2022 17:46	82.38	6/14/2022 17:04	-0.03	6/14/2022 17:34	10.06	6/14/2022 16:21	0.55	6/14/2022 18:04	28.39
6/15/2022 17:47	82.38	6/14/2022 17:05	-0.02	6/14/2022 17:35	10.01	6/14/2022 16:22	0.56	6/14/2022 18:05	28.44
6/15/2022 17:48	82.40	6/14/2022 17:06	-0.01	6/14/2022 17:36	10.01	6/14/2022 16:23	0.48	6/14/2022 18:06	29.57
6/15/2022 17:49	82.39	6/14/2022 17:07	-0.01	6/14/2022 17:37	10.03	6/14/2022 16:24	0.48	6/14/2022 18:07	29.75
6/15/2022 17:50	82.38	6/14/2022 17:08	-0.08	6/14/2022 17:38	10.01	6/14/2022 16:25	0.39	6/14/2022 18:08	31.48
6/15/2022 17:51	82.38	6/14/2022 17:09	0.01	6/14/2022 17:39	10.02	6/14/2022 16:26	0.44	6/14/2022 18:09	29.80
6/15/2022 17:52	82.39	6/14/2022 17:10	-0.02	6/14/2022 17:40	10.04	6/14/2022 16:27	0.44	6/14/2022 18:10	31.20
6/15/2022 17:53	82.39	6/14/2022 17:11	-0.02	6/14/2022 17:41	9.99	6/14/2022 16:28	0.52	6/14/2022 18:11	29.96
6/15/2022 17:54	82.34	6/14/2022 17:12	-0.01	6/14/2022 17:42	9.96	6/14/2022 16:29	0.51	6/14/2022 18:12	30.32
6/15/2022 17:55	82.39	6/14/2022 17:13	-0.04	6/14/2022 17:43	10.01	6/14/2022 16:30	0.55	6/14/2022 18:13	30.23
6/15/2022 17:56	82.39	6/14/2022 17:14	-0.03	6/14/2022 17:44	9.98	6/14/2022 16:31	0.55	6/14/2022 18:14	29.26
6/15/2022 17:57	82.37	6/14/2022 17:15	-0.02	6/14/2022 17:45	9.97	6/14/2022 16:32	0.49	6/14/2022 18:15	28.84
6/15/2022 17:58	82.34	6/14/2022 17:16	-0.01	6/14/2022 17:46	10.00	6/14/2022 16:33	0.46	6/14/2022 18:16	28.63
6/15/2022 17:59	82.35	6/14/2022 17:17	0.03	6/14/2022 17:47	9.97	6/14/2022 16:34	0.45	6/14/2022 18:17	28.57
6/15/2022 18:00	82.35	6/14/2022 17:18	0.01	6/14/2022 17:48	9.97	6/14/2022 16:35	0.46	6/14/2022 18:18	28.58
6/15/2022 18:01	82.35	6/14/2022 17:19	0.54	6/14/2022 17:49	9.98	6/14/2022 16:36	5.48	6/14/2022 18:19	28.58
6/15/2022 18:02	82.35	6/14/2022 17:20	5.91	6/14/2022 17:50	10.06	6/14/2022 16:37	2.83	6/14/2022 18:20	28.55
6/15/2022 18:03	82.34	6/14/2022 17:21	6.57	6/14/2022 17:51	10.01	6/14/2022 16:38	0.80	6/14/2022 18:21	28.56
6/15/2022 18:04	82.32	6/14/2022 17:22	5.39	6/14/2022 17:52	10.03	6/14/2022 16:39	0.55	6/14/2022 18:22	30.69
6/15/2022 18:05	82.33	6/14/2022 17:23	4.50	6/14/2022 17:53	10.04	6/14/2022 16:40	2.94	6/14/2022 18:23	29.46
6/15/2022 18:06	82.31	6/14/2022 17:24	3.67	6/14/2022 17:54	10.07	6/14/2022 16:41	3.69	6/14/2022 18:24	28.83
6/15/2022 18:07	82.30	6/14/2022 17:25	3.04	6/14/2022 17:55	10.08	6/14/2022 16:42	1.44	6/14/2022 18:25	28.62
6/15/2022 18:08	82.32	6/14/2022 17:26	2.50	6/14/2022 17:56	10.03	6/14/2022 16:43	0.62	6/14/2022 18:26	28.57
6/15/2022 18:09	82.31	6/14/2022 17:27	2.08	6/14/2022 17:57	10.02	6/14/2022 16:44	0.71	6/14/2022 18:27	28.57
6/15/2022 18:10	82.30	6/14/2022 17:28	1.72	6/14/2022 17:58	10.06	6/14/2022 16:45	4.69	6/14/2022 18:28	28.53
6/15/2022 18:11	82.30	6/14/2022 17:29	1.38	6/14/2022 17:59	10.06	6/14/2022 16:46	2.22	6/14/2022 18:29	28.52
6/15/2022 18:12	82.27	6/14/2022 17:30	1.08	6/14/2022 18:00	10.06	6/14/2022 16:47	0.55	6/14/2022 18:30	28.55
6/15/2022 18:13	82.29	6/14/2022 17:31	0.88	6/14/2022 18:01	10.02	6/14/2022 16:48	0.56	6/14/2022 18:31	28.51
6/15/2022 18:14	82.27	6/14/2022 17:32	0.63	6/14/2022 18:02	10.05	6/14/2022 16:49	4.76	6/14/2022 18:32	28.52
6/15/2022 18:15	82.31	6/14/2022 17:33	0.49	6/14/2022 18:03	10.01	6/14/2022 16:50	2.23	6/14/2022 18:33	28.52
6/15/2022 18:16	82.33	6/14/2022 17:34	0.28	6/14/2022 18:04	10.03	6/14/2022 16:51	0.56	6/14/2022 18:34	28.50
6/15/2022 18:17	82.28	6/14/2022 17:35	0.18	6/14/2022 18:05	10.01	6/14/2022 16:52	0.56	6/14/2022 18:35	28.50
6/15/2022 18:18	82.26	6/14/2022 17:36	0.03	6/14/2022 18:06	10.02	6/14/2022 16:53	4.27	6/14/2022 18:36	28.49
6/15/2022 18:19	82.28	6/14/2022 17:37	0.00	6/14/2022 18:07	9.97	6/14/2022 16:54	3.41	6/14/2022 18:37	28.50
6/15/2022 18:20	82.29	6/14/2022 17:38	-0.02	6/14/2022 18:08	9.99	6/14/2022 16:55	1.21	6/14/2022 18:38	28.47
6/15/2022 18:21	82.28	6/14/2022 17:39	0.01	6/14/2022 18:09	9.99	6/14/2022 16:56	0.58	6/14/2022 18:39	28.50
6/15/2022 18:22	82.26	6/14/2022 17:40	-0.03	6/14/2022 18:10	9.98	6/14/2022 16:57	0.58	6/14/2022 18:40	28.46
6/15/2022 18:23	82.23	6/14/2022 17:41	-0.04	6/14/2022 18:11	9.98	6/14/2022 16:58	0.53	6/14/2022 18:41	28.46
6/15/2022 18:24	82.26	6/14/2022 17:42	0.03	6/14/2022 18:12	9.99	6/14/2022 16:59	0.54	6/14/2022 18:42	28.47
6/15/2022 18:25	82.27	6/14/2022 17:43	-0.03	6/14/2022 18:13	9.94	6/14/2022 17:00	0.49	6/14/2022 18:43	28.49
6/15/2022 18:26	82.22	6/14/2022 17:44	-0.02	6/14/2022 18:14	9.96	6/14/2022 17:01	0.49	6/14/2022 18:44	28.44
6/15/2022 18:27	82.27	6/14/2022 17:45	-0.04	6/14/2022 18:15	9.97	6/14/2022 17:02	0.44	6/14/2022 18:45	28.48
6/15/2022 18:28	82.26	6/14/2022 17:46	-0.03	6/14/2022 18:16	10.03	6/14/2022 17:03	0.47	6/14/2022 18:46	28.46
6/15/2022 18:29	82.22	6/14/2022 17:47	-0.05	6/14/2022 18:17	10.03	6/14/2022 17:04	0.41	6/14/2022 18:47	28.47
6/15/2022 18:30	82.22	6/14/2022 17:48	0.00	6/14/2022 18:18	10.04	6/14/2022 17:05	0.49	6/14/2022 18:48	28.44
6/15/2022 18:31	82.20	6/14/2022 17:49	0.00	6/14/2022 18:19	10.03	6/14/2022 17:06	0.53	6/14/2022 18:49	28.45
6/15/2022 18:32	82.22	6/14/2022 17:50	-0.03	6/14/2022 18:20	10.07	6/14/2022 17:07	0.53	6/14/2022 18:50	28.42
6/15/2022 18:33	82.23	6/14/2022 17:51	-0.02	6/14/2022 18:21	10.08	6/14/2022 17:08	0.58	6/14/2022 18:51	28.45
6/15/2022 18:34	82.24	6/14/2022 17:52	0.01	6/14/2022 18:22	10.04	6/14/2022 17:09	0.50	6/14/2022 18:52	28.45
6/15/2022 18:35	82.22	6/14/2022 17:53	0.01	6/14/2022 18:23	10.05	6/14/2022 17:10	0.50	6/14/2022 18:53	28.48
6/15/2022 18:36	82.22	6/14/2022 17:54	0.02	6/14/2022 18:24	10.04	6/14/2022 17:11	0.47	6/14/2022 18:54	28.49
6/15/2022 18:37	82.23	6/14/2022 17:55	0.00	6/14/2022 18:25	10.05	6/14/2022 17:12	0.47	6/14/2022 18:55	28.46
6/15/2022 18:38	82.22	6/14/2022 17:56	0.02	6/14/2022 18:26	10.06	6/14/2022 17:13	0.49	6/14/2022 18:56	28.47
6/15/2022 18:39	82.25	6/14/2022 17:57	-0.04	6/14/2022 18:27	10.04	6/14/2022 17:14	0.53	6/14/2022 18:57	28.45
6/15/2022 18:40	82.20	6/14/2022 17:58	-0.02	6/14/2022 18:28	10.03	6/14/2022 17:15	0.58	6/14/2022 18:58	28.41
6/15/2022 18:41	82.20	6/14/2022 17:59	0.01	6/14/2022 18:29	10.05	6/14/2022 17:16	0.53	6/14/2022 18:59	28.44
6/15/2022 18:42	82.20	6/14/2022 18:00	-0.01	6/14/2022 18:30	10.04	6/14/2022 17:17	0.55	6/14/2022 19:00	28.44
6/15/2022 18:43	82.17	6/14/2022 18:01	-0.02	6/14/2022 18:31	10.01	6/14/2022 17:18	0.51	6/14/2022 19:01	28.42
6/15/2022 18:44	82.22	6/14/2022 18:02	-0.03	6/14/2022 18:32	10.00	6/14/2022 17:19	0.49	6/14/2022 19:02	28.44
6/15/2022 18:45	82.21	6/14/2022 18:03	-0.01	6/14/2022 18:33	10.01	6/14/2022 17:20	0.49	6/14/2022 19:03	28.42
6/15/2022 18:46	82.22	6/14/2022 18:04	-0.02	6/14/2022 18:34	9.99	6/14/2022 17:21	0.46	6/14/2022 19:04	28.43
6/15/2022 18:47	82.18	6/14/2022 18:05	-0.03	6/14/2022 18:35	10.00	6/14/2022 17:22	0.48	6/14/2022 19:05	28.45
6/15/2022 18:48	82.18	6/14/2022 18:06	-0.03	6/14/2022 18:36	9.98	6/14/2022 17:23	0.48	6/14/2022 19:06	28.45
6/15/2022 18:49	82.19	6/14/2022 18:07	-0.02	6/14/2022 18:37	9.98	6/14/2022 17:24	0.50	6/14/2022 19:07	28.40
6/15/2022 18:50	82.17	6/14/2022 18:08	-0.05	6/14/2022 18:38	9.95	6/14/2022 17:25	0.48	6/14/2022 19:08	28.42
6/15/2022 18:51	82.16	6/14/2022 18:09	-0.02	6/14/2022 18:39	9.94	6/14/2022 17:26	0.48	6/14/2022 19:09	28.43
6/15/2022 18:52	82.16	6/14/2022 18:10	-0.03	6/14/2022 18:40	9.98	6/14/2022 17:27	0.46	6/14/2022 19:10	28.43

6/15/2022 18:53	82.19	6/14/2022 18:11	3.73	6/14/2022 18:41	10.01	6/14/2022 17:28	0.46	6/14/2022 19:11	28.46
6/15/2022 18:54	82.19	6/14/2022 18:12	6.98	6/14/2022 18:42	10.03	6/14/2022 17:29	0.49	6/14/2022 19:12	28.43
6/15/2022 18:55	82.17	6/14/2022 18:13	5.65	6/14/2022 18:43	10.03	6/14/2022 17:30	0.52	6/14/2022 19:13	28.40
6/15/2022 18:56	82.18	6/14/2022 18:14	4.68	6/14/2022 18:44	10.06	6/14/2022 17:31	0.52	6/14/2022 19:14	28.44
6/15/2022 18:57	82.15	6/14/2022 18:15	3.90	6/14/2022 18:45	10.06	6/14/2022 17:32	0.57	6/14/2022 19:15	28.41
6/15/2022 18:58	82.18	6/14/2022 18:16	3.19	6/14/2022 18:46	10.08	6/14/2022 17:33	0.57	6/14/2022 19:16	28.40
6/15/2022 18:59	82.17	6/14/2022 18:17	2.65	6/14/2022 18:47	10.09	6/14/2022 17:34	0.54	6/14/2022 19:17	28.43
6/15/2022 19:00	82.15	6/14/2022 18:18	2.12	6/14/2022 18:48	10.09	6/14/2022 17:35	0.53	6/14/2022 19:18	28.45
6/15/2022 19:01	82.19	6/14/2022 18:19	1.78	6/14/2022 18:49	10.10	6/14/2022 17:36	0.50	6/14/2022 19:19	28.41
6/15/2022 19:02	82.13	6/14/2022 18:20	1.42	6/14/2022 18:50	10.08	6/14/2022 17:37	0.51	6/14/2022 19:20	28.42
6/15/2022 19:03	82.16	6/14/2022 18:21	1.13	6/14/2022 18:51	10.08	6/14/2022 17:38	0.43	6/14/2022 19:21	28.42
6/15/2022 19:04	82.14	6/14/2022 18:22	0.88	6/14/2022 18:52	10.08	6/14/2022 17:39	0.48	6/14/2022 19:22	28.41
6/15/2022 19:05	82.13	6/14/2022 18:23	0.71	6/14/2022 18:53	10.07	6/14/2022 17:40	0.50	6/14/2022 19:23	28.42
6/15/2022 19:06	82.19	6/14/2022 18:24	0.48	6/14/2022 18:54	10.06	6/14/2022 17:41	0.53	6/14/2022 19:24	28.43
6/15/2022 19:07	82.15	6/14/2022 18:25	0.33	6/14/2022 18:55	10.05	6/14/2022 17:42	0.55	6/14/2022 19:25	28.40
6/15/2022 19:08	82.12	6/14/2022 18:26	0.17	6/14/2022 18:56	10.04	6/14/2022 17:43	0.57	6/14/2022 19:26	28.38
6/15/2022 19:09	82.15	6/14/2022 18:27	0.07	6/14/2022 18:57	10.04	6/14/2022 17:44	0.51	6/14/2022 19:27	28.42
6/15/2022 19:10	82.12	6/14/2022 18:28	-0.01	6/14/2022 18:58	10.02	6/14/2022 17:45	0.50	6/14/2022 19:28	28.38
6/15/2022 19:11	82.13	6/14/2022 18:29	-0.01	6/14/2022 18:59	10.09	6/14/2022 17:46	0.43	6/14/2022 19:29	28.41
6/15/2022 19:12	82.13	6/14/2022 18:30	-0.04	6/14/2022 19:00	10.06	6/14/2022 17:47	0.45	6/14/2022 19:30	28.44
6/15/2022 19:13	82.14	6/14/2022 18:31	-0.04	6/14/2022 19:01	10.10	6/14/2022 17:48	0.49	6/14/2022 19:31	28.43
6/15/2022 19:14	82.15	6/14/2022 18:32	-0.05	6/14/2022 19:02	10.13	6/14/2022 17:49	0.51	6/14/2022 19:32	28.44
6/15/2022 19:15	82.12	6/14/2022 18:33	0.02	6/14/2022 19:03	10.14	6/14/2022 17:50	0.55	6/14/2022 19:33	28.43
6/15/2022 19:16	82.14	6/14/2022 18:34	0.00	6/14/2022 19:04	10.07	6/14/2022 17:51	0.58	6/14/2022 19:34	28.39
6/15/2022 19:17	82.12	6/14/2022 18:35	-0.01	6/14/2022 19:05	10.15	6/14/2022 17:52	0.55	6/14/2022 19:35	28.41
6/15/2022 19:18	82.10	6/14/2022 18:36	-0.05	6/14/2022 19:06	10.17	6/14/2022 17:53	0.54	6/14/2022 19:36	28.39
6/15/2022 19:19	82.10	6/14/2022 18:37	-0.03	6/14/2022 19:07	10.13	6/14/2022 17:54	0.47	6/14/2022 19:37	28.41
6/15/2022 19:20	82.08	6/14/2022 18:38	-0.05	6/14/2022 19:08	10.14	6/14/2022 17:55	0.46	6/14/2022 19:38	28.38
6/15/2022 19:21	82.08	6/14/2022 18:39	0.00	6/14/2022 19:09	10.12	6/14/2022 17:56	0.48	6/14/2022 19:39	28.41
6/15/2022 19:22	82.11	6/14/2022 18:40	0.00	6/14/2022 19:10	10.17	6/14/2022 17:57	0.47	6/14/2022 19:40	28.40
6/15/2022 19:23	82.10	6/14/2022 18:41	-0.01	6/14/2022 19:11	10.14	6/14/2022 17:58	0.56	6/14/2022 19:41	28.39
6/15/2022 19:24	82.09	6/14/2022 18:42	-0.01	6/14/2022 19:12	10.09	6/14/2022 17:59	0.54	6/14/2022 19:42	28.37
6/15/2022 19:25	82.11	6/14/2022 18:43	0.01	6/14/2022 19:13	10.11	6/14/2022 18:00	0.58	6/14/2022 19:43	28.42
6/15/2022 19:26	82.10	6/14/2022 18:44	0.01	6/14/2022 19:14	10.09	6/14/2022 18:01	0.53	6/14/2022 19:44	28.39
6/15/2022 19:27	82.12	6/14/2022 18:45	0.01	6/14/2022 19:15	10.09	6/14/2022 18:02	0.51	6/14/2022 19:45	28.42
6/15/2022 19:28	82.09	6/14/2022 18:46	0.03	6/14/2022 19:16	10.08	6/14/2022 18:03	0.49	6/14/2022 19:46	28.38
6/15/2022 19:29	82.11	6/14/2022 18:47	0.00	6/14/2022 19:17	10.06	6/14/2022 18:04	0.44	6/14/2022 19:47	28.42
6/15/2022 19:30	82.14	6/14/2022 18:48	-0.02	6/14/2022 19:18	10.06	6/14/2022 18:05	0.45	6/14/2022 19:48	28.40
6/15/2022 19:31	82.07	6/14/2022 18:49	0.01	6/14/2022 19:19	10.05	6/14/2022 18:06	0.50	6/14/2022 19:49	28.39
6/15/2022 19:32	82.04	6/14/2022 18:50	0.01	6/14/2022 19:20	10.06	6/14/2022 18:07	0.54	6/14/2022 19:50	28.40
6/15/2022 19:33	82.12	6/14/2022 18:51	-0.03	6/14/2022 19:21	10.09	6/14/2022 18:08	0.55	6/14/2022 19:51	28.39
6/15/2022 19:34	82.05	6/14/2022 18:52	0.01	6/14/2022 19:22	10.11	6/14/2022 18:09	0.55	6/14/2022 19:52	28.38
6/15/2022 19:35	82.08	6/14/2022 18:53	0.00	6/14/2022 19:23	10.10	6/14/2022 18:10	0.48	6/14/2022 19:53	28.41
6/15/2022 19:36	82.08	6/14/2022 18:54	0.01	6/14/2022 19:24	10.15	6/14/2022 18:11	0.49	6/14/2022 19:54	28.37
6/15/2022 19:37	82.06	6/14/2022 18:55	-0.01	6/14/2022 19:25	10.13	6/14/2022 18:12	0.46	6/14/2022 19:55	28.42
6/15/2022 19:38	82.09	6/14/2022 18:56	-0.03	6/14/2022 19:26	10.12	6/14/2022 18:13	0.45	6/14/2022 19:56	28.41
6/15/2022 19:39	82.07	6/14/2022 18:57	-0.02	6/14/2022 19:27	10.14	6/14/2022 18:14	0.45	6/14/2022 19:57	28.43
6/15/2022 19:40	82.05	6/14/2022 18:58	-0.01	6/14/2022 19:28	10.13	6/14/2022 18:15	0.45	6/14/2022 19:58	28.37
6/15/2022 19:41	82.10	6/14/2022 18:59	-0.04	6/14/2022 19:29	10.15	6/14/2022 18:16	0.42	6/14/2022 19:59	28.39
6/15/2022 19:42	82.12	6/14/2022 19:00	2.83	6/14/2022 19:30	10.12	6/14/2022 18:17	0.44	6/14/2022 20:00	28.41
6/15/2022 19:43	82.07	6/14/2022 19:01	7.18	6/14/2022 19:31	10.08	6/14/2022 18:18	0.46	6/14/2022 20:01	28.41
6/15/2022 19:44	82.05	6/14/2022 19:02	5.91	6/14/2022 19:32	10.08	6/14/2022 18:19	0.51	6/14/2022 20:02	28.39
6/15/2022 19:45	82.08	6/14/2022 19:03	4.85	6/14/2022 19:33	10.10	6/14/2022 18:20	0.55	6/14/2022 20:03	28.38
6/15/2022 19:46	82.05	6/14/2022 19:04	4.02	6/14/2022 19:34	10.09	6/14/2022 18:21	0.53	6/14/2022 20:04	28.38
6/15/2022 19:47	82.08	6/14/2022 19:05	3.30	6/14/2022 19:35	10.06	6/14/2022 18:22	0.54	6/14/2022 20:05	28.41
6/15/2022 19:48	82.06	6/14/2022 19:06	2.71	6/14/2022 19:36	10.06	6/14/2022 18:23	0.54	6/14/2022 20:06	28.40
6/15/2022 19:49	82.05	6/14/2022 19:07	2.22	6/14/2022 19:37	10.08	6/14/2022 18:24	0.52	6/14/2022 20:07	28.42
6/15/2022 19:50	82.04	6/14/2022 19:08	1.85	6/14/2022 19:38	10.04	6/14/2022 18:25	0.51	6/14/2022 20:08	28.41
6/15/2022 19:51	82.04	6/14/2022 19:09	1.48	6/14/2022 19:39	10.04	6/14/2022 18:26	0.48	6/14/2022 20:09	28.40
6/15/2022 19:52	84.91	6/14/2022 19:10	1.22	6/14/2022 19:40	10.06	6/14/2022 18:27	0.49	6/14/2022 20:10	28.39
6/15/2022 19:53	88.11	6/14/2022 19:11	0.95	6/14/2022 19:41	10.03	6/14/2022 18:28	0.42	6/14/2022 20:11	28.38
6/15/2022 19:54	89.97	6/14/2022 19:12	0.74	6/14/2022 19:42	10.07	6/14/2022 18:29	0.47	6/14/2022 20:12	28.39
6/15/2022 19:55	88.28	6/14/2022 19:13	0.55	6/14/2022 19:43	10.05	6/14/2022 18:30	0.52	6/14/2022 20:13	28.37
6/15/2022 19:56	86.22	6/14/2022 19:14	0.37	6/14/2022 19:44	10.04	6/14/2022 18:31	0.54	6/14/2022 20:14	28.38
6/15/2022 19:57	84.98	6/14/2022 19:15	0.19	6/14/2022 19:45	10.09	6/14/2022 18:32	0.55	6/14/2022 20:15	28.40
6/15/2022 19:58	84.23	6/14/2022 19:16	0.05	6/14/2022 19:46	10.10	6/14/2022 18:33	5.17	6/14/2022 20:16	28.41
6/15/2022 19:59	83.75	6/14/2022 19:17	0.01	6/14/2022 19:47	10.12	6/14/2022 18:34	2.43	6/14/2022 20:17	28.38
6/15/2022 20:00	83.45	6/14/2022 19:18	0.00	6/14/2022 19:48	10.11	6/14/2022 18:35	0.58	6/14/2022 20:18	28.42
6/15/2022 20:01	83.21	6/14/2022 19:19	0.01	6/14/2022 19:49	10.07	6/14/2022 18:36	0.55	6/14/2022 20:19	28.38
6/15/2022 20:02	83.10	6/14/2022 19:20	0.01	6/14/2022 19:50	10.08	6/14/2022 18:37	0.53	6/14/2022 20:20	28.39
6/15/2022 20:03	82.93	6/14/2022 19:21	-0.03	6/14/2022 19:51	10.12	6/14/2022 18:38	0.50	6/14/2022 20:21	28.40
6/15/2022 20:04	82.87	6/14/2022 19:22	-0.02	6/14/2022 19:52	10.10	6/14/2022 18:39	0.44	6/14/2022 20:22	28.38
6/15/2022 20:05	82.81	6/14/2022 19:23	-0.02	6/14/2022 19:53	10.13	6/14/2022 18:40	0.49	6/14/2022 20:23	28.39
6/15/2022 20:06	82.73	6/14/2022 19:24	0.03	6/14/2022 19:54	10.13	6/14/2022 18:41	0.47	6/14/2022 20:24	28.37
6/15/2022 20:07	82.69	6/14/2022 19:25	0.13	6/14/2022 19:55	10.15	6/14/2022 18:42	0.52	6/14/2022 20:25	28.40
6/15/2022 20:08	82.70	6/14/2022 19:26	5.94	6/14/2022 19:56	10.19	6/14/2022 18:43	0.55	6/14/2022 20:26	28.39
6/15/2022 20:09	82.66	6/14/2022 19:27	6.58	6/14/2022 19:57	10.20	6/14/2022 18:44	0.56	6/14/2022 20:27	28.41
6/15/2022 20:10	82.59	6/14/2022 19:28	5.37	6/14/2022 19:58	10.16	6/14/2022 18:45	4.95	6/14/2022 20:28	28.42
6/15/2022 20:11	82.57	6/14/2022 19:29	4.43	6/14/2022 19:59	10.18	6/14/2022 18:46	2.28	6/14/2022 20:29	28.38
6/15/2022 20:12	82.52	6/14/2022 19:30	3.72	6/14/2022 20:00	10.18	6/14/2022 18:47	0.53	6/14/2022 20:30	28.40
6/15/2022 20:13	82.50	6/14/2022 19:31	3.10	6/14/2022 20:01	10.18	6/14/2022 18:48	0.58	6/14/2022 20:31	28.38
6/15/2022 20:14	82.49	6/14/2022 19:32	2.59	6/14/2022 20:02	10.17	6/14/2022 18:49	5.54	6/14/2022 20:32	28.39
6/15/2022 20:15	82.45	6/14/2022 19:33	2.13	6/14/2022 20:03	10.19	6/14/2022 18:50	2.74	6/14/2022 20:33	28.39
6/15/2022 20:16	82.47	6/14/2022 19:34	1.76	6/14/2022 20:04	10.20	6/14/2022 18:51	0.80	6/14/2022 20:34	28.42
6/15/2022 20:17	82.46	6/14/2022 19:35	1.43	6/14/2022 20:05	10.25	6/14/2022 18:52	0.53	6/14/2022 20:35	28.38
6/15/2022 20:18	82.41	6/14/2022 19:36	1.17	6/14/2022 20:06	10.24	6/14/2022 18:53	0.50	6/14/2022 20:36	28.38
6/15/2022 20:19	82.43	6/14/2022 19:37	1.01	6/14/2022 20:07	10.25	6/14/2022 18:54	0.55	6/14/2022 20:37	30.10
6/15/2022 20:20	82.39	6/14/2022 19:38	0.80	6/14/2022 20:08	10.27	6/14/2022 18:55	2.78	6/14/2022 20:38	29.09

6/15/2022 20:21	82.42	6/14/2022 19:39	0.57	6/14/2022 20:09	10.27	6/14/2022 18:56	4.33	6/14/2022 20:39	28.63
6/15/2022 20:22	82.37	6/14/2022 19:40	0.39	6/14/2022 20:10	10.24	6/14/2022 18:57	1.89	6/14/2022 20:40	28.45
6/15/2022 20:23	82.39	6/14/2022 19:41	0.29	6/14/2022 20:11	10.25	6/14/2022 18:58	0.46	6/14/2022 20:41	28.42
6/15/2022 20:24	82.35	6/14/2022 19:42	0.14	6/14/2022 20:12	10.25	6/14/2022 18:59	0.46	6/14/2022 20:42	28.47
6/15/2022 20:25	82.34	6/14/2022 19:43	0.05	6/14/2022 20:13	10.25	6/14/2022 19:00	4.95	6/14/2022 20:43	28.43
6/15/2022 20:26	82.37	6/14/2022 19:44	-0.06	6/14/2022 20:14	10.24	6/14/2022 19:01	2.38	6/14/2022 20:44	28.42
6/15/2022 20:27	82.34	6/14/2022 19:45	0.00	6/14/2022 20:15	10.21	6/14/2022 19:02	0.61	6/14/2022 20:45	28.43
6/15/2022 20:28	82.33	6/14/2022 19:46	-0.03	6/14/2022 20:16	10.20	6/14/2022 19:03	0.51	6/14/2022 20:46	28.42
6/15/2022 20:29	82.32	6/14/2022 19:47	-0.04	6/14/2022 20:17	10.18	6/14/2022 19:04	0.49	6/14/2022 20:47	28.40
6/15/2022 20:30	82.32	6/14/2022 19:48	0.01	6/14/2022 20:18	10.13	6/14/2022 19:05	0.46	6/14/2022 20:48	28.42
6/15/2022 20:31	82.30	6/14/2022 19:49	-0.02	6/14/2022 20:19	10.17	6/14/2022 19:06	0.50	6/14/2022 20:49	28.39
6/15/2022 20:32	82.29	6/14/2022 19:50	-0.03	6/14/2022 20:20	10.15	6/14/2022 19:07	0.51	6/14/2022 20:50	28.42
6/15/2022 20:33	82.32	6/14/2022 19:51	-0.05	6/14/2022 20:21	10.15	6/14/2022 19:08	0.54	6/14/2022 20:51	28.44
6/15/2022 20:34	82.26	6/14/2022 19:52	-0.03	6/14/2022 20:22	10.14	6/14/2022 19:09	0.50	6/14/2022 20:52	28.43
6/15/2022 20:35	82.32	6/14/2022 19:53	-0.02	6/14/2022 20:23	10.11	6/14/2022 19:10	0.55	6/14/2022 20:53	28.43
6/15/2022 20:36	82.28	6/14/2022 19:54	-0.08	6/14/2022 20:24	10.11	6/14/2022 19:11	0.58	6/14/2022 20:54	28.40
6/15/2022 20:37	82.27	6/14/2022 19:55	-0.02	6/14/2022 20:25	10.10	6/14/2022 19:12	0.54	6/14/2022 20:55	28.40
6/15/2022 20:38	82.29	6/14/2022 19:56	0.02	6/14/2022 20:26	10.10	6/14/2022 19:13	0.52	6/14/2022 20:56	28.40
6/15/2022 20:39	82.26	6/14/2022 19:57	-0.02	6/14/2022 20:27	10.05	6/14/2022 19:14	0.47	6/14/2022 20:57	28.40
6/15/2022 20:40	82.28	6/14/2022 19:58	-0.03	6/14/2022 20:28	10.07	6/14/2022 19:15	0.45	6/14/2022 20:58	28.43
6/15/2022 20:41	82.27	6/14/2022 19:59	-0.02	6/14/2022 20:29	10.08	6/14/2022 19:16	0.44	6/14/2022 20:59	28.40
6/15/2022 20:42	82.24	6/14/2022 20:00	-0.03	6/14/2022 20:30	10.07	6/14/2022 19:17	0.44	6/14/2022 21:00	28.42
6/15/2022 20:43	82.23	6/14/2022 20:01	0.12	6/14/2022 20:31	10.06	6/14/2022 19:18	0.50	6/14/2022 21:01	28.41
6/15/2022 20:44	82.26	6/14/2022 20:02	5.95	6/14/2022 20:32	10.04	6/14/2022 19:19	0.58	6/14/2022 21:02	28.37
6/15/2022 20:45	82.26	6/14/2022 20:03	6.34	6/14/2022 20:33	10.02	6/14/2022 19:20	0.57	6/14/2022 21:03	28.38
6/15/2022 20:46	82.26	6/14/2022 20:04	5.21	6/14/2022 20:34	10.05	6/14/2022 19:21	0.53	6/14/2022 21:04	28.41
6/15/2022 20:47	82.27	6/14/2022 20:05	4.31	6/14/2022 20:35	10.06	6/14/2022 19:22	0.49	6/14/2022 21:05	28.40
6/15/2022 20:48	82.24	6/14/2022 20:06	3.57	6/14/2022 20:36	10.04	6/14/2022 19:23	0.48	6/14/2022 21:06	28.43
6/15/2022 20:49	82.23	6/14/2022 20:07	2.88	6/14/2022 20:37	10.07	6/14/2022 19:24	0.45	6/14/2022 21:07	28.40
6/15/2022 20:50	82.23	6/14/2022 20:08	2.39	6/14/2022 20:38	10.06	6/14/2022 19:25	0.45	6/14/2022 21:08	28.36
6/15/2022 20:51	82.19	6/14/2022 20:09	1.99	6/14/2022 20:39	10.06	6/14/2022 19:26	0.47	6/14/2022 21:09	28.39
6/15/2022 20:52	82.22	6/14/2022 20:10	1.63	6/14/2022 20:40	10.08	6/14/2022 19:27	0.49	6/14/2022 21:10	28.38
6/15/2022 20:53	82.25	6/14/2022 20:11	1.31	6/14/2022 20:41	10.09	6/14/2022 19:28	0.50	6/14/2022 21:11	28.38
6/15/2022 20:54	82.23	6/14/2022 20:12	1.02	6/14/2022 20:42	10.11	6/14/2022 19:29	0.50	6/14/2022 21:12	28.36
6/15/2022 20:55	82.21	6/14/2022 20:13	0.82	6/14/2022 20:43	10.12	6/14/2022 19:30	4.99	6/14/2022 21:13	28.40
6/15/2022 20:56	82.22	6/14/2022 20:14	0.58	6/14/2022 20:44	10.08	6/14/2022 19:31	2.57	6/14/2022 21:14	28.41
6/15/2022 20:57	82.16	6/14/2022 20:15	0.41	6/14/2022 20:45	10.07	6/14/2022 19:32	0.70	6/14/2022 21:15	28.39
6/15/2022 20:58	82.18	6/14/2022 20:16	0.26	6/14/2022 20:46	10.07	6/14/2022 19:33	0.56	6/14/2022 21:16	28.40
6/15/2022 20:59	82.18	6/14/2022 20:17	0.19	6/14/2022 20:47	10.08	6/14/2022 19:34	0.54	6/14/2022 21:17	28.42
6/15/2022 21:00	82.23	6/14/2022 20:18	0.03	6/14/2022 20:48	10.05	6/14/2022 19:35	0.57	6/14/2022 21:18	28.42
6/15/2022 21:01	82.17	6/14/2022 20:19	-0.05	6/14/2022 20:49	10.09	6/14/2022 19:36	5.16	6/14/2022 21:19	28.44
6/15/2022 21:02	82.19	6/14/2022 20:20	-0.04	6/14/2022 20:50	10.07	6/14/2022 19:37	2.62	6/14/2022 21:20	28.41
6/15/2022 21:03	82.18	6/14/2022 20:21	-0.02	6/14/2022 20:51	10.05	6/14/2022 19:38	0.75	6/14/2022 21:21	28.41
6/15/2022 21:04	82.17	6/14/2022 20:22	-0.03	6/14/2022 20:52	10.03	6/14/2022 19:39	0.50	6/14/2022 21:22	28.40
6/15/2022 21:05	82.20	6/14/2022 20:23	-0.04	6/14/2022 20:53	10.03	6/14/2022 19:40	0.55	6/14/2022 21:23	28.38
6/15/2022 21:06	82.16	6/14/2022 20:24	-0.03	6/14/2022 20:54	10.05	6/14/2022 19:41	0.55	6/14/2022 21:24	28.38
6/15/2022 21:07	82.18	6/14/2022 20:25	0.00	6/14/2022 20:55	10.08	6/14/2022 19:42	0.53	6/14/2022 21:25	28.41
6/15/2022 21:08	82.14	6/14/2022 20:26	-0.06	6/14/2022 20:56	10.06	6/14/2022 19:43	0.52	6/14/2022 21:26	28.39
6/15/2022 21:09	82.16	6/14/2022 20:27	0.01	6/14/2022 20:57	10.07	6/14/2022 19:44	0.52	6/14/2022 21:27	28.40
6/15/2022 21:10	82.15	6/14/2022 20:28	-0.05	6/14/2022 20:58	10.10	6/14/2022 19:45	0.46	6/14/2022 21:28	28.41
6/15/2022 21:11	82.17	6/14/2022 20:29	0.01	6/14/2022 20:59	10.08	6/14/2022 19:46	0.46	6/14/2022 21:29	28.39
6/15/2022 21:12	82.16	6/14/2022 20:30	-0.03	6/14/2022 21:00	10.11	6/14/2022 19:47	0.41	6/14/2022 21:30	28.42
6/15/2022 21:13	82.17	6/14/2022 20:31	-0.03	6/14/2022 21:01	10.09	6/14/2022 19:48	0.53	6/14/2022 21:31	28.42
6/15/2022 21:14	82.16	6/14/2022 20:32	-0.04	6/14/2022 21:02	10.13	6/14/2022 19:49	0.49	6/14/2022 21:32	28.39
6/15/2022 21:15	82.15	6/14/2022 20:33	-0.06	6/14/2022 21:03	10.12	6/14/2022 19:50	0.53	6/14/2022 21:33	28.40
6/15/2022 21:16	82.18	6/14/2022 20:34	-0.05	6/14/2022 21:04	10.12	6/14/2022 19:51	0.55	6/14/2022 21:34	28.39
6/15/2022 21:17	82.17	6/14/2022 20:35	-0.05	6/14/2022 21:05	10.12	6/14/2022 19:52	0.57	6/14/2022 21:35	28.43
6/15/2022 21:18	82.14	6/14/2022 20:36	0.01	6/14/2022 21:06	10.14	6/14/2022 19:53	0.55	6/14/2022 21:36	28.39
6/15/2022 21:19	82.19	6/14/2022 20:37	-0.04	6/14/2022 21:07	10.12	6/14/2022 19:54	0.50	6/14/2022 21:37	28.42
6/15/2022 21:20	82.15	6/14/2022 20:38	-0.01	6/14/2022 21:08	10.15	6/14/2022 19:55	0.45	6/14/2022 21:38	28.43
6/15/2022 21:21	82.13	6/14/2022 20:39	-0.06	6/14/2022 21:09	10.18	6/14/2022 19:56	0.46	6/14/2022 21:39	28.41
6/15/2022 21:22	82.12	6/14/2022 20:40	-0.06	6/14/2022 21:10	10.19	6/14/2022 19:57	0.47	6/14/2022 21:40	28.38
6/15/2022 21:23	82.11	6/14/2022 20:41	0.00	6/14/2022 21:11	10.19	6/14/2022 19:58	0.50	6/14/2022 21:41	28.42
6/15/2022 21:24	82.12	6/14/2022 20:42	-0.05	6/14/2022 21:12	10.22	6/14/2022 19:59	0.58	6/14/2022 21:42	28.37
6/15/2022 21:25	82.16	6/14/2022 20:43	-0.03	6/14/2022 21:13	10.16	6/14/2022 20:00	0.56	6/14/2022 21:43	28.40
6/15/2022 21:26	82.10	6/14/2022 20:44	-0.03	6/14/2022 21:14	10.18	6/14/2022 20:01	0.56	6/14/2022 21:44	28.42
6/15/2022 21:27	82.10	6/14/2022 20:45	-0.05	6/14/2022 21:15	10.19	6/14/2022 20:02	0.54	6/14/2022 21:45	28.39
6/15/2022 21:28	82.14	6/14/2022 20:46	0.01	6/14/2022 21:16	10.20	6/14/2022 20:03	0.49	6/14/2022 21:46	28.42
6/15/2022 21:29	82.12	6/14/2022 20:47	0.00	6/14/2022 21:17	10.17	6/14/2022 20:04	0.48	6/14/2022 21:47	28.40
6/15/2022 21:30	82.11	6/14/2022 20:48	-0.04	6/14/2022 21:18	10.16	6/14/2022 20:05	0.49	6/14/2022 21:48	28.39
6/15/2022 21:31	82.11	6/14/2022 20:49	3.47	6/14/2022 21:19	10.17	6/14/2022 20:06	0.49	6/14/2022 21:49	28.39
6/15/2022 21:32	82.12	6/14/2022 20:50	7.08	6/14/2022 21:20	10.17	6/14/2022 20:07	0.49	6/14/2022 21:50	28.40
6/15/2022 21:33	82.10	6/14/2022 20:51	5.78	6/14/2022 21:21	10.16	6/14/2022 20:08	0.53	6/14/2022 21:51	28.42
6/15/2022 21:34	82.09	6/14/2022 20:52	4.79	6/14/2022 21:22	10.18	6/14/2022 20:09	0.44	6/14/2022 21:52	28.40
6/15/2022 21:35	82.11	6/14/2022 20:53	3.96	6/14/2022 21:23	10.12	6/14/2022 20:10	0.46	6/14/2022 21:53	28.40
6/15/2022 21:36	82.10	6/14/2022 20:54	3.27	6/14/2022 21:24	10.09	6/14/2022 20:11	0.48	6/14/2022 21:54	28.38
6/15/2022 21:37	82.12	6/14/2022 20:55	2.67	6/14/2022 21:25	10.09	6/14/2022 20:12	0.53	6/14/2022 21:55	28.43
6/15/2022 21:38	82.10	6/14/2022 20:56	2.22	6/14/2022 21:26	10.09	6/14/2022 20:13	0.55	6/14/2022 21:56	28.42
6/15/2022 21:39	82.08	6/14/2022 20:57	1.83	6/14/2022 21:27	10.12	6/14/2022 20:14	0.58	6/14/2022 21:57	28.40
6/15/2022 21:40	82.07	6/14/2022 20:58	1.54	6/14/2022 21:28	10.15	6/14/2022 20:15	0.60	6/14/2022 21:58	28.41
6/15/2022 21:41	82.08	6/14/2022 20:59	1.22	6/14/2022 21:29	10.14	6/14/2022 20:16	0.51	6/14/2022 21:59	28.39
6/15/2022 21:42	82.08	6/14/2022 21:00	0.97	6/14/2022 21:30	10.16	6/14/2022 20:17	0.47	6/14/2022 22:00	28.40
6/15/2022 21:43	82.11	6/14/2022 21:01	0.77	6/14/2022 21:31	10.11	6/14/2022 20:18	0.48	6/14/2022 22:01	28.42
6/15/2022 21:44	82.11	6/14/2022 21:02	0.58	6/14/2022 21:32	10.17	6/14/2022 20:19	0.44	6/14/2022 22:02	28.44
6/15/2022 21:45	82.09	6/14/2022 21:03	0.42	6/14/2022 21:33	10.17	6/14/2022 20:20	0.49	6/14/2022 22:03	28.42
6/15/2022 21:46	82.06	6/14/2022 21:04	0.26	6/14/2022 21:34	10.14	6/14/2022 20:21	0.54	6/14/2022 22:04	28.38
6/15/2022 21:47	82.08	6/14/2022 21:05	0.11	6/14/2022 21:35	10.15	6/14/2022 20:22	0.55	6/14/2022 22:05	28.42
6/15/2022 21:48	82.11	6/14/2022 21:06	0.04	6/14/2022 21:36	10.16	6/14/2022 20:23	0.56	6/14/2022 22:06	28.39

6/15/2022 21:49	82.09	6/14/2022 21:07	-0.01	6/14/2022 21:37	10.14	6/14/2022 20:24	0.53	6/14/2022 22:07	28.42
6/15/2022 21:50	82.07	6/14/2022 21:08	-0.05	6/14/2022 21:38	10.15	6/14/2022 20:25	0.51	6/14/2022 22:08	28.40
6/15/2022 21:51	82.09	6/14/2022 21:09	0.01	6/14/2022 21:39	10.12	6/14/2022 20:26	0.46	6/14/2022 22:09	28.40
6/15/2022 21:52	82.09	6/14/2022 21:10	0.00	6/14/2022 21:40	10.14	6/14/2022 20:27	0.45	6/14/2022 22:10	28.40
6/15/2022 21:53	82.05	6/14/2022 21:11	-0.03	6/14/2022 21:41	10.14	6/14/2022 20:28	0.47	6/14/2022 22:11	28.41
6/15/2022 21:54	82.10	6/14/2022 21:12	0.01	6/14/2022 21:42	10.12	6/14/2022 20:29	0.47	6/14/2022 22:12	28.41
6/15/2022 21:55	82.10	6/14/2022 21:13	-0.02	6/14/2022 21:43	10.15	6/14/2022 20:30	0.50	6/14/2022 22:13	28.38
6/15/2022 21:56	82.08	6/14/2022 21:14	-0.04	6/14/2022 21:44	10.12	6/14/2022 20:31	0.56	6/14/2022 22:14	28.40
6/15/2022 21:57	82.03	6/14/2022 21:15	-0.05	6/14/2022 21:45	10.08	6/14/2022 20:32	0.53	6/14/2022 22:15	28.39
6/15/2022 21:58	82.08	6/14/2022 21:16	-0.02	6/14/2022 21:46	10.11	6/14/2022 20:33	0.55	6/14/2022 22:16	28.38
6/15/2022 21:59	82.05	6/14/2022 21:17	0.01	6/14/2022 21:47	10.08	6/14/2022 20:34	0.53	6/14/2022 22:17	28.39
6/15/2022 22:00	82.03	6/14/2022 21:18	-0.02	6/14/2022 21:48	10.07	6/14/2022 20:35	0.50	6/14/2022 22:18	28.41
6/15/2022 22:01	82.05	6/14/2022 21:19	-0.01	6/14/2022 21:49	10.07	6/14/2022 20:36	0.44	6/14/2022 22:19	28.41
6/15/2022 22:02	82.08	6/14/2022 21:20	-0.01	6/14/2022 21:50	10.06	6/14/2022 20:37	0.46	6/14/2022 22:20	28.39
6/15/2022 22:03	82.07	6/14/2022 21:21	-0.04	6/14/2022 21:51	10.06	6/14/2022 20:38	0.45	6/14/2022 22:21	28.39
6/15/2022 22:04	82.06	6/14/2022 21:22	-0.03	6/14/2022 21:52	10.07	6/14/2022 20:39	0.49	6/14/2022 22:22	28.39
6/15/2022 22:05	82.06	6/14/2022 21:23	-0.03	6/14/2022 21:53	10.09	6/14/2022 20:40	0.50	6/14/2022 22:23	28.40
6/15/2022 22:06	82.04	6/14/2022 21:24	-0.03	6/14/2022 21:54	10.05	6/14/2022 20:41	0.50	6/14/2022 22:24	28.40
6/15/2022 22:07	82.06	6/14/2022 21:25	0.00	6/14/2022 21:55	10.06	6/14/2022 20:42	0.53	6/14/2022 22:25	28.39
6/15/2022 22:08	82.06	6/14/2022 21:26	-0.04	6/14/2022 21:56	10.03	6/14/2022 20:43	0.53	6/14/2022 22:26	28.98
6/15/2022 22:09	82.05	6/14/2022 21:27	-0.01	6/14/2022 21:57	10.01	6/14/2022 20:44	0.55	6/14/2022 22:27	30.08
6/15/2022 22:10	82.07	6/14/2022 21:28	-0.05	6/14/2022 21:58	10.06	6/14/2022 20:45	0.55	6/14/2022 22:28	29.15
6/15/2022 22:11	82.02	6/14/2022 21:29	-0.05	6/14/2022 21:59	10.08	6/14/2022 20:46	0.54	6/14/2022 22:29	28.69
6/15/2022 22:12	82.03	6/14/2022 21:30	3.83	6/14/2022 22:00	10.08	6/14/2022 20:47	0.52	6/14/2022 22:30	28.55
6/15/2022 22:13	82.04	6/14/2022 21:31	6.93	6/14/2022 22:01	10.11	6/14/2022 20:48	0.48	6/14/2022 22:31	28.49
6/15/2022 22:14	82.03	6/14/2022 21:32	5.69	6/14/2022 22:02	10.09	6/14/2022 20:49	0.46	6/14/2022 22:32	28.44
6/15/2022 22:15	82.01	6/14/2022 21:33	4.70	6/14/2022 22:03	10.10	6/14/2022 20:50	0.46	6/14/2022 22:33	28.44
6/15/2022 22:16	82.02	6/14/2022 21:34	3.88	6/14/2022 22:04	10.11	6/14/2022 20:51	0.43	6/14/2022 22:34	28.45
6/15/2022 22:17	82.02	6/14/2022 21:35	3.22	6/14/2022 22:05	10.10	6/14/2022 20:52	0.47	6/14/2022 22:35	28.43
6/15/2022 22:18	81.99	6/14/2022 21:36	2.64	6/14/2022 22:06	10.10	6/14/2022 20:53	0.49	6/14/2022 22:36	28.82
6/15/2022 22:19	82.05	6/14/2022 21:37	2.20	6/14/2022 22:07	10.11	6/14/2022 20:54	0.48	6/14/2022 22:37	29.91
6/15/2022 22:20	82.04	6/14/2022 21:38	1.79	6/14/2022 22:08	10.13	6/14/2022 20:55	0.50	6/14/2022 22:38	29.02
6/15/2022 22:21	82.00	6/14/2022 21:39	1.48	6/14/2022 22:09	10.07	6/14/2022 20:56	0.47	6/14/2022 22:39	28.63
6/15/2022 22:22	82.04	6/14/2022 21:40	1.19	6/14/2022 22:10	10.12	6/14/2022 20:57	0.45	6/14/2022 22:40	28.53
6/15/2022 22:23	82.05	6/14/2022 21:41	0.95	6/14/2022 22:11	10.12	6/14/2022 20:58	0.48	6/14/2022 22:41	30.34
6/15/2022 22:24	81.99	6/14/2022 21:42	0.73	6/14/2022 22:12	10.10	6/14/2022 20:59	0.51	6/14/2022 22:42	29.25
6/15/2022 22:25	81.99	6/14/2022 21:43	0.51	6/14/2022 22:13	10.06	6/14/2022 21:00	0.52	6/14/2022 22:43	28.75
6/15/2022 22:26	82.01	6/14/2022 21:44	0.35	6/14/2022 22:14	10.09	6/14/2022 21:01	0.59	6/14/2022 22:44	28.58
6/15/2022 22:27	82.02	6/14/2022 21:45	0.26	6/14/2022 22:15	10.09	6/14/2022 21:02	0.57	6/14/2022 22:45	28.53
6/15/2022 22:28	81.99	6/14/2022 21:46	0.10	6/14/2022 22:16	10.06	6/14/2022 21:03	0.53	6/14/2022 22:46	28.50
6/15/2022 22:29	81.99	6/14/2022 21:47	-0.02	6/14/2022 22:17	10.09	6/14/2022 21:04	0.52	6/14/2022 22:47	28.49
6/15/2022 22:30	81.98	6/14/2022 21:48	-0.02	6/14/2022 22:18	10.07	6/14/2022 21:05	0.45	6/14/2022 22:48	28.49
6/15/2022 22:31	82.03	6/14/2022 21:49	-0.05	6/14/2022 22:19	10.04	6/14/2022 21:06	0.46	6/14/2022 22:49	28.50
6/15/2022 22:32	82.05	6/14/2022 21:50	-0.03	6/14/2022 22:20	10.06	6/14/2022 21:07	0.42	6/14/2022 22:50	28.48
6/15/2022 22:33	82.00	6/14/2022 21:51	0.01	6/14/2022 22:21	10.06	6/14/2022 21:08	0.47	6/14/2022 22:51	28.47
6/15/2022 22:34	82.00	6/14/2022 21:52	0.00	6/14/2022 22:22	10.05	6/14/2022 21:09	0.46	6/14/2022 22:52	28.45
6/15/2022 22:35	82.02	6/14/2022 21:53	-0.03	6/14/2022 22:23	10.06	6/14/2022 21:10	0.51	6/14/2022 22:53	28.45
6/15/2022 22:36	82.02	6/14/2022 21:54	0.01	6/14/2022 22:24	10.08	6/14/2022 21:11	0.51	6/14/2022 22:54	28.44
6/15/2022 22:37	81.99	6/14/2022 21:55	-0.02	6/14/2022 22:25	10.11	6/14/2022 21:12	0.55	6/14/2022 22:55	28.48
6/15/2022 22:38	81.97	6/14/2022 21:56	-0.01	6/14/2022 22:26	10.11	6/14/2022 21:13	0.54	6/14/2022 22:56	28.49
6/15/2022 22:39	82.00	6/14/2022 21:57	-0.03	6/14/2022 22:27	10.12	6/14/2022 21:14	0.48	6/14/2022 22:57	28.45
6/15/2022 22:40	81.98	6/14/2022 21:58	-0.02	6/14/2022 22:28	10.15	6/14/2022 21:15	0.46	6/14/2022 22:58	28.47
6/15/2022 22:41	81.97	6/14/2022 21:59	-0.02	6/14/2022 22:29	10.16	6/14/2022 21:16	0.44	6/14/2022 22:59	28.48
6/15/2022 22:42	81.96	6/14/2022 22:00	0.01	6/14/2022 22:30	10.12	6/14/2022 21:17	0.41	6/14/2022 23:00	28.46
6/15/2022 22:43	81.99	6/14/2022 22:01	-0.01	6/14/2022 22:31	10.13	6/14/2022 21:18	0.42	6/14/2022 23:01	28.47
6/15/2022 22:44	81.98	6/14/2022 22:02	-0.02	6/14/2022 22:32	10.14	6/14/2022 21:19	0.48	6/14/2022 23:02	28.46
6/15/2022 22:45	81.99	6/14/2022 22:03	-0.03	6/14/2022 22:33	10.16	6/14/2022 21:20	0.53	6/14/2022 23:03	28.45
6/15/2022 22:46	81.96	6/14/2022 22:04	-0.03	6/14/2022 22:34	10.14	6/14/2022 21:21	0.55	6/14/2022 23:04	28.45
6/15/2022 22:47	81.97	6/14/2022 22:05	-0.04	6/14/2022 22:35	10.14	6/14/2022 21:22	0.51	6/14/2022 23:05	28.45
6/15/2022 22:48	81.98	6/14/2022 22:06	-0.01	6/14/2022 22:36	10.10	6/14/2022 21:23	0.42	6/14/2022 23:06	28.43
6/15/2022 22:49	82.00	6/14/2022 22:07	-0.05	6/14/2022 22:37	10.13	6/14/2022 21:24	0.44	6/14/2022 23:07	28.45
6/15/2022 22:50	81.99	6/14/2022 22:08	-0.01	6/14/2022 22:38	10.11	6/14/2022 21:25	0.42	6/14/2022 23:08	28.46
6/15/2022 22:51	81.94	6/14/2022 22:09	-0.06	6/14/2022 22:39	10.08	6/14/2022 21:26	0.39	6/14/2022 23:09	28.44
6/15/2022 22:52	81.97	6/14/2022 22:10	-0.01	6/14/2022 22:40	10.11	6/14/2022 21:27	0.46	6/14/2022 23:10	28.42
6/15/2022 22:53	81.96	6/14/2022 22:11	-0.03	6/14/2022 22:41	10.08	6/14/2022 21:28	0.51	6/14/2022 23:11	28.44
6/15/2022 22:54	81.98	6/14/2022 22:12	-0.05	6/14/2022 22:42	10.09	6/14/2022 21:29	0.54	6/14/2022 23:12	28.49
6/15/2022 22:55	81.95	6/14/2022 22:13	-0.04	6/14/2022 22:43	10.08	6/14/2022 21:30	0.52	6/14/2022 23:13	28.44
6/15/2022 22:56	81.97	6/14/2022 22:14	-0.01	6/14/2022 22:44	10.10	6/14/2022 21:31	0.55	6/14/2022 23:14	28.43
6/15/2022 22:57	81.97	6/14/2022 22:15	-0.04	6/14/2022 22:45	10.09	6/14/2022 21:32	0.52	6/14/2022 23:15	28.44
6/15/2022 22:58	81.95	6/14/2022 22:16	4.94	6/14/2022 22:46	10.09	6/14/2022 21:33	0.54	6/14/2022 23:16	28.45
6/15/2022 22:59	81.98	6/14/2022 22:17	6.75	6/14/2022 22:47	10.15	6/14/2022 21:34	0.52	6/14/2022 23:17	28.42
6/15/2022 23:00	81.97	6/14/2022 22:18	5.54	6/14/2022 22:48	10.15	6/14/2022 21:35	0.53	6/14/2022 23:18	28.41
6/15/2022 23:01	81.97	6/14/2022 22:19	4.58	6/14/2022 22:49	10.18	6/14/2022 21:36	0.52	6/14/2022 23:19	28.46
6/15/2022 23:02	81.98	6/14/2022 22:20	3.81	6/14/2022 22:50	10.17	6/14/2022 21:37	0.52	6/14/2022 23:20	28.42
6/15/2022 23:03	81.94	6/14/2022 22:21	3.11	6/14/2022 22:51	10.16	6/14/2022 21:38	0.53	6/14/2022 23:21	28.42
6/15/2022 23:04	81.97	6/14/2022 22:22	2.58	6/14/2022 22:52	10.18	6/14/2022 21:39	0.46	6/14/2022 23:22	28.41
6/15/2022 23:05	81.98	6/14/2022 22:23	2.13	6/14/2022 22:53	10.17	6/14/2022 21:40	0.50	6/14/2022 23:23	28.43
6/15/2022 23:06	81.96	6/14/2022 22:24	1.74	6/14/2022 22:54	10.16	6/14/2022 21:41	0.41	6/14/2022 23:24	28.43
6/15/2022 23:07	81.96	6/14/2022 22:25	1.40	6/14/2022 22:55	10.19	6/14/2022 21:42	0.38	6/14/2022 23:25	28.42
6/15/2022 23:08	82.00	6/14/2022 22:26	1.17	6/14/2022 22:56	10.15	6/14/2022 21:43	0.42	6/14/2022 23:26	28.43
6/15/2022 23:09	81.93	6/14/2022 22:27	0.91	6/14/2022 22:57	10.13	6/14/2022 21:44	0.41	6/14/2022 23:27	28.43
6/15/2022 23:10	81.95	6/14/2022 22:28	0.66	6/14/2022 22:58	10.16	6/14/2022 21:45	0.47	6/14/2022 23:28	28.43
6/15/2022 23:11	81.96	6/14/2022 22:29	0.46	6/14/2022 22:59	10.16	6/14/2022 21:46	0.47	6/14/2022 23:29	28.44
6/15/2022 23:12	81.92	6/14/2022 22:30	0.31	6/14/2022 23:00	10.13	6/14/2022 21:47	0.51	6/14/2022 23:30	28.44
6/15/2022 23:13	81.92	6/14/2022 22:31	0.25	6/14/2022 23:01	10.12	6/14/2022 21:48	0.50	6/14/2022 23:31	28.41
6/15/2022 23:14	81.97	6/14/2022 22:32	0.07	6/14/2022 23:02	10.11	6/14/2022 21:49	0.49	6/14/2022 23:32	28.40
6/15/2022 23:15	81.99	6/14/2022 22:33	-0.01	6/14/2022 23:03	10.11	6/14/2022 21:50	0.47	6/14/2022 23:33	28.42
6/15/2022 23:16	81.96	6/14/2022 22:34	-0.03	6/14/2022 23:04	10.11	6/14/2022 21:51	0.46	6/14/2022 23:34	28.41

6/15/2022 23:17	81.93	6/14/2022 22:35	0.00	6/14/2022 23:05	10.10	6/14/2022 21:52	0.44	6/14/2022 23:35	28.42
6/15/2022 23:18	81.94	6/14/2022 22:36	-0.03	6/14/2022 23:06	10.11	6/14/2022 21:53	0.43	6/14/2022 23:36	28.44
6/15/2022 23:19	81.93	6/14/2022 22:37	-0.03	6/14/2022 23:07	10.06	6/14/2022 21:54	0.42	6/14/2022 23:37	28.47
6/15/2022 23:20	81.92	6/14/2022 22:38	-0.01	6/14/2022 23:08	10.07	6/14/2022 21:55	0.47	6/14/2022 23:38	28.41
6/15/2022 23:21	81.91	6/14/2022 22:39	-0.03	6/14/2022 23:09	10.11	6/14/2022 21:56	0.50	6/14/2022 23:39	28.44
6/15/2022 23:22	81.97	6/14/2022 22:40	0.00	6/14/2022 23:10	10.07	6/14/2022 21:57	0.56	6/14/2022 23:40	28.44
6/15/2022 23:23	81.94	6/14/2022 22:41	-0.04	6/14/2022 23:11	10.08	6/14/2022 21:58	0.49	6/14/2022 23:41	30.72
6/15/2022 23:24	81.90	6/14/2022 22:42	-0.06	6/14/2022 23:12	10.05	6/14/2022 21:59	0.49	6/14/2022 23:42	29.44
6/15/2022 23:25	81.94	6/14/2022 22:43	-0.02	6/14/2022 23:13	10.02	6/14/2022 22:00	0.46	6/14/2022 23:43	28.80
6/15/2022 23:26	81.92	6/14/2022 22:44	-0.03	6/14/2022 23:14	10.03	6/14/2022 22:01	0.44	6/14/2022 23:44	28.57
6/15/2022 23:27	81.94	6/14/2022 22:45	0.00	6/14/2022 23:15	10.02	6/14/2022 22:02	0.38	6/14/2022 23:45	28.53
6/15/2022 23:28	81.92	6/14/2022 22:46	-0.04	6/14/2022 23:16	10.04	6/14/2022 22:03	0.45	6/14/2022 23:46	28.51
6/15/2022 23:29	81.87	6/14/2022 22:47	-0.05	6/14/2022 23:17	10.03	6/14/2022 22:04	0.42	6/14/2022 23:47	28.47
6/15/2022 23:30	81.93	6/14/2022 22:48	-0.03	6/14/2022 23:18	10.08	6/14/2022 22:05	0.47	6/14/2022 23:48	28.49
6/15/2022 23:31	81.92	6/14/2022 22:49	0.01	6/14/2022 23:19	10.12	6/14/2022 22:06	0.46	6/14/2022 23:49	28.45
6/15/2022 23:32	81.93	6/14/2022 22:50	-0.05	6/14/2022 23:20	10.08	6/14/2022 22:07	0.51	6/14/2022 23:50	28.46
6/15/2022 23:33	81.88	6/14/2022 22:51	-0.01	6/14/2022 23:21	10.13	6/14/2022 22:08	0.49	6/14/2022 23:51	30.62
6/15/2022 23:34	81.91	6/14/2022 22:52	0.01	6/14/2022 23:22	10.11	6/14/2022 22:09	0.49	6/14/2022 23:52	29.37
6/15/2022 23:35	81.89	6/14/2022 22:53	-0.02	6/14/2022 23:23	10.12	6/14/2022 22:10	0.46	6/14/2022 23:53	30.77
6/15/2022 23:36	81.92	6/14/2022 22:54	-0.04	6/14/2022 23:24	10.12	6/14/2022 22:11	0.42	6/14/2022 23:54	29.86
6/15/2022 23:37	81.92	6/14/2022 22:55	-0.04	6/14/2022 23:25	10.09	6/14/2022 22:12	0.40	6/14/2022 23:55	29.03
6/15/2022 23:38	81.88	6/14/2022 22:56	0.01	6/14/2022 23:26	10.12	6/14/2022 22:13	0.42	6/14/2022 23:56	28.71
6/15/2022 23:39	81.89	6/14/2022 22:57	-0.02	6/14/2022 23:27	10.12	6/14/2022 22:14	0.41	6/14/2022 23:57	28.60
6/15/2022 23:40	81.88	6/14/2022 22:58	-0.01	6/14/2022 23:28	10.08	6/14/2022 22:15	0.48	6/14/2022 23:58	28.55
6/15/2022 23:41	81.89	6/14/2022 22:59	-0.04	6/14/2022 23:29	10.09	6/14/2022 22:16	0.54	6/14/2022 23:59	28.52
6/15/2022 23:42	81.88	6/14/2022 23:00	-0.02	6/14/2022 23:30	10.09	6/14/2022 22:17	0.51	6/15/2022 0:00	28.51
6/15/2022 23:43	81.90	6/14/2022 23:01	-0.04	6/14/2022 23:31	10.09	6/14/2022 22:18	0.52	6/15/2022 0:01	28.53
6/15/2022 23:44	81.87	6/14/2022 23:02	0.00	6/14/2022 23:32	10.10	6/14/2022 22:19	0.50	6/15/2022 0:02	28.51
6/15/2022 23:45	81.93	6/14/2022 23:03	0.01	6/14/2022 23:33	10.07	6/14/2022 22:20	0.51	6/15/2022 0:03	28.49
6/15/2022 23:46	81.92	6/14/2022 23:04	-0.03	6/14/2022 23:34	10.02	6/14/2022 22:21	0.56	6/15/2022 0:04	28.50
6/15/2022 23:47	81.89	6/14/2022 23:05	-0.03	6/14/2022 23:35	10.07	6/14/2022 22:22	0.55	6/15/2022 0:05	28.47
6/15/2022 23:48	81.94	6/14/2022 23:06	-0.03	6/14/2022 23:36	10.05	6/14/2022 22:23	0.50	6/15/2022 0:06	28.51
6/15/2022 23:49	81.87	6/14/2022 23:07	-0.01	6/14/2022 23:37	10.02	6/14/2022 22:24	0.49	6/15/2022 0:07	28.45
6/15/2022 23:50	81.92	6/14/2022 23:08	1.87	6/14/2022 23:38	10.07	6/14/2022 22:25	0.49	6/15/2022 0:08	28.47
6/15/2022 23:51	81.91	6/14/2022 23:09	7.22	6/14/2022 23:39	10.08	6/14/2022 22:26	0.49	6/15/2022 0:09	28.47
6/15/2022 23:52	81.90	6/14/2022 23:10	6.06	6/14/2022 23:40	10.05	6/14/2022 22:27	0.45	6/15/2022 0:10	28.49
6/15/2022 23:53	81.90	6/14/2022 23:11	5.00	6/14/2022 23:41	10.03	6/14/2022 22:28	0.43	6/15/2022 0:11	28.47
6/15/2022 23:54	81.88	6/14/2022 23:12	4.13	6/14/2022 23:42	10.04	6/14/2022 22:29	0.37	6/15/2022 0:12	28.47
6/15/2022 23:55	81.88	6/14/2022 23:13	3.41	6/14/2022 23:43	10.05	6/14/2022 22:30	0.40	6/15/2022 0:13	28.47
6/15/2022 23:56	81.85	6/14/2022 23:14	2.78	6/14/2022 23:44	10.05	6/14/2022 22:31	0.42	6/15/2022 0:14	28.47
6/15/2022 23:57	81.89	6/14/2022 23:15	2.31	6/14/2022 23:45	10.03	6/14/2022 22:32	0.42	6/15/2022 0:15	28.47
6/15/2022 23:58	81.84	6/14/2022 23:16	1.90	6/14/2022 23:46	10.05	6/14/2022 22:33	0.48	6/15/2022 0:16	28.45
6/15/2022 23:59	81.87	6/14/2022 23:17	1.59	6/14/2022 23:47	10.05	6/14/2022 22:34	0.52	6/15/2022 0:17	28.46
6/16/2022 0:00	81.86	6/14/2022 23:18	1.27	6/14/2022 23:48	10.08	6/14/2022 22:35	0.50	6/15/2022 0:18	28.47
6/16/2022 0:01	81.87	6/14/2022 23:19	1.03	6/14/2022 23:49	10.05	6/14/2022 22:36	0.51	6/15/2022 0:19	28.49
6/16/2022 0:02	81.87	6/14/2022 23:20	0.76	6/14/2022 23:50	10.05	6/14/2022 22:37	0.46	6/15/2022 0:20	28.47
6/16/2022 0:03	81.86	6/14/2022 23:21	0.56	6/14/2022 23:51	10.09	6/14/2022 22:38	0.44	6/15/2022 0:21	28.47
6/16/2022 0:04	81.84	6/14/2022 23:22	0.40	6/14/2022 23:52	10.13	6/14/2022 22:39	0.43	6/15/2022 0:22	28.49
6/16/2022 0:05	81.89	6/14/2022 23:23	0.25	6/14/2022 23:53	10.09	6/14/2022 22:40	0.40	6/15/2022 0:23	28.47
6/16/2022 0:06	81.87	6/14/2022 23:24	0.10	6/14/2022 23:54	10.07	6/14/2022 22:41	0.42	6/15/2022 0:24	28.47
6/16/2022 0:07	81.85	6/14/2022 23:25	0.02	6/14/2022 23:55	10.09	6/14/2022 22:42	0.44	6/15/2022 0:25	28.46
6/16/2022 0:08	81.86	6/14/2022 23:26	-0.02	6/14/2022 23:56	10.12	6/14/2022 22:43	0.46	6/15/2022 0:26	28.46
6/16/2022 0:09	81.86	6/14/2022 23:27	-0.05	6/14/2022 23:57	10.11	6/14/2022 22:44	0.51	6/15/2022 0:27	28.45
6/16/2022 0:10	81.86	6/14/2022 23:28	-0.03	6/14/2022 23:58	10.10	6/14/2022 22:45	0.51	6/15/2022 0:28	28.44
6/16/2022 0:11	81.89	6/14/2022 23:29	-0.03	6/14/2022 23:59	10.11	6/14/2022 22:46	0.46	6/15/2022 0:29	28.47
6/16/2022 0:12	81.85	6/14/2022 23:30	0.02	6/15/2022 0:00	10.08	6/14/2022 22:47	0.46	6/15/2022 0:30	28.48
6/16/2022 0:13	81.89	6/14/2022 23:31	-0.01	6/15/2022 0:01	10.10	6/14/2022 22:48	0.40	6/15/2022 0:31	28.43
6/16/2022 0:14	81.88	6/14/2022 23:32	-0.06	6/15/2022 0:02	10.10	6/14/2022 22:49	0.43	6/15/2022 0:32	28.48
6/16/2022 0:15	81.84	6/14/2022 23:33	-0.02	6/15/2022 0:03	10.09	6/14/2022 22:50	0.42	6/15/2022 0:33	28.47
6/16/2022 0:16	81.87	6/14/2022 23:34	-0.02	6/15/2022 0:04	10.10	6/14/2022 22:51	0.45	6/15/2022 0:34	28.48
6/16/2022 0:17	81.88	6/14/2022 23:35	-0.04	6/15/2022 0:05	10.09	6/14/2022 22:52	0.47	6/15/2022 0:35	28.48
6/16/2022 0:18	81.83	6/14/2022 23:36	0.00	6/15/2022 0:06	10.08	6/14/2022 22:53	0.48	6/15/2022 0:36	28.44
6/16/2022 0:19	81.82	6/14/2022 23:37	-0.02	6/15/2022 0:07	10.04	6/14/2022 22:54	0.53	6/15/2022 0:37	28.44
6/16/2022 0:20	81.87	6/14/2022 23:38	-0.02	6/15/2022 0:08	10.07	6/14/2022 22:55	0.50	6/15/2022 0:38	28.45
6/16/2022 0:21	81.84	6/14/2022 23:39	-0.04	6/15/2022 0:09	10.05	6/14/2022 22:56	0.45	6/15/2022 0:39	28.45
6/16/2022 0:22	81.84	6/14/2022 23:40	-0.04	6/15/2022 0:10	10.04	6/14/2022 22:57	0.43	6/15/2022 0:40	28.45
6/16/2022 0:23	81.82	6/14/2022 23:41	-0.02	6/15/2022 0:11	10.05	6/14/2022 22:58	0.42	6/15/2022 0:41	28.45
6/16/2022 0:24	81.84	6/14/2022 23:42	-0.03	6/15/2022 0:12	10.03	6/14/2022 22:59	0.39	6/15/2022 0:42	28.42
6/16/2022 0:25	81.87	6/14/2022 23:43	-0.04	6/15/2022 0:13	10.05	6/14/2022 23:00	0.40	6/15/2022 0:43	28.46
6/16/2022 0:26	81.84	6/14/2022 23:44	-0.04	6/15/2022 0:14	10.04	6/14/2022 23:01	0.45	6/15/2022 0:44	28.43
6/16/2022 0:27	81.83	6/14/2022 23:45	-0.05	6/15/2022 0:15	10.01	6/14/2022 23:02	0.49	6/15/2022 0:45	28.44
6/16/2022 0:28	81.85	6/14/2022 23:46	-0.03	6/15/2022 0:16	10.01	6/14/2022 23:03	0.53	6/15/2022 0:46	28.45
6/16/2022 0:29	81.82	6/14/2022 23:47	0.00	6/15/2022 0:17	10.03	6/14/2022 23:04	0.53	6/15/2022 0:47	28.46
6/16/2022 0:30	81.80	6/14/2022 23:48	0.01	6/15/2022 0:18	10.04	6/14/2022 23:05	0.45	6/15/2022 0:48	28.45
6/16/2022 0:31	81.82	6/14/2022 23:49	-0.02	6/15/2022 0:19	10.02	6/14/2022 23:06	0.41	6/15/2022 0:49	28.47
6/16/2022 0:32	81.86	6/14/2022 23:50	-0.02	6/15/2022 0:20	10.04	6/14/2022 23:07	0.36	6/15/2022 0:50	28.45
6/16/2022 0:33	81.83	6/14/2022 23:51	0.00	6/15/2022 0:21	10.07	6/14/2022 23:08	0.40	6/15/2022 0:51	28.46
6/16/2022 0:34	81.84	6/14/2022 23:52	-0.05	6/15/2022 0:22	10.09	6/14/2022 23:09	0.35	6/15/2022 0:52	28.44
6/16/2022 0:35	81.85	6/14/2022 23:53	0.01	6/15/2022 0:23	10.11	6/14/2022 23:10	0.39	6/15/2022 0:53	28.45
6/16/2022 0:36	81.85	6/14/2022 23:54	-0.01	6/15/2022 0:24	10.11	6/14/2022 23:11	0.38	6/15/2022 0:54	28.47
6/16/2022 0:37	81.82	6/14/2022 23:55	-0.02	6/15/2022 0:25	10.09	6/14/2022 23:12	0.40	6/15/2022 0:55	28.49
6/16/2022 0:38	81.80	6/14/2022 23:56	-0.02	6/15/2022 0:26	10.11	6/14/2022 23:13	0.45	6/15/2022 0:56	30.19
6/16/2022 0:39	81.81	6/14/2022 23:57	-0.04	6/15/2022 0:27	10.14	6/14/2022 23:14	0.42	6/15/2022 0:57	29.16
6/16/2022 0:40	81.82	6/14/2022 23:58	-0.01	6/15/2022 0:28	10.13	6/14/2022 23:15	0.43	6/15/2022 0:58	28.71
6/16/2022 0:41	81.80	6/14/2022 23:59	-0.05	6/15/2022 0:29	10.11	6/14/2022 23:16	0.42	6/15/2022 0:59	28.56
6/16/2022 0:42	81.83	6/15/2022 0:00	3.54	6/15/2022 0:30	10.11	6/14/2022 23:17	0.45	6/15/2022 1:00	28.51
6/16/2022 0:43	81.83	6/15/2022 0:01	7.05	6/15/2022 0:31	10.11	6/14/2022 23:18	0.49	6/15/2022 1:01	28.49
6/16/2022 0:44	81.81	6/15/2022 0:02	5.80	6/15/2022 0:32	10.08	6/14/2022 23:19	0.52	6/15/2022 1:02	28.48

6/16/2022 0:45	81.81	6/15/2022 0:03	4.76	6/15/2022 0:33	10.11	6/14/2022 23:20	0.53	6/15/2022 1:03	28.49
6/16/2022 0:46	81.81	6/15/2022 0:04	3.94	6/15/2022 0:34	10.08	6/14/2022 23:21	0.50	6/15/2022 1:04	28.48
6/16/2022 0:47	81.79	6/15/2022 0:05	3.27	6/15/2022 0:35	10.07	6/14/2022 23:22	0.47	6/15/2022 1:05	28.49
6/16/2022 0:48	81.83	6/15/2022 0:06	2.68	6/15/2022 0:36	10.08	6/14/2022 23:23	0.42	6/15/2022 1:06	28.51
6/16/2022 0:49	81.79	6/15/2022 0:07	2.21	6/15/2022 0:37	10.10	6/14/2022 23:24	0.37	6/15/2022 1:07	28.48
6/16/2022 0:50	81.80	6/15/2022 0:08	1.80	6/15/2022 0:38	10.10	6/14/2022 23:25	0.39	6/15/2022 1:08	28.48
6/16/2022 0:51	81.81	6/15/2022 0:09	1.49	6/15/2022 0:39	10.08	6/14/2022 23:26	0.38	6/15/2022 1:09	28.46
6/16/2022 0:52	81.82	6/15/2022 0:10	1.20	6/15/2022 0:40	10.05	6/14/2022 23:27	0.43	6/15/2022 1:10	28.46
6/16/2022 0:53	81.83	6/15/2022 0:11	0.97	6/15/2022 0:41	10.09	6/14/2022 23:28	0.43	6/15/2022 1:11	28.44
6/16/2022 0:54	81.82	6/15/2022 0:12	0.73	6/15/2022 0:42	10.06	6/14/2022 23:29	0.46	6/15/2022 1:12	28.48
6/16/2022 0:55	81.79	6/15/2022 0:13	0.54	6/15/2022 0:43	10.08	6/14/2022 23:30	0.53	6/15/2022 1:13	28.48
6/16/2022 0:56	81.81	6/15/2022 0:14	0.37	6/15/2022 0:44	10.06	6/14/2022 23:31	0.48	6/15/2022 1:14	28.47
6/16/2022 0:57	81.82	6/15/2022 0:15	0.21	6/15/2022 0:45	10.04	6/14/2022 23:32	0.46	6/15/2022 1:15	28.48
6/16/2022 0:58	81.77	6/15/2022 0:16	0.11	6/15/2022 0:46	10.06	6/14/2022 23:33	0.44	6/15/2022 1:16	28.54
6/16/2022 0:59	81.76	6/15/2022 0:17	0.01	6/15/2022 0:47	10.01	6/14/2022 23:34	0.42	6/15/2022 1:17	28.55
6/16/2022 1:00	81.79	6/15/2022 0:18	-0.02	6/15/2022 0:48	10.01	6/14/2022 23:35	0.36	6/15/2022 1:18	28.54
6/16/2022 1:01	81.81	6/15/2022 0:19	0.00	6/15/2022 0:49	10.01	6/14/2022 23:36	0.37	6/15/2022 1:19	28.50
6/16/2022 1:02	81.78	6/15/2022 0:20	-0.02	6/15/2022 0:50	10.02	6/14/2022 23:37	0.46	6/15/2022 1:20	28.53
6/16/2022 1:03	81.80	6/15/2022 0:21	-0.03	6/15/2022 0:51	10.03	6/14/2022 23:38	0.49	6/15/2022 1:21	28.52
6/16/2022 1:04	81.77	6/15/2022 0:22	0.00	6/15/2022 0:52	10.04	6/14/2022 23:39	0.48	6/15/2022 1:22	28.51
6/16/2022 1:05	81.82	6/15/2022 0:23	-0.05	6/15/2022 0:53	10.03	6/14/2022 23:40	0.49	6/15/2022 1:23	28.49
6/16/2022 1:06	81.78	6/15/2022 0:24	-0.03	6/15/2022 0:54	10.05	6/14/2022 23:41	0.45	6/15/2022 1:24	28.51
6/16/2022 1:07	81.76	6/15/2022 0:25	-0.03	6/15/2022 0:55	10.06	6/14/2022 23:42	0.43	6/15/2022 1:25	28.48
6/16/2022 1:08	81.80	6/15/2022 0:26	-0.03	6/15/2022 0:56	10.12	6/14/2022 23:43	0.45	6/15/2022 1:26	28.50
6/16/2022 1:09	81.78	6/15/2022 0:27	-0.04	6/15/2022 0:57	10.10	6/14/2022 23:44	0.39	6/15/2022 1:27	28.49
6/16/2022 1:10	81.80	6/15/2022 0:28	-0.01	6/15/2022 0:58	10.10	6/14/2022 23:45	0.38	6/15/2022 1:28	28.49
6/16/2022 1:11	81.81	6/15/2022 0:29	-0.03	6/15/2022 0:59	10.13	6/14/2022 23:46	0.42	6/15/2022 1:29	28.49
6/16/2022 1:12	81.82	6/15/2022 0:30	-0.03	6/15/2022 1:00	10.09	6/14/2022 23:47	0.44	6/15/2022 1:30	28.49
6/16/2022 1:13	81.77	6/15/2022 0:31	-0.02	6/15/2022 1:01	10.11	6/14/2022 23:48	0.53	6/15/2022 1:31	28.49
6/16/2022 1:14	81.78	6/15/2022 0:32	-0.03	6/15/2022 1:02	10.09	6/14/2022 23:49	0.54	6/15/2022 1:32	28.45
6/16/2022 1:15	81.81	6/15/2022 0:33	-0.06	6/15/2022 1:03	10.09	6/14/2022 23:50	0.45	6/15/2022 1:33	28.48
6/16/2022 1:16	81.81	6/15/2022 0:34	-0.06	6/15/2022 1:04	10.10	6/14/2022 23:51	0.43	6/15/2022 1:34	28.45
6/16/2022 1:17	81.80	6/15/2022 0:35	-0.02	6/15/2022 1:05	10.12	6/14/2022 23:52	0.43	6/15/2022 1:35	28.51
6/16/2022 1:18	81.79	6/15/2022 0:36	-0.05	6/15/2022 1:06	10.10	6/14/2022 23:53	0.39	6/15/2022 1:36	28.45
6/16/2022 1:19	81.77	6/15/2022 0:37	-0.02	6/15/2022 1:07	10.11	6/14/2022 23:54	0.40	6/15/2022 1:37	28.49
6/16/2022 1:20	81.78	6/15/2022 0:38	-0.04	6/15/2022 1:08	10.09	6/14/2022 23:55	0.38	6/15/2022 1:38	28.46
6/16/2022 1:21	81.80	6/15/2022 0:39	0.00	6/15/2022 1:09	10.12	6/14/2022 23:56	0.42	6/15/2022 1:39	28.45
6/16/2022 1:22	81.77	6/15/2022 0:40	-0.01	6/15/2022 1:10	10.06	6/14/2022 23:57	0.46	6/15/2022 1:40	28.49
6/16/2022 1:23	81.78	6/15/2022 0:41	-0.02	6/15/2022 1:11	10.08	6/14/2022 23:58	0.48	6/15/2022 1:41	28.50
6/16/2022 1:24	81.77	6/15/2022 0:42	-0.01	6/15/2022 1:12	10.04	6/14/2022 23:59	0.49	6/15/2022 1:42	28.48
6/16/2022 1:25	81.77	6/15/2022 0:43	-0.03	6/15/2022 1:13	10.06	6/15/2022 0:00	0.45	6/15/2022 1:43	28.47
6/16/2022 1:26	81.74	6/15/2022 0:44	-0.05	6/15/2022 1:14	10.06	6/15/2022 0:01	0.45	6/15/2022 1:44	28.45
6/16/2022 1:27	81.76	6/15/2022 0:45	-0.07	6/15/2022 1:15	10.06	6/15/2022 0:02	0.43	6/15/2022 1:45	28.46
6/16/2022 1:28	81.83	6/15/2022 0:46	-0.02	6/15/2022 1:16	10.06	6/15/2022 0:03	0.44	6/15/2022 1:46	28.52
6/16/2022 1:29	81.75	6/15/2022 0:47	-0.04	6/15/2022 1:17	10.05	6/15/2022 0:04	0.46	6/15/2022 1:47	28.52
6/16/2022 1:30	81.78	6/15/2022 0:48	-0.01	6/15/2022 1:18	10.01	6/15/2022 0:05	0.44	6/15/2022 1:48	28.53
6/16/2022 1:31	81.76	6/15/2022 0:49	-0.04	6/15/2022 1:19	10.02	6/15/2022 0:06	0.42	6/15/2022 1:49	28.54
6/16/2022 1:32	81.76	6/15/2022 0:50	1.63	6/15/2022 1:20	10.06	6/15/2022 0:07	0.39	6/15/2022 1:50	28.49
6/16/2022 1:33	81.75	6/15/2022 0:51	7.08	6/15/2022 1:21	10.04	6/15/2022 0:08	0.39	6/15/2022 1:51	28.53
6/16/2022 1:34	81.77	6/15/2022 0:52	6.12	6/15/2022 1:22	10.05	6/15/2022 0:09	0.39	6/15/2022 1:52	28.53
6/16/2022 1:35	81.75	6/15/2022 0:53	5.04	6/15/2022 1:23	10.01	6/15/2022 0:10	0.39	6/15/2022 1:53	28.50
6/16/2022 1:36	81.79	6/15/2022 0:54	4.19	6/15/2022 1:24	10.03	6/15/2022 0:11	0.40	6/15/2022 1:54	28.51
6/16/2022 1:37	81.76	6/15/2022 0:55	3.43	6/15/2022 1:25	10.05	6/15/2022 0:12	0.44	6/15/2022 1:55	28.46
6/16/2022 1:38	81.75	6/15/2022 0:56	2.82	6/15/2022 1:26	10.09	6/15/2022 0:13	0.46	6/15/2022 1:56	28.51
6/16/2022 1:39	81.75	6/15/2022 0:57	2.28	6/15/2022 1:27	10.08	6/15/2022 0:14	0.49	6/15/2022 1:57	30.72
6/16/2022 1:40	81.77	6/15/2022 0:58	1.92	6/15/2022 1:28	10.12	6/15/2022 0:15	0.48	6/15/2022 1:58	29.42
6/16/2022 1:41	81.73	6/15/2022 0:59	1.57	6/15/2022 1:29	10.07	6/15/2022 0:16	0.51	6/15/2022 1:59	30.93
6/16/2022 1:42	81.78	6/15/2022 1:00	1.27	6/15/2022 1:30	10.12	6/15/2022 0:17	0.49	6/15/2022 2:00	29.58
6/16/2022 1:43	81.76	6/15/2022 1:01	1.00	6/15/2022 1:31	10.09	6/15/2022 0:18	0.48	6/15/2022 2:01	28.93
6/16/2022 1:44	81.77	6/15/2022 1:02	0.77	6/15/2022 1:32	10.10	6/15/2022 0:19	0.42	6/15/2022 2:02	28.70
6/16/2022 1:45	81.75	6/15/2022 1:03	0.60	6/15/2022 1:33	10.11	6/15/2022 0:20	0.40	6/15/2022 2:03	28.60
6/16/2022 1:46	81.76	6/15/2022 1:04	0.40	6/15/2022 1:34	10.12	6/15/2022 0:21	0.38	6/15/2022 2:04	30.86
6/16/2022 1:47	81.75	6/15/2022 1:05	0.24	6/15/2022 1:35	10.09	6/15/2022 0:22	0.40	6/15/2022 2:05	29.54
6/16/2022 1:48	81.73	6/15/2022 1:06	0.12	6/15/2022 1:36	10.11	6/15/2022 0:23	0.44	6/15/2022 2:06	31.04
6/16/2022 1:49	81.76	6/15/2022 1:07	0.02	6/15/2022 1:37	10.13	6/15/2022 0:24	0.48	6/15/2022 2:07	29.96
6/16/2022 1:50	81.76	6/15/2022 1:08	-0.05	6/15/2022 1:38	10.10	6/15/2022 0:25	0.47	6/15/2022 2:08	30.83
6/16/2022 1:51	81.73	6/15/2022 1:09	-0.03	6/15/2022 1:39	10.10	6/15/2022 0:26	0.51	6/15/2022 2:09	31.74
6/16/2022 1:52	81.75	6/15/2022 1:10	-0.01	6/15/2022 1:40	10.10	6/15/2022 0:27	0.44	6/15/2022 2:10	30.65
6/16/2022 1:53	81.75	6/15/2022 1:11	0.00	6/15/2022 1:41	10.06	6/15/2022 0:28	0.44	6/15/2022 2:11	31.10
6/16/2022 1:54	81.73	6/15/2022 1:12	-0.01	6/15/2022 1:42	10.08	6/15/2022 0:29	0.40	6/15/2022 2:12	31.37
6/16/2022 1:55	81.74	6/15/2022 1:13	-0.01	6/15/2022 1:43	10.06	6/15/2022 0:30	0.41	6/15/2022 2:13	30.70
6/16/2022 1:56	81.76	6/15/2022 1:14	-0.05	6/15/2022 1:44	10.07	6/15/2022 0:31	0.40	6/15/2022 2:14	31.71
6/16/2022 1:57	81.73	6/15/2022 1:15	-0.05	6/15/2022 1:45	10.07	6/15/2022 0:32	0.45	6/15/2022 2:15	30.41
6/16/2022 1:58	81.75	6/15/2022 1:16	-0.03	6/15/2022 1:46	10.05	6/15/2022 0:33	0.47	6/15/2022 2:16	29.43
6/16/2022 1:59	81.72	6/15/2022 1:17	-0.06	6/15/2022 1:47	10.04	6/15/2022 0:34	0.46	6/15/2022 2:17	29.00
6/16/2022 2:00	81.76	6/15/2022 1:18	-0.01	6/15/2022 1:48	10.06	6/15/2022 0:35	0.50	6/15/2022 2:18	28.85
6/16/2022 2:01	81.79	6/15/2022 1:19	-0.02	6/15/2022 1:49	10.01	6/15/2022 0:36	0.52	6/15/2022 2:19	28.76
6/16/2022 2:02	81.72	6/15/2022 1:20	-0.01	6/15/2022 1:50	10.04	6/15/2022 0:37	0.44	6/15/2022 2:20	28.74
6/16/2022 2:03	81.74	6/15/2022 1:21	-0.03	6/15/2022 1:51	10.02	6/15/2022 0:38	0.40	6/15/2022 2:21	28.73
6/16/2022 2:04	81.74	6/15/2022 1:22	-0.03	6/15/2022 1:52	10.02	6/15/2022 0:39	0.38	6/15/2022 2:22	28.72
6/16/2022 2:05	81.70	6/15/2022 1:23	-0.02	6/15/2022 1:53	10.01	6/15/2022 0:40	0.43	6/15/2022 2:23	28.70
6/16/2022 2:06	81.76	6/15/2022 1:24	-0.05	6/15/2022 1:54	10.04	6/15/2022 0:41	0.42	6/15/2022 2:24	28.67
6/16/2022 2:07	81.71	6/15/2022 1:25	-0.03	6/15/2022 1:55	10.01	6/15/2022 0:42	0.42	6/15/2022 2:25	28.69
6/16/2022 2:08	81.73	6/15/2022 1:26	-0.02	6/15/2022 1:56	10.04	6/15/2022 0:43	0.45	6/15/2022 2:26	30.72
6/16/2022 2:09	81.74	6/15/2022 1:27	-0.05	6/15/2022 1:57	10.07	6/15/2022 0:44	0.45	6/15/2022 2:27	29.55
6/16/2022 2:10	81.75	6/15/2022 1:28	-0.02	6/15/2022 1:58	10.09	6/15/2022 0:45	0.49	6/15/2022 2:28	28.99
6/16/2022 2:11	81.75	6/15/2022 1:29	-0.05	6/15/2022 1:59	10.09	6/15/2022 0:46	0.49	6/15/2022 2:29	28.76
6/16/2022 2:12	81.73	6/15/2022 1:30	0.00	6/15/2022 2:00	10.12	6/15/2022 0:47	0.45	6/15/2022 2:30	28.69

6/16/2022 2:13	81.72	6/15/2022 1:31	0.01	6/15/2022 2:01	10.12	6/15/2022 0:48	0.44	6/15/2022 2:31	28.68
6/16/2022 2:14	81.70	6/15/2022 1:32	-0.06	6/15/2022 2:02	10.11	6/15/2022 0:49	0.39	6/15/2022 2:32	28.66
6/16/2022 2:15	81.73	6/15/2022 1:33	-0.06	6/15/2022 2:03	10.12	6/15/2022 0:50	0.41	6/15/2022 2:33	28.65
6/16/2022 2:16	81.71	6/15/2022 1:34	-0.01	6/15/2022 2:04	10.10	6/15/2022 0:51	0.39	6/15/2022 2:34	29.98
6/16/2022 2:17	81.72	6/15/2022 1:35	-0.04	6/15/2022 2:05	10.11	6/15/2022 0:52	0.41	6/15/2022 2:35	29.84
6/16/2022 2:18	81.70	6/15/2022 1:36	-0.04	6/15/2022 2:06	10.12	6/15/2022 0:53	0.39	6/15/2022 2:36	29.10
6/16/2022 2:19	81.74	6/15/2022 1:37	-0.05	6/15/2022 2:07	10.11	6/15/2022 0:54	0.41	6/15/2022 2:37	28.81
6/16/2022 2:20	81.73	6/15/2022 1:38	-0.04	6/15/2022 2:08	10.12	6/15/2022 0:55	0.43	6/15/2022 2:38	28.70
6/16/2022 2:21	81.74	6/15/2022 1:39	-0.01	6/15/2022 2:09	10.11	6/15/2022 0:56	0.48	6/15/2022 2:39	28.70
6/16/2022 2:22	81.76	6/15/2022 1:40	0.02	6/15/2022 2:10	10.09	6/15/2022 0:57	0.46	6/15/2022 2:40	28.65
6/16/2022 2:23	81.72	6/15/2022 1:41	5.90	6/15/2022 2:11	10.08	6/15/2022 0:58	0.47	6/15/2022 2:41	28.61
6/16/2022 2:24	81.69	6/15/2022 1:42	6.39	6/15/2022 2:12	10.08	6/15/2022 0:59	0.52	6/15/2022 2:42	28.61
6/16/2022 2:25	81.71	6/15/2022 1:43	5.25	6/15/2022 2:13	10.09	6/15/2022 1:00	0.51	6/15/2022 2:43	30.59
6/16/2022 2:26	81.71	6/15/2022 1:44	4.31	6/15/2022 2:14	10.08	6/15/2022 1:01	0.44	6/15/2022 2:44	29.43
6/16/2022 2:27	81.68	6/15/2022 1:45	3.58	6/15/2022 2:15	10.08	6/15/2022 1:02	0.45	6/15/2022 2:45	28.90
6/16/2022 2:28	81.69	6/15/2022 1:46	2.88	6/15/2022 2:16	10.07	6/15/2022 1:03	0.44	6/15/2022 2:46	28.69
6/16/2022 2:29	81.68	6/15/2022 1:47	2.39	6/15/2022 2:17	10.06	6/15/2022 1:04	0.39	6/15/2022 2:47	28.71
6/16/2022 2:30	81.69	6/15/2022 1:48	2.00	6/15/2022 2:18	10.07	6/15/2022 1:05	0.36	6/15/2022 2:48	28.65
6/16/2022 2:31	81.72	6/15/2022 1:49	1.68	6/15/2022 2:19	10.05	6/15/2022 1:06	0.37	6/15/2022 2:49	28.61
6/16/2022 2:32	81.71	6/15/2022 1:50	1.33	6/15/2022 2:20	10.10	6/15/2022 1:07	0.38	6/15/2022 2:50	28.62
6/16/2022 2:33	81.69	6/15/2022 1:51	1.07	6/15/2022 2:21	10.06	6/15/2022 1:08	0.47	6/15/2022 2:51	29.40
6/16/2022 2:34	81.68	6/15/2022 1:52	0.84	6/15/2022 2:22	10.04	6/15/2022 1:09	0.45	6/15/2022 2:52	29.99
6/16/2022 2:35	81.70	6/15/2022 1:53	0.61	6/15/2022 2:23	10.06	6/15/2022 1:10	0.49	6/15/2022 2:53	29.14
6/16/2022 2:36	81.69	6/15/2022 1:54	0.44	6/15/2022 2:24	10.04	6/15/2022 1:11	0.47	6/15/2022 2:54	28.82
6/16/2022 2:37	81.71	6/15/2022 1:55	0.30	6/15/2022 2:25	10.05	6/15/2022 1:12	0.42	6/15/2022 2:55	28.68
6/16/2022 2:38	81.68	6/15/2022 1:56	0.19	6/15/2022 2:26	10.04	6/15/2022 1:13	0.43	6/15/2022 2:56	28.68
6/16/2022 2:39	81.69	6/15/2022 1:57	0.05	6/15/2022 2:27	10.03	6/15/2022 1:14	0.41	6/15/2022 2:57	28.62
6/16/2022 2:40	81.72	6/15/2022 1:58	-0.05	6/15/2022 2:28	10.04	6/15/2022 1:15	0.39	6/15/2022 2:58	28.59
6/16/2022 2:41	81.70	6/15/2022 1:59	-0.03	6/15/2022 2:29	10.06	6/15/2022 1:16	0.42	6/15/2022 2:59	28.61
6/16/2022 2:42	81.71	6/15/2022 2:00	-0.04	6/15/2022 2:30	10.10	6/15/2022 1:17	0.42	6/15/2022 3:00	30.73
6/16/2022 2:43	81.67	6/15/2022 2:01	-0.05	6/15/2022 2:31	10.12	6/15/2022 1:18	0.43	6/15/2022 3:01	29.50
6/16/2022 2:44	81.69	6/15/2022 2:02	-0.01	6/15/2022 2:32	10.11	6/15/2022 1:19	0.48	6/15/2022 3:02	28.95
6/16/2022 2:45	81.69	6/15/2022 2:03	-0.05	6/15/2022 2:33	10.11	6/15/2022 1:20	0.50	6/15/2022 3:03	28.71
6/16/2022 2:46	81.69	6/15/2022 2:04	-0.04	6/15/2022 2:34	10.13	6/15/2022 1:21	0.45	6/15/2022 3:04	28.66
6/16/2022 2:47	81.66	6/15/2022 2:05	-0.03	6/15/2022 2:35	10.16	6/15/2022 1:22	0.40	6/15/2022 3:05	28.66
6/16/2022 2:48	81.71	6/15/2022 2:06	-0.06	6/15/2022 2:36	10.16	6/15/2022 1:23	0.42	6/15/2022 3:06	28.65
6/16/2022 2:49	81.72	6/15/2022 2:07	-0.04	6/15/2022 2:37	10.11	6/15/2022 1:24	0.38	6/15/2022 3:07	28.63
6/16/2022 2:50	81.66	6/15/2022 2:08	-0.02	6/15/2022 2:38	10.12	6/15/2022 1:25	0.37	6/15/2022 3:08	30.63
6/16/2022 2:51	81.67	6/15/2022 2:09	-0.03	6/15/2022 2:39	10.11	6/15/2022 1:26	0.41	6/15/2022 3:09	29.42
6/16/2022 2:52	81.66	6/15/2022 2:10	-0.03	6/15/2022 2:40	10.11	6/15/2022 1:27	0.49	6/15/2022 3:10	28.91
6/16/2022 2:53	81.67	6/15/2022 2:11	-0.01	6/15/2022 2:41	10.11	6/15/2022 1:28	0.46	6/15/2022 3:11	28.71
6/16/2022 2:54	81.65	6/15/2022 2:12	0.01	6/15/2022 2:42	10.11	6/15/2022 1:29	0.47	6/15/2022 3:12	28.65
6/16/2022 2:55	81.70	6/15/2022 2:13	-0.04	6/15/2022 2:43	10.08	6/15/2022 1:30	0.46	6/15/2022 3:13	28.61
6/16/2022 2:56	81.69	6/15/2022 2:14	0.02	6/15/2022 2:44	10.08	6/15/2022 1:31	0.43	6/15/2022 3:14	28.61
6/16/2022 2:57	81.66	6/15/2022 2:15	-0.05	6/15/2022 2:45	10.09	6/15/2022 1:32	0.41	6/15/2022 3:15	28.60
6/16/2022 2:58	81.66	6/15/2022 2:16	-0.06	6/15/2022 2:46	10.09	6/15/2022 1:33	0.38	6/15/2022 3:16	28.60
6/16/2022 2:59	81.67	6/15/2022 2:17	-0.05	6/15/2022 2:47	10.08	6/15/2022 1:34	0.36	6/15/2022 3:17	28.58
6/16/2022 3:00	81.63	6/15/2022 2:18	-0.03	6/15/2022 2:48	10.06	6/15/2022 1:35	0.43	6/15/2022 3:18	28.59
6/16/2022 3:01	81.68	6/15/2022 2:19	-0.05	6/15/2022 2:49	10.07	6/15/2022 1:36	0.47	6/15/2022 3:19	28.60
6/16/2022 3:02	81.64	6/15/2022 2:20	-0.04	6/15/2022 2:50	10.06	6/15/2022 1:37	0.47	6/15/2022 3:20	30.37
6/16/2022 3:03	81.66	6/15/2022 2:21	-0.04	6/15/2022 2:51	10.04	6/15/2022 1:38	0.48	6/15/2022 3:21	29.74
6/16/2022 3:04	81.67	6/15/2022 2:22	-0.05	6/15/2022 2:52	10.07	6/15/2022 1:39	0.46	6/15/2022 3:22	29.14
6/16/2022 3:05	81.67	6/15/2022 2:23	-0.03	6/15/2022 2:53	10.04	6/15/2022 1:40	0.45	6/15/2022 3:23	30.51
6/16/2022 3:06	81.65	6/15/2022 2:24	-0.01	6/15/2022 2:54	10.04	6/15/2022 1:41	0.37	6/15/2022 3:24	29.43
6/16/2022 3:07	81.67	6/15/2022 2:25	-0.04	6/15/2022 2:55	10.03	6/15/2022 1:42	0.40	6/15/2022 3:25	31.04
6/16/2022 3:08	81.66	6/15/2022 2:26	0.00	6/15/2022 2:56	10.06	6/15/2022 1:43	0.36	6/15/2022 3:26	29.68
6/16/2022 3:09	81.65	6/15/2022 2:27	-0.04	6/15/2022 2:57	10.04	6/15/2022 1:44	0.43	6/15/2022 3:27	31.44
6/16/2022 3:10	81.64	6/15/2022 2:28	-0.04	6/15/2022 2:58	10.00	6/15/2022 1:45	0.42	6/15/2022 3:28	29.95
6/16/2022 3:11	81.69	6/15/2022 2:29	0.00	6/15/2022 2:59	10.06	6/15/2022 1:46	0.41	6/15/2022 3:29	31.27
6/16/2022 3:12	81.69	6/15/2022 2:30	3.06	6/15/2022 3:00	10.03	6/15/2022 1:47	0.41	6/15/2022 3:30	30.18
6/16/2022 3:13	81.62	6/15/2022 2:31	7.11	6/15/2022 3:01	10.06	6/15/2022 1:48	0.39	6/15/2022 3:31	31.37
6/16/2022 3:14	81.66	6/15/2022 2:32	5.80	6/15/2022 3:02	10.09	6/15/2022 1:49	0.37	6/15/2022 3:32	30.27
6/16/2022 3:15	81.65	6/15/2022 2:33	4.86	6/15/2022 3:03	10.08	6/15/2022 1:50	0.36	6/15/2022 3:33	29.85
6/16/2022 3:16	81.62	6/15/2022 2:34	3.97	6/15/2022 3:04	10.10	6/15/2022 1:51	0.43	6/15/2022 3:34	30.60
6/16/2022 3:17	81.64	6/15/2022 2:35	3.29	6/15/2022 3:05	10.08	6/15/2022 1:52	0.51	6/15/2022 3:35	29.53
6/16/2022 3:18	81.62	6/15/2022 2:36	2.70	6/15/2022 3:06	10.11	6/15/2022 1:53	0.52	6/15/2022 3:36	29.04
6/16/2022 3:19	81.64	6/15/2022 2:37	2.24	6/15/2022 3:07	10.13	6/15/2022 1:54	0.48	6/15/2022 3:37	30.69
6/16/2022 3:20	81.64	6/15/2022 2:38	1.82	6/15/2022 3:08	10.14	6/15/2022 1:55	0.46	6/15/2022 3:38	30.03
6/16/2022 3:21	81.66	6/15/2022 2:39	1.50	6/15/2022 3:09	10.12	6/15/2022 1:56	0.42	6/15/2022 3:39	32.10
6/16/2022 3:22	81.63	6/15/2022 2:40	1.16	6/15/2022 3:10	10.10	6/15/2022 1:57	0.38	6/15/2022 3:40	30.15
6/16/2022 3:23	81.63	6/15/2022 2:41	0.99	6/15/2022 3:11	10.14	6/15/2022 1:58	0.35	6/15/2022 3:41	29.27
6/16/2022 3:24	81.66	6/15/2022 2:42	0.71	6/15/2022 3:12	10.10	6/15/2022 1:59	0.39	6/15/2022 3:42	28.93
6/16/2022 3:25	81.65	6/15/2022 2:43	0.51	6/15/2022 3:13	10.10	6/15/2022 2:00	0.41	6/15/2022 3:43	28.84
6/16/2022 3:26	81.63	6/15/2022 2:44	0.39	6/15/2022 3:14	10.11	6/15/2022 2:01	0.43	6/15/2022 3:44	28.79
6/16/2022 3:27	81.61	6/15/2022 2:45	0.19	6/15/2022 3:15	10.14	6/15/2022 2:02	0.45	6/15/2022 3:45	28.77
6/16/2022 3:28	81.66	6/15/2022 2:46	0.07	6/15/2022 3:16	10.12	6/15/2022 2:03	0.50	6/15/2022 3:46	28.75
6/16/2022 3:29	81.62	6/15/2022 2:47	-0.01	6/15/2022 3:17	10.09	6/15/2022 2:04	0.47	6/15/2022 3:47	28.74
6/16/2022 3:30	81.63	6/15/2022 2:48	-0.05	6/15/2022 3:18	10.05	6/15/2022 2:05	0.43	6/15/2022 3:48	28.71
6/16/2022 3:31	81.59	6/15/2022 2:49	-0.03	6/15/2022 3:19	10.09	6/15/2022 2:06	0.42	6/15/2022 3:49	28.68
6/16/2022 3:32	81.61	6/15/2022 2:50	-0.01	6/15/2022 3:20	10.07	6/15/2022 2:07	0.38	6/15/2022 3:50	28.71
6/16/2022 3:33	81.63	6/15/2022 2:51	-0.04	6/15/2022 3:21	10.07	6/15/2022 2:08	0.37	6/15/2022 3:51	28.71
6/16/2022 3:34	81.65	6/15/2022 2:52	-0.03	6/15/2022 3:22	10.07	6/15/2022 2:09	0.39	6/15/2022 3:52	28.72
6/16/2022 3:35	81.64	6/15/2022 2:53	0.00	6/15/2022 3:23	10.06	6/15/2022 2:10	0.43	6/15/2022 3:53	28.68
6/16/2022 3:36	81.61	6/15/2022 2:54	-0.05	6/15/2022 3:24	10.06	6/15/2022 2:11	0.48	6/15/2022 3:54	28.68
6/16/2022 3:37	81.62	6/15/2022 2:55	-0.04	6/15/2022 3:25	10.07	6/15/2022 2:12	0.47	6/15/2022 3:55	28.68
6/16/2022 3:38	81.64	6/15/2022 2:56	-0.03	6/15/2022 3:26	10.06	6/15/2022 2:13	0.48	6/15/2022 3:56	28.67
6/16/2022 3:39	81.63	6/15/2022 2:57	-0.03	6/15/2022 3:27	10.02	6/15/2022 2:14	0.42	6/15/2022 3:57	28.66
6/16/2022 3:40	81.66	6/15/2022 2:58	-0.02	6/15/2022 3:28	10.08	6/15/2022 2:15	0.42	6/15/2022 3:58	28.64

6/16/2022 3:41	81.64	6/15/2022 2:59	-0.05	6/15/2022 3:29	10.01	6/15/2022 2:16	0.38	6/15/2022 3:59	28.64
6/16/2022 3:42	81.65	6/15/2022 3:00	-0.03	6/15/2022 3:30	10.03	6/15/2022 2:17	0.37	6/15/2022 4:00	28.63
6/16/2022 3:43	81.61	6/15/2022 3:01	-0.07	6/15/2022 3:31	10.04	6/15/2022 2:18	0.39	6/15/2022 4:01	28.64
6/16/2022 3:44	81.63	6/15/2022 3:02	-0.04	6/15/2022 3:32	10.01	6/15/2022 2:19	0.41	6/15/2022 4:02	28.65
6/16/2022 3:45	81.62	6/15/2022 3:03	-0.02	6/15/2022 3:33	10.06	6/15/2022 2:20	0.46	6/15/2022 4:03	28.61
6/16/2022 3:46	81.61	6/15/2022 3:04	-0.03	6/15/2022 3:34	10.05	6/15/2022 2:21	0.48	6/15/2022 4:04	28.65
6/16/2022 3:47	81.63	6/15/2022 3:05	-0.03	6/15/2022 3:35	10.10	6/15/2022 2:22	0.49	6/15/2022 4:05	28.63
6/16/2022 3:48	81.60	6/15/2022 3:06	0.02	6/15/2022 3:36	10.09	6/15/2022 2:23	0.41	6/15/2022 4:06	28.64
6/16/2022 3:49	81.62	6/15/2022 3:07	-0.05	6/15/2022 3:37	10.12	6/15/2022 2:24	0.40	6/15/2022 4:07	28.61
6/16/2022 3:50	81.60	6/15/2022 3:08	-0.02	6/15/2022 3:38	10.09	6/15/2022 2:25	0.37	6/15/2022 4:08	28.60
6/16/2022 3:51	81.61	6/15/2022 3:09	-0.05	6/15/2022 3:39	10.12	6/15/2022 2:26	0.37	6/15/2022 4:09	28.61
6/16/2022 3:52	81.63	6/15/2022 3:10	-0.05	6/15/2022 3:40	10.09	6/15/2022 2:27	0.42	6/15/2022 4:10	28.63
6/16/2022 3:53	81.61	6/15/2022 3:11	-0.04	6/15/2022 3:41	10.14	6/15/2022 2:28	0.46	6/15/2022 4:11	28.64
6/16/2022 3:54	81.60	6/15/2022 3:12	-0.02	6/15/2022 3:42	10.09	6/15/2022 2:29	0.54	6/15/2022 4:12	28.62
6/16/2022 3:55	81.62	6/15/2022 3:13	-0.05	6/15/2022 3:43	10.09	6/15/2022 2:30	0.49	6/15/2022 4:13	28.62
6/16/2022 3:56	81.61	6/15/2022 3:14	-0.07	6/15/2022 3:44	10.11	6/15/2022 2:31	0.51	6/15/2022 4:14	28.61
6/16/2022 3:57	81.56	6/15/2022 3:15	0.00	6/15/2022 3:45	10.08	6/15/2022 2:32	0.46	6/15/2022 4:15	28.58
6/16/2022 3:58	81.58	6/15/2022 3:16	-0.01	6/15/2022 3:46	10.11	6/15/2022 2:33	0.51	6/15/2022 4:16	28.57
6/16/2022 3:59	81.62	6/15/2022 3:17	-0.04	6/15/2022 3:47	10.12	6/15/2022 2:34	0.49	6/15/2022 4:17	28.58
6/16/2022 4:00	81.62	6/15/2022 3:18	-0.02	6/15/2022 3:48	10.09	6/15/2022 2:35	0.42	6/15/2022 4:18	28.59
6/16/2022 4:01	81.61	6/15/2022 3:19	-0.01	6/15/2022 3:49	10.08	6/15/2022 2:36	0.41	6/15/2022 4:19	28.59
6/16/2022 4:02	81.61	6/15/2022 3:20	4.52	6/15/2022 3:50	10.08	6/15/2022 2:37	0.41	6/15/2022 4:20	28.59
6/16/2022 4:03	81.59	6/15/2022 3:21	6.74	6/15/2022 3:51	10.07	6/15/2022 2:38	0.44	6/15/2022 4:21	28.57
6/16/2022 4:04	81.60	6/15/2022 3:22	5.50	6/15/2022 3:52	10.08	6/15/2022 2:39	0.40	6/15/2022 4:22	28.59
6/16/2022 4:05	81.62	6/15/2022 3:23	4.57	6/15/2022 3:53	10.08	6/15/2022 2:40	0.39	6/15/2022 4:23	28.60
6/16/2022 4:06	81.61	6/15/2022 3:24	3.82	6/15/2022 3:54	10.05	6/15/2022 2:41	0.40	6/15/2022 4:24	28.55
6/16/2022 4:07	81.59	6/15/2022 3:25	3.10	6/15/2022 3:55	10.09	6/15/2022 2:42	0.39	6/15/2022 4:25	28.58
6/16/2022 4:08	81.59	6/15/2022 3:26	2.56	6/15/2022 3:56	10.10	6/15/2022 2:43	0.42	6/15/2022 4:26	28.54
6/16/2022 4:09	81.59	6/15/2022 3:27	2.14	6/15/2022 3:57	10.04	6/15/2022 2:44	0.46	6/15/2022 4:27	28.58
6/16/2022 4:10	81.57	6/15/2022 3:28	1.70	6/15/2022 3:58	10.04	6/15/2022 2:45	0.50	6/15/2022 4:28	28.55
6/16/2022 4:11	81.58	6/15/2022 3:29	1.40	6/15/2022 3:59	10.04	6/15/2022 2:46	0.48	6/15/2022 4:29	28.55
6/16/2022 4:12	81.64	6/15/2022 3:30	1.13	6/15/2022 4:00	10.07	6/15/2022 2:47	0.47	6/15/2022 4:30	28.59
6/16/2022 4:13	81.62	6/15/2022 3:31	0.90	6/15/2022 4:01	10.02	6/15/2022 2:48	0.41	6/15/2022 4:31	28.57
6/16/2022 4:14	81.60	6/15/2022 3:32	0.65	6/15/2022 4:02	10.06	6/15/2022 2:49	0.41	6/15/2022 4:32	28.56
6/16/2022 4:15	81.61	6/15/2022 3:33	0.45	6/15/2022 4:03	10.03	6/15/2022 2:50	0.38	6/15/2022 4:33	28.56
6/16/2022 4:16	81.61	6/15/2022 3:34	0.31	6/15/2022 4:04	10.02	6/15/2022 2:51	0.40	6/15/2022 4:34	28.58
6/16/2022 4:17	81.54	6/15/2022 3:35	0.15	6/15/2022 4:05	10.02	6/15/2022 2:52	0.41	6/15/2022 4:35	28.55
6/16/2022 4:18	81.55	6/15/2022 3:36	0.09	6/15/2022 4:06	10.06	6/15/2022 2:53	0.42	6/15/2022 4:36	28.58
6/16/2022 4:19	81.57	6/15/2022 3:37	-0.01	6/15/2022 4:07	10.06	6/15/2022 2:54	0.52	6/15/2022 4:37	28.56
6/16/2022 4:20	81.58	6/15/2022 3:38	-0.03	6/15/2022 4:08	10.07	6/15/2022 2:55	0.51	6/15/2022 4:38	28.58
6/16/2022 4:21	81.59	6/15/2022 3:39	0.03	6/15/2022 4:09	10.09	6/15/2022 2:56	0.45	6/15/2022 4:39	28.56
6/16/2022 4:22	81.61	6/15/2022 3:40	-0.02	6/15/2022 4:10	10.12	6/15/2022 2:57	0.44	6/15/2022 4:40	28.54
6/16/2022 4:23	81.59	6/15/2022 3:41	-0.02	6/15/2022 4:11	10.09	6/15/2022 2:58	0.40	6/15/2022 4:41	28.56
6/16/2022 4:24	81.58	6/15/2022 3:42	-0.01	6/15/2022 4:12	10.12	6/15/2022 2:59	0.41	6/15/2022 4:42	28.51
6/16/2022 4:25	81.56	6/15/2022 3:43	-0.01	6/15/2022 4:13	10.10	6/15/2022 3:00	0.41	6/15/2022 4:43	28.53
6/16/2022 4:26	81.58	6/15/2022 3:44	-0.04	6/15/2022 4:14	10.11	6/15/2022 3:01	0.40	6/15/2022 4:44	28.55
6/16/2022 4:27	81.56	6/15/2022 3:45	-0.01	6/15/2022 4:15	10.09	6/15/2022 3:02	0.37	6/15/2022 4:45	28.57
6/16/2022 4:28	81.56	6/15/2022 3:46	-0.03	6/15/2022 4:16	10.13	6/15/2022 3:03	0.46	6/15/2022 4:46	28.53
6/16/2022 4:29	81.60	6/15/2022 3:47	-0.02	6/15/2022 4:17	10.10	6/15/2022 3:04	0.49	6/15/2022 4:47	28.57
6/16/2022 4:30	81.57	6/15/2022 3:48	-0.03	6/15/2022 4:18	10.12	6/15/2022 3:05	0.45	6/15/2022 4:48	28.52
6/16/2022 4:31	81.58	6/15/2022 3:49	-0.02	6/15/2022 4:19	10.10	6/15/2022 3:06	0.46	6/15/2022 4:49	28.52
6/16/2022 4:32	81.54	6/15/2022 3:50	-0.05	6/15/2022 4:20	10.11	6/15/2022 3:07	0.43	6/15/2022 4:50	28.58
6/16/2022 4:33	81.58	6/15/2022 3:51	-0.06	6/15/2022 4:21	10.12	6/15/2022 3:08	0.40	6/15/2022 4:51	28.52
6/16/2022 4:34	81.58	6/15/2022 3:52	-0.01	6/15/2022 4:22	10.16	6/15/2022 3:09	0.37	6/15/2022 4:52	28.50
6/16/2022 4:35	81.58	6/15/2022 3:53	0.00	6/15/2022 4:23	10.20	6/15/2022 3:10	0.39	6/15/2022 4:53	28.57
6/16/2022 4:36	81.54	6/15/2022 3:54	-0.05	6/15/2022 4:24	10.25	6/15/2022 3:11	0.41	6/15/2022 4:54	28.57
6/16/2022 4:37	81.59	6/15/2022 3:55	-0.03	6/15/2022 4:25	10.27	6/15/2022 3:12	0.44	6/15/2022 4:55	28.57
6/16/2022 4:38	81.55	6/15/2022 3:56	-0.02	6/15/2022 4:26	10.31	6/15/2022 3:13	0.50	6/15/2022 4:56	28.55
6/16/2022 4:39	81.54	6/15/2022 3:57	-0.02	6/15/2022 4:27	10.32	6/15/2022 3:14	0.49	6/15/2022 4:57	28.53
6/16/2022 4:40	81.55	6/15/2022 3:58	-0.02	6/15/2022 4:28	10.39	6/15/2022 3:15	0.49	6/15/2022 4:58	28.55
6/16/2022 4:41	81.55	6/15/2022 3:59	-0.03	6/15/2022 4:29	10.45	6/15/2022 3:16	0.44	6/15/2022 4:59	28.55
6/16/2022 4:42	81.56	6/15/2022 4:00	-0.03	6/15/2022 4:30	10.47	6/15/2022 3:17	0.38	6/15/2022 5:00	28.53
6/16/2022 4:43	81.53	6/15/2022 4:01	-0.02	6/15/2022 4:31	10.51	6/15/2022 3:18	0.38	6/15/2022 5:01	28.54
6/16/2022 4:44	81.60	6/15/2022 4:02	-0.03	6/15/2022 4:32	10.54	6/15/2022 3:19	0.40	6/15/2022 5:02	28.54
6/16/2022 4:45	81.52	6/15/2022 4:03	-0.01	6/15/2022 4:33	10.57	6/15/2022 3:20	0.42	6/15/2022 5:03	28.53
6/16/2022 4:46	81.52	6/15/2022 4:04	-0.01	6/15/2022 4:34	10.61	6/15/2022 3:21	0.47	6/15/2022 5:04	28.53
6/16/2022 4:47	81.52	6/15/2022 4:05	-0.07	6/15/2022 4:35	10.60	6/15/2022 3:22	0.46	6/15/2022 5:05	28.56
6/16/2022 4:48	81.57	6/15/2022 4:06	-0.06	6/15/2022 4:36	10.66	6/15/2022 3:23	0.45	6/15/2022 5:06	28.52
6/16/2022 4:49	81.56	6/15/2022 4:07	-0.09	6/15/2022 4:37	10.69	6/15/2022 3:24	0.46	6/15/2022 5:07	28.54
6/16/2022 4:50	81.51	6/15/2022 4:08	-0.01	6/15/2022 4:38	10.73	6/15/2022 3:25	0.46	6/15/2022 5:08	28.50
6/16/2022 4:51	81.52	6/15/2022 4:09	-0.05	6/15/2022 4:39	10.72	6/15/2022 3:26	0.46	6/15/2022 5:09	28.50
6/16/2022 4:52	81.55	6/15/2022 4:10	4.09	6/15/2022 4:40	10.70	6/15/2022 3:27	0.49	6/15/2022 5:10	28.51
6/16/2022 4:53	81.54	6/15/2022 4:11	6.98	6/15/2022 4:41	10.71	6/15/2022 3:28	0.46	6/15/2022 5:11	28.52
6/16/2022 4:54	81.56	6/15/2022 4:12	5.74	6/15/2022 4:42	10.72	6/15/2022 3:29	0.45	6/15/2022 5:12	28.50
6/16/2022 4:55	81.56	6/15/2022 4:13	4.78	6/15/2022 4:43	10.69	6/15/2022 3:30	0.44	6/15/2022 5:13	28.52
6/16/2022 4:56	81.53	6/15/2022 4:14	4.00	6/15/2022 4:44	10.68	6/15/2022 3:31	0.42	6/15/2022 5:14	28.51
6/16/2022 4:57	81.55	6/15/2022 4:15	3.39	6/15/2022 4:45	10.71	6/15/2022 3:32	0.38	6/15/2022 5:15	28.55
6/16/2022 4:58	81.54	6/15/2022 4:16	2.75	6/15/2022 4:46	10.62	6/15/2022 3:33	0.36	6/15/2022 5:16	28.50
6/16/2022 4:59	81.54	6/15/2022 4:17	2.36	6/15/2022 4:47	10.62	6/15/2022 3:34	0.41	6/15/2022 5:17	28.52
6/16/2022 5:00	81.54	6/15/2022 4:18	1.95	6/15/2022 4:48	10.62	6/15/2022 3:35	0.41	6/15/2022 5:18	28.53
6/16/2022 5:01	81.54	6/15/2022 4:19	1.66	6/15/2022 4:49	10.57	6/15/2022 3:36	0.42	6/15/2022 5:19	28.51
6/16/2022 5:02	81.55	6/15/2022 4:20	1.44	6/15/2022 4:50	10.55	6/15/2022 3:37	0.49	6/15/2022 5:20	28.50
6/16/2022 5:03	81.53	6/15/2022 4:21	1.18	6/15/2022 4:51	10.55	6/15/2022 3:38	0.47	6/15/2022 5:21	28.52
6/16/2022 5:04	81.56	6/15/2022 4:22	1.03	6/15/2022 4:52	10.48	6/15/2022 3:39	0.47	6/15/2022 5:22	28.50
6/16/2022 5:05	81.53	6/15/2022 4:23	0.87	6/15/2022 4:53	10.46	6/15/2022 3:40	0.39	6/15/2022 5:23	28.51
6/16/2022 5:06	81.55	6/15/2022 4:24	0.69	6/15/2022 4:54	10.46	6/15/2022 3:41	0.41	6/15/2022 5:24	28.54
6/16/2022 5:07	81.58	6/15/2022 4:25	0.55	6/15/2022 4:55	10.45	6/15/2022 3:42	0.38	6/15/2022 5:25	28.50
6/16/2022 5:08	81.54	6/15/2022 4:26	0.49	6/15/2022 4:56	10.43	6/15/2022 3:43	0.41	6/15/2022 5:26	28.50

6/16/2022 5:09	81.50	6/15/2022 4:27	0.39	6/15/2022 4:57	10.41	6/15/2022 3:44	0.41	6/15/2022 5:27	28.48
6/16/2022 5:10	81.54	6/15/2022 4:28	0.31	6/15/2022 4:58	10.40	6/15/2022 3:45	0.44	6/15/2022 5:28	28.53
6/16/2022 5:11	81.52	6/15/2022 4:29	0.27	6/15/2022 4:59	10.36	6/15/2022 3:46	0.46	6/15/2022 5:29	28.50
6/16/2022 5:12	81.55	6/15/2022 4:30	0.20	6/15/2022 5:00	10.36	6/15/2022 3:47	0.50	6/15/2022 5:30	28.50
6/16/2022 5:13	81.53	6/15/2022 4:31	0.21	6/15/2022 5:01	10.38	6/15/2022 3:48	0.48	6/15/2022 5:31	28.53
6/16/2022 5:14	81.53	6/15/2022 4:32	0.10	6/15/2022 5:02	10.36	6/15/2022 3:49	0.45	6/15/2022 5:32	28.52
6/16/2022 5:15	81.55	6/15/2022 4:33	0.08	6/15/2022 5:03	10.37	6/15/2022 3:50	0.43	6/15/2022 5:33	28.50
6/16/2022 5:16	81.56	6/15/2022 4:34	0.07	6/15/2022 5:04	10.37	6/15/2022 3:51	0.37	6/15/2022 5:34	28.53
6/16/2022 5:17	81.54	6/15/2022 4:35	0.06	6/15/2022 5:05	10.37	6/15/2022 3:52	0.37	6/15/2022 5:35	28.50
6/16/2022 5:18	81.52	6/15/2022 4:36	0.03	6/15/2022 5:06	10.39	6/15/2022 3:53	0.38	6/15/2022 5:36	28.48
6/16/2022 5:19	81.53	6/15/2022 4:37	0.01	6/15/2022 5:07	10.35	6/15/2022 3:54	0.43	6/15/2022 5:37	28.48
6/16/2022 5:20	81.51	6/15/2022 4:38	-0.03	6/15/2022 5:08	10.36	6/15/2022 3:55	0.48	6/15/2022 5:38	28.48
6/16/2022 5:21	81.54	6/15/2022 4:39	-0.03	6/15/2022 5:09	10.37	6/15/2022 3:56	0.48	6/15/2022 5:39	28.48
6/16/2022 5:22	81.53	6/15/2022 4:40	-0.02	6/15/2022 5:10	10.31	6/15/2022 3:57	0.46	6/15/2022 5:40	28.49
6/16/2022 5:23	81.50	6/15/2022 4:41	0.01	6/15/2022 5:11	10.32	6/15/2022 3:58	0.43	6/15/2022 5:41	28.52
6/16/2022 5:24	81.54	6/15/2022 4:42	0.00	6/15/2022 5:12	10.29	6/15/2022 3:59	0.42	6/15/2022 5:42	28.51
6/16/2022 5:25	81.55	6/15/2022 4:43	-0.02	6/15/2022 5:13	10.29	6/15/2022 4:00	0.39	6/15/2022 5:43	28.49
6/16/2022 5:26	81.53	6/15/2022 4:44	0.00	6/15/2022 5:14	10.28	6/15/2022 4:01	0.38	6/15/2022 5:44	28.49
6/16/2022 5:27	81.51	6/15/2022 4:45	0.00	6/15/2022 5:15	10.29	6/15/2022 4:02	0.39	6/15/2022 5:45	28.50
6/16/2022 5:28	81.52	6/15/2022 4:46	0.01	6/15/2022 5:16	10.26	6/15/2022 4:03	0.40	6/15/2022 5:46	28.48
6/16/2022 5:29	81.51	6/15/2022 4:47	0.04	6/15/2022 5:17	10.24	6/15/2022 4:04	0.38	6/15/2022 5:47	28.47
6/16/2022 5:30	81.49	6/15/2022 4:48	0.00	6/15/2022 5:18	10.24	6/15/2022 4:05	0.40	6/15/2022 5:48	28.48
6/16/2022 5:31	81.50	6/15/2022 4:49	0.02	6/15/2022 5:19	10.25	6/15/2022 4:06	0.42	6/15/2022 5:49	28.51
6/16/2022 5:32	81.51	6/15/2022 4:50	-0.02	6/15/2022 5:20	10.21	6/15/2022 4:07	0.42	6/15/2022 5:50	28.51
6/16/2022 5:33	81.49	6/15/2022 4:51	0.03	6/15/2022 5:21	10.19	6/15/2022 4:08	0.44	6/15/2022 5:51	28.48
6/16/2022 5:34	81.56	6/15/2022 4:52	0.03	6/15/2022 5:22	10.23	6/15/2022 4:09	0.44	6/15/2022 5:52	28.51
6/16/2022 5:35	81.52	6/15/2022 4:53	0.01	6/15/2022 5:23	10.19	6/15/2022 4:10	0.42	6/15/2022 5:53	28.49
6/16/2022 5:36	81.54	6/15/2022 4:54	0.01	6/15/2022 5:24	10.19	6/15/2022 4:11	0.41	6/15/2022 5:54	28.50
6/16/2022 5:37	81.53	6/15/2022 4:55	0.02	6/15/2022 5:25	10.18	6/15/2022 4:12	0.40	6/15/2022 5:55	28.47
6/16/2022 5:38	81.50	6/15/2022 4:56	0.03	6/15/2022 5:26	10.15	6/15/2022 4:13	0.44	6/15/2022 5:56	28.51
6/16/2022 5:39	81.50	6/15/2022 4:57	0.02	6/15/2022 5:27	10.14	6/15/2022 4:14	0.47	6/15/2022 5:57	28.47
6/16/2022 5:40	81.53	6/15/2022 4:58	0.05	6/15/2022 5:28	10.15	6/15/2022 4:15	0.41	6/15/2022 5:58	28.47
6/16/2022 5:41	81.48	6/15/2022 4:59	0.03	6/15/2022 5:29	10.15	6/15/2022 4:16	0.35	6/15/2022 5:59	28.49
6/16/2022 5:42	81.55	6/15/2022 5:00	5.42	6/15/2022 5:30	10.15	6/15/2022 4:17	0.44	6/15/2022 6:00	28.52
6/16/2022 5:43	81.49	6/15/2022 5:01	6.67	6/15/2022 5:31	10.13	6/15/2022 4:18	0.47	6/15/2022 6:01	28.50
6/16/2022 5:44	81.50	6/15/2022 5:02	5.56	6/15/2022 5:32	10.12	6/15/2022 4:19	0.46	6/15/2022 6:02	28.48
6/16/2022 5:45	81.54	6/15/2022 5:03	4.69	6/15/2022 5:33	10.14	6/15/2022 4:20	0.43	6/15/2022 6:03	28.48
6/16/2022 5:46	81.53	6/15/2022 5:04	3.91	6/15/2022 5:34	10.15	6/15/2022 4:21	0.40	6/15/2022 6:04	28.51
6/16/2022 5:47	81.50	6/15/2022 5:05	3.38	6/15/2022 5:35	10.17	6/15/2022 4:22	0.42	6/15/2022 6:05	28.51
6/16/2022 5:48	81.49	6/15/2022 5:06	2.87	6/15/2022 5:36	10.18	6/15/2022 4:23	0.44	6/15/2022 6:06	28.47
6/16/2022 5:49	81.49	6/15/2022 5:07	2.41	6/15/2022 5:37	10.20	6/15/2022 4:24	0.44	6/15/2022 6:07	28.51
6/16/2022 5:50	81.51	6/15/2022 5:08	2.09	6/15/2022 5:38	10.18	6/15/2022 4:25	0.39	6/15/2022 6:08	28.53
6/16/2022 5:51	81.48	6/15/2022 5:09	1.77	6/15/2022 5:39	10.21	6/15/2022 4:26	0.39	6/15/2022 6:09	28.49
6/16/2022 5:52	81.48	6/15/2022 5:10	1.56	6/15/2022 5:40	10.18	6/15/2022 4:27	0.43	6/15/2022 6:10	28.48
6/16/2022 5:53	81.49	6/15/2022 5:11	1.31	6/15/2022 5:41	10.20	6/15/2022 4:28	0.47	6/15/2022 6:11	28.47
6/16/2022 5:54	81.49	6/15/2022 5:12	1.15	6/15/2022 5:42	10.22	6/15/2022 4:29	0.37	6/15/2022 6:12	28.50
6/16/2022 5:55	81.48	6/15/2022 5:13	1.05	6/15/2022 5:43	10.17	6/15/2022 4:30	0.39	6/15/2022 6:13	28.50
6/16/2022 5:56	81.51	6/15/2022 5:14	0.86	6/15/2022 5:44	10.18	6/15/2022 4:31	0.45	6/15/2022 6:14	28.49
6/16/2022 5:57	81.47	6/15/2022 5:15	0.76	6/15/2022 5:45	10.16	6/15/2022 4:32	0.47	6/15/2022 6:15	28.50
6/16/2022 5:58	81.47	6/15/2022 5:16	0.62	6/15/2022 5:46	10.20	6/15/2022 4:33	0.40	6/15/2022 6:16	28.47
6/16/2022 5:59	81.47	6/15/2022 5:17	0.56	6/15/2022 5:47	10.14	6/15/2022 4:34	0.36	6/15/2022 6:17	28.46
6/16/2022 6:00	81.52	6/15/2022 5:18	0.49	6/15/2022 5:48	10.17	6/15/2022 4:35	0.36	6/15/2022 6:18	28.48
6/16/2022 6:01	81.50	6/15/2022 5:19	0.43	6/15/2022 5:49	10.14	6/15/2022 4:36	0.50	6/15/2022 6:19	28.49
6/16/2022 6:02	81.51	6/15/2022 5:20	0.34	6/15/2022 5:50	10.15	6/15/2022 4:37	0.43	6/15/2022 6:20	28.46
6/16/2022 6:03	81.48	6/15/2022 5:21	0.30	6/15/2022 5:51	10.08	6/15/2022 4:38	0.40	6/15/2022 6:21	28.48
6/16/2022 6:04	81.49	6/15/2022 5:22	0.25	6/15/2022 5:52	10.13	6/15/2022 4:39	0.39	6/15/2022 6:22	28.47
6/16/2022 6:05	81.52	6/15/2022 5:23	0.22	6/15/2022 5:53	10.15	6/15/2022 4:40	0.43	6/15/2022 6:23	28.50
6/16/2022 6:06	81.49	6/15/2022 5:24	0.14	6/15/2022 5:54	10.14	6/15/2022 4:41	0.47	6/15/2022 6:24	28.47
6/16/2022 6:07	81.47	6/15/2022 5:25	0.11	6/15/2022 5:55	10.11	6/15/2022 4:42	0.43	6/15/2022 6:25	28.49
6/16/2022 6:08	81.47	6/15/2022 5:26	0.17	6/15/2022 5:56	10.12	6/15/2022 4:43	0.37	6/15/2022 6:26	28.48
6/16/2022 6:09	81.53	6/15/2022 5:27	0.22	6/15/2022 5:57	10.10	6/15/2022 4:44	0.47	6/15/2022 6:27	28.50
6/16/2022 6:10	81.50	6/15/2022 5:28	0.20	6/15/2022 5:58	10.10	6/15/2022 4:45	0.41	6/15/2022 6:28	28.45
6/16/2022 6:11	81.48	6/15/2022 5:29	0.18	6/15/2022 5:59	10.08	6/15/2022 4:46	0.36	6/15/2022 6:29	28.46
6/16/2022 6:12	81.52	6/15/2022 5:30	0.12	6/15/2022 6:00	10.08	6/15/2022 4:47	0.51	6/15/2022 6:30	28.50
6/16/2022 6:13	81.50	6/15/2022 5:31	0.12	6/15/2022 6:01	10.07	6/15/2022 4:48	0.41	6/15/2022 6:31	28.45
6/16/2022 6:14	81.52	6/15/2022 5:32	0.10	6/15/2022 6:02	10.09	6/15/2022 4:49	0.41	6/15/2022 6:32	28.48
6/16/2022 6:15	81.52	6/15/2022 5:33	0.05	6/15/2022 6:03	10.08	6/15/2022 4:50	0.49	6/15/2022 6:33	28.52
6/16/2022 6:16	81.52	6/15/2022 5:34	0.06	6/15/2022 6:04	10.08	6/15/2022 4:51	0.36	6/15/2022 6:34	28.47
6/16/2022 6:17	81.50	6/15/2022 5:35	0.04	6/15/2022 6:05	10.06	6/15/2022 4:52	0.41	6/15/2022 6:35	28.51
6/16/2022 6:18	81.52	6/15/2022 5:36	0.05	6/15/2022 6:06	10.05	6/15/2022 4:53	0.51	6/15/2022 6:36	28.49
6/16/2022 6:19	81.48	6/15/2022 5:37	0.05	6/15/2022 6:07	10.10	6/15/2022 4:54	0.37	6/15/2022 6:37	28.50
6/16/2022 6:20	81.49	6/15/2022 5:38	0.03	6/15/2022 6:08	10.11	6/15/2022 4:55	0.41	6/15/2022 6:38	28.49
6/16/2022 6:21	81.51	6/15/2022 5:39	0.01	6/15/2022 6:09	10.14	6/15/2022 4:56	0.48	6/15/2022 6:39	28.50
6/16/2022 6:22	81.49	6/15/2022 5:40	0.00	6/15/2022 6:10	10.12	6/15/2022 4:57	0.38	6/15/2022 6:40	28.48
6/16/2022 6:23	81.51	6/15/2022 5:41	-0.03	6/15/2022 6:11	10.15	6/15/2022 4:58	0.43	6/15/2022 6:41	28.47
6/16/2022 6:24	81.55	6/15/2022 5:42	0.00	6/15/2022 6:12	10.14	6/15/2022 4:59	0.47	6/15/2022 6:42	28.46
6/16/2022 6:25	81.53	6/15/2022 5:43	0.03	6/15/2022 6:13	10.12	6/15/2022 5:00	0.37	6/15/2022 6:43	28.49
6/16/2022 6:26	81.51	6/15/2022 5:44	0.02	6/15/2022 6:14	10.16	6/15/2022 5:01	0.49	6/15/2022 6:44	28.48
6/16/2022 6:27	81.56	6/15/2022 5:45	0.01	6/15/2022 6:15	10.11	6/15/2022 5:02	0.39	6/15/2022 6:45	28.50
6/16/2022 6:28	81.52	6/15/2022 5:46	-0.01	6/15/2022 6:16	10.14	6/15/2022 5:03	0.45	6/15/2022 6:46	28.51
6/16/2022 6:29	81.53	6/15/2022 5:47	0.01	6/15/2022 6:17	10.13	6/15/2022 5:04	0.41	6/15/2022 6:47	28.65
6/16/2022 6:30	81.51	6/15/2022 5:48	0.03	6/15/2022 6:18	10.14	6/15/2022 5:05	0.42	6/15/2022 6:48	30.17
6/16/2022 6:31	81.56	6/15/2022 5:49	3.73	6/15/2022 6:19	10.10	6/15/2022 5:06	0.38	6/15/2022 6:49	29.15
6/16/2022 6:32	81.49	6/15/2022 5:50	7.02	6/15/2022 6:20	10.10	6/15/2022 5:07	0.44	6/15/2022 6:50	28.73
6/16/2022 6:33	81.53	6/15/2022 5:51	5.83	6/15/2022 6:21	10.11	6/15/2022 5:08	0.45	6/15/2022 6:51	28.60
6/16/2022 6:34	81.54	6/15/2022 5:52	4.88	6/15/2022 6:22	10.12	6/15/2022 5:09	0.39	6/15/2022 6:52	28.55
6/16/2022 6:35	81.50	6/15/2022 5:53	4.14	6/15/2022 6:23	10.12	6/15/2022 5:10	0.45	6/15/2022 6:53	28.54
6/16/2022 6:36	81.50	6/15/2022 5:54	3.46	6/15/2022 6:24	10.14	6/15/2022 5:11	0.37	6/15/2022 6:54	28.52

6/16/2022 6:37	81.53	6/15/2022 5:55	2.97	6/15/2022 6:25	10.15	6/15/2022 5:12	0.39	6/15/2022 6:55	28.53
6/16/2022 6:38	81.56	6/15/2022 5:56	2.53	6/15/2022 6:26	10.19	6/15/2022 5:13	0.43	6/15/2022 6:56	30.35
6/16/2022 6:39	81.48	6/15/2022 5:57	2.17	6/15/2022 6:27	10.16	6/15/2022 5:14	0.36	6/15/2022 6:57	29.30
6/16/2022 6:40	81.56	6/15/2022 5:58	1.88	6/15/2022 6:28	10.19	6/15/2022 5:15	0.45	6/15/2022 6:58	28.79
6/16/2022 6:41	81.54	6/15/2022 5:59	1.66	6/15/2022 6:29	10.15	6/15/2022 5:16	0.41	6/15/2022 6:59	28.63
6/16/2022 6:42	81.56	6/15/2022 6:00	1.42	6/15/2022 6:30	10.19	6/15/2022 5:17	0.42	6/15/2022 7:00	28.52
6/16/2022 6:43	81.50	6/15/2022 6:01	1.24	6/15/2022 6:31	10.18	6/15/2022 5:18	0.49	6/15/2022 7:01	28.55
6/16/2022 6:44	81.49	6/15/2022 6:02	1.07	6/15/2022 6:32	10.17	6/15/2022 5:19	0.37	6/15/2022 7:02	28.56
6/16/2022 6:45	81.53	6/15/2022 6:03	0.97	6/15/2022 6:33	10.16	6/15/2022 5:20	0.40	6/15/2022 7:03	28.53
6/16/2022 6:46	81.51	6/15/2022 6:04	0.87	6/15/2022 6:34	10.18	6/15/2022 5:21	0.46	6/15/2022 7:04	28.49
6/16/2022 6:47	81.52	6/15/2022 6:05	0.76	6/15/2022 6:35	10.20	6/15/2022 5:22	0.41	6/15/2022 7:05	28.54
6/16/2022 6:48	81.49	6/15/2022 6:06	0.68	6/15/2022 6:36	10.19	6/15/2022 5:23	0.36	6/15/2022 7:06	28.54
6/16/2022 6:49	81.53	6/15/2022 6:07	0.62	6/15/2022 6:37	10.16	6/15/2022 5:24	0.38	6/15/2022 7:07	28.49
6/16/2022 6:50	81.51	6/15/2022 6:08	0.55	6/15/2022 6:38	10.15	6/15/2022 5:25	0.44	6/15/2022 7:08	28.52
6/16/2022 6:51	81.51	6/15/2022 6:09	0.48	6/15/2022 6:39	10.13	6/15/2022 5:26	4.97	6/15/2022 7:09	28.50
6/16/2022 6:52	81.49	6/15/2022 6:10	0.47	6/15/2022 6:40	10.15	6/15/2022 5:27	2.81	6/15/2022 7:10	28.52
6/16/2022 6:53	81.48	6/15/2022 6:11	0.42	6/15/2022 6:41	10.13	6/15/2022 5:28	1.01	6/15/2022 7:11	28.56
6/16/2022 6:54	81.51	6/15/2022 6:12	0.36	6/15/2022 6:42	10.13	6/15/2022 5:29	0.46	6/15/2022 7:12	28.55
6/16/2022 6:55	81.53	6/15/2022 6:13	0.39	6/15/2022 6:43	10.13	6/15/2022 5:30	0.34	6/15/2022 7:13	28.51
6/16/2022 6:56	81.52	6/15/2022 6:14	0.32	6/15/2022 6:44	10.16	6/15/2022 5:31	0.39	6/15/2022 7:14	28.52
6/16/2022 6:57	81.49	6/15/2022 6:15	0.30	6/15/2022 6:45	10.11	6/15/2022 5:32	0.49	6/15/2022 7:15	28.52
6/16/2022 6:58	81.53	6/15/2022 6:16	0.26	6/15/2022 6:46	10.10	6/15/2022 5:33	0.37	6/15/2022 7:16	28.53
6/16/2022 6:59	81.49	6/15/2022 6:17	0.28	6/15/2022 6:47	10.10	6/15/2022 5:34	0.34	6/15/2022 7:17	28.52
6/16/2022 7:00	81.53	6/15/2022 6:18	0.26	6/15/2022 6:48	10.08	6/15/2022 5:35	0.43	6/15/2022 7:18	28.50
6/16/2022 7:01	81.50	6/15/2022 6:19	0.28	6/15/2022 6:49	10.09	6/15/2022 5:36	0.39	6/15/2022 7:19	28.48
6/16/2022 7:02	81.49	6/15/2022 6:20	0.33	6/15/2022 6:50	10.06	6/15/2022 5:37	0.36	6/15/2022 7:20	28.51
6/16/2022 7:03	81.51	6/15/2022 6:21	0.37	6/15/2022 6:51	10.08	6/15/2022 5:38	0.44	6/15/2022 7:21	28.48
6/16/2022 7:04	81.49	6/15/2022 6:22	0.34	6/15/2022 6:52	10.09	6/15/2022 5:39	0.47	6/15/2022 7:22	28.52
6/16/2022 7:05	81.48	6/15/2022 6:23	0.33	6/15/2022 6:53	10.07	6/15/2022 5:40	0.35	6/15/2022 7:23	28.52
6/16/2022 7:06	81.48	6/15/2022 6:24	0.36	6/15/2022 6:54	10.07	6/15/2022 5:41	0.39	6/15/2022 7:24	28.48
6/16/2022 7:07	81.51	6/15/2022 6:25	0.36	6/15/2022 6:55	10.13	6/15/2022 5:42	0.46	6/15/2022 7:25	28.50
6/16/2022 7:08	81.50	6/15/2022 6:26	0.39	6/15/2022 6:56	10.11	6/15/2022 5:43	0.36	6/15/2022 7:26	28.50
6/16/2022 7:09	81.50	6/15/2022 6:27	0.34	6/15/2022 6:57	10.11	6/15/2022 5:44	0.38	6/15/2022 7:27	28.48
6/16/2022 7:10	81.53	6/15/2022 6:28	0.34	6/15/2022 6:58	10.15	6/15/2022 5:45	0.48	6/15/2022 7:28	28.48
6/16/2022 7:11	81.48	6/15/2022 6:29	0.34	6/15/2022 6:59	10.13	6/15/2022 5:46	0.36	6/15/2022 7:29	28.47
6/16/2022 7:12	81.49	6/15/2022 6:30	0.32	6/15/2022 7:00	10.13	6/15/2022 5:47	0.41	6/15/2022 7:30	28.47
6/16/2022 7:13	81.50	6/15/2022 6:31	0.33	6/15/2022 7:01	10.15	6/15/2022 5:48	0.48	6/15/2022 7:31	28.53
6/16/2022 7:14	81.48	6/15/2022 6:32	0.31	6/15/2022 7:02	10.17	6/15/2022 5:49	0.38	6/15/2022 7:32	28.50
6/16/2022 7:15	81.50	6/15/2022 6:33	0.26	6/15/2022 7:03	10.13	6/15/2022 5:50	0.41	6/15/2022 7:33	28.49
6/16/2022 7:16	81.47	6/15/2022 6:34	0.25	6/15/2022 7:04	10.16	6/15/2022 5:51	0.38	6/15/2022 7:34	28.48
6/16/2022 7:17	81.50	6/15/2022 6:35	5.43	6/15/2022 7:05	10.15	6/15/2022 5:52	0.45	6/15/2022 7:35	28.50
6/16/2022 7:18	81.53	6/15/2022 6:36	7.93	6/15/2022 7:06	10.14	6/15/2022 5:53	0.39	6/15/2022 7:36	28.50
6/16/2022 7:19	81.49	6/15/2022 6:37	6.64	6/15/2022 7:07	10.11	6/15/2022 5:54	0.42	6/15/2022 7:37	28.48
6/16/2022 7:20	81.48	6/15/2022 6:38	5.59	6/15/2022 7:08	10.14	6/15/2022 5:55	0.38	6/15/2022 7:38	28.47
6/16/2022 7:21	81.46	6/15/2022 6:39	4.71	6/15/2022 7:09	10.13	6/15/2022 5:56	0.44	6/15/2022 7:39	28.50
6/16/2022 7:22	81.48	6/15/2022 6:40	4.04	6/15/2022 7:10	10.16	6/15/2022 5:57	0.40	6/15/2022 7:40	28.49
6/16/2022 7:23	81.45	6/15/2022 6:41	3.44	6/15/2022 7:11	10.14	6/15/2022 5:58	0.47	6/15/2022 7:41	28.48
6/16/2022 7:24	81.47	6/15/2022 6:42	6.57	6/15/2022 7:12	10.12	6/15/2022 5:59	0.40	6/15/2022 7:42	28.48
6/16/2022 7:25	81.47	6/15/2022 6:43	11.15	6/15/2022 7:13	10.14	6/15/2022 6:00	0.48	6/15/2022 7:43	28.48
6/16/2022 7:26	81.45	6/15/2022 6:44	9.47	6/15/2022 7:14	10.17	6/15/2022 6:01	0.38	6/15/2022 7:44	28.51
6/16/2022 7:27	81.49	6/15/2022 6:45	7.98	6/15/2022 7:15	10.15	6/15/2022 6:02	0.41	6/15/2022 7:45	28.53
6/16/2022 7:28	81.48	6/15/2022 6:46	6.71	6/15/2022 7:16	10.14	6/15/2022 6:03	0.40	6/15/2022 7:46	28.47
6/16/2022 7:29	81.49	6/15/2022 6:47	5.68	6/15/2022 7:17	10.19	6/15/2022 6:04	0.42	6/15/2022 7:47	28.50
6/16/2022 7:30	81.48	6/15/2022 6:48	4.88	6/15/2022 7:18	10.16	6/15/2022 6:05	0.35	6/15/2022 7:48	28.48
6/16/2022 7:31	81.48	6/15/2022 6:49	4.16	6/15/2022 7:19	10.19	6/15/2022 6:06	0.47	6/15/2022 7:49	28.50
6/16/2022 7:32	81.48	6/15/2022 6:50	3.52	6/15/2022 7:20	10.16	6/15/2022 6:07	0.35	6/15/2022 7:50	28.50
6/16/2022 7:33	81.48	6/15/2022 6:51	3.00	6/15/2022 7:21	10.20	6/15/2022 6:08	0.45	6/15/2022 7:51	28.49
6/16/2022 7:34	81.51	6/15/2022 6:52	2.60	6/15/2022 7:22	10.17	6/15/2022 6:09	0.38	6/15/2022 7:52	28.48
6/16/2022 7:35	81.50	6/15/2022 6:53	2.21	6/15/2022 7:23	10.15	6/15/2022 6:10	0.46	6/15/2022 7:53	28.50
6/16/2022 7:36	81.48	6/15/2022 6:54	1.95	6/15/2022 7:24	10.21	6/15/2022 6:11	0.32	6/15/2022 7:54	28.48
6/16/2022 7:37	81.48	6/15/2022 6:55	1.73	6/15/2022 7:25	10.16	6/15/2022 6:12	0.45	6/15/2022 7:55	28.49
6/16/2022 7:38	81.53	6/15/2022 6:56	1.51	6/15/2022 7:26	10.17	6/15/2022 6:13	0.37	6/15/2022 7:56	28.49
6/16/2022 7:39	81.47	6/15/2022 6:57	1.29	6/15/2022 7:27	10.18	6/15/2022 6:14	0.47	6/15/2022 7:57	28.50
6/16/2022 7:40	81.47	6/15/2022 6:58	1.12	6/15/2022 7:28	10.17	6/15/2022 6:15	0.38	6/15/2022 7:58	28.50
6/16/2022 7:41	81.45	6/15/2022 6:59	0.99	6/15/2022 7:29	10.18	6/15/2022 6:16	0.40	6/15/2022 7:59	28.50
6/16/2022 7:42	81.47	6/15/2022 7:00	0.84	6/15/2022 7:30	10.13	6/15/2022 6:17	0.38	6/15/2022 8:00	28.50
6/16/2022 7:43	81.45	6/15/2022 7:01	0.66	6/15/2022 7:31	10.11	6/15/2022 6:18	0.40	6/15/2022 8:01	28.45
6/16/2022 7:44	81.49	6/15/2022 7:02	0.57	6/15/2022 7:32	10.13	6/15/2022 6:19	4.48	6/15/2022 8:02	28.49
6/16/2022 7:45	81.47	6/15/2022 7:03	0.41	6/15/2022 7:33	10.14	6/15/2022 6:20	3.47	6/15/2022 8:03	28.50
6/16/2022 7:46	81.47	6/15/2022 7:04	0.34	6/15/2022 7:34	10.13	6/15/2022 6:21	1.51	6/15/2022 8:04	28.51
6/16/2022 7:47	81.43	6/15/2022 7:05	0.26	6/15/2022 7:35	10.09	6/15/2022 6:22	0.40	6/15/2022 8:05	28.48
6/16/2022 7:48	81.49	6/15/2022 7:06	0.16	6/15/2022 7:36	10.10	6/15/2022 6:23	0.39	6/15/2022 8:06	28.47
6/16/2022 7:49	81.48	6/15/2022 7:07	0.15	6/15/2022 7:37	10.13	6/15/2022 6:24	4.18	6/15/2022 8:07	28.46
6/16/2022 7:50	81.44	6/15/2022 7:08	0.06	6/15/2022 7:38	10.08	6/15/2022 6:25	2.04	6/15/2022 8:08	28.50
6/16/2022 7:51	81.45	6/15/2022 7:09	0.02	6/15/2022 7:39	10.11	6/15/2022 6:26	0.54	6/15/2022 8:09	28.48
6/16/2022 7:52	81.47	6/15/2022 7:10	-0.02	6/15/2022 7:40	10.06	6/15/2022 6:27	0.46	6/15/2022 8:10	28.50
6/16/2022 7:53	81.43	6/15/2022 7:11	-0.02	6/15/2022 7:41	10.10	6/15/2022 6:28	0.41	6/15/2022 8:11	28.48
6/16/2022 7:54	81.46	6/15/2022 7:12	0.00	6/15/2022 7:42	10.09	6/15/2022 6:29	0.42	6/15/2022 8:12	28.50
6/16/2022 7:55	81.45	6/15/2022 7:13	-0.03	6/15/2022 7:43	10.15	6/15/2022 6:30	0.40	6/15/2022 8:13	28.47
6/16/2022 7:56	81.45	6/15/2022 7:14	-0.05	6/15/2022 7:44	10.11	6/15/2022 6:31	0.37	6/15/2022 8:14	28.52
6/16/2022 7:57	81.47	6/15/2022 7:15	-0.02	6/15/2022 7:45	10.13	6/15/2022 6:32	0.39	6/15/2022 8:15	28.49
6/16/2022 7:58	81.44	6/15/2022 7:16	-0.03	6/15/2022 7:46	10.14	6/15/2022 6:33	0.33	6/15/2022 8:16	28.52
6/16/2022 7:59	81.46	6/15/2022 7:17	-0.04	6/15/2022 7:47	10.17	6/15/2022 6:34	0.42	6/15/2022 8:17	28.46
6/16/2022 8:00	81.42	6/15/2022 7:18	-0.06	6/15/2022 7:48	10.19	6/15/2022 6:35	0.39	6/15/2022 8:18	28.49
6/16/2022 8:01	81.50	6/15/2022 7:19	-0.02	6/15/2022 7:49	10.20	6/15/2022 6:36	0.39	6/15/2022 8:19	28.51
6/16/2022 8:02	81.46	6/15/2022 7:20	-0.04	6/15/2022 7:50	10.17	6/15/2022 6:37	0.37	6/15/2022 8:20	30.05
6/16/2022 8:03	81.45	6/15/2022 7:21	-0.01	6/15/2022 7:51	10.18	6/15/2022 6:38	0.39	6/15/2022 8:21	29.14
6/16/2022 8:04	81.46	6/15/2022 7:22	-0.02	6/15/2022 7:52	10.17	6/15/2022 6:39	0.40	6/15/2022 8:22	28.70

6/16/2022 8:05	81.45	6/15/2022 7:23	0.00	6/15/2022 7:53	10.15	6/15/2022 6:40	0.45	6/15/2022 8:23	28.59
6/16/2022 8:06	81.46	6/15/2022 7:24	-0.03	6/15/2022 7:54	10.16	6/15/2022 6:41	0.38	6/15/2022 8:24	28.55
6/16/2022 8:07	81.47	6/15/2022 7:25	2.49	6/15/2022 7:55	10.15	6/15/2022 6:42	0.40	6/15/2022 8:25	28.53
6/16/2022 8:08	81.43	6/15/2022 7:26	8.10	6/15/2022 7:56	10.18	6/15/2022 6:43	0.42	6/15/2022 8:26	28.50
6/16/2022 8:09	81.42	6/15/2022 7:27	6.44	6/15/2022 7:57	10.14	6/15/2022 6:44	0.37	6/15/2022 8:27	28.54
6/16/2022 8:10	81.41	6/15/2022 7:28	5.32	6/15/2022 7:58	10.13	6/15/2022 6:45	0.36	6/15/2022 8:28	28.51
6/16/2022 8:11	81.46	6/15/2022 7:29	4.44	6/15/2022 7:59	10.17	6/15/2022 6:46	0.35	6/15/2022 8:29	28.52
6/16/2022 8:12	81.46	6/15/2022 7:30	3.72	6/15/2022 8:00	10.16	6/15/2022 6:47	0.36	6/15/2022 8:30	28.53
6/16/2022 8:13	81.44	6/15/2022 7:31	3.07	6/15/2022 8:01	10.13	6/15/2022 6:48	0.43	6/15/2022 8:31	28.49
6/16/2022 8:14	81.45	6/15/2022 7:32	2.57	6/15/2022 8:02	10.10	6/15/2022 6:49	0.37	6/15/2022 8:32	28.56
6/16/2022 8:15	81.46	6/15/2022 7:33	6.07	6/15/2022 8:03	10.08	6/15/2022 6:50	0.45	6/15/2022 8:33	28.53
6/16/2022 8:16	81.47	6/15/2022 7:34	9.38	6/15/2022 8:04	10.12	6/15/2022 6:51	0.37	6/15/2022 8:34	28.52
6/16/2022 8:17	81.46	6/15/2022 7:35	7.82	6/15/2022 8:05	10.10	6/15/2022 6:52	0.44	6/15/2022 8:35	28.50
6/16/2022 8:18	81.47	6/15/2022 7:36	6.51	6/15/2022 8:06	10.10	6/15/2022 6:53	0.36	6/15/2022 8:36	28.50
6/16/2022 8:19	81.45	6/15/2022 7:37	5.48	6/15/2022 8:07	10.11	6/15/2022 6:54	0.43	6/15/2022 8:37	28.52
6/16/2022 8:20	81.42	6/15/2022 7:38	4.58	6/15/2022 8:08	10.11	6/15/2022 6:55	0.37	6/15/2022 8:38	28.50
6/16/2022 8:21	81.44	6/15/2022 7:39	3.86	6/15/2022 8:09	10.07	6/15/2022 6:56	0.41	6/15/2022 8:39	28.50
6/16/2022 8:22	81.48	6/15/2022 7:40	3.23	6/15/2022 8:10	10.09	6/15/2022 6:57	0.34	6/15/2022 8:40	28.48
6/16/2022 8:23	81.47	6/15/2022 7:41	2.67	6/15/2022 8:11	10.12	6/15/2022 6:58	0.37	6/15/2022 8:41	28.48
6/16/2022 8:24	81.48	6/15/2022 7:42	2.27	6/15/2022 8:12	10.09	6/15/2022 6:59	0.47	6/15/2022 8:42	28.50
6/16/2022 8:25	81.49	6/15/2022 7:43	1.90	6/15/2022 8:13	10.09	6/15/2022 7:00	0.39	6/15/2022 8:43	28.55
6/16/2022 8:26	81.46	6/15/2022 7:44	1.58	6/15/2022 8:14	10.06	6/15/2022 7:01	0.33	6/15/2022 8:44	28.57
6/16/2022 8:27	81.45	6/15/2022 7:45	1.29	6/15/2022 8:15	10.06	6/15/2022 7:02	0.39	6/15/2022 8:45	28.60
6/16/2022 8:28	81.46	6/15/2022 7:46	1.06	6/15/2022 8:16	10.11	6/15/2022 7:03	0.44	6/15/2022 8:46	28.59
6/16/2022 8:29	81.43	6/15/2022 7:47	0.92	6/15/2022 8:17	10.11	6/15/2022 7:04	0.44	6/15/2022 8:47	28.59
6/16/2022 8:30	81.43	6/15/2022 7:48	0.71	6/15/2022 8:18	10.13	6/15/2022 7:05	0.44	6/15/2022 8:48	28.62
6/16/2022 8:31	81.43	6/15/2022 7:49	0.51	6/15/2022 8:19	10.15	6/15/2022 7:06	0.46	6/15/2022 8:49	28.62
6/16/2022 8:32	81.42	6/15/2022 7:50	0.45	6/15/2022 8:20	10.18	6/15/2022 7:07	0.43	6/15/2022 8:50	28.62
6/16/2022 8:33	81.43	6/15/2022 7:51	0.30	6/15/2022 8:21	10.16	6/15/2022 7:08	0.44	6/15/2022 8:51	28.64
6/16/2022 8:34	81.43	6/15/2022 7:52	0.16	6/15/2022 8:22	10.19	6/15/2022 7:09	0.41	6/15/2022 8:52	28.63
6/16/2022 8:35	81.44	6/15/2022 7:53	0.11	6/15/2022 8:23	10.18	6/15/2022 7:10	0.38	6/15/2022 8:53	28.62
6/16/2022 8:36	81.40	6/15/2022 7:54	0.04	6/15/2022 8:24	10.16	6/15/2022 7:11	0.45	6/15/2022 8:54	28.59
6/16/2022 8:37	81.45	6/15/2022 7:55	0.00	6/15/2022 8:25	10.17	6/15/2022 7:12	0.43	6/15/2022 8:55	28.62
6/16/2022 8:38	81.42	6/15/2022 7:56	-0.04	6/15/2022 8:26	10.15	6/15/2022 7:13	0.44	6/15/2022 8:56	28.61
6/16/2022 8:39	81.45	6/15/2022 7:57	-0.07	6/15/2022 8:27	10.15	6/15/2022 7:14	0.47	6/15/2022 8:57	28.60
6/16/2022 8:40	81.44	6/15/2022 7:58	-0.02	6/15/2022 8:28	10.13	6/15/2022 7:15	0.47	6/15/2022 8:58	28.60
6/16/2022 8:41	81.47	6/15/2022 7:59	-0.04	6/15/2022 8:29	10.16	6/15/2022 7:16	0.43	6/15/2022 8:59	28.56
6/16/2022 8:42	81.44	6/15/2022 8:00	-0.04	6/15/2022 8:30	10.14	6/15/2022 7:17	0.46	6/15/2022 9:00	28.59
6/16/2022 8:43	81.43	6/15/2022 8:01	-0.02	6/15/2022 8:31	10.16	6/15/2022 7:18	0.49	6/15/2022 9:01	28.58
6/16/2022 8:44	81.46	6/15/2022 8:02	-0.01	6/15/2022 8:32	10.13	6/15/2022 7:19	0.45	6/15/2022 9:02	28.58
6/16/2022 8:45	81.43	6/15/2022 8:03	-0.05	6/15/2022 8:33	10.10	6/15/2022 7:20	0.43	6/15/2022 9:03	28.61
6/16/2022 8:46	81.42	6/15/2022 8:04	-0.02	6/15/2022 8:34	10.08	6/15/2022 7:21	0.45	6/15/2022 9:04	28.57
6/16/2022 8:47	81.47	6/15/2022 8:05	-0.07	6/15/2022 8:35	10.10	6/15/2022 7:22	0.42	6/15/2022 9:05	28.56
6/16/2022 8:48	81.45	6/15/2022 8:06	-0.04	6/15/2022 8:36	10.12	6/15/2022 7:23	0.41	6/15/2022 9:06	28.53
6/16/2022 8:49	81.43	6/15/2022 8:07	-0.03	6/15/2022 8:37	10.10	6/15/2022 7:24	0.44	6/15/2022 9:07	28.57
6/16/2022 8:50	81.43	6/15/2022 8:08	-0.04	6/15/2022 8:38	10.10	6/15/2022 7:25	0.40	6/15/2022 9:08	28.57
6/16/2022 8:51	81.42	6/15/2022 8:09	-0.01	6/15/2022 8:39	10.08	6/15/2022 7:26	0.41	6/15/2022 9:09	28.53
6/16/2022 8:52	81.44	6/15/2022 8:10	-0.03	6/15/2022 8:40	10.09	6/15/2022 7:27	0.47	6/15/2022 9:10	28.55
6/16/2022 8:53	81.41	6/15/2022 8:11	-0.06	6/15/2022 8:41	10.09	6/15/2022 7:28	0.42	6/15/2022 9:11	28.53
6/16/2022 8:54	81.48	6/15/2022 8:12	-0.04	6/15/2022 8:42	10.08	6/15/2022 7:29	0.35	6/15/2022 9:12	28.56
6/16/2022 8:55	81.42	6/15/2022 8:13	-0.01	6/15/2022 8:43	10.09	6/15/2022 7:30	0.34	6/15/2022 9:13	28.54
6/16/2022 8:56	81.45	6/15/2022 8:14	1.23	6/15/2022 8:44	10.06	6/15/2022 7:31	0.32	6/15/2022 9:14	28.55
6/16/2022 8:57	81.44	6/15/2022 8:15	6.81	6/15/2022 8:45	10.07	6/15/2022 7:32	0.32	6/15/2022 9:15	28.56
6/16/2022 8:58	81.45	6/15/2022 8:16	6.41	6/15/2022 8:46	10.04	6/15/2022 7:33	0.32	6/15/2022 9:16	28.52
6/16/2022 8:59	81.43	6/15/2022 8:17	5.29	6/15/2022 8:47	10.05	6/15/2022 7:34	0.37	6/15/2022 9:17	28.54
6/16/2022 9:00	81.40	6/15/2022 8:18	4.44	6/15/2022 8:48	10.08	6/15/2022 7:35	0.41	6/15/2022 9:18	28.56
6/16/2022 9:01	81.45	6/15/2022 8:19	3.66	6/15/2022 8:49	10.10	6/15/2022 7:36	0.46	6/15/2022 9:19	28.54
6/16/2022 9:02	81.42	6/15/2022 8:20	3.04	6/15/2022 8:50	10.12	6/15/2022 7:37	0.34	6/15/2022 9:20	28.55
6/16/2022 9:03	81.48	6/15/2022 8:21	2.53	6/15/2022 8:51	10.10	6/15/2022 7:38	0.38	6/15/2022 9:21	28.51
6/16/2022 9:04	81.41	6/15/2022 8:22	2.14	6/15/2022 8:52	10.15	6/15/2022 7:39	0.38	6/15/2022 9:22	28.57
6/16/2022 9:05	81.42	6/15/2022 8:23	1.75	6/15/2022 8:53	10.16	6/15/2022 7:40	0.38	6/15/2022 9:23	28.53
6/16/2022 9:06	81.41	6/15/2022 8:24	1.48	6/15/2022 8:54	10.15	6/15/2022 7:41	0.41	6/15/2022 9:24	28.55
6/16/2022 9:07	81.39	6/15/2022 8:25	1.21	6/15/2022 8:55	10.13	6/15/2022 7:42	0.39	6/15/2022 9:25	28.53
6/16/2022 9:08	81.42	6/15/2022 8:26	0.99	6/15/2022 8:56	10.15	6/15/2022 7:43	0.36	6/15/2022 9:26	30.72
6/16/2022 9:09	81.42	6/15/2022 8:27	0.87	6/15/2022 8:57	10.15	6/15/2022 7:44	0.40	6/15/2022 9:27	29.49
6/16/2022 9:10	81.39	6/15/2022 8:28	0.66	6/15/2022 8:58	10.13	6/15/2022 7:45	0.35	6/15/2022 9:28	28.89
6/16/2022 9:11	81.43	6/15/2022 8:29	0.56	6/15/2022 8:59	10.18	6/15/2022 7:46	0.41	6/15/2022 9:29	28.67
6/16/2022 9:12	81.40	6/15/2022 8:30	0.40	6/15/2022 9:00	10.13	6/15/2022 7:47	0.40	6/15/2022 9:30	28.59
6/16/2022 9:13	81.41	6/15/2022 8:31	0.24	6/15/2022 9:01	10.15	6/15/2022 7:48	0.38	6/15/2022 9:31	28.58
6/16/2022 9:14	81.42	6/15/2022 8:32	0.16	6/15/2022 9:02	10.12	6/15/2022 7:49	0.37	6/15/2022 9:32	28.56
6/16/2022 9:15	81.40	6/15/2022 8:33	0.09	6/15/2022 9:03	10.09	6/15/2022 7:50	0.39	6/15/2022 9:33	28.60
6/16/2022 9:16	81.42	6/15/2022 8:34	-0.02	6/15/2022 9:04	10.10	6/15/2022 7:51	0.36	6/15/2022 9:34	28.56
6/16/2022 9:17	81.42	6/15/2022 8:35	-0.05	6/15/2022 9:05	10.14	6/15/2022 7:52	0.36	6/15/2022 9:35	28.58
6/16/2022 9:18	81.40	6/15/2022 8:36	-0.04	6/15/2022 9:06	10.10	6/15/2022 7:53	0.37	6/15/2022 9:36	28.58
6/16/2022 9:19	81.39	6/15/2022 8:37	-0.02	6/15/2022 9:07	10.13	6/15/2022 7:54	0.39	6/15/2022 9:37	28.57
6/16/2022 9:20	81.39	6/15/2022 8:38	-0.03	6/15/2022 9:08	10.10	6/15/2022 7:55	0.33	6/15/2022 9:38	28.55
6/16/2022 9:21	82.40	6/15/2022 8:39	-0.05	6/15/2022 9:09	10.07	6/15/2022 7:56	0.32	6/15/2022 9:39	28.55
6/16/2022 9:22	86.42	6/15/2022 8:40	0.01	6/15/2022 9:10	10.10	6/15/2022 7:57	0.33	6/15/2022 9:40	28.61
6/16/2022 9:23	88.79	6/15/2022 8:41	0.00	6/15/2022 9:11	10.09	6/15/2022 7:58	0.30	6/15/2022 9:41	28.55
6/16/2022 9:24	89.04	6/15/2022 8:42	-0.04	6/15/2022 9:12	10.11	6/15/2022 7:59	0.34	6/15/2022 9:42	28.58
6/16/2022 9:25	86.52	6/15/2022 8:43	-0.06	6/15/2022 9:13	10.08	6/15/2022 8:00	0.32	6/15/2022 9:43	28.56
6/16/2022 9:26	84.96	6/15/2022 8:44	-0.04	6/15/2022 9:14	10.06	6/15/2022 8:01	0.33	6/15/2022 9:44	28.57
6/16/2022 9:27	84.01	6/15/2022 8:45	-0.05	6/15/2022 9:15	10.09	6/15/2022 8:02	0.31	6/15/2022 9:45	28.57
6/16/2022 9:28	83.39	6/15/2022 8:46	-0.07	6/15/2022 9:16	10.08	6/15/2022 8:03	0.36	6/15/2022 9:46	28.55
6/16/2022 9:29	83.00	6/15/2022 8:47	-0.01	6/15/2022 9:17	10.05	6/15/2022 8:04	0.37	6/15/2022 9:47	28.54
6/16/2022 9:30	82.72	6/15/2022 8:48	-0.04	6/15/2022 9:18	10.07	6/15/2022 8:05	0.40	6/15/2022 9:48	28.52
6/16/2022 9:31	82.54	6/15/2022 8:49	-0.02	6/15/2022 9:19	10.10	6/15/2022 8:06	0.37	6/15/2022 9:49	28.55
6/16/2022 9:32	82.43	6/15/2022 8:50	0.00	6/15/2022 9:20	10.10	6/15/2022 8:07	0.43	6/15/2022 9:50	28.54

6/16/2022 9:33	82.31	6/15/2022 8:51	-0.03	6/15/2022 9:21	10.12	6/15/2022 8:08	0.45	6/15/2022 9:51	28.52
6/16/2022 9:34	82.22	6/15/2022 8:52	0.00	6/15/2022 9:22	10.14	6/15/2022 8:09	0.43	6/15/2022 9:52	28.56
6/16/2022 9:35	82.14	6/15/2022 8:53	-0.06	6/15/2022 9:23	10.14	6/15/2022 8:10	0.37	6/15/2022 9:53	28.57
6/16/2022 9:36	82.10	6/15/2022 8:54	-0.02	6/15/2022 9:24	10.12	6/15/2022 8:11	0.32	6/15/2022 9:54	28.54
6/16/2022 9:37	82.03	6/15/2022 8:55	-0.04	6/15/2022 9:25	10.16	6/15/2022 8:12	0.35	6/15/2022 9:55	28.55
6/16/2022 9:38	82.02	6/15/2022 8:56	0.01	6/15/2022 9:26	10.14	6/15/2022 8:13	0.33	6/15/2022 9:56	28.56
6/16/2022 9:39	82.00	6/15/2022 8:57	-0.02	6/15/2022 9:27	10.13	6/15/2022 8:14	0.33	6/15/2022 9:57	28.52
6/16/2022 9:40	81.97	6/15/2022 8:58	-0.01	6/15/2022 9:28	10.17	6/15/2022 8:15	0.36	6/15/2022 9:58	28.53
6/16/2022 9:41	81.95	6/15/2022 8:59	-0.02	6/15/2022 9:29	10.13	6/15/2022 8:16	0.42	6/15/2022 9:59	28.53
6/16/2022 9:42	81.91	6/15/2022 9:00	-0.03	6/15/2022 9:30	10.17	6/15/2022 8:17	0.41	6/15/2022 10:00	28.54
6/16/2022 9:43	81.88	6/15/2022 9:01	-0.06	6/15/2022 9:31	10.13	6/15/2022 8:18	0.36	6/15/2022 10:01	28.54
6/16/2022 9:44	81.85	6/15/2022 9:02	-0.05	6/15/2022 9:32	10.12	6/15/2022 8:19	0.33	6/15/2022 10:02	28.55
6/16/2022 9:45	81.86	6/15/2022 9:03	-0.02	6/15/2022 9:33	10.13	6/15/2022 8:20	0.36	6/15/2022 10:03	28.55
6/16/2022 9:46	81.84	6/15/2022 9:04	-0.03	6/15/2022 9:34	10.14	6/15/2022 8:21	0.29	6/15/2022 10:04	28.52
6/16/2022 9:47	81.86	6/15/2022 9:05	1.35	6/15/2022 9:35	10.13	6/15/2022 8:22	0.30	6/15/2022 10:05	28.55
6/16/2022 9:48	81.81	6/15/2022 9:06	6.86	6/15/2022 9:36	10.10	6/15/2022 8:23	0.31	6/15/2022 10:06	28.55
6/16/2022 9:49	81.81	6/15/2022 9:07	6.41	6/15/2022 9:37	10.15	6/15/2022 8:24	0.28	6/15/2022 10:07	28.56
6/16/2022 9:50	81.80	6/15/2022 9:08	5.27	6/15/2022 9:38	10.14	6/15/2022 8:25	0.32	6/15/2022 10:08	28.54
6/16/2022 9:51	81.76	6/15/2022 9:09	4.41	6/15/2022 9:39	10.17	6/15/2022 8:26	4.62	6/15/2022 10:09	28.52
6/16/2022 9:52	81.77	6/15/2022 9:10	3.66	6/15/2022 9:40	10.19	6/15/2022 8:27	2.45	6/15/2022 10:10	28.55
6/16/2022 9:53	81.77	6/15/2022 9:11	3.02	6/15/2022 9:41	10.17	6/15/2022 8:28	0.57	6/15/2022 10:11	28.55
6/16/2022 9:54	81.77	6/15/2022 9:12	2.53	6/15/2022 9:42	10.21	6/15/2022 8:29	0.36	6/15/2022 10:12	28.52
6/16/2022 9:55	81.77	6/15/2022 9:13	2.09	6/15/2022 9:43	10.21	6/15/2022 8:30	0.37	6/15/2022 10:13	28.55
6/16/2022 9:56	81.73	6/15/2022 9:14	1.70	6/15/2022 9:44	10.20	6/15/2022 8:31	0.35	6/15/2022 10:14	28.55
6/16/2022 9:57	81.75	6/15/2022 9:15	1.43	6/15/2022 9:45	10.19	6/15/2022 8:32	0.37	6/15/2022 10:15	28.55
6/16/2022 9:58	81.73	6/15/2022 9:16	1.19	6/15/2022 9:46	10.16	6/15/2022 8:33	0.40	6/15/2022 10:16	28.55
6/16/2022 9:59	81.72	6/15/2022 9:17	0.94	6/15/2022 9:47	10.18	6/15/2022 8:34	0.40	6/15/2022 10:17	28.50
6/16/2022 10:00	81.71	6/15/2022 9:18	0.71	6/15/2022 9:48	10.15	6/15/2022 8:35	2.20	6/15/2022 10:18	28.50
6/16/2022 10:01	81.74	6/15/2022 9:19	0.59	6/15/2022 9:49	10.16	6/15/2022 8:36	2.65	6/15/2022 10:19	28.55
6/16/2022 10:02	81.71	6/15/2022 9:20	0.42	6/15/2022 9:50	10.20	6/15/2022 8:37	0.70	6/15/2022 10:20	28.54
6/16/2022 10:03	81.71	6/15/2022 9:21	0.29	6/15/2022 9:51	10.17	6/15/2022 8:38	0.30	6/15/2022 10:21	28.52
6/16/2022 10:04	81.68	6/15/2022 9:22	0.17	6/15/2022 9:52	10.17	6/15/2022 8:39	0.34	6/15/2022 10:22	28.56
6/16/2022 10:05	81.67	6/15/2022 9:23	0.11	6/15/2022 9:53	10.13	6/15/2022 8:40	0.32	6/15/2022 10:23	28.52
6/16/2022 10:06	85.82	6/15/2022 9:24	0.02	6/15/2022 9:54	10.13	6/15/2022 8:41	0.46	6/15/2022 10:24	28.53
6/16/2022 10:07	88.61	6/15/2022 9:25	-0.02	6/15/2022 9:55	10.10	6/15/2022 8:42	0.46	6/15/2022 10:25	28.54
6/16/2022 10:08	90.17	6/15/2022 9:26	-0.01	6/15/2022 9:56	10.10	6/15/2022 8:43	0.50	6/15/2022 10:26	28.55
6/16/2022 10:09	88.12	6/15/2022 9:27	-0.02	6/15/2022 9:57	10.12	6/15/2022 8:44	0.47	6/15/2022 10:27	28.55
6/16/2022 10:10	86.07	6/15/2022 9:28	-0.06	6/15/2022 9:58	10.11	6/15/2022 8:45	0.47	6/15/2022 10:28	28.55
6/16/2022 10:11	84.83	6/15/2022 9:29	0.01	6/15/2022 9:59	10.09	6/15/2022 8:46	0.46	6/15/2022 10:29	28.52
6/16/2022 10:12	84.03	6/15/2022 9:30	-0.04	6/15/2022 10:00	10.12	6/15/2022 8:47	0.49	6/15/2022 10:30	28.52
6/16/2022 10:13	83.55	6/15/2022 9:31	-0.03	6/15/2022 10:01	10.13	6/15/2022 8:48	0.45	6/15/2022 10:31	28.51
6/16/2022 10:14	83.20	6/15/2022 9:32	-0.03	6/15/2022 10:02	10.10	6/15/2022 8:49	0.50	6/15/2022 10:32	28.53
6/16/2022 10:15	82.96	6/15/2022 9:33	-0.03	6/15/2022 10:03	10.08	6/15/2022 8:50	0.55	6/15/2022 10:33	28.54
6/16/2022 10:16	82.83	6/15/2022 9:34	0.06	6/15/2022 10:04	10.09	6/15/2022 8:51	0.54	6/15/2022 10:34	28.56
6/16/2022 10:17	82.68	6/15/2022 9:35	0.11	6/15/2022 10:05	10.08	6/15/2022 8:52	0.48	6/15/2022 10:35	28.52
6/16/2022 10:18	82.57	6/15/2022 9:36	0.12	6/15/2022 10:06	10.05	6/15/2022 8:53	0.45	6/15/2022 10:36	28.54
6/16/2022 10:19	82.47	6/15/2022 9:37	0.21	6/15/2022 10:07	10.07	6/15/2022 8:54	0.46	6/15/2022 10:37	28.52
6/16/2022 10:20	82.44	6/15/2022 9:38	0.29	6/15/2022 10:08	10.12	6/15/2022 8:55	0.46	6/15/2022 10:38	28.54
6/16/2022 10:21	82.39	6/15/2022 9:39	0.30	6/15/2022 10:09	10.15	6/15/2022 8:56	0.44	6/15/2022 10:39	28.53
6/16/2022 10:22	82.34	6/15/2022 9:40	0.32	6/15/2022 10:10	10.11	6/15/2022 8:57	0.47	6/15/2022 10:40	28.54
6/16/2022 10:23	82.31	6/15/2022 9:41	0.30	6/15/2022 10:11	10.16	6/15/2022 8:58	0.46	6/15/2022 10:41	28.52
6/16/2022 10:24	82.28	6/15/2022 9:42	0.31	6/15/2022 10:12	10.15	6/15/2022 8:59	0.47	6/15/2022 10:42	28.53
6/16/2022 10:25	82.25	6/15/2022 9:43	0.33	6/15/2022 10:13	10.15	6/15/2022 9:00	0.45	6/15/2022 10:43	28.53
6/16/2022 10:26	82.23	6/15/2022 9:44	0.38	6/15/2022 10:14	10.19	6/15/2022 9:01	0.46	6/15/2022 10:44	28.55
6/16/2022 10:27	82.19	6/15/2022 9:45	0.33	6/15/2022 10:15	10.17	6/15/2022 9:02	0.45	6/15/2022 10:45	28.52
6/16/2022 10:28	82.21	6/15/2022 9:46	0.29	6/15/2022 10:16	10.14	6/15/2022 9:03	0.46	6/15/2022 10:46	28.55
6/16/2022 10:29	82.16	6/15/2022 9:47	0.17	6/15/2022 10:17	10.13	6/15/2022 9:04	0.44	6/15/2022 10:47	28.53
6/16/2022 10:30	82.12	6/15/2022 9:48	0.06	6/15/2022 10:18	10.17	6/15/2022 9:05	0.47	6/15/2022 10:48	28.55
6/16/2022 10:31	82.12	6/15/2022 9:49	0.02	6/15/2022 10:19	10.15	6/15/2022 9:06	0.45	6/15/2022 10:49	28.53
6/16/2022 10:32	82.12	6/15/2022 9:50	0.02	6/15/2022 10:20	10.13	6/15/2022 9:07	0.45	6/15/2022 10:50	28.51
6/16/2022 10:33	82.10	6/15/2022 9:51	-0.03	6/15/2022 10:21	10.15	6/15/2022 9:08	0.47	6/15/2022 10:51	28.52
6/16/2022 10:34	82.07	6/15/2022 9:52	0.00	6/15/2022 10:22	10.12	6/15/2022 9:09	0.48	6/15/2022 10:52	28.54
6/16/2022 10:35	82.06	6/15/2022 9:53	-0.02	6/15/2022 10:23	10.12	6/15/2022 9:10	0.49	6/15/2022 10:53	28.53
6/16/2022 10:36	82.09	6/15/2022 9:54	0.00	6/15/2022 10:24	10.10	6/15/2022 9:11	0.48	6/15/2022 10:54	28.53
6/16/2022 10:37	82.05	6/15/2022 9:55	-0.02	6/15/2022 10:25	10.13	6/15/2022 9:12	0.47	6/15/2022 10:55	28.52
6/16/2022 10:38	82.01	6/15/2022 9:56	0.15	6/15/2022 10:26	10.10	6/15/2022 9:13	0.49	6/15/2022 10:56	28.56
6/16/2022 10:39	82.03	6/15/2022 9:57	5.97	6/15/2022 10:27	10.11	6/15/2022 9:14	0.45	6/15/2022 10:57	28.53
6/16/2022 10:40	82.04	6/15/2022 9:58	6.54	6/15/2022 10:28	10.08	6/15/2022 9:15	0.44	6/15/2022 10:58	28.56
6/16/2022 10:41	82.00	6/15/2022 9:59	5.38	6/15/2022 10:29	10.08	6/15/2022 9:16	0.47	6/15/2022 10:59	28.54
6/16/2022 10:42	82.00	6/15/2022 10:00	4.51	6/15/2022 10:30	10.11	6/15/2022 9:17	0.44	6/15/2022 11:00	28.53
6/16/2022 10:43	82.00	6/15/2022 10:01	3.73	6/15/2022 10:31	10.09	6/15/2022 9:18	0.43	6/15/2022 11:01	28.57
6/16/2022 10:44	81.99	6/15/2022 10:02	3.09	6/15/2022 10:32	10.07	6/15/2022 9:19	0.46	6/15/2022 11:02	28.57
6/16/2022 10:45	81.99	6/15/2022 10:03	2.56	6/15/2022 10:33	10.12	6/15/2022 9:20	0.49	6/15/2022 11:03	28.57
6/16/2022 10:46	81.96	6/15/2022 10:04	2.16	6/15/2022 10:34	10.07	6/15/2022 9:21	0.46	6/15/2022 11:04	28.61
6/16/2022 10:47	81.94	6/15/2022 10:05	1.77	6/15/2022 10:35	10.06	6/15/2022 9:22	0.43	6/15/2022 11:05	28.58
6/16/2022 10:48	81.93	6/15/2022 10:06	1.46	6/15/2022 10:36	10.09	6/15/2022 9:23	0.45	6/15/2022 11:06	28.57
6/16/2022 10:49	81.97	6/15/2022 10:07	1.20	6/15/2022 10:37	10.10	6/15/2022 9:24	0.44	6/15/2022 11:07	28.57
6/16/2022 10:50	81.91	6/15/2022 10:08	0.97	6/15/2022 10:38	10.09	6/15/2022 9:25	0.45	6/15/2022 11:08	28.56
6/16/2022 10:51	81.94	6/15/2022 10:09	0.73	6/15/2022 10:39	10.13	6/15/2022 9:26	0.44	6/15/2022 11:09	28.57
6/16/2022 10:52	81.89	6/15/2022 10:10	0.60	6/15/2022 10:40	10.11	6/15/2022 9:27	0.46	6/15/2022 11:10	28.59
6/16/2022 10:53	81.92	6/15/2022 10:11	0.45	6/15/2022 10:41	10.15	6/15/2022 9:28	0.45	6/15/2022 11:11	28.57
6/16/2022 10:54	81.92	6/15/2022 10:12	0.28	6/15/2022 10:42	10.15	6/15/2022 9:29	0.43	6/15/2022 11:12	28.51
6/16/2022 10:55	81.90	6/15/2022 10:13	0.19	6/15/2022 10:43	10.16	6/15/2022 9:30	0.48	6/15/2022 11:13	28.55
6/16/2022 10:56	81.90	6/15/2022 10:14	0.11	6/15/2022 10:44	10.16	6/15/2022 9:31	0.44	6/15/2022 11:14	28.56
6/16/2022 10:57	81.88	6/15/2022 10:15	0.05	6/15/2022 10:45	10.18	6/15/2022 9:32	0.72	6/15/2022 11:15	28.56
6/16/2022 10:58	81.90	6/15/2022 10:16	-0.06	6/15/2022 10:46	10.13	6/15/2022 9:33	7.78	6/15/2022 11:16	28.57
6/16/2022 10:59	81.89	6/15/2022 10:17	-0.04	6/15/2022 10:47	10.15	6/15/2022 9:34	8.69	6/15/2022 11:17	28.55
6/16/2022 11:00	81.84	6/15/2022 10:18	-0.05	6/15/2022 10:48	10.13	6/15/2022 9:35	5.37	6/15/2022 11:18	28.54

6/16/2022 11:01	81.85	6/15/2022 10:19	-0.08	6/15/2022 10:49	10.11	6/15/2022 9:36	10.70	6/15/2022 11:19	28.55
6/16/2022 11:02	81.87	6/15/2022 10:20	-0.03	6/15/2022 10:50	10.12	6/15/2022 9:37	9.11	6/15/2022 11:20	28.54
6/16/2022 11:03	81.89	6/15/2022 10:21	-0.04	6/15/2022 10:51	10.13	6/15/2022 9:38	8.80	6/15/2022 11:21	28.54
6/16/2022 11:04	81.86	6/15/2022 10:22	-0.04	6/15/2022 10:52	10.12	6/15/2022 9:39	8.75	6/15/2022 11:22	28.55
6/16/2022 11:05	81.81	6/15/2022 10:23	-0.01	6/15/2022 10:53	10.09	6/15/2022 9:40	5.89	6/15/2022 11:23	29.09
6/16/2022 11:06	81.84	6/15/2022 10:24	-0.04	6/15/2022 10:54	10.11	6/15/2022 9:41	4.25	6/15/2022 11:24	30.01
6/16/2022 11:07	81.86	6/15/2022 10:25	-0.02	6/15/2022 10:55	10.11	6/15/2022 9:42	8.25	6/15/2022 11:25	29.14
6/16/2022 11:08	81.84	6/15/2022 10:26	0.01	6/15/2022 10:56	10.09	6/15/2022 9:43	10.08	6/15/2022 11:26	28.77
6/16/2022 11:09	81.86	6/15/2022 10:27	-0.04	6/15/2022 10:57	10.09	6/15/2022 9:44	6.52	6/15/2022 11:27	28.66
6/16/2022 11:10	81.88	6/15/2022 10:28	-0.05	6/15/2022 10:58	10.10	6/15/2022 9:45	3.75	6/15/2022 11:28	28.63
6/16/2022 11:11	81.86	6/15/2022 10:29	-0.03	6/15/2022 10:59	10.12	6/15/2022 9:46	1.68	6/15/2022 11:29	28.58
6/16/2022 11:12	81.83	6/15/2022 10:30	-0.02	6/15/2022 11:00	10.11	6/15/2022 9:47	0.33	6/15/2022 11:30	28.59
6/16/2022 11:13	81.80	6/15/2022 10:31	-0.01	6/15/2022 11:01	10.18	6/15/2022 9:48	0.34	6/15/2022 11:31	28.58
6/16/2022 11:14	81.86	6/15/2022 10:32	-0.05	6/15/2022 11:02	10.18	6/15/2022 9:49	0.30	6/15/2022 11:32	28.57
6/16/2022 11:15	81.83	6/15/2022 10:33	-0.05	6/15/2022 11:03	10.16	6/15/2022 9:50	0.33	6/15/2022 11:33	28.59
6/16/2022 11:16	81.82	6/15/2022 10:34	-0.04	6/15/2022 11:04	10.18	6/15/2022 9:51	0.32	6/15/2022 11:34	28.53
6/16/2022 11:17	81.81	6/15/2022 10:35	-0.06	6/15/2022 11:05	10.17	6/15/2022 9:52	0.36	6/15/2022 11:35	28.58
6/16/2022 11:18	81.82	6/15/2022 10:36	-0.03	6/15/2022 11:06	10.21	6/15/2022 9:53	0.33	6/15/2022 11:36	28.56
6/16/2022 11:19	81.83	6/15/2022 10:37	-0.01	6/15/2022 11:07	10.20	6/15/2022 9:54	0.33	6/15/2022 11:37	28.57
6/16/2022 11:20	81.79	6/15/2022 10:38	-0.01	6/15/2022 11:08	10.18	6/15/2022 9:55	0.28	6/15/2022 11:38	28.55
6/16/2022 11:21	81.80	6/15/2022 10:39	-0.03	6/15/2022 11:09	10.20	6/15/2022 9:56	0.31	6/15/2022 11:39	28.57
6/16/2022 11:22	81.83	6/15/2022 10:40	-0.02	6/15/2022 11:10	10.20	6/15/2022 9:57	0.30	6/15/2022 11:40	28.57
6/16/2022 11:23	81.80	6/15/2022 10:41	-0.05	6/15/2022 11:11	10.19	6/15/2022 9:58	0.33	6/15/2022 11:41	28.59
6/16/2022 11:24	81.78	6/15/2022 10:42	-0.02	6/15/2022 11:12	10.16	6/15/2022 9:59	0.31	6/15/2022 11:42	28.54
6/16/2022 11:25	81.81	6/15/2022 10:43	0.02	6/15/2022 11:13	10.11	6/15/2022 10:00	0.35	6/15/2022 11:43	28.57
6/16/2022 11:26	81.79	6/15/2022 10:44	-0.03	6/15/2022 11:14	10.17	6/15/2022 10:01	0.36	6/15/2022 11:44	28.56
6/16/2022 11:27	81.78	6/15/2022 10:45	-0.01	6/15/2022 11:15	10.14	6/15/2022 10:02	0.35	6/15/2022 11:45	28.58
6/16/2022 11:28	81.77	6/15/2022 10:46	-0.05	6/15/2022 11:16	10.13	6/15/2022 10:03	0.36	6/15/2022 11:46	29.89
6/16/2022 11:29	81.80	6/15/2022 10:47	2.52	6/15/2022 11:17	10.14	6/15/2022 10:04	0.36	6/15/2022 11:47	29.79
6/16/2022 11:30	81.79	6/15/2022 10:48	7.41	6/15/2022 11:18	10.14	6/15/2022 10:05	0.33	6/15/2022 11:48	29.01
6/16/2022 11:31	81.82	6/15/2022 10:49	6.11	6/15/2022 11:19	10.11	6/15/2022 10:06	0.35	6/15/2022 11:49	28.73
6/16/2022 11:32	81.76	6/15/2022 10:50	5.03	6/15/2022 11:20	10.16	6/15/2022 10:07	0.27	6/15/2022 11:50	28.62
6/16/2022 11:33	81.76	6/15/2022 10:51	4.19	6/15/2022 11:21	10.12	6/15/2022 10:08	0.30	6/15/2022 11:51	28.61
6/16/2022 11:34	81.79	6/15/2022 10:52	3.47	6/15/2022 11:22	10.08	6/15/2022 10:09	0.32	6/15/2022 11:52	28.59
6/16/2022 11:35	81.76	6/15/2022 10:53	2.85	6/15/2022 11:23	10.10	6/15/2022 10:10	0.29	6/15/2022 11:53	28.56
6/16/2022 11:36	81.76	6/15/2022 10:54	2.40	6/15/2022 11:24	10.07	6/15/2022 10:11	0.28	6/15/2022 11:54	28.61
6/16/2022 11:37	81.81	6/15/2022 10:55	1.95	6/15/2022 11:25	10.07	6/15/2022 10:12	0.28	6/15/2022 11:55	28.59
6/16/2022 11:38	81.74	6/15/2022 10:56	1.64	6/15/2022 11:26	10.09	6/15/2022 10:13	0.32	6/15/2022 11:56	28.60
6/16/2022 11:39	81.78	6/15/2022 10:57	1.36	6/15/2022 11:27	10.09	6/15/2022 10:14	0.37	6/15/2022 11:57	28.58
6/16/2022 11:40	81.78	6/15/2022 10:58	1.08	6/15/2022 11:28	10.09	6/15/2022 10:15	0.38	6/15/2022 11:58	28.60
6/16/2022 11:41	81.76	6/15/2022 10:59	0.87	6/15/2022 11:29	10.09	6/15/2022 10:16	0.40	6/15/2022 11:59	28.60
6/16/2022 11:42	81.75	6/15/2022 11:00	0.68	6/15/2022 11:30	10.07	6/15/2022 10:17	0.44	6/15/2022 12:00	28.60
6/16/2022 11:43	81.77	6/15/2022 11:01	0.49	6/15/2022 11:31	10.08	6/15/2022 10:18	0.39	6/15/2022 12:01	28.57
6/16/2022 11:44	81.77	6/15/2022 11:02	0.37	6/15/2022 11:32	10.10	6/15/2022 10:19	0.36	6/15/2022 12:02	28.58
6/16/2022 11:45	81.73	6/15/2022 11:03	0.22	6/15/2022 11:33	10.11	6/15/2022 10:20	0.30	6/15/2022 12:03	28.55
6/16/2022 11:46	81.71	6/15/2022 11:04	0.13	6/15/2022 11:34	10.10	6/15/2022 10:21	0.32	6/15/2022 12:04	28.57
6/16/2022 11:47	81.72	6/15/2022 11:05	0.04	6/15/2022 11:35	10.13	6/15/2022 10:22	0.29	6/15/2022 12:05	28.59
6/16/2022 11:48	81.73	6/15/2022 11:06	-0.04	6/15/2022 11:36	10.13	6/15/2022 10:23	0.31	6/15/2022 12:06	28.58
6/16/2022 11:49	81.75	6/15/2022 11:07	-0.03	6/15/2022 11:37	10.14	6/15/2022 10:24	0.33	6/15/2022 12:07	28.57
6/16/2022 11:50	81.71	6/15/2022 11:08	-0.06	6/15/2022 11:38	10.18	6/15/2022 10:25	0.37	6/15/2022 12:08	28.56
6/16/2022 11:51	81.71	6/15/2022 11:09	-0.03	6/15/2022 11:39	10.17	6/15/2022 10:26	0.38	6/15/2022 12:09	28.55
6/16/2022 11:52	81.75	6/15/2022 11:10	-0.02	6/15/2022 11:40	10.16	6/15/2022 10:27	0.43	6/15/2022 12:10	28.56
6/16/2022 11:53	81.76	6/15/2022 11:11	-0.03	6/15/2022 11:41	10.15	6/15/2022 10:28	0.40	6/15/2022 12:11	28.55
6/16/2022 11:54	81.71	6/15/2022 11:12	-0.02	6/15/2022 11:42	10.17	6/15/2022 10:29	0.39	6/15/2022 12:12	28.52
6/16/2022 11:55	81.71	6/15/2022 11:13	-0.02	6/15/2022 11:43	10.17	6/15/2022 10:30	0.35	6/15/2022 12:13	28.57
6/16/2022 11:56	81.72	6/15/2022 11:14	-0.06	6/15/2022 11:44	10.14	6/15/2022 10:31	0.36	6/15/2022 12:14	28.55
6/16/2022 11:57	81.70	6/15/2022 11:15	0.01	6/15/2022 11:45	10.16	6/15/2022 10:32	0.32	6/15/2022 12:15	28.58
6/16/2022 11:58	81.66	6/15/2022 11:16	-0.03	6/15/2022 11:46	10.14	6/15/2022 10:33	0.30	6/15/2022 12:16	28.57
6/16/2022 11:59	81.69	6/15/2022 11:17	-0.03	6/15/2022 11:47	10.12	6/15/2022 10:34	0.29	6/15/2022 12:17	28.58
6/16/2022 12:00	81.68	6/15/2022 11:18	-0.01	6/15/2022 11:48	10.12	6/15/2022 10:35	0.33	6/15/2022 12:18	28.61
6/16/2022 12:01	81.70	6/15/2022 11:19	-0.03	6/15/2022 11:49	10.14	6/15/2022 10:36	0.32	6/15/2022 12:19	28.57
6/16/2022 12:02	81.69	6/15/2022 11:20	-0.04	6/15/2022 11:50	10.19	6/15/2022 10:37	0.35	6/15/2022 12:20	28.57
6/16/2022 12:03	81.68	6/15/2022 11:21	-0.03	6/15/2022 11:51	10.21	6/15/2022 10:38	0.41	6/15/2022 12:21	28.57
6/16/2022 12:04	81.70	6/15/2022 11:22	-0.06	6/15/2022 11:52	10.19	6/15/2022 10:39	0.38	6/15/2022 12:22	28.58
6/16/2022 12:05	81.68	6/15/2022 11:23	-0.07	6/15/2022 11:53	10.21	6/15/2022 10:40	0.44	6/15/2022 12:23	28.53
6/16/2022 12:06	81.72	6/15/2022 11:24	-0.05	6/15/2022 11:54	10.23	6/15/2022 10:41	0.39	6/15/2022 12:24	28.59
6/16/2022 12:07	81.69	6/15/2022 11:25	0.01	6/15/2022 11:55	10.19	6/15/2022 10:42	0.39	6/15/2022 12:25	28.58
6/16/2022 12:08	81.67	6/15/2022 11:26	-0.04	6/15/2022 11:56	10.20	6/15/2022 10:43	0.34	6/15/2022 12:26	28.57
6/16/2022 12:09	81.67	6/15/2022 11:27	-0.03	6/15/2022 11:57	10.25	6/15/2022 10:44	0.36	6/15/2022 12:27	28.54
6/16/2022 12:10	81.71	6/15/2022 11:28	0.00	6/15/2022 11:58	10.24	6/15/2022 10:45	0.32	6/15/2022 12:28	28.56
6/16/2022 12:11	81.68	6/15/2022 11:29	-0.01	6/15/2022 11:59	10.20	6/15/2022 10:46	0.30	6/15/2022 12:29	28.55
6/16/2022 12:12	81.68	6/15/2022 11:30	-0.02	6/15/2022 12:00	10.21	6/15/2022 10:47	0.33	6/15/2022 12:30	28.56
6/16/2022 12:13	81.67	6/15/2022 11:31	-0.03	6/15/2022 12:01	10.20	6/15/2022 10:48	0.34	6/15/2022 12:31	28.56
6/16/2022 12:14	81.67	6/15/2022 11:32	-0.01	6/15/2022 12:02	10.23	6/15/2022 10:49	0.30	6/15/2022 12:32	28.53
6/16/2022 12:15	81.66	6/15/2022 11:33	-0.01	6/15/2022 12:03	10.21	6/15/2022 10:50	0.32	6/15/2022 12:33	28.53
6/16/2022 12:16	81.66	6/15/2022 11:34	-0.03	6/15/2022 12:04	10.17	6/15/2022 10:51	0.28	6/15/2022 12:34	28.58
6/16/2022 12:17	81.64	6/15/2022 11:35	-0.03	6/15/2022 12:05	10.21	6/15/2022 10:52	0.30	6/15/2022 12:35	28.55
6/16/2022 12:18	81.65	6/15/2022 11:36	-0.04	6/15/2022 12:06	10.15	6/15/2022 10:53	0.28	6/15/2022 12:36	28.57
6/16/2022 12:19	81.65	6/15/2022 11:37	-0.04	6/15/2022 12:07	10.19	6/15/2022 10:54	0.30	6/15/2022 12:37	30.87
6/16/2022 12:20	81.66	6/15/2022 11:38	2.78	6/15/2022 12:08	10.15	6/15/2022 10:55	0.32	6/15/2022 12:38	29.72
6/16/2022 12:21	81.65	6/15/2022 11:39	7.33	6/15/2022 12:09	10.17	6/15/2022 10:56	0.33	6/15/2022 12:39	29.02
6/16/2022 12:22	81.66	6/15/2022 11:40	5.99	6/15/2022 12:10	10.17	6/15/2022 10:57	0.32	6/15/2022 12:40	28.72
6/16/2022 12:23	81.65	6/15/2022 11:41	5.00	6/15/2022 12:11	10.22	6/15/2022 10:58	0.36	6/15/2022 12:41	28.64
6/16/2022 12:24	81.69	6/15/2022 11:42	4.15	6/15/2022 12:12	10.22	6/15/2022 10:59	0.38	6/15/2022 12:42	28.57
6/16/2022 12:25	81.64	6/15/2022 11:43	3.42	6/15/2022 12:13	10.24	6/15/2022 11:00	0.37	6/15/2022 12:43	28.60
6/16/2022 12:26	81.65	6/15/2022 11:44	2.80	6/15/2022 12:14	10.22	6/15/2022 11:01	0.36	6/15/2022 12:44	28.62
6/16/2022 12:27	81.63	6/15/2022 11:45	2.38	6/15/2022 12:15	10.24	6/15/2022 11:02	0.37	6/15/2022 12:45	28.57
6/16/2022 12:28	81.68	6/15/2022 11:46	1.95	6/15/2022 12:16	10.23	6/15/2022 11:03	0.35	6/15/2022 12:46	28.59

6/16/2022 12:29	81.61	6/15/2022 11:47	1.61	6/15/2022 12:17	10.22	6/15/2022 11:04	0.35	6/15/2022 12:47	28.57
6/16/2022 12:30	81.62	6/15/2022 11:48	1.31	6/15/2022 12:18	10.22	6/15/2022 11:05	0.33	6/15/2022 12:48	28.58
6/16/2022 12:31	81.64	6/15/2022 11:49	1.09	6/15/2022 12:19	10.21	6/15/2022 11:06	0.26	6/15/2022 12:49	28.57
6/16/2022 12:32	81.65	6/15/2022 11:50	0.83	6/15/2022 12:20	10.22	6/15/2022 11:07	0.27	6/15/2022 12:50	28.59
6/16/2022 12:33	85.07	6/15/2022 11:51	0.64	6/15/2022 12:21	10.23	6/15/2022 11:08	0.29	6/15/2022 12:51	28.56
6/16/2022 12:34	88.10	6/15/2022 11:52	0.47	6/15/2022 12:22	10.22	6/15/2022 11:09	0.31	6/15/2022 12:52	28.57
6/16/2022 12:35	89.74	6/15/2022 11:53	0.37	6/15/2022 12:23	10.18	6/15/2022 11:10	0.35	6/15/2022 12:53	28.57
6/16/2022 12:36	87.54	6/15/2022 11:54	0.22	6/15/2022 12:24	10.18	6/15/2022 11:11	0.37	6/15/2022 12:54	28.58
6/16/2022 12:37	85.63	6/15/2022 11:55	0.12	6/15/2022 12:25	10.18	6/15/2022 11:12	0.40	6/15/2022 12:55	28.58
6/16/2022 12:38	84.54	6/15/2022 11:56	0.03	6/15/2022 12:26	10.16	6/15/2022 11:13	0.39	6/15/2022 12:56	28.52
6/16/2022 12:39	83.77	6/15/2022 11:57	-0.01	6/15/2022 12:27	10.15	6/15/2022 11:14	0.38	6/15/2022 12:57	28.56
6/16/2022 12:40	83.37	6/15/2022 11:58	-0.03	6/15/2022 12:28	10.17	6/15/2022 11:15	0.34	6/15/2022 12:58	28.57
6/16/2022 12:41	83.03	6/15/2022 11:59	-0.05	6/15/2022 12:29	10.17	6/15/2022 11:16	0.29	6/15/2022 12:59	28.58
6/16/2022 12:42	82.82	6/15/2022 12:00	-0.02	6/15/2022 12:30	10.14	6/15/2022 11:17	0.29	6/15/2022 13:00	30.09
6/16/2022 12:43	82.69	6/15/2022 12:01	-0.04	6/15/2022 12:31	10.17	6/15/2022 11:18	0.29	6/15/2022 13:01	29.78
6/16/2022 12:44	82.56	6/15/2022 12:02	-0.04	6/15/2022 12:32	10.20	6/15/2022 11:19	0.28	6/15/2022 13:02	29.03
6/16/2022 12:45	82.50	6/15/2022 12:03	-0.02	6/15/2022 12:33	10.17	6/15/2022 11:20	0.28	6/15/2022 13:03	28.72
6/16/2022 12:46	82.43	6/15/2022 12:04	-0.05	6/15/2022 12:34	10.18	6/15/2022 11:21	0.30	6/15/2022 13:04	28.66
6/16/2022 12:47	82.35	6/15/2022 12:05	-0.03	6/15/2022 12:35	10.21	6/15/2022 11:22	0.34	6/15/2022 13:05	28.61
6/16/2022 12:48	82.29	6/15/2022 12:06	-0.04	6/15/2022 12:36	10.21	6/15/2022 11:23	0.39	6/15/2022 13:06	28.63
6/16/2022 12:49	82.26	6/15/2022 12:07	-0.04	6/15/2022 12:37	10.22	6/15/2022 11:24	0.42	6/15/2022 13:07	28.58
6/16/2022 12:50	82.22	6/15/2022 12:08	-0.02	6/15/2022 12:38	10.20	6/15/2022 11:25	0.40	6/15/2022 13:08	28.59
6/16/2022 12:51	82.22	6/15/2022 12:09	-0.02	6/15/2022 12:39	10.21	6/15/2022 11:26	0.35	6/15/2022 13:09	28.61
6/16/2022 12:52	82.14	6/15/2022 12:10	-0.05	6/15/2022 12:40	10.21	6/15/2022 11:27	0.35	6/15/2022 13:10	28.60
6/16/2022 12:53	82.15	6/15/2022 12:11	-0.08	6/15/2022 12:41	10.20	6/15/2022 11:28	0.32	6/15/2022 13:11	28.58
6/16/2022 12:54	82.12	6/15/2022 12:12	-0.04	6/15/2022 12:42	10.18	6/15/2022 11:29	0.29	6/15/2022 13:12	28.57
6/16/2022 12:55	82.12	6/15/2022 12:13	0.00	6/15/2022 12:43	10.19	6/15/2022 11:30	0.25	6/15/2022 13:13	28.60
6/16/2022 12:56	82.05	6/15/2022 12:14	-0.06	6/15/2022 12:44	10.18	6/15/2022 11:31	0.26	6/15/2022 13:14	28.57
6/16/2022 12:57	82.07	6/15/2022 12:15	-0.03	6/15/2022 12:45	10.19	6/15/2022 11:32	0.30	6/15/2022 13:15	28.57
6/16/2022 12:58	82.06	6/15/2022 12:16	-0.02	6/15/2022 12:46	10.17	6/15/2022 11:33	0.33	6/15/2022 13:16	28.59
6/16/2022 12:59	82.03	6/15/2022 12:17	-0.03	6/15/2022 12:47	10.15	6/15/2022 11:34	0.34	6/15/2022 13:17	28.56
6/16/2022 13:00	82.01	6/15/2022 12:18	-0.03	6/15/2022 12:48	10.17	6/15/2022 11:35	0.36	6/15/2022 13:18	29.14
6/16/2022 13:01	82.06	6/15/2022 12:19	0.00	6/15/2022 12:49	10.16	6/15/2022 11:36	0.40	6/15/2022 13:19	30.06
6/16/2022 13:02	82.00	6/15/2022 12:20	-0.02	6/15/2022 12:50	10.16	6/15/2022 11:37	0.40	6/15/2022 13:20	29.15
6/16/2022 13:03	82.01	6/15/2022 12:21	-0.01	6/15/2022 12:51	10.12	6/15/2022 11:38	0.37	6/15/2022 13:21	28.78
6/16/2022 13:04	82.02	6/15/2022 12:22	-0.02	6/15/2022 12:52	10.12	6/15/2022 11:39	0.36	6/15/2022 13:22	28.67
6/16/2022 13:05	81.99	6/15/2022 12:23	-0.01	6/15/2022 12:53	10.17	6/15/2022 11:40	0.40	6/15/2022 13:23	28.62
6/16/2022 13:06	81.96	6/15/2022 12:24	-0.02	6/15/2022 12:54	10.13	6/15/2022 11:41	0.39	6/15/2022 13:24	28.62
6/16/2022 13:07	81.95	6/15/2022 12:25	0.02	6/15/2022 12:55	10.12	6/15/2022 11:42	0.37	6/15/2022 13:25	28.61
6/16/2022 13:08	81.96	6/15/2022 12:26	-0.03	6/15/2022 12:56	10.13	6/15/2022 11:43	0.38	6/15/2022 13:26	28.62
6/16/2022 13:09	81.96	6/15/2022 12:27	0.01	6/15/2022 12:57	10.09	6/15/2022 11:44	0.38	6/15/2022 13:27	28.58
6/16/2022 13:10	81.91	6/15/2022 12:28	-0.05	6/15/2022 12:58	10.08	6/15/2022 11:45	0.34	6/15/2022 13:28	28.57
6/16/2022 13:11	81.95	6/15/2022 12:29	1.04	6/15/2022 12:59	10.08	6/15/2022 11:46	0.36	6/15/2022 13:29	28.56
6/16/2022 13:12	81.92	6/15/2022 12:30	6.69	6/15/2022 13:00	10.11	6/15/2022 11:47	0.37	6/15/2022 13:30	28.58
6/16/2022 13:13	81.95	6/15/2022 12:31	6.40	6/15/2022 13:01	10.06	6/15/2022 11:48	0.36	6/15/2022 13:31	28.60
6/16/2022 13:14	81.95	6/15/2022 12:32	5.24	6/15/2022 13:02	10.06	6/15/2022 11:49	0.35	6/15/2022 13:32	28.57
6/16/2022 13:15	81.90	6/15/2022 12:33	4.40	6/15/2022 13:03	10.10	6/15/2022 11:50	0.32	6/15/2022 13:33	28.59
6/16/2022 13:16	81.94	6/15/2022 12:34	3.62	6/15/2022 13:04	10.12	6/15/2022 11:51	0.30	6/15/2022 13:34	28.62
6/16/2022 13:17	81.92	6/15/2022 12:35	2.97	6/15/2022 13:05	10.14	6/15/2022 11:52	0.28	6/15/2022 13:35	28.58
6/16/2022 13:18	81.90	6/15/2022 12:36	2.49	6/15/2022 13:06	10.15	6/15/2022 11:53	0.25	6/15/2022 13:36	28.57
6/16/2022 13:19	81.88	6/15/2022 12:37	2.00	6/15/2022 13:07	10.21	6/15/2022 11:54	0.29	6/15/2022 13:37	28.57
6/16/2022 13:20	81.87	6/15/2022 12:38	1.69	6/15/2022 13:08	10.18	6/15/2022 11:55	0.32	6/15/2022 13:38	28.62
6/16/2022 13:21	81.89	6/15/2022 12:39	1.39	6/15/2022 13:09	10.17	6/15/2022 11:56	0.30	6/15/2022 13:39	28.59
6/16/2022 13:22	81.89	6/15/2022 12:40	1.13	6/15/2022 13:10	10.20	6/15/2022 11:57	0.36	6/15/2022 13:40	28.57
6/16/2022 13:23	81.84	6/15/2022 12:41	0.90	6/15/2022 13:11	10.18	6/15/2022 11:58	0.35	6/15/2022 13:41	28.62
6/16/2022 13:24	81.84	6/15/2022 12:42	0.70	6/15/2022 13:12	10.16	6/15/2022 11:59	0.38	6/15/2022 13:42	28.65
6/16/2022 13:25	81.88	6/15/2022 12:43	0.51	6/15/2022 13:13	10.19	6/15/2022 12:00	0.39	6/15/2022 13:43	29.67
6/16/2022 13:26	81.87	6/15/2022 12:44	0.36	6/15/2022 13:14	10.17	6/15/2022 12:01	0.32	6/15/2022 13:44	30.25
6/16/2022 13:27	81.87	6/15/2022 12:45	0.25	6/15/2022 13:15	10.19	6/15/2022 12:02	0.32	6/15/2022 13:45	29.39
6/16/2022 13:28	81.86	6/15/2022 12:46	0.13	6/15/2022 13:16	10.18	6/15/2022 12:03	0.34	6/15/2022 13:46	29.06
6/16/2022 13:29	81.86	6/15/2022 12:47	-0.01	6/15/2022 13:17	10.17	6/15/2022 12:04	0.29	6/15/2022 13:47	28.93
6/16/2022 13:30	81.88	6/15/2022 12:48	-0.03	6/15/2022 13:18	10.15	6/15/2022 12:05	0.27	6/15/2022 13:48	28.89
6/16/2022 13:31	81.84	6/15/2022 12:49	-0.04	6/15/2022 13:19	10.16	6/15/2022 12:06	0.29	6/15/2022 13:49	28.93
6/16/2022 13:32	81.83	6/15/2022 12:50	-0.03	6/15/2022 13:20	10.15	6/15/2022 12:07	0.28	6/15/2022 13:50	28.92
6/16/2022 13:33	81.84	6/15/2022 12:51	-0.05	6/15/2022 13:21	10.14	6/15/2022 12:08	0.30	6/15/2022 13:51	28.98
6/16/2022 13:34	81.84	6/15/2022 12:52	-0.05	6/15/2022 13:22	10.15	6/15/2022 12:09	0.34	6/15/2022 13:52	28.95
6/16/2022 13:35	81.85	6/15/2022 12:53	-0.05	6/15/2022 13:23	10.14	6/15/2022 12:10	0.36	6/15/2022 13:53	28.92
6/16/2022 13:36	81.81	6/15/2022 12:54	0.00	6/15/2022 13:24	10.12	6/15/2022 12:11	0.37	6/15/2022 13:54	29.02
6/16/2022 13:37	81.82	6/15/2022 12:55	-0.02	6/15/2022 13:25	10.12	6/15/2022 12:12	0.33	6/15/2022 13:55	28.98
6/16/2022 13:38	81.79	6/15/2022 12:56	-0.03	6/15/2022 13:26	10.11	6/15/2022 12:13	0.36	6/15/2022 13:56	28.96
6/16/2022 13:39	81.81	6/15/2022 12:57	-0.04	6/15/2022 13:27	10.10	6/15/2022 12:14	0.27	6/15/2022 13:57	28.92
6/16/2022 13:40	81.81	6/15/2022 12:58	-0.05	6/15/2022 13:28	10.09	6/15/2022 12:15	0.28	6/15/2022 13:58	28.91
6/16/2022 13:41	81.81	6/15/2022 12:59	-0.05	6/15/2022 13:29	10.08	6/15/2022 12:16	0.26	6/15/2022 13:59	28.90
6/16/2022 13:42	81.82	6/15/2022 13:00	-0.06	6/15/2022 13:30	10.06	6/15/2022 12:17	0.26	6/15/2022 14:00	28.89
6/16/2022 13:43	81.81	6/15/2022 13:01	-0.03	6/15/2022 13:31	10.08	6/15/2022 12:18	0.28	6/15/2022 14:01	28.89
6/16/2022 13:44	81.79	6/15/2022 13:02	-0.02	6/15/2022 13:32	10.09	6/15/2022 12:19	0.30	6/15/2022 14:02	28.88
6/16/2022 13:45	81.78	6/15/2022 13:03	-0.07	6/15/2022 13:33	10.07	6/15/2022 12:20	0.34	6/15/2022 14:03	30.54
6/16/2022 13:46	81.76	6/15/2022 13:04	-0.04	6/15/2022 13:34	10.12	6/15/2022 12:21	0.38	6/15/2022 14:04	29.53
6/16/2022 13:47	81.75	6/15/2022 13:05	-0.01	6/15/2022 13:35	10.14	6/15/2022 12:22	0.35	6/15/2022 14:05	29.09
6/16/2022 13:48	81.77	6/15/2022 13:06	-0.01	6/15/2022 13:36	10.16	6/15/2022 12:23	0.39	6/15/2022 14:06	28.95
6/16/2022 13:49	81.78	6/15/2022 13:07	-0.07	6/15/2022 13:37	10.18	6/15/2022 12:24	0.40	6/15/2022 14:07	28.87
6/16/2022 13:50	81.78	6/15/2022 13:08	-0.07	6/15/2022 13:38	10.16	6/15/2022 12:25	0.34	6/15/2022 14:08	28.84
6/16/2022 13:51	81.78	6/15/2022 13:09	-0.03	6/15/2022 13:39	10.17	6/15/2022 12:26	0.35	6/15/2022 14:09	28.83
6/16/2022 13:52	81.74	6/15/2022 13:10	-0.05	6/15/2022 13:40	10.20	6/15/2022 12:27	0.29	6/15/2022 14:10	28.84
6/16/2022 13:53	81.76	6/15/2022 13:11	0.00	6/15/2022 13:41	10.18	6/15/2022 12:28	0.28	6/15/2022 14:11	28.82
6/16/2022 13:54	81.76	6/15/2022 13:12	-0.04	6/15/2022 13:42	10.17	6/15/2022 12:29	0.28	6/15/2022 14:12	28.87
6/16/2022 13:55	81.75	6/15/2022 13:13	-0.04	6/15/2022 13:43	10.19	6/15/2022 12:30	0.26	6/15/2022 14:13	30.32
6/16/2022 13:56	81.74	6/15/2022 13:14	-0.01	6/15/2022 13:44	10.14	6/15/2022 12:31	0.27	6/15/2022 14:14	29.41

6/16/2022 13:57	81.77	6/15/2022 13:15	-0.01	6/15/2022 13:45	10.18	6/15/2022 12:32	0.27	6/15/2022 14:15	29.01
6/16/2022 13:58	81.77	6/15/2022 13:16	-0.01	6/15/2022 13:46	10.21	6/15/2022 12:33	0.27	6/15/2022 14:16	28.85
6/16/2022 13:59	81.77	6/15/2022 13:17	-0.04	6/15/2022 13:47	10.14	6/15/2022 12:34	0.31	6/15/2022 14:17	28.81
6/16/2022 14:00	81.78	6/15/2022 13:18	-0.01	6/15/2022 13:48	10.13	6/15/2022 12:35	0.28	6/15/2022 14:18	28.78
6/16/2022 14:01	81.74	6/15/2022 13:19	-0.03	6/15/2022 13:49	10.13	6/15/2022 12:36	0.27	6/15/2022 14:19	28.81
6/16/2022 14:02	81.72	6/15/2022 13:20	1.17	6/15/2022 13:50	10.13	6/15/2022 12:37	0.29	6/15/2022 14:20	28.80
6/16/2022 14:03	81.75	6/15/2022 13:21	6.72	6/15/2022 13:51	10.16	6/15/2022 12:38	0.28	6/15/2022 14:21	28.80
6/16/2022 14:04	81.75	6/15/2022 13:22	6.27	6/15/2022 13:52	10.13	6/15/2022 12:39	0.26	6/15/2022 14:22	28.84
6/16/2022 14:05	81.72	6/15/2022 13:23	5.19	6/15/2022 13:53	10.12	6/15/2022 12:40	0.29	6/15/2022 14:23	28.84
6/16/2022 14:06	81.77	6/15/2022 13:24	4.30	6/15/2022 13:54	10.11	6/15/2022 12:41	0.32	6/15/2022 14:24	28.84
6/16/2022 14:07	81.75	6/15/2022 13:25	3.56	6/15/2022 13:55	10.12	6/15/2022 12:42	0.28	6/15/2022 14:25	28.82
6/16/2022 14:08	81.71	6/15/2022 13:26	2.89	6/15/2022 13:56	10.12	6/15/2022 12:43	0.39	6/15/2022 14:26	28.82
6/16/2022 14:09	81.73	6/15/2022 13:27	2.43	6/15/2022 13:57	10.15	6/15/2022 12:44	0.40	6/15/2022 14:27	28.79
6/16/2022 14:10	81.71	6/15/2022 13:28	2.04	6/15/2022 13:58	10.13	6/15/2022 12:45	0.38	6/15/2022 14:28	28.74
6/16/2022 14:11	81.74	6/15/2022 13:29	1.68	6/15/2022 13:59	10.19	6/15/2022 12:46	0.37	6/15/2022 14:29	28.78
6/16/2022 14:12	81.72	6/15/2022 13:30	1.37	6/15/2022 14:00	10.19	6/15/2022 12:47	0.39	6/15/2022 14:30	28.78
6/16/2022 14:13	81.72	6/15/2022 13:31	1.13	6/15/2022 14:01	10.20	6/15/2022 12:48	0.32	6/15/2022 14:31	28.76
6/16/2022 14:14	81.72	6/15/2022 13:32	0.89	6/15/2022 14:02	10.22	6/15/2022 12:49	0.28	6/15/2022 14:32	28.77
6/16/2022 14:15	81.69	6/15/2022 13:33	0.69	6/15/2022 14:03	10.23	6/15/2022 12:50	0.29	6/15/2022 14:33	28.76
6/16/2022 14:16	81.69	6/15/2022 13:34	0.51	6/15/2022 14:04	10.18	6/15/2022 12:51	0.28	6/15/2022 14:34	28.77
6/16/2022 14:17	81.74	6/15/2022 13:35	0.33	6/15/2022 14:05	10.24	6/15/2022 12:52	0.27	6/15/2022 14:35	28.71
6/16/2022 14:18	81.74	6/15/2022 13:36	0.26	6/15/2022 14:06	10.18	6/15/2022 12:53	0.27	6/15/2022 14:36	28.73
6/16/2022 14:19	81.72	6/15/2022 13:37	0.07	6/15/2022 14:07	10.16	6/15/2022 12:54	0.31	6/15/2022 14:37	28.75
6/16/2022 14:20	81.74	6/15/2022 13:38	0.03	6/15/2022 14:08	10.19	6/15/2022 12:55	0.36	6/15/2022 14:38	28.71
6/16/2022 14:21	81.68	6/15/2022 13:39	-0.05	6/15/2022 14:09	10.21	6/15/2022 12:56	0.40	6/15/2022 14:39	28.74
6/16/2022 14:22	81.68	6/15/2022 13:40	-0.05	6/15/2022 14:10	10.20	6/15/2022 12:57	0.38	6/15/2022 14:40	28.78
6/16/2022 14:23	81.69	6/15/2022 13:41	-0.06	6/15/2022 14:11	10.20	6/15/2022 12:58	0.38	6/15/2022 14:41	30.43
6/16/2022 14:24	81.69	6/15/2022 13:42	-0.03	6/15/2022 14:12	10.16	6/15/2022 12:59	0.34	6/15/2022 14:42	29.41
6/16/2022 14:25	81.68	6/15/2022 13:43	-0.02	6/15/2022 14:13	10.15	6/15/2022 13:00	0.29	6/15/2022 14:43	28.97
6/16/2022 14:26	81.69	6/15/2022 13:44	-0.04	6/15/2022 14:14	10.18	6/15/2022 13:01	0.29	6/15/2022 14:44	30.62
6/16/2022 14:27	81.68	6/15/2022 13:45	-0.03	6/15/2022 14:15	10.10	6/15/2022 13:02	0.28	6/15/2022 14:45	30.26
6/16/2022 14:28	81.68	6/15/2022 13:46	-0.03	6/15/2022 14:16	10.14	6/15/2022 13:03	0.26	6/15/2022 14:46	29.35
6/16/2022 14:29	81.70	6/15/2022 13:47	-0.03	6/15/2022 14:17	10.17	6/15/2022 13:04	0.28	6/15/2022 14:47	28.97
6/16/2022 14:30	81.70	6/15/2022 13:48	-0.02	6/15/2022 14:18	10.13	6/15/2022 13:05	0.32	6/15/2022 14:48	28.84
6/16/2022 14:31	81.68	6/15/2022 13:49	-0.05	6/15/2022 14:19	10.11	6/15/2022 13:06	0.40	6/15/2022 14:49	28.81
6/16/2022 14:32	81.67	6/15/2022 13:50	-0.06	6/15/2022 14:20	10.13	6/15/2022 13:07	0.39	6/15/2022 14:50	28.76
6/16/2022 14:33	81.66	6/15/2022 13:51	-0.03	6/15/2022 14:21	10.10	6/15/2022 13:08	0.37	6/15/2022 14:51	28.78
6/16/2022 14:34	81.66	6/15/2022 13:52	-0.03	6/15/2022 14:22	10.12	6/15/2022 13:09	0.31	6/15/2022 14:52	28.73
6/16/2022 14:35	81.62	6/15/2022 13:53	-0.03	6/15/2022 14:23	10.11	6/15/2022 13:10	0.33	6/15/2022 14:53	28.74
6/16/2022 14:36	81.66	6/15/2022 13:54	-0.05	6/15/2022 14:24	10.08	6/15/2022 13:11	0.32	6/15/2022 14:54	28.77
6/16/2022 14:37	81.67	6/15/2022 13:55	-0.03	6/15/2022 14:25	10.14	6/15/2022 13:12	0.29	6/15/2022 14:55	28.74
6/16/2022 14:38	81.67	6/15/2022 13:56	-0.03	6/15/2022 14:26	10.16	6/15/2022 13:13	0.25	6/15/2022 14:56	30.66
6/16/2022 14:39	81.66	6/15/2022 13:57	0.00	6/15/2022 14:27	10.14	6/15/2022 13:14	0.32	6/15/2022 14:57	29.56
6/16/2022 14:40	81.67	6/15/2022 13:58	-0.06	6/15/2022 14:28	10.14	6/15/2022 13:15	0.35	6/15/2022 14:58	29.03
6/16/2022 14:41	81.63	6/15/2022 13:59	0.01	6/15/2022 14:29	10.15	6/15/2022 13:16	0.38	6/15/2022 14:59	28.83
6/16/2022 14:42	81.65	6/15/2022 14:00	-0.02	6/15/2022 14:30	10.16	6/15/2022 13:17	0.39	6/15/2022 15:00	30.69
6/16/2022 14:43	81.69	6/15/2022 14:01	-0.03	6/15/2022 14:31	10.12	6/15/2022 13:18	0.34	6/15/2022 15:01	29.56
6/16/2022 14:44	81.65	6/15/2022 14:02	-0.01	6/15/2022 14:32	10.19	6/15/2022 13:19	0.32	6/15/2022 15:02	29.08
6/16/2022 14:45	81.66	6/15/2022 14:03	0.00	6/15/2022 14:33	10.17	6/15/2022 13:20	0.29	6/15/2022 15:03	28.88
6/16/2022 14:46	81.68	6/15/2022 14:04	0.00	6/15/2022 14:34	10.15	6/15/2022 13:21	0.28	6/15/2022 15:04	28.83
6/16/2022 14:47	81.64	6/15/2022 14:05	-0.01	6/15/2022 14:35	10.19	6/15/2022 13:22	0.24	6/15/2022 15:05	28.78
6/16/2022 14:48	81.61	6/15/2022 14:06	-0.05	6/15/2022 14:36	10.15	6/15/2022 13:23	0.30	6/15/2022 15:06	28.78
6/16/2022 14:49	81.64	6/15/2022 14:07	-0.03	6/15/2022 14:37	10.15	6/15/2022 13:24	0.35	6/15/2022 15:07	28.75
6/16/2022 14:50	81.66	6/15/2022 14:08	-0.02	6/15/2022 14:38	10.16	6/15/2022 13:25	0.34	6/15/2022 15:08	29.53
6/16/2022 14:51	81.64	6/15/2022 14:09	-0.01	6/15/2022 14:39	10.17	6/15/2022 13:26	0.31	6/15/2022 15:09	30.19
6/16/2022 14:52	81.61	6/15/2022 14:10	-0.05	6/15/2022 14:40	10.12	6/15/2022 13:27	0.31	6/15/2022 15:10	29.32
6/16/2022 14:53	81.63	6/15/2022 14:11	2.41	6/15/2022 14:41	10.12	6/15/2022 13:28	0.30	6/15/2022 15:11	28.95
6/16/2022 14:54	81.63	6/15/2022 14:12	7.39	6/15/2022 14:42	10.12	6/15/2022 13:29	0.31	6/15/2022 15:12	28.81
6/16/2022 14:55	81.60	6/15/2022 14:13	6.06	6/15/2022 14:43	10.15	6/15/2022 13:30	0.29	6/15/2022 15:13	28.77
6/16/2022 14:56	81.61	6/15/2022 14:14	5.05	6/15/2022 14:44	10.14	6/15/2022 13:31	0.26	6/15/2022 15:14	28.74
6/16/2022 14:57	81.64	6/15/2022 14:15	4.19	6/15/2022 14:45	10.09	6/15/2022 13:32	0.26	6/15/2022 15:15	28.75
6/16/2022 14:58	81.63	6/15/2022 14:16	3.47	6/15/2022 14:46	10.09	6/15/2022 13:33	0.29	6/15/2022 15:16	28.72
6/16/2022 14:59	81.62	6/15/2022 14:17	2.83	6/15/2022 14:47	10.12	6/15/2022 13:34	0.36	6/15/2022 15:17	28.76
6/16/2022 15:00	83.84	6/15/2022 14:18	2.37	6/15/2022 14:48	10.11	6/15/2022 13:35	0.36	6/15/2022 15:18	28.74
6/16/2022 15:01	87.44	6/15/2022 14:19	1.95	6/15/2022 14:49	10.09	6/15/2022 13:36	0.38	6/15/2022 15:19	28.66
6/16/2022 15:02	89.63	6/15/2022 14:20	1.60	6/15/2022 14:50	10.10	6/15/2022 13:37	0.39	6/15/2022 15:20	28.72
6/16/2022 15:03	90.91	6/15/2022 14:21	1.35	6/15/2022 14:51	10.13	6/15/2022 13:38	0.37	6/15/2022 15:21	28.72
6/16/2022 15:04	90.14	6/15/2022 14:22	1.03	6/15/2022 14:52	10.14	6/15/2022 13:39	0.34	6/15/2022 15:22	28.73
6/16/2022 15:05	87.46	6/15/2022 14:23	0.86	6/15/2022 14:53	10.15	6/15/2022 13:40	0.31	6/15/2022 15:23	28.73
6/16/2022 15:06	85.83	6/15/2022 14:24	0.63	6/15/2022 14:54	10.18	6/15/2022 13:41	0.28	6/15/2022 15:24	28.68
6/16/2022 15:07	84.79	6/15/2022 14:25	0.48	6/15/2022 14:55	10.18	6/15/2022 13:42	0.30	6/15/2022 15:25	28.70
6/16/2022 15:08	84.01	6/15/2022 14:26	0.30	6/15/2022 14:56	10.15	6/15/2022 13:43	0.32	6/15/2022 15:26	28.71
6/16/2022 15:09	83.61	6/15/2022 14:27	0.21	6/15/2022 14:57	10.14	6/15/2022 13:44	0.28	6/15/2022 15:27	28.68
6/16/2022 15:10	83.27	6/15/2022 14:28	0.08	6/15/2022 14:58	10.18	6/15/2022 13:45	0.31	6/15/2022 15:28	28.68
6/16/2022 15:11	83.08	6/15/2022 14:29	0.03	6/15/2022 14:59	10.18	6/15/2022 13:46	0.33	6/15/2022 15:29	28.72
6/16/2022 15:12	82.91	6/15/2022 14:30	-0.04	6/15/2022 15:00	10.17	6/15/2022 13:47	0.37	6/15/2022 15:30	28.67
6/16/2022 15:13	82.77	6/15/2022 14:31	-0.03	6/15/2022 15:01	10.17	6/15/2022 13:48	0.35	6/15/2022 15:31	28.69
6/16/2022 15:14	82.68	6/15/2022 14:32	-0.03	6/15/2022 15:02	10.17	6/15/2022 13:49	0.36	6/15/2022 15:32	28.69
6/16/2022 15:15	82.61	6/15/2022 14:33	0.00	6/15/2022 15:03	10.16	6/15/2022 13:50	0.34	6/15/2022 15:33	28.68
6/16/2022 15:16	82.54	6/15/2022 14:34	-0.03	6/15/2022 15:04	10.16	6/15/2022 13:51	0.32	6/15/2022 15:34	28.68
6/16/2022 15:17	82.47	6/15/2022 14:35	-0.05	6/15/2022 15:05	10.14	6/15/2022 13:52	0.32	6/15/2022 15:35	28.67
6/16/2022 15:18	82.47	6/15/2022 14:36	-0.04	6/15/2022 15:06	10.15	6/15/2022 13:53	0.26	6/15/2022 15:36	28.68
6/16/2022 15:19	82.40	6/15/2022 14:37	-0.01	6/15/2022 15:07	10.15	6/15/2022 13:54	0.28	6/15/2022 15:37	28.68
6/16/2022 15:20	82.39	6/15/2022 14:38	0.00	6/15/2022 15:08	10.15	6/15/2022 13:55	0.30	6/15/2022 15:38	28.68
6/16/2022 15:21	82.37	6/15/2022 14:39	-0.03	6/15/2022 15:09	10.11	6/15/2022 13:56	0.29	6/15/2022 15:39	28.68
6/16/2022 15:22	82.29	6/15/2022 14:40	-0.03	6/15/2022 15:10	10.12	6/15/2022 13:57	0.34	6/15/2022 15:40	28.65
6/16/2022 15:23	82.28	6/15/2022 14:41	-0.03	6/15/2022 15:11	10.10	6/15/2022 13:58	0.41	6/15/2022 15:41	28.65
6/16/2022 15:24	82.25	6/15/2022 14:42	-0.01	6/15/2022 15:12	10.13	6/15/2022 13:59	0.40	6/15/2022 15:42	28.65

6/16/2022 15:25	82.24	6/15/2022 14:43	-0.10	6/15/2022 15:13	10.12	6/15/2022 14:00	0.41	6/15/2022 15:43	28.68
6/16/2022 15:26	82.20	6/15/2022 14:44	-0.02	6/15/2022 15:14	10.09	6/15/2022 14:01	0.36	6/15/2022 15:44	28.65
6/16/2022 15:27	82.21	6/15/2022 14:45	-0.02	6/15/2022 15:15	10.10	6/15/2022 14:02	0.29	6/15/2022 15:45	28.67
6/16/2022 15:28	82.15	6/15/2022 14:46	0.02	6/15/2022 15:16	10.11	6/15/2022 14:03	0.31	6/15/2022 15:46	28.65
6/16/2022 15:29	82.15	6/15/2022 14:47	-0.03	6/15/2022 15:17	10.16	6/15/2022 14:04	0.28	6/15/2022 15:47	28.65
6/16/2022 15:30	82.13	6/15/2022 14:48	-0.01	6/15/2022 15:18	10.14	6/15/2022 14:05	0.28	6/15/2022 15:48	28.65
6/16/2022 15:31	82.11	6/15/2022 14:49	-0.06	6/15/2022 15:19	10.14	6/15/2022 14:06	0.30	6/15/2022 15:49	28.67
6/16/2022 15:32	82.10	6/15/2022 14:50	-0.05	6/15/2022 15:20	10.12	6/15/2022 14:07	0.36	6/15/2022 15:50	28.65
6/16/2022 15:33	82.12	6/15/2022 14:51	-0.06	6/15/2022 15:21	10.17	6/15/2022 14:08	0.36	6/15/2022 15:51	28.66
6/16/2022 15:34	82.10	6/15/2022 14:52	-0.01	6/15/2022 15:22	10.16	6/15/2022 14:09	0.40	6/15/2022 15:52	28.63
6/16/2022 15:35	82.11	6/15/2022 14:53	-0.05	6/15/2022 15:23	10.16	6/15/2022 14:10	0.40	6/15/2022 15:53	29.62
6/16/2022 15:36	82.09	6/15/2022 14:54	-0.03	6/15/2022 15:24	10.18	6/15/2022 14:11	0.37	6/15/2022 15:54	30.05
6/16/2022 15:37	82.10	6/15/2022 14:55	-0.04	6/15/2022 15:25	10.14	6/15/2022 14:12	0.38	6/15/2022 15:55	29.17
6/16/2022 15:38	82.06	6/15/2022 14:56	-0.02	6/15/2022 15:26	10.15	6/15/2022 14:13	0.35	6/15/2022 15:56	28.81
6/16/2022 15:39	82.06	6/15/2022 14:57	-0.05	6/15/2022 15:27	10.16	6/15/2022 14:14	0.37	6/15/2022 15:57	28.72
6/16/2022 15:40	82.04	6/15/2022 14:58	-0.02	6/15/2022 15:28	10.17	6/15/2022 14:15	0.38	6/15/2022 15:58	28.68
6/16/2022 15:41	82.04	6/15/2022 14:59	-0.05	6/15/2022 15:29	10.17	6/15/2022 14:16	0.41	6/15/2022 15:59	30.48
6/16/2022 15:42	82.06	6/15/2022 15:00	-0.04	6/15/2022 15:30	10.15	6/15/2022 14:17	0.41	6/15/2022 16:00	29.41
6/16/2022 15:43	82.02	6/15/2022 15:01	-0.07	6/15/2022 15:31	10.14	6/15/2022 14:18	0.35	6/15/2022 16:01	28.95
6/16/2022 15:44	82.03	6/15/2022 15:02	-0.02	6/15/2022 15:32	10.16	6/15/2022 14:19	0.40	6/15/2022 16:02	28.77
6/16/2022 15:45	82.05	6/15/2022 15:03	5.56	6/15/2022 15:33	10.16	6/15/2022 14:20	0.34	6/15/2022 16:03	28.70
6/16/2022 15:46	82.01	6/15/2022 15:04	6.54	6/15/2022 15:34	10.11	6/15/2022 14:21	0.34	6/15/2022 16:04	28.71
6/16/2022 15:47	82.00	6/15/2022 15:05	5.38	6/15/2022 15:35	10.15	6/15/2022 14:22	0.32	6/15/2022 16:05	28.72
6/16/2022 15:48	81.99	6/15/2022 15:06	4.51	6/15/2022 15:36	10.11	6/15/2022 14:23	0.29	6/15/2022 16:06	28.70
6/16/2022 15:49	81.98	6/15/2022 15:07	3.73	6/15/2022 15:37	10.10	6/15/2022 14:24	0.26	6/15/2022 16:07	28.67
6/16/2022 15:50	81.99	6/15/2022 15:08	3.04	6/15/2022 15:38	10.10	6/15/2022 14:25	0.28	6/15/2022 16:08	28.65
6/16/2022 15:51	81.96	6/15/2022 15:09	2.55	6/15/2022 15:39	10.08	6/15/2022 14:26	0.27	6/15/2022 16:09	28.66
6/16/2022 15:52	81.99	6/15/2022 15:10	2.08	6/15/2022 15:40	10.12	6/15/2022 14:27	0.31	6/15/2022 16:10	28.65
6/16/2022 15:53	81.95	6/15/2022 15:11	1.72	6/15/2022 15:41	10.12	6/15/2022 14:28	0.34	6/15/2022 16:11	28.66
6/16/2022 15:54	81.94	6/15/2022 15:12	1.44	6/15/2022 15:42	10.12	6/15/2022 14:29	0.38	6/15/2022 16:12	28.66
6/16/2022 15:55	81.93	6/15/2022 15:13	1.16	6/15/2022 15:43	10.08	6/15/2022 14:30	0.35	6/15/2022 16:13	28.68
6/16/2022 15:56	81.92	6/15/2022 15:14	0.91	6/15/2022 15:44	10.14	6/15/2022 14:31	0.38	6/15/2022 16:14	28.64
6/16/2022 15:57	81.94	6/15/2022 15:15	0.71	6/15/2022 15:45	10.15	6/15/2022 14:32	0.38	6/15/2022 16:15	28.71
6/16/2022 15:58	81.89	6/15/2022 15:16	0.51	6/15/2022 15:46	10.16	6/15/2022 14:33	0.32	6/15/2022 16:16	28.66
6/16/2022 15:59	81.94	6/15/2022 15:17	0.35	6/15/2022 15:47	10.18	6/15/2022 14:34	0.32	6/15/2022 16:17	28.63
6/16/2022 16:00	81.87	6/15/2022 15:18	0.24	6/15/2022 15:48	10.17	6/15/2022 14:35	0.26	6/15/2022 16:18	28.67
6/16/2022 16:01	81.89	6/15/2022 15:19	0.10	6/15/2022 15:49	10.12	6/15/2022 14:36	0.25	6/15/2022 16:19	28.63
6/16/2022 16:02	81.91	6/15/2022 15:20	0.01	6/15/2022 15:50	10.17	6/15/2022 14:37	0.29	6/15/2022 16:20	28.63
6/16/2022 16:03	81.90	6/15/2022 15:21	-0.02	6/15/2022 15:51	10.12	6/15/2022 14:38	0.30	6/15/2022 16:21	28.64
6/16/2022 16:04	81.86	6/15/2022 15:22	-0.05	6/15/2022 15:52	10.19	6/15/2022 14:39	0.38	6/15/2022 16:22	28.64
6/16/2022 16:05	81.91	6/15/2022 15:23	-0.05	6/15/2022 15:53	10.12	6/15/2022 14:40	0.39	6/15/2022 16:23	28.61
6/16/2022 16:06	81.86	6/15/2022 15:24	-0.03	6/15/2022 15:54	10.17	6/15/2022 14:41	0.37	6/15/2022 16:24	28.63
6/16/2022 16:07	81.85	6/15/2022 15:25	-0.05	6/15/2022 15:55	10.12	6/15/2022 14:42	0.36	6/15/2022 16:25	28.65
6/16/2022 16:08	81.86	6/15/2022 15:26	-0.03	6/15/2022 15:56	10.15	6/15/2022 14:43	0.32	6/15/2022 16:26	28.65
6/16/2022 16:09	81.86	6/15/2022 15:27	-0.03	6/15/2022 15:57	10.16	6/15/2022 14:44	0.29	6/15/2022 16:27	28.67
6/16/2022 16:10	81.84	6/15/2022 15:28	-0.02	6/15/2022 15:58	10.13	6/15/2022 14:45	0.27	6/15/2022 16:28	28.69
6/16/2022 16:11	81.85	6/15/2022 15:29	-0.06	6/15/2022 15:59	10.14	6/15/2022 14:46	0.25	6/15/2022 16:29	28.69
6/16/2022 16:12	81.89	6/15/2022 15:30	-0.05	6/15/2022 16:00	10.15	6/15/2022 14:47	0.26	6/15/2022 16:30	28.65
6/16/2022 16:13	81.87	6/15/2022 15:31	-0.03	6/15/2022 16:01	10.17	6/15/2022 14:48	0.31	6/15/2022 16:31	28.68
6/16/2022 16:14	81.90	6/15/2022 15:32	0.01	6/15/2022 16:02	10.13	6/15/2022 14:49	0.37	6/15/2022 16:32	28.67
6/16/2022 16:15	81.85	6/15/2022 15:33	-0.04	6/15/2022 16:03	10.19	6/15/2022 14:50	0.39	6/15/2022 16:33	28.65
6/16/2022 16:16	81.85	6/15/2022 15:34	0.01	6/15/2022 16:04	10.19	6/15/2022 14:51	0.39	6/15/2022 16:34	28.65
6/16/2022 16:17	81.90	6/15/2022 15:35	-0.05	6/15/2022 16:05	10.17	6/15/2022 14:52	0.38	6/15/2022 16:35	28.67
6/16/2022 16:18	81.83	6/15/2022 15:36	0.01	6/15/2022 16:06	10.17	6/15/2022 14:53	0.41	6/15/2022 16:36	28.63
6/16/2022 16:19	81.84	6/15/2022 15:37	-0.06	6/15/2022 16:07	10.21	6/15/2022 14:54	0.35	6/15/2022 16:37	28.64
6/16/2022 16:20	81.84	6/15/2022 15:38	0.02	6/15/2022 16:08	10.20	6/15/2022 14:55	0.26	6/15/2022 16:38	28.64
6/16/2022 16:21	81.87	6/15/2022 15:39	-0.05	6/15/2022 16:09	10.16	6/15/2022 14:56	0.29	6/15/2022 16:39	28.63
6/16/2022 16:22	81.81	6/15/2022 15:40	-0.01	6/15/2022 16:10	10.21	6/15/2022 14:57	0.25	6/15/2022 16:40	28.64
6/16/2022 16:23	81.82	6/15/2022 15:41	-0.03	6/15/2022 16:11	10.18	6/15/2022 14:58	0.27	6/15/2022 16:41	28.61
6/16/2022 16:24	81.83	6/15/2022 15:42	-0.04	6/15/2022 16:12	10.16	6/15/2022 14:59	0.31	6/15/2022 16:42	28.65
6/16/2022 16:25	81.81	6/15/2022 15:43	-0.01	6/15/2022 16:13	10.15	6/15/2022 15:00	0.38	6/15/2022 16:43	28.61
6/16/2022 16:26	81.81	6/15/2022 15:44	-0.03	6/15/2022 16:14	10.14	6/15/2022 15:01	0.36	6/15/2022 16:44	28.63
6/16/2022 16:27	81.79	6/15/2022 15:45	-0.05	6/15/2022 16:15	10.14	6/15/2022 15:02	0.37	6/15/2022 16:45	28.64
6/16/2022 16:28	81.85	6/15/2022 15:46	-0.05	6/15/2022 16:16	10.14	6/15/2022 15:03	0.35	6/15/2022 16:46	28.62
6/16/2022 16:29	81.84	6/15/2022 15:47	-0.03	6/15/2022 16:17	10.14	6/15/2022 15:04	0.39	6/15/2022 16:47	28.61
6/16/2022 16:30	81.79	6/15/2022 15:48	-0.04	6/15/2022 16:18	10.11	6/15/2022 15:05	0.37	6/15/2022 16:48	28.63
6/16/2022 16:31	81.79	6/15/2022 15:49	-0.03	6/15/2022 16:19	10.12	6/15/2022 15:06	0.38	6/15/2022 16:49	28.62
6/16/2022 16:32	81.79	6/15/2022 15:50	-0.02	6/15/2022 16:20	10.13	6/15/2022 15:07	0.39	6/15/2022 16:50	28.61
6/16/2022 16:33	81.78	6/15/2022 15:51	-0.02	6/15/2022 16:21	10.14	6/15/2022 15:08	0.37	6/15/2022 16:51	28.65
6/16/2022 16:34	81.77	6/15/2022 15:52	-0.07	6/15/2022 16:22	10.13	6/15/2022 15:09	0.36	6/15/2022 16:52	28.63
6/16/2022 16:35	81.75	6/15/2022 15:53	2.34	6/15/2022 16:23	10.10	6/15/2022 15:10	0.34	6/15/2022 16:53	28.63
6/16/2022 16:36	81.78	6/15/2022 15:54	7.37	6/15/2022 16:24	10.11	6/15/2022 15:11	0.35	6/15/2022 16:54	28.60
6/16/2022 16:37	81.80	6/15/2022 15:55	5.99	6/15/2022 16:25	10.10	6/15/2022 15:12	0.29	6/15/2022 16:55	28.58
6/16/2022 16:38	81.77	6/15/2022 15:56	4.94	6/15/2022 16:26	10.07	6/15/2022 15:13	0.30	6/15/2022 16:56	28.63
6/16/2022 16:39	81.75	6/15/2022 15:57	4.17	6/15/2022 16:27	10.11	6/15/2022 15:14	0.28	6/15/2022 16:57	30.87
6/16/2022 16:40	81.75	6/15/2022 15:58	3.40	6/15/2022 16:28	10.16	6/15/2022 15:15	0.25	6/15/2022 16:58	29.78
6/16/2022 16:41	81.74	6/15/2022 15:59	2.79	6/15/2022 16:29	10.15	6/15/2022 15:16	0.30	6/15/2022 16:59	29.02
6/16/2022 16:42	81.72	6/15/2022 16:00	2.36	6/15/2022 16:30	10.15	6/15/2022 15:17	0.31	6/15/2022 17:00	28.79
6/16/2022 16:43	81.77	6/15/2022 16:01	1.93	6/15/2022 16:31	10.17	6/15/2022 15:18	0.38	6/15/2022 17:01	28.67
6/16/2022 16:44	81.71	6/15/2022 16:02	1.59	6/15/2022 16:32	10.17	6/15/2022 15:19	0.40	6/15/2022 17:02	28.64
6/16/2022 16:45	81.73	6/15/2022 16:03	1.28	6/15/2022 16:33	10.14	6/15/2022 15:20	0.37	6/15/2022 17:03	28.62
6/16/2022 16:46	81.72	6/15/2022 16:04	1.00	6/15/2022 16:34	10.16	6/15/2022 15:21	0.41	6/15/2022 17:04	28.59
6/16/2022 16:47	81.74	6/15/2022 16:05	0.83	6/15/2022 16:35	10.15	6/15/2022 15:22	0.39	6/15/2022 17:05	28.61
6/16/2022 16:48	81.72	6/15/2022 16:06	0.60	6/15/2022 16:36	10.17	6/15/2022 15:23	0.34	6/15/2022 17:06	28.66
6/16/2022 16:49	81.73	6/15/2022 16:07	0.43	6/15/2022 16:37	10.18	6/15/2022 15:24	0.33	6/15/2022 17:07	28.64
6/16/2022 16:50	81.75	6/15/2022 16:08	0.27	6/15/2022 16:38	10.15	6/15/2022 15:25	0.32	6/15/2022 17:08	28.61
6/16/2022 16:51	81.74	6/15/2022 16:09	0.16	6/15/2022 16:39	10.14	6/15/2022 15:26	0.28	6/15/2022 17:09	28.64
6/16/2022 16:52	81.71	6/15/2022 16:10	0.07	6/15/2022 16:40	10.13	6/15/2022 15:27	0.27	6/15/2022 17:10	28.63

6/16/2022 16:53	81.71	6/15/2022 16:11	0.01	6/15/2022 16:41	10.13	6/15/2022 15:28	0.36	6/15/2022 17:11	28.60
6/16/2022 16:54	81.71	6/15/2022 16:12	-0.04	6/15/2022 16:42	10.12	6/15/2022 15:29	0.35	6/15/2022 17:12	28.61
6/16/2022 16:55	81.74	6/15/2022 16:13	-0.08	6/15/2022 16:43	10.12	6/15/2022 15:30	0.39	6/15/2022 17:13	28.58
6/16/2022 16:56	81.70	6/15/2022 16:14	-0.02	6/15/2022 16:44	10.12	6/15/2022 15:31	0.37	6/15/2022 17:14	28.62
6/16/2022 16:57	81.72	6/15/2022 16:15	-0.04	6/15/2022 16:45	10.18	6/15/2022 15:32	0.43	6/15/2022 17:15	28.61
6/16/2022 16:58	81.73	6/15/2022 16:16	-0.05	6/15/2022 16:46	10.11	6/15/2022 15:33	0.37	6/15/2022 17:16	28.59
6/16/2022 16:59	81.73	6/15/2022 16:17	-0.05	6/15/2022 16:47	10.10	6/15/2022 15:34	0.34	6/15/2022 17:17	30.73
6/16/2022 17:00	81.67	6/15/2022 16:18	-0.02	6/15/2022 16:48	10.10	6/15/2022 15:35	0.31	6/15/2022 17:18	29.51
6/16/2022 17:01	81.72	6/15/2022 16:19	0.00	6/15/2022 16:49	10.09	6/15/2022 15:36	0.31	6/15/2022 17:19	28.97
6/16/2022 17:02	81.67	6/15/2022 16:20	-0.02	6/15/2022 16:50	10.06	6/15/2022 15:37	0.35	6/15/2022 17:20	28.73
6/16/2022 17:03	81.71	6/15/2022 16:21	0.02	6/15/2022 16:51	10.09	6/15/2022 15:38	0.35	6/15/2022 17:21	28.66
6/16/2022 17:04	81.72	6/15/2022 16:22	-0.02	6/15/2022 16:52	10.09	6/15/2022 15:39	0.35	6/15/2022 17:22	28.69
6/16/2022 17:05	81.67	6/15/2022 16:23	-0.05	6/15/2022 16:53	10.12	6/15/2022 15:40	0.40	6/15/2022 17:23	28.65
6/16/2022 17:06	81.67	6/15/2022 16:24	-0.06	6/15/2022 16:54	10.15	6/15/2022 15:41	0.43	6/15/2022 17:24	28.62
6/16/2022 17:07	81.65	6/15/2022 16:25	-0.05	6/15/2022 16:55	10.15	6/15/2022 15:42	0.42	6/15/2022 17:25	28.64
6/16/2022 17:08	81.67	6/15/2022 16:26	-0.01	6/15/2022 16:56	10.16	6/15/2022 15:43	0.39	6/15/2022 17:26	30.44
6/16/2022 17:09	81.67	6/15/2022 16:27	-0.02	6/15/2022 16:57	10.15	6/15/2022 15:44	0.37	6/15/2022 17:27	29.38
6/16/2022 17:10	81.68	6/15/2022 16:28	-0.07	6/15/2022 16:58	10.17	6/15/2022 15:45	0.32	6/15/2022 17:28	28.89
6/16/2022 17:11	81.67	6/15/2022 16:29	-0.04	6/15/2022 16:59	10.18	6/15/2022 15:46	0.33	6/15/2022 17:29	28.72
6/16/2022 17:12	81.66	6/15/2022 16:30	-0.07	6/15/2022 17:00	10.15	6/15/2022 15:47	0.36	6/15/2022 17:30	28.72
6/16/2022 17:13	81.69	6/15/2022 16:31	-0.05	6/15/2022 17:01	10.14	6/15/2022 15:48	0.36	6/15/2022 17:31	28.66
6/16/2022 17:14	81.68	6/15/2022 16:32	-0.01	6/15/2022 17:02	10.17	6/15/2022 15:49	0.40	6/15/2022 17:32	30.86
6/16/2022 17:15	81.65	6/15/2022 16:33	-0.05	6/15/2022 17:03	10.13	6/15/2022 15:50	0.42	6/15/2022 17:33	29.59
6/16/2022 17:16	81.64	6/15/2022 16:34	-0.06	6/15/2022 17:04	10.14	6/15/2022 15:51	0.41	6/15/2022 17:34	30.76
6/16/2022 17:17	81.66	6/15/2022 16:35	-0.05	6/15/2022 17:05	10.13	6/15/2022 15:52	0.42	6/15/2022 17:35	30.04
6/16/2022 17:18	81.66	6/15/2022 16:36	-0.05	6/15/2022 17:06	10.14	6/15/2022 15:53	0.37	6/15/2022 17:36	29.19
6/16/2022 17:19	81.63	6/15/2022 16:37	-0.04	6/15/2022 17:07	10.14	6/15/2022 15:54	0.35	6/15/2022 17:37	28.88
6/16/2022 17:20	81.66	6/15/2022 16:38	-0.02	6/15/2022 17:08	10.11	6/15/2022 15:55	0.32	6/15/2022 17:38	28.75
6/16/2022 17:21	81.65	6/15/2022 16:39	-0.03	6/15/2022 17:09	10.09	6/15/2022 15:56	0.30	6/15/2022 17:39	28.73
6/16/2022 17:22	81.67	6/15/2022 16:40	-0.07	6/15/2022 17:10	10.13	6/15/2022 15:57	0.37	6/15/2022 17:40	28.71
6/16/2022 17:23	81.67	6/15/2022 16:41	-0.03	6/15/2022 17:11	10.12	6/15/2022 15:58	0.35	6/15/2022 17:41	28.68
6/16/2022 17:24	81.63	6/15/2022 16:42	-0.03	6/15/2022 17:12	10.09	6/15/2022 15:59	0.32	6/15/2022 17:42	28.65
6/16/2022 17:25	81.64	6/15/2022 16:43	-0.06	6/15/2022 17:13	10.10	6/15/2022 16:00	0.31	6/15/2022 17:43	28.66
6/16/2022 17:26	81.65	6/15/2022 16:44	4.86	6/15/2022 17:14	10.09	6/15/2022 16:01	0.33	6/15/2022 17:44	28.64
6/16/2022 17:27	81.70	6/15/2022 16:45	6.86	6/15/2022 17:15	10.12	6/15/2022 16:02	0.34	6/15/2022 17:45	28.65
6/16/2022 17:28	81.64	6/15/2022 16:46	5.61	6/15/2022 17:16	10.11	6/15/2022 16:03	0.33	6/15/2022 17:46	28.60
6/16/2022 17:29	81.63	6/15/2022 16:47	4.67	6/15/2022 17:17	10.15	6/15/2022 16:04	0.30	6/15/2022 17:47	28.65
6/16/2022 17:30	81.61	6/15/2022 16:48	3.86	6/15/2022 17:18	10.12	6/15/2022 16:05	0.32	6/15/2022 17:48	28.65
6/16/2022 17:31	81.62	6/15/2022 16:49	3.17	6/15/2022 17:19	10.16	6/15/2022 16:06	0.36	6/15/2022 17:49	28.66
6/16/2022 17:32	81.65	6/15/2022 16:50	2.59	6/15/2022 17:20	10.15	6/15/2022 16:07	0.39	6/15/2022 17:50	28.65
6/16/2022 17:33	81.62	6/15/2022 16:51	2.14	6/15/2022 17:21	10.17	6/15/2022 16:08	0.42	6/15/2022 17:51	28.64
6/16/2022 17:34	81.62	6/15/2022 16:52	1.81	6/15/2022 17:22	10.15	6/15/2022 16:09	0.44	6/15/2022 17:52	28.62
6/16/2022 17:35	81.63	6/15/2022 16:53	1.45	6/15/2022 17:23	10.15	6/15/2022 16:10	0.41	6/15/2022 17:53	28.66
6/16/2022 17:36	81.64	6/15/2022 16:54	1.22	6/15/2022 17:24	10.17	6/15/2022 16:11	0.42	6/15/2022 17:54	28.62
6/16/2022 17:37	81.62	6/15/2022 16:55	0.93	6/15/2022 17:25	10.18	6/15/2022 16:12	0.39	6/15/2022 17:55	28.63
6/16/2022 17:38	81.62	6/15/2022 16:56	0.73	6/15/2022 17:26	10.16	6/15/2022 16:13	0.37	6/15/2022 17:56	28.63
6/16/2022 17:39	81.60	6/15/2022 16:57	0.52	6/15/2022 17:27	10.19	6/15/2022 16:14	0.31	6/15/2022 17:57	28.63
6/16/2022 17:40	81.65	6/15/2022 16:58	0.37	6/15/2022 17:28	10.13	6/15/2022 16:15	0.36	6/15/2022 17:58	28.64
6/16/2022 17:41	81.62	6/15/2022 16:59	0.22	6/15/2022 17:29	10.16	6/15/2022 16:16	0.36	6/15/2022 17:59	28.60
6/16/2022 17:42	81.58	6/15/2022 17:00	0.11	6/15/2022 17:30	10.13	6/15/2022 16:17	0.34	6/15/2022 18:00	28.60
6/16/2022 17:43	81.64	6/15/2022 17:01	-0.02	6/15/2022 17:31	10.15	6/15/2022 16:18	0.36	6/15/2022 18:01	28.60
6/16/2022 17:44	81.61	6/15/2022 17:02	-0.03	6/15/2022 17:32	10.12	6/15/2022 16:19	0.39	6/15/2022 18:02	28.63
6/16/2022 17:45	81.61	6/15/2022 17:03	-0.03	6/15/2022 17:33	10.12	6/15/2022 16:20	0.43	6/15/2022 18:03	30.84
6/16/2022 17:46	81.61	6/15/2022 17:04	-0.03	6/15/2022 17:34	10.13	6/15/2022 16:21	0.43	6/15/2022 18:04	29.55
6/16/2022 17:47	81.64	6/15/2022 17:05	-0.02	6/15/2022 17:35	10.09	6/15/2022 16:22	0.40	6/15/2022 18:05	28.95
6/16/2022 17:48	81.64	6/15/2022 17:06	-0.02	6/15/2022 17:36	10.10	6/15/2022 16:23	0.39	6/15/2022 18:06	28.75
6/16/2022 17:49	81.62	6/15/2022 17:07	-0.03	6/15/2022 17:37	10.06	6/15/2022 16:24	0.40	6/15/2022 18:07	28.66
6/16/2022 17:50	81.58	6/15/2022 17:08	-0.05	6/15/2022 17:38	10.10	6/15/2022 16:25	0.34	6/15/2022 18:08	28.67
6/16/2022 17:51	81.62	6/15/2022 17:09	-0.03	6/15/2022 17:39	10.10	6/15/2022 16:26	0.30	6/15/2022 18:09	30.24
6/16/2022 17:52	81.59	6/15/2022 17:10	-0.02	6/15/2022 17:40	10.12	6/15/2022 16:27	0.36	6/15/2022 18:10	29.94
6/16/2022 17:53	81.61	6/15/2022 17:11	-0.05	6/15/2022 17:41	10.15	6/15/2022 16:28	0.38	6/15/2022 18:11	29.35
6/16/2022 17:54	81.63	6/15/2022 17:12	-0.07	6/15/2022 17:42	10.14	6/15/2022 16:29	0.44	6/15/2022 18:12	30.51
6/16/2022 17:55	81.62	6/15/2022 17:13	-0.05	6/15/2022 17:43	10.13	6/15/2022 16:30	0.45	6/15/2022 18:13	29.40
6/16/2022 17:56	81.61	6/15/2022 17:14	-0.04	6/15/2022 17:44	10.15	6/15/2022 16:31	0.44	6/15/2022 18:14	28.98
6/16/2022 17:57	81.59	6/15/2022 17:15	-0.04	6/15/2022 17:45	10.17	6/15/2022 16:32	0.41	6/15/2022 18:15	28.77
6/16/2022 17:58	81.60	6/15/2022 17:16	-0.05	6/15/2022 17:46	10.15	6/15/2022 16:33	0.36	6/15/2022 18:16	28.77
6/16/2022 17:59	81.59	6/15/2022 17:17	-0.01	6/15/2022 17:47	10.19	6/15/2022 16:34	0.36	6/15/2022 18:17	28.77
6/16/2022 18:00	81.62	6/15/2022 17:18	-0.02	6/15/2022 17:48	10.19	6/15/2022 16:35	0.35	6/15/2022 18:18	28.76
6/16/2022 18:01	81.58	6/15/2022 17:19	-0.02	6/15/2022 17:49	10.14	6/15/2022 16:36	0.31	6/15/2022 18:19	28.73
6/16/2022 18:02	81.61	6/15/2022 17:20	-0.04	6/15/2022 17:50	10.19	6/15/2022 16:37	0.34	6/15/2022 18:20	28.73
6/16/2022 18:03	81.52	6/15/2022 17:21	-0.03	6/15/2022 17:51	10.15	6/15/2022 16:38	0.36	6/15/2022 18:21	28.74
6/16/2022 18:04	81.57	6/15/2022 17:22	-0.04	6/15/2022 17:52	10.18	6/15/2022 16:39	0.41	6/15/2022 18:22	28.74
6/16/2022 18:05	81.56	6/15/2022 17:23	-0.02	6/15/2022 17:53	10.17	6/15/2022 16:40	0.42	6/15/2022 18:23	28.72
6/16/2022 18:06	81.55	6/15/2022 17:24	-0.06	6/15/2022 17:54	10.12	6/15/2022 16:41	0.41	6/15/2022 18:24	28.66
6/16/2022 18:07	81.55	6/15/2022 17:25	-0.02	6/15/2022 17:55	10.14	6/15/2022 16:42	0.40	6/15/2022 18:25	28.70
6/16/2022 18:08	82.75	6/15/2022 17:26	-0.05	6/15/2022 17:56	10.14	6/15/2022 16:43	0.38	6/15/2022 18:26	28.69
6/16/2022 18:09	86.71	6/15/2022 17:27	-0.03	6/15/2022 17:57	10.14	6/15/2022 16:44	0.34	6/15/2022 18:27	28.68
6/16/2022 18:10	89.02	6/15/2022 17:28	-0.01	6/15/2022 17:58	10.09	6/15/2022 16:45	0.36	6/15/2022 18:28	28.71
6/16/2022 18:11	89.54	6/15/2022 17:29	5.24	6/15/2022 17:59	10.15	6/15/2022 16:46	0.34	6/15/2022 18:29	28.66
6/16/2022 18:12	86.89	6/15/2022 17:30	6.76	6/15/2022 18:00	10.16	6/15/2022 16:47	0.34	6/15/2022 18:30	28.65
6/16/2022 18:13	85.28	6/15/2022 17:31	5.57	6/15/2022 18:01	10.09	6/15/2022 16:48	0.35	6/15/2022 18:31	28.70
6/16/2022 18:14	84.26	6/15/2022 17:32	4.61	6/15/2022 18:02	10.12	6/15/2022 16:49	0.34	6/15/2022 18:32	28.73
6/16/2022 18:15	83.63	6/15/2022 17:33	3.84	6/15/2022 18:03	10.09	6/15/2022 16:50	0.35	6/15/2022 18:33	28.76
6/16/2022 18:16	83.20	6/15/2022 17:34	3.19	6/15/2022 18:04	10.12	6/15/2022 16:51	0.33	6/15/2022 18:34	28.72
6/16/2022 18:17	82.95	6/15/2022 17:35	2.62	6/15/2022 18:05	10.16	6/15/2022 16:52	0.35	6/15/2022 18:35	28.69
6/16/2022 18:18	82.76	6/15/2022 17:36	2.19	6/15/2022 18:06	10.12	6/15/2022 16:53	0.37	6/15/2022 18:36	28.73
6/16/2022 18:19	82.64	6/15/2022 17:37	1.81	6/15/2022 18:07	10.19	6/15/2022 16:54	0.38	6/15/2022 18:37	28.72
6/16/2022 18:20	82.52	6/15/2022 17:38	1.44	6/15/2022 18:08	10.14	6/15/2022 16:55	0.39	6/15/2022 18:38	28.70

6/16/2022 18:21	82.44	6/15/2022 17:39	1.21	6/15/2022 18:09	10.15	6/15/2022 16:56	0.44	6/15/2022 18:39	28.70
6/16/2022 18:22	82.35	6/15/2022 17:40	0.99	6/15/2022 18:10	10.15	6/15/2022 16:57	0.44	6/15/2022 18:40	28.68
6/16/2022 18:23	82.31	6/15/2022 17:41	0.81	6/15/2022 18:11	10.19	6/15/2022 16:58	0.45	6/15/2022 18:41	28.66
6/16/2022 18:24	82.28	6/15/2022 17:42	0.58	6/15/2022 18:12	10.20	6/15/2022 16:59	0.37	6/15/2022 18:42	28.65
6/16/2022 18:25	82.24	6/15/2022 17:43	0.43	6/15/2022 18:13	10.20	6/15/2022 17:00	0.34	6/15/2022 18:43	28.64
6/16/2022 18:26	82.20	6/15/2022 17:44	0.30	6/15/2022 18:14	10.19	6/15/2022 17:01	0.37	6/15/2022 18:44	28.67
6/16/2022 18:27	82.17	6/15/2022 17:45	0.18	6/15/2022 18:15	10.21	6/15/2022 17:02	0.33	6/15/2022 18:45	28.66
6/16/2022 18:28	82.13	6/15/2022 17:46	0.06	6/15/2022 18:16	10.18	6/15/2022 17:03	0.38	6/15/2022 18:46	28.65
6/16/2022 18:29	82.12	6/15/2022 17:47	0.02	6/15/2022 18:17	10.18	6/15/2022 17:04	0.34	6/15/2022 18:47	28.63
6/16/2022 18:30	82.11	6/15/2022 17:48	0.00	6/15/2022 18:18	10.16	6/15/2022 17:05	0.42	6/15/2022 18:48	28.64
6/16/2022 18:31	82.08	6/15/2022 17:49	-0.04	6/15/2022 18:19	10.16	6/15/2022 17:06	0.46	6/15/2022 18:49	28.66
6/16/2022 18:32	82.03	6/15/2022 17:50	-0.03	6/15/2022 18:20	10.13	6/15/2022 17:07	0.47	6/15/2022 18:50	28.66
6/16/2022 18:33	82.06	6/15/2022 17:51	-0.03	6/15/2022 18:21	10.15	6/15/2022 17:08	0.48	6/15/2022 18:51	28.67
6/16/2022 18:34	82.01	6/15/2022 17:52	-0.05	6/15/2022 18:22	10.14	6/15/2022 17:09	0.43	6/15/2022 18:52	28.68
6/16/2022 18:35	82.02	6/15/2022 17:53	-0.04	6/15/2022 18:23	10.14	6/15/2022 17:10	0.38	6/15/2022 18:53	28.64
6/16/2022 18:36	81.98	6/15/2022 17:54	-0.03	6/15/2022 18:24	10.13	6/15/2022 17:11	0.40	6/15/2022 18:54	28.64
6/16/2022 18:37	81.95	6/15/2022 17:55	0.01	6/15/2022 18:25	10.13	6/15/2022 17:12	0.39	6/15/2022 18:55	28.64
6/16/2022 18:38	81.98	6/15/2022 17:56	-0.02	6/15/2022 18:26	10.12	6/15/2022 17:13	0.44	6/15/2022 18:56	28.61
6/16/2022 18:39	81.97	6/15/2022 17:57	-0.07	6/15/2022 18:27	10.11	6/15/2022 17:14	0.41	6/15/2022 18:57	28.62
6/16/2022 18:40	81.93	6/15/2022 17:58	-0.01	6/15/2022 18:28	10.07	6/15/2022 17:15	0.40	6/15/2022 18:58	28.65
6/16/2022 18:41	81.94	6/15/2022 17:59	-0.04	6/15/2022 18:29	10.11	6/15/2022 17:16	0.45	6/15/2022 18:59	28.67
6/16/2022 18:42	81.93	6/15/2022 18:00	-0.05	6/15/2022 18:30	10.12	6/15/2022 17:17	0.44	6/15/2022 19:00	28.60
6/16/2022 18:43	81.97	6/15/2022 18:01	-0.01	6/15/2022 18:31	10.15	6/15/2022 17:18	0.50	6/15/2022 19:01	28.63
6/16/2022 18:44	81.95	6/15/2022 18:02	-0.05	6/15/2022 18:32	10.15	6/15/2022 17:19	0.52	6/15/2022 19:02	28.63
6/16/2022 18:45	81.94	6/15/2022 18:03	-0.03	6/15/2022 18:33	10.16	6/15/2022 17:20	0.50	6/15/2022 19:03	28.60
6/16/2022 18:46	81.92	6/15/2022 18:04	4.51	6/15/2022 18:34	10.16	6/15/2022 17:21	0.46	6/15/2022 19:04	28.64
6/16/2022 18:47	81.95	6/15/2022 18:05	6.95	6/15/2022 18:35	10.20	6/15/2022 17:22	0.41	6/15/2022 19:05	28.62
6/16/2022 18:48	81.96	6/15/2022 18:06	5.74	6/15/2022 18:36	10.17	6/15/2022 17:23	0.42	6/15/2022 19:06	28.65
6/16/2022 18:49	81.92	6/15/2022 18:07	4.76	6/15/2022 18:37	10.20	6/15/2022 17:24	0.39	6/15/2022 19:07	28.59
6/16/2022 18:50	81.90	6/15/2022 18:08	3.93	6/15/2022 18:38	10.15	6/15/2022 17:25	0.38	6/15/2022 19:08	28.59
6/16/2022 18:51	81.89	6/15/2022 18:09	3.25	6/15/2022 18:39	10.17	6/15/2022 17:26	0.35	6/15/2022 19:09	28.60
6/16/2022 18:52	81.87	6/15/2022 18:10	2.70	6/15/2022 18:40	10.18	6/15/2022 17:27	0.36	6/15/2022 19:10	28.63
6/16/2022 18:53	81.90	6/15/2022 18:11	2.20	6/15/2022 18:41	10.14	6/15/2022 17:28	0.38	6/15/2022 19:11	29.28
6/16/2022 18:54	81.89	6/15/2022 18:12	1.86	6/15/2022 18:42	10.18	6/15/2022 17:29	0.37	6/15/2022 19:12	30.11
6/16/2022 18:55	81.86	6/15/2022 18:13	1.52	6/15/2022 18:43	10.15	6/15/2022 17:30	0.36	6/15/2022 19:13	29.21
6/16/2022 18:56	81.89	6/15/2022 18:14	1.24	6/15/2022 18:44	10.13	6/15/2022 17:31	0.37	6/15/2022 19:14	28.84
6/16/2022 18:57	81.89	6/15/2022 18:15	0.99	6/15/2022 18:45	10.16	6/15/2022 17:32	0.42	6/15/2022 19:15	28.72
6/16/2022 18:58	81.87	6/15/2022 18:16	0.76	6/15/2022 18:46	10.18	6/15/2022 17:33	0.39	6/15/2022 19:16	28.67
6/16/2022 18:59	81.82	6/15/2022 18:17	0.56	6/15/2022 18:47	10.19	6/15/2022 17:34	0.42	6/15/2022 19:17	28.63
6/16/2022 19:00	81.82	6/15/2022 18:18	0.41	6/15/2022 18:48	10.21	6/15/2022 17:35	0.40	6/15/2022 19:18	28.65
6/16/2022 19:01	81.86	6/15/2022 18:19	0.29	6/15/2022 18:49	10.22	6/15/2022 17:36	0.42	6/15/2022 19:19	28.67
6/16/2022 19:02	81.82	6/15/2022 18:20	0.19	6/15/2022 18:50	10.23	6/15/2022 17:37	0.42	6/15/2022 19:20	28.63
6/16/2022 19:03	81.82	6/15/2022 18:21	0.08	6/15/2022 18:51	10.21	6/15/2022 17:38	0.40	6/15/2022 19:21	28.61
6/16/2022 19:04	81.84	6/15/2022 18:22	-0.03	6/15/2022 18:52	10.24	6/15/2022 17:39	0.37	6/15/2022 19:22	28.63
6/16/2022 19:05	81.82	6/15/2022 18:23	-0.04	6/15/2022 18:53	10.24	6/15/2022 17:40	0.38	6/15/2022 19:23	28.66
6/16/2022 19:06	81.80	6/15/2022 18:24	-0.04	6/15/2022 18:54	10.24	6/15/2022 17:41	0.37	6/15/2022 19:24	28.63
6/16/2022 19:07	81.80	6/15/2022 18:25	-0.03	6/15/2022 18:55	10.23	6/15/2022 17:42	0.38	6/15/2022 19:25	28.64
6/16/2022 19:08	81.80	6/15/2022 18:26	-0.05	6/15/2022 18:56	10.25	6/15/2022 17:43	0.40	6/15/2022 19:26	28.64
6/16/2022 19:09	81.81	6/15/2022 18:27	-0.01	6/15/2022 18:57	10.22	6/15/2022 17:44	0.39	6/15/2022 19:27	28.62
6/16/2022 19:10	81.81	6/15/2022 18:28	-0.01	6/15/2022 18:58	10.19	6/15/2022 17:45	0.45	6/15/2022 19:28	28.60
6/16/2022 19:11	81.79	6/15/2022 18:29	0.00	6/15/2022 18:59	10.19	6/15/2022 17:46	0.46	6/15/2022 19:29	28.59
6/16/2022 19:12	81.79	6/15/2022 18:30	-0.02	6/15/2022 19:00	10.23	6/15/2022 17:47	0.44	6/15/2022 19:30	28.60
6/16/2022 19:13	81.80	6/15/2022 18:31	-0.04	6/15/2022 19:01	10.18	6/15/2022 17:48	0.46	6/15/2022 19:31	28.64
6/16/2022 19:14	81.77	6/15/2022 18:32	-0.04	6/15/2022 19:02	10.15	6/15/2022 17:49	0.51	6/15/2022 19:32	28.60
6/16/2022 19:15	81.78	6/15/2022 18:33	-0.05	6/15/2022 19:03	10.16	6/15/2022 17:50	0.48	6/15/2022 19:33	28.58
6/16/2022 19:16	81.78	6/15/2022 18:34	-0.05	6/15/2022 19:04	10.20	6/15/2022 17:51	0.41	6/15/2022 19:34	28.61
6/16/2022 19:17	81.80	6/15/2022 18:35	-0.06	6/15/2022 19:05	10.17	6/15/2022 17:52	0.42	6/15/2022 19:35	28.60
6/16/2022 19:18	81.80	6/15/2022 18:36	-0.05	6/15/2022 19:06	10.18	6/15/2022 17:53	0.40	6/15/2022 19:36	28.60
6/16/2022 19:19	81.78	6/15/2022 18:37	-0.02	6/15/2022 19:07	10.16	6/15/2022 17:54	0.38	6/15/2022 19:37	28.62
6/16/2022 19:20	81.77	6/15/2022 18:38	-0.05	6/15/2022 19:08	10.13	6/15/2022 17:55	0.37	6/15/2022 19:38	28.56
6/16/2022 19:21	81.77	6/15/2022 18:39	-0.01	6/15/2022 19:09	10.13	6/15/2022 17:56	0.41	6/15/2022 19:39	28.58
6/16/2022 19:22	81.80	6/15/2022 18:40	-0.04	6/15/2022 19:10	10.14	6/15/2022 17:57	0.42	6/15/2022 19:40	28.63
6/16/2022 19:23	81.75	6/15/2022 18:41	-0.04	6/15/2022 19:11	10.12	6/15/2022 17:58	0.45	6/15/2022 19:41	28.62
6/16/2022 19:24	81.74	6/15/2022 18:42	-0.06	6/15/2022 19:12	10.15	6/15/2022 17:59	0.50	6/15/2022 19:42	28.58
6/16/2022 19:25	81.76	6/15/2022 18:43	-0.05	6/15/2022 19:13	10.14	6/15/2022 18:00	0.50	6/15/2022 19:43	28.61
6/16/2022 19:26	81.74	6/15/2022 18:44	-0.03	6/15/2022 19:14	10.16	6/15/2022 18:01	0.47	6/15/2022 19:44	28.60
6/16/2022 19:27	81.75	6/15/2022 18:45	-0.01	6/15/2022 19:15	10.16	6/15/2022 18:02	0.44	6/15/2022 19:45	28.59
6/16/2022 19:28	81.72	6/15/2022 18:46	-0.04	6/15/2022 19:16	10.20	6/15/2022 18:03	0.39	6/15/2022 19:46	28.60
6/16/2022 19:29	81.74	6/15/2022 18:47	-0.02	6/15/2022 19:17	10.20	6/15/2022 18:04	0.41	6/15/2022 19:47	28.60
6/16/2022 19:30	81.77	6/15/2022 18:48	-0.01	6/15/2022 19:18	10.19	6/15/2022 18:05	0.34	6/15/2022 19:48	28.61
6/16/2022 19:31	81.70	6/15/2022 18:49	0.03	6/15/2022 19:19	10.23	6/15/2022 18:06	0.37	6/15/2022 19:49	28.59
6/16/2022 19:32	81.69	6/15/2022 18:50	-0.01	6/15/2022 19:20	10.21	6/15/2022 18:07	0.38	6/15/2022 19:50	28.59
6/16/2022 19:33	81.76	6/15/2022 18:51	-0.02	6/15/2022 19:21	10.20	6/15/2022 18:08	0.38	6/15/2022 19:51	28.60
6/16/2022 19:34	81.74	6/15/2022 18:52	-0.04	6/15/2022 19:22	10.19	6/15/2022 18:09	0.34	6/15/2022 19:52	28.62
6/16/2022 19:35	81.72	6/15/2022 18:53	-0.04	6/15/2022 19:23	10.18	6/15/2022 18:10	0.39	6/15/2022 19:53	28.58
6/16/2022 19:36	81.73	6/15/2022 18:54	-0.05	6/15/2022 19:24	10.21	6/15/2022 18:11	0.36	6/15/2022 19:54	28.59
6/16/2022 19:37	81.70	6/15/2022 18:55	-0.06	6/15/2022 19:25	10.22	6/15/2022 18:12	0.35	6/15/2022 19:55	28.60
6/16/2022 19:38	81.72	6/15/2022 18:56	4.91	6/15/2022 19:26	10.19	6/15/2022 18:13	0.33	6/15/2022 19:56	31.13
6/16/2022 19:39	81.73	6/15/2022 18:57	6.67	6/15/2022 19:27	10.18	6/15/2022 18:14	0.42	6/15/2022 19:57	29.74
6/16/2022 19:40	81.76	6/15/2022 18:58	5.49	6/15/2022 19:28	10.15	6/15/2022 18:15	0.48	6/15/2022 19:58	29.02
6/16/2022 19:41	81.69	6/15/2022 18:59	4.56	6/15/2022 19:29	10.16	6/15/2022 18:16	0.47	6/15/2022 19:59	28.73
6/16/2022 19:42	81.70	6/15/2022 19:00	3.82	6/15/2022 19:30	10.17	6/15/2022 18:17	0.51	6/15/2022 20:00	28.66
6/16/2022 19:43	81.70	6/15/2022 19:01	3.15	6/15/2022 19:31	10.16	6/15/2022 18:18	0.48	6/15/2022 20:01	28.61
6/16/2022 19:44	81.72	6/15/2022 19:02	2.64	6/15/2022 19:32	10.15	6/15/2022 18:19	0.49	6/15/2022 20:02	28.62
6/16/2022 19:45	81.71	6/15/2022 19:03	2.15	6/15/2022 19:33	10.17	6/15/2022 18:20	0.44	6/15/2022 20:03	28.59
6/16/2022 19:46	81.67	6/15/2022 19:04	1.76	6/15/2022 19:34	10.16	6/15/2022 18:21	0.43	6/15/2022 20:04	28.65
6/16/2022 19:47	81.70	6/15/2022 19:05	1.52	6/15/2022 19:35	10.14	6/15/2022 18:22	0.38	6/15/2022 20:05	28.62
6/16/2022 19:48	81.68	6/15/2022 19:06	1.18	6/15/2022 19:36	10.13	6/15/2022 18:23	0.36	6/15/2022 20:06	28.62

6/16/2022 19:49	81.72	6/15/2022 19:07	0.96	6/15/2022 19:37	10.11	6/15/2022 18:24	0.36	6/15/2022 20:07	28.61
6/16/2022 19:50	81.70	6/15/2022 19:08	0.72	6/15/2022 19:38	10.09	6/15/2022 18:25	0.38	6/15/2022 20:08	28.62
6/16/2022 19:51	81.67	6/15/2022 19:09	0.57	6/15/2022 19:39	10.17	6/15/2022 18:26	0.40	6/15/2022 20:09	28.60
6/16/2022 19:52	81.69	6/15/2022 19:10	0.41	6/15/2022 19:40	10.14	6/15/2022 18:27	0.42	6/15/2022 20:10	28.60
6/16/2022 19:53	81.68	6/15/2022 19:11	0.22	6/15/2022 19:41	10.14	6/15/2022 18:28	0.47	6/15/2022 20:11	28.57
6/16/2022 19:54	81.70	6/15/2022 19:12	0.11	6/15/2022 19:42	10.17	6/15/2022 18:29	0.51	6/15/2022 20:12	28.61
6/16/2022 19:55	81.67	6/15/2022 19:13	0.06	6/15/2022 19:43	10.20	6/15/2022 18:30	0.41	6/15/2022 20:13	28.60
6/16/2022 19:56	81.66	6/15/2022 19:14	-0.04	6/15/2022 19:44	10.21	6/15/2022 18:31	0.45	6/15/2022 20:14	28.58
6/16/2022 19:57	81.68	6/15/2022 19:15	-0.04	6/15/2022 19:45	10.20	6/15/2022 18:32	0.44	6/15/2022 20:15	28.61
6/16/2022 19:58	81.68	6/15/2022 19:16	-0.05	6/15/2022 19:46	10.22	6/15/2022 18:33	0.35	6/15/2022 20:16	28.58
6/16/2022 19:59	81.67	6/15/2022 19:17	0.00	6/15/2022 19:47	10.22	6/15/2022 18:34	0.36	6/15/2022 20:17	28.60
6/16/2022 20:00	81.66	6/15/2022 19:18	-0.04	6/15/2022 19:48	10.19	6/15/2022 18:35	0.35	6/15/2022 20:18	28.62
6/16/2022 20:01	81.62	6/15/2022 19:19	-0.02	6/15/2022 19:49	10.19	6/15/2022 18:36	0.35	6/15/2022 20:19	28.61
6/16/2022 20:02	81.67	6/15/2022 19:20	-0.03	6/15/2022 19:50	10.24	6/15/2022 18:37	0.35	6/15/2022 20:20	28.59
6/16/2022 20:03	81.64	6/15/2022 19:21	-0.03	6/15/2022 19:51	10.19	6/15/2022 18:38	0.44	6/15/2022 20:21	28.58
6/16/2022 20:04	81.64	6/15/2022 19:22	-0.03	6/15/2022 19:52	10.18	6/15/2022 18:39	0.42	6/15/2022 20:22	28.60
6/16/2022 20:05	81.66	6/15/2022 19:23	-0.07	6/15/2022 19:53	10.17	6/15/2022 18:40	0.46	6/15/2022 20:23	28.57
6/16/2022 20:06	81.67	6/15/2022 19:24	-0.01	6/15/2022 19:54	10.20	6/15/2022 18:41	0.45	6/15/2022 20:24	28.61
6/16/2022 20:07	81.66	6/15/2022 19:25	-0.04	6/15/2022 19:55	10.17	6/15/2022 18:42	0.45	6/15/2022 20:25	28.64
6/16/2022 20:08	81.64	6/15/2022 19:26	-0.04	6/15/2022 19:56	10.18	6/15/2022 18:43	0.40	6/15/2022 20:26	28.61
6/16/2022 20:09	81.66	6/15/2022 19:27	-0.07	6/15/2022 19:57	10.15	6/15/2022 18:44	0.37	6/15/2022 20:27	28.64
6/16/2022 20:10	81.64	6/15/2022 19:28	-0.02	6/15/2022 19:58	10.16	6/15/2022 18:45	0.34	6/15/2022 20:28	28.70
6/16/2022 20:11	81.64	6/15/2022 19:29	-0.04	6/15/2022 19:59	10.16	6/15/2022 18:46	0.35	6/15/2022 20:29	28.63
6/16/2022 20:12	81.64	6/15/2022 19:30	-0.02	6/15/2022 20:00	10.16	6/15/2022 18:47	5.79	6/15/2022 20:30	28.67
6/16/2022 20:13	81.62	6/15/2022 19:31	-0.05	6/15/2022 20:01	10.16	6/15/2022 18:48	7.99	6/15/2022 20:31	28.63
6/16/2022 20:14	81.63	6/15/2022 19:32	-0.01	6/15/2022 20:02	10.13	6/15/2022 18:49	4.72	6/15/2022 20:32	28.63
6/16/2022 20:15	81.62	6/15/2022 19:33	-0.04	6/15/2022 20:03	10.13	6/15/2022 18:50	2.26	6/15/2022 20:33	28.64
6/16/2022 20:16	81.61	6/15/2022 19:34	-0.06	6/15/2022 20:04	10.11	6/15/2022 18:51	0.51	6/15/2022 20:34	28.61
6/16/2022 20:17	81.62	6/15/2022 19:35	-0.06	6/15/2022 20:05	10.16	6/15/2022 18:52	0.49	6/15/2022 20:35	28.62
6/16/2022 20:18	81.61	6/15/2022 19:36	1.43	6/15/2022 20:06	10.13	6/15/2022 18:53	0.48	6/15/2022 20:36	28.64
6/16/2022 20:19	81.66	6/15/2022 19:37	7.00	6/15/2022 20:07	10.15	6/15/2022 18:54	0.50	6/15/2022 20:37	28.64
6/16/2022 20:20	81.61	6/15/2022 19:38	6.53	6/15/2022 20:08	10.20	6/15/2022 18:55	0.46	6/15/2022 20:38	28.65
6/16/2022 20:21	81.63	6/15/2022 19:39	5.42	6/15/2022 20:09	10.17	6/15/2022 18:56	0.44	6/15/2022 20:39	28.62
6/16/2022 20:22	81.61	6/15/2022 19:40	4.49	6/15/2022 20:10	10.21	6/15/2022 18:57	0.45	6/15/2022 20:40	28.60
6/16/2022 20:23	81.60	6/15/2022 19:41	3.73	6/15/2022 20:11	10.20	6/15/2022 18:58	0.44	6/15/2022 20:41	28.60
6/16/2022 20:24	81.63	6/15/2022 19:42	3.05	6/15/2022 20:12	10.19	6/15/2022 18:59	0.49	6/15/2022 20:42	28.60
6/16/2022 20:25	81.63	6/15/2022 19:43	2.54	6/15/2022 20:13	10.21	6/15/2022 19:00	0.41	6/15/2022 20:43	28.61
6/16/2022 20:26	81.62	6/15/2022 19:44	2.12	6/15/2022 20:14	10.18	6/15/2022 19:01	0.48	6/15/2022 20:44	28.63
6/16/2022 20:27	81.61	6/15/2022 19:45	1.74	6/15/2022 20:15	10.19	6/15/2022 19:02	0.39	6/15/2022 20:45	28.58
6/16/2022 20:28	81.61	6/15/2022 19:46	1.40	6/15/2022 20:16	10.17	6/15/2022 19:03	0.44	6/15/2022 20:46	28.60
6/16/2022 20:29	81.61	6/15/2022 19:47	1.15	6/15/2022 20:17	10.16	6/15/2022 19:04	0.39	6/15/2022 20:47	28.59
6/16/2022 20:30	81.60	6/15/2022 19:48	0.93	6/15/2022 20:18	10.21	6/15/2022 19:05	0.37	6/15/2022 20:48	28.61
6/16/2022 20:31	81.59	6/15/2022 19:49	0.73	6/15/2022 20:19	10.21	6/15/2022 19:06	0.38	6/15/2022 20:49	28.63
6/16/2022 20:32	81.64	6/15/2022 19:50	0.56	6/15/2022 20:20	10.22	6/15/2022 19:07	0.38	6/15/2022 20:50	28.62
6/16/2022 20:33	81.57	6/15/2022 19:51	0.39	6/15/2022 20:21	10.24	6/15/2022 19:08	0.38	6/15/2022 20:51	28.60
6/16/2022 20:34	81.60	6/15/2022 19:52	0.22	6/15/2022 20:22	10.26	6/15/2022 19:09	0.36	6/15/2022 20:52	28.62
6/16/2022 20:35	81.57	6/15/2022 19:53	0.17	6/15/2022 20:23	10.24	6/15/2022 19:10	0.38	6/15/2022 20:53	28.57
6/16/2022 20:36	81.60	6/15/2022 19:54	0.02	6/15/2022 20:24	10.26	6/15/2022 19:11	0.38	6/15/2022 20:54	28.62
6/16/2022 20:37	81.64	6/15/2022 19:55	-0.03	6/15/2022 20:25	10.24	6/15/2022 19:12	0.42	6/15/2022 20:55	28.56
6/16/2022 20:38	81.60	6/15/2022 19:56	-0.05	6/15/2022 20:26	10.25	6/15/2022 19:13	0.43	6/15/2022 20:56	28.61
6/16/2022 20:39	81.59	6/15/2022 19:57	-0.04	6/15/2022 20:27	10.26	6/15/2022 19:14	0.44	6/15/2022 20:57	28.58
6/16/2022 20:40	81.59	6/15/2022 19:58	-0.02	6/15/2022 20:28	10.23	6/15/2022 19:15	0.45	6/15/2022 20:58	28.58
6/16/2022 20:41	81.58	6/15/2022 19:59	-0.03	6/15/2022 20:29	10.28	6/15/2022 19:16	0.42	6/15/2022 20:59	28.58
6/16/2022 20:42	81.60	6/15/2022 20:00	-0.04	6/15/2022 20:30	10.27	6/15/2022 19:17	0.39	6/15/2022 21:00	28.57
6/16/2022 20:43	81.59	6/15/2022 20:01	-0.02	6/15/2022 20:31	10.30	6/15/2022 19:18	0.39	6/15/2022 21:01	28.56
6/16/2022 20:44	81.55	6/15/2022 20:02	-0.03	6/15/2022 20:32	10.32	6/15/2022 19:19	0.37	6/15/2022 21:02	28.57
6/16/2022 20:45	81.56	6/15/2022 20:03	0.01	6/15/2022 20:33	10.30	6/15/2022 19:20	0.31	6/15/2022 21:03	28.58
6/16/2022 20:46	81.59	6/15/2022 20:04	0.00	6/15/2022 20:34	10.33	6/15/2022 19:21	0.35	6/15/2022 21:04	28.60
6/16/2022 20:47	81.57	6/15/2022 20:05	-0.04	6/15/2022 20:35	10.30	6/15/2022 19:22	0.36	6/15/2022 21:05	28.57
6/16/2022 20:48	81.60	6/15/2022 20:06	-0.05	6/15/2022 20:36	10.29	6/15/2022 19:23	0.41	6/15/2022 21:06	28.60
6/16/2022 20:49	81.57	6/15/2022 20:07	-0.01	6/15/2022 20:37	10.30	6/15/2022 19:24	0.44	6/15/2022 21:07	28.58
6/16/2022 20:50	81.60	6/15/2022 20:08	-0.05	6/15/2022 20:38	10.30	6/15/2022 19:25	0.44	6/15/2022 21:08	28.60
6/16/2022 20:51	81.58	6/15/2022 20:09	-0.03	6/15/2022 20:39	10.31	6/15/2022 19:26	0.44	6/15/2022 21:09	28.58
6/16/2022 20:52	81.59	6/15/2022 20:10	-0.03	6/15/2022 20:40	10.27	6/15/2022 19:27	0.45	6/15/2022 21:10	28.58
6/16/2022 20:53	81.56	6/15/2022 20:11	-0.03	6/15/2022 20:41	10.32	6/15/2022 19:28	0.40	6/15/2022 21:11	28.56
6/16/2022 20:54	81.55	6/15/2022 20:12	-0.06	6/15/2022 20:42	10.35	6/15/2022 19:29	0.37	6/15/2022 21:12	28.58
6/16/2022 20:55	81.54	6/15/2022 20:13	-0.02	6/15/2022 20:43	10.32	6/15/2022 19:30	0.37	6/15/2022 21:13	28.57
6/16/2022 20:56	81.58	6/15/2022 20:14	-0.05	6/15/2022 20:44	10.34	6/15/2022 19:31	0.38	6/15/2022 21:14	28.57
6/16/2022 20:57	81.57	6/15/2022 20:15	0.00	6/15/2022 20:45	10.31	6/15/2022 19:32	0.36	6/15/2022 21:15	28.61
6/16/2022 20:58	81.55	6/15/2022 20:16	-0.03	6/15/2022 20:46	10.34	6/15/2022 19:33	0.40	6/15/2022 21:16	28.54
6/16/2022 20:59	81.56	6/15/2022 20:17	5.71	6/15/2022 20:47	10.34	6/15/2022 19:34	0.39	6/15/2022 21:17	28.60
6/16/2022 21:00	81.56	6/15/2022 20:18	6.58	6/15/2022 20:48	10.36	6/15/2022 19:35	0.45	6/15/2022 21:18	28.58
6/16/2022 21:01	81.51	6/15/2022 20:19	5.46	6/15/2022 20:49	10.32	6/15/2022 19:36	0.42	6/15/2022 21:19	28.57
6/16/2022 21:02	81.56	6/15/2022 20:20	4.52	6/15/2022 20:50	10.34	6/15/2022 19:37	0.48	6/15/2022 21:20	28.58
6/16/2022 21:03	81.57	6/15/2022 20:21	3.74	6/15/2022 20:51	10.31	6/15/2022 19:38	0.46	6/15/2022 21:21	28.58
6/16/2022 21:04	81.57	6/15/2022 20:22	3.11	6/15/2022 20:52	10.33	6/15/2022 19:39	0.49	6/15/2022 21:22	28.55
6/16/2022 21:05	81.53	6/15/2022 20:23	2.54	6/15/2022 20:53	10.31	6/15/2022 19:40	0.46	6/15/2022 21:23	28.59
6/16/2022 21:06	81.55	6/15/2022 20:24	2.11	6/15/2022 20:54	10.31	6/15/2022 19:41	0.44	6/15/2022 21:24	28.57
6/16/2022 21:07	81.53	6/15/2022 20:25	1.75	6/15/2022 20:55	10.37	6/15/2022 19:42	0.43	6/15/2022 21:25	28.57
6/16/2022 21:08	81.50	6/15/2022 20:26	1.44	6/15/2022 20:56	10.38	6/15/2022 19:43	0.45	6/15/2022 21:26	28.63
6/16/2022 21:09	81.54	6/15/2022 20:27	1.14	6/15/2022 20:57	10.39	6/15/2022 19:44	0.45	6/15/2022 21:27	28.60
6/16/2022 21:10	81.51	6/15/2022 20:28	0.95	6/15/2022 20:58	10.37	6/15/2022 19:45	0.50	6/15/2022 21:28	28.58
6/16/2022 21:11	81.50	6/15/2022 20:29	0.75	6/15/2022 20:59	10.37	6/15/2022 19:46	0.47	6/15/2022 21:29	28.59
6/16/2022 21:12	81.52	6/15/2022 20:30	0.57	6/15/2022 21:00	10.36	6/15/2022 19:47	0.44	6/15/2022 21:30	28.63
6/16/2022 21:13	81.54	6/15/2022 20:31	0.39	6/15/2022 21:01	10.35	6/15/2022 19:48	0.39	6/15/2022 21:31	28.61
6/16/2022 21:14	81.52	6/15/2022 20:32	0.28	6/15/2022 21:02	10.35	6/15/2022 19:49	0.42	6/15/2022 21:32	28.55
6/16/2022 21:15	81.53	6/15/2022 20:33	0.13	6/15/2022 21:03	10.34	6/15/2022 19:50	0.35	6/15/2022 21:33	28.58
6/16/2022 21:16	81.51	6/15/2022 20:34	0.03	6/15/2022 21:04	10.34	6/15/2022 19:51	0.35	6/15/2022 21:34	28.59

6/16/2022 21:17	81.50	6/15/2022 20:35	-0.07	6/15/2022 21:05	10.32	6/15/2022 19:52	0.36	6/15/2022 21:35	28.57
6/16/2022 21:18	81.51	6/15/2022 20:36	-0.02	6/15/2022 21:06	10.32	6/15/2022 19:53	0.35	6/15/2022 21:36	28.57
6/16/2022 21:19	81.50	6/15/2022 20:37	-0.03	6/15/2022 21:07	10.37	6/15/2022 19:54	0.40	6/15/2022 21:37	28.55
6/16/2022 21:20	81.52	6/15/2022 20:38	-0.09	6/15/2022 21:08	10.37	6/15/2022 19:55	0.43	6/15/2022 21:38	28.62
6/16/2022 21:21	81.51	6/15/2022 20:39	5.64	6/15/2022 21:09	10.36	6/15/2022 19:56	0.45	6/15/2022 21:39	28.56
6/16/2022 21:22	81.55	6/15/2022 20:40	8.55	6/15/2022 21:10	10.40	6/15/2022 19:57	0.43	6/15/2022 21:40	28.58
6/16/2022 21:23	81.50	6/15/2022 20:41	7.10	6/15/2022 21:11	10.35	6/15/2022 19:58	0.42	6/15/2022 21:41	28.57
6/16/2022 21:24	81.53	6/15/2022 20:42	5.89	6/15/2022 21:12	10.36	6/15/2022 19:59	0.37	6/15/2022 21:42	28.57
6/16/2022 21:25	81.51	6/15/2022 20:43	4.93	6/15/2022 21:13	10.37	6/15/2022 20:00	0.38	6/15/2022 21:43	28.59
6/16/2022 21:26	81.50	6/15/2022 20:44	4.07	6/15/2022 21:14	10.34	6/15/2022 20:01	0.37	6/15/2022 21:44	28.57
6/16/2022 21:27	81.53	6/15/2022 20:45	3.45	6/15/2022 21:15	10.32	6/15/2022 20:02	0.38	6/15/2022 21:45	28.59
6/16/2022 21:28	81.53	6/15/2022 20:46	2.78	6/15/2022 21:16	10.29	6/15/2022 20:03	0.37	6/15/2022 21:46	28.57
6/16/2022 21:29	81.52	6/15/2022 20:47	2.34	6/15/2022 21:17	10.34	6/15/2022 20:04	0.38	6/15/2022 21:47	28.61
6/16/2022 21:30	81.50	6/15/2022 20:48	1.95	6/15/2022 21:18	10.31	6/15/2022 20:05	0.42	6/15/2022 21:48	28.55
6/16/2022 21:31	81.53	6/15/2022 20:49	1.62	6/15/2022 21:19	10.30	6/15/2022 20:06	0.46	6/15/2022 21:49	28.56
6/16/2022 21:32	81.49	6/15/2022 20:50	1.31	6/15/2022 21:20	10.26	6/15/2022 20:07	0.44	6/15/2022 21:50	28.54
6/16/2022 21:33	81.49	6/15/2022 20:51	1.07	6/15/2022 21:21	10.28	6/15/2022 20:08	0.47	6/15/2022 21:51	28.57
6/16/2022 21:34	81.49	6/15/2022 20:52	0.86	6/15/2022 21:22	10.25	6/15/2022 20:09	0.38	6/15/2022 21:52	28.58
6/16/2022 21:35	81.50	6/15/2022 20:53	0.66	6/15/2022 21:23	10.28	6/15/2022 20:10	0.39	6/15/2022 21:53	28.57
6/16/2022 21:36	81.48	6/15/2022 20:54	0.48	6/15/2022 21:24	10.21	6/15/2022 20:11	0.38	6/15/2022 21:54	28.57
6/16/2022 21:37	81.51	6/15/2022 20:55	0.32	6/15/2022 21:25	10.24	6/15/2022 20:12	0.40	6/15/2022 21:55	28.56
6/16/2022 21:38	81.46	6/15/2022 20:56	0.22	6/15/2022 21:26	10.24	6/15/2022 20:13	0.38	6/15/2022 21:56	28.59
6/16/2022 21:39	81.53	6/15/2022 20:57	0.13	6/15/2022 21:27	10.22	6/15/2022 20:14	0.38	6/15/2022 21:57	28.57
6/16/2022 21:40	81.49	6/15/2022 20:58	0.00	6/15/2022 21:28	10.19	6/15/2022 20:15	0.40	6/15/2022 21:58	28.55
6/16/2022 21:41	81.48	6/15/2022 20:59	-0.03	6/15/2022 21:29	10.17	6/15/2022 20:16	0.43	6/15/2022 21:59	28.60
6/16/2022 21:42	81.49	6/15/2022 21:00	0.00	6/15/2022 21:30	10.17	6/15/2022 20:17	0.47	6/15/2022 22:00	29.90
6/16/2022 21:43	81.45	6/15/2022 21:01	0.04	6/15/2022 21:31	10.16	6/15/2022 20:18	0.48	6/15/2022 22:01	29.86
6/16/2022 21:44	81.44	6/15/2022 21:02	0.04	6/15/2022 21:32	10.20	6/15/2022 20:19	0.43	6/15/2022 22:02	29.07
6/16/2022 21:45	81.47	6/15/2022 21:03	0.00	6/15/2022 21:33	10.15	6/15/2022 20:20	0.44	6/15/2022 22:03	28.75
6/16/2022 21:46	81.49	6/15/2022 21:04	0.01	6/15/2022 21:34	10.21	6/15/2022 20:21	0.46	6/15/2022 22:04	28.63
6/16/2022 21:47	81.48	6/15/2022 21:05	-0.09	6/15/2022 21:35	10.23	6/15/2022 20:22	0.45	6/15/2022 22:05	28.64
6/16/2022 21:48	81.45	6/15/2022 21:06	-0.05	6/15/2022 21:36	10.25	6/15/2022 20:23	0.48	6/15/2022 22:06	28.64
6/16/2022 21:49	81.45	6/15/2022 21:07	-0.04	6/15/2022 21:37	10.22	6/15/2022 20:24	0.42	6/15/2022 22:07	28.58
6/16/2022 21:50	81.46	6/15/2022 21:08	-0.05	6/15/2022 21:38	10.24	6/15/2022 20:25	0.44	6/15/2022 22:08	28.59
6/16/2022 21:51	81.47	6/15/2022 21:09	-0.05	6/15/2022 21:39	10.27	6/15/2022 20:26	0.40	6/15/2022 22:09	28.57
6/16/2022 21:52	81.49	6/15/2022 21:10	-0.05	6/15/2022 21:40	10.29	6/15/2022 20:27	0.40	6/15/2022 22:10	28.60
6/16/2022 21:53	81.48	6/15/2022 21:11	-0.03	6/15/2022 21:41	10.28	6/15/2022 20:28	0.39	6/15/2022 22:11	30.57
6/16/2022 21:54	81.47	6/15/2022 21:12	-0.02	6/15/2022 21:42	10.32	6/15/2022 20:29	0.37	6/15/2022 22:12	29.39
6/16/2022 21:55	81.49	6/15/2022 21:13	1.24	6/15/2022 21:43	10.27	6/15/2022 20:30	0.37	6/15/2022 22:13	28.88
6/16/2022 21:56	81.48	6/15/2022 21:14	6.77	6/15/2022 21:44	10.27	6/15/2022 20:31	0.36	6/15/2022 22:14	28.70
6/16/2022 21:57	81.44	6/15/2022 21:15	6.32	6/15/2022 21:45	10.28	6/15/2022 20:32	0.39	6/15/2022 22:15	28.66
6/16/2022 21:58	81.44	6/15/2022 21:16	5.27	6/15/2022 21:46	10.26	6/15/2022 20:33	0.38	6/15/2022 22:16	28.63
6/16/2022 21:59	81.48	6/15/2022 21:17	4.34	6/15/2022 21:47	10.25	6/15/2022 20:34	0.40	6/15/2022 22:17	28.62
6/16/2022 22:00	81.48	6/15/2022 21:18	3.63	6/15/2022 21:48	10.24	6/15/2022 20:35	0.47	6/15/2022 22:18	28.59
6/16/2022 22:01	81.45	6/15/2022 21:19	2.94	6/15/2022 21:49	10.23	6/15/2022 20:36	0.44	6/15/2022 22:19	28.60
6/16/2022 22:02	81.47	6/15/2022 21:20	2.46	6/15/2022 21:50	10.21	6/15/2022 20:37	0.48	6/15/2022 22:20	28.58
6/16/2022 22:03	81.46	6/15/2022 21:21	2.06	6/15/2022 21:51	10.21	6/15/2022 20:38	0.42	6/15/2022 22:21	28.61
6/16/2022 22:04	81.42	6/15/2022 21:22	1.72	6/15/2022 21:52	10.20	6/15/2022 20:39	0.41	6/15/2022 22:22	28.60
6/16/2022 22:05	81.43	6/15/2022 21:23	1.40	6/15/2022 21:53	10.22	6/15/2022 20:40	0.39	6/15/2022 22:23	28.60
6/16/2022 22:06	81.44	6/15/2022 21:24	1.16	6/15/2022 21:54	10.21	6/15/2022 20:41	0.38	6/15/2022 22:24	28.58
6/16/2022 22:07	81.45	6/15/2022 21:25	0.92	6/15/2022 21:55	10.25	6/15/2022 20:42	0.37	6/15/2022 22:25	28.59
6/16/2022 22:08	81.45	6/15/2022 21:26	0.73	6/15/2022 21:56	10.23	6/15/2022 20:43	0.41	6/15/2022 22:26	28.60
6/16/2022 22:09	81.49	6/15/2022 21:27	0.53	6/15/2022 21:57	10.23	6/15/2022 20:44	0.40	6/15/2022 22:27	28.60
6/16/2022 22:10	81.45	6/15/2022 21:28	0.39	6/15/2022 21:58	10.23	6/15/2022 20:45	0.41	6/15/2022 22:28	28.59
6/16/2022 22:11	81.48	6/15/2022 21:29	0.29	6/15/2022 21:59	10.22	6/15/2022 20:46	0.40	6/15/2022 22:29	28.60
6/16/2022 22:12	81.46	6/15/2022 21:30	0.14	6/15/2022 22:00	10.26	6/15/2022 20:47	0.40	6/15/2022 22:30	28.57
6/16/2022 22:13	81.51	6/15/2022 21:31	0.07	6/15/2022 22:01	10.27	6/15/2022 20:48	0.38	6/15/2022 22:31	28.58
6/16/2022 22:14	81.49	6/15/2022 21:32	0.00	6/15/2022 22:02	10.28	6/15/2022 20:49	0.37	6/15/2022 22:32	28.58
6/16/2022 22:15	81.45	6/15/2022 21:33	-0.01	6/15/2022 22:03	10.23	6/15/2022 20:50	0.34	6/15/2022 22:33	28.55
6/16/2022 22:16	81.46	6/15/2022 21:34	-0.05	6/15/2022 22:04	10.25	6/15/2022 20:51	0.33	6/15/2022 22:34	28.61
6/16/2022 22:17	81.49	6/15/2022 21:35	-0.05	6/15/2022 22:05	10.23	6/15/2022 20:52	0.38	6/15/2022 22:35	28.56
6/16/2022 22:18	81.45	6/15/2022 21:36	0.00	6/15/2022 22:06	10.29	6/15/2022 20:53	0.37	6/15/2022 22:36	28.59
6/16/2022 22:19	81.52	6/15/2022 21:37	-0.05	6/15/2022 22:07	10.25	6/15/2022 20:54	0.38	6/15/2022 22:37	28.58
6/16/2022 22:20	81.49	6/15/2022 21:38	-0.03	6/15/2022 22:08	10.22	6/15/2022 20:55	0.44	6/15/2022 22:38	28.57
6/16/2022 22:21	81.48	6/15/2022 21:39	-0.01	6/15/2022 22:09	10.25	6/15/2022 20:56	0.46	6/15/2022 22:39	28.57
6/16/2022 22:22	81.49	6/15/2022 21:40	-0.05	6/15/2022 22:10	10.21	6/15/2022 20:57	0.46	6/15/2022 22:40	30.59
6/16/2022 22:23	81.44	6/15/2022 21:41	0.01	6/15/2022 22:11	10.22	6/15/2022 20:58	0.44	6/15/2022 22:41	29.41
6/16/2022 22:24	81.47	6/15/2022 21:42	-0.05	6/15/2022 22:12	10.22	6/15/2022 20:59	3.54	6/15/2022 22:42	28.88
6/16/2022 22:25	81.45	6/15/2022 21:43	-0.04	6/15/2022 22:13	10.22	6/15/2022 21:00	8.48	6/15/2022 22:43	28.72
6/16/2022 22:26	81.47	6/15/2022 21:44	0.00	6/15/2022 22:14	10.20	6/15/2022 21:01	5.05	6/15/2022 22:44	28.64
6/16/2022 22:27	81.49	6/15/2022 21:45	-0.03	6/15/2022 22:15	10.18	6/15/2022 21:02	2.49	6/15/2022 22:45	28.64
6/16/2022 22:28	81.46	6/15/2022 21:46	-0.04	6/15/2022 22:16	10.18	6/15/2022 21:03	0.63	6/15/2022 22:46	28.59
6/16/2022 22:29	81.48	6/15/2022 21:47	-0.05	6/15/2022 22:17	10.17	6/15/2022 21:04	0.35	6/15/2022 22:47	28.63
6/16/2022 22:30	81.47	6/15/2022 21:48	-0.04	6/15/2022 22:18	10.13	6/15/2022 21:05	0.41	6/15/2022 22:48	28.60
6/16/2022 22:31	81.45	6/15/2022 21:49	-0.01	6/15/2022 22:19	10.15	6/15/2022 21:06	0.39	6/15/2022 22:49	28.60
6/16/2022 22:32	81.45	6/15/2022 21:50	-0.03	6/15/2022 22:20	10.16	6/15/2022 21:07	0.39	6/15/2022 22:50	28.60
6/16/2022 22:33	81.46	6/15/2022 21:51	-0.03	6/15/2022 22:21	10.15	6/15/2022 21:08	0.43	6/15/2022 22:51	28.60
6/16/2022 22:34	81.45	6/15/2022 21:52	-0.05	6/15/2022 22:22	10.14	6/15/2022 21:09	0.47	6/15/2022 22:52	28.59
6/16/2022 22:35	81.45	6/15/2022 21:53	-0.02	6/15/2022 22:23	10.14	6/15/2022 21:10	0.42	6/15/2022 22:53	28.60
6/16/2022 22:36	81.43	6/15/2022 21:54	-0.05	6/15/2022 22:24	10.17	6/15/2022 21:11	0.45	6/15/2022 22:54	28.62
6/16/2022 22:37	81.48	6/15/2022 21:55	-0.04	6/15/2022 22:25	10.14	6/15/2022 21:12	0.44	6/15/2022 22:55	28.56
6/16/2022 22:38	81.42	6/15/2022 21:56	-0.04	6/15/2022 22:26	10.11	6/15/2022 21:13	0.43	6/15/2022 22:56	28.59
6/16/2022 22:39	81.41	6/15/2022 21:57	-0.05	6/15/2022 22:27	10.17	6/15/2022 21:14	0.37	6/15/2022 22:57	28.61
6/16/2022 22:40	81.41	6/15/2022 21:58	-0.07	6/15/2022 22:28	10.17	6/15/2022 21:15	0.39	6/15/2022 22:58	28.58
6/16/2022 22:41	81.41	6/15/2022 21:59	-0.04	6/15/2022 22:29	10.21	6/15/2022 21:16	0.38	6/15/2022 22:59	28.61
6/16/2022 22:42	81.43	6/15/2022 22:00	-0.04	6/15/2022 22:30	10.18	6/15/2022 21:17	0.40	6/15/2022 23:00	28.61
6/16/2022 22:43	81.40	6/15/2022 22:01	-0.06	6/15/2022 22:31	10.19	6/15/2022 21:18	0.38	6/15/2022 23:01	28.56
6/16/2022 22:44	81.42	6/15/2022 22:02	-0.03	6/15/2022 22:32	10.21	6/15/2022 21:19	0.41	6/15/2022 23:02	28.60

6/16/2022 22:45	81.43	6/15/2022 22:03	-0.04	6/15/2022 22:33	10.25	6/15/2022 21:20	0.36	6/15/2022 23:03	28.60
6/16/2022 22:46	81.43	6/15/2022 22:04	-0.06	6/15/2022 22:34	10.21	6/15/2022 21:21	0.36	6/15/2022 23:04	28.59
6/16/2022 22:47	81.46	6/15/2022 22:05	-0.05	6/15/2022 22:35	10.21	6/15/2022 21:22	0.34	6/15/2022 23:05	28.58
6/16/2022 22:48	81.41	6/15/2022 22:06	4.22	6/15/2022 22:36	10.22	6/15/2022 21:23	0.40	6/15/2022 23:06	30.71
6/16/2022 22:49	81.46	6/15/2022 22:07	7.01	6/15/2022 22:37	10.23	6/15/2022 21:24	0.34	6/15/2022 23:07	29.48
6/16/2022 22:50	81.45	6/15/2022 22:08	5.76	6/15/2022 22:38	10.22	6/15/2022 21:25	0.36	6/15/2022 23:08	28.93
6/16/2022 22:51	81.45	6/15/2022 22:09	4.80	6/15/2022 22:39	10.19	6/15/2022 21:26	0.34	6/15/2022 23:09	28.72
6/16/2022 22:52	81.42	6/15/2022 22:10	3.99	6/15/2022 22:40	10.20	6/15/2022 21:27	0.34	6/15/2022 23:10	28.62
6/16/2022 22:53	81.39	6/15/2022 22:11	3.29	6/15/2022 22:41	10.20	6/15/2022 21:28	0.34	6/15/2022 23:11	28.62
6/16/2022 22:54	81.43	6/15/2022 22:12	2.71	6/15/2022 22:42	10.20	6/15/2022 21:29	0.38	6/15/2022 23:12	28.61
6/16/2022 22:55	81.43	6/15/2022 22:13	2.24	6/15/2022 22:43	10.21	6/15/2022 21:30	0.37	6/15/2022 23:13	28.62
6/16/2022 22:56	81.45	6/15/2022 22:14	1.89	6/15/2022 22:44	10.17	6/15/2022 21:31	0.36	6/15/2022 23:14	28.60
6/16/2022 22:57	81.46	6/15/2022 22:15	1.52	6/15/2022 22:45	10.16	6/15/2022 21:32	0.40	6/15/2022 23:15	28.61
6/16/2022 22:58	81.42	6/15/2022 22:16	1.29	6/15/2022 22:46	10.15	6/15/2022 21:33	0.46	6/15/2022 23:16	28.61
6/16/2022 22:59	81.41	6/15/2022 22:17	1.02	6/15/2022 22:47	10.16	6/15/2022 21:34	0.44	6/15/2022 23:17	28.60
6/16/2022 23:00	81.43	6/15/2022 22:18	0.84	6/15/2022 22:48	10.16	6/15/2022 21:35	0.42	6/15/2022 23:18	28.62
6/16/2022 23:01	81.43	6/15/2022 22:19	0.62	6/15/2022 22:49	10.19	6/15/2022 21:36	0.42	6/15/2022 23:19	28.60
6/16/2022 23:02	81.42	6/15/2022 22:20	0.44	6/15/2022 22:50	10.16	6/15/2022 21:37	0.40	6/15/2022 23:20	28.62
6/16/2022 23:03	81.38	6/15/2022 22:21	0.30	6/15/2022 22:51	10.14	6/15/2022 21:38	0.37	6/15/2022 23:21	28.64
6/16/2022 23:04	81.43	6/15/2022 22:22	0.14	6/15/2022 22:52	10.17	6/15/2022 21:39	0.33	6/15/2022 23:22	28.59
6/16/2022 23:05	81.41	6/15/2022 22:23	0.07	6/15/2022 22:53	10.15	6/15/2022 21:40	0.31	6/15/2022 23:23	28.57
6/16/2022 23:06	81.38	6/15/2022 22:24	-0.04	6/15/2022 22:54	10.19	6/15/2022 21:41	0.37	6/15/2022 23:24	28.60
6/16/2022 23:07	81.40	6/15/2022 22:25	-0.03	6/15/2022 22:55	10.19	6/15/2022 21:42	0.32	6/15/2022 23:25	28.60
6/16/2022 23:08	81.42	6/15/2022 22:26	-0.03	6/15/2022 22:56	10.19	6/15/2022 21:43	0.37	6/15/2022 23:26	28.58
6/16/2022 23:09	81.42	6/15/2022 22:27	-0.05	6/15/2022 22:57	10.23	6/15/2022 21:44	0.42	6/15/2022 23:27	28.59
6/16/2022 23:10	81.38	6/15/2022 22:28	-0.05	6/15/2022 22:58	10.26	6/15/2022 21:45	0.45	6/15/2022 23:28	28.62
6/16/2022 23:11	81.41	6/15/2022 22:29	-0.06	6/15/2022 22:59	10.23	6/15/2022 21:46	0.42	6/15/2022 23:29	28.61
6/16/2022 23:12	81.42	6/15/2022 22:30	-0.01	6/15/2022 23:00	10.23	6/15/2022 21:47	0.43	6/15/2022 23:30	28.58
6/16/2022 23:13	81.41	6/15/2022 22:31	-0.02	6/15/2022 23:01	10.23	6/15/2022 21:48	0.37	6/15/2022 23:31	28.60
6/16/2022 23:14	81.42	6/15/2022 22:32	-0.04	6/15/2022 23:02	10.23	6/15/2022 21:49	0.39	6/15/2022 23:32	28.61
6/16/2022 23:15	81.39	6/15/2022 22:33	-0.04	6/15/2022 23:03	10.21	6/15/2022 21:50	0.37	6/15/2022 23:33	28.60
6/16/2022 23:16	81.39	6/15/2022 22:34	-0.06	6/15/2022 23:04	10.23	6/15/2022 21:51	0.35	6/15/2022 23:34	28.59
6/16/2022 23:17	81.39	6/15/2022 22:35	-0.05	6/15/2022 23:05	10.22	6/15/2022 21:52	0.36	6/15/2022 23:35	28.60
6/16/2022 23:18	81.40	6/15/2022 22:36	-0.06	6/15/2022 23:06	10.24	6/15/2022 21:53	0.35	6/15/2022 23:36	28.63
6/16/2022 23:19	81.43	6/15/2022 22:37	-0.05	6/15/2022 23:07	10.21	6/15/2022 21:54	0.42	6/15/2022 23:37	28.56
6/16/2022 23:20	81.43	6/15/2022 22:38	-0.05	6/15/2022 23:08	10.20	6/15/2022 21:55	0.42	6/15/2022 23:38	28.59
6/16/2022 23:21	81.43	6/15/2022 22:39	-0.05	6/15/2022 23:09	10.22	6/15/2022 21:56	0.45	6/15/2022 23:39	28.55
6/16/2022 23:22	81.42	6/15/2022 22:40	0.00	6/15/2022 23:10	10.20	6/15/2022 21:57	0.44	6/15/2022 23:40	28.60
6/16/2022 23:23	81.39	6/15/2022 22:41	-0.03	6/15/2022 23:11	10.18	6/15/2022 21:58	0.39	6/15/2022 23:41	28.59
6/16/2022 23:24	81.41	6/15/2022 22:42	-0.06	6/15/2022 23:12	10.23	6/15/2022 21:59	0.37	6/15/2022 23:42	28.59
6/16/2022 23:25	81.38	6/15/2022 22:43	-0.05	6/15/2022 23:13	10.19	6/15/2022 22:00	0.37	6/15/2022 23:43	28.61
6/16/2022 23:26	81.39	6/15/2022 22:44	-0.05	6/15/2022 23:14	10.19	6/15/2022 22:01	0.32	6/15/2022 23:44	30.82
6/16/2022 23:27	81.38	6/15/2022 22:45	-0.04	6/15/2022 23:15	10.16	6/15/2022 22:02	0.33	6/15/2022 23:45	29.54
6/16/2022 23:28	81.43	6/15/2022 22:46	-0.07	6/15/2022 23:16	10.18	6/15/2022 22:03	0.35	6/15/2022 23:46	28.94
6/16/2022 23:29	81.39	6/15/2022 22:47	-0.03	6/15/2022 23:17	10.17	6/15/2022 22:04	0.38	6/15/2022 23:47	28.71
6/16/2022 23:30	81.37	6/15/2022 22:48	4.52	6/15/2022 23:18	10.18	6/15/2022 22:05	0.47	6/15/2022 23:48	28.65
6/16/2022 23:31	81.39	6/15/2022 22:49	6.96	6/15/2022 23:19	10.18	6/15/2022 22:06	0.47	6/15/2022 23:49	28.62
6/16/2022 23:32	81.38	6/15/2022 22:50	5.73	6/15/2022 23:20	10.21	6/15/2022 22:07	0.45	6/15/2022 23:50	28.61
6/16/2022 23:33	81.38	6/15/2022 22:51	4.75	6/15/2022 23:21	10.23	6/15/2022 22:08	0.45	6/15/2022 23:51	28.64
6/16/2022 23:34	81.39	6/15/2022 22:52	3.98	6/15/2022 23:22	10.22	6/15/2022 22:09	0.44	6/15/2022 23:52	28.62
6/16/2022 23:35	81.39	6/15/2022 22:53	3.26	6/15/2022 23:23	10.23	6/15/2022 22:10	0.45	6/15/2022 23:53	28.62
6/16/2022 23:36	81.39	6/15/2022 22:54	2.70	6/15/2022 23:24	10.23	6/15/2022 22:11	0.46	6/15/2022 23:54	28.60
6/16/2022 23:37	81.37	6/15/2022 22:55	2.24	6/15/2022 23:25	10.25	6/15/2022 22:12	0.41	6/15/2022 23:55	28.60
6/16/2022 23:38	81.38	6/15/2022 22:56	1.89	6/15/2022 23:26	10.20	6/15/2022 22:13	0.45	6/15/2022 23:56	28.62
6/16/2022 23:39	81.39	6/15/2022 22:57	1.53	6/15/2022 23:27	10.23	6/15/2022 22:14	0.45	6/15/2022 23:57	28.60
6/16/2022 23:40	81.39	6/15/2022 22:58	1.28	6/15/2022 23:28	10.22	6/15/2022 22:15	0.47	6/15/2022 23:58	28.57
6/16/2022 23:41	81.38	6/15/2022 22:59	0.99	6/15/2022 23:29	10.25	6/15/2022 22:16	0.38	6/15/2022 23:59	28.57
6/16/2022 23:42	81.38	6/15/2022 23:00	0.81	6/15/2022 23:30	10.26	6/15/2022 22:17	0.38	6/16/2022 0:00	28.61
6/16/2022 23:43	81.38	6/15/2022 23:01	0.59	6/15/2022 23:31	10.21	6/15/2022 22:18	0.34	6/16/2022 0:01	28.61
6/16/2022 23:44	81.36	6/15/2022 23:02	0.43	6/15/2022 23:32	10.19	6/15/2022 22:19	0.33	6/16/2022 0:02	28.58
6/16/2022 23:45	81.39	6/15/2022 23:03	0.32	6/15/2022 23:33	10.23	6/15/2022 22:20	0.35	6/16/2022 0:03	28.57
6/16/2022 23:46	81.40	6/15/2022 23:04	0.20	6/15/2022 23:34	10.19	6/15/2022 22:21	0.33	6/16/2022 0:04	28.59
6/16/2022 23:47	81.38	6/15/2022 23:05	0.09	6/15/2022 23:35	10.24	6/15/2022 22:22	0.33	6/16/2022 0:05	28.56
6/16/2022 23:48	81.37	6/15/2022 23:06	-0.01	6/15/2022 23:36	10.20	6/15/2022 22:23	0.36	6/16/2022 0:06	28.58
6/16/2022 23:49	81.37	6/15/2022 23:07	-0.06	6/15/2022 23:37	10.19	6/15/2022 22:24	0.39	6/16/2022 0:07	28.59
6/16/2022 23:50	81.39	6/15/2022 23:08	-0.06	6/15/2022 23:38	10.18	6/15/2022 22:25	0.44	6/16/2022 0:08	28.60
6/16/2022 23:51	81.37	6/15/2022 23:09	-0.06	6/15/2022 23:39	10.18	6/15/2022 22:26	0.45	6/16/2022 0:09	28.58
6/16/2022 23:52	81.35	6/15/2022 23:10	-0.01	6/15/2022 23:40	10.17	6/15/2022 22:27	0.44	6/16/2022 0:10	28.58
6/16/2022 23:53	81.39	6/15/2022 23:11	-0.04	6/15/2022 23:41	10.17	6/15/2022 22:28	0.37	6/16/2022 0:11	28.58
6/16/2022 23:54	81.35	6/15/2022 23:12	-0.02	6/15/2022 23:42	10.16	6/15/2022 22:29	0.37	6/16/2022 0:12	28.58
6/16/2022 23:55	81.36	6/15/2022 23:13	-0.06	6/15/2022 23:43	10.19	6/15/2022 22:30	0.32	6/16/2022 0:13	28.58
6/16/2022 23:56	81.40	6/15/2022 23:14	-0.01	6/15/2022 23:44	10.17	6/15/2022 22:31	0.34	6/16/2022 0:14	28.60
6/16/2022 23:57	81.39	6/15/2022 23:15	-0.04	6/15/2022 23:45	10.18	6/15/2022 22:32	0.37	6/16/2022 0:15	28.58
6/16/2022 23:58	81.36	6/15/2022 23:16	0.00	6/15/2022 23:46	10.17	6/15/2022 22:33	0.37	6/16/2022 0:16	28.59
6/16/2022 23:59	81.37	6/15/2022 23:17	-0.03	6/15/2022 23:47	10.20	6/15/2022 22:34	0.38	6/16/2022 0:17	28.61
6/17/2022 0:00	81.36	6/15/2022 23:18	-0.02	6/15/2022 23:48	10.20	6/15/2022 22:35	0.41	6/16/2022 0:18	28.56
6/17/2022 0:01	81.35	6/15/2022 23:19	-0.05	6/15/2022 23:49	10.25	6/15/2022 22:36	0.45	6/16/2022 0:19	28.57
6/17/2022 0:02	81.34	6/15/2022 23:20	-0.04	6/15/2022 23:50	10.21	6/15/2022 22:37	0.44	6/16/2022 0:20	28.59
6/17/2022 0:03	81.36	6/15/2022 23:21	-0.06	6/15/2022 23:51	10.24	6/15/2022 22:38	0.43	6/16/2022 0:21	28.57
6/17/2022 0:04	81.34	6/15/2022 23:22	-0.04	6/15/2022 23:52	10.23	6/15/2022 22:39	0.43	6/16/2022 0:22	28.57
6/17/2022 0:05	81.34	6/15/2022 23:23	-0.04	6/15/2022 23:53	10.24	6/15/2022 22:40	0.37	6/16/2022 0:23	28.57
6/17/2022 0:06	81.35	6/15/2022 23:24	-0.03	6/15/2022 23:54	10.23	6/15/2022 22:41	0.33	6/16/2022 0:24	28.61
6/17/2022 0:07	81.34	6/15/2022 23:25	-0.04	6/15/2022 23:55	10.23	6/15/2022 22:42	0.36	6/16/2022 0:25	28.57
6/17/2022 0:08	81.34	6/15/2022 23:26	-0.04	6/15/2022 23:56	10.21	6/15/2022 22:43	0.35	6/16/2022 0:26	28.57
6/17/2022 0:09	81.35	6/15/2022 23:27	-0.04	6/15/2022 23:57	10.22	6/15/2022 22:44	0.36	6/16/2022 0:27	28.57
6/17/2022 0:10	81.36	6/15/2022 23:28	-0.05	6/15/2022 23:58	10.17	6/15/2022 22:45	0.38	6/16/2022 0:28	28.54
6/17/2022 0:11	81.36	6/15/2022 23:29	-0.06	6/15/2022 23:59	10.22	6/15/2022 22:46	0.37	6/16/2022 0:29	28.57
6/17/2022 0:12	81.34	6/15/2022 23:30	-0.05	6/16/2022 0:00	10.20	6/15/2022 22:47	0.43	6/16/2022 0:30	28.58

6/17/2022 0:13	81.34	6/15/2022 23:31	-0.07	6/16/2022 0:01	10.17	6/15/2022 22:48	0.47	6/16/2022 0:31	28.58
6/17/2022 0:14	81.36	6/15/2022 23:32	-0.02	6/16/2022 0:02	10.18	6/15/2022 22:49	0.43	6/16/2022 0:32	28.57
6/17/2022 0:15	81.34	6/15/2022 23:33	-0.03	6/16/2022 0:03	10.21	6/15/2022 22:50	0.47	6/16/2022 0:33	28.59
6/17/2022 0:16	81.33	6/15/2022 23:34	-0.04	6/16/2022 0:04	10.18	6/15/2022 22:51	0.41	6/16/2022 0:34	28.57
6/17/2022 0:17	81.38	6/15/2022 23:35	-0.04	6/16/2022 0:05	10.20	6/15/2022 22:52	0.43	6/16/2022 0:35	28.55
6/17/2022 0:18	81.36	6/15/2022 23:36	-0.04	6/16/2022 0:06	10.15	6/15/2022 22:53	0.44	6/16/2022 0:36	28.60
6/17/2022 0:19	81.34	6/15/2022 23:37	-0.06	6/16/2022 0:07	10.17	6/15/2022 22:54	0.43	6/16/2022 0:37	28.57
6/17/2022 0:20	81.33	6/15/2022 23:38	-0.04	6/16/2022 0:08	10.17	6/15/2022 22:55	0.45	6/16/2022 0:38	28.54
6/17/2022 0:21	81.35	6/15/2022 23:39	-0.02	6/16/2022 0:09	10.17	6/15/2022 22:56	0.44	6/16/2022 0:39	28.53
6/17/2022 0:22	81.31	6/15/2022 23:40	4.10	6/16/2022 0:10	10.20	6/15/2022 22:57	0.45	6/16/2022 0:40	28.57
6/17/2022 0:23	81.37	6/15/2022 23:41	7.00	6/16/2022 0:11	10.21	6/15/2022 22:58	0.40	6/16/2022 0:41	28.59
6/17/2022 0:24	81.36	6/15/2022 23:42	5.73	6/16/2022 0:12	10.22	6/15/2022 22:59	0.38	6/16/2022 0:42	28.59
6/17/2022 0:25	81.34	6/15/2022 23:43	4.75	6/16/2022 0:13	10.23	6/15/2022 23:00	0.34	6/16/2022 0:43	28.54
6/17/2022 0:26	81.37	6/15/2022 23:44	3.95	6/16/2022 0:14	10.22	6/15/2022 23:01	0.34	6/16/2022 0:44	28.56
6/17/2022 0:27	81.36	6/15/2022 23:45	3.28	6/16/2022 0:15	10.23	6/15/2022 23:02	0.35	6/16/2022 0:45	28.57
6/17/2022 0:28	81.29	6/15/2022 23:46	2.69	6/16/2022 0:16	10.23	6/15/2022 23:03	0.33	6/16/2022 0:46	28.60
6/17/2022 0:29	81.33	6/15/2022 23:47	2.25	6/16/2022 0:17	10.23	6/15/2022 23:04	0.34	6/16/2022 0:47	28.55
6/17/2022 0:30	81.33	6/15/2022 23:48	1.85	6/16/2022 0:18	10.26	6/15/2022 23:05	0.30	6/16/2022 0:48	28.56
6/17/2022 0:31	81.36	6/15/2022 23:49	1.54	6/16/2022 0:19	10.24	6/15/2022 23:06	0.36	6/16/2022 0:49	28.58
6/17/2022 0:32	81.37	6/15/2022 23:50	1.25	6/16/2022 0:20	10.23	6/15/2022 23:07	0.34	6/16/2022 0:50	28.55
6/17/2022 0:33	81.35	6/15/2022 23:51	1.05	6/16/2022 0:21	10.23	6/15/2022 23:08	0.39	6/16/2022 0:51	28.60
6/17/2022 0:34	81.33	6/15/2022 23:52	0.78	6/16/2022 0:22	10.22	6/15/2022 23:09	0.45	6/16/2022 0:52	28.59
6/17/2022 0:35	81.34	6/15/2022 23:53	0.53	6/16/2022 0:23	10.20	6/15/2022 23:10	0.46	6/16/2022 0:53	28.56
6/17/2022 0:36	81.33	6/15/2022 23:54	0.39	6/16/2022 0:24	10.20	6/15/2022 23:11	0.41	6/16/2022 0:54	28.55
6/17/2022 0:37	81.36	6/15/2022 23:55	0.28	6/16/2022 0:25	10.20	6/15/2022 23:12	0.39	6/16/2022 0:55	28.55
6/17/2022 0:38	81.34	6/15/2022 23:56	0.16	6/16/2022 0:26	10.19	6/15/2022 23:13	0.35	6/16/2022 0:56	28.56
6/17/2022 0:39	81.33	6/15/2022 23:57	0.06	6/16/2022 0:27	10.18	6/15/2022 23:14	0.38	6/16/2022 0:57	28.59
6/17/2022 0:40	81.34	6/15/2022 23:58	-0.09	6/16/2022 0:28	10.19	6/15/2022 23:15	0.34	6/16/2022 0:58	28.60
6/17/2022 0:41	81.34	6/15/2022 23:59	-0.01	6/16/2022 0:29	10.17	6/15/2022 23:16	0.32	6/16/2022 0:59	28.57
6/17/2022 0:42	81.32	6/16/2022 0:00	-0.04	6/16/2022 0:30	10.14	6/15/2022 23:17	0.35	6/16/2022 1:00	28.57
6/17/2022 0:43	81.31	6/16/2022 0:01	-0.04	6/16/2022 0:31	10.16	6/15/2022 23:18	0.37	6/16/2022 1:01	28.55
6/17/2022 0:44	81.32	6/16/2022 0:02	-0.02	6/16/2022 0:32	10.15	6/15/2022 23:19	0.40	6/16/2022 1:02	28.58
6/17/2022 0:45	81.31	6/16/2022 0:03	-0.04	6/16/2022 0:33	10.16	6/15/2022 23:20	0.45	6/16/2022 1:03	28.58
6/17/2022 0:46	81.32	6/16/2022 0:04	0.01	6/16/2022 0:34	10.17	6/15/2022 23:21	0.41	6/16/2022 1:04	28.55
6/17/2022 0:47	81.35	6/16/2022 0:05	-0.06	6/16/2022 0:35	10.20	6/15/2022 23:22	0.43	6/16/2022 1:05	28.55
6/17/2022 0:48	81.31	6/16/2022 0:06	-0.02	6/16/2022 0:36	10.15	6/15/2022 23:23	0.35	6/16/2022 1:06	28.56
6/17/2022 0:49	81.30	6/16/2022 0:07	-0.02	6/16/2022 0:37	10.20	6/15/2022 23:24	0.37	6/16/2022 1:07	28.55
6/17/2022 0:50	81.30	6/16/2022 0:08	-0.05	6/16/2022 0:38	10.20	6/15/2022 23:25	0.36	6/16/2022 1:08	28.55
6/17/2022 0:51	81.32	6/16/2022 0:09	-0.02	6/16/2022 0:39	10.23	6/15/2022 23:26	0.32	6/16/2022 1:09	28.60
6/17/2022 0:52	81.30	6/16/2022 0:10	-0.06	6/16/2022 0:40	10.21	6/15/2022 23:27	0.36	6/16/2022 1:10	28.57
6/17/2022 0:53	81.27	6/16/2022 0:11	-0.04	6/16/2022 0:41	10.26	6/15/2022 23:28	0.34	6/16/2022 1:11	28.58
6/17/2022 0:54	81.30	6/16/2022 0:12	-0.03	6/16/2022 0:42	10.24	6/15/2022 23:29	0.39	6/16/2022 1:12	28.55
6/17/2022 0:55	81.31	6/16/2022 0:13	-0.04	6/16/2022 0:43	10.22	6/15/2022 23:30	0.43	6/16/2022 1:13	28.55
6/17/2022 0:56	81.28	6/16/2022 0:14	-0.02	6/16/2022 0:44	10.19	6/15/2022 23:31	0.46	6/16/2022 1:14	28.55
6/17/2022 0:57	81.29	6/16/2022 0:15	-0.04	6/16/2022 0:45	10.22	6/15/2022 23:32	0.43	6/16/2022 1:15	28.56
6/17/2022 0:58	81.30	6/16/2022 0:16	-0.02	6/16/2022 0:46	10.20	6/15/2022 23:33	0.41	6/16/2022 1:16	28.57
6/17/2022 0:59	81.33	6/16/2022 0:17	-0.07	6/16/2022 0:47	10.21	6/15/2022 23:34	0.39	6/16/2022 1:17	28.57
6/17/2022 1:00	81.32	6/16/2022 0:18	-0.06	6/16/2022 0:48	10.22	6/15/2022 23:35	0.34	6/16/2022 1:18	28.58
6/17/2022 1:01	81.33	6/16/2022 0:19	-0.04	6/16/2022 0:49	10.20	6/15/2022 23:36	0.33	6/16/2022 1:19	28.58
6/17/2022 1:02	81.30	6/16/2022 0:20	-0.04	6/16/2022 0:50	10.17	6/15/2022 23:37	0.34	6/16/2022 1:20	28.51
6/17/2022 1:03	81.28	6/16/2022 0:21	-0.08	6/16/2022 0:51	10.19	6/15/2022 23:38	0.32	6/16/2022 1:21	28.60
6/17/2022 1:04	81.30	6/16/2022 0:22	-0.04	6/16/2022 0:52	10.18	6/15/2022 23:39	0.36	6/16/2022 1:22	28.52
6/17/2022 1:05	81.28	6/16/2022 0:23	-0.03	6/16/2022 0:53	10.19	6/15/2022 23:40	0.45	6/16/2022 1:23	28.57
6/17/2022 1:06	81.26	6/16/2022 0:24	-0.03	6/16/2022 0:54	10.19	6/15/2022 23:41	0.44	6/16/2022 1:24	28.55
6/17/2022 1:07	81.31	6/16/2022 0:25	-0.04	6/16/2022 0:55	10.18	6/15/2022 23:42	0.44	6/16/2022 1:25	28.55
6/17/2022 1:08	81.31	6/16/2022 0:26	-0.02	6/16/2022 0:56	10.16	6/15/2022 23:43	0.45	6/16/2022 1:26	28.59
6/17/2022 1:09	81.30	6/16/2022 0:27	-0.01	6/16/2022 0:57	10.14	6/15/2022 23:44	0.45	6/16/2022 1:27	28.55
6/17/2022 1:10	81.35	6/16/2022 0:28	-0.05	6/16/2022 0:58	10.17	6/15/2022 23:45	0.46	6/16/2022 1:28	28.54
6/17/2022 1:11	81.32	6/16/2022 0:29	-0.03	6/16/2022 0:59	10.20	6/15/2022 23:46	0.47	6/16/2022 1:29	28.56
6/17/2022 1:12	81.28	6/16/2022 0:30	0.10	6/16/2022 1:00	10.17	6/15/2022 23:47	0.45	6/16/2022 1:30	28.53
6/17/2022 1:13	81.27	6/16/2022 0:31	5.98	6/16/2022 1:01	10.16	6/15/2022 23:48	0.44	6/16/2022 1:31	28.54
6/17/2022 1:14	81.32	6/16/2022 0:32	6.53	6/16/2022 1:02	10.21	6/15/2022 23:49	0.45	6/16/2022 1:32	28.59
6/17/2022 1:15	81.32	6/16/2022 0:33	5.38	6/16/2022 1:03	10.20	6/15/2022 23:50	0.44	6/16/2022 1:33	28.56
6/17/2022 1:16	81.29	6/16/2022 0:34	4.47	6/16/2022 1:04	10.21	6/15/2022 23:51	0.43	6/16/2022 1:34	28.56
6/17/2022 1:17	81.32	6/16/2022 0:35	3.72	6/16/2022 1:05	10.23	6/15/2022 23:52	0.39	6/16/2022 1:35	28.57
6/17/2022 1:18	81.27	6/16/2022 0:36	3.06	6/16/2022 1:06	10.26	6/15/2022 23:53	0.40	6/16/2022 1:36	28.60
6/17/2022 1:19	81.29	6/16/2022 0:37	2.55	6/16/2022 1:07	10.19	6/15/2022 23:54	0.37	6/16/2022 1:37	28.54
6/17/2022 1:20	81.30	6/16/2022 0:38	2.10	6/16/2022 1:08	10.18	6/15/2022 23:55	0.33	6/16/2022 1:38	28.56
6/17/2022 1:21	81.31	6/16/2022 0:39	1.76	6/16/2022 1:09	10.22	6/15/2022 23:56	0.32	6/16/2022 1:39	28.53
6/17/2022 1:22	81.27	6/16/2022 0:40	1.41	6/16/2022 1:10	10.22	6/15/2022 23:57	0.37	6/16/2022 1:40	28.58
6/17/2022 1:23	81.26	6/16/2022 0:41	1.13	6/16/2022 1:11	10.21	6/15/2022 23:58	0.33	6/16/2022 1:41	28.55
6/17/2022 1:24	81.27	6/16/2022 0:42	0.94	6/16/2022 1:12	10.22	6/15/2022 23:59	0.36	6/16/2022 1:42	28.57
6/17/2022 1:25	81.30	6/16/2022 0:43	0.73	6/16/2022 1:13	10.22	6/16/2022 0:00	0.40	6/16/2022 1:43	28.57
6/17/2022 1:26	81.25	6/16/2022 0:44	0.55	6/16/2022 1:14	10.17	6/16/2022 0:01	0.40	6/16/2022 1:44	28.57
6/17/2022 1:27	81.28	6/16/2022 0:45	0.37	6/16/2022 1:15	10.19	6/16/2022 0:02	0.44	6/16/2022 1:45	28.56
6/17/2022 1:28	81.31	6/16/2022 0:46	0.23	6/16/2022 1:16	10.19	6/16/2022 0:03	0.44	6/16/2022 1:46	28.57
6/17/2022 1:29	81.27	6/16/2022 0:47	0.09	6/16/2022 1:17	10.19	6/16/2022 0:04	0.45	6/16/2022 1:47	28.55
6/17/2022 1:30	81.28	6/16/2022 0:48	0.03	6/16/2022 1:18	10.17	6/16/2022 0:05	0.40	6/16/2022 1:48	28.57
6/17/2022 1:31	81.29	6/16/2022 0:49	-0.05	6/16/2022 1:19	10.15	6/16/2022 0:06	0.35	6/16/2022 1:49	28.54
6/17/2022 1:32	81.31	6/16/2022 0:50	-0.01	6/16/2022 1:20	10.15	6/16/2022 0:07	0.33	6/16/2022 1:50	28.57
6/17/2022 1:33	81.27	6/16/2022 0:51	-0.05	6/16/2022 1:21	10.15	6/16/2022 0:08	0.34	6/16/2022 1:51	28.58
6/17/2022 1:34	81.29	6/16/2022 0:52	-0.06	6/16/2022 1:22	10.18	6/16/2022 0:09	0.37	6/16/2022 1:52	28.55
6/17/2022 1:35	81.24	6/16/2022 0:53	0.00	6/16/2022 1:23	10.13	6/16/2022 0:10	0.39	6/16/2022 1:53	28.56
6/17/2022 1:36	81.28	6/16/2022 0:54	-0.03	6/16/2022 1:24	10.15	6/16/2022 0:11	0.43	6/16/2022 1:54	28.57
6/17/2022 1:37	81.24	6/16/2022 0:55	-0.08	6/16/2022 1:25	10.18	6/16/2022 0:12	0.46	6/16/2022 1:55	28.56
6/17/2022 1:38	81.27	6/16/2022 0:56	-0.02	6/16/2022 1:26	10.20	6/16/2022 0:13	0.45	6/16/2022 1:56	28.57
6/17/2022 1:39	81.31	6/16/2022 0:57	-0.07	6/16/2022 1:27	10.22	6/16/2022 0:14	0.40	6/16/2022 1:57	28.54
6/17/2022 1:40	81.26	6/16/2022 0:58	-0.05	6/16/2022 1:28	10.18	6/16/2022 0:15	0.38	6/16/2022 1:58	28.57

6/17/2022 1:41	81.25	6/16/2022 0:59	-0.04	6/16/2022 1:29	10.23	6/16/2022 0:16	0.39	6/16/2022 1:59	28.56
6/17/2022 1:42	81.27	6/16/2022 1:00	-0.05	6/16/2022 1:30	10.25	6/16/2022 0:17	0.33	6/16/2022 2:00	28.52
6/17/2022 1:43	81.26	6/16/2022 1:01	-0.05	6/16/2022 1:31	10.21	6/16/2022 0:18	0.34	6/16/2022 2:01	28.59
6/17/2022 1:44	81.27	6/16/2022 1:02	0.02	6/16/2022 1:32	10.24	6/16/2022 0:19	0.34	6/16/2022 2:02	28.52
6/17/2022 1:45	81.25	6/16/2022 1:03	-0.03	6/16/2022 1:33	10.21	6/16/2022 0:20	0.35	6/16/2022 2:03	28.56
6/17/2022 1:46	81.27	6/16/2022 1:04	-0.02	6/16/2022 1:34	10.21	6/16/2022 0:21	0.42	6/16/2022 2:04	28.55
6/17/2022 1:47	81.25	6/16/2022 1:05	-0.05	6/16/2022 1:35	10.27	6/16/2022 0:22	0.45	6/16/2022 2:05	28.54
6/17/2022 1:48	81.26	6/16/2022 1:06	-0.05	6/16/2022 1:36	10.24	6/16/2022 0:23	0.44	6/16/2022 2:06	28.53
6/17/2022 1:49	81.28	6/16/2022 1:07	-0.05	6/16/2022 1:37	10.22	6/16/2022 0:24	0.41	6/16/2022 2:07	28.52
6/17/2022 1:50	81.24	6/16/2022 1:08	-0.02	6/16/2022 1:38	10.23	6/16/2022 0:25	0.43	6/16/2022 2:08	28.58
6/17/2022 1:51	81.23	6/16/2022 1:09	-0.02	6/16/2022 1:39	10.22	6/16/2022 0:26	0.38	6/16/2022 2:09	28.57
6/17/2022 1:52	81.26	6/16/2022 1:10	-0.03	6/16/2022 1:40	10.22	6/16/2022 0:27	0.37	6/16/2022 2:10	28.57
6/17/2022 1:53	81.25	6/16/2022 1:11	-0.02	6/16/2022 1:41	10.21	6/16/2022 0:28	0.36	6/16/2022 2:11	28.56
6/17/2022 1:54	81.26	6/16/2022 1:12	-0.01	6/16/2022 1:42	10.20	6/16/2022 0:29	0.34	6/16/2022 2:12	28.58
6/17/2022 1:55	81.28	6/16/2022 1:13	-0.01	6/16/2022 1:43	10.16	6/16/2022 0:30	0.36	6/16/2022 2:13	28.59
6/17/2022 1:56	81.24	6/16/2022 1:14	-0.01	6/16/2022 1:44	10.19	6/16/2022 0:31	0.42	6/16/2022 2:14	28.52
6/17/2022 1:57	81.24	6/16/2022 1:15	-0.02	6/16/2022 1:45	10.14	6/16/2022 0:32	0.41	6/16/2022 2:15	28.55
6/17/2022 1:58	81.24	6/16/2022 1:16	-0.04	6/16/2022 1:46	10.16	6/16/2022 0:33	0.42	6/16/2022 2:16	28.54
6/17/2022 1:59	81.23	6/16/2022 1:17	-0.01	6/16/2022 1:47	10.17	6/16/2022 0:34	0.41	6/16/2022 2:17	28.57
6/17/2022 2:00	81.22	6/16/2022 1:18	-0.03	6/16/2022 1:48	10.16	6/16/2022 0:35	0.36	6/16/2022 2:18	28.56
6/17/2022 2:01	81.25	6/16/2022 1:19	-0.07	6/16/2022 1:49	10.17	6/16/2022 0:36	0.37	6/16/2022 2:19	28.53
6/17/2022 2:02	81.24	6/16/2022 1:20	-0.03	6/16/2022 1:50	10.16	6/16/2022 0:37	0.41	6/16/2022 2:20	28.54
6/17/2022 2:03	81.21	6/16/2022 1:21	3.71	6/16/2022 1:51	10.16	6/16/2022 0:38	0.41	6/16/2022 2:21	28.52
6/17/2022 2:04	81.25	6/16/2022 1:22	6.90	6/16/2022 1:52	10.14	6/16/2022 0:39	0.42	6/16/2022 2:22	28.53
6/17/2022 2:05	81.26	6/16/2022 1:23	5.67	6/16/2022 1:53	10.20	6/16/2022 0:40	0.46	6/16/2022 2:23	28.57
6/17/2022 2:06	81.27	6/16/2022 1:24	4.68	6/16/2022 1:54	10.19	6/16/2022 0:41	0.49	6/16/2022 2:24	28.54
6/17/2022 2:07	81.25	6/16/2022 1:25	3.91	6/16/2022 1:55	10.24	6/16/2022 0:42	0.45	6/16/2022 2:25	28.55
6/17/2022 2:08	81.28	6/16/2022 1:26	3.25	6/16/2022 1:56	10.24	6/16/2022 0:43	0.47	6/16/2022 2:26	28.56
6/17/2022 2:09	81.25	6/16/2022 1:27	2.65	6/16/2022 1:57	10.25	6/16/2022 0:44	0.42	6/16/2022 2:27	28.55
6/17/2022 2:10	81.24	6/16/2022 1:28	2.17	6/16/2022 1:58	10.23	6/16/2022 0:45	0.40	6/16/2022 2:28	28.55
6/17/2022 2:11	81.23	6/16/2022 1:29	1.85	6/16/2022 1:59	10.25	6/16/2022 0:46	0.37	6/16/2022 2:29	28.56
6/17/2022 2:12	81.23	6/16/2022 1:30	1.53	6/16/2022 2:00	10.20	6/16/2022 0:47	0.36	6/16/2022 2:30	28.55
6/17/2022 2:13	81.26	6/16/2022 1:31	1.24	6/16/2022 2:01	10.23	6/16/2022 0:48	0.35	6/16/2022 2:31	28.51
6/17/2022 2:14	81.24	6/16/2022 1:32	0.96	6/16/2022 2:02	10.22	6/16/2022 0:49	0.36	6/16/2022 2:32	28.53
6/17/2022 2:15	81.28	6/16/2022 1:33	0.75	6/16/2022 2:03	10.21	6/16/2022 0:50	0.37	6/16/2022 2:33	28.56
6/17/2022 2:16	81.24	6/16/2022 1:34	0.58	6/16/2022 2:04	10.20	6/16/2022 0:51	0.41	6/16/2022 2:34	28.51
6/17/2022 2:17	81.23	6/16/2022 1:35	0.43	6/16/2022 2:05	10.21	6/16/2022 0:52	0.43	6/16/2022 2:35	28.54
6/17/2022 2:18	81.22	6/16/2022 1:36	0.27	6/16/2022 2:06	10.22	6/16/2022 0:53	0.44	6/16/2022 2:36	28.56
6/17/2022 2:19	81.26	6/16/2022 1:37	0.17	6/16/2022 2:07	10.22	6/16/2022 0:54	0.48	6/16/2022 2:37	28.53
6/17/2022 2:20	81.22	6/16/2022 1:38	0.02	6/16/2022 2:08	10.19	6/16/2022 0:55	0.45	6/16/2022 2:38	28.56
6/17/2022 2:21	81.22	6/16/2022 1:39	-0.02	6/16/2022 2:09	10.19	6/16/2022 0:56	0.38	6/16/2022 2:39	28.58
6/17/2022 2:22	81.26	6/16/2022 1:40	-0.04	6/16/2022 2:10	10.20	6/16/2022 0:57	0.39	6/16/2022 2:40	28.56
6/17/2022 2:23	81.24	6/16/2022 1:41	-0.05	6/16/2022 2:11	10.15	6/16/2022 0:58	0.35	6/16/2022 2:41	28.55
6/17/2022 2:24	81.22	6/16/2022 1:42	-0.04	6/16/2022 2:12	10.15	6/16/2022 0:59	0.36	6/16/2022 2:42	28.55
6/17/2022 2:25	81.25	6/16/2022 1:43	-0.01	6/16/2022 2:13	10.16	6/16/2022 1:00	0.36	6/16/2022 2:43	28.51
6/17/2022 2:26	81.22	6/16/2022 1:44	-0.03	6/16/2022 2:14	10.20	6/16/2022 1:01	0.37	6/16/2022 2:44	28.53
6/17/2022 2:27	81.24	6/16/2022 1:45	-0.03	6/16/2022 2:15	10.14	6/16/2022 1:02	0.38	6/16/2022 2:45	28.52
6/17/2022 2:28	81.23	6/16/2022 1:46	-0.05	6/16/2022 2:16	10.14	6/16/2022 1:03	0.46	6/16/2022 2:46	28.52
6/17/2022 2:29	81.24	6/16/2022 1:47	-0.05	6/16/2022 2:17	10.18	6/16/2022 1:04	0.47	6/16/2022 2:47	28.57
6/17/2022 2:30	81.22	6/16/2022 1:48	-0.02	6/16/2022 2:18	10.21	6/16/2022 1:05	0.45	6/16/2022 2:48	28.54
6/17/2022 2:31	81.25	6/16/2022 1:49	-0.05	6/16/2022 2:19	10.19	6/16/2022 1:06	0.48	6/16/2022 2:49	28.56
6/17/2022 2:32	81.24	6/16/2022 1:50	-0.03	6/16/2022 2:20	10.24	6/16/2022 1:07	0.41	6/16/2022 2:50	28.54
6/17/2022 2:33	81.19	6/16/2022 1:51	-0.03	6/16/2022 2:21	10.21	6/16/2022 1:08	0.40	6/16/2022 2:51	28.53
6/17/2022 2:34	81.24	6/16/2022 1:52	-0.07	6/16/2022 2:22	10.21	6/16/2022 1:09	0.35	6/16/2022 2:52	28.52
6/17/2022 2:35	81.24	6/16/2022 1:53	0.00	6/16/2022 2:23	10.20	6/16/2022 1:10	0.33	6/16/2022 2:53	28.56
6/17/2022 2:36	81.22	6/16/2022 1:54	-0.04	6/16/2022 2:24	10.22	6/16/2022 1:11	0.34	6/16/2022 2:54	28.53
6/17/2022 2:37	81.24	6/16/2022 1:55	-0.03	6/16/2022 2:25	10.25	6/16/2022 1:12	0.38	6/16/2022 2:55	28.57
6/17/2022 2:38	81.21	6/16/2022 1:56	-0.05	6/16/2022 2:26	10.25	6/16/2022 1:13	0.39	6/16/2022 2:56	28.55
6/17/2022 2:39	81.22	6/16/2022 1:57	-0.03	6/16/2022 2:27	10.23	6/16/2022 1:14	0.46	6/16/2022 2:57	28.54
6/17/2022 2:40	81.25	6/16/2022 1:58	-0.03	6/16/2022 2:28	10.22	6/16/2022 1:15	0.45	6/16/2022 2:58	28.54
6/17/2022 2:41	81.20	6/16/2022 1:59	-0.03	6/16/2022 2:29	10.23	6/16/2022 1:16	0.49	6/16/2022 2:59	28.54
6/17/2022 2:42	81.20	6/16/2022 2:00	-0.04	6/16/2022 2:30	10.21	6/16/2022 1:17	0.37	6/16/2022 3:00	28.52
6/17/2022 2:43	81.20	6/16/2022 2:01	-0.07	6/16/2022 2:31	10.17	6/16/2022 1:18	0.39	6/16/2022 3:01	28.54
6/17/2022 2:44	81.22	6/16/2022 2:02	-0.02	6/16/2022 2:32	10.18	6/16/2022 1:19	0.36	6/16/2022 3:02	28.56
6/17/2022 2:45	81.24	6/16/2022 2:03	-0.05	6/16/2022 2:33	10.18	6/16/2022 1:20	0.33	6/16/2022 3:03	28.51
6/17/2022 2:46	81.19	6/16/2022 2:04	-0.01	6/16/2022 2:34	10.18	6/16/2022 1:21	0.36	6/16/2022 3:04	28.56
6/17/2022 2:47	81.20	6/16/2022 2:05	-0.10	6/16/2022 2:35	10.21	6/16/2022 1:22	0.37	6/16/2022 3:05	28.52
6/17/2022 2:48	81.20	6/16/2022 2:06	-0.02	6/16/2022 2:36	10.19	6/16/2022 1:23	0.35	6/16/2022 3:06	28.53
6/17/2022 2:49	81.20	6/16/2022 2:07	-0.05	6/16/2022 2:37	10.15	6/16/2022 1:24	0.37	6/16/2022 3:07	28.54
6/17/2022 2:50	81.19	6/16/2022 2:08	-0.03	6/16/2022 2:38	10.18	6/16/2022 1:25	0.38	6/16/2022 3:08	28.52
6/17/2022 2:51	81.22	6/16/2022 2:09	-0.08	6/16/2022 2:39	10.17	6/16/2022 1:26	0.37	6/16/2022 3:09	28.55
6/17/2022 2:52	81.21	6/16/2022 2:10	1.61	6/16/2022 2:40	10.16	6/16/2022 1:27	0.36	6/16/2022 3:10	28.53
6/17/2022 2:53	81.21	6/16/2022 2:11	7.15	6/16/2022 2:41	10.15	6/16/2022 1:28	0.38	6/16/2022 3:11	28.56
6/17/2022 2:54	81.18	6/16/2022 2:12	6.29	6/16/2022 2:42	10.17	6/16/2022 1:29	0.36	6/16/2022 3:12	28.56
6/17/2022 2:55	81.22	6/16/2022 2:13	5.20	6/16/2022 2:43	10.18	6/16/2022 1:30	0.38	6/16/2022 3:13	28.50
6/17/2022 2:56	81.20	6/16/2022 2:14	4.33	6/16/2022 2:44	10.20	6/16/2022 1:31	0.42	6/16/2022 3:14	28.57
6/17/2022 2:57	81.19	6/16/2022 2:15	3.60	6/16/2022 2:45	10.20	6/16/2022 1:32	0.45	6/16/2022 3:15	28.52
6/17/2022 2:58	81.18	6/16/2022 2:16	2.93	6/16/2022 2:46	10.22	6/16/2022 1:33	0.45	6/16/2022 3:16	28.56
6/17/2022 2:59	81.22	6/16/2022 2:17	2.43	6/16/2022 2:47	10.24	6/16/2022 1:34	0.49	6/16/2022 3:17	28.59
6/17/2022 3:00	81.20	6/16/2022 2:18	2.07	6/16/2022 2:48	10.24	6/16/2022 1:35	0.46	6/16/2022 3:18	28.54
6/17/2022 3:01	84.47	6/16/2022 2:19	1.70	6/16/2022 2:49	10.24	6/16/2022 1:36	0.42	6/16/2022 3:19	28.53
6/17/2022 3:02	87.60	6/16/2022 2:20	1.42	6/16/2022 2:50	10.24	6/16/2022 1:37	0.38	6/16/2022 3:20	28.55
6/17/2022 3:03	89.53	6/16/2022 2:21	1.13	6/16/2022 2:51	10.21	6/16/2022 1:38	0.37	6/16/2022 3:21	28.52
6/17/2022 3:04	90.66	6/16/2022 2:22	0.93	6/16/2022 2:52	10.25	6/16/2022 1:39	0.36	6/16/2022 3:22	28.55
6/17/2022 3:05	88.09	6/16/2022 2:23	0.73	6/16/2022 2:53	10.29	6/16/2022 1:40	0.35	6/16/2022 3:23	28.55
6/17/2022 3:06	86.04	6/16/2022 2:24	0.58	6/16/2022 2:54	10.20	6/16/2022 1:41	0.37	6/16/2022 3:24	28.52
6/17/2022 3:07	84.70	6/16/2022 2:25	0.40	6/16/2022 2:55	10.23	6/16/2022 1:42	0.40	6/16/2022 3:25	28.54
6/17/2022 3:08	83.85	6/16/2022 2:26	0.25	6/16/2022 2:56	10.18	6/16/2022 1:43	0.40	6/16/2022 3:26	28.55

6/17/2022 3:09	83.36	6/16/2022 2:27	0.15	6/16/2022 2:57	10.18	6/16/2022 1:44	0.47	6/16/2022 3:27	28.57
6/17/2022 3:10	82.97	6/16/2022 2:28	0.10	6/16/2022 2:58	10.21	6/16/2022 1:45	0.45	6/16/2022 3:28	28.52
6/17/2022 3:11	82.74	6/16/2022 2:29	-0.04	6/16/2022 2:59	10.19	6/16/2022 1:46	0.44	6/16/2022 3:29	28.55
6/17/2022 3:12	82.55	6/16/2022 2:30	-0.03	6/16/2022 3:00	10.17	6/16/2022 1:47	0.42	6/16/2022 3:30	28.53
6/17/2022 3:13	82.38	6/16/2022 2:31	-0.04	6/16/2022 3:01	10.23	6/16/2022 1:48	0.37	6/16/2022 3:31	28.50
6/17/2022 3:14	82.28	6/16/2022 2:32	-0.03	6/16/2022 3:02	10.19	6/16/2022 1:49	0.35	6/16/2022 3:32	28.55
6/17/2022 3:15	82.18	6/16/2022 2:33	-0.06	6/16/2022 3:03	10.18	6/16/2022 1:50	0.34	6/16/2022 3:33	28.53
6/17/2022 3:16	82.10	6/16/2022 2:34	-0.05	6/16/2022 3:04	10.16	6/16/2022 1:51	0.35	6/16/2022 3:34	28.52
6/17/2022 3:17	82.06	6/16/2022 2:35	-0.10	6/16/2022 3:05	10.17	6/16/2022 1:52	0.39	6/16/2022 3:35	28.57
6/17/2022 3:18	82.03	6/16/2022 2:36	0.00	6/16/2022 3:06	10.17	6/16/2022 1:53	0.41	6/16/2022 3:36	28.51
6/17/2022 3:19	81.99	6/16/2022 2:37	-0.05	6/16/2022 3:07	10.17	6/16/2022 1:54	0.44	6/16/2022 3:37	28.52
6/17/2022 3:20	81.94	6/16/2022 2:38	-0.08	6/16/2022 3:08	10.16	6/16/2022 1:55	0.45	6/16/2022 3:38	28.55
6/17/2022 3:21	81.90	6/16/2022 2:39	-0.05	6/16/2022 3:09	10.19	6/16/2022 1:56	0.43	6/16/2022 3:39	28.53
6/17/2022 3:22	81.88	6/16/2022 2:40	-0.07	6/16/2022 3:10	10.22	6/16/2022 1:57	0.37	6/16/2022 3:40	28.53
6/17/2022 3:23	81.87	6/16/2022 2:41	-0.03	6/16/2022 3:11	10.17	6/16/2022 1:58	0.39	6/16/2022 3:41	28.55
6/17/2022 3:24	81.81	6/16/2022 2:42	-0.04	6/16/2022 3:12	10.25	6/16/2022 1:59	0.39	6/16/2022 3:42	28.53
6/17/2022 3:25	81.79	6/16/2022 2:43	-0.06	6/16/2022 3:13	10.21	6/16/2022 2:00	0.33	6/16/2022 3:43	28.52
6/17/2022 3:26	81.80	6/16/2022 2:44	-0.05	6/16/2022 3:14	10.24	6/16/2022 2:01	0.34	6/16/2022 3:44	28.51
6/17/2022 3:27	81.77	6/16/2022 2:45	-0.05	6/16/2022 3:15	10.21	6/16/2022 2:02	0.35	6/16/2022 3:45	28.54
6/17/2022 3:28	83.74	6/16/2022 2:46	-0.03	6/16/2022 3:16	10.25	6/16/2022 2:03	0.40	6/16/2022 3:46	28.52
6/17/2022 3:29	87.30	6/16/2022 2:47	-0.07	6/16/2022 3:17	10.21	6/16/2022 2:04	0.44	6/16/2022 3:47	28.51
6/17/2022 3:30	89.49	6/16/2022 2:48	-0.01	6/16/2022 3:18	10.25	6/16/2022 2:05	0.46	6/16/2022 3:48	28.53
6/17/2022 3:31	89.58	6/16/2022 2:49	-0.06	6/16/2022 3:19	10.23	6/16/2022 2:06	0.46	6/16/2022 3:49	28.50
6/17/2022 3:32	86.96	6/16/2022 2:50	-0.06	6/16/2022 3:20	10.21	6/16/2022 2:07	0.39	6/16/2022 3:50	28.54
6/17/2022 3:33	85.40	6/16/2022 2:51	-0.03	6/16/2022 3:21	10.25	6/16/2022 2:08	0.41	6/16/2022 3:51	28.56
6/17/2022 3:34	84.40	6/16/2022 2:52	-0.03	6/16/2022 3:22	10.20	6/16/2022 2:09	0.36	6/16/2022 3:52	28.56
6/17/2022 3:35	83.75	6/16/2022 2:53	-0.03	6/16/2022 3:23	10.20	6/16/2022 2:10	0.37	6/16/2022 3:53	28.53
6/17/2022 3:36	83.31	6/16/2022 2:54	-0.05	6/16/2022 3:24	10.21	6/16/2022 2:11	0.39	6/16/2022 3:54	28.57
6/17/2022 3:37	83.07	6/16/2022 2:55	-0.08	6/16/2022 3:25	10.23	6/16/2022 2:12	0.36	6/16/2022 3:55	28.53
6/17/2022 3:38	82.85	6/16/2022 2:56	-0.06	6/16/2022 3:26	10.23	6/16/2022 2:13	0.42	6/16/2022 3:56	28.53
6/17/2022 3:39	82.68	6/16/2022 2:57	-0.03	6/16/2022 3:27	10.19	6/16/2022 2:14	0.37	6/16/2022 3:57	28.50
6/17/2022 3:40	82.59	6/16/2022 2:58	-0.05	6/16/2022 3:28	10.18	6/16/2022 2:15	0.41	6/16/2022 3:58	28.53
6/17/2022 3:41	82.50	6/16/2022 2:59	-0.05	6/16/2022 3:29	10.16	6/16/2022 2:16	0.41	6/16/2022 3:59	28.55
6/17/2022 3:42	82.38	6/16/2022 3:00	-0.09	6/16/2022 3:30	10.16	6/16/2022 2:17	0.43	6/16/2022 4:00	28.52
6/17/2022 3:43	82.33	6/16/2022 3:01	5.05	6/16/2022 3:31	10.14	6/16/2022 2:18	0.39	6/16/2022 4:01	28.53
6/17/2022 3:44	82.31	6/16/2022 3:02	6.76	6/16/2022 3:32	10.16	6/16/2022 2:19	0.38	6/16/2022 4:02	28.54
6/17/2022 3:45	82.29	6/16/2022 3:03	5.55	6/16/2022 3:33	10.15	6/16/2022 2:20	0.38	6/16/2022 4:03	28.53
6/17/2022 3:46	82.24	6/16/2022 3:04	4.58	6/16/2022 3:34	10.18	6/16/2022 2:21	0.38	6/16/2022 4:04	28.54
6/17/2022 3:47	82.19	6/16/2022 3:05	3.86	6/16/2022 3:35	10.20	6/16/2022 2:22	0.38	6/16/2022 4:05	28.51
6/17/2022 3:48	82.21	6/16/2022 3:06	3.15	6/16/2022 3:36	10.21	6/16/2022 2:23	0.36	6/16/2022 4:06	28.52
6/17/2022 3:49	82.15	6/16/2022 3:07	2.63	6/16/2022 3:37	10.18	6/16/2022 2:24	0.39	6/16/2022 4:07	28.53
6/17/2022 3:50	82.13	6/16/2022 3:08	2.18	6/16/2022 3:38	10.21	6/16/2022 2:25	0.36	6/16/2022 4:08	28.51
6/17/2022 3:51	82.10	6/16/2022 3:09	1.80	6/16/2022 3:39	10.25	6/16/2022 2:26	0.37	6/16/2022 4:09	28.52
6/17/2022 3:52	82.06	6/16/2022 3:10	1.49	6/16/2022 3:40	10.22	6/16/2022 2:27	0.37	6/16/2022 4:10	28.57
6/17/2022 3:53	82.08	6/16/2022 3:11	1.26	6/16/2022 3:41	10.25	6/16/2022 2:28	0.38	6/16/2022 4:11	28.53
6/17/2022 3:54	82.03	6/16/2022 3:12	1.02	6/16/2022 3:42	10.24	6/16/2022 2:29	0.44	6/16/2022 4:12	28.54
6/17/2022 3:55	82.03	6/16/2022 3:13	0.80	6/16/2022 3:43	10.24	6/16/2022 2:30	0.43	6/16/2022 4:13	28.52
6/17/2022 3:56	82.03	6/16/2022 3:14	0.62	6/16/2022 3:44	10.20	6/16/2022 2:31	0.50	6/16/2022 4:14	28.54
6/17/2022 3:57	81.98	6/16/2022 3:15	0.48	6/16/2022 3:45	10.23	6/16/2022 2:32	0.47	6/16/2022 4:15	28.55
6/17/2022 3:58	82.00	6/16/2022 3:16	0.33	6/16/2022 3:46	10.23	6/16/2022 2:33	0.46	6/16/2022 4:16	28.52
6/17/2022 3:59	81.94	6/16/2022 3:17	0.19	6/16/2022 3:47	10.21	6/16/2022 2:34	0.46	6/16/2022 4:17	28.54
6/17/2022 4:00	81.96	6/16/2022 3:18	0.11	6/16/2022 3:48	10.22	6/16/2022 2:35	0.39	6/16/2022 4:18	28.52
6/17/2022 4:01	85.64	6/16/2022 3:19	0.01	6/16/2022 3:49	10.22	6/16/2022 2:36	0.38	6/16/2022 4:19	28.52
6/17/2022 4:02	88.47	6/16/2022 3:20	-0.04	6/16/2022 3:50	10.19	6/16/2022 2:37	0.35	6/16/2022 4:20	28.52
6/17/2022 4:03	90.19	6/16/2022 3:21	-0.07	6/16/2022 3:51	10.23	6/16/2022 2:38	0.37	6/16/2022 4:21	28.51
6/17/2022 4:04	88.77	6/16/2022 3:22	-0.05	6/16/2022 3:52	10.20	6/16/2022 2:39	0.33	6/16/2022 4:22	28.51
6/17/2022 4:05	86.55	6/16/2022 3:23	-0.05	6/16/2022 3:53	10.19	6/16/2022 2:40	0.36	6/16/2022 4:23	28.55
6/17/2022 4:06	85.23	6/16/2022 3:24	-0.05	6/16/2022 3:54	10.18	6/16/2022 2:41	0.37	6/16/2022 4:24	28.52
6/17/2022 4:07	84.35	6/16/2022 3:25	-0.04	6/16/2022 3:55	10.19	6/16/2022 2:42	0.38	6/16/2022 4:25	28.52
6/17/2022 4:08	83.81	6/16/2022 3:26	-0.08	6/16/2022 3:56	10.17	6/16/2022 2:43	0.41	6/16/2022 4:26	28.53
6/17/2022 4:09	83.41	6/16/2022 3:27	-0.03	6/16/2022 3:57	10.17	6/16/2022 2:44	0.48	6/16/2022 4:27	28.51
6/17/2022 4:10	83.18	6/16/2022 3:28	-0.01	6/16/2022 3:58	10.16	6/16/2022 2:45	0.46	6/16/2022 4:28	28.54
6/17/2022 4:11	83.02	6/16/2022 3:29	-0.03	6/16/2022 3:59	10.18	6/16/2022 2:46	0.49	6/16/2022 4:29	28.51
6/17/2022 4:12	82.90	6/16/2022 3:30	-0.07	6/16/2022 4:00	10.20	6/16/2022 2:47	0.51	6/16/2022 4:30	28.52
6/17/2022 4:13	82.77	6/16/2022 3:31	-0.07	6/16/2022 4:01	10.20	6/16/2022 2:48	0.44	6/16/2022 4:31	28.52
6/17/2022 4:14	82.69	6/16/2022 3:32	-0.05	6/16/2022 4:02	10.22	6/16/2022 2:49	0.47	6/16/2022 4:32	28.57
6/17/2022 4:15	82.66	6/16/2022 3:33	-0.03	6/16/2022 4:03	10.24	6/16/2022 2:50	0.43	6/16/2022 4:33	28.52
6/17/2022 4:16	82.59	6/16/2022 3:34	-0.04	6/16/2022 4:04	10.30	6/16/2022 2:51	0.39	6/16/2022 4:34	28.49
6/17/2022 4:17	82.54	6/16/2022 3:35	-0.05	6/16/2022 4:05	10.31	6/16/2022 2:52	0.38	6/16/2022 4:35	28.54
6/17/2022 4:18	82.48	6/16/2022 3:36	-0.04	6/16/2022 4:06	10.30	6/16/2022 2:53	0.39	6/16/2022 4:36	28.53
6/17/2022 4:19	82.42	6/16/2022 3:37	0.00	6/16/2022 4:07	10.27	6/16/2022 2:54	0.32	6/16/2022 4:37	28.52
6/17/2022 4:20	83.21	6/16/2022 3:38	-0.01	6/16/2022 4:08	10.27	6/16/2022 2:55	0.40	6/16/2022 4:38	28.54
6/17/2022 4:21	87.36	6/16/2022 3:39	-0.05	6/16/2022 4:09	10.29	6/16/2022 2:56	0.39	6/16/2022 4:39	28.51
6/17/2022 4:22	89.83	6/16/2022 3:40	-0.02	6/16/2022 4:10	10.28	6/16/2022 2:57	0.44	6/16/2022 4:40	28.52
6/17/2022 4:23	91.20	6/16/2022 3:41	-0.03	6/16/2022 4:11	10.29	6/16/2022 2:58	0.45	6/16/2022 4:41	28.51
6/17/2022 4:24	88.34	6/16/2022 3:42	-0.05	6/16/2022 4:12	10.29	6/16/2022 2:59	0.49	6/16/2022 4:42	28.50
6/17/2022 4:25	86.46	6/16/2022 3:43	-0.06	6/16/2022 4:13	10.25	6/16/2022 3:00	0.48	6/16/2022 4:43	28.52
6/17/2022 4:26	85.29	6/16/2022 3:44	-0.01	6/16/2022 4:14	10.26	6/16/2022 3:01	0.48	6/16/2022 4:44	28.54
6/17/2022 4:27	84.53	6/16/2022 3:45	-0.06	6/16/2022 4:15	10.24	6/16/2022 3:02	0.46	6/16/2022 4:45	28.53
6/17/2022 4:28	84.04	6/16/2022 3:46	-0.03	6/16/2022 4:16	10.25	6/16/2022 3:03	0.48	6/16/2022 4:46	28.55
6/17/2022 4:29	83.69	6/16/2022 3:47	0.00	6/16/2022 4:17	10.25	6/16/2022 3:04	0.49	6/16/2022 4:47	28.53
6/17/2022 4:30	83.48	6/16/2022 3:48	-0.06	6/16/2022 4:18	10.29	6/16/2022 3:05	0.47	6/16/2022 4:48	28.51
6/17/2022 4:31	83.31	6/16/2022 3:49	-0.07	6/16/2022 4:19	10.31	6/16/2022 3:06	0.46	6/16/2022 4:49	28.53
6/17/2022 4:32	83.21	6/16/2022 3:50	-0.01	6/16/2022 4:20	10.34	6/16/2022 3:07	0.45	6/16/2022 4:50	28.53
6/17/2022 4:33	83.11	6/16/2022 3:51	3.53	6/16/2022 4:21	10.37	6/16/2022 3:08	0.46	6/16/2022 4:51	28.53
6/17/2022 4:34	83.00	6/16/2022 3:52	7.05	6/16/2022 4:22	10.40	6/16/2022 3:09	0.48	6/16/2022 4:52	28.54
6/17/2022 4:35	82.95	6/16/2022 3:53	5.82	6/16/2022 4:23	10.41	6/16/2022 3:10	0.44	6/16/2022 4:53	28.54
6/17/2022 4:36	82.84	6/16/2022 3:54	4.82	6/16/2022 4:24	10.48	6/16/2022 3:11	0.41	6/16/2022 4:54	28.52

6/17/2022 4:37	82.83	6/16/2022 3:55	4.02	6/16/2022 4:25	10.53	6/16/2022 3:12	0.45	6/16/2022 4:55	28.54
6/17/2022 4:38	82.77	6/16/2022 3:56	3.30	6/16/2022 4:26	10.56	6/16/2022 3:13	0.47	6/16/2022 4:56	28.51
6/17/2022 4:39	82.74	6/16/2022 3:57	2.70	6/16/2022 4:27	10.61	6/16/2022 3:14	0.45	6/16/2022 4:57	28.53
6/17/2022 4:40	82.70	6/16/2022 3:58	2.25	6/16/2022 4:28	10.63	6/16/2022 3:15	0.40	6/16/2022 4:58	28.55
6/17/2022 4:41	82.68	6/16/2022 3:59	1.87	6/16/2022 4:29	10.68	6/16/2022 3:16	0.39	6/16/2022 4:59	28.53
6/17/2022 4:42	82.62	6/16/2022 4:00	1.54	6/16/2022 4:30	10.69	6/16/2022 3:17	0.38	6/16/2022 5:00	28.50
6/17/2022 4:43	82.63	6/16/2022 4:01	1.27	6/16/2022 4:31	10.71	6/16/2022 3:18	0.41	6/16/2022 5:01	28.50
6/17/2022 4:44	82.58	6/16/2022 4:02	1.00	6/16/2022 4:32	10.74	6/16/2022 3:19	0.35	6/16/2022 5:02	28.50
6/17/2022 4:45	82.55	6/16/2022 4:03	0.79	6/16/2022 4:33	10.77	6/16/2022 3:20	0.40	6/16/2022 5:03	28.54
6/17/2022 4:46	82.54	6/16/2022 4:04	0.58	6/16/2022 4:34	10.79	6/16/2022 3:21	0.41	6/16/2022 5:04	28.57
6/17/2022 4:47	82.52	6/16/2022 4:05	0.48	6/16/2022 4:35	10.84	6/16/2022 3:22	0.43	6/16/2022 5:05	28.52
6/17/2022 4:48	82.50	6/16/2022 4:06	0.31	6/16/2022 4:36	10.76	6/16/2022 3:23	0.46	6/16/2022 5:06	28.56
6/17/2022 4:49	82.46	6/16/2022 4:07	0.18	6/16/2022 4:37	10.79	6/16/2022 3:24	0.52	6/16/2022 5:07	28.52
6/17/2022 4:50	82.47	6/16/2022 4:08	0.05	6/16/2022 4:38	10.76	6/16/2022 3:25	0.51	6/16/2022 5:08	28.53
6/17/2022 4:51	82.45	6/16/2022 4:09	-0.03	6/16/2022 4:39	10.76	6/16/2022 3:26	0.48	6/16/2022 5:09	28.51
6/17/2022 4:52	82.41	6/16/2022 4:10	-0.08	6/16/2022 4:40	10.77	6/16/2022 3:27	0.44	6/16/2022 5:10	28.52
6/17/2022 4:53	82.40	6/16/2022 4:11	-0.05	6/16/2022 4:41	10.74	6/16/2022 3:28	0.43	6/16/2022 5:11	28.53
6/17/2022 4:54	82.39	6/16/2022 4:12	-0.04	6/16/2022 4:42	10.78	6/16/2022 3:29	0.43	6/16/2022 5:12	28.50
6/17/2022 4:55	82.41	6/16/2022 4:13	-0.07	6/16/2022 4:43	10.77	6/16/2022 3:30	0.41	6/16/2022 5:13	28.55
6/17/2022 4:56	82.36	6/16/2022 4:14	-0.06	6/16/2022 4:44	10.77	6/16/2022 3:31	0.40	6/16/2022 5:14	28.54
6/17/2022 4:57	82.37	6/16/2022 4:15	-0.06	6/16/2022 4:45	10.71	6/16/2022 3:32	0.41	6/16/2022 5:15	28.52
6/17/2022 4:58	82.32	6/16/2022 4:16	-0.06	6/16/2022 4:46	10.75	6/16/2022 3:33	0.39	6/16/2022 5:16	28.52
6/17/2022 4:59	82.33	6/16/2022 4:17	-0.03	6/16/2022 4:47	10.68	6/16/2022 3:34	0.36	6/16/2022 5:17	28.51
6/17/2022 5:00	82.31	6/16/2022 4:18	-0.05	6/16/2022 4:48	10.70	6/16/2022 3:35	0.38	6/16/2022 5:18	28.53
6/17/2022 5:01	82.31	6/16/2022 4:19	-0.05	6/16/2022 4:49	10.68	6/16/2022 3:36	0.39	6/16/2022 5:19	28.55
6/17/2022 5:02	82.30	6/16/2022 4:20	-0.08	6/16/2022 4:50	10.65	6/16/2022 3:37	0.40	6/16/2022 5:20	28.52
6/17/2022 5:03	82.28	6/16/2022 4:21	-0.07	6/16/2022 4:51	10.68	6/16/2022 3:38	0.43	6/16/2022 5:21	28.52
6/17/2022 5:04	82.26	6/16/2022 4:22	-0.05	6/16/2022 4:52	10.62	6/16/2022 3:39	0.44	6/16/2022 5:22	28.52
6/17/2022 5:05	82.25	6/16/2022 4:23	-0.03	6/16/2022 4:53	10.60	6/16/2022 3:40	0.45	6/16/2022 5:23	28.52
6/17/2022 5:06	82.27	6/16/2022 4:24	-0.04	6/16/2022 4:54	10.60	6/16/2022 3:41	0.48	6/16/2022 5:24	28.52
6/17/2022 5:07	82.24	6/16/2022 4:25	-0.06	6/16/2022 4:55	10.54	6/16/2022 3:42	0.44	6/16/2022 5:25	28.51
6/17/2022 5:08	82.24	6/16/2022 4:26	-0.01	6/16/2022 4:56	10.55	6/16/2022 3:43	0.46	6/16/2022 5:26	28.50
6/17/2022 5:09	82.25	6/16/2022 4:27	-0.07	6/16/2022 4:57	10.51	6/16/2022 3:44	0.43	6/16/2022 5:27	28.54
6/17/2022 5:10	82.21	6/16/2022 4:28	-0.03	6/16/2022 4:58	10.50	6/16/2022 3:45	0.38	6/16/2022 5:28	28.51
6/17/2022 5:11	82.21	6/16/2022 4:29	-0.01	6/16/2022 4:59	10.46	6/16/2022 3:46	0.34	6/16/2022 5:29	28.53
6/17/2022 5:12	82.19	6/16/2022 4:30	0.01	6/16/2022 5:00	10.45	6/16/2022 3:47	0.38	6/16/2022 5:30	28.53
6/17/2022 5:13	82.17	6/16/2022 4:31	-0.03	6/16/2022 5:01	10.45	6/16/2022 3:48	0.42	6/16/2022 5:31	28.53
6/17/2022 5:14	82.15	6/16/2022 4:32	-0.05	6/16/2022 5:02	10.42	6/16/2022 3:49	0.39	6/16/2022 5:32	28.52
6/17/2022 5:15	82.16	6/16/2022 4:33	-0.04	6/16/2022 5:03	10.44	6/16/2022 3:50	0.46	6/16/2022 5:33	28.53
6/17/2022 5:16	82.17	6/16/2022 4:34	-0.03	6/16/2022 5:04	10.42	6/16/2022 3:51	0.49	6/16/2022 5:34	28.53
6/17/2022 5:17	82.15	6/16/2022 4:35	-0.05	6/16/2022 5:05	10.37	6/16/2022 3:52	0.50	6/16/2022 5:35	28.52
6/17/2022 5:18	82.17	6/16/2022 4:36	-0.06	6/16/2022 5:06	10.36	6/16/2022 3:53	0.46	6/16/2022 5:36	28.52
6/17/2022 5:19	82.13	6/16/2022 4:37	-0.07	6/16/2022 5:07	10.37	6/16/2022 3:54	0.49	6/16/2022 5:37	28.55
6/17/2022 5:20	82.15	6/16/2022 4:38	-0.07	6/16/2022 5:08	10.36	6/16/2022 3:55	0.47	6/16/2022 5:38	28.54
6/17/2022 5:21	82.14	6/16/2022 4:39	-0.04	6/16/2022 5:09	10.37	6/16/2022 3:56	0.49	6/16/2022 5:39	28.54
6/17/2022 5:22	82.15	6/16/2022 4:40	-0.04	6/16/2022 5:10	10.35	6/16/2022 3:57	0.50	6/16/2022 5:40	28.52
6/17/2022 5:23	82.11	6/16/2022 4:41	4.34	6/16/2022 5:11	10.38	6/16/2022 3:58	0.48	6/16/2022 5:41	28.53
6/17/2022 5:24	82.11	6/16/2022 4:42	6.91	6/16/2022 5:12	10.36	6/16/2022 3:59	0.45	6/16/2022 5:42	28.53
6/17/2022 5:25	82.11	6/16/2022 4:43	5.66	6/16/2022 5:13	10.39	6/16/2022 4:00	0.45	6/16/2022 5:43	28.53
6/17/2022 5:26	82.09	6/16/2022 4:44	4.70	6/16/2022 5:14	10.37	6/16/2022 4:01	0.45	6/16/2022 5:44	28.53
6/17/2022 5:27	82.09	6/16/2022 4:45	3.91	6/16/2022 5:15	10.39	6/16/2022 4:02	0.46	6/16/2022 5:45	28.53
6/17/2022 5:28	82.11	6/16/2022 4:46	3.28	6/16/2022 5:16	10.40	6/16/2022 4:03	0.44	6/16/2022 5:46	28.53
6/17/2022 5:29	82.11	6/16/2022 4:47	2.60	6/16/2022 5:17	10.37	6/16/2022 4:04	0.36	6/16/2022 5:47	28.52
6/17/2022 5:30	82.02	6/16/2022 4:48	2.18	6/16/2022 5:18	10.34	6/16/2022 4:05	0.36	6/16/2022 5:48	28.53
6/17/2022 5:31	82.09	6/16/2022 4:49	1.83	6/16/2022 5:19	10.34	6/16/2022 4:06	0.37	6/16/2022 5:49	28.54
6/17/2022 5:32	82.04	6/16/2022 4:50	1.47	6/16/2022 5:20	10.34	6/16/2022 4:07	0.37	6/16/2022 5:50	28.54
6/17/2022 5:33	82.08	6/16/2022 4:51	1.20	6/16/2022 5:21	10.31	6/16/2022 4:08	0.40	6/16/2022 5:51	28.52
6/17/2022 5:34	82.06	6/16/2022 4:52	0.98	6/16/2022 5:22	10.30	6/16/2022 4:09	0.46	6/16/2022 5:52	28.52
6/17/2022 5:35	82.05	6/16/2022 4:53	0.74	6/16/2022 5:23	10.32	6/16/2022 4:10	0.49	6/16/2022 5:53	28.53
6/17/2022 5:36	82.03	6/16/2022 4:54	0.52	6/16/2022 5:24	10.34	6/16/2022 4:11	0.51	6/16/2022 5:54	28.52
6/17/2022 5:37	82.01	6/16/2022 4:55	0.42	6/16/2022 5:25	10.30	6/16/2022 4:12	0.47	6/16/2022 5:55	28.53
6/17/2022 5:38	82.01	6/16/2022 4:56	0.28	6/16/2022 5:26	10.29	6/16/2022 4:13	0.44	6/16/2022 5:56	28.55
6/17/2022 5:39	82.06	6/16/2022 4:57	0.14	6/16/2022 5:27	10.30	6/16/2022 4:14	0.40	6/16/2022 5:57	28.52
6/17/2022 5:40	82.02	6/16/2022 4:58	0.05	6/16/2022 5:28	10.25	6/16/2022 4:15	0.40	6/16/2022 5:58	28.52
6/17/2022 5:41	81.97	6/16/2022 4:59	-0.04	6/16/2022 5:29	10.25	6/16/2022 4:16	0.38	6/16/2022 5:59	28.53
6/17/2022 5:42	82.02	6/16/2022 5:00	-0.04	6/16/2022 5:30	10.26	6/16/2022 4:17	0.35	6/16/2022 6:00	28.56
6/17/2022 5:43	82.03	6/16/2022 5:01	-0.05	6/16/2022 5:31	10.25	6/16/2022 4:18	0.41	6/16/2022 6:01	28.53
6/17/2022 5:44	82.00	6/16/2022 5:02	-0.02	6/16/2022 5:32	10.23	6/16/2022 4:19	0.45	6/16/2022 6:02	28.51
6/17/2022 5:45	82.01	6/16/2022 5:03	-0.05	6/16/2022 5:33	10.22	6/16/2022 4:20	0.42	6/16/2022 6:03	28.52
6/17/2022 5:46	81.99	6/16/2022 5:04	-0.04	6/16/2022 5:34	10.20	6/16/2022 4:21	0.49	6/16/2022 6:04	28.55
6/17/2022 5:47	81.99	6/16/2022 5:05	-0.01	6/16/2022 5:35	10.20	6/16/2022 4:22	0.51	6/16/2022 6:05	28.53
6/17/2022 5:48	81.99	6/16/2022 5:06	-0.04	6/16/2022 5:36	10.20	6/16/2022 4:23	0.48	6/16/2022 6:06	28.52
6/17/2022 5:49	81.98	6/16/2022 5:07	-0.04	6/16/2022 5:37	10.21	6/16/2022 4:24	0.43	6/16/2022 6:07	28.53
6/17/2022 5:50	81.96	6/16/2022 5:08	-0.05	6/16/2022 5:38	10.20	6/16/2022 4:25	0.43	6/16/2022 6:08	28.58
6/17/2022 5:51	81.97	6/16/2022 5:09	-0.05	6/16/2022 5:39	10.23	6/16/2022 4:26	0.37	6/16/2022 6:09	28.52
6/17/2022 5:52	81.95	6/16/2022 5:10	-0.04	6/16/2022 5:40	10.17	6/16/2022 4:27	0.36	6/16/2022 6:10	28.55
6/17/2022 5:53	81.97	6/16/2022 5:11	-0.07	6/16/2022 5:41	10.22	6/16/2022 4:28	0.41	6/16/2022 6:11	28.54
6/17/2022 5:54	81.93	6/16/2022 5:12	-0.03	6/16/2022 5:42	10.22	6/16/2022 4:29	0.39	6/16/2022 6:12	28.53
6/17/2022 5:55	81.99	6/16/2022 5:13	-0.04	6/16/2022 5:43	10.25	6/16/2022 4:30	0.46	6/16/2022 6:13	28.53
6/17/2022 5:56	81.95	6/16/2022 5:14	-0.02	6/16/2022 5:44	10.25	6/16/2022 4:31	0.48	6/16/2022 6:14	28.52
6/17/2022 5:57	81.96	6/16/2022 5:15	-0.02	6/16/2022 5:45	10.28	6/16/2022 4:32	0.48	6/16/2022 6:15	28.55
6/17/2022 5:58	81.94	6/16/2022 5:16	-0.04	6/16/2022 5:46	10.26	6/16/2022 4:33	0.45	6/16/2022 6:16	28.54
6/17/2022 5:59	81.92	6/16/2022 5:17	-0.05	6/16/2022 5:47	10.26	6/16/2022 4:34	0.44	6/16/2022 6:17	28.52
6/17/2022 6:00	81.92	6/16/2022 5:18	-0.06	6/16/2022 5:48	10.25	6/16/2022 4:35	0.43	6/16/2022 6:18	28.54
6/17/2022 6:01	81.91	6/16/2022 5:19	-0.03	6/16/2022 5:49	10.27	6/16/2022 4:36	0.40	6/16/2022 6:19	28.58
6/17/2022 6:02	81.96	6/16/2022 5:20	-0.06	6/16/2022 5:50	10.26	6/16/2022 4:37	0.39	6/16/2022 6:20	28.54
6/17/2022 6:03	81.92	6/16/2022 5:21	-0.03	6/16/2022 5:51	10.24	6/16/2022 4:38	0.39	6/16/2022 6:21	28.54
6/17/2022 6:04	81.90	6/16/2022 5:22	-0.05	6/16/2022 5:52	10.22	6/16/2022 4:39	0.40	6/16/2022 6:22	28.56

6/17/2022 6:05	81.90	6/16/2022 5:23	-0.02	6/16/2022 5:53	10.24	6/16/2022 4:40	0.45	6/16/2022 6:23	28.54
6/17/2022 6:06	81.96	6/16/2022 5:24	-0.06	6/16/2022 5:54	10.24	6/16/2022 4:41	0.49	6/16/2022 6:24	28.53
6/17/2022 6:07	81.94	6/16/2022 5:25	-0.03	6/16/2022 5:55	10.25	6/16/2022 4:42	0.50	6/16/2022 6:25	28.55
6/17/2022 6:08	81.92	6/16/2022 5:26	-0.03	6/16/2022 5:56	10.20	6/16/2022 4:43	0.46	6/16/2022 6:26	28.52
6/17/2022 6:09	81.92	6/16/2022 5:27	-0.04	6/16/2022 5:57	10.24	6/16/2022 4:44	0.46	6/16/2022 6:27	28.53
6/17/2022 6:10	81.89	6/16/2022 5:28	-0.03	6/16/2022 5:58	10.17	6/16/2022 4:45	0.52	6/16/2022 6:28	28.52
6/17/2022 6:11	81.88	6/16/2022 5:29	-0.04	6/16/2022 5:59	10.21	6/16/2022 4:46	0.47	6/16/2022 6:29	28.57
6/17/2022 6:12	81.85	6/16/2022 5:30	0.02	6/16/2022 6:00	10.22	6/16/2022 4:47	0.46	6/16/2022 6:30	28.57
6/17/2022 6:13	81.89	6/16/2022 5:31	4.94	6/16/2022 6:01	10.17	6/16/2022 4:48	0.51	6/16/2022 6:31	28.54
6/17/2022 6:14	81.88	6/16/2022 5:32	6.67	6/16/2022 6:02	10.18	6/16/2022 4:49	0.47	6/16/2022 6:32	28.54
6/17/2022 6:15	81.88	6/16/2022 5:33	5.49	6/16/2022 6:03	10.18	6/16/2022 4:50	0.50	6/16/2022 6:33	28.55
6/17/2022 6:16	81.86	6/16/2022 5:34	4.53	6/16/2022 6:04	10.15	6/16/2022 4:51	0.45	6/16/2022 6:34	28.50
6/17/2022 6:17	81.86	6/16/2022 5:35	3.80	6/16/2022 6:05	10.14	6/16/2022 4:52	0.46	6/16/2022 6:35	28.53
6/17/2022 6:18	81.86	6/16/2022 5:36	3.14	6/16/2022 6:06	10.13	6/16/2022 4:53	0.41	6/16/2022 6:36	28.55
6/17/2022 6:19	81.89	6/16/2022 5:37	2.59	6/16/2022 6:07	10.19	6/16/2022 4:54	0.39	6/16/2022 6:37	28.54
6/17/2022 6:20	81.87	6/16/2022 5:38	2.19	6/16/2022 6:08	10.16	6/16/2022 4:55	0.39	6/16/2022 6:38	28.54
6/17/2022 6:21	81.87	6/16/2022 5:39	1.80	6/16/2022 6:09	10.16	6/16/2022 4:56	0.38	6/16/2022 6:39	28.53
6/17/2022 6:22	81.87	6/16/2022 5:40	1.49	6/16/2022 6:10	10.15	6/16/2022 4:57	0.41	6/16/2022 6:40	28.57
6/17/2022 6:23	81.85	6/16/2022 5:41	1.20	6/16/2022 6:11	10.14	6/16/2022 4:58	0.42	6/16/2022 6:41	28.55
6/17/2022 6:24	81.87	6/16/2022 5:42	0.91	6/16/2022 6:12	10.16	6/16/2022 4:59	0.45	6/16/2022 6:42	28.58
6/17/2022 6:25	81.82	6/16/2022 5:43	0.76	6/16/2022 6:13	10.13	6/16/2022 5:00	0.49	6/16/2022 6:43	28.56
6/17/2022 6:26	81.83	6/16/2022 5:44	0.59	6/16/2022 6:14	10.14	6/16/2022 5:01	0.48	6/16/2022 6:44	28.53
6/17/2022 6:27	81.80	6/16/2022 5:45	0.42	6/16/2022 6:15	10.17	6/16/2022 5:02	0.50	6/16/2022 6:45	29.97
6/17/2022 6:28	81.83	6/16/2022 5:46	0.28	6/16/2022 6:16	10.19	6/16/2022 5:03	0.53	6/16/2022 6:46	30.03
6/17/2022 6:29	81.83	6/16/2022 5:47	0.16	6/16/2022 6:17	10.21	6/16/2022 5:04	0.43	6/16/2022 6:47	29.12
6/17/2022 6:30	81.84	6/16/2022 5:48	0.08	6/16/2022 6:18	10.23	6/16/2022 5:05	0.44	6/16/2022 6:48	28.78
6/17/2022 6:31	81.82	6/16/2022 5:49	-0.04	6/16/2022 6:19	10.24	6/16/2022 5:06	0.39	6/16/2022 6:49	28.64
6/17/2022 6:32	81.84	6/16/2022 5:50	-0.03	6/16/2022 6:20	10.19	6/16/2022 5:07	0.41	6/16/2022 6:50	28.62
6/17/2022 6:33	81.81	6/16/2022 5:51	-0.01	6/16/2022 6:21	10.24	6/16/2022 5:08	0.38	6/16/2022 6:51	28.60
6/17/2022 6:34	81.82	6/16/2022 5:52	-0.08	6/16/2022 6:22	10.23	6/16/2022 5:09	0.38	6/16/2022 6:52	28.57
6/17/2022 6:35	81.83	6/16/2022 5:53	-0.03	6/16/2022 6:23	10.24	6/16/2022 5:10	0.39	6/16/2022 6:53	28.56
6/17/2022 6:36	81.79	6/16/2022 5:54	-0.05	6/16/2022 6:24	10.26	6/16/2022 5:11	0.46	6/16/2022 6:54	28.56
6/17/2022 6:37	81.79	6/16/2022 5:55	-0.05	6/16/2022 6:25	10.24	6/16/2022 5:12	0.50	6/16/2022 6:55	28.57
6/17/2022 6:38	81.80	6/16/2022 5:56	-0.03	6/16/2022 6:26	10.22	6/16/2022 5:13	0.47	6/16/2022 6:56	28.57
6/17/2022 6:39	81.82	6/16/2022 5:57	0.01	6/16/2022 6:27	10.19	6/16/2022 5:14	0.51	6/16/2022 6:57	28.56
6/17/2022 6:40	81.82	6/16/2022 5:58	-0.03	6/16/2022 6:28	10.24	6/16/2022 5:15	0.45	6/16/2022 6:58	28.57
6/17/2022 6:41	81.84	6/16/2022 5:59	-0.04	6/16/2022 6:29	10.24	6/16/2022 5:16	0.43	6/16/2022 6:59	28.55
6/17/2022 6:42	81.83	6/16/2022 6:00	0.00	6/16/2022 6:30	10.23	6/16/2022 5:17	0.39	6/16/2022 7:00	28.55
6/17/2022 6:43	81.81	6/16/2022 6:01	-0.03	6/16/2022 6:31	10.26	6/16/2022 5:18	0.37	6/16/2022 7:01	28.55
6/17/2022 6:44	81.79	6/16/2022 6:02	-0.08	6/16/2022 6:32	10.27	6/16/2022 5:19	0.39	6/16/2022 7:02	30.95
6/17/2022 6:45	81.81	6/16/2022 6:03	-0.05	6/16/2022 6:33	10.26	6/16/2022 5:20	0.42	6/16/2022 7:03	30.80
6/17/2022 6:46	81.77	6/16/2022 6:04	-0.02	6/16/2022 6:34	10.27	6/16/2022 5:21	0.45	6/16/2022 7:04	30.69
6/17/2022 6:47	81.79	6/16/2022 6:05	-0.05	6/16/2022 6:35	10.30	6/16/2022 5:22	0.47	6/16/2022 7:05	31.85
6/17/2022 6:48	81.78	6/16/2022 6:06	-0.05	6/16/2022 6:36	10.26	6/16/2022 5:23	0.51	6/16/2022 7:06	31.76
6/17/2022 6:49	81.76	6/16/2022 6:07	-0.04	6/16/2022 6:37	10.31	6/16/2022 5:24	0.49	6/16/2022 7:07	30.90
6/17/2022 6:50	81.79	6/16/2022 6:08	-0.03	6/16/2022 6:38	10.31	6/16/2022 5:25	0.45	6/16/2022 7:08	31.99
6/17/2022 6:51	81.78	6/16/2022 6:09	-0.03	6/16/2022 6:39	10.29	6/16/2022 5:26	0.47	6/16/2022 7:09	31.77
6/17/2022 6:52	81.77	6/16/2022 6:10	-0.06	6/16/2022 6:40	10.28	6/16/2022 5:27	0.43	6/16/2022 7:10	31.02
6/17/2022 6:53	81.75	6/16/2022 6:11	-0.05	6/16/2022 6:41	10.29	6/16/2022 5:28	0.45	6/16/2022 7:11	32.07
6/17/2022 6:54	81.77	6/16/2022 6:12	-0.05	6/16/2022 6:42	10.29	6/16/2022 5:29	0.39	6/16/2022 7:12	31.75
6/17/2022 6:55	81.75	6/16/2022 6:13	-0.01	6/16/2022 6:43	10.22	6/16/2022 5:30	0.36	6/16/2022 7:13	31.10
6/17/2022 6:56	81.77	6/16/2022 6:14	-0.02	6/16/2022 6:44	10.26	6/16/2022 5:31	0.39	6/16/2022 7:14	32.18
6/17/2022 6:57	81.76	6/16/2022 6:15	-0.04	6/16/2022 6:45	10.28	6/16/2022 5:32	0.44	6/16/2022 7:15	31.76
6/17/2022 6:58	81.74	6/16/2022 6:16	-0.02	6/16/2022 6:46	10.26	6/16/2022 5:33	0.41	6/16/2022 7:16	31.17
6/17/2022 6:59	81.75	6/16/2022 6:17	-0.08	6/16/2022 6:47	10.30	6/16/2022 5:34	0.40	6/16/2022 7:17	32.23
6/17/2022 7:00	81.76	6/16/2022 6:18	-0.01	6/16/2022 6:48	10.26	6/16/2022 5:35	0.39	6/16/2022 7:18	31.75
6/17/2022 7:01	81.77	6/16/2022 6:19	-0.03	6/16/2022 6:49	10.29	6/16/2022 5:36	0.40	6/16/2022 7:19	31.27
6/17/2022 7:02	81.77	6/16/2022 6:20	3.28	6/16/2022 6:50	10.33	6/16/2022 5:37	0.41	6/16/2022 7:20	32.33
6/17/2022 7:03	81.76	6/16/2022 6:21	7.19	6/16/2022 6:51	10.32	6/16/2022 5:38	0.42	6/16/2022 7:21	31.68
6/17/2022 7:04	81.75	6/16/2022 6:22	5.98	6/16/2022 6:52	10.34	6/16/2022 5:39	0.46	6/16/2022 7:22	31.35
6/17/2022 7:05	81.72	6/16/2022 6:23	5.06	6/16/2022 6:53	10.31	6/16/2022 5:40	0.46	6/16/2022 7:23	32.53
6/17/2022 7:06	81.74	6/16/2022 6:24	4.25	6/16/2022 6:54	10.33	6/16/2022 5:41	0.51	6/16/2022 7:24	30.66
6/17/2022 7:07	86.25	6/16/2022 6:25	3.53	6/16/2022 6:55	10.33	6/16/2022 5:42	0.48	6/16/2022 7:25	31.69
6/17/2022 7:08	88.91	6/16/2022 6:26	2.86	6/16/2022 6:56	10.31	6/16/2022 5:43	0.46	6/16/2022 7:26	31.74
6/17/2022 7:09	90.52	6/16/2022 6:27	2.45	6/16/2022 6:57	10.29	6/16/2022 5:44	0.47	6/16/2022 7:27	31.09
6/17/2022 7:10	89.40	6/16/2022 6:28	2.04	6/16/2022 6:58	10.27	6/16/2022 5:45	0.46	6/16/2022 7:28	32.39
6/17/2022 7:11	86.96	6/16/2022 6:29	1.68	6/16/2022 6:59	10.26	6/16/2022 5:46	0.41	6/16/2022 7:29	30.60
6/17/2022 7:12	85.46	6/16/2022 6:30	1.37	6/16/2022 7:00	10.29	6/16/2022 5:47	0.40	6/16/2022 7:30	31.66
6/17/2022 7:13	84.54	6/16/2022 6:31	1.10	6/16/2022 7:01	10.25	6/16/2022 5:48	0.40	6/16/2022 7:31	31.71
6/17/2022 7:14	83.87	6/16/2022 6:32	0.93	6/16/2022 7:02	10.24	6/16/2022 5:49	0.37	6/16/2022 7:32	31.06
6/17/2022 7:15	83.45	6/16/2022 6:33	0.72	6/16/2022 7:03	10.26	6/16/2022 5:50	0.42	6/16/2022 7:33	32.35
6/17/2022 7:16	83.18	6/16/2022 6:34	0.53	6/16/2022 7:04	10.24	6/16/2022 5:51	0.44	6/16/2022 7:34	30.59
6/17/2022 7:17	83.00	6/16/2022 6:35	0.38	6/16/2022 7:05	10.21	6/16/2022 5:52	0.47	6/16/2022 7:35	31.64
6/17/2022 7:18	82.88	6/16/2022 6:36	0.27	6/16/2022 7:06	10.23	6/16/2022 5:53	0.50	6/16/2022 7:36	31.65
6/17/2022 7:19	82.76	6/16/2022 6:37	0.16	6/16/2022 7:07	10.22	6/16/2022 5:54	0.50	6/16/2022 7:37	31.12
6/17/2022 7:20	82.66	6/16/2022 6:38	0.06	6/16/2022 7:08	10.22	6/16/2022 5:55	0.44	6/16/2022 7:38	32.45
6/17/2022 7:21	82.60	6/16/2022 6:39	-0.02	6/16/2022 7:09	10.21	6/16/2022 5:56	0.48	6/16/2022 7:39	30.65
6/17/2022 7:22	82.54	6/16/2022 6:40	5.16	6/16/2022 7:10	10.23	6/16/2022 5:57	0.42	6/16/2022 7:40	31.80
6/17/2022 7:23	82.51	6/16/2022 6:41	8.71	6/16/2022 7:11	10.20	6/16/2022 5:58	0.37	6/16/2022 7:41	31.61
6/17/2022 7:24	82.49	6/16/2022 6:42	7.24	6/16/2022 7:12	10.22	6/16/2022 5:59	0.34	6/16/2022 7:42	33.49
6/17/2022 7:25	82.39	6/16/2022 6:43	5.96	6/16/2022 7:13	10.19	6/16/2022 6:00	0.36	6/16/2022 7:43	35.00
6/17/2022 7:26	82.40	6/16/2022 6:44	5.00	6/16/2022 7:14	10.21	6/16/2022 6:01	0.39	6/16/2022 7:44	36.12
6/17/2022 7:27	82.33	6/16/2022 6:45	4.20	6/16/2022 7:15	10.18	6/16/2022 6:02	0.39	6/16/2022 7:45	36.70
6/17/2022 7:28	82.33	6/16/2022 6:46	3.49	6/16/2022 7:16	10.19	6/16/2022 6:03	0.49	6/16/2022 7:46	36.88
6/17/2022 7:29	82.27	6/16/2022 6:47	2.84	6/16/2022 7:17	10.21	6/16/2022 6:04	0.48	6/16/2022 7:47	37.09
6/17/2022 7:30	82.26	6/16/2022 6:48	2.41	6/16/2022 7:18	10.19	6/16/2022 6:05	0.46	6/16/2022 7:48	37.48
6/17/2022 7:31	82.25	6/16/2022 6:49	2.00	6/16/2022 7:19	10.23	6/16/2022 6:06	0.48	6/16/2022 7:49	37.79
6/17/2022 7:32	82.26	6/16/2022 6:50	1.66	6/16/2022 7:20	10.26	6/16/2022 6:07	0.44	6/16/2022 7:50	38.08

6/17/2022 7:33	82.22	6/16/2022 6:51	1.35	6/16/2022 7:21	10.24	6/16/2022 6:08	0.35	6/16/2022 7:51	38.29
6/17/2022 7:34	82.23	6/16/2022 6:52	1.12	6/16/2022 7:22	10.23	6/16/2022 6:09	0.34	6/16/2022 7:52	38.45
6/17/2022 7:35	82.20	6/16/2022 6:53	0.89	6/16/2022 7:23	10.28	6/16/2022 6:10	0.35	6/16/2022 7:53	38.62
6/17/2022 7:36	82.17	6/16/2022 6:54	0.73	6/16/2022 7:24	10.27	6/16/2022 6:11	0.37	6/16/2022 7:54	38.77
6/17/2022 7:37	82.16	6/16/2022 6:55	0.56	6/16/2022 7:25	10.25	6/16/2022 6:12	0.40	6/16/2022 7:55	38.91
6/17/2022 7:38	82.16	6/16/2022 6:56	0.39	6/16/2022 7:26	10.28	6/16/2022 6:13	0.39	6/16/2022 7:56	38.98
6/17/2022 7:39	82.14	6/16/2022 6:57	5.97	6/16/2022 7:27	10.26	6/16/2022 6:14	0.48	6/16/2022 7:57	38.89
6/17/2022 7:40	82.14	6/16/2022 6:58	7.46	6/16/2022 7:28	10.26	6/16/2022 6:15	0.43	6/16/2022 7:58	38.59
6/17/2022 7:41	82.13	6/16/2022 6:59	6.18	6/16/2022 7:29	10.28	6/16/2022 6:16	0.46	6/16/2022 7:59	38.35
6/17/2022 7:42	82.13	6/16/2022 7:00	5.15	6/16/2022 7:30	10.26	6/16/2022 6:17	0.45	6/16/2022 8:00	38.45
6/17/2022 7:43	82.12	6/16/2022 7:01	4.27	6/16/2022 7:31	10.22	6/16/2022 6:18	0.39	6/16/2022 8:01	38.62
6/17/2022 7:44	82.10	6/16/2022 7:02	3.57	6/16/2022 7:32	10.24	6/16/2022 6:19	0.38	6/16/2022 8:02	37.46
6/17/2022 7:45	82.08	6/16/2022 7:03	2.92	6/16/2022 7:33	10.25	6/16/2022 6:20	4.03	6/16/2022 8:03	36.57
6/17/2022 7:46	82.08	6/16/2022 7:04	2.48	6/16/2022 7:34	10.25	6/16/2022 6:21	7.27	6/16/2022 8:04	34.13
6/17/2022 7:47	82.08	6/16/2022 7:05	2.06	6/16/2022 7:35	10.18	6/16/2022 6:22	4.21	6/16/2022 8:05	33.54
6/17/2022 7:48	82.06	6/16/2022 7:06	1.70	6/16/2022 7:36	10.20	6/16/2022 6:23	1.90	6/16/2022 8:06	33.99
6/17/2022 7:49	82.08	6/16/2022 7:07	1.43	6/16/2022 7:37	10.22	6/16/2022 6:24	0.38	6/16/2022 8:07	32.00
6/17/2022 7:50	82.06	6/16/2022 7:08	1.18	6/16/2022 7:38	10.20	6/16/2022 6:25	0.41	6/16/2022 8:08	32.93
6/17/2022 7:51	82.04	6/16/2022 7:09	0.94	6/16/2022 7:39	10.21	6/16/2022 6:26	0.32	6/16/2022 8:09	31.96
6/17/2022 7:52	82.05	6/16/2022 7:10	0.79	6/16/2022 7:40	10.19	6/16/2022 6:27	0.32	6/16/2022 8:10	32.01
6/17/2022 7:53	82.04	6/16/2022 7:11	0.54	6/16/2022 7:41	10.22	6/16/2022 6:28	0.33	6/16/2022 8:11	32.94
6/17/2022 7:54	82.02	6/16/2022 7:12	0.44	6/16/2022 7:42	10.19	6/16/2022 6:29	0.35	6/16/2022 8:12	31.43
6/17/2022 7:55	82.03	6/16/2022 7:13	4.64	6/16/2022 7:43	10.18	6/16/2022 6:30	0.32	6/16/2022 8:13	32.61
6/17/2022 7:56	82.00	6/16/2022 7:14	8.10	6/16/2022 7:44	10.19	6/16/2022 6:31	0.33	6/16/2022 8:14	32.90
6/17/2022 7:57	82.03	6/16/2022 7:15	6.74	6/16/2022 7:45	10.22	6/16/2022 6:32	0.34	6/16/2022 8:15	32.04
6/17/2022 7:58	81.98	6/16/2022 7:16	5.55	6/16/2022 7:46	10.24	6/16/2022 6:33	0.40	6/16/2022 8:16	32.86
6/17/2022 7:59	82.04	6/16/2022 7:17	4.65	6/16/2022 7:47	10.23	6/16/2022 6:34	0.39	6/16/2022 8:17	32.08
6/17/2022 8:00	81.98	6/16/2022 7:18	3.87	6/16/2022 7:48	10.24	6/16/2022 6:35	0.42	6/16/2022 8:18	31.97
6/17/2022 8:01	81.99	6/16/2022 7:19	3.28	6/16/2022 7:49	10.29	6/16/2022 6:36	0.41	6/16/2022 8:19	33.03
6/17/2022 8:02	81.96	6/16/2022 7:20	2.64	6/16/2022 7:50	10.30	6/16/2022 6:37	0.38	6/16/2022 8:20	31.33
6/17/2022 8:03	82.00	6/16/2022 7:21	2.18	6/16/2022 7:51	10.30	6/16/2022 6:38	0.35	6/16/2022 8:21	32.46
6/17/2022 8:04	81.95	6/16/2022 7:22	1.84	6/16/2022 7:52	10.30	6/16/2022 6:39	0.32	6/16/2022 8:22	30.90
6/17/2022 8:05	81.99	6/16/2022 7:23	1.53	6/16/2022 7:53	10.28	6/16/2022 6:40	0.32	6/16/2022 8:23	30.08
6/17/2022 8:06	82.01	6/16/2022 7:24	1.23	6/16/2022 7:54	10.30	6/16/2022 6:41	0.30	6/16/2022 8:24	29.77
6/17/2022 8:07	81.97	6/16/2022 7:25	1.00	6/16/2022 7:55	10.27	6/16/2022 6:42	0.35	6/16/2022 8:25	29.60
6/17/2022 8:08	81.99	6/16/2022 7:26	0.85	6/16/2022 7:56	10.29	6/16/2022 6:43	0.34	6/16/2022 8:26	29.55
6/17/2022 8:09	81.98	6/16/2022 7:27	0.64	6/16/2022 7:57	10.28	6/16/2022 6:44	0.39	6/16/2022 8:27	29.48
6/17/2022 8:10	81.94	6/16/2022 7:28	0.52	6/16/2022 7:58	10.29	6/16/2022 6:45	0.39	6/16/2022 8:28	29.50
6/17/2022 8:11	81.93	6/16/2022 7:29	0.34	6/16/2022 7:59	10.25	6/16/2022 6:46	0.39	6/16/2022 8:29	29.45
6/17/2022 8:12	81.96	6/16/2022 7:30	0.20	6/16/2022 8:00	10.24	6/16/2022 6:47	0.34	6/16/2022 8:30	29.46
6/17/2022 8:13	81.94	6/16/2022 7:31	0.12	6/16/2022 8:01	10.25	6/16/2022 6:48	0.36	6/16/2022 8:31	29.42
6/17/2022 8:14	81.94	6/16/2022 7:32	0.04	6/16/2022 8:02	10.22	6/16/2022 6:49	0.37	6/16/2022 8:32	29.35
6/17/2022 8:15	81.95	6/16/2022 7:33	-0.02	6/16/2022 8:03	10.23	6/16/2022 6:50	0.33	6/16/2022 8:33	29.35
6/17/2022 8:16	81.90	6/16/2022 7:34	-0.05	6/16/2022 8:04	10.26	6/16/2022 6:51	0.31	6/16/2022 8:34	29.35
6/17/2022 8:17	81.94	6/16/2022 7:35	-0.02	6/16/2022 8:05	10.22	6/16/2022 6:52	0.31	6/16/2022 8:35	29.33
6/17/2022 8:18	81.93	6/16/2022 7:36	-0.06	6/16/2022 8:06	10.23	6/16/2022 6:53	0.29	6/16/2022 8:36	29.30
6/17/2022 8:19	81.94	6/16/2022 7:37	0.00	6/16/2022 8:07	10.20	6/16/2022 6:54	0.31	6/16/2022 8:37	29.28
6/17/2022 8:20	81.91	6/16/2022 7:38	-0.05	6/16/2022 8:08	10.20	6/16/2022 6:55	0.31	6/16/2022 8:38	29.26
6/17/2022 8:21	81.93	6/16/2022 7:39	-0.06	6/16/2022 8:09	10.19	6/16/2022 6:56	0.28	6/16/2022 8:39	29.23
6/17/2022 8:22	81.90	6/16/2022 7:40	-0.04	6/16/2022 8:10	10.21	6/16/2022 6:57	0.31	6/16/2022 8:40	29.23
6/17/2022 8:23	81.92	6/16/2022 7:41	-0.06	6/16/2022 8:11	10.18	6/16/2022 6:58	0.34	6/16/2022 8:41	29.24
6/17/2022 8:24	81.89	6/16/2022 7:42	-0.03	6/16/2022 8:12	10.18	6/16/2022 6:59	0.33	6/16/2022 8:42	29.22
6/17/2022 8:25	81.90	6/16/2022 7:43	-0.02	6/16/2022 8:13	10.21	6/16/2022 7:00	0.32	6/16/2022 8:43	29.23
6/17/2022 8:26	81.90	6/16/2022 7:44	-0.03	6/16/2022 8:14	10.21	6/16/2022 7:01	0.30	6/16/2022 8:44	29.21
6/17/2022 8:27	81.88	6/16/2022 7:45	-0.08	6/16/2022 8:15	10.26	6/16/2022 7:02	0.33	6/16/2022 8:45	29.21
6/17/2022 8:28	81.91	6/16/2022 7:46	3.45	6/16/2022 8:16	10.26	6/16/2022 7:03	0.33	6/16/2022 8:46	29.16
6/17/2022 8:29	81.88	6/16/2022 7:47	7.09	6/16/2022 8:17	10.24	6/16/2022 7:04	0.33	6/16/2022 8:47	29.18
6/17/2022 8:30	81.87	6/16/2022 7:48	5.82	6/16/2022 8:18	10.28	6/16/2022 7:05	0.29	6/16/2022 8:48	29.14
6/17/2022 8:31	81.87	6/16/2022 7:49	4.83	6/16/2022 8:19	10.29	6/16/2022 7:06	0.31	6/16/2022 8:49	29.15
6/17/2022 8:32	81.89	6/16/2022 7:50	4.05	6/16/2022 8:20	10.28	6/16/2022 7:07	0.32	6/16/2022 8:50	29.12
6/17/2022 8:33	81.89	6/16/2022 7:51	3.33	6/16/2022 8:21	10.29	6/16/2022 7:08	0.37	6/16/2022 8:51	29.13
6/17/2022 8:34	81.88	6/16/2022 7:52	2.72	6/16/2022 8:22	10.29	6/16/2022 7:09	0.34	6/16/2022 8:52	29.09
6/17/2022 8:35	81.92	6/16/2022 7:53	2.26	6/16/2022 8:23	10.29	6/16/2022 7:10	0.40	6/16/2022 8:53	29.08
6/17/2022 8:36	81.88	6/16/2022 7:54	1.92	6/16/2022 8:24	10.27	6/16/2022 7:11	0.44	6/16/2022 8:54	29.09
6/17/2022 8:37	81.87	6/16/2022 7:55	1.58	6/16/2022 8:25	10.28	6/16/2022 7:12	0.46	6/16/2022 8:55	29.09
6/17/2022 8:38	81.86	6/16/2022 7:56	1.27	6/16/2022 8:26	10.28	6/16/2022 7:13	0.40	6/16/2022 8:56	29.10
6/17/2022 8:39	81.89	6/16/2022 7:57	1.07	6/16/2022 8:27	10.29	6/16/2022 7:14	0.42	6/16/2022 8:57	29.12
6/17/2022 8:40	81.88	6/16/2022 7:58	0.85	6/16/2022 8:28	10.26	6/16/2022 7:15	0.43	6/16/2022 8:58	29.07
6/17/2022 8:41	81.86	6/16/2022 7:59	0.61	6/16/2022 8:29	10.28	6/16/2022 7:16	0.40	6/16/2022 8:59	29.06
6/17/2022 8:42	81.83	6/16/2022 8:00	0.47	6/16/2022 8:30	10.23	6/16/2022 7:17	0.33	6/16/2022 9:00	29.05
6/17/2022 8:43	81.85	6/16/2022 8:01	0.30	6/16/2022 8:31	10.23	6/16/2022 7:18	0.30	6/16/2022 9:01	29.03
6/17/2022 8:44	81.84	6/16/2022 8:02	0.22	6/16/2022 8:32	10.25	6/16/2022 7:19	0.32	6/16/2022 9:02	29.03
6/17/2022 8:45	81.86	6/16/2022 8:03	0.10	6/16/2022 8:33	10.27	6/16/2022 7:20	0.34	6/16/2022 9:03	29.01
6/17/2022 8:46	81.83	6/16/2022 8:04	0.00	6/16/2022 8:34	10.20	6/16/2022 7:21	0.33	6/16/2022 9:04	29.05
6/17/2022 8:47	81.84	6/16/2022 8:05	0.01	6/16/2022 8:35	10.23	6/16/2022 7:22	0.34	6/16/2022 9:05	29.02
6/17/2022 8:48	81.80	6/16/2022 8:06	-0.03	6/16/2022 8:36	10.21	6/16/2022 7:23	0.35	6/16/2022 9:06	29.04
6/17/2022 8:49	81.82	6/16/2022 8:07	-0.08	6/16/2022 8:37	10.24	6/16/2022 7:24	0.40	6/16/2022 9:07	29.03
6/17/2022 8:50	81.81	6/16/2022 8:08	-0.01	6/16/2022 8:38	10.25	6/16/2022 7:25	0.42	6/16/2022 9:08	29.01
6/17/2022 8:51	81.85	6/16/2022 8:09	-0.04	6/16/2022 8:39	10.24	6/16/2022 7:26	0.47	6/16/2022 9:09	29.03
6/17/2022 8:52	81.82	6/16/2022 8:10	-0.01	6/16/2022 8:40	10.26	6/16/2022 7:27	0.43	6/16/2022 9:10	29.00
6/17/2022 8:53	81.82	6/16/2022 8:11	-0.04	6/16/2022 8:41	10.28	6/16/2022 7:28	0.44	6/16/2022 9:11	29.00
6/17/2022 8:54	81.83	6/16/2022 8:12	-0.04	6/16/2022 8:42	10.27	6/16/2022 7:29	0.44	6/16/2022 9:12	28.99
6/17/2022 8:55	81.83	6/16/2022 8:13	-0.05	6/16/2022 8:43	10.28	6/16/2022 7:30	0.44	6/16/2022 9:13	30.69
6/17/2022 8:56	81.80	6/16/2022 8:14	-0.05	6/16/2022 8:44	10.29	6/16/2022 7:31	0.41	6/16/2022 9:14	30.38
6/17/2022 8:57	81.84	6/16/2022 8:15	-0.03	6/16/2022 8:45	10.29	6/16/2022 7:32	0.37	6/16/2022 9:15	29.49
6/17/2022 8:58	81.81	6/16/2022 8:16	-0.06	6/16/2022 8:46	10.29	6/16/2022 7:33	0.31	6/16/2022 9:16	29.19
6/17/2022 8:59	81.81	6/16/2022 8:17	0.00	6/16/2022 8:47	10.25	6/16/2022 7:34	0.35	6/16/2022 9:17	29.13
6/17/2022 9:00	81.79	6/16/2022 8:18	-0.03	6/16/2022 8:48	10.28	6/16/2022 7:35	0.36	6/16/2022 9:18	29.10

6/17/2022 9:01	81.77	6/16/2022 8:19	-0.03	6/16/2022 8:49	10.27	6/16/2022 7:36	0.38	6/16/2022 9:19	29.07
6/17/2022 9:02	81.81	6/16/2022 8:20	-0.05	6/16/2022 8:50	10.24	6/16/2022 7:37	0.39	6/16/2022 9:20	29.07
6/17/2022 9:03	81.82	6/16/2022 8:21	-0.05	6/16/2022 8:51	10.27	6/16/2022 7:38	0.44	6/16/2022 9:21	29.06
6/17/2022 9:04	81.79	6/16/2022 8:22	-0.06	6/16/2022 8:52	10.27	6/16/2022 7:39	0.46	6/16/2022 9:22	29.02
6/17/2022 9:05	81.80	6/16/2022 8:23	-0.03	6/16/2022 8:53	10.24	6/16/2022 7:40	0.49	6/16/2022 9:23	29.02
6/17/2022 9:06	81.81	6/16/2022 8:24	-0.06	6/16/2022 8:54	10.24	6/16/2022 7:41	0.42	6/16/2022 9:24	29.02
6/17/2022 9:07	81.79	6/16/2022 8:25	-0.04	6/16/2022 8:55	10.21	6/16/2022 7:42	0.42	6/16/2022 9:25	28.99
6/17/2022 9:08	81.82	6/16/2022 8:26	-0.07	6/16/2022 8:56	10.21	6/16/2022 7:43	0.37	6/16/2022 9:26	29.01
6/17/2022 9:09	81.79	6/16/2022 8:27	-0.03	6/16/2022 8:57	10.24	6/16/2022 7:44	0.36	6/16/2022 9:27	28.98
6/17/2022 9:10	81.78	6/16/2022 8:28	-0.03	6/16/2022 8:58	10.22	6/16/2022 7:45	0.38	6/16/2022 9:28	28.96
6/17/2022 9:11	81.79	6/16/2022 8:29	-0.03	6/16/2022 8:59	10.21	6/16/2022 7:46	0.43	6/16/2022 9:29	28.99
6/17/2022 9:12	81.80	6/16/2022 8:30	-0.04	6/16/2022 9:00	10.20	6/16/2022 7:47	0.39	6/16/2022 9:30	28.98
6/17/2022 9:13	81.77	6/16/2022 8:31	-0.03	6/16/2022 9:01	10.19	6/16/2022 7:48	0.40	6/16/2022 9:31	28.96
6/17/2022 9:14	81.78	6/16/2022 8:32	-0.03	6/16/2022 9:02	10.16	6/16/2022 7:49	0.39	6/16/2022 9:32	28.96
6/17/2022 9:15	81.79	6/16/2022 8:33	1.31	6/16/2022 9:03	10.17	6/16/2022 7:50	0.40	6/16/2022 9:33	28.97
6/17/2022 9:16	81.79	6/16/2022 8:34	7.00	6/16/2022 9:04	10.19	6/16/2022 7:51	0.39	6/16/2022 9:34	28.99
6/17/2022 9:17	81.77	6/16/2022 8:35	8.61	6/16/2022 9:05	10.17	6/16/2022 7:52	0.41	6/16/2022 9:35	28.96
6/17/2022 9:18	81.78	6/16/2022 8:36	7.19	6/16/2022 9:06	10.17	6/16/2022 7:53	0.38	6/16/2022 9:36	28.93
6/17/2022 9:19	81.77	6/16/2022 8:37	5.93	6/16/2022 9:07	10.16	6/16/2022 7:54	0.44	6/16/2022 9:37	28.95
6/17/2022 9:20	81.73	6/16/2022 8:38	4.93	6/16/2022 9:08	10.14	6/16/2022 7:55	0.47	6/16/2022 9:38	28.95
6/17/2022 9:21	81.75	6/16/2022 8:39	4.11	6/16/2022 9:09	10.17	6/16/2022 7:56	0.49	6/16/2022 9:39	28.91
6/17/2022 9:22	81.79	6/16/2022 8:40	3.42	6/16/2022 9:10	10.19	6/16/2022 7:57	0.47	6/16/2022 9:40	28.91
6/17/2022 9:23	81.76	6/16/2022 8:41	4.86	6/16/2022 9:11	10.21	6/16/2022 7:58	0.48	6/16/2022 9:41	28.94
6/17/2022 9:24	81.73	6/16/2022 8:42	9.88	6/16/2022 9:12	10.23	6/16/2022 7:59	0.50	6/16/2022 9:42	28.94
6/17/2022 9:25	81.76	6/16/2022 8:43	8.78	6/16/2022 9:13	10.21	6/16/2022 8:00	0.44	6/16/2022 9:43	28.90
6/17/2022 9:26	81.75	6/16/2022 8:44	7.31	6/16/2022 9:14	10.26	6/16/2022 8:01	0.42	6/16/2022 9:44	28.93
6/17/2022 9:27	81.79	6/16/2022 8:45	6.06	6/16/2022 9:15	10.23	6/16/2022 8:02	0.43	6/16/2022 9:45	28.91
6/17/2022 9:28	81.74	6/16/2022 8:46	5.12	6/16/2022 9:16	10.23	6/16/2022 8:03	0.37	6/16/2022 9:46	28.92
6/17/2022 9:29	81.74	6/16/2022 8:47	4.29	6/16/2022 9:17	10.24	6/16/2022 8:04	0.36	6/16/2022 9:47	28.89
6/17/2022 9:30	81.73	6/16/2022 8:48	3.62	6/16/2022 9:18	10.25	6/16/2022 8:05	0.34	6/16/2022 9:48	28.91
6/17/2022 9:31	81.75	6/16/2022 8:49	2.93	6/16/2022 9:19	10.26	6/16/2022 8:06	0.40	6/16/2022 9:49	28.90
6/17/2022 9:32	81.74	6/16/2022 8:50	2.49	6/16/2022 9:20	10.25	6/16/2022 8:07	0.37	6/16/2022 9:50	28.90
6/17/2022 9:33	81.73	6/16/2022 8:51	2.09	6/16/2022 9:21	10.21	6/16/2022 8:08	0.43	6/16/2022 9:51	28.88
6/17/2022 9:34	81.76	6/16/2022 8:52	1.70	6/16/2022 9:22	10.21	6/16/2022 8:09	0.49	6/16/2022 9:52	28.90
6/17/2022 9:35	81.74	6/16/2022 8:53	1.42	6/16/2022 9:23	10.20	6/16/2022 8:10	0.48	6/16/2022 9:53	28.87
6/17/2022 9:36	81.72	6/16/2022 8:54	1.15	6/16/2022 9:24	10.22	6/16/2022 8:11	0.49	6/16/2022 9:54	28.88
6/17/2022 9:37	81.73	6/16/2022 8:55	0.93	6/16/2022 9:25	10.23	6/16/2022 8:12	0.47	6/16/2022 9:55	28.86
6/17/2022 9:38	81.74	6/16/2022 8:56	0.76	6/16/2022 9:26	10.19	6/16/2022 8:13	0.46	6/16/2022 9:56	28.89
6/17/2022 9:39	81.73	6/16/2022 8:57	0.53	6/16/2022 9:27	10.20	6/16/2022 8:14	0.40	6/16/2022 9:57	28.88
6/17/2022 9:40	81.74	6/16/2022 8:58	0.43	6/16/2022 9:28	10.16	6/16/2022 8:15	0.40	6/16/2022 9:58	31.21
6/17/2022 9:41	81.72	6/16/2022 8:59	0.30	6/16/2022 9:29	10.19	6/16/2022 8:16	0.35	6/16/2022 9:59	29.88
6/17/2022 9:42	81.76	6/16/2022 9:00	0.18	6/16/2022 9:30	10.16	6/16/2022 8:17	0.36	6/16/2022 10:00	29.25
6/17/2022 9:43	81.71	6/16/2022 9:01	0.07	6/16/2022 9:31	10.18	6/16/2022 8:18	0.40	6/16/2022 10:01	29.00
6/17/2022 9:44	81.70	6/16/2022 9:02	0.02	6/16/2022 9:32	10.16	6/16/2022 8:19	0.39	6/16/2022 10:02	28.94
6/17/2022 9:45	81.75	6/16/2022 9:03	-0.06	6/16/2022 9:33	10.18	6/16/2022 8:20	0.44	6/16/2022 10:03	28.89
6/17/2022 9:46	81.72	6/16/2022 9:04	-0.02	6/16/2022 9:34	10.14	6/16/2022 8:21	0.43	6/16/2022 10:04	28.90
6/17/2022 9:47	81.71	6/16/2022 9:05	-0.05	6/16/2022 9:35	10.15	6/16/2022 8:22	0.43	6/16/2022 10:05	28.89
6/17/2022 9:48	81.69	6/16/2022 9:06	-0.07	6/16/2022 9:36	10.12	6/16/2022 8:23	0.43	6/16/2022 10:06	28.91
6/17/2022 9:49	81.71	6/16/2022 9:07	-0.05	6/16/2022 9:37	10.12	6/16/2022 8:24	0.40	6/16/2022 10:07	28.88
6/17/2022 9:50	81.74	6/16/2022 9:08	-0.08	6/16/2022 9:38	10.13	6/16/2022 8:25	0.38	6/16/2022 10:08	28.85
6/17/2022 9:51	81.73	6/16/2022 9:09	-0.01	6/16/2022 9:39	10.14	6/16/2022 8:26	0.37	6/16/2022 10:09	28.89
6/17/2022 9:52	81.70	6/16/2022 9:10	-0.05	6/16/2022 9:40	10.13	6/16/2022 8:27	0.35	6/16/2022 10:10	28.89
6/17/2022 9:53	81.69	6/16/2022 9:11	0.01	6/16/2022 9:41	10.17	6/16/2022 8:28	0.36	6/16/2022 10:11	28.86
6/17/2022 9:54	81.70	6/16/2022 9:12	0.05	6/16/2022 9:42	10.17	6/16/2022 8:29	0.38	6/16/2022 10:12	28.87
6/17/2022 9:55	81.70	6/16/2022 9:13	0.01	6/16/2022 9:43	10.15	6/16/2022 8:30	0.46	6/16/2022 10:13	28.87
6/17/2022 9:56	81.72	6/16/2022 9:14	-0.04	6/16/2022 9:44	10.19	6/16/2022 8:31	0.43	6/16/2022 10:14	28.82
6/17/2022 9:57	81.68	6/16/2022 9:15	-0.05	6/16/2022 9:45	10.22	6/16/2022 8:32	0.49	6/16/2022 10:15	28.87
6/17/2022 9:58	81.72	6/16/2022 9:16	-0.05	6/16/2022 9:46	10.18	6/16/2022 8:33	0.49	6/16/2022 10:16	28.87
6/17/2022 9:59	81.68	6/16/2022 9:17	-0.05	6/16/2022 9:47	10.24	6/16/2022 8:34	0.49	6/16/2022 10:17	28.85
6/17/2022 10:00	81.72	6/16/2022 9:18	4.03	6/16/2022 9:48	10.19	6/16/2022 8:35	0.45	6/16/2022 10:18	28.85
6/17/2022 10:02	83.35	6/16/2022 9:19	6.84	6/16/2022 9:49	10.17	6/16/2022 8:36	0.47	6/16/2022 10:19	28.82
6/17/2022 10:03	83.33	6/16/2022 9:20	5.66	6/16/2022 9:50	10.19	6/16/2022 8:37	0.49	6/16/2022 10:20	28.84
6/17/2022 10:04	83.35	6/16/2022 9:21	4.70	6/16/2022 9:51	10.20	6/16/2022 8:38	0.46	6/16/2022 10:21	28.83
6/17/2022 10:05	83.34	6/16/2022 9:22	3.94	6/16/2022 9:52	10.20	6/16/2022 8:39	0.46	6/16/2022 10:22	28.84
6/17/2022 10:06	83.30	6/16/2022 9:23	3.27	6/16/2022 9:53	10.20	6/16/2022 8:40	0.41	6/16/2022 10:23	28.81
6/17/2022 10:07	83.31	6/16/2022 9:24	2.66	6/16/2022 9:54	10.17	6/16/2022 8:41	0.45	6/16/2022 10:24	28.85
6/17/2022 10:08	83.37	6/16/2022 9:25	2.25	6/16/2022 9:55	10.19	6/16/2022 8:42	0.40	6/16/2022 10:25	28.83
6/17/2022 10:09	83.31	6/16/2022 9:26	1.84	6/16/2022 9:56	10.17	6/16/2022 8:43	0.40	6/16/2022 10:26	28.85
6/17/2022 10:10	83.35	6/16/2022 9:27	1.51	6/16/2022 9:57	10.16	6/16/2022 8:44	0.37	6/16/2022 10:27	28.83
6/17/2022 10:11	87.03	6/16/2022 9:28	1.25	6/16/2022 9:58	10.16	6/16/2022 8:45	0.35	6/16/2022 10:28	28.82
6/17/2022 10:12	90.06	6/16/2022 9:29	1.01	6/16/2022 9:59	10.18	6/16/2022 8:46	0.36	6/16/2022 10:29	28.82
6/17/2022 10:13	91.91	6/16/2022 9:30	0.79	6/16/2022 10:00	10.16	6/16/2022 8:47	0.39	6/16/2022 10:30	28.83
6/17/2022 10:14	92.91	6/16/2022 9:31	0.59	6/16/2022 10:01	10.14	6/16/2022 8:48	0.41	6/16/2022 10:31	28.78
6/17/2022 10:15	90.56	6/16/2022 9:32	0.44	6/16/2022 10:02	10.17	6/16/2022 8:49	0.41	6/16/2022 10:32	28.86
6/17/2022 10:16	88.37	6/16/2022 9:33	0.33	6/16/2022 10:03	10.15	6/16/2022 8:50	0.43	6/16/2022 10:33	28.84
6/17/2022 10:17	87.00	6/16/2022 9:34	0.21	6/16/2022 10:04	10.18	6/16/2022 8:51	0.38	6/16/2022 10:34	28.78
6/17/2022 10:18	86.12	6/16/2022 9:35	0.10	6/16/2022 10:05	10.18	6/16/2022 8:52	0.39	6/16/2022 10:35	28.83
6/17/2022 10:19	85.59	6/16/2022 9:36	-0.01	6/16/2022 10:06	10.14	6/16/2022 8:53	0.39	6/16/2022 10:36	28.83
6/17/2022 10:20	85.16	6/16/2022 9:37	-0.02	6/16/2022 10:07	10.21	6/16/2022 8:54	0.38	6/16/2022 10:37	28.83
6/17/2022 10:21	84.90	6/16/2022 9:38	-0.04	6/16/2022 10:08	10.21	6/16/2022 8:55	0.41	6/16/2022 10:38	30.21
6/17/2022 10:22	84.69	6/16/2022 9:39	0.01	6/16/2022 10:09	10.20	6/16/2022 8:56	0.35	6/16/2022 10:39	30.10
6/17/2022 10:23	84.58	6/16/2022 9:40	-0.05	6/16/2022 10:10	10.19	6/16/2022 8:57	0.39	6/16/2022 10:40	29.33
6/17/2022 10:24	84.48	6/16/2022 9:41	-0.07	6/16/2022 10:11	10.19	6/16/2022 8:58	0.39	6/16/2022 10:41	29.00
6/17/2022 10:25	84.37	6/16/2022 9:42	-0.04	6/16/2022 10:12	10.19	6/16/2022 8:59	0.39	6/16/2022 10:42	28.88
6/17/2022 10:26	84.32	6/16/2022 9:43	-0.03	6/16/2022 10:13	10.18	6/16/2022 9:00	0.44	6/16/2022 10:43	28.94
6/17/2022 10:27	84.21	6/16/2022 9:44	-0.05	6/16/2022 10:14	10.21	6/16/2022 9:01	0.44	6/16/2022 10:44	28.95
6/17/2022 10:28	84.17	6/16/2022 9:45	-0.02	6/16/2022 10:15	10.18	6/16/2022 9:02	0.46	6/16/2022 10:45	28.93
6/17/2022 10:29	84.11	6/16/2022 9:46	-0.02	6/16/2022 10:16	10.21	6/16/2022 9:03	0.49	6/16/2022 10:46	28.96

6/17/2022 10:30	84.07	6/16/2022 9:47	-0.06	6/16/2022 10:17	10.16	6/16/2022 9:04	0.50	6/16/2022 10:47	28.98
6/17/2022 10:31	84.05	6/16/2022 9:48	0.01	6/16/2022 10:18	10.21	6/16/2022 9:05	0.43	6/16/2022 10:48	29.05
6/17/2022 10:32	84.03	6/16/2022 9:49	-0.06	6/16/2022 10:19	10.18	6/16/2022 9:06	0.42	6/16/2022 10:49	29.08
6/17/2022 10:33	84.01	6/16/2022 9:50	-0.04	6/16/2022 10:20	10.18	6/16/2022 9:07	0.39	6/16/2022 10:50	29.14
6/17/2022 10:34	83.95	6/16/2022 9:51	-0.06	6/16/2022 10:21	10.18	6/16/2022 9:08	0.39	6/16/2022 10:51	29.16
6/17/2022 10:35	83.92	6/16/2022 9:52	-0.05	6/16/2022 10:22	10.14	6/16/2022 9:09	0.40	6/16/2022 10:52	29.19
6/17/2022 10:36	83.96	6/16/2022 9:53	-0.05	6/16/2022 10:23	10.11	6/16/2022 9:10	5.36	6/16/2022 10:53	29.21
6/17/2022 10:37	83.90	6/16/2022 9:54	-0.05	6/16/2022 10:24	10.08	6/16/2022 9:11	7.42	6/16/2022 10:54	29.26
6/17/2022 10:38	83.92	6/16/2022 9:55	-0.04	6/16/2022 10:25	10.16	6/16/2022 9:12	4.30	6/16/2022 10:55	29.26
6/17/2022 10:39	83.89	6/16/2022 9:56	-0.02	6/16/2022 10:26	10.12	6/16/2022 9:13	1.99	6/16/2022 10:56	29.31
6/17/2022 10:40	83.88	6/16/2022 9:57	-0.04	6/16/2022 10:27	10.12	6/16/2022 9:14	0.44	6/16/2022 10:57	29.28
6/17/2022 10:41	83.86	6/16/2022 9:58	-0.07	6/16/2022 10:28	10.13	6/16/2022 9:15	0.43	6/16/2022 10:58	29.31
6/17/2022 10:42	83.84	6/16/2022 9:59	-0.05	6/16/2022 10:29	10.11	6/16/2022 9:16	0.45	6/16/2022 10:59	29.35
6/17/2022 10:43	83.85	6/16/2022 10:00	-0.07	6/16/2022 10:30	10.14	6/16/2022 9:17	0.42	6/16/2022 11:00	29.33
6/17/2022 10:44	83.84	6/16/2022 10:01	-0.05	6/16/2022 10:31	10.15	6/16/2022 9:18	0.42	6/16/2022 11:01	29.39
6/17/2022 10:45	83.81	6/16/2022 10:02	-0.04	6/16/2022 10:32	10.10	6/16/2022 9:19	0.45	6/16/2022 11:02	29.41
6/17/2022 10:46	83.79	6/16/2022 10:03	-0.08	6/16/2022 10:33	10.11	6/16/2022 9:20	0.44	6/16/2022 11:03	29.42
6/17/2022 10:47	83.78	6/16/2022 10:04	-0.04	6/16/2022 10:34	10.12	6/16/2022 9:21	0.44	6/16/2022 11:04	29.43
6/17/2022 10:48	83.76	6/16/2022 10:05	-0.06	6/16/2022 10:35	10.10	6/16/2022 9:22	0.48	6/16/2022 11:05	29.44
6/17/2022 10:49	83.73	6/16/2022 10:06	-0.07	6/16/2022 10:36	10.12	6/16/2022 9:23	0.48	6/16/2022 11:06	29.50
6/17/2022 10:50	83.74	6/16/2022 10:07	-0.05	6/16/2022 10:37	10.15	6/16/2022 9:24	0.54	6/16/2022 11:07	29.46
6/17/2022 10:51	83.73	6/16/2022 10:08	-0.04	6/16/2022 10:38	10.14	6/16/2022 9:25	0.46	6/16/2022 11:08	29.47
6/17/2022 10:52	83.75	6/16/2022 10:09	2.31	6/16/2022 10:39	10.17	6/16/2022 9:26	0.47	6/16/2022 11:09	29.55
6/17/2022 10:53	83.72	6/16/2022 10:10	7.34	6/16/2022 10:40	10.16	6/16/2022 9:27	0.46	6/16/2022 11:10	29.53
6/17/2022 10:54	83.71	6/16/2022 10:11	6.02	6/16/2022 10:41	10.15	6/16/2022 9:28	0.43	6/16/2022 11:11	29.56
6/17/2022 10:55	83.70	6/16/2022 10:12	4.99	6/16/2022 10:42	10.18	6/16/2022 9:29	0.41	6/16/2022 11:12	29.54
6/17/2022 10:56	83.72	6/16/2022 10:13	4.16	6/16/2022 10:43	10.20	6/16/2022 9:30	0.41	6/16/2022 11:13	29.56
6/17/2022 10:57	83.72	6/16/2022 10:14	3.46	6/16/2022 10:44	10.20	6/16/2022 9:31	0.38	6/16/2022 11:14	29.59
6/17/2022 10:58	83.69	6/16/2022 10:15	2.85	6/16/2022 10:45	10.19	6/16/2022 9:32	0.40	6/16/2022 11:15	29.59
6/17/2022 10:59	83.68	6/16/2022 10:16	2.40	6/16/2022 10:46	10.18	6/16/2022 9:33	0.42	6/16/2022 11:16	29.63
6/17/2022 11:00	83.69	6/16/2022 10:17	2.00	6/16/2022 10:47	10.17	6/16/2022 9:34	0.41	6/16/2022 11:17	29.63
6/17/2022 11:01	83.68	6/16/2022 10:18	1.63	6/16/2022 10:48	10.22	6/16/2022 9:35	0.48	6/16/2022 11:18	29.62
6/17/2022 11:02	83.69	6/16/2022 10:19	1.33	6/16/2022 10:49	10.18	6/16/2022 9:36	0.47	6/16/2022 11:19	29.64
6/17/2022 11:03	83.70	6/16/2022 10:20	1.13	6/16/2022 10:50	10.18	6/16/2022 9:37	0.52	6/16/2022 11:20	29.63
6/17/2022 11:04	83.66	6/16/2022 10:21	0.89	6/16/2022 10:51	10.19	6/16/2022 9:38	0.51	6/16/2022 11:21	29.68
6/17/2022 11:05	83.71	6/16/2022 10:22	0.74	6/16/2022 10:52	10.14	6/16/2022 9:39	0.50	6/16/2022 11:22	29.65
6/17/2022 11:06	83.70	6/16/2022 10:23	0.56	6/16/2022 10:53	10.17	6/16/2022 9:40	0.47	6/16/2022 11:23	29.68
6/17/2022 11:07	83.65	6/16/2022 10:24	0.42	6/16/2022 10:54	10.18	6/16/2022 9:41	0.45	6/16/2022 11:24	29.70
6/17/2022 11:08	83.65	6/16/2022 10:25	0.29	6/16/2022 10:55	10.16	6/16/2022 9:42	0.46	6/16/2022 11:25	29.67
6/17/2022 11:09	83.64	6/16/2022 10:26	0.17	6/16/2022 10:56	10.14	6/16/2022 9:43	0.42	6/16/2022 11:26	29.74
6/17/2022 11:10	83.66	6/16/2022 10:27	0.05	6/16/2022 10:57	10.15	6/16/2022 9:44	0.45	6/16/2022 11:27	29.80
6/17/2022 11:11	83.64	6/16/2022 10:28	-0.01	6/16/2022 10:58	10.09	6/16/2022 9:45	0.44	6/16/2022 11:28	29.82
6/17/2022 11:12	83.62	6/16/2022 10:29	-0.05	6/16/2022 10:59	10.16	6/16/2022 9:46	0.51	6/16/2022 11:29	29.88
6/17/2022 11:13	83.60	6/16/2022 10:30	-0.02	6/16/2022 11:00	10.14	6/16/2022 9:47	0.54	6/16/2022 11:30	29.88
6/17/2022 11:14	83.60	6/16/2022 10:31	-0.03	6/16/2022 11:01	10.11	6/16/2022 9:48	0.52	6/16/2022 11:31	29.98
6/17/2022 11:15	83.61	6/16/2022 10:32	-0.04	6/16/2022 11:02	10.09	6/16/2022 9:49	0.48	6/16/2022 11:32	30.01
6/17/2022 11:16	83.62	6/16/2022 10:33	-0.01	6/16/2022 11:03	10.12	6/16/2022 9:50	0.49	6/16/2022 11:33	31.99
6/17/2022 11:17	83.63	6/16/2022 10:34	-0.03	6/16/2022 11:04	10.08	6/16/2022 9:51	0.45	6/16/2022 11:34	31.18
6/17/2022 11:18	83.62	6/16/2022 10:35	-0.05	6/16/2022 11:05	10.55	6/16/2022 9:52	0.43	6/16/2022 11:35	30.45
6/17/2022 11:19	83.61	6/16/2022 10:36	-0.04	6/16/2022 11:06	14.69	6/16/2022 9:53	0.44	6/16/2022 11:36	30.16
6/17/2022 11:20	83.56	6/16/2022 10:37	-0.05	6/16/2022 11:07	14.04	6/16/2022 9:54	0.39	6/16/2022 11:37	30.06
6/17/2022 11:21	83.61	6/16/2022 10:38	-0.05	6/16/2022 11:08	13.59	6/16/2022 9:55	0.43	6/16/2022 11:38	30.03
6/17/2022 11:22	83.58	6/16/2022 10:39	-0.04	6/16/2022 11:09	13.18	6/16/2022 9:56	0.42	6/16/2022 11:39	29.96
6/17/2022 11:23	83.56	6/16/2022 10:40	-0.05	6/16/2022 11:10	12.82	6/16/2022 9:57	0.48	6/16/2022 11:40	30.03
6/17/2022 11:24	83.61	6/16/2022 10:41	-0.04	6/16/2022 11:11	12.56	6/16/2022 9:58	0.48	6/16/2022 11:41	30.00
6/17/2022 11:25	83.58	6/16/2022 10:42	-0.03	6/16/2022 11:12	12.26	6/16/2022 9:59	0.42	6/16/2022 11:42	30.03
6/17/2022 11:26	83.55	6/16/2022 10:43	-0.05	6/16/2022 11:13	12.09	6/16/2022 10:00	0.46	6/16/2022 11:43	30.01
6/17/2022 11:27	83.57	6/16/2022 10:44	-0.05	6/16/2022 11:14	11.84	6/16/2022 10:01	0.49	6/16/2022 11:44	29.99
6/17/2022 11:28	83.56	6/16/2022 10:45	-0.06	6/16/2022 11:15	11.73	6/16/2022 10:02	0.52	6/16/2022 11:45	30.03
6/17/2022 11:29	83.56	6/16/2022 10:46	-0.03	6/16/2022 11:16	11.58	6/16/2022 10:03	0.56	6/16/2022 11:46	29.99
6/17/2022 11:30	83.57	6/16/2022 10:47	-0.07	6/16/2022 11:17	11.45	6/16/2022 10:04	0.53	6/16/2022 11:47	30.04
6/17/2022 11:31	83.56	6/16/2022 10:48	-0.07	6/16/2022 11:18	11.28	6/16/2022 10:05	0.51	6/16/2022 11:48	30.03
6/17/2022 11:32	83.57	6/16/2022 10:49	-0.05	6/16/2022 11:19	11.16	6/16/2022 10:06	0.48	6/16/2022 11:49	30.02
6/17/2022 11:33	83.55	6/16/2022 10:50	-0.03	6/16/2022 11:20	11.10	6/16/2022 10:07	0.40	6/16/2022 11:50	30.02
6/17/2022 11:34	83.53	6/16/2022 10:51	-0.03	6/16/2022 11:21	11.02	6/16/2022 10:08	0.43	6/16/2022 11:51	30.05
6/17/2022 11:35	83.54	6/16/2022 10:52	-0.04	6/16/2022 11:22	10.95	6/16/2022 10:09	0.44	6/16/2022 11:52	30.03
6/17/2022 11:36	83.55	6/16/2022 10:53	-0.06	6/16/2022 11:23	11.72	6/16/2022 10:10	0.47	6/16/2022 11:53	30.05
6/17/2022 11:37	83.50	6/16/2022 10:54	-0.01	6/16/2022 11:24	14.56	6/16/2022 10:11	0.43	6/16/2022 11:54	30.05
6/17/2022 11:38	83.53	6/16/2022 10:55	-0.03	6/16/2022 11:25	14.01	6/16/2022 10:12	0.42	6/16/2022 11:55	30.06
6/17/2022 11:39	83.53	6/16/2022 10:56	-0.03	6/16/2022 11:26	13.53	6/16/2022 10:13	0.48	6/16/2022 11:56	30.05
6/17/2022 11:40	83.53	6/16/2022 10:57	-0.03	6/16/2022 11:27	13.17	6/16/2022 10:14	0.44	6/16/2022 11:57	30.07
6/17/2022 11:41	83.52	6/16/2022 10:58	-0.03	6/16/2022 11:28	12.82	6/16/2022 10:15	0.45	6/16/2022 11:58	30.04
6/17/2022 11:42	83.51	6/16/2022 10:59	-0.05	6/16/2022 11:29	12.56	6/16/2022 10:16	0.47	6/16/2022 11:59	30.08
6/17/2022 11:43	83.53	6/16/2022 11:00	-0.04	6/16/2022 11:30	12.31	6/16/2022 10:17	0.48	6/16/2022 12:00	30.06
6/17/2022 11:44	83.50	6/16/2022 11:01	5.31	6/16/2022 11:31	12.04	6/16/2022 10:18	0.44	6/16/2022 12:01	30.09
6/17/2022 11:45	83.52	6/16/2022 11:02	6.65	6/16/2022 11:32	11.88	6/16/2022 10:19	0.45	6/16/2022 12:02	30.07
6/17/2022 11:46	83.53	6/16/2022 11:03	5.46	6/16/2022 11:33	11.74	6/16/2022 10:20	0.46	6/16/2022 12:03	30.09
6/17/2022 11:47	83.51	6/16/2022 11:04	4.52	6/16/2022 11:34	11.55	6/16/2022 10:21	0.46	6/16/2022 12:04	30.07
6/17/2022 11:48	83.50	6/16/2022 11:05	3.76	6/16/2022 11:35	11.42	6/16/2022 10:22	0.44	6/16/2022 12:05	30.14
6/17/2022 11:49	83.50	6/16/2022 11:06	3.11	6/16/2022 11:36	11.26	6/16/2022 10:23	0.45	6/16/2022 12:06	30.09
6/17/2022 11:50	83.49	6/16/2022 11:07	2.58	6/16/2022 11:37	11.20	6/16/2022 10:24	0.45	6/16/2022 12:07	30.14
6/17/2022 11:51	83.49	6/16/2022 11:08	2.15	6/16/2022 11:38	11.09	6/16/2022 10:25	0.41	6/16/2022 12:08	30.14
6/17/2022 11:52	83.47	6/16/2022 11:09	1.77	6/16/2022 11:39	11.05	6/16/2022 10:26	0.44	6/16/2022 12:09	30.09
6/17/2022 11:53	83.52	6/16/2022 11:10	1.45	6/16/2022 11:40	10.99	6/16/2022 10:27	0.43	6/16/2022 12:10	30.14
6/17/2022 11:54	83.50	6/16/2022 11:11	1.18	6/16/2022 11:41	11.25	6/16/2022 10:28	0.39	6/16/2022 12:11	30.12
6/17/2022 11:55	83.49	6/16/2022 11:12	0.95	6/16/2022 11:42	15.78	6/16/2022 10:29	0.45	6/16/2022 12:12	30.14
6/17/2022 11:56	83.48	6/16/2022 11:13	0.76	6/16/2022 11:43	15.36	6/16/2022 10:30	0.42	6/16/2022 12:13	30.12
6/17/2022 11:57	83.50	6/16/2022 11:14	0.57	6/16/2022 11:44	14.78	6/16/2022 10:31	0.44	6/16/2022 12:14	30.14

6/17/2022 11:58	83.45	6/16/2022 11:15	0.43	6/16/2022 11:45	14.28	6/16/2022 10:32	0.53	6/16/2022 12:15	30.13
6/17/2022 11:59	83.47	6/16/2022 11:16	0.27	6/16/2022 11:46	13.86	6/16/2022 10:33	0.54	6/16/2022 12:16	30.18
6/17/2022 12:00	83.49	6/16/2022 11:17	0.14	6/16/2022 11:47	13.49	6/16/2022 10:34	0.51	6/16/2022 12:17	30.15
6/17/2022 12:01	83.47	6/16/2022 11:18	0.08	6/16/2022 11:48	13.10	6/16/2022 10:35	0.52	6/16/2022 12:18	30.15
6/17/2022 12:02	83.44	6/16/2022 11:19	-0.01	6/16/2022 11:49	12.80	6/16/2022 10:36	0.45	6/16/2022 12:19	30.18
6/17/2022 12:03	83.45	6/16/2022 11:20	-0.05	6/16/2022 11:50	12.57	6/16/2022 10:37	0.44	6/16/2022 12:20	30.15
6/17/2022 12:04	83.49	6/16/2022 11:21	-0.02	6/16/2022 11:51	12.37	6/16/2022 10:38	0.42	6/16/2022 12:21	30.16
6/17/2022 12:05	83.48	6/16/2022 11:22	-0.02	6/16/2022 11:52	12.13	6/16/2022 10:39	0.44	6/16/2022 12:22	30.16
6/17/2022 12:06	83.45	6/16/2022 11:23	-0.02	6/16/2022 11:53	11.96	6/16/2022 10:40	0.43	6/16/2022 12:23	31.59
6/17/2022 12:07	83.45	6/16/2022 11:24	-0.04	6/16/2022 11:54	11.78	6/16/2022 10:41	0.43	6/16/2022 12:24	31.55
6/17/2022 12:08	83.45	6/16/2022 11:25	-0.08	6/16/2022 11:55	11.60	6/16/2022 10:42	0.38	6/16/2022 12:25	30.69
6/17/2022 12:09	83.47	6/16/2022 11:26	-0.05	6/16/2022 11:56	11.51	6/16/2022 10:43	0.47	6/16/2022 12:26	30.39
6/17/2022 12:10	83.45	6/16/2022 11:27	-0.05	6/16/2022 11:57	11.39	6/16/2022 10:44	0.46	6/16/2022 12:27	30.35
6/17/2022 12:11	83.44	6/16/2022 11:28	-0.02	6/16/2022 11:58	11.30	6/16/2022 10:45	0.50	6/16/2022 12:28	30.36
6/17/2022 12:12	83.44	6/16/2022 11:29	-0.04	6/16/2022 11:59	11.20	6/16/2022 10:46	0.52	6/16/2022 12:29	30.39
6/17/2022 12:13	83.44	6/16/2022 11:30	-0.04	6/16/2022 12:00	11.19	6/16/2022 10:47	0.48	6/16/2022 12:30	30.44
6/17/2022 12:14	83.43	6/16/2022 11:31	-0.06	6/16/2022 12:01	11.05	6/16/2022 10:48	0.46	6/16/2022 12:31	30.44
6/17/2022 12:15	83.46	6/16/2022 11:32	-0.08	6/16/2022 12:02	11.04	6/16/2022 10:49	0.45	6/16/2022 12:32	30.45
6/17/2022 12:16	83.46	6/16/2022 11:33	-0.03	6/16/2022 12:03	10.99	6/16/2022 10:50	0.47	6/16/2022 12:33	30.40
6/17/2022 12:17	83.43	6/16/2022 11:34	-0.06	6/16/2022 12:04	10.94	6/16/2022 10:51	0.45	6/16/2022 12:34	30.44
6/17/2022 12:18	83.42	6/16/2022 11:35	-0.03	6/16/2022 12:05	10.88	6/16/2022 10:52	0.41	6/16/2022 12:35	30.42
6/17/2022 12:19	83.41	6/16/2022 11:36	-0.06	6/16/2022 12:06	10.82	6/16/2022 10:53	0.40	6/16/2022 12:36	30.42
6/17/2022 12:20	83.43	6/16/2022 11:37	-0.04	6/16/2022 12:07	10.77	6/16/2022 10:54	0.45	6/16/2022 12:37	30.41
6/17/2022 12:21	83.46	6/16/2022 11:38	-0.04	6/16/2022 12:08	10.77	6/16/2022 10:55	0.44	6/16/2022 12:38	30.42
6/17/2022 12:22	83.44	6/16/2022 11:39	-0.05	6/16/2022 12:09	10.69	6/16/2022 10:56	0.44	6/16/2022 12:39	30.42
6/17/2022 12:23	83.43	6/16/2022 11:40	-0.05	6/16/2022 12:10	10.68	6/16/2022 10:57	0.48	6/16/2022 12:40	30.47
6/17/2022 12:24	83.41	6/16/2022 11:41	-0.06	6/16/2022 12:11	10.65	6/16/2022 10:58	0.50	6/16/2022 12:41	30.44
6/17/2022 12:25	83.40	6/16/2022 11:42	-0.03	6/16/2022 12:12	10.61	6/16/2022 10:59	0.47	6/16/2022 12:42	30.46
6/17/2022 12:26	83.43	6/16/2022 11:43	-0.08	6/16/2022 12:13	10.57	6/16/2022 11:00	0.49	6/16/2022 12:43	30.43
6/17/2022 12:27	83.41	6/16/2022 11:44	-0.04	6/16/2022 12:14	10.52	6/16/2022 11:01	0.57	6/16/2022 12:44	30.42
6/17/2022 12:28	83.42	6/16/2022 11:45	-0.03	6/16/2022 12:15	10.53	6/16/2022 11:02	0.49	6/16/2022 12:45	30.43
6/17/2022 12:29	83.39	6/16/2022 11:46	-0.02	6/16/2022 12:16	10.54	6/16/2022 11:03	0.44	6/16/2022 12:46	32.14
6/17/2022 12:30	83.39	6/16/2022 11:47	-0.06	6/16/2022 12:17	10.53	6/16/2022 11:04	0.47	6/16/2022 12:47	31.13
6/17/2022 12:31	83.41	6/16/2022 11:48	-0.04	6/16/2022 12:18	10.52	6/16/2022 11:05	0.45	6/16/2022 12:48	30.71
6/17/2022 12:32	83.42	6/16/2022 11:49	-0.02	6/16/2022 12:19	10.52	6/16/2022 11:06	0.45	6/16/2022 12:49	30.59
6/17/2022 12:33	83.41	6/16/2022 11:50	4.11	6/16/2022 12:20	10.51	6/16/2022 11:07	0.45	6/16/2022 12:50	30.57
6/17/2022 12:34	83.40	6/16/2022 11:51	7.16	6/16/2022 12:21	10.49	6/16/2022 11:08	0.44	6/16/2022 12:51	30.53
6/17/2022 12:35	83.41	6/16/2022 11:52	5.87	6/16/2022 12:22	10.45	6/16/2022 11:09	0.40	6/16/2022 12:52	30.50
6/17/2022 12:36	83.36	6/16/2022 11:53	4.85	6/16/2022 12:23	10.47	6/16/2022 11:10	0.41	6/16/2022 12:53	30.51
6/17/2022 12:37	83.39	6/16/2022 11:54	4.07	6/16/2022 12:24	10.49	6/16/2022 11:11	0.45	6/16/2022 12:54	30.49
6/17/2022 12:38	83.39	6/16/2022 11:55	3.36	6/16/2022 12:25	10.43	6/16/2022 11:12	0.48	6/16/2022 12:55	30.52
6/17/2022 12:39	83.37	6/16/2022 11:56	2.74	6/16/2022 12:26	10.39	6/16/2022 11:13	0.50	6/16/2022 12:56	30.47
6/17/2022 12:40	83.37	6/16/2022 11:57	2.31	6/16/2022 12:27	10.41	6/16/2022 11:14	0.56	6/16/2022 12:57	30.51
6/17/2022 12:41	83.39	6/16/2022 11:58	1.96	6/16/2022 12:28	10.41	6/16/2022 11:15	0.57	6/16/2022 12:58	30.50
6/17/2022 12:42	83.36	6/16/2022 11:59	1.57	6/16/2022 12:29	10.41	6/16/2022 11:16	0.51	6/16/2022 12:59	30.49
6/17/2022 12:43	83.39	6/16/2022 12:00	1.27	6/16/2022 12:30	10.41	6/16/2022 11:17	0.50	6/16/2022 13:00	30.50
6/17/2022 12:44	83.40	6/16/2022 12:01	1.01	6/16/2022 12:31	10.44	6/16/2022 11:18	0.50	6/16/2022 13:01	30.49
6/17/2022 12:45	83.37	6/16/2022 12:02	0.81	6/16/2022 12:32	10.43	6/16/2022 11:19	0.43	6/16/2022 13:02	30.52
6/17/2022 12:46	83.40	6/16/2022 12:03	0.60	6/16/2022 12:33	10.44	6/16/2022 11:20	0.45	6/16/2022 13:03	30.50
6/17/2022 12:47	83.38	6/16/2022 12:04	0.45	6/16/2022 12:34	10.45	6/16/2022 11:21	0.42	6/16/2022 13:04	32.24
6/17/2022 12:48	83.36	6/16/2022 12:05	0.34	6/16/2022 12:35	10.41	6/16/2022 11:22	0.42	6/16/2022 13:05	31.24
6/17/2022 12:49	83.37	6/16/2022 12:06	0.17	6/16/2022 12:36	10.40	6/16/2022 11:23	0.40	6/16/2022 13:06	30.76
6/17/2022 12:50	83.40	6/16/2022 12:07	0.07	6/16/2022 12:37	10.41	6/16/2022 11:24	0.39	6/16/2022 13:07	30.59
6/17/2022 12:51	83.33	6/16/2022 12:08	0.00	6/16/2022 12:38	10.39	6/16/2022 11:25	0.42	6/16/2022 13:08	30.56
6/17/2022 12:52	83.36	6/16/2022 12:09	-0.01	6/16/2022 12:39	10.37	6/16/2022 11:26	0.44	6/16/2022 13:09	30.52
6/17/2022 12:53	83.32	6/16/2022 12:10	-0.03	6/16/2022 12:40	10.40	6/16/2022 11:27	0.45	6/16/2022 13:10	30.53
6/17/2022 12:54	83.37	6/16/2022 12:11	-0.05	6/16/2022 12:41	10.36	6/16/2022 11:28	0.47	6/16/2022 13:11	30.52
6/17/2022 12:55	83.36	6/16/2022 12:12	-0.03	6/16/2022 12:42	10.34	6/16/2022 11:29	0.48	6/16/2022 13:12	32.26
6/17/2022 12:56	83.38	6/16/2022 12:13	-0.05	6/16/2022 12:43	10.32	6/16/2022 11:30	0.51	6/16/2022 13:13	31.21
6/17/2022 12:57	83.36	6/16/2022 12:14	-0.02	6/16/2022 12:44	10.31	6/16/2022 11:31	0.53	6/16/2022 13:14	30.78
6/17/2022 12:58	83.39	6/16/2022 12:15	-0.08	6/16/2022 12:45	10.29	6/16/2022 11:32	0.51	6/16/2022 13:15	30.69
6/17/2022 12:59	83.35	6/16/2022 12:16	-0.02	6/16/2022 12:46	10.26	6/16/2022 11:33	0.49	6/16/2022 13:16	30.62
6/17/2022 13:00	83.36	6/16/2022 12:17	-0.07	6/16/2022 12:47	10.27	6/16/2022 11:34	0.49	6/16/2022 13:17	30.65
6/17/2022 13:01	83.33	6/16/2022 12:18	-0.04	6/16/2022 12:48	10.24	6/16/2022 11:35	0.50	6/16/2022 13:18	30.62
6/17/2022 13:02	83.34	6/16/2022 12:19	-0.04	6/16/2022 12:49	10.24	6/16/2022 11:36	0.44	6/16/2022 13:19	30.61
6/17/2022 13:03	83.34	6/16/2022 12:20	-0.07	6/16/2022 12:50	10.21	6/16/2022 11:37	0.40	6/16/2022 13:20	30.64
6/17/2022 13:04	83.33	6/16/2022 12:21	-0.02	6/16/2022 12:51	10.21	6/16/2022 11:38	0.45	6/16/2022 13:21	30.58
6/17/2022 13:05	83.33	6/16/2022 12:22	-0.06	6/16/2022 12:52	10.20	6/16/2022 11:39	0.42	6/16/2022 13:22	30.60
6/17/2022 13:06	83.31	6/16/2022 12:23	-0.05	6/16/2022 12:53	10.17	6/16/2022 11:40	0.43	6/16/2022 13:23	30.54
6/17/2022 13:07	83.36	6/16/2022 12:24	-0.05	6/16/2022 12:54	10.20	6/16/2022 11:41	0.47	6/16/2022 13:24	30.60
6/17/2022 13:08	83.34	6/16/2022 12:25	-0.08	6/16/2022 12:55	10.22	6/16/2022 11:42	0.50	6/16/2022 13:25	30.57
6/17/2022 13:09	83.33	6/16/2022 12:26	-0.02	6/16/2022 12:56	10.22	6/16/2022 11:43	0.54	6/16/2022 13:26	30.60
6/17/2022 13:10	83.37	6/16/2022 12:27	-0.05	6/16/2022 12:57	10.22	6/16/2022 11:44	0.49	6/16/2022 13:27	30.58
6/17/2022 13:11	83.33	6/16/2022 12:28	-0.03	6/16/2022 12:58	10.25	6/16/2022 11:45	0.50	6/16/2022 13:28	30.58
6/17/2022 13:12	83.34	6/16/2022 12:29	-0.04	6/16/2022 12:59	10.25	6/16/2022 11:46	0.47	6/16/2022 13:29	30.59
6/17/2022 13:13	83.32	6/16/2022 12:30	-0.07	6/16/2022 13:00	10.23	6/16/2022 11:47	0.43	6/16/2022 13:30	30.64
6/17/2022 13:14	83.32	6/16/2022 12:31	-0.03	6/16/2022 13:01	10.25	6/16/2022 11:48	0.48	6/16/2022 13:31	30.54
6/17/2022 13:15	83.34	6/16/2022 12:32	-0.01	6/16/2022 13:02	10.26	6/16/2022 11:49	0.40	6/16/2022 13:32	30.61
6/17/2022 13:16	83.32	6/16/2022 12:33	0.76	6/16/2022 13:03	10.24	6/16/2022 11:50	0.44	6/16/2022 13:33	30.60
6/17/2022 13:17	83.35	6/16/2022 12:34	6.48	6/16/2022 13:04	10.22	6/16/2022 11:51	0.40	6/16/2022 13:34	30.62
6/17/2022 13:18	83.31	6/16/2022 12:35	6.31	6/16/2022 13:05	10.23	6/16/2022 11:52	0.44	6/16/2022 13:35	30.59
6/17/2022 13:19	83.30	6/16/2022 12:36	5.20	6/16/2022 13:06	10.22	6/16/2022 11:53	0.39	6/16/2022 13:36	30.59
6/17/2022 13:20	83.33	6/16/2022 12:37	4.33	6/16/2022 13:07	10.19	6/16/2022 11:54	0.42	6/16/2022 13:37	30.60
6/17/2022 13:21	83.32	6/16/2022 12:38	3.56	6/16/2022 13:08	10.20	6/16/2022 11:55	0.44	6/16/2022 13:38	30.59
6/17/2022 13:22	83.34	6/16/2022 12:39	2.95	6/16/2022 13:09	10.18	6/16/2022 11:56	0.46	6/16/2022 13:39	30.59
6/17/2022 13:23	83.33	6/16/2022 12:40	2.44	6/16/2022 13:10	10.15	6/16/2022 11:57	0.45	6/16/2022 13:40	30.58
6/17/2022 13:24	83.33	6/16/2022 12:41	2.05	6/16/2022 13:11	10.20	6/16/2022 11:58	0.45	6/16/2022 13:41	30.59
6/17/2022 13:25	83.34	6/16/2022 12:42	1.69	6/16/2022 13:12	10.17	6/16/2022 11:59	0.44	6/16/2022 13:42	30.62

6/17/2022 13:26	83.32	6/16/2022 12:43	1.36	6/16/2022 13:13	10.20	6/16/2022 12:00	0.45	6/16/2022 13:43	30.56
6/17/2022 13:27	83.33	6/16/2022 12:44	1.12	6/16/2022 13:14	10.15	6/16/2022 12:01	0.44	6/16/2022 13:44	30.60
6/17/2022 13:28	83.32	6/16/2022 12:45	0.88	6/16/2022 13:15	10.12	6/16/2022 12:02	0.45	6/16/2022 13:45	30.59
6/17/2022 13:29	83.31	6/16/2022 12:46	0.67	6/16/2022 13:16	10.12	6/16/2022 12:03	0.48	6/16/2022 13:46	30.58
6/17/2022 13:30	83.27	6/16/2022 12:47	0.54	6/16/2022 13:17	10.12	6/16/2022 12:04	0.47	6/16/2022 13:47	30.64
6/17/2022 13:31	83.30	6/16/2022 12:48	0.38	6/16/2022 13:18	10.16	6/16/2022 12:05	0.53	6/16/2022 13:48	30.58
6/17/2022 13:32	83.29	6/16/2022 12:49	0.18	6/16/2022 13:19	10.12	6/16/2022 12:06	0.55	6/16/2022 13:49	30.58
6/17/2022 13:33	83.29	6/16/2022 12:50	0.15	6/16/2022 13:20	10.10	6/16/2022 12:07	0.54	6/16/2022 13:50	32.43
6/17/2022 13:34	83.28	6/16/2022 12:51	0.01	6/16/2022 13:21	10.15	6/16/2022 12:08	0.55	6/16/2022 13:51	31.36
6/17/2022 13:35	83.32	6/16/2022 12:52	-0.06	6/16/2022 13:22	10.14	6/16/2022 12:09	0.51	6/16/2022 13:52	30.89
6/17/2022 13:36	83.32	6/16/2022 12:53	-0.01	6/16/2022 13:23	10.17	6/16/2022 12:10	0.50	6/16/2022 13:53	30.72
6/17/2022 13:37	83.27	6/16/2022 12:54	-0.06	6/16/2022 13:24	10.17	6/16/2022 12:11	0.48	6/16/2022 13:54	30.69
6/17/2022 13:38	83.27	6/16/2022 12:55	-0.05	6/16/2022 13:25	10.21	6/16/2022 12:12	0.45	6/16/2022 13:55	30.72
6/17/2022 13:39	83.32	6/16/2022 12:56	-0.04	6/16/2022 13:26	10.22	6/16/2022 12:13	0.47	6/16/2022 13:56	30.64
6/17/2022 13:40	83.30	6/16/2022 12:57	-0.06	6/16/2022 13:27	10.20	6/16/2022 12:14	0.46	6/16/2022 13:57	30.69
6/17/2022 13:41	83.28	6/16/2022 12:58	-0.04	6/16/2022 13:28	10.26	6/16/2022 12:15	0.47	6/16/2022 13:58	30.68
6/17/2022 13:42	83.25	6/16/2022 12:59	-0.02	6/16/2022 13:29	10.27	6/16/2022 12:16	0.54	6/16/2022 13:59	30.68
6/17/2022 13:43	83.29	6/16/2022 13:00	-0.04	6/16/2022 13:30	10.25	6/16/2022 12:17	0.54	6/16/2022 14:00	30.69
6/17/2022 13:44	87.32	6/16/2022 13:01	-0.04	6/16/2022 13:31	10.28	6/16/2022 12:18	0.54	6/16/2022 14:01	30.68
6/17/2022 13:45	90.03	6/16/2022 13:02	-0.07	6/16/2022 13:32	10.30	6/16/2022 12:19	0.55	6/16/2022 14:02	30.65
6/17/2022 13:46	90.76	6/16/2022 13:03	-0.04	6/16/2022 13:33	10.26	6/16/2022 12:20	0.49	6/16/2022 14:03	30.65
6/17/2022 13:47	88.23	6/16/2022 13:04	-0.06	6/16/2022 13:34	10.30	6/16/2022 12:21	0.46	6/16/2022 14:04	30.66
6/17/2022 13:48	86.68	6/16/2022 13:05	-0.06	6/16/2022 13:35	10.30	6/16/2022 12:22	0.45	6/16/2022 14:05	30.67
6/17/2022 13:49	85.75	6/16/2022 13:06	-0.05	6/16/2022 13:36	10.32	6/16/2022 12:23	0.42	6/16/2022 14:06	30.66
6/17/2022 13:50	85.18	6/16/2022 13:07	-0.07	6/16/2022 13:37	10.30	6/16/2022 12:24	0.44	6/16/2022 14:07	30.69
6/17/2022 13:51	84.77	6/16/2022 13:08	-0.05	6/16/2022 13:38	10.32	6/16/2022 12:25	0.45	6/16/2022 14:08	30.67
6/17/2022 13:52	84.52	6/16/2022 13:09	-0.06	6/16/2022 13:39	10.33	6/16/2022 12:26	0.46	6/16/2022 14:09	30.65
6/17/2022 13:53	84.31	6/16/2022 13:10	-0.03	6/16/2022 13:40	10.35	6/16/2022 12:27	0.44	6/16/2022 14:10	30.68
6/17/2022 13:54	84.22	6/16/2022 13:11	-0.04	6/16/2022 13:41	10.36	6/16/2022 12:28	0.46	6/16/2022 14:11	30.68
6/17/2022 13:55	84.12	6/16/2022 13:12	-0.03	6/16/2022 13:42	10.39	6/16/2022 12:29	0.48	6/16/2022 14:12	30.70
6/17/2022 13:56	84.03	6/16/2022 13:13	-0.02	6/16/2022 13:43	10.36	6/16/2022 12:30	0.56	6/16/2022 14:13	30.67
6/17/2022 13:57	83.98	6/16/2022 13:14	-0.04	6/16/2022 13:44	10.41	6/16/2022 12:31	0.53	6/16/2022 14:14	30.69
6/17/2022 13:58	83.94	6/16/2022 13:15	0.00	6/16/2022 13:45	10.41	6/16/2022 12:32	0.55	6/16/2022 14:15	30.64
6/17/2022 13:59	83.87	6/16/2022 13:16	-0.09	6/16/2022 13:46	10.39	6/16/2022 12:33	0.53	6/16/2022 14:16	30.67
6/17/2022 14:00	83.83	6/16/2022 13:17	-0.03	6/16/2022 13:47	10.39	6/16/2022 12:34	0.52	6/16/2022 14:17	30.70
6/17/2022 14:01	83.82	6/16/2022 13:18	-0.02	6/16/2022 13:48	10.35	6/16/2022 12:35	0.51	6/16/2022 14:18	30.67
6/17/2022 14:02	83.77	6/16/2022 13:19	1.57	6/16/2022 13:49	13.53	6/16/2022 12:36	0.51	6/16/2022 14:19	30.67
6/17/2022 14:03	83.79	6/16/2022 13:20	7.10	6/16/2022 13:50	17.53	6/16/2022 12:37	0.54	6/16/2022 14:20	30.69
6/17/2022 14:04	83.75	6/16/2022 13:21	6.16	6/16/2022 13:51	16.63	6/16/2022 12:38	0.54	6/16/2022 14:21	30.73
6/17/2022 14:05	83.75	6/16/2022 13:22	5.11	6/16/2022 13:52	16.84	6/16/2022 12:39	0.55	6/16/2022 14:22	32.36
6/17/2022 14:06	83.73	6/16/2022 13:23	4.31	6/16/2022 13:53	20.80	6/16/2022 12:40	0.56	6/16/2022 14:23	31.32
6/17/2022 14:07	83.71	6/16/2022 13:24	3.52	6/16/2022 13:54	21.62	6/16/2022 12:41	0.56	6/16/2022 14:24	30.94
6/17/2022 14:08	83.65	6/16/2022 13:25	2.91	6/16/2022 13:55	20.43	6/16/2022 12:42	0.55	6/16/2022 14:25	30.76
6/17/2022 14:09	83.70	6/16/2022 13:26	2.41	6/16/2022 13:56	19.32	6/16/2022 12:43	0.54	6/16/2022 14:26	30.66
6/17/2022 14:10	83.62	6/16/2022 13:27	1.99	6/16/2022 13:57	18.43	6/16/2022 12:44	0.56	6/16/2022 14:27	30.62
6/17/2022 14:11	83.65	6/16/2022 13:28	1.63	6/16/2022 13:58	17.59	6/16/2022 12:45	0.54	6/16/2022 14:28	30.60
6/17/2022 14:12	83.65	6/16/2022 13:29	1.37	6/16/2022 13:59	16.86	6/16/2022 12:46	0.54	6/16/2022 14:29	30.54
6/17/2022 14:13	83.65	6/16/2022 13:30	1.10	6/16/2022 14:00	16.15	6/16/2022 12:47	0.53	6/16/2022 14:30	32.57
6/17/2022 14:14	83.60	6/16/2022 13:31	0.80	6/16/2022 14:01	15.57	6/16/2022 12:48	0.52	6/16/2022 14:31	31.35
6/17/2022 14:15	83.64	6/16/2022 13:32	0.66	6/16/2022 14:02	15.08	6/16/2022 12:49	0.46	6/16/2022 14:32	30.75
6/17/2022 14:16	83.60	6/16/2022 13:33	0.47	6/16/2022 14:03	14.61	6/16/2022 12:50	0.43	6/16/2022 14:33	30.58
6/17/2022 14:17	83.59	6/16/2022 13:34	0.38	6/16/2022 14:04	14.22	6/16/2022 12:51	0.44	6/16/2022 14:34	30.54
6/17/2022 14:18	83.57	6/16/2022 13:35	0.28	6/16/2022 14:05	13.83	6/16/2022 12:52	0.46	6/16/2022 14:35	30.49
6/17/2022 14:19	83.58	6/16/2022 13:36	0.13	6/16/2022 14:06	13.46	6/16/2022 12:53	0.51	6/16/2022 14:36	30.44
6/17/2022 14:20	83.58	6/16/2022 13:37	0.00	6/16/2022 14:07	13.20	6/16/2022 12:54	0.49	6/16/2022 14:37	30.42
6/17/2022 14:21	83.56	6/16/2022 13:38	-0.01	6/16/2022 14:08	12.96	6/16/2022 12:55	0.51	6/16/2022 14:38	30.39
6/17/2022 14:22	83.56	6/16/2022 13:39	-0.08	6/16/2022 14:09	12.71	6/16/2022 12:56	0.55	6/16/2022 14:39	30.34
6/17/2022 14:23	83.56	6/16/2022 13:40	-0.03	6/16/2022 14:10	12.49	6/16/2022 12:57	0.59	6/16/2022 14:40	30.30
6/17/2022 14:24	83.56	6/16/2022 13:41	-0.04	6/16/2022 14:11	12.31	6/16/2022 12:58	0.54	6/16/2022 14:41	30.26
6/17/2022 14:25	83.49	6/16/2022 13:42	-0.05	6/16/2022 14:12	12.17	6/16/2022 12:59	0.49	6/16/2022 14:42	30.25
6/17/2022 14:26	83.51	6/16/2022 13:43	-0.05	6/16/2022 14:13	12.04	6/16/2022 13:00	0.47	6/16/2022 14:43	30.24
6/17/2022 14:27	83.50	6/16/2022 13:44	-0.05	6/16/2022 14:14	11.86	6/16/2022 13:01	0.49	6/16/2022 14:44	30.16
6/17/2022 14:28	83.51	6/16/2022 13:45	0.00	6/16/2022 14:15	11.76	6/16/2022 13:02	0.49	6/16/2022 14:45	30.17
6/17/2022 14:29	83.52	6/16/2022 13:46	-0.01	6/16/2022 14:16	11.62	6/16/2022 13:03	0.50	6/16/2022 14:46	30.16
6/17/2022 14:30	83.49	6/16/2022 13:47	-0.05	6/16/2022 14:17	11.49	6/16/2022 13:04	0.47	6/16/2022 14:47	30.12
6/17/2022 14:31	83.50	6/16/2022 13:48	-0.05	6/16/2022 14:18	11.45	6/16/2022 13:05	0.55	6/16/2022 14:48	30.11
6/17/2022 14:32	83.53	6/16/2022 13:49	-0.05	6/16/2022 14:19	11.29	6/16/2022 13:06	0.51	6/16/2022 14:49	30.10
6/17/2022 14:33	83.53	6/16/2022 13:50	-0.06	6/16/2022 14:20	11.23	6/16/2022 13:07	0.57	6/16/2022 14:50	30.07
6/17/2022 14:34	83.49	6/16/2022 13:51	-0.03	6/16/2022 14:21	11.15	6/16/2022 13:08	0.58	6/16/2022 14:51	30.07
6/17/2022 14:35	83.51	6/16/2022 13:52	-0.01	6/16/2022 14:22	11.08	6/16/2022 13:09	0.52	6/16/2022 14:52	30.08
6/17/2022 14:36	83.53	6/16/2022 13:53	-0.04	6/16/2022 14:23	11.01	6/16/2022 13:10	0.49	6/16/2022 14:53	30.06
6/17/2022 14:37	83.50	6/16/2022 13:54	-0.04	6/16/2022 14:24	10.94	6/16/2022 13:11	0.45	6/16/2022 14:54	30.00
6/17/2022 14:38	83.50	6/16/2022 13:55	-0.11	6/16/2022 14:25	10.87	6/16/2022 13:12	0.44	6/16/2022 14:55	29.99
6/17/2022 14:39	83.49	6/16/2022 13:56	-0.02	6/16/2022 14:26	10.80	6/16/2022 13:13	0.49	6/16/2022 14:56	30.01
6/17/2022 14:40	83.48	6/16/2022 13:57	-0.03	6/16/2022 14:27	10.81	6/16/2022 13:14	0.46	6/16/2022 14:57	29.95
6/17/2022 14:41	83.48	6/16/2022 13:58	-0.04	6/16/2022 14:28	10.74	6/16/2022 13:15	0.49	6/16/2022 14:58	31.50
6/17/2022 14:42	83.47	6/16/2022 13:59	-0.04	6/16/2022 14:29	10.72	6/16/2022 13:16	0.57	6/16/2022 14:59	31.24
6/17/2022 14:43	83.49	6/16/2022 14:00	-0.05	6/16/2022 14:30	10.70	6/16/2022 13:17	0.54	6/16/2022 15:00	30.43
6/17/2022 14:44	83.47	6/16/2022 14:01	-0.04	6/16/2022 14:31	10.66	6/16/2022 13:18	0.57	6/16/2022 15:01	30.12
6/17/2022 14:45	83.47	6/16/2022 14:02	-0.05	6/16/2022 14:32	10.64	6/16/2022 13:19	0.52	6/16/2022 15:02	29.99
6/17/2022 14:46	83.44	6/16/2022 14:03	-0.05	6/16/2022 14:33	10.63	6/16/2022 13:20	0.47	6/16/2022 15:03	29.96
6/17/2022 14:47	83.44	6/16/2022 14:04	-0.04	6/16/2022 14:34	10.60	6/16/2022 13:21	0.51	6/16/2022 15:04	29.93
6/17/2022 14:48	83.44	6/16/2022 14:05	0.43	6/16/2022 14:35	10.63	6/16/2022 13:22	0.55	6/16/2022 15:05	29.91
6/17/2022 14:49	83.44	6/16/2022 14:06	6.30	6/16/2022 14:36	10.58	6/16/2022 13:23	0.57	6/16/2022 15:06	29.93
6/17/2022 14:50	83.47	6/16/2022 14:07	7.87	6/16/2022 14:37	10.55	6/16/2022 13:24	0.61	6/16/2022 15:07	29.89
6/17/2022 14:51	83.46	6/16/2022 14:08	6.53	6/16/2022 14:38	10.55	6/16/2022 13:25	0.57	6/16/2022 15:08	29.86
6/17/2022 14:52	83.46	6/16/2022 14:09	5.38	6/16/2022 14:39	10.53	6/16/2022 13:26	0.57	6/16/2022 15:09	29.84
6/17/2022 14:53	83.46	6/16/2022 14:10	4.47	6/16/2022 14:40	10.51	6/16/2022 13:27	0.54	6/16/2022 15:10	29.82

6/17/2022 14:54	83.47	6/16/2022 14:11	3.75	6/16/2022 14:41	10.49	6/16/2022 13:28	0.52	6/16/2022 15:11	29.83
6/17/2022 14:55	83.45	6/16/2022 14:12	3.15	6/16/2022 14:42	10.45	6/16/2022 13:29	0.54	6/16/2022 15:12	29.82
6/17/2022 14:56	83.44	6/16/2022 14:13	7.30	6/16/2022 14:43	10.45	6/16/2022 13:30	0.48	6/16/2022 15:13	29.83
6/17/2022 14:57	83.44	6/16/2022 14:14	9.60	6/16/2022 14:44	10.44	6/16/2022 13:31	0.48	6/16/2022 15:14	31.75
6/17/2022 14:58	83.44	6/16/2022 14:15	8.01	6/16/2022 14:45	10.42	6/16/2022 13:32	0.45	6/16/2022 15:15	30.61
6/17/2022 14:59	83.45	6/16/2022 14:16	6.66	6/16/2022 14:46	10.40	6/16/2022 13:33	0.44	6/16/2022 15:16	30.10
6/17/2022 15:00	83.41	6/16/2022 14:17	5.56	6/16/2022 14:47	10.36	6/16/2022 13:34	0.48	6/16/2022 15:17	29.91
6/17/2022 15:01	83.45	6/16/2022 14:18	4.65	6/16/2022 14:48	10.37	6/16/2022 13:35	0.52	6/16/2022 15:18	29.84
6/17/2022 15:02	83.43	6/16/2022 14:19	3.88	6/16/2022 14:49	10.38	6/16/2022 13:36	0.49	6/16/2022 15:19	30.25
6/17/2022 15:03	83.42	6/16/2022 14:20	3.26	6/16/2022 14:50	10.37	6/16/2022 13:37	0.57	6/16/2022 15:20	31.34
6/17/2022 15:04	83.43	6/16/2022 14:21	2.69	6/16/2022 14:51	10.35	6/16/2022 13:38	0.56	6/16/2022 15:21	30.43
6/17/2022 15:05	83.39	6/16/2022 14:22	2.25	6/16/2022 14:52	10.39	6/16/2022 13:39	0.58	6/16/2022 15:22	30.03
6/17/2022 15:06	83.39	6/16/2022 14:23	1.89	6/16/2022 14:53	10.39	6/16/2022 13:40	0.58	6/16/2022 15:23	29.83
6/17/2022 15:07	83.43	6/16/2022 14:24	1.53	6/16/2022 14:54	10.36	6/16/2022 13:41	0.57	6/16/2022 15:24	29.82
6/17/2022 15:08	83.45	6/16/2022 14:25	1.28	6/16/2022 14:55	10.34	6/16/2022 13:42	0.54	6/16/2022 15:25	29.78
6/17/2022 15:09	83.44	6/16/2022 14:26	1.00	6/16/2022 14:56	10.32	6/16/2022 13:43	0.50	6/16/2022 15:26	29.78
6/17/2022 15:10	83.42	6/16/2022 14:27	0.83	6/16/2022 14:57	10.34	6/16/2022 13:44	0.47	6/16/2022 15:27	29.74
6/17/2022 15:11	83.40	6/16/2022 14:28	0.64	6/16/2022 14:58	10.31	6/16/2022 13:45	0.49	6/16/2022 15:28	29.72
6/17/2022 15:12	83.39	6/16/2022 14:29	0.46	6/16/2022 14:59	10.31	6/16/2022 13:46	0.50	6/16/2022 15:29	29.72
6/17/2022 15:13	83.38	6/16/2022 14:30	0.31	6/16/2022 15:00	10.34	6/16/2022 13:47	0.57	6/16/2022 15:30	29.70
6/17/2022 15:14	83.41	6/16/2022 14:31	0.16	6/16/2022 15:01	10.30	6/16/2022 13:48	0.55	6/16/2022 15:31	29.71
6/17/2022 15:15	83.39	6/16/2022 14:32	0.08	6/16/2022 15:02	10.26	6/16/2022 13:49	0.56	6/16/2022 15:32	29.67
6/17/2022 15:16	83.38	6/16/2022 14:33	0.03	6/16/2022 15:03	10.26	6/16/2022 13:50	0.55	6/16/2022 15:33	29.66
6/17/2022 15:17	86.65	6/16/2022 14:34	-0.06	6/16/2022 15:04	10.24	6/16/2022 13:51	0.58	6/16/2022 15:34	29.65
6/17/2022 15:18	89.73	6/16/2022 14:35	-0.01	6/16/2022 15:05	10.24	6/16/2022 13:52	0.53	6/16/2022 15:35	29.68
6/17/2022 15:19	91.68	6/16/2022 14:36	-0.03	6/16/2022 15:06	10.24	6/16/2022 13:53	0.52	6/16/2022 15:36	29.68
6/17/2022 15:20	92.86	6/16/2022 14:37	-0.05	6/16/2022 15:07	10.25	6/16/2022 13:54	0.50	6/16/2022 15:37	29.65
6/17/2022 15:21	93.04	6/16/2022 14:38	-0.03	6/16/2022 15:08	10.21	6/16/2022 13:55	0.48	6/16/2022 15:38	29.66
6/17/2022 15:22	90.01	6/16/2022 14:39	-0.07	6/16/2022 15:09	10.18	6/16/2022 13:56	0.48	6/16/2022 15:39	29.64
6/17/2022 15:23	88.10	6/16/2022 14:40	-0.04	6/16/2022 15:10	10.20	6/16/2022 13:57	0.49	6/16/2022 15:40	29.62
6/17/2022 15:24	86.90	6/16/2022 14:41	4.39	6/16/2022 15:11	10.19	6/16/2022 13:58	0.52	6/16/2022 15:41	29.60
6/17/2022 15:25	86.14	6/16/2022 14:42	6.93	6/16/2022 15:12	10.24	6/16/2022 13:59	0.53	6/16/2022 15:42	29.60
6/17/2022 15:26	85.59	6/16/2022 14:43	5.70	6/16/2022 15:13	10.22	6/16/2022 14:00	0.60	6/16/2022 15:43	29.61
6/17/2022 15:27	85.24	6/16/2022 14:44	4.71	6/16/2022 15:14	10.20	6/16/2022 14:01	0.53	6/16/2022 15:44	29.61
6/17/2022 15:28	84.97	6/16/2022 14:45	3.93	6/16/2022 15:15	10.24	6/16/2022 14:02	0.55	6/16/2022 15:45	29.59
6/17/2022 15:29	84.84	6/16/2022 14:46	3.25	6/16/2022 15:16	10.24	6/16/2022 14:03	0.55	6/16/2022 15:46	29.56
6/17/2022 15:30	88.22	6/16/2022 14:47	2.70	6/16/2022 15:17	10.21	6/16/2022 14:04	0.54	6/16/2022 15:47	29.61
6/17/2022 15:31	91.11	6/16/2022 14:48	2.23	6/16/2022 15:18	10.24	6/16/2022 14:05	0.50	6/16/2022 15:48	29.59
6/17/2022 15:32	92.86	6/16/2022 14:49	1.83	6/16/2022 15:19	10.19	6/16/2022 14:06	0.49	6/16/2022 15:49	31.56
6/17/2022 15:33	93.96	6/16/2022 14:50	1.50	6/16/2022 15:20	10.25	6/16/2022 14:07	0.48	6/16/2022 15:50	30.39
6/17/2022 15:34	91.28	6/16/2022 14:51	1.28	6/16/2022 15:21	10.21	6/16/2022 14:08	0.52	6/16/2022 15:51	29.85
6/17/2022 15:35	89.14	6/16/2022 14:52	0.98	6/16/2022 15:22	10.19	6/16/2022 14:09	0.51	6/16/2022 15:52	29.67
6/17/2022 15:36	87.82	6/16/2022 14:53	0.80	6/16/2022 15:23	10.20	6/16/2022 14:10	0.51	6/16/2022 15:53	29.61
6/17/2022 15:37	86.94	6/16/2022 14:54	0.59	6/16/2022 15:24	10.20	6/16/2022 14:11	0.54	6/16/2022 15:54	31.44
6/17/2022 15:38	86.31	6/16/2022 14:55	0.45	6/16/2022 15:25	10.18	6/16/2022 14:12	0.55	6/16/2022 15:55	30.34
6/17/2022 15:39	85.92	6/16/2022 14:56	0.30	6/16/2022 15:26	10.15	6/16/2022 14:13	0.48	6/16/2022 15:56	29.84
6/17/2022 15:40	85.63	6/16/2022 14:57	0.19	6/16/2022 15:27	10.17	6/16/2022 14:14	0.54	6/16/2022 15:57	29.66
6/17/2022 15:41	85.43	6/16/2022 14:58	0.05	6/16/2022 15:28	10.18	6/16/2022 14:15	0.57	6/16/2022 15:58	29.57
6/17/2022 15:42	85.29	6/16/2022 14:59	0.00	6/16/2022 15:29	10.11	6/16/2022 14:16	0.57	6/16/2022 15:59	29.56
6/17/2022 15:43	85.16	6/16/2022 15:00	-0.05	6/16/2022 15:30	10.14	6/16/2022 14:17	0.57	6/16/2022 16:00	29.56
6/17/2022 15:44	85.05	6/16/2022 15:01	-0.05	6/16/2022 15:31	10.15	6/16/2022 14:18	0.60	6/16/2022 16:01	29.59
6/17/2022 15:45	84.96	6/16/2022 15:02	-0.06	6/16/2022 15:32	10.12	6/16/2022 14:19	0.58	6/16/2022 16:02	29.60
6/17/2022 15:46	84.90	6/16/2022 15:03	-0.06	6/16/2022 15:33	10.10	6/16/2022 14:20	0.59	6/16/2022 16:03	29.70
6/17/2022 15:47	84.85	6/16/2022 15:04	-0.05	6/16/2022 15:34	10.10	6/16/2022 14:21	0.62	6/16/2022 16:04	29.75
6/17/2022 15:48	84.78	6/16/2022 15:05	-0.04	6/16/2022 15:35	10.07	6/16/2022 14:22	0.56	6/16/2022 16:05	29.79
6/17/2022 15:49	84.73	6/16/2022 15:06	-0.04	6/16/2022 15:36	10.15	6/16/2022 14:23	0.60	6/16/2022 16:06	29.86
6/17/2022 15:50	84.68	6/16/2022 15:07	-0.06	6/16/2022 15:37	10.09	6/16/2022 14:24	0.60	6/16/2022 16:07	29.93
6/17/2022 15:51	84.64	6/16/2022 15:08	-0.03	6/16/2022 15:38	10.17	6/16/2022 14:25	0.57	6/16/2022 16:08	29.97
6/17/2022 15:52	84.57	6/16/2022 15:09	-0.08	6/16/2022 15:39	10.15	6/16/2022 14:26	0.54	6/16/2022 16:09	32.23
6/17/2022 15:53	84.57	6/16/2022 15:10	-0.06	6/16/2022 15:40	10.19	6/16/2022 14:27	0.52	6/16/2022 16:10	31.03
6/17/2022 15:54	84.53	6/16/2022 15:11	-0.04	6/16/2022 15:41	10.18	6/16/2022 14:28	0.54	6/16/2022 16:11	30.38
6/17/2022 15:55	84.47	6/16/2022 15:12	-0.05	6/16/2022 15:42	10.15	6/16/2022 14:29	0.47	6/16/2022 16:12	30.22
6/17/2022 15:56	84.47	6/16/2022 15:13	-0.05	6/16/2022 15:43	10.14	6/16/2022 14:30	0.48	6/16/2022 16:13	30.21
6/17/2022 15:57	84.43	6/16/2022 15:14	-0.05	6/16/2022 15:44	10.16	6/16/2022 14:31	0.49	6/16/2022 16:14	30.15
6/17/2022 15:58	84.44	6/16/2022 15:15	-0.08	6/16/2022 15:45	10.12	6/16/2022 14:32	0.50	6/16/2022 16:15	30.17
6/17/2022 15:59	84.38	6/16/2022 15:16	-0.01	6/16/2022 15:46	10.17	6/16/2022 14:33	0.53	6/16/2022 16:16	30.13
6/17/2022 16:00	84.42	6/16/2022 15:17	-0.07	6/16/2022 15:47	10.14	6/16/2022 14:34	0.59	6/16/2022 16:17	30.16
6/17/2022 16:01	84.37	6/16/2022 15:18	1.34	6/16/2022 15:48	10.11	6/16/2022 14:35	0.60	6/16/2022 16:18	30.11
6/17/2022 16:02	84.34	6/16/2022 15:19	6.91	6/16/2022 15:49	10.15	6/16/2022 14:36	0.59	6/16/2022 16:19	30.07
6/17/2022 16:03	84.33	6/16/2022 15:20	6.32	6/16/2022 15:50	10.15	6/16/2022 14:37	0.62	6/16/2022 16:20	31.15
6/17/2022 16:04	84.32	6/16/2022 15:21	5.25	6/16/2022 15:51	10.16	6/16/2022 14:38	0.55	6/16/2022 16:21	31.41
6/17/2022 16:05	84.28	6/16/2022 15:22	4.35	6/16/2022 15:52	10.11	6/16/2022 14:39	0.55	6/16/2022 16:22	30.57
6/17/2022 16:06	84.26	6/16/2022 15:23	3.61	6/16/2022 15:53	10.59	6/16/2022 14:40	0.49	6/16/2022 16:23	30.18
6/17/2022 16:07	84.28	6/16/2022 15:24	2.94	6/16/2022 15:54	14.12	6/16/2022 14:41	0.51	6/16/2022 16:24	30.04
6/17/2022 16:08	84.27	6/16/2022 15:25	2.46	6/16/2022 15:55	13.58	6/16/2022 14:42	0.53	6/16/2022 16:25	29.98
6/17/2022 16:09	84.24	6/16/2022 15:26	2.05	6/16/2022 15:56	13.13	6/16/2022 14:43	0.50	6/16/2022 16:26	29.94
6/17/2022 16:10	84.21	6/16/2022 15:27	1.68	6/16/2022 15:57	12.75	6/16/2022 14:44	0.56	6/16/2022 16:27	29.91
6/17/2022 16:11	84.20	6/16/2022 15:28	1.37	6/16/2022 15:58	12.46	6/16/2022 14:45	0.54	6/16/2022 16:28	29.89
6/17/2022 16:12	84.17	6/16/2022 15:29	1.10	6/16/2022 15:59	12.21	6/16/2022 14:46	0.52	6/16/2022 16:29	29.88
6/17/2022 16:13	84.16	6/16/2022 15:30	0.88	6/16/2022 16:00	11.99	6/16/2022 14:47	0.55	6/16/2022 16:30	29.81
6/17/2022 16:14	84.16	6/16/2022 15:31	0.65	6/16/2022 16:01	11.80	6/16/2022 14:48	0.52	6/16/2022 16:31	29.82
6/17/2022 16:15	84.15	6/16/2022 15:32	0.54	6/16/2022 16:02	11.63	6/16/2022 14:49	0.53	6/16/2022 16:32	29.76
6/17/2022 16:16	84.13	6/16/2022 15:33	0.32	6/16/2022 16:03	11.51	6/16/2022 14:50	0.51	6/16/2022 16:33	29.78
6/17/2022 16:17	84.13	6/16/2022 15:34	0.22	6/16/2022 16:04	11.32	6/16/2022 14:51	0.50	6/16/2022 16:34	29.77
6/17/2022 16:18	84.13	6/16/2022 15:35	0.12	6/16/2022 16:05	11.25	6/16/2022 14:52	0.53	6/16/2022 16:35	29.73
6/17/2022 16:19	84.12	6/16/2022 15:36	0.00	6/16/2022 16:06	11.16	6/16/2022 14:53	0.48	6/16/2022 16:36	29.72
6/17/2022 16:20	84.11	6/16/2022 15:37	-0.05	6/16/2022 16:07	11.04	6/16/2022 14:54	0.52	6/16/2022 16:37	29.72
6/17/2022 16:21	84.08	6/16/2022 15:38	-0.02	6/16/2022 16:08	10.98	6/16/2022 14:55	0.58	6/16/2022 16:38	29.72

6/17/2022 16:22	84.08	6/16/2022 15:39	-0.04	6/16/2022 16:09	10.87	6/16/2022 14:56	0.60	6/16/2022 16:39	29.67
6/17/2022 16:23	84.06	6/16/2022 15:40	0.00	6/16/2022 16:10	10.83	6/16/2022 14:57	0.63	6/16/2022 16:40	29.69
6/17/2022 16:24	84.06	6/16/2022 15:41	-0.07	6/16/2022 16:11	10.79	6/16/2022 14:58	0.61	6/16/2022 16:41	29.66
6/17/2022 16:25	84.04	6/16/2022 15:42	-0.07	6/16/2022 16:12	10.69	6/16/2022 14:59	0.57	6/16/2022 16:42	29.70
6/17/2022 16:26	84.07	6/16/2022 15:43	-0.07	6/16/2022 16:13	10.63	6/16/2022 15:00	0.56	6/16/2022 16:43	29.63
6/17/2022 16:27	84.04	6/16/2022 15:44	-0.05	6/16/2022 16:14	10.62	6/16/2022 15:01	0.53	6/16/2022 16:44	29.60
6/17/2022 16:28	84.01	6/16/2022 15:45	-0.08	6/16/2022 16:15	10.58	6/16/2022 15:02	0.53	6/16/2022 16:45	29.65
6/17/2022 16:29	84.03	6/16/2022 15:46	-0.04	6/16/2022 16:16	10.51	6/16/2022 15:03	0.54	6/16/2022 16:46	29.60
6/17/2022 16:30	84.03	6/16/2022 15:47	-0.06	6/16/2022 16:17	10.47	6/16/2022 15:04	0.54	6/16/2022 16:47	29.62
6/17/2022 16:31	84.04	6/16/2022 15:48	-0.08	6/16/2022 16:18	10.47	6/16/2022 15:05	0.56	6/16/2022 16:48	30.59
6/17/2022 16:32	84.02	6/16/2022 15:49	-0.05	6/16/2022 16:19	10.42	6/16/2022 15:06	0.63	6/16/2022 16:49	31.35
6/17/2022 16:33	84.00	6/16/2022 15:50	-0.04	6/16/2022 16:20	10.37	6/16/2022 15:07	0.60	6/16/2022 16:50	32.31
6/17/2022 16:34	83.99	6/16/2022 15:51	-0.04	6/16/2022 16:21	10.30	6/16/2022 15:08	0.63	6/16/2022 16:51	33.24
6/17/2022 16:35	83.98	6/16/2022 15:52	-0.04	6/16/2022 16:22	10.32	6/16/2022 15:09	0.65	6/16/2022 16:52	33.98
6/17/2022 16:36	83.99	6/16/2022 15:53	-0.04	6/16/2022 16:23	10.31	6/16/2022 15:10	0.55	6/16/2022 16:53	34.75
6/17/2022 16:37	83.98	6/16/2022 15:54	-0.07	6/16/2022 16:24	10.28	6/16/2022 15:11	0.55	6/16/2022 16:54	34.85
6/17/2022 16:38	83.99	6/16/2022 15:55	-0.08	6/16/2022 16:25	10.28	6/16/2022 15:12	0.50	6/16/2022 16:55	34.40
6/17/2022 16:39	83.98	6/16/2022 15:56	2.33	6/16/2022 16:26	10.25	6/16/2022 15:13	0.52	6/16/2022 16:56	33.88
6/17/2022 16:40	83.95	6/16/2022 15:57	7.38	6/16/2022 16:27	10.30	6/16/2022 15:14	0.48	6/16/2022 16:57	33.38
6/17/2022 16:41	83.97	6/16/2022 15:58	6.07	6/16/2022 16:28	10.28	6/16/2022 15:15	0.53	6/16/2022 16:58	33.72
6/17/2022 16:42	83.96	6/16/2022 15:59	5.03	6/16/2022 16:29	10.26	6/16/2022 15:16	0.57	6/16/2022 16:59	34.18
6/17/2022 16:43	83.96	6/16/2022 16:00	4.17	6/16/2022 16:30	10.27	6/16/2022 15:17	0.62	6/16/2022 17:00	32.01
6/17/2022 16:44	83.87	6/16/2022 16:01	3.45	6/16/2022 16:31	10.26	6/16/2022 15:18	0.65	6/16/2022 17:01	30.78
6/17/2022 16:45	83.92	6/16/2022 16:02	2.84	6/16/2022 16:32	10.24	6/16/2022 15:19	0.60	6/16/2022 17:02	30.14
6/17/2022 16:46	83.92	6/16/2022 16:03	2.37	6/16/2022 16:33	10.23	6/16/2022 15:20	0.62	6/16/2022 17:03	29.93
6/17/2022 16:47	83.92	6/16/2022 16:04	1.91	6/16/2022 16:34	10.25	6/16/2022 15:21	0.60	6/16/2022 17:04	29.83
6/17/2022 16:48	83.90	6/16/2022 16:05	1.60	6/16/2022 16:35	10.22	6/16/2022 15:22	0.63	6/16/2022 17:05	29.77
6/17/2022 16:49	83.89	6/16/2022 16:06	1.33	6/16/2022 16:36	10.20	6/16/2022 15:23	0.67	6/16/2022 17:06	29.75
6/17/2022 16:50	83.89	6/16/2022 16:07	1.06	6/16/2022 16:37	10.20	6/16/2022 15:24	0.62	6/16/2022 17:07	31.51
6/17/2022 16:51	83.91	6/16/2022 16:08	0.85	6/16/2022 16:38	10.20	6/16/2022 15:25	0.61	6/16/2022 17:08	32.57
6/17/2022 16:52	83.89	6/16/2022 16:09	0.59	6/16/2022 16:39	10.15	6/16/2022 15:26	0.56	6/16/2022 17:09	33.29
6/17/2022 16:53	83.88	6/16/2022 16:10	0.45	6/16/2022 16:40	10.15	6/16/2022 15:27	0.56	6/16/2022 17:10	32.95
6/17/2022 16:54	83.90	6/16/2022 16:11	0.28	6/16/2022 16:41	10.17	6/16/2022 15:28	0.57	6/16/2022 17:11	33.47
6/17/2022 16:55	83.89	6/16/2022 16:12	0.18	6/16/2022 16:42	10.11	6/16/2022 15:29	0.54	6/16/2022 17:12	34.01
6/17/2022 16:56	83.90	6/16/2022 16:13	0.07	6/16/2022 16:43	10.15	6/16/2022 15:30	0.51	6/16/2022 17:13	34.56
6/17/2022 16:57	83.88	6/16/2022 16:14	0.04	6/16/2022 16:44	10.17	6/16/2022 15:31	0.50	6/16/2022 17:14	34.69
6/17/2022 16:58	83.84	6/16/2022 16:15	0.06	6/16/2022 16:45	10.10	6/16/2022 15:32	0.52	6/16/2022 17:15	32.57
6/17/2022 16:59	83.85	6/16/2022 16:16	0.05	6/16/2022 16:46	10.08	6/16/2022 15:33	0.55	6/16/2022 17:16	31.05
6/17/2022 17:00	83.80	6/16/2022 16:17	-0.07	6/16/2022 16:47	10.10	6/16/2022 15:34	0.57	6/16/2022 17:17	30.29
6/17/2022 17:01	83.85	6/16/2022 16:18	-0.04	6/16/2022 16:48	10.11	6/16/2022 15:35	0.57	6/16/2022 17:18	29.98
6/17/2022 17:02	83.84	6/16/2022 16:19	-0.03	6/16/2022 16:49	10.05	6/16/2022 15:36	0.62	6/16/2022 17:19	32.05
6/17/2022 17:03	83.85	6/16/2022 16:20	-0.04	6/16/2022 16:50	10.13	6/16/2022 15:37	0.66	6/16/2022 17:20	30.74
6/17/2022 17:04	83.85	6/16/2022 16:21	-0.04	6/16/2022 16:51	10.11	6/16/2022 15:38	0.65	6/16/2022 17:21	32.33
6/17/2022 17:05	83.81	6/16/2022 16:22	-0.05	6/16/2022 16:52	10.13	6/16/2022 15:39	0.59	6/16/2022 17:22	30.86
6/17/2022 17:06	83.83	6/16/2022 16:23	-0.01	6/16/2022 16:53	10.13	6/16/2022 15:40	0.59	6/16/2022 17:23	32.34
6/17/2022 17:07	83.84	6/16/2022 16:24	-0.03	6/16/2022 16:54	10.15	6/16/2022 15:41	0.54	6/16/2022 17:24	30.93
6/17/2022 17:08	83.83	6/16/2022 16:25	-0.07	6/16/2022 16:55	10.11	6/16/2022 15:42	0.54	6/16/2022 17:25	30.22
6/17/2022 17:09	83.84	6/16/2022 16:26	-0.06	6/16/2022 16:56	10.16	6/16/2022 15:43	0.51	6/16/2022 17:26	32.32
6/17/2022 17:10	83.80	6/16/2022 16:27	-0.07	6/16/2022 16:57	10.13	6/16/2022 15:44	0.53	6/16/2022 17:27	30.92
6/17/2022 17:11	83.82	6/16/2022 16:28	-0.04	6/16/2022 16:58	10.19	6/16/2022 15:45	0.58	6/16/2022 17:28	30.19
6/17/2022 17:12	83.82	6/16/2022 16:29	-0.02	6/16/2022 16:59	10.13	6/16/2022 15:46	0.66	6/16/2022 17:29	29.90
6/17/2022 17:13	83.79	6/16/2022 16:30	-0.06	6/16/2022 17:00	10.13	6/16/2022 15:47	0.67	6/16/2022 17:30	29.79
6/17/2022 17:14	83.80	6/16/2022 16:31	-0.06	6/16/2022 17:01	10.12	6/16/2022 15:48	0.66	6/16/2022 17:31	29.76
6/17/2022 17:15	83.78	6/16/2022 16:32	-0.05	6/16/2022 17:02	10.12	6/16/2022 15:49	0.61	6/16/2022 17:32	31.93
6/17/2022 17:16	83.80	6/16/2022 16:33	-0.06	6/16/2022 17:03	10.11	6/16/2022 15:50	0.58	6/16/2022 17:33	30.61
6/17/2022 17:17	83.77	6/16/2022 16:34	4.61	6/16/2022 17:04	10.12	6/16/2022 15:51	0.58	6/16/2022 17:34	30.03
6/17/2022 17:18	83.80	6/16/2022 16:35	6.92	6/16/2022 17:05	10.13	6/16/2022 15:52	0.55	6/16/2022 17:35	29.81
6/17/2022 17:19	83.80	6/16/2022 16:36	5.65	6/16/2022 17:06	10.12	6/16/2022 15:53	0.54	6/16/2022 17:36	29.70
6/17/2022 17:20	83.83	6/16/2022 16:37	4.71	6/16/2022 17:07	10.14	6/16/2022 15:54	0.53	6/16/2022 17:37	29.67
6/17/2022 17:21	83.81	6/16/2022 16:38	3.90	6/16/2022 17:08	10.17	6/16/2022 15:55	0.59	6/16/2022 17:38	29.62
6/17/2022 17:22	83.75	6/16/2022 16:39	3.24	6/16/2022 17:09	10.16	6/16/2022 15:56	0.62	6/16/2022 17:39	29.62
6/17/2022 17:23	83.77	6/16/2022 16:40	2.67	6/16/2022 17:10	10.15	6/16/2022 15:57	0.65	6/16/2022 17:40	29.61
6/17/2022 17:24	83.76	6/16/2022 16:41	2.19	6/16/2022 17:11	10.16	6/16/2022 15:58	0.65	6/16/2022 17:41	29.59
6/17/2022 17:25	83.78	6/16/2022 16:42	1.82	6/16/2022 17:12	10.15	6/16/2022 15:59	0.62	6/16/2022 17:42	29.63
6/17/2022 17:26	83.74	6/16/2022 16:43	1.49	6/16/2022 17:13	10.14	6/16/2022 16:00	0.66	6/16/2022 17:43	29.57
6/17/2022 17:27	83.74	6/16/2022 16:44	1.22	6/16/2022 17:14	10.17	6/16/2022 16:01	0.68	6/16/2022 17:44	29.59
6/17/2022 17:28	83.74	6/16/2022 16:45	0.95	6/16/2022 17:15	10.15	6/16/2022 16:02	0.65	6/16/2022 17:45	29.55
6/17/2022 17:29	83.72	6/16/2022 16:46	0.72	6/16/2022 17:16	10.14	6/16/2022 16:03	0.67	6/16/2022 17:46	29.54
6/17/2022 17:30	83.75	6/16/2022 16:47	0.57	6/16/2022 17:17	10.17	6/16/2022 16:04	0.64	6/16/2022 17:47	29.57
6/17/2022 17:31	83.74	6/16/2022 16:48	0.38	6/16/2022 17:18	10.14	6/16/2022 16:05	0.62	6/16/2022 17:48	29.53
6/17/2022 17:32	83.70	6/16/2022 16:49	0.25	6/16/2022 17:19	14.29	6/16/2022 16:06	0.60	6/16/2022 17:49	31.38
6/17/2022 17:33	83.75	6/16/2022 16:50	0.16	6/16/2022 17:20	14.00	6/16/2022 16:07	0.56	6/16/2022 17:50	30.28
6/17/2022 17:34	86.90	6/16/2022 16:51	0.05	6/16/2022 17:21	13.52	6/16/2022 16:08	0.57	6/16/2022 17:51	29.76
6/17/2022 17:35	90.02	6/16/2022 16:52	-0.04	6/16/2022 17:22	13.18	6/16/2022 16:09	0.55	6/16/2022 17:52	29.64
6/17/2022 17:36	91.92	6/16/2022 16:53	-0.03	6/16/2022 17:23	12.82	6/16/2022 16:10	0.58	6/16/2022 17:53	29.54
6/17/2022 17:37	91.63	6/16/2022 16:54	0.01	6/16/2022 17:24	12.50	6/16/2022 16:11	0.57	6/16/2022 17:54	29.49
6/17/2022 17:38	89.09	6/16/2022 16:55	-0.02	6/16/2022 17:25	12.29	6/16/2022 16:12	0.57	6/16/2022 17:55	29.55
6/17/2022 17:39	87.49	6/16/2022 16:56	-0.06	6/16/2022 17:26	12.03	6/16/2022 16:13	0.57	6/16/2022 17:56	29.47
6/17/2022 17:40	86.50	6/16/2022 16:57	-0.05	6/16/2022 17:27	11.86	6/16/2022 16:14	6.15	6/16/2022 17:57	29.49
6/17/2022 17:41	85.88	6/16/2022 16:58	-0.08	6/16/2022 17:28	11.70	6/16/2022 16:15	6.74	6/16/2022 17:58	29.47
6/17/2022 17:42	85.44	6/16/2022 16:59	-0.04	6/16/2022 17:29	11.52	6/16/2022 16:16	3.83	6/16/2022 17:59	29.46
6/17/2022 17:43	85.14	6/16/2022 17:00	-0.04	6/16/2022 17:30	11.36	6/16/2022 16:17	1.63	6/16/2022 18:00	29.46
6/17/2022 17:44	84.95	6/16/2022 17:01	-0.05	6/16/2022 17:31	11.23	6/16/2022 16:18	0.68	6/16/2022 18:01	29.46
6/17/2022 17:45	84.82	6/16/2022 17:02	-0.05	6/16/2022 17:32	11.16	6/16/2022 16:19	0.66	6/16/2022 18:02	29.44
6/17/2022 17:46	84.68	6/16/2022 17:03	-0.05	6/16/2022 17:33	11.06	6/16/2022 16:20	0.61	6/16/2022 18:03	29.42
6/17/2022 17:47	84.64	6/16/2022 17:04	-0.05	6/16/2022 17:34	11.01	6/16/2022 16:21	0.58	6/16/2022 18:04	29.43
6/17/2022 17:48	84.53	6/16/2022 17:05	-0.05	6/16/2022 17:35	10.89	6/16/2022 16:22	0.62	6/16/2022 18:05	29.41
6/17/2022 17:49	84.47	6/16/2022 17:06	-0.05	6/16/2022 17:36	10.82	6/16/2022 16:23	0.57	6/16/2022 18:06	29.40

6/17/2022 17:50	84.47	6/16/2022 17:07	-0.01	6/16/2022 17:37	10.71	6/16/2022 16:24	0.57	6/16/2022 18:07	29.41
6/17/2022 17:51	84.41	6/16/2022 17:08	-0.05	6/16/2022 17:38	10.65	6/16/2022 16:25	0.53	6/16/2022 18:08	29.44
6/17/2022 17:52	84.37	6/16/2022 17:09	-0.04	6/16/2022 17:39	10.63	6/16/2022 16:26	0.55	6/16/2022 18:09	29.37
6/17/2022 17:53	84.33	6/16/2022 17:10	-0.04	6/16/2022 17:40	10.56	6/16/2022 16:27	0.61	6/16/2022 18:10	29.40
6/17/2022 17:54	84.31	6/16/2022 17:11	3.15	6/16/2022 17:41	10.52	6/16/2022 16:28	0.63	6/16/2022 18:11	29.41
6/17/2022 17:55	84.26	6/16/2022 17:12	7.89	6/16/2022 17:42	13.45	6/16/2022 16:29	0.68	6/16/2022 18:12	29.39
6/17/2022 17:56	84.23	6/16/2022 17:13	6.43	6/16/2022 17:43	15.76	6/16/2022 16:30	0.68	6/16/2022 18:13	29.42
6/17/2022 17:57	84.22	6/16/2022 17:14	5.35	6/16/2022 17:44	15.11	6/16/2022 16:31	0.68	6/16/2022 18:14	29.36
6/17/2022 17:58	84.24	6/16/2022 17:15	4.46	6/16/2022 17:45	14.55	6/16/2022 16:32	0.65	6/16/2022 18:15	29.37
6/17/2022 17:59	84.20	6/16/2022 17:16	3.70	6/16/2022 17:46	14.05	6/16/2022 16:33	0.60	6/16/2022 18:16	29.38
6/17/2022 18:00	84.20	6/16/2022 17:17	3.02	6/16/2022 17:47	13.61	6/16/2022 16:34	0.62	6/16/2022 18:17	29.35
6/17/2022 18:01	84.14	6/16/2022 17:18	2.52	6/16/2022 17:48	13.26	6/16/2022 16:35	0.60	6/16/2022 18:18	29.36
6/17/2022 18:02	84.13	6/16/2022 17:19	2.10	6/16/2022 17:49	12.92	6/16/2022 16:36	0.63	6/16/2022 18:19	29.35
6/17/2022 18:03	84.12	6/16/2022 17:20	1.72	6/16/2022 17:50	12.64	6/16/2022 16:37	0.65	6/16/2022 18:20	29.31
6/17/2022 18:04	84.10	6/16/2022 17:21	1.40	6/16/2022 17:51	12.43	6/16/2022 16:38	0.65	6/16/2022 18:21	29.41
6/17/2022 18:05	84.12	6/16/2022 17:22	1.13	6/16/2022 17:52	12.18	6/16/2022 16:39	0.65	6/16/2022 18:22	29.40
6/17/2022 18:06	84.10	6/16/2022 17:23	0.93	6/16/2022 17:53	11.99	6/16/2022 16:40	0.65	6/16/2022 18:23	29.40
6/17/2022 18:07	84.09	6/16/2022 17:24	0.68	6/16/2022 17:54	11.80	6/16/2022 16:41	0.61	6/16/2022 18:24	29.38
6/17/2022 18:08	84.06	6/16/2022 17:25	0.51	6/16/2022 17:55	11.66	6/16/2022 16:42	0.62	6/16/2022 18:25	29.37
6/17/2022 18:09	84.10	6/16/2022 17:26	0.37	6/16/2022 17:56	11.54	6/16/2022 16:43	0.58	6/16/2022 18:26	29.39
6/17/2022 18:10	84.06	6/16/2022 17:27	0.21	6/16/2022 17:57	11.40	6/16/2022 16:44	0.58	6/16/2022 18:27	29.36
6/17/2022 18:11	84.05	6/16/2022 17:28	0.09	6/16/2022 17:58	11.29	6/16/2022 16:45	0.61	6/16/2022 18:28	29.35
6/17/2022 18:12	84.02	6/16/2022 17:29	0.02	6/16/2022 17:59	11.17	6/16/2022 16:46	0.58	6/16/2022 18:29	29.36
6/17/2022 18:13	84.01	6/16/2022 17:30	-0.07	6/16/2022 18:00	11.09	6/16/2022 16:47	0.62	6/16/2022 18:30	29.34
6/17/2022 18:14	84.03	6/16/2022 17:31	-0.03	6/16/2022 18:01	10.99	6/16/2022 16:48	0.63	6/16/2022 18:31	29.32
6/17/2022 18:15	84.03	6/16/2022 17:32	-0.04	6/16/2022 18:02	10.92	6/16/2022 16:49	0.66	6/16/2022 18:32	29.33
6/17/2022 18:16	83.98	6/16/2022 17:33	-0.02	6/16/2022 18:03	10.86	6/16/2022 16:50	0.71	6/16/2022 18:33	29.29
6/17/2022 18:17	84.01	6/16/2022 17:34	-0.04	6/16/2022 18:04	10.78	6/16/2022 16:51	0.69	6/16/2022 18:34	29.32
6/17/2022 18:18	83.95	6/16/2022 17:35	-0.04	6/16/2022 18:05	10.72	6/16/2022 16:52	0.67	6/16/2022 18:35	29.30
6/17/2022 18:19	83.99	6/16/2022 17:36	0.00	6/16/2022 18:06	10.69	6/16/2022 16:53	0.66	6/16/2022 18:36	29.26
6/17/2022 18:20	84.02	6/16/2022 17:37	-0.04	6/16/2022 18:07	10.62	6/16/2022 16:54	0.60	6/16/2022 18:37	29.28
6/17/2022 18:21	83.98	6/16/2022 17:38	-0.05	6/16/2022 18:08	10.57	6/16/2022 16:55	0.64	6/16/2022 18:38	29.27
6/17/2022 18:22	83.95	6/16/2022 17:39	-0.08	6/16/2022 18:09	10.51	6/16/2022 16:56	0.58	6/16/2022 18:39	29.27
6/17/2022 18:23	83.93	6/16/2022 17:40	-0.03	6/16/2022 18:10	10.53	6/16/2022 16:57	0.62	6/16/2022 18:40	29.28
6/17/2022 18:24	83.92	6/16/2022 17:41	-0.11	6/16/2022 18:11	10.47	6/16/2022 16:58	0.67	6/16/2022 18:41	29.30
6/17/2022 18:25	83.93	6/16/2022 17:42	-0.06	6/16/2022 18:12	10.50	6/16/2022 16:59	0.65	6/16/2022 18:42	29.29
6/17/2022 18:26	83.92	6/16/2022 17:43	-0.02	6/16/2022 18:13	10.45	6/16/2022 17:00	0.71	6/16/2022 18:43	29.29
6/17/2022 18:27	83.92	6/16/2022 17:44	-0.02	6/16/2022 18:14	10.47	6/16/2022 17:01	0.71	6/16/2022 18:44	29.26
6/17/2022 18:28	83.98	6/16/2022 17:45	-0.08	6/16/2022 18:15	10.48	6/16/2022 17:02	0.68	6/16/2022 18:45	29.25
6/17/2022 18:29	83.94	6/16/2022 17:46	5.19	6/16/2022 18:16	10.41	6/16/2022 17:03	0.65	6/16/2022 18:46	29.29
6/17/2022 18:30	83.93	6/16/2022 17:47	6.69	6/16/2022 18:17	10.39	6/16/2022 17:04	0.62	6/16/2022 18:47	29.26
6/17/2022 18:31	83.92	6/16/2022 17:48	5.49	6/16/2022 18:18	10.39	6/16/2022 17:05	0.59	6/16/2022 18:48	29.24
6/17/2022 18:32	83.93	6/16/2022 17:49	4.55	6/16/2022 18:19	10.38	6/16/2022 17:06	0.57	6/16/2022 18:49	29.23
6/17/2022 18:33	83.89	6/16/2022 17:50	3.76	6/16/2022 18:20	10.38	6/16/2022 17:07	0.60	6/16/2022 18:50	29.24
6/17/2022 18:34	83.90	6/16/2022 17:51	3.15	6/16/2022 18:21	10.36	6/16/2022 17:08	0.65	6/16/2022 18:51	29.24
6/17/2022 18:35	83.89	6/16/2022 17:52	2.58	6/16/2022 18:22	10.34	6/16/2022 17:09	0.70	6/16/2022 18:52	29.26
6/17/2022 18:36	83.87	6/16/2022 17:53	2.11	6/16/2022 18:23	10.32	6/16/2022 17:10	0.69	6/16/2022 18:53	29.22
6/17/2022 18:37	83.89	6/16/2022 17:54	1.76	6/16/2022 18:24	10.31	6/16/2022 17:11	0.70	6/16/2022 18:54	29.23
6/17/2022 18:38	83.88	6/16/2022 17:55	1.43	6/16/2022 18:25	10.28	6/16/2022 17:12	0.68	6/16/2022 18:55	29.21
6/17/2022 18:39	83.88	6/16/2022 17:56	1.18	6/16/2022 18:26	10.28	6/16/2022 17:13	0.75	6/16/2022 18:56	29.22
6/17/2022 18:40	83.89	6/16/2022 17:57	0.89	6/16/2022 18:27	10.25	6/16/2022 17:14	0.73	6/16/2022 18:57	29.18
6/17/2022 18:41	83.87	6/16/2022 17:58	0.70	6/16/2022 18:28	10.22	6/16/2022 17:15	0.72	6/16/2022 18:58	29.21
6/17/2022 18:42	83.85	6/16/2022 17:59	0.52	6/16/2022 18:29	10.25	6/16/2022 17:16	0.73	6/16/2022 18:59	29.21
6/17/2022 18:43	83.88	6/16/2022 18:00	0.37	6/16/2022 18:30	10.22	6/16/2022 17:17	0.70	6/16/2022 19:00	29.20
6/17/2022 18:44	83.90	6/16/2022 18:01	0.20	6/16/2022 18:31	10.24	6/16/2022 17:18	0.72	6/16/2022 19:01	29.19
6/17/2022 18:45	83.86	6/16/2022 18:02	0.13	6/16/2022 18:32	10.22	6/16/2022 17:19	0.70	6/16/2022 19:02	29.23
6/17/2022 18:46	83.84	6/16/2022 18:03	0.00	6/16/2022 18:33	10.23	6/16/2022 17:20	0.72	6/16/2022 19:03	29.20
6/17/2022 18:47	83.85	6/16/2022 18:04	0.00	6/16/2022 18:34	10.25	6/16/2022 17:21	0.66	6/16/2022 19:04	29.16
6/17/2022 18:48	83.84	6/16/2022 18:05	-0.01	6/16/2022 18:35	10.25	6/16/2022 17:22	0.67	6/16/2022 19:05	29.18
6/17/2022 18:49	83.80	6/16/2022 18:06	-0.05	6/16/2022 18:36	10.28	6/16/2022 17:23	0.60	6/16/2022 19:06	29.17
6/17/2022 18:50	83.84	6/16/2022 18:07	0.02	6/16/2022 18:37	10.23	6/16/2022 17:24	0.64	6/16/2022 19:07	29.17
6/17/2022 18:51	83.85	6/16/2022 18:08	0.03	6/16/2022 18:38	10.20	6/16/2022 17:25	0.60	6/16/2022 19:08	29.22
6/17/2022 18:52	83.82	6/16/2022 18:09	-0.01	6/16/2022 18:39	14.10	6/16/2022 17:26	0.60	6/16/2022 19:09	29.18
6/17/2022 18:53	83.85	6/16/2022 18:10	-0.04	6/16/2022 18:40	14.70	6/16/2022 17:27	0.60	6/16/2022 19:10	29.18
6/17/2022 18:54	83.85	6/16/2022 18:11	-0.02	6/16/2022 18:41	14.16	6/16/2022 17:28	0.64	6/16/2022 19:11	29.21
6/17/2022 18:55	83.80	6/16/2022 18:12	0.00	6/16/2022 18:42	13.69	6/16/2022 17:29	0.66	6/16/2022 19:12	29.16
6/17/2022 18:56	83.84	6/16/2022 18:13	-0.04	6/16/2022 18:43	13.28	6/16/2022 17:30	0.69	6/16/2022 19:13	29.16
6/17/2022 18:57	83.83	6/16/2022 18:14	-0.06	6/16/2022 18:44	12.92	6/16/2022 17:31	0.73	6/16/2022 19:14	29.18
6/17/2022 18:58	83.80	6/16/2022 18:15	-0.02	6/16/2022 18:45	12.61	6/16/2022 17:32	0.72	6/16/2022 19:15	29.16
6/17/2022 18:59	83.82	6/16/2022 18:16	-0.02	6/16/2022 18:46	12.33	6/16/2022 17:33	0.67	6/16/2022 19:16	29.14
6/17/2022 19:00	83.77	6/16/2022 18:17	-0.07	6/16/2022 18:47	12.10	6/16/2022 17:34	0.65	6/16/2022 19:17	29.17
6/17/2022 19:01	83.78	6/16/2022 18:18	-0.01	6/16/2022 18:48	11.89	6/16/2022 17:35	0.64	6/16/2022 19:18	29.17
6/17/2022 19:02	83.82	6/16/2022 18:19	-0.06	6/16/2022 18:49	11.71	6/16/2022 17:36	0.60	6/16/2022 19:19	29.17
6/17/2022 19:03	87.43	6/16/2022 18:20	-0.09	6/16/2022 18:50	11.58	6/16/2022 17:37	0.61	6/16/2022 19:20	29.12
6/17/2022 19:04	90.25	6/16/2022 18:21	-0.04	6/16/2022 18:51	11.44	6/16/2022 17:38	0.60	6/16/2022 19:21	29.12
6/17/2022 19:05	91.31	6/16/2022 18:22	-0.03	6/16/2022 18:52	11.34	6/16/2022 17:39	0.63	6/16/2022 19:22	29.14
6/17/2022 19:06	88.66	6/16/2022 18:23	-0.05	6/16/2022 18:53	11.24	6/16/2022 17:40	0.71	6/16/2022 19:23	29.16
6/17/2022 19:07	87.14	6/16/2022 18:24	3.46	6/16/2022 18:54	11.16	6/16/2022 17:41	0.70	6/16/2022 19:24	29.17
6/17/2022 19:08	86.18	6/16/2022 18:25	7.12	6/16/2022 18:55	11.14	6/16/2022 17:42	0.72	6/16/2022 19:25	29.13
6/17/2022 19:09	85.61	6/16/2022 18:26	5.87	6/16/2022 18:56	11.03	6/16/2022 17:43	0.74	6/16/2022 19:26	29.13
6/17/2022 19:10	85.24	6/16/2022 18:27	4.86	6/16/2022 18:57	10.93	6/16/2022 17:44	0.71	6/16/2022 19:27	29.13
6/17/2022 19:11	85.00	6/16/2022 18:28	4.04	6/16/2022 18:58	10.92	6/16/2022 17:45	0.64	6/16/2022 19:28	29.18
6/17/2022 19:12	84.82	6/16/2022 18:29	3.36	6/16/2022 18:59	10.85	6/16/2022 17:46	0.61	6/16/2022 19:29	29.12
6/17/2022 19:13	84.68	6/16/2022 18:30	2.78	6/16/2022 19:00	10.78	6/16/2022 17:47	0.63	6/16/2022 19:30	29.11
6/17/2022 19:14	84.59	6/16/2022 18:31	2.33	6/16/2022 19:01	10.76	6/16/2022 17:48	0.65	6/16/2022 19:31	29.15
6/17/2022 19:15	84.51	6/16/2022 18:32	1.89	6/16/2022 19:02	10.69	6/16/2022 17:49	0.65	6/16/2022 19:32	29.12
6/17/2022 19:16	84.45	6/16/2022 18:33	1.56	6/16/2022 19:03	10.65	6/16/2022 17:50	0.65	6/16/2022 19:33	29.13
6/17/2022 19:17	84.40	6/16/2022 18:34	1.29	6/16/2022 19:04	10.62	6/16/2022 17:51	0.65	6/16/2022 19:34	29.17

6/17/2022 19:18	84.35	6/16/2022 18:35	1.04	6/16/2022 19:05	10.57	6/16/2022 17:52	0.64	6/16/2022 19:35	29.18
6/17/2022 19:19	84.33	6/16/2022 18:36	0.82	6/16/2022 19:06	10.53	6/16/2022 17:53	0.63	6/16/2022 19:36	29.18
6/17/2022 19:20	84.29	6/16/2022 18:37	0.59	6/16/2022 19:07	10.50	6/16/2022 17:54	0.65	6/16/2022 19:37	29.17
6/17/2022 19:21	84.23	6/16/2022 18:38	0.48	6/16/2022 19:08	10.45	6/16/2022 17:55	0.62	6/16/2022 19:38	29.15
6/17/2022 19:22	84.24	6/16/2022 18:39	0.27	6/16/2022 19:09	10.44	6/16/2022 17:56	0.58	6/16/2022 19:39	29.15
6/17/2022 19:23	84.22	6/16/2022 18:40	0.16	6/16/2022 19:10	10.42	6/16/2022 17:57	0.58	6/16/2022 19:40	29.15
6/17/2022 19:24	84.21	6/16/2022 18:41	0.07	6/16/2022 19:11	10.36	6/16/2022 17:58	0.65	6/16/2022 19:41	29.14
6/17/2022 19:25	84.18	6/16/2022 18:42	-0.05	6/16/2022 19:12	10.35	6/16/2022 17:59	0.68	6/16/2022 19:42	29.11
6/17/2022 19:26	84.15	6/16/2022 18:43	-0.04	6/16/2022 19:13	10.34	6/16/2022 18:00	0.70	6/16/2022 19:43	29.10
6/17/2022 19:27	84.13	6/16/2022 18:44	-0.03	6/16/2022 19:14	10.34	6/16/2022 18:01	0.70	6/16/2022 19:44	29.11
6/17/2022 19:28	84.13	6/16/2022 18:45	-0.03	6/16/2022 19:15	10.32	6/16/2022 18:02	0.73	6/16/2022 19:45	29.17
6/17/2022 19:29	84.13	6/16/2022 18:46	-0.06	6/16/2022 19:16	10.27	6/16/2022 18:03	0.75	6/16/2022 19:46	29.13
6/17/2022 19:30	84.10	6/16/2022 18:47	-0.04	6/16/2022 19:17	10.27	6/16/2022 18:04	0.67	6/16/2022 19:47	29.12
6/17/2022 19:31	84.07	6/16/2022 18:48	-0.01	6/16/2022 19:18	10.25	6/16/2022 18:05	2.21	6/16/2022 19:48	29.10
6/17/2022 19:32	84.09	6/16/2022 18:49	-0.05	6/16/2022 19:19	10.23	6/16/2022 18:06	8.69	6/16/2022 19:49	29.08
6/17/2022 19:33	84.10	6/16/2022 18:50	-0.07	6/16/2022 19:20	10.23	6/16/2022 18:07	5.81	6/16/2022 19:50	29.10
6/17/2022 19:34	84.05	6/16/2022 18:51	-0.01	6/16/2022 19:21	10.19	6/16/2022 18:08	3.08	6/16/2022 19:51	29.11
6/17/2022 19:35	84.07	6/16/2022 18:52	0.01	6/16/2022 19:22	10.19	6/16/2022 18:09	1.18	6/16/2022 19:52	29.06
6/17/2022 19:36	84.03	6/16/2022 18:53	-0.06	6/16/2022 19:23	10.18	6/16/2022 18:10	0.62	6/16/2022 19:53	29.13
6/17/2022 19:37	84.05	6/16/2022 18:54	-0.02	6/16/2022 19:24	10.16	6/16/2022 18:11	0.63	6/16/2022 19:54	29.10
6/17/2022 19:38	83.98	6/16/2022 18:55	-0.03	6/16/2022 19:25	10.16	6/16/2022 18:12	0.67	6/16/2022 19:55	29.08
6/17/2022 19:39	84.05	6/16/2022 18:56	-0.04	6/16/2022 19:26	10.23	6/16/2022 18:13	0.64	6/16/2022 19:56	29.08
6/17/2022 19:40	83.98	6/16/2022 18:57	-0.06	6/16/2022 19:27	10.21	6/16/2022 18:14	0.62	6/16/2022 19:57	29.08
6/17/2022 19:41	83.98	6/16/2022 18:58	-0.06	6/16/2022 19:28	10.23	6/16/2022 18:15	0.57	6/16/2022 19:58	29.08
6/17/2022 19:42	83.95	6/16/2022 18:59	-0.07	6/16/2022 19:29	10.23	6/16/2022 18:16	0.59	6/16/2022 19:59	29.08
6/17/2022 19:43	83.98	6/16/2022 19:00	-0.07	6/16/2022 19:30	10.23	6/16/2022 18:17	0.68	6/16/2022 20:00	29.06
6/17/2022 19:44	83.98	6/16/2022 19:01	-0.01	6/16/2022 19:31	10.20	6/16/2022 18:18	0.67	6/16/2022 20:01	29.06
6/17/2022 19:45	83.96	6/16/2022 19:02	5.69	6/16/2022 19:32	10.22	6/16/2022 18:19	0.72	6/16/2022 20:02	29.04
6/17/2022 19:46	83.95	6/16/2022 19:03	6.76	6/16/2022 19:33	10.20	6/16/2022 18:20	0.73	6/16/2022 20:03	29.07
6/17/2022 19:47	83.97	6/16/2022 19:04	5.56	6/16/2022 19:34	10.20	6/16/2022 18:21	0.73	6/16/2022 20:04	29.06
6/17/2022 19:48	83.97	6/16/2022 19:05	4.58	6/16/2022 19:35	10.21	6/16/2022 18:22	0.72	6/16/2022 20:05	29.10
6/17/2022 19:49	83.93	6/16/2022 19:06	3.85	6/16/2022 19:36	10.20	6/16/2022 18:23	0.66	6/16/2022 20:06	29.03
6/17/2022 19:50	83.97	6/16/2022 19:07	3.19	6/16/2022 19:37	10.16	6/16/2022 18:24	0.62	6/16/2022 20:07	30.29
6/17/2022 19:51	83.92	6/16/2022 19:08	2.58	6/16/2022 19:38	10.19	6/16/2022 18:25	0.62	6/16/2022 20:08	30.36
6/17/2022 19:52	83.94	6/16/2022 19:09	2.13	6/16/2022 19:39	10.12	6/16/2022 18:26	0.66	6/16/2022 20:09	29.59
6/17/2022 19:53	83.92	6/16/2022 19:10	1.76	6/16/2022 19:40	10.16	6/16/2022 18:27	0.72	6/16/2022 20:10	29.27
6/17/2022 19:54	83.93	6/16/2022 19:11	1.51	6/16/2022 19:41	10.14	6/16/2022 18:28	0.72	6/16/2022 20:11	29.13
6/17/2022 19:55	83.92	6/16/2022 19:12	1.20	6/16/2022 19:42	10.13	6/16/2022 18:29	0.69	6/16/2022 20:12	29.09
6/17/2022 19:56	83.93	6/16/2022 19:13	0.98	6/16/2022 19:43	10.10	6/16/2022 18:30	0.74	6/16/2022 20:13	29.08
6/17/2022 19:57	83.90	6/16/2022 19:14	0.78	6/16/2022 19:44	10.11	6/16/2022 18:31	0.74	6/16/2022 20:14	29.09
6/17/2022 19:58	83.89	6/16/2022 19:15	0.55	6/16/2022 19:45	10.10	6/16/2022 18:32	0.72	6/16/2022 20:15	29.03
6/17/2022 19:59	83.89	6/16/2022 19:16	0.42	6/16/2022 19:46	10.12	6/16/2022 18:33	0.72	6/16/2022 20:16	29.05
6/17/2022 20:00	83.93	6/16/2022 19:17	0.26	6/16/2022 19:47	10.11	6/16/2022 18:34	0.67	6/16/2022 20:17	29.07
6/17/2022 20:01	83.90	6/16/2022 19:18	0.14	6/16/2022 19:48	10.09	6/16/2022 18:35	0.66	6/16/2022 20:18	29.06
6/17/2022 20:02	83.87	6/16/2022 19:19	0.06	6/16/2022 19:49	10.08	6/16/2022 18:36	0.63	6/16/2022 20:19	29.02
6/17/2022 20:03	83.85	6/16/2022 19:20	-0.02	6/16/2022 19:50	10.06	6/16/2022 18:37	0.66	6/16/2022 20:20	29.03
6/17/2022 20:04	83.90	6/16/2022 19:21	-0.03	6/16/2022 19:51	10.09	6/16/2022 18:38	0.63	6/16/2022 20:21	29.06
6/17/2022 20:05	83.89	6/16/2022 19:22	-0.04	6/16/2022 19:52	10.09	6/16/2022 18:39	0.61	6/16/2022 20:22	29.05
6/17/2022 20:06	83.89	6/16/2022 19:23	-0.06	6/16/2022 19:53	10.10	6/16/2022 18:40	0.63	6/16/2022 20:23	29.07
6/17/2022 20:07	83.87	6/16/2022 19:24	-0.07	6/16/2022 19:54	10.12	6/16/2022 18:41	0.66	6/16/2022 20:24	29.04
6/17/2022 20:08	83.91	6/16/2022 19:25	-0.05	6/16/2022 19:55	10.13	6/16/2022 18:42	0.70	6/16/2022 20:25	29.04
6/17/2022 20:09	83.84	6/16/2022 19:26	-0.01	6/16/2022 19:56	10.15	6/16/2022 18:43	0.74	6/16/2022 20:26	29.02
6/17/2022 20:10	83.87	6/16/2022 19:27	-0.03	6/16/2022 19:57	10.11	6/16/2022 18:44	0.68	6/16/2022 20:27	29.03
6/17/2022 20:11	83.90	6/16/2022 19:28	-0.04	6/16/2022 19:58	10.13	6/16/2022 18:45	0.69	6/16/2022 20:28	29.05
6/17/2022 20:12	83.85	6/16/2022 19:29	-0.05	6/16/2022 19:59	10.13	6/16/2022 18:46	0.66	6/16/2022 20:29	29.02
6/17/2022 20:13	83.85	6/16/2022 19:30	0.35	6/16/2022 20:00	10.13	6/16/2022 18:47	0.64	6/16/2022 20:30	29.04
6/17/2022 20:14	83.87	6/16/2022 19:31	6.19	6/16/2022 20:01	10.16	6/16/2022 18:48	0.61	6/16/2022 20:31	29.03
6/17/2022 20:15	83.82	6/16/2022 19:32	7.11	6/16/2022 20:02	10.15	6/16/2022 18:49	0.61	6/16/2022 20:32	29.01
6/17/2022 20:16	83.80	6/16/2022 19:33	5.85	6/16/2022 20:03	10.11	6/16/2022 18:50	0.61	6/16/2022 20:33	29.02
6/17/2022 20:17	83.81	6/16/2022 19:34	4.86	6/16/2022 20:04	10.13	6/16/2022 18:51	0.67	6/16/2022 20:34	29.02
6/17/2022 20:18	83.83	6/16/2022 19:35	4.08	6/16/2022 20:05	10.18	6/16/2022 18:52	0.72	6/16/2022 20:35	29.04
6/17/2022 20:19	83.81	6/16/2022 19:36	3.37	6/16/2022 20:06	10.20	6/16/2022 18:53	0.72	6/16/2022 20:36	28.99
6/17/2022 20:20	83.85	6/16/2022 19:37	2.72	6/16/2022 20:07	10.22	6/16/2022 18:54	0.67	6/16/2022 20:37	29.03
6/17/2022 20:21	83.81	6/16/2022 19:38	2.31	6/16/2022 20:08	10.23	6/16/2022 18:55	0.71	6/16/2022 20:38	28.99
6/17/2022 20:22	83.82	6/16/2022 19:39	1.92	6/16/2022 20:09	10.25	6/16/2022 18:56	0.64	6/16/2022 20:39	28.96
6/17/2022 20:23	83.87	6/16/2022 19:40	1.59	6/16/2022 20:10	10.26	6/16/2022 18:57	0.63	6/16/2022 20:40	29.02
6/17/2022 20:24	83.83	6/16/2022 19:41	1.26	6/16/2022 20:11	10.27	6/16/2022 18:58	0.60	6/16/2022 20:41	28.99
6/17/2022 20:25	83.82	6/16/2022 19:42	1.01	6/16/2022 20:12	10.21	6/16/2022 18:59	0.58	6/16/2022 20:42	28.97
6/17/2022 20:26	83.81	6/16/2022 19:43	0.83	6/16/2022 20:13	14.59	6/16/2022 19:00	0.60	6/16/2022 20:43	29.03
6/17/2022 20:27	83.79	6/16/2022 19:44	0.62	6/16/2022 20:14	14.15	6/16/2022 19:01	0.61	6/16/2022 20:44	28.97
6/17/2022 20:28	83.80	6/16/2022 19:45	0.42	6/16/2022 20:15	13.65	6/16/2022 19:02	0.63	6/16/2022 20:45	28.99
6/17/2022 20:29	83.82	6/16/2022 19:46	0.32	6/16/2022 20:16	13.28	6/16/2022 19:03	0.67	6/16/2022 20:46	28.97
6/17/2022 20:30	83.83	6/16/2022 19:47	0.21	6/16/2022 20:17	12.90	6/16/2022 19:04	0.61	6/16/2022 20:47	28.98
6/17/2022 20:31	83.73	6/16/2022 19:48	0.06	6/16/2022 20:18	12.61	6/16/2022 19:05	0.65	6/16/2022 20:48	28.96
6/17/2022 20:32	83.77	6/16/2022 19:49	0.01	6/16/2022 20:19	12.35	6/16/2022 19:06	0.64	6/16/2022 20:49	28.99
6/17/2022 20:33	83.80	6/16/2022 19:50	-0.04	6/16/2022 20:20	12.13	6/16/2022 19:07	0.63	6/16/2022 20:50	28.97
6/17/2022 20:34	83.76	6/16/2022 19:51	-0.04	6/16/2022 20:21	11.95	6/16/2022 19:08	0.63	6/16/2022 20:51	28.99
6/17/2022 20:35	83.78	6/16/2022 19:52	-0.10	6/16/2022 20:22	11.78	6/16/2022 19:09	0.70	6/16/2022 20:52	28.97
6/17/2022 20:36	83.75	6/16/2022 19:53	-0.06	6/16/2022 20:23	11.62	6/16/2022 19:10	0.66	6/16/2022 20:53	28.96
6/17/2022 20:37	83.73	6/16/2022 19:54	-0.06	6/16/2022 20:24	11.48	6/16/2022 19:11	0.66	6/16/2022 20:54	28.96
6/17/2022 20:38	83.78	6/16/2022 19:55	-0.05	6/16/2022 20:25	11.36	6/16/2022 19:12	0.68	6/16/2022 20:55	28.97
6/17/2022 20:39	83.77	6/16/2022 19:56	5.04	6/16/2022 20:26	11.29	6/16/2022 19:13	0.71	6/16/2022 20:56	28.94
6/17/2022 20:40	83.74	6/16/2022 19:57	9.34	6/16/2022 20:27	11.14	6/16/2022 19:14	0.70	6/16/2022 20:57	28.96
6/17/2022 20:41	83.75	6/16/2022 19:58	7.67	6/16/2022 20:28	11.09	6/16/2022 19:15	0.68	6/16/2022 20:58	28.98
6/17/2022 20:42	83.76	6/16/2022 19:59	6.38	6/16/2022 20:29	10.97	6/16/2022 19:16	0.63	6/16/2022 20:59	28.96
6/17/2022 20:43	83.70	6/16/2022 20:00	5.28	6/16/2022 20:30	10.92	6/16/2022 19:17	0.63	6/16/2022 21:00	28.96
6/17/2022 20:44	83.79	6/16/2022 20:01	4.41	6/16/2022 20:31	10.86	6/16/2022 19:18	0.62	6/16/2022 21:01	28.98
6/17/2022 20:45	83.74	6/16/2022 20:02	3.72	6/16/2022 20:32	10.78	6/16/2022 19:19	0.56	6/16/2022 21:02	28.95

6/17/2022 20:46	83.76	6/16/2022 20:03	3.05	6/16/2022 20:33	10.69	6/16/2022 19:20	0.60	6/16/2022 21:03	28.96
6/17/2022 20:47	83.69	6/16/2022 20:04	2.50	6/16/2022 20:34	10.67	6/16/2022 19:21	0.59	6/16/2022 21:04	28.96
6/17/2022 20:48	83.71	6/16/2022 20:05	2.09	6/16/2022 20:35	10.61	6/16/2022 19:22	0.65	6/16/2022 21:05	28.95
6/17/2022 20:49	83.74	6/16/2022 20:06	1.68	6/16/2022 20:36	10.58	6/16/2022 19:23	0.70	6/16/2022 21:06	28.94
6/17/2022 20:50	83.73	6/16/2022 20:07	1.40	6/16/2022 20:37	10.56	6/16/2022 19:24	0.68	6/16/2022 21:07	28.96
6/17/2022 20:51	83.70	6/16/2022 20:08	1.16	6/16/2022 20:38	10.51	6/16/2022 19:25	0.68	6/16/2022 21:08	28.92
6/17/2022 20:52	83.76	6/16/2022 20:09	0.92	6/16/2022 20:39	10.49	6/16/2022 19:26	0.68	6/16/2022 21:09	28.95
6/17/2022 20:53	83.71	6/16/2022 20:10	3.86	6/16/2022 20:40	10.49	6/16/2022 19:27	0.66	6/16/2022 21:10	28.96
6/17/2022 20:54	83.67	6/16/2022 20:11	7.96	6/16/2022 20:41	10.46	6/16/2022 19:28	0.62	6/16/2022 21:11	28.96
6/17/2022 20:55	83.76	6/16/2022 20:12	6.63	6/16/2022 20:42	10.45	6/16/2022 19:29	0.61	6/16/2022 21:12	28.93
6/17/2022 20:56	83.75	6/16/2022 20:13	5.50	6/16/2022 20:43	10.43	6/16/2022 19:30	0.61	6/16/2022 21:13	28.93
6/17/2022 20:57	83.76	6/16/2022 20:14	4.58	6/16/2022 20:44	10.42	6/16/2022 19:31	0.59	6/16/2022 21:14	28.95
6/17/2022 20:58	83.73	6/16/2022 20:15	3.84	6/16/2022 20:45	10.42	6/16/2022 19:32	0.61	6/16/2022 21:15	28.92
6/17/2022 20:59	83.69	6/16/2022 20:16	3.15	6/16/2022 20:46	10.40	6/16/2022 19:33	0.61	6/16/2022 21:16	28.93
6/17/2022 21:00	83.72	6/16/2022 20:17	2.61	6/16/2022 20:47	10.40	6/16/2022 19:34	0.66	6/16/2022 21:17	28.90
6/17/2022 21:01	83.72	6/16/2022 20:18	2.21	6/16/2022 20:48	10.36	6/16/2022 19:35	0.61	6/16/2022 21:18	28.91
6/17/2022 21:02	83.65	6/16/2022 20:19	1.82	6/16/2022 20:49	10.32	6/16/2022 19:36	0.58	6/16/2022 21:19	28.92
6/17/2022 21:03	83.73	6/16/2022 20:20	1.52	6/16/2022 20:50	10.34	6/16/2022 19:37	0.61	6/16/2022 21:20	28.92
6/17/2022 21:04	83.69	6/16/2022 20:21	1.22	6/16/2022 20:51	10.30	6/16/2022 19:38	0.60	6/16/2022 21:21	28.94
6/17/2022 21:05	83.70	6/16/2022 20:22	1.01	6/16/2022 20:52	10.28	6/16/2022 19:39	0.61	6/16/2022 21:22	28.91
6/17/2022 21:06	83.69	6/16/2022 20:23	0.79	6/16/2022 20:53	10.27	6/16/2022 19:40	0.63	6/16/2022 21:23	28.92
6/17/2022 21:07	83.72	6/16/2022 20:24	0.54	6/16/2022 20:54	10.27	6/16/2022 19:41	0.62	6/16/2022 21:24	28.95
6/17/2022 21:08	83.65	6/16/2022 20:25	0.40	6/16/2022 20:55	10.26	6/16/2022 19:42	0.68	6/16/2022 21:25	28.91
6/17/2022 21:09	83.68	6/16/2022 20:26	0.34	6/16/2022 20:56	10.25	6/16/2022 19:43	0.72	6/16/2022 21:26	28.94
6/17/2022 21:10	83.68	6/16/2022 20:27	0.16	6/16/2022 20:57	10.20	6/16/2022 19:44	0.67	6/16/2022 21:27	28.89
6/17/2022 21:11	83.67	6/16/2022 20:28	0.09	6/16/2022 20:58	10.21	6/16/2022 19:45	0.69	6/16/2022 21:28	28.92
6/17/2022 21:12	83.69	6/16/2022 20:29	-0.02	6/16/2022 20:59	10.21	6/16/2022 19:46	0.66	6/16/2022 21:29	28.93
6/17/2022 21:13	83.71	6/16/2022 20:30	-0.04	6/16/2022 21:00	10.17	6/16/2022 19:47	0.67	6/16/2022 21:30	28.93
6/17/2022 21:14	83.65	6/16/2022 20:31	-0.05	6/16/2022 21:01	10.17	6/16/2022 19:48	0.66	6/16/2022 21:31	28.92
6/17/2022 21:15	83.68	6/16/2022 20:32	-0.09	6/16/2022 21:02	10.12	6/16/2022 19:49	0.62	6/16/2022 21:32	28.87
6/17/2022 21:16	83.70	6/16/2022 20:33	-0.04	6/16/2022 21:03	10.14	6/16/2022 19:50	0.61	6/16/2022 21:33	28.90
6/17/2022 21:17	83.67	6/16/2022 20:34	-0.04	6/16/2022 21:04	10.14	6/16/2022 19:51	0.60	6/16/2022 21:34	28.90
6/17/2022 21:18	83.68	6/16/2022 20:35	-0.08	6/16/2022 21:05	10.12	6/16/2022 19:52	0.62	6/16/2022 21:35	28.88
6/17/2022 21:19	83.67	6/16/2022 20:36	-0.03	6/16/2022 21:06	10.12	6/16/2022 19:53	0.65	6/16/2022 21:36	28.89
6/17/2022 21:20	83.71	6/16/2022 20:37	-0.02	6/16/2022 21:07	10.12	6/16/2022 19:54	0.69	6/16/2022 21:37	28.90
6/17/2022 21:21	83.66	6/16/2022 20:38	-0.06	6/16/2022 21:08	10.10	6/16/2022 19:55	0.75	6/16/2022 21:38	28.92
6/17/2022 21:22	83.64	6/16/2022 20:39	-0.07	6/16/2022 21:09	10.10	6/16/2022 19:56	0.71	6/16/2022 21:39	28.93
6/17/2022 21:23	83.67	6/16/2022 20:40	-0.06	6/16/2022 21:10	10.09	6/16/2022 19:57	0.74	6/16/2022 21:40	28.89
6/17/2022 21:24	83.63	6/16/2022 20:41	-0.05	6/16/2022 21:11	10.09	6/16/2022 19:58	0.74	6/16/2022 21:41	28.89
6/17/2022 21:25	83.62	6/16/2022 20:42	-0.04	6/16/2022 21:12	10.12	6/16/2022 19:59	0.74	6/16/2022 21:42	28.88
6/17/2022 21:26	83.66	6/16/2022 20:43	-0.04	6/16/2022 21:13	10.12	6/16/2022 20:00	0.73	6/16/2022 21:43	28.85
6/17/2022 21:27	83.65	6/16/2022 20:44	-0.07	6/16/2022 21:14	10.10	6/16/2022 20:01	0.71	6/16/2022 21:44	28.89
6/17/2022 21:28	83.61	6/16/2022 20:45	-0.04	6/16/2022 21:15	10.13	6/16/2022 20:02	0.75	6/16/2022 21:45	28.90
6/17/2022 21:29	83.67	6/16/2022 20:46	-0.06	6/16/2022 21:16	10.11	6/16/2022 20:03	0.71	6/16/2022 21:46	28.91
6/17/2022 21:30	83.65	6/16/2022 20:47	-0.07	6/16/2022 21:17	10.15	6/16/2022 20:04	0.72	6/16/2022 21:47	28.88
6/17/2022 21:31	83.66	6/16/2022 20:48	-0.05	6/16/2022 21:18	10.16	6/16/2022 20:05	0.70	6/16/2022 21:48	28.86
6/17/2022 21:32	83.64	6/16/2022 20:49	5.49	6/16/2022 21:19	10.15	6/16/2022 20:06	0.72	6/16/2022 21:49	28.87
6/17/2022 21:33	83.63	6/16/2022 20:50	6.54	6/16/2022 21:20	10.15	6/16/2022 20:07	0.65	6/16/2022 21:50	28.88
6/17/2022 21:34	83.62	6/16/2022 20:51	5.45	6/16/2022 21:21	10.14	6/16/2022 20:08	0.65	6/16/2022 21:51	28.90
6/17/2022 21:35	83.67	6/16/2022 20:52	4.52	6/16/2022 21:22	10.15	6/16/2022 20:09	0.63	6/16/2022 21:52	28.90
6/17/2022 21:36	83.62	6/16/2022 20:53	3.73	6/16/2022 21:23	10.17	6/16/2022 20:10	0.61	6/16/2022 21:53	28.88
6/17/2022 21:37	83.65	6/16/2022 20:54	3.06	6/16/2022 21:24	10.10	6/16/2022 20:11	0.62	6/16/2022 21:54	28.90
6/17/2022 21:38	83.64	6/16/2022 20:55	2.53	6/16/2022 21:25	10.10	6/16/2022 20:12	0.65	6/16/2022 21:55	28.91
6/17/2022 21:39	83.58	6/16/2022 20:56	2.04	6/16/2022 21:26	10.11	6/16/2022 20:13	0.64	6/16/2022 21:56	28.91
6/17/2022 21:40	83.59	6/16/2022 20:57	1.74	6/16/2022 21:27	10.10	6/16/2022 20:14	0.63	6/16/2022 21:57	28.90
6/17/2022 21:41	83.62	6/16/2022 20:58	1.39	6/16/2022 21:28	10.10	6/16/2022 20:15	0.64	6/16/2022 21:58	28.88
6/17/2022 21:42	83.64	6/16/2022 20:59	1.16	6/16/2022 21:29	10.07	6/16/2022 20:16	0.65	6/16/2022 21:59	28.90
6/17/2022 21:43	83.63	6/16/2022 21:00	0.93	6/16/2022 21:30	10.07	6/16/2022 20:17	0.67	6/16/2022 22:00	28.90
6/17/2022 21:44	83.63	6/16/2022 21:01	0.75	6/16/2022 21:31	10.09	6/16/2022 20:18	0.64	6/16/2022 22:01	28.90
6/17/2022 21:45	83.59	6/16/2022 21:02	0.55	6/16/2022 21:32	10.06	6/16/2022 20:19	0.64	6/16/2022 22:02	28.91
6/17/2022 21:46	83.61	6/16/2022 21:03	0.37	6/16/2022 21:33	10.08	6/16/2022 20:20	0.64	6/16/2022 22:03	28.90
6/17/2022 21:47	83.57	6/16/2022 21:04	0.23	6/16/2022 21:34	10.02	6/16/2022 20:21	0.64	6/16/2022 22:04	28.92
6/17/2022 21:48	83.59	6/16/2022 21:05	0.11	6/16/2022 21:35	10.06	6/16/2022 20:22	0.64	6/16/2022 22:05	28.88
6/17/2022 21:49	83.62	6/16/2022 21:06	0.04	6/16/2022 21:36	10.02	6/16/2022 20:23	0.60	6/16/2022 22:06	28.88
6/17/2022 21:50	83.57	6/16/2022 21:07	-0.01	6/16/2022 21:37	10.03	6/16/2022 20:24	0.66	6/16/2022 22:07	28.87
6/17/2022 21:51	83.64	6/16/2022 21:08	-0.03	6/16/2022 21:38	10.04	6/16/2022 20:25	0.66	6/16/2022 22:08	28.87
6/17/2022 21:52	83.61	6/16/2022 21:09	-0.05	6/16/2022 21:39	10.02	6/16/2022 20:26	0.71	6/16/2022 22:09	28.89
6/17/2022 21:53	83.65	6/16/2022 21:10	-0.04	6/16/2022 21:40	10.00	6/16/2022 20:27	0.69	6/16/2022 22:10	28.87
6/17/2022 21:54	83.55	6/16/2022 21:11	-0.06	6/16/2022 21:41	10.01	6/16/2022 20:28	0.74	6/16/2022 22:11	28.89
6/17/2022 21:55	83.55	6/16/2022 21:12	-0.07	6/16/2022 21:42	10.02	6/16/2022 20:29	0.78	6/16/2022 22:12	28.88
6/17/2022 21:56	83.57	6/16/2022 21:13	-0.06	6/16/2022 21:43	10.00	6/16/2022 20:30	0.70	6/16/2022 22:13	28.89
6/17/2022 21:57	83.57	6/16/2022 21:14	-0.05	6/16/2022 21:44	10.07	6/16/2022 20:31	0.69	6/16/2022 22:14	28.90
6/17/2022 21:58	83.62	6/16/2022 21:15	-0.03	6/16/2022 21:45	10.03	6/16/2022 20:32	0.66	6/16/2022 22:15	28.90
6/17/2022 21:59	83.55	6/16/2022 21:16	-0.07	6/16/2022 21:46	10.02	6/16/2022 20:33	0.63	6/16/2022 22:16	28.90
6/17/2022 22:00	83.58	6/16/2022 21:17	-0.05	6/16/2022 21:47	10.06	6/16/2022 20:34	0.59	6/16/2022 22:17	28.90
6/17/2022 22:01	83.62	6/16/2022 21:18	-0.05	6/16/2022 21:48	10.06	6/16/2022 20:35	0.62	6/16/2022 22:18	28.88
6/17/2022 22:02	83.60	6/16/2022 21:19	-0.02	6/16/2022 21:49	10.08	6/16/2022 20:36	0.70	6/16/2022 22:19	28.85
6/17/2022 22:03	83.61	6/16/2022 21:20	-0.07	6/16/2022 21:50	10.11	6/16/2022 20:37	0.71	6/16/2022 22:20	28.86
6/17/2022 22:04	83.58	6/16/2022 21:21	-0.02	6/16/2022 21:51	10.09	6/16/2022 20:38	0.74	6/16/2022 22:21	28.89
6/17/2022 22:05	83.56	6/16/2022 21:22	-0.02	6/16/2022 21:52	10.08	6/16/2022 20:39	0.76	6/16/2022 22:22	28.88
6/17/2022 22:06	83.54	6/16/2022 21:23	1.93	6/16/2022 21:53	10.10	6/16/2022 20:40	0.69	6/16/2022 22:23	28.88
6/17/2022 22:07	83.57	6/16/2022 21:24	7.42	6/16/2022 21:54	10.08	6/16/2022 20:41	0.70	6/16/2022 22:24	28.87
6/17/2022 22:08	83.53	6/16/2022 21:25	6.34	6/16/2022 21:55	10.10	6/16/2022 20:42	0.63	6/16/2022 22:25	29.68
6/17/2022 22:09	83.60	6/16/2022 21:26	5.27	6/16/2022 21:56	10.05	6/16/2022 20:43	0.64	6/16/2022 22:26	30.47
6/17/2022 22:10	83.53	6/16/2022 21:27	4.34	6/16/2022 21:57	10.03	6/16/2022 20:44	0.61	6/16/2022 22:27	29.53
6/17/2022 22:11	83.55	6/16/2022 21:28	3.57	6/16/2022 21:58	10.07	6/16/2022 20:45	0.61	6/16/2022 22:28	29.11
6/17/2022 22:12	83.56	6/16/2022 21:29	2.93	6/16/2022 21:59	10.03	6/16/2022 20:46	0.67	6/16/2022 22:29	28.94
6/17/2022 22:13	83.51	6/16/2022 21:30	2.50	6/16/2022 22:00	10.07	6/16/2022 20:47	0.71	6/16/2022 22:30	28.91

6/17/2022 22:14	83.57	6/16/2022 21:31	2.03	6/16/2022 22:01	10.04	6/16/2022 20:48	0.73	6/16/2022 22:31	28.91
6/17/2022 22:15	83.58	6/16/2022 21:32	1.72	6/16/2022 22:02	10.04	6/16/2022 20:49	0.74	6/16/2022 22:32	28.89
6/17/2022 22:16	83.57	6/16/2022 21:33	1.35	6/16/2022 22:03	10.03	6/16/2022 20:50	0.71	6/16/2022 22:33	28.91
6/17/2022 22:17	83.52	6/16/2022 21:34	1.11	6/16/2022 22:04	10.03	6/16/2022 20:51	0.75	6/16/2022 22:34	28.90
6/17/2022 22:18	83.56	6/16/2022 21:35	0.86	6/16/2022 22:05	10.04	6/16/2022 20:52	0.76	6/16/2022 22:35	28.90
6/17/2022 22:19	83.52	6/16/2022 21:36	0.66	6/16/2022 22:06	10.05	6/16/2022 20:53	0.72	6/16/2022 22:36	28.88
6/17/2022 22:20	83.50	6/16/2022 21:37	0.50	6/16/2022 22:07	10.04	6/16/2022 20:54	0.74	6/16/2022 22:37	28.87
6/17/2022 22:21	83.54	6/16/2022 21:38	0.33	6/16/2022 22:08	10.03	6/16/2022 20:55	0.72	6/16/2022 22:38	28.86
6/17/2022 22:22	83.53	6/16/2022 21:39	0.20	6/16/2022 22:09	10.03	6/16/2022 20:56	0.69	6/16/2022 22:39	28.88
6/17/2022 22:23	83.56	6/16/2022 21:40	0.08	6/16/2022 22:10	10.01	6/16/2022 20:57	0.68	6/16/2022 22:40	28.85
6/17/2022 22:24	83.54	6/16/2022 21:41	0.03	6/16/2022 22:11	10.01	6/16/2022 20:58	0.69	6/16/2022 22:41	28.90
6/17/2022 22:25	83.52	6/16/2022 21:42	-0.05	6/16/2022 22:12	10.01	6/16/2022 20:59	0.66	6/16/2022 22:42	28.87
6/17/2022 22:26	83.57	6/16/2022 21:43	-0.04	6/16/2022 22:13	10.00	6/16/2022 21:00	0.64	6/16/2022 22:43	31.02
6/17/2022 22:27	83.51	6/16/2022 21:44	-0.05	6/16/2022 22:14	9.97	6/16/2022 21:01	0.64	6/16/2022 22:44	29.71
6/17/2022 22:28	83.54	6/16/2022 21:45	-0.06	6/16/2022 22:15	9.99	6/16/2022 21:02	0.66	6/16/2022 22:45	29.21
6/17/2022 22:29	83.55	6/16/2022 21:46	-0.05	6/16/2022 22:16	9.99	6/16/2022 21:03	0.67	6/16/2022 22:46	29.01
6/17/2022 22:30	83.58	6/16/2022 21:47	-0.06	6/16/2022 22:17	10.01	6/16/2022 21:04	0.73	6/16/2022 22:47	28.97
6/17/2022 22:31	83.54	6/16/2022 21:48	-0.01	6/16/2022 22:18	10.03	6/16/2022 21:05	0.74	6/16/2022 22:48	28.89
6/17/2022 22:32	83.51	6/16/2022 21:49	-0.03	6/16/2022 22:19	10.03	6/16/2022 21:06	0.76	6/16/2022 22:49	28.91
6/17/2022 22:33	83.50	6/16/2022 21:50	-0.06	6/16/2022 22:20	10.06	6/16/2022 21:07	0.75	6/16/2022 22:50	28.89
6/17/2022 22:34	83.52	6/16/2022 21:51	-0.06	6/16/2022 22:21	10.07	6/16/2022 21:08	0.72	6/16/2022 22:51	28.86
6/17/2022 22:35	83.53	6/16/2022 21:52	-0.03	6/16/2022 22:22	10.06	6/16/2022 21:09	0.68	6/16/2022 22:52	28.89
6/17/2022 22:36	83.46	6/16/2022 21:53	-0.06	6/16/2022 22:23	10.06	6/16/2022 21:10	0.65	6/16/2022 22:53	28.90
6/17/2022 22:37	83.49	6/16/2022 21:54	-0.06	6/16/2022 22:24	10.09	6/16/2022 21:11	0.68	6/16/2022 22:54	28.87
6/17/2022 22:38	83.54	6/16/2022 21:55	-0.06	6/16/2022 22:25	10.06	6/16/2022 21:12	0.68	6/16/2022 22:55	28.87
6/17/2022 22:39	83.50	6/16/2022 21:56	-0.02	6/16/2022 22:26	10.08	6/16/2022 21:13	0.69	6/16/2022 22:56	28.87
6/17/2022 22:40	83.50	6/16/2022 21:57	4.87	6/16/2022 22:27	10.09	6/16/2022 21:14	0.72	6/16/2022 22:57	28.87
6/17/2022 22:41	83.49	6/16/2022 21:58	6.84	6/16/2022 22:28	10.11	6/16/2022 21:15	0.71	6/16/2022 22:58	28.86
6/17/2022 22:42	83.56	6/16/2022 21:59	5.59	6/16/2022 22:29	10.10	6/16/2022 21:16	0.80	6/16/2022 22:59	28.86
6/17/2022 22:43	83.53	6/16/2022 22:00	4.66	6/16/2022 22:30	10.10	6/16/2022 21:17	0.79	6/16/2022 23:00	28.85
6/17/2022 22:44	83.48	6/16/2022 22:01	3.92	6/16/2022 22:31	10.08	6/16/2022 21:18	0.73	6/16/2022 23:01	28.85
6/17/2022 22:45	83.48	6/16/2022 22:02	3.21	6/16/2022 22:32	10.06	6/16/2022 21:19	0.70	6/16/2022 23:02	28.85
6/17/2022 22:46	83.47	6/16/2022 22:03	2.61	6/16/2022 22:33	10.05	6/16/2022 21:20	0.71	6/16/2022 23:03	28.85
6/17/2022 22:47	83.46	6/16/2022 22:04	2.16	6/16/2022 22:34	10.03	6/16/2022 21:21	0.62	6/16/2022 23:04	28.88
6/17/2022 22:48	83.54	6/16/2022 22:05	1.78	6/16/2022 22:35	10.04	6/16/2022 21:22	0.67	6/16/2022 23:05	28.83
6/17/2022 22:49	83.49	6/16/2022 22:06	1.47	6/16/2022 22:36	10.05	6/16/2022 21:23	0.65	6/16/2022 23:06	28.84
6/17/2022 22:50	83.49	6/16/2022 22:07	1.21	6/16/2022 22:37	10.01	6/16/2022 21:24	0.70	6/16/2022 23:07	28.82
6/17/2022 22:51	83.48	6/16/2022 22:08	0.99	6/16/2022 22:38	10.01	6/16/2022 21:25	0.68	6/16/2022 23:08	28.84
6/17/2022 22:52	83.53	6/16/2022 22:09	0.73	6/16/2022 22:39	10.07	6/16/2022 21:26	0.68	6/16/2022 23:09	28.83
6/17/2022 22:53	83.49	6/16/2022 22:10	0.59	6/16/2022 22:40	10.03	6/16/2022 21:27	0.69	6/16/2022 23:10	28.85
6/17/2022 22:54	83.51	6/16/2022 22:11	0.39	6/16/2022 22:41	10.02	6/16/2022 21:28	0.67	6/16/2022 23:11	28.85
6/17/2022 22:55	83.52	6/16/2022 22:12	0.23	6/16/2022 22:42	9.97	6/16/2022 21:29	0.72	6/16/2022 23:12	28.83
6/17/2022 22:56	83.45	6/16/2022 22:13	0.12	6/16/2022 22:43	10.02	6/16/2022 21:30	0.74	6/16/2022 23:13	28.85
6/17/2022 22:57	83.49	6/16/2022 22:14	0.04	6/16/2022 22:44	10.02	6/16/2022 21:31	0.78	6/16/2022 23:14	28.81
6/17/2022 22:58	83.50	6/16/2022 22:15	-0.05	6/16/2022 22:45	10.01	6/16/2022 21:32	0.78	6/16/2022 23:15	28.82
6/17/2022 22:59	83.50	6/16/2022 22:16	-0.06	6/16/2022 22:46	9.98	6/16/2022 21:33	0.76	6/16/2022 23:16	30.61
6/17/2022 23:00	83.45	6/16/2022 22:17	-0.02	6/16/2022 22:47	10.00	6/16/2022 21:34	0.80	6/16/2022 23:17	29.57
6/17/2022 23:01	83.50	6/16/2022 22:18	-0.05	6/16/2022 22:48	10.01	6/16/2022 21:35	0.75	6/16/2022 23:18	29.07
6/17/2022 23:02	83.47	6/16/2022 22:19	-0.08	6/16/2022 22:49	10.20	6/16/2022 21:36	0.75	6/16/2022 23:19	28.93
6/17/2022 23:03	83.48	6/16/2022 22:20	-0.05	6/16/2022 22:50	14.69	6/16/2022 21:37	0.71	6/16/2022 23:20	28.94
6/17/2022 23:04	83.44	6/16/2022 22:21	-0.03	6/16/2022 22:51	13.98	6/16/2022 21:38	0.70	6/16/2022 23:21	28.92
6/17/2022 23:05	83.44	6/16/2022 22:22	-0.06	6/16/2022 22:52	13.52	6/16/2022 21:39	0.68	6/16/2022 23:22	28.87
6/17/2022 23:06	83.45	6/16/2022 22:23	-0.04	6/16/2022 22:53	13.15	6/16/2022 21:40	0.71	6/16/2022 23:23	28.84
6/17/2022 23:07	83.50	6/16/2022 22:24	-0.05	6/16/2022 22:54	12.79	6/16/2022 21:41	0.69	6/16/2022 23:24	28.84
6/17/2022 23:08	83.49	6/16/2022 22:25	-0.07	6/16/2022 22:55	12.51	6/16/2022 21:42	0.75	6/16/2022 23:25	28.83
6/17/2022 23:09	83.51	6/16/2022 22:26	-0.04	6/16/2022 22:56	12.24	6/16/2022 21:43	0.79	6/16/2022 23:26	28.86
6/17/2022 23:10	83.46	6/16/2022 22:27	-0.07	6/16/2022 22:57	12.00	6/16/2022 21:44	0.84	6/16/2022 23:27	28.83
6/17/2022 23:11	83.44	6/16/2022 22:28	-0.06	6/16/2022 22:58	11.80	6/16/2022 21:45	0.85	6/16/2022 23:28	28.84
6/17/2022 23:12	83.48	6/16/2022 22:29	-0.05	6/16/2022 22:59	11.61	6/16/2022 21:46	0.79	6/16/2022 23:29	28.84
6/17/2022 23:13	83.47	6/16/2022 22:30	-0.05	6/16/2022 23:00	11.49	6/16/2022 21:47	0.77	6/16/2022 23:30	28.87
6/17/2022 23:14	83.54	6/16/2022 22:31	-0.05	6/16/2022 23:01	11.31	6/16/2022 21:48	0.71	6/16/2022 23:31	28.84
6/17/2022 23:15	83.46	6/16/2022 22:32	-0.05	6/16/2022 23:02	11.23	6/16/2022 21:49	0.70	6/16/2022 23:32	28.80
6/17/2022 23:16	83.45	6/16/2022 22:33	-0.06	6/16/2022 23:03	11.12	6/16/2022 21:50	0.69	6/16/2022 23:33	28.81
6/17/2022 23:17	83.44	6/16/2022 22:34	-0.07	6/16/2022 23:04	11.00	6/16/2022 21:51	0.75	6/16/2022 23:34	28.86
6/17/2022 23:18	83.43	6/16/2022 22:35	-0.09	6/16/2022 23:05	10.93	6/16/2022 21:52	0.77	6/16/2022 23:35	28.83
6/17/2022 23:19	83.48	6/16/2022 22:36	5.67	6/16/2022 23:06	10.79	6/16/2022 21:53	0.78	6/16/2022 23:36	28.81
6/17/2022 23:20	83.44	6/16/2022 22:37	6.55	6/16/2022 23:07	10.77	6/16/2022 21:54	0.77	6/16/2022 23:37	28.83
6/17/2022 23:21	83.45	6/16/2022 22:38	5.37	6/16/2022 23:08	10.70	6/16/2022 21:55	0.78	6/16/2022 23:38	28.81
6/17/2022 23:22	83.47	6/16/2022 22:39	4.45	6/16/2022 23:09	10.62	6/16/2022 21:56	0.76	6/16/2022 23:39	28.81
6/17/2022 23:23	83.44	6/16/2022 22:40	3.72	6/16/2022 23:10	10.60	6/16/2022 21:57	0.68	6/16/2022 23:40	28.84
6/17/2022 23:24	83.48	6/16/2022 22:41	3.07	6/16/2022 23:11	10.54	6/16/2022 21:58	0.73	6/16/2022 23:41	28.81
6/17/2022 23:25	83.42	6/16/2022 22:42	2.51	6/16/2022 23:12	10.49	6/16/2022 21:59	0.68	6/16/2022 23:42	28.85
6/17/2022 23:26	83.51	6/16/2022 22:43	2.12	6/16/2022 23:13	10.44	6/16/2022 22:00	0.70	6/16/2022 23:43	28.80
6/17/2022 23:27	83.43	6/16/2022 22:44	1.75	6/16/2022 23:14	10.40	6/16/2022 22:01	0.71	6/16/2022 23:44	28.81
6/17/2022 23:28	83.42	6/16/2022 22:45	1.41	6/16/2022 23:15	10.38	6/16/2022 22:02	0.73	6/16/2022 23:45	28.83
6/17/2022 23:29	83.48	6/16/2022 22:46	1.12	6/16/2022 23:16	10.36	6/16/2022 22:03	0.68	6/16/2022 23:46	28.84
6/17/2022 23:30	83.46	6/16/2022 22:47	0.91	6/16/2022 23:17	10.32	6/16/2022 22:04	0.67	6/16/2022 23:47	28.78
6/17/2022 23:31	83.41	6/16/2022 22:48	0.74	6/16/2022 23:18	10.32	6/16/2022 22:05	0.67	6/16/2022 23:48	28.81
6/17/2022 23:32	83.41	6/16/2022 22:49	0.52	6/16/2022 23:19	10.27	6/16/2022 22:06	0.68	6/16/2022 23:49	28.77
6/17/2022 23:33	83.47	6/16/2022 22:50	0.32	6/16/2022 23:20	10.29	6/16/2022 22:07	0.69	6/16/2022 23:50	28.78
6/17/2022 23:34	83.43	6/16/2022 22:51	0.21	6/16/2022 23:21	10.26	6/16/2022 22:08	0.72	6/16/2022 23:51	28.82
6/17/2022 23:35	83.47	6/16/2022 22:52	0.13	6/16/2022 23:22	10.22	6/16/2022 22:09	0.74	6/16/2022 23:52	28.77
6/17/2022 23:36	83.43	6/16/2022 22:53	0.07	6/16/2022 23:23	10.23	6/16/2022 22:10	0.74	6/16/2022 23:53	28.79
6/17/2022 23:37	83.42	6/16/2022 22:54	-0.09	6/16/2022 23:24	10.24	6/16/2022 22:11	0.76	6/16/2022 23:54	28.80
6/17/2022 23:38	83.42	6/16/2022 22:55	-0.03	6/16/2022 23:25	10.23	6/16/2022 22:12	0.73	6/16/2022 23:55	28.80
6/17/2022 23:39	83.48	6/16/2022 22:56	-0.07	6/16/2022 23:26	10.24	6/16/2022 22:13	0.72	6/16/2022 23:56	28.79
6/17/2022 23:40	83.38	6/16/2022 22:57	-0.02	6/16/2022 23:27	10.24	6/16/2022 22:14	0.68	6/16/2022 23:57	28.80
6/17/2022 23:41	83.40	6/16/2022 22:58	-0.03	6/16/2022 23:28	10.21	6/16/2022 22:15	0.64	6/16/2022 23:58	28.78

6/17/2022 23:42	83.38	6/16/2022 22:59	-0.03	6/16/2022 23:29	10.19	6/16/2022 22:16	0.65	6/16/2022 23:59	28.80
6/17/2022 23:43	84.29	6/16/2022 23:00	-0.04	6/16/2022 23:30	10.22	6/16/2022 22:17	0.65	6/17/2022 0:00	28.78
6/17/2022 23:44	88.35	6/16/2022 23:01	-0.05	6/16/2022 23:31	10.22	6/16/2022 22:18	0.64	6/17/2022 0:01	28.79
6/17/2022 23:45	90.77	6/16/2022 23:02	-0.04	6/16/2022 23:32	10.20	6/16/2022 22:19	0.67	6/17/2022 0:02	28.79
6/17/2022 23:46	90.85	6/16/2022 23:03	-0.06	6/16/2022 23:33	10.23	6/16/2022 22:20	0.73	6/17/2022 0:03	28.78
6/17/2022 23:47	88.36	6/16/2022 23:04	-0.06	6/16/2022 23:34	10.19	6/16/2022 22:21	0.76	6/17/2022 0:04	28.78
6/17/2022 23:48	86.91	6/16/2022 23:05	-0.07	6/16/2022 23:35	10.19	6/16/2022 22:22	0.76	6/17/2022 0:05	28.78
6/17/2022 23:49	85.97	6/16/2022 23:06	-0.07	6/16/2022 23:36	10.17	6/16/2022 22:23	0.77	6/17/2022 0:06	28.81
6/17/2022 23:50	85.34	6/16/2022 23:07	-0.06	6/16/2022 23:37	10.19	6/16/2022 22:24	0.71	6/17/2022 0:07	28.79
6/17/2022 23:51	85.01	6/16/2022 23:08	-0.03	6/16/2022 23:38	10.15	6/16/2022 22:25	0.65	6/17/2022 0:08	28.80
6/17/2022 23:52	84.72	6/16/2022 23:09	-0.04	6/16/2022 23:39	10.17	6/16/2022 22:26	0.66	6/17/2022 0:09	28.78
6/17/2022 23:53	84.54	6/16/2022 23:10	-0.05	6/16/2022 23:40	10.16	6/16/2022 22:27	0.61	6/17/2022 0:10	28.81
6/17/2022 23:54	84.40	6/16/2022 23:11	-0.06	6/16/2022 23:41	10.13	6/16/2022 22:28	0.64	6/17/2022 0:11	28.78
6/17/2022 23:55	84.32	6/16/2022 23:12	-0.06	6/16/2022 23:42	10.10	6/16/2022 22:29	0.67	6/17/2022 0:12	28.77
6/17/2022 23:56	84.24	6/16/2022 23:13	-0.05	6/16/2022 23:43	10.13	6/16/2022 22:30	0.70	6/17/2022 0:13	28.76
6/17/2022 23:57	84.21	6/16/2022 23:14	5.01	6/16/2022 23:44	14.05	6/16/2022 22:31	0.78	6/17/2022 0:14	28.78
6/17/2022 23:58	84.08	6/16/2022 23:15	6.70	6/16/2022 23:45	13.54	6/16/2022 22:32	0.79	6/17/2022 0:15	28.78
6/17/2022 23:59	84.03	6/16/2022 23:16	5.49	6/16/2022 23:46	13.05	6/16/2022 22:33	0.75	6/17/2022 0:16	28.79
6/18/2022 0:00	84.02	6/16/2022 23:17	4.60	6/16/2022 23:47	12.67	6/16/2022 22:34	0.73	6/17/2022 0:17	28.79
6/18/2022 0:01	83.99	6/16/2022 23:18	3.81	6/16/2022 23:48	12.37	6/16/2022 22:35	0.69	6/17/2022 0:18	28.77
6/18/2022 0:02	83.98	6/16/2022 23:19	3.09	6/16/2022 23:49	12.15	6/16/2022 22:36	0.69	6/17/2022 0:19	28.75
6/18/2022 0:03	83.98	6/16/2022 23:20	2.59	6/16/2022 23:50	11.90	6/16/2022 22:37	0.70	6/17/2022 0:20	28.77
6/18/2022 0:04	83.97	6/16/2022 23:21	2.13	6/16/2022 23:51	11.72	6/16/2022 22:38	0.72	6/17/2022 0:21	28.76
6/18/2022 0:05	83.93	6/16/2022 23:22	1.79	6/16/2022 23:52	11.49	6/16/2022 22:39	0.71	6/17/2022 0:22	28.78
6/18/2022 0:06	83.89	6/16/2022 23:23	1.44	6/16/2022 23:53	11.38	6/16/2022 22:40	0.73	6/17/2022 0:23	28.78
6/18/2022 0:07	83.91	6/16/2022 23:24	1.14	6/16/2022 23:54	11.23	6/16/2022 22:41	0.72	6/17/2022 0:24	28.77
6/18/2022 0:08	83.88	6/16/2022 23:25	0.95	6/16/2022 23:55	11.16	6/16/2022 22:42	0.70	6/17/2022 0:25	28.77
6/18/2022 0:09	83.90	6/16/2022 23:26	0.71	6/16/2022 23:56	11.02	6/16/2022 22:43	0.67	6/17/2022 0:26	28.71
6/18/2022 0:10	83.88	6/16/2022 23:27	0.51	6/16/2022 23:57	10.94	6/16/2022 22:44	0.66	6/17/2022 0:27	28.76
6/18/2022 0:11	83.83	6/16/2022 23:28	0.37	6/16/2022 23:58	10.90	6/16/2022 22:45	0.68	6/17/2022 0:28	28.75
6/18/2022 0:12	83.84	6/16/2022 23:29	0.19	6/16/2022 23:59	10.85	6/16/2022 22:46	0.70	6/17/2022 0:29	28.81
6/18/2022 0:13	83.82	6/16/2022 23:30	0.10	6/17/2022 0:00	10.76	6/16/2022 22:47	0.68	6/17/2022 0:30	28.76
6/18/2022 0:14	83.79	6/16/2022 23:31	-0.01	6/17/2022 0:01	10.75	6/16/2022 22:48	0.68	6/17/2022 0:31	28.74
6/18/2022 0:15	83.80	6/16/2022 23:32	-0.05	6/17/2022 0:02	10.65	6/16/2022 22:49	0.70	6/17/2022 0:32	28.78
6/18/2022 0:16	83.80	6/16/2022 23:33	-0.04	6/17/2022 0:03	10.64	6/16/2022 22:50	0.76	6/17/2022 0:33	28.77
6/18/2022 0:17	83.82	6/16/2022 23:34	-0.04	6/17/2022 0:04	10.61	6/16/2022 22:51	0.80	6/17/2022 0:34	28.78
6/18/2022 0:18	83.74	6/16/2022 23:35	-0.03	6/17/2022 0:05	10.55	6/16/2022 22:52	0.75	6/17/2022 0:35	28.75
6/18/2022 0:19	83.75	6/16/2022 23:36	-0.02	6/17/2022 0:06	10.53	6/16/2022 22:53	0.75	6/17/2022 0:36	28.78
6/18/2022 0:20	83.81	6/16/2022 23:37	-0.08	6/17/2022 0:07	10.51	6/16/2022 22:54	0.71	6/17/2022 0:37	28.76
6/18/2022 0:21	83.78	6/16/2022 23:38	-0.06	6/17/2022 0:08	10.42	6/16/2022 22:55	0.71	6/17/2022 0:38	28.77
6/18/2022 0:22	83.79	6/16/2022 23:39	-0.04	6/17/2022 0:09	10.41	6/16/2022 22:56	0.66	6/17/2022 0:39	28.76
6/18/2022 0:23	83.75	6/16/2022 23:40	-0.04	6/17/2022 0:10	10.40	6/16/2022 22:57	0.64	6/17/2022 0:40	28.74
6/18/2022 0:24	83.76	6/16/2022 23:41	-0.03	6/17/2022 0:11	10.37	6/16/2022 22:58	0.69	6/17/2022 0:41	28.77
6/18/2022 0:25	83.70	6/16/2022 23:42	-0.03	6/17/2022 0:12	10.32	6/16/2022 22:59	0.72	6/17/2022 0:42	28.77
6/18/2022 0:26	83.80	6/16/2022 23:43	-0.06	6/17/2022 0:13	10.32	6/16/2022 23:00	0.74	6/17/2022 0:43	28.75
6/18/2022 0:27	83.74	6/16/2022 23:44	-0.04	6/17/2022 0:14	10.31	6/16/2022 23:01	0.79	6/17/2022 0:44	28.76
6/18/2022 0:28	83.68	6/16/2022 23:45	-0.03	6/17/2022 0:15	10.28	6/16/2022 23:02	0.73	6/17/2022 0:45	28.75
6/18/2022 0:29	83.68	6/16/2022 23:46	-0.04	6/17/2022 0:16	10.25	6/16/2022 23:03	0.76	6/17/2022 0:46	28.74
6/18/2022 0:30	83.66	6/16/2022 23:47	-0.05	6/17/2022 0:17	10.25	6/16/2022 23:04	0.73	6/17/2022 0:47	28.75
6/18/2022 0:31	83.66	6/16/2022 23:48	-0.05	6/17/2022 0:18	10.22	6/16/2022 23:05	0.73	6/17/2022 0:48	28.76
6/18/2022 0:32	83.73	6/16/2022 23:49	-0.09	6/17/2022 0:19	10.21	6/16/2022 23:06	0.63	6/17/2022 0:49	28.74
6/18/2022 0:33	83.67	6/16/2022 23:50	-0.05	6/17/2022 0:20	10.22	6/16/2022 23:07	0.69	6/17/2022 0:50	28.80
6/18/2022 0:34	83.69	6/16/2022 23:51	0.47	6/17/2022 0:21	10.17	6/16/2022 23:08	0.72	6/17/2022 0:51	28.81
6/18/2022 0:35	83.74	6/16/2022 23:52	5.90	6/17/2022 0:22	10.14	6/16/2022 23:09	0.71	6/17/2022 0:52	28.80
6/18/2022 0:36	83.67	6/16/2022 23:53	6.42	6/17/2022 0:23	10.15	6/16/2022 23:10	0.77	6/17/2022 0:53	29.84
6/18/2022 0:37	83.74	6/16/2022 23:54	5.26	6/17/2022 0:24	10.15	6/16/2022 23:11	0.78	6/17/2022 0:54	30.22
6/18/2022 0:38	83.62	6/16/2022 23:55	4.39	6/17/2022 0:25	10.13	6/16/2022 23:12	0.78	6/17/2022 0:55	29.35
6/18/2022 0:39	83.67	6/16/2022 23:56	3.64	6/17/2022 0:26	10.10	6/16/2022 23:13	0.76	6/17/2022 0:56	28.95
6/18/2022 0:40	83.63	6/16/2022 23:57	3.03	6/17/2022 0:27	10.09	6/16/2022 23:14	0.69	6/17/2022 0:57	28.92
6/18/2022 0:41	83.74	6/16/2022 23:58	2.48	6/17/2022 0:28	10.10	6/16/2022 23:15	0.69	6/17/2022 0:58	28.82
6/18/2022 0:42	83.63	6/16/2022 23:59	2.05	6/17/2022 0:29	10.10	6/16/2022 23:16	0.72	6/17/2022 0:59	28.82
6/18/2022 0:43	83.62	6/17/2022 0:00	1.68	6/17/2022 0:30	10.16	6/16/2022 23:17	0.73	6/17/2022 1:00	28.82
6/18/2022 0:44	83.63	6/17/2022 0:01	1.37	6/17/2022 0:31	10.15	6/16/2022 23:18	0.73	6/17/2022 1:01	28.81
6/18/2022 0:45	83.65	6/17/2022 0:02	1.08	6/17/2022 0:32	10.16	6/16/2022 23:19	0.72	6/17/2022 1:02	28.84
6/18/2022 0:46	83.65	6/17/2022 0:03	0.88	6/17/2022 0:33	10.16	6/16/2022 23:20	0.69	6/17/2022 1:03	28.81
6/18/2022 0:47	83.65	6/17/2022 0:04	0.66	6/17/2022 0:34	10.14	6/16/2022 23:21	0.66	6/17/2022 1:04	28.81
6/18/2022 0:48	83.70	6/17/2022 0:05	0.49	6/17/2022 0:35	10.17	6/16/2022 23:22	0.70	6/17/2022 1:05	28.79
6/18/2022 0:49	83.62	6/17/2022 0:06	0.35	6/17/2022 0:36	10.17	6/16/2022 23:23	0.73	6/17/2022 1:06	28.80
6/18/2022 0:50	83.68	6/17/2022 0:07	0.21	6/17/2022 0:37	10.15	6/16/2022 23:24	0.72	6/17/2022 1:07	28.79
6/18/2022 0:51	83.58	6/17/2022 0:08	0.16	6/17/2022 0:38	10.16	6/16/2022 23:25	0.72	6/17/2022 1:08	28.79
6/18/2022 0:52	83.62	6/17/2022 0:09	0.06	6/17/2022 0:39	10.15	6/16/2022 23:26	0.76	6/17/2022 1:09	28.75
6/18/2022 0:53	83.64	6/17/2022 0:10	-0.03	6/17/2022 0:40	10.15	6/16/2022 23:27	0.75	6/17/2022 1:10	28.77
6/18/2022 0:54	83.63	6/17/2022 0:11	-0.03	6/17/2022 0:41	10.14	6/16/2022 23:28	0.80	6/17/2022 1:11	28.78
6/18/2022 0:55	83.64	6/17/2022 0:12	-0.05	6/17/2022 0:42	10.10	6/16/2022 23:29	0.80	6/17/2022 1:12	28.79
6/18/2022 0:56	83.62	6/17/2022 0:13	-0.05	6/17/2022 0:43	10.08	6/16/2022 23:30	0.73	6/17/2022 1:13	28.77
6/18/2022 0:57	83.60	6/17/2022 0:14	-0.05	6/17/2022 0:44	10.13	6/16/2022 23:31	0.70	6/17/2022 1:14	28.75
6/18/2022 0:58	83.61	6/17/2022 0:15	-0.05	6/17/2022 0:45	10.10	6/16/2022 23:32	0.74	6/17/2022 1:15	28.74
6/18/2022 0:59	83.59	6/17/2022 0:16	-0.06	6/17/2022 0:46	10.10	6/16/2022 23:33	0.70	6/17/2022 1:16	28.75
6/18/2022 1:00	83.61	6/17/2022 0:17	-0.03	6/17/2022 0:47	10.09	6/16/2022 23:34	0.71	6/17/2022 1:17	28.75
6/18/2022 1:01	83.60	6/17/2022 0:18	-0.06	6/17/2022 0:48	10.08	6/16/2022 23:35	0.73	6/17/2022 1:18	28.76
6/18/2022 1:02	83.66	6/17/2022 0:19	-0.08	6/17/2022 0:49	10.09	6/16/2022 23:36	0.72	6/17/2022 1:19	28.74
6/18/2022 1:03	83.58	6/17/2022 0:20	-0.09	6/17/2022 0:50	10.06	6/16/2022 23:37	0.80	6/17/2022 1:20	28.74
6/18/2022 1:04	83.55	6/17/2022 0:21	-0.06	6/17/2022 0:51	10.06	6/16/2022 23:38	0.79	6/17/2022 1:21	28.74
6/18/2022 1:05	83.57	6/17/2022 0:22	-0.06	6/17/2022 0:52	10.07	6/16/2022 23:39	0.81	6/17/2022 1:22	28.78
6/18/2022 1:06	83.60	6/17/2022 0:23	-0.06	6/17/2022 0:53	10.08	6/16/2022 23:40	0.79	6/17/2022 1:23	28.75
6/18/2022 1:07	83.57	6/17/2022 0:24	-0.05	6/17/2022 0:54	10.09	6/16/2022 23:41	0.73	6/17/2022 1:24	28.74
6/18/2022 1:08	83.58	6/17/2022 0:25	-0.07	6/17/2022 0:55	10.05	6/16/2022 23:42	0.71	6/17/2022 1:25	28.74
6/18/2022 1:09	83.59	6/17/2022 0:26	-0.02	6/17/2022 0:56	10.03	6/16/2022 23:43	0.72	6/17/2022 1:26	28.77

6/18/2022 1:10	83.58	6/17/2022 0:27	-0.05	6/17/2022 0:57	10.04	6/16/2022 23:44	0.65	6/17/2022 1:27	28.73
6/18/2022 1:11	83.59	6/17/2022 0:28	-0.01	6/17/2022 0:58	10.02	6/16/2022 23:45	0.73	6/17/2022 1:28	28.76
6/18/2022 1:12	83.61	6/17/2022 0:29	2.20	6/17/2022 0:59	10.02	6/16/2022 23:46	0.72	6/17/2022 1:29	28.76
6/18/2022 1:13	83.59	6/17/2022 0:30	7.14	6/17/2022 1:00	9.99	6/16/2022 23:47	0.77	6/17/2022 1:30	28.77
6/18/2022 1:14	83.58	6/17/2022 0:31	5.82	6/17/2022 1:01	10.02	6/16/2022 23:48	0.83	6/17/2022 1:31	28.75
6/18/2022 1:15	83.55	6/17/2022 0:32	4.81	6/17/2022 1:02	10.03	6/16/2022 23:49	0.80	6/17/2022 1:32	28.75
6/18/2022 1:16	83.57	6/17/2022 0:33	4.03	6/17/2022 1:03	10.03	6/16/2022 23:50	0.79	6/17/2022 1:33	28.73
6/18/2022 1:17	83.56	6/17/2022 0:34	3.32	6/17/2022 1:04	10.03	6/16/2022 23:51	0.74	6/17/2022 1:34	28.73
6/18/2022 1:18	83.55	6/17/2022 0:35	2.70	6/17/2022 1:05	10.09	6/16/2022 23:52	0.73	6/17/2022 1:35	28.73
6/18/2022 1:19	83.61	6/17/2022 0:36	2.27	6/17/2022 1:06	10.05	6/16/2022 23:53	0.72	6/17/2022 1:36	28.75
6/18/2022 1:20	83.53	6/17/2022 0:37	1.87	6/17/2022 1:07	10.08	6/16/2022 23:54	0.71	6/17/2022 1:37	28.71
6/18/2022 1:21	83.59	6/17/2022 0:38	1.56	6/17/2022 1:08	10.13	6/16/2022 23:55	0.73	6/17/2022 1:38	28.72
6/18/2022 1:22	83.61	6/17/2022 0:39	1.24	6/17/2022 1:09	10.10	6/16/2022 23:56	0.73	6/17/2022 1:39	28.71
6/18/2022 1:23	83.58	6/17/2022 0:40	1.01	6/17/2022 1:10	10.06	6/16/2022 23:57	0.74	6/17/2022 1:40	28.74
6/18/2022 1:24	83.59	6/17/2022 0:41	0.77	6/17/2022 1:11	10.10	6/16/2022 23:58	0.72	6/17/2022 1:41	28.70
6/18/2022 1:25	83.56	6/17/2022 0:42	0.59	6/17/2022 1:12	10.10	6/16/2022 23:59	0.76	6/17/2022 1:42	28.70
6/18/2022 1:26	83.57	6/17/2022 0:43	0.40	6/17/2022 1:13	10.11	6/17/2022 0:00	0.72	6/17/2022 1:43	28.72
6/18/2022 1:27	83.54	6/17/2022 0:44	0.26	6/17/2022 1:14	10.08	6/17/2022 0:01	0.72	6/17/2022 1:44	28.73
6/18/2022 1:28	83.54	6/17/2022 0:45	0.13	6/17/2022 1:15	10.10	6/17/2022 0:02	0.70	6/17/2022 1:45	28.72
6/18/2022 1:29	83.55	6/17/2022 0:46	0.03	6/17/2022 1:16	10.10	6/17/2022 0:03	0.73	6/17/2022 1:46	28.73
6/18/2022 1:30	83.53	6/17/2022 0:47	-0.07	6/17/2022 1:17	10.09	6/17/2022 0:04	0.71	6/17/2022 1:47	28.70
6/18/2022 1:31	83.57	6/17/2022 0:48	-0.05	6/17/2022 1:18	10.07	6/17/2022 0:05	0.79	6/17/2022 1:48	28.71
6/18/2022 1:32	83.53	6/17/2022 0:49	-0.07	6/17/2022 1:19	10.04	6/17/2022 0:06	0.80	6/17/2022 1:49	28.73
6/18/2022 1:33	83.51	6/17/2022 0:50	-0.08	6/17/2022 1:20	10.09	6/17/2022 0:07	0.80	6/17/2022 1:50	28.70
6/18/2022 1:34	83.58	6/17/2022 0:51	-0.03	6/17/2022 1:21	10.06	6/17/2022 0:08	0.82	6/17/2022 1:51	28.72
6/18/2022 1:35	83.50	6/17/2022 0:52	-0.03	6/17/2022 1:22	10.08	6/17/2022 0:09	0.78	6/17/2022 1:52	28.71
6/18/2022 1:36	83.55	6/17/2022 0:53	-0.09	6/17/2022 1:23	10.04	6/17/2022 0:10	0.78	6/17/2022 1:53	28.70
6/18/2022 1:37	83.55	6/17/2022 0:54	-0.03	6/17/2022 1:24	10.07	6/17/2022 0:11	0.77	6/17/2022 1:54	28.71
6/18/2022 1:38	83.51	6/17/2022 0:55	-0.07	6/17/2022 1:25	10.04	6/17/2022 0:12	0.75	6/17/2022 1:55	28.70
6/18/2022 1:39	83.55	6/17/2022 0:56	-0.02	6/17/2022 1:26	10.05	6/17/2022 0:13	0.72	6/17/2022 1:56	28.72
6/18/2022 1:40	83.53	6/17/2022 0:57	-0.08	6/17/2022 1:27	10.04	6/17/2022 0:14	0.70	6/17/2022 1:57	28.72
6/18/2022 1:41	83.50	6/17/2022 0:58	-0.02	6/17/2022 1:28	10.01	6/17/2022 0:15	0.69	6/17/2022 1:58	28.71
6/18/2022 1:42	83.51	6/17/2022 0:59	-0.05	6/17/2022 1:29	10.01	6/17/2022 0:16	0.75	6/17/2022 1:59	28.70
6/18/2022 1:43	83.52	6/17/2022 1:00	-0.05	6/17/2022 1:30	9.97	6/17/2022 0:17	0.77	6/17/2022 2:00	28.74
6/18/2022 1:44	83.53	6/17/2022 1:01	-0.04	6/17/2022 1:31	9.99	6/17/2022 0:18	0.77	6/17/2022 2:01	28.70
6/18/2022 1:45	83.54	6/17/2022 1:02	-0.04	6/17/2022 1:32	10.00	6/17/2022 0:19	0.83	6/17/2022 2:02	28.71
6/18/2022 1:46	83.52	6/17/2022 1:03	-0.04	6/17/2022 1:33	10.01	6/17/2022 0:20	0.80	6/17/2022 2:03	28.72
6/18/2022 1:47	83.56	6/17/2022 1:04	-0.04	6/17/2022 1:34	10.00	6/17/2022 0:21	0.76	6/17/2022 2:04	28.69
6/18/2022 1:48	83.56	6/17/2022 1:05	-0.08	6/17/2022 1:35	10.01	6/17/2022 0:22	0.75	6/17/2022 2:05	28.72
6/18/2022 1:49	83.50	6/17/2022 1:06	1.65	6/17/2022 1:36	9.98	6/17/2022 0:23	0.75	6/17/2022 2:06	28.72
6/18/2022 1:50	83.51	6/17/2022 1:07	7.16	6/17/2022 1:37	10.02	6/17/2022 0:24	0.69	6/17/2022 2:07	28.69
6/18/2022 1:51	83.47	6/17/2022 1:08	6.10	6/17/2022 1:38	10.01	6/17/2022 0:25	0.70	6/17/2022 2:08	28.70
6/18/2022 1:52	83.57	6/17/2022 1:09	5.04	6/17/2022 1:39	10.03	6/17/2022 0:26	0.75	6/17/2022 2:09	28.70
6/18/2022 1:53	83.57	6/17/2022 1:10	4.18	6/17/2022 1:40	10.06	6/17/2022 0:27	0.77	6/17/2022 2:10	28.71
6/18/2022 1:54	83.49	6/17/2022 1:11	3.45	6/17/2022 1:41	10.06	6/17/2022 0:28	0.80	6/17/2022 2:11	28.68
6/18/2022 1:55	83.52	6/17/2022 1:12	2.85	6/17/2022 1:42	10.10	6/17/2022 0:29	0.82	6/17/2022 2:12	28.68
6/18/2022 1:56	83.47	6/17/2022 1:13	2.32	6/17/2022 1:43	10.10	6/17/2022 0:30	0.81	6/17/2022 2:13	28.70
6/18/2022 1:57	83.51	6/17/2022 1:14	1.99	6/17/2022 1:44	10.06	6/17/2022 0:31	0.81	6/17/2022 2:14	28.70
6/18/2022 1:58	83.49	6/17/2022 1:15	1.57	6/17/2022 1:45	10.07	6/17/2022 0:32	0.81	6/17/2022 2:15	28.71
6/18/2022 1:59	83.48	6/17/2022 1:16	1.33	6/17/2022 1:46	10.07	6/17/2022 0:33	0.80	6/17/2022 2:16	28.72
6/18/2022 2:00	83.44	6/17/2022 1:17	1.07	6/17/2022 1:47	10.08	6/17/2022 0:34	0.82	6/17/2022 2:17	28.71
6/18/2022 2:01	83.50	6/17/2022 1:18	0.80	6/17/2022 1:48	10.05	6/17/2022 0:35	0.82	6/17/2022 2:18	28.71
6/18/2022 2:02	83.45	6/17/2022 1:19	0.63	6/17/2022 1:49	10.07	6/17/2022 0:36	0.81	6/17/2022 2:19	28.67
6/18/2022 2:03	83.50	6/17/2022 1:20	0.43	6/17/2022 1:50	10.05	6/17/2022 0:37	0.80	6/17/2022 2:20	28.70
6/18/2022 2:04	83.48	6/17/2022 1:21	0.28	6/17/2022 1:51	10.05	6/17/2022 0:38	0.81	6/17/2022 2:21	28.71
6/18/2022 2:05	83.47	6/17/2022 1:22	0.15	6/17/2022 1:52	10.05	6/17/2022 0:39	0.79	6/17/2022 2:22	28.68
6/18/2022 2:06	83.50	6/17/2022 1:23	0.02	6/17/2022 1:53	10.07	6/17/2022 0:40	0.79	6/17/2022 2:23	28.68
6/18/2022 2:07	83.50	6/17/2022 1:24	-0.04	6/17/2022 1:54	10.04	6/17/2022 0:41	0.79	6/17/2022 2:24	28.70
6/18/2022 2:08	83.45	6/17/2022 1:25	-0.06	6/17/2022 1:55	10.05	6/17/2022 0:42	0.75	6/17/2022 2:25	28.69
6/18/2022 2:09	83.52	6/17/2022 1:26	-0.03	6/17/2022 1:56	10.05	6/17/2022 0:43	0.72	6/17/2022 2:26	28.70
6/18/2022 2:10	83.43	6/17/2022 1:27	-0.04	6/17/2022 1:57	10.03	6/17/2022 0:44	0.74	6/17/2022 2:27	28.68
6/18/2022 2:11	83.45	6/17/2022 1:28	-0.04	6/17/2022 1:58	10.02	6/17/2022 0:45	0.69	6/17/2022 2:28	28.70
6/18/2022 2:12	83.48	6/17/2022 1:29	-0.04	6/17/2022 1:59	10.02	6/17/2022 0:46	0.73	6/17/2022 2:29	28.68
6/18/2022 2:13	83.46	6/17/2022 1:30	-0.01	6/17/2022 2:00	10.03	6/17/2022 0:47	0.82	6/17/2022 2:30	28.65
6/18/2022 2:14	83.45	6/17/2022 1:31	-0.03	6/17/2022 2:01	10.01	6/17/2022 0:48	0.82	6/17/2022 2:31	28.71
6/18/2022 2:15	83.46	6/17/2022 1:32	-0.03	6/17/2022 2:02	10.01	6/17/2022 0:49	0.80	6/17/2022 2:32	28.71
6/18/2022 2:16	83.48	6/17/2022 1:33	-0.09	6/17/2022 2:03	9.99	6/17/2022 0:50	0.84	6/17/2022 2:33	28.70
6/18/2022 2:17	83.47	6/17/2022 1:34	-0.03	6/17/2022 2:04	9.99	6/17/2022 0:51	0.76	6/17/2022 2:34	28.68
6/18/2022 2:18	83.48	6/17/2022 1:35	-0.04	6/17/2022 2:05	10.00	6/17/2022 0:52	0.77	6/17/2022 2:35	28.66
6/18/2022 2:19	83.48	6/17/2022 1:36	-0.06	6/17/2022 2:06	10.00	6/17/2022 0:53	0.74	6/17/2022 2:36	28.67
6/18/2022 2:20	83.46	6/17/2022 1:37	-0.07	6/17/2022 2:07	9.99	6/17/2022 0:54	0.75	6/17/2022 2:37	28.67
6/18/2022 2:21	83.41	6/17/2022 1:38	-0.04	6/17/2022 2:08	9.99	6/17/2022 0:55	0.74	6/17/2022 2:38	28.66
6/18/2022 2:22	83.43	6/17/2022 1:39	-0.06	6/17/2022 2:09	9.95	6/17/2022 0:56	0.80	6/17/2022 2:39	28.64
6/18/2022 2:23	83.39	6/17/2022 1:40	-0.02	6/17/2022 2:10	9.99	6/17/2022 0:57	0.85	6/17/2022 2:40	28.68
6/18/2022 2:24	83.42	6/17/2022 1:41	-0.06	6/17/2022 2:11	10.00	6/17/2022 0:58	0.82	6/17/2022 2:41	28.68
6/18/2022 2:25	83.41	6/17/2022 1:42	-0.06	6/17/2022 2:12	9.98	6/17/2022 0:59	0.86	6/17/2022 2:42	28.68
6/18/2022 2:26	83.45	6/17/2022 1:43	-0.05	6/17/2022 2:13	10.01	6/17/2022 1:00	0.79	6/17/2022 2:43	28.68
6/18/2022 2:27	83.52	6/17/2022 1:44	4.43	6/17/2022 2:14	10.06	6/17/2022 1:01	0.75	6/17/2022 2:44	28.66
6/18/2022 2:28	83.48	6/17/2022 1:45	6.75	6/17/2022 2:15	10.03	6/17/2022 1:02	0.73	6/17/2022 2:45	28.65
6/18/2022 2:29	83.46	6/17/2022 1:46	5.55	6/17/2022 2:16	10.01	6/17/2022 1:03	0.72	6/17/2022 2:46	28.67
6/18/2022 2:30	83.44	6/17/2022 1:47	4.60	6/17/2022 2:17	10.06	6/17/2022 1:04	0.72	6/17/2022 2:47	28.63
6/18/2022 2:31	83.46	6/17/2022 1:48	3.79	6/17/2022 2:18	10.06	6/17/2022 1:05	0.77	6/17/2022 2:48	28.68
6/18/2022 2:32	83.47	6/17/2022 1:49	3.14	6/17/2022 2:19	10.08	6/17/2022 1:06	0.80	6/17/2022 2:49	28.69
6/18/2022 2:33	83.49	6/17/2022 1:50	2.58	6/17/2022 2:20	10.07	6/17/2022 1:07	0.82	6/17/2022 2:50	28.66
6/18/2022 2:34	83.45	6/17/2022 1:51	2.16	6/17/2022 2:21	10.08	6/17/2022 1:08	0.83	6/17/2022 2:51	28.68
6/18/2022 2:35	83.38	6/17/2022 1:52	1.74	6/17/2022 2:22	10.06	6/17/2022 1:09	0.84	6/17/2022 2:52	28.67
6/18/2022 2:36	83.41	6/17/2022 1:53	1.41	6/17/2022 2:23	10.07	6/17/2022 1:10	0.82	6/17/2022 2:53	28.68
6/18/2022 2:37	83.42	6/17/2022 1:54	1.16	6/17/2022 2:24	10.08	6/17/2022 1:11	0.85	6/17/2022 2:54	28.67

6/18/2022 2:38	83.43	6/17/2022 1:55	0.91	6/17/2022 2:25	10.06	6/17/2022 1:12	0.85	6/17/2022 2:55	28.65
6/18/2022 2:39	83.41	6/17/2022 1:56	0.67	6/17/2022 2:26	10.04	6/17/2022 1:13	0.86	6/17/2022 2:56	28.63
6/18/2022 2:40	83.40	6/17/2022 1:57	0.51	6/17/2022 2:27	10.05	6/17/2022 1:14	0.83	6/17/2022 2:57	28.68
6/18/2022 2:41	83.41	6/17/2022 1:58	0.36	6/17/2022 2:28	10.04	6/17/2022 1:15	0.83	6/17/2022 2:58	28.68
6/18/2022 2:42	83.39	6/17/2022 1:59	0.21	6/17/2022 2:29	10.03	6/17/2022 1:16	0.84	6/17/2022 2:59	28.64
6/18/2022 2:43	83.42	6/17/2022 2:00	0.09	6/17/2022 2:30	10.01	6/17/2022 1:17	0.81	6/17/2022 3:00	28.65
6/18/2022 2:44	83.36	6/17/2022 2:01	-0.02	6/17/2022 2:31	10.03	6/17/2022 1:18	0.78	6/17/2022 3:01	28.66
6/18/2022 2:45	83.41	6/17/2022 2:02	-0.04	6/17/2022 2:32	9.99	6/17/2022 1:19	0.79	6/17/2022 3:02	28.68
6/18/2022 2:46	83.49	6/17/2022 2:03	-0.04	6/17/2022 2:33	10.01	6/17/2022 1:20	0.72	6/17/2022 3:03	28.65
6/18/2022 2:47	83.39	6/17/2022 2:04	-0.06	6/17/2022 2:34	9.99	6/17/2022 1:21	0.77	6/17/2022 3:04	28.64
6/18/2022 2:48	83.37	6/17/2022 2:05	-0.04	6/17/2022 2:35	10.02	6/17/2022 1:22	0.77	6/17/2022 3:05	28.65
6/18/2022 2:49	83.45	6/17/2022 2:06	-0.06	6/17/2022 2:36	10.04	6/17/2022 1:23	0.79	6/17/2022 3:06	28.69
6/18/2022 2:50	83.45	6/17/2022 2:07	-0.07	6/17/2022 2:37	10.02	6/17/2022 1:24	0.83	6/17/2022 3:07	28.67
6/18/2022 2:51	83.42	6/17/2022 2:08	-0.07	6/17/2022 2:38	9.98	6/17/2022 1:25	0.85	6/17/2022 3:08	28.62
6/18/2022 2:52	83.41	6/17/2022 2:09	-0.07	6/17/2022 2:39	9.98	6/17/2022 1:26	0.84	6/17/2022 3:09	28.66
6/18/2022 2:53	83.42	6/17/2022 2:10	-0.01	6/17/2022 2:40	9.99	6/17/2022 1:27	0.79	6/17/2022 3:10	28.66
6/18/2022 2:54	83.44	6/17/2022 2:11	-0.08	6/17/2022 2:41	9.97	6/17/2022 1:28	0.80	6/17/2022 3:11	28.62
6/18/2022 2:55	83.40	6/17/2022 2:12	-0.06	6/17/2022 2:42	10.00	6/17/2022 1:29	0.71	6/17/2022 3:12	28.62
6/18/2022 2:56	83.40	6/17/2022 2:13	-0.09	6/17/2022 2:43	9.95	6/17/2022 1:30	0.77	6/17/2022 3:13	28.68
6/18/2022 2:57	83.40	6/17/2022 2:14	-0.05	6/17/2022 2:44	9.96	6/17/2022 1:31	0.75	6/17/2022 3:14	28.66
6/18/2022 2:58	83.42	6/17/2022 2:15	-0.07	6/17/2022 2:45	9.97	6/17/2022 1:32	0.78	6/17/2022 3:15	28.62
6/18/2022 2:59	83.41	6/17/2022 2:16	-0.07	6/17/2022 2:46	9.98	6/17/2022 1:33	0.81	6/17/2022 3:16	28.66
6/18/2022 3:00	83.40	6/17/2022 2:17	-0.03	6/17/2022 2:47	10.00	6/17/2022 1:34	0.88	6/17/2022 3:17	28.63
6/18/2022 3:01	83.40	6/17/2022 2:18	-0.06	6/17/2022 2:48	10.05	6/17/2022 1:35	0.86	6/17/2022 3:18	28.67
6/18/2022 3:02	83.38	6/17/2022 2:19	-0.04	6/17/2022 2:49	10.01	6/17/2022 1:36	0.87	6/17/2022 3:19	28.60
6/18/2022 3:03	83.38	6/17/2022 2:20	-0.05	6/17/2022 2:50	10.06	6/17/2022 1:37	0.83	6/17/2022 3:20	28.63
6/18/2022 3:04	83.45	6/17/2022 2:21	0.39	6/17/2022 2:51	10.08	6/17/2022 1:38	0.77	6/17/2022 3:21	28.60
6/18/2022 3:05	83.40	6/17/2022 2:22	6.17	6/17/2022 2:52	10.05	6/17/2022 1:39	0.74	6/17/2022 3:22	28.63
6/18/2022 3:06	83.38	6/17/2022 2:23	6.43	6/17/2022 2:53	10.07	6/17/2022 1:40	0.78	6/17/2022 3:23	28.62
6/18/2022 3:07	83.40	6/17/2022 2:24	5.30	6/17/2022 2:54	10.08	6/17/2022 1:41	0.79	6/17/2022 3:24	28.64
6/18/2022 3:08	83.39	6/17/2022 2:25	4.39	6/17/2022 2:55	10.08	6/17/2022 1:42	0.80	6/17/2022 3:25	28.63
6/18/2022 3:09	83.39	6/17/2022 2:26	3.63	6/17/2022 2:56	10.05	6/17/2022 1:43	0.83	6/17/2022 3:26	28.66
6/18/2022 3:10	83.39	6/17/2022 2:27	2.96	6/17/2022 2:57	10.06	6/17/2022 1:44	0.89	6/17/2022 3:27	28.67
6/18/2022 3:11	83.40	6/17/2022 2:28	2.46	6/17/2022 2:58	10.04	6/17/2022 1:45	0.90	6/17/2022 3:28	28.64
6/18/2022 3:12	83.41	6/17/2022 2:29	2.06	6/17/2022 2:59	10.07	6/17/2022 1:46	0.87	6/17/2022 3:29	28.64
6/18/2022 3:13	83.37	6/17/2022 2:30	1.68	6/17/2022 3:00	10.05	6/17/2022 1:47	0.87	6/17/2022 3:30	28.65
6/18/2022 3:14	83.43	6/17/2022 2:31	1.35	6/17/2022 3:01	10.04	6/17/2022 1:48	0.88	6/17/2022 3:31	28.63
6/18/2022 3:15	83.34	6/17/2022 2:32	1.09	6/17/2022 3:02	10.04	6/17/2022 1:49	0.92	6/17/2022 3:32	28.63
6/18/2022 3:16	83.42	6/17/2022 2:33	0.84	6/17/2022 3:03	10.04	6/17/2022 1:50	0.91	6/17/2022 3:33	28.61
6/18/2022 3:17	83.40	6/17/2022 2:34	0.69	6/17/2022 3:04	10.02	6/17/2022 1:51	0.86	6/17/2022 3:34	28.64
6/18/2022 3:18	83.37	6/17/2022 2:35	0.46	6/17/2022 3:05	10.03	6/17/2022 1:52	0.88	6/17/2022 3:35	28.65
6/18/2022 3:19	83.40	6/17/2022 2:36	0.31	6/17/2022 3:06	10.01	6/17/2022 1:53	0.83	6/17/2022 3:36	28.62
6/18/2022 3:20	83.36	6/17/2022 2:37	0.18	6/17/2022 3:07	10.02	6/17/2022 1:54	0.82	6/17/2022 3:37	28.63
6/18/2022 3:21	83.41	6/17/2022 2:38	0.09	6/17/2022 3:08	9.98	6/17/2022 1:55	0.83	6/17/2022 3:38	28.62
6/18/2022 3:22	83.39	6/17/2022 2:39	-0.04	6/17/2022 3:09	10.03	6/17/2022 1:56	0.78	6/17/2022 3:39	28.62
6/18/2022 3:23	83.37	6/17/2022 2:40	-0.03	6/17/2022 3:10	10.02	6/17/2022 1:57	0.79	6/17/2022 3:40	28.63
6/18/2022 3:24	83.35	6/17/2022 2:41	0.00	6/17/2022 3:11	10.00	6/17/2022 1:58	0.77	6/17/2022 3:41	28.63
6/18/2022 3:25	83.38	6/17/2022 2:42	-0.05	6/17/2022 3:12	9.98	6/17/2022 1:59	0.81	6/17/2022 3:42	28.63
6/18/2022 3:26	83.37	6/17/2022 2:43	-0.04	6/17/2022 3:13	9.98	6/17/2022 2:00	0.80	6/17/2022 3:43	28.62
6/18/2022 3:27	83.38	6/17/2022 2:44	-0.07	6/17/2022 3:14	9.98	6/17/2022 2:01	0.87	6/17/2022 3:44	28.64
6/18/2022 3:28	83.36	6/17/2022 2:45	-0.04	6/17/2022 3:15	9.98	6/17/2022 2:02	0.92	6/17/2022 3:45	28.63
6/18/2022 3:29	83.39	6/17/2022 2:46	-0.07	6/17/2022 3:16	9.95	6/17/2022 2:03	0.87	6/17/2022 3:46	28.61
6/18/2022 3:30	83.37	6/17/2022 2:47	-0.06	6/17/2022 3:17	9.94	6/17/2022 2:04	0.84	6/17/2022 3:47	28.64
6/18/2022 3:31	83.39	6/17/2022 2:48	-0.03	6/17/2022 3:18	9.95	6/17/2022 2:05	0.81	6/17/2022 3:48	28.63
6/18/2022 3:32	83.38	6/17/2022 2:49	-0.06	6/17/2022 3:19	9.99	6/17/2022 2:06	0.80	6/17/2022 3:49	28.63
6/18/2022 3:33	83.36	6/17/2022 2:50	-0.06	6/17/2022 3:20	9.96	6/17/2022 2:07	0.76	6/17/2022 3:50	28.60
6/18/2022 3:34	83.38	6/17/2022 2:51	-0.02	6/17/2022 3:21	10.00	6/17/2022 2:08	0.75	6/17/2022 3:51	28.63
6/18/2022 3:35	83.34	6/17/2022 2:52	-0.07	6/17/2022 3:22	9.99	6/17/2022 2:09	0.80	6/17/2022 3:52	28.63
6/18/2022 3:36	83.34	6/17/2022 2:53	-0.04	6/17/2022 3:23	10.01	6/17/2022 2:10	0.82	6/17/2022 3:53	28.60
6/18/2022 3:37	83.36	6/17/2022 2:54	-0.01	6/17/2022 3:24	10.01	6/17/2022 2:11	0.86	6/17/2022 3:54	28.61
6/18/2022 3:38	83.38	6/17/2022 2:55	-0.04	6/17/2022 3:25	10.03	6/17/2022 2:12	0.88	6/17/2022 3:55	28.62
6/18/2022 3:39	83.35	6/17/2022 2:56	-0.03	6/17/2022 3:26	10.07	6/17/2022 2:13	0.86	6/17/2022 3:56	28.61
6/18/2022 3:40	83.38	6/17/2022 2:57	-0.09	6/17/2022 3:27	10.04	6/17/2022 2:14	0.81	6/17/2022 3:57	28.61
6/18/2022 3:41	83.33	6/17/2022 2:58	-0.07	6/17/2022 3:28	10.06	6/17/2022 2:15	0.78	6/17/2022 3:58	28.59
6/18/2022 3:42	83.38	6/17/2022 2:59	-0.14	6/17/2022 3:29	10.06	6/17/2022 2:16	0.76	6/17/2022 3:59	28.62
6/18/2022 3:43	83.36	6/17/2022 3:00	5.84	6/17/2022 3:30	10.03	6/17/2022 2:17	0.78	6/17/2022 4:00	28.60
6/18/2022 3:44	83.33	6/17/2022 3:01	6.45	6/17/2022 3:31	10.04	6/17/2022 2:18	0.81	6/17/2022 4:01	28.62
6/18/2022 3:45	83.33	6/17/2022 3:02	5.28	6/17/2022 3:32	10.03	6/17/2022 2:19	0.84	6/17/2022 4:02	28.62
6/18/2022 3:46	83.35	6/17/2022 3:03	4.42	6/17/2022 3:33	10.05	6/17/2022 2:20	0.90	6/17/2022 4:03	28.66
6/18/2022 3:47	83.34	6/17/2022 3:04	3.62	6/17/2022 3:34	10.03	6/17/2022 2:21	0.90	6/17/2022 4:04	28.64
6/18/2022 3:48	83.36	6/17/2022 3:05	2.95	6/17/2022 3:35	10.04	6/17/2022 2:22	0.85	6/17/2022 4:05	28.62
6/18/2022 3:49	83.35	6/17/2022 3:06	2.49	6/17/2022 3:36	10.02	6/17/2022 2:23	0.88	6/17/2022 4:06	28.61
6/18/2022 3:50	83.36	6/17/2022 3:07	2.06	6/17/2022 3:37	10.03	6/17/2022 2:24	0.85	6/17/2022 4:07	28.62
6/18/2022 3:51	83.31	6/17/2022 3:08	1.66	6/17/2022 3:38	10.04	6/17/2022 2:25	0.84	6/17/2022 4:08	28.60
6/18/2022 3:52	83.33	6/17/2022 3:09	1.34	6/17/2022 3:39	10.06	6/17/2022 2:26	0.84	6/17/2022 4:09	28.58
6/18/2022 3:53	83.32	6/17/2022 3:10	1.11	6/17/2022 3:40	10.09	6/17/2022 2:27	0.85	6/17/2022 4:10	28.59
6/18/2022 3:54	83.33	6/17/2022 3:11	0.86	6/17/2022 3:41	10.08	6/17/2022 2:28	0.85	6/17/2022 4:11	28.60
6/18/2022 3:55	83.35	6/17/2022 3:12	0.65	6/17/2022 3:42	10.09	6/17/2022 2:29	0.81	6/17/2022 4:12	28.59
6/18/2022 3:56	83.32	6/17/2022 3:13	0.47	6/17/2022 3:43	10.08	6/17/2022 2:30	0.81	6/17/2022 4:13	28.63
6/18/2022 3:57	83.31	6/17/2022 3:14	0.28	6/17/2022 3:44	10.09	6/17/2022 2:31	0.78	6/17/2022 4:14	28.57
6/18/2022 3:58	83.33	6/17/2022 3:15	0.17	6/17/2022 3:45	10.09	6/17/2022 2:32	0.76	6/17/2022 4:15	28.60
6/18/2022 3:59	83.29	6/17/2022 3:16	0.05	6/17/2022 3:46	10.08	6/17/2022 2:33	0.80	6/17/2022 4:16	28.58
6/18/2022 4:00	83.32	6/17/2022 3:17	-0.02	6/17/2022 3:47	10.06	6/17/2022 2:34	0.79	6/17/2022 4:17	28.63
6/18/2022 4:01	83.31	6/17/2022 3:18	-0.07	6/17/2022 3:48	10.10	6/17/2022 2:35	0.83	6/17/2022 4:18	28.59
6/18/2022 4:02	83.32	6/17/2022 3:19	-0.03	6/17/2022 3:49	10.09	6/17/2022 2:36	0.93	6/17/2022 4:19	28.60
6/18/2022 4:03	83.36	6/17/2022 3:20	-0.07	6/17/2022 3:50	10.07	6/17/2022 2:37	0.89	6/17/2022 4:20	28.60
6/18/2022 4:04	83.33	6/17/2022 3:21	-0.04	6/17/2022 3:51	10.10	6/17/2022 2:38	0.89	6/17/2022 4:21	28.60
6/18/2022 4:05	83.30	6/17/2022 3:22	-0.06	6/17/2022 3:52	10.07	6/17/2022 2:39	0.85	6/17/2022 4:22	28.61

6/18/2022 4:06	83.35	6/17/2022 3:23	-0.03	6/17/2022 3:53	10.06	6/17/2022 2:40	0.81	6/17/2022 4:23	28.63
6/18/2022 4:07	83.34	6/17/2022 3:24	-0.02	6/17/2022 3:54	10.06	6/17/2022 2:41	0.80	6/17/2022 4:24	28.56
6/18/2022 4:08	83.25	6/17/2022 3:25	-0.04	6/17/2022 3:55	10.13	6/17/2022 2:42	0.80	6/17/2022 4:25	28.62
6/18/2022 4:09	83.34	6/17/2022 3:26	-0.09	6/17/2022 3:56	10.14	6/17/2022 2:43	0.80	6/17/2022 4:26	28.59
6/18/2022 4:10	83.30	6/17/2022 3:27	-0.05	6/17/2022 3:57	10.12	6/17/2022 2:44	0.78	6/17/2022 4:27	28.59
6/18/2022 4:11	83.31	6/17/2022 3:28	-0.05	6/17/2022 3:58	10.11	6/17/2022 2:45	0.83	6/17/2022 4:28	28.59
6/18/2022 4:12	83.27	6/17/2022 3:29	-0.06	6/17/2022 3:59	10.11	6/17/2022 2:46	0.87	6/17/2022 4:29	28.61
6/18/2022 4:13	83.34	6/17/2022 3:30	-0.03	6/17/2022 4:00	10.11	6/17/2022 2:47	0.90	6/17/2022 4:30	28.56
6/18/2022 4:14	83.29	6/17/2022 3:31	-0.03	6/17/2022 4:01	10.13	6/17/2022 2:48	0.90	6/17/2022 4:31	28.59
6/18/2022 4:15	83.35	6/17/2022 3:32	-0.09	6/17/2022 4:02	10.13	6/17/2022 2:49	0.87	6/17/2022 4:32	28.60
6/18/2022 4:16	83.28	6/17/2022 3:33	-0.06	6/17/2022 4:03	10.11	6/17/2022 2:50	0.86	6/17/2022 4:33	28.59
6/18/2022 4:17	83.30	6/17/2022 3:34	-0.04	6/17/2022 4:04	10.09	6/17/2022 2:51	0.82	6/17/2022 4:34	28.61
6/18/2022 4:18	83.29	6/17/2022 3:35	-0.05	6/17/2022 4:05	10.11	6/17/2022 2:52	0.82	6/17/2022 4:35	28.56
6/18/2022 4:19	83.30	6/17/2022 3:36	-0.05	6/17/2022 4:06	10.12	6/17/2022 2:53	0.78	6/17/2022 4:36	28.55
6/18/2022 4:20	83.29	6/17/2022 3:37	1.30	6/17/2022 4:07	10.11	6/17/2022 2:54	0.80	6/17/2022 4:37	28.60
6/18/2022 4:21	83.31	6/17/2022 3:38	6.90	6/17/2022 4:08	10.10	6/17/2022 2:55	0.87	6/17/2022 4:38	28.59
6/18/2022 4:22	83.30	6/17/2022 3:39	6.04	6/17/2022 4:09	10.03	6/17/2022 2:56	0.91	6/17/2022 4:39	28.58
6/18/2022 4:23	83.30	6/17/2022 3:40	4.96	6/17/2022 4:10	10.07	6/17/2022 2:57	0.91	6/17/2022 4:40	28.59
6/18/2022 4:24	83.27	6/17/2022 3:41	4.15	6/17/2022 4:11	10.09	6/17/2022 2:58	0.92	6/17/2022 4:41	28.59
6/18/2022 4:25	83.28	6/17/2022 3:42	3.34	6/17/2022 4:12	10.05	6/17/2022 2:59	0.93	6/17/2022 4:42	28.62
6/18/2022 4:26	83.30	6/17/2022 3:43	2.76	6/17/2022 4:13	10.04	6/17/2022 3:00	0.83	6/17/2022 4:43	28.59
6/18/2022 4:27	83.25	6/17/2022 3:44	2.28	6/17/2022 4:14	10.06	6/17/2022 3:01	0.85	6/17/2022 4:44	28.56
6/18/2022 4:28	83.32	6/17/2022 3:45	1.85	6/17/2022 4:15	10.04	6/17/2022 3:02	0.88	6/17/2022 4:45	28.59
6/18/2022 4:29	83.28	6/17/2022 3:46	1.55	6/17/2022 4:16	10.06	6/17/2022 3:03	0.87	6/17/2022 4:46	28.60
6/18/2022 4:30	83.29	6/17/2022 3:47	1.27	6/17/2022 4:17	10.01	6/17/2022 3:04	0.86	6/17/2022 4:47	28.61
6/18/2022 4:31	83.30	6/17/2022 3:48	0.98	6/17/2022 4:18	10.04	6/17/2022 3:05	0.84	6/17/2022 4:48	28.60
6/18/2022 4:32	83.32	6/17/2022 3:49	0.75	6/17/2022 4:19	10.02	6/17/2022 3:06	0.81	6/17/2022 4:49	28.57
6/18/2022 4:33	83.30	6/17/2022 3:50	0.56	6/17/2022 4:20	10.02	6/17/2022 3:07	0.79	6/17/2022 4:50	28.59
6/18/2022 4:34	83.32	6/17/2022 3:51	0.40	6/17/2022 4:21	10.00	6/17/2022 3:08	0.85	6/17/2022 4:51	28.58
6/18/2022 4:35	83.26	6/17/2022 3:52	0.24	6/17/2022 4:22	9.98	6/17/2022 3:09	0.79	6/17/2022 4:52	28.57
6/18/2022 4:36	83.23	6/17/2022 3:53	0.14	6/17/2022 4:23	9.99	6/17/2022 3:10	0.79	6/17/2022 4:53	28.58
6/18/2022 4:37	83.32	6/17/2022 3:54	0.01	6/17/2022 4:24	9.98	6/17/2022 3:11	0.78	6/17/2022 4:54	28.60
6/18/2022 4:38	83.26	6/17/2022 3:55	-0.04	6/17/2022 4:25	10.00	6/17/2022 3:12	0.84	6/17/2022 4:55	28.61
6/18/2022 4:39	83.27	6/17/2022 3:56	-0.07	6/17/2022 4:26	10.00	6/17/2022 3:13	0.86	6/17/2022 4:56	28.57
6/18/2022 4:40	83.29	6/17/2022 3:57	-0.04	6/17/2022 4:27	10.04	6/17/2022 3:14	0.91	6/17/2022 4:57	28.57
6/18/2022 4:41	83.23	6/17/2022 3:58	-0.05	6/17/2022 4:28	10.04	6/17/2022 3:15	0.89	6/17/2022 4:58	28.59
6/18/2022 4:42	83.32	6/17/2022 3:59	-0.02	6/17/2022 4:29	10.06	6/17/2022 3:16	0.90	6/17/2022 4:59	28.58
6/18/2022 4:43	83.25	6/17/2022 4:00	-0.09	6/17/2022 4:30	10.06	6/17/2022 3:17	0.86	6/17/2022 5:00	28.59
6/18/2022 4:44	83.30	6/17/2022 4:01	-0.08	6/17/2022 4:31	10.09	6/17/2022 3:18	0.86	6/17/2022 5:01	28.58
6/18/2022 4:45	83.28	6/17/2022 4:02	-0.04	6/17/2022 4:32	10.08	6/17/2022 3:19	0.87	6/17/2022 5:02	28.60
6/18/2022 4:46	83.26	6/17/2022 4:03	-0.06	6/17/2022 4:33	10.07	6/17/2022 3:20	0.78	6/17/2022 5:03	28.57
6/18/2022 4:47	83.29	6/17/2022 4:04	-0.01	6/17/2022 4:34	10.08	6/17/2022 3:21	0.81	6/17/2022 5:04	28.55
6/18/2022 4:48	83.27	6/17/2022 4:05	-0.04	6/17/2022 4:35	10.08	6/17/2022 3:22	0.82	6/17/2022 5:05	28.58
6/18/2022 4:49	83.32	6/17/2022 4:06	-0.05	6/17/2022 4:36	10.06	6/17/2022 3:23	0.86	6/17/2022 5:06	28.54
6/18/2022 4:50	83.25	6/17/2022 4:07	-0.05	6/17/2022 4:37	10.08	6/17/2022 3:24	0.89	6/17/2022 5:07	28.57
6/18/2022 4:51	83.28	6/17/2022 4:08	-0.02	6/17/2022 4:38	10.07	6/17/2022 3:25	0.92	6/17/2022 5:08	28.60
6/18/2022 4:52	83.25	6/17/2022 4:09	-0.07	6/17/2022 4:39	10.05	6/17/2022 3:26	0.94	6/17/2022 5:09	28.58
6/18/2022 4:53	83.30	6/17/2022 4:10	-0.05	6/17/2022 4:40	10.06	6/17/2022 3:27	0.93	6/17/2022 5:10	28.59
6/18/2022 4:54	83.29	6/17/2022 4:11	-0.04	6/17/2022 4:41	10.04	6/17/2022 3:28	0.90	6/17/2022 5:11	28.58
6/18/2022 4:55	83.25	6/17/2022 4:12	-0.05	6/17/2022 4:42	10.04	6/17/2022 3:29	0.79	6/17/2022 5:12	28.56
6/18/2022 4:56	83.30	6/17/2022 4:13	-0.03	6/17/2022 4:43	10.07	6/17/2022 3:30	0.84	6/17/2022 5:13	28.56
6/18/2022 4:57	83.28	6/17/2022 4:14	0.34	6/17/2022 4:44	10.03	6/17/2022 3:31	0.82	6/17/2022 5:14	28.52
6/18/2022 4:58	83.28	6/17/2022 4:15	6.23	6/17/2022 4:45	10.04	6/17/2022 3:32	0.80	6/17/2022 5:15	28.55
6/18/2022 4:59	83.26	6/17/2022 4:16	6.44	6/17/2022 4:46	10.04	6/17/2022 3:33	0.85	6/17/2022 5:16	28.58
6/18/2022 5:00	83.26	6/17/2022 4:17	5.32	6/17/2022 4:47	10.02	6/17/2022 3:34	0.86	6/17/2022 5:17	28.57
6/18/2022 5:01	83.28	6/17/2022 4:18	4.43	6/17/2022 4:48	10.00	6/17/2022 3:35	0.92	6/17/2022 5:18	28.58
6/18/2022 5:02	83.29	6/17/2022 4:19	3.75	6/17/2022 4:49	9.99	6/17/2022 3:36	0.91	6/17/2022 5:19	28.53
6/18/2022 5:03	83.26	6/17/2022 4:20	3.13	6/17/2022 4:50	9.99	6/17/2022 3:37	0.88	6/17/2022 5:20	28.59
6/18/2022 5:04	83.27	6/17/2022 4:21	2.65	6/17/2022 4:51	10.00	6/17/2022 3:38	0.85	6/17/2022 5:21	28.53
6/18/2022 5:05	83.25	6/17/2022 4:22	2.27	6/17/2022 4:52	9.94	6/17/2022 3:39	0.87	6/17/2022 5:22	28.57
6/18/2022 5:06	83.30	6/17/2022 4:23	1.89	6/17/2022 4:53	9.95	6/17/2022 3:40	0.85	6/17/2022 5:23	28.56
6/18/2022 5:07	83.25	6/17/2022 4:24	1.62	6/17/2022 4:54	10.00	6/17/2022 3:41	0.82	6/17/2022 5:24	28.57
6/18/2022 5:08	83.25	6/17/2022 4:25	1.39	6/17/2022 4:55	9.99	6/17/2022 3:42	0.84	6/17/2022 5:25	28.57
6/18/2022 5:09	83.28	6/17/2022 4:26	1.19	6/17/2022 4:56	9.96	6/17/2022 3:43	0.82	6/17/2022 5:26	28.56
6/18/2022 5:10	83.20	6/17/2022 4:27	1.00	6/17/2022 4:57	9.98	6/17/2022 3:44	0.81	6/17/2022 5:27	28.55
6/18/2022 5:11	83.29	6/17/2022 4:28	0.84	6/17/2022 4:58	10.01	6/17/2022 3:45	0.82	6/17/2022 5:28	28.53
6/18/2022 5:12	83.27	6/17/2022 4:29	0.73	6/17/2022 4:59	10.02	6/17/2022 3:46	0.83	6/17/2022 5:29	28.56
6/18/2022 5:13	83.28	6/17/2022 4:30	0.60	6/17/2022 5:00	10.10	6/17/2022 3:47	0.81	6/17/2022 5:30	28.53
6/18/2022 5:14	83.29	6/17/2022 4:31	0.49	6/17/2022 5:01	10.13	6/17/2022 3:48	0.87	6/17/2022 5:31	28.56
6/18/2022 5:15	83.23	6/17/2022 4:32	0.43	6/17/2022 5:02	10.16	6/17/2022 3:49	0.89	6/17/2022 5:32	28.55
6/18/2022 5:16	83.26	6/17/2022 4:33	0.31	6/17/2022 5:03	10.17	6/17/2022 3:50	0.92	6/17/2022 5:33	28.52
6/18/2022 5:17	83.23	6/17/2022 4:34	0.29	6/17/2022 5:04	10.25	6/17/2022 3:51	0.94	6/17/2022 5:34	28.56
6/18/2022 5:18	83.29	6/17/2022 4:35	0.21	6/17/2022 5:05	10.28	6/17/2022 3:52	0.91	6/17/2022 5:35	28.53
6/18/2022 5:19	83.24	6/17/2022 4:36	0.23	6/17/2022 5:06	10.32	6/17/2022 3:53	0.89	6/17/2022 5:36	28.53
6/18/2022 5:20	83.21	6/17/2022 4:37	0.15	6/17/2022 5:07	10.33	6/17/2022 3:54	0.85	6/17/2022 5:37	28.56
6/18/2022 5:21	83.26	6/17/2022 4:38	0.10	6/17/2022 5:08	10.39	6/17/2022 3:55	0.85	6/17/2022 5:38	28.54
6/18/2022 5:22	83.27	6/17/2022 4:39	0.05	6/17/2022 5:09	10.41	6/17/2022 3:56	0.81	6/17/2022 5:39	28.53
6/18/2022 5:23	83.28	6/17/2022 4:40	0.05	6/17/2022 5:10	10.46	6/17/2022 3:57	0.83	6/17/2022 5:40	28.57
6/18/2022 5:24	83.26	6/17/2022 4:41	0.05	6/17/2022 5:11	10.46	6/17/2022 3:58	0.85	6/17/2022 5:41	28.60
6/18/2022 5:25	83.24	6/17/2022 4:42	0.00	6/17/2022 5:12	10.45	6/17/2022 3:59	0.89	6/17/2022 5:42	28.55
6/18/2022 5:26	83.26	6/17/2022 4:43	0.02	6/17/2022 5:13	10.44	6/17/2022 4:00	0.94	6/17/2022 5:43	28.52
6/18/2022 5:27	83.23	6/17/2022 4:44	0.04	6/17/2022 5:14	10.46	6/17/2022 4:01	0.94	6/17/2022 5:44	28.55
6/18/2022 5:28	83.20	6/17/2022 4:45	0.03	6/17/2022 5:15	10.46	6/17/2022 4:02	0.91	6/17/2022 5:45	28.56
6/18/2022 5:29	83.22	6/17/2022 4:46	0.04	6/17/2022 5:16	10.47	6/17/2022 4:03	0.91	6/17/2022 5:46	28.57
6/18/2022 5:30	83.22	6/17/2022 4:47	0.05	6/17/2022 5:17	10.42	6/17/2022 4:04	0.86	6/17/2022 5:47	28.56
6/18/2022 5:31	83.23	6/17/2022 4:48	0.06	6/17/2022 5:18	10.42	6/17/2022 4:05	0.88	6/17/2022 5:48	28.57
6/18/2022 5:32	83.23	6/17/2022 4:49	0.03	6/17/2022 5:19	10.42	6/17/2022 4:06	0.86	6/17/2022 5:49	28.55
6/18/2022 5:33	83.22	6/17/2022 4:50	0.02	6/17/2022 5:20	10.39	6/17/2022 4:07	0.91	6/17/2022 5:50	28.56

6/18/2022 5:34	83.21	6/17/2022 4:51	0.06	6/17/2022 5:21	10.36	6/17/2022 4:08	0.83	6/17/2022 5:51	28.54
6/18/2022 5:35	83.24	6/17/2022 4:52	2.34	6/17/2022 5:22	10.32	6/17/2022 4:09	0.83	6/17/2022 5:52	28.58
6/18/2022 5:36	83.26	6/17/2022 4:53	7.52	6/17/2022 5:23	10.34	6/17/2022 4:10	0.85	6/17/2022 5:53	28.54
6/18/2022 5:37	83.23	6/17/2022 4:54	6.22	6/17/2022 5:24	10.34	6/17/2022 4:11	0.87	6/17/2022 5:54	28.54
6/18/2022 5:38	83.25	6/17/2022 4:55	5.22	6/17/2022 5:25	10.30	6/17/2022 4:12	0.86	6/17/2022 5:55	28.58
6/18/2022 5:39	83.23	6/17/2022 4:56	4.43	6/17/2022 5:26	10.29	6/17/2022 4:13	0.87	6/17/2022 5:56	28.53
6/18/2022 5:40	83.24	6/17/2022 4:57	3.79	6/17/2022 5:27	10.30	6/17/2022 4:14	0.84	6/17/2022 5:57	28.55
6/18/2022 5:41	83.26	6/17/2022 4:58	3.16	6/17/2022 5:28	10.31	6/17/2022 4:15	0.88	6/17/2022 5:58	28.53
6/18/2022 5:42	83.20	6/17/2022 4:59	2.72	6/17/2022 5:29	10.29	6/17/2022 4:16	0.92	6/17/2022 5:59	28.56
6/18/2022 5:43	83.22	6/17/2022 5:00	2.32	6/17/2022 5:30	10.32	6/17/2022 4:17	0.82	6/17/2022 6:00	28.54
6/18/2022 5:44	83.21	6/17/2022 5:01	1.99	6/17/2022 5:31	10.32	6/17/2022 4:18	0.84	6/17/2022 6:01	28.51
6/18/2022 5:45	83.23	6/17/2022 5:02	1.76	6/17/2022 5:32	10.27	6/17/2022 4:19	0.95	6/17/2022 6:02	28.55
6/18/2022 5:46	83.23	6/17/2022 5:03	1.52	6/17/2022 5:33	10.29	6/17/2022 4:20	0.85	6/17/2022 6:03	28.55
6/18/2022 5:47	83.25	6/17/2022 5:04	1.30	6/17/2022 5:34	10.31	6/17/2022 4:21	0.79	6/17/2022 6:04	28.54
6/18/2022 5:48	83.24	6/17/2022 5:05	1.11	6/17/2022 5:35	10.26	6/17/2022 4:22	0.95	6/17/2022 6:05	28.58
6/18/2022 5:49	83.20	6/17/2022 5:06	0.98	6/17/2022 5:36	10.26	6/17/2022 4:23	0.86	6/17/2022 6:06	28.51
6/18/2022 5:50	83.24	6/17/2022 5:07	0.85	6/17/2022 5:37	10.24	6/17/2022 4:24	0.83	6/17/2022 6:07	28.51
6/18/2022 5:51	83.25	6/17/2022 5:08	0.75	6/17/2022 5:38	10.27	6/17/2022 4:25	0.91	6/17/2022 6:08	28.54
6/18/2022 5:52	83.21	6/17/2022 5:09	0.61	6/17/2022 5:39	10.25	6/17/2022 4:26	0.91	6/17/2022 6:09	28.53
6/18/2022 5:53	83.26	6/17/2022 5:10	0.51	6/17/2022 5:40	10.27	6/17/2022 4:27	0.87	6/17/2022 6:10	28.56
6/18/2022 5:54	83.23	6/17/2022 5:11	0.47	6/17/2022 5:41	10.27	6/17/2022 4:28	0.85	6/17/2022 6:11	28.57
6/18/2022 5:55	83.21	6/17/2022 5:12	0.37	6/17/2022 5:42	10.29	6/17/2022 4:29	0.95	6/17/2022 6:12	28.52
6/18/2022 5:56	83.21	6/17/2022 5:13	0.35	6/17/2022 5:43	10.29	6/17/2022 4:30	0.87	6/17/2022 6:13	28.55
6/18/2022 5:57	83.25	6/17/2022 5:14	0.35	6/17/2022 5:44	10.30	6/17/2022 4:31	0.86	6/17/2022 6:14	28.49
6/18/2022 5:58	83.20	6/17/2022 5:15	0.26	6/17/2022 5:45	10.27	6/17/2022 4:32	0.90	6/17/2022 6:15	28.56
6/18/2022 5:59	83.21	6/17/2022 5:16	0.21	6/17/2022 5:46	10.27	6/17/2022 4:33	0.94	6/17/2022 6:16	28.56
6/18/2022 6:00	83.23	6/17/2022 5:17	0.19	6/17/2022 5:47	10.27	6/17/2022 4:34	0.85	6/17/2022 6:17	28.49
6/18/2022 6:01	83.21	6/17/2022 5:18	0.15	6/17/2022 5:48	10.23	6/17/2022 4:35	0.86	6/17/2022 6:18	28.51
6/18/2022 6:02	83.23	6/17/2022 5:19	0.11	6/17/2022 5:49	10.24	6/17/2022 4:36	0.95	6/17/2022 6:19	28.53
6/18/2022 6:03	83.18	6/17/2022 5:20	0.15	6/17/2022 5:50	10.22	6/17/2022 4:37	0.87	6/17/2022 6:20	28.56
6/18/2022 6:04	83.22	6/17/2022 5:21	0.12	6/17/2022 5:51	10.19	6/17/2022 4:38	0.86	6/17/2022 6:21	28.51
6/18/2022 6:05	83.23	6/17/2022 5:22	0.05	6/17/2022 5:52	10.16	6/17/2022 4:39	0.89	6/17/2022 6:22	28.53
6/18/2022 6:06	83.22	6/17/2022 5:23	0.09	6/17/2022 5:53	10.18	6/17/2022 4:40	0.98	6/17/2022 6:23	28.52
6/18/2022 6:07	83.22	6/17/2022 5:24	0.04	6/17/2022 5:54	10.19	6/17/2022 4:41	0.90	6/17/2022 6:24	28.53
6/18/2022 6:08	83.23	6/17/2022 5:25	0.05	6/17/2022 5:55	10.20	6/17/2022 4:42	0.83	6/17/2022 6:25	28.52
6/18/2022 6:09	83.24	6/17/2022 5:26	0.04	6/17/2022 5:56	10.18	6/17/2022 4:43	0.93	6/17/2022 6:26	28.54
6/18/2022 6:10	83.23	6/17/2022 5:27	0.04	6/17/2022 5:57	10.22	6/17/2022 4:44	0.91	6/17/2022 6:27	28.51
6/18/2022 6:11	83.22	6/17/2022 5:28	0.00	6/17/2022 5:58	10.24	6/17/2022 4:45	0.87	6/17/2022 6:28	28.56
6/18/2022 6:12	83.22	6/17/2022 5:29	-0.02	6/17/2022 5:59	10.20	6/17/2022 4:46	0.90	6/17/2022 6:29	28.53
6/18/2022 6:13	83.17	6/17/2022 5:30	2.39	6/17/2022 6:00	10.26	6/17/2022 4:47	0.95	6/17/2022 6:30	28.47
6/18/2022 6:14	83.23	6/17/2022 5:31	7.45	6/17/2022 6:01	10.23	6/17/2022 4:48	0.89	6/17/2022 6:31	28.51
6/18/2022 6:15	83.17	6/17/2022 5:32	6.15	6/17/2022 6:02	10.22	6/17/2022 4:49	0.88	6/17/2022 6:32	28.53
6/18/2022 6:16	83.19	6/17/2022 5:33	5.16	6/17/2022 6:03	10.19	6/17/2022 4:50	0.94	6/17/2022 6:33	28.55
6/18/2022 6:17	83.19	6/17/2022 5:34	4.37	6/17/2022 6:04	10.22	6/17/2022 4:51	0.85	6/17/2022 6:34	28.53
6/18/2022 6:18	83.19	6/17/2022 5:35	3.83	6/17/2022 6:05	10.24	6/17/2022 4:52	0.89	6/17/2022 6:35	28.52
6/18/2022 6:19	83.16	6/17/2022 5:36	3.34	6/17/2022 6:06	10.21	6/17/2022 4:53	0.91	6/17/2022 6:36	28.52
6/18/2022 6:20	83.21	6/17/2022 5:37	2.85	6/17/2022 6:07	10.17	6/17/2022 4:54	0.92	6/17/2022 6:37	28.51
6/18/2022 6:21	83.24	6/17/2022 5:38	2.48	6/17/2022 6:08	10.18	6/17/2022 4:55	0.90	6/17/2022 6:38	28.54
6/18/2022 6:22	83.20	6/17/2022 5:39	2.11	6/17/2022 6:09	10.16	6/17/2022 4:56	0.94	6/17/2022 6:39	28.52
6/18/2022 6:23	83.20	6/17/2022 5:40	1.89	6/17/2022 6:10	10.17	6/17/2022 4:57	0.90	6/17/2022 6:40	28.50
6/18/2022 6:24	83.21	6/17/2022 5:41	1.60	6/17/2022 6:11	10.16	6/17/2022 4:58	0.91	6/17/2022 6:41	28.54
6/18/2022 6:25	83.20	6/17/2022 5:42	1.40	6/17/2022 6:12	10.16	6/17/2022 4:59	0.92	6/17/2022 6:42	28.53
6/18/2022 6:26	83.23	6/17/2022 5:43	1.17	6/17/2022 6:13	10.16	6/17/2022 5:00	0.96	6/17/2022 6:43	28.54
6/18/2022 6:27	83.14	6/17/2022 5:44	1.04	6/17/2022 6:14	10.12	6/17/2022 5:01	0.89	6/17/2022 6:44	28.50
6/18/2022 6:28	83.23	6/17/2022 5:45	0.91	6/17/2022 6:15	10.14	6/17/2022 5:02	0.92	6/17/2022 6:45	28.56
6/18/2022 6:29	83.20	6/17/2022 5:46	0.77	6/17/2022 6:16	10.13	6/17/2022 5:03	0.90	6/17/2022 6:46	28.52
6/18/2022 6:30	83.19	6/17/2022 5:47	0.67	6/17/2022 6:17	10.09	6/17/2022 5:04	0.89	6/17/2022 6:47	28.51
6/18/2022 6:31	83.21	6/17/2022 5:48	0.62	6/17/2022 6:18	10.10	6/17/2022 5:05	0.98	6/17/2022 6:48	28.55
6/18/2022 6:32	83.18	6/17/2022 5:49	0.52	6/17/2022 6:19	10.13	6/17/2022 5:06	0.87	6/17/2022 6:49	28.49
6/18/2022 6:33	83.20	6/17/2022 5:50	0.43	6/17/2022 6:20	10.14	6/17/2022 5:07	0.92	6/17/2022 6:50	28.55
6/18/2022 6:34	83.22	6/17/2022 5:51	0.43	6/17/2022 6:21	10.15	6/17/2022 5:08	0.88	6/17/2022 6:51	28.49
6/18/2022 6:35	83.20	6/17/2022 5:52	0.34	6/17/2022 6:22	10.18	6/17/2022 5:09	0.86	6/17/2022 6:52	28.53
6/18/2022 6:36	83.21	6/17/2022 5:53	0.31	6/17/2022 6:23	10.24	6/17/2022 5:10	0.95	6/17/2022 6:53	28.50
6/18/2022 6:37	83.20	6/17/2022 5:54	0.28	6/17/2022 6:24	10.23	6/17/2022 5:11	0.95	6/17/2022 6:54	28.53
6/18/2022 6:38	83.16	6/17/2022 5:55	0.24	6/17/2022 6:25	10.23	6/17/2022 5:12	0.88	6/17/2022 6:55	28.49
6/18/2022 6:39	83.14	6/17/2022 5:56	0.21	6/17/2022 6:26	10.29	6/17/2022 5:13	0.97	6/17/2022 6:56	28.49
6/18/2022 6:40	83.19	6/17/2022 5:57	0.19	6/17/2022 6:27	10.25	6/17/2022 5:14	0.89	6/17/2022 6:57	28.50
6/18/2022 6:41	83.16	6/17/2022 5:58	0.14	6/17/2022 6:28	10.29	6/17/2022 5:15	0.89	6/17/2022 6:58	28.52
6/18/2022 6:42	83.22	6/17/2022 5:59	0.13	6/17/2022 6:29	10.29	6/17/2022 5:16	0.96	6/17/2022 6:59	28.51
6/18/2022 6:43	83.21	6/17/2022 6:00	0.18	6/17/2022 6:30	10.26	6/17/2022 5:17	0.89	6/17/2022 7:00	28.49
6/18/2022 6:44	83.19	6/17/2022 6:01	0.16	6/17/2022 6:31	10.25	6/17/2022 5:18	0.89	6/17/2022 7:01	28.54
6/18/2022 6:45	83.21	6/17/2022 6:02	0.16	6/17/2022 6:32	10.19	6/17/2022 5:19	0.95	6/17/2022 7:02	28.53
6/18/2022 6:46	83.19	6/17/2022 6:03	0.15	6/17/2022 6:33	10.28	6/17/2022 5:20	0.86	6/17/2022 7:03	28.48
6/18/2022 6:47	83.18	6/17/2022 6:04	0.15	6/17/2022 6:34	10.28	6/17/2022 5:21	0.89	6/17/2022 7:04	28.53
6/18/2022 6:48	83.20	6/17/2022 6:05	0.18	6/17/2022 6:35	10.31	6/17/2022 5:22	0.95	6/17/2022 7:05	28.53
6/18/2022 6:49	83.17	6/17/2022 6:06	0.14	6/17/2022 6:36	10.33	6/17/2022 5:23	0.91	6/17/2022 7:06	28.52
6/18/2022 6:50	83.16	6/17/2022 6:07	0.14	6/17/2022 6:37	10.31	6/17/2022 5:24	0.81	6/17/2022 7:07	28.50
6/18/2022 6:51	83.18	6/17/2022 6:08	3.13	6/17/2022 6:38	10.33	6/17/2022 5:25	0.97	6/17/2022 7:08	28.51
6/18/2022 6:52	83.20	6/17/2022 6:09	7.38	6/17/2022 6:39	10.31	6/17/2022 5:26	0.92	6/17/2022 7:09	28.53
6/18/2022 6:53	83.17	6/17/2022 6:10	6.16	6/17/2022 6:40	10.30	6/17/2022 5:27	0.85	6/17/2022 7:10	28.54
6/18/2022 6:54	83.18	6/17/2022 6:11	5.16	6/17/2022 6:41	10.33	6/17/2022 5:28	0.95	6/17/2022 7:11	28.47
6/18/2022 6:55	83.16	6/17/2022 6:12	4.42	6/17/2022 6:42	10.33	6/17/2022 5:29	0.98	6/17/2022 7:12	28.48
6/18/2022 6:56	83.20	6/17/2022 6:13	3.73	6/17/2022 6:43	10.27	6/17/2022 5:30	0.84	6/17/2022 7:13	28.52
6/18/2022 6:57	83.22	6/17/2022 6:14	3.21	6/17/2022 6:44	10.31	6/17/2022 5:31	0.89	6/17/2022 7:14	28.49
6/18/2022 6:58	83.17	6/17/2022 6:15	2.74	6/17/2022 6:45	10.33	6/17/2022 5:32	0.89	6/17/2022 7:15	28.50
6/18/2022 6:59	83.19	6/17/2022 6:16	2.38	6/17/2022 6:46	10.35	6/17/2022 5:33	0.94	6/17/2022 7:16	28.52
6/18/2022 7:00	83.13	6/17/2022 6:17	2.07	6/17/2022 6:47	10.28	6/17/2022 5:34	3.10	6/17/2022 7:17	28.50
6/18/2022 7:01	83.18	6/17/2022 6:18	1.79	6/17/2022 6:48	10.30	6/17/2022 5:35	8.53	6/17/2022 7:18	28.51

6/18/2022 7:02	83.18	6/17/2022 6:19	1.56	6/17/2022 6:49	10.30	6/17/2022 5:36	5.50	6/17/2022 7:19	28.47
6/18/2022 7:03	83.18	6/17/2022 6:20	1.41	6/17/2022 6:50	10.31	6/17/2022 5:37	3.19	6/17/2022 7:20	28.52
6/18/2022 7:04	83.21	6/17/2022 6:21	1.22	6/17/2022 6:51	10.29	6/17/2022 5:38	1.54	6/17/2022 7:21	28.52
6/18/2022 7:05	83.15	6/17/2022 6:22	1.10	6/17/2022 6:52	10.26	6/17/2022 5:39	0.89	6/17/2022 7:22	28.49
6/18/2022 7:06	83.17	6/17/2022 6:23	0.97	6/17/2022 6:53	10.30	6/17/2022 5:40	0.97	6/17/2022 7:23	28.50
6/18/2022 7:07	83.13	6/17/2022 6:24	0.89	6/17/2022 6:54	10.28	6/17/2022 5:41	0.90	6/17/2022 7:24	28.49
6/18/2022 7:08	83.16	6/17/2022 6:25	0.79	6/17/2022 6:55	10.29	6/17/2022 5:42	0.94	6/17/2022 7:25	28.48
6/18/2022 7:09	83.15	6/17/2022 6:26	0.74	6/17/2022 6:56	10.28	6/17/2022 5:43	0.86	6/17/2022 7:26	28.49
6/18/2022 7:10	83.16	6/17/2022 6:27	0.66	6/17/2022 6:57	10.32	6/17/2022 5:44	0.98	6/17/2022 7:27	28.50
6/18/2022 7:11	83.17	6/17/2022 6:28	0.62	6/17/2022 6:58	10.26	6/17/2022 5:45	0.89	6/17/2022 7:28	28.49
6/18/2022 7:12	83.18	6/17/2022 6:29	0.56	6/17/2022 6:59	10.26	6/17/2022 5:46	0.85	6/17/2022 7:29	28.53
6/18/2022 7:13	83.18	6/17/2022 6:30	0.53	6/17/2022 7:00	10.27	6/17/2022 5:47	0.98	6/17/2022 7:30	28.50
6/18/2022 7:14	83.17	6/17/2022 6:31	0.47	6/17/2022 7:01	10.32	6/17/2022 5:48	0.91	6/17/2022 7:31	30.00
6/18/2022 7:15	83.15	6/17/2022 6:32	0.41	6/17/2022 7:02	10.31	6/17/2022 5:49	0.91	6/17/2022 7:32	29.96
6/18/2022 7:16	83.19	6/17/2022 6:33	0.40	6/17/2022 7:03	10.30	6/17/2022 5:50	0.94	6/17/2022 7:33	29.08
6/18/2022 7:17	83.19	6/17/2022 6:34	0.34	6/17/2022 7:04	10.29	6/17/2022 5:51	0.89	6/17/2022 7:34	28.71
6/18/2022 7:18	83.14	6/17/2022 6:35	0.33	6/17/2022 7:05	10.29	6/17/2022 5:52	0.97	6/17/2022 7:35	28.63
6/18/2022 7:19	83.19	6/17/2022 6:36	0.26	6/17/2022 7:06	10.28	6/17/2022 5:53	0.89	6/17/2022 7:36	28.57
6/18/2022 7:20	83.17	6/17/2022 6:37	0.26	6/17/2022 7:07	10.27	6/17/2022 5:54	0.87	6/17/2022 7:37	28.58
6/18/2022 7:21	83.16	6/17/2022 6:38	0.26	6/17/2022 7:08	10.24	6/17/2022 5:55	0.96	6/17/2022 7:38	28.57
6/18/2022 7:22	83.15	6/17/2022 6:39	5.07	6/17/2022 7:09	10.24	6/17/2022 5:56	0.89	6/17/2022 7:39	28.53
6/18/2022 7:23	83.13	6/17/2022 6:40	7.25	6/17/2022 7:10	10.23	6/17/2022 5:57	0.90	6/17/2022 7:40	28.54
6/18/2022 7:24	83.11	6/17/2022 6:41	6.03	6/17/2022 7:11	10.23	6/17/2022 5:58	0.95	6/17/2022 7:41	28.54
6/18/2022 7:25	83.17	6/17/2022 6:42	5.10	6/17/2022 7:12	10.23	6/17/2022 5:59	0.86	6/17/2022 7:42	28.50
6/18/2022 7:26	83.14	6/17/2022 6:43	4.32	6/17/2022 7:13	10.18	6/17/2022 6:00	0.91	6/17/2022 7:43	28.50
6/18/2022 7:27	83.14	6/17/2022 6:44	3.69	6/17/2022 7:14	10.22	6/17/2022 6:01	0.93	6/17/2022 7:44	28.54
6/18/2022 7:28	83.14	6/17/2022 6:45	6.93	6/17/2022 7:15	10.18	6/17/2022 6:02	0.89	6/17/2022 7:45	28.48
6/18/2022 7:29	83.14	6/17/2022 6:46	11.52	6/17/2022 7:16	10.18	6/17/2022 6:03	0.94	6/17/2022 7:46	28.53
6/18/2022 7:30	83.16	6/17/2022 6:47	9.89	6/17/2022 7:17	10.16	6/17/2022 6:04	0.88	6/17/2022 7:47	28.51
6/18/2022 7:31	83.15	6/17/2022 6:48	8.36	6/17/2022 7:18	10.18	6/17/2022 6:05	0.95	6/17/2022 7:48	28.50
6/18/2022 7:32	83.19	6/17/2022 6:49	7.04	6/17/2022 7:19	10.18	6/17/2022 6:06	0.91	6/17/2022 7:49	28.53
6/18/2022 7:33	83.16	6/17/2022 6:50	5.94	6/17/2022 7:20	10.19	6/17/2022 6:07	0.98	6/17/2022 7:50	28.51
6/18/2022 7:34	83.16	6/17/2022 6:51	5.08	6/17/2022 7:21	10.18	6/17/2022 6:08	0.87	6/17/2022 7:51	28.52
6/18/2022 7:35	83.17	6/17/2022 6:52	4.33	6/17/2022 7:22	10.20	6/17/2022 6:09	0.97	6/17/2022 7:52	28.52
6/18/2022 7:36	83.15	6/17/2022 6:53	3.70	6/17/2022 7:23	10.17	6/17/2022 6:10	0.95	6/17/2022 7:53	28.48
6/18/2022 7:37	83.15	6/17/2022 6:54	3.14	6/17/2022 7:24	10.21	6/17/2022 6:11	0.94	6/17/2022 7:54	28.53
6/18/2022 7:38	83.15	6/17/2022 6:55	2.70	6/17/2022 7:25	10.19	6/17/2022 6:12	0.87	6/17/2022 7:55	28.55
6/18/2022 7:39	83.16	6/17/2022 6:56	2.32	6/17/2022 7:26	10.20	6/17/2022 6:13	0.92	6/17/2022 7:56	28.50
6/18/2022 7:40	83.14	6/17/2022 6:57	2.05	6/17/2022 7:27	10.22	6/17/2022 6:14	0.95	6/17/2022 7:57	28.52
6/18/2022 7:41	83.14	6/17/2022 6:58	1.74	6/17/2022 7:28	10.17	6/17/2022 6:15	0.94	6/17/2022 7:58	28.47
6/18/2022 7:42	83.11	6/17/2022 6:59	1.53	6/17/2022 7:29	10.15	6/17/2022 6:16	0.92	6/17/2022 7:59	28.49
6/18/2022 7:43	83.13	6/17/2022 7:00	1.25	6/17/2022 7:30	10.16	6/17/2022 6:17	0.93	6/17/2022 8:00	28.47
6/18/2022 7:44	83.15	6/17/2022 7:01	1.06	6/17/2022 7:31	10.14	6/17/2022 6:18	0.97	6/17/2022 8:01	28.53
6/18/2022 7:45	83.14	6/17/2022 7:02	0.89	6/17/2022 7:32	10.17	6/17/2022 6:19	0.90	6/17/2022 8:02	28.50
6/18/2022 7:46	83.15	6/17/2022 7:03	0.73	6/17/2022 7:33	10.15	6/17/2022 6:20	0.97	6/17/2022 8:03	28.49
6/18/2022 7:47	83.17	6/17/2022 7:04	0.60	6/17/2022 7:34	10.12	6/17/2022 6:21	0.92	6/17/2022 8:04	28.49
6/18/2022 7:48	83.15	6/17/2022 7:05	0.51	6/17/2022 7:35	10.13	6/17/2022 6:22	0.91	6/17/2022 8:05	28.46
6/18/2022 7:49	83.11	6/17/2022 7:06	0.36	6/17/2022 7:36	10.10	6/17/2022 6:23	0.95	6/17/2022 8:06	28.48
6/18/2022 7:50	83.15	6/17/2022 7:07	0.31	6/17/2022 7:37	10.11	6/17/2022 6:24	0.92	6/17/2022 8:07	28.50
6/18/2022 7:51	83.13	6/17/2022 7:08	0.18	6/17/2022 7:38	10.13	6/17/2022 6:25	0.98	6/17/2022 8:08	28.49
6/18/2022 7:52	83.17	6/17/2022 7:09	0.12	6/17/2022 7:39	10.16	6/17/2022 6:26	0.88	6/17/2022 8:09	28.49
6/18/2022 7:53	83.13	6/17/2022 7:10	0.09	6/17/2022 7:40	10.16	6/17/2022 6:27	0.94	6/17/2022 8:10	28.49
6/18/2022 7:54	83.14	6/17/2022 7:11	0.02	6/17/2022 7:41	10.14	6/17/2022 6:28	0.92	6/17/2022 8:11	28.50
6/18/2022 7:55	83.11	6/17/2022 7:12	-0.02	6/17/2022 7:42	10.19	6/17/2022 6:29	0.96	6/17/2022 8:12	28.48
6/18/2022 7:56	83.15	6/17/2022 7:13	-0.02	6/17/2022 7:43	10.18	6/17/2022 6:30	0.90	6/17/2022 8:13	28.48
6/18/2022 7:57	83.13	6/17/2022 7:14	-0.05	6/17/2022 7:44	10.21	6/17/2022 6:31	0.96	6/17/2022 8:14	28.50
6/18/2022 7:58	83.14	6/17/2022 7:15	-0.03	6/17/2022 7:45	10.18	6/17/2022 6:32	0.92	6/17/2022 8:15	28.50
6/18/2022 7:59	83.14	6/17/2022 7:16	-0.04	6/17/2022 7:46	10.18	6/17/2022 6:33	0.92	6/17/2022 8:16	28.50
6/18/2022 8:00	83.14	6/17/2022 7:17	-0.05	6/17/2022 7:47	10.12	6/17/2022 6:34	0.89	6/17/2022 8:17	28.47
6/18/2022 8:01	83.13	6/17/2022 7:18	-0.04	6/17/2022 7:48	10.15	6/17/2022 6:35	0.87	6/17/2022 8:18	28.49
6/18/2022 8:02	83.10	6/17/2022 7:19	1.24	6/17/2022 7:49	10.13	6/17/2022 6:36	1.02	6/17/2022 8:19	28.52
6/18/2022 8:03	83.12	6/17/2022 7:20	6.96	6/17/2022 7:50	10.12	6/17/2022 6:37	0.88	6/17/2022 8:20	28.49
6/18/2022 8:04	83.08	6/17/2022 7:21	7.12	6/17/2022 7:51	10.16	6/17/2022 6:38	0.98	6/17/2022 8:21	28.49
6/18/2022 8:05	83.12	6/17/2022 7:22	6.02	6/17/2022 7:52	10.09	6/17/2022 6:39	0.91	6/17/2022 8:22	28.51
6/18/2022 8:06	83.12	6/17/2022 7:23	5.08	6/17/2022 7:53	10.15	6/17/2022 6:40	1.00	6/17/2022 8:23	28.49
6/18/2022 8:07	83.10	6/17/2022 7:24	4.27	6/17/2022 7:54	10.16	6/17/2022 6:41	0.91	6/17/2022 8:24	28.48
6/18/2022 8:08	83.10	6/17/2022 7:25	3.56	6/17/2022 7:55	10.15	6/17/2022 6:42	0.91	6/17/2022 8:25	28.54
6/18/2022 8:09	86.56	6/17/2022 7:26	2.90	6/17/2022 7:56	10.14	6/17/2022 6:43	0.96	6/17/2022 8:26	28.46
6/18/2022 8:10	89.49	6/17/2022 7:27	2.49	6/17/2022 7:57	10.17	6/17/2022 6:44	0.92	6/17/2022 8:27	28.50
6/18/2022 8:11	91.22	6/17/2022 7:28	2.12	6/17/2022 7:58	10.16	6/17/2022 6:45	0.92	6/17/2022 8:28	28.50
6/18/2022 8:12	88.73	6/17/2022 7:29	1.74	6/17/2022 7:59	10.14	6/17/2022 6:46	0.98	6/17/2022 8:29	28.49
6/18/2022 8:13	87.01	6/17/2022 7:30	1.41	6/17/2022 8:00	10.17	6/17/2022 6:47	0.91	6/17/2022 8:30	28.47
6/18/2022 8:14	85.87	6/17/2022 7:31	1.20	6/17/2022 8:01	10.18	6/17/2022 6:48	0.91	6/17/2022 8:31	28.50
6/18/2022 8:15	85.22	6/17/2022 7:32	0.96	6/17/2022 8:02	10.15	6/17/2022 6:49	0.94	6/17/2022 8:32	28.50
6/18/2022 8:16	84.73	6/17/2022 7:33	0.83	6/17/2022 8:03	10.16	6/17/2022 6:50	0.94	6/17/2022 8:33	28.48
6/18/2022 8:17	84.50	6/17/2022 7:34	0.64	6/17/2022 8:04	10.15	6/17/2022 6:51	0.91	6/17/2022 8:34	28.48
6/18/2022 8:18	84.31	6/17/2022 7:35	0.51	6/17/2022 8:05	10.14	6/17/2022 6:52	1.02	6/17/2022 8:35	28.48
6/18/2022 8:19	84.12	6/17/2022 7:36	0.34	6/17/2022 8:06	10.12	6/17/2022 6:53	0.90	6/17/2022 8:36	28.50
6/18/2022 8:20	84.06	6/17/2022 7:37	0.24	6/17/2022 8:07	10.13	6/17/2022 6:54	1.03	6/17/2022 8:37	28.48
6/18/2022 8:21	83.94	6/17/2022 7:38	0.17	6/17/2022 8:08	10.11	6/17/2022 6:55	0.90	6/17/2022 8:38	28.53
6/18/2022 8:22	83.91	6/17/2022 7:39	0.07	6/17/2022 8:09	10.10	6/17/2022 6:56	0.95	6/17/2022 8:39	30.20
6/18/2022 8:23	83.85	6/17/2022 7:40	-0.02	6/17/2022 8:10	10.13	6/17/2022 6:57	0.98	6/17/2022 8:40	29.16
6/18/2022 8:24	83.75	6/17/2022 7:41	-0.03	6/17/2022 8:11	10.08	6/17/2022 6:58	0.90	6/17/2022 8:41	28.68
6/18/2022 8:25	83.77	6/17/2022 7:42	-0.04	6/17/2022 8:12	10.11	6/17/2022 6:59	0.92	6/17/2022 8:42	28.56
6/18/2022 8:26	83.71	6/17/2022 7:43	-0.01	6/17/2022 8:13	10.06	6/17/2022 7:00	1.00	6/17/2022 8:43	28.54
6/18/2022 8:27	83.70	6/17/2022 7:44	-0.06	6/17/2022 8:14	10.07	6/17/2022 7:01	0.95	6/17/2022 8:44	28.50
6/18/2022 8:28	83.63	6/17/2022 7:45	-0.08	6/17/2022 8:15	10.08	6/17/2022 7:02	0.89	6/17/2022 8:45	28.54
6/18/2022 8:29	83.69	6/17/2022 7:46	-0.04	6/17/2022 8:16	10.06	6/17/2022 7:03	0.89	6/17/2022 8:46	28.54

6/18/2022 8:30	83.62	6/17/2022 7:47	-0.01	6/17/2022 8:17	10.04	6/17/2022 7:04	0.90	6/17/2022 8:47	28.49
6/18/2022 8:31	83.63	6/17/2022 7:48	-0.03	6/17/2022 8:18	10.04	6/17/2022 7:05	0.90	6/17/2022 8:48	28.50
6/18/2022 8:32	83.62	6/17/2022 7:49	-0.05	6/17/2022 8:19	10.05	6/17/2022 7:06	0.88	6/17/2022 8:49	28.54
6/18/2022 8:33	83.61	6/17/2022 7:50	-0.05	6/17/2022 8:20	10.05	6/17/2022 7:07	0.91	6/17/2022 8:50	28.50
6/18/2022 8:34	83.59	6/17/2022 7:51	-0.03	6/17/2022 8:21	10.04	6/17/2022 7:08	0.92	6/17/2022 8:51	28.52
6/18/2022 8:35	83.57	6/17/2022 7:52	-0.01	6/17/2022 8:22	10.00	6/17/2022 7:09	0.91	6/17/2022 8:52	28.53
6/18/2022 8:36	83.54	6/17/2022 7:53	0.00	6/17/2022 8:23	10.03	6/17/2022 7:10	0.94	6/17/2022 8:53	28.51
6/18/2022 8:37	83.51	6/17/2022 7:54	-0.08	6/17/2022 8:24	10.03	6/17/2022 7:11	0.98	6/17/2022 8:54	28.49
6/18/2022 8:38	83.57	6/17/2022 7:55	-0.08	6/17/2022 8:25	10.06	6/17/2022 7:12	0.98	6/17/2022 8:55	28.50
6/18/2022 8:39	83.53	6/17/2022 7:56	3.75	6/17/2022 8:26	10.07	6/17/2022 7:13	0.99	6/17/2022 8:56	28.50
6/18/2022 8:40	83.49	6/17/2022 7:57	7.31	6/17/2022 8:27	10.07	6/17/2022 7:14	0.97	6/17/2022 8:57	28.50
6/18/2022 8:41	83.49	6/17/2022 7:58	6.04	6/17/2022 8:28	10.07	6/17/2022 7:15	0.99	6/17/2022 8:58	28.45
6/18/2022 8:42	83.48	6/17/2022 7:59	4.98	6/17/2022 8:29	10.09	6/17/2022 7:16	0.98	6/17/2022 8:59	28.54
6/18/2022 8:43	83.48	6/17/2022 8:00	4.17	6/17/2022 8:30	10.12	6/17/2022 7:17	0.97	6/17/2022 9:00	28.55
6/18/2022 8:44	83.52	6/17/2022 8:01	3.47	6/17/2022 8:31	10.14	6/17/2022 7:18	0.95	6/17/2022 9:01	28.57
6/18/2022 8:45	83.48	6/17/2022 8:02	2.88	6/17/2022 8:32	10.11	6/17/2022 7:19	2.06	6/17/2022 9:02	28.52
6/18/2022 8:46	83.50	6/17/2022 8:03	2.39	6/17/2022 8:33	14.22	6/17/2022 7:20	8.85	6/17/2022 9:03	28.51
6/18/2022 8:47	83.53	6/17/2022 8:04	2.04	6/17/2022 8:34	13.71	6/17/2022 7:21	7.10	6/17/2022 9:04	28.54
6/18/2022 8:48	83.44	6/17/2022 8:05	1.64	6/17/2022 8:35	13.26	6/17/2022 7:22	4.37	6/17/2022 9:05	28.52
6/18/2022 8:49	83.47	6/17/2022 8:06	1.37	6/17/2022 8:36	12.89	6/17/2022 7:23	2.29	6/17/2022 9:06	28.51
6/18/2022 8:50	83.46	6/17/2022 8:07	1.12	6/17/2022 8:37	12.62	6/17/2022 7:24	0.92	6/17/2022 9:07	28.51
6/18/2022 8:51	83.46	6/17/2022 8:08	0.89	6/17/2022 8:38	12.27	6/17/2022 7:25	0.91	6/17/2022 9:08	28.52
6/18/2022 8:52	83.43	6/17/2022 8:09	0.70	6/17/2022 8:39	12.08	6/17/2022 7:26	0.99	6/17/2022 9:09	28.51
6/18/2022 8:53	83.41	6/17/2022 8:10	0.51	6/17/2022 8:40	11.88	6/17/2022 7:27	1.06	6/17/2022 9:10	28.49
6/18/2022 8:54	83.40	6/17/2022 8:11	0.43	6/17/2022 8:41	11.71	6/17/2022 7:28	0.90	6/17/2022 9:11	28.52
6/18/2022 8:55	83.43	6/17/2022 8:12	0.28	6/17/2022 8:42	11.51	6/17/2022 7:29	0.95	6/17/2022 9:12	28.49
6/18/2022 8:56	83.46	6/17/2022 8:13	0.16	6/17/2022 8:43	11.36	6/17/2022 7:30	0.93	6/17/2022 9:13	28.53
6/18/2022 8:57	83.42	6/17/2022 8:14	0.05	6/17/2022 8:44	11.28	6/17/2022 7:31	0.93	6/17/2022 9:14	28.52
6/18/2022 8:58	83.44	6/17/2022 8:15	0.01	6/17/2022 8:45	11.16	6/17/2022 7:32	0.87	6/17/2022 9:15	30.93
6/18/2022 8:59	83.44	6/17/2022 8:16	-0.05	6/17/2022 8:46	11.05	6/17/2022 7:33	0.91	6/17/2022 9:16	29.62
6/18/2022 9:00	83.44	6/17/2022 8:17	-0.07	6/17/2022 8:47	10.94	6/17/2022 7:34	0.88	6/17/2022 9:17	28.92
6/18/2022 9:01	83.37	6/17/2022 8:18	-0.03	6/17/2022 8:48	10.86	6/17/2022 7:35	0.92	6/17/2022 9:18	28.71
6/18/2022 9:02	83.42	6/17/2022 8:19	-0.08	6/17/2022 8:49	10.80	6/17/2022 7:36	0.90	6/17/2022 9:19	28.60
6/18/2022 9:03	83.40	6/17/2022 8:20	-0.02	6/17/2022 8:50	10.77	6/17/2022 7:37	0.93	6/17/2022 9:20	28.53
6/18/2022 9:04	83.44	6/17/2022 8:21	-0.07	6/17/2022 8:51	10.68	6/17/2022 7:38	0.89	6/17/2022 9:21	28.56
6/18/2022 9:05	83.39	6/17/2022 8:22	-0.02	6/17/2022 8:52	10.68	6/17/2022 7:39	0.93	6/17/2022 9:22	28.53
6/18/2022 9:06	83.39	6/17/2022 8:23	-0.06	6/17/2022 8:53	10.66	6/17/2022 7:40	0.94	6/17/2022 9:23	28.50
6/18/2022 9:07	83.42	6/17/2022 8:24	-0.02	6/17/2022 8:54	10.61	6/17/2022 7:41	0.95	6/17/2022 9:24	28.51
6/18/2022 9:08	83.36	6/17/2022 8:25	-0.08	6/17/2022 8:55	10.59	6/17/2022 7:42	0.95	6/17/2022 9:25	28.53
6/18/2022 9:09	83.38	6/17/2022 8:26	-0.03	6/17/2022 8:56	10.56	6/17/2022 7:43	0.99	6/17/2022 9:26	28.57
6/18/2022 9:10	83.40	6/17/2022 8:27	-0.04	6/17/2022 8:57	10.54	6/17/2022 7:44	1.02	6/17/2022 9:27	28.50
6/18/2022 9:11	83.40	6/17/2022 8:28	-0.08	6/17/2022 8:58	10.50	6/17/2022 7:45	0.99	6/17/2022 9:28	28.53
6/18/2022 9:12	83.40	6/17/2022 8:29	-0.03	6/17/2022 8:59	10.51	6/17/2022 7:46	0.96	6/17/2022 9:29	28.55
6/18/2022 9:13	83.38	6/17/2022 8:30	3.22	6/17/2022 9:00	10.42	6/17/2022 7:47	0.99	6/17/2022 9:30	28.52
6/18/2022 9:14	83.38	6/17/2022 8:31	7.18	6/17/2022 9:01	10.42	6/17/2022 7:48	1.02	6/17/2022 9:31	28.53
6/18/2022 9:15	83.41	6/17/2022 8:32	5.93	6/17/2022 9:02	10.37	6/17/2022 7:49	0.98	6/17/2022 9:32	28.50
6/18/2022 9:16	83.37	6/17/2022 8:33	4.93	6/17/2022 9:03	10.33	6/17/2022 7:50	0.96	6/17/2022 9:33	28.52
6/18/2022 9:17	83.36	6/17/2022 8:34	4.12	6/17/2022 9:04	10.35	6/17/2022 7:51	0.95	6/17/2022 9:34	28.51
6/18/2022 9:18	83.37	6/17/2022 8:35	3.44	6/17/2022 9:05	10.30	6/17/2022 7:52	0.92	6/17/2022 9:35	28.52
6/18/2022 9:19	83.38	6/17/2022 8:36	2.84	6/17/2022 9:06	10.28	6/17/2022 7:53	0.89	6/17/2022 9:36	28.48
6/18/2022 9:20	83.37	6/17/2022 8:37	2.33	6/17/2022 9:07	10.24	6/17/2022 7:54	0.90	6/17/2022 9:37	28.52
6/18/2022 9:21	83.34	6/17/2022 8:38	1.94	6/17/2022 9:08	10.27	6/17/2022 7:55	0.90	6/17/2022 9:38	28.48
6/18/2022 9:22	83.38	6/17/2022 8:39	1.60	6/17/2022 9:09	10.23	6/17/2022 7:56	0.90	6/17/2022 9:39	28.53
6/18/2022 9:23	83.30	6/17/2022 8:40	1.35	6/17/2022 9:10	10.20	6/17/2022 7:57	0.90	6/17/2022 9:40	28.51
6/18/2022 9:24	83.39	6/17/2022 8:41	1.09	6/17/2022 9:11	10.19	6/17/2022 7:58	0.93	6/17/2022 9:41	28.52
6/18/2022 9:25	83.35	6/17/2022 8:42	0.86	6/17/2022 9:12	10.15	6/17/2022 7:59	0.98	6/17/2022 9:42	28.50
6/18/2022 9:26	83.33	6/17/2022 8:43	0.65	6/17/2022 9:13	10.17	6/17/2022 8:00	0.97	6/17/2022 9:43	28.48
6/18/2022 9:27	83.32	6/17/2022 8:44	0.52	6/17/2022 9:14	10.16	6/17/2022 8:01	0.98	6/17/2022 9:44	28.50
6/18/2022 9:28	83.35	6/17/2022 8:45	0.35	6/17/2022 9:15	10.18	6/17/2022 8:02	0.97	6/17/2022 9:45	28.50
6/18/2022 9:29	83.35	6/17/2022 8:46	0.25	6/17/2022 9:16	10.18	6/17/2022 8:03	1.01	6/17/2022 9:46	28.49
6/18/2022 9:30	83.35	6/17/2022 8:47	0.14	6/17/2022 9:17	13.23	6/17/2022 8:04	0.98	6/17/2022 9:47	28.54
6/18/2022 9:31	83.35	6/17/2022 8:48	0.03	6/17/2022 9:18	14.97	6/17/2022 8:05	1.01	6/17/2022 9:48	28.54
6/18/2022 9:32	83.35	6/17/2022 8:49	-0.09	6/17/2022 9:19	14.36	6/17/2022 8:06	0.93	6/17/2022 9:49	28.58
6/18/2022 9:33	83.31	6/17/2022 8:50	-0.08	6/17/2022 9:20	13.86	6/17/2022 8:07	1.00	6/17/2022 9:50	28.56
6/18/2022 9:34	83.35	6/17/2022 8:51	-0.07	6/17/2022 9:21	13.45	6/17/2022 8:08	0.97	6/17/2022 9:51	28.56
6/18/2022 9:35	83.32	6/17/2022 8:52	-0.03	6/17/2022 9:22	13.04	6/17/2022 8:09	0.92	6/17/2022 9:52	28.56
6/18/2022 9:36	83.33	6/17/2022 8:53	-0.02	6/17/2022 9:23	12.75	6/17/2022 8:10	0.90	6/17/2022 9:53	28.54
6/18/2022 9:37	83.34	6/17/2022 8:54	-0.05	6/17/2022 9:24	12.48	6/17/2022 8:11	0.91	6/17/2022 9:54	28.55
6/18/2022 9:38	83.33	6/17/2022 8:55	-0.07	6/17/2022 9:25	12.25	6/17/2022 8:12	0.91	6/17/2022 9:55	28.51
6/18/2022 9:39	83.31	6/17/2022 8:56	-0.04	6/17/2022 9:26	12.00	6/17/2022 8:13	0.91	6/17/2022 9:56	28.56
6/18/2022 9:40	83.33	6/17/2022 8:57	-0.01	6/17/2022 9:27	11.84	6/17/2022 8:14	0.91	6/17/2022 9:57	28.54
6/18/2022 9:41	83.31	6/17/2022 8:58	-0.09	6/17/2022 9:28	11.67	6/17/2022 8:15	0.90	6/17/2022 9:58	28.52
6/18/2022 9:42	83.34	6/17/2022 8:59	-0.04	6/17/2022 9:29	11.55	6/17/2022 8:16	0.91	6/17/2022 9:59	28.54
6/18/2022 9:43	83.29	6/17/2022 9:00	-0.05	6/17/2022 9:30	11.45	6/17/2022 8:17	0.95	6/17/2022 10:00	28.52
6/18/2022 9:44	83.31	6/17/2022 9:01	-0.06	6/17/2022 9:31	11.35	6/17/2022 8:18	0.91	6/17/2022 10:01	28.52
6/18/2022 9:45	83.32	6/17/2022 9:02	-0.03	6/17/2022 9:32	11.25	6/17/2022 8:19	0.99	6/17/2022 10:02	28.54
6/18/2022 9:46	83.29	6/17/2022 9:03	-0.08	6/17/2022 9:33	11.15	6/17/2022 8:20	0.97	6/17/2022 10:03	28.52
6/18/2022 9:47	86.63	6/17/2022 9:04	-0.06	6/17/2022 9:34	11.02	6/17/2022 8:21	1.03	6/17/2022 10:04	28.54
6/18/2022 9:48	89.67	6/17/2022 9:05	-0.07	6/17/2022 9:35	11.03	6/17/2022 8:22	1.01	6/17/2022 10:05	28.62
6/18/2022 9:49	91.38	6/17/2022 9:06	-0.06	6/17/2022 9:36	10.94	6/17/2022 8:23	0.99	6/17/2022 10:06	28.57
6/18/2022 9:50	88.85	6/17/2022 9:07	-0.05	6/17/2022 9:37	10.88	6/17/2022 8:24	1.02	6/17/2022 10:07	28.64
6/18/2022 9:51	87.15	6/17/2022 9:08	-0.06	6/17/2022 9:38	10.78	6/17/2022 8:25	0.93	6/17/2022 10:08	28.68
6/18/2022 9:52	86.04	6/17/2022 9:09	-0.06	6/17/2022 9:39	10.75	6/17/2022 8:26	0.95	6/17/2022 10:09	28.67
6/18/2022 9:53	85.41	6/17/2022 9:10	5.82	6/17/2022 9:40	10.65	6/17/2022 8:27	0.94	6/17/2022 10:10	28.68
6/18/2022 9:54	84.92	6/17/2022 9:11	6.75	6/17/2022 9:41	10.64	6/17/2022 8:28	0.91	6/17/2022 10:11	28.65
6/18/2022 9:55	84.63	6/17/2022 9:12	5.57	6/17/2022 9:42	10.59	6/17/2022 8:29	0.92	6/17/2022 10:12	28.64
6/18/2022 9:56	84.45	6/17/2022 9:13	4.64	6/17/2022 9:43	10.57	6/17/2022 8:30	0.92	6/17/2022 10:13	28.63
6/18/2022 9:57	84.32	6/17/2022 9:14	3.89	6/17/2022 9:44	10.55	6/17/2022 8:31	0.89	6/17/2022 10:14	28.64

6/18/2022 9:58	84.19	6/17/2022 9:15	3.19	6/17/2022 9:45	10.50	6/17/2022 8:32	0.93	6/17/2022 10:15	28.61
6/18/2022 9:59	84.13	6/17/2022 9:16	2.60	6/17/2022 9:46	10.40	6/17/2022 8:33	0.97	6/17/2022 10:16	28.58
6/18/2022 10:00	84.06	6/17/2022 9:17	2.17	6/17/2022 9:47	10.44	6/17/2022 8:34	0.95	6/17/2022 10:17	28.59
6/18/2022 10:01	83.99	6/17/2022 9:18	1.85	6/17/2022 9:48	10.37	6/17/2022 8:35	0.97	6/17/2022 10:18	28.58
6/18/2022 10:02	83.97	6/17/2022 9:19	1.54	6/17/2022 9:49	10.36	6/17/2022 8:36	0.99	6/17/2022 10:19	28.60
6/18/2022 10:03	83.89	6/17/2022 9:20	1.20	6/17/2022 9:50	10.36	6/17/2022 8:37	0.98	6/17/2022 10:20	28.65
6/18/2022 10:04	83.88	6/17/2022 9:21	1.02	6/17/2022 9:51	10.35	6/17/2022 8:38	0.93	6/17/2022 10:21	28.67
6/18/2022 10:05	83.89	6/17/2022 9:22	0.80	6/17/2022 9:52	10.27	6/17/2022 8:39	0.96	6/17/2022 10:22	28.65
6/18/2022 10:06	83.86	6/17/2022 9:23	0.66	6/17/2022 9:53	10.23	6/17/2022 8:40	0.93	6/17/2022 10:23	28.64
6/18/2022 10:07	83.80	6/17/2022 9:24	0.49	6/17/2022 9:54	10.27	6/17/2022 8:41	0.90	6/17/2022 10:24	28.65
6/18/2022 10:08	83.79	6/17/2022 9:25	0.34	6/17/2022 9:55	14.43	6/17/2022 8:42	0.89	6/17/2022 10:25	28.64
6/18/2022 10:09	83.76	6/17/2022 9:26	0.25	6/17/2022 9:56	13.86	6/17/2022 8:43	0.90	6/17/2022 10:26	28.61
6/18/2022 10:10	83.73	6/17/2022 9:27	0.12	6/17/2022 9:57	13.40	6/17/2022 8:44	0.91	6/17/2022 10:27	28.62
6/18/2022 10:11	83.75	6/17/2022 9:28	0.03	6/17/2022 9:58	13.04	6/17/2022 8:45	0.89	6/17/2022 10:28	28.62
6/18/2022 10:12	83.70	6/17/2022 9:29	-0.06	6/17/2022 9:59	12.70	6/17/2022 8:46	0.99	6/17/2022 10:29	29.67
6/18/2022 10:13	83.73	6/17/2022 9:30	-0.08	6/17/2022 10:00	12.41	6/17/2022 8:47	0.98	6/17/2022 10:30	30.04
6/18/2022 10:14	83.70	6/17/2022 9:31	-0.01	6/17/2022 10:01	12.23	6/17/2022 8:48	1.01	6/17/2022 10:31	29.20
6/18/2022 10:15	83.68	6/17/2022 9:32	-0.02	6/17/2022 10:02	11.99	6/17/2022 8:49	1.02	6/17/2022 10:32	28.81
6/18/2022 10:16	83.68	6/17/2022 9:33	-0.04	6/17/2022 10:03	11.78	6/17/2022 8:50	1.03	6/17/2022 10:33	28.70
6/18/2022 10:17	83.67	6/17/2022 9:34	-0.02	6/17/2022 10:04	11.67	6/17/2022 8:51	1.00	6/17/2022 10:34	28.63
6/18/2022 10:18	83.62	6/17/2022 9:35	-0.05	6/17/2022 10:05	11.47	6/17/2022 8:52	1.00	6/17/2022 10:35	28.65
6/18/2022 10:19	83.65	6/17/2022 9:36	-0.05	6/17/2022 10:06	11.35	6/17/2022 8:53	0.95	6/17/2022 10:36	28.65
6/18/2022 10:20	83.63	6/17/2022 9:37	-0.06	6/17/2022 10:07	11.25	6/17/2022 8:54	0.94	6/17/2022 10:37	28.67
6/18/2022 10:21	83.63	6/17/2022 9:38	-0.05	6/17/2022 10:08	11.16	6/17/2022 8:55	0.94	6/17/2022 10:38	28.67
6/18/2022 10:22	83.61	6/17/2022 9:39	-0.04	6/17/2022 10:09	11.06	6/17/2022 8:56	0.93	6/17/2022 10:39	28.67
6/18/2022 10:23	83.62	6/17/2022 9:40	-0.07	6/17/2022 10:10	10.97	6/17/2022 8:57	0.93	6/17/2022 10:40	28.67
6/18/2022 10:24	83.64	6/17/2022 9:41	-0.04	6/17/2022 10:11	10.92	6/17/2022 8:58	0.92	6/17/2022 10:41	28.60
6/18/2022 10:25	83.62	6/17/2022 9:42	3.81	6/17/2022 10:12	10.83	6/17/2022 8:59	0.92	6/17/2022 10:42	28.61
6/18/2022 10:26	83.65	6/17/2022 9:43	7.67	6/17/2022 10:13	10.78	6/17/2022 9:00	0.97	6/17/2022 10:43	28.66
6/18/2022 10:27	83.58	6/17/2022 9:44	6.34	6/17/2022 10:14	10.75	6/17/2022 9:01	0.98	6/17/2022 10:44	28.60
6/18/2022 10:28	83.61	6/17/2022 9:45	5.25	6/17/2022 10:15	10.71	6/17/2022 9:02	1.01	6/17/2022 10:45	28.62
6/18/2022 10:29	83.59	6/17/2022 9:46	4.35	6/17/2022 10:16	10.70	6/17/2022 9:03	1.03	6/17/2022 10:46	28.60
6/18/2022 10:30	83.60	6/17/2022 9:47	3.61	6/17/2022 10:17	10.67	6/17/2022 9:04	0.98	6/17/2022 10:47	28.58
6/18/2022 10:31	83.58	6/17/2022 9:48	3.01	6/17/2022 10:18	10.62	6/17/2022 9:05	1.02	6/17/2022 10:48	28.63
6/18/2022 10:32	83.59	6/17/2022 9:49	2.49	6/17/2022 10:19	10.59	6/17/2022 9:06	1.00	6/17/2022 10:49	30.84
6/18/2022 10:33	83.58	6/17/2022 9:50	2.08	6/17/2022 10:20	10.55	6/17/2022 9:07	0.93	6/17/2022 10:50	29.57
6/18/2022 10:34	83.60	6/17/2022 9:51	1.73	6/17/2022 10:21	10.52	6/17/2022 9:08	0.95	6/17/2022 10:51	28.96
6/18/2022 10:35	83.55	6/17/2022 9:52	1.43	6/17/2022 10:22	10.53	6/17/2022 9:09	0.90	6/17/2022 10:52	28.72
6/18/2022 10:36	83.56	6/17/2022 9:53	1.16	6/17/2022 10:23	10.44	6/17/2022 9:10	0.94	6/17/2022 10:53	28.64
6/18/2022 10:37	83.51	6/17/2022 9:54	0.92	6/17/2022 10:24	10.43	6/17/2022 9:11	0.91	6/17/2022 10:54	28.65
6/18/2022 10:38	83.54	6/17/2022 9:55	1.07	6/17/2022 10:25	10.40	6/17/2022 9:12	0.95	6/17/2022 10:55	28.64
6/18/2022 10:39	83.55	6/17/2022 9:56	6.95	6/17/2022 10:26	10.41	6/17/2022 9:13	0.95	6/17/2022 10:56	28.63
6/18/2022 10:40	83.53	6/17/2022 9:57	9.84	6/17/2022 10:27	10.38	6/17/2022 9:14	0.97	6/17/2022 10:57	28.62
6/18/2022 10:41	83.54	6/17/2022 9:58	8.22	6/17/2022 10:28	10.33	6/17/2022 9:15	0.94	6/17/2022 10:58	28.62
6/18/2022 10:42	83.52	6/17/2022 9:59	6.81	6/17/2022 10:29	10.33	6/17/2022 9:16	0.95	6/17/2022 10:59	30.50
6/18/2022 10:43	83.50	6/17/2022 10:00	5.68	6/17/2022 10:30	10.29	6/17/2022 9:17	0.95	6/17/2022 11:00	29.39
6/18/2022 10:44	83.54	6/17/2022 10:01	4.74	6/17/2022 10:31	10.30	6/17/2022 9:18	0.89	6/17/2022 11:01	28.90
6/18/2022 10:45	83.50	6/17/2022 10:02	6.71	6/17/2022 10:32	10.26	6/17/2022 9:19	0.99	6/17/2022 11:02	28.71
6/18/2022 10:46	83.53	6/17/2022 10:03	11.38	6/17/2022 10:33	10.23	6/17/2022 9:20	0.93	6/17/2022 11:03	30.71
6/18/2022 10:47	83.50	6/17/2022 10:04	9.70	6/17/2022 10:34	10.23	6/17/2022 9:22	0.87	6/17/2022 11:04	29.66
6/18/2022 10:48	83.51	6/17/2022 10:05	8.07	6/17/2022 10:35	10.19	6/17/2022 9:23	0.86	6/17/2022 11:05	29.01
6/18/2022 10:49	83.50	6/17/2022 10:06	6.74	6/17/2022 10:36	10.21	6/17/2022 9:24	0.84	6/17/2022 11:06	28.75
6/18/2022 10:50	83.52	6/17/2022 10:07	5.63	6/17/2022 10:37	10.21	6/17/2022 9:25	0.82	6/17/2022 11:07	28.68
6/18/2022 10:51	83.51	6/17/2022 10:08	4.73	6/17/2022 10:38	10.21	6/17/2022 9:26	0.80	6/17/2022 11:08	28.64
6/18/2022 10:52	83.48	6/17/2022 10:09	3.94	6/17/2022 10:39	10.19	6/17/2022 9:27	0.83	6/17/2022 11:09	28.67
6/18/2022 10:53	83.46	6/17/2022 10:10	3.33	6/17/2022 10:40	10.16	6/17/2022 9:28	0.84	6/17/2022 11:10	28.63
6/18/2022 10:54	83.50	6/17/2022 10:11	7.91	6/17/2022 10:41	10.22	6/17/2022 9:29	0.88	6/17/2022 11:11	28.68
6/18/2022 10:55	83.49	6/17/2022 10:12	10.45	6/17/2022 10:42	10.22	6/17/2022 9:30	0.91	6/17/2022 11:12	28.66
6/18/2022 10:56	83.48	6/17/2022 10:13	8.75	6/17/2022 10:43	10.23	6/17/2022 9:31	0.93	6/17/2022 11:13	28.61
6/18/2022 10:57	83.47	6/17/2022 10:14	7.34	6/17/2022 10:44	10.20	6/17/2022 9:32	0.97	6/17/2022 11:14	28.66
6/18/2022 10:58	83.50	6/17/2022 10:15	6.13	6/17/2022 10:45	10.21	6/17/2022 9:33	0.97	6/17/2022 11:15	28.68
6/18/2022 10:59	83.47	6/17/2022 10:16	5.14	6/17/2022 10:46	10.19	6/17/2022 9:34	0.95	6/17/2022 11:16	28.66
6/18/2022 11:00	83.50	6/17/2022 10:17	4.29	6/17/2022 10:47	10.21	6/17/2022 9:35	0.94	6/17/2022 11:17	28.65
6/18/2022 11:01	83.50	6/17/2022 10:18	3.56	6/17/2022 10:48	10.22	6/17/2022 9:36	0.90	6/17/2022 11:18	28.65
6/18/2022 11:02	83.50	6/17/2022 10:19	2.99	6/17/2022 10:49	10.22	6/17/2022 9:37	0.84	6/17/2022 11:19	28.65
6/18/2022 11:03	83.50	6/17/2022 10:20	2.54	6/17/2022 10:50	10.22	6/17/2022 9:38	0.85	6/17/2022 11:20	28.64
6/18/2022 11:04	83.50	6/17/2022 10:21	2.12	6/17/2022 10:51	10.25	6/17/2022 9:39	0.82	6/17/2022 11:21	28.66
6/18/2022 11:05	83.47	6/17/2022 10:22	1.77	6/17/2022 10:52	10.27	6/17/2022 9:40	0.87	6/17/2022 11:22	28.62
6/18/2022 11:06	83.47	6/17/2022 10:23	1.47	6/17/2022 10:53	10.29	6/17/2022 9:41	0.83	6/17/2022 11:23	28.60
6/18/2022 11:07	83.46	6/17/2022 10:24	1.20	6/17/2022 10:54	10.29	6/17/2022 9:42	0.85	6/17/2022 11:24	28.62
6/18/2022 11:08	83.43	6/17/2022 10:25	1.00	6/17/2022 10:55	10.29	6/17/2022 9:43	0.89	6/17/2022 11:25	28.58
6/18/2022 11:09	83.45	6/17/2022 10:26	0.78	6/17/2022 10:56	10.31	6/17/2022 9:44	0.83	6/17/2022 11:26	28.59
6/18/2022 11:10	83.46	6/17/2022 10:27	0.61	6/17/2022 10:57	10.25	6/17/2022 9:45	0.83	6/17/2022 11:27	28.62
6/18/2022 11:11	83.43	6/17/2022 10:28	0.45	6/17/2022 10:58	10.24	6/17/2022 9:46	0.83	6/17/2022 11:28	28.63
6/18/2022 11:12	83.46	6/17/2022 10:29	0.30	6/17/2022 10:59	10.28	6/17/2022 9:47	0.86	6/17/2022 11:29	28.59
6/18/2022 11:13	83.46	6/17/2022 10:30	0.23	6/17/2022 11:00	10.27	6/17/2022 9:48	0.88	6/17/2022 11:30	28.61
6/18/2022 11:14	83.43	6/17/2022 10:31	0.14	6/17/2022 11:01	10.22	6/17/2022 9:49	0.85	6/17/2022 11:31	28.58
6/18/2022 11:15	83.45	6/17/2022 10:32	0.05	6/17/2022 11:02	10.20	6/17/2022 9:50	0.83	6/17/2022 11:32	28.63
6/18/2022 11:16	83.46	6/17/2022 10:33	-0.04	6/17/2022 11:03	10.20	6/17/2022 9:51	0.85	6/17/2022 11:33	28.60
6/18/2022 11:17	83.45	6/17/2022 10:34	-0.05	6/17/2022 11:04	10.21	6/17/2022 9:52	0.85	6/17/2022 11:34	28.61
6/18/2022 11:18	83.44	6/17/2022 10:35	-0.09	6/17/2022 11:05	10.19	6/17/2022 9:53	0.84	6/17/2022 11:35	28.61
6/18/2022 11:19	83.43	6/17/2022 10:36	-0.05	6/17/2022 11:06	10.20	6/17/2022 9:54	0.81	6/17/2022 11:36	28.60
6/18/2022 11:20	83.46	6/17/2022 10:37	-0.03	6/17/2022 11:07	10.14	6/17/2022 9:55	0.85	6/17/2022 11:37	28.55
6/18/2022 11:21	83.44	6/17/2022 10:38	-0.02	6/17/2022 11:08	10.17	6/17/2022 9:56	0.88	6/17/2022 11:38	28.60
6/18/2022 11:22	83.42	6/17/2022 10:39	-0.04	6/17/2022 11:09	10.12	6/17/2022 9:57	0.87	6/17/2022 11:39	28.56
6/18/2022 11:23	83.46	6/17/2022 10:40	-0.02	6/17/2022 11:10	10.18	6/17/2022 9:58	0.89	6/17/2022 11:40	28.53
6/18/2022 11:24	83.44	6/17/2022 10:41	-0.03	6/17/2022 11:11	10.14	6/17/2022 9:59	0.90	6/17/2022 11:41	28.58
6/18/2022 11:25	83.42	6/17/2022 10:42	-0.08	6/17/2022 11:12	10.12	6/17/2022 10:00	0.90	6/17/2022 11:42	28.59

6/18/2022 11:26	83.44	6/17/2022 10:43	-0.04	6/17/2022 11:13	10.10	6/17/2022 10:01	0.98	6/17/2022 11:43	28.54
6/18/2022 11:27	83.42	6/17/2022 10:44	-0.07	6/17/2022 11:14	10.10	6/17/2022 10:02	0.95	6/17/2022 11:44	28.58
6/18/2022 11:28	83.42	6/17/2022 10:45	-0.08	6/17/2022 11:15	10.09	6/17/2022 10:03	0.97	6/17/2022 11:45	28.59
6/18/2022 11:29	83.42	6/17/2022 10:46	-0.03	6/17/2022 11:16	10.09	6/17/2022 10:04	0.88	6/17/2022 11:46	28.57
6/18/2022 11:30	83.43	6/17/2022 10:47	-0.05	6/17/2022 11:17	10.12	6/17/2022 10:05	0.88	6/17/2022 11:47	28.58
6/18/2022 11:31	83.41	6/17/2022 10:48	-0.03	6/17/2022 11:18	10.10	6/17/2022 10:06	0.87	6/17/2022 11:48	28.58
6/18/2022 11:32	83.43	6/17/2022 10:49	-0.04	6/17/2022 11:19	10.09	6/17/2022 10:07	0.89	6/17/2022 11:49	28.57
6/18/2022 11:33	83.39	6/17/2022 10:50	-0.02	6/17/2022 11:20	10.17	6/17/2022 10:08	0.91	6/17/2022 11:50	28.56
6/18/2022 11:34	83.40	6/17/2022 10:51	-0.10	6/17/2022 11:21	10.17	6/17/2022 10:09	0.92	6/17/2022 11:51	28.55
6/18/2022 11:35	83.44	6/17/2022 10:52	-0.04	6/17/2022 11:22	10.15	6/17/2022 10:10	0.98	6/17/2022 11:52	28.56
6/18/2022 11:36	83.41	6/17/2022 10:53	-0.03	6/17/2022 11:23	10.16	6/17/2022 10:11	0.97	6/17/2022 11:53	30.65
6/18/2022 11:37	83.38	6/17/2022 10:54	-0.02	6/17/2022 11:24	10.16	6/17/2022 10:12	0.96	6/17/2022 11:54	29.75
6/18/2022 11:38	83.44	6/17/2022 10:55	-0.05	6/17/2022 11:25	10.17	6/17/2022 10:13	0.90	6/17/2022 11:55	29.04
6/18/2022 11:39	83.40	6/17/2022 10:56	-0.06	6/17/2022 11:26	10.16	6/17/2022 10:14	0.86	6/17/2022 11:56	28.74
6/18/2022 11:40	83.41	6/17/2022 10:57	-0.04	6/17/2022 11:27	10.17	6/17/2022 10:15	0.91	6/17/2022 11:57	28.68
6/18/2022 11:41	83.43	6/17/2022 10:58	-0.03	6/17/2022 11:28	10.18	6/17/2022 10:16	0.96	6/17/2022 11:58	28.61
6/18/2022 11:42	83.42	6/17/2022 10:59	-0.02	6/17/2022 11:29	10.15	6/17/2022 10:17	0.94	6/17/2022 11:59	28.57
6/18/2022 11:43	83.39	6/17/2022 11:00	-0.07	6/17/2022 11:30	10.15	6/17/2022 10:18	0.94	6/17/2022 12:00	28.59
6/18/2022 11:44	83.42	6/17/2022 11:01	-0.06	6/17/2022 11:31	10.13	6/17/2022 10:19	0.99	6/17/2022 12:01	28.58
6/18/2022 11:45	83.42	6/17/2022 11:02	-0.05	6/17/2022 11:32	10.11	6/17/2022 10:20	0.97	6/17/2022 12:02	28.60
6/18/2022 11:46	83.43	6/17/2022 11:03	-0.01	6/17/2022 11:33	10.14	6/17/2022 10:21	0.94	6/17/2022 12:03	28.61
6/18/2022 11:47	83.41	6/17/2022 11:04	-0.04	6/17/2022 11:34	10.12	6/17/2022 10:22	0.96	6/17/2022 12:04	28.59
6/18/2022 11:48	83.40	6/17/2022 11:05	-0.08	6/17/2022 11:35	10.11	6/17/2022 10:23	0.92	6/17/2022 12:05	28.59
6/18/2022 11:49	83.39	6/17/2022 11:06	-0.06	6/17/2022 11:36	10.13	6/17/2022 10:24	0.93	6/17/2022 12:06	28.55
6/18/2022 11:50	83.41	6/17/2022 11:07	-0.05	6/17/2022 11:37	10.08	6/17/2022 10:25	0.98	6/17/2022 12:07	28.58
6/18/2022 11:51	83.43	6/17/2022 11:08	-0.06	6/17/2022 11:38	10.09	6/17/2022 10:26	1.01	6/17/2022 12:08	28.57
6/18/2022 11:52	83.39	6/17/2022 11:09	-0.03	6/17/2022 11:39	10.10	6/17/2022 10:27	0.96	6/17/2022 12:09	28.56
6/18/2022 11:53	83.39	6/17/2022 11:10	4.90	6/17/2022 11:40	10.08	6/17/2022 10:28	0.94	6/17/2022 12:10	28.59
6/18/2022 11:54	83.41	6/17/2022 11:11	6.93	6/17/2022 11:41	10.10	6/17/2022 10:29	0.89	6/17/2022 12:11	28.54
6/18/2022 11:55	83.41	6/17/2022 11:12	5.70	6/17/2022 11:42	10.09	6/17/2022 10:30	0.85	6/17/2022 12:12	28.57
6/18/2022 11:56	83.39	6/17/2022 11:13	4.76	6/17/2022 11:43	11.09	6/17/2022 10:31	0.85	6/17/2022 12:13	28.57
6/18/2022 11:57	83.43	6/17/2022 11:14	3.91	6/17/2022 11:44	15.58	6/17/2022 10:32	0.83	6/17/2022 12:14	28.57
6/18/2022 11:58	83.39	6/17/2022 11:15	3.28	6/17/2022 11:45	16.56	6/17/2022 10:33	0.86	6/17/2022 12:15	28.57
6/18/2022 11:59	83.37	6/17/2022 11:16	2.65	6/17/2022 11:46	15.71	6/17/2022 10:34	0.88	6/17/2022 12:16	28.57
6/18/2022 12:00	83.40	6/17/2022 11:17	2.25	6/17/2022 11:47	18.62	6/17/2022 10:35	0.96	6/17/2022 12:17	28.56
6/18/2022 12:01	83.36	6/17/2022 11:18	1.81	6/17/2022 11:48	18.28	6/17/2022 10:36	0.93	6/17/2022 12:18	28.57
6/18/2022 12:02	83.38	6/17/2022 11:19	1.54	6/17/2022 11:49	17.36	6/17/2022 10:37	0.99	6/17/2022 12:19	28.52
6/18/2022 12:03	83.37	6/17/2022 11:20	1.25	6/17/2022 11:50	16.57	6/17/2022 10:38	0.96	6/17/2022 12:20	28.53
6/18/2022 12:04	83.41	6/17/2022 11:21	1.01	6/17/2022 11:51	15.90	6/17/2022 10:39	1.01	6/17/2022 12:21	28.52
6/18/2022 12:05	83.37	6/17/2022 11:22	0.76	6/17/2022 11:52	15.31	6/17/2022 10:40	1.00	6/17/2022 12:22	28.53
6/18/2022 12:06	83.40	6/17/2022 11:23	0.60	6/17/2022 11:53	14.77	6/17/2022 10:41	0.93	6/17/2022 12:23	28.55
6/18/2022 12:07	83.39	6/17/2022 11:24	0.40	6/17/2022 11:54	14.34	6/17/2022 10:42	0.91	6/17/2022 12:24	28.53
6/18/2022 12:08	83.36	6/17/2022 11:25	0.30	6/17/2022 11:55	18.00	6/17/2022 10:43	0.90	6/17/2022 12:25	28.56
6/18/2022 12:09	83.42	6/17/2022 11:26	0.20	6/17/2022 11:56	19.35	6/17/2022 10:44	0.92	6/17/2022 12:26	28.54
6/18/2022 12:10	83.42	6/17/2022 11:27	0.07	6/17/2022 11:57	18.38	6/17/2022 10:45	0.88	6/17/2022 12:27	28.56
6/18/2022 12:11	83.40	6/17/2022 11:28	0.01	6/17/2022 11:58	17.86	6/17/2022 10:46	0.89	6/17/2022 12:28	28.55
6/18/2022 12:12	83.41	6/17/2022 11:29	-0.05	6/17/2022 11:59	20.74	6/17/2022 10:47	0.97	6/17/2022 12:29	28.55
6/18/2022 12:13	83.39	6/17/2022 11:30	-0.08	6/17/2022 12:00	19.66	6/17/2022 10:48	0.96	6/17/2022 12:30	28.55
6/18/2022 12:14	83.37	6/17/2022 11:31	-0.01	6/17/2022 12:01	18.69	6/17/2022 10:49	1.02	6/17/2022 12:31	28.54
6/18/2022 12:15	83.36	6/17/2022 11:32	-0.04	6/17/2022 12:02	17.82	6/17/2022 10:50	0.98	6/17/2022 12:32	28.53
6/18/2022 12:16	83.39	6/17/2022 11:33	-0.08	6/17/2022 12:03	17.10	6/17/2022 10:51	0.96	6/17/2022 12:33	28.53
6/18/2022 12:17	83.35	6/17/2022 11:34	-0.01	6/17/2022 12:04	16.43	6/17/2022 10:52	0.92	6/17/2022 12:34	28.54
6/18/2022 12:18	83.35	6/17/2022 11:35	-0.07	6/17/2022 12:05	19.49	6/17/2022 10:53	0.91	6/17/2022 12:35	28.52
6/18/2022 12:19	83.39	6/17/2022 11:36	-0.09	6/17/2022 12:06	21.48	6/17/2022 10:54	0.85	6/17/2022 12:36	28.51
6/18/2022 12:20	83.36	6/17/2022 11:37	-0.07	6/17/2022 12:07	20.36	6/17/2022 10:55	0.89	6/17/2022 12:37	28.54
6/18/2022 12:21	83.37	6/17/2022 11:38	-0.04	6/17/2022 12:08	19.34	6/17/2022 10:56	0.89	6/17/2022 12:38	28.55
6/18/2022 12:22	83.36	6/17/2022 11:39	-0.03	6/17/2022 12:09	18.43	6/17/2022 10:57	0.95	6/17/2022 12:39	28.52
6/18/2022 12:23	83.34	6/17/2022 11:40	-0.06	6/17/2022 12:10	17.65	6/17/2022 10:58	0.93	6/17/2022 12:40	28.56
6/18/2022 12:24	83.37	6/17/2022 11:41	-0.08	6/17/2022 12:11	16.92	6/17/2022 10:59	0.96	6/17/2022 12:41	28.55
6/18/2022 12:25	83.37	6/17/2022 11:42	-0.08	6/17/2022 12:12	16.33	6/17/2022 11:00	0.95	6/17/2022 12:42	28.53
6/18/2022 12:26	83.37	6/17/2022 11:43	-0.03	6/17/2022 12:13	15.75	6/17/2022 11:01	1.00	6/17/2022 12:43	28.53
6/18/2022 12:27	83.36	6/17/2022 11:44	-0.04	6/17/2022 12:14	15.21	6/17/2022 11:02	0.96	6/17/2022 12:44	28.55
6/18/2022 12:28	83.41	6/17/2022 11:45	-0.05	6/17/2022 12:15	14.80	6/17/2022 11:03	0.93	6/17/2022 12:45	28.54
6/18/2022 12:29	83.38	6/17/2022 11:46	-0.05	6/17/2022 12:16	14.38	6/17/2022 11:04	0.91	6/17/2022 12:46	28.56
6/18/2022 12:30	83.37	6/17/2022 11:47	-0.04	6/17/2022 12:17	14.07	6/17/2022 11:05	0.89	6/17/2022 12:47	28.56
6/18/2022 12:31	83.37	6/17/2022 11:48	-0.07	6/17/2022 12:18	13.70	6/17/2022 11:06	0.89	6/17/2022 12:48	28.54
6/18/2022 12:32	83.37	6/17/2022 11:49	-0.06	6/17/2022 12:19	13.45	6/17/2022 11:07	0.87	6/17/2022 12:49	28.54
6/18/2022 12:33	83.39	6/17/2022 11:50	-0.05	6/17/2022 12:20	13.16	6/17/2022 11:08	0.88	6/17/2022 12:50	28.52
6/18/2022 12:34	83.39	6/17/2022 11:51	-0.08	6/17/2022 12:21	12.94	6/17/2022 11:09	0.90	6/17/2022 12:51	28.54
6/18/2022 12:35	83.34	6/17/2022 11:52	-0.04	6/17/2022 12:22	12.72	6/17/2022 11:10	0.95	6/17/2022 12:52	28.54
6/18/2022 12:36	83.41	6/17/2022 11:53	-0.07	6/17/2022 12:23	12.52	6/17/2022 11:11	0.92	6/17/2022 12:53	28.52
6/18/2022 12:37	83.35	6/17/2022 11:54	-0.03	6/17/2022 12:24	12.36	6/17/2022 11:12	0.92	6/17/2022 12:54	28.51
6/18/2022 12:38	83.35	6/17/2022 11:55	-0.08	6/17/2022 12:25	12.21	6/17/2022 11:13	0.89	6/17/2022 12:55	28.53
6/18/2022 12:39	83.34	6/17/2022 11:56	-0.09	6/17/2022 12:26	12.03	6/17/2022 11:14	0.94	6/17/2022 12:56	28.54
6/18/2022 12:40	83.35	6/17/2022 11:57	-0.06	6/17/2022 12:27	11.88	6/17/2022 11:15	0.93	6/17/2022 12:57	28.52
6/18/2022 12:41	83.41	6/17/2022 11:58	-0.03	6/17/2022 12:28	11.80	6/17/2022 11:16	0.90	6/17/2022 12:58	28.50
6/18/2022 12:42	83.37	6/17/2022 11:59	-0.09	6/17/2022 12:29	11.67	6/17/2022 11:17	0.90	6/17/2022 12:59	28.53
6/18/2022 12:43	83.37	6/17/2022 12:00	-0.06	6/17/2022 12:30	11.54	6/17/2022 11:18	0.89	6/17/2022 13:00	28.53
6/18/2022 12:44	83.39	6/17/2022 12:01	-0.10	6/17/2022 12:31	11.42	6/17/2022 11:19	0.92	6/17/2022 13:01	28.51
6/18/2022 12:45	83.37	6/17/2022 12:02	-0.06	6/17/2022 12:32	11.36	6/17/2022 11:20	0.94	6/17/2022 13:02	28.52
6/18/2022 12:46	83.36	6/17/2022 12:03	-0.05	6/17/2022 12:33	11.26	6/17/2022 11:21	0.94	6/17/2022 13:03	28.55
6/18/2022 12:47	83.38	6/17/2022 12:04	4.64	6/17/2022 12:34	11.20	6/17/2022 11:22	1.00	6/17/2022 13:04	28.52
6/18/2022 12:48	83.35	6/17/2022 12:05	7.03	6/17/2022 12:35	11.14	6/17/2022 11:23	1.01	6/17/2022 13:05	28.53
6/18/2022 12:49	83.36	6/17/2022 12:06	5.80	6/17/2022 12:36	11.04	6/17/2022 11:24	1.01	6/17/2022 13:06	28.53
6/18/2022 12:50	83.35	6/17/2022 12:07	4.76	6/17/2022 12:37	11.00	6/17/2022 11:25	0.99	6/17/2022 13:07	28.51
6/18/2022 12:51	83.31	6/17/2022 12:08	3.94	6/17/2022 12:38	10.93	6/17/2022 11:26	0.93	6/17/2022 13:08	28.51
6/18/2022 12:52	83.37	6/17/2022 12:09	3.28	6/17/2022 12:39	10.89	6/17/2022 11:27	0.92	6/17/2022 13:09	28.54
6/18/2022 12:53	83.32	6/17/2022 12:10	2.66	6/17/2022 12:40	10.83	6/17/2022 11:28	0.92	6/17/2022 13:10	28.51

6/18/2022 12:54	83.38	6/17/2022 12:11	2.24	6/17/2022 12:41	10.77	6/17/2022 11:29	0.91	6/17/2022 13:11	28.55
6/18/2022 12:55	83.36	6/17/2022 12:12	1.80	6/17/2022 12:42	10.73	6/17/2022 11:30	0.87	6/17/2022 13:12	28.53
6/18/2022 12:56	83.37	6/17/2022 12:13	1.54	6/17/2022 12:43	10.69	6/17/2022 11:31	0.89	6/17/2022 13:13	28.52
6/18/2022 12:57	83.34	6/17/2022 12:14	1.23	6/17/2022 12:44	10.63	6/17/2022 11:32	0.95	6/17/2022 13:14	28.54
6/18/2022 12:58	83.37	6/17/2022 12:15	0.97	6/17/2022 12:45	10.63	6/17/2022 11:33	0.96	6/17/2022 13:15	28.53
6/18/2022 12:59	83.34	6/17/2022 12:16	0.77	6/17/2022 12:46	10.59	6/17/2022 11:34	1.03	6/17/2022 13:16	28.50
6/18/2022 13:00	87.26	6/17/2022 12:17	0.61	6/17/2022 12:47	10.59	6/17/2022 11:35	1.00	6/17/2022 13:17	28.54
6/18/2022 13:01	90.26	6/17/2022 12:18	0.43	6/17/2022 12:48	10.56	6/17/2022 11:36	0.99	6/17/2022 13:18	28.52
6/18/2022 13:02	92.22	6/17/2022 12:19	0.27	6/17/2022 12:49	10.56	6/17/2022 11:37	0.99	6/17/2022 13:19	28.51
6/18/2022 13:03	93.54	6/17/2022 12:20	0.16	6/17/2022 12:50	10.55	6/17/2022 11:38	0.94	6/17/2022 13:20	28.52
6/18/2022 13:04	94.42	6/17/2022 12:21	0.06	6/17/2022 12:51	10.54	6/17/2022 11:39	0.94	6/17/2022 13:21	28.55
6/18/2022 13:05	94.94	6/17/2022 12:22	-0.06	6/17/2022 12:52	10.50	6/17/2022 11:40	0.91	6/17/2022 13:22	28.49
6/18/2022 13:06	95.34	6/17/2022 12:23	-0.06	6/17/2022 12:53	10.51	6/17/2022 11:41	0.89	6/17/2022 13:23	28.52
6/18/2022 13:07	95.55	6/17/2022 12:24	-0.03	6/17/2022 12:54	10.49	6/17/2022 11:42	0.91	6/17/2022 13:24	28.53
6/18/2022 13:08	93.78	6/17/2022 12:25	-0.05	6/17/2022 12:55	10.45	6/17/2022 11:43	0.93	6/17/2022 13:25	28.49
6/18/2022 13:09	90.94	6/17/2022 12:26	-0.08	6/17/2022 12:56	10.45	6/17/2022 11:44	0.94	6/17/2022 13:26	28.47
6/18/2022 13:10	89.09	6/17/2022 12:27	-0.04	6/17/2022 12:57	10.38	6/17/2022 11:45	0.96	6/17/2022 13:27	28.54
6/18/2022 13:11	87.84	6/17/2022 12:28	-0.06	6/17/2022 12:58	10.41	6/17/2022 11:46	1.02	6/17/2022 13:28	28.50
6/18/2022 13:12	87.06	6/17/2022 12:29	-0.04	6/17/2022 12:59	10.44	6/17/2022 11:47	1.00	6/17/2022 13:29	28.52
6/18/2022 13:13	86.47	6/17/2022 12:30	-0.05	6/17/2022 13:00	10.38	6/17/2022 11:48	0.99	6/17/2022 13:30	28.50
6/18/2022 13:14	86.08	6/17/2022 12:31	-0.10	6/17/2022 13:01	10.36	6/17/2022 11:49	0.94	6/17/2022 13:31	28.50
6/18/2022 13:15	85.76	6/17/2022 12:32	-0.04	6/17/2022 13:02	10.36	6/17/2022 11:50	0.95	6/17/2022 13:32	28.53
6/18/2022 13:16	85.54	6/17/2022 12:33	-0.06	6/17/2022 13:03	10.34	6/17/2022 11:51	0.92	6/17/2022 13:33	28.51
6/18/2022 13:17	85.37	6/17/2022 12:34	-0.03	6/17/2022 13:04	10.34	6/17/2022 11:52	0.92	6/17/2022 13:34	28.51
6/18/2022 13:18	85.23	6/17/2022 12:35	-0.04	6/17/2022 13:05	10.34	6/17/2022 11:53	0.92	6/17/2022 13:35	28.53
6/18/2022 13:19	85.11	6/17/2022 12:36	-0.05	6/17/2022 13:06	10.38	6/17/2022 11:54	0.91	6/17/2022 13:36	28.58
6/18/2022 13:20	85.02	6/17/2022 12:37	-0.07	6/17/2022 13:07	10.37	6/17/2022 11:55	0.97	6/17/2022 13:37	28.55
6/18/2022 13:21	84.95	6/17/2022 12:38	-0.07	6/17/2022 13:08	10.34	6/17/2022 11:56	1.01	6/17/2022 13:38	28.58
6/18/2022 13:22	84.90	6/17/2022 12:39	-0.01	6/17/2022 13:09	10.35	6/17/2022 11:57	1.01	6/17/2022 13:39	28.55
6/18/2022 13:23	84.83	6/17/2022 12:40	-0.06	6/17/2022 13:10	10.35	6/17/2022 11:58	1.02	6/17/2022 13:40	28.56
6/18/2022 13:24	84.75	6/17/2022 12:41	-0.07	6/17/2022 13:11	10.35	6/17/2022 11:59	1.02	6/17/2022 13:41	28.55
6/18/2022 13:25	84.73	6/17/2022 12:42	-0.02	6/17/2022 13:12	10.36	6/17/2022 12:00	1.00	6/17/2022 13:42	28.54
6/18/2022 13:26	84.68	6/17/2022 12:43	-0.08	6/17/2022 13:13	10.31	6/17/2022 12:01	0.96	6/17/2022 13:43	28.52
6/18/2022 13:27	84.61	6/17/2022 12:44	-0.05	6/17/2022 13:14	10.26	6/17/2022 12:02	0.92	6/17/2022 13:44	30.84
6/18/2022 13:28	84.59	6/17/2022 12:45	-0.06	6/17/2022 13:15	10.28	6/17/2022 12:03	0.95	6/17/2022 13:45	29.53
6/18/2022 13:29	84.57	6/17/2022 12:46	-0.04	6/17/2022 13:16	10.27	6/17/2022 12:04	0.92	6/17/2022 13:46	28.88
6/18/2022 13:30	84.50	6/17/2022 12:47	-0.04	6/17/2022 13:17	10.24	6/17/2022 12:05	0.90	6/17/2022 13:47	28.71
6/18/2022 13:31	84.49	6/17/2022 12:48	-0.04	6/17/2022 13:18	10.27	6/17/2022 12:06	0.89	6/17/2022 13:48	28.60
6/18/2022 13:32	84.49	6/17/2022 12:49	-0.08	6/17/2022 13:19	10.25	6/17/2022 12:07	0.89	6/17/2022 13:49	28.58
6/18/2022 13:33	84.46	6/17/2022 12:50	-0.10	6/17/2022 13:20	10.25	6/17/2022 12:08	0.91	6/17/2022 13:50	28.58
6/18/2022 13:34	84.41	6/17/2022 12:51	-0.02	6/17/2022 13:21	10.22	6/17/2022 12:09	0.93	6/17/2022 13:51	28.57
6/18/2022 13:35	84.41	6/17/2022 12:52	-0.06	6/17/2022 13:22	10.22	6/17/2022 12:10	0.93	6/17/2022 13:52	28.58
6/18/2022 13:36	84.38	6/17/2022 12:53	-0.09	6/17/2022 13:23	10.22	6/17/2022 12:11	0.95	6/17/2022 13:53	28.58
6/18/2022 13:37	84.37	6/17/2022 12:54	-0.07	6/17/2022 13:24	10.22	6/17/2022 12:12	0.92	6/17/2022 13:54	28.56
6/18/2022 13:38	84.32	6/17/2022 12:55	-0.05	6/17/2022 13:25	10.17	6/17/2022 12:13	0.91	6/17/2022 13:55	28.51
6/18/2022 13:39	84.32	6/17/2022 12:56	-0.06	6/17/2022 13:26	10.21	6/17/2022 12:14	0.99	6/17/2022 13:56	28.54
6/18/2022 13:40	84.31	6/17/2022 12:57	-0.05	6/17/2022 13:27	10.19	6/17/2022 12:15	0.95	6/17/2022 13:57	28.53
6/18/2022 13:41	84.29	6/17/2022 12:58	-0.07	6/17/2022 13:28	10.19	6/17/2022 12:16	0.97	6/17/2022 13:58	28.55
6/18/2022 13:42	84.28	6/17/2022 12:59	-0.08	6/17/2022 13:29	10.20	6/17/2022 12:17	1.00	6/17/2022 13:59	28.54
6/18/2022 13:43	84.25	6/17/2022 13:00	-0.06	6/17/2022 13:30	10.25	6/17/2022 12:18	1.03	6/17/2022 14:00	28.54
6/18/2022 13:44	84.26	6/17/2022 13:01	-0.08	6/17/2022 13:31	10.21	6/17/2022 12:19	1.02	6/17/2022 14:01	28.48
6/18/2022 13:45	84.24	6/17/2022 13:02	3.17	6/17/2022 13:32	10.23	6/17/2022 12:20	1.01	6/17/2022 14:02	28.52
6/18/2022 13:46	84.23	6/17/2022 13:03	7.40	6/17/2022 13:33	10.25	6/17/2022 12:21	1.02	6/17/2022 14:03	28.53
6/18/2022 13:47	84.21	6/17/2022 13:04	6.10	6/17/2022 13:34	10.23	6/17/2022 12:22	1.00	6/17/2022 14:04	28.52
6/18/2022 13:48	84.21	6/17/2022 13:05	5.03	6/17/2022 13:35	10.19	6/17/2022 12:23	0.96	6/17/2022 14:05	28.53
6/18/2022 13:49	84.16	6/17/2022 13:06	4.15	6/17/2022 13:36	10.20	6/17/2022 12:24	0.90	6/17/2022 14:06	28.50
6/18/2022 13:50	84.15	6/17/2022 13:07	3.47	6/17/2022 13:37	10.22	6/17/2022 12:25	0.93	6/17/2022 14:07	28.51
6/18/2022 13:51	84.12	6/17/2022 13:08	2.80	6/17/2022 13:38	10.22	6/17/2022 12:26	0.95	6/17/2022 14:08	28.49
6/18/2022 13:52	84.12	6/17/2022 13:09	2.32	6/17/2022 13:39	10.26	6/17/2022 12:27	0.90	6/17/2022 14:09	28.54
6/18/2022 13:53	84.13	6/17/2022 13:10	1.96	6/17/2022 13:40	10.24	6/17/2022 12:28	0.95	6/17/2022 14:10	28.53
6/18/2022 13:54	84.12	6/17/2022 13:11	1.60	6/17/2022 13:41	10.23	6/17/2022 12:29	0.96	6/17/2022 14:11	28.50
6/18/2022 13:55	84.14	6/17/2022 13:12	1.30	6/17/2022 13:42	10.25	6/17/2022 12:30	1.01	6/17/2022 14:12	28.55
6/18/2022 13:56	84.13	6/17/2022 13:13	1.05	6/17/2022 13:43	10.29	6/17/2022 12:31	1.01	6/17/2022 14:13	28.51
6/18/2022 13:57	84.11	6/17/2022 13:14	0.80	6/17/2022 13:44	10.26	6/17/2022 12:32	1.05	6/17/2022 14:14	28.50
6/18/2022 13:58	84.10	6/17/2022 13:15	0.61	6/17/2022 13:45	10.29	6/17/2022 12:33	0.98	6/17/2022 14:15	28.53
6/18/2022 13:59	84.09	6/17/2022 13:16	0.44	6/17/2022 13:46	10.24	6/17/2022 12:34	0.96	6/17/2022 14:16	28.52
6/18/2022 14:00	84.06	6/17/2022 13:17	0.31	6/17/2022 13:47	10.27	6/17/2022 12:35	0.95	6/17/2022 14:17	28.53
6/18/2022 14:01	84.07	6/17/2022 13:18	0.15	6/17/2022 13:48	10.28	6/17/2022 12:36	0.94	6/17/2022 14:18	28.50
6/18/2022 14:02	84.03	6/17/2022 13:19	0.07	6/17/2022 13:49	10.34	6/17/2022 12:37	0.96	6/17/2022 14:19	28.54
6/18/2022 14:03	84.05	6/17/2022 13:20	-0.01	6/17/2022 13:50	10.34	6/17/2022 12:38	0.94	6/17/2022 14:20	28.54
6/18/2022 14:04	84.03	6/17/2022 13:21	-0.07	6/17/2022 13:51	10.34	6/17/2022 12:39	0.95	6/17/2022 14:21	28.53
6/18/2022 14:05	84.03	6/17/2022 13:22	-0.09	6/17/2022 13:52	10.28	6/17/2022 12:40	0.98	6/17/2022 14:22	28.50
6/18/2022 14:06	84.02	6/17/2022 13:23	-0.03	6/17/2022 13:53	10.32	6/17/2022 12:41	1.00	6/17/2022 14:23	28.53
6/18/2022 14:07	84.03	6/17/2022 13:24	-0.06	6/17/2022 13:54	10.34	6/17/2022 12:42	1.04	6/17/2022 14:24	28.51
6/18/2022 14:08	83.99	6/17/2022 13:25	-0.04	6/17/2022 13:55	10.33	6/17/2022 12:43	1.05	6/17/2022 14:25	28.49
6/18/2022 14:09	84.01	6/17/2022 13:26	-0.05	6/17/2022 13:56	10.33	6/17/2022 12:44	1.01	6/17/2022 14:26	28.49
6/18/2022 14:10	83.99	6/17/2022 13:27	-0.09	6/17/2022 13:57	10.31	6/17/2022 12:45	0.95	6/17/2022 14:27	28.52
6/18/2022 14:11	83.97	6/17/2022 13:28	-0.04	6/17/2022 13:58	10.33	6/17/2022 12:46	0.96	6/17/2022 14:28	28.49
6/18/2022 14:12	83.99	6/17/2022 13:29	-0.05	6/17/2022 13:59	10.28	6/17/2022 12:47	0.91	6/17/2022 14:29	28.50
6/18/2022 14:13	83.99	6/17/2022 13:30	-0.01	6/17/2022 14:00	10.30	6/17/2022 12:48	0.93	6/17/2022 14:30	28.52
6/18/2022 14:14	83.98	6/17/2022 13:31	-0.05	6/17/2022 14:01	10.29	6/17/2022 12:49	0.95	6/17/2022 14:31	28.51
6/18/2022 14:15	83.97	6/17/2022 13:32	-0.07	6/17/2022 14:02	10.23	6/17/2022 12:50	0.96	6/17/2022 14:32	28.49
6/18/2022 14:16	83.94	6/17/2022 13:33	-0.04	6/17/2022 14:03	10.25	6/17/2022 12:51	1.04	6/17/2022 14:33	28.51
6/18/2022 14:17	83.94	6/17/2022 13:34	-0.07	6/17/2022 14:04	10.25	6/17/2022 12:52	1.02	6/17/2022 14:34	28.54
6/18/2022 14:18	83.96	6/17/2022 13:35	-0.07	6/17/2022 14:05	10.23	6/17/2022 12:53	1.03	6/17/2022 14:35	28.50
6/18/2022 14:19	83.93	6/17/2022 13:36	-0.09	6/17/2022 14:06	10.22	6/17/2022 12:54	1.02	6/17/2022 14:36	28.48
6/18/2022 14:20	83.96	6/17/2022 13:37	-0.04	6/17/2022 14:07	10.22	6/17/2022 12:55	0.99	6/17/2022 14:37	28.49
6/18/2022 14:21	83.96	6/17/2022 13:38	-0.04	6/17/2022 14:08	10.21	6/17/2022 12:56	0.95	6/17/2022 14:38	28.48

6/18/2022 14:22	83.95	6/17/2022 13:39	-0.08	6/17/2022 14:09	10.18	6/17/2022 12:57	0.92	6/17/2022 14:39	28.49
6/18/2022 14:23	83.95	6/17/2022 13:40	-0.07	6/17/2022 14:10	10.12	6/17/2022 12:58	0.92	6/17/2022 14:40	28.48
6/18/2022 14:24	83.96	6/17/2022 13:41	-0.06	6/17/2022 14:11	10.16	6/17/2022 12:59	0.93	6/17/2022 14:41	28.52
6/18/2022 14:25	83.93	6/17/2022 13:42	-0.07	6/17/2022 14:12	10.15	6/17/2022 13:00	0.96	6/17/2022 14:42	28.46
6/18/2022 14:26	83.93	6/17/2022 13:43	-0.09	6/17/2022 14:13	10.13	6/17/2022 13:01	1.02	6/17/2022 14:43	28.51
6/18/2022 14:27	83.94	6/17/2022 13:44	-0.05	6/17/2022 14:14	10.12	6/17/2022 13:02	1.00	6/17/2022 14:44	28.51
6/18/2022 14:28	83.93	6/17/2022 13:45	-0.08	6/17/2022 14:15	10.11	6/17/2022 13:03	1.05	6/17/2022 14:45	28.51
6/18/2022 14:29	83.89	6/17/2022 13:46	0.41	6/17/2022 14:16	10.12	6/17/2022 13:04	1.05	6/17/2022 14:46	28.52
6/18/2022 14:30	83.91	6/17/2022 13:47	6.22	6/17/2022 14:17	10.10	6/17/2022 13:05	0.99	6/17/2022 14:47	28.50
6/18/2022 14:31	83.94	6/17/2022 13:48	6.55	6/17/2022 14:18	10.11	6/17/2022 13:06	1.05	6/17/2022 14:48	28.46
6/18/2022 14:32	83.88	6/17/2022 13:49	5.43	6/17/2022 14:19	10.13	6/17/2022 13:07	1.06	6/17/2022 14:49	28.48
6/18/2022 14:33	83.88	6/17/2022 13:50	4.51	6/17/2022 14:20	10.09	6/17/2022 13:08	1.01	6/17/2022 14:50	28.49
6/18/2022 14:34	83.89	6/17/2022 13:51	3.74	6/17/2022 14:21	10.13	6/17/2022 13:09	1.05	6/17/2022 14:51	28.48
6/18/2022 14:35	83.88	6/17/2022 13:52	3.05	6/17/2022 14:22	10.11	6/17/2022 13:10	1.03	6/17/2022 14:52	28.47
6/18/2022 14:36	83.88	6/17/2022 13:53	2.55	6/17/2022 14:23	10.15	6/17/2022 13:11	1.04	6/17/2022 14:53	28.50
6/18/2022 14:37	83.85	6/17/2022 13:54	2.08	6/17/2022 14:24	10.14	6/17/2022 13:12	1.03	6/17/2022 14:54	28.53
6/18/2022 14:38	83.87	6/17/2022 13:55	1.72	6/17/2022 14:25	10.16	6/17/2022 13:13	0.99	6/17/2022 14:55	28.49
6/18/2022 14:39	83.87	6/17/2022 13:56	1.41	6/17/2022 14:26	10.17	6/17/2022 13:14	0.99	6/17/2022 14:56	28.48
6/18/2022 14:40	83.86	6/17/2022 13:57	1.12	6/17/2022 14:27	10.16	6/17/2022 13:15	0.95	6/17/2022 14:57	28.52
6/18/2022 14:41	83.87	6/17/2022 13:58	0.90	6/17/2022 14:28	10.16	6/17/2022 13:16	0.93	6/17/2022 14:58	28.47
6/18/2022 14:42	83.87	6/17/2022 13:59	0.68	6/17/2022 14:29	10.17	6/17/2022 13:17	0.97	6/17/2022 14:59	28.49
6/18/2022 14:43	83.85	6/17/2022 14:00	0.49	6/17/2022 14:30	10.16	6/17/2022 13:18	0.94	6/17/2022 15:00	28.47
6/18/2022 14:44	83.84	6/17/2022 14:01	0.35	6/17/2022 14:31	10.13	6/17/2022 13:19	1.00	6/17/2022 15:01	28.45
6/18/2022 14:45	83.85	6/17/2022 14:02	0.23	6/17/2022 14:32	10.11	6/17/2022 13:20	0.99	6/17/2022 15:02	28.49
6/18/2022 14:46	83.89	6/17/2022 14:03	0.11	6/17/2022 14:33	10.13	6/17/2022 13:21	1.06	6/17/2022 15:03	28.46
6/18/2022 14:47	83.82	6/17/2022 14:04	0.01	6/17/2022 14:34	10.15	6/17/2022 13:22	1.04	6/17/2022 15:04	28.50
6/18/2022 14:48	83.83	6/17/2022 14:05	-0.08	6/17/2022 14:35	10.10	6/17/2022 13:23	1.08	6/17/2022 15:05	28.50
6/18/2022 14:49	83.84	6/17/2022 14:06	-0.07	6/17/2022 14:36	10.12	6/17/2022 13:24	1.00	6/17/2022 15:06	28.47
6/18/2022 14:50	83.83	6/17/2022 14:07	-0.07	6/17/2022 14:37	10.12	6/17/2022 13:25	1.00	6/17/2022 15:07	28.50
6/18/2022 14:51	83.80	6/17/2022 14:08	-0.06	6/17/2022 14:38	10.13	6/17/2022 13:26	0.94	6/17/2022 15:08	28.45
6/18/2022 14:52	83.83	6/17/2022 14:09	-0.03	6/17/2022 14:39	10.09	6/17/2022 13:27	0.96	6/17/2022 15:09	28.47
6/18/2022 14:53	83.80	6/17/2022 14:10	-0.07	6/17/2022 14:40	10.10	6/17/2022 13:28	0.89	6/17/2022 15:10	28.50
6/18/2022 14:54	83.81	6/17/2022 14:11	-0.06	6/17/2022 14:41	10.08	6/17/2022 13:29	0.96	6/17/2022 15:11	28.51
6/18/2022 14:55	83.83	6/17/2022 14:12	-0.04	6/17/2022 14:42	10.04	6/17/2022 13:30	0.97	6/17/2022 15:12	28.47
6/18/2022 14:56	83.83	6/17/2022 14:13	-0.05	6/17/2022 14:43	10.10	6/17/2022 13:31	1.03	6/17/2022 15:13	28.47
6/18/2022 14:57	83.83	6/17/2022 14:14	-0.08	6/17/2022 14:44	10.05	6/17/2022 13:32	1.07	6/17/2022 15:14	28.47
6/18/2022 14:58	83.82	6/17/2022 14:15	-0.10	6/17/2022 14:45	10.04	6/17/2022 13:33	1.04	6/17/2022 15:15	28.44
6/18/2022 14:59	83.83	6/17/2022 14:16	-0.05	6/17/2022 14:46	10.07	6/17/2022 13:34	1.05	6/17/2022 15:16	28.47
6/18/2022 15:00	83.79	6/17/2022 14:17	-0.10	6/17/2022 14:47	10.10	6/17/2022 13:35	0.96	6/17/2022 15:17	28.48
6/18/2022 15:01	83.81	6/17/2022 14:18	-0.09	6/17/2022 14:48	10.04	6/17/2022 13:36	0.98	6/17/2022 15:18	28.46
6/18/2022 15:02	83.81	6/17/2022 14:19	-0.06	6/17/2022 14:49	10.05	6/17/2022 13:37	0.95	6/17/2022 15:19	28.46
6/18/2022 15:03	83.84	6/17/2022 14:20	-0.06	6/17/2022 14:50	10.06	6/17/2022 13:38	0.96	6/17/2022 15:20	28.49
6/18/2022 15:04	83.78	6/17/2022 14:21	-0.07	6/17/2022 14:51	10.04	6/17/2022 13:39	0.95	6/17/2022 15:21	28.47
6/18/2022 15:05	83.78	6/17/2022 14:22	-0.01	6/17/2022 14:52	10.04	6/17/2022 13:40	0.96	6/17/2022 15:22	28.47
6/18/2022 15:06	83.81	6/17/2022 14:23	-0.02	6/17/2022 14:53	10.03	6/17/2022 13:41	1.04	6/17/2022 15:23	28.49
6/18/2022 15:07	83.78	6/17/2022 14:24	-0.05	6/17/2022 14:54	10.04	6/17/2022 13:42	1.05	6/17/2022 15:24	28.46
6/18/2022 15:08	83.77	6/17/2022 14:25	-0.06	6/17/2022 14:55	10.07	6/17/2022 13:43	1.07	6/17/2022 15:25	28.48
6/18/2022 15:09	83.76	6/17/2022 14:26	-0.07	6/17/2022 14:56	10.09	6/17/2022 13:44	1.08	6/17/2022 15:26	28.47
6/18/2022 15:10	83.80	6/17/2022 14:27	-0.06	6/17/2022 14:57	10.12	6/17/2022 13:45	1.05	6/17/2022 15:27	28.47
6/18/2022 15:11	83.80	6/17/2022 14:28	-0.05	6/17/2022 14:58	10.09	6/17/2022 13:46	1.00	6/17/2022 15:28	28.48
6/18/2022 15:12	83.77	6/17/2022 14:29	-0.03	6/17/2022 14:59	10.12	6/17/2022 13:47	0.97	6/17/2022 15:29	28.45
6/18/2022 15:13	83.80	6/17/2022 14:30	-0.01	6/17/2022 15:00	12.77	6/17/2022 13:48	1.01	6/17/2022 15:30	28.50
6/18/2022 15:14	83.75	6/17/2022 14:31	-0.05	6/17/2022 15:01	14.76	6/17/2022 13:49	1.02	6/17/2022 15:31	28.46
6/18/2022 15:15	83.73	6/17/2022 14:32	-0.02	6/17/2022 15:02	14.18	6/17/2022 13:50	1.04	6/17/2022 15:32	28.45
6/18/2022 15:16	83.77	6/17/2022 14:33	-0.08	6/17/2022 15:03	13.66	6/17/2022 13:51	1.01	6/17/2022 15:33	28.43
6/18/2022 15:17	83.77	6/17/2022 14:34	5.78	6/17/2022 15:04	13.29	6/17/2022 13:52	1.03	6/17/2022 15:34	28.41
6/18/2022 15:18	83.73	6/17/2022 14:35	6.75	6/17/2022 15:05	12.92	6/17/2022 13:53	1.01	6/17/2022 15:35	28.47
6/18/2022 15:19	83.76	6/17/2022 14:36	5.56	6/17/2022 15:06	12.61	6/17/2022 13:54	0.97	6/17/2022 15:36	28.46
6/18/2022 15:20	83.76	6/17/2022 14:37	4.65	6/17/2022 15:07	12.34	6/17/2022 13:55	0.98	6/17/2022 15:37	28.44
6/18/2022 15:21	83.72	6/17/2022 14:38	4.01	6/17/2022 15:08	12.09	6/17/2022 13:56	0.96	6/17/2022 15:38	28.43
6/18/2022 15:22	83.74	6/17/2022 14:39	3.43	6/17/2022 15:09	11.90	6/17/2022 13:57	0.93	6/17/2022 15:39	28.45
6/18/2022 15:23	83.74	6/17/2022 14:40	2.84	6/17/2022 15:10	11.75	6/17/2022 13:58	0.97	6/17/2022 15:40	28.45
6/18/2022 15:24	83.74	6/17/2022 14:41	2.38	6/17/2022 15:11	11.55	6/17/2022 13:59	0.97	6/17/2022 15:41	28.48
6/18/2022 15:25	83.76	6/17/2022 14:42	1.95	6/17/2022 15:12	11.41	6/17/2022 14:00	0.99	6/17/2022 15:42	28.43
6/18/2022 15:26	83.72	6/17/2022 14:43	1.65	6/17/2022 15:13	11.26	6/17/2022 14:01	1.01	6/17/2022 15:43	28.44
6/18/2022 15:27	83.76	6/17/2022 14:44	1.36	6/17/2022 15:14	11.19	6/17/2022 14:02	1.06	6/17/2022 15:44	28.46
6/18/2022 15:28	83.70	6/17/2022 14:45	1.07	6/17/2022 15:15	11.09	6/17/2022 14:03	1.06	6/17/2022 15:45	28.49
6/18/2022 15:29	83.75	6/17/2022 14:46	0.82	6/17/2022 15:16	10.98	6/17/2022 14:04	1.07	6/17/2022 15:46	28.45
6/18/2022 15:30	83.74	6/17/2022 14:47	0.64	6/17/2022 15:17	10.93	6/17/2022 14:05	1.07	6/17/2022 15:47	28.45
6/18/2022 15:31	83.71	6/17/2022 14:48	0.48	6/17/2022 15:18	10.86	6/17/2022 14:06	1.04	6/17/2022 15:48	28.46
6/18/2022 15:32	83.69	6/17/2022 14:49	0.33	6/17/2022 15:19	10.87	6/17/2022 14:07	1.00	6/17/2022 15:49	28.45
6/18/2022 15:33	83.71	6/17/2022 14:50	0.16	6/17/2022 15:20	10.79	6/17/2022 14:08	0.98	6/17/2022 15:50	28.49
6/18/2022 15:34	83.73	6/17/2022 14:51	0.07	6/17/2022 15:21	10.74	6/17/2022 14:09	0.96	6/17/2022 15:51	28.48
6/18/2022 15:35	83.72	6/17/2022 14:52	-0.03	6/17/2022 15:22	10.68	6/17/2022 14:10	0.97	6/17/2022 15:52	28.47
6/18/2022 15:36	83.72	6/17/2022 14:53	-0.08	6/17/2022 15:23	10.68	6/17/2022 14:11	0.94	6/17/2022 15:53	28.45
6/18/2022 15:37	83.75	6/17/2022 14:54	-0.07	6/17/2022 15:24	10.61	6/17/2022 14:12	1.01	6/17/2022 15:54	28.44
6/18/2022 15:38	83.71	6/17/2022 14:55	-0.05	6/17/2022 15:25	10.57	6/17/2022 14:13	1.02	6/17/2022 15:55	28.43
6/18/2022 15:39	83.71	6/17/2022 14:56	-0.05	6/17/2022 15:26	10.56	6/17/2022 14:14	1.09	6/17/2022 15:56	28.44
6/18/2022 15:40	83.71	6/17/2022 14:57	-0.05	6/17/2022 15:27	10.52	6/17/2022 14:15	1.09	6/17/2022 15:57	28.44
6/18/2022 15:41	83.68	6/17/2022 14:58	-0.08	6/17/2022 15:28	10.50	6/17/2022 14:16	1.06	6/17/2022 15:58	28.46
6/18/2022 15:42	83.71	6/17/2022 14:59	-0.05	6/17/2022 15:29	10.44	6/17/2022 14:17	1.03	6/17/2022 15:59	28.47
6/18/2022 15:43	83.73	6/17/2022 15:00	-0.06	6/17/2022 15:30	10.39	6/17/2022 14:18	0.99	6/17/2022 16:00	28.46
6/18/2022 15:44	83.71	6/17/2022 15:01	-0.06	6/17/2022 15:31	10.38	6/17/2022 14:19	0.98	6/17/2022 16:01	28.41
6/18/2022 15:45	83.74	6/17/2022 15:02	-0.05	6/17/2022 15:32	10.39	6/17/2022 14:20	0.97	6/17/2022 16:02	28.47
6/18/2022 15:46	83.71	6/17/2022 15:03	-0.01	6/17/2022 15:33	10.33	6/17/2022 14:21	0.99	6/17/2022 16:03	28.40
6/18/2022 15:47	83.66	6/17/2022 15:04	-0.06	6/17/2022 15:34	10.30	6/17/2022 14:22	1.01	6/17/2022 16:04	28.44
6/18/2022 15:48	83.69	6/17/2022 15:05	-0.07	6/17/2022 15:35	10.31	6/17/2022 14:23	1.09	6/17/2022 16:05	28.45
6/18/2022 15:49	83.72	6/17/2022 15:06	-0.06	6/17/2022 15:36	10.26	6/17/2022 14:24	1.08	6/17/2022 16:06	28.45

6/18/2022 15:50	83.71	6/17/2022 15:07	-0.04	6/17/2022 15:37	10.28	6/17/2022 14:25	1.08	6/17/2022 16:07	28.46
6/18/2022 15:51	84.88	6/17/2022 15:08	-0.08	6/17/2022 15:38	10.24	6/17/2022 14:26	1.05	6/17/2022 16:08	28.42
6/18/2022 15:52	88.81	6/17/2022 15:09	-0.05	6/17/2022 15:39	10.27	6/17/2022 14:27	1.03	6/17/2022 16:09	28.42
6/18/2022 15:53	91.16	6/17/2022 15:10	-0.04	6/17/2022 15:40	10.27	6/17/2022 14:28	1.00	6/17/2022 16:10	28.44
6/18/2022 15:54	92.13	6/17/2022 15:11	-0.04	6/17/2022 15:41	10.28	6/17/2022 14:29	0.97	6/17/2022 16:11	28.42
6/18/2022 15:55	89.32	6/17/2022 15:12	-0.01	6/17/2022 15:42	10.26	6/17/2022 14:30	0.96	6/17/2022 16:12	28.43
6/18/2022 15:56	87.59	6/17/2022 15:13	-0.07	6/17/2022 15:43	10.26	6/17/2022 14:31	1.01	6/17/2022 16:13	28.46
6/18/2022 15:57	86.48	6/17/2022 15:14	-0.06	6/17/2022 15:44	10.26	6/17/2022 14:32	1.01	6/17/2022 16:14	28.46
6/18/2022 15:58	85.84	6/17/2022 15:15	-0.03	6/17/2022 15:45	10.25	6/17/2022 14:33	1.03	6/17/2022 16:15	28.41
6/18/2022 15:59	85.37	6/17/2022 15:16	-0.08	6/17/2022 15:46	10.28	6/17/2022 14:34	1.08	6/17/2022 16:16	28.44
6/18/2022 16:00	85.15	6/17/2022 15:17	-0.03	6/17/2022 15:47	10.21	6/17/2022 14:35	1.08	6/17/2022 16:17	28.43
6/18/2022 16:01	84.90	6/17/2022 15:18	-0.03	6/17/2022 15:48	10.23	6/17/2022 14:36	1.07	6/17/2022 16:18	28.43
6/18/2022 16:02	84.75	6/17/2022 15:19	-0.07	6/17/2022 15:49	10.21	6/17/2022 14:37	7.96	6/17/2022 16:19	28.41
6/18/2022 16:03	84.64	6/17/2022 15:20	-0.06	6/17/2022 15:50	10.21	6/17/2022 14:38	7.92	6/17/2022 16:20	30.37
6/18/2022 16:04	84.57	6/17/2022 15:21	-0.08	6/17/2022 15:51	10.21	6/17/2022 14:39	4.91	6/17/2022 16:21	29.22
6/18/2022 16:05	84.48	6/17/2022 15:22	-0.02	6/17/2022 15:52	10.19	6/17/2022 14:40	2.62	6/17/2022 16:22	28.81
6/18/2022 16:06	84.44	6/17/2022 15:23	-0.08	6/17/2022 15:53	10.22	6/17/2022 14:41	1.08	6/17/2022 16:23	30.23
6/18/2022 16:07	84.38	6/17/2022 15:24	-0.06	6/17/2022 15:54	10.20	6/17/2022 14:42	1.08	6/17/2022 16:24	29.17
6/18/2022 16:08	84.35	6/17/2022 15:25	-0.07	6/17/2022 15:55	10.16	6/17/2022 14:43	1.10	6/17/2022 16:25	28.72
6/18/2022 16:09	84.30	6/17/2022 15:26	-0.05	6/17/2022 15:56	10.14	6/17/2022 14:44	1.11	6/17/2022 16:26	28.60
6/18/2022 16:10	84.29	6/17/2022 15:27	0.36	6/17/2022 15:57	10.15	6/17/2022 14:45	1.09	6/17/2022 16:27	28.56
6/18/2022 16:11	84.24	6/17/2022 15:28	6.23	6/17/2022 15:58	10.13	6/17/2022 14:46	1.09	6/17/2022 16:28	28.53
6/18/2022 16:12	84.25	6/17/2022 15:29	6.66	6/17/2022 15:59	10.15	6/17/2022 14:47	1.06	6/17/2022 16:29	28.50
6/18/2022 16:13	84.22	6/17/2022 15:30	5.49	6/17/2022 16:00	10.13	6/17/2022 14:48	1.12	6/17/2022 16:30	28.47
6/18/2022 16:14	84.18	6/17/2022 15:31	4.54	6/17/2022 16:01	10.13	6/17/2022 14:49	1.06	6/17/2022 16:31	28.50
6/18/2022 16:15	84.15	6/17/2022 15:32	3.75	6/17/2022 16:02	10.13	6/17/2022 14:50	1.02	6/17/2022 16:32	28.46
6/18/2022 16:16	84.16	6/17/2022 15:33	3.11	6/17/2022 16:03	10.09	6/17/2022 14:51	1.02	6/17/2022 16:33	28.48
6/18/2022 16:17	84.15	6/17/2022 15:34	2.54	6/17/2022 16:04	10.09	6/17/2022 14:52	1.01	6/17/2022 16:34	28.48
6/18/2022 16:18	84.12	6/17/2022 15:35	2.11	6/17/2022 16:05	10.08	6/17/2022 14:53	0.97	6/17/2022 16:35	28.46
6/18/2022 16:19	84.10	6/17/2022 15:36	1.73	6/17/2022 16:06	10.08	6/17/2022 14:54	0.99	6/17/2022 16:36	28.46
6/18/2022 16:20	84.09	6/17/2022 15:37	1.42	6/17/2022 16:07	10.09	6/17/2022 14:55	1.02	6/17/2022 16:37	28.48
6/18/2022 16:21	84.09	6/17/2022 15:38	1.15	6/17/2022 16:08	10.07	6/17/2022 14:56	1.03	6/17/2022 16:38	28.47
6/18/2022 16:22	84.07	6/17/2022 15:39	0.92	6/17/2022 16:09	10.07	6/17/2022 14:57	1.04	6/17/2022 16:39	30.23
6/18/2022 16:23	84.09	6/17/2022 15:40	0.63	6/17/2022 16:10	10.05	6/17/2022 14:58	1.10	6/17/2022 16:40	29.13
6/18/2022 16:24	84.11	6/17/2022 15:41	0.53	6/17/2022 16:11	10.08	6/17/2022 14:59	1.08	6/17/2022 16:41	28.75
6/18/2022 16:25	84.06	6/17/2022 15:42	0.35	6/17/2022 16:12	10.06	6/17/2022 15:00	1.10	6/17/2022 16:42	28.58
6/18/2022 16:26	84.04	6/17/2022 15:43	0.24	6/17/2022 16:13	10.06	6/17/2022 15:01	1.08	6/17/2022 16:43	28.52
6/18/2022 16:27	84.02	6/17/2022 15:44	0.11	6/17/2022 16:14	10.09	6/17/2022 15:02	1.07	6/17/2022 16:44	28.50
6/18/2022 16:28	84.02	6/17/2022 15:45	0.01	6/17/2022 16:15	10.11	6/17/2022 15:03	1.07	6/17/2022 16:45	28.47
6/18/2022 16:29	84.00	6/17/2022 15:46	-0.06	6/17/2022 16:16	10.14	6/17/2022 15:04	1.01	6/17/2022 16:46	28.54
6/18/2022 16:30	84.02	6/17/2022 15:47	-0.02	6/17/2022 16:17	10.12	6/17/2022 15:05	1.00	6/17/2022 16:47	28.50
6/18/2022 16:31	84.02	6/17/2022 15:48	-0.03	6/17/2022 16:18	10.12	6/17/2022 15:06	1.00	6/17/2022 16:48	28.48
6/18/2022 16:32	84.05	6/17/2022 15:49	-0.07	6/17/2022 16:19	10.13	6/17/2022 15:07	0.97	6/17/2022 16:49	28.51
6/18/2022 16:33	84.01	6/17/2022 15:50	-0.05	6/17/2022 16:20	10.13	6/17/2022 15:08	0.99	6/17/2022 16:50	28.49
6/18/2022 16:34	83.99	6/17/2022 15:51	-0.06	6/17/2022 16:21	10.12	6/17/2022 15:09	1.00	6/17/2022 16:51	28.47
6/18/2022 16:35	83.96	6/17/2022 15:52	-0.06	6/17/2022 16:22	10.11	6/17/2022 15:10	0.98	6/17/2022 16:52	28.46
6/18/2022 16:36	83.99	6/17/2022 15:53	-0.07	6/17/2022 16:23	10.13	6/17/2022 15:11	1.04	6/17/2022 16:53	30.65
6/18/2022 16:37	83.95	6/17/2022 15:54	-0.07	6/17/2022 16:24	10.13	6/17/2022 15:12	1.08	6/17/2022 16:54	29.41
6/18/2022 16:38	83.95	6/17/2022 15:55	-0.11	6/17/2022 16:25	10.14	6/17/2022 15:13	1.12	6/17/2022 16:55	28.82
6/18/2022 16:39	83.96	6/17/2022 15:56	-0.06	6/17/2022 16:26	10.15	6/17/2022 15:14	1.13	6/17/2022 16:56	28.63
6/18/2022 16:40	83.96	6/17/2022 15:57	-0.07	6/17/2022 16:27	10.11	6/17/2022 15:15	1.08	6/17/2022 16:57	28.54
6/18/2022 16:41	83.94	6/17/2022 15:58	-0.05	6/17/2022 16:28	10.08	6/17/2022 15:16	1.09	6/17/2022 16:58	28.51
6/18/2022 16:42	83.94	6/17/2022 15:59	-0.03	6/17/2022 16:29	10.07	6/17/2022 15:17	1.05	6/17/2022 16:59	28.53
6/18/2022 16:43	83.93	6/17/2022 16:00	-0.05	6/17/2022 16:30	10.11	6/17/2022 15:18	1.06	6/17/2022 17:00	28.51
6/18/2022 16:44	83.94	6/17/2022 16:01	-0.07	6/17/2022 16:31	10.08	6/17/2022 15:19	1.02	6/17/2022 17:01	28.46
6/18/2022 16:45	83.95	6/17/2022 16:02	-0.07	6/17/2022 16:32	10.06	6/17/2022 15:20	1.03	6/17/2022 17:02	28.46
6/18/2022 16:46	83.94	6/17/2022 16:03	-0.05	6/17/2022 16:33	10.07	6/17/2022 15:21	1.02	6/17/2022 17:03	28.48
6/18/2022 16:47	83.93	6/17/2022 16:04	2.37	6/17/2022 16:34	10.05	6/17/2022 15:22	1.04	6/17/2022 17:04	28.48
6/18/2022 16:48	83.93	6/17/2022 16:05	7.72	6/17/2022 16:35	10.06	6/17/2022 15:23	1.03	6/17/2022 17:05	28.48
6/18/2022 16:49	83.92	6/17/2022 16:06	6.63	6/17/2022 16:36	10.06	6/17/2022 15:24	1.06	6/17/2022 17:06	28.49
6/18/2022 16:50	83.94	6/17/2022 16:07	5.46	6/17/2022 16:37	10.06	6/17/2022 15:25	1.10	6/17/2022 17:07	28.46
6/18/2022 16:51	83.96	6/17/2022 16:08	4.51	6/17/2022 16:38	10.01	6/17/2022 15:26	1.07	6/17/2022 17:08	28.49
6/18/2022 16:52	83.91	6/17/2022 16:09	3.76	6/17/2022 16:39	10.05	6/17/2022 15:27	1.10	6/17/2022 17:09	28.46
6/18/2022 16:53	83.94	6/17/2022 16:10	3.07	6/17/2022 16:40	10.05	6/17/2022 15:28	1.07	6/17/2022 17:10	28.81
6/18/2022 16:54	83.91	6/17/2022 16:11	2.53	6/17/2022 16:41	10.08	6/17/2022 15:29	1.07	6/17/2022 17:11	30.02
6/18/2022 16:55	83.90	6/17/2022 16:12	2.10	6/17/2022 16:42	10.08	6/17/2022 15:30	1.10	6/17/2022 17:12	29.07
6/18/2022 16:56	83.92	6/17/2022 16:13	1.71	6/17/2022 16:43	10.11	6/17/2022 15:31	1.09	6/17/2022 17:13	28.69
6/18/2022 16:57	83.93	6/17/2022 16:14	1.41	6/17/2022 16:44	10.08	6/17/2022 15:32	1.10	6/17/2022 17:14	28.60
6/18/2022 16:58	83.91	6/17/2022 16:15	1.17	6/17/2022 16:45	10.10	6/17/2022 15:33	1.09	6/17/2022 17:15	28.52
6/18/2022 16:59	83.88	6/17/2022 16:16	0.92	6/17/2022 16:46	10.14	6/17/2022 15:34	1.09	6/17/2022 17:16	28.51
6/18/2022 17:00	83.92	6/17/2022 16:17	0.72	6/17/2022 16:47	10.11	6/17/2022 15:35	1.09	6/17/2022 17:17	28.50
6/18/2022 17:01	83.93	6/17/2022 16:18	0.54	6/17/2022 16:48	10.14	6/17/2022 15:36	1.10	6/17/2022 17:18	28.49
6/18/2022 17:02	83.87	6/17/2022 16:19	3.53	6/17/2022 16:49	10.13	6/17/2022 15:37	1.04	6/17/2022 17:19	30.81
6/18/2022 17:03	83.87	6/17/2022 16:20	7.62	6/17/2022 16:50	10.12	6/17/2022 15:38	1.04	6/17/2022 17:20	29.56
6/18/2022 17:04	83.88	6/17/2022 16:21	6.30	6/17/2022 16:51	10.11	6/17/2022 15:39	1.03	6/17/2022 17:21	30.98
6/18/2022 17:05	83.88	6/17/2022 16:22	5.20	6/17/2022 16:52	10.09	6/17/2022 15:40	1.03	6/17/2022 17:22	29.60
6/18/2022 17:06	83.86	6/17/2022 16:23	4.31	6/17/2022 16:53	10.13	6/17/2022 15:41	1.01	6/17/2022 17:23	28.89
6/18/2022 17:07	83.87	6/17/2022 16:24	3.59	6/17/2022 16:54	10.13	6/17/2022 15:42	1.06	6/17/2022 17:24	28.63
6/18/2022 17:08	83.87	6/17/2022 16:25	2.88	6/17/2022 16:55	10.11	6/17/2022 15:43	1.09	6/17/2022 17:25	28.57
6/18/2022 17:09	83.88	6/17/2022 16:26	2.43	6/17/2022 16:56	10.10	6/17/2022 15:44	1.11	6/17/2022 17:26	28.56
6/18/2022 17:10	83.88	6/17/2022 16:27	2.00	6/17/2022 16:57	10.06	6/17/2022 15:45	1.10	6/17/2022 17:27	28.55
6/18/2022 17:11	83.88	6/17/2022 16:28	1.70	6/17/2022 16:58	10.09	6/17/2022 15:46	1.07	6/17/2022 17:28	28.53
6/18/2022 17:12	83.87	6/17/2022 16:29	1.38	6/17/2022 16:59	10.07	6/17/2022 15:47	1.09	6/17/2022 17:29	28.51
6/18/2022 17:13	83.84	6/17/2022 16:30	6.14	6/17/2022 17:00	10.08	6/17/2022 15:48	1.05	6/17/2022 17:30	28.52
6/18/2022 17:14	83.87	6/17/2022 16:31	8.79	6/17/2022 17:01	10.05	6/17/2022 15:49	1.03	6/17/2022 17:31	28.50
6/18/2022 17:15	83.85	6/17/2022 16:32	7.34	6/17/2022 17:02	10.05	6/17/2022 15:50	0.98	6/17/2022 17:32	28.45
6/18/2022 17:16	83.86	6/17/2022 16:33	6.07	6/17/2022 17:03	10.08	6/17/2022 15:51	1.03	6/17/2022 17:33	28.52
6/18/2022 17:17	83.85	6/17/2022 16:34	5.04	6/17/2022 17:04	10.07	6/17/2022 15:52	1.08	6/17/2022 17:34	28.50

6/18/2022 17:18	83.83	6/17/2022 16:35	4.23	6/17/2022 17:05	10.07	6/17/2022 15:53	1.08	6/17/2022 17:35	28.53
6/18/2022 17:19	83.83	6/17/2022 16:36	3.55	6/17/2022 17:06	10.09	6/17/2022 15:54	1.13	6/17/2022 17:36	28.51
6/18/2022 17:20	83.82	6/17/2022 16:37	2.91	6/17/2022 17:07	10.10	6/17/2022 15:55	1.14	6/17/2022 17:37	28.49
6/18/2022 17:21	83.87	6/17/2022 16:38	2.45	6/17/2022 17:08	10.09	6/17/2022 15:56	1.06	6/17/2022 17:38	28.50
6/18/2022 17:22	83.83	6/17/2022 16:39	2.06	6/17/2022 17:09	10.13	6/17/2022 15:57	1.09	6/17/2022 17:39	28.51
6/18/2022 17:23	83.84	6/17/2022 16:40	1.71	6/17/2022 17:10	10.10	6/17/2022 15:58	1.03	6/17/2022 17:40	28.50
6/18/2022 17:24	83.84	6/17/2022 16:41	1.38	6/17/2022 17:11	10.08	6/17/2022 15:59	1.02	6/17/2022 17:41	28.52
6/18/2022 17:25	83.81	6/17/2022 16:42	1.19	6/17/2022 17:12	10.11	6/17/2022 16:00	1.00	6/17/2022 17:42	28.52
6/18/2022 17:26	83.85	6/17/2022 16:43	0.91	6/17/2022 17:13	10.11	6/17/2022 16:01	1.06	6/17/2022 17:43	28.51
6/18/2022 17:27	83.81	6/17/2022 16:44	0.71	6/17/2022 17:14	10.11	6/17/2022 16:02	1.03	6/17/2022 17:44	30.38
6/18/2022 17:28	83.83	6/17/2022 16:45	0.53	6/17/2022 17:15	10.14	6/17/2022 16:03	1.09	6/17/2022 17:45	29.27
6/18/2022 17:29	83.83	6/17/2022 16:46	0.34	6/17/2022 17:16	10.13	6/17/2022 16:04	1.07	6/17/2022 17:46	28.77
6/18/2022 17:30	83.83	6/17/2022 16:47	0.26	6/17/2022 17:17	10.12	6/17/2022 16:05	1.10	6/17/2022 17:47	28.57
6/18/2022 17:31	83.83	6/17/2022 16:48	0.11	6/17/2022 17:18	10.07	6/17/2022 16:06	1.10	6/17/2022 17:48	28.54
6/18/2022 17:32	83.82	6/17/2022 16:49	0.03	6/17/2022 17:19	10.10	6/17/2022 16:07	1.10	6/17/2022 17:49	28.52
6/18/2022 17:33	83.82	6/17/2022 16:50	-0.01	6/17/2022 17:20	10.09	6/17/2022 16:08	1.13	6/17/2022 17:50	28.51
6/18/2022 17:34	83.80	6/17/2022 16:51	-0.02	6/17/2022 17:21	10.12	6/17/2022 16:09	1.04	6/17/2022 17:51	28.49
6/18/2022 17:35	83.81	6/17/2022 16:52	-0.10	6/17/2022 17:22	10.07	6/17/2022 16:10	1.09	6/17/2022 17:52	28.49
6/18/2022 17:36	83.78	6/17/2022 16:53	5.66	6/17/2022 17:23	10.07	6/17/2022 16:11	1.11	6/17/2022 17:53	28.53
6/18/2022 17:37	83.82	6/17/2022 16:54	6.76	6/17/2022 17:24	10.09	6/17/2022 16:12	1.14	6/17/2022 17:54	29.80
6/18/2022 17:38	83.80	6/17/2022 16:55	5.62	6/17/2022 17:25	10.06	6/17/2022 16:13	1.11	6/17/2022 17:55	29.77
6/18/2022 17:39	83.81	6/17/2022 16:56	4.68	6/17/2022 17:26	13.26	6/17/2022 16:14	1.13	6/17/2022 17:56	29.21
6/18/2022 17:40	83.81	6/17/2022 16:57	3.86	6/17/2022 17:27	14.36	6/17/2022 16:15	1.10	6/17/2022 17:57	30.35
6/18/2022 17:41	83.79	6/17/2022 16:58	3.19	6/17/2022 17:28	13.78	6/17/2022 16:16	1.09	6/17/2022 17:58	29.29
6/18/2022 17:42	83.77	6/17/2022 16:59	2.65	6/17/2022 17:29	13.34	6/17/2022 16:17	1.07	6/17/2022 17:59	28.79
6/18/2022 17:43	83.79	6/17/2022 17:00	2.19	6/17/2022 17:30	12.97	6/17/2022 16:18	1.05	6/17/2022 18:00	28.61
6/18/2022 17:44	83.78	6/17/2022 17:01	1.79	6/17/2022 17:31	12.62	6/17/2022 16:19	1.00	6/17/2022 18:01	28.55
6/18/2022 17:45	83.78	6/17/2022 17:02	1.50	6/17/2022 17:32	12.34	6/17/2022 16:20	1.01	6/17/2022 18:02	28.54
6/18/2022 17:46	83.79	6/17/2022 17:03	1.19	6/17/2022 17:33	12.10	6/17/2022 16:21	1.04	6/17/2022 18:03	28.54
6/18/2022 17:47	83.81	6/17/2022 17:04	0.99	6/17/2022 17:34	11.91	6/17/2022 16:22	1.06	6/17/2022 18:04	28.52
6/18/2022 17:48	83.79	6/17/2022 17:05	0.75	6/17/2022 17:35	11.65	6/17/2022 16:23	1.07	6/17/2022 18:05	28.52
6/18/2022 17:49	83.77	6/17/2022 17:06	0.55	6/17/2022 17:36	11.50	6/17/2022 16:24	1.10	6/17/2022 18:06	28.53
6/18/2022 17:50	83.78	6/17/2022 17:07	0.41	6/17/2022 17:37	11.35	6/17/2022 16:25	1.05	6/17/2022 18:07	28.50
6/18/2022 17:51	83.79	6/17/2022 17:08	0.30	6/17/2022 17:38	11.27	6/17/2022 16:26	1.06	6/17/2022 18:08	28.49
6/18/2022 17:52	83.76	6/17/2022 17:09	0.13	6/17/2022 17:39	11.16	6/17/2022 16:27	1.05	6/17/2022 18:09	28.45
6/18/2022 17:53	83.76	6/17/2022 17:10	0.04	6/17/2022 17:40	11.05	6/17/2022 16:28	1.05	6/17/2022 18:10	28.51
6/18/2022 17:54	83.78	6/17/2022 17:11	-0.04	6/17/2022 17:41	10.98	6/17/2022 16:29	1.04	6/17/2022 18:11	28.51
6/18/2022 17:55	83.78	6/17/2022 17:12	-0.05	6/17/2022 17:42	10.91	6/17/2022 16:30	1.02	6/17/2022 18:12	28.48
6/18/2022 17:56	83.76	6/17/2022 17:13	-0.04	6/17/2022 17:43	10.85	6/17/2022 16:31	1.03	6/17/2022 18:13	28.50
6/18/2022 17:57	83.76	6/17/2022 17:14	-0.07	6/17/2022 17:44	10.79	6/17/2022 16:32	1.01	6/17/2022 18:14	28.50
6/18/2022 17:58	83.77	6/17/2022 17:15	-0.05	6/17/2022 17:45	10.71	6/17/2022 16:33	1.02	6/17/2022 18:15	28.46
6/18/2022 17:59	83.73	6/17/2022 17:16	-0.06	6/17/2022 17:46	10.69	6/17/2022 16:34	1.06	6/17/2022 18:16	29.19
6/18/2022 18:00	83.74	6/17/2022 17:17	-0.06	6/17/2022 17:47	10.66	6/17/2022 16:35	1.08	6/17/2022 18:17	30.31
6/18/2022 18:01	83.73	6/17/2022 17:18	-0.08	6/17/2022 17:48	10.60	6/17/2022 16:36	1.08	6/17/2022 18:18	31.54
6/18/2022 18:02	83.76	6/17/2022 17:19	-0.07	6/17/2022 17:49	10.55	6/17/2022 16:37	1.08	6/17/2022 18:19	30.11
6/18/2022 18:03	83.76	6/17/2022 17:20	-0.07	6/17/2022 17:50	10.50	6/17/2022 16:38	1.09	6/17/2022 18:20	29.17
6/18/2022 18:04	83.74	6/17/2022 17:21	-0.08	6/17/2022 17:51	10.51	6/17/2022 16:39	1.08	6/17/2022 18:21	28.75
6/18/2022 18:05	83.75	6/17/2022 17:22	-0.07	6/17/2022 17:52	10.47	6/17/2022 16:40	1.08	6/17/2022 18:22	28.66
6/18/2022 18:06	83.73	6/17/2022 17:23	-0.05	6/17/2022 17:53	10.40	6/17/2022 16:41	1.05	6/17/2022 18:23	28.60
6/18/2022 18:07	83.75	6/17/2022 17:24	-0.05	6/17/2022 17:54	10.41	6/17/2022 16:42	1.10	6/17/2022 18:24	28.56
6/18/2022 18:08	83.75	6/17/2022 17:25	-0.04	6/17/2022 17:55	10.37	6/17/2022 16:43	1.04	6/17/2022 18:25	28.55
6/18/2022 18:09	83.73	6/17/2022 17:26	-0.05	6/17/2022 17:56	10.35	6/17/2022 16:44	1.05	6/17/2022 18:26	28.55
6/18/2022 18:10	83.72	6/17/2022 17:27	-0.02	6/17/2022 17:57	10.20	6/17/2022 16:45	1.01	6/17/2022 18:27	28.55
6/18/2022 18:11	83.72	6/17/2022 17:28	-0.08	6/17/2022 17:58	14.77	6/17/2022 16:46	0.99	6/17/2022 18:28	28.54
6/18/2022 18:12	83.72	6/17/2022 17:29	-0.07	6/17/2022 17:59	14.21	6/17/2022 16:47	0.97	6/17/2022 18:29	28.54
6/18/2022 18:13	83.70	6/17/2022 17:30	-0.04	6/17/2022 18:00	13.70	6/17/2022 16:48	1.04	6/17/2022 18:30	28.53
6/18/2022 18:14	83.73	6/17/2022 17:31	-0.05	6/17/2022 18:01	13.28	6/17/2022 16:49	1.06	6/17/2022 18:31	28.55
6/18/2022 18:15	83.70	6/17/2022 17:32	1.15	6/17/2022 18:02	12.90	6/17/2022 16:50	1.08	6/17/2022 18:32	28.53
6/18/2022 18:16	83.74	6/17/2022 17:33	6.82	6/17/2022 18:03	12.61	6/17/2022 16:51	1.13	6/17/2022 18:33	28.52
6/18/2022 18:17	83.73	6/17/2022 17:34	6.50	6/17/2022 18:04	12.35	6/17/2022 16:52	1.12	6/17/2022 18:34	28.50
6/18/2022 18:18	83.73	6/17/2022 17:35	5.34	6/17/2022 18:05	12.10	6/17/2022 16:53	1.13	6/17/2022 18:35	28.52
6/18/2022 18:19	83.70	6/17/2022 17:36	4.44	6/17/2022 18:06	11.90	6/17/2022 16:54	1.09	6/17/2022 18:36	28.52
6/18/2022 18:20	87.21	6/17/2022 17:37	3.65	6/17/2022 18:07	11.70	6/17/2022 16:55	1.08	6/17/2022 18:37	28.51
6/18/2022 18:21	90.26	6/17/2022 17:38	3.04	6/17/2022 18:08	11.55	6/17/2022 16:56	1.13	6/17/2022 18:38	28.48
6/18/2022 18:22	92.10	6/17/2022 17:39	2.47	6/17/2022 18:09	11.40	6/17/2022 16:57	1.13	6/17/2022 18:39	28.49
6/18/2022 18:23	91.01	6/17/2022 17:40	2.06	6/17/2022 18:10	11.24	6/17/2022 16:58	1.15	6/17/2022 18:40	28.50
6/18/2022 18:24	88.69	6/17/2022 17:41	1.71	6/17/2022 18:11	11.16	6/17/2022 16:59	1.13	6/17/2022 18:41	28.47
6/18/2022 18:25	87.21	6/17/2022 17:42	1.40	6/17/2022 18:12	11.06	6/17/2022 17:00	1.10	6/17/2022 18:42	30.09
6/18/2022 18:26	86.30	6/17/2022 17:43	1.13	6/17/2022 18:13	10.98	6/17/2022 17:01	1.06	6/17/2022 18:43	29.74
6/18/2022 18:27	85.72	6/17/2022 17:44	0.88	6/17/2022 18:14	10.95	6/17/2022 17:02	1.07	6/17/2022 18:44	28.97
6/18/2022 18:28	85.33	6/17/2022 17:45	0.72	6/17/2022 18:15	10.86	6/17/2022 17:03	1.02	6/17/2022 18:45	28.66
6/18/2022 18:29	85.10	6/17/2022 17:46	0.52	6/17/2022 18:16	10.85	6/17/2022 17:04	1.03	6/17/2022 18:46	28.55
6/18/2022 18:30	84.90	6/17/2022 17:47	0.44	6/17/2022 18:17	10.82	6/17/2022 17:05	1.00	6/17/2022 18:47	28.54
6/18/2022 18:31	84.77	6/17/2022 17:48	0.45	6/17/2022 18:18	10.73	6/17/2022 17:06	0.99	6/17/2022 18:48	28.52
6/18/2022 18:32	84.67	6/17/2022 17:49	0.35	6/17/2022 18:19	10.70	6/17/2022 17:07	1.05	6/17/2022 18:49	28.52
6/18/2022 18:33	84.60	6/17/2022 17:50	0.28	6/17/2022 18:20	10.65	6/17/2022 17:08	1.05	6/17/2022 18:50	28.53
6/18/2022 18:34	84.56	6/17/2022 17:51	0.19	6/17/2022 18:21	10.56	6/17/2022 17:09	1.07	6/17/2022 18:51	28.58
6/18/2022 18:35	84.48	6/17/2022 17:52	0.14	6/17/2022 18:22	10.56	6/17/2022 17:10	1.15	6/17/2022 18:52	28.58
6/18/2022 18:36	84.41	6/17/2022 17:53	0.14	6/17/2022 18:23	10.52	6/17/2022 17:11	1.10	6/17/2022 18:53	28.56
6/18/2022 18:37	84.41	6/17/2022 17:54	0.17	6/17/2022 18:24	10.51	6/17/2022 17:12	1.13	6/17/2022 18:54	28.59
6/18/2022 18:38	84.37	6/17/2022 17:55	0.12	6/17/2022 18:25	10.47	6/17/2022 17:13	1.15	6/17/2022 18:55	28.54
6/18/2022 18:39	84.33	6/17/2022 17:56	0.03	6/17/2022 18:26	10.43	6/17/2022 17:14	1.13	6/17/2022 18:56	28.54
6/18/2022 18:40	84.31	6/17/2022 17:57	-0.02	6/17/2022 18:27	10.38	6/17/2022 17:15	1.06	6/17/2022 18:57	28.52
6/18/2022 18:41	84.31	6/17/2022 17:58	-0.04	6/17/2022 18:28	10.40	6/17/2022 17:16	1.04	6/17/2022 18:58	28.52
6/18/2022 18:42	84.28	6/17/2022 17:59	-0.04	6/17/2022 18:29	10.44	6/17/2022 17:17	1.03	6/17/2022 18:59	28.54
6/18/2022 18:43	84.25	6/17/2022 18:00	-0.05	6/17/2022 18:30	10.40	6/17/2022 17:18	1.02	6/17/2022 19:00	28.54
6/18/2022 18:44	84.21	6/17/2022 18:01	-0.06	6/17/2022 18:31	10.37	6/17/2022 17:19	1.06	6/17/2022 19:01	28.50
6/18/2022 18:45	84.23	6/17/2022 18:02	-0.02	6/17/2022 18:32	10.36	6/17/2022 17:20	1.08	6/17/2022 19:02	28.52

6/18/2022 18:46	84.21	6/17/2022 18:03	0.01	6/17/2022 18:33	10.36	6/17/2022 17:21	1.09	6/17/2022 19:03	28.50
6/18/2022 18:47	84.17	6/17/2022 18:04	-0.02	6/17/2022 18:34	10.40	6/17/2022 17:22	1.16	6/17/2022 19:04	28.52
6/18/2022 18:48	84.16	6/17/2022 18:05	-0.06	6/17/2022 18:35	10.36	6/17/2022 17:23	1.13	6/17/2022 19:05	28.52
6/18/2022 18:49	84.14	6/17/2022 18:06	-0.05	6/17/2022 18:36	10.33	6/17/2022 17:24	1.11	6/17/2022 19:06	28.51
6/18/2022 18:50	84.15	6/17/2022 18:07	-0.06	6/17/2022 18:37	10.34	6/17/2022 17:25	1.06	6/17/2022 19:07	28.52
6/18/2022 18:51	84.13	6/17/2022 18:08	-0.06	6/17/2022 18:38	10.33	6/17/2022 17:26	1.07	6/17/2022 19:08	28.49
6/18/2022 18:52	84.12	6/17/2022 18:09	-0.06	6/17/2022 18:39	10.30	6/17/2022 17:27	1.06	6/17/2022 19:09	28.47
6/18/2022 18:53	84.12	6/17/2022 18:10	-0.02	6/17/2022 18:40	10.29	6/17/2022 17:28	1.01	6/17/2022 19:10	28.51
6/18/2022 18:54	84.08	6/17/2022 18:11	-0.04	6/17/2022 18:41	10.31	6/17/2022 17:29	1.02	6/17/2022 19:11	28.49
6/18/2022 18:55	84.06	6/17/2022 18:12	-0.05	6/17/2022 18:42	10.31	6/17/2022 17:30	1.05	6/17/2022 19:12	28.51
6/18/2022 18:56	84.05	6/17/2022 18:13	-0.07	6/17/2022 18:43	10.28	6/17/2022 17:31	1.08	6/17/2022 19:13	28.49
6/18/2022 18:57	84.06	6/17/2022 18:14	-0.08	6/17/2022 18:44	11.20	6/17/2022 17:32	1.10	6/17/2022 19:14	28.49
6/18/2022 18:58	84.09	6/17/2022 18:15	-0.05	6/17/2022 18:45	15.16	6/17/2022 17:33	1.12	6/17/2022 19:15	28.49
6/18/2022 18:59	84.07	6/17/2022 18:16	-0.08	6/17/2022 18:46	14.52	6/17/2022 17:34	1.11	6/17/2022 19:16	28.47
6/18/2022 19:00	84.05	6/17/2022 18:17	-0.07	6/17/2022 18:47	14.01	6/17/2022 17:35	1.15	6/17/2022 19:17	28.47
6/18/2022 19:01	84.02	6/17/2022 18:18	-0.08	6/17/2022 18:48	13.59	6/17/2022 17:36	1.14	6/17/2022 19:18	28.47
6/18/2022 19:02	84.03	6/17/2022 18:19	-0.03	6/17/2022 18:49	13.22	6/17/2022 17:37	1.14	6/17/2022 19:19	28.50
6/18/2022 19:03	84.01	6/17/2022 18:20	-0.06	6/17/2022 18:50	12.93	6/17/2022 17:38	1.11	6/17/2022 19:20	28.49
6/18/2022 19:04	83.98	6/17/2022 18:21	-0.07	6/17/2022 18:51	12.64	6/17/2022 17:39	1.12	6/17/2022 19:21	28.43
6/18/2022 19:05	84.00	6/17/2022 18:22	-0.09	6/17/2022 18:52	12.38	6/17/2022 17:40	1.14	6/17/2022 19:22	28.44
6/18/2022 19:06	84.01	6/17/2022 18:23	-0.07	6/17/2022 18:53	12.16	6/17/2022 17:41	1.15	6/17/2022 19:23	28.49
6/18/2022 19:07	83.97	6/17/2022 18:24	-0.08	6/17/2022 18:54	11.98	6/17/2022 17:42	1.12	6/17/2022 19:24	28.47
6/18/2022 19:08	83.99	6/17/2022 18:25	-0.07	6/17/2022 18:55	11.80	6/17/2022 17:43	1.10	6/17/2022 19:25	28.51
6/18/2022 19:09	83.99	6/17/2022 18:26	-0.02	6/17/2022 18:56	11.66	6/17/2022 17:44	1.08	6/17/2022 19:26	28.45
6/18/2022 19:10	83.98	6/17/2022 18:27	-0.06	6/17/2022 18:57	11.50	6/17/2022 17:45	1.07	6/17/2022 19:27	28.47
6/18/2022 19:11	83.99	6/17/2022 18:28	3.42	6/17/2022 18:58	11.37	6/17/2022 17:46	2.74	6/17/2022 19:28	28.49
6/18/2022 19:12	83.96	6/17/2022 18:29	7.32	6/17/2022 18:59	11.29	6/17/2022 17:47	9.31	6/17/2022 19:29	28.43
6/18/2022 19:13	83.96	6/17/2022 18:30	6.00	6/17/2022 19:00	11.18	6/17/2022 17:48	7.49	6/17/2022 19:30	28.45
6/18/2022 19:14	83.96	6/17/2022 18:31	4.99	6/17/2022 19:01	11.10	6/17/2022 17:49	4.51	6/17/2022 19:31	28.48
6/18/2022 19:15	83.96	6/17/2022 18:32	4.16	6/17/2022 19:02	11.02	6/17/2022 17:50	2.30	6/17/2022 19:32	28.48
6/18/2022 19:16	83.98	6/17/2022 18:33	3.43	6/17/2022 19:03	10.95	6/17/2022 17:51	1.03	6/17/2022 19:33	28.48
6/18/2022 19:17	83.98	6/17/2022 18:34	2.90	6/17/2022 19:04	10.91	6/17/2022 17:52	5.64	6/17/2022 19:34	28.48
6/18/2022 19:18	83.95	6/17/2022 18:35	2.47	6/17/2022 19:05	10.80	6/17/2022 17:53	9.90	6/17/2022 19:35	28.43
6/18/2022 19:19	83.97	6/17/2022 18:36	2.15	6/17/2022 19:06	10.74	6/17/2022 17:54	6.36	6/17/2022 19:36	28.48
6/18/2022 19:20	83.93	6/17/2022 18:37	1.76	6/17/2022 19:07	10.68	6/17/2022 17:55	3.70	6/17/2022 19:37	28.45
6/18/2022 19:21	83.91	6/17/2022 18:38	1.43	6/17/2022 19:08	10.62	6/17/2022 17:56	1.78	6/17/2022 19:38	28.42
6/18/2022 19:22	83.91	6/17/2022 18:39	1.15	6/17/2022 19:09	10.63	6/17/2022 17:57	1.12	6/17/2022 19:39	28.44
6/18/2022 19:23	83.94	6/17/2022 18:40	0.91	6/17/2022 19:10	10.58	6/17/2022 17:58	1.11	6/17/2022 19:40	28.45
6/18/2022 19:24	83.91	6/17/2022 18:41	0.76	6/17/2022 19:11	10.53	6/17/2022 17:59	1.09	6/17/2022 19:41	28.47
6/18/2022 19:25	83.97	6/17/2022 18:42	0.53	6/17/2022 19:12	10.51	6/17/2022 18:00	1.12	6/17/2022 19:42	28.46
6/18/2022 19:26	83.93	6/17/2022 18:43	0.39	6/17/2022 19:13	10.46	6/17/2022 18:01	3.16	6/17/2022 19:43	28.44
6/18/2022 19:27	83.92	6/17/2022 18:44	0.29	6/17/2022 19:14	10.39	6/17/2022 18:02	9.52	6/17/2022 19:44	28.44
6/18/2022 19:28	83.94	6/17/2022 18:45	0.09	6/17/2022 19:15	10.45	6/17/2022 18:03	6.08	6/17/2022 19:45	28.43
6/18/2022 19:29	83.89	6/17/2022 18:46	0.04	6/17/2022 19:16	10.39	6/17/2022 18:04	3.36	6/17/2022 19:46	28.44
6/18/2022 19:30	83.91	6/17/2022 18:47	-0.03	6/17/2022 19:17	10.36	6/17/2022 18:05	1.51	6/17/2022 19:47	28.46
6/18/2022 19:31	83.92	6/17/2022 18:48	-0.09	6/17/2022 19:18	10.36	6/17/2022 18:06	1.04	6/17/2022 19:48	28.43
6/18/2022 19:32	83.86	6/17/2022 18:49	-0.03	6/17/2022 19:19	10.38	6/17/2022 18:07	1.02	6/17/2022 19:49	28.45
6/18/2022 19:33	83.92	6/17/2022 18:50	-0.03	6/17/2022 19:20	10.36	6/17/2022 18:08	1.04	6/17/2022 19:50	28.43
6/18/2022 19:34	83.89	6/17/2022 18:51	0.00	6/17/2022 19:21	10.37	6/17/2022 18:09	1.01	6/17/2022 19:51	28.47
6/18/2022 19:35	83.87	6/17/2022 18:52	-0.08	6/17/2022 19:22	10.31	6/17/2022 18:10	1.02	6/17/2022 19:52	28.42
6/18/2022 19:36	83.86	6/17/2022 18:53	-0.04	6/17/2022 19:23	13.59	6/17/2022 18:11	1.03	6/17/2022 19:53	28.47
6/18/2022 19:37	83.86	6/17/2022 18:54	-0.03	6/17/2022 19:24	13.97	6/17/2022 18:12	1.02	6/17/2022 19:54	28.42
6/18/2022 19:38	83.85	6/17/2022 18:55	-0.08	6/17/2022 19:25	13.49	6/17/2022 18:13	1.02	6/17/2022 19:55	28.48
6/18/2022 19:39	83.86	6/17/2022 18:56	-0.05	6/17/2022 19:26	13.10	6/17/2022 18:14	1.05	6/17/2022 19:56	28.44
6/18/2022 19:40	83.88	6/17/2022 18:57	-0.07	6/17/2022 19:27	12.79	6/17/2022 18:15	1.08	6/17/2022 19:57	28.41
6/18/2022 19:41	83.88	6/17/2022 18:58	-0.08	6/17/2022 19:28	12.49	6/17/2022 18:16	1.10	6/17/2022 19:58	28.42
6/18/2022 19:42	83.87	6/17/2022 18:59	-0.02	6/17/2022 19:29	12.24	6/17/2022 18:17	1.12	6/17/2022 19:59	28.42
6/18/2022 19:43	83.84	6/17/2022 19:00	-0.06	6/17/2022 19:30	12.02	6/17/2022 18:18	1.12	6/17/2022 20:00	28.45
6/18/2022 19:44	83.86	6/17/2022 19:01	-0.08	6/17/2022 19:31	11.84	6/17/2022 18:19	1.10	6/17/2022 20:01	28.44
6/18/2022 19:45	83.86	6/17/2022 19:02	-0.04	6/17/2022 19:32	11.65	6/17/2022 18:20	1.05	6/17/2022 20:02	28.40
6/18/2022 19:46	83.84	6/17/2022 19:03	-0.09	6/17/2022 19:33	11.50	6/17/2022 18:21	1.00	6/17/2022 20:03	28.43
6/18/2022 19:47	83.84	6/17/2022 19:04	-0.09	6/17/2022 19:34	11.35	6/17/2022 18:22	1.00	6/17/2022 20:04	28.44
6/18/2022 19:48	83.85	6/17/2022 19:05	-0.06	6/17/2022 19:35	11.25	6/17/2022 18:23	1.00	6/17/2022 20:05	28.41
6/18/2022 19:49	83.85	6/17/2022 19:06	-0.09	6/17/2022 19:36	11.15	6/17/2022 18:24	1.02	6/17/2022 20:06	28.43
6/18/2022 19:50	83.83	6/17/2022 19:07	-0.05	6/17/2022 19:37	11.07	6/17/2022 18:25	0.99	6/17/2022 20:07	28.42
6/18/2022 19:51	83.85	6/17/2022 19:08	-0.06	6/17/2022 19:38	11.00	6/17/2022 18:26	1.11	6/17/2022 20:08	28.43
6/18/2022 19:52	83.83	6/17/2022 19:09	-0.04	6/17/2022 19:39	10.86	6/17/2022 18:27	1.06	6/17/2022 20:09	28.43
6/18/2022 19:53	83.81	6/17/2022 19:10	-0.05	6/17/2022 19:40	10.82	6/17/2022 18:28	1.11	6/17/2022 20:10	28.41
6/18/2022 19:54	83.81	6/17/2022 19:11	-0.06	6/17/2022 19:41	10.72	6/17/2022 18:29	1.09	6/17/2022 20:11	28.41
6/18/2022 19:55	83.79	6/17/2022 19:12	-0.08	6/17/2022 19:42	10.68	6/17/2022 18:30	1.10	6/17/2022 20:12	28.45
6/18/2022 19:56	83.87	6/17/2022 19:13	-0.08	6/17/2022 19:43	10.63	6/17/2022 18:31	1.10	6/17/2022 20:13	28.41
6/18/2022 19:57	83.80	6/17/2022 19:14	-0.07	6/17/2022 19:44	10.64	6/17/2022 18:32	1.12	6/17/2022 20:14	28.44
6/18/2022 19:58	83.83	6/17/2022 19:15	-0.10	6/17/2022 19:45	10.62	6/17/2022 18:33	4.25	6/17/2022 20:15	28.39
6/18/2022 19:59	83.83	6/17/2022 19:16	-0.03	6/17/2022 19:46	10.57	6/17/2022 18:34	7.25	6/17/2022 20:16	28.41
6/18/2022 20:00	83.82	6/17/2022 19:17	-0.08	6/17/2022 19:47	10.55	6/17/2022 18:35	4.32	6/17/2022 20:17	28.41
6/18/2022 20:01	83.80	6/17/2022 19:18	-0.05	6/17/2022 19:48	10.55	6/17/2022 18:36	2.17	6/17/2022 20:18	28.45
6/18/2022 20:02	83.83	6/17/2022 19:19	-0.06	6/17/2022 19:49	10.51	6/17/2022 18:37	1.01	6/17/2022 20:19	28.40
6/18/2022 20:03	83.80	6/17/2022 19:20	2.07	6/17/2022 19:50	10.51	6/17/2022 18:38	1.03	6/17/2022 20:20	28.43
6/18/2022 20:04	83.82	6/17/2022 19:21	7.53	6/17/2022 19:51	10.49	6/17/2022 18:39	1.02	6/17/2022 20:21	28.40
6/18/2022 20:05	83.83	6/17/2022 19:22	6.25	6/17/2022 19:52	10.51	6/17/2022 18:40	1.01	6/17/2022 20:22	28.42
6/18/2022 20:06	83.79	6/17/2022 19:23	5.22	6/17/2022 19:53	10.52	6/17/2022 18:41	1.04	6/17/2022 20:23	28.41
6/18/2022 20:07	83.83	6/17/2022 19:24	4.32	6/17/2022 19:54	10.50	6/17/2022 18:42	1.01	6/17/2022 20:24	28.43
6/18/2022 20:08	83.83	6/17/2022 19:25	3.57	6/17/2022 19:55	10.49	6/17/2022 18:43	1.07	6/17/2022 20:25	28.42
6/18/2022 20:09	83.81	6/17/2022 19:26	2.91	6/17/2022 19:56	10.53	6/17/2022 18:44	1.08	6/17/2022 20:26	28.43
6/18/2022 20:10	83.76	6/17/2022 19:27	2.43	6/17/2022 19:57	10.50	6/17/2022 18:45	1.09	6/17/2022 20:27	28.42
6/18/2022 20:11	83.78	6/17/2022 19:28	1.99	6/17/2022 19:58	10.52	6/17/2022 18:46	1.10	6/17/2022 20:28	28.42
6/18/2022 20:12	83.81	6/17/2022 19:29	1.65	6/17/2022 19:59	10.51	6/17/2022 18:47	1.13	6/17/2022 20:29	28.43
6/18/2022 20:13	83.76	6/17/2022 19:30	1.34	6/17/2022 20:00	10.47	6/17/2022 18:48	1.08	6/17/2022 20:30	28.41

6/18/2022 20:14	83.80	6/17/2022 19:31	1.07	6/17/2022 20:01	10.47	6/17/2022 18:49	1.08	6/17/2022 20:31	28.41
6/18/2022 20:15	83.80	6/17/2022 19:32	0.85	6/17/2022 20:02	10.43	6/17/2022 18:50	1.03	6/17/2022 20:32	28.41
6/18/2022 20:16	83.80	6/17/2022 19:33	0.64	6/17/2022 20:03	10.44	6/17/2022 18:51	1.02	6/17/2022 20:33	28.42
6/18/2022 20:17	83.79	6/17/2022 19:34	0.47	6/17/2022 20:04	10.42	6/17/2022 18:52	1.02	6/17/2022 20:34	28.42
6/18/2022 20:18	83.78	6/17/2022 19:35	0.33	6/17/2022 20:05	10.41	6/17/2022 18:53	0.98	6/17/2022 20:35	28.42
6/18/2022 20:19	83.78	6/17/2022 19:36	0.21	6/17/2022 20:06	10.39	6/17/2022 18:54	0.99	6/17/2022 20:36	28.42
6/18/2022 20:20	83.78	6/17/2022 19:37	0.06	6/17/2022 20:07	10.36	6/17/2022 18:55	1.01	6/17/2022 20:37	28.42
6/18/2022 20:21	83.80	6/17/2022 19:38	-0.04	6/17/2022 20:08	10.37	6/17/2022 18:56	1.01	6/17/2022 20:38	28.42
6/18/2022 20:22	83.81	6/17/2022 19:39	-0.08	6/17/2022 20:09	10.33	6/17/2022 18:57	1.10	6/17/2022 20:39	28.42
6/18/2022 20:23	83.76	6/17/2022 19:40	-0.08	6/17/2022 20:10	10.33	6/17/2022 18:58	1.12	6/17/2022 20:40	28.43
6/18/2022 20:24	83.73	6/17/2022 19:41	-0.10	6/17/2022 20:11	10.32	6/17/2022 18:59	1.12	6/17/2022 20:41	28.40
6/18/2022 20:25	83.76	6/17/2022 19:42	-0.03	6/17/2022 20:12	10.30	6/17/2022 19:00	1.09	6/17/2022 20:42	28.44
6/18/2022 20:26	83.79	6/17/2022 19:43	-0.04	6/17/2022 20:13	10.34	6/17/2022 19:01	1.05	6/17/2022 20:43	28.40
6/18/2022 20:27	83.80	6/17/2022 19:44	-0.03	6/17/2022 20:14	10.28	6/17/2022 19:02	1.02	6/17/2022 20:44	28.40
6/18/2022 20:28	83.79	6/17/2022 19:45	-0.11	6/17/2022 20:15	10.24	6/17/2022 19:03	0.99	6/17/2022 20:45	28.40
6/18/2022 20:29	83.77	6/17/2022 19:46	-0.02	6/17/2022 20:16	10.25	6/17/2022 19:04	1.01	6/17/2022 20:46	28.39
6/18/2022 20:30	83.76	6/17/2022 19:47	-0.05	6/17/2022 20:17	10.29	6/17/2022 19:05	1.00	6/17/2022 20:47	28.35
6/18/2022 20:31	83.78	6/17/2022 19:48	-0.11	6/17/2022 20:18	10.30	6/17/2022 19:06	1.01	6/17/2022 20:48	28.41
6/18/2022 20:32	83.74	6/17/2022 19:49	-0.09	6/17/2022 20:19	10.30	6/17/2022 19:07	1.06	6/17/2022 20:49	28.43
6/18/2022 20:33	83.78	6/17/2022 19:50	-0.07	6/17/2022 20:20	10.32	6/17/2022 19:08	1.11	6/17/2022 20:50	28.38
6/18/2022 20:34	83.75	6/17/2022 19:51	-0.06	6/17/2022 20:21	10.33	6/17/2022 19:09	1.12	6/17/2022 20:51	28.37
6/18/2022 20:35	83.74	6/17/2022 19:52	-0.11	6/17/2022 20:22	10.34	6/17/2022 19:10	1.13	6/17/2022 20:52	28.39
6/18/2022 20:36	83.73	6/17/2022 19:53	-0.04	6/17/2022 20:23	10.34	6/17/2022 19:11	1.10	6/17/2022 20:53	28.43
6/18/2022 20:37	83.77	6/17/2022 19:54	-0.02	6/17/2022 20:24	10.30	6/17/2022 19:12	1.05	6/17/2022 20:54	28.42
6/18/2022 20:38	83.75	6/17/2022 19:55	-0.10	6/17/2022 20:25	10.30	6/17/2022 19:13	1.01	6/17/2022 20:55	28.42
6/18/2022 20:39	83.77	6/17/2022 19:56	-0.04	6/17/2022 20:26	10.31	6/17/2022 19:14	1.01	6/17/2022 20:56	28.40
6/18/2022 20:40	83.73	6/17/2022 19:57	-0.09	6/17/2022 20:27	10.29	6/17/2022 19:15	1.02	6/17/2022 20:57	28.42
6/18/2022 20:41	83.76	6/17/2022 19:58	-0.07	6/17/2022 20:28	10.29	6/17/2022 19:16	0.97	6/17/2022 20:58	28.41
6/18/2022 20:42	83.77	6/17/2022 19:59	-0.04	6/17/2022 20:29	10.26	6/17/2022 19:17	1.01	6/17/2022 20:59	28.39
6/18/2022 20:43	83.75	6/17/2022 20:00	-0.01	6/17/2022 20:30	10.27	6/17/2022 19:18	1.05	6/17/2022 21:00	28.39
6/18/2022 20:44	83.73	6/17/2022 20:01	-0.11	6/17/2022 20:31	13.15	6/17/2022 19:19	1.07	6/17/2022 21:01	28.40
6/18/2022 20:45	83.74	6/17/2022 20:02	-0.07	6/17/2022 20:32	17.27	6/17/2022 19:20	1.08	6/17/2022 21:02	28.41
6/18/2022 20:46	83.73	6/17/2022 20:03	-0.10	6/17/2022 20:33	16.93	6/17/2022 19:21	1.07	6/17/2022 21:03	28.38
6/18/2022 20:47	83.68	6/17/2022 20:04	-0.03	6/17/2022 20:34	16.38	6/17/2022 19:22	1.10	6/17/2022 21:04	28.41
6/18/2022 20:48	83.74	6/17/2022 20:05	-0.08	6/17/2022 20:35	20.35	6/17/2022 19:23	1.11	6/17/2022 21:05	28.42
6/18/2022 20:49	83.74	6/17/2022 20:06	-0.06	6/17/2022 20:36	22.51	6/17/2022 19:24	1.10	6/17/2022 21:06	28.41
6/18/2022 20:50	83.73	6/17/2022 20:07	-0.07	6/17/2022 20:37	21.20	6/17/2022 19:25	1.11	6/17/2022 21:07	28.43
6/18/2022 20:51	83.76	6/17/2022 20:08	-0.07	6/17/2022 20:38	22.03	6/17/2022 19:26	1.10	6/17/2022 21:08	28.40
6/18/2022 20:52	83.74	6/17/2022 20:09	-0.08	6/17/2022 20:39	25.38	6/17/2022 19:27	1.06	6/17/2022 21:09	28.41
6/18/2022 20:53	83.71	6/17/2022 20:10	-0.05	6/17/2022 20:40	25.41	6/17/2022 19:28	1.06	6/17/2022 21:10	28.43
6/18/2022 20:54	83.74	6/17/2022 20:11	-0.11	6/17/2022 20:41	23.89	6/17/2022 19:29	1.04	6/17/2022 21:11	28.38
6/18/2022 20:55	83.73	6/17/2022 20:12	-0.06	6/17/2022 20:42	26.14	6/17/2022 19:30	1.07	6/17/2022 21:12	28.39
6/18/2022 20:56	83.75	6/17/2022 20:13	-0.07	6/17/2022 20:43	25.01	6/17/2022 19:31	1.05	6/17/2022 21:13	28.42
6/18/2022 20:57	83.77	6/17/2022 20:14	-0.11	6/17/2022 20:44	23.54	6/17/2022 19:32	0.96	6/17/2022 21:14	28.42
6/18/2022 20:58	83.75	6/17/2022 20:15	-0.05	6/17/2022 20:45	22.34	6/17/2022 19:33	0.99	6/17/2022 21:15	28.35
6/18/2022 20:59	83.70	6/17/2022 20:16	-0.07	6/17/2022 20:46	21.23	6/17/2022 19:34	0.96	6/17/2022 21:16	28.42
6/18/2022 21:00	83.77	6/17/2022 20:17	-0.10	6/17/2022 20:47	20.22	6/17/2022 19:35	1.02	6/17/2022 21:17	28.40
6/18/2022 21:01	83.72	6/17/2022 20:18	-0.04	6/17/2022 20:48	19.33	6/17/2022 19:36	1.02	6/17/2022 21:18	28.41
6/18/2022 21:02	83.73	6/17/2022 20:19	-0.08	6/17/2022 20:49	18.43	6/17/2022 19:37	1.05	6/17/2022 21:19	28.40
6/18/2022 21:03	83.69	6/17/2022 20:20	-0.09	6/17/2022 20:50	17.76	6/17/2022 19:38	1.09	6/17/2022 21:20	28.39
6/18/2022 21:04	83.78	6/17/2022 20:21	4.33	6/17/2022 20:51	17.10	6/17/2022 19:39	1.06	6/17/2022 21:21	28.43
6/18/2022 21:05	83.73	6/17/2022 20:22	7.14	6/17/2022 20:52	16.50	6/17/2022 19:40	1.10	6/17/2022 21:22	28.40
6/18/2022 21:06	83.70	6/17/2022 20:23	5.86	6/17/2022 20:53	15.93	6/17/2022 19:41	1.06	6/17/2022 21:23	28.39
6/18/2022 21:07	83.72	6/17/2022 20:24	4.83	6/17/2022 20:54	15.45	6/17/2022 19:42	1.02	6/17/2022 21:24	28.38
6/18/2022 21:08	83.70	6/17/2022 20:25	4.07	6/17/2022 20:55	15.02	6/17/2022 19:43	1.03	6/17/2022 21:25	28.39
6/18/2022 21:09	83.72	6/17/2022 20:26	3.34	6/17/2022 20:56	14.63	6/17/2022 19:44	0.96	6/17/2022 21:26	28.38
6/18/2022 21:10	83.72	6/17/2022 20:27	2.72	6/17/2022 20:57	14.25	6/17/2022 19:45	1.02	6/17/2022 21:27	28.39
6/18/2022 21:11	83.73	6/17/2022 20:28	2.30	6/17/2022 20:58	13.96	6/17/2022 19:46	1.00	6/17/2022 21:28	28.42
6/18/2022 21:12	83.74	6/17/2022 20:29	1.89	6/17/2022 20:59	13.69	6/17/2022 19:47	1.01	6/17/2022 21:29	28.38
6/18/2022 21:13	83.73	6/17/2022 20:30	1.55	6/17/2022 21:00	13.42	6/17/2022 19:48	1.03	6/17/2022 21:30	28.40
6/18/2022 21:14	83.69	6/17/2022 20:31	1.23	6/17/2022 21:01	13.19	6/17/2022 19:49	1.02	6/17/2022 21:31	28.39
6/18/2022 21:15	83.72	6/17/2022 20:32	1.03	6/17/2022 21:02	12.98	6/17/2022 19:50	1.06	6/17/2022 21:32	28.40
6/18/2022 21:16	83.72	6/17/2022 20:33	0.77	6/17/2022 21:03	12.82	6/17/2022 19:51	1.04	6/17/2022 21:33	28.40
6/18/2022 21:17	83.72	6/17/2022 20:34	0.59	6/17/2022 21:04	12.63	6/17/2022 19:52	1.07	6/17/2022 21:34	28.35
6/18/2022 21:18	83.75	6/17/2022 20:35	0.40	6/17/2022 21:05	12.49	6/17/2022 19:53	1.11	6/17/2022 21:35	28.39
6/18/2022 21:19	83.73	6/17/2022 20:36	0.30	6/17/2022 21:06	12.36	6/17/2022 19:54	1.04	6/17/2022 21:36	28.39
6/18/2022 21:20	83.72	6/17/2022 20:37	0.13	6/17/2022 21:07	12.22	6/17/2022 19:55	1.13	6/17/2022 21:37	28.39
6/18/2022 21:21	83.68	6/17/2022 20:38	0.03	6/17/2022 21:08	12.11	6/17/2022 19:56	1.10	6/17/2022 21:38	28.37
6/18/2022 21:22	83.69	6/17/2022 20:39	-0.03	6/17/2022 21:09	11.95	6/17/2022 19:57	1.08	6/17/2022 21:39	28.39
6/18/2022 21:23	83.69	6/17/2022 20:40	-0.04	6/17/2022 21:10	11.83	6/17/2022 19:58	1.03	6/17/2022 21:40	28.37
6/18/2022 21:24	83.71	6/17/2022 20:41	-0.07	6/17/2022 21:11	11.81	6/17/2022 19:59	1.02	6/17/2022 21:41	28.39
6/18/2022 21:25	83.71	6/17/2022 20:42	-0.04	6/17/2022 21:12	11.69	6/17/2022 20:00	1.01	6/17/2022 21:42	28.40
6/18/2022 21:26	83.69	6/17/2022 20:43	-0.11	6/17/2022 21:13	11.63	6/17/2022 20:01	0.97	6/17/2022 21:43	28.40
6/18/2022 21:27	83.70	6/17/2022 20:44	-0.03	6/17/2022 21:14	11.56	6/17/2022 20:02	0.98	6/17/2022 21:44	28.39
6/18/2022 21:28	83.70	6/17/2022 20:45	-0.07	6/17/2022 21:15	11.48	6/17/2022 20:03	1.00	6/17/2022 21:45	28.39
6/18/2022 21:29	83.73	6/17/2022 20:46	-0.06	6/17/2022 21:16	11.42	6/17/2022 20:04	1.01	6/17/2022 21:46	28.40
6/18/2022 21:30	83.68	6/17/2022 20:47	-0.08	6/17/2022 21:17	11.35	6/17/2022 20:05	1.04	6/17/2022 21:47	28.39
6/18/2022 21:31	83.71	6/17/2022 20:48	-0.06	6/17/2022 21:18	11.30	6/17/2022 20:06	1.06	6/17/2022 21:48	28.40
6/18/2022 21:32	83.71	6/17/2022 20:49	-0.01	6/17/2022 21:19	11.21	6/17/2022 20:07	1.11	6/17/2022 21:49	28.38
6/18/2022 21:33	83.65	6/17/2022 20:50	-0.10	6/17/2022 21:20	11.18	6/17/2022 20:08	1.10	6/17/2022 21:50	28.36
6/18/2022 21:34	83.71	6/17/2022 20:51	-0.06	6/17/2022 21:21	11.14	6/17/2022 20:09	1.07	6/17/2022 21:51	28.32
6/18/2022 21:35	83.71	6/17/2022 20:52	-0.05	6/17/2022 21:22	11.06	6/17/2022 20:10	1.04	6/17/2022 21:52	28.39
6/18/2022 21:36	83.71	6/17/2022 20:53	-0.05	6/17/2022 21:23	11.01	6/17/2022 20:11	1.01	6/17/2022 21:53	28.39
6/18/2022 21:37	83.70	6/17/2022 20:54	-0.06	6/17/2022 21:24	10.98	6/17/2022 20:12	1.01	6/17/2022 21:54	28.40
6/18/2022 21:38	83.71	6/17/2022 20:55	-0.04	6/17/2022 21:25	10.93	6/17/2022 20:13	0.99	6/17/2022 21:55	28.41
6/18/2022 21:39	83.66	6/17/2022 20:56	-0.05	6/17/2022 21:26	10.91	6/17/2022 20:14	0.97	6/17/2022 21:56	28.38
6/18/2022 21:40	83.70	6/17/2022 20:57	-0.08	6/17/2022 21:27	10.86	6/17/2022 20:15	1.01	6/17/2022 21:57	30.48
6/18/2022 21:41	83.71	6/17/2022 20:58	-0.04	6/17/2022 21:28	10.79	6/17/2022 20:16	0.97	6/17/2022 21:58	29.62

6/18/2022 21:42	83.68	6/17/2022 20:59	-0.07	6/17/2022 21:29	10.78	6/17/2022 20:17	1.01	6/17/2022 21:59	28.88
6/18/2022 21:43	83.71	6/17/2022 21:00	-0.09	6/17/2022 21:30	10.75	6/17/2022 20:18	1.02	6/17/2022 22:00	28.56
6/18/2022 21:44	83.70	6/17/2022 21:01	-0.10	6/17/2022 21:31	10.69	6/17/2022 20:19	1.07	6/17/2022 22:01	28.46
6/18/2022 21:45	83.68	6/17/2022 21:02	-0.03	6/17/2022 21:32	10.64	6/17/2022 20:20	1.07	6/17/2022 22:02	30.70
6/18/2022 21:46	83.70	6/17/2022 21:03	-0.07	6/17/2022 21:33	10.62	6/17/2022 20:21	1.06	6/17/2022 22:03	29.45
6/18/2022 21:47	83.70	6/17/2022 21:04	-0.06	6/17/2022 21:34	10.58	6/17/2022 20:22	1.12	6/17/2022 22:04	28.83
6/18/2022 21:48	83.70	6/17/2022 21:05	-0.04	6/17/2022 21:35	10.58	6/17/2022 20:23	1.07	6/17/2022 22:05	28.55
6/18/2022 21:49	83.70	6/17/2022 21:06	-0.07	6/17/2022 21:36	10.56	6/17/2022 20:24	1.09	6/17/2022 22:06	28.50
6/18/2022 21:50	83.72	6/17/2022 21:07	-0.06	6/17/2022 21:37	10.56	6/17/2022 20:25	1.09	6/17/2022 22:07	28.45
6/18/2022 21:51	83.68	6/17/2022 21:08	-0.07	6/17/2022 21:38	10.48	6/17/2022 20:26	1.07	6/17/2022 22:08	28.43
6/18/2022 21:52	83.70	6/17/2022 21:09	0.29	6/17/2022 21:39	10.50	6/17/2022 20:27	1.12	6/17/2022 22:09	28.46
6/18/2022 21:53	83.67	6/17/2022 21:10	6.21	6/17/2022 21:40	10.50	6/17/2022 20:28	1.07	6/17/2022 22:10	28.46
6/18/2022 21:54	83.68	6/17/2022 21:11	6.97	6/17/2022 21:41	10.49	6/17/2022 20:29	1.07	6/17/2022 22:11	28.43
6/18/2022 21:55	83.68	6/17/2022 21:12	5.74	6/17/2022 21:42	10.51	6/17/2022 20:30	1.03	6/17/2022 22:12	28.43
6/18/2022 21:56	83.70	6/17/2022 21:13	4.78	6/17/2022 21:43	10.50	6/17/2022 20:31	1.06	6/17/2022 22:13	28.44
6/18/2022 21:57	83.68	6/17/2022 21:14	3.94	6/17/2022 21:44	10.51	6/17/2022 20:32	1.06	6/17/2022 22:14	28.43
6/18/2022 21:58	83.69	6/17/2022 21:15	3.25	6/17/2022 21:45	10.47	6/17/2022 20:33	1.01	6/17/2022 22:15	28.44
6/18/2022 21:59	83.67	6/17/2022 21:16	2.72	6/17/2022 21:46	10.48	6/17/2022 20:34	0.99	6/17/2022 22:16	28.40
6/18/2022 22:00	83.66	6/17/2022 21:17	2.24	6/17/2022 21:47	10.50	6/17/2022 20:35	0.98	6/17/2022 22:17	28.43
6/18/2022 22:01	83.67	6/17/2022 21:18	1.82	6/17/2022 21:48	10.50	6/17/2022 20:36	1.01	6/17/2022 22:18	28.42
6/18/2022 22:02	83.66	6/17/2022 21:19	1.53	6/17/2022 21:49	10.50	6/17/2022 20:37	1.00	6/17/2022 22:19	28.40
6/18/2022 22:03	83.66	6/17/2022 21:20	1.23	6/17/2022 21:50	10.53	6/17/2022 20:38	1.02	6/17/2022 22:20	28.43
6/18/2022 22:04	83.65	6/17/2022 21:21	0.95	6/17/2022 21:51	10.60	6/17/2022 20:39	1.06	6/17/2022 22:21	28.41
6/18/2022 22:05	83.67	6/17/2022 21:22	0.78	6/17/2022 21:52	10.58	6/17/2022 20:40	1.06	6/17/2022 22:22	28.42
6/18/2022 22:06	83.66	6/17/2022 21:23	0.57	6/17/2022 21:53	10.62	6/17/2022 20:41	1.13	6/17/2022 22:23	28.42
6/18/2022 22:07	83.71	6/17/2022 21:24	0.40	6/17/2022 21:54	10.66	6/17/2022 20:42	1.11	6/17/2022 22:24	28.40
6/18/2022 22:08	83.68	6/17/2022 21:25	0.26	6/17/2022 21:55	10.66	6/17/2022 20:43	1.06	6/17/2022 22:25	28.42
6/18/2022 22:09	83.66	6/17/2022 21:26	0.12	6/17/2022 21:56	10.65	6/17/2022 20:44	1.04	6/17/2022 22:26	28.43
6/18/2022 22:10	83.65	6/17/2022 21:27	0.03	6/17/2022 21:57	10.69	6/17/2022 20:45	1.03	6/17/2022 22:27	28.44
6/18/2022 22:11	83.65	6/17/2022 21:28	-0.07	6/17/2022 21:58	10.78	6/17/2022 20:46	1.01	6/17/2022 22:28	28.39
6/18/2022 22:12	83.64	6/17/2022 21:29	-0.05	6/17/2022 21:59	10.74	6/17/2022 20:47	0.96	6/17/2022 22:29	28.40
6/18/2022 22:13	83.64	6/17/2022 21:30	-0.06	6/17/2022 22:00	10.77	6/17/2022 20:48	1.00	6/17/2022 22:30	28.41
6/18/2022 22:14	83.62	6/17/2022 21:31	-0.07	6/17/2022 22:01	10.81	6/17/2022 20:49	1.02	6/17/2022 22:31	28.39
6/18/2022 22:15	83.68	6/17/2022 21:32	-0.11	6/17/2022 22:02	10.78	6/17/2022 20:50	1.03	6/17/2022 22:32	28.39
6/18/2022 22:16	83.67	6/17/2022 21:33	-0.05	6/17/2022 22:03	10.77	6/17/2022 20:51	1.04	6/17/2022 22:33	28.39
6/18/2022 22:17	83.65	6/17/2022 21:34	-0.06	6/17/2022 22:04	10.78	6/17/2022 20:52	1.08	6/17/2022 22:34	28.41
6/18/2022 22:18	83.66	6/17/2022 21:35	-0.07	6/17/2022 22:05	10.73	6/17/2022 20:53	1.08	6/17/2022 22:35	28.41
6/18/2022 22:19	83.69	6/17/2022 21:36	-0.03	6/17/2022 22:06	10.74	6/17/2022 20:54	1.07	6/17/2022 22:36	28.42
6/18/2022 22:20	83.64	6/17/2022 21:37	-0.04	6/17/2022 22:07	10.71	6/17/2022 20:55	1.10	6/17/2022 22:37	28.40
6/18/2022 22:21	83.62	6/17/2022 21:38	-0.03	6/17/2022 22:08	10.70	6/17/2022 20:56	1.04	6/17/2022 22:38	28.38
6/18/2022 22:22	83.66	6/17/2022 21:39	-0.05	6/17/2022 22:09	10.72	6/17/2022 20:57	1.03	6/17/2022 22:39	28.38
6/18/2022 22:23	83.67	6/17/2022 21:40	-0.06	6/17/2022 22:10	10.66	6/17/2022 20:58	0.97	6/17/2022 22:40	28.36
6/18/2022 22:24	83.67	6/17/2022 21:41	-0.04	6/17/2022 22:11	10.64	6/17/2022 20:59	1.00	6/17/2022 22:41	28.37
6/18/2022 22:25	83.63	6/17/2022 21:42	-0.07	6/17/2022 22:12	10.64	6/17/2022 21:00	0.97	6/17/2022 22:42	28.38
6/18/2022 22:26	83.65	6/17/2022 21:43	-0.05	6/17/2022 22:13	10.56	6/17/2022 21:01	0.96	6/17/2022 22:43	28.43
6/18/2022 22:27	83.62	6/17/2022 21:44	-0.06	6/17/2022 22:14	10.58	6/17/2022 21:02	1.02	6/17/2022 22:44	28.42
6/18/2022 22:28	83.64	6/17/2022 21:45	-0.05	6/17/2022 22:15	10.60	6/17/2022 21:03	1.02	6/17/2022 22:45	28.34
6/18/2022 22:29	83.64	6/17/2022 21:46	-0.04	6/17/2022 22:16	10.62	6/17/2022 21:04	1.06	6/17/2022 22:46	28.41
6/18/2022 22:30	83.65	6/17/2022 21:47	-0.06	6/17/2022 22:17	10.59	6/17/2022 21:05	1.07	6/17/2022 22:47	28.36
6/18/2022 22:31	83.65	6/17/2022 21:48	-0.06	6/17/2022 22:18	10.61	6/17/2022 21:06	1.03	6/17/2022 22:48	28.37
6/18/2022 22:32	83.66	6/17/2022 21:49	-0.03	6/17/2022 22:19	10.62	6/17/2022 21:07	1.06	6/17/2022 22:49	28.38
6/18/2022 22:33	83.64	6/17/2022 21:50	-0.08	6/17/2022 22:20	10.66	6/17/2022 21:08	0.99	6/17/2022 22:50	28.40
6/18/2022 22:34	83.64	6/17/2022 21:51	0.29	6/17/2022 22:21	10.65	6/17/2022 21:09	0.98	6/17/2022 22:51	28.42
6/18/2022 22:35	83.66	6/17/2022 21:52	6.13	6/17/2022 22:22	10.61	6/17/2022 21:10	0.96	6/17/2022 22:52	28.43
6/18/2022 22:36	83.60	6/17/2022 21:53	6.62	6/17/2022 22:23	10.67	6/17/2022 21:11	0.98	6/17/2022 22:53	28.38
6/18/2022 22:37	83.62	6/17/2022 21:54	5.49	6/17/2022 22:24	10.65	6/17/2022 21:12	0.95	6/17/2022 22:54	28.41
6/18/2022 22:38	83.63	6/17/2022 21:55	4.59	6/17/2022 22:25	10.64	6/17/2022 21:13	0.99	6/17/2022 22:55	28.40
6/18/2022 22:39	83.61	6/17/2022 21:56	3.76	6/17/2022 22:26	10.63	6/17/2022 21:14	1.00	6/17/2022 22:56	28.38
6/18/2022 22:40	83.64	6/17/2022 21:57	3.14	6/17/2022 22:27	10.61	6/17/2022 21:15	0.97	6/17/2022 22:57	28.42
6/18/2022 22:41	83.60	6/17/2022 21:58	2.55	6/17/2022 22:28	10.58	6/17/2022 21:16	0.98	6/17/2022 22:58	28.41
6/18/2022 22:42	83.64	6/17/2022 21:59	2.10	6/17/2022 22:29	10.60	6/17/2022 21:17	1.01	6/17/2022 22:59	28.35
6/18/2022 22:43	83.62	6/17/2022 22:00	1.72	6/17/2022 22:30	10.55	6/17/2022 21:18	0.97	6/17/2022 23:00	28.39
6/18/2022 22:44	83.63	6/17/2022 22:01	1.42	6/17/2022 22:31	10.55	6/17/2022 21:19	0.98	6/17/2022 23:01	28.41
6/18/2022 22:45	83.59	6/17/2022 22:02	1.16	6/17/2022 22:32	10.52	6/17/2022 21:20	0.99	6/17/2022 23:02	28.35
6/18/2022 22:46	83.62	6/17/2022 22:03	0.93	6/17/2022 22:33	10.53	6/17/2022 21:21	1.00	6/17/2022 23:03	28.40
6/18/2022 22:47	83.62	6/17/2022 22:04	0.72	6/17/2022 22:34	10.48	6/17/2022 21:22	1.01	6/17/2022 23:04	28.40
6/18/2022 22:48	83.62	6/17/2022 22:05	0.55	6/17/2022 22:35	10.51	6/17/2022 21:23	1.04	6/17/2022 23:05	28.40
6/18/2022 22:49	83.62	6/17/2022 22:06	0.43	6/17/2022 22:36	10.45	6/17/2022 21:24	1.04	6/17/2022 23:06	28.37
6/18/2022 22:50	83.62	6/17/2022 22:07	0.26	6/17/2022 22:37	10.43	6/17/2022 21:25	1.08	6/17/2022 23:07	29.13
6/18/2022 22:51	83.65	6/17/2022 22:08	0.13	6/17/2022 22:38	10.43	6/17/2022 21:26	1.08	6/17/2022 23:08	29.77
6/18/2022 22:52	83.64	6/17/2022 22:09	0.05	6/17/2022 22:39	10.41	6/17/2022 21:27	1.07	6/17/2022 23:09	28.89
6/18/2022 22:53	83.63	6/17/2022 22:10	-0.08	6/17/2022 22:40	10.37	6/17/2022 21:28	1.05	6/17/2022 23:10	28.57
6/18/2022 22:54	83.63	6/17/2022 22:11	-0.04	6/17/2022 22:41	10.38	6/17/2022 21:29	1.03	6/17/2022 23:11	28.50
6/18/2022 22:55	83.61	6/17/2022 22:12	-0.04	6/17/2022 22:42	10.35	6/17/2022 21:30	0.97	6/17/2022 23:12	28.44
6/18/2022 22:56	83.59	6/17/2022 22:13	-0.06	6/17/2022 22:43	10.34	6/17/2022 21:31	0.97	6/17/2022 23:13	28.45
6/18/2022 22:57	83.61	6/17/2022 22:14	-0.05	6/17/2022 22:44	10.33	6/17/2022 21:32	0.99	6/17/2022 23:14	28.42
6/18/2022 22:58	83.63	6/17/2022 22:15	-0.04	6/17/2022 22:45	10.31	6/17/2022 21:33	0.94	6/17/2022 23:15	28.42
6/18/2022 22:59	83.62	6/17/2022 22:16	-0.06	6/17/2022 22:46	10.32	6/17/2022 21:34	1.00	6/17/2022 23:16	28.40
6/18/2022 23:00	83.62	6/17/2022 22:17	-0.06	6/17/2022 22:47	10.34	6/17/2022 21:35	1.03	6/17/2022 23:17	28.40
6/18/2022 23:01	83.59	6/17/2022 22:18	-0.04	6/17/2022 22:48	10.29	6/17/2022 21:36	1.06	6/17/2022 23:18	28.43
6/18/2022 23:02	83.60	6/17/2022 22:19	-0.08	6/17/2022 22:49	10.27	6/17/2022 21:37	1.07	6/17/2022 23:19	28.41
6/18/2022 23:03	83.62	6/17/2022 22:20	-0.08	6/17/2022 22:50	10.29	6/17/2022 21:38	1.07	6/17/2022 23:20	28.41
6/18/2022 23:04	83.62	6/17/2022 22:21	-0.09	6/17/2022 22:51	10.27	6/17/2022 21:39	1.04	6/17/2022 23:21	28.40
6/18/2022 23:05	83.61	6/17/2022 22:22	-0.02	6/17/2022 22:52	10.33	6/17/2022 21:40	1.05	6/17/2022 23:22	28.39
6/18/2022 23:06	83.60	6/17/2022 22:23	-0.05	6/17/2022 22:53	10.33	6/17/2022 21:41	1.00	6/17/2022 23:23	28.39
6/18/2022 23:07	83.59	6/17/2022 22:24	-0.07	6/17/2022 22:54	10.33	6/17/2022 21:42	1.00	6/17/2022 23:24	28.42
6/18/2022 23:08	83.62	6/17/2022 22:25	-0.05	6/17/2022 22:55	10.32	6/17/2022 21:43	1.02	6/17/2022 23:25	28.40
6/18/2022 23:09	83.58	6/17/2022 22:26	-0.06	6/17/2022 22:56	10.35	6/17/2022 21:44	0.99	6/17/2022 23:26	28.42

6/18/2022 23:10	83.59	6/17/2022 22:27	-0.04	6/17/2022 22:57	10.30	6/17/2022 21:45	1.00	6/17/2022 23:27	28.38
6/18/2022 23:11	83.61	6/17/2022 22:28	-0.08	6/17/2022 22:58	10.34	6/17/2022 21:46	1.00	6/17/2022 23:28	28.42
6/18/2022 23:12	83.63	6/17/2022 22:29	-0.09	6/17/2022 22:59	10.31	6/17/2022 21:47	1.04	6/17/2022 23:29	28.43
6/18/2022 23:13	83.63	6/17/2022 22:30	-0.09	6/17/2022 23:00	10.30	6/17/2022 21:48	1.07	6/17/2022 23:30	28.47
6/18/2022 23:14	83.63	6/17/2022 22:31	-0.08	6/17/2022 23:01	10.31	6/17/2022 21:49	1.10	6/17/2022 23:31	28.48
6/18/2022 23:15	83.58	6/17/2022 22:32	-0.05	6/17/2022 23:02	10.28	6/17/2022 21:50	1.09	6/17/2022 23:32	28.44
6/18/2022 23:16	83.62	6/17/2022 22:33	-0.05	6/17/2022 23:03	10.28	6/17/2022 21:51	1.01	6/17/2022 23:33	28.43
6/18/2022 23:17	83.60	6/17/2022 22:34	-0.05	6/17/2022 23:04	10.27	6/17/2022 21:52	1.05	6/17/2022 23:34	28.46
6/18/2022 23:18	83.62	6/17/2022 22:35	0.70	6/17/2022 23:05	10.22	6/17/2022 21:53	1.04	6/17/2022 23:35	28.46
6/18/2022 23:19	83.58	6/17/2022 22:36	6.45	6/17/2022 23:06	10.23	6/17/2022 21:54	1.02	6/17/2022 23:36	28.46
6/18/2022 23:20	83.63	6/17/2022 22:37	6.48	6/17/2022 23:07	10.27	6/17/2022 21:55	1.12	6/17/2022 23:37	28.46
6/18/2022 23:21	83.57	6/17/2022 22:38	5.33	6/17/2022 23:08	13.47	6/17/2022 21:56	1.07	6/17/2022 23:38	28.45
6/18/2022 23:22	83.58	6/17/2022 22:39	4.40	6/17/2022 23:09	14.50	6/17/2022 21:57	1.09	6/17/2022 23:39	28.43
6/18/2022 23:23	83.57	6/17/2022 22:40	3.70	6/17/2022 23:10	13.99	6/17/2022 21:58	1.06	6/17/2022 23:40	28.41
6/18/2022 23:24	83.62	6/17/2022 22:41	3.02	6/17/2022 23:11	13.61	6/17/2022 21:59	1.06	6/17/2022 23:41	28.42
6/18/2022 23:25	83.59	6/17/2022 22:42	2.51	6/17/2022 23:12	13.23	6/17/2022 22:00	1.03	6/17/2022 23:42	28.43
6/18/2022 23:26	83.59	6/17/2022 22:43	2.07	6/17/2022 23:13	12.92	6/17/2022 22:01	1.03	6/17/2022 23:43	28.43
6/18/2022 23:27	83.60	6/17/2022 22:44	1.68	6/17/2022 23:14	12.65	6/17/2022 22:02	1.03	6/17/2022 23:44	28.39
6/18/2022 23:28	83.57	6/17/2022 22:45	1.43	6/17/2022 23:15	12.36	6/17/2022 22:03	0.99	6/17/2022 23:45	28.44
6/18/2022 23:29	83.58	6/17/2022 22:46	1.14	6/17/2022 23:16	12.19	6/17/2022 22:04	0.99	6/17/2022 23:46	28.41
6/18/2022 23:30	83.58	6/17/2022 22:47	0.86	6/17/2022 23:17	11.99	6/17/2022 22:05	1.00	6/17/2022 23:47	28.41
6/18/2022 23:31	83.60	6/17/2022 22:48	0.69	6/17/2022 23:18	11.84	6/17/2022 22:06	0.97	6/17/2022 23:48	28.42
6/18/2022 23:32	83.62	6/17/2022 22:49	0.50	6/17/2022 23:19	15.95	6/17/2022 22:07	0.99	6/17/2022 23:49	28.42
6/18/2022 23:33	83.57	6/17/2022 22:50	0.35	6/17/2022 23:20	15.23	6/17/2022 22:08	1.03	6/17/2022 23:50	28.40
6/18/2022 23:34	83.58	6/17/2022 22:51	0.23	6/17/2022 23:21	14.67	6/17/2022 22:09	1.08	6/17/2022 23:51	28.41
6/18/2022 23:35	83.58	6/17/2022 22:52	0.08	6/17/2022 23:22	14.19	6/17/2022 22:10	1.08	6/17/2022 23:52	28.44
6/18/2022 23:36	83.56	6/17/2022 22:53	-0.03	6/17/2022 23:23	13.77	6/17/2022 22:11	1.11	6/17/2022 23:53	28.39
6/18/2022 23:37	83.59	6/17/2022 22:54	-0.09	6/17/2022 23:24	13.39	6/17/2022 22:12	1.07	6/17/2022 23:54	28.40
6/18/2022 23:38	83.63	6/17/2022 22:55	-0.09	6/17/2022 23:25	13.06	6/17/2022 22:13	1.09	6/17/2022 23:55	28.40
6/18/2022 23:39	83.56	6/17/2022 22:56	-0.06	6/17/2022 23:26	12.80	6/17/2022 22:14	1.06	6/17/2022 23:56	28.44
6/18/2022 23:40	83.60	6/17/2022 22:57	-0.09	6/17/2022 23:27	12.53	6/17/2022 22:15	1.01	6/17/2022 23:57	28.40
6/18/2022 23:41	83.57	6/17/2022 22:58	-0.07	6/17/2022 23:28	12.30	6/17/2022 22:16	0.96	6/17/2022 23:58	28.43
6/18/2022 23:42	83.59	6/17/2022 22:59	-0.04	6/17/2022 23:29	12.15	6/17/2022 22:17	0.96	6/17/2022 23:59	28.42
6/18/2022 23:43	83.56	6/17/2022 23:00	-0.04	6/17/2022 23:30	11.95	6/17/2022 22:18	1.01	6/18/2022 0:00	28.42
6/18/2022 23:44	83.57	6/17/2022 23:01	-0.08	6/17/2022 23:31	11.81	6/17/2022 22:19	0.98	6/18/2022 0:01	28.41
6/18/2022 23:45	83.59	6/17/2022 23:02	-0.07	6/17/2022 23:32	11.64	6/17/2022 22:20	0.99	6/18/2022 0:02	28.42
6/18/2022 23:46	83.55	6/17/2022 23:03	-0.07	6/17/2022 23:33	11.53	6/17/2022 22:21	1.04	6/18/2022 0:03	28.39
6/18/2022 23:47	83.57	6/17/2022 23:04	-0.07	6/17/2022 23:34	11.39	6/17/2022 22:22	1.07	6/18/2022 0:04	28.40
6/18/2022 23:48	83.55	6/17/2022 23:05	-0.02	6/17/2022 23:35	11.28	6/17/2022 22:23	1.09	6/18/2022 0:05	28.41
6/18/2022 23:49	83.58	6/17/2022 23:06	-0.01	6/17/2022 23:36	11.19	6/17/2022 22:24	1.07	6/18/2022 0:06	28.38
6/18/2022 23:50	83.55	6/17/2022 23:07	-0.08	6/17/2022 23:37	11.11	6/17/2022 22:25	1.11	6/18/2022 0:07	28.40
6/18/2022 23:51	83.56	6/17/2022 23:08	-0.07	6/17/2022 23:38	11.06	6/17/2022 22:26	1.04	6/18/2022 0:08	28.41
6/18/2022 23:52	83.59	6/17/2022 23:09	-0.04	6/17/2022 23:39	11.00	6/17/2022 22:27	1.04	6/18/2022 0:09	28.40
6/18/2022 23:53	83.55	6/17/2022 23:10	-0.03	6/17/2022 23:40	10.92	6/17/2022 22:28	1.01	6/18/2022 0:10	28.39
6/18/2022 23:54	83.56	6/17/2022 23:11	-0.04	6/17/2022 23:41	10.87	6/17/2022 22:29	0.99	6/18/2022 0:11	28.39
6/18/2022 23:55	83.55	6/17/2022 23:12	-0.06	6/17/2022 23:42	10.86	6/17/2022 22:30	1.01	6/18/2022 0:12	28.41
6/18/2022 23:56	83.60	6/17/2022 23:13	-0.08	6/17/2022 23:43	10.82	6/17/2022 22:31	1.00	6/18/2022 0:13	28.40
6/18/2022 23:57	83.54	6/17/2022 23:14	-0.09	6/17/2022 23:44	10.80	6/17/2022 22:32	1.08	6/18/2022 0:14	28.38
6/18/2022 23:58	83.57	6/17/2022 23:15	-0.07	6/17/2022 23:45	10.75	6/17/2022 22:33	1.12	6/18/2022 0:15	28.38
6/18/2022 23:59	83.58	6/17/2022 23:16	-0.06	6/17/2022 23:46	10.72	6/17/2022 22:34	1.10	6/18/2022 0:16	28.40
6/19/2022 0:00	83.54	6/17/2022 23:17	-0.04	6/17/2022 23:47	10.70	6/17/2022 22:35	1.08	6/18/2022 0:17	28.40
6/19/2022 0:01	83.56	6/17/2022 23:18	-0.03	6/17/2022 23:48	10.65	6/17/2022 22:36	1.09	6/18/2022 0:18	28.39
6/19/2022 0:02	83.60	6/17/2022 23:19	-0.10	6/17/2022 23:49	10.63	6/17/2022 22:37	1.07	6/18/2022 0:19	28.39
6/19/2022 0:03	83.55	6/17/2022 23:20	-0.08	6/17/2022 23:50	10.62	6/17/2022 22:38	1.09	6/18/2022 0:20	28.41
6/19/2022 0:04	83.54	6/17/2022 23:21	-0.07	6/17/2022 23:51	10.57	6/17/2022 22:39	1.10	6/18/2022 0:21	28.38
6/19/2022 0:05	83.56	6/17/2022 23:22	-0.07	6/17/2022 23:52	10.55	6/17/2022 22:40	1.09	6/18/2022 0:22	28.41
6/19/2022 0:06	83.54	6/17/2022 23:23	-0.08	6/17/2022 23:53	10.52	6/17/2022 22:41	1.09	6/18/2022 0:23	28.42
6/19/2022 0:07	83.54	6/17/2022 23:24	-0.06	6/17/2022 23:54	10.46	6/17/2022 22:42	1.10	6/18/2022 0:24	28.43
6/19/2022 0:08	83.57	6/17/2022 23:25	-0.05	6/17/2022 23:55	10.50	6/17/2022 22:43	1.07	6/18/2022 0:25	28.41
6/19/2022 0:09	83.58	6/17/2022 23:26	-0.07	6/17/2022 23:56	10.44	6/17/2022 22:44	1.08	6/18/2022 0:26	28.39
6/19/2022 0:10	83.51	6/17/2022 23:27	-0.06	6/17/2022 23:57	10.45	6/17/2022 22:45	1.11	6/18/2022 0:27	28.44
6/19/2022 0:11	83.53	6/17/2022 23:28	-0.03	6/17/2022 23:58	10.43	6/17/2022 22:46	1.08	6/18/2022 0:28	28.40
6/19/2022 0:12	83.53	6/17/2022 23:29	-0.06	6/17/2022 23:59	10.39	6/17/2022 22:47	1.00	6/18/2022 0:29	28.40
6/19/2022 0:13	83.56	6/17/2022 23:30	-0.06	6/18/2022 0:00	10.38	6/17/2022 22:48	1.02	6/18/2022 0:30	28.40
6/19/2022 0:14	83.57	6/17/2022 23:31	4.24	6/18/2022 0:01	10.33	6/17/2022 22:49	1.00	6/18/2022 0:31	28.37
6/19/2022 0:15	83.53	6/17/2022 23:32	7.14	6/18/2022 0:02	10.34	6/17/2022 22:50	0.96	6/18/2022 0:32	28.39
6/19/2022 0:16	83.59	6/17/2022 23:33	5.85	6/18/2022 0:03	10.39	6/17/2022 22:51	1.01	6/18/2022 0:33	28.41
6/19/2022 0:17	83.52	6/17/2022 23:34	4.79	6/18/2022 0:04	10.40	6/17/2022 22:52	0.98	6/18/2022 0:34	28.36
6/19/2022 0:18	83.54	6/17/2022 23:35	4.01	6/18/2022 0:05	10.39	6/17/2022 22:53	1.01	6/18/2022 0:35	28.39
6/19/2022 0:19	83.54	6/17/2022 23:36	3.31	6/18/2022 0:06	10.39	6/17/2022 22:54	1.06	6/18/2022 0:36	28.39
6/19/2022 0:20	83.55	6/17/2022 23:37	2.74	6/18/2022 0:07	10.39	6/17/2022 22:55	1.10	6/18/2022 0:37	28.37
6/19/2022 0:21	83.52	6/17/2022 23:38	2.25	6/18/2022 0:08	10.38	6/17/2022 22:56	1.10	6/18/2022 0:38	28.38
6/19/2022 0:22	83.52	6/17/2022 23:39	1.88	6/18/2022 0:09	10.43	6/17/2022 22:57	1.07	6/18/2022 0:39	28.38
6/19/2022 0:23	83.52	6/17/2022 23:40	1.51	6/18/2022 0:10	10.39	6/17/2022 22:58	1.08	6/18/2022 0:40	28.39
6/19/2022 0:24	83.55	6/17/2022 23:41	1.26	6/18/2022 0:11	10.40	6/17/2022 22:59	1.06	6/18/2022 0:41	28.40
6/19/2022 0:25	83.55	6/17/2022 23:42	0.97	6/18/2022 0:12	10.37	6/17/2022 23:00	0.99	6/18/2022 0:42	28.35
6/19/2022 0:26	83.57	6/17/2022 23:43	0.77	6/18/2022 0:13	10.36	6/17/2022 23:01	1.00	6/18/2022 0:43	28.39
6/19/2022 0:27	83.53	6/17/2022 23:44	0.60	6/18/2022 0:14	10.38	6/17/2022 23:02	0.97	6/18/2022 0:44	28.41
6/19/2022 0:28	83.55	6/17/2022 23:45	0.41	6/18/2022 0:15	10.33	6/17/2022 23:03	1.00	6/18/2022 0:45	28.39
6/19/2022 0:29	83.55	6/17/2022 23:46	0.26	6/18/2022 0:16	10.35	6/17/2022 23:04	0.98	6/18/2022 0:46	28.39
6/19/2022 0:30	83.54	6/17/2022 23:47	0.17	6/18/2022 0:17	10.34	6/17/2022 23:05	1.02	6/18/2022 0:47	28.40
6/19/2022 0:31	83.55	6/17/2022 23:48	0.05	6/18/2022 0:18	10.35	6/17/2022 23:06	1.08	6/18/2022 0:48	28.39
6/19/2022 0:32	83.48	6/17/2022 23:49	-0.09	6/18/2022 0:19	10.30	6/17/2022 23:07	1.14	6/18/2022 0:49	28.40
6/19/2022 0:33	83.54	6/17/2022 23:50	-0.05	6/18/2022 0:20	10.30	6/17/2022 23:08	1.09	6/18/2022 0:50	28.41
6/19/2022 0:34	83.55	6/17/2022 23:51	-0.05	6/18/2022 0:21	10.31	6/17/2022 23:09	1.08	6/18/2022 0:51	28.40
6/19/2022 0:35	83.50	6/17/2022 23:52	-0.07	6/18/2022 0:22	10.29	6/17/2022 23:10	1.06	6/18/2022 0:52	28.37
6/19/2022 0:36	83.52	6/17/2022 23:53	-0.03	6/18/2022 0:23	10.32	6/17/2022 23:11	1.03	6/18/2022 0:53	28.37
6/19/2022 0:37	83.54	6/17/2022 23:54	-0.05	6/18/2022 0:24	10.29	6/17/2022 23:12	0.97	6/18/2022 0:54	28.38

6/19/2022 0:38	83.54	6/17/2022 23:55	-0.07	6/18/2022 0:25	10.26	6/17/2022 23:13	0.99	6/18/2022 0:55	28.39
6/19/2022 0:39	83.50	6/17/2022 23:56	-0.06	6/18/2022 0:26	10.31	6/17/2022 23:14	0.99	6/18/2022 0:56	28.38
6/19/2022 0:40	83.53	6/17/2022 23:57	-0.05	6/18/2022 0:27	10.21	6/17/2022 23:15	1.06	6/18/2022 0:57	28.41
6/19/2022 0:41	83.53	6/17/2022 23:58	-0.06	6/18/2022 0:28	10.25	6/17/2022 23:16	1.03	6/18/2022 0:58	28.39
6/19/2022 0:42	83.51	6/17/2022 23:59	-0.09	6/18/2022 0:29	10.25	6/17/2022 23:17	1.05	6/18/2022 0:59	28.37
6/19/2022 0:43	83.54	6/18/2022 0:00	-0.11	6/18/2022 0:30	10.21	6/17/2022 23:18	1.11	6/18/2022 1:00	28.41
6/19/2022 0:44	83.55	6/18/2022 0:01	-0.09	6/18/2022 0:31	10.23	6/17/2022 23:19	1.15	6/18/2022 1:01	28.36
6/19/2022 0:45	83.50	6/18/2022 0:02	-0.05	6/18/2022 0:32	10.19	6/17/2022 23:20	1.09	6/18/2022 1:02	28.36
6/19/2022 0:46	83.52	6/18/2022 0:03	-0.05	6/18/2022 0:33	10.21	6/17/2022 23:21	1.07	6/18/2022 1:03	28.41
6/19/2022 0:47	83.51	6/18/2022 0:04	-0.07	6/18/2022 0:34	10.20	6/17/2022 23:22	1.00	6/18/2022 1:04	28.40
6/19/2022 0:48	83.52	6/18/2022 0:05	-0.14	6/18/2022 0:35	10.24	6/17/2022 23:23	1.06	6/18/2022 1:05	28.38
6/19/2022 0:49	83.54	6/18/2022 0:06	-0.05	6/18/2022 0:36	10.25	6/17/2022 23:24	0.98	6/18/2022 1:06	28.34
6/19/2022 0:50	83.51	6/18/2022 0:07	-0.06	6/18/2022 0:37	10.21	6/17/2022 23:25	1.01	6/18/2022 1:07	28.37
6/19/2022 0:51	83.51	6/18/2022 0:08	-0.09	6/18/2022 0:38	10.20	6/17/2022 23:26	1.00	6/18/2022 1:08	28.36
6/19/2022 0:52	83.53	6/18/2022 0:09	-0.07	6/18/2022 0:39	10.26	6/17/2022 23:27	1.04	6/18/2022 1:09	28.37
6/19/2022 0:53	83.50	6/18/2022 0:10	-0.05	6/18/2022 0:40	10.28	6/17/2022 23:28	1.04	6/18/2022 1:10	28.35
6/19/2022 0:54	83.49	6/18/2022 0:11	-0.07	6/18/2022 0:41	10.27	6/17/2022 23:29	1.08	6/18/2022 1:11	28.39
6/19/2022 0:55	83.52	6/18/2022 0:12	-0.05	6/18/2022 0:42	10.25	6/17/2022 23:30	1.08	6/18/2022 1:12	28.36
6/19/2022 0:56	83.53	6/18/2022 0:13	-0.10	6/18/2022 0:43	10.26	6/17/2022 23:31	1.11	6/18/2022 1:13	28.38
6/19/2022 0:57	83.50	6/18/2022 0:14	-0.08	6/18/2022 0:44	10.24	6/17/2022 23:32	1.12	6/18/2022 1:14	28.39
6/19/2022 0:58	83.51	6/18/2022 0:15	-0.05	6/18/2022 0:45	10.23	6/17/2022 23:33	1.15	6/18/2022 1:15	28.39
6/19/2022 0:59	83.52	6/18/2022 0:16	-0.10	6/18/2022 0:46	10.25	6/17/2022 23:34	1.11	6/18/2022 1:16	28.38
6/19/2022 1:00	83.48	6/18/2022 0:17	-0.05	6/18/2022 0:47	10.26	6/17/2022 23:35	1.06	6/18/2022 1:17	28.41
6/19/2022 1:01	83.50	6/18/2022 0:18	-0.06	6/18/2022 0:48	10.23	6/17/2022 23:36	1.08	6/18/2022 1:18	28.39
6/19/2022 1:02	83.50	6/18/2022 0:19	-0.08	6/18/2022 0:49	10.23	6/17/2022 23:37	1.06	6/18/2022 1:19	28.40
6/19/2022 1:03	83.53	6/18/2022 0:20	-0.06	6/18/2022 0:50	10.21	6/17/2022 23:38	1.06	6/18/2022 1:20	28.40
6/19/2022 1:04	83.51	6/18/2022 0:21	-0.06	6/18/2022 0:51	10.24	6/17/2022 23:39	1.04	6/18/2022 1:21	28.40
6/19/2022 1:05	83.51	6/18/2022 0:22	-0.08	6/18/2022 0:52	10.23	6/17/2022 23:40	1.04	6/18/2022 1:22	28.40
6/19/2022 1:06	83.47	6/18/2022 0:23	-0.08	6/18/2022 0:53	10.20	6/17/2022 23:41	1.02	6/18/2022 1:23	28.36
6/19/2022 1:07	83.48	6/18/2022 0:24	-0.05	6/18/2022 0:54	10.22	6/17/2022 23:42	1.03	6/18/2022 1:24	28.37
6/19/2022 1:08	83.51	6/18/2022 0:25	-0.06	6/18/2022 0:55	10.16	6/17/2022 23:43	0.99	6/18/2022 1:25	28.37
6/19/2022 1:09	83.50	6/18/2022 0:26	-0.05	6/18/2022 0:56	10.20	6/17/2022 23:44	0.99	6/18/2022 1:26	28.40
6/19/2022 1:10	83.50	6/18/2022 0:27	-0.05	6/18/2022 0:57	10.17	6/17/2022 23:45	0.98	6/18/2022 1:27	28.38
6/19/2022 1:11	83.47	6/18/2022 0:28	-0.05	6/18/2022 0:58	10.17	6/17/2022 23:46	1.04	6/18/2022 1:28	28.38
6/19/2022 1:12	83.48	6/18/2022 0:29	-0.08	6/18/2022 0:59	10.17	6/17/2022 23:47	1.03	6/18/2022 1:29	28.39
6/19/2022 1:13	83.51	6/18/2022 0:30	-0.06	6/18/2022 1:00	10.18	6/17/2022 23:48	1.08	6/18/2022 1:30	28.42
6/19/2022 1:14	83.51	6/18/2022 0:31	-0.09	6/18/2022 1:01	10.19	6/17/2022 23:49	1.11	6/18/2022 1:31	28.39
6/19/2022 1:15	83.48	6/18/2022 0:32	-0.04	6/18/2022 1:02	10.17	6/17/2022 23:50	1.11	6/18/2022 1:32	28.38
6/19/2022 1:16	83.47	6/18/2022 0:33	-0.11	6/18/2022 1:03	10.15	6/17/2022 23:51	1.11	6/18/2022 1:33	28.37
6/19/2022 1:17	83.48	6/18/2022 0:34	-0.06	6/18/2022 1:04	10.12	6/17/2022 23:52	1.08	6/18/2022 1:34	28.40
6/19/2022 1:18	83.49	6/18/2022 0:35	2.68	6/18/2022 1:05	10.14	6/17/2022 23:53	1.06	6/18/2022 1:35	28.36
6/19/2022 1:19	83.46	6/18/2022 0:36	7.48	6/18/2022 1:06	10.12	6/17/2022 23:54	1.04	6/18/2022 1:36	28.37
6/19/2022 1:20	83.51	6/18/2022 0:37	6.19	6/18/2022 1:07	10.15	6/17/2022 23:55	1.02	6/18/2022 1:37	28.34
6/19/2022 1:21	83.52	6/18/2022 0:38	5.08	6/18/2022 1:08	10.16	6/17/2022 23:56	1.01	6/18/2022 1:38	28.41
6/19/2022 1:22	83.46	6/18/2022 0:39	4.22	6/18/2022 1:09	10.17	6/17/2022 23:57	1.00	6/18/2022 1:39	28.39
6/19/2022 1:23	83.48	6/18/2022 0:40	3.52	6/18/2022 1:10	10.23	6/17/2022 23:58	1.02	6/18/2022 1:40	28.39
6/19/2022 1:24	83.47	6/18/2022 0:41	2.87	6/18/2022 1:11	10.21	6/17/2022 23:59	1.07	6/18/2022 1:41	28.36
6/19/2022 1:25	83.50	6/18/2022 0:42	2.39	6/18/2022 1:12	10.22	6/18/2022 0:00	1.12	6/18/2022 1:42	28.36
6/19/2022 1:26	83.49	6/18/2022 0:43	1.98	6/18/2022 1:13	10.24	6/18/2022 0:01	1.14	6/18/2022 1:43	28.39
6/19/2022 1:27	83.48	6/18/2022 0:44	1.60	6/18/2022 1:14	10.23	6/18/2022 0:02	1.13	6/18/2022 1:44	28.37
6/19/2022 1:28	83.51	6/18/2022 0:45	1.31	6/18/2022 1:15	10.21	6/18/2022 0:03	1.10	6/18/2022 1:45	28.39
6/19/2022 1:29	83.50	6/18/2022 0:46	1.10	6/18/2022 1:16	10.22	6/18/2022 0:04	1.07	6/18/2022 1:46	28.36
6/19/2022 1:30	83.50	6/18/2022 0:47	0.84	6/18/2022 1:17	10.20	6/18/2022 0:05	1.06	6/18/2022 1:47	28.39
6/19/2022 1:31	83.50	6/18/2022 0:48	0.65	6/18/2022 1:18	10.20	6/18/2022 0:06	1.00	6/18/2022 1:48	28.39
6/19/2022 1:32	83.49	6/18/2022 0:49	0.47	6/18/2022 1:19	10.21	6/18/2022 0:07	1.00	6/18/2022 1:49	28.38
6/19/2022 1:33	83.46	6/18/2022 0:50	0.31	6/18/2022 1:20	10.20	6/18/2022 0:08	0.99	6/18/2022 1:50	28.38
6/19/2022 1:34	83.48	6/18/2022 0:51	0.14	6/18/2022 1:21	10.18	6/18/2022 0:09	1.04	6/18/2022 1:51	28.40
6/19/2022 1:35	83.45	6/18/2022 0:52	0.03	6/18/2022 1:22	10.22	6/18/2022 0:10	1.05	6/18/2022 1:52	28.40
6/19/2022 1:36	83.45	6/18/2022 0:53	-0.03	6/18/2022 1:23	10.19	6/18/2022 0:11	1.05	6/18/2022 1:53	28.39
6/19/2022 1:37	83.47	6/18/2022 0:54	-0.07	6/18/2022 1:24	10.20	6/18/2022 0:12	1.12	6/18/2022 1:54	28.39
6/19/2022 1:38	83.46	6/18/2022 0:55	-0.10	6/18/2022 1:25	10.15	6/18/2022 0:13	1.11	6/18/2022 1:55	28.35
6/19/2022 1:39	83.50	6/18/2022 0:56	-0.08	6/18/2022 1:26	10.18	6/18/2022 0:14	1.09	6/18/2022 1:56	29.18
6/19/2022 1:40	83.48	6/18/2022 0:57	-0.07	6/18/2022 1:27	10.16	6/18/2022 0:15	1.08	6/18/2022 1:57	29.83
6/19/2022 1:41	83.48	6/18/2022 0:58	-0.07	6/18/2022 1:28	10.18	6/18/2022 0:16	1.04	6/18/2022 1:58	30.64
6/19/2022 1:42	83.48	6/18/2022 0:59	-0.07	6/18/2022 1:29	10.20	6/18/2022 0:17	1.02	6/18/2022 1:59	30.06
6/19/2022 1:43	83.49	6/18/2022 1:00	-0.03	6/18/2022 1:30	10.15	6/18/2022 0:18	1.03	6/18/2022 2:00	29.07
6/19/2022 1:44	83.48	6/18/2022 1:01	-0.05	6/18/2022 1:31	10.15	6/18/2022 0:19	1.02	6/18/2022 2:01	28.67
6/19/2022 1:45	83.46	6/18/2022 1:02	-0.03	6/18/2022 1:32	10.13	6/18/2022 0:20	1.01	6/18/2022 2:02	28.50
6/19/2022 1:46	83.51	6/18/2022 1:03	-0.04	6/18/2022 1:33	10.15	6/18/2022 0:21	1.03	6/18/2022 2:03	29.32
6/19/2022 1:47	83.50	6/18/2022 1:04	-0.09	6/18/2022 1:34	10.12	6/18/2022 0:22	1.08	6/18/2022 2:04	29.89
6/19/2022 1:48	83.49	6/18/2022 1:05	-0.04	6/18/2022 1:35	10.15	6/18/2022 0:23	1.09	6/18/2022 2:05	30.95
6/19/2022 1:49	83.48	6/18/2022 1:06	-0.03	6/18/2022 1:36	10.10	6/18/2022 0:24	1.13	6/18/2022 2:06	30.03
6/19/2022 1:50	83.44	6/18/2022 1:07	-0.05	6/18/2022 1:37	10.14	6/18/2022 0:25	1.13	6/18/2022 2:07	31.56
6/19/2022 1:51	83.48	6/18/2022 1:08	-0.03	6/18/2022 1:38	10.14	6/18/2022 0:26	1.09	6/18/2022 2:08	29.86
6/19/2022 1:52	83.50	6/18/2022 1:09	-0.06	6/18/2022 1:39	10.16	6/18/2022 0:27	1.03	6/18/2022 2:09	31.17
6/19/2022 1:53	83.45	6/18/2022 1:10	-0.07	6/18/2022 1:40	10.18	6/18/2022 0:28	1.04	6/18/2022 2:10	30.07
6/19/2022 1:54	83.47	6/18/2022 1:11	-0.04	6/18/2022 1:41	10.18	6/18/2022 0:29	1.04	6/18/2022 2:11	30.83
6/19/2022 1:55	83.48	6/18/2022 1:12	-0.06	6/18/2022 1:42	10.18	6/18/2022 0:30	1.02	6/18/2022 2:12	30.95
6/19/2022 1:56	83.49	6/18/2022 1:13	-0.08	6/18/2022 1:43	10.20	6/18/2022 0:31	1.02	6/18/2022 2:13	30.52
6/19/2022 1:57	83.47	6/18/2022 1:14	-0.07	6/18/2022 1:44	10.19	6/18/2022 0:32	1.01	6/18/2022 2:14	31.22
6/19/2022 1:58	83.49	6/18/2022 1:15	-0.08	6/18/2022 1:45	10.17	6/18/2022 0:33	1.04	6/18/2022 2:15	30.36
6/19/2022 1:59	83.47	6/18/2022 1:16	-0.03	6/18/2022 1:46	10.21	6/18/2022 0:34	1.05	6/18/2022 2:16	29.34
6/19/2022 2:00	83.46	6/18/2022 1:17	-0.08	6/18/2022 1:47	10.17	6/18/2022 0:35	1.11	6/18/2022 2:17	28.89
6/19/2022 2:01	83.46	6/18/2022 1:18	-0.08	6/18/2022 1:48	10.22	6/18/2022 0:36	1.11	6/18/2022 2:18	28.71
6/19/2022 2:02	83.46	6/18/2022 1:19	-0.05	6/18/2022 1:49	10.20	6/18/2022 0:37	1.14	6/18/2022 2:19	28.65
6/19/2022 2:03	83.46	6/18/2022 1:20	-0.04	6/18/2022 1:50	10.20	6/18/2022 0:38	1.12	6/18/2022 2:20	28.62
6/19/2022 2:04	83.46	6/18/2022 1:21	-0.02	6/18/2022 1:51	10.21	6/18/2022 0:39	1.10	6/18/2022 2:21	28.59
6/19/2022 2:05	83.45	6/18/2022 1:22	-0.05	6/18/2022 1:52	10.21	6/18/2022 0:40	1.13	6/18/2022 2:22	28.56

6/19/2022 2:06	83.47	6/18/2022 1:23	-0.09	6/18/2022 1:53	10.18	6/18/2022 0:41	1.08	6/18/2022 2:23	28.58
6/19/2022 2:07	83.43	6/18/2022 1:24	-0.03	6/18/2022 1:54	10.17	6/18/2022 0:42	1.09	6/18/2022 2:24	28.53
6/19/2022 2:08	83.44	6/18/2022 1:25	1.20	6/18/2022 1:55	10.16	6/18/2022 0:43	1.12	6/18/2022 2:25	28.54
6/19/2022 2:09	83.45	6/18/2022 1:26	6.82	6/18/2022 1:56	10.17	6/18/2022 0:44	1.10	6/18/2022 2:26	28.52
6/19/2022 2:10	83.43	6/18/2022 1:27	6.44	6/18/2022 1:57	10.14	6/18/2022 0:45	1.12	6/18/2022 2:27	30.64
6/19/2022 2:11	83.43	6/18/2022 1:28	5.32	6/18/2022 1:58	10.14	6/18/2022 0:46	1.14	6/18/2022 2:28	29.52
6/19/2022 2:12	83.51	6/18/2022 1:29	4.42	6/18/2022 1:59	10.12	6/18/2022 0:47	1.15	6/18/2022 2:29	28.91
6/19/2022 2:13	83.43	6/18/2022 1:30	3.66	6/18/2022 2:00	10.17	6/18/2022 0:48	1.11	6/18/2022 2:30	28.65
6/19/2022 2:14	83.44	6/18/2022 1:31	3.01	6/18/2022 2:01	10.15	6/18/2022 0:49	1.12	6/18/2022 2:31	28.55
6/19/2022 2:15	83.46	6/18/2022 1:32	2.49	6/18/2022 2:02	10.13	6/18/2022 0:50	1.08	6/18/2022 2:32	28.55
6/19/2022 2:16	83.42	6/18/2022 1:33	2.10	6/18/2022 2:03	10.16	6/18/2022 0:51	1.08	6/18/2022 2:33	28.53
6/19/2022 2:17	83.46	6/18/2022 1:34	1.68	6/18/2022 2:04	10.13	6/18/2022 0:52	1.03	6/18/2022 2:34	28.56
6/19/2022 2:18	83.44	6/18/2022 1:35	1.39	6/18/2022 2:05	10.13	6/18/2022 0:53	1.01	6/18/2022 2:35	28.64
6/19/2022 2:19	83.45	6/18/2022 1:36	1.15	6/18/2022 2:06	10.10	6/18/2022 0:54	1.04	6/18/2022 2:36	30.05
6/19/2022 2:20	83.44	6/18/2022 1:37	0.86	6/18/2022 2:07	10.07	6/18/2022 0:55	1.03	6/18/2022 2:37	29.16
6/19/2022 2:21	83.45	6/18/2022 1:38	0.68	6/18/2022 2:08	10.11	6/18/2022 0:56	1.05	6/18/2022 2:38	28.77
6/19/2022 2:22	83.46	6/18/2022 1:39	0.48	6/18/2022 2:09	10.09	6/18/2022 0:57	1.09	6/18/2022 2:39	28.60
6/19/2022 2:23	83.41	6/18/2022 1:40	0.34	6/18/2022 2:10	10.14	6/18/2022 0:58	1.12	6/18/2022 2:40	28.58
6/19/2022 2:24	83.46	6/18/2022 1:41	0.20	6/18/2022 2:11	10.13	6/18/2022 0:59	1.12	6/18/2022 2:41	28.51
6/19/2022 2:25	83.48	6/18/2022 1:42	0.12	6/18/2022 2:12	10.17	6/18/2022 1:00	1.12	6/18/2022 2:42	28.55
6/19/2022 2:26	83.45	6/18/2022 1:43	0.03	6/18/2022 2:13	10.13	6/18/2022 1:01	1.13	6/18/2022 2:43	28.54
6/19/2022 2:27	83.42	6/18/2022 1:44	-0.05	6/18/2022 2:14	10.21	6/18/2022 1:02	1.06	6/18/2022 2:44	30.69
6/19/2022 2:28	83.45	6/18/2022 1:45	-0.06	6/18/2022 2:15	10.19	6/18/2022 1:03	1.05	6/18/2022 2:45	29.42
6/19/2022 2:29	83.43	6/18/2022 1:46	-0.10	6/18/2022 2:16	10.17	6/18/2022 1:04	1.02	6/18/2022 2:46	28.88
6/19/2022 2:30	83.45	6/18/2022 1:47	-0.04	6/18/2022 2:17	10.19	6/18/2022 1:05	1.02	6/18/2022 2:47	28.67
6/19/2022 2:31	83.46	6/18/2022 1:48	-0.06	6/18/2022 2:18	10.17	6/18/2022 1:06	1.01	6/18/2022 2:48	28.59
6/19/2022 2:32	83.43	6/18/2022 1:49	-0.08	6/18/2022 2:19	10.19	6/18/2022 1:07	1.03	6/18/2022 2:49	28.57
6/19/2022 2:33	83.45	6/18/2022 1:50	-0.08	6/18/2022 2:20	10.18	6/18/2022 1:08	1.07	6/18/2022 2:50	28.52
6/19/2022 2:34	83.46	6/18/2022 1:51	-0.09	6/18/2022 2:21	10.23	6/18/2022 1:09	1.08	6/18/2022 2:51	28.52
6/19/2022 2:35	83.45	6/18/2022 1:52	-0.03	6/18/2022 2:22	10.20	6/18/2022 1:10	1.11	6/18/2022 2:52	30.34
6/19/2022 2:36	83.42	6/18/2022 1:53	-0.04	6/18/2022 2:23	10.20	6/18/2022 1:11	1.15	6/18/2022 2:53	29.29
6/19/2022 2:37	83.45	6/18/2022 1:54	-0.08	6/18/2022 2:24	10.19	6/18/2022 1:12	1.09	6/18/2022 2:54	28.80
6/19/2022 2:38	83.46	6/18/2022 1:55	-0.06	6/18/2022 2:25	10.21	6/18/2022 1:13	1.11	6/18/2022 2:55	28.64
6/19/2022 2:39	83.45	6/18/2022 1:56	-0.08	6/18/2022 2:26	10.17	6/18/2022 1:14	1.01	6/18/2022 2:56	28.57
6/19/2022 2:40	83.48	6/18/2022 1:57	-0.10	6/18/2022 2:27	10.22	6/18/2022 1:15	1.02	6/18/2022 2:57	28.57
6/19/2022 2:41	83.44	6/18/2022 1:58	-0.06	6/18/2022 2:28	10.15	6/18/2022 1:16	1.02	6/18/2022 2:58	28.56
6/19/2022 2:42	83.47	6/18/2022 1:59	-0.05	6/18/2022 2:29	10.11	6/18/2022 1:17	1.04	6/18/2022 2:59	28.54
6/19/2022 2:43	83.45	6/18/2022 2:00	-0.07	6/18/2022 2:30	10.16	6/18/2022 1:18	1.03	6/18/2022 3:00	30.19
6/19/2022 2:44	83.44	6/18/2022 2:01	-0.07	6/18/2022 2:31	10.15	6/18/2022 1:19	1.07	6/18/2022 3:01	29.18
6/19/2022 2:45	83.47	6/18/2022 2:02	-0.02	6/18/2022 2:32	10.13	6/18/2022 1:20	1.11	6/18/2022 3:02	28.78
6/19/2022 2:46	83.44	6/18/2022 2:03	-0.04	6/18/2022 2:33	10.16	6/18/2022 1:21	1.14	6/18/2022 3:03	28.61
6/19/2022 2:47	83.47	6/18/2022 2:04	-0.05	6/18/2022 2:34	10.13	6/18/2022 1:22	1.09	6/18/2022 3:04	28.61
6/19/2022 2:48	83.43	6/18/2022 2:05	-0.07	6/18/2022 2:35	10.13	6/18/2022 1:23	1.13	6/18/2022 3:05	28.56
6/19/2022 2:49	83.42	6/18/2022 2:06	-0.11	6/18/2022 2:36	10.15	6/18/2022 1:24	1.02	6/18/2022 3:06	28.53
6/19/2022 2:50	83.46	6/18/2022 2:07	-0.10	6/18/2022 2:37	10.13	6/18/2022 1:25	1.08	6/18/2022 3:07	28.52
6/19/2022 2:51	83.44	6/18/2022 2:08	-0.06	6/18/2022 2:38	10.12	6/18/2022 1:26	1.01	6/18/2022 3:08	30.09
6/19/2022 2:52	83.43	6/18/2022 2:09	4.71	6/18/2022 2:39	10.13	6/18/2022 1:27	1.04	6/18/2022 3:09	29.16
6/19/2022 2:53	83.46	6/18/2022 2:10	8.85	6/18/2022 2:40	10.12	6/18/2022 1:28	1.05	6/18/2022 3:10	28.76
6/19/2022 2:54	83.46	6/18/2022 2:11	7.32	6/18/2022 2:41	10.12	6/18/2022 1:29	1.04	6/18/2022 3:11	28.60
6/19/2022 2:55	83.45	6/18/2022 2:12	6.06	6/18/2022 2:42	10.12	6/18/2022 1:30	1.03	6/18/2022 3:12	28.57
6/19/2022 2:56	83.44	6/18/2022 2:13	5.05	6/18/2022 2:43	10.13	6/18/2022 1:31	1.07	6/18/2022 3:13	28.56
6/19/2022 2:57	83.46	6/18/2022 2:14	4.17	6/18/2022 2:44	10.13	6/18/2022 1:32	1.03	6/18/2022 3:14	28.57
6/19/2022 2:58	83.42	6/18/2022 2:15	3.49	6/18/2022 2:45	10.16	6/18/2022 1:33	1.02	6/18/2022 3:15	28.56
6/19/2022 2:59	83.43	6/18/2022 2:16	2.82	6/18/2022 2:46	10.16	6/18/2022 1:34	1.02	6/18/2022 3:16	28.53
6/19/2022 3:00	83.46	6/18/2022 2:17	2.37	6/18/2022 2:47	10.19	6/18/2022 1:35	1.01	6/18/2022 3:17	28.53
6/19/2022 3:01	83.44	6/18/2022 2:18	1.96	6/18/2022 2:48	10.20	6/18/2022 1:36	1.01	6/18/2022 3:18	28.52
6/19/2022 3:02	83.48	6/18/2022 2:19	3.90	6/18/2022 2:49	10.18	6/18/2022 1:37	1.00	6/18/2022 3:19	28.48
6/19/2022 3:03	83.42	6/18/2022 2:20	9.01	6/18/2022 2:50	10.20	6/18/2022 1:38	1.03	6/18/2022 3:20	30.63
6/19/2022 3:04	83.47	6/18/2022 2:21	7.85	6/18/2022 2:51	10.18	6/18/2022 1:39	1.08	6/18/2022 3:21	29.42
6/19/2022 3:05	83.42	6/18/2022 2:22	6.56	6/18/2022 2:52	10.21	6/18/2022 1:40	1.08	6/18/2022 3:22	31.32
6/19/2022 3:06	83.45	6/18/2022 2:23	5.44	6/18/2022 2:53	10.18	6/18/2022 1:41	1.10	6/18/2022 3:23	29.77
6/19/2022 3:07	83.45	6/18/2022 2:24	4.52	6/18/2022 2:54	10.18	6/18/2022 1:42	1.15	6/18/2022 3:24	31.49
6/19/2022 3:08	83.47	6/18/2022 2:25	3.81	6/18/2022 2:55	10.19	6/18/2022 1:43	1.16	6/18/2022 3:25	29.98
6/19/2022 3:09	83.43	6/18/2022 2:26	3.14	6/18/2022 2:56	10.20	6/18/2022 1:44	1.15	6/18/2022 3:26	31.46
6/19/2022 3:10	83.47	6/18/2022 2:27	2.61	6/18/2022 2:57	10.15	6/18/2022 1:45	1.10	6/18/2022 3:27	29.89
6/19/2022 3:11	83.44	6/18/2022 2:28	2.16	6/18/2022 2:58	10.15	6/18/2022 1:46	1.11	6/18/2022 3:28	31.11
6/19/2022 3:12	83.45	6/18/2022 2:29	1.82	6/18/2022 2:59	10.17	6/18/2022 1:47	1.09	6/18/2022 3:29	30.69
6/19/2022 3:13	83.44	6/18/2022 2:30	1.48	6/18/2022 3:00	10.18	6/18/2022 1:48	1.05	6/18/2022 3:30	30.77
6/19/2022 3:14	83.46	6/18/2022 2:31	1.24	6/18/2022 3:01	10.13	6/18/2022 1:49	1.03	6/18/2022 3:31	31.43
6/19/2022 3:15	83.45	6/18/2022 2:32	0.97	6/18/2022 3:02	10.16	6/18/2022 1:50	0.98	6/18/2022 3:32	30.46
6/19/2022 3:16	83.43	6/18/2022 2:33	0.75	6/18/2022 3:03	10.13	6/18/2022 1:51	1.05	6/18/2022 3:33	29.42
6/19/2022 3:17	83.47	6/18/2022 2:34	0.53	6/18/2022 3:04	10.17	6/18/2022 1:52	1.06	6/18/2022 3:34	28.92
6/19/2022 3:18	83.40	6/18/2022 2:35	0.42	6/18/2022 3:05	10.10	6/18/2022 1:53	1.08	6/18/2022 3:35	28.78
6/19/2022 3:19	83.44	6/18/2022 2:36	0.30	6/18/2022 3:06	10.13	6/18/2022 1:54	1.11	6/18/2022 3:36	31.08
6/19/2022 3:20	83.43	6/18/2022 2:37	0.16	6/18/2022 3:07	10.14	6/18/2022 1:55	1.13	6/18/2022 3:37	29.79
6/19/2022 3:21	83.45	6/18/2022 2:38	0.04	6/18/2022 3:08	10.15	6/18/2022 1:56	1.15	6/18/2022 3:38	31.31
6/19/2022 3:22	83.43	6/18/2022 2:39	-0.04	6/18/2022 3:09	10.14	6/18/2022 1:57	1.12	6/18/2022 3:39	29.86
6/19/2022 3:23	83.45	6/18/2022 2:40	-0.04	6/18/2022 3:10	10.11	6/18/2022 1:58	1.11	6/18/2022 3:40	31.22
6/19/2022 3:24	83.46	6/18/2022 2:41	-0.10	6/18/2022 3:11	10.12	6/18/2022 1:59	1.06	6/18/2022 3:41	29.80
6/19/2022 3:25	83.45	6/18/2022 2:42	-0.09	6/18/2022 3:12	10.10	6/18/2022 2:00	1.02	6/18/2022 3:42	29.13
6/19/2022 3:26	83.45	6/18/2022 2:43	-0.06	6/18/2022 3:13	10.12	6/18/2022 2:01	1.03	6/18/2022 3:43	28.87
6/19/2022 3:27	83.42	6/18/2022 2:44	-0.06	6/18/2022 3:14	10.10	6/18/2022 2:02	1.04	6/18/2022 3:44	28.80
6/19/2022 3:28	83.42	6/18/2022 2:45	0.03	6/18/2022 3:15	10.15	6/18/2022 2:03	1.10	6/18/2022 3:45	28.69
6/19/2022 3:29	83.41	6/18/2022 2:46	5.96	6/18/2022 3:16	10.12	6/18/2022 2:04	1.09	6/18/2022 3:46	28.74
6/19/2022 3:30	83.46	6/18/2022 2:47	7.16	6/18/2022 3:17	10.18	6/18/2022 2:05	1.12	6/18/2022 3:47	28.69
6/19/2022 3:31	83.45	6/18/2022 2:48	5.91	6/18/2022 3:18	10.18	6/18/2022 2:06	1.10	6/18/2022 3:48	28.69
6/19/2022 3:32	83.46	6/18/2022 2:49	4.88	6/18/2022 3:19	10.19	6/18/2022 2:07	1.14	6/18/2022 3:49	28.66
6/19/2022 3:33	83.44	6/18/2022 2:50	4.04	6/18/2022 3:20	10.24	6/18/2022 2:08	1.13	6/18/2022 3:50	28.68

6/19/2022 3:34	83.46	6/18/2022 2:51	3.40	6/18/2022 3:21	10.24	6/18/2022 2:09	1.15	6/18/2022 3:51	28.66
6/19/2022 3:35	83.43	6/18/2022 2:52	2.79	6/18/2022 3:22	10.24	6/18/2022 2:10	1.12	6/18/2022 3:52	28.60
6/19/2022 3:36	83.45	6/18/2022 2:53	2.30	6/18/2022 3:23	10.22	6/18/2022 2:11	1.17	6/18/2022 3:53	28.61
6/19/2022 3:37	83.47	6/18/2022 2:54	1.91	6/18/2022 3:24	10.29	6/18/2022 2:12	1.15	6/18/2022 3:54	28.64
6/19/2022 3:38	83.44	6/18/2022 2:55	1.57	6/18/2022 3:25	10.27	6/18/2022 2:13	1.09	6/18/2022 3:55	28.63
6/19/2022 3:39	83.44	6/18/2022 2:56	1.32	6/18/2022 3:26	10.28	6/18/2022 2:14	1.09	6/18/2022 3:56	28.61
6/19/2022 3:40	83.45	6/18/2022 2:57	1.06	6/18/2022 3:27	10.22	6/18/2022 2:15	1.07	6/18/2022 3:57	28.60
6/19/2022 3:41	83.42	6/18/2022 2:58	0.82	6/18/2022 3:28	10.24	6/18/2022 2:16	1.10	6/18/2022 3:58	28.59
6/19/2022 3:42	83.45	6/18/2022 2:59	0.62	6/18/2022 3:29	10.26	6/18/2022 2:17	1.12	6/18/2022 3:59	28.57
6/19/2022 3:43	83.46	6/18/2022 3:00	0.48	6/18/2022 3:30	10.23	6/18/2022 2:18	1.12	6/18/2022 4:00	28.57
6/19/2022 3:44	83.44	6/18/2022 3:01	0.31	6/18/2022 3:31	10.23	6/18/2022 2:19	1.13	6/18/2022 4:01	28.61
6/19/2022 3:45	83.42	6/18/2022 3:02	0.21	6/18/2022 3:32	10.23	6/18/2022 2:20	1.15	6/18/2022 4:02	28.60
6/19/2022 3:46	83.43	6/18/2022 3:03	0.10	6/18/2022 3:33	10.22	6/18/2022 2:21	1.12	6/18/2022 4:03	28.59
6/19/2022 3:47	83.43	6/18/2022 3:04	0.03	6/18/2022 3:34	10.20	6/18/2022 2:22	1.06	6/18/2022 4:04	28.58
6/19/2022 3:48	83.45	6/18/2022 3:05	-0.06	6/18/2022 3:35	10.21	6/18/2022 2:23	1.04	6/18/2022 4:05	28.58
6/19/2022 3:49	83.45	6/18/2022 3:06	-0.06	6/18/2022 3:36	10.18	6/18/2022 2:24	1.07	6/18/2022 4:06	28.58
6/19/2022 3:50	83.42	6/18/2022 3:07	-0.07	6/18/2022 3:37	10.16	6/18/2022 2:25	1.05	6/18/2022 4:07	28.57
6/19/2022 3:51	83.45	6/18/2022 3:08	2.01	6/18/2022 3:38	10.19	6/18/2022 2:26	1.06	6/18/2022 4:08	28.56
6/19/2022 3:52	83.45	6/18/2022 3:09	7.55	6/18/2022 3:39	10.16	6/18/2022 2:27	1.06	6/18/2022 4:09	28.58
6/19/2022 3:53	83.43	6/18/2022 3:10	8.11	6/18/2022 3:40	10.15	6/18/2022 2:28	1.07	6/18/2022 4:10	28.58
6/19/2022 3:54	83.39	6/18/2022 3:11	6.74	6/18/2022 3:41	10.14	6/18/2022 2:29	1.00	6/18/2022 4:11	28.55
6/19/2022 3:55	83.43	6/18/2022 3:12	5.60	6/18/2022 3:42	10.14	6/18/2022 2:30	1.06	6/18/2022 4:12	28.54
6/19/2022 3:56	83.45	6/18/2022 3:13	4.66	6/18/2022 3:43	10.13	6/18/2022 2:31	1.05	6/18/2022 4:13	28.54
6/19/2022 3:57	83.44	6/18/2022 3:14	3.90	6/18/2022 3:44	10.16	6/18/2022 2:32	1.09	6/18/2022 4:14	28.56
6/19/2022 3:58	83.48	6/18/2022 3:15	3.23	6/18/2022 3:45	10.12	6/18/2022 2:33	1.07	6/18/2022 4:15	28.56
6/19/2022 3:59	83.46	6/18/2022 3:16	2.69	6/18/2022 3:46	10.13	6/18/2022 2:34	1.08	6/18/2022 4:16	28.55
6/19/2022 4:00	83.48	6/18/2022 3:17	6.09	6/18/2022 3:47	10.17	6/18/2022 2:35	1.12	6/18/2022 4:17	28.53
6/19/2022 4:01	83.43	6/18/2022 3:18	10.79	6/18/2022 3:48	10.18	6/18/2022 2:36	1.14	6/18/2022 4:18	28.52
6/19/2022 4:02	83.42	6/18/2022 3:19	9.44	6/18/2022 3:49	10.17	6/18/2022 2:37	1.14	6/18/2022 4:19	28.53
6/19/2022 4:03	83.47	6/18/2022 3:20	7.88	6/18/2022 3:50	10.20	6/18/2022 2:38	1.16	6/18/2022 4:20	28.52
6/19/2022 4:04	83.48	6/18/2022 3:21	6.55	6/18/2022 3:51	10.22	6/18/2022 2:39	1.10	6/18/2022 4:21	28.50
6/19/2022 4:05	83.43	6/18/2022 3:22	5.48	6/18/2022 3:52	10.21	6/18/2022 2:40	1.09	6/18/2022 4:22	28.52
6/19/2022 4:06	83.42	6/18/2022 3:23	4.61	6/18/2022 3:53	10.20	6/18/2022 2:41	1.07	6/18/2022 4:23	28.50
6/19/2022 4:07	83.46	6/18/2022 3:24	3.85	6/18/2022 3:54	10.21	6/18/2022 2:42	1.04	6/18/2022 4:24	28.53
6/19/2022 4:08	83.48	6/18/2022 3:25	3.23	6/18/2022 3:55	10.22	6/18/2022 2:43	1.02	6/18/2022 4:25	28.49
6/19/2022 4:09	83.45	6/18/2022 3:26	2.66	6/18/2022 3:56	10.24	6/18/2022 2:44	1.00	6/18/2022 4:26	28.50
6/19/2022 4:10	83.45	6/18/2022 3:27	2.22	6/18/2022 3:57	10.22	6/18/2022 2:45	1.05	6/18/2022 4:27	28.53
6/19/2022 4:11	83.43	6/18/2022 3:28	1.84	6/18/2022 3:58	10.23	6/18/2022 2:46	1.05	6/18/2022 4:28	28.53
6/19/2022 4:12	83.44	6/18/2022 3:29	1.59	6/18/2022 3:59	10.20	6/18/2022 2:47	1.12	6/18/2022 4:29	28.47
6/19/2022 4:13	83.42	6/18/2022 3:30	1.28	6/18/2022 4:00	10.20	6/18/2022 2:48	1.11	6/18/2022 4:30	28.49
6/19/2022 4:14	83.46	6/18/2022 3:31	1.07	6/18/2022 4:01	10.17	6/18/2022 2:49	1.06	6/18/2022 4:31	28.52
6/19/2022 4:15	83.43	6/18/2022 3:32	0.84	6/18/2022 4:02	10.21	6/18/2022 2:50	1.06	6/18/2022 4:32	28.52
6/19/2022 4:16	83.42	6/18/2022 3:33	0.65	6/18/2022 4:03	10.18	6/18/2022 2:51	1.07	6/18/2022 4:33	28.51
6/19/2022 4:17	83.44	6/18/2022 3:34	0.49	6/18/2022 4:04	10.19	6/18/2022 2:52	1.03	6/18/2022 4:34	28.50
6/19/2022 4:18	83.48	6/18/2022 3:35	0.33	6/18/2022 4:05	10.15	6/18/2022 2:53	1.07	6/18/2022 4:35	28.51
6/19/2022 4:19	83.43	6/18/2022 3:36	0.24	6/18/2022 4:06	10.16	6/18/2022 2:54	1.03	6/18/2022 4:36	28.51
6/19/2022 4:20	83.45	6/18/2022 3:37	0.11	6/18/2022 4:07	10.19	6/18/2022 2:55	1.06	6/18/2022 4:37	28.50
6/19/2022 4:21	83.46	6/18/2022 3:38	0.05	6/18/2022 4:08	10.19	6/18/2022 2:56	1.07	6/18/2022 4:38	28.53
6/19/2022 4:22	83.43	6/18/2022 3:39	-0.03	6/18/2022 4:09	10.14	6/18/2022 2:57	1.08	6/18/2022 4:39	28.51
6/19/2022 4:23	83.44	6/18/2022 3:40	-0.09	6/18/2022 4:10	10.14	6/18/2022 2:58	1.16	6/18/2022 4:40	28.49
6/19/2022 4:24	83.42	6/18/2022 3:41	-0.07	6/18/2022 4:11	10.14	6/18/2022 2:59	1.15	6/18/2022 4:41	28.50
6/19/2022 4:25	83.46	6/18/2022 3:42	-0.06	6/18/2022 4:12	10.11	6/18/2022 3:00	1.19	6/18/2022 4:42	28.49
6/19/2022 4:26	83.44	6/18/2022 3:43	-0.07	6/18/2022 4:13	10.14	6/18/2022 3:01	1.13	6/18/2022 4:43	28.50
6/19/2022 4:27	83.45	6/18/2022 3:44	-0.05	6/18/2022 4:14	10.09	6/18/2022 3:02	1.16	6/18/2022 4:44	28.50
6/19/2022 4:28	83.43	6/18/2022 3:45	-0.05	6/18/2022 4:15	10.11	6/18/2022 3:03	1.08	6/18/2022 4:45	28.47
6/19/2022 4:29	83.44	6/18/2022 3:46	-0.03	6/18/2022 4:16	10.10	6/18/2022 3:04	1.08	6/18/2022 4:46	28.50
6/19/2022 4:30	83.48	6/18/2022 3:47	-0.05	6/18/2022 4:17	10.12	6/18/2022 3:05	1.06	6/18/2022 4:47	28.48
6/19/2022 4:31	83.44	6/18/2022 3:48	-0.02	6/18/2022 4:18	10.15	6/18/2022 3:06	1.04	6/18/2022 4:48	28.49
6/19/2022 4:32	83.43	6/18/2022 3:49	-0.09	6/18/2022 4:19	10.20	6/18/2022 3:07	1.05	6/18/2022 4:49	28.48
6/19/2022 4:33	83.47	6/18/2022 3:50	-0.04	6/18/2022 4:20	10.22	6/18/2022 3:08	1.03	6/18/2022 4:50	28.50
6/19/2022 4:34	83.42	6/18/2022 3:51	-0.08	6/18/2022 4:21	10.16	6/18/2022 3:09	1.03	6/18/2022 4:51	28.47
6/19/2022 4:35	83.45	6/18/2022 3:52	-0.04	6/18/2022 4:22	10.18	6/18/2022 3:10	1.03	6/18/2022 4:52	28.53
6/19/2022 4:36	83.43	6/18/2022 3:53	-0.08	6/18/2022 4:23	10.20	6/18/2022 3:11	1.08	6/18/2022 4:53	28.47
6/19/2022 4:37	83.44	6/18/2022 3:54	-0.04	6/18/2022 4:24	10.23	6/18/2022 3:12	1.04	6/18/2022 4:54	28.46
6/19/2022 4:38	83.46	6/18/2022 3:55	-0.07	6/18/2022 4:25	10.23	6/18/2022 3:13	1.04	6/18/2022 4:55	28.50
6/19/2022 4:39	83.46	6/18/2022 3:56	1.45	6/18/2022 4:26	10.21	6/18/2022 3:14	1.04	6/18/2022 4:56	28.47
6/19/2022 4:40	83.47	6/18/2022 3:57	7.05	6/18/2022 4:27	10.23	6/18/2022 3:15	1.03	6/18/2022 4:57	28.48
6/19/2022 4:41	83.48	6/18/2022 3:58	6.62	6/18/2022 4:28	10.18	6/18/2022 3:16	1.01	6/18/2022 4:58	28.45
6/19/2022 4:42	83.45	6/18/2022 3:59	5.48	6/18/2022 4:29	10.17	6/18/2022 3:17	1.06	6/18/2022 4:59	28.50
6/19/2022 4:43	83.44	6/18/2022 4:00	4.56	6/18/2022 4:30	10.22	6/18/2022 3:18	1.07	6/18/2022 5:00	28.47
6/19/2022 4:44	83.42	6/18/2022 4:01	3.83	6/18/2022 4:31	10.19	6/18/2022 3:19	1.12	6/18/2022 5:01	28.45
6/19/2022 4:45	83.47	6/18/2022 4:02	3.15	6/18/2022 4:32	10.15	6/18/2022 3:20	1.14	6/18/2022 5:02	28.43
6/19/2022 4:46	83.44	6/18/2022 4:03	2.55	6/18/2022 4:33	10.14	6/18/2022 3:21	1.14	6/18/2022 5:03	28.49
6/19/2022 4:47	83.44	6/18/2022 4:04	2.15	6/18/2022 4:34	10.15	6/18/2022 3:22	1.00	6/18/2022 5:04	28.45
6/19/2022 4:48	83.45	6/18/2022 4:05	1.77	6/18/2022 4:35	10.15	6/18/2022 3:23	1.05	6/18/2022 5:05	28.47
6/19/2022 4:49	83.45	6/18/2022 4:06	1.50	6/18/2022 4:36	10.16	6/18/2022 3:24	1.05	6/18/2022 5:06	28.53
6/19/2022 4:50	83.42	6/18/2022 4:07	1.21	6/18/2022 4:37	10.17	6/18/2022 3:25	1.04	6/18/2022 5:07	28.46
6/19/2022 4:51	83.48	6/18/2022 4:08	0.99	6/18/2022 4:38	10.11	6/18/2022 3:26	1.05	6/18/2022 5:08	28.48
6/19/2022 4:52	83.42	6/18/2022 4:09	0.76	6/18/2022 4:39	10.16	6/18/2022 3:27	1.05	6/18/2022 5:09	28.48
6/19/2022 4:53	83.44	6/18/2022 4:10	0.57	6/18/2022 4:40	10.13	6/18/2022 3:28	1.01	6/18/2022 5:10	28.45
6/19/2022 4:54	83.43	6/18/2022 4:11	0.39	6/18/2022 4:41	10.14	6/18/2022 3:29	1.05	6/18/2022 5:11	28.46
6/19/2022 4:55	83.47	6/18/2022 4:12	0.25	6/18/2022 4:42	10.12	6/18/2022 3:30	1.03	6/18/2022 5:12	28.47
6/19/2022 4:56	83.47	6/18/2022 4:13	0.14	6/18/2022 4:43	10.13	6/18/2022 3:31	1.02	6/18/2022 5:13	28.46
6/19/2022 4:57	83.44	6/18/2022 4:14	0.14	6/18/2022 4:44	10.08	6/18/2022 3:32	1.05	6/18/2022 5:14	28.42
6/19/2022 4:58	83.43	6/18/2022 4:15	-0.01	6/18/2022 4:45	10.12	6/18/2022 3:33	1.07	6/18/2022 5:15	28.44
6/19/2022 4:59	83.43	6/18/2022 4:16	-0.02	6/18/2022 4:46	10.11	6/18/2022 3:34	1.08	6/18/2022 5:16	28.46
6/19/2022 5:00	83.45	6/18/2022 4:17	-0.07	6/18/2022 4:47	10.16	6/18/2022 3:35	1.14	6/18/2022 5:17	28.42
6/19/2022 5:01	83.45	6/18/2022 4:18	-0.06	6/18/2022 4:48	10.17	6/18/2022 3:36	1.14	6/18/2022 5:18	28.49

6/19/2022 5:02	83.42	6/18/2022 4:19	-0.05	6/18/2022 4:49	10.16	6/18/2022 3:37	1.17	6/18/2022 5:19	28.45
6/19/2022 5:03	83.42	6/18/2022 4:20	-0.05	6/18/2022 4:50	10.18	6/18/2022 3:38	1.10	6/18/2022 5:20	28.43
6/19/2022 5:04	83.40	6/18/2022 4:21	-0.05	6/18/2022 4:51	10.19	6/18/2022 3:39	1.08	6/18/2022 5:21	28.44
6/19/2022 5:05	83.45	6/18/2022 4:22	-0.04	6/18/2022 4:52	10.19	6/18/2022 3:40	1.04	6/18/2022 5:22	28.45
6/19/2022 5:06	83.44	6/18/2022 4:23	-0.03	6/18/2022 4:53	10.19	6/18/2022 3:41	1.06	6/18/2022 5:23	28.47
6/19/2022 5:07	83.43	6/18/2022 4:24	-0.05	6/18/2022 4:54	10.19	6/18/2022 3:42	1.01	6/18/2022 5:24	28.43
6/19/2022 5:08	83.43	6/18/2022 4:25	-0.05	6/18/2022 4:55	10.18	6/18/2022 3:43	1.05	6/18/2022 5:25	28.43
6/19/2022 5:09	83.45	6/18/2022 4:26	-0.05	6/18/2022 4:56	10.20	6/18/2022 3:44	1.03	6/18/2022 5:26	28.41
6/19/2022 5:10	83.43	6/18/2022 4:27	-0.06	6/18/2022 4:57	10.19	6/18/2022 3:45	1.05	6/18/2022 5:27	28.42
6/19/2022 5:11	83.40	6/18/2022 4:28	-0.05	6/18/2022 4:58	10.18	6/18/2022 3:46	1.06	6/18/2022 5:28	28.42
6/19/2022 5:12	83.42	6/18/2022 4:29	-0.07	6/18/2022 4:59	10.20	6/18/2022 3:47	1.14	6/18/2022 5:29	28.45
6/19/2022 5:13	83.44	6/18/2022 4:30	-0.05	6/18/2022 5:00	10.18	6/18/2022 3:48	1.16	6/18/2022 5:30	28.43
6/19/2022 5:14	83.41	6/18/2022 4:31	-0.03	6/18/2022 5:01	10.17	6/18/2022 3:49	1.13	6/18/2022 5:31	28.48
6/19/2022 5:15	83.40	6/18/2022 4:32	-0.06	6/18/2022 5:02	10.20	6/18/2022 3:50	1.13	6/18/2022 5:32	28.45
6/19/2022 5:16	83.43	6/18/2022 4:33	-0.04	6/18/2022 5:03	10.16	6/18/2022 3:51	1.08	6/18/2022 5:33	28.45
6/19/2022 5:17	83.40	6/18/2022 4:34	-0.05	6/18/2022 5:04	10.17	6/18/2022 3:52	1.11	6/18/2022 5:34	28.47
6/19/2022 5:18	83.43	6/18/2022 4:35	-0.02	6/18/2022 5:05	10.18	6/18/2022 3:53	1.04	6/18/2022 5:35	28.46
6/19/2022 5:19	83.45	6/18/2022 4:36	-0.05	6/18/2022 5:06	10.13	6/18/2022 3:54	1.05	6/18/2022 5:36	28.47
6/19/2022 5:20	83.40	6/18/2022 4:37	-0.03	6/18/2022 5:07	10.13	6/18/2022 3:55	1.05	6/18/2022 5:37	28.46
6/19/2022 5:21	83.44	6/18/2022 4:38	-0.07	6/18/2022 5:08	10.15	6/18/2022 3:56	1.06	6/18/2022 5:38	28.46
6/19/2022 5:22	83.42	6/18/2022 4:39	-0.06	6/18/2022 5:09	10.14	6/18/2022 3:57	1.09	6/18/2022 5:39	28.46
6/19/2022 5:23	83.42	6/18/2022 4:40	-0.06	6/18/2022 5:10	10.17	6/18/2022 3:58	1.07	6/18/2022 5:40	28.43
6/19/2022 5:24	83.44	6/18/2022 4:41	-0.04	6/18/2022 5:11	10.11	6/18/2022 3:59	1.04	6/18/2022 5:41	28.44
6/19/2022 5:25	83.42	6/18/2022 4:42	-0.07	6/18/2022 5:12	10.10	6/18/2022 4:00	1.07	6/18/2022 5:42	28.42
6/19/2022 5:26	83.42	6/18/2022 4:43	-0.10	6/18/2022 5:13	10.12	6/18/2022 4:01	1.04	6/18/2022 5:43	28.45
6/19/2022 5:27	83.44	6/18/2022 4:44	-0.09	6/18/2022 5:14	10.11	6/18/2022 4:02	1.05	6/18/2022 5:44	28.44
6/19/2022 5:28	83.40	6/18/2022 4:45	-0.07	6/18/2022 5:15	10.12	6/18/2022 4:03	1.04	6/18/2022 5:45	28.43
6/19/2022 5:29	83.41	6/18/2022 4:46	-0.06	6/18/2022 5:16	10.11	6/18/2022 4:04	1.05	6/18/2022 5:46	28.45
6/19/2022 5:30	83.42	6/18/2022 4:47	-0.01	6/18/2022 5:17	10.11	6/18/2022 4:05	1.08	6/18/2022 5:47	28.44
6/19/2022 5:31	83.42	6/18/2022 4:48	-0.06	6/18/2022 5:18	10.12	6/18/2022 4:06	1.08	6/18/2022 5:48	28.44
6/19/2022 5:32	83.44	6/18/2022 4:49	-0.08	6/18/2022 5:19	10.14	6/18/2022 4:07	1.08	6/18/2022 5:49	28.46
6/19/2022 5:33	83.42	6/18/2022 4:50	-0.04	6/18/2022 5:20	10.19	6/18/2022 4:08	1.11	6/18/2022 5:50	28.45
6/19/2022 5:34	83.43	6/18/2022 4:51	-0.06	6/18/2022 5:21	10.17	6/18/2022 4:09	1.13	6/18/2022 5:51	28.45
6/19/2022 5:35	83.40	6/18/2022 4:52	-0.09	6/18/2022 5:22	10.21	6/18/2022 4:10	1.19	6/18/2022 5:52	28.44
6/19/2022 5:36	83.46	6/18/2022 4:53	-0.08	6/18/2022 5:23	10.27	6/18/2022 4:11	1.14	6/18/2022 5:53	28.41
6/19/2022 5:37	83.43	6/18/2022 4:54	-0.05	6/18/2022 5:24	10.30	6/18/2022 4:12	1.18	6/18/2022 5:54	28.38
6/19/2022 5:38	83.41	6/18/2022 4:55	-0.07	6/18/2022 5:25	10.34	6/18/2022 4:13	1.15	6/18/2022 5:55	28.44
6/19/2022 5:39	83.40	6/18/2022 4:56	-0.07	6/18/2022 5:26	10.37	6/18/2022 4:14	1.09	6/18/2022 5:56	28.43
6/19/2022 5:40	83.43	6/18/2022 4:57	-0.06	6/18/2022 5:27	10.41	6/18/2022 4:15	1.08	6/18/2022 5:57	28.46
6/19/2022 5:41	83.45	6/18/2022 4:58	-0.04	6/18/2022 5:28	10.46	6/18/2022 4:16	1.08	6/18/2022 5:58	28.43
6/19/2022 5:42	83.40	6/18/2022 4:59	-0.04	6/18/2022 5:29	10.45	6/18/2022 4:17	1.05	6/18/2022 5:59	28.40
6/19/2022 5:43	83.40	6/18/2022 5:00	-0.04	6/18/2022 5:30	10.54	6/18/2022 4:18	1.07	6/18/2022 6:00	28.46
6/19/2022 5:44	83.42	6/18/2022 5:01	5.26	6/18/2022 5:31	10.60	6/18/2022 4:19	1.05	6/18/2022 6:01	28.45
6/19/2022 5:45	83.42	6/18/2022 5:02	7.08	6/18/2022 5:32	10.63	6/18/2022 4:20	1.09	6/18/2022 6:02	28.43
6/19/2022 5:46	83.44	6/18/2022 5:03	5.85	6/18/2022 5:33	10.63	6/18/2022 4:21	1.11	6/18/2022 6:03	28.44
6/19/2022 5:47	83.40	6/18/2022 5:04	4.86	6/18/2022 5:34	10.64	6/18/2022 4:22	1.16	6/18/2022 6:04	28.43
6/19/2022 5:48	83.43	6/18/2022 5:05	4.06	6/18/2022 5:35	10.68	6/18/2022 4:23	1.14	6/18/2022 6:05	28.43
6/19/2022 5:49	83.38	6/18/2022 5:06	3.30	6/18/2022 5:36	10.70	6/18/2022 4:24	1.19	6/18/2022 6:06	28.43
6/19/2022 5:50	83.42	6/18/2022 5:07	2.73	6/18/2022 5:37	10.73	6/18/2022 4:25	1.13	6/18/2022 6:07	28.42
6/19/2022 5:51	83.41	6/18/2022 5:08	2.29	6/18/2022 5:38	10.73	6/18/2022 4:26	1.11	6/18/2022 6:08	28.41
6/19/2022 5:52	83.42	6/18/2022 5:09	1.90	6/18/2022 5:39	10.77	6/18/2022 4:27	1.07	6/18/2022 6:09	28.44
6/19/2022 5:53	83.41	6/18/2022 5:10	1.53	6/18/2022 5:40	10.75	6/18/2022 4:28	1.05	6/18/2022 6:10	28.45
6/19/2022 5:54	83.40	6/18/2022 5:11	1.26	6/18/2022 5:41	10.77	6/18/2022 4:29	1.04	6/18/2022 6:11	28.40
6/19/2022 5:55	83.41	6/18/2022 5:12	1.00	6/18/2022 5:42	10.76	6/18/2022 4:30	1.05	6/18/2022 6:12	28.42
6/19/2022 5:56	83.43	6/18/2022 5:13	0.81	6/18/2022 5:43	10.72	6/18/2022 4:31	1.04	6/18/2022 6:13	28.44
6/19/2022 5:57	83.40	6/18/2022 5:14	0.61	6/18/2022 5:44	10.73	6/18/2022 4:32	1.08	6/18/2022 6:14	28.44
6/19/2022 5:58	83.42	6/18/2022 5:15	0.44	6/18/2022 5:45	10.68	6/18/2022 4:33	1.14	6/18/2022 6:15	28.43
6/19/2022 5:59	83.41	6/18/2022 5:16	0.33	6/18/2022 5:46	10.69	6/18/2022 4:34	1.19	6/18/2022 6:16	28.44
6/19/2022 6:00	83.39	6/18/2022 5:17	0.14	6/18/2022 5:47	10.67	6/18/2022 4:35	1.16	6/18/2022 6:17	28.46
6/19/2022 6:01	83.38	6/18/2022 5:18	0.09	6/18/2022 5:48	10.66	6/18/2022 4:36	1.14	6/18/2022 6:18	28.39
6/19/2022 6:02	83.43	6/18/2022 5:19	-0.03	6/18/2022 5:49	10.63	6/18/2022 4:37	1.09	6/18/2022 6:19	28.41
6/19/2022 6:03	83.41	6/18/2022 5:20	-0.09	6/18/2022 5:50	10.62	6/18/2022 4:38	1.06	6/18/2022 6:20	28.43
6/19/2022 6:04	83.40	6/18/2022 5:21	-0.02	6/18/2022 5:51	10.60	6/18/2022 4:39	1.04	6/18/2022 6:21	28.45
6/19/2022 6:05	83.40	6/18/2022 5:22	-0.04	6/18/2022 5:52	10.56	6/18/2022 4:40	1.01	6/18/2022 6:22	28.43
6/19/2022 6:06	83.36	6/18/2022 5:23	-0.07	6/18/2022 5:53	10.53	6/18/2022 4:41	1.03	6/18/2022 6:23	28.43
6/19/2022 6:07	83.42	6/18/2022 5:24	-0.03	6/18/2022 5:54	10.57	6/18/2022 4:42	1.05	6/18/2022 6:24	28.43
6/19/2022 6:08	83.38	6/18/2022 5:25	-0.03	6/18/2022 5:55	10.57	6/18/2022 4:43	1.09	6/18/2022 6:25	28.42
6/19/2022 6:09	83.41	6/18/2022 5:26	-0.06	6/18/2022 5:56	10.49	6/18/2022 4:44	1.11	6/18/2022 6:26	28.42
6/19/2022 6:10	83.39	6/18/2022 5:27	-0.07	6/18/2022 5:57	10.54	6/18/2022 4:45	1.13	6/18/2022 6:27	28.44
6/19/2022 6:11	83.43	6/18/2022 5:28	-0.06	6/18/2022 5:58	10.52	6/18/2022 4:46	1.15	6/18/2022 6:28	28.43
6/19/2022 6:12	83.40	6/18/2022 5:29	-0.05	6/18/2022 5:59	10.56	6/18/2022 4:47	1.12	6/18/2022 6:29	28.43
6/19/2022 6:13	83.42	6/18/2022 5:30	-0.05	6/18/2022 6:00	10.53	6/18/2022 4:48	1.12	6/18/2022 6:30	28.42
6/19/2022 6:14	83.40	6/18/2022 5:31	-0.08	6/18/2022 6:01	10.52	6/18/2022 4:49	1.05	6/18/2022 6:31	28.43
6/19/2022 6:15	83.37	6/18/2022 5:32	-0.03	6/18/2022 6:02	10.52	6/18/2022 4:50	1.02	6/18/2022 6:32	28.40
6/19/2022 6:16	83.39	6/18/2022 5:33	-0.05	6/18/2022 6:03	10.53	6/18/2022 4:51	1.03	6/18/2022 6:33	28.46
6/19/2022 6:17	83.43	6/18/2022 5:34	-0.05	6/18/2022 6:04	10.53	6/18/2022 4:52	1.03	6/18/2022 6:34	28.41
6/19/2022 6:18	83.40	6/18/2022 5:35	-0.07	6/18/2022 6:05	10.52	6/18/2022 4:53	1.01	6/18/2022 6:35	28.43
6/19/2022 6:19	83.40	6/18/2022 5:36	-0.05	6/18/2022 6:06	10.56	6/18/2022 4:54	1.07	6/18/2022 6:36	28.43
6/19/2022 6:20	83.37	6/18/2022 5:37	-0.09	6/18/2022 6:07	10.53	6/18/2022 4:55	1.05	6/18/2022 6:37	28.42
6/19/2022 6:21	83.42	6/18/2022 5:38	-0.07	6/18/2022 6:08	10.53	6/18/2022 4:56	1.13	6/18/2022 6:38	28.42
6/19/2022 6:22	83.36	6/18/2022 5:39	-0.08	6/18/2022 6:09	10.50	6/18/2022 4:57	1.14	6/18/2022 6:39	28.44
6/19/2022 6:23	83.42	6/18/2022 5:40	-0.06	6/18/2022 6:10	10.51	6/18/2022 4:58	1.16	6/18/2022 6:40	28.45
6/19/2022 6:24	83.41	6/18/2022 5:41	-0.08	6/18/2022 6:11	10.49	6/18/2022 4:59	1.12	6/18/2022 6:41	28.42
6/19/2022 6:25	83.39	6/18/2022 5:42	-0.05	6/18/2022 6:12	10.45	6/18/2022 5:00	1.09	6/18/2022 6:42	28.42
6/19/2022 6:26	83.38	6/18/2022 5:43	-0.05	6/18/2022 6:13	10.45	6/18/2022 5:01	1.07	6/18/2022 6:43	28.42
6/19/2022 6:27	83.41	6/18/2022 5:44	-0.08	6/18/2022 6:14	10.43	6/18/2022 5:02	1.06	6/18/2022 6:44	28.41
6/19/2022 6:28	83.41	6/18/2022 5:45	-0.09	6/18/2022 6:15	10.38	6/18/2022 5:03	1.04	6/18/2022 6:45	28.41
6/19/2022 6:29	83.39	6/18/2022 5:46	1.02	6/18/2022 6:16	10.44	6/18/2022 5:04	1.06	6/18/2022 6:46	28.38

6/19/2022 6:30	83.43	6/18/2022 5:47	6.78	6/18/2022 6:17	10.38	6/18/2022 5:05	1.07	6/18/2022 6:47	28.41
6/19/2022 6:31	83.40	6/18/2022 5:48	7.30	6/18/2022 6:18	10.33	6/18/2022 5:06	1.10	6/18/2022 6:48	28.44
6/19/2022 6:32	83.37	6/18/2022 5:49	6.02	6/18/2022 6:19	10.35	6/18/2022 5:07	1.07	6/18/2022 6:49	28.44
6/19/2022 6:33	83.35	6/18/2022 5:50	5.04	6/18/2022 6:20	10.35	6/18/2022 5:08	1.06	6/18/2022 6:50	28.44
6/19/2022 6:34	83.38	6/18/2022 5:51	4.18	6/18/2022 6:21	10.34	6/18/2022 5:09	1.10	6/18/2022 6:51	28.40
6/19/2022 6:35	83.37	6/18/2022 5:52	3.46	6/18/2022 6:22	10.33	6/18/2022 5:10	1.07	6/18/2022 6:52	28.39
6/19/2022 6:36	83.39	6/18/2022 5:53	2.86	6/18/2022 6:23	10.32	6/18/2022 5:11	1.04	6/18/2022 6:53	28.43
6/19/2022 6:37	83.43	6/18/2022 5:54	2.36	6/18/2022 6:24	10.29	6/18/2022 5:12	1.05	6/18/2022 6:54	28.41
6/19/2022 6:38	83.38	6/18/2022 5:55	1.97	6/18/2022 6:25	10.27	6/18/2022 5:13	1.00	6/18/2022 6:55	28.40
6/19/2022 6:39	83.36	6/18/2022 5:56	1.63	6/18/2022 6:26	10.24	6/18/2022 5:14	1.03	6/18/2022 6:56	28.41
6/19/2022 6:40	83.39	6/18/2022 5:57	1.29	6/18/2022 6:27	10.25	6/18/2022 5:15	1.02	6/18/2022 6:57	28.44
6/19/2022 6:41	83.36	6/18/2022 5:58	1.07	6/18/2022 6:28	10.26	6/18/2022 5:16	1.06	6/18/2022 6:58	28.41
6/19/2022 6:42	83.39	6/18/2022 5:59	0.88	6/18/2022 6:29	10.23	6/18/2022 5:17	1.10	6/18/2022 6:59	28.42
6/19/2022 6:43	83.42	6/18/2022 6:00	0.64	6/18/2022 6:30	10.25	6/18/2022 5:18	1.12	6/18/2022 7:00	28.41
6/19/2022 6:44	83.38	6/18/2022 6:01	0.49	6/18/2022 6:31	10.23	6/18/2022 5:19	1.12	6/18/2022 7:01	28.39
6/19/2022 6:45	83.42	6/18/2022 6:02	0.32	6/18/2022 6:32	10.23	6/18/2022 5:20	1.12	6/18/2022 7:02	28.43
6/19/2022 6:46	83.40	6/18/2022 6:03	0.21	6/18/2022 6:33	10.25	6/18/2022 5:21	1.09	6/18/2022 7:03	28.43
6/19/2022 6:47	83.38	6/18/2022 6:04	0.08	6/18/2022 6:34	10.26	6/18/2022 5:22	1.08	6/18/2022 7:04	28.44
6/19/2022 6:48	83.39	6/18/2022 6:05	0.00	6/18/2022 6:35	10.24	6/18/2022 5:23	1.02	6/18/2022 7:05	28.41
6/19/2022 6:49	83.40	6/18/2022 6:06	-0.01	6/18/2022 6:36	10.29	6/18/2022 5:24	1.03	6/18/2022 7:06	28.41
6/19/2022 6:50	83.40	6/18/2022 6:07	-0.05	6/18/2022 6:37	10.26	6/18/2022 5:25	1.02	6/18/2022 7:07	28.42
6/19/2022 6:51	83.40	6/18/2022 6:08	-0.06	6/18/2022 6:38	10.28	6/18/2022 5:26	1.05	6/18/2022 7:08	28.42
6/19/2022 6:52	83.41	6/18/2022 6:09	-0.07	6/18/2022 6:39	10.24	6/18/2022 5:27	1.03	6/18/2022 7:09	28.42
6/19/2022 6:53	83.37	6/18/2022 6:10	-0.04	6/18/2022 6:40	10.29	6/18/2022 5:28	1.06	6/18/2022 7:10	28.41
6/19/2022 6:54	83.39	6/18/2022 6:11	-0.06	6/18/2022 6:41	10.29	6/18/2022 5:29	1.10	6/18/2022 7:11	28.43
6/19/2022 6:55	83.38	6/18/2022 6:12	-0.06	6/18/2022 6:42	10.25	6/18/2022 5:30	1.16	6/18/2022 7:12	28.38
6/19/2022 6:56	83.38	6/18/2022 6:13	-0.08	6/18/2022 6:43	10.28	6/18/2022 5:31	1.18	6/18/2022 7:13	28.40
6/19/2022 6:57	83.43	6/18/2022 6:14	-0.01	6/18/2022 6:44	10.24	6/18/2022 5:32	1.15	6/18/2022 7:14	28.39
6/19/2022 6:58	83.40	6/18/2022 6:15	-0.02	6/18/2022 6:45	10.27	6/18/2022 5:33	1.09	6/18/2022 7:15	28.43
6/19/2022 6:59	83.38	6/18/2022 6:16	-0.02	6/18/2022 6:46	10.24	6/18/2022 5:34	1.08	6/18/2022 7:16	28.45
6/19/2022 7:00	83.39	6/18/2022 6:17	-0.07	6/18/2022 6:47	10.25	6/18/2022 5:35	1.01	6/18/2022 7:17	28.39
6/19/2022 7:01	83.39	6/18/2022 6:18	-0.04	6/18/2022 6:48	10.26	6/18/2022 5:36	1.03	6/18/2022 7:18	28.40
6/19/2022 7:02	83.38	6/18/2022 6:19	-0.04	6/18/2022 6:49	10.25	6/18/2022 5:37	1.02	6/18/2022 7:19	28.41
6/19/2022 7:03	83.41	6/18/2022 6:20	-0.04	6/18/2022 6:50	10.23	6/18/2022 5:38	1.03	6/18/2022 7:20	28.41
6/19/2022 7:04	83.40	6/18/2022 6:21	-0.09	6/18/2022 6:51	10.25	6/18/2022 5:39	1.03	6/18/2022 7:21	28.42
6/19/2022 7:05	83.38	6/18/2022 6:22	-0.06	6/18/2022 6:52	10.28	6/18/2022 5:40	1.06	6/18/2022 7:22	28.41
6/19/2022 7:06	83.42	6/18/2022 6:23	-0.04	6/18/2022 6:53	10.28	6/18/2022 5:41	1.10	6/18/2022 7:23	28.40
6/19/2022 7:07	83.39	6/18/2022 6:24	0.01	6/18/2022 6:54	10.30	6/18/2022 5:42	1.14	6/18/2022 7:24	28.44
6/19/2022 7:08	83.39	6/18/2022 6:25	-0.02	6/18/2022 6:55	10.32	6/18/2022 5:43	1.11	6/18/2022 7:25	28.40
6/19/2022 7:09	83.36	6/18/2022 6:26	-0.04	6/18/2022 6:56	10.30	6/18/2022 5:44	1.09	6/18/2022 7:26	28.43
6/19/2022 7:10	83.39	6/18/2022 6:27	-0.07	6/18/2022 6:57	10.29	6/18/2022 5:45	1.05	6/18/2022 7:27	28.41
6/19/2022 7:11	83.36	6/18/2022 6:28	-0.01	6/18/2022 6:58	10.30	6/18/2022 5:46	1.04	6/18/2022 7:28	28.40
6/19/2022 7:12	83.37	6/18/2022 6:29	-0.02	6/18/2022 6:59	10.27	6/18/2022 5:47	1.02	6/18/2022 7:29	28.41
6/19/2022 7:13	83.38	6/18/2022 6:30	-0.03	6/18/2022 7:00	10.28	6/18/2022 5:48	1.02	6/18/2022 7:30	28.41
6/19/2022 7:14	83.39	6/18/2022 6:31	-0.05	6/18/2022 7:01	10.28	6/18/2022 5:49	1.06	6/18/2022 7:31	28.43
6/19/2022 7:15	83.40	6/18/2022 6:32	-0.07	6/18/2022 7:02	10.26	6/18/2022 5:50	1.06	6/18/2022 7:32	28.41
6/19/2022 7:16	83.38	6/18/2022 6:33	-0.07	6/18/2022 7:03	10.25	6/18/2022 5:51	1.07	6/18/2022 7:33	28.44
6/19/2022 7:17	83.37	6/18/2022 6:34	-0.05	6/18/2022 7:04	10.28	6/18/2022 5:52	1.03	6/18/2022 7:34	28.40
6/19/2022 7:18	83.38	6/18/2022 6:35	-0.05	6/18/2022 7:05	10.28	6/18/2022 5:53	1.08	6/18/2022 7:35	28.43
6/19/2022 7:19	83.40	6/18/2022 6:36	-0.03	6/18/2022 7:06	10.25	6/18/2022 5:54	1.05	6/18/2022 7:36	28.40
6/19/2022 7:20	83.39	6/18/2022 6:37	-0.07	6/18/2022 7:07	10.22	6/18/2022 5:55	1.08	6/18/2022 7:37	28.38
6/19/2022 7:21	83.36	6/18/2022 6:38	-0.07	6/18/2022 7:08	10.25	6/18/2022 5:56	1.04	6/18/2022 7:38	28.40
6/19/2022 7:22	83.38	6/18/2022 6:39	-0.05	6/18/2022 7:09	10.26	6/18/2022 5:57	1.06	6/18/2022 7:39	28.42
6/19/2022 7:23	83.36	6/18/2022 6:40	-0.03	6/18/2022 7:10	10.28	6/18/2022 5:58	1.02	6/18/2022 7:40	28.42
6/19/2022 7:24	83.41	6/18/2022 6:41	-0.04	6/18/2022 7:11	10.29	6/18/2022 5:59	1.02	6/18/2022 7:41	28.41
6/19/2022 7:25	83.34	6/18/2022 6:42	-0.09	6/18/2022 7:12	10.34	6/18/2022 6:00	1.02	6/18/2022 7:42	28.44
6/19/2022 7:26	83.38	6/18/2022 6:43	-0.08	6/18/2022 7:13	10.31	6/18/2022 6:01	1.01	6/18/2022 7:43	28.38
6/19/2022 7:27	83.40	6/18/2022 6:44	-0.03	6/18/2022 7:14	10.32	6/18/2022 6:02	1.02	6/18/2022 7:44	28.42
6/19/2022 7:28	83.41	6/18/2022 6:45	-0.08	6/18/2022 7:15	10.28	6/18/2022 6:03	1.05	6/18/2022 7:45	28.41
6/19/2022 7:29	83.40	6/18/2022 6:46	-0.05	6/18/2022 7:16	10.26	6/18/2022 6:04	1.11	6/18/2022 7:46	28.41
6/19/2022 7:30	83.36	6/18/2022 6:47	-0.09	6/18/2022 7:17	10.27	6/18/2022 6:05	1.13	6/18/2022 7:47	28.42
6/19/2022 7:31	83.41	6/18/2022 6:48	-0.09	6/18/2022 7:18	10.32	6/18/2022 6:06	1.15	6/18/2022 7:48	28.41
6/19/2022 7:32	83.36	6/18/2022 6:49	-0.03	6/18/2022 7:19	10.31	6/18/2022 6:07	1.14	6/18/2022 7:49	28.38
6/19/2022 7:33	83.36	6/18/2022 6:50	-0.09	6/18/2022 7:20	10.28	6/18/2022 6:08	1.11	6/18/2022 7:50	28.40
6/19/2022 7:34	83.36	6/18/2022 6:51	-0.03	6/18/2022 7:21	10.28	6/18/2022 6:09	1.07	6/18/2022 7:51	28.40
6/19/2022 7:35	83.35	6/18/2022 6:52	1.09	6/18/2022 7:22	10.28	6/18/2022 6:10	1.02	6/18/2022 7:52	28.37
6/19/2022 7:36	83.38	6/18/2022 6:53	6.80	6/18/2022 7:23	10.25	6/18/2022 6:11	1.02	6/18/2022 7:53	28.38
6/19/2022 7:37	83.36	6/18/2022 6:54	6.72	6/18/2022 7:24	10.24	6/18/2022 6:12	0.99	6/18/2022 7:54	28.41
6/19/2022 7:38	83.35	6/18/2022 6:55	5.55	6/18/2022 7:25	10.24	6/18/2022 6:13	5.64	6/18/2022 7:55	28.41
6/19/2022 7:39	83.37	6/18/2022 6:56	4.66	6/18/2022 7:26	10.22	6/18/2022 6:14	7.97	6/18/2022 7:56	28.39
6/19/2022 7:40	83.38	6/18/2022 6:57	3.86	6/18/2022 7:27	10.21	6/18/2022 6:15	4.89	6/18/2022 7:57	28.40
6/19/2022 7:41	83.37	6/18/2022 6:58	3.18	6/18/2022 7:28	10.20	6/18/2022 6:16	2.55	6/18/2022 7:58	28.39
6/19/2022 7:42	83.39	6/18/2022 6:59	2.59	6/18/2022 7:29	10.22	6/18/2022 6:17	1.04	6/18/2022 7:59	28.43
6/19/2022 7:43	83.36	6/18/2022 7:00	2.20	6/18/2022 7:30	10.23	6/18/2022 6:18	1.07	6/18/2022 8:00	28.42
6/19/2022 7:44	83.39	6/18/2022 7:01	1.82	6/18/2022 7:31	10.22	6/18/2022 6:19	1.05	6/18/2022 8:01	28.41
6/19/2022 7:45	83.38	6/18/2022 7:02	1.47	6/18/2022 7:32	10.17	6/18/2022 6:20	1.07	6/18/2022 8:02	28.39
6/19/2022 7:46	83.36	6/18/2022 7:03	1.24	6/18/2022 7:33	10.20	6/18/2022 6:21	1.06	6/18/2022 8:03	28.39
6/19/2022 7:47	83.35	6/18/2022 7:04	0.96	6/18/2022 7:34	10.19	6/18/2022 6:22	4.83	6/18/2022 8:04	28.42
6/19/2022 7:48	83.37	6/18/2022 7:05	0.75	6/18/2022 7:35	10.18	6/18/2022 6:23	8.60	6/18/2022 8:05	28.42
6/19/2022 7:49	83.38	6/18/2022 7:06	0.60	6/18/2022 7:36	10.18	6/18/2022 6:24	5.31	6/18/2022 8:06	28.40
6/19/2022 7:50	83.37	6/18/2022 7:07	0.42	6/18/2022 7:37	10.33	6/18/2022 6:25	2.84	6/18/2022 8:07	28.41
6/19/2022 7:51	83.38	6/18/2022 7:08	0.28	6/18/2022 7:38	14.01	6/18/2022 6:26	1.13	6/18/2022 8:08	28.41
6/19/2022 7:52	83.37	6/18/2022 7:09	0.17	6/18/2022 7:39	13.49	6/18/2022 6:27	1.05	6/18/2022 8:09	28.39
6/19/2022 7:53	83.39	6/18/2022 7:10	0.03	6/18/2022 7:40	13.11	6/18/2022 6:28	1.02	6/18/2022 8:10	30.72
6/19/2022 7:54	83.37	6/18/2022 7:11	-0.02	6/18/2022 7:41	12.76	6/18/2022 6:29	0.99	6/18/2022 8:11	29.61
6/19/2022 7:55	83.41	6/18/2022 7:12	-0.05	6/18/2022 7:42	12.48	6/18/2022 6:30	1.03	6/18/2022 8:12	28.90
6/19/2022 7:56	83.38	6/18/2022 7:13	-0.03	6/18/2022 7:43	12.25	6/18/2022 6:31	1.02	6/18/2022 8:13	28.56
6/19/2022 7:57	83.38	6/18/2022 7:14	-0.12	6/18/2022 7:44	11.99	6/18/2022 6:32	0.95	6/18/2022 8:14	28.50

6/19/2022 7:58	83.37	6/18/2022 7:15	-0.07	6/18/2022 7:45	11.86	6/18/2022 6:33	1.02	6/18/2022 8:15	28.44
6/19/2022 7:59	83.38	6/18/2022 7:16	-0.06	6/18/2022 7:46	11.68	6/18/2022 6:34	1.00	6/18/2022 8:16	28.45
6/19/2022 8:00	83.36	6/18/2022 7:17	-0.06	6/18/2022 7:47	11.57	6/18/2022 6:35	1.08	6/18/2022 8:17	30.35
6/19/2022 8:01	83.40	6/18/2022 7:18	-0.07	6/18/2022 7:48	11.43	6/18/2022 6:36	1.11	6/18/2022 8:18	29.23
6/19/2022 8:02	83.38	6/18/2022 7:19	-0.06	6/18/2022 7:49	11.28	6/18/2022 6:37	1.13	6/18/2022 8:19	28.72
6/19/2022 8:03	83.42	6/18/2022 7:20	-0.07	6/18/2022 7:50	11.20	6/18/2022 6:38	1.11	6/18/2022 8:20	28.57
6/19/2022 8:04	83.34	6/18/2022 7:21	-0.04	6/18/2022 7:51	11.09	6/18/2022 6:39	1.11	6/18/2022 8:21	28.49
6/19/2022 8:05	83.39	6/18/2022 7:22	-0.09	6/18/2022 7:52	11.01	6/18/2022 6:40	1.08	6/18/2022 8:22	28.46
6/19/2022 8:06	83.38	6/18/2022 7:23	-0.08	6/18/2022 7:53	10.94	6/18/2022 6:41	1.05	6/18/2022 8:23	28.47
6/19/2022 8:07	83.40	6/18/2022 7:24	-0.08	6/18/2022 7:54	10.89	6/18/2022 6:42	1.03	6/18/2022 8:24	28.43
6/19/2022 8:08	83.40	6/18/2022 7:25	-0.05	6/18/2022 7:55	10.83	6/18/2022 6:43	0.99	6/18/2022 8:25	28.44
6/19/2022 8:09	83.40	6/18/2022 7:26	-0.02	6/18/2022 7:56	10.77	6/18/2022 6:44	1.02	6/18/2022 8:26	28.49
6/19/2022 8:10	83.38	6/18/2022 7:27	-0.10	6/18/2022 7:57	10.73	6/18/2022 6:45	0.97	6/18/2022 8:27	28.44
6/19/2022 8:11	83.38	6/18/2022 7:28	-0.08	6/18/2022 7:58	10.68	6/18/2022 6:46	1.03	6/18/2022 8:28	28.46
6/19/2022 8:12	83.37	6/18/2022 7:29	-0.03	6/18/2022 7:59	10.66	6/18/2022 6:47	1.06	6/18/2022 8:29	28.46
6/19/2022 8:13	83.43	6/18/2022 7:30	-0.05	6/18/2022 8:00	10.64	6/18/2022 6:48	1.09	6/18/2022 8:30	28.42
6/19/2022 8:14	83.38	6/18/2022 7:31	-0.04	6/18/2022 8:01	10.64	6/18/2022 6:49	1.08	6/18/2022 8:31	28.45
6/19/2022 8:15	83.36	6/18/2022 7:32	-0.08	6/18/2022 8:02	10.61	6/18/2022 6:50	1.13	6/18/2022 8:32	28.45
6/19/2022 8:16	83.40	6/18/2022 7:33	-0.06	6/18/2022 8:03	10.59	6/18/2022 6:51	1.12	6/18/2022 8:33	28.43
6/19/2022 8:17	83.37	6/18/2022 7:34	-0.09	6/18/2022 8:04	10.59	6/18/2022 6:52	1.05	6/18/2022 8:34	28.46
6/19/2022 8:18	83.37	6/18/2022 7:35	-0.06	6/18/2022 8:05	10.54	6/18/2022 6:53	1.06	6/18/2022 8:35	28.44
6/19/2022 8:19	83.37	6/18/2022 7:36	-0.04	6/18/2022 8:06	10.55	6/18/2022 6:54	1.05	6/18/2022 8:36	28.39
6/19/2022 8:20	83.40	6/18/2022 7:37	-0.04	6/18/2022 8:07	10.49	6/18/2022 6:55	1.07	6/18/2022 8:37	28.43
6/19/2022 8:21	83.39	6/18/2022 7:38	-0.08	6/18/2022 8:08	10.52	6/18/2022 6:56	1.09	6/18/2022 8:38	28.42
6/19/2022 8:22	83.43	6/18/2022 7:39	-0.02	6/18/2022 8:09	10.49	6/18/2022 6:57	1.03	6/18/2022 8:39	28.46
6/19/2022 8:23	83.39	6/18/2022 7:40	-0.08	6/18/2022 8:10	10.44	6/18/2022 6:58	1.00	6/18/2022 8:40	28.49
6/19/2022 8:24	83.39	6/18/2022 7:41	-0.04	6/18/2022 8:11	10.42	6/18/2022 6:59	1.11	6/18/2022 8:41	28.50
6/19/2022 8:25	83.39	6/18/2022 7:42	-0.06	6/18/2022 8:12	10.41	6/18/2022 7:00	1.09	6/18/2022 8:42	28.48
6/19/2022 8:26	83.41	6/18/2022 7:43	-0.07	6/18/2022 8:13	10.38	6/18/2022 7:01	1.07	6/18/2022 8:43	28.52
6/19/2022 8:27	83.37	6/18/2022 7:44	-0.05	6/18/2022 8:14	10.37	6/18/2022 7:02	1.05	6/18/2022 8:44	28.52
6/19/2022 8:28	83.39	6/18/2022 7:45	-0.02	6/18/2022 8:15	10.37	6/18/2022 7:03	1.01	6/18/2022 8:45	28.50
6/19/2022 8:29	83.40	6/18/2022 7:46	-0.02	6/18/2022 8:16	10.33	6/18/2022 7:04	0.98	6/18/2022 8:46	28.48
6/19/2022 8:30	83.37	6/18/2022 7:47	-0.10	6/18/2022 8:17	10.32	6/18/2022 7:05	0.97	6/18/2022 8:47	28.48
6/19/2022 8:31	83.39	6/18/2022 7:48	-0.09	6/18/2022 8:18	10.34	6/18/2022 7:06	0.97	6/18/2022 8:48	28.47
6/19/2022 8:32	83.40	6/18/2022 7:49	-0.09	6/18/2022 8:19	10.33	6/18/2022 7:07	1.00	6/18/2022 8:49	28.46
6/19/2022 8:33	83.42	6/18/2022 7:50	4.23	6/18/2022 8:20	10.32	6/18/2022 7:08	0.99	6/18/2022 8:50	28.50
6/19/2022 8:34	83.38	6/18/2022 7:51	9.31	6/18/2022 8:21	10.30	6/18/2022 7:09	1.01	6/18/2022 8:51	28.48
6/19/2022 8:35	83.41	6/18/2022 7:52	9.58	6/18/2022 8:22	10.30	6/18/2022 7:10	1.07	6/18/2022 8:52	28.53
6/19/2022 8:36	83.33	6/18/2022 7:53	7.90	6/18/2022 8:23	10.27	6/18/2022 7:11	1.12	6/18/2022 8:53	28.56
6/19/2022 8:37	83.40	6/18/2022 7:54	6.57	6/18/2022 8:24	10.23	6/18/2022 7:12	1.11	6/18/2022 8:54	28.55
6/19/2022 8:38	83.39	6/18/2022 7:55	5.46	6/18/2022 8:25	10.25	6/18/2022 7:13	1.12	6/18/2022 8:55	28.51
6/19/2022 8:39	83.38	6/18/2022 7:56	10.09	6/18/2022 8:26	10.25	6/18/2022 7:14	1.07	6/18/2022 8:56	28.50
6/19/2022 8:40	83.39	6/18/2022 7:57	12.06	6/18/2022 8:27	10.28	6/18/2022 7:15	1.04	6/18/2022 8:57	28.50
6/19/2022 8:41	83.41	6/18/2022 7:58	10.13	6/18/2022 8:28	10.28	6/18/2022 7:16	1.00	6/18/2022 8:58	28.53
6/19/2022 8:42	83.41	6/18/2022 7:59	8.50	6/18/2022 8:29	10.31	6/18/2022 7:17	0.99	6/18/2022 8:59	28.53
6/19/2022 8:43	83.37	6/18/2022 8:00	7.09	6/18/2022 8:30	10.31	6/18/2022 7:18	1.00	6/18/2022 9:00	28.49
6/19/2022 8:44	83.37	6/18/2022 8:01	5.93	6/18/2022 8:31	10.33	6/18/2022 7:19	0.95	6/18/2022 9:01	28.48
6/19/2022 8:45	83.41	6/18/2022 8:02	4.97	6/18/2022 8:32	10.30	6/18/2022 7:20	1.01	6/18/2022 9:02	28.47
6/19/2022 8:46	83.41	6/18/2022 8:03	4.21	6/18/2022 8:33	10.32	6/18/2022 7:21	1.06	6/18/2022 9:03	28.49
6/19/2022 8:47	83.38	6/18/2022 8:04	3.53	6/18/2022 8:34	10.33	6/18/2022 7:22	1.03	6/18/2022 9:04	28.50
6/19/2022 8:48	83.42	6/18/2022 8:05	2.92	6/18/2022 8:35	10.32	6/18/2022 7:23	1.11	6/18/2022 9:05	28.49
6/19/2022 8:49	83.36	6/18/2022 8:06	2.44	6/18/2022 8:36	10.32	6/18/2022 7:24	1.09	6/18/2022 9:06	28.51
6/19/2022 8:50	83.38	6/18/2022 8:07	2.05	6/18/2022 8:37	10.27	6/18/2022 7:25	1.06	6/18/2022 9:07	28.44
6/19/2022 8:51	83.37	6/18/2022 8:08	1.73	6/18/2022 8:38	10.28	6/18/2022 7:26	1.04	6/18/2022 9:08	28.48
6/19/2022 8:52	83.39	6/18/2022 8:09	1.43	6/18/2022 8:39	10.32	6/18/2022 7:27	1.00	6/18/2022 9:09	28.44
6/19/2022 8:53	83.41	6/18/2022 8:10	1.14	6/18/2022 8:40	10.28	6/18/2022 7:28	1.02	6/18/2022 9:10	28.47
6/19/2022 8:54	83.39	6/18/2022 8:11	0.93	6/18/2022 8:41	10.29	6/18/2022 7:29	1.00	6/18/2022 9:11	28.47
6/19/2022 8:55	83.41	6/18/2022 8:12	0.74	6/18/2022 8:42	10.28	6/18/2022 7:30	1.00	6/18/2022 9:12	28.46
6/19/2022 8:56	83.38	6/18/2022 8:13	0.59	6/18/2022 8:43	10.26	6/18/2022 7:31	1.04	6/18/2022 9:13	28.50
6/19/2022 8:57	83.39	6/18/2022 8:14	0.40	6/18/2022 8:44	10.26	6/18/2022 7:32	1.04	6/18/2022 9:14	28.54
6/19/2022 8:58	83.39	6/18/2022 8:15	0.31	6/18/2022 8:45	10.23	6/18/2022 7:33	1.07	6/18/2022 9:15	28.52
6/19/2022 8:59	83.38	6/18/2022 8:16	0.21	6/18/2022 8:46	10.27	6/18/2022 7:34	1.10	6/18/2022 9:16	28.65
6/19/2022 9:00	83.37	6/18/2022 8:17	0.10	6/18/2022 8:47	12.36	6/18/2022 7:35	1.08	6/18/2022 9:17	30.29
6/19/2022 9:01	83.38	6/18/2022 8:18	0.02	6/18/2022 8:48	15.83	6/18/2022 7:36	1.07	6/18/2022 9:18	29.26
6/19/2022 9:02	83.38	6/18/2022 8:19	-0.07	6/18/2022 8:49	15.13	6/18/2022 7:37	1.07	6/18/2022 9:19	28.74
6/19/2022 9:03	83.39	6/18/2022 8:20	-0.07	6/18/2022 8:50	14.52	6/18/2022 7:38	1.04	6/18/2022 9:20	28.58
6/19/2022 9:04	83.39	6/18/2022 8:21	-0.07	6/18/2022 8:51	14.08	6/18/2022 7:39	1.00	6/18/2022 9:21	28.54
6/19/2022 9:05	83.37	6/18/2022 8:22	0.00	6/18/2022 8:52	13.65	6/18/2022 7:40	0.98	6/18/2022 9:22	28.53
6/19/2022 9:06	83.38	6/18/2022 8:23	-0.07	6/18/2022 8:53	13.29	6/18/2022 7:41	1.02	6/18/2022 9:23	28.54
6/19/2022 9:07	83.39	6/18/2022 8:24	-0.06	6/18/2022 8:54	12.99	6/18/2022 7:42	1.00	6/18/2022 9:24	28.52
6/19/2022 9:08	83.38	6/18/2022 8:25	-0.03	6/18/2022 8:55	12.72	6/18/2022 7:43	1.04	6/18/2022 9:25	28.50
6/19/2022 9:09	83.39	6/18/2022 8:26	-0.04	6/18/2022 8:56	12.45	6/18/2022 7:44	1.07	6/18/2022 9:26	28.51
6/19/2022 9:10	83.38	6/18/2022 8:27	-0.05	6/18/2022 8:57	12.20	6/18/2022 7:45	1.11	6/18/2022 9:27	28.55
6/19/2022 9:11	83.35	6/18/2022 8:28	-0.07	6/18/2022 8:58	12.03	6/18/2022 7:46	1.08	6/18/2022 9:28	28.51
6/19/2022 9:12	83.39	6/18/2022 8:29	5.63	6/18/2022 8:59	11.87	6/18/2022 7:47	1.08	6/18/2022 9:29	28.50
6/19/2022 9:13	83.42	6/18/2022 8:30	8.04	6/18/2022 9:00	11.69	6/18/2022 7:48	1.03	6/18/2022 9:30	28.46
6/19/2022 9:14	83.38	6/18/2022 8:31	6.66	6/18/2022 9:01	11.61	6/18/2022 7:49	1.01	6/18/2022 9:31	28.52
6/19/2022 9:15	83.41	6/18/2022 8:32	5.50	6/18/2022 9:02	11.46	6/18/2022 7:50	1.01	6/18/2022 9:32	28.50
6/19/2022 9:16	83.38	6/18/2022 8:33	4.61	6/18/2022 9:03	11.40	6/18/2022 7:51	1.01	6/18/2022 9:33	28.48
6/19/2022 9:17	83.39	6/18/2022 8:34	3.89	6/18/2022 9:04	11.30	6/18/2022 7:52	1.06	6/18/2022 9:34	28.50
6/19/2022 9:18	83.36	6/18/2022 8:35	3.35	6/18/2022 9:05	11.14	6/18/2022 7:53	1.09	6/18/2022 9:35	28.46
6/19/2022 9:19	83.36	6/18/2022 8:36	2.84	6/18/2022 9:06	11.04	6/18/2022 7:54	1.08	6/18/2022 9:36	28.49
6/19/2022 9:20	83.41	6/18/2022 8:37	2.44	6/18/2022 9:07	11.04	6/18/2022 7:55	1.02	6/18/2022 9:37	28.46
6/19/2022 9:21	83.38	6/18/2022 8:38	2.06	6/18/2022 9:08	10.91	6/18/2022 7:56	1.02	6/18/2022 9:38	28.48
6/19/2022 9:22	86.52	6/18/2022 8:39	1.74	6/18/2022 9:09	10.87	6/18/2022 7:57	0.99	6/18/2022 9:39	28.52
6/19/2022 9:23	89.66	6/18/2022 8:40	1.48	6/18/2022 9:10	10.80	6/18/2022 7:58	1.00	6/18/2022 9:40	28.50
6/19/2022 9:24	91.45	6/18/2022 8:41	1.18	6/18/2022 9:11	10.81	6/18/2022 7:59	1.05	6/18/2022 9:41	28.49
6/19/2022 9:25	89.46	6/18/2022 8:42	0.99	6/18/2022 9:12	10.72	6/18/2022 8:00	1.09	6/18/2022 9:42	28.46

6/19/2022 9:26	87.52	6/18/2022 8:43	0.78	6/18/2022 9:13	10.73	6/18/2022 8:01	1.00	6/18/2022 9:43	28.46
6/19/2022 9:27	86.34	6/18/2022 8:44	0.61	6/18/2022 9:14	10.68	6/18/2022 8:02	0.98	6/18/2022 9:44	28.45
6/19/2022 9:28	85.56	6/18/2022 8:45	0.45	6/18/2022 9:15	10.68	6/18/2022 8:03	1.00	6/18/2022 9:45	28.48
6/19/2022 9:29	85.14	6/18/2022 8:46	0.31	6/18/2022 9:16	10.67	6/18/2022 8:04	0.94	6/18/2022 9:46	28.46
6/19/2022 9:30	84.82	6/18/2022 8:47	0.22	6/18/2022 9:17	10.64	6/18/2022 8:05	1.01	6/18/2022 9:47	28.49
6/19/2022 9:31	84.59	6/18/2022 8:48	0.11	6/18/2022 9:18	10.61	6/18/2022 8:06	0.95	6/18/2022 9:48	28.47
6/19/2022 9:32	84.41	6/18/2022 8:49	0.01	6/18/2022 9:19	10.57	6/18/2022 8:07	0.99	6/18/2022 9:49	28.50
6/19/2022 9:33	84.34	6/18/2022 8:50	-0.09	6/18/2022 9:20	10.57	6/18/2022 8:08	0.97	6/18/2022 9:50	28.49
6/19/2022 9:34	84.25	6/18/2022 8:51	-0.09	6/18/2022 9:21	10.56	6/18/2022 8:09	0.97	6/18/2022 9:51	28.47
6/19/2022 9:35	84.16	6/18/2022 8:52	-0.07	6/18/2022 9:22	10.54	6/18/2022 8:10	1.01	6/18/2022 9:52	28.46
6/19/2022 9:36	84.07	6/18/2022 8:53	-0.07	6/18/2022 9:23	10.53	6/18/2022 8:11	0.98	6/18/2022 9:53	28.47
6/19/2022 9:37	84.02	6/18/2022 8:54	-0.06	6/18/2022 9:24	10.46	6/18/2022 8:12	0.99	6/18/2022 9:54	28.47
6/19/2022 9:38	84.01	6/18/2022 8:55	-0.07	6/18/2022 9:25	10.49	6/18/2022 8:13	0.99	6/18/2022 9:55	28.43
6/19/2022 9:39	83.99	6/18/2022 8:56	-0.04	6/18/2022 9:26	10.48	6/18/2022 8:14	1.08	6/18/2022 9:56	28.44
6/19/2022 9:40	83.97	6/18/2022 8:57	-0.06	6/18/2022 9:27	10.46	6/18/2022 8:15	1.07	6/18/2022 9:57	28.46
6/19/2022 9:41	83.95	6/18/2022 8:58	-0.08	6/18/2022 9:28	10.44	6/18/2022 8:16	1.07	6/18/2022 9:58	28.46
6/19/2022 9:42	83.89	6/18/2022 8:59	-0.08	6/18/2022 9:29	10.42	6/18/2022 8:17	1.10	6/18/2022 9:59	28.43
6/19/2022 9:43	83.88	6/18/2022 9:00	-0.08	6/18/2022 9:30	10.39	6/18/2022 8:18	1.09	6/18/2022 10:00	28.45
6/19/2022 9:44	83.88	6/18/2022 9:01	-0.01	6/18/2022 9:31	10.38	6/18/2022 8:19	1.04	6/18/2022 10:01	28.48
6/19/2022 9:45	83.85	6/18/2022 9:02	0.04	6/18/2022 9:32	10.37	6/18/2022 8:20	1.01	6/18/2022 10:02	28.45
6/19/2022 9:46	83.85	6/18/2022 9:03	2.88	6/18/2022 9:33	12.95	6/18/2022 8:21	0.97	6/18/2022 10:03	28.45
6/19/2022 9:47	83.78	6/18/2022 9:04	8.19	6/18/2022 9:34	15.36	6/18/2022 8:22	0.99	6/18/2022 10:04	28.47
6/19/2022 9:48	83.83	6/18/2022 9:05	7.32	6/18/2022 9:35	14.72	6/18/2022 8:23	0.99	6/18/2022 10:05	28.45
6/19/2022 9:49	83.81	6/18/2022 9:06	6.05	6/18/2022 9:36	14.21	6/18/2022 8:24	0.97	6/18/2022 10:06	28.45
6/19/2022 9:50	83.78	6/18/2022 9:07	5.09	6/18/2022 9:37	13.77	6/18/2022 8:25	0.96	6/18/2022 10:07	28.47
6/19/2022 9:51	83.78	6/18/2022 9:08	4.34	6/18/2022 9:38	13.35	6/18/2022 8:26	1.03	6/18/2022 10:08	28.42
6/19/2022 9:52	83.78	6/18/2022 9:09	3.76	6/18/2022 9:39	13.03	6/18/2022 8:27	1.05	6/18/2022 10:09	28.47
6/19/2022 9:53	83.80	6/18/2022 9:10	3.20	6/18/2022 9:40	12.78	6/18/2022 8:28	1.08	6/18/2022 10:10	28.44
6/19/2022 9:54	83.76	6/18/2022 9:11	2.65	6/18/2022 9:41	16.51	6/18/2022 8:29	1.04	6/18/2022 10:11	28.49
6/19/2022 9:55	83.72	6/18/2022 9:12	2.24	6/18/2022 9:42	15.75	6/18/2022 8:30	1.08	6/18/2022 10:12	28.46
6/19/2022 9:56	83.73	6/18/2022 9:13	1.91	6/18/2022 9:43	15.13	6/18/2022 8:31	1.04	6/18/2022 10:13	28.45
6/19/2022 9:57	83.74	6/18/2022 9:14	1.57	6/18/2022 9:44	14.63	6/18/2022 8:32	0.96	6/18/2022 10:14	28.46
6/19/2022 9:58	83.71	6/18/2022 9:15	1.35	6/18/2022 9:45	14.15	6/18/2022 8:33	1.01	6/18/2022 10:15	28.42
6/19/2022 9:59	83.74	6/18/2022 9:16	1.20	6/18/2022 9:46	13.75	6/18/2022 8:34	5.86	6/18/2022 10:16	28.45
6/19/2022 10:00	83.71	6/18/2022 9:17	1.08	6/18/2022 9:47	13.39	6/18/2022 8:35	8.80	6/18/2022 10:17	28.43
6/19/2022 10:01	83.71	6/18/2022 9:18	0.94	6/18/2022 9:48	13.10	6/18/2022 8:36	5.57	6/18/2022 10:18	28.44
6/19/2022 10:02	83.72	6/18/2022 9:19	0.80	6/18/2022 9:49	12.85	6/18/2022 8:37	3.10	6/18/2022 10:19	28.45
6/19/2022 10:03	83.71	6/18/2022 9:20	0.62	6/18/2022 9:50	12.61	6/18/2022 8:38	1.30	6/18/2022 10:20	28.43
6/19/2022 10:04	83.71	6/18/2022 9:21	0.45	6/18/2022 9:51	12.39	6/18/2022 8:39	1.00	6/18/2022 10:21	28.43
6/19/2022 10:05	83.70	6/18/2022 9:22	0.30	6/18/2022 9:52	12.16	6/18/2022 8:40	0.99	6/18/2022 10:22	28.46
6/19/2022 10:06	83.68	6/18/2022 9:23	0.29	6/18/2022 9:53	12.01	6/18/2022 8:41	0.98	6/18/2022 10:23	28.47
6/19/2022 10:07	83.67	6/18/2022 9:24	0.28	6/18/2022 9:54	11.87	6/18/2022 8:42	1.00	6/18/2022 10:24	28.42
6/19/2022 10:08	83.67	6/18/2022 9:25	0.28	6/18/2022 9:55	11.69	6/18/2022 8:43	0.95	6/18/2022 10:25	28.43
6/19/2022 10:09	83.70	6/18/2022 9:26	0.24	6/18/2022 9:56	11.57	6/18/2022 8:44	0.94	6/18/2022 10:26	28.46
6/19/2022 10:10	83.72	6/18/2022 9:27	0.14	6/18/2022 9:57	11.49	6/18/2022 8:45	0.99	6/18/2022 10:27	28.45
6/19/2022 10:11	83.65	6/18/2022 9:28	0.03	6/18/2022 9:58	11.39	6/18/2022 8:46	0.96	6/18/2022 10:28	28.44
6/19/2022 10:12	83.68	6/18/2022 9:29	-0.04	6/18/2022 9:59	11.28	6/18/2022 8:47	0.97	6/18/2022 10:29	28.49
6/19/2022 10:13	83.70	6/18/2022 9:30	-0.06	6/18/2022 10:00	11.17	6/18/2022 8:48	0.94	6/18/2022 10:30	28.49
6/19/2022 10:14	83.64	6/18/2022 9:31	5.10	6/18/2022 10:01	15.43	6/18/2022 8:49	0.98	6/18/2022 10:31	28.54
6/19/2022 10:15	83.67	6/18/2022 9:32	9.89	6/18/2022 10:02	14.91	6/18/2022 8:50	1.02	6/18/2022 10:32	28.56
6/19/2022 10:16	83.65	6/18/2022 9:33	9.32	6/18/2022 10:03	14.39	6/18/2022 8:51	1.03	6/18/2022 10:33	28.60
6/19/2022 10:17	83.64	6/18/2022 9:34	7.73	6/18/2022 10:04	13.98	6/18/2022 8:52	1.03	6/18/2022 10:34	28.64
6/19/2022 10:18	83.70	6/18/2022 9:35	6.47	6/18/2022 10:05	13.58	6/18/2022 8:53	1.08	6/18/2022 10:35	28.63
6/19/2022 10:19	83.61	6/18/2022 9:36	5.39	6/18/2022 10:06	13.25	6/18/2022 8:54	1.08	6/18/2022 10:36	28.59
6/19/2022 10:20	83.64	6/18/2022 9:37	4.52	6/18/2022 10:07	12.93	6/18/2022 8:55	1.07	6/18/2022 10:37	28.60
6/19/2022 10:21	83.66	6/18/2022 9:38	3.82	6/18/2022 10:08	12.72	6/18/2022 8:56	1.04	6/18/2022 10:38	28.55
6/19/2022 10:22	83.63	6/18/2022 9:39	3.14	6/18/2022 10:09	12.48	6/18/2022 8:57	1.03	6/18/2022 10:39	28.57
6/19/2022 10:23	83.65	6/18/2022 9:40	2.64	6/18/2022 10:10	12.32	6/18/2022 8:58	0.96	6/18/2022 10:40	28.59
6/19/2022 10:24	83.64	6/18/2022 9:41	5.90	6/18/2022 10:11	12.09	6/18/2022 8:59	0.96	6/18/2022 10:41	30.53
6/19/2022 10:25	83.66	6/18/2022 9:42	10.54	6/18/2022 10:12	11.93	6/18/2022 9:00	6.92	6/18/2022 10:42	29.84
6/19/2022 10:26	83.67	6/18/2022 9:43	8.72	6/18/2022 10:13	11.77	6/18/2022 9:01	8.21	6/18/2022 10:43	29.05
6/19/2022 10:27	83.64	6/18/2022 9:44	7.26	6/18/2022 10:14	11.67	6/18/2022 9:02	5.08	6/18/2022 10:44	28.73
6/19/2022 10:28	83.61	6/18/2022 9:45	6.10	6/18/2022 10:15	11.57	6/18/2022 9:03	2.66	6/18/2022 10:45	28.65
6/19/2022 10:29	83.61	6/18/2022 9:46	5.09	6/18/2022 10:16	11.45	6/18/2022 9:04	1.10	6/18/2022 10:46	28.59
6/19/2022 10:30	83.62	6/18/2022 9:47	4.24	6/18/2022 10:17	11.36	6/18/2022 9:05	1.05	6/18/2022 10:47	28.58
6/19/2022 10:31	83.62	6/18/2022 9:48	3.57	6/18/2022 10:18	11.23	6/18/2022 9:06	0.99	6/18/2022 10:48	28.56
6/19/2022 10:32	83.63	6/18/2022 9:49	2.99	6/18/2022 10:19	11.19	6/18/2022 9:07	3.99	6/18/2022 10:49	28.66
6/19/2022 10:33	83.63	6/18/2022 9:50	2.50	6/18/2022 10:20	11.09	6/18/2022 9:08	10.22	6/18/2022 10:50	28.63
6/19/2022 10:34	83.65	6/18/2022 9:51	2.08	6/18/2022 10:21	11.06	6/18/2022 9:09	6.88	6/18/2022 10:51	28.62
6/19/2022 10:35	83.62	6/18/2022 9:52	1.77	6/18/2022 10:22	11.00	6/18/2022 9:10	4.15	6/18/2022 10:52	28.57
6/19/2022 10:36	83.57	6/18/2022 9:53	1.45	6/18/2022 10:23	10.94	6/18/2022 9:11	2.12	6/18/2022 10:53	28.60
6/19/2022 10:37	83.62	6/18/2022 9:54	1.18	6/18/2022 10:24	10.83	6/18/2022 9:12	0.96	6/18/2022 10:54	28.55
6/19/2022 10:38	83.61	6/18/2022 9:55	1.03	6/18/2022 10:25	10.82	6/18/2022 9:13	0.95	6/18/2022 10:55	28.55
6/19/2022 10:39	83.61	6/18/2022 9:56	0.79	6/18/2022 10:26	10.79	6/18/2022 9:14	1.06	6/18/2022 10:56	28.55
6/19/2022 10:40	83.61	6/18/2022 9:57	0.60	6/18/2022 10:27	10.81	6/18/2022 9:15	6.32	6/18/2022 10:57	28.58
6/19/2022 10:41	83.60	6/18/2022 9:58	0.48	6/18/2022 10:28	10.80	6/18/2022 9:16	8.49	6/18/2022 10:58	28.59
6/19/2022 10:42	83.61	6/18/2022 9:59	0.29	6/18/2022 10:29	10.73	6/18/2022 9:17	5.31	6/18/2022 10:59	28.58
6/19/2022 10:43	83.58	6/18/2022 10:00	0.23	6/18/2022 10:30	10.75	6/18/2022 9:18	2.88	6/18/2022 11:00	28.56
6/19/2022 10:44	83.58	6/18/2022 10:01	0.11	6/18/2022 10:31	10.73	6/18/2022 9:19	1.18	6/18/2022 11:01	28.57
6/19/2022 10:45	83.58	6/18/2022 10:02	0.02	6/18/2022 10:32	10.69	6/18/2022 9:20	1.07	6/18/2022 11:02	28.53
6/19/2022 10:46	83.60	6/18/2022 10:03	0.00	6/18/2022 10:33	10.66	6/18/2022 9:21	1.08	6/18/2022 11:03	28.54
6/19/2022 10:47	83.59	6/18/2022 10:04	-0.03	6/18/2022 10:34	10.65	6/18/2022 9:22	3.33	6/18/2022 11:04	28.53
6/19/2022 10:48	83.58	6/18/2022 10:05	-0.07	6/18/2022 10:35	10.60	6/18/2022 9:23	9.69	6/18/2022 11:05	28.56
6/19/2022 10:49	83.56	6/18/2022 10:06	-0.05	6/18/2022 10:36	10.62	6/18/2022 9:24	6.53	6/18/2022 11:06	28.57
6/19/2022 10:50	83.58	6/18/2022 10:07	-0.06	6/18/2022 10:37	10.54	6/18/2022 9:25	3.79	6/18/2022 11:07	28.51
6/19/2022 10:51	83.56	6/18/2022 10:08	-0.08	6/18/2022 10:38	10.54	6/18/2022 9:26	1.81	6/18/2022 11:08	28.54
6/19/2022 10:52	83.59	6/18/2022 10:09	-0.06	6/18/2022 10:39	10.57	6/18/2022 9:27	1.07	6/18/2022 11:09	28.52
6/19/2022 10:53	83.59	6/18/2022 10:10	-0.04	6/18/2022 10:40	10.51	6/18/2022 9:28	1.08	6/18/2022 11:10	28.50

6/19/2022 10:54	83.57	6/18/2022 10:11	-0.04	6/18/2022 10:41	10.51	6/18/2022 9:29	1.07	6/18/2022 11:11	28.55
6/19/2022 10:55	83.61	6/18/2022 10:12	-0.07	6/18/2022 10:42	10.49	6/18/2022 9:30	1.06	6/18/2022 11:12	28.51
6/19/2022 10:56	83.59	6/18/2022 10:13	-0.06	6/18/2022 10:43	14.85	6/18/2022 9:31	1.04	6/18/2022 11:13	28.52
6/19/2022 10:57	83.59	6/18/2022 10:14	-0.08	6/18/2022 10:44	15.24	6/18/2022 9:32	1.02	6/18/2022 11:14	28.49
6/19/2022 10:58	83.58	6/18/2022 10:15	-0.06	6/18/2022 10:45	14.62	6/18/2022 9:33	0.99	6/18/2022 11:15	28.49
6/19/2022 10:59	83.57	6/18/2022 10:16	-0.08	6/18/2022 10:46	14.12	6/18/2022 9:34	1.00	6/18/2022 11:16	28.52
6/19/2022 11:00	83.56	6/18/2022 10:17	-0.08	6/18/2022 10:47	13.69	6/18/2022 9:35	1.09	6/18/2022 11:17	28.50
6/19/2022 11:01	83.56	6/18/2022 10:18	-0.07	6/18/2022 10:48	13.30	6/18/2022 9:36	1.04	6/18/2022 11:18	28.53
6/19/2022 11:02	83.56	6/18/2022 10:19	-0.05	6/18/2022 10:49	12.98	6/18/2022 9:37	1.04	6/18/2022 11:19	28.51
6/19/2022 11:03	83.57	6/18/2022 10:20	-0.06	6/18/2022 10:50	12.72	6/18/2022 9:38	0.99	6/18/2022 11:20	28.55
6/19/2022 11:04	83.59	6/18/2022 10:21	-0.03	6/18/2022 10:51	12.47	6/18/2022 9:39	1.00	6/18/2022 11:21	28.51
6/19/2022 11:05	83.56	6/18/2022 10:22	-0.10	6/18/2022 10:52	12.29	6/18/2022 9:40	0.98	6/18/2022 11:22	28.52
6/19/2022 11:06	83.58	6/18/2022 10:23	-0.02	6/18/2022 10:53	12.10	6/18/2022 9:41	0.99	6/18/2022 11:23	28.51
6/19/2022 11:07	83.56	6/18/2022 10:24	-0.06	6/18/2022 10:54	11.94	6/18/2022 9:42	0.96	6/18/2022 11:24	28.51
6/19/2022 11:08	83.59	6/18/2022 10:25	-0.06	6/18/2022 10:55	11.79	6/18/2022 9:43	1.01	6/18/2022 11:25	28.55
6/19/2022 11:09	83.56	6/18/2022 10:26	-0.07	6/18/2022 10:56	11.69	6/18/2022 9:44	1.09	6/18/2022 11:26	28.50
6/19/2022 11:10	83.56	6/18/2022 10:27	0.04	6/18/2022 10:57	11.55	6/18/2022 9:45	1.06	6/18/2022 11:27	28.51
6/19/2022 11:11	83.58	6/18/2022 10:28	0.04	6/18/2022 10:58	11.47	6/18/2022 9:46	1.00	6/18/2022 11:28	28.49
6/19/2022 11:12	83.55	6/18/2022 10:29	0.01	6/18/2022 10:59	11.35	6/18/2022 9:47	0.94	6/18/2022 11:29	28.52
6/19/2022 11:13	83.60	6/18/2022 10:30	0.00	6/18/2022 11:00	11.28	6/18/2022 9:48	0.94	6/18/2022 11:30	28.48
6/19/2022 11:14	83.59	6/18/2022 10:31	-0.05	6/18/2022 11:01	11.17	6/18/2022 9:49	0.97	6/18/2022 11:31	28.52
6/19/2022 11:15	83.57	6/18/2022 10:32	1.90	6/18/2022 11:02	11.11	6/18/2022 9:50	0.94	6/18/2022 11:32	29.92
6/19/2022 11:16	83.56	6/18/2022 10:33	7.46	6/18/2022 11:03	11.02	6/18/2022 9:51	0.97	6/18/2022 11:33	29.78
6/19/2022 11:17	83.55	6/18/2022 10:34	6.82	6/18/2022 11:04	11.00	6/18/2022 9:52	0.98	6/18/2022 11:34	29.01
6/19/2022 11:18	83.57	6/18/2022 10:35	5.66	6/18/2022 11:05	10.92	6/18/2022 9:53	0.97	6/18/2022 11:35	28.73
6/19/2022 11:19	83.59	6/18/2022 10:36	4.73	6/18/2022 11:06	10.88	6/18/2022 9:54	0.97	6/18/2022 11:36	28.60
6/19/2022 11:20	83.57	6/18/2022 10:37	3.96	6/18/2022 11:07	10.82	6/18/2022 9:55	0.99	6/18/2022 11:37	28.54
6/19/2022 11:21	83.55	6/18/2022 10:38	3.27	6/18/2022 11:08	10.81	6/18/2022 9:56	0.96	6/18/2022 11:38	28.57
6/19/2022 11:22	83.57	6/18/2022 10:39	2.69	6/18/2022 11:09	10.73	6/18/2022 9:57	0.99	6/18/2022 11:39	28.55
6/19/2022 11:23	83.56	6/18/2022 10:40	2.27	6/18/2022 11:10	10.71	6/18/2022 9:58	0.99	6/18/2022 11:40	28.53
6/19/2022 11:24	83.57	6/18/2022 10:41	1.91	6/18/2022 11:11	10.68	6/18/2022 9:59	1.06	6/18/2022 11:41	28.54
6/19/2022 11:25	83.55	6/18/2022 10:42	1.56	6/18/2022 11:12	10.64	6/18/2022 10:00	1.04	6/18/2022 11:42	28.55
6/19/2022 11:26	83.58	6/18/2022 10:43	1.30	6/18/2022 11:13	10.65	6/18/2022 10:01	1.08	6/18/2022 11:43	28.55
6/19/2022 11:27	83.55	6/18/2022 10:44	1.04	6/18/2022 11:14	10.63	6/18/2022 10:02	1.08	6/18/2022 11:44	28.55
6/19/2022 11:28	83.57	6/18/2022 10:45	0.87	6/18/2022 11:15	10.63	6/18/2022 10:03	1.08	6/18/2022 11:45	28.51
6/19/2022 11:29	83.56	6/18/2022 10:46	0.61	6/18/2022 11:16	10.61	6/18/2022 10:04	1.03	6/18/2022 11:46	28.52
6/19/2022 11:30	83.58	6/18/2022 10:47	0.49	6/18/2022 11:17	10.62	6/18/2022 10:05	0.99	6/18/2022 11:47	28.50
6/19/2022 11:31	83.57	6/18/2022 10:48	0.35	6/18/2022 11:18	10.64	6/18/2022 10:06	0.97	6/18/2022 11:48	28.52
6/19/2022 11:32	83.52	6/18/2022 10:49	0.24	6/18/2022 11:19	10.65	6/18/2022 10:07	0.93	6/18/2022 11:49	28.50
6/19/2022 11:33	83.57	6/18/2022 10:50	0.13	6/18/2022 11:20	10.64	6/18/2022 10:08	0.94	6/18/2022 11:50	28.49
6/19/2022 11:34	83.59	6/18/2022 10:51	0.04	6/18/2022 11:21	10.66	6/18/2022 10:09	0.99	6/18/2022 11:51	28.51
6/19/2022 11:35	85.12	6/18/2022 10:52	-0.03	6/18/2022 11:22	10.66	6/18/2022 10:10	0.99	6/18/2022 11:52	28.51
6/19/2022 11:36	88.91	6/18/2022 10:53	-0.07	6/18/2022 11:23	10.68	6/18/2022 10:11	1.02	6/18/2022 11:53	28.51
6/19/2022 11:37	91.11	6/18/2022 10:54	-0.07	6/18/2022 11:24	10.65	6/18/2022 10:12	1.05	6/18/2022 11:54	28.51
6/19/2022 11:38	90.44	6/18/2022 10:55	-0.03	6/18/2022 11:25	10.63	6/18/2022 10:13	1.06	6/18/2022 11:55	28.53
6/19/2022 11:39	88.18	6/18/2022 10:56	-0.03	6/18/2022 11:26	10.60	6/18/2022 10:14	1.08	6/18/2022 11:56	28.54
6/19/2022 11:40	86.80	6/18/2022 10:57	-0.06	6/18/2022 11:27	10.60	6/18/2022 10:15	1.05	6/18/2022 11:57	28.49
6/19/2022 11:41	85.92	6/18/2022 10:58	-0.08	6/18/2022 11:28	10.58	6/18/2022 10:16	0.97	6/18/2022 11:58	28.52
6/19/2022 11:42	85.37	6/18/2022 10:59	-0.08	6/18/2022 11:29	10.58	6/18/2022 10:17	0.99	6/18/2022 11:59	28.52
6/19/2022 11:43	85.01	6/18/2022 11:00	-0.05	6/18/2022 11:30	10.58	6/18/2022 10:18	0.96	6/18/2022 12:00	28.49
6/19/2022 11:44	84.82	6/18/2022 11:01	-0.03	6/18/2022 11:31	10.56	6/18/2022 10:19	0.96	6/18/2022 12:01	28.49
6/19/2022 11:45	84.63	6/18/2022 11:02	-0.07	6/18/2022 11:32	10.51	6/18/2022 10:20	0.94	6/18/2022 12:02	28.51
6/19/2022 11:46	84.50	6/18/2022 11:03	-0.09	6/18/2022 11:33	10.53	6/18/2022 10:21	0.99	6/18/2022 12:03	28.49
6/19/2022 11:47	84.39	6/18/2022 11:04	-0.08	6/18/2022 11:34	10.47	6/18/2022 10:22	0.99	6/18/2022 12:04	28.49
6/19/2022 11:48	84.37	6/18/2022 11:05	-0.08	6/18/2022 11:35	10.49	6/18/2022 10:23	1.01	6/18/2022 12:05	28.49
6/19/2022 11:49	84.29	6/18/2022 11:06	-0.09	6/18/2022 11:36	10.46	6/18/2022 10:24	1.01	6/18/2022 12:06	28.52
6/19/2022 11:50	84.25	6/18/2022 11:07	-0.03	6/18/2022 11:37	10.48	6/18/2022 10:25	1.06	6/18/2022 12:07	28.47
6/19/2022 11:51	84.19	6/18/2022 11:08	-0.06	6/18/2022 11:38	10.45	6/18/2022 10:26	5.21	6/18/2022 12:08	28.48
6/19/2022 11:52	84.16	6/18/2022 11:09	-0.05	6/18/2022 11:39	10.43	6/18/2022 10:27	8.52	6/18/2022 12:09	28.48
6/19/2022 11:53	84.13	6/18/2022 11:10	-0.07	6/18/2022 11:40	10.49	6/18/2022 10:28	5.27	6/18/2022 12:10	28.51
6/19/2022 11:54	84.15	6/18/2022 11:11	-0.05	6/18/2022 11:41	10.50	6/18/2022 10:29	2.88	6/18/2022 12:11	28.47
6/19/2022 11:55	84.10	6/18/2022 11:12	-0.05	6/18/2022 11:42	14.78	6/18/2022 10:30	1.10	6/18/2022 12:12	28.50
6/19/2022 11:56	84.09	6/18/2022 11:13	-0.04	6/18/2022 11:43	14.88	6/18/2022 10:31	0.93	6/18/2022 12:13	28.48
6/19/2022 11:57	84.01	6/18/2022 11:14	-0.07	6/18/2022 11:44	14.33	6/18/2022 10:32	0.96	6/18/2022 12:14	28.48
6/19/2022 11:58	84.06	6/18/2022 11:15	-0.10	6/18/2022 11:45	13.90	6/18/2022 10:33	0.96	6/18/2022 12:15	28.50
6/19/2022 11:59	83.99	6/18/2022 11:16	-0.05	6/18/2022 11:46	13.47	6/18/2022 10:34	0.93	6/18/2022 12:16	28.49
6/19/2022 12:00	83.99	6/18/2022 11:17	-0.07	6/18/2022 11:47	13.15	6/18/2022 10:35	1.00	6/18/2022 12:17	28.49
6/19/2022 12:01	84.00	6/18/2022 11:18	-0.05	6/18/2022 11:48	12.87	6/18/2022 10:36	1.09	6/18/2022 12:18	28.52
6/19/2022 12:02	83.97	6/18/2022 11:19	-0.02	6/18/2022 11:49	12.61	6/18/2022 10:37	1.04	6/18/2022 12:19	28.50
6/19/2022 12:03	83.98	6/18/2022 11:20	-0.09	6/18/2022 11:50	12.35	6/18/2022 10:38	1.07	6/18/2022 12:20	28.47
6/19/2022 12:04	83.96	6/18/2022 11:21	-0.07	6/18/2022 11:51	12.18	6/18/2022 10:39	1.05	6/18/2022 12:21	28.52
6/19/2022 12:05	83.97	6/18/2022 11:22	-0.06	6/18/2022 11:52	11.97	6/18/2022 10:40	1.04	6/18/2022 12:22	28.49
6/19/2022 12:06	83.96	6/18/2022 11:23	-0.06	6/18/2022 11:53	11.83	6/18/2022 10:41	1.02	6/18/2022 12:23	28.52
6/19/2022 12:07	83.92	6/18/2022 11:24	-0.07	6/18/2022 11:54	11.69	6/18/2022 10:42	1.04	6/18/2022 12:24	28.51
6/19/2022 12:08	83.92	6/18/2022 11:25	-0.05	6/18/2022 11:55	11.56	6/18/2022 10:43	1.05	6/18/2022 12:25	28.51
6/19/2022 12:09	83.92	6/18/2022 11:26	-0.01	6/18/2022 11:56	11.44	6/18/2022 10:44	1.07	6/18/2022 12:26	28.50
6/19/2022 12:10	83.90	6/18/2022 11:27	-0.08	6/18/2022 11:57	11.34	6/18/2022 10:45	1.07	6/18/2022 12:27	28.52
6/19/2022 12:11	83.89	6/18/2022 11:28	-0.08	6/18/2022 11:58	11.23	6/18/2022 10:46	1.07	6/18/2022 12:28	28.48
6/19/2022 12:12	83.89	6/18/2022 11:29	-0.04	6/18/2022 11:59	11.16	6/18/2022 10:47	1.08	6/18/2022 12:29	28.53
6/19/2022 12:13	83.90	6/18/2022 11:30	-0.05	6/18/2022 12:00	11.08	6/18/2022 10:48	1.04	6/18/2022 12:30	28.52
6/19/2022 12:14	83.93	6/18/2022 11:31	3.43	6/18/2022 12:01	11.01	6/18/2022 10:49	1.05	6/18/2022 12:31	28.51
6/19/2022 12:15	83.86	6/18/2022 11:32	7.43	6/18/2022 12:02	10.95	6/18/2022 10:50	1.02	6/18/2022 12:32	28.51
6/19/2022 12:16	83.89	6/18/2022 11:33	6.14	6/18/2022 12:03	10.87	6/18/2022 10:51	1.04	6/18/2022 12:33	28.47
6/19/2022 12:17	83.87	6/18/2022 11:34	5.11	6/18/2022 12:04	10.83	6/18/2022 10:52	1.03	6/18/2022 12:34	28.50
6/19/2022 12:18	83.85	6/18/2022 11:35	4.27	6/18/2022 12:05	10.78	6/18/2022 10:53	1.00	6/18/2022 12:35	28.51
6/19/2022 12:19	84.13	6/18/2022 11:36	3.53	6/18/2022 12:06	10.74	6/18/2022 10:54	0.88	6/18/2022 12:36	28.48
6/19/2022 12:20	88.50	6/18/2022 11:37	2.93	6/18/2022 12:07	10.71	6/18/2022 10:55	0.97	6/18/2022 12:37	28.51
6/19/2022 12:21	91.04	6/18/2022 11:38	2.41	6/18/2022 12:08	10.65	6/18/2022 10:56	0.96	6/18/2022 12:38	28.47

6/19/2022 12:22	92.53	6/18/2022 11:39	2.00	6/18/2022 12:09	10.64	6/18/2022 10:57	0.91	6/18/2022 12:39	28.48
6/19/2022 12:23	90.73	6/18/2022 11:40	1.68	6/18/2022 12:10	10.62	6/18/2022 10:58	0.96	6/18/2022 12:40	28.48
6/19/2022 12:24	88.57	6/18/2022 11:41	1.34	6/18/2022 12:11	10.59	6/18/2022 10:59	1.01	6/18/2022 12:41	28.51
6/19/2022 12:25	87.23	6/18/2022 11:42	1.15	6/18/2022 12:12	10.57	6/18/2022 11:00	1.04	6/18/2022 12:42	28.50
6/19/2022 12:26	86.37	6/18/2022 11:43	0.91	6/18/2022 12:13	10.55	6/18/2022 11:01	1.04	6/18/2022 12:43	28.47
6/19/2022 12:27	85.80	6/18/2022 11:44	0.74	6/18/2022 12:14	10.60	6/18/2022 11:02	1.08	6/18/2022 12:44	28.49
6/19/2022 12:28	85.46	6/18/2022 11:45	0.55	6/18/2022 12:15	10.54	6/18/2022 11:03	1.07	6/18/2022 12:45	28.49
6/19/2022 12:29	85.22	6/18/2022 11:46	0.43	6/18/2022 12:16	10.57	6/18/2022 11:04	1.04	6/18/2022 12:46	28.51
6/19/2022 12:30	85.04	6/18/2022 11:47	0.28	6/18/2022 12:17	10.54	6/18/2022 11:05	1.00	6/18/2022 12:47	28.50
6/19/2022 12:31	84.91	6/18/2022 11:48	0.15	6/18/2022 12:18	10.56	6/18/2022 11:06	1.00	6/18/2022 12:48	28.47
6/19/2022 12:32	84.81	6/18/2022 11:49	0.03	6/18/2022 12:19	10.52	6/18/2022 11:07	1.01	6/18/2022 12:49	28.49
6/19/2022 12:33	84.72	6/18/2022 11:50	0.01	6/18/2022 12:20	10.49	6/18/2022 11:08	0.98	6/18/2022 12:50	28.49
6/19/2022 12:34	84.65	6/18/2022 11:51	-0.07	6/18/2022 12:21	10.52	6/18/2022 11:09	0.96	6/18/2022 12:51	30.58
6/19/2022 12:35	84.57	6/18/2022 11:52	-0.05	6/18/2022 12:22	10.53	6/18/2022 11:10	0.94	6/18/2022 12:52	29.61
6/19/2022 12:36	84.55	6/18/2022 11:53	-0.09	6/18/2022 12:23	10.50	6/18/2022 11:11	0.96	6/18/2022 12:53	28.91
6/19/2022 12:37	84.52	6/18/2022 11:54	-0.04	6/18/2022 12:24	10.47	6/18/2022 11:12	0.94	6/18/2022 12:54	28.66
6/19/2022 12:38	84.44	6/18/2022 11:55	-0.06	6/18/2022 12:25	10.46	6/18/2022 11:13	1.01	6/18/2022 12:55	28.57
6/19/2022 12:39	84.48	6/18/2022 11:56	-0.06	6/18/2022 12:26	10.41	6/18/2022 11:14	1.02	6/18/2022 12:56	28.55
6/19/2022 12:40	84.44	6/18/2022 11:57	-0.05	6/18/2022 12:27	10.45	6/18/2022 11:15	1.05	6/18/2022 12:57	28.55
6/19/2022 12:41	84.37	6/18/2022 11:58	-0.05	6/18/2022 12:28	10.41	6/18/2022 11:16	1.04	6/18/2022 12:58	28.53
6/19/2022 12:42	84.35	6/18/2022 11:59	-0.06	6/18/2022 12:29	10.40	6/18/2022 11:17	1.02	6/18/2022 12:59	28.55
6/19/2022 12:43	84.38	6/18/2022 12:00	-0.08	6/18/2022 12:30	10.41	6/18/2022 11:18	1.02	6/18/2022 13:00	28.52
6/19/2022 12:44	84.33	6/18/2022 12:01	-0.05	6/18/2022 12:31	10.37	6/18/2022 11:19	0.97	6/18/2022 13:01	28.51
6/19/2022 12:45	84.34	6/18/2022 12:02	-0.04	6/18/2022 12:32	10.38	6/18/2022 11:20	1.00	6/18/2022 13:02	28.53
6/19/2022 12:46	84.31	6/18/2022 12:03	-0.05	6/18/2022 12:33	10.36	6/18/2022 11:21	0.95	6/18/2022 13:03	28.50
6/19/2022 12:47	84.27	6/18/2022 12:04	-0.06	6/18/2022 12:34	10.35	6/18/2022 11:22	1.00	6/18/2022 13:04	28.53
6/19/2022 12:48	84.27	6/18/2022 12:05	-0.05	6/18/2022 12:35	10.36	6/18/2022 11:23	0.94	6/18/2022 13:05	28.51
6/19/2022 12:49	84.25	6/18/2022 12:06	-0.04	6/18/2022 12:36	10.32	6/18/2022 11:24	0.94	6/18/2022 13:06	28.51
6/19/2022 12:50	84.24	6/18/2022 12:07	-0.02	6/18/2022 12:37	10.34	6/18/2022 11:25	0.94	6/18/2022 13:07	28.55
6/19/2022 12:51	84.21	6/18/2022 12:08	-0.06	6/18/2022 12:38	10.31	6/18/2022 11:26	1.01	6/18/2022 13:08	28.51
6/19/2022 12:52	84.25	6/18/2022 12:09	-0.08	6/18/2022 12:39	10.28	6/18/2022 11:27	1.00	6/18/2022 13:09	28.50
6/19/2022 12:53	84.24	6/18/2022 12:10	-0.05	6/18/2022 12:40	10.28	6/18/2022 11:28	1.05	6/18/2022 13:10	28.50
6/19/2022 12:54	84.21	6/18/2022 12:11	-0.02	6/18/2022 12:41	10.31	6/18/2022 11:29	1.03	6/18/2022 13:11	28.49
6/19/2022 12:55	84.15	6/18/2022 12:12	-0.04	6/18/2022 12:42	10.29	6/18/2022 11:30	1.08	6/18/2022 13:12	28.50
6/19/2022 12:56	84.19	6/18/2022 12:13	-0.09	6/18/2022 12:43	10.30	6/18/2022 11:31	1.03	6/18/2022 13:13	28.52
6/19/2022 12:57	84.19	6/18/2022 12:14	-0.08	6/18/2022 12:44	10.29	6/18/2022 11:32	1.06	6/18/2022 13:14	28.51
6/19/2022 12:58	84.16	6/18/2022 12:15	-0.05	6/18/2022 12:45	10.30	6/18/2022 11:33	1.03	6/18/2022 13:15	28.55
6/19/2022 12:59	84.15	6/18/2022 12:16	-0.01	6/18/2022 12:46	10.31	6/18/2022 11:34	1.06	6/18/2022 13:16	28.50
6/19/2022 13:00	84.18	6/18/2022 12:17	-0.07	6/18/2022 12:47	10.31	6/18/2022 11:35	1.03	6/18/2022 13:17	28.52
6/19/2022 13:01	84.12	6/18/2022 12:18	-0.06	6/18/2022 12:48	10.33	6/18/2022 11:36	1.02	6/18/2022 13:18	28.51
6/19/2022 13:02	84.10	6/18/2022 12:19	-0.03	6/18/2022 12:49	10.33	6/18/2022 11:37	1.02	6/18/2022 13:19	28.55
6/19/2022 13:03	84.12	6/18/2022 12:20	-0.07	6/18/2022 12:50	10.36	6/18/2022 11:38	0.97	6/18/2022 13:20	28.59
6/19/2022 13:04	84.11	6/18/2022 12:21	-0.05	6/18/2022 12:51	10.34	6/18/2022 11:39	1.02	6/18/2022 13:21	28.55
6/19/2022 13:05	84.11	6/18/2022 12:22	5.48	6/18/2022 12:52	10.37	6/18/2022 11:40	0.99	6/18/2022 13:22	28.57
6/19/2022 13:06	84.09	6/18/2022 12:23	7.32	6/18/2022 12:53	10.32	6/18/2022 11:41	1.04	6/18/2022 13:23	28.56
6/19/2022 13:07	84.11	6/18/2022 12:24	6.10	6/18/2022 12:54	10.31	6/18/2022 11:42	1.02	6/18/2022 13:24	28.57
6/19/2022 13:08	84.10	6/18/2022 12:25	5.05	6/18/2022 12:55	10.32	6/18/2022 11:43	1.04	6/18/2022 13:25	28.54
6/19/2022 13:09	84.10	6/18/2022 12:26	4.24	6/18/2022 12:56	10.34	6/18/2022 11:44	1.04	6/18/2022 13:26	28.58
6/19/2022 13:10	84.12	6/18/2022 12:27	3.50	6/18/2022 12:57	10.29	6/18/2022 11:45	1.01	6/18/2022 13:27	28.57
6/19/2022 13:11	84.08	6/18/2022 12:28	2.85	6/18/2022 12:58	10.32	6/18/2022 11:46	1.04	6/18/2022 13:28	28.54
6/19/2022 13:12	84.05	6/18/2022 12:29	2.40	6/18/2022 12:59	10.32	6/18/2022 11:47	1.02	6/18/2022 13:29	28.53
6/19/2022 13:13	84.08	6/18/2022 12:30	2.01	6/18/2022 13:00	10.33	6/18/2022 11:48	0.97	6/18/2022 13:30	30.39
6/19/2022 13:14	84.06	6/18/2022 12:31	1.68	6/18/2022 13:01	10.29	6/18/2022 11:49	1.01	6/18/2022 13:31	29.33
6/19/2022 13:15	84.04	6/18/2022 12:32	1.41	6/18/2022 13:02	10.28	6/18/2022 11:50	0.98	6/18/2022 13:32	28.83
6/19/2022 13:16	84.05	6/18/2022 12:33	1.12	6/18/2022 13:03	10.29	6/18/2022 11:51	0.94	6/18/2022 13:33	28.64
6/19/2022 13:17	84.10	6/18/2022 12:34	0.90	6/18/2022 13:04	10.31	6/18/2022 11:52	0.95	6/18/2022 13:34	28.59
6/19/2022 13:18	84.06	6/18/2022 12:35	0.72	6/18/2022 13:05	10.33	6/18/2022 11:53	0.93	6/18/2022 13:35	28.59
6/19/2022 13:19	84.04	6/18/2022 12:36	0.55	6/18/2022 13:06	10.35	6/18/2022 11:54	0.95	6/18/2022 13:36	28.59
6/19/2022 13:20	84.04	6/18/2022 12:37	0.39	6/18/2022 13:07	10.31	6/18/2022 11:55	0.99	6/18/2022 13:37	28.57
6/19/2022 13:21	84.01	6/18/2022 12:38	0.27	6/18/2022 13:08	10.38	6/18/2022 11:56	1.00	6/18/2022 13:38	28.57
6/19/2022 13:22	84.03	6/18/2022 12:39	0.17	6/18/2022 13:09	10.34	6/18/2022 11:57	1.00	6/18/2022 13:39	28.59
6/19/2022 13:23	83.98	6/18/2022 12:40	0.05	6/18/2022 13:10	10.36	6/18/2022 11:58	1.02	6/18/2022 13:40	28.58
6/19/2022 13:24	84.02	6/18/2022 12:41	-0.02	6/18/2022 13:11	10.36	6/18/2022 11:59	1.06	6/18/2022 13:41	28.55
6/19/2022 13:25	83.99	6/18/2022 12:42	-0.07	6/18/2022 13:12	10.35	6/18/2022 12:00	1.02	6/18/2022 13:42	28.57
6/19/2022 13:26	84.04	6/18/2022 12:43	-0.06	6/18/2022 13:13	10.36	6/18/2022 12:01	1.04	6/18/2022 13:43	28.55
6/19/2022 13:27	84.04	6/18/2022 12:44	-0.05	6/18/2022 13:14	10.33	6/18/2022 12:02	0.99	6/18/2022 13:44	28.55
6/19/2022 13:28	83.98	6/18/2022 12:45	-0.05	6/18/2022 13:15	10.37	6/18/2022 12:03	0.98	6/18/2022 13:45	28.55
6/19/2022 13:29	84.02	6/18/2022 12:46	-0.05	6/18/2022 13:16	10.37	6/18/2022 12:04	0.95	6/18/2022 13:46	28.52
6/19/2022 13:30	83.97	6/18/2022 12:47	-0.08	6/18/2022 13:17	10.39	6/18/2022 12:05	0.97	6/18/2022 13:47	28.55
6/19/2022 13:31	83.97	6/18/2022 12:48	-0.07	6/18/2022 13:18	10.44	6/18/2022 12:06	0.93	6/18/2022 13:48	28.53
6/19/2022 13:32	83.99	6/18/2022 12:49	-0.03	6/18/2022 13:19	10.46	6/18/2022 12:07	0.93	6/18/2022 13:49	28.54
6/19/2022 13:33	83.97	6/18/2022 12:50	-0.02	6/18/2022 13:20	10.53	6/18/2022 12:08	0.95	6/18/2022 13:50	28.55
6/19/2022 13:34	84.00	6/18/2022 12:51	-0.03	6/18/2022 13:21	10.55	6/18/2022 12:09	0.96	6/18/2022 13:51	28.53
6/19/2022 13:35	84.02	6/18/2022 12:52	-0.09	6/18/2022 13:22	10.57	6/18/2022 12:10	0.93	6/18/2022 13:52	28.53
6/19/2022 13:36	83.95	6/18/2022 12:53	-0.05	6/18/2022 13:23	10.64	6/18/2022 12:11	0.95	6/18/2022 13:53	28.51
6/19/2022 13:37	84.00	6/18/2022 12:54	-0.04	6/18/2022 13:24	10.65	6/18/2022 12:12	1.02	6/18/2022 13:54	28.51
6/19/2022 13:38	84.00	6/18/2022 12:55	-0.06	6/18/2022 13:25	10.72	6/18/2022 12:13	1.01	6/18/2022 13:55	28.51
6/19/2022 13:39	84.01	6/18/2022 12:56	-0.08	6/18/2022 13:26	10.77	6/18/2022 12:14	1.04	6/18/2022 13:56	28.53
6/19/2022 13:40	83.98	6/18/2022 12:57	-0.06	6/18/2022 13:27	10.80	6/18/2022 12:15	1.05	6/18/2022 13:57	28.54
6/19/2022 13:41	84.01	6/18/2022 12:58	3.69	6/18/2022 13:28	10.84	6/18/2022 12:16	1.05	6/18/2022 13:58	28.50
6/19/2022 13:42	83.97	6/18/2022 12:59	7.66	6/18/2022 13:29	10.93	6/18/2022 12:17	1.04	6/18/2022 13:59	28.54
6/19/2022 13:43	83.97	6/18/2022 13:00	6.28	6/18/2022 13:30	10.96	6/18/2022 12:18	1.00	6/18/2022 14:00	28.53
6/19/2022 13:44	83.93	6/18/2022 13:01	5.21	6/18/2022 13:31	10.98	6/18/2022 12:19	0.96	6/18/2022 14:01	28.51
6/19/2022 13:45	83.94	6/18/2022 13:02	4.36	6/18/2022 13:32	11.06	6/18/2022 12:20	0.95	6/18/2022 14:02	28.53
6/19/2022 13:46	83.96	6/18/2022 13:03	3.65	6/18/2022 13:33	11.08	6/18/2022 12:21	0.92	6/18/2022 14:03	28.54
6/19/2022 13:47	83.96	6/18/2022 13:04	2.99	6/18/2022 13:34	11.12	6/18/2022 12:22	0.93	6/18/2022 14:04	28.51
6/19/2022 13:48	83.98	6/18/2022 13:05	2.48	6/18/2022 13:35	11.19	6/18/2022 12:23	0.94	6/18/2022 14:05	28.55
6/19/2022 13:49	83.94	6/18/2022 13:06	2.09	6/18/2022 13:36	11.23	6/18/2022 12:24	0.93	6/18/2022 14:06	28.53

6/19/2022 13:50	83.98	6/18/2022 13:07	1.78	6/18/2022 13:37	11.23	6/18/2022 12:25	1.03	6/18/2022 14:07	28.55
6/19/2022 13:51	83.94	6/18/2022 13:08	1.45	6/18/2022 13:38	11.25	6/18/2022 12:26	1.07	6/18/2022 14:08	28.52
6/19/2022 13:52	83.95	6/18/2022 13:09	1.21	6/18/2022 13:39	11.31	6/18/2022 12:27	1.04	6/18/2022 14:09	28.51
6/19/2022 13:53	83.97	6/18/2022 13:10	0.95	6/18/2022 13:40	11.34	6/18/2022 12:28	1.02	6/18/2022 14:10	28.50
6/19/2022 13:54	83.95	6/18/2022 13:11	0.78	6/18/2022 13:41	11.36	6/18/2022 12:29	1.03	6/18/2022 14:11	28.51
6/19/2022 13:55	83.97	6/18/2022 13:12	0.59	6/18/2022 13:42	11.36	6/18/2022 12:30	1.04	6/18/2022 14:12	28.51
6/19/2022 13:56	83.92	6/18/2022 13:13	0.42	6/18/2022 13:43	11.42	6/18/2022 12:31	1.04	6/18/2022 14:13	28.50
6/19/2022 13:57	83.95	6/18/2022 13:14	0.32	6/18/2022 13:44	11.45	6/18/2022 12:32	1.04	6/18/2022 14:14	28.52
6/19/2022 13:58	83.95	6/18/2022 13:15	0.22	6/18/2022 13:45	11.49	6/18/2022 12:33	1.04	6/18/2022 14:15	28.54
6/19/2022 13:59	83.95	6/18/2022 13:16	0.10	6/18/2022 13:46	11.48	6/18/2022 12:34	1.04	6/18/2022 14:16	28.54
6/19/2022 14:00	83.93	6/18/2022 13:17	0.05	6/18/2022 13:47	11.52	6/18/2022 12:35	1.06	6/18/2022 14:17	28.54
6/19/2022 14:01	83.92	6/18/2022 13:18	-0.04	6/18/2022 13:48	11.54	6/18/2022 12:36	1.05	6/18/2022 14:18	28.50
6/19/2022 14:02	83.95	6/18/2022 13:19	-0.06	6/18/2022 13:49	11.49	6/18/2022 12:37	1.03	6/18/2022 14:19	28.52
6/19/2022 14:03	83.89	6/18/2022 13:20	-0.09	6/18/2022 13:50	11.54	6/18/2022 12:38	1.04	6/18/2022 14:20	28.49
6/19/2022 14:04	83.94	6/18/2022 13:21	-0.08	6/18/2022 13:51	11.50	6/18/2022 12:39	1.02	6/18/2022 14:21	28.51
6/19/2022 14:05	83.91	6/18/2022 13:22	-0.10	6/18/2022 13:52	11.49	6/18/2022 12:40	1.02	6/18/2022 14:22	28.53
6/19/2022 14:06	83.91	6/18/2022 13:23	-0.06	6/18/2022 13:53	11.50	6/18/2022 12:41	0.97	6/18/2022 14:23	28.48
6/19/2022 14:07	83.88	6/18/2022 13:24	-0.04	6/18/2022 13:54	11.43	6/18/2022 12:42	0.95	6/18/2022 14:24	28.55
6/19/2022 14:08	83.94	6/18/2022 13:25	-0.06	6/18/2022 13:55	11.44	6/18/2022 12:43	0.98	6/18/2022 14:25	28.55
6/19/2022 14:09	83.89	6/18/2022 13:26	-0.07	6/18/2022 13:56	11.43	6/18/2022 12:44	0.89	6/18/2022 14:26	28.49
6/19/2022 14:10	83.93	6/18/2022 13:27	-0.01	6/18/2022 13:57	11.37	6/18/2022 12:45	0.95	6/18/2022 14:27	28.50
6/19/2022 14:11	83.88	6/18/2022 13:28	-0.07	6/18/2022 13:58	11.34	6/18/2022 12:46	0.96	6/18/2022 14:28	28.51
6/19/2022 14:12	83.91	6/18/2022 13:29	-0.09	6/18/2022 13:59	11.31	6/18/2022 12:47	0.97	6/18/2022 14:29	28.52
6/19/2022 14:13	83.85	6/18/2022 13:30	-0.06	6/18/2022 14:00	11.23	6/18/2022 12:48	0.94	6/18/2022 14:30	28.51
6/19/2022 14:14	83.89	6/18/2022 13:31	-0.05	6/18/2022 14:01	11.23	6/18/2022 12:49	0.94	6/18/2022 14:31	28.49
6/19/2022 14:15	83.91	6/18/2022 13:32	-0.08	6/18/2022 14:02	11.17	6/18/2022 12:50	1.04	6/18/2022 14:32	28.51
6/19/2022 14:16	83.90	6/18/2022 13:33	-0.06	6/18/2022 14:03	11.16	6/18/2022 12:51	1.04	6/18/2022 14:33	28.51
6/19/2022 14:17	83.89	6/18/2022 13:34	-0.03	6/18/2022 14:04	11.12	6/18/2022 12:52	1.04	6/18/2022 14:34	28.47
6/19/2022 14:18	83.89	6/18/2022 13:35	-0.05	6/18/2022 14:05	11.05	6/18/2022 12:53	1.03	6/18/2022 14:35	28.49
6/19/2022 14:19	83.90	6/18/2022 13:36	-0.05	6/18/2022 14:06	11.05	6/18/2022 12:54	1.05	6/18/2022 14:36	28.49
6/19/2022 14:20	83.89	6/18/2022 13:37	-0.10	6/18/2022 14:07	11.02	6/18/2022 12:55	1.02	6/18/2022 14:37	28.49
6/19/2022 14:21	83.89	6/18/2022 13:38	-0.07	6/18/2022 14:08	10.95	6/18/2022 12:56	1.00	6/18/2022 14:38	28.51
6/19/2022 14:22	83.88	6/18/2022 13:39	-0.06	6/18/2022 14:09	10.95	6/18/2022 12:57	1.00	6/18/2022 14:39	28.49
6/19/2022 14:23	83.84	6/18/2022 13:40	-0.06	6/18/2022 14:10	10.89	6/18/2022 12:58	0.96	6/18/2022 14:40	28.48
6/19/2022 14:24	83.88	6/18/2022 13:41	-0.06	6/18/2022 14:11	10.83	6/18/2022 12:59	0.94	6/18/2022 14:41	28.51
6/19/2022 14:25	83.85	6/18/2022 13:42	-0.03	6/18/2022 14:12	10.83	6/18/2022 13:00	0.96	6/18/2022 14:42	28.46
6/19/2022 14:26	83.87	6/18/2022 13:43	-0.06	6/18/2022 14:13	10.82	6/18/2022 13:01	0.96	6/18/2022 14:43	28.50
6/19/2022 14:27	83.87	6/18/2022 13:44	-0.03	6/18/2022 14:14	10.76	6/18/2022 13:02	0.99	6/18/2022 14:44	28.52
6/19/2022 14:28	83.87	6/18/2022 13:45	-0.08	6/18/2022 14:15	10.74	6/18/2022 13:03	1.04	6/18/2022 14:45	28.51
6/19/2022 14:29	83.89	6/18/2022 13:46	-0.04	6/18/2022 14:16	10.73	6/18/2022 13:04	1.04	6/18/2022 14:46	28.49
6/19/2022 14:30	83.87	6/18/2022 13:47	-0.03	6/18/2022 14:17	10.69	6/18/2022 13:05	1.02	6/18/2022 14:47	28.48
6/19/2022 14:31	83.85	6/18/2022 13:48	-0.02	6/18/2022 14:18	10.69	6/18/2022 13:06	1.01	6/18/2022 14:48	28.53
6/19/2022 14:32	83.86	6/18/2022 13:49	-0.03	6/18/2022 14:19	10.66	6/18/2022 13:07	1.06	6/18/2022 14:49	28.50
6/19/2022 14:33	83.86	6/18/2022 13:50	-0.02	6/18/2022 14:20	10.65	6/18/2022 13:08	1.01	6/18/2022 14:50	28.50
6/19/2022 14:34	83.89	6/18/2022 13:51	-0.06	6/18/2022 14:21	10.60	6/18/2022 13:09	1.05	6/18/2022 14:51	28.52
6/19/2022 14:35	83.85	6/18/2022 13:52	-0.04	6/18/2022 14:22	10.61	6/18/2022 13:10	1.02	6/18/2022 14:52	28.53
6/19/2022 14:36	83.83	6/18/2022 13:53	-0.03	6/18/2022 14:23	10.59	6/18/2022 13:11	1.04	6/18/2022 14:53	28.49
6/19/2022 14:37	83.85	6/18/2022 13:54	-0.05	6/18/2022 14:24	10.59	6/18/2022 13:12	1.04	6/18/2022 14:54	28.51
6/19/2022 14:38	83.87	6/18/2022 13:55	-0.05	6/18/2022 14:25	10.60	6/18/2022 13:13	1.02	6/18/2022 14:55	28.50
6/19/2022 14:39	83.86	6/18/2022 13:56	-0.05	6/18/2022 14:26	10.62	6/18/2022 13:14	1.03	6/18/2022 14:56	28.46
6/19/2022 14:40	83.85	6/18/2022 13:57	4.22	6/18/2022 14:27	10.59	6/18/2022 13:15	0.98	6/18/2022 14:57	28.47
6/19/2022 14:41	83.86	6/18/2022 13:58	8.91	6/18/2022 14:28	10.58	6/18/2022 13:16	0.96	6/18/2022 14:58	28.48
6/19/2022 14:42	83.83	6/18/2022 13:59	7.41	6/18/2022 14:29	10.59	6/18/2022 13:17	0.98	6/18/2022 14:59	30.12
6/19/2022 14:43	83.85	6/18/2022 14:00	6.14	6/18/2022 14:30	10.58	6/18/2022 13:18	0.95	6/18/2022 15:00	29.83
6/19/2022 14:44	83.82	6/18/2022 14:01	5.14	6/18/2022 14:31	10.58	6/18/2022 13:19	0.95	6/18/2022 15:01	28.99
6/19/2022 14:45	83.83	6/18/2022 14:02	4.28	6/18/2022 14:32	10.53	6/18/2022 13:20	0.93	6/18/2022 15:02	28.71
6/19/2022 14:46	83.82	6/18/2022 14:03	3.57	6/18/2022 14:33	10.58	6/18/2022 13:21	0.93	6/18/2022 15:03	28.56
6/19/2022 14:47	83.87	6/18/2022 14:04	2.97	6/18/2022 14:34	10.53	6/18/2022 13:22	0.94	6/18/2022 15:04	28.58
6/19/2022 14:48	83.86	6/18/2022 14:05	2.47	6/18/2022 14:35	10.51	6/18/2022 13:23	0.95	6/18/2022 15:05	28.53
6/19/2022 14:49	83.85	6/18/2022 14:06	2.07	6/18/2022 14:36	10.52	6/18/2022 13:24	0.95	6/18/2022 15:06	28.53
6/19/2022 14:50	83.85	6/18/2022 14:07	1.71	6/18/2022 14:37	10.48	6/18/2022 13:25	1.00	6/18/2022 15:07	28.53
6/19/2022 14:51	83.86	6/18/2022 14:08	1.46	6/18/2022 14:38	10.50	6/18/2022 13:26	0.99	6/18/2022 15:08	28.52
6/19/2022 14:52	83.84	6/18/2022 14:09	1.20	6/18/2022 14:39	10.48	6/18/2022 13:27	1.01	6/18/2022 15:09	28.51
6/19/2022 14:53	83.84	6/18/2022 14:10	0.93	6/18/2022 14:40	10.45	6/18/2022 13:28	1.02	6/18/2022 15:10	28.51
6/19/2022 14:54	83.82	6/18/2022 14:11	0.77	6/18/2022 14:41	10.41	6/18/2022 13:29	1.04	6/18/2022 15:11	28.53
6/19/2022 14:55	83.86	6/18/2022 14:12	0.61	6/18/2022 14:42	10.48	6/18/2022 13:30	1.04	6/18/2022 15:12	28.54
6/19/2022 14:56	83.79	6/18/2022 14:13	0.47	6/18/2022 14:43	10.45	6/18/2022 13:31	1.05	6/18/2022 15:13	28.52
6/19/2022 14:57	83.81	6/18/2022 14:14	0.31	6/18/2022 14:44	10.42	6/18/2022 13:32	1.02	6/18/2022 15:14	28.53
6/19/2022 14:58	83.83	6/18/2022 14:15	0.22	6/18/2022 14:45	10.41	6/18/2022 13:33	1.00	6/18/2022 15:15	28.55
6/19/2022 14:59	83.85	6/18/2022 14:16	0.10	6/18/2022 14:46	10.39	6/18/2022 13:34	0.99	6/18/2022 15:16	28.51
6/19/2022 15:00	83.82	6/18/2022 14:17	0.02	6/18/2022 14:47	10.38	6/18/2022 13:35	0.94	6/18/2022 15:17	28.54
6/19/2022 15:01	83.84	6/18/2022 14:18	-0.01	6/18/2022 14:48	10.37	6/18/2022 13:36	1.00	6/18/2022 15:18	28.52
6/19/2022 15:02	83.78	6/18/2022 14:19	-0.07	6/18/2022 14:49	10.36	6/18/2022 13:37	0.95	6/18/2022 15:19	28.51
6/19/2022 15:03	83.81	6/18/2022 14:20	-0.03	6/18/2022 14:50	10.37	6/18/2022 13:38	0.93	6/18/2022 15:20	28.51
6/19/2022 15:04	83.80	6/18/2022 14:21	-0.03	6/18/2022 14:51	10.37	6/18/2022 13:39	0.90	6/18/2022 15:21	28.51
6/19/2022 15:05	83.83	6/18/2022 14:22	-0.03	6/18/2022 14:52	10.33	6/18/2022 13:40	0.96	6/18/2022 15:22	28.53
6/19/2022 15:06	83.75	6/18/2022 14:23	-0.04	6/18/2022 14:53	10.36	6/18/2022 13:41	0.97	6/18/2022 15:23	28.54
6/19/2022 15:07	83.83	6/18/2022 14:24	-0.05	6/18/2022 14:54	10.39	6/18/2022 13:42	0.97	6/18/2022 15:24	28.50
6/19/2022 15:08	83.81	6/18/2022 14:25	-0.04	6/18/2022 14:55	10.38	6/18/2022 13:43	0.99	6/18/2022 15:25	28.50
6/19/2022 15:09	83.82	6/18/2022 14:26	-0.05	6/18/2022 14:56	10.41	6/18/2022 13:44	1.00	6/18/2022 15:26	28.50
6/19/2022 15:10	83.79	6/18/2022 14:27	3.42	6/18/2022 14:57	10.39	6/18/2022 13:45	1.03	6/18/2022 15:27	28.53
6/19/2022 15:11	83.82	6/18/2022 14:28	7.62	6/18/2022 14:58	10.41	6/18/2022 13:46	1.07	6/18/2022 15:28	28.50
6/19/2022 15:12	83.81	6/18/2022 14:29	6.28	6/18/2022 14:59	10.44	6/18/2022 13:47	1.06	6/18/2022 15:29	28.47
6/19/2022 15:13	83.76	6/18/2022 14:30	5.25	6/18/2022 15:00	10.46	6/18/2022 13:48	1.03	6/18/2022 15:30	28.50
6/19/2022 15:14	83.81	6/18/2022 14:31	4.37	6/18/2022 15:01	10.46	6/18/2022 13:49	1.04	6/18/2022 15:31	28.53
6/19/2022 15:15	83.80	6/18/2022 14:32	3.64	6/18/2022 15:02	10.44	6/18/2022 13:50	1.04	6/18/2022 15:32	28.50
6/19/2022 15:16	83.82	6/18/2022 14:33	3.01	6/18/2022 15:03	10.42	6/18/2022 13:51	1.05	6/18/2022 15:33	28.49
6/19/2022 15:17	83.80	6/18/2022 14:34	2.50	6/18/2022 15:04	10.47	6/18/2022 13:52	1.05	6/18/2022 15:34	28.51

6/19/2022 15:18	83.81	6/18/2022 14:35	2.06	6/18/2022 15:05	10.41	6/18/2022 13:53	1.03	6/18/2022 15:35	28.52
6/19/2022 15:19	83.78	6/18/2022 14:36	1.73	6/18/2022 15:06	10.40	6/18/2022 13:54	1.00	6/18/2022 15:36	28.49
6/19/2022 15:20	83.76	6/18/2022 14:37	1.46	6/18/2022 15:07	10.39	6/18/2022 13:55	0.98	6/18/2022 15:37	28.50
6/19/2022 15:21	83.80	6/18/2022 14:38	1.22	6/18/2022 15:08	10.42	6/18/2022 13:56	1.00	6/18/2022 15:38	28.50
6/19/2022 15:22	83.81	6/18/2022 14:39	0.96	6/18/2022 15:09	10.36	6/18/2022 13:57	0.92	6/18/2022 15:39	28.46
6/19/2022 15:23	83.79	6/18/2022 14:40	0.79	6/18/2022 15:10	10.42	6/18/2022 13:58	0.96	6/18/2022 15:40	28.50
6/19/2022 15:24	83.77	6/18/2022 14:41	0.60	6/18/2022 15:11	10.41	6/18/2022 13:59	1.04	6/18/2022 15:41	28.49
6/19/2022 15:25	83.82	6/18/2022 14:42	0.48	6/18/2022 15:12	10.36	6/18/2022 14:00	1.06	6/18/2022 15:42	28.51
6/19/2022 15:26	83.83	6/18/2022 14:43	0.35	6/18/2022 15:13	10.35	6/18/2022 14:01	0.97	6/18/2022 15:43	28.50
6/19/2022 15:27	83.78	6/18/2022 14:44	0.26	6/18/2022 15:14	10.36	6/18/2022 14:02	0.93	6/18/2022 15:44	28.50
6/19/2022 15:28	83.76	6/18/2022 14:45	0.19	6/18/2022 15:15	10.37	6/18/2022 14:03	0.91	6/18/2022 15:45	28.51
6/19/2022 15:29	83.78	6/18/2022 14:46	0.06	6/18/2022 15:16	10.29	6/18/2022 14:04	0.93	6/18/2022 15:46	28.52
6/19/2022 15:30	83.81	6/18/2022 14:47	0.00	6/18/2022 15:17	10.32	6/18/2022 14:05	0.94	6/18/2022 15:47	28.51
6/19/2022 15:31	83.81	6/18/2022 14:48	-0.09	6/18/2022 15:18	10.33	6/18/2022 14:06	0.99	6/18/2022 15:48	28.48
6/19/2022 15:32	83.79	6/18/2022 14:49	-0.11	6/18/2022 15:19	10.33	6/18/2022 14:07	0.98	6/18/2022 15:49	28.50
6/19/2022 15:33	83.79	6/18/2022 14:50	-0.07	6/18/2022 15:20	10.36	6/18/2022 14:08	1.01	6/18/2022 15:50	28.50
6/19/2022 15:34	83.78	6/18/2022 14:51	-0.04	6/18/2022 15:21	10.35	6/18/2022 14:09	0.97	6/18/2022 15:51	28.52
6/19/2022 15:35	83.77	6/18/2022 14:52	-0.05	6/18/2022 15:22	10.37	6/18/2022 14:10	0.98	6/18/2022 15:52	28.49
6/19/2022 15:36	83.79	6/18/2022 14:53	-0.04	6/18/2022 15:23	10.41	6/18/2022 14:11	0.97	6/18/2022 15:53	28.51
6/19/2022 15:37	83.81	6/18/2022 14:54	-0.04	6/18/2022 15:24	10.38	6/18/2022 14:12	0.98	6/18/2022 15:54	28.52
6/19/2022 15:38	83.78	6/18/2022 14:55	-0.05	6/18/2022 15:25	10.41	6/18/2022 14:13	0.89	6/18/2022 15:55	28.51
6/19/2022 15:39	83.78	6/18/2022 14:56	-0.07	6/18/2022 15:26	10.38	6/18/2022 14:14	0.95	6/18/2022 15:56	28.51
6/19/2022 15:40	83.76	6/18/2022 14:57	-0.05	6/18/2022 15:27	10.41	6/18/2022 14:15	0.96	6/18/2022 15:57	28.51
6/19/2022 15:41	83.79	6/18/2022 14:58	-0.01	6/18/2022 15:28	10.37	6/18/2022 14:16	0.91	6/18/2022 15:58	28.49
6/19/2022 15:42	83.80	6/18/2022 14:59	-0.01	6/18/2022 15:29	10.41	6/18/2022 14:17	0.93	6/18/2022 15:59	28.48
6/19/2022 15:43	83.77	6/18/2022 15:00	-0.02	6/18/2022 15:30	10.33	6/18/2022 14:18	0.92	6/18/2022 16:00	28.48
6/19/2022 15:44	83.77	6/18/2022 15:01	-0.05	6/18/2022 15:31	10.38	6/18/2022 14:19	0.92	6/18/2022 16:01	28.51
6/19/2022 15:45	83.77	6/18/2022 15:02	-0.04	6/18/2022 15:32	10.39	6/18/2022 14:20	0.92	6/18/2022 16:02	28.50
6/19/2022 15:46	83.98	6/18/2022 15:03	-0.06	6/18/2022 15:33	10.37	6/18/2022 14:21	0.96	6/18/2022 16:03	28.52
6/19/2022 15:47	88.35	6/18/2022 15:04	-0.02	6/18/2022 15:34	10.38	6/18/2022 14:22	0.99	6/18/2022 16:04	28.48
6/19/2022 15:48	90.95	6/18/2022 15:05	-0.03	6/18/2022 15:35	10.34	6/18/2022 14:23	1.03	6/18/2022 16:05	28.53
6/19/2022 15:49	92.66	6/18/2022 15:06	-0.02	6/18/2022 15:36	10.30	6/18/2022 14:24	1.04	6/18/2022 16:06	28.47
6/19/2022 15:50	89.40	6/18/2022 15:07	-0.06	6/18/2022 15:37	10.35	6/18/2022 14:25	1.03	6/18/2022 16:07	28.50
6/19/2022 15:51	87.68	6/18/2022 15:08	-0.07	6/18/2022 15:38	10.31	6/18/2022 14:26	1.03	6/18/2022 16:08	28.49
6/19/2022 15:52	86.58	6/18/2022 15:09	-0.06	6/18/2022 15:39	10.31	6/18/2022 14:27	1.02	6/18/2022 16:09	28.47
6/19/2022 15:53	85.92	6/18/2022 15:10	3.57	6/18/2022 15:40	10.32	6/18/2022 14:28	0.99	6/18/2022 16:10	28.47
6/19/2022 15:54	85.50	6/18/2022 15:11	7.70	6/18/2022 15:41	10.33	6/18/2022 14:29	1.04	6/18/2022 16:11	28.52
6/19/2022 15:55	85.16	6/18/2022 15:12	6.38	6/18/2022 15:42	10.31	6/18/2022 14:30	0.97	6/18/2022 16:12	28.50
6/19/2022 15:56	84.97	6/18/2022 15:13	5.25	6/18/2022 15:43	10.30	6/18/2022 14:31	0.95	6/18/2022 16:13	28.51
6/19/2022 15:57	84.85	6/18/2022 15:14	4.41	6/18/2022 15:44	10.27	6/18/2022 14:32	0.96	6/18/2022 16:14	28.51
6/19/2022 15:58	84.72	6/18/2022 15:15	3.71	6/18/2022 15:45	10.26	6/18/2022 14:33	0.94	6/18/2022 16:15	28.51
6/19/2022 15:59	84.64	6/18/2022 15:16	3.05	6/18/2022 15:46	10.30	6/18/2022 14:34	0.97	6/18/2022 16:16	28.49
6/19/2022 16:00	84.56	6/18/2022 15:17	2.55	6/18/2022 15:47	10.27	6/18/2022 14:35	0.98	6/18/2022 16:17	28.52
6/19/2022 16:01	84.52	6/18/2022 15:18	2.13	6/18/2022 15:48	10.24	6/18/2022 14:36	0.97	6/18/2022 16:18	28.53
6/19/2022 16:02	84.46	6/18/2022 15:19	1.76	6/18/2022 15:49	10.26	6/18/2022 14:37	1.00	6/18/2022 16:19	28.48
6/19/2022 16:03	84.42	6/18/2022 15:20	1.44	6/18/2022 15:50	10.23	6/18/2022 14:38	1.01	6/18/2022 16:20	28.52
6/19/2022 16:04	84.38	6/18/2022 15:21	1.19	6/18/2022 15:51	10.27	6/18/2022 14:39	1.04	6/18/2022 16:21	28.51
6/19/2022 16:05	84.35	6/18/2022 15:22	0.97	6/18/2022 15:52	10.28	6/18/2022 14:40	0.92	6/18/2022 16:22	28.51
6/19/2022 16:06	84.35	6/18/2022 15:23	0.77	6/18/2022 15:53	10.28	6/18/2022 14:41	0.94	6/18/2022 16:23	28.52
6/19/2022 16:07	84.29	6/18/2022 15:24	0.62	6/18/2022 15:54	10.30	6/18/2022 14:42	0.92	6/18/2022 16:24	28.48
6/19/2022 16:08	84.31	6/18/2022 15:25	0.45	6/18/2022 15:55	10.34	6/18/2022 14:43	0.96	6/18/2022 16:25	28.49
6/19/2022 16:09	84.26	6/18/2022 15:26	0.32	6/18/2022 15:56	10.32	6/18/2022 14:44	0.96	6/18/2022 16:26	28.49
6/19/2022 16:10	84.26	6/18/2022 15:27	2.79	6/18/2022 15:57	10.36	6/18/2022 14:45	0.91	6/18/2022 16:27	28.53
6/19/2022 16:11	84.23	6/18/2022 15:28	7.71	6/18/2022 15:58	10.35	6/18/2022 14:46	0.96	6/18/2022 16:28	28.50
6/19/2022 16:12	84.23	6/18/2022 15:29	6.35	6/18/2022 15:59	10.32	6/18/2022 14:47	0.95	6/18/2022 16:29	28.51
6/19/2022 16:13	84.21	6/18/2022 15:30	5.29	6/18/2022 16:00	10.32	6/18/2022 14:48	0.97	6/18/2022 16:30	28.50
6/19/2022 16:14	84.15	6/18/2022 15:31	4.43	6/18/2022 16:01	10.34	6/18/2022 14:49	1.00	6/18/2022 16:31	28.50
6/19/2022 16:15	84.18	6/18/2022 15:32	3.67	6/18/2022 16:02	10.35	6/18/2022 14:50	1.05	6/18/2022 16:32	28.52
6/19/2022 16:16	84.20	6/18/2022 15:33	3.09	6/18/2022 16:03	10.37	6/18/2022 14:51	1.01	6/18/2022 16:33	28.48
6/19/2022 16:17	84.20	6/18/2022 15:34	2.58	6/18/2022 16:04	10.31	6/18/2022 14:52	1.01	6/18/2022 16:34	28.49
6/19/2022 16:18	84.12	6/18/2022 15:35	2.17	6/18/2022 16:05	10.29	6/18/2022 14:53	1.08	6/18/2022 16:35	30.20
6/19/2022 16:19	84.15	6/18/2022 15:36	1.77	6/18/2022 16:06	10.29	6/18/2022 14:54	1.02	6/18/2022 16:36	29.19
6/19/2022 16:20	84.11	6/18/2022 15:37	1.50	6/18/2022 16:07	10.32	6/18/2022 14:55	1.02	6/18/2022 16:37	28.70
6/19/2022 16:21	84.14	6/18/2022 15:38	1.23	6/18/2022 16:08	10.33	6/18/2022 14:56	0.98	6/18/2022 16:38	28.58
6/19/2022 16:22	84.13	6/18/2022 15:39	1.01	6/18/2022 16:09	10.30	6/18/2022 14:57	1.14	6/18/2022 16:39	28.57
6/19/2022 16:23	84.08	6/18/2022 15:40	0.81	6/18/2022 16:10	10.29	6/18/2022 14:58	7.97	6/18/2022 16:40	28.51
6/19/2022 16:24	84.08	6/18/2022 15:41	0.59	6/18/2022 16:11	10.30	6/18/2022 14:59	5.67	6/18/2022 16:41	28.51
6/19/2022 16:25	84.10	6/18/2022 15:42	0.44	6/18/2022 16:12	10.30	6/18/2022 15:00	3.09	6/18/2022 16:42	28.50
6/19/2022 16:26	84.09	6/18/2022 15:43	0.30	6/18/2022 16:13	10.24	6/18/2022 15:01	1.23	6/18/2022 16:43	28.48
6/19/2022 16:27	84.11	6/18/2022 15:44	0.18	6/18/2022 16:14	10.26	6/18/2022 15:02	1.01	6/18/2022 16:44	28.51
6/19/2022 16:28	84.06	6/18/2022 15:45	0.13	6/18/2022 16:15	10.23	6/18/2022 15:03	1.01	6/18/2022 16:45	28.51
6/19/2022 16:29	84.07	6/18/2022 15:46	0.03	6/18/2022 16:16	10.26	6/18/2022 15:04	1.02	6/18/2022 16:46	28.50
6/19/2022 16:30	84.08	6/18/2022 15:47	-0.04	6/18/2022 16:17	10.29	6/18/2022 15:05	1.01	6/18/2022 16:47	28.51
6/19/2022 16:31	84.06	6/18/2022 15:48	-0.07	6/18/2022 16:18	10.25	6/18/2022 15:06	1.04	6/18/2022 16:48	28.52
6/19/2022 16:32	84.08	6/18/2022 15:49	-0.07	6/18/2022 16:19	10.21	6/18/2022 15:07	1.05	6/18/2022 16:49	28.52
6/19/2022 16:33	84.06	6/18/2022 15:50	-0.04	6/18/2022 16:20	10.22	6/18/2022 15:08	1.02	6/18/2022 16:50	28.50
6/19/2022 16:34	84.05	6/18/2022 15:51	-0.06	6/18/2022 16:21	10.23	6/18/2022 15:09	0.99	6/18/2022 16:51	28.50
6/19/2022 16:35	84.05	6/18/2022 15:52	-0.06	6/18/2022 16:22	10.23	6/18/2022 15:10	0.99	6/18/2022 16:52	28.52
6/19/2022 16:36	84.05	6/18/2022 15:53	-0.06	6/18/2022 16:23	10.28	6/18/2022 15:11	0.98	6/18/2022 16:53	28.50
6/19/2022 16:37	84.04	6/18/2022 15:54	-0.06	6/18/2022 16:24	10.25	6/18/2022 15:12	1.02	6/18/2022 16:54	28.50
6/19/2022 16:38	84.02	6/18/2022 15:55	-0.06	6/18/2022 16:25	10.25	6/18/2022 15:13	1.00	6/18/2022 16:55	28.52
6/19/2022 16:39	84.06	6/18/2022 15:56	-0.06	6/18/2022 16:26	10.29	6/18/2022 15:14	0.99	6/18/2022 16:56	28.53
6/19/2022 16:40	84.03	6/18/2022 15:57	-0.05	6/18/2022 16:27	10.29	6/18/2022 15:15	0.99	6/18/2022 16:57	28.49
6/19/2022 16:41	84.00	6/18/2022 15:58	-0.04	6/18/2022 16:28	10.30	6/18/2022 15:16	0.95	6/18/2022 16:58	28.51
6/19/2022 16:42	84.01	6/18/2022 15:59	-0.09	6/18/2022 16:29	10.33	6/18/2022 15:17	0.94	6/18/2022 16:59	28.52
6/19/2022 16:43	84.02	6/18/2022 16:00	-0.03	6/18/2022 16:30	10.32	6/18/2022 15:18	0.96	6/18/2022 17:00	28.46
6/19/2022 16:44	83.98	6/18/2022 16:01	-0.08	6/18/2022 16:31	10.30	6/18/2022 15:19	0.98	6/18/2022 17:01	28.52
6/19/2022 16:45	84.02	6/18/2022 16:02	-0.07	6/18/2022 16:32	10.31	6/18/2022 15:20	0.99	6/18/2022 17:02	28.50

6/19/2022 16:46	84.03	6/18/2022 16:03	-0.07	6/18/2022 16:33	10.32	6/18/2022 15:21	0.97	6/18/2022 17:03	28.51
6/19/2022 16:47	84.00	6/18/2022 16:04	-0.08	6/18/2022 16:34	10.28	6/18/2022 15:22	0.98	6/18/2022 17:04	28.50
6/19/2022 16:48	83.98	6/18/2022 16:05	-0.04	6/18/2022 16:35	10.31	6/18/2022 15:23	1.03	6/18/2022 17:05	28.48
6/19/2022 16:49	84.00	6/18/2022 16:06	-0.05	6/18/2022 16:36	10.30	6/18/2022 15:24	1.04	6/18/2022 17:06	28.50
6/19/2022 16:50	83.98	6/18/2022 16:07	-0.06	6/18/2022 16:37	10.32	6/18/2022 15:25	1.05	6/18/2022 17:07	28.51
6/19/2022 16:51	83.99	6/18/2022 16:08	-0.05	6/18/2022 16:38	10.30	6/18/2022 15:26	1.02	6/18/2022 17:08	28.51
6/19/2022 16:52	84.00	6/18/2022 16:09	4.39	6/18/2022 16:39	10.28	6/18/2022 15:27	0.97	6/18/2022 17:09	28.47
6/19/2022 16:53	84.00	6/18/2022 16:10	7.23	6/18/2022 16:40	10.30	6/18/2022 15:28	0.99	6/18/2022 17:10	28.48
6/19/2022 16:54	83.97	6/18/2022 16:11	5.99	6/18/2022 16:41	10.28	6/18/2022 15:29	1.01	6/18/2022 17:11	28.50
6/19/2022 16:55	83.99	6/18/2022 16:12	5.02	6/18/2022 16:42	10.27	6/18/2022 15:30	1.02	6/18/2022 17:12	28.52
6/19/2022 16:56	83.99	6/18/2022 16:13	4.21	6/18/2022 16:43	10.26	6/18/2022 15:31	1.03	6/18/2022 17:13	28.50
6/19/2022 16:57	83.98	6/18/2022 16:14	3.66	6/18/2022 16:44	10.28	6/18/2022 15:32	1.03	6/18/2022 17:14	28.50
6/19/2022 16:58	83.98	6/18/2022 16:15	3.12	6/18/2022 16:45	10.27	6/18/2022 15:33	1.04	6/18/2022 17:15	28.48
6/19/2022 16:59	83.97	6/18/2022 16:16	2.57	6/18/2022 16:46	10.25	6/18/2022 15:34	1.03	6/18/2022 17:16	28.50
6/19/2022 17:00	83.98	6/18/2022 16:17	2.23	6/18/2022 16:47	10.24	6/18/2022 15:35	1.03	6/18/2022 17:17	28.49
6/19/2022 17:01	83.94	6/18/2022 16:18	1.82	6/18/2022 16:48	10.24	6/18/2022 15:36	1.00	6/18/2022 17:18	28.52
6/19/2022 17:02	83.96	6/18/2022 16:19	1.57	6/18/2022 16:49	10.25	6/18/2022 15:37	1.01	6/18/2022 17:19	28.51
6/19/2022 17:03	83.96	6/18/2022 16:20	1.32	6/18/2022 16:50	10.20	6/18/2022 15:38	1.02	6/18/2022 17:20	28.51
6/19/2022 17:04	83.93	6/18/2022 16:21	1.02	6/18/2022 16:51	10.23	6/18/2022 15:39	1.03	6/18/2022 17:21	28.52
6/19/2022 17:05	83.94	6/18/2022 16:22	0.87	6/18/2022 16:52	10.22	6/18/2022 15:40	1.05	6/18/2022 17:22	28.50
6/19/2022 17:06	83.93	6/18/2022 16:23	0.66	6/18/2022 16:53	10.21	6/18/2022 15:41	1.02	6/18/2022 17:23	28.52
6/19/2022 17:07	83.92	6/18/2022 16:24	0.54	6/18/2022 16:54	10.23	6/18/2022 15:42	1.00	6/18/2022 17:24	28.50
6/19/2022 17:08	87.61	6/18/2022 16:25	0.40	6/18/2022 16:55	10.22	6/18/2022 15:43	0.95	6/18/2022 17:25	28.50
6/19/2022 17:09	90.56	6/18/2022 16:26	0.22	6/18/2022 16:56	10.23	6/18/2022 15:44	0.94	6/18/2022 17:26	28.49
6/19/2022 17:10	92.24	6/18/2022 16:27	0.14	6/18/2022 16:57	10.20	6/18/2022 15:45	0.96	6/18/2022 17:27	28.50
6/19/2022 17:11	90.29	6/18/2022 16:28	0.10	6/18/2022 16:58	10.25	6/18/2022 15:46	0.95	6/18/2022 17:28	28.46
6/19/2022 17:12	88.25	6/18/2022 16:29	0.00	6/18/2022 16:59	10.31	6/18/2022 15:47	0.91	6/18/2022 17:29	28.50
6/19/2022 17:13	87.03	6/18/2022 16:30	-0.06	6/18/2022 17:00	10.31	6/18/2022 15:48	0.92	6/18/2022 17:30	28.50
6/19/2022 17:14	86.21	6/18/2022 16:31	-0.07	6/18/2022 17:01	10.28	6/18/2022 15:49	0.90	6/18/2022 17:31	28.53
6/19/2022 17:15	85.73	6/18/2022 16:32	-0.04	6/18/2022 17:02	10.32	6/18/2022 15:50	0.95	6/18/2022 17:32	28.50
6/19/2022 17:16	85.42	6/18/2022 16:33	-0.07	6/18/2022 17:03	10.31	6/18/2022 15:51	0.94	6/18/2022 17:33	28.53
6/19/2022 17:17	85.18	6/18/2022 16:34	-0.07	6/18/2022 17:04	10.33	6/18/2022 15:52	0.96	6/18/2022 17:34	28.47
6/19/2022 17:18	84.99	6/18/2022 16:35	-0.06	6/18/2022 17:05	10.32	6/18/2022 15:53	1.00	6/18/2022 17:35	28.49
6/19/2022 17:19	84.90	6/18/2022 16:36	-0.07	6/18/2022 17:06	10.33	6/18/2022 15:54	1.02	6/18/2022 17:36	28.49
6/19/2022 17:20	84.80	6/18/2022 16:37	-0.09	6/18/2022 17:07	10.32	6/18/2022 15:55	1.02	6/18/2022 17:37	28.49
6/19/2022 17:21	84.71	6/18/2022 16:38	-0.08	6/18/2022 17:08	10.30	6/18/2022 15:56	1.01	6/18/2022 17:38	28.49
6/19/2022 17:22	84.68	6/18/2022 16:39	-0.06	6/18/2022 17:09	10.30	6/18/2022 15:57	1.00	6/18/2022 17:39	28.57
6/19/2022 17:23	84.62	6/18/2022 16:40	-0.07	6/18/2022 17:10	10.26	6/18/2022 15:58	0.99	6/18/2022 17:40	28.59
6/19/2022 17:24	84.60	6/18/2022 16:41	-0.04	6/18/2022 17:11	10.29	6/18/2022 15:59	0.99	6/18/2022 17:41	28.55
6/19/2022 17:25	84.55	6/18/2022 16:42	-0.05	6/18/2022 17:12	10.26	6/18/2022 16:00	0.96	6/18/2022 17:42	28.56
6/19/2022 17:26	84.51	6/18/2022 16:43	-0.07	6/18/2022 17:13	10.27	6/18/2022 16:01	0.91	6/18/2022 17:43	28.56
6/19/2022 17:27	84.47	6/18/2022 16:44	-0.01	6/18/2022 17:14	10.29	6/18/2022 16:02	0.94	6/18/2022 17:44	28.53
6/19/2022 17:28	84.46	6/18/2022 16:45	-0.09	6/18/2022 17:15	10.28	6/18/2022 16:03	0.89	6/18/2022 17:45	28.54
6/19/2022 17:29	84.43	6/18/2022 16:46	-0.06	6/18/2022 17:16	10.29	6/18/2022 16:04	0.93	6/18/2022 17:46	28.55
6/19/2022 17:30	84.46	6/18/2022 16:47	-0.08	6/18/2022 17:17	10.26	6/18/2022 16:05	0.91	6/18/2022 17:47	28.52
6/19/2022 17:31	84.39	6/18/2022 16:48	-0.01	6/18/2022 17:18	10.27	6/18/2022 16:06	0.90	6/18/2022 17:48	28.54
6/19/2022 17:32	84.39	6/18/2022 16:49	-0.02	6/18/2022 17:19	10.24	6/18/2022 16:07	0.95	6/18/2022 17:49	28.54
6/19/2022 17:33	84.41	6/18/2022 16:50	-0.09	6/18/2022 17:20	10.25	6/18/2022 16:08	0.96	6/18/2022 17:50	28.55
6/19/2022 17:34	84.37	6/18/2022 16:51	-0.04	6/18/2022 17:21	10.22	6/18/2022 16:09	0.99	6/18/2022 17:51	28.52
6/19/2022 17:35	84.36	6/18/2022 16:52	-0.08	6/18/2022 17:22	10.24	6/18/2022 16:10	1.00	6/18/2022 17:52	28.54
6/19/2022 17:36	84.33	6/18/2022 16:53	-0.09	6/18/2022 17:23	10.23	6/18/2022 16:11	0.89	6/18/2022 17:53	28.52
6/19/2022 17:37	84.31	6/18/2022 16:54	-0.10	6/18/2022 17:24	10.26	6/18/2022 16:12	0.93	6/18/2022 17:54	28.52
6/19/2022 17:38	84.33	6/18/2022 16:55	-0.04	6/18/2022 17:25	10.23	6/18/2022 16:13	7.35	6/18/2022 17:55	28.55
6/19/2022 17:39	84.29	6/18/2022 16:56	-0.04	6/18/2022 17:26	10.21	6/18/2022 16:14	7.32	6/18/2022 17:56	28.49
6/19/2022 17:40	84.30	6/18/2022 16:57	-0.04	6/18/2022 17:27	10.23	6/18/2022 16:15	4.44	6/18/2022 17:57	28.54
6/19/2022 17:41	84.28	6/18/2022 16:58	-0.05	6/18/2022 17:28	10.24	6/18/2022 16:16	2.28	6/18/2022 17:58	28.53
6/19/2022 17:42	84.25	6/18/2022 16:59	-0.07	6/18/2022 17:29	10.17	6/18/2022 16:17	0.93	6/18/2022 17:59	28.51
6/19/2022 17:43	84.27	6/18/2022 17:00	-0.07	6/18/2022 17:30	10.21	6/18/2022 16:18	0.98	6/18/2022 18:00	28.53
6/19/2022 17:44	84.23	6/18/2022 17:01	-0.05	6/18/2022 17:31	10.24	6/18/2022 16:19	0.99	6/18/2022 18:01	30.62
6/19/2022 17:45	84.26	6/18/2022 17:02	-0.03	6/18/2022 17:32	10.29	6/18/2022 16:20	0.98	6/18/2022 18:02	29.88
6/19/2022 17:46	84.23	6/18/2022 17:03	-0.03	6/18/2022 17:33	10.27	6/18/2022 16:21	0.99	6/18/2022 18:03	31.44
6/19/2022 17:47	84.22	6/18/2022 17:04	-0.07	6/18/2022 17:34	10.29	6/18/2022 16:22	0.98	6/18/2022 18:04	29.95
6/19/2022 17:48	84.24	6/18/2022 17:05	-0.09	6/18/2022 17:35	10.25	6/18/2022 16:23	0.96	6/18/2022 18:05	29.16
6/19/2022 17:49	84.20	6/18/2022 17:06	-0.05	6/18/2022 17:36	10.28	6/18/2022 16:24	0.96	6/18/2022 18:06	28.82
6/19/2022 17:50	84.22	6/18/2022 17:07	-0.08	6/18/2022 17:37	10.31	6/18/2022 16:25	1.01	6/18/2022 18:07	28.67
6/19/2022 17:51	84.20	6/18/2022 17:08	-0.07	6/18/2022 17:38	10.30	6/18/2022 16:26	0.97	6/18/2022 18:08	29.10
6/19/2022 17:52	84.21	6/18/2022 17:09	-0.07	6/18/2022 17:39	10.31	6/18/2022 16:27	0.95	6/18/2022 18:09	30.09
6/19/2022 17:53	84.21	6/18/2022 17:10	-0.08	6/18/2022 17:40	10.29	6/18/2022 16:28	0.95	6/18/2022 18:10	29.17
6/19/2022 17:54	84.19	6/18/2022 17:11	-0.05	6/18/2022 17:41	10.29	6/18/2022 16:29	0.90	6/18/2022 18:11	28.83
6/19/2022 17:55	84.20	6/18/2022 17:12	-0.06	6/18/2022 17:42	10.27	6/18/2022 16:30	0.90	6/18/2022 18:12	28.67
6/19/2022 17:56	84.19	6/18/2022 17:13	-0.08	6/18/2022 17:43	10.29	6/18/2022 16:31	0.88	6/18/2022 18:13	28.61
6/19/2022 17:57	84.16	6/18/2022 17:14	-0.09	6/18/2022 17:44	10.32	6/18/2022 16:32	0.88	6/18/2022 18:14	28.64
6/19/2022 17:58	84.18	6/18/2022 17:15	-0.04	6/18/2022 17:45	10.27	6/18/2022 16:33	0.86	6/18/2022 18:15	28.64
6/19/2022 17:59	84.14	6/18/2022 17:16	-0.10	6/18/2022 17:46	10.32	6/18/2022 16:34	0.85	6/18/2022 18:16	28.60
6/19/2022 18:00	84.16	6/18/2022 17:17	-0.07	6/18/2022 17:47	10.29	6/18/2022 16:35	0.88	6/18/2022 18:17	29.49
6/19/2022 18:01	84.12	6/18/2022 17:18	-0.08	6/18/2022 17:48	10.27	6/18/2022 16:36	0.87	6/18/2022 18:18	30.00
6/19/2022 18:02	84.13	6/18/2022 17:19	0.51	6/18/2022 17:49	10.23	6/18/2022 16:37	0.90	6/18/2022 18:19	29.13
6/19/2022 18:03	84.15	6/18/2022 17:20	6.36	6/18/2022 17:50	10.28	6/18/2022 16:38	0.96	6/18/2022 18:20	30.52
6/19/2022 18:04	84.12	6/18/2022 17:21	6.62	6/18/2022 17:51	10.24	6/18/2022 16:39	0.94	6/18/2022 18:21	29.40
6/19/2022 18:05	84.12	6/18/2022 17:22	5.50	6/18/2022 17:52	10.23	6/18/2022 16:40	0.96	6/18/2022 18:22	28.90
6/19/2022 18:06	84.12	6/18/2022 17:23	4.56	6/18/2022 17:53	10.26	6/18/2022 16:41	1.04	6/18/2022 18:23	28.73
6/19/2022 18:07	84.14	6/18/2022 17:24	3.79	6/18/2022 17:54	10.23	6/18/2022 16:42	0.99	6/18/2022 18:24	28.65
6/19/2022 18:08	84.15	6/18/2022 17:25	3.14	6/18/2022 17:55	10.21	6/18/2022 16:43	0.97	6/18/2022 18:25	28.65
6/19/2022 18:09	84.13	6/18/2022 17:26	2.61	6/18/2022 17:56	10.21	6/18/2022 16:44	0.98	6/18/2022 18:26	28.62
6/19/2022 18:10	84.11	6/18/2022 17:27	2.19	6/18/2022 17:57	10.26	6/18/2022 16:45	0.93	6/18/2022 18:27	28.59
6/19/2022 18:11	84.10	6/18/2022 17:28	1.90	6/18/2022 17:58	10.28	6/18/2022 16:46	0.91	6/18/2022 18:28	28.67
6/19/2022 18:12	84.11	6/18/2022 17:29	1.73	6/18/2022 17:59	10.27	6/18/2022 16:47	0.87	6/18/2022 18:29	28.62
6/19/2022 18:13	84.13	6/18/2022 17:30	1.58	6/18/2022 18:00	10.29	6/18/2022 16:48	0.91	6/18/2022 18:30	28.60

6/19/2022 18:14	84.08	6/18/2022 17:31	1.37	6/18/2022 18:01	10.32	6/18/2022 16:49	0.90	6/18/2022 18:31	28.63
6/19/2022 18:15	84.14	6/18/2022 17:32	1.17	6/18/2022 18:02	10.32	6/18/2022 16:50	0.90	6/18/2022 18:32	28.61
6/19/2022 18:16	84.13	6/18/2022 17:33	0.95	6/18/2022 18:03	10.35	6/18/2022 16:51	0.90	6/18/2022 18:33	28.61
6/19/2022 18:17	87.64	6/18/2022 17:34	0.77	6/18/2022 18:04	10.30	6/18/2022 16:52	0.91	6/18/2022 18:34	28.60
6/19/2022 18:18	90.54	6/18/2022 17:35	0.63	6/18/2022 18:05	10.29	6/18/2022 16:53	0.98	6/18/2022 18:35	28.57
6/19/2022 18:19	92.22	6/18/2022 17:36	0.45	6/18/2022 18:06	10.33	6/18/2022 16:54	0.97	6/18/2022 18:36	28.57
6/19/2022 18:20	89.99	6/18/2022 17:37	0.34	6/18/2022 18:07	10.32	6/18/2022 16:55	0.98	6/18/2022 18:37	28.57
6/19/2022 18:21	88.14	6/18/2022 17:38	0.21	6/18/2022 18:08	10.29	6/18/2022 16:56	0.97	6/18/2022 18:38	28.61
6/19/2022 18:22	86.99	6/18/2022 17:39	0.11	6/18/2022 18:09	10.33	6/18/2022 16:57	0.94	6/18/2022 18:39	28.57
6/19/2022 18:23	86.26	6/18/2022 17:40	0.06	6/18/2022 18:10	10.31	6/18/2022 16:58	0.93	6/18/2022 18:40	28.57
6/19/2022 18:24	85.76	6/18/2022 17:41	-0.02	6/18/2022 18:11	10.29	6/18/2022 16:59	0.93	6/18/2022 18:41	28.55
6/19/2022 18:25	85.48	6/18/2022 17:42	-0.05	6/18/2022 18:12	10.33	6/18/2022 17:00	0.87	6/18/2022 18:42	28.55
6/19/2022 18:26	85.26	6/18/2022 17:43	-0.09	6/18/2022 18:13	10.31	6/18/2022 17:01	0.87	6/18/2022 18:43	28.59
6/19/2022 18:27	85.13	6/18/2022 17:44	-0.05	6/18/2022 18:14	10.33	6/18/2022 17:02	0.85	6/18/2022 18:44	28.58
6/19/2022 18:28	85.03	6/18/2022 17:45	-0.09	6/18/2022 18:15	10.35	6/18/2022 17:03	0.85	6/18/2022 18:45	28.58
6/19/2022 18:29	84.86	6/18/2022 17:46	-0.02	6/18/2022 18:16	10.38	6/18/2022 17:04	0.89	6/18/2022 18:46	28.54
6/19/2022 18:30	84.82	6/18/2022 17:47	-0.03	6/18/2022 18:17	10.37	6/18/2022 17:05	0.91	6/18/2022 18:47	28.56
6/19/2022 18:31	84.78	6/18/2022 17:48	-0.05	6/18/2022 18:18	10.36	6/18/2022 17:06	0.92	6/18/2022 18:48	28.56
6/19/2022 18:32	84.72	6/18/2022 17:49	-0.06	6/18/2022 18:19	10.33	6/18/2022 17:07	0.93	6/18/2022 18:49	28.52
6/19/2022 18:33	84.69	6/18/2022 17:50	-0.07	6/18/2022 18:20	10.38	6/18/2022 17:08	0.94	6/18/2022 18:50	28.57
6/19/2022 18:34	84.67	6/18/2022 17:51	-0.06	6/18/2022 18:21	10.35	6/18/2022 17:09	0.98	6/18/2022 18:51	28.56
6/19/2022 18:35	84.62	6/18/2022 17:52	-0.04	6/18/2022 18:22	10.35	6/18/2022 17:10	0.96	6/18/2022 18:52	28.56
6/19/2022 18:36	84.60	6/18/2022 17:53	-0.04	6/18/2022 18:23	10.34	6/18/2022 17:11	0.93	6/18/2022 18:53	28.58
6/19/2022 18:37	84.61	6/18/2022 17:54	-0.06	6/18/2022 18:24	10.32	6/18/2022 17:12	0.93	6/18/2022 18:54	28.59
6/19/2022 18:38	84.56	6/18/2022 17:55	-0.07	6/18/2022 18:25	10.36	6/18/2022 17:13	0.89	6/18/2022 18:55	28.57
6/19/2022 18:39	84.53	6/18/2022 17:56	-0.09	6/18/2022 18:26	10.37	6/18/2022 17:14	0.88	6/18/2022 18:56	28.55
6/19/2022 18:40	84.49	6/18/2022 17:57	5.84	6/18/2022 18:27	10.34	6/18/2022 17:15	0.87	6/18/2022 18:57	28.58
6/19/2022 18:41	84.51	6/18/2022 17:58	6.77	6/18/2022 18:28	10.32	6/18/2022 17:16	0.89	6/18/2022 18:58	28.56
6/19/2022 18:42	84.51	6/18/2022 17:59	5.61	6/18/2022 18:29	10.29	6/18/2022 17:17	0.87	6/18/2022 18:59	28.55
6/19/2022 18:43	84.43	6/18/2022 18:00	4.77	6/18/2022 18:30	10.33	6/18/2022 17:18	0.91	6/18/2022 19:00	28.56
6/19/2022 18:44	84.44	6/18/2022 18:01	4.12	6/18/2022 18:31	10.31	6/18/2022 17:19	0.87	6/18/2022 19:01	28.56
6/19/2022 18:45	84.43	6/18/2022 18:02	3.47	6/18/2022 18:32	10.31	6/18/2022 17:20	0.92	6/18/2022 19:02	28.54
6/19/2022 18:46	84.44	6/18/2022 18:03	2.92	6/18/2022 18:33	10.28	6/18/2022 17:21	0.89	6/18/2022 19:03	28.56
6/19/2022 18:47	84.42	6/18/2022 18:04	2.49	6/18/2022 18:34	10.26	6/18/2022 17:22	0.91	6/18/2022 19:04	28.55
6/19/2022 18:48	84.44	6/18/2022 18:05	2.04	6/18/2022 18:35	10.25	6/18/2022 17:23	0.88	6/18/2022 19:05	28.55
6/19/2022 18:49	84.41	6/18/2022 18:06	1.69	6/18/2022 18:36	10.29	6/18/2022 17:24	0.90	6/18/2022 19:06	28.57
6/19/2022 18:50	84.38	6/18/2022 18:07	1.44	6/18/2022 18:37	10.28	6/18/2022 17:25	0.87	6/18/2022 19:07	28.56
6/19/2022 18:51	84.43	6/18/2022 18:08	1.16	6/18/2022 18:38	10.27	6/18/2022 17:26	0.87	6/18/2022 19:08	28.53
6/19/2022 18:52	84.40	6/18/2022 18:09	0.98	6/18/2022 18:39	10.23	6/18/2022 17:27	1.52	6/18/2022 19:09	28.51
6/19/2022 18:53	84.36	6/18/2022 18:10	0.78	6/18/2022 18:40	10.22	6/18/2022 17:28	8.49	6/18/2022 19:10	28.50
6/19/2022 18:54	84.34	6/18/2022 18:11	0.59	6/18/2022 18:41	10.24	6/18/2022 17:29	10.69	6/18/2022 19:11	28.56
6/19/2022 18:55	84.34	6/18/2022 18:12	0.43	6/18/2022 18:42	10.24	6/18/2022 17:30	7.00	6/18/2022 19:12	28.52
6/19/2022 18:56	84.35	6/18/2022 18:13	0.30	6/18/2022 18:43	10.26	6/18/2022 17:31	4.25	6/18/2022 19:13	28.54
6/19/2022 18:57	84.31	6/18/2022 18:14	0.23	6/18/2022 18:44	10.26	6/18/2022 17:32	2.13	6/18/2022 19:14	28.55
6/19/2022 18:58	84.35	6/18/2022 18:15	0.14	6/18/2022 18:45	10.28	6/18/2022 17:33	0.85	6/18/2022 19:15	28.60
6/19/2022 18:59	84.27	6/18/2022 18:16	0.04	6/18/2022 18:46	10.33	6/18/2022 17:34	0.88	6/18/2022 19:16	28.63
6/19/2022 19:00	84.32	6/18/2022 18:17	-0.04	6/18/2022 18:47	10.29	6/18/2022 17:35	0.95	6/18/2022 19:17	28.59
6/19/2022 19:01	84.30	6/18/2022 18:18	-0.06	6/18/2022 18:48	10.29	6/18/2022 17:36	0.95	6/18/2022 19:18	28.60
6/19/2022 19:02	84.32	6/18/2022 18:19	-0.04	6/18/2022 18:49	10.31	6/18/2022 17:37	0.92	6/18/2022 19:19	28.60
6/19/2022 19:03	84.31	6/18/2022 18:20	-0.07	6/18/2022 18:50	10.33	6/18/2022 17:38	0.96	6/18/2022 19:20	28.61
6/19/2022 19:04	84.32	6/18/2022 18:21	-0.04	6/18/2022 18:51	10.30	6/18/2022 17:39	0.96	6/18/2022 19:21	28.58
6/19/2022 19:05	84.26	6/18/2022 18:22	-0.08	6/18/2022 18:52	10.31	6/18/2022 17:40	0.94	6/18/2022 19:22	28.59
6/19/2022 19:06	84.29	6/18/2022 18:23	-0.08	6/18/2022 18:53	10.31	6/18/2022 17:41	0.89	6/18/2022 19:23	28.57
6/19/2022 19:07	84.28	6/18/2022 18:24	-0.07	6/18/2022 18:54	10.31	6/18/2022 17:42	0.87	6/18/2022 19:24	28.58
6/19/2022 19:08	84.30	6/18/2022 18:25	-0.06	6/18/2022 18:55	10.34	6/18/2022 17:43	0.90	6/18/2022 19:25	28.56
6/19/2022 19:09	84.26	6/18/2022 18:26	-0.06	6/18/2022 18:56	10.30	6/18/2022 17:44	0.87	6/18/2022 19:26	28.56
6/19/2022 19:10	84.26	6/18/2022 18:27	-0.09	6/18/2022 18:57	10.30	6/18/2022 17:45	0.90	6/18/2022 19:27	28.59
6/19/2022 19:11	84.26	6/18/2022 18:28	-0.08	6/18/2022 18:58	10.30	6/18/2022 17:46	0.87	6/18/2022 19:28	28.60
6/19/2022 19:12	84.26	6/18/2022 18:29	-0.03	6/18/2022 18:59	10.26	6/18/2022 17:47	0.84	6/18/2022 19:29	28.56
6/19/2022 19:13	84.25	6/18/2022 18:30	-0.09	6/18/2022 19:00	10.24	6/18/2022 17:48	0.84	6/18/2022 19:30	28.54
6/19/2022 19:14	84.22	6/18/2022 18:31	-0.08	6/18/2022 19:01	10.30	6/18/2022 17:49	0.86	6/18/2022 19:31	28.55
6/19/2022 19:15	84.23	6/18/2022 18:32	-0.05	6/18/2022 19:02	10.28	6/18/2022 17:50	0.87	6/18/2022 19:32	28.56
6/19/2022 19:16	84.23	6/18/2022 18:33	-0.08	6/18/2022 19:03	10.29	6/18/2022 17:51	0.91	6/18/2022 19:33	28.54
6/19/2022 19:17	84.21	6/18/2022 18:34	-0.05	6/18/2022 19:04	10.29	6/18/2022 17:52	0.92	6/18/2022 19:34	28.57
6/19/2022 19:18	84.22	6/18/2022 18:35	-0.05	6/18/2022 19:05	10.30	6/18/2022 17:53	0.88	6/18/2022 19:35	28.54
6/19/2022 19:19	84.24	6/18/2022 18:36	-0.04	6/18/2022 19:06	10.33	6/18/2022 17:54	0.92	6/18/2022 19:36	28.57
6/19/2022 19:20	84.20	6/18/2022 18:37	-0.06	6/18/2022 19:07	10.32	6/18/2022 17:55	0.94	6/18/2022 19:37	28.54
6/19/2022 19:21	84.19	6/18/2022 18:38	-0.07	6/18/2022 19:08	10.35	6/18/2022 17:56	0.98	6/18/2022 19:38	28.53
6/19/2022 19:22	84.18	6/18/2022 18:39	-0.05	6/18/2022 19:09	10.34	6/18/2022 17:57	0.96	6/18/2022 19:39	28.55
6/19/2022 19:23	84.21	6/18/2022 18:40	-0.05	6/18/2022 19:10	10.34	6/18/2022 17:58	0.93	6/18/2022 19:40	28.55
6/19/2022 19:24	84.18	6/18/2022 18:41	-0.04	6/18/2022 19:11	10.35	6/18/2022 17:59	2.64	6/18/2022 19:41	28.56
6/19/2022 19:25	84.21	6/18/2022 18:42	-0.06	6/18/2022 19:12	10.34	6/18/2022 18:00	9.23	6/18/2022 19:42	28.57
6/19/2022 19:26	84.19	6/18/2022 18:43	-0.05	6/18/2022 19:13	10.29	6/18/2022 18:01	6.64	6/18/2022 19:43	28.54
6/19/2022 19:27	84.16	6/18/2022 18:44	-0.05	6/18/2022 19:14	10.28	6/18/2022 18:02	3.96	6/18/2022 19:44	28.53
6/19/2022 19:28	84.21	6/18/2022 18:45	-0.01	6/18/2022 19:15	10.34	6/18/2022 18:03	1.90	6/18/2022 19:45	28.52
6/19/2022 19:29	84.18	6/18/2022 18:46	-0.02	6/18/2022 19:16	10.33	6/18/2022 18:04	0.86	6/18/2022 19:46	28.55
6/19/2022 19:30	84.19	6/18/2022 18:47	0.02	6/18/2022 19:17	10.35	6/18/2022 18:05	0.85	6/18/2022 19:47	28.54
6/19/2022 19:31	84.17	6/18/2022 18:48	0.01	6/18/2022 19:18	10.32	6/18/2022 18:06	0.86	6/18/2022 19:48	28.55
6/19/2022 19:32	84.15	6/18/2022 18:49	-0.04	6/18/2022 19:19	10.28	6/18/2022 18:07	0.89	6/18/2022 19:49	28.57
6/19/2022 19:33	84.15	6/18/2022 18:50	-0.06	6/18/2022 19:20	10.29	6/18/2022 18:08	0.91	6/18/2022 19:50	28.56
6/19/2022 19:34	84.17	6/18/2022 18:51	-0.06	6/18/2022 19:21	10.26	6/18/2022 18:09	0.89	6/18/2022 19:51	28.52
6/19/2022 19:35	84.16	6/18/2022 18:52	-0.05	6/18/2022 19:22	10.26	6/18/2022 18:10	0.87	6/18/2022 19:52	28.52
6/19/2022 19:36	84.17	6/18/2022 18:53	-0.04	6/18/2022 19:23	10.30	6/18/2022 18:11	0.83	6/18/2022 19:53	28.55
6/19/2022 19:37	84.17	6/18/2022 18:54	-0.10	6/18/2022 19:24	10.26	6/18/2022 18:12	0.88	6/18/2022 19:54	28.54
6/19/2022 19:38	84.15	6/18/2022 18:55	-0.05	6/18/2022 19:25	10.28	6/18/2022 18:13	0.86	6/18/2022 19:55	28.53
6/19/2022 19:39	84.16	6/18/2022 18:56	-0.06	6/18/2022 19:26	10.25	6/18/2022 18:14	0.87	6/18/2022 19:56	28.54
6/19/2022 19:40	84.14	6/18/2022 18:57	-0.06	6/18/2022 19:27	10.23	6/18/2022 18:15	0.84	6/18/2022 19:57	28.56
6/19/2022 19:41	84.16	6/18/2022 18:58	3.90	6/18/2022 19:28	10.25	6/18/2022 18:16	0.84	6/18/2022 19:58	28.51

6/19/2022 19:42	84.14	6/18/2022 18:59	7.28	6/18/2022 19:29	10.25	6/18/2022 18:17	0.82	6/18/2022 19:59	28.53
6/19/2022 19:43	84.12	6/18/2022 19:00	6.01	6/18/2022 19:30	10.24	6/18/2022 18:18	0.83	6/18/2022 20:00	28.54
6/19/2022 19:44	84.15	6/18/2022 19:01	5.04	6/18/2022 19:31	10.27	6/18/2022 18:19	0.83	6/18/2022 20:01	28.54
6/19/2022 19:45	84.17	6/18/2022 19:02	4.15	6/18/2022 19:32	10.21	6/18/2022 18:20	0.85	6/18/2022 20:02	28.56
6/19/2022 19:46	84.13	6/18/2022 19:03	3.50	6/18/2022 19:33	10.25	6/18/2022 18:21	0.86	6/18/2022 20:03	28.51
6/19/2022 19:47	84.12	6/18/2022 19:04	2.85	6/18/2022 19:34	10.26	6/18/2022 18:22	0.91	6/18/2022 20:04	28.55
6/19/2022 19:48	84.14	6/18/2022 19:05	2.39	6/18/2022 19:35	10.30	6/18/2022 18:23	0.92	6/18/2022 20:05	28.55
6/19/2022 19:49	84.11	6/18/2022 19:06	2.01	6/18/2022 19:36	10.29	6/18/2022 18:24	0.92	6/18/2022 20:06	28.53
6/19/2022 19:50	84.17	6/18/2022 19:07	1.63	6/18/2022 19:37	10.29	6/18/2022 18:25	0.95	6/18/2022 20:07	28.53
6/19/2022 19:51	84.11	6/18/2022 19:08	1.34	6/18/2022 19:38	10.30	6/18/2022 18:26	0.91	6/18/2022 20:08	28.53
6/19/2022 19:52	84.11	6/18/2022 19:09	1.10	6/18/2022 19:39	10.27	6/18/2022 18:27	0.95	6/18/2022 20:09	28.54
6/19/2022 19:53	84.11	6/18/2022 19:10	0.90	6/18/2022 19:40	10.30	6/18/2022 18:28	0.92	6/18/2022 20:10	28.54
6/19/2022 19:54	84.11	6/18/2022 19:11	0.73	6/18/2022 19:41	10.33	6/18/2022 18:29	0.93	6/18/2022 20:11	28.52
6/19/2022 19:55	84.13	6/18/2022 19:12	0.57	6/18/2022 19:42	10.33	6/18/2022 18:30	0.88	6/18/2022 20:12	28.51
6/19/2022 19:56	84.13	6/18/2022 19:13	0.37	6/18/2022 19:43	10.28	6/18/2022 18:31	0.86	6/18/2022 20:13	28.55
6/19/2022 19:57	84.10	6/18/2022 19:14	0.27	6/18/2022 19:44	10.31	6/18/2022 18:32	0.87	6/18/2022 20:14	28.52
6/19/2022 19:58	84.12	6/18/2022 19:15	0.16	6/18/2022 19:45	10.30	6/18/2022 18:33	0.83	6/18/2022 20:15	28.52
6/19/2022 19:59	84.12	6/18/2022 19:16	0.05	6/18/2022 19:46	10.27	6/18/2022 18:34	0.86	6/18/2022 20:16	28.51
6/19/2022 20:00	84.09	6/18/2022 19:17	-0.02	6/18/2022 19:47	10.26	6/18/2022 18:35	0.82	6/18/2022 20:17	28.53
6/19/2022 20:01	84.10	6/18/2022 19:18	-0.05	6/18/2022 19:48	10.31	6/18/2022 18:36	0.82	6/18/2022 20:18	28.54
6/19/2022 20:02	84.10	6/18/2022 19:19	-0.03	6/18/2022 19:49	10.28	6/18/2022 18:37	0.89	6/18/2022 20:19	28.53
6/19/2022 20:03	84.08	6/18/2022 19:20	-0.10	6/18/2022 19:50	10.28	6/18/2022 18:38	0.84	6/18/2022 20:20	28.56
6/19/2022 20:04	84.10	6/18/2022 19:21	-0.04	6/18/2022 19:51	10.26	6/18/2022 18:39	0.84	6/18/2022 20:21	28.54
6/19/2022 20:05	84.08	6/18/2022 19:22	-0.06	6/18/2022 19:52	10.28	6/18/2022 18:40	0.88	6/18/2022 20:22	28.55
6/19/2022 20:06	84.07	6/18/2022 19:23	-0.04	6/18/2022 19:53	10.30	6/18/2022 18:41	0.92	6/18/2022 20:23	28.51
6/19/2022 20:07	84.05	6/18/2022 19:24	-0.03	6/18/2022 19:54	10.26	6/18/2022 18:42	0.97	6/18/2022 20:24	28.53
6/19/2022 20:08	84.09	6/18/2022 19:25	-0.05	6/18/2022 19:55	10.30	6/18/2022 18:43	0.92	6/18/2022 20:25	28.53
6/19/2022 20:09	84.10	6/18/2022 19:26	0.02	6/18/2022 19:56	10.34	6/18/2022 18:44	5.29	6/18/2022 20:26	28.53
6/19/2022 20:10	84.06	6/18/2022 19:27	0.02	6/18/2022 19:57	10.32	6/18/2022 18:45	8.62	6/18/2022 20:27	28.50
6/19/2022 20:11	84.09	6/18/2022 19:28	-0.01	6/18/2022 19:58	10.31	6/18/2022 18:46	5.29	6/18/2022 20:28	28.51
6/19/2022 20:12	84.10	6/18/2022 19:29	-0.05	6/18/2022 19:59	13.65	6/18/2022 18:47	2.81	6/18/2022 20:29	28.52
6/19/2022 20:13	84.07	6/18/2022 19:30	-0.09	6/18/2022 20:00	13.93	6/18/2022 18:48	1.07	6/18/2022 20:30	28.50
6/19/2022 20:14	84.08	6/18/2022 19:31	-0.06	6/18/2022 20:01	13.48	6/18/2022 18:49	0.93	6/18/2022 20:31	28.50
6/19/2022 20:15	84.05	6/18/2022 19:32	-0.06	6/18/2022 20:02	13.07	6/18/2022 18:50	0.94	6/18/2022 20:32	28.53
6/19/2022 20:16	84.09	6/18/2022 19:33	-0.06	6/18/2022 20:03	12.79	6/18/2022 18:51	0.92	6/18/2022 20:33	28.51
6/19/2022 20:17	84.06	6/18/2022 19:34	-0.06	6/18/2022 20:04	12.44	6/18/2022 18:52	0.93	6/18/2022 20:34	28.53
6/19/2022 20:18	84.01	6/18/2022 19:35	-0.06	6/18/2022 20:05	12.22	6/18/2022 18:53	0.89	6/18/2022 20:35	28.53
6/19/2022 20:19	84.06	6/18/2022 19:36	-0.04	6/18/2022 20:06	12.04	6/18/2022 18:54	0.86	6/18/2022 20:36	28.50
6/19/2022 20:20	84.06	6/18/2022 19:37	-0.05	6/18/2022 20:07	11.84	6/18/2022 18:55	0.87	6/18/2022 20:37	28.50
6/19/2022 20:21	84.05	6/18/2022 19:38	-0.09	6/18/2022 20:08	11.70	6/18/2022 18:56	0.89	6/18/2022 20:38	28.53
6/19/2022 20:22	84.07	6/18/2022 19:39	-0.04	6/18/2022 20:09	11.53	6/18/2022 18:57	0.84	6/18/2022 20:39	28.52
6/19/2022 20:23	84.05	6/18/2022 19:40	-0.05	6/18/2022 20:10	11.41	6/18/2022 18:58	0.89	6/18/2022 20:40	28.55
6/19/2022 20:24	84.06	6/18/2022 19:41	-0.08	6/18/2022 20:11	11.30	6/18/2022 18:59	0.85	6/18/2022 20:41	28.54
6/19/2022 20:25	84.06	6/18/2022 19:42	-0.11	6/18/2022 20:12	11.18	6/18/2022 19:00	0.89	6/18/2022 20:42	28.49
6/19/2022 20:26	84.04	6/18/2022 19:43	-0.02	6/18/2022 20:13	11.09	6/18/2022 19:01	0.85	6/18/2022 20:43	28.50
6/19/2022 20:27	84.04	6/18/2022 19:44	2.46	6/18/2022 20:14	11.02	6/18/2022 19:02	0.90	6/18/2022 20:44	28.57
6/19/2022 20:28	84.07	6/18/2022 19:45	7.58	6/18/2022 20:15	10.98	6/18/2022 19:03	0.93	6/18/2022 20:45	28.51
6/19/2022 20:29	84.08	6/18/2022 19:46	6.26	6/18/2022 20:16	10.87	6/18/2022 19:04	0.90	6/18/2022 20:46	28.52
6/19/2022 20:30	84.03	6/18/2022 19:47	5.22	6/18/2022 20:17	10.83	6/18/2022 19:05	0.89	6/18/2022 20:47	28.50
6/19/2022 20:31	84.04	6/18/2022 19:48	4.31	6/18/2022 20:18	10.79	6/18/2022 19:06	0.91	6/18/2022 20:48	28.52
6/19/2022 20:32	84.02	6/18/2022 19:49	3.58	6/18/2022 20:19	10.74	6/18/2022 19:07	0.89	6/18/2022 20:49	28.53
6/19/2022 20:33	84.03	6/18/2022 19:50	2.94	6/18/2022 20:20	10.72	6/18/2022 19:08	0.90	6/18/2022 20:50	28.52
6/19/2022 20:34	84.04	6/18/2022 19:51	2.48	6/18/2022 20:21	10.71	6/18/2022 19:09	0.95	6/18/2022 20:51	28.47
6/19/2022 20:35	84.07	6/18/2022 19:52	2.05	6/18/2022 20:22	10.66	6/18/2022 19:10	0.93	6/18/2022 20:52	28.50
6/19/2022 20:36	84.03	6/18/2022 19:53	1.72	6/18/2022 20:23	10.68	6/18/2022 19:11	0.91	6/18/2022 20:53	28.52
6/19/2022 20:37	84.04	6/18/2022 19:54	1.44	6/18/2022 20:24	10.63	6/18/2022 19:12	0.89	6/18/2022 20:54	28.53
6/19/2022 20:38	84.03	6/18/2022 19:55	1.18	6/18/2022 20:25	10.67	6/18/2022 19:13	0.87	6/18/2022 20:55	28.53
6/19/2022 20:39	84.01	6/18/2022 19:56	0.94	6/18/2022 20:26	10.62	6/18/2022 19:14	0.84	6/18/2022 20:56	28.53
6/19/2022 20:40	84.01	6/18/2022 19:57	0.75	6/18/2022 20:27	10.62	6/18/2022 19:15	0.85	6/18/2022 20:57	28.52
6/19/2022 20:41	84.02	6/18/2022 19:58	0.56	6/18/2022 20:28	10.60	6/18/2022 19:16	0.83	6/18/2022 20:58	28.56
6/19/2022 20:42	84.04	6/18/2022 19:59	0.39	6/18/2022 20:29	10.57	6/18/2022 19:17	0.83	6/18/2022 20:59	28.49
6/19/2022 20:43	84.02	6/18/2022 20:00	0.27	6/18/2022 20:30	10.59	6/18/2022 19:18	0.82	6/18/2022 21:00	28.50
6/19/2022 20:44	84.00	6/18/2022 20:01	0.18	6/18/2022 20:31	10.55	6/18/2022 19:19	0.85	6/18/2022 21:01	28.55
6/19/2022 20:45	84.04	6/18/2022 20:02	0.07	6/18/2022 20:32	10.56	6/18/2022 19:20	0.86	6/18/2022 21:02	28.57
6/19/2022 20:46	84.02	6/18/2022 20:03	-0.03	6/18/2022 20:33	10.53	6/18/2022 19:21	0.85	6/18/2022 21:03	28.59
6/19/2022 20:47	84.03	6/18/2022 20:04	4.87	6/18/2022 20:34	10.48	6/18/2022 19:22	0.88	6/18/2022 21:04	28.56
6/19/2022 20:48	84.01	6/18/2022 20:05	6.95	6/18/2022 20:35	10.49	6/18/2022 19:23	0.91	6/18/2022 21:05	28.58
6/19/2022 20:49	84.02	6/18/2022 20:06	5.75	6/18/2022 20:36	10.47	6/18/2022 19:24	0.95	6/18/2022 21:06	28.56
6/19/2022 20:50	84.01	6/18/2022 20:07	4.77	6/18/2022 20:37	10.44	6/18/2022 19:25	4.86	6/18/2022 21:07	28.55
6/19/2022 20:51	84.02	6/18/2022 20:08	3.98	6/18/2022 20:38	10.44	6/18/2022 19:26	7.25	6/18/2022 21:08	28.58
6/19/2022 20:52	84.02	6/18/2022 20:09	3.37	6/18/2022 20:39	10.43	6/18/2022 19:27	4.26	6/18/2022 21:09	28.57
6/19/2022 20:53	84.02	6/18/2022 20:10	2.76	6/18/2022 20:40	10.43	6/18/2022 19:28	2.05	6/18/2022 21:10	28.55
6/19/2022 20:54	84.01	6/18/2022 20:11	2.32	6/18/2022 20:41	10.40	6/18/2022 19:29	0.84	6/18/2022 21:11	28.55
6/19/2022 20:55	84.02	6/18/2022 20:12	1.89	6/18/2022 20:42	10.40	6/18/2022 19:30	0.85	6/18/2022 21:12	28.54
6/19/2022 20:56	83.99	6/18/2022 20:13	1.62	6/18/2022 20:43	10.39	6/18/2022 19:31	0.82	6/18/2022 21:13	28.54
6/19/2022 20:57	87.33	6/18/2022 20:14	1.33	6/18/2022 20:44	10.36	6/18/2022 19:32	0.86	6/18/2022 21:14	28.52
6/19/2022 20:58	90.40	6/18/2022 20:15	1.07	6/18/2022 20:45	10.34	6/18/2022 19:33	0.87	6/18/2022 21:15	28.54
6/19/2022 20:59	92.17	6/18/2022 20:16	0.88	6/18/2022 20:46	10.33	6/18/2022 19:34	0.88	6/18/2022 21:16	28.54
6/19/2022 21:00	90.98	6/18/2022 20:17	0.65	6/18/2022 20:47	10.32	6/18/2022 19:35	0.92	6/18/2022 21:17	28.57
6/19/2022 21:01	88.68	6/18/2022 20:18	0.52	6/18/2022 20:48	10.32	6/18/2022 19:36	0.94	6/18/2022 21:18	28.53
6/19/2022 21:02	87.33	6/18/2022 20:19	0.37	6/18/2022 20:49	10.29	6/18/2022 19:37	0.90	6/18/2022 21:19	28.51
6/19/2022 21:03	86.45	6/18/2022 20:20	0.28	6/18/2022 20:50	10.30	6/18/2022 19:38	0.94	6/18/2022 21:20	28.54
6/19/2022 21:04	85.93	6/18/2022 20:21	0.19	6/18/2022 20:51	10.30	6/18/2022 19:39	0.94	6/18/2022 21:21	28.56
6/19/2022 21:05	85.57	6/18/2022 20:22	0.07	6/18/2022 20:52	10.30	6/18/2022 19:40	0.90	6/18/2022 21:22	28.52
6/19/2022 21:06	85.33	6/18/2022 20:23	0.02	6/18/2022 20:53	10.29	6/18/2022 19:41	0.98	6/18/2022 21:23	28.50
6/19/2022 21:07	85.13	6/18/2022 20:24	-0.06	6/18/2022 20:54	10.34	6/18/2022 19:42	0.92	6/18/2022 21:24	28.55
6/19/2022 21:08	85.03	6/18/2022 20:25	-0.08	6/18/2022 20:55	10.33	6/18/2022 19:43	0.94	6/18/2022 21:25	28.52
6/19/2022 21:09	84.92	6/18/2022 20:26	-0.05	6/18/2022 20:56	10.39	6/18/2022 19:44	0.91	6/18/2022 21:26	28.53

6/19/2022 21:10	84.83	6/18/2022 20:27	-0.03	6/18/2022 20:57	10.37	6/18/2022 19:45	0.87	6/18/2022 21:27	28.54
6/19/2022 21:11	84.73	6/18/2022 20:28	-0.09	6/18/2022 20:58	10.36	6/18/2022 19:46	0.90	6/18/2022 21:28	28.53
6/19/2022 21:12	84.73	6/18/2022 20:29	-0.08	6/18/2022 20:59	10.41	6/18/2022 19:47	0.95	6/18/2022 21:29	28.53
6/19/2022 21:13	84.70	6/18/2022 20:30	-0.07	6/18/2022 21:00	10.38	6/18/2022 19:48	0.87	6/18/2022 21:30	28.52
6/19/2022 21:14	84.63	6/18/2022 20:31	-0.10	6/18/2022 21:01	10.37	6/18/2022 19:49	0.91	6/18/2022 21:31	28.49
6/19/2022 21:15	84.64	6/18/2022 20:32	-0.06	6/18/2022 21:02	13.90	6/18/2022 19:50	0.91	6/18/2022 21:32	28.50
6/19/2022 21:16	84.58	6/18/2022 20:33	-0.08	6/18/2022 21:03	14.29	6/18/2022 19:51	0.92	6/18/2022 21:33	28.53
6/19/2022 21:17	84.54	6/18/2022 20:34	-0.06	6/18/2022 21:04	13.82	6/18/2022 19:52	0.93	6/18/2022 21:34	28.53
6/19/2022 21:18	84.49	6/18/2022 20:35	-0.02	6/18/2022 21:05	13.41	6/18/2022 19:53	0.93	6/18/2022 21:35	28.51
6/19/2022 21:19	84.50	6/18/2022 20:36	-0.04	6/18/2022 21:06	13.04	6/18/2022 19:54	0.92	6/18/2022 21:36	28.53
6/19/2022 21:20	84.49	6/18/2022 20:37	-0.06	6/18/2022 21:07	12.73	6/18/2022 19:55	0.91	6/18/2022 21:37	28.47
6/19/2022 21:21	84.45	6/18/2022 20:38	-0.07	6/18/2022 21:08	12.47	6/18/2022 19:56	0.91	6/18/2022 21:38	28.53
6/19/2022 21:22	84.45	6/18/2022 20:39	-0.06	6/18/2022 21:09	12.30	6/18/2022 19:57	0.93	6/18/2022 21:39	28.53
6/19/2022 21:23	84.41	6/18/2022 20:40	-0.09	6/18/2022 21:10	12.09	6/18/2022 19:58	0.93	6/18/2022 21:40	28.55
6/19/2022 21:24	84.43	6/18/2022 20:41	-0.03	6/18/2022 21:11	11.92	6/18/2022 19:59	0.88	6/18/2022 21:41	28.55
6/19/2022 21:25	84.42	6/18/2022 20:42	-0.10	6/18/2022 21:12	11.77	6/18/2022 20:00	0.87	6/18/2022 21:42	28.54
6/19/2022 21:26	84.43	6/18/2022 20:43	-0.07	6/18/2022 21:13	11.64	6/18/2022 20:01	0.87	6/18/2022 21:43	28.50
6/19/2022 21:27	84.38	6/18/2022 20:44	-0.05	6/18/2022 21:14	11.53	6/18/2022 20:02	0.82	6/18/2022 21:44	28.49
6/19/2022 21:28	84.37	6/18/2022 20:45	-0.01	6/18/2022 21:15	11.43	6/18/2022 20:03	0.83	6/18/2022 21:45	28.54
6/19/2022 21:29	84.38	6/18/2022 20:46	-0.06	6/18/2022 21:16	11.31	6/18/2022 20:04	0.80	6/18/2022 21:46	28.51
6/19/2022 21:30	84.38	6/18/2022 20:47	-0.07	6/18/2022 21:17	11.22	6/18/2022 20:05	0.82	6/18/2022 21:47	28.54
6/19/2022 21:31	84.35	6/18/2022 20:48	-0.05	6/18/2022 21:18	11.16	6/18/2022 20:06	0.83	6/18/2022 21:48	28.53
6/19/2022 21:32	84.36	6/18/2022 20:49	-0.08	6/18/2022 21:19	11.10	6/18/2022 20:07	0.83	6/18/2022 21:49	28.51
6/19/2022 21:33	84.35	6/18/2022 20:50	-0.10	6/18/2022 21:20	11.00	6/18/2022 20:08	0.85	6/18/2022 21:50	28.52
6/19/2022 21:34	84.33	6/18/2022 20:51	-0.04	6/18/2022 21:21	10.96	6/18/2022 20:09	0.87	6/18/2022 21:51	28.53
6/19/2022 21:35	84.32	6/18/2022 20:52	-0.07	6/18/2022 21:22	10.89	6/18/2022 20:10	0.87	6/18/2022 21:52	28.52
6/19/2022 21:36	84.32	6/18/2022 20:53	-0.05	6/18/2022 21:23	10.85	6/18/2022 20:11	0.87	6/18/2022 21:53	28.54
6/19/2022 21:37	84.34	6/18/2022 20:54	-0.04	6/18/2022 21:24	10.82	6/18/2022 20:12	0.86	6/18/2022 21:54	28.54
6/19/2022 21:38	84.28	6/18/2022 20:55	-0.07	6/18/2022 21:25	10.73	6/18/2022 20:13	0.84	6/18/2022 21:55	28.51
6/19/2022 21:39	84.32	6/18/2022 20:56	-0.10	6/18/2022 21:26	10.73	6/18/2022 20:14	0.86	6/18/2022 21:56	28.52
6/19/2022 21:40	84.30	6/18/2022 20:57	3.58	6/18/2022 21:27	10.70	6/18/2022 20:15	0.83	6/18/2022 21:57	28.53
6/19/2022 21:41	84.27	6/18/2022 20:58	7.18	6/18/2022 21:28	10.65	6/18/2022 20:16	0.83	6/18/2022 21:58	28.51
6/19/2022 21:42	84.30	6/18/2022 20:59	5.85	6/18/2022 21:29	10.66	6/18/2022 20:17	0.84	6/18/2022 21:59	28.55
6/19/2022 21:43	84.26	6/18/2022 21:00	4.89	6/18/2022 21:30	10.60	6/18/2022 20:18	0.81	6/18/2022 22:00	28.54
6/19/2022 21:44	84.29	6/18/2022 21:01	4.10	6/18/2022 21:31	10.56	6/18/2022 20:19	0.83	6/18/2022 22:01	28.50
6/19/2022 21:45	84.28	6/18/2022 21:02	3.38	6/18/2022 21:32	10.54	6/18/2022 20:20	0.81	6/18/2022 22:02	28.52
6/19/2022 21:46	84.25	6/18/2022 21:03	2.80	6/18/2022 21:33	10.51	6/18/2022 20:21	0.84	6/18/2022 22:03	28.52
6/19/2022 21:47	84.29	6/18/2022 21:04	2.32	6/18/2022 21:34	10.51	6/18/2022 20:22	0.86	6/18/2022 22:04	28.54
6/19/2022 21:48	84.26	6/18/2022 21:05	1.96	6/18/2022 21:35	10.46	6/18/2022 20:23	0.90	6/18/2022 22:05	28.50
6/19/2022 21:49	84.26	6/18/2022 21:06	1.68	6/18/2022 21:36	10.41	6/18/2022 20:24	0.89	6/18/2022 22:06	28.54
6/19/2022 21:50	84.24	6/18/2022 21:07	1.34	6/18/2022 21:37	10.43	6/18/2022 20:25	0.92	6/18/2022 22:07	28.52
6/19/2022 21:51	84.22	6/18/2022 21:08	1.10	6/18/2022 21:38	10.42	6/18/2022 20:26	0.93	6/18/2022 22:08	28.53
6/19/2022 21:52	84.25	6/18/2022 21:09	0.89	6/18/2022 21:39	10.45	6/18/2022 20:27	0.93	6/18/2022 22:09	28.52
6/19/2022 21:53	84.23	6/18/2022 21:10	0.66	6/18/2022 21:40	10.42	6/18/2022 20:28	0.93	6/18/2022 22:10	28.52
6/19/2022 21:54	84.25	6/18/2022 21:11	0.52	6/18/2022 21:41	10.45	6/18/2022 20:29	0.91	6/18/2022 22:11	28.49
6/19/2022 21:55	84.23	6/18/2022 21:12	0.40	6/18/2022 21:42	10.43	6/18/2022 20:30	0.89	6/18/2022 22:12	28.55
6/19/2022 21:56	84.26	6/18/2022 21:13	0.27	6/18/2022 21:43	10.40	6/18/2022 20:31	0.85	6/18/2022 22:13	28.52
6/19/2022 21:57	84.22	6/18/2022 21:14	0.16	6/18/2022 21:44	10.41	6/18/2022 20:32	0.81	6/18/2022 22:14	28.50
6/19/2022 21:58	84.22	6/18/2022 21:15	0.09	6/18/2022 21:45	10.41	6/18/2022 20:33	0.80	6/18/2022 22:15	28.52
6/19/2022 21:59	84.21	6/18/2022 21:16	0.00	6/18/2022 21:46	10.45	6/18/2022 20:34	0.79	6/18/2022 22:16	28.51
6/19/2022 22:00	84.19	6/18/2022 21:17	-0.04	6/18/2022 21:47	10.45	6/18/2022 20:35	0.77	6/18/2022 22:17	28.52
6/19/2022 22:01	84.19	6/18/2022 21:18	-0.04	6/18/2022 21:48	10.45	6/18/2022 20:36	0.82	6/18/2022 22:18	28.52
6/19/2022 22:02	84.17	6/18/2022 21:19	-0.08	6/18/2022 21:49	10.40	6/18/2022 20:37	0.85	6/18/2022 22:19	28.53
6/19/2022 22:03	84.20	6/18/2022 21:20	-0.07	6/18/2022 21:50	10.43	6/18/2022 20:38	0.83	6/18/2022 22:20	28.50
6/19/2022 22:04	84.18	6/18/2022 21:21	-0.09	6/18/2022 21:51	10.46	6/18/2022 20:39	0.90	6/18/2022 22:21	28.54
6/19/2022 22:05	84.19	6/18/2022 21:22	-0.05	6/18/2022 21:52	10.39	6/18/2022 20:40	0.94	6/18/2022 22:22	28.53
6/19/2022 22:06	84.16	6/18/2022 21:23	-0.09	6/18/2022 21:53	10.38	6/18/2022 20:41	0.89	6/18/2022 22:23	28.52
6/19/2022 22:07	84.16	6/18/2022 21:24	-0.07	6/18/2022 21:54	10.38	6/18/2022 20:42	0.92	6/18/2022 22:24	28.54
6/19/2022 22:08	84.18	6/18/2022 21:25	-0.08	6/18/2022 21:55	10.39	6/18/2022 20:43	0.90	6/18/2022 22:25	28.54
6/19/2022 22:09	84.17	6/18/2022 21:26	-0.04	6/18/2022 21:56	10.39	6/18/2022 20:44	0.89	6/18/2022 22:26	28.53
6/19/2022 22:10	84.17	6/18/2022 21:27	-0.05	6/18/2022 21:57	10.42	6/18/2022 20:45	0.86	6/18/2022 22:27	28.52
6/19/2022 22:11	84.19	6/18/2022 21:28	-0.09	6/18/2022 21:58	10.42	6/18/2022 20:46	0.85	6/18/2022 22:28	28.53
6/19/2022 22:12	84.16	6/18/2022 21:29	-0.08	6/18/2022 21:59	10.47	6/18/2022 20:47	0.80	6/18/2022 22:29	28.50
6/19/2022 22:13	84.16	6/18/2022 21:30	-0.08	6/18/2022 22:00	10.47	6/18/2022 20:48	0.83	6/18/2022 22:30	28.54
6/19/2022 22:14	84.15	6/18/2022 21:31	-0.05	6/18/2022 22:01	10.47	6/18/2022 20:49	0.81	6/18/2022 22:31	28.52
6/19/2022 22:15	84.17	6/18/2022 21:32	-0.08	6/18/2022 22:02	10.48	6/18/2022 20:50	0.79	6/18/2022 22:32	28.47
6/19/2022 22:16	84.14	6/18/2022 21:33	-0.11	6/18/2022 22:03	10.48	6/18/2022 20:51	0.82	6/18/2022 22:33	28.53
6/19/2022 22:17	84.19	6/18/2022 21:34	-0.06	6/18/2022 22:04	10.46	6/18/2022 20:52	0.82	6/18/2022 22:34	28.50
6/19/2022 22:18	84.15	6/18/2022 21:35	-0.07	6/18/2022 22:05	10.46	6/18/2022 20:53	0.85	6/18/2022 22:35	28.52
6/19/2022 22:19	84.15	6/18/2022 21:36	-0.04	6/18/2022 22:06	10.43	6/18/2022 20:54	0.88	6/18/2022 22:36	28.49
6/19/2022 22:20	84.17	6/18/2022 21:37	-0.04	6/18/2022 22:07	10.42	6/18/2022 20:55	0.88	6/18/2022 22:37	28.51
6/19/2022 22:21	84.14	6/18/2022 21:38	-0.07	6/18/2022 22:08	10.46	6/18/2022 20:56	0.91	6/18/2022 22:38	28.51
6/19/2022 22:22	84.14	6/18/2022 21:39	2.65	6/18/2022 22:09	10.46	6/18/2022 20:57	0.88	6/18/2022 22:39	28.52
6/19/2022 22:23	84.15	6/18/2022 21:40	7.46	6/18/2022 22:10	10.44	6/18/2022 20:58	0.92	6/18/2022 22:40	28.51
6/19/2022 22:24	84.16	6/18/2022 21:41	6.18	6/18/2022 22:11	10.44	6/18/2022 20:59	0.88	6/18/2022 22:41	28.52
6/19/2022 22:25	84.12	6/18/2022 21:42	5.11	6/18/2022 22:12	10.43	6/18/2022 21:00	0.91	6/18/2022 22:42	28.52
6/19/2022 22:26	84.12	6/18/2022 21:43	4.29	6/18/2022 22:13	10.41	6/18/2022 21:01	0.86	6/18/2022 22:43	28.50
6/19/2022 22:27	84.11	6/18/2022 21:44	3.54	6/18/2022 22:14	10.36	6/18/2022 21:02	0.83	6/18/2022 22:44	28.51
6/19/2022 22:28	84.12	6/18/2022 21:45	2.91	6/18/2022 22:15	10.37	6/18/2022 21:03	0.81	6/18/2022 22:45	28.53
6/19/2022 22:29	84.11	6/18/2022 21:46	2.47	6/18/2022 22:16	10.37	6/18/2022 21:04	0.81	6/18/2022 22:46	28.53
6/19/2022 22:30	84.12	6/18/2022 21:47	2.05	6/18/2022 22:17	10.36	6/18/2022 21:05	0.80	6/18/2022 22:47	30.75
6/19/2022 22:31	84.12	6/18/2022 21:48	1.72	6/18/2022 22:18	10.37	6/18/2022 21:06	0.89	6/18/2022 22:48	29.55
6/19/2022 22:32	84.13	6/18/2022 21:49	1.42	6/18/2022 22:19	10.33	6/18/2022 21:07	0.88	6/18/2022 22:49	28.92
6/19/2022 22:33	84.14	6/18/2022 21:50	1.18	6/18/2022 22:20	10.34	6/18/2022 21:08	0.86	6/18/2022 22:50	28.67
6/19/2022 22:34	84.11	6/18/2022 21:51	0.91	6/18/2022 22:21	10.34	6/18/2022 21:09	0.87	6/18/2022 22:51	29.71
6/19/2022 22:35	84.11	6/18/2022 21:52	0.76	6/18/2022 22:22	10.31	6/18/2022 21:10	0.91	6/18/2022 22:52	29.81
6/19/2022 22:36	84.10	6/18/2022 21:53	0.58	6/18/2022 22:23	10.32	6/18/2022 21:11	0.88	6/18/2022 22:53	29.04
6/19/2022 22:37	84.10	6/18/2022 21:54	0.47	6/18/2022 22:24	10.30	6/18/2022 21:12	0.89	6/18/2022 22:54	28.76

6/19/2022 22:38	84.03	6/18/2022 21:55	0.29	6/18/2022 22:25	10.30	6/18/2022 21:13	0.87	6/18/2022 22:55	28.65
6/19/2022 22:39	84.12	6/18/2022 21:56	0.19	6/18/2022 22:26	10.28	6/18/2022 21:14	0.89	6/18/2022 22:56	30.77
6/19/2022 22:40	84.06	6/18/2022 21:57	0.16	6/18/2022 22:27	10.31	6/18/2022 21:15	0.88	6/18/2022 22:57	29.51
6/19/2022 22:41	84.11	6/18/2022 21:58	0.21	6/18/2022 22:28	10.30	6/18/2022 21:16	0.89	6/18/2022 22:58	28.91
6/19/2022 22:42	84.08	6/18/2022 21:59	0.15	6/18/2022 22:29	10.31	6/18/2022 21:17	0.87	6/18/2022 22:59	28.74
6/19/2022 22:43	84.09	6/18/2022 22:00	0.12	6/18/2022 22:30	10.33	6/18/2022 21:18	0.83	6/18/2022 23:00	28.63
6/19/2022 22:44	84.13	6/18/2022 22:01	0.06	6/18/2022 22:31	10.33	6/18/2022 21:19	0.81	6/18/2022 23:01	28.62
6/19/2022 22:45	84.11	6/18/2022 22:02	-0.04	6/18/2022 22:32	10.36	6/18/2022 21:20	0.75	6/18/2022 23:02	28.62
6/19/2022 22:46	84.11	6/18/2022 22:03	-0.07	6/18/2022 22:33	10.37	6/18/2022 21:21	0.80	6/18/2022 23:03	28.60
6/19/2022 22:47	84.07	6/18/2022 22:04	-0.01	6/18/2022 22:34	10.36	6/18/2022 21:22	0.77	6/18/2022 23:04	28.58
6/19/2022 22:48	84.09	6/18/2022 22:05	-0.04	6/18/2022 22:35	10.39	6/18/2022 21:23	0.80	6/18/2022 23:05	28.59
6/19/2022 22:49	84.09	6/18/2022 22:06	-0.07	6/18/2022 22:36	10.38	6/18/2022 21:24	0.77	6/18/2022 23:06	28.59
6/19/2022 22:50	84.07	6/18/2022 22:07	-0.07	6/18/2022 22:37	10.36	6/18/2022 21:25	0.76	6/18/2022 23:07	28.61
6/19/2022 22:51	84.07	6/18/2022 22:08	-0.05	6/18/2022 22:38	10.35	6/18/2022 21:26	0.80	6/18/2022 23:08	28.57
6/19/2022 22:52	84.10	6/18/2022 22:09	-0.07	6/18/2022 22:39	10.35	6/18/2022 21:27	0.81	6/18/2022 23:09	28.60
6/19/2022 22:53	84.09	6/18/2022 22:10	-0.05	6/18/2022 22:40	10.29	6/18/2022 21:28	0.79	6/18/2022 23:10	28.57
6/19/2022 22:54	84.08	6/18/2022 22:11	-0.08	6/18/2022 22:41	10.34	6/18/2022 21:29	0.84	6/18/2022 23:11	28.58
6/19/2022 22:55	84.09	6/18/2022 22:12	-0.06	6/18/2022 22:42	10.36	6/18/2022 21:30	0.87	6/18/2022 23:12	28.55
6/19/2022 22:56	84.10	6/18/2022 22:13	-0.04	6/18/2022 22:43	10.31	6/18/2022 21:31	0.89	6/18/2022 23:13	28.58
6/19/2022 22:57	84.10	6/18/2022 22:14	-0.07	6/18/2022 22:44	10.32	6/18/2022 21:32	0.88	6/18/2022 23:14	28.54
6/19/2022 22:58	84.10	6/18/2022 22:15	-0.07	6/18/2022 22:45	10.34	6/18/2022 21:33	0.91	6/18/2022 23:15	28.56
6/19/2022 22:59	84.06	6/18/2022 22:16	-0.07	6/18/2022 22:46	10.40	6/18/2022 21:34	0.90	6/18/2022 23:16	28.56
6/19/2022 23:00	84.07	6/18/2022 22:17	-0.07	6/18/2022 22:47	10.39	6/18/2022 21:35	0.83	6/18/2022 23:17	28.58
6/19/2022 23:01	84.06	6/18/2022 22:18	-0.06	6/18/2022 22:48	10.36	6/18/2022 21:36	0.84	6/18/2022 23:18	28.59
6/19/2022 23:02	84.07	6/18/2022 22:19	-0.06	6/18/2022 22:49	10.38	6/18/2022 21:37	0.80	6/18/2022 23:19	28.55
6/19/2022 23:03	84.03	6/18/2022 22:20	-0.07	6/18/2022 22:50	10.39	6/18/2022 21:38	0.78	6/18/2022 23:20	28.53
6/19/2022 23:04	84.09	6/18/2022 22:21	-0.05	6/18/2022 22:51	10.39	6/18/2022 21:39	0.82	6/18/2022 23:21	28.57
6/19/2022 23:05	84.06	6/18/2022 22:22	-0.05	6/18/2022 22:52	10.38	6/18/2022 21:40	0.80	6/18/2022 23:22	28.57
6/19/2022 23:06	84.05	6/18/2022 22:23	-0.10	6/18/2022 22:53	10.40	6/18/2022 21:41	0.79	6/18/2022 23:23	28.60
6/19/2022 23:07	84.06	6/18/2022 22:24	-0.03	6/18/2022 22:54	10.41	6/18/2022 21:42	0.78	6/18/2022 23:24	28.61
6/19/2022 23:08	84.07	6/18/2022 22:25	-0.08	6/18/2022 22:55	10.37	6/18/2022 21:43	0.78	6/18/2022 23:25	28.66
6/19/2022 23:09	84.05	6/18/2022 22:26	-0.05	6/18/2022 22:56	10.37	6/18/2022 21:44	0.79	6/18/2022 23:26	28.62
6/19/2022 23:10	84.03	6/18/2022 22:27	-0.11	6/18/2022 22:57	10.35	6/18/2022 21:45	0.81	6/18/2022 23:27	28.59
6/19/2022 23:11	84.08	6/18/2022 22:28	-0.01	6/18/2022 22:58	10.35	6/18/2022 21:46	0.85	6/18/2022 23:28	28.61
6/19/2022 23:12	84.05	6/18/2022 22:29	-0.07	6/18/2022 22:59	10.34	6/18/2022 21:47	0.80	6/18/2022 23:29	28.58
6/19/2022 23:13	84.04	6/18/2022 22:30	-0.07	6/18/2022 23:00	10.32	6/18/2022 21:48	0.80	6/18/2022 23:30	28.59
6/19/2022 23:14	84.07	6/18/2022 22:31	2.84	6/18/2022 23:01	10.33	6/18/2022 21:49	0.78	6/18/2022 23:31	28.60
6/19/2022 23:15	84.05	6/18/2022 22:32	8.16	6/18/2022 23:02	10.31	6/18/2022 21:50	0.78	6/18/2022 23:32	28.59
6/19/2022 23:16	84.06	6/18/2022 22:33	7.31	6/18/2022 23:03	10.28	6/18/2022 21:51	0.79	6/18/2022 23:33	28.62
6/19/2022 23:17	84.05	6/18/2022 22:34	6.02	6/18/2022 23:04	10.31	6/18/2022 21:52	0.78	6/18/2022 23:34	28.59
6/19/2022 23:18	84.06	6/18/2022 22:35	5.06	6/18/2022 23:05	10.30	6/18/2022 21:53	0.82	6/18/2022 23:35	28.58
6/19/2022 23:19	84.06	6/18/2022 22:36	4.23	6/18/2022 23:06	10.27	6/18/2022 21:54	0.77	6/18/2022 23:36	28.57
6/19/2022 23:20	84.02	6/18/2022 22:37	3.50	6/18/2022 23:07	10.30	6/18/2022 21:55	0.80	6/18/2022 23:37	28.54
6/19/2022 23:21	84.04	6/18/2022 22:38	2.93	6/18/2022 23:08	10.31	6/18/2022 21:56	1.10	6/18/2022 23:38	28.56
6/19/2022 23:22	84.02	6/18/2022 22:39	2.45	6/18/2022 23:09	10.30	6/18/2022 21:57	8.00	6/18/2022 23:39	28.60
6/19/2022 23:23	84.07	6/18/2022 22:40	2.04	6/18/2022 23:10	10.29	6/18/2022 21:58	6.16	6/18/2022 23:40	28.58
6/19/2022 23:24	84.04	6/18/2022 22:41	1.74	6/18/2022 23:11	10.29	6/18/2022 21:59	3.44	6/18/2022 23:41	28.60
6/19/2022 23:25	84.04	6/18/2022 22:42	1.48	6/18/2022 23:12	10.26	6/18/2022 22:00	1.50	6/18/2022 23:42	28.59
6/19/2022 23:26	84.06	6/18/2022 22:43	1.19	6/18/2022 23:13	10.24	6/18/2022 22:01	0.86	6/18/2022 23:43	28.59
6/19/2022 23:27	84.03	6/18/2022 22:44	0.99	6/18/2022 23:14	10.28	6/18/2022 22:02	0.87	6/18/2022 23:44	28.59
6/19/2022 23:28	84.02	6/18/2022 22:45	0.78	6/18/2022 23:15	10.26	6/18/2022 22:03	0.89	6/18/2022 23:45	28.58
6/19/2022 23:29	84.06	6/18/2022 22:46	0.59	6/18/2022 23:16	10.30	6/18/2022 22:04	0.85	6/18/2022 23:46	28.57
6/19/2022 23:30	84.06	6/18/2022 22:47	0.42	6/18/2022 23:17	10.30	6/18/2022 22:05	0.80	6/18/2022 23:47	28.55
6/19/2022 23:31	84.04	6/18/2022 22:48	0.33	6/18/2022 23:18	10.30	6/18/2022 22:06	0.82	6/18/2022 23:48	28.58
6/19/2022 23:32	84.01	6/18/2022 22:49	0.24	6/18/2022 23:19	10.34	6/18/2022 22:07	0.79	6/18/2022 23:49	28.59
6/19/2022 23:33	84.03	6/18/2022 22:50	0.14	6/18/2022 23:20	10.30	6/18/2022 22:08	0.80	6/18/2022 23:50	28.64
6/19/2022 23:34	84.02	6/18/2022 22:51	0.01	6/18/2022 23:21	10.33	6/18/2022 22:09	0.80	6/18/2022 23:51	28.60
6/19/2022 23:35	84.03	6/18/2022 22:52	-0.07	6/18/2022 23:22	10.35	6/18/2022 22:10	0.83	6/18/2022 23:52	28.62
6/19/2022 23:36	84.01	6/18/2022 22:53	-0.06	6/18/2022 23:23	10.30	6/18/2022 22:11	0.76	6/18/2022 23:53	28.63
6/19/2022 23:37	84.04	6/18/2022 22:54	-0.09	6/18/2022 23:24	10.32	6/18/2022 22:12	0.77	6/18/2022 23:54	28.57
6/19/2022 23:38	84.02	6/18/2022 22:55	-0.06	6/18/2022 23:25	10.30	6/18/2022 22:13	0.80	6/18/2022 23:55	28.64
6/19/2022 23:39	84.02	6/18/2022 22:56	-0.04	6/18/2022 23:26	10.37	6/18/2022 22:14	0.76	6/18/2022 23:56	28.59
6/19/2022 23:40	84.04	6/18/2022 22:57	-0.06	6/18/2022 23:27	10.29	6/18/2022 22:15	0.83	6/18/2022 23:57	28.60
6/19/2022 23:41	84.03	6/18/2022 22:58	-0.07	6/18/2022 23:28	10.31	6/18/2022 22:16	0.83	6/18/2022 23:58	28.61
6/19/2022 23:42	84.04	6/18/2022 22:59	-0.03	6/18/2022 23:29	10.31	6/18/2022 22:17	0.87	6/18/2022 23:59	28.61
6/19/2022 23:43	84.06	6/18/2022 23:00	-0.03	6/18/2022 23:30	10.33	6/18/2022 22:18	0.85	6/19/2022 0:00	28.60
6/19/2022 23:44	84.01	6/18/2022 23:01	-0.02	6/18/2022 23:31	10.31	6/18/2022 22:19	0.89	6/19/2022 0:01	28.58
6/19/2022 23:45	84.02	6/18/2022 23:02	-0.06	6/18/2022 23:32	10.26	6/18/2022 22:20	0.90	6/19/2022 0:02	28.57
6/19/2022 23:46	84.06	6/18/2022 23:03	-0.09	6/18/2022 23:33	10.27	6/18/2022 22:21	0.88	6/19/2022 0:03	28.57
6/19/2022 23:47	86.92	6/18/2022 23:04	-0.04	6/18/2022 23:34	10.30	6/18/2022 22:22	0.85	6/19/2022 0:04	28.58
6/19/2022 23:48	90.09	6/18/2022 23:05	-0.05	6/18/2022 23:35	10.31	6/18/2022 22:23	0.86	6/19/2022 0:05	28.61
6/19/2022 23:49	91.88	6/18/2022 23:06	-0.04	6/18/2022 23:36	10.28	6/18/2022 22:24	0.78	6/19/2022 0:06	28.60
6/19/2022 23:50	90.63	6/18/2022 23:07	-0.02	6/18/2022 23:37	10.25	6/18/2022 22:25	0.82	6/19/2022 0:07	28.57
6/19/2022 23:51	88.53	6/18/2022 23:08	-0.09	6/18/2022 23:38	10.29	6/18/2022 22:26	0.78	6/19/2022 0:08	28.59
6/19/2022 23:52	87.19	6/18/2022 23:09	-0.05	6/18/2022 23:39	10.24	6/18/2022 22:27	0.78	6/19/2022 0:09	28.61
6/19/2022 23:53	86.36	6/18/2022 23:10	-0.07	6/18/2022 23:40	10.25	6/18/2022 22:28	0.79	6/19/2022 0:10	28.56
6/19/2022 23:54	85.88	6/18/2022 23:11	-0.07	6/18/2022 23:41	10.24	6/18/2022 22:29	0.75	6/19/2022 0:11	28.54
6/19/2022 23:55	85.51	6/18/2022 23:12	-0.02	6/18/2022 23:42	10.25	6/18/2022 22:30	0.80	6/19/2022 0:12	28.57
6/19/2022 23:56	85.29	6/18/2022 23:13	-0.04	6/18/2022 23:43	10.22	6/18/2022 22:31	0.82	6/19/2022 0:13	28.56
6/19/2022 23:57	85.12	6/18/2022 23:14	-0.05	6/18/2022 23:44	10.26	6/18/2022 22:32	0.88	6/19/2022 0:14	28.58
6/19/2022 23:58	84.96	6/18/2022 23:15	2.07	6/18/2022 23:45	10.25	6/18/2022 22:33	0.79	6/19/2022 0:15	28.57
6/19/2022 23:59	84.90	6/18/2022 23:16	7.52	6/18/2022 23:46	10.27	6/18/2022 22:34	0.75	6/19/2022 0:16	28.58
6/20/2022 0:00	84.83	6/18/2022 23:17	6.48	6/18/2022 23:47	10.24	6/18/2022 22:35	0.78	6/19/2022 0:17	28.59
6/20/2022 0:01	84.76	6/18/2022 23:18	5.40	6/18/2022 23:48	10.29	6/18/2022 22:36	0.82	6/19/2022 0:18	28.59
6/20/2022 0:02	84.69	6/18/2022 23:19	4.51	6/18/2022 23:49	10.29	6/18/2022 22:37	0.83	6/19/2022 0:19	28.56
6/20/2022 0:03	84.68	6/18/2022 23:20	3.75	6/18/2022 23:50	10.32	6/18/2022 22:38	0.84	6/19/2022 0:20	28.58
6/20/2022 0:04	84.59	6/18/2022 23:21	3.09	6/18/2022 23:51	10.33	6/18/2022 22:39	0.88	6/19/2022 0:21	28.54
6/20/2022 0:05	84.60	6/18/2022 23:22	2.60	6/18/2022 23:52	10.32	6/18/2022 22:40	0.85	6/19/2022 0:22	28.54

6/20/2022 0:06	84.57	6/18/2022 23:23	2.19	6/18/2022 23:53	10.30	6/18/2022 22:41	0.80	6/19/2022 0:23	28.55
6/20/2022 0:07	84.51	6/18/2022 23:24	1.84	6/18/2022 23:54	10.29	6/18/2022 22:42	0.79	6/19/2022 0:24	28.58
6/20/2022 0:08	84.53	6/18/2022 23:25	1.53	6/18/2022 23:55	10.35	6/18/2022 22:43	0.80	6/19/2022 0:25	28.59
6/20/2022 0:09	84.53	6/18/2022 23:26	1.22	6/18/2022 23:56	10.33	6/18/2022 22:44	0.83	6/19/2022 0:26	28.55
6/20/2022 0:10	84.49	6/18/2022 23:27	0.99	6/18/2022 23:57	10.35	6/18/2022 22:45	0.79	6/19/2022 0:27	28.54
6/20/2022 0:11	84.47	6/18/2022 23:28	0.81	6/18/2022 23:58	10.30	6/18/2022 22:46	0.84	6/19/2022 0:28	28.56
6/20/2022 0:12	84.46	6/18/2022 23:29	0.63	6/18/2022 23:59	10.28	6/18/2022 22:47	0.82	6/19/2022 0:29	28.58
6/20/2022 0:13	84.45	6/18/2022 23:30	0.44	6/19/2022 0:00	10.29	6/18/2022 22:48	0.84	6/19/2022 0:30	28.55
6/20/2022 0:14	84.45	6/18/2022 23:31	0.36	6/19/2022 0:01	10.31	6/18/2022 22:49	0.89	6/19/2022 0:31	28.55
6/20/2022 0:15	84.43	6/18/2022 23:32	0.21	6/19/2022 0:02	10.32	6/18/2022 22:50	0.88	6/19/2022 0:32	28.58
6/20/2022 0:16	84.42	6/18/2022 23:33	0.11	6/19/2022 0:03	10.30	6/18/2022 22:51	0.91	6/19/2022 0:33	28.58
6/20/2022 0:17	84.42	6/18/2022 23:34	0.00	6/19/2022 0:04	10.27	6/18/2022 22:52	0.84	6/19/2022 0:34	28.57
6/20/2022 0:18	84.35	6/18/2022 23:35	-0.06	6/19/2022 0:05	10.25	6/18/2022 22:53	0.89	6/19/2022 0:35	28.55
6/20/2022 0:19	84.39	6/18/2022 23:36	-0.06	6/19/2022 0:06	10.28	6/18/2022 22:54	0.87	6/19/2022 0:36	28.53
6/20/2022 0:20	84.36	6/18/2022 23:37	-0.07	6/19/2022 0:07	10.23	6/18/2022 22:55	0.86	6/19/2022 0:37	28.58
6/20/2022 0:21	84.37	6/18/2022 23:38	-0.07	6/19/2022 0:08	10.26	6/18/2022 22:56	0.84	6/19/2022 0:38	28.56
6/20/2022 0:22	84.33	6/18/2022 23:39	-0.04	6/19/2022 0:09	10.28	6/18/2022 22:57	0.78	6/19/2022 0:39	28.57
6/20/2022 0:23	84.40	6/18/2022 23:40	-0.10	6/19/2022 0:10	10.26	6/18/2022 22:58	0.77	6/19/2022 0:40	28.55
6/20/2022 0:24	84.37	6/18/2022 23:41	-0.06	6/19/2022 0:11	10.28	6/18/2022 22:59	0.78	6/19/2022 0:41	28.57
6/20/2022 0:25	84.32	6/18/2022 23:42	-0.05	6/19/2022 0:12	10.24	6/18/2022 23:00	0.76	6/19/2022 0:42	28.56
6/20/2022 0:26	84.34	6/18/2022 23:43	-0.07	6/19/2022 0:13	10.25	6/18/2022 23:01	0.76	6/19/2022 0:43	28.54
6/20/2022 0:27	84.33	6/18/2022 23:44	-0.11	6/19/2022 0:14	10.21	6/18/2022 23:02	0.76	6/19/2022 0:44	28.55
6/20/2022 0:28	84.29	6/18/2022 23:45	-0.09	6/19/2022 0:15	10.24	6/18/2022 23:03	0.79	6/19/2022 0:45	28.55
6/20/2022 0:29	84.29	6/18/2022 23:46	-0.05	6/19/2022 0:16	10.26	6/18/2022 23:04	0.84	6/19/2022 0:46	28.55
6/20/2022 0:30	84.30	6/18/2022 23:47	-0.07	6/19/2022 0:17	10.24	6/18/2022 23:05	0.86	6/19/2022 0:47	28.57
6/20/2022 0:31	84.32	6/18/2022 23:48	-0.05	6/19/2022 0:18	10.26	6/18/2022 23:06	0.88	6/19/2022 0:48	28.55
6/20/2022 0:32	84.32	6/18/2022 23:49	-0.05	6/19/2022 0:19	10.25	6/18/2022 23:07	0.88	6/19/2022 0:49	28.56
6/20/2022 0:33	84.31	6/18/2022 23:50	-0.05	6/19/2022 0:20	10.30	6/18/2022 23:08	0.87	6/19/2022 0:50	28.53
6/20/2022 0:34	84.27	6/18/2022 23:51	-0.06	6/19/2022 0:21	10.29	6/18/2022 23:09	0.91	6/19/2022 0:51	28.58
6/20/2022 0:35	84.30	6/18/2022 23:52	-0.06	6/19/2022 0:22	10.31	6/18/2022 23:10	0.86	6/19/2022 0:52	28.56
6/20/2022 0:36	84.30	6/18/2022 23:53	-0.08	6/19/2022 0:23	10.30	6/18/2022 23:11	0.79	6/19/2022 0:53	28.54
6/20/2022 0:37	84.27	6/18/2022 23:54	-0.10	6/19/2022 0:24	10.30	6/18/2022 23:12	0.80	6/19/2022 0:54	28.56
6/20/2022 0:38	84.28	6/18/2022 23:55	-0.07	6/19/2022 0:25	10.31	6/18/2022 23:13	0.76	6/19/2022 0:55	28.56
6/20/2022 0:39	84.28	6/18/2022 23:56	-0.04	6/19/2022 0:26	10.32	6/18/2022 23:14	0.75	6/19/2022 0:56	28.53
6/20/2022 0:40	84.27	6/18/2022 23:57	-0.08	6/19/2022 0:27	10.31	6/18/2022 23:15	0.76	6/19/2022 0:57	28.59
6/20/2022 0:41	84.25	6/18/2022 23:58	-0.07	6/19/2022 0:28	10.32	6/18/2022 23:16	0.77	6/19/2022 0:58	28.54
6/20/2022 0:42	84.21	6/18/2022 23:59	-0.03	6/19/2022 0:29	10.27	6/18/2022 23:17	0.78	6/19/2022 0:59	28.53
6/20/2022 0:43	84.21	6/19/2022 0:00	-0.09	6/19/2022 0:30	10.29	6/18/2022 23:18	0.80	6/19/2022 1:00	28.56
6/20/2022 0:44	84.22	6/19/2022 0:01	-0.09	6/19/2022 0:31	10.31	6/18/2022 23:19	0.75	6/19/2022 1:01	28.57
6/20/2022 0:45	84.21	6/19/2022 0:02	-0.05	6/19/2022 0:32	10.26	6/18/2022 23:20	0.83	6/19/2022 1:02	28.56
6/20/2022 0:46	84.23	6/19/2022 0:03	-0.04	6/19/2022 0:33	10.31	6/18/2022 23:21	0.80	6/19/2022 1:03	28.57
6/20/2022 0:47	84.22	6/19/2022 0:04	-0.08	6/19/2022 0:34	10.27	6/18/2022 23:22	0.81	6/19/2022 1:04	28.56
6/20/2022 0:48	84.23	6/19/2022 0:05	-0.04	6/19/2022 0:35	10.29	6/18/2022 23:23	0.82	6/19/2022 1:05	28.55
6/20/2022 0:49	84.22	6/19/2022 0:06	-0.05	6/19/2022 0:36	10.26	6/18/2022 23:24	0.83	6/19/2022 1:06	28.53
6/20/2022 0:50	84.22	6/19/2022 0:07	-0.06	6/19/2022 0:37	10.29	6/18/2022 23:25	0.83	6/19/2022 1:07	28.55
6/20/2022 0:51	84.18	6/19/2022 0:08	-0.08	6/19/2022 0:38	10.28	6/18/2022 23:26	0.80	6/19/2022 1:08	28.57
6/20/2022 0:52	84.21	6/19/2022 0:09	-0.08	6/19/2022 0:39	10.27	6/18/2022 23:27	0.81	6/19/2022 1:09	28.55
6/20/2022 0:53	84.20	6/19/2022 0:10	-0.07	6/19/2022 0:40	10.29	6/18/2022 23:28	0.81	6/19/2022 1:10	28.52
6/20/2022 0:54	84.20	6/19/2022 0:11	-0.05	6/19/2022 0:41	10.26	6/18/2022 23:29	0.78	6/19/2022 1:11	28.58
6/20/2022 0:55	84.17	6/19/2022 0:12	-0.03	6/19/2022 0:42	10.26	6/18/2022 23:30	0.75	6/19/2022 1:12	28.53
6/20/2022 0:56	84.22	6/19/2022 0:13	-0.03	6/19/2022 0:43	10.23	6/18/2022 23:31	0.78	6/19/2022 1:13	28.57
6/20/2022 0:57	84.15	6/19/2022 0:14	-0.06	6/19/2022 0:44	10.24	6/18/2022 23:32	0.78	6/19/2022 1:14	28.56
6/20/2022 0:58	84.20	6/19/2022 0:15	-0.05	6/19/2022 0:45	10.26	6/18/2022 23:33	0.80	6/19/2022 1:15	28.55
6/20/2022 0:59	84.20	6/19/2022 0:16	-0.05	6/19/2022 0:46	10.22	6/18/2022 23:34	0.76	6/19/2022 1:16	28.57
6/20/2022 1:00	84.19	6/19/2022 0:17	-0.04	6/19/2022 0:47	10.21	6/18/2022 23:35	0.76	6/19/2022 1:17	28.58
6/20/2022 1:01	84.18	6/19/2022 0:18	-0.07	6/19/2022 0:48	10.25	6/18/2022 23:36	0.82	6/19/2022 1:18	28.57
6/20/2022 1:02	84.18	6/19/2022 0:19	-0.06	6/19/2022 0:49	10.23	6/18/2022 23:37	0.81	6/19/2022 1:19	28.54
6/20/2022 1:03	84.16	6/19/2022 0:20	-0.08	6/19/2022 0:50	10.27	6/18/2022 23:38	0.85	6/19/2022 1:20	28.57
6/20/2022 1:04	84.18	6/19/2022 0:21	-0.07	6/19/2022 0:51	10.27	6/18/2022 23:39	0.79	6/19/2022 1:21	28.53
6/20/2022 1:05	84.14	6/19/2022 0:22	-0.06	6/19/2022 0:52	10.30	6/18/2022 23:40	0.82	6/19/2022 1:22	28.53
6/20/2022 1:06	84.16	6/19/2022 0:23	-0.04	6/19/2022 0:53	10.30	6/18/2022 23:41	0.88	6/19/2022 1:23	28.56
6/20/2022 1:07	84.16	6/19/2022 0:24	4.93	6/19/2022 0:54	10.33	6/18/2022 23:42	0.85	6/19/2022 1:24	28.53
6/20/2022 1:08	84.15	6/19/2022 0:25	6.90	6/19/2022 0:55	10.31	6/18/2022 23:43	0.88	6/19/2022 1:25	28.54
6/20/2022 1:09	84.14	6/19/2022 0:26	5.70	6/19/2022 0:56	10.31	6/18/2022 23:44	0.86	6/19/2022 1:26	28.54
6/20/2022 1:10	84.16	6/19/2022 0:27	4.77	6/19/2022 0:57	10.33	6/18/2022 23:45	0.89	6/19/2022 1:27	28.54
6/20/2022 1:11	84.17	6/19/2022 0:28	3.99	6/19/2022 0:58	10.30	6/18/2022 23:46	0.87	6/19/2022 1:28	28.54
6/20/2022 1:12	84.16	6/19/2022 0:29	3.34	6/19/2022 0:59	10.27	6/18/2022 23:47	0.84	6/19/2022 1:29	28.55
6/20/2022 1:13	84.16	6/19/2022 0:30	2.75	6/19/2022 1:00	10.29	6/18/2022 23:48	0.83	6/19/2022 1:30	28.57
6/20/2022 1:14	84.15	6/19/2022 0:31	2.26	6/19/2022 1:01	10.31	6/18/2022 23:49	0.82	6/19/2022 1:31	28.57
6/20/2022 1:15	84.15	6/19/2022 0:32	1.88	6/19/2022 1:02	10.29	6/18/2022 23:50	0.75	6/19/2022 1:32	28.53
6/20/2022 1:16	84.15	6/19/2022 0:33	1.61	6/19/2022 1:03	10.30	6/18/2022 23:51	0.76	6/19/2022 1:33	28.54
6/20/2022 1:17	84.17	6/19/2022 0:34	1.31	6/19/2022 1:04	10.28	6/18/2022 23:52	0.76	6/19/2022 1:34	28.58
6/20/2022 1:18	84.16	6/19/2022 0:35	1.09	6/19/2022 1:05	10.27	6/18/2022 23:53	0.75	6/19/2022 1:35	28.55
6/20/2022 1:19	84.13	6/19/2022 0:36	0.88	6/19/2022 1:06	10.26	6/18/2022 23:54	0.78	6/19/2022 1:36	28.53
6/20/2022 1:20	84.14	6/19/2022 0:37	0.68	6/19/2022 1:07	10.29	6/18/2022 23:55	0.80	6/19/2022 1:37	28.53
6/20/2022 1:21	84.13	6/19/2022 0:38	0.49	6/19/2022 1:08	10.27	6/18/2022 23:56	0.79	6/19/2022 1:38	28.56
6/20/2022 1:22	84.14	6/19/2022 0:39	0.39	6/19/2022 1:09	10.27	6/18/2022 23:57	0.82	6/19/2022 1:39	28.50
6/20/2022 1:23	84.15	6/19/2022 0:40	0.29	6/19/2022 1:10	10.23	6/18/2022 23:58	0.80	6/19/2022 1:40	28.54
6/20/2022 1:24	84.16	6/19/2022 0:41	0.15	6/19/2022 1:11	10.26	6/18/2022 23:59	0.87	6/19/2022 1:41	28.54
6/20/2022 1:25	84.15	6/19/2022 0:42	0.09	6/19/2022 1:12	10.24	6/19/2022 0:00	0.86	6/19/2022 1:42	28.55
6/20/2022 1:26	84.15	6/19/2022 0:43	-0.04	6/19/2022 1:13	10.25	6/19/2022 0:01	0.85	6/19/2022 1:43	28.55
6/20/2022 1:27	84.14	6/19/2022 0:44	-0.05	6/19/2022 1:14	10.23	6/19/2022 0:02	0.87	6/19/2022 1:44	28.55
6/20/2022 1:28	84.13	6/19/2022 0:45	-0.04	6/19/2022 1:15	10.24	6/19/2022 0:03	0.85	6/19/2022 1:45	28.53
6/20/2022 1:29	84.14	6/19/2022 0:46	-0.05	6/19/2022 1:16	10.23	6/19/2022 0:04	0.85	6/19/2022 1:46	28.56
6/20/2022 1:30	84.15	6/19/2022 0:47	-0.06	6/19/2022 1:17	10.23	6/19/2022 0:05	0.85	6/19/2022 1:47	28.56
6/20/2022 1:31	84.11	6/19/2022 0:48	-0.03	6/19/2022 1:18	10.20	6/19/2022 0:06	0.77	6/19/2022 1:48	28.52
6/20/2022 1:32	84.11	6/19/2022 0:49	-0.10	6/19/2022 1:19	10.24	6/19/2022 0:07	0.81	6/19/2022 1:49	28.56
6/20/2022 1:33	84.14	6/19/2022 0:50	-0.06	6/19/2022 1:20	10.25	6/19/2022 0:08	0.81	6/19/2022 1:50	28.53

6/20/2022 1:34	84.09	6/19/2022 0:51	-0.05	6/19/2022 1:21	10.22	6/19/2022 0:09	0.77	6/19/2022 1:51	28.56
6/20/2022 1:35	84.09	6/19/2022 0:52	-0.09	6/19/2022 1:22	10.22	6/19/2022 0:10	0.77	6/19/2022 1:52	28.54
6/20/2022 1:36	84.09	6/19/2022 0:53	-0.06	6/19/2022 1:23	10.28	6/19/2022 0:11	0.80	6/19/2022 1:53	28.55
6/20/2022 1:37	84.10	6/19/2022 0:54	-0.08	6/19/2022 1:24	10.31	6/19/2022 0:12	0.78	6/19/2022 1:54	28.57
6/20/2022 1:38	84.08	6/19/2022 0:55	-0.04	6/19/2022 1:25	10.31	6/19/2022 0:13	0.81	6/19/2022 1:55	28.57
6/20/2022 1:39	84.10	6/19/2022 0:56	-0.01	6/19/2022 1:26	10.29	6/19/2022 0:14	0.77	6/19/2022 1:56	28.57
6/20/2022 1:40	84.06	6/19/2022 0:57	-0.08	6/19/2022 1:27	10.32	6/19/2022 0:15	0.81	6/19/2022 1:57	28.58
6/20/2022 1:41	84.10	6/19/2022 0:58	-0.06	6/19/2022 1:28	10.32	6/19/2022 0:16	0.83	6/19/2022 1:58	28.54
6/20/2022 1:42	84.11	6/19/2022 0:59	-0.06	6/19/2022 1:29	10.29	6/19/2022 0:17	0.85	6/19/2022 1:59	28.56
6/20/2022 1:43	84.11	6/19/2022 1:00	-0.05	6/19/2022 1:30	10.31	6/19/2022 0:18	0.84	6/19/2022 2:00	28.54
6/20/2022 1:44	84.05	6/19/2022 1:01	-0.08	6/19/2022 1:31	10.29	6/19/2022 0:19	0.86	6/19/2022 2:01	28.53
6/20/2022 1:45	84.10	6/19/2022 1:02	-0.11	6/19/2022 1:32	10.25	6/19/2022 0:20	0.89	6/19/2022 2:02	28.57
6/20/2022 1:46	84.10	6/19/2022 1:03	-0.03	6/19/2022 1:33	10.32	6/19/2022 0:21	0.89	6/19/2022 2:03	28.54
6/20/2022 1:47	84.12	6/19/2022 1:04	-0.05	6/19/2022 1:34	10.28	6/19/2022 0:22	0.85	6/19/2022 2:04	28.56
6/20/2022 1:48	84.09	6/19/2022 1:05	-0.07	6/19/2022 1:35	10.29	6/19/2022 0:23	0.86	6/19/2022 2:05	28.55
6/20/2022 1:49	84.08	6/19/2022 1:06	-0.05	6/19/2022 1:36	10.30	6/19/2022 0:24	0.85	6/19/2022 2:06	28.56
6/20/2022 1:50	84.10	6/19/2022 1:07	-0.09	6/19/2022 1:37	10.26	6/19/2022 0:25	0.85	6/19/2022 2:07	28.55
6/20/2022 1:51	84.12	6/19/2022 1:08	-0.12	6/19/2022 1:38	10.26	6/19/2022 0:26	0.85	6/19/2022 2:08	28.54
6/20/2022 1:52	84.10	6/19/2022 1:09	-0.04	6/19/2022 1:39	10.28	6/19/2022 0:27	0.86	6/19/2022 2:09	28.54
6/20/2022 1:53	84.04	6/19/2022 1:10	-0.06	6/19/2022 1:40	10.24	6/19/2022 0:28	0.84	6/19/2022 2:10	28.54
6/20/2022 1:54	84.09	6/19/2022 1:11	-0.08	6/19/2022 1:41	10.22	6/19/2022 0:29	0.82	6/19/2022 2:11	28.57
6/20/2022 1:55	84.10	6/19/2022 1:12	-0.07	6/19/2022 1:42	10.24	6/19/2022 0:30	0.82	6/19/2022 2:12	28.54
6/20/2022 1:56	84.10	6/19/2022 1:13	-0.04	6/19/2022 1:43	10.26	6/19/2022 0:31	0.80	6/19/2022 2:13	28.54
6/20/2022 1:57	84.06	6/19/2022 1:14	-0.08	6/19/2022 1:44	10.27	6/19/2022 0:32	0.76	6/19/2022 2:14	28.57
6/20/2022 1:58	84.06	6/19/2022 1:15	-0.04	6/19/2022 1:45	10.25	6/19/2022 0:33	0.77	6/19/2022 2:15	28.56
6/20/2022 1:59	84.03	6/19/2022 1:16	-0.08	6/19/2022 1:46	10.20	6/19/2022 0:34	0.79	6/19/2022 2:16	28.54
6/20/2022 2:00	84.07	6/19/2022 1:17	-0.07	6/19/2022 1:47	10.23	6/19/2022 0:35	0.81	6/19/2022 2:17	28.57
6/20/2022 2:01	84.09	6/19/2022 1:18	-0.08	6/19/2022 1:48	10.23	6/19/2022 0:36	0.78	6/19/2022 2:18	28.52
6/20/2022 2:02	84.05	6/19/2022 1:19	-0.07	6/19/2022 1:49	10.22	6/19/2022 0:37	0.84	6/19/2022 2:19	28.52
6/20/2022 2:03	84.06	6/19/2022 1:20	-0.03	6/19/2022 1:50	10.21	6/19/2022 0:38	0.83	6/19/2022 2:20	28.57
6/20/2022 2:04	84.07	6/19/2022 1:21	-0.11	6/19/2022 1:51	10.21	6/19/2022 0:39	0.84	6/19/2022 2:21	28.55
6/20/2022 2:05	84.09	6/19/2022 1:22	-0.10	6/19/2022 1:52	10.25	6/19/2022 0:40	0.86	6/19/2022 2:22	28.57
6/20/2022 2:06	84.12	6/19/2022 1:23	-0.07	6/19/2022 1:53	10.25	6/19/2022 0:41	0.85	6/19/2022 2:23	28.56
6/20/2022 2:07	84.05	6/19/2022 1:24	-0.05	6/19/2022 1:54	10.29	6/19/2022 0:42	0.85	6/19/2022 2:24	28.55
6/20/2022 2:08	84.04	6/19/2022 1:25	-0.06	6/19/2022 1:55	10.31	6/19/2022 0:43	0.89	6/19/2022 2:25	28.55
6/20/2022 2:09	84.07	6/19/2022 1:26	-0.06	6/19/2022 1:56	10.32	6/19/2022 0:44	0.87	6/19/2022 2:26	28.54
6/20/2022 2:10	84.08	6/19/2022 1:27	-0.07	6/19/2022 1:57	10.34	6/19/2022 0:45	0.87	6/19/2022 2:27	28.56
6/20/2022 2:11	84.04	6/19/2022 1:28	-0.05	6/19/2022 1:58	10.31	6/19/2022 0:46	0.87	6/19/2022 2:28	28.53
6/20/2022 2:12	84.07	6/19/2022 1:29	0.45	6/19/2022 1:59	10.29	6/19/2022 0:47	0.81	6/19/2022 2:29	28.50
6/20/2022 2:13	84.04	6/19/2022 1:30	6.30	6/19/2022 2:00	10.33	6/19/2022 0:48	0.82	6/19/2022 2:30	28.55
6/20/2022 2:14	84.03	6/19/2022 1:31	6.52	6/19/2022 2:01	10.33	6/19/2022 0:49	0.77	6/19/2022 2:31	28.57
6/20/2022 2:15	84.05	6/19/2022 1:32	5.41	6/19/2022 2:02	10.29	6/19/2022 0:50	0.83	6/19/2022 2:32	28.55
6/20/2022 2:16	84.05	6/19/2022 1:33	4.51	6/19/2022 2:03	10.31	6/19/2022 0:51	0.77	6/19/2022 2:33	28.55
6/20/2022 2:17	84.06	6/19/2022 1:34	3.79	6/19/2022 2:04	10.29	6/19/2022 0:52	0.75	6/19/2022 2:34	28.55
6/20/2022 2:18	84.05	6/19/2022 1:35	3.16	6/19/2022 2:05	10.31	6/19/2022 0:53	0.77	6/19/2022 2:35	28.56
6/20/2022 2:19	84.04	6/19/2022 1:36	2.59	6/19/2022 2:06	10.27	6/19/2022 0:54	0.73	6/19/2022 2:36	28.54
6/20/2022 2:20	84.03	6/19/2022 1:37	2.19	6/19/2022 2:07	10.28	6/19/2022 0:55	0.74	6/19/2022 2:37	28.53
6/20/2022 2:21	84.03	6/19/2022 1:38	1.81	6/19/2022 2:08	10.28	6/19/2022 0:56	0.77	6/19/2022 2:38	28.52
6/20/2022 2:22	84.04	6/19/2022 1:39	1.48	6/19/2022 2:09	10.24	6/19/2022 0:57	0.78	6/19/2022 2:39	28.53
6/20/2022 2:23	84.01	6/19/2022 1:40	1.25	6/19/2022 2:10	10.26	6/19/2022 0:58	0.82	6/19/2022 2:40	28.55
6/20/2022 2:24	84.00	6/19/2022 1:41	1.01	6/19/2022 2:11	10.27	6/19/2022 0:59	0.83	6/19/2022 2:41	28.55
6/20/2022 2:25	83.99	6/19/2022 1:42	0.80	6/19/2022 2:12	10.26	6/19/2022 1:00	0.88	6/19/2022 2:42	28.52
6/20/2022 2:26	84.02	6/19/2022 1:43	0.59	6/19/2022 2:13	10.29	6/19/2022 1:01	0.87	6/19/2022 2:43	28.55
6/20/2022 2:27	84.04	6/19/2022 1:44	0.46	6/19/2022 2:14	10.22	6/19/2022 1:02	0.87	6/19/2022 2:44	28.54
6/20/2022 2:28	84.04	6/19/2022 1:45	0.31	6/19/2022 2:15	10.25	6/19/2022 1:03	0.87	6/19/2022 2:45	28.56
6/20/2022 2:29	84.03	6/19/2022 1:46	0.20	6/19/2022 2:16	10.26	6/19/2022 1:04	0.86	6/19/2022 2:46	28.55
6/20/2022 2:30	84.02	6/19/2022 1:47	0.15	6/19/2022 2:17	10.28	6/19/2022 1:05	0.86	6/19/2022 2:47	28.54
6/20/2022 2:31	84.01	6/19/2022 1:48	0.01	6/19/2022 2:18	10.31	6/19/2022 1:06	0.87	6/19/2022 2:48	28.55
6/20/2022 2:32	84.04	6/19/2022 1:49	-0.04	6/19/2022 2:19	10.28	6/19/2022 1:07	0.81	6/19/2022 2:49	28.54
6/20/2022 2:33	84.02	6/19/2022 1:50	-0.03	6/19/2022 2:20	10.35	6/19/2022 1:08	0.82	6/19/2022 2:50	28.53
6/20/2022 2:34	84.03	6/19/2022 1:51	-0.06	6/19/2022 2:21	10.31	6/19/2022 1:09	0.78	6/19/2022 2:51	28.54
6/20/2022 2:35	84.01	6/19/2022 1:52	-0.06	6/19/2022 2:22	10.30	6/19/2022 1:10	0.76	6/19/2022 2:52	28.53
6/20/2022 2:36	84.03	6/19/2022 1:53	-0.09	6/19/2022 2:23	10.33	6/19/2022 1:11	0.79	6/19/2022 2:53	28.53
6/20/2022 2:37	83.99	6/19/2022 1:54	-0.04	6/19/2022 2:24	10.32	6/19/2022 1:12	0.76	6/19/2022 2:54	28.51
6/20/2022 2:38	84.02	6/19/2022 1:55	-0.04	6/19/2022 2:25	10.34	6/19/2022 1:13	0.73	6/19/2022 2:55	28.57
6/20/2022 2:39	84.01	6/19/2022 1:56	-0.05	6/19/2022 2:26	10.29	6/19/2022 1:14	0.74	6/19/2022 2:56	28.58
6/20/2022 2:40	84.01	6/19/2022 1:57	-0.05	6/19/2022 2:27	10.33	6/19/2022 1:15	0.78	6/19/2022 2:57	28.55
6/20/2022 2:41	84.02	6/19/2022 1:58	-0.04	6/19/2022 2:28	10.31	6/19/2022 1:16	0.78	6/19/2022 2:58	28.58
6/20/2022 2:42	83.98	6/19/2022 1:59	-0.08	6/19/2022 2:29	10.31	6/19/2022 1:17	0.81	6/19/2022 2:59	28.55
6/20/2022 2:43	84.05	6/19/2022 2:00	-0.05	6/19/2022 2:30	10.32	6/19/2022 1:18	0.85	6/19/2022 3:00	28.56
6/20/2022 2:44	84.01	6/19/2022 2:01	-0.06	6/19/2022 2:31	10.27	6/19/2022 1:19	0.82	6/19/2022 3:01	28.56
6/20/2022 2:45	84.01	6/19/2022 2:02	-0.03	6/19/2022 2:32	10.28	6/19/2022 1:20	0.84	6/19/2022 3:02	28.59
6/20/2022 2:46	84.01	6/19/2022 2:03	-0.04	6/19/2022 2:33	10.28	6/19/2022 1:21	0.86	6/19/2022 3:03	28.57
6/20/2022 2:47	84.01	6/19/2022 2:04	-0.04	6/19/2022 2:34	10.29	6/19/2022 1:22	0.91	6/19/2022 3:04	28.53
6/20/2022 2:48	83.99	6/19/2022 2:05	-0.06	6/19/2022 2:35	10.25	6/19/2022 1:23	0.86	6/19/2022 3:05	28.55
6/20/2022 2:49	84.03	6/19/2022 2:06	-0.06	6/19/2022 2:36	10.26	6/19/2022 1:24	0.86	6/19/2022 3:06	28.57
6/20/2022 2:50	84.00	6/19/2022 2:07	-0.07	6/19/2022 2:37	10.28	6/19/2022 1:25	0.89	6/19/2022 3:07	28.55
6/20/2022 2:51	84.02	6/19/2022 2:08	-0.05	6/19/2022 2:38	10.26	6/19/2022 1:26	0.87	6/19/2022 3:08	28.54
6/20/2022 2:52	84.03	6/19/2022 2:09	0.00	6/19/2022 2:39	10.26	6/19/2022 1:27	0.83	6/19/2022 3:09	28.58
6/20/2022 2:53	84.00	6/19/2022 2:10	0.02	6/19/2022 2:40	10.29	6/19/2022 1:28	0.83	6/19/2022 3:10	28.54
6/20/2022 2:54	83.98	6/19/2022 2:11	-0.01	6/19/2022 2:41	10.25	6/19/2022 1:29	0.80	6/19/2022 3:11	28.55
6/20/2022 2:55	83.99	6/19/2022 2:12	-0.02	6/19/2022 2:42	10.31	6/19/2022 1:30	0.79	6/19/2022 3:12	28.52
6/20/2022 2:56	84.01	6/19/2022 2:13	-0.05	6/19/2022 2:43	10.32	6/19/2022 1:31	0.80	6/19/2022 3:13	28.56
6/20/2022 2:57	83.99	6/19/2022 2:14	-0.09	6/19/2022 2:44	10.31	6/19/2022 1:32	0.83	6/19/2022 3:14	28.55
6/20/2022 2:58	83.97	6/19/2022 2:15	-0.06	6/19/2022 2:45	10.29	6/19/2022 1:33	0.88	6/19/2022 3:15	28.54
6/20/2022 2:59	84.00	6/19/2022 2:16	-0.04	6/19/2022 2:46	10.33	6/19/2022 1:34	0.90	6/19/2022 3:16	28.53
6/20/2022 3:00	84.00	6/19/2022 2:17	-0.06	6/19/2022 2:47	10.31	6/19/2022 1:35	0.79	6/19/2022 3:17	28.54
6/20/2022 3:01	83.99	6/19/2022 2:18	-0.06	6/19/2022 2:48	10.33	6/19/2022 1:36	0.75	6/19/2022 3:18	28.54

6/20/2022 3:02	83.98	6/19/2022 2:19	-0.05	6/19/2022 2:49	10.36	6/19/2022 1:37	0.77	6/19/2022 3:19	28.55
6/20/2022 3:03	83.98	6/19/2022 2:20	-0.06	6/19/2022 2:50	10.36	6/19/2022 1:38	0.80	6/19/2022 3:20	28.53
6/20/2022 3:04	83.97	6/19/2022 2:21	-0.04	6/19/2022 2:51	10.31	6/19/2022 1:39	0.76	6/19/2022 3:21	28.53
6/20/2022 3:05	83.99	6/19/2022 2:22	-0.06	6/19/2022 2:52	10.30	6/19/2022 1:40	0.78	6/19/2022 3:22	28.51
6/20/2022 3:06	84.00	6/19/2022 2:23	-0.07	6/19/2022 2:53	10.29	6/19/2022 1:41	0.76	6/19/2022 3:23	28.51
6/20/2022 3:07	83.95	6/19/2022 2:24	-0.05	6/19/2022 2:54	10.34	6/19/2022 1:42	0.78	6/19/2022 3:24	28.54
6/20/2022 3:08	83.98	6/19/2022 2:25	-0.05	6/19/2022 2:55	10.33	6/19/2022 1:43	0.79	6/19/2022 3:25	28.53
6/20/2022 3:09	83.96	6/19/2022 2:26	-0.07	6/19/2022 2:56	10.29	6/19/2022 1:44	0.82	6/19/2022 3:26	28.54
6/20/2022 3:10	83.94	6/19/2022 2:27	-0.07	6/19/2022 2:57	10.29	6/19/2022 1:45	0.80	6/19/2022 3:27	28.57
6/20/2022 3:11	83.98	6/19/2022 2:28	-0.03	6/19/2022 2:58	10.34	6/19/2022 1:46	0.81	6/19/2022 3:28	28.56
6/20/2022 3:12	83.93	6/19/2022 2:29	0.01	6/19/2022 2:59	10.36	6/19/2022 1:47	0.85	6/19/2022 3:29	28.53
6/20/2022 3:13	83.95	6/19/2022 2:30	-0.03	6/19/2022 3:00	10.36	6/19/2022 1:48	0.90	6/19/2022 3:30	28.52
6/20/2022 3:14	83.97	6/19/2022 2:31	-0.05	6/19/2022 3:01	10.37	6/19/2022 1:49	0.87	6/19/2022 3:31	28.54
6/20/2022 3:15	83.95	6/19/2022 2:32	-0.03	6/19/2022 3:02	10.39	6/19/2022 1:50	0.87	6/19/2022 3:32	28.55
6/20/2022 3:16	83.98	6/19/2022 2:33	-0.04	6/19/2022 3:03	10.40	6/19/2022 1:51	0.84	6/19/2022 3:33	28.53
6/20/2022 3:17	83.95	6/19/2022 2:34	0.01	6/19/2022 3:04	10.37	6/19/2022 1:52	0.88	6/19/2022 3:34	28.57
6/20/2022 3:18	83.98	6/19/2022 2:35	4.20	6/19/2022 3:05	10.34	6/19/2022 1:53	0.80	6/19/2022 3:35	28.55
6/20/2022 3:19	83.99	6/19/2022 2:36	6.97	6/19/2022 3:06	10.38	6/19/2022 1:54	0.87	6/19/2022 3:36	28.58
6/20/2022 3:20	83.99	6/19/2022 2:37	5.79	6/19/2022 3:07	10.36	6/19/2022 1:55	0.78	6/19/2022 3:37	28.59
6/20/2022 3:21	83.97	6/19/2022 2:38	4.82	6/19/2022 3:08	10.37	6/19/2022 1:56	0.79	6/19/2022 3:38	28.57
6/20/2022 3:22	83.98	6/19/2022 2:39	4.00	6/19/2022 3:09	10.38	6/19/2022 1:57	0.78	6/19/2022 3:39	28.55
6/20/2022 3:23	83.95	6/19/2022 2:40	3.33	6/19/2022 3:10	10.36	6/19/2022 1:58	0.82	6/19/2022 3:40	28.57
6/20/2022 3:24	83.97	6/19/2022 2:41	2.75	6/19/2022 3:11	10.30	6/19/2022 1:59	0.76	6/19/2022 3:41	28.57
6/20/2022 3:25	83.97	6/19/2022 2:42	2.28	6/19/2022 3:12	10.37	6/19/2022 2:00	0.79	6/19/2022 3:42	28.53
6/20/2022 3:26	83.95	6/19/2022 2:43	1.93	6/19/2022 3:13	10.34	6/19/2022 2:01	0.76	6/19/2022 3:43	28.55
6/20/2022 3:27	83.96	6/19/2022 2:44	1.59	6/19/2022 3:14	10.35	6/19/2022 2:02	0.78	6/19/2022 3:44	28.59
6/20/2022 3:28	83.98	6/19/2022 2:45	1.34	6/19/2022 3:15	10.35	6/19/2022 2:03	0.78	6/19/2022 3:45	28.53
6/20/2022 3:29	83.94	6/19/2022 2:46	1.09	6/19/2022 3:16	10.37	6/19/2022 2:04	0.82	6/19/2022 3:46	28.54
6/20/2022 3:30	83.95	6/19/2022 2:47	0.78	6/19/2022 3:17	10.37	6/19/2022 2:05	0.85	6/19/2022 3:47	28.52
6/20/2022 3:31	83.91	6/19/2022 2:48	0.65	6/19/2022 3:18	10.39	6/19/2022 2:06	0.87	6/19/2022 3:48	28.56
6/20/2022 3:32	83.98	6/19/2022 2:49	0.50	6/19/2022 3:19	10.39	6/19/2022 2:07	0.90	6/19/2022 3:49	28.51
6/20/2022 3:33	83.96	6/19/2022 2:50	0.38	6/19/2022 3:20	10.40	6/19/2022 2:08	4.44	6/19/2022 3:50	28.56
6/20/2022 3:34	83.96	6/19/2022 2:51	0.25	6/19/2022 3:21	10.38	6/19/2022 2:09	8.27	6/19/2022 3:51	28.56
6/20/2022 3:35	83.94	6/19/2022 2:52	0.13	6/19/2022 3:22	10.40	6/19/2022 2:10	5.05	6/19/2022 3:52	28.56
6/20/2022 3:36	83.96	6/19/2022 2:53	0.07	6/19/2022 3:23	10.43	6/19/2022 2:11	2.61	6/19/2022 3:53	28.52
6/20/2022 3:37	83.95	6/19/2022 2:54	0.00	6/19/2022 3:24	10.39	6/19/2022 2:12	0.90	6/19/2022 3:54	28.55
6/20/2022 3:38	83.91	6/19/2022 2:55	-0.06	6/19/2022 3:25	10.39	6/19/2022 2:13	0.86	6/19/2022 3:55	28.56
6/20/2022 3:39	83.94	6/19/2022 2:56	-0.09	6/19/2022 3:26	10.40	6/19/2022 2:14	0.89	6/19/2022 3:56	28.52
6/20/2022 3:40	83.93	6/19/2022 2:57	-0.06	6/19/2022 3:27	10.39	6/19/2022 2:15	0.84	6/19/2022 3:57	28.56
6/20/2022 3:41	83.92	6/19/2022 2:58	-0.05	6/19/2022 3:28	10.35	6/19/2022 2:16	0.88	6/19/2022 3:58	28.54
6/20/2022 3:42	83.94	6/19/2022 2:59	-0.05	6/19/2022 3:29	10.35	6/19/2022 2:17	0.87	6/19/2022 3:59	28.56
6/20/2022 3:43	83.92	6/19/2022 3:00	0.00	6/19/2022 3:30	10.37	6/19/2022 2:18	0.87	6/19/2022 4:00	28.55
6/20/2022 3:44	83.92	6/19/2022 3:01	0.00	6/19/2022 3:31	10.34	6/19/2022 2:19	0.88	6/19/2022 4:01	28.57
6/20/2022 3:45	83.95	6/19/2022 3:02	-0.06	6/19/2022 3:32	10.33	6/19/2022 2:20	0.88	6/19/2022 4:02	28.57
6/20/2022 3:46	83.93	6/19/2022 3:03	-0.02	6/19/2022 3:33	10.37	6/19/2022 2:21	0.86	6/19/2022 4:03	28.57
6/20/2022 3:47	83.89	6/19/2022 3:04	-0.05	6/19/2022 3:34	10.33	6/19/2022 2:22	0.86	6/19/2022 4:04	28.54
6/20/2022 3:48	83.94	6/19/2022 3:05	-0.02	6/19/2022 3:35	10.35	6/19/2022 2:23	0.81	6/19/2022 4:05	28.52
6/20/2022 3:49	83.92	6/19/2022 3:06	-0.06	6/19/2022 3:36	10.29	6/19/2022 2:24	0.81	6/19/2022 4:06	28.56
6/20/2022 3:50	83.92	6/19/2022 3:07	-0.05	6/19/2022 3:37	10.31	6/19/2022 2:25	0.80	6/19/2022 4:07	28.53
6/20/2022 3:51	83.93	6/19/2022 3:08	-0.03	6/19/2022 3:38	10.29	6/19/2022 2:26	0.79	6/19/2022 4:08	28.54
6/20/2022 3:52	83.94	6/19/2022 3:09	-0.08	6/19/2022 3:39	10.30	6/19/2022 2:27	0.76	6/19/2022 4:09	28.55
6/20/2022 3:53	83.92	6/19/2022 3:10	-0.03	6/19/2022 3:40	10.28	6/19/2022 2:28	0.76	6/19/2022 4:10	28.54
6/20/2022 3:54	83.95	6/19/2022 3:11	-0.08	6/19/2022 3:41	10.27	6/19/2022 2:29	0.78	6/19/2022 4:11	28.54
6/20/2022 3:55	83.92	6/19/2022 3:12	-0.07	6/19/2022 3:42	10.26	6/19/2022 2:30	0.75	6/19/2022 4:12	28.56
6/20/2022 3:56	83.92	6/19/2022 3:13	-0.09	6/19/2022 3:43	10.25	6/19/2022 2:31	0.78	6/19/2022 4:13	28.54
6/20/2022 3:57	83.93	6/19/2022 3:14	-0.06	6/19/2022 3:44	10.23	6/19/2022 2:32	0.79	6/19/2022 4:14	28.55
6/20/2022 3:58	83.89	6/19/2022 3:15	-0.09	6/19/2022 3:45	10.28	6/19/2022 2:33	0.81	6/19/2022 4:15	28.57
6/20/2022 3:59	83.93	6/19/2022 3:16	-0.12	6/19/2022 3:46	10.27	6/19/2022 2:34	0.84	6/19/2022 4:16	28.55
6/20/2022 4:00	83.90	6/19/2022 3:17	-0.04	6/19/2022 3:47	10.28	6/19/2022 2:35	0.86	6/19/2022 4:17	28.54
6/20/2022 4:01	83.90	6/19/2022 3:18	-0.09	6/19/2022 3:48	10.28	6/19/2022 2:36	0.86	6/19/2022 4:18	28.59
6/20/2022 4:02	83.91	6/19/2022 3:19	-0.08	6/19/2022 3:49	10.29	6/19/2022 2:37	0.76	6/19/2022 4:19	28.58
6/20/2022 4:03	83.91	6/19/2022 3:20	-0.03	6/19/2022 3:50	10.32	6/19/2022 2:38	0.78	6/19/2022 4:20	28.55
6/20/2022 4:04	83.92	6/19/2022 3:21	-0.02	6/19/2022 3:51	10.35	6/19/2022 2:39	0.76	6/19/2022 4:21	28.57
6/20/2022 4:05	83.90	6/19/2022 3:22	-0.04	6/19/2022 3:52	10.33	6/19/2022 2:40	0.83	6/19/2022 4:22	28.57
6/20/2022 4:06	83.93	6/19/2022 3:23	-0.09	6/19/2022 3:53	10.31	6/19/2022 2:41	0.74	6/19/2022 4:23	28.55
6/20/2022 4:07	83.95	6/19/2022 3:24	-0.07	6/19/2022 3:54	10.32	6/19/2022 2:42	0.70	6/19/2022 4:24	28.54
6/20/2022 4:08	83.92	6/19/2022 3:25	-0.04	6/19/2022 3:55	10.37	6/19/2022 2:43	0.81	6/19/2022 4:25	28.57
6/20/2022 4:09	83.89	6/19/2022 3:26	-0.05	6/19/2022 3:56	10.32	6/19/2022 2:44	0.79	6/19/2022 4:26	28.56
6/20/2022 4:10	83.92	6/19/2022 3:27	-0.04	6/19/2022 3:57	10.31	6/19/2022 2:45	0.76	6/19/2022 4:27	28.54
6/20/2022 4:11	83.92	6/19/2022 3:28	-0.04	6/19/2022 3:58	10.33	6/19/2022 2:46	0.75	6/19/2022 4:28	28.52
6/20/2022 4:12	83.89	6/19/2022 3:29	-0.06	6/19/2022 3:59	10.31	6/19/2022 2:47	0.74	6/19/2022 4:29	28.56
6/20/2022 4:13	83.92	6/19/2022 3:30	-0.07	6/19/2022 4:00	10.33	6/19/2022 2:48	0.74	6/19/2022 4:30	28.54
6/20/2022 4:14	83.94	6/19/2022 3:31	-0.05	6/19/2022 4:01	10.31	6/19/2022 2:49	0.78	6/19/2022 4:31	28.57
6/20/2022 4:15	83.90	6/19/2022 3:32	-0.05	6/19/2022 4:02	10.28	6/19/2022 2:50	0.76	6/19/2022 4:32	28.55
6/20/2022 4:16	83.91	6/19/2022 3:33	-0.06	6/19/2022 4:03	10.29	6/19/2022 2:51	0.73	6/19/2022 4:33	28.52
6/20/2022 4:17	83.90	6/19/2022 3:34	-0.09	6/19/2022 4:04	10.28	6/19/2022 2:52	0.73	6/19/2022 4:34	28.54
6/20/2022 4:18	83.86	6/19/2022 3:35	-0.08	6/19/2022 4:05	10.27	6/19/2022 2:53	0.79	6/19/2022 4:35	28.56
6/20/2022 4:19	83.90	6/19/2022 3:36	0.00	6/19/2022 4:06	10.27	6/19/2022 2:54	0.78	6/19/2022 4:36	28.55
6/20/2022 4:20	83.92	6/19/2022 3:37	-0.06	6/19/2022 4:07	10.30	6/19/2022 2:55	0.77	6/19/2022 4:37	28.57
6/20/2022 4:21	83.88	6/19/2022 3:38	-0.08	6/19/2022 4:08	10.25	6/19/2022 2:56	0.82	6/19/2022 4:38	28.54
6/20/2022 4:22	83.90	6/19/2022 3:39	4.56	6/19/2022 4:09	10.26	6/19/2022 2:57	0.87	6/19/2022 4:39	28.57
6/20/2022 4:23	83.92	6/19/2022 3:40	6.88	6/19/2022 4:10	10.27	6/19/2022 2:58	5.43	6/19/2022 4:40	28.54
6/20/2022 4:24	83.92	6/19/2022 3:41	5.69	6/19/2022 4:11	10.26	6/19/2022 2:59	7.19	6/19/2022 4:41	28.56
6/20/2022 4:25	83.90	6/19/2022 3:42	4.74	6/19/2022 4:12	10.23	6/19/2022 3:00	4.21	6/19/2022 4:42	28.54
6/20/2022 4:26	83.90	6/19/2022 3:43	3.97	6/19/2022 4:13	10.24	6/19/2022 3:01	1.97	6/19/2022 4:43	28.55
6/20/2022 4:27	83.89	6/19/2022 3:44	3.29	6/19/2022 4:14	10.22	6/19/2022 3:02	0.76	6/19/2022 4:44	28.54
6/20/2022 4:28	83.89	6/19/2022 3:45	2.72	6/19/2022 4:15	10.24	6/19/2022 3:03	0.77	6/19/2022 4:45	28.59
6/20/2022 4:29	83.89	6/19/2022 3:46	2.25	6/19/2022 4:16	10.23	6/19/2022 3:04	0.76	6/19/2022 4:46	28.54

6/20/2022 4:30	83.88	6/19/2022 3:47	1.88	6/19/2022 4:17	10.26	6/19/2022 3:05	0.79	6/19/2022 4:47	28.54
6/20/2022 4:31	83.91	6/19/2022 3:48	1.57	6/19/2022 4:18	10.26	6/19/2022 3:06	0.76	6/19/2022 4:48	28.52
6/20/2022 4:32	83.90	6/19/2022 3:49	1.30	6/19/2022 4:19	10.31	6/19/2022 3:07	0.79	6/19/2022 4:49	28.57
6/20/2022 4:33	83.87	6/19/2022 3:50	1.04	6/19/2022 4:20	10.34	6/19/2022 3:08	0.78	6/19/2022 4:50	28.58
6/20/2022 4:34	83.87	6/19/2022 3:51	0.85	6/19/2022 4:21	10.33	6/19/2022 3:09	0.80	6/19/2022 4:51	28.55
6/20/2022 4:35	83.90	6/19/2022 3:52	0.64	6/19/2022 4:22	10.32	6/19/2022 3:10	0.77	6/19/2022 4:52	28.53
6/20/2022 4:36	83.91	6/19/2022 3:53	0.52	6/19/2022 4:23	10.30	6/19/2022 3:11	0.82	6/19/2022 4:53	28.57
6/20/2022 4:37	83.89	6/19/2022 3:54	0.37	6/19/2022 4:24	10.33	6/19/2022 3:12	0.88	6/19/2022 4:54	28.53
6/20/2022 4:38	83.91	6/19/2022 3:55	0.23	6/19/2022 4:25	10.31	6/19/2022 3:13	0.87	6/19/2022 4:55	28.53
6/20/2022 4:39	83.89	6/19/2022 3:56	0.14	6/19/2022 4:26	10.33	6/19/2022 3:14	0.86	6/19/2022 4:56	28.56
6/20/2022 4:40	83.87	6/19/2022 3:57	0.04	6/19/2022 4:27	10.30	6/19/2022 3:15	0.84	6/19/2022 4:57	28.56
6/20/2022 4:41	83.88	6/19/2022 3:58	-0.01	6/19/2022 4:28	10.30	6/19/2022 3:16	0.89	6/19/2022 4:58	28.57
6/20/2022 4:42	83.89	6/19/2022 3:59	-0.04	6/19/2022 4:29	10.29	6/19/2022 3:17	0.85	6/19/2022 4:59	28.54
6/20/2022 4:43	83.84	6/19/2022 4:00	-0.05	6/19/2022 4:30	10.33	6/19/2022 3:18	0.89	6/19/2022 5:00	28.57
6/20/2022 4:44	83.91	6/19/2022 4:01	-0.05	6/19/2022 4:31	10.30	6/19/2022 3:19	0.83	6/19/2022 5:01	28.53
6/20/2022 4:45	83.89	6/19/2022 4:02	-0.03	6/19/2022 4:32	10.31	6/19/2022 3:20	0.77	6/19/2022 5:02	28.54
6/20/2022 4:46	83.90	6/19/2022 4:03	-0.04	6/19/2022 4:33	10.30	6/19/2022 3:21	0.78	6/19/2022 5:03	28.57
6/20/2022 4:47	83.86	6/19/2022 4:04	-0.06	6/19/2022 4:34	10.28	6/19/2022 3:22	0.77	6/19/2022 5:04	28.53
6/20/2022 4:48	83.87	6/19/2022 4:05	-0.03	6/19/2022 4:35	10.26	6/19/2022 3:23	0.73	6/19/2022 5:05	28.55
6/20/2022 4:49	83.92	6/19/2022 4:06	-0.03	6/19/2022 4:36	10.26	6/19/2022 3:24	0.74	6/19/2022 5:06	28.53
6/20/2022 4:50	83.85	6/19/2022 4:07	-0.10	6/19/2022 4:37	10.27	6/19/2022 3:25	0.76	6/19/2022 5:07	28.52
6/20/2022 4:51	83.89	6/19/2022 4:08	-0.07	6/19/2022 4:38	10.26	6/19/2022 3:26	0.76	6/19/2022 5:08	28.56
6/20/2022 4:52	83.87	6/19/2022 4:09	-0.09	6/19/2022 4:39	10.25	6/19/2022 3:27	0.79	6/19/2022 5:09	28.59
6/20/2022 4:53	83.89	6/19/2022 4:10	-0.08	6/19/2022 4:40	10.23	6/19/2022 3:28	0.76	6/19/2022 5:10	28.53
6/20/2022 4:54	83.89	6/19/2022 4:11	-0.06	6/19/2022 4:41	10.24	6/19/2022 3:29	0.81	6/19/2022 5:11	28.57
6/20/2022 4:55	83.88	6/19/2022 4:12	-0.04	6/19/2022 4:42	10.26	6/19/2022 3:30	0.84	6/19/2022 5:12	28.56
6/20/2022 4:56	83.86	6/19/2022 4:13	-0.08	6/19/2022 4:43	10.24	6/19/2022 3:31	0.87	6/19/2022 5:13	28.56
6/20/2022 4:57	83.87	6/19/2022 4:14	-0.06	6/19/2022 4:44	10.24	6/19/2022 3:32	0.85	6/19/2022 5:14	30.34
6/20/2022 4:58	83.86	6/19/2022 4:15	-0.03	6/19/2022 4:45	10.23	6/19/2022 3:33	0.86	6/19/2022 5:15	29.25
6/20/2022 4:59	83.86	6/19/2022 4:16	-0.03	6/19/2022 4:46	10.23	6/19/2022 3:34	0.84	6/19/2022 5:16	28.83
6/20/2022 5:00	83.86	6/19/2022 4:17	-0.04	6/19/2022 4:47	10.28	6/19/2022 3:35	0.84	6/19/2022 5:17	28.68
6/20/2022 5:01	83.86	6/19/2022 4:18	-0.04	6/19/2022 4:48	10.25	6/19/2022 3:36	0.80	6/19/2022 5:18	28.61
6/20/2022 5:02	83.89	6/19/2022 4:19	-0.05	6/19/2022 4:49	10.29	6/19/2022 3:37	0.78	6/19/2022 5:19	28.59
6/20/2022 5:03	83.88	6/19/2022 4:20	-0.06	6/19/2022 4:50	10.26	6/19/2022 3:38	0.74	6/19/2022 5:20	28.55
6/20/2022 5:04	83.88	6/19/2022 4:21	-0.02	6/19/2022 4:51	10.32	6/19/2022 3:39	0.73	6/19/2022 5:21	28.56
6/20/2022 5:05	83.86	6/19/2022 4:22	-0.03	6/19/2022 4:52	10.28	6/19/2022 3:40	0.76	6/19/2022 5:22	28.55
6/20/2022 5:06	83.86	6/19/2022 4:23	-0.06	6/19/2022 4:53	10.33	6/19/2022 3:41	0.78	6/19/2022 5:23	28.58
6/20/2022 5:07	83.88	6/19/2022 4:24	-0.05	6/19/2022 4:54	10.29	6/19/2022 3:42	0.81	6/19/2022 5:24	28.56
6/20/2022 5:08	83.87	6/19/2022 4:25	-0.03	6/19/2022 4:55	10.31	6/19/2022 3:43	0.78	6/19/2022 5:25	28.57
6/20/2022 5:09	83.88	6/19/2022 4:26	-0.05	6/19/2022 4:56	10.29	6/19/2022 3:44	0.83	6/19/2022 5:26	28.53
6/20/2022 5:10	83.85	6/19/2022 4:27	-0.03	6/19/2022 4:57	10.31	6/19/2022 3:45	0.82	6/19/2022 5:27	28.55
6/20/2022 5:11	83.87	6/19/2022 4:28	0.03	6/19/2022 4:58	10.31	6/19/2022 3:46	0.85	6/19/2022 5:28	28.60
6/20/2022 5:12	83.87	6/19/2022 4:29	0.02	6/19/2022 4:59	10.29	6/19/2022 3:47	0.88	6/19/2022 5:29	28.57
6/20/2022 5:13	83.85	6/19/2022 4:30	-0.03	6/19/2022 5:00	10.28	6/19/2022 3:48	0.82	6/19/2022 5:30	28.52
6/20/2022 5:14	83.85	6/19/2022 4:31	0.00	6/19/2022 5:01	10.28	6/19/2022 3:49	0.82	6/19/2022 5:31	28.55
6/20/2022 5:15	83.90	6/19/2022 4:32	-0.03	6/19/2022 5:02	10.30	6/19/2022 3:50	0.82	6/19/2022 5:32	28.52
6/20/2022 5:16	83.84	6/19/2022 4:33	-0.01	6/19/2022 5:03	10.30	6/19/2022 3:51	0.77	6/19/2022 5:33	28.58
6/20/2022 5:17	83.84	6/19/2022 4:34	0.02	6/19/2022 5:04	10.25	6/19/2022 3:52	0.79	6/19/2022 5:34	28.57
6/20/2022 5:18	83.83	6/19/2022 4:35	0.02	6/19/2022 5:05	10.27	6/19/2022 3:53	0.76	6/19/2022 5:35	28.55
6/20/2022 5:19	83.83	6/19/2022 4:36	0.03	6/19/2022 5:06	10.30	6/19/2022 3:54	0.74	6/19/2022 5:36	28.58
6/20/2022 5:20	83.82	6/19/2022 4:37	0.05	6/19/2022 5:07	10.25	6/19/2022 3:55	0.75	6/19/2022 5:37	28.57
6/20/2022 5:21	83.86	6/19/2022 4:38	0.02	6/19/2022 5:08	10.26	6/19/2022 3:56	0.73	6/19/2022 5:38	28.55
6/20/2022 5:22	83.89	6/19/2022 4:39	-0.01	6/19/2022 5:09	10.27	6/19/2022 3:57	0.72	6/19/2022 5:39	28.55
6/20/2022 5:23	83.83	6/19/2022 4:40	0.00	6/19/2022 5:10	10.22	6/19/2022 3:58	0.75	6/19/2022 5:40	28.56
6/20/2022 5:24	83.84	6/19/2022 4:41	0.05	6/19/2022 5:11	10.26	6/19/2022 3:59	0.75	6/19/2022 5:41	28.50
6/20/2022 5:25	83.86	6/19/2022 4:42	0.04	6/19/2022 5:12	10.26	6/19/2022 4:00	0.74	6/19/2022 5:42	28.58
6/20/2022 5:26	83.84	6/19/2022 4:43	5.95	6/19/2022 5:13	10.22	6/19/2022 4:01	0.78	6/19/2022 5:43	28.54
6/20/2022 5:27	83.82	6/19/2022 4:44	6.92	6/19/2022 5:14	10.27	6/19/2022 4:02	0.82	6/19/2022 5:44	28.55
6/20/2022 5:28	83.87	6/19/2022 4:45	5.79	6/19/2022 5:15	10.21	6/19/2022 4:03	0.78	6/19/2022 5:45	28.54
6/20/2022 5:29	83.84	6/19/2022 4:46	4.94	6/19/2022 5:16	10.23	6/19/2022 4:04	0.82	6/19/2022 5:46	28.54
6/20/2022 5:30	83.86	6/19/2022 4:47	4.17	6/19/2022 5:17	10.25	6/19/2022 4:05	0.76	6/19/2022 5:47	28.54
6/20/2022 5:31	83.86	6/19/2022 4:48	3.60	6/19/2022 5:18	10.21	6/19/2022 4:06	0.72	6/19/2022 5:48	28.55
6/20/2022 5:32	83.85	6/19/2022 4:49	3.02	6/19/2022 5:19	10.23	6/19/2022 4:07	0.76	6/19/2022 5:49	28.56
6/20/2022 5:33	83.80	6/19/2022 4:50	2.62	6/19/2022 5:20	10.30	6/19/2022 4:08	0.81	6/19/2022 5:50	28.56
6/20/2022 5:34	83.84	6/19/2022 4:51	2.28	6/19/2022 5:21	10.35	6/19/2022 4:09	0.85	6/19/2022 5:51	28.55
6/20/2022 5:35	83.83	6/19/2022 4:52	2.00	6/19/2022 5:22	10.37	6/19/2022 4:10	0.84	6/19/2022 5:52	28.58
6/20/2022 5:36	83.83	6/19/2022 4:53	1.74	6/19/2022 5:23	10.37	6/19/2022 4:11	0.81	6/19/2022 5:53	28.58
6/20/2022 5:37	83.87	6/19/2022 4:54	1.57	6/19/2022 5:24	10.42	6/19/2022 4:12	0.74	6/19/2022 5:54	28.55
6/20/2022 5:38	83.85	6/19/2022 4:55	1.35	6/19/2022 5:25	10.44	6/19/2022 4:13	0.76	6/19/2022 5:55	28.57
6/20/2022 5:39	83.84	6/19/2022 4:56	1.21	6/19/2022 5:26	10.49	6/19/2022 4:14	0.83	6/19/2022 5:56	28.55
6/20/2022 5:40	83.86	6/19/2022 4:57	1.09	6/19/2022 5:27	10.51	6/19/2022 4:15	0.88	6/19/2022 5:57	28.53
6/20/2022 5:41	83.88	6/19/2022 4:58	0.99	6/19/2022 5:28	10.56	6/19/2022 4:16	0.82	6/19/2022 5:58	28.57
6/20/2022 5:42	83.81	6/19/2022 4:59	0.92	6/19/2022 5:29	10.64	6/19/2022 4:17	0.78	6/19/2022 5:59	28.56
6/20/2022 5:43	83.82	6/19/2022 5:00	0.80	6/19/2022 5:30	10.64	6/19/2022 4:18	0.75	6/19/2022 6:00	28.57
6/20/2022 5:44	83.80	6/19/2022 5:01	0.68	6/19/2022 5:31	10.66	6/19/2022 4:19	0.74	6/19/2022 6:01	28.56
6/20/2022 5:45	83.83	6/19/2022 5:02	0.61	6/19/2022 5:32	10.70	6/19/2022 4:20	0.84	6/19/2022 6:02	28.56
6/20/2022 5:46	83.85	6/19/2022 5:03	0.55	6/19/2022 5:33	10.73	6/19/2022 4:21	0.79	6/19/2022 6:03	28.55
6/20/2022 5:47	83.78	6/19/2022 5:04	0.54	6/19/2022 5:34	10.78	6/19/2022 4:22	0.76	6/19/2022 6:04	28.57
6/20/2022 5:48	83.81	6/19/2022 5:05	0.48	6/19/2022 5:35	10.76	6/19/2022 4:23	0.82	6/19/2022 6:05	28.58
6/20/2022 5:49	83.83	6/19/2022 5:06	0.42	6/19/2022 5:36	10.76	6/19/2022 4:24	0.86	6/19/2022 6:06	28.56
6/20/2022 5:50	83.80	6/19/2022 5:07	0.39	6/19/2022 5:37	10.80	6/19/2022 4:25	0.76	6/19/2022 6:07	28.56
6/20/2022 5:51	83.84	6/19/2022 5:08	0.33	6/19/2022 5:38	10.76	6/19/2022 4:26	0.76	6/19/2022 6:08	28.55
6/20/2022 5:52	83.81	6/19/2022 5:09	0.36	6/19/2022 5:39	10.76	6/19/2022 4:27	0.87	6/19/2022 6:09	28.56
6/20/2022 5:53	83.81	6/19/2022 5:10	0.33	6/19/2022 5:40	10.78	6/19/2022 4:28	0.74	6/19/2022 6:10	28.57
6/20/2022 5:54	83.81	6/19/2022 5:11	0.30	6/19/2022 5:41	10.75	6/19/2022 4:29	0.79	6/19/2022 6:11	28.57
6/20/2022 5:55	83.81	6/19/2022 5:12	0.28	6/19/2022 5:42	10.73	6/19/2022 4:30	0.83	6/19/2022 6:12	28.56
6/20/2022 5:56	83.83	6/19/2022 5:13	0.29	6/19/2022 5:43	10.73	6/19/2022 4:31	0.76	6/19/2022 6:13	28.57
6/20/2022 5:57	83.83	6/19/2022 5:14	0.28	6/19/2022 5:44	10.72	6/19/2022 4:32	0.77	6/19/2022 6:14	28.58

6/20/2022 5:58	83.83	6/19/2022 5:15	0.23	6/19/2022 5:45	10.65	6/19/2022 4:33	0.88	6/19/2022 6:15	28.55
6/20/2022 5:59	83.84	6/19/2022 5:16	0.25	6/19/2022 5:46	10.65	6/19/2022 4:34	0.75	6/19/2022 6:16	28.54
6/20/2022 6:00	83.86	6/19/2022 5:17	0.20	6/19/2022 5:47	10.66	6/19/2022 4:35	0.78	6/19/2022 6:17	28.55
6/20/2022 6:01	83.78	6/19/2022 5:18	0.19	6/19/2022 5:48	10.65	6/19/2022 4:36	0.83	6/19/2022 6:18	28.53
6/20/2022 6:02	83.81	6/19/2022 5:19	0.16	6/19/2022 5:49	10.59	6/19/2022 4:37	0.78	6/19/2022 6:19	28.59
6/20/2022 6:03	83.80	6/19/2022 5:20	0.17	6/19/2022 5:50	10.60	6/19/2022 4:38	0.80	6/19/2022 6:20	28.55
6/20/2022 6:04	83.81	6/19/2022 5:21	0.21	6/19/2022 5:51	10.57	6/19/2022 4:39	0.85	6/19/2022 6:21	28.56
6/20/2022 6:05	83.80	6/19/2022 5:22	0.17	6/19/2022 5:52	10.52	6/19/2022 4:40	0.76	6/19/2022 6:22	28.54
6/20/2022 6:06	83.80	6/19/2022 5:23	0.19	6/19/2022 5:53	14.00	6/19/2022 4:41	0.78	6/19/2022 6:23	28.58
6/20/2022 6:07	83.84	6/19/2022 5:24	0.20	6/19/2022 5:54	15.84	6/19/2022 4:42	0.85	6/19/2022 6:24	28.52
6/20/2022 6:08	83.82	6/19/2022 5:25	0.15	6/19/2022 5:55	15.14	6/19/2022 4:43	0.72	6/19/2022 6:25	28.54
6/20/2022 6:09	83.80	6/19/2022 5:26	0.13	6/19/2022 5:56	14.63	6/19/2022 4:44	0.85	6/19/2022 6:26	28.55
6/20/2022 6:10	83.80	6/19/2022 5:27	0.18	6/19/2022 5:57	14.14	6/19/2022 4:45	0.78	6/19/2022 6:27	28.58
6/20/2022 6:11	83.80	6/19/2022 5:28	0.14	6/19/2022 5:58	13.73	6/19/2022 4:46	0.79	6/19/2022 6:28	28.54
6/20/2022 6:12	83.80	6/19/2022 5:29	0.13	6/19/2022 5:59	13.40	6/19/2022 4:47	0.78	6/19/2022 6:29	28.55
6/20/2022 6:13	83.82	6/19/2022 5:30	0.14	6/19/2022 6:00	13.09	6/19/2022 4:48	0.78	6/19/2022 6:30	28.55
6/20/2022 6:14	83.80	6/19/2022 5:31	0.11	6/19/2022 6:01	12.82	6/19/2022 4:49	0.89	6/19/2022 6:31	28.53
6/20/2022 6:15	83.79	6/19/2022 5:32	0.12	6/19/2022 6:02	12.52	6/19/2022 4:50	0.76	6/19/2022 6:32	28.55
6/20/2022 6:16	83.79	6/19/2022 5:33	0.18	6/19/2022 6:03	12.36	6/19/2022 4:51	0.74	6/19/2022 6:33	28.56
6/20/2022 6:17	83.82	6/19/2022 5:34	0.16	6/19/2022 6:04	12.16	6/19/2022 4:52	0.82	6/19/2022 6:34	28.55
6/20/2022 6:18	83.82	6/19/2022 5:35	0.13	6/19/2022 6:05	12.05	6/19/2022 4:53	0.83	6/19/2022 6:35	28.53
6/20/2022 6:19	83.80	6/19/2022 5:36	0.12	6/19/2022 6:06	11.85	6/19/2022 4:54	0.78	6/19/2022 6:36	28.55
6/20/2022 6:20	83.79	6/19/2022 5:37	0.16	6/19/2022 6:07	11.73	6/19/2022 4:55	0.81	6/19/2022 6:37	28.55
6/20/2022 6:21	83.78	6/19/2022 5:38	0.13	6/19/2022 6:08	11.58	6/19/2022 4:56	0.76	6/19/2022 6:38	28.56
6/20/2022 6:22	83.80	6/19/2022 5:39	0.12	6/19/2022 6:09	11.48	6/19/2022 4:57	0.81	6/19/2022 6:39	28.53
6/20/2022 6:23	83.82	6/19/2022 5:40	0.15	6/19/2022 6:10	11.40	6/19/2022 4:58	0.75	6/19/2022 6:40	28.55
6/20/2022 6:24	83.79	6/19/2022 5:41	0.13	6/19/2022 6:11	11.31	6/19/2022 4:59	0.86	6/19/2022 6:41	28.53
6/20/2022 6:25	83.81	6/19/2022 5:42	0.13	6/19/2022 6:12	11.19	6/19/2022 5:00	0.74	6/19/2022 6:42	28.53
6/20/2022 6:26	83.82	6/19/2022 5:43	0.16	6/19/2022 6:13	11.12	6/19/2022 5:01	0.80	6/19/2022 6:43	28.56
6/20/2022 6:27	83.77	6/19/2022 5:44	0.14	6/19/2022 6:14	11.07	6/19/2022 5:02	0.71	6/19/2022 6:44	28.53
6/20/2022 6:28	83.78	6/19/2022 5:45	0.18	6/19/2022 6:15	11.00	6/19/2022 5:03	0.85	6/19/2022 6:45	28.54
6/20/2022 6:29	83.78	6/19/2022 5:46	0.17	6/19/2022 6:16	10.93	6/19/2022 5:04	0.75	6/19/2022 6:46	28.52
6/20/2022 6:30	83.82	6/19/2022 5:47	1.14	6/19/2022 6:17	10.87	6/19/2022 5:05	0.83	6/19/2022 6:47	28.54
6/20/2022 6:31	83.82	6/19/2022 5:48	6.96	6/19/2022 6:18	10.85	6/19/2022 5:06	0.80	6/19/2022 6:48	28.55
6/20/2022 6:32	83.81	6/19/2022 5:49	6.78	6/19/2022 6:19	10.81	6/19/2022 5:07	0.82	6/19/2022 6:49	28.54
6/20/2022 6:33	83.78	6/19/2022 5:50	5.69	6/19/2022 6:20	10.79	6/19/2022 5:08	0.77	6/19/2022 6:50	28.56
6/20/2022 6:34	83.80	6/19/2022 5:51	4.85	6/19/2022 6:21	10.78	6/19/2022 5:09	0.79	6/19/2022 6:51	28.55
6/20/2022 6:35	83.81	6/19/2022 5:52	4.15	6/19/2022 6:22	10.75	6/19/2022 5:10	0.75	6/19/2022 6:52	28.54
6/20/2022 6:36	83.79	6/19/2022 5:53	3.55	6/19/2022 6:23	10.72	6/19/2022 5:11	0.77	6/19/2022 6:53	28.57
6/20/2022 6:37	83.80	6/19/2022 5:54	3.01	6/19/2022 6:24	10.72	6/19/2022 5:12	0.83	6/19/2022 6:54	28.55
6/20/2022 6:38	83.77	6/19/2022 5:55	2.60	6/19/2022 6:25	10.75	6/19/2022 5:13	0.79	6/19/2022 6:55	28.56
6/20/2022 6:39	83.80	6/19/2022 5:56	2.24	6/19/2022 6:26	10.71	6/19/2022 5:14	0.88	6/19/2022 6:56	28.54
6/20/2022 6:40	83.80	6/19/2022 5:57	1.97	6/19/2022 6:27	10.67	6/19/2022 5:15	0.78	6/19/2022 6:57	28.57
6/20/2022 6:41	83.78	6/19/2022 5:58	1.72	6/19/2022 6:28	10.68	6/19/2022 5:16	0.81	6/19/2022 6:58	28.55
6/20/2022 6:42	83.81	6/19/2022 5:59	1.54	6/19/2022 6:29	10.61	6/19/2022 5:17	0.77	6/19/2022 6:59	28.55
6/20/2022 6:43	83.82	6/19/2022 6:00	1.41	6/19/2022 6:30	10.62	6/19/2022 5:18	0.79	6/19/2022 7:00	28.54
6/20/2022 6:44	83.79	6/19/2022 6:01	1.34	6/19/2022 6:31	10.61	6/19/2022 5:19	0.79	6/19/2022 7:01	28.57
6/20/2022 6:45	83.78	6/19/2022 6:02	1.34	6/19/2022 6:32	10.58	6/19/2022 5:20	0.76	6/19/2022 7:02	28.52
6/20/2022 6:46	83.79	6/19/2022 6:03	1.28	6/19/2022 6:33	10.57	6/19/2022 5:21	0.87	6/19/2022 7:03	28.57
6/20/2022 6:47	83.79	6/19/2022 6:04	1.15	6/19/2022 6:34	10.53	6/19/2022 5:22	0.73	6/19/2022 7:04	28.55
6/20/2022 6:48	83.77	6/19/2022 6:05	1.07	6/19/2022 6:35	10.57	6/19/2022 5:23	0.83	6/19/2022 7:05	28.56
6/20/2022 6:49	83.80	6/19/2022 6:06	0.99	6/19/2022 6:36	10.54	6/19/2022 5:24	0.74	6/19/2022 7:06	28.55
6/20/2022 6:50	83.82	6/19/2022 6:07	0.86	6/19/2022 6:37	10.54	6/19/2022 5:25	0.77	6/19/2022 7:07	28.55
6/20/2022 6:51	83.77	6/19/2022 6:08	0.83	6/19/2022 6:38	10.57	6/19/2022 5:26	0.80	6/19/2022 7:08	28.52
6/20/2022 6:52	83.82	6/19/2022 6:09	0.72	6/19/2022 6:39	10.58	6/19/2022 5:27	0.79	6/19/2022 7:09	28.55
6/20/2022 6:53	83.76	6/19/2022 6:10	0.70	6/19/2022 6:40	10.55	6/19/2022 5:28	0.89	6/19/2022 7:10	28.55
6/20/2022 6:54	83.78	6/19/2022 6:11	0.61	6/19/2022 6:41	10.58	6/19/2022 5:29	0.75	6/19/2022 7:11	28.55
6/20/2022 6:55	83.77	6/19/2022 6:12	0.59	6/19/2022 6:42	10.55	6/19/2022 5:30	0.78	6/19/2022 7:12	28.53
6/20/2022 6:56	83.76	6/19/2022 6:13	0.55	6/19/2022 6:43	10.56	6/19/2022 5:31	0.80	6/19/2022 7:13	28.52
6/20/2022 6:57	83.82	6/19/2022 6:14	0.49	6/19/2022 6:44	10.51	6/19/2022 5:32	0.74	6/19/2022 7:14	28.54
6/20/2022 6:58	83.77	6/19/2022 6:15	0.52	6/19/2022 6:45	10.54	6/19/2022 5:33	0.83	6/19/2022 7:15	28.52
6/20/2022 6:59	83.77	6/19/2022 6:16	0.51	6/19/2022 6:46	10.48	6/19/2022 5:34	0.79	6/19/2022 7:16	28.54
6/20/2022 7:00	83.77	6/19/2022 6:17	0.47	6/19/2022 6:47	10.45	6/19/2022 5:35	0.77	6/19/2022 7:17	28.55
6/20/2022 7:01	83.75	6/19/2022 6:18	0.46	6/19/2022 6:48	10.45	6/19/2022 5:36	0.80	6/19/2022 7:18	28.55
6/20/2022 7:02	83.79	6/19/2022 6:19	0.45	6/19/2022 6:49	10.47	6/19/2022 5:37	0.77	6/19/2022 7:19	28.58
6/20/2022 7:03	83.77	6/19/2022 6:20	0.43	6/19/2022 6:50	10.46	6/19/2022 5:38	0.83	6/19/2022 7:20	28.57
6/20/2022 7:04	83.79	6/19/2022 6:21	0.48	6/19/2022 6:51	10.43	6/19/2022 5:39	0.69	6/19/2022 7:21	28.55
6/20/2022 7:05	83.77	6/19/2022 6:22	0.44	6/19/2022 6:52	10.41	6/19/2022 5:40	0.81	6/19/2022 7:22	28.54
6/20/2022 7:06	83.79	6/19/2022 6:23	0.42	6/19/2022 6:53	10.42	6/19/2022 5:41	0.79	6/19/2022 7:23	28.54
6/20/2022 7:07	83.78	6/19/2022 6:24	0.40	6/19/2022 6:54	10.39	6/19/2022 5:42	0.75	6/19/2022 7:24	28.50
6/20/2022 7:08	83.84	6/19/2022 6:25	0.42	6/19/2022 6:55	10.39	6/19/2022 5:43	0.81	6/19/2022 7:25	28.55
6/20/2022 7:09	83.76	6/19/2022 6:26	0.41	6/19/2022 6:56	10.39	6/19/2022 5:44	0.75	6/19/2022 7:26	28.54
6/20/2022 7:10	83.78	6/19/2022 6:27	0.41	6/19/2022 6:57	10.41	6/19/2022 5:45	0.83	6/19/2022 7:27	28.55
6/20/2022 7:11	83.79	6/19/2022 6:28	0.39	6/19/2022 6:58	10.38	6/19/2022 5:46	0.78	6/19/2022 7:28	28.55
6/20/2022 7:12	83.80	6/19/2022 6:29	0.39	6/19/2022 6:59	10.39	6/19/2022 5:47	0.79	6/19/2022 7:29	28.56
6/20/2022 7:13	83.79	6/19/2022 6:30	0.39	6/19/2022 7:00	10.36	6/19/2022 5:48	0.81	6/19/2022 7:30	28.57
6/20/2022 7:14	83.80	6/19/2022 6:31	0.37	6/19/2022 7:01	10.44	6/19/2022 5:49	0.80	6/19/2022 7:31	28.57
6/20/2022 7:15	83.79	6/19/2022 6:32	0.34	6/19/2022 7:02	10.41	6/19/2022 5:50	0.80	6/19/2022 7:32	28.54
6/20/2022 7:16	83.77	6/19/2022 6:33	0.39	6/19/2022 7:03	10.41	6/19/2022 5:51	0.79	6/19/2022 7:33	28.57
6/20/2022 7:17	83.77	6/19/2022 6:34	0.37	6/19/2022 7:04	10.42	6/19/2022 5:52	0.85	6/19/2022 7:34	28.53
6/20/2022 7:18	83.80	6/19/2022 6:35	0.38	6/19/2022 7:05	10.44	6/19/2022 5:53	0.85	6/19/2022 7:35	28.53
6/20/2022 7:19	83.78	6/19/2022 6:36	0.33	6/19/2022 7:06	10.44	6/19/2022 5:54	0.74	6/19/2022 7:36	28.54
6/20/2022 7:20	83.80	6/19/2022 6:37	0.34	6/19/2022 7:07	10.41	6/19/2022 5:55	0.76	6/19/2022 7:37	28.53
6/20/2022 7:21	83.75	6/19/2022 6:38	0.34	6/19/2022 7:08	10.45	6/19/2022 5:56	0.84	6/19/2022 7:38	28.53
6/20/2022 7:22	83.79	6/19/2022 6:39	0.33	6/19/2022 7:09	10.41	6/19/2022 5:57	0.76	6/19/2022 7:39	28.52
6/20/2022 7:23	83.75	6/19/2022 6:40	0.29	6/19/2022 7:10	10.38	6/19/2022 5:58	0.87	6/19/2022 7:40	28.58
6/20/2022 7:24	83.75	6/19/2022 6:41	0.34	6/19/2022 7:11	10.40	6/19/2022 5:59	0.75	6/19/2022 7:41	28.55
6/20/2022 7:25	83.77	6/19/2022 6:42	0.29	6/19/2022 7:12	10.39	6/19/2022 6:00	6.62	6/19/2022 7:42	28.59

6/20/2022 7:26	83.76	6/19/2022 6:43	0.33	6/19/2022 7:13	10.41	6/19/2022 6:01	7.86	6/19/2022 7:43	28.54
6/20/2022 7:27	83.78	6/19/2022 6:44	0.29	6/19/2022 7:14	10.37	6/19/2022 6:02	5.00	6/19/2022 7:44	28.54
6/20/2022 7:28	83.76	6/19/2022 6:45	0.27	6/19/2022 7:15	10.39	6/19/2022 6:03	2.88	6/19/2022 7:45	28.53
6/20/2022 7:29	83.80	6/19/2022 6:46	0.31	6/19/2022 7:16	10.39	6/19/2022 6:04	1.39	6/19/2022 7:46	28.52
6/20/2022 7:30	83.77	6/19/2022 6:47	0.29	6/19/2022 7:17	10.37	6/19/2022 6:05	0.80	6/19/2022 7:47	28.55
6/20/2022 7:31	83.75	6/19/2022 6:48	0.29	6/19/2022 7:18	10.36	6/19/2022 6:06	0.82	6/19/2022 7:48	28.53
6/20/2022 7:32	83.80	6/19/2022 6:49	0.28	6/19/2022 7:19	10.38	6/19/2022 6:07	0.78	6/19/2022 7:49	28.55
6/20/2022 7:33	83.74	6/19/2022 6:50	0.26	6/19/2022 7:20	10.33	6/19/2022 6:08	0.84	6/19/2022 7:50	28.51
6/20/2022 7:34	83.76	6/19/2022 6:51	0.25	6/19/2022 7:21	10.32	6/19/2022 6:09	0.83	6/19/2022 7:51	28.57
6/20/2022 7:35	83.75	6/19/2022 6:52	3.79	6/19/2022 7:22	10.30	6/19/2022 6:10	0.84	6/19/2022 7:52	28.56
6/20/2022 7:36	83.79	6/19/2022 6:53	7.55	6/19/2022 7:23	10.33	6/19/2022 6:11	0.82	6/19/2022 7:53	28.58
6/20/2022 7:37	83.78	6/19/2022 6:54	6.37	6/19/2022 7:24	10.29	6/19/2022 6:12	0.77	6/19/2022 7:54	28.58
6/20/2022 7:38	83.77	6/19/2022 6:55	5.34	6/19/2022 7:25	10.30	6/19/2022 6:13	0.76	6/19/2022 7:55	28.55
6/20/2022 7:39	83.78	6/19/2022 6:56	4.58	6/19/2022 7:26	10.29	6/19/2022 6:14	0.85	6/19/2022 7:56	28.56
6/20/2022 7:40	83.80	6/19/2022 6:57	3.88	6/19/2022 7:27	10.25	6/19/2022 6:15	0.80	6/19/2022 7:57	28.52
6/20/2022 7:41	83.76	6/19/2022 6:58	3.29	6/19/2022 7:28	10.27	6/19/2022 6:16	0.76	6/19/2022 7:58	28.58
6/20/2022 7:42	83.75	6/19/2022 6:59	2.80	6/19/2022 7:29	10.26	6/19/2022 6:17	0.83	6/19/2022 7:59	28.55
6/20/2022 7:43	83.79	6/19/2022 7:00	2.39	6/19/2022 7:30	10.24	6/19/2022 6:18	0.76	6/19/2022 8:00	28.54
6/20/2022 7:44	83.75	6/19/2022 7:01	2.02	6/19/2022 7:31	10.28	6/19/2022 6:19	0.75	6/19/2022 8:01	28.58
6/20/2022 7:45	83.79	6/19/2022 7:02	1.75	6/19/2022 7:32	10.31	6/19/2022 6:20	0.79	6/19/2022 8:02	28.55
6/20/2022 7:46	83.80	6/19/2022 7:03	1.48	6/19/2022 7:33	10.32	6/19/2022 6:21	0.84	6/19/2022 8:03	28.54
6/20/2022 7:47	83.78	6/19/2022 7:04	1.29	6/19/2022 7:34	10.34	6/19/2022 6:22	0.79	6/19/2022 8:04	28.58
6/20/2022 7:48	83.76	6/19/2022 7:05	1.07	6/19/2022 7:35	10.34	6/19/2022 6:23	0.79	6/19/2022 8:05	28.54
6/20/2022 7:49	83.79	6/19/2022 7:06	0.93	6/19/2022 7:36	10.36	6/19/2022 6:24	0.88	6/19/2022 8:06	28.56
6/20/2022 7:50	83.79	6/19/2022 7:07	0.74	6/19/2022 7:37	10.34	6/19/2022 6:25	0.79	6/19/2022 8:07	28.56
6/20/2022 7:51	83.78	6/19/2022 7:08	0.63	6/19/2022 7:38	10.33	6/19/2022 6:26	0.76	6/19/2022 8:08	28.53
6/20/2022 7:52	83.78	6/19/2022 7:09	0.57	6/19/2022 7:39	10.34	6/19/2022 6:27	0.74	6/19/2022 8:09	28.54
6/20/2022 7:53	83.73	6/19/2022 7:10	0.41	6/19/2022 7:40	10.34	6/19/2022 6:28	0.83	6/19/2022 8:10	28.51
6/20/2022 7:54	83.74	6/19/2022 7:11	0.26	6/19/2022 7:41	10.36	6/19/2022 6:29	0.84	6/19/2022 8:11	28.55
6/20/2022 7:55	83.73	6/19/2022 7:12	0.24	6/19/2022 7:42	10.31	6/19/2022 6:30	0.76	6/19/2022 8:12	28.53
6/20/2022 7:56	83.76	6/19/2022 7:13	0.18	6/19/2022 7:43	10.33	6/19/2022 6:31	0.75	6/19/2022 8:13	28.56
6/20/2022 7:57	83.74	6/19/2022 7:14	0.10	6/19/2022 7:44	10.29	6/19/2022 6:32	0.85	6/19/2022 8:14	28.57
6/20/2022 7:58	83.76	6/19/2022 7:15	0.03	6/19/2022 7:45	10.35	6/19/2022 6:33	0.74	6/19/2022 8:15	28.55
6/20/2022 7:59	83.77	6/19/2022 7:16	-0.01	6/19/2022 7:46	10.34	6/19/2022 6:34	0.77	6/19/2022 8:16	28.54
6/20/2022 8:00	83.76	6/19/2022 7:17	-0.01	6/19/2022 7:47	10.34	6/19/2022 6:35	0.79	6/19/2022 8:17	28.60
6/20/2022 8:01	83.73	6/19/2022 7:18	-0.08	6/19/2022 7:48	10.36	6/19/2022 6:36	0.77	6/19/2022 8:18	28.55
6/20/2022 8:02	83.74	6/19/2022 7:19	-0.03	6/19/2022 7:49	10.36	6/19/2022 6:37	0.77	6/19/2022 8:19	28.56
6/20/2022 8:03	83.74	6/19/2022 7:20	-0.02	6/19/2022 7:50	10.37	6/19/2022 6:38	0.77	6/19/2022 8:20	28.55
6/20/2022 8:04	83.75	6/19/2022 7:21	-0.04	6/19/2022 7:51	10.38	6/19/2022 6:39	0.82	6/19/2022 8:21	28.53
6/20/2022 8:05	83.78	6/19/2022 7:22	-0.08	6/19/2022 7:52	10.39	6/19/2022 6:40	0.74	6/19/2022 8:22	28.54
6/20/2022 8:06	83.81	6/19/2022 7:23	-0.04	6/19/2022 7:53	10.37	6/19/2022 6:41	0.81	6/19/2022 8:23	28.53
6/20/2022 8:07	83.73	6/19/2022 7:24	-0.07	6/19/2022 7:54	10.38	6/19/2022 6:42	0.74	6/19/2022 8:24	28.53
6/20/2022 8:08	83.72	6/19/2022 7:25	-0.08	6/19/2022 7:55	10.38	6/19/2022 6:43	0.83	6/19/2022 8:25	28.53
6/20/2022 8:09	83.73	6/19/2022 7:26	-0.05	6/19/2022 7:56	10.39	6/19/2022 6:44	0.76	6/19/2022 8:26	28.60
6/20/2022 8:10	83.73	6/19/2022 7:27	-0.07	6/19/2022 7:57	10.39	6/19/2022 6:45	0.85	6/19/2022 8:27	30.36
6/20/2022 8:11	83.72	6/19/2022 7:28	-0.03	6/19/2022 7:58	10.35	6/19/2022 6:46	0.73	6/19/2022 8:28	29.34
6/20/2022 8:12	83.77	6/19/2022 7:29	-0.07	6/19/2022 7:59	10.35	6/19/2022 6:47	0.78	6/19/2022 8:29	28.85
6/20/2022 8:13	83.73	6/19/2022 7:30	-0.07	6/19/2022 8:00	10.33	6/19/2022 6:48	0.75	6/19/2022 8:30	28.68
6/20/2022 8:14	83.73	6/19/2022 7:31	-0.07	6/19/2022 8:01	10.32	6/19/2022 6:49	0.85	6/19/2022 8:31	28.62
6/20/2022 8:15	83.76	6/19/2022 7:32	-0.07	6/19/2022 8:02	10.32	6/19/2022 6:50	0.72	6/19/2022 8:32	28.58
6/20/2022 8:16	83.74	6/19/2022 7:33	-0.04	6/19/2022 8:03	10.32	6/19/2022 6:51	0.84	6/19/2022 8:33	28.58
6/20/2022 8:17	83.76	6/19/2022 7:34	-0.06	6/19/2022 8:04	10.30	6/19/2022 6:52	0.75	6/19/2022 8:34	30.94
6/20/2022 8:18	83.77	6/19/2022 7:35	-0.08	6/19/2022 8:05	10.34	6/19/2022 6:53	0.80	6/19/2022 8:35	29.59
6/20/2022 8:19	83.73	6/19/2022 7:36	-0.06	6/19/2022 8:06	10.33	6/19/2022 6:54	0.90	6/19/2022 8:36	28.95
6/20/2022 8:20	83.72	6/19/2022 7:37	-0.05	6/19/2022 8:07	10.35	6/19/2022 6:55	0.77	6/19/2022 8:37	28.74
6/20/2022 8:21	83.74	6/19/2022 7:38	-0.05	6/19/2022 8:08	10.36	6/19/2022 6:56	0.76	6/19/2022 8:38	28.66
6/20/2022 8:22	83.77	6/19/2022 7:39	-0.04	6/19/2022 8:09	10.36	6/19/2022 6:57	0.79	6/19/2022 8:39	28.62
6/20/2022 8:23	83.74	6/19/2022 7:40	-0.08	6/19/2022 8:10	10.38	6/19/2022 6:58	0.75	6/19/2022 8:40	28.62
6/20/2022 8:24	83.75	6/19/2022 7:41	-0.05	6/19/2022 8:11	10.34	6/19/2022 6:59	0.81	6/19/2022 8:41	28.60
6/20/2022 8:25	83.74	6/19/2022 7:42	-0.04	6/19/2022 8:12	10.41	6/19/2022 7:00	0.72	6/19/2022 8:42	28.64
6/20/2022 8:26	83.74	6/19/2022 7:43	-0.08	6/19/2022 8:13	10.36	6/19/2022 7:01	0.79	6/19/2022 8:43	28.61
6/20/2022 8:27	83.74	6/19/2022 7:44	-0.04	6/19/2022 8:14	10.39	6/19/2022 7:02	0.76	6/19/2022 8:44	28.61
6/20/2022 8:28	83.74	6/19/2022 7:45	-0.04	6/19/2022 8:15	10.36	6/19/2022 7:03	0.76	6/19/2022 8:45	28.57
6/20/2022 8:29	83.75	6/19/2022 7:46	-0.05	6/19/2022 8:16	10.36	6/19/2022 7:04	0.75	6/19/2022 8:46	28.62
6/20/2022 8:30	83.75	6/19/2022 7:47	-0.04	6/19/2022 8:17	10.34	6/19/2022 7:05	0.80	6/19/2022 8:47	28.58
6/20/2022 8:31	83.72	6/19/2022 7:48	-0.09	6/19/2022 8:18	10.37	6/19/2022 7:06	0.80	6/19/2022 8:48	28.59
6/20/2022 8:32	83.76	6/19/2022 7:49	-0.09	6/19/2022 8:19	10.35	6/19/2022 7:07	0.73	6/19/2022 8:49	28.58
6/20/2022 8:33	83.73	6/19/2022 7:50	-0.06	6/19/2022 8:20	10.35	6/19/2022 7:08	0.71	6/19/2022 8:50	28.62
6/20/2022 8:34	83.74	6/19/2022 7:51	-0.05	6/19/2022 8:21	10.34	6/19/2022 7:09	0.79	6/19/2022 8:51	28.60
6/20/2022 8:35	83.71	6/19/2022 7:52	-0.03	6/19/2022 8:22	10.37	6/19/2022 7:10	0.76	6/19/2022 8:52	28.57
6/20/2022 8:36	83.73	6/19/2022 7:53	-0.01	6/19/2022 8:23	10.39	6/19/2022 7:11	0.80	6/19/2022 8:53	28.58
6/20/2022 8:37	83.74	6/19/2022 7:54	-0.03	6/19/2022 8:24	10.39	6/19/2022 7:12	0.83	6/19/2022 8:54	28.63
6/20/2022 8:38	83.75	6/19/2022 7:55	-0.05	6/19/2022 8:25	10.41	6/19/2022 7:13	0.83	6/19/2022 8:55	28.66
6/20/2022 8:39	83.72	6/19/2022 7:56	-0.04	6/19/2022 8:26	10.43	6/19/2022 7:14	0.79	6/19/2022 8:56	28.65
6/20/2022 8:40	83.73	6/19/2022 7:57	5.72	6/19/2022 8:27	10.43	6/19/2022 7:15	0.76	6/19/2022 8:57	28.62
6/20/2022 8:41	83.72	6/19/2022 7:58	6.85	6/19/2022 8:28	10.40	6/19/2022 7:16	0.73	6/19/2022 8:58	28.60
6/20/2022 8:42	83.74	6/19/2022 7:59	5.67	6/19/2022 8:29	10.41	6/19/2022 7:17	0.72	6/19/2022 8:59	28.63
6/20/2022 8:43	83.73	6/19/2022 8:00	4.71	6/19/2022 8:30	10.40	6/19/2022 7:18	0.73	6/19/2022 9:00	28.66
6/20/2022 8:44	83.75	6/19/2022 8:01	3.99	6/19/2022 8:31	10.39	6/19/2022 7:19	0.69	6/19/2022 9:01	28.61
6/20/2022 8:45	83.76	6/19/2022 8:02	3.33	6/19/2022 8:32	10.37	6/19/2022 7:20	0.75	6/19/2022 9:02	28.62
6/20/2022 8:46	83.75	6/19/2022 8:03	2.73	6/19/2022 8:33	10.36	6/19/2022 7:21	0.71	6/19/2022 9:03	28.64
6/20/2022 8:47	83.73	6/19/2022 8:04	2.32	6/19/2022 8:34	10.39	6/19/2022 7:22	0.73	6/19/2022 9:04	28.62
6/20/2022 8:48	83.68	6/19/2022 8:05	1.94	6/19/2022 8:35	10.36	6/19/2022 7:23	0.75	6/19/2022 9:05	28.62
6/20/2022 8:49	83.77	6/19/2022 8:06	1.68	6/19/2022 8:36	10.34	6/19/2022 7:24	0.74	6/19/2022 9:06	28.61
6/20/2022 8:50	83.74	6/19/2022 8:07	1.37	6/19/2022 8:37	10.32	6/19/2022 7:25	0.76	6/19/2022 9:07	28.63
6/20/2022 8:51	84.27	6/19/2022 8:08	1.17	6/19/2022 8:38	10.31	6/19/2022 7:26	0.78	6/19/2022 9:08	28.60
6/20/2022 8:52	88.48	6/19/2022 8:09	0.96	6/19/2022 8:39	10.34	6/19/2022 7:27	0.76	6/19/2022 9:09	28.59
6/20/2022 8:53	90.98	6/19/2022 8:10	0.75	6/19/2022 8:40	10.33	6/19/2022 7:28	0.76	6/19/2022 9:10	28.61

6/20/2022 8:54	91.58	6/19/2022 8:11	0.63	6/19/2022 8:41	10.28	6/19/2022 7:29	0.80	6/19/2022 9:11	28.60
6/20/2022 8:55	88.94	6/19/2022 8:12	0.47	6/19/2022 8:42	10.31	6/19/2022 7:30	0.77	6/19/2022 9:12	28.60
6/20/2022 8:56	87.34	6/19/2022 8:13	0.35	6/19/2022 8:43	10.29	6/19/2022 7:31	0.78	6/19/2022 9:13	28.62
6/20/2022 8:57	86.33	6/19/2022 8:14	0.26	6/19/2022 8:44	10.28	6/19/2022 7:32	0.80	6/19/2022 9:14	28.59
6/20/2022 8:58	85.69	6/19/2022 8:15	0.18	6/19/2022 8:45	10.28	6/19/2022 7:33	0.84	6/19/2022 9:15	28.63
6/20/2022 8:59	85.31	6/19/2022 8:16	0.10	6/19/2022 8:46	10.27	6/19/2022 7:34	0.81	6/19/2022 9:16	28.61
6/20/2022 9:00	85.05	6/19/2022 8:17	-0.01	6/19/2022 8:47	10.28	6/19/2022 7:35	0.84	6/19/2022 9:17	28.62
6/20/2022 9:01	84.85	6/19/2022 8:18	-0.01	6/19/2022 8:48	10.28	6/19/2022 7:36	0.83	6/19/2022 9:18	28.59
6/20/2022 9:02	84.71	6/19/2022 8:19	-0.07	6/19/2022 8:49	10.26	6/19/2022 7:37	0.81	6/19/2022 9:19	28.62
6/20/2022 9:03	84.58	6/19/2022 8:20	-0.05	6/19/2022 8:50	10.25	6/19/2022 7:38	0.82	6/19/2022 9:20	28.59
6/20/2022 9:04	84.55	6/19/2022 8:21	-0.05	6/19/2022 8:51	10.26	6/19/2022 7:39	0.80	6/19/2022 9:21	28.60
6/20/2022 9:05	84.45	6/19/2022 8:22	-0.03	6/19/2022 8:52	10.26	6/19/2022 7:40	0.83	6/19/2022 9:22	28.59
6/20/2022 9:06	84.42	6/19/2022 8:23	-0.06	6/19/2022 8:53	10.29	6/19/2022 7:41	0.84	6/19/2022 9:23	28.57
6/20/2022 9:07	84.40	6/19/2022 8:24	-0.06	6/19/2022 8:54	10.30	6/19/2022 7:42	0.81	6/19/2022 9:24	28.59
6/20/2022 9:08	84.32	6/19/2022 8:25	-0.06	6/19/2022 8:55	10.34	6/19/2022 7:43	0.82	6/19/2022 9:25	28.62
6/20/2022 9:09	84.30	6/19/2022 8:26	-0.03	6/19/2022 8:56	10.31	6/19/2022 7:44	0.80	6/19/2022 9:26	30.58
6/20/2022 9:10	84.29	6/19/2022 8:27	-0.09	6/19/2022 8:57	10.35	6/19/2022 7:45	0.81	6/19/2022 9:27	29.78
6/20/2022 9:11	84.26	6/19/2022 8:28	-0.03	6/19/2022 8:58	10.32	6/19/2022 7:46	0.77	6/19/2022 9:28	29.02
6/20/2022 9:12	84.23	6/19/2022 8:29	-0.06	6/19/2022 8:59	10.30	6/19/2022 7:47	0.83	6/19/2022 9:29	28.78
6/20/2022 9:13	84.23	6/19/2022 8:30	-0.03	6/19/2022 9:00	10.29	6/19/2022 7:48	0.83	6/19/2022 9:30	28.67
6/20/2022 9:14	84.19	6/19/2022 8:31	0.03	6/19/2022 9:01	10.35	6/19/2022 7:49	0.79	6/19/2022 9:31	28.65
6/20/2022 9:15	84.18	6/19/2022 8:32	0.01	6/19/2022 9:02	10.31	6/19/2022 7:50	0.81	6/19/2022 9:32	28.58
6/20/2022 9:16	84.14	6/19/2022 8:33	-0.03	6/19/2022 9:03	10.29	6/19/2022 7:51	0.83	6/19/2022 9:33	28.63
6/20/2022 9:17	84.16	6/19/2022 8:34	4.43	6/19/2022 9:04	10.33	6/19/2022 7:52	0.83	6/19/2022 9:34	28.59
6/20/2022 9:18	84.13	6/19/2022 8:35	7.14	6/19/2022 9:05	10.30	6/19/2022 7:53	0.82	6/19/2022 9:35	28.63
6/20/2022 9:19	84.15	6/19/2022 8:36	5.92	6/19/2022 9:06	10.32	6/19/2022 7:54	0.81	6/19/2022 9:36	28.63
6/20/2022 9:20	84.13	6/19/2022 8:37	4.91	6/19/2022 9:07	10.28	6/19/2022 7:55	0.81	6/19/2022 9:37	28.58
6/20/2022 9:21	84.10	6/19/2022 8:38	4.15	6/19/2022 9:08	10.28	6/19/2022 7:56	0.82	6/19/2022 9:38	28.62
6/20/2022 9:22	84.12	6/19/2022 8:39	3.44	6/19/2022 9:09	10.30	6/19/2022 7:57	0.83	6/19/2022 9:39	28.59
6/20/2022 9:23	84.11	6/19/2022 8:40	2.86	6/19/2022 9:10	10.26	6/19/2022 7:58	0.79	6/19/2022 9:40	28.60
6/20/2022 9:24	84.09	6/19/2022 8:41	2.41	6/19/2022 9:11	10.29	6/19/2022 7:59	0.76	6/19/2022 9:41	28.60
6/20/2022 9:25	84.07	6/19/2022 8:42	2.01	6/19/2022 9:12	10.28	6/19/2022 8:00	0.69	6/19/2022 9:42	28.58
6/20/2022 9:26	84.10	6/19/2022 8:43	1.72	6/19/2022 9:13	10.27	6/19/2022 8:01	0.76	6/19/2022 9:43	28.60
6/20/2022 9:27	84.08	6/19/2022 8:44	1.44	6/19/2022 9:14	10.26	6/19/2022 8:02	0.81	6/19/2022 9:44	28.61
6/20/2022 9:28	84.05	6/19/2022 8:45	1.21	6/19/2022 9:15	10.26	6/19/2022 8:03	0.80	6/19/2022 9:45	28.58
6/20/2022 9:29	84.04	6/19/2022 8:46	1.00	6/19/2022 9:16	10.29	6/19/2022 8:04	0.80	6/19/2022 9:46	28.61
6/20/2022 9:30	84.05	6/19/2022 8:47	0.82	6/19/2022 9:17	10.31	6/19/2022 8:05	0.74	6/19/2022 9:47	28.59
6/20/2022 9:31	84.04	6/19/2022 8:48	0.64	6/19/2022 9:18	10.31	6/19/2022 8:06	0.77	6/19/2022 9:48	28.59
6/20/2022 9:32	84.06	6/19/2022 8:49	0.48	6/19/2022 9:19	10.34	6/19/2022 8:07	0.72	6/19/2022 9:49	28.59
6/20/2022 9:33	84.03	6/19/2022 8:50	0.39	6/19/2022 9:20	10.34	6/19/2022 8:08	0.69	6/19/2022 9:50	28.60
6/20/2022 9:34	84.04	6/19/2022 8:51	0.28	6/19/2022 9:21	10.35	6/19/2022 8:09	0.71	6/19/2022 9:51	28.58
6/20/2022 9:35	84.02	6/19/2022 8:52	0.20	6/19/2022 9:22	10.34	6/19/2022 8:10	0.73	6/19/2022 9:52	28.59
6/20/2022 9:36	84.03	6/19/2022 8:53	0.11	6/19/2022 9:23	10.37	6/19/2022 8:11	0.73	6/19/2022 9:53	28.57
6/20/2022 9:37	84.00	6/19/2022 8:54	0.09	6/19/2022 9:24	10.36	6/19/2022 8:12	0.73	6/19/2022 9:54	28.58
6/20/2022 9:38	84.00	6/19/2022 8:55	0.00	6/19/2022 9:25	10.31	6/19/2022 8:13	0.72	6/19/2022 9:55	28.57
6/20/2022 9:39	84.03	6/19/2022 8:56	-0.04	6/19/2022 9:26	10.36	6/19/2022 8:14	0.73	6/19/2022 9:56	28.56
6/20/2022 9:40	84.02	6/19/2022 8:57	-0.05	6/19/2022 9:27	10.36	6/19/2022 8:15	0.74	6/19/2022 9:57	28.57
6/20/2022 9:41	84.01	6/19/2022 8:58	-0.03	6/19/2022 9:28	10.34	6/19/2022 8:16	0.71	6/19/2022 9:58	28.58
6/20/2022 9:42	84.03	6/19/2022 8:59	-0.05	6/19/2022 9:29	10.33	6/19/2022 8:17	0.70	6/19/2022 9:59	28.55
6/20/2022 9:43	83.99	6/19/2022 9:00	-0.05	6/19/2022 9:30	10.32	6/19/2022 8:18	0.72	6/19/2022 10:00	28.58
6/20/2022 9:44	84.02	6/19/2022 9:01	-0.03	6/19/2022 9:31	10.33	6/19/2022 8:19	0.68	6/19/2022 10:01	28.57
6/20/2022 9:45	83.99	6/19/2022 9:02	-0.06	6/19/2022 9:32	10.32	6/19/2022 8:20	0.72	6/19/2022 10:02	28.60
6/20/2022 9:46	84.00	6/19/2022 9:03	-0.05	6/19/2022 9:33	10.33	6/19/2022 8:21	0.67	6/19/2022 10:03	28.57
6/20/2022 9:47	83.99	6/19/2022 9:04	-0.08	6/19/2022 9:34	10.34	6/19/2022 8:22	0.66	6/19/2022 10:04	28.57
6/20/2022 9:48	84.01	6/19/2022 9:05	-0.03	6/19/2022 9:35	10.35	6/19/2022 8:23	0.71	6/19/2022 10:05	28.57
6/20/2022 9:49	83.98	6/19/2022 9:06	-0.05	6/19/2022 9:36	10.36	6/19/2022 8:24	0.70	6/19/2022 10:06	28.58
6/20/2022 9:50	84.00	6/19/2022 9:07	-0.07	6/19/2022 9:37	10.38	6/19/2022 8:25	0.70	6/19/2022 10:07	28.54
6/20/2022 9:51	83.95	6/19/2022 9:08	-0.06	6/19/2022 9:38	10.34	6/19/2022 8:26	0.73	6/19/2022 10:08	28.59
6/20/2022 9:52	83.98	6/19/2022 9:09	-0.04	6/19/2022 9:39	10.38	6/19/2022 8:27	0.69	6/19/2022 10:09	28.57
6/20/2022 9:53	83.96	6/19/2022 9:10	-0.07	6/19/2022 9:40	10.37	6/19/2022 8:28	0.73	6/19/2022 10:10	28.57
6/20/2022 9:54	83.96	6/19/2022 9:11	-0.07	6/19/2022 9:41	10.36	6/19/2022 8:29	3.67	6/19/2022 10:11	28.57
6/20/2022 9:55	83.96	6/19/2022 9:12	0.51	6/19/2022 9:42	10.36	6/19/2022 8:30	7.27	6/19/2022 10:12	28.60
6/20/2022 9:56	83.96	6/19/2022 9:13	6.40	6/19/2022 9:43	10.32	6/19/2022 8:31	4.31	6/19/2022 10:13	28.59
6/20/2022 9:57	83.98	6/19/2022 9:14	6.61	6/19/2022 9:44	10.35	6/19/2022 8:32	2.00	6/19/2022 10:14	28.58
6/20/2022 9:58	83.94	6/19/2022 9:15	5.44	6/19/2022 9:45	10.35	6/19/2022 8:33	0.72	6/19/2022 10:15	28.62
6/20/2022 9:59	84.01	6/19/2022 9:16	4.59	6/19/2022 9:46	10.32	6/19/2022 8:34	0.74	6/19/2022 10:16	28.66
6/20/2022 10:00	83.98	6/19/2022 9:17	3.84	6/19/2022 9:47	10.32	6/19/2022 8:35	0.74	6/19/2022 10:17	28.66
6/20/2022 10:01	83.91	6/19/2022 9:18	3.22	6/19/2022 9:48	10.33	6/19/2022 8:36	0.82	6/19/2022 10:18	28.63
6/20/2022 10:02	83.89	6/19/2022 9:19	2.65	6/19/2022 9:49	10.34	6/19/2022 8:37	0.70	6/19/2022 10:19	28.60
6/20/2022 10:03	83.98	6/19/2022 9:20	2.29	6/19/2022 9:50	10.32	6/19/2022 8:38	0.70	6/19/2022 10:20	28.61
6/20/2022 10:04	83.94	6/19/2022 9:21	1.89	6/19/2022 9:51	10.34	6/19/2022 8:39	0.70	6/19/2022 10:21	28.61
6/20/2022 10:05	83.93	6/19/2022 9:22	1.59	6/19/2022 9:52	10.35	6/19/2022 8:40	0.74	6/19/2022 10:22	28.60
6/20/2022 10:06	83.94	6/19/2022 9:23	1.32	6/19/2022 9:53	10.35	6/19/2022 8:41	0.84	6/19/2022 10:23	28.61
6/20/2022 10:07	83.90	6/19/2022 9:24	1.24	6/19/2022 9:54	10.36	6/19/2022 8:42	0.84	6/19/2022 10:24	28.61
6/20/2022 10:08	83.93	6/19/2022 9:25	1.11	6/19/2022 9:55	10.35	6/19/2022 8:43	0.76	6/19/2022 10:25	28.60
6/20/2022 10:09	83.93	6/19/2022 9:26	1.00	6/19/2022 9:56	10.35	6/19/2022 8:44	0.69	6/19/2022 10:26	28.60
6/20/2022 10:10	83.96	6/19/2022 9:27	0.78	6/19/2022 9:57	10.38	6/19/2022 8:45	0.71	6/19/2022 10:27	28.60
6/20/2022 10:11	83.95	6/19/2022 9:28	0.66	6/19/2022 9:58	10.36	6/19/2022 8:46	0.71	6/19/2022 10:28	28.60
6/20/2022 10:12	83.93	6/19/2022 9:29	0.51	6/19/2022 9:59	10.37	6/19/2022 8:47	0.72	6/19/2022 10:29	28.58
6/20/2022 10:13	83.96	6/19/2022 9:30	0.38	6/19/2022 10:00	10.35	6/19/2022 8:48	0.70	6/19/2022 10:30	28.60
6/20/2022 10:14	83.96	6/19/2022 9:31	0.28	6/19/2022 10:01	10.36	6/19/2022 8:49	0.72	6/19/2022 10:31	28.62
6/20/2022 10:15	83.91	6/19/2022 9:32	0.16	6/19/2022 10:02	10.34	6/19/2022 8:50	0.74	6/19/2022 10:32	28.58
6/20/2022 10:16	83.89	6/19/2022 9:33	0.09	6/19/2022 10:03	10.34	6/19/2022 8:51	0.76	6/19/2022 10:33	28.60
6/20/2022 10:17	83.91	6/19/2022 9:34	0.06	6/19/2022 10:04	10.35	6/19/2022 8:52	0.76	6/19/2022 10:34	28.63
6/20/2022 10:18	83.88	6/19/2022 9:35	0.06	6/19/2022 10:05	10.34	6/19/2022 8:53	0.74	6/19/2022 10:35	28.61
6/20/2022 10:19	83.93	6/19/2022 9:36	0.12	6/19/2022 10:06	10.33	6/19/2022 8:54	0.79	6/19/2022 10:36	30.43
6/20/2022 10:20	83.92	6/19/2022 9:37	0.13	6/19/2022 10:07	10.32	6/19/2022 8:55	0.79	6/19/2022 10:37	30.32
6/20/2022 10:21	83.89	6/19/2022 9:38	0.10	6/19/2022 10:08	10.31	6/19/2022 8:56	0.78	6/19/2022 10:38	30.45

6/20/2022 10:22	83.91	6/19/2022 9:39	0.03	6/19/2022 10:09	10.32	6/19/2022 8:57	0.77	6/19/2022 10:39	29.42
6/20/2022 10:23	86.30	6/19/2022 9:40	-0.02	6/19/2022 10:10	10.29	6/19/2022 8:58	0.82	6/19/2022 10:40	28.93
6/20/2022 10:24	89.80	6/19/2022 9:41	-0.05	6/19/2022 10:11	10.30	6/19/2022 8:59	0.83	6/19/2022 10:41	28.78
6/20/2022 10:25	91.84	6/19/2022 9:42	-0.09	6/19/2022 10:12	10.28	6/19/2022 9:00	0.79	6/19/2022 10:42	28.72
6/20/2022 10:26	90.82	6/19/2022 9:43	-0.07	6/19/2022 10:13	10.27	6/19/2022 9:01	0.73	6/19/2022 10:43	28.65
6/20/2022 10:27	88.60	6/19/2022 9:44	-0.07	6/19/2022 10:14	10.27	6/19/2022 9:02	0.79	6/19/2022 10:44	28.69
6/20/2022 10:28	87.18	6/19/2022 9:45	-0.05	6/19/2022 10:15	10.25	6/19/2022 9:03	0.78	6/19/2022 10:45	28.66
6/20/2022 10:29	86.34	6/19/2022 9:46	-0.06	6/19/2022 10:16	10.29	6/19/2022 9:04	0.73	6/19/2022 10:46	28.63
6/20/2022 10:30	85.76	6/19/2022 9:47	-0.04	6/19/2022 10:17	10.27	6/19/2022 9:05	0.80	6/19/2022 10:47	28.66
6/20/2022 10:31	85.42	6/19/2022 9:48	-0.04	6/19/2022 10:18	10.26	6/19/2022 9:06	0.75	6/19/2022 10:48	28.62
6/20/2022 10:32	85.19	6/19/2022 9:49	-0.03	6/19/2022 10:19	10.23	6/19/2022 9:07	0.75	6/19/2022 10:49	28.66
6/20/2022 10:33	85.00	6/19/2022 9:50	4.89	6/19/2022 10:20	10.29	6/19/2022 9:08	0.77	6/19/2022 10:50	28.60
6/20/2022 10:34	84.93	6/19/2022 9:51	6.79	6/19/2022 10:21	10.27	6/19/2022 9:09	0.74	6/19/2022 10:51	28.64
6/20/2022 10:35	84.80	6/19/2022 9:52	5.64	6/19/2022 10:22	10.31	6/19/2022 9:10	0.74	6/19/2022 10:52	28.65
6/20/2022 10:36	84.73	6/19/2022 9:53	4.65	6/19/2022 10:23	10.32	6/19/2022 9:11	0.81	6/19/2022 10:53	28.67
6/20/2022 10:37	84.67	6/19/2022 9:54	3.96	6/19/2022 10:24	10.30	6/19/2022 9:12	0.78	6/19/2022 10:54	28.65
6/20/2022 10:38	84.60	6/19/2022 9:55	3.25	6/19/2022 10:25	10.32	6/19/2022 9:13	0.79	6/19/2022 10:55	28.62
6/20/2022 10:39	84.53	6/19/2022 9:56	4.26	6/19/2022 10:26	10.31	6/19/2022 9:14	0.79	6/19/2022 10:56	28.61
6/20/2022 10:40	84.51	6/19/2022 9:57	9.51	6/19/2022 10:27	10.35	6/19/2022 9:15	0.79	6/19/2022 10:57	28.60
6/20/2022 10:41	84.52	6/19/2022 9:58	8.99	6/19/2022 10:28	10.30	6/19/2022 9:16	0.72	6/19/2022 10:58	28.63
6/20/2022 10:42	84.44	6/19/2022 9:59	7.49	6/19/2022 10:29	10.33	6/19/2022 9:17	0.72	6/19/2022 10:59	28.63
6/20/2022 10:43	84.42	6/19/2022 10:00	6.27	6/19/2022 10:30	10.34	6/19/2022 9:18	0.72	6/19/2022 11:00	28.63
6/20/2022 10:44	84.41	6/19/2022 10:01	5.23	6/19/2022 10:31	10.31	6/19/2022 9:19	0.75	6/19/2022 11:01	28.61
6/20/2022 10:45	84.37	6/19/2022 10:02	4.43	6/19/2022 10:32	13.34	6/19/2022 9:20	0.78	6/19/2022 11:02	28.63
6/20/2022 10:46	84.37	6/19/2022 10:03	3.72	6/19/2022 10:33	14.08	6/19/2022 9:21	0.80	6/19/2022 11:03	28.63
6/20/2022 10:47	84.35	6/19/2022 10:04	3.11	6/19/2022 10:34	13.60	6/19/2022 9:22	0.83	6/19/2022 11:04	28.61
6/20/2022 10:48	84.34	6/19/2022 10:05	2.64	6/19/2022 10:35	13.19	6/19/2022 9:23	5.63	6/19/2022 11:05	28.60
6/20/2022 10:49	84.36	6/19/2022 10:06	2.21	6/19/2022 10:36	12.88	6/19/2022 9:24	7.73	6/19/2022 11:06	28.65
6/20/2022 10:50	84.33	6/19/2022 10:07	1.90	6/19/2022 10:37	12.61	6/19/2022 9:25	4.66	6/19/2022 11:07	28.63
6/20/2022 10:51	84.29	6/19/2022 10:08	1.58	6/19/2022 10:38	12.39	6/19/2022 9:26	2.33	6/19/2022 11:08	28.59
6/20/2022 10:52	84.28	6/19/2022 10:09	1.31	6/19/2022 10:39	12.15	6/19/2022 9:27	0.81	6/19/2022 11:09	28.60
6/20/2022 10:53	84.26	6/19/2022 10:10	1.10	6/19/2022 10:40	11.99	6/19/2022 9:28	0.80	6/19/2022 11:10	28.61
6/20/2022 10:54	84.29	6/19/2022 10:11	0.93	6/19/2022 10:41	11.84	6/19/2022 9:29	0.68	6/19/2022 11:11	28.63
6/20/2022 10:55	84.28	6/19/2022 10:12	0.71	6/19/2022 10:42	11.71	6/19/2022 9:30	0.73	6/19/2022 11:12	28.60
6/20/2022 10:56	84.24	6/19/2022 10:13	0.57	6/19/2022 10:43	11.55	6/19/2022 9:31	0.70	6/19/2022 11:13	28.59
6/20/2022 10:57	84.26	6/19/2022 10:14	0.45	6/19/2022 10:44	11.42	6/19/2022 9:32	0.71	6/19/2022 11:14	28.61
6/20/2022 10:58	84.25	6/19/2022 10:15	0.33	6/19/2022 10:45	11.34	6/19/2022 9:33	0.68	6/19/2022 11:15	28.61
6/20/2022 10:59	84.23	6/19/2022 10:16	0.26	6/19/2022 10:46	11.24	6/19/2022 9:34	2.90	6/19/2022 11:16	28.61
6/20/2022 11:00	84.25	6/19/2022 10:17	0.18	6/19/2022 10:47	11.15	6/19/2022 9:35	9.25	6/19/2022 11:17	28.61
6/20/2022 11:01	84.17	6/19/2022 10:18	0.11	6/19/2022 10:48	11.09	6/19/2022 9:36	5.78	6/19/2022 11:18	28.61
6/20/2022 11:02	84.22	6/19/2022 10:19	0.07	6/19/2022 10:49	11.02	6/19/2022 9:37	3.14	6/19/2022 11:19	28.58
6/20/2022 11:03	84.22	6/19/2022 10:20	-0.06	6/19/2022 10:50	10.95	6/19/2022 9:38	1.33	6/19/2022 11:20	28.61
6/20/2022 11:04	84.20	6/19/2022 10:21	-0.09	6/19/2022 10:51	10.91	6/19/2022 9:39	0.78	6/19/2022 11:21	28.59
6/20/2022 11:05	84.21	6/19/2022 10:22	-0.08	6/19/2022 10:52	10.84	6/19/2022 9:40	0.81	6/19/2022 11:22	28.60
6/20/2022 11:06	84.17	6/19/2022 10:23	-0.03	6/19/2022 10:53	10.80	6/19/2022 9:41	0.84	6/19/2022 11:23	28.61
6/20/2022 11:07	84.22	6/19/2022 10:24	-0.06	6/19/2022 10:54	10.74	6/19/2022 9:42	0.82	6/19/2022 11:24	28.57
6/20/2022 11:08	84.19	6/19/2022 10:25	0.54	6/19/2022 10:55	10.70	6/19/2022 9:43	0.80	6/19/2022 11:25	28.61
6/20/2022 11:09	84.19	6/19/2022 10:26	6.01	6/19/2022 10:56	10.69	6/19/2022 9:44	0.81	6/19/2022 11:26	28.62
6/20/2022 11:10	84.14	6/19/2022 10:27	6.70	6/19/2022 10:57	10.65	6/19/2022 9:45	0.78	6/19/2022 11:27	28.60
6/20/2022 11:11	84.16	6/19/2022 10:28	5.58	6/19/2022 10:58	10.65	6/19/2022 9:46	0.78	6/19/2022 11:28	28.63
6/20/2022 11:12	84.16	6/19/2022 10:29	4.68	6/19/2022 10:59	10.58	6/19/2022 9:47	0.81	6/19/2022 11:29	28.58
6/20/2022 11:13	84.16	6/19/2022 10:30	3.91	6/19/2022 11:00	10.55	6/19/2022 9:48	0.82	6/19/2022 11:30	28.61
6/20/2022 11:14	84.16	6/19/2022 10:31	3.26	6/19/2022 11:01	10.57	6/19/2022 9:49	0.80	6/19/2022 11:31	30.92
6/20/2022 11:15	84.15	6/19/2022 10:32	2.73	6/19/2022 11:02	10.58	6/19/2022 9:50	0.80	6/19/2022 11:32	29.72
6/20/2022 11:16	84.16	6/19/2022 10:33	2.34	6/19/2022 11:03	10.56	6/19/2022 9:51	0.81	6/19/2022 11:33	29.01
6/20/2022 11:17	84.17	6/19/2022 10:34	1.94	6/19/2022 11:04	10.56	6/19/2022 9:52	0.75	6/19/2022 11:34	28.75
6/20/2022 11:18	84.10	6/19/2022 10:35	1.63	6/19/2022 11:05	10.56	6/19/2022 9:53	0.76	6/19/2022 11:35	28.70
6/20/2022 11:19	84.18	6/19/2022 10:36	1.36	6/19/2022 11:06	10.53	6/19/2022 9:54	0.85	6/19/2022 11:36	28.64
6/20/2022 11:20	84.17	6/19/2022 10:37	1.12	6/19/2022 11:07	10.51	6/19/2022 9:55	0.84	6/19/2022 11:37	28.67
6/20/2022 11:21	84.12	6/19/2022 10:38	0.91	6/19/2022 11:08	10.51	6/19/2022 9:56	0.79	6/19/2022 11:38	28.68
6/20/2022 11:22	84.10	6/19/2022 10:39	0.75	6/19/2022 11:09	10.51	6/19/2022 9:57	0.81	6/19/2022 11:39	28.72
6/20/2022 11:23	84.09	6/19/2022 10:40	0.64	6/19/2022 11:10	10.49	6/19/2022 9:58	0.71	6/19/2022 11:40	28.77
6/20/2022 11:24	84.12	6/19/2022 10:41	0.61	6/19/2022 11:11	10.50	6/19/2022 9:59	0.77	6/19/2022 11:41	28.78
6/20/2022 11:25	84.13	6/19/2022 10:42	0.62	6/19/2022 11:12	10.47	6/19/2022 10:00	0.82	6/19/2022 11:42	28.82
6/20/2022 11:26	84.12	6/19/2022 10:43	0.55	6/19/2022 11:13	10.43	6/19/2022 10:01	0.88	6/19/2022 11:43	28.87
6/20/2022 11:27	84.15	6/19/2022 10:44	0.44	6/19/2022 11:14	10.43	6/19/2022 10:02	0.71	6/19/2022 11:44	28.92
6/20/2022 11:28	84.12	6/19/2022 10:45	0.35	6/19/2022 11:15	10.42	6/19/2022 10:03	0.71	6/19/2022 11:45	28.92
6/20/2022 11:29	84.08	6/19/2022 10:46	0.25	6/19/2022 11:16	10.43	6/19/2022 10:04	0.73	6/19/2022 11:46	28.94
6/20/2022 11:30	84.08	6/19/2022 10:47	0.22	6/19/2022 11:17	10.44	6/19/2022 10:05	0.79	6/19/2022 11:47	28.96
6/20/2022 11:31	84.11	6/19/2022 10:48	0.10	6/19/2022 11:18	10.40	6/19/2022 10:06	0.85	6/19/2022 11:48	28.98
6/20/2022 11:32	84.12	6/19/2022 10:49	0.04	6/19/2022 11:19	10.40	6/19/2022 10:07	0.81	6/19/2022 11:49	28.93
6/20/2022 11:33	84.13	6/19/2022 10:50	-0.01	6/19/2022 11:20	10.37	6/19/2022 10:08	0.76	6/19/2022 11:50	29.01
6/20/2022 11:34	84.09	6/19/2022 10:51	-0.08	6/19/2022 11:21	10.38	6/19/2022 10:09	0.77	6/19/2022 11:51	29.04
6/20/2022 11:35	84.12	6/19/2022 10:52	-0.03	6/19/2022 11:22	10.35	6/19/2022 10:10	0.77	6/19/2022 11:52	29.01
6/20/2022 11:36	84.13	6/19/2022 10:53	5.49	6/19/2022 11:23	10.33	6/19/2022 10:11	0.76	6/19/2022 11:53	28.96
6/20/2022 11:37	84.12	6/19/2022 10:54	8.85	6/19/2022 11:24	10.34	6/19/2022 10:12	0.69	6/19/2022 11:54	28.92
6/20/2022 11:38	84.10	6/19/2022 10:55	7.39	6/19/2022 11:25	10.33	6/19/2022 10:13	0.74	6/19/2022 11:55	28.95
6/20/2022 11:39	84.07	6/19/2022 10:56	6.20	6/19/2022 11:26	10.34	6/19/2022 10:14	0.77	6/19/2022 11:56	28.93
6/20/2022 11:40	84.07	6/19/2022 10:57	5.18	6/19/2022 11:27	10.32	6/19/2022 10:15	0.75	6/19/2022 11:57	28.89
6/20/2022 11:41	84.08	6/19/2022 10:58	4.37	6/19/2022 11:28	10.29	6/19/2022 10:16	0.71	6/19/2022 11:58	28.88
6/20/2022 11:42	84.07	6/19/2022 10:59	9.84	6/19/2022 11:29	10.30	6/19/2022 10:17	0.75	6/19/2022 11:59	28.88
6/20/2022 11:43	84.04	6/19/2022 11:00	10.49	6/19/2022 11:30	10.29	6/19/2022 10:18	0.77	6/19/2022 12:00	28.88
6/20/2022 11:44	88.50	6/19/2022 11:01	8.78	6/19/2022 11:31	10.30	6/19/2022 10:19	0.73	6/19/2022 12:01	28.87
6/20/2022 11:45	91.16	6/19/2022 11:02	7.36	6/19/2022 11:32	10.31	6/19/2022 10:20	0.72	6/19/2022 12:02	28.86
6/20/2022 11:46	92.79	6/19/2022 11:03	6.20	6/19/2022 11:33	10.38	6/19/2022 10:21	0.76	6/19/2022 12:03	28.91
6/20/2022 11:47	91.85	6/19/2022 11:04	5.22	6/19/2022 11:34	10.27	6/19/2022 10:22	0.72	6/19/2022 12:04	28.90
6/20/2022 11:48	89.42	6/19/2022 11:05	4.45	6/19/2022 11:35	10.37	6/19/2022 10:23	0.74	6/19/2022 12:05	28.90
6/20/2022 11:49	87.81	6/19/2022 11:06	3.74	6/19/2022 11:36	10.36	6/19/2022 10:24	0.75	6/19/2022 12:06	28.87

6/20/2022 11:50	86.86	6/19/2022 11:07	3.13	6/19/2022 11:37	10.36	6/19/2022 10:25	0.68	6/19/2022 12:07	28.86
6/20/2022 11:51	86.23	6/19/2022 11:08	2.63	6/19/2022 11:38	10.37	6/19/2022 10:26	0.71	6/19/2022 12:08	28.86
6/20/2022 11:52	85.83	6/19/2022 11:09	2.29	6/19/2022 11:39	10.35	6/19/2022 10:27	0.74	6/19/2022 12:09	28.83
6/20/2022 11:53	85.56	6/19/2022 11:10	2.07	6/19/2022 11:40	10.36	6/19/2022 10:28	0.75	6/19/2022 12:10	28.86
6/20/2022 11:54	85.37	6/19/2022 11:11	1.79	6/19/2022 11:41	10.36	6/19/2022 10:29	0.86	6/19/2022 12:11	28.84
6/20/2022 11:55	85.19	6/19/2022 11:12	1.53	6/19/2022 11:42	10.37	6/19/2022 10:30	0.72	6/19/2022 12:12	28.81
6/20/2022 11:56	85.07	6/19/2022 11:13	1.25	6/19/2022 11:43	10.36	6/19/2022 10:31	0.73	6/19/2022 12:13	28.80
6/20/2022 11:57	85.02	6/19/2022 11:14	1.09	6/19/2022 11:44	10.34	6/19/2022 10:32	0.72	6/19/2022 12:14	28.78
6/20/2022 11:58	84.97	6/19/2022 11:15	0.92	6/19/2022 11:45	10.32	6/19/2022 10:33	0.74	6/19/2022 12:15	28.79
6/20/2022 11:59	84.91	6/19/2022 11:16	0.75	6/19/2022 11:46	10.34	6/19/2022 10:34	0.78	6/19/2022 12:16	28.79
6/20/2022 12:00	84.87	6/19/2022 11:17	0.62	6/19/2022 11:47	10.32	6/19/2022 10:35	0.81	6/19/2022 12:17	28.82
6/20/2022 12:01	84.77	6/19/2022 11:18	0.50	6/19/2022 11:48	10.31	6/19/2022 10:36	0.78	6/19/2022 12:18	28.81
6/20/2022 12:02	84.73	6/19/2022 11:19	0.37	6/19/2022 11:49	10.33	6/19/2022 10:37	0.78	6/19/2022 12:19	28.79
6/20/2022 12:03	84.72	6/19/2022 11:20	0.26	6/19/2022 11:50	10.37	6/19/2022 10:38	0.80	6/19/2022 12:20	28.80
6/20/2022 12:04	84.70	6/19/2022 11:21	0.21	6/19/2022 11:51	10.38	6/19/2022 10:39	0.79	6/19/2022 12:21	28.79
6/20/2022 12:05	84.72	6/19/2022 11:22	0.14	6/19/2022 11:52	10.36	6/19/2022 10:40	5.58	6/19/2022 12:22	28.76
6/20/2022 12:06	84.65	6/19/2022 11:23	0.05	6/19/2022 11:53	10.37	6/19/2022 10:41	9.99	6/19/2022 12:23	28.76
6/20/2022 12:07	84.62	6/19/2022 11:24	0.01	6/19/2022 11:54	10.39	6/19/2022 10:42	6.38	6/19/2022 12:24	28.75
6/20/2022 12:08	84.60	6/19/2022 11:25	-0.03	6/19/2022 11:55	10.38	6/19/2022 10:43	3.72	6/19/2022 12:25	28.74
6/20/2022 12:09	84.59	6/19/2022 11:26	-0.06	6/19/2022 11:56	10.41	6/19/2022 10:44	1.71	6/19/2022 12:26	28.76
6/20/2022 12:10	84.59	6/19/2022 11:27	-0.03	6/19/2022 11:57	10.37	6/19/2022 10:45	0.81	6/19/2022 12:27	28.73
6/20/2022 12:11	84.52	6/19/2022 11:28	-0.03	6/19/2022 11:58	10.37	6/19/2022 10:46	0.84	6/19/2022 12:28	28.77
6/20/2022 12:12	84.55	6/19/2022 11:29	-0.06	6/19/2022 11:59	10.36	6/19/2022 10:47	0.77	6/19/2022 12:29	28.76
6/20/2022 12:13	84.57	6/19/2022 11:30	-0.03	6/19/2022 12:00	10.38	6/19/2022 10:48	0.75	6/19/2022 12:30	28.75
6/20/2022 12:14	84.47	6/19/2022 11:31	-0.07	6/19/2022 12:01	10.37	6/19/2022 10:49	0.74	6/19/2022 12:31	28.76
6/20/2022 12:15	84.51	6/19/2022 11:32	-0.05	6/19/2022 12:02	10.34	6/19/2022 10:50	0.75	6/19/2022 12:32	28.74
6/20/2022 12:16	84.51	6/19/2022 11:33	-0.08	6/19/2022 12:03	10.37	6/19/2022 10:51	0.77	6/19/2022 12:33	28.74
6/20/2022 12:17	84.50	6/19/2022 11:34	-0.05	6/19/2022 12:04	10.35	6/19/2022 10:52	0.73	6/19/2022 12:34	28.72
6/20/2022 12:18	84.48	6/19/2022 11:35	-0.05	6/19/2022 12:05	10.32	6/19/2022 10:53	0.76	6/19/2022 12:35	28.75
6/20/2022 12:19	84.47	6/19/2022 11:36	-0.10	6/19/2022 12:06	10.37	6/19/2022 10:54	0.75	6/19/2022 12:36	28.72
6/20/2022 12:20	84.47	6/19/2022 11:37	-0.09	6/19/2022 12:07	10.41	6/19/2022 10:55	0.73	6/19/2022 12:37	28.70
6/20/2022 12:21	84.44	6/19/2022 11:38	-0.03	6/19/2022 12:08	10.37	6/19/2022 10:56	0.79	6/19/2022 12:38	28.75
6/20/2022 12:22	84.43	6/19/2022 11:39	-0.05	6/19/2022 12:09	10.38	6/19/2022 10:57	0.80	6/19/2022 12:39	28.71
6/20/2022 12:23	88.56	6/19/2022 11:40	-0.08	6/19/2022 12:10	10.39	6/19/2022 10:58	0.74	6/19/2022 12:40	28.72
6/20/2022 12:24	91.27	6/19/2022 11:41	-0.05	6/19/2022 12:11	10.35	6/19/2022 10:59	0.70	6/19/2022 12:41	28.74
6/20/2022 12:25	92.80	6/19/2022 11:42	-0.06	6/19/2022 12:12	10.41	6/19/2022 11:00	0.75	6/19/2022 12:42	28.72
6/20/2022 12:26	90.13	6/19/2022 11:43	-0.05	6/19/2022 12:13	10.44	6/19/2022 11:01	0.80	6/19/2022 12:43	28.71
6/20/2022 12:27	88.34	6/19/2022 11:44	-0.06	6/19/2022 12:14	10.44	6/19/2022 11:02	0.77	6/19/2022 12:44	28.70
6/20/2022 12:28	87.22	6/19/2022 11:45	-0.08	6/19/2022 12:15	10.45	6/19/2022 11:03	0.74	6/19/2022 12:45	28.70
6/20/2022 12:29	86.49	6/19/2022 11:46	4.00	6/19/2022 12:16	10.45	6/19/2022 11:04	0.82	6/19/2022 12:46	28.73
6/20/2022 12:30	86.01	6/19/2022 11:47	7.06	6/19/2022 12:17	10.50	6/19/2022 11:05	0.81	6/19/2022 12:47	28.73
6/20/2022 12:31	85.74	6/19/2022 11:48	5.86	6/19/2022 12:18	10.44	6/19/2022 11:06	0.76	6/19/2022 12:48	28.69
6/20/2022 12:32	85.50	6/19/2022 11:49	4.95	6/19/2022 12:19	10.53	6/19/2022 11:07	0.74	6/19/2022 12:49	28.71
6/20/2022 12:33	85.34	6/19/2022 11:50	4.15	6/19/2022 12:20	10.48	6/19/2022 11:08	3.65	6/19/2022 12:50	28.72
6/20/2022 12:34	85.26	6/19/2022 11:51	3.51	6/19/2022 12:21	10.50	6/19/2022 11:09	7.32	6/19/2022 12:51	28.70
6/20/2022 12:35	85.16	6/19/2022 11:52	2.89	6/19/2022 12:22	10.48	6/19/2022 11:10	4.37	6/19/2022 12:52	28.71
6/20/2022 12:36	85.11	6/19/2022 11:53	2.49	6/19/2022 12:23	10.49	6/19/2022 11:11	2.15	6/19/2022 12:53	28.68
6/20/2022 12:37	85.10	6/19/2022 11:54	2.08	6/19/2022 12:24	10.50	6/19/2022 11:12	0.75	6/19/2022 12:54	28.71
6/20/2022 12:38	85.01	6/19/2022 11:55	1.81	6/19/2022 12:25	10.55	6/19/2022 11:13	0.85	6/19/2022 12:55	28.72
6/20/2022 12:39	84.96	6/19/2022 11:56	1.52	6/19/2022 12:26	10.52	6/19/2022 11:14	0.74	6/19/2022 12:56	28.68
6/20/2022 12:40	84.96	6/19/2022 11:57	1.28	6/19/2022 12:27	10.56	6/19/2022 11:15	0.69	6/19/2022 12:57	28.70
6/20/2022 12:41	84.96	6/19/2022 11:58	1.03	6/19/2022 12:28	10.54	6/19/2022 11:16	0.76	6/19/2022 12:58	28.68
6/20/2022 12:42	84.86	6/19/2022 11:59	0.89	6/19/2022 12:29	10.53	6/19/2022 11:17	0.79	6/19/2022 12:59	28.70
6/20/2022 12:43	84.85	6/19/2022 12:00	0.74	6/19/2022 12:30	10.52	6/19/2022 11:18	0.81	6/19/2022 13:00	28.72
6/20/2022 12:44	84.84	6/19/2022 12:01	0.63	6/19/2022 12:31	10.53	6/19/2022 11:19	0.81	6/19/2022 13:01	28.70
6/20/2022 12:45	84.82	6/19/2022 12:02	0.53	6/19/2022 12:32	10.54	6/19/2022 11:20	0.80	6/19/2022 13:02	28.70
6/20/2022 12:46	84.77	6/19/2022 12:03	0.41	6/19/2022 12:33	10.53	6/19/2022 11:21	0.82	6/19/2022 13:03	28.72
6/20/2022 12:47	84.76	6/19/2022 12:04	0.32	6/19/2022 12:34	10.49	6/19/2022 11:22	0.84	6/19/2022 13:04	28.69
6/20/2022 12:48	84.75	6/19/2022 12:05	0.25	6/19/2022 12:35	10.50	6/19/2022 11:23	0.86	6/19/2022 13:05	28.70
6/20/2022 12:49	84.77	6/19/2022 12:06	0.21	6/19/2022 12:36	10.50	6/19/2022 11:24	0.85	6/19/2022 13:06	28.71
6/20/2022 12:50	84.71	6/19/2022 12:07	0.16	6/19/2022 12:37	10.46	6/19/2022 11:25	0.85	6/19/2022 13:07	28.68
6/20/2022 12:51	84.74	6/19/2022 12:08	0.06	6/19/2022 12:38	10.45	6/19/2022 11:26	0.82	6/19/2022 13:08	28.68
6/20/2022 12:52	84.69	6/19/2022 12:09	-0.02	6/19/2022 12:39	10.47	6/19/2022 11:27	0.89	6/19/2022 13:09	28.63
6/20/2022 12:53	84.69	6/19/2022 12:10	-0.03	6/19/2022 12:40	10.48	6/19/2022 11:28	0.84	6/19/2022 13:10	28.65
6/20/2022 12:54	84.68	6/19/2022 12:11	-0.09	6/19/2022 12:41	10.46	6/19/2022 11:29	0.87	6/19/2022 13:11	28.69
6/20/2022 12:55	84.62	6/19/2022 12:12	-0.08	6/19/2022 12:42	10.51	6/19/2022 11:30	0.86	6/19/2022 13:12	28.67
6/20/2022 12:56	84.67	6/19/2022 12:13	-0.03	6/19/2022 12:43	10.44	6/19/2022 11:31	0.86	6/19/2022 13:13	28.68
6/20/2022 12:57	84.62	6/19/2022 12:14	-0.04	6/19/2022 12:44	10.47	6/19/2022 11:32	0.87	6/19/2022 13:14	28.67
6/20/2022 12:58	84.66	6/19/2022 12:15	-0.05	6/19/2022 12:45	10.46	6/19/2022 11:33	0.86	6/19/2022 13:15	28.72
6/20/2022 12:59	84.62	6/19/2022 12:16	-0.04	6/19/2022 12:46	10.51	6/19/2022 11:34	0.86	6/19/2022 13:16	28.68
6/20/2022 13:00	84.61	6/19/2022 12:17	-0.08	6/19/2022 12:47	10.50	6/19/2022 11:35	0.83	6/19/2022 13:17	28.66
6/20/2022 13:01	84.60	6/19/2022 12:18	-0.04	6/19/2022 12:48	10.46	6/19/2022 11:36	0.87	6/19/2022 13:18	28.66
6/20/2022 13:02	84.59	6/19/2022 12:19	-0.06	6/19/2022 12:49	10.45	6/19/2022 11:37	0.85	6/19/2022 13:19	28.68
6/20/2022 13:03	84.60	6/19/2022 12:20	-0.03	6/19/2022 12:50	10.47	6/19/2022 11:38	0.80	6/19/2022 13:20	28.68
6/20/2022 13:04	84.60	6/19/2022 12:21	-0.04	6/19/2022 12:51	10.45	6/19/2022 11:39	0.83	6/19/2022 13:21	28.67
6/20/2022 13:05	84.55	6/19/2022 12:22	-0.06	6/19/2022 12:52	10.40	6/19/2022 11:40	0.81	6/19/2022 13:22	28.68
6/20/2022 13:06	84.57	6/19/2022 12:23	-0.05	6/19/2022 12:53	10.42	6/19/2022 11:41	0.79	6/19/2022 13:23	28.69
6/20/2022 13:07	84.55	6/19/2022 12:24	-0.06	6/19/2022 12:54	14.40	6/19/2022 11:42	0.76	6/19/2022 13:24	28.66
6/20/2022 13:08	84.58	6/19/2022 12:25	-0.07	6/19/2022 12:55	15.72	6/19/2022 11:43	0.78	6/19/2022 13:25	28.70
6/20/2022 13:09	84.55	6/19/2022 12:26	-0.01	6/19/2022 12:56	15.08	6/19/2022 11:44	0.76	6/19/2022 13:26	28.68
6/20/2022 13:10	84.55	6/19/2022 12:27	-0.06	6/19/2022 12:57	14.50	6/19/2022 11:45	0.76	6/19/2022 13:27	28.66
6/20/2022 13:11	84.55	6/19/2022 12:28	-0.06	6/19/2022 12:58	14.04	6/19/2022 11:46	0.72	6/19/2022 13:28	28.68
6/20/2022 13:12	84.51	6/19/2022 12:29	-0.04	6/19/2022 12:59	13.60	6/19/2022 11:47	0.79	6/19/2022 13:29	28.66
6/20/2022 13:13	84.54	6/19/2022 12:30	-0.08	6/19/2022 13:00	13.23	6/19/2022 11:48	0.81	6/19/2022 13:30	28.65
6/20/2022 13:14	84.51	6/19/2022 12:31	-0.08	6/19/2022 13:01	12.95	6/19/2022 11:49	0.87	6/19/2022 13:31	28.66
6/20/2022 13:15	84.46	6/19/2022 12:32	-0.05	6/19/2022 13:02	15.39	6/19/2022 11:50	0.77	6/19/2022 13:32	28.69
6/20/2022 13:16	84.52	6/19/2022 12:33	-0.01	6/19/2022 13:03	19.32	6/19/2022 11:51	0.77	6/19/2022 13:33	28.70
6/20/2022 13:17	84.52	6/19/2022 12:34	-0.07	6/19/2022 13:04	18.30	6/19/2022 11:52	0.86	6/19/2022 13:34	28.70

6/20/2022 13:18	84.51	6/19/2022 12:35	-0.05	6/19/2022 13:05	17.67	6/19/2022 11:53	0.84	6/19/2022 13:35	28.74
6/20/2022 13:19	84.46	6/19/2022 12:36	-0.10	6/19/2022 13:06	21.33	6/19/2022 11:54	0.78	6/19/2022 13:36	28.74
6/20/2022 13:20	84.47	6/19/2022 12:37	-0.08	6/19/2022 13:07	22.66	6/19/2022 11:55	0.75	6/19/2022 13:37	28.72
6/20/2022 13:21	84.51	6/19/2022 12:38	-0.06	6/19/2022 13:08	21.39	6/19/2022 11:56	0.81	6/19/2022 13:38	28.72
6/20/2022 13:22	84.49	6/19/2022 12:39	-0.07	6/19/2022 13:09	22.20	6/19/2022 11:57	0.86	6/19/2022 13:39	28.67
6/20/2022 13:23	84.49	6/19/2022 12:40	-0.09	6/19/2022 13:10	25.61	6/19/2022 11:58	0.83	6/19/2022 13:40	28.70
6/20/2022 13:24	84.48	6/19/2022 12:41	-0.04	6/19/2022 13:11	24.70	6/19/2022 11:59	0.77	6/19/2022 13:41	28.67
6/20/2022 13:25	84.46	6/19/2022 12:42	-0.07	6/19/2022 13:12	23.29	6/19/2022 12:00	0.74	6/19/2022 13:42	28.70
6/20/2022 13:26	84.43	6/19/2022 12:43	-0.05	6/19/2022 13:13	22.09	6/19/2022 12:01	0.78	6/19/2022 13:43	28.69
6/20/2022 13:27	84.43	6/19/2022 12:44	-0.03	6/19/2022 13:14	20.99	6/19/2022 12:02	0.75	6/19/2022 13:44	28.74
6/20/2022 13:28	84.45	6/19/2022 12:45	-0.05	6/19/2022 13:15	20.04	6/19/2022 12:03	0.79	6/19/2022 13:45	28.74
6/20/2022 13:29	84.47	6/19/2022 12:46	-0.07	6/19/2022 13:16	19.17	6/19/2022 12:04	0.83	6/19/2022 13:46	28.79
6/20/2022 13:30	84.46	6/19/2022 12:47	-0.05	6/19/2022 13:17	18.37	6/19/2022 12:05	0.85	6/19/2022 13:47	28.76
6/20/2022 13:31	84.43	6/19/2022 12:48	-0.09	6/19/2022 13:18	17.66	6/19/2022 12:06	0.86	6/19/2022 13:48	28.78
6/20/2022 13:32	84.44	6/19/2022 12:49	-0.03	6/19/2022 13:19	17.04	6/19/2022 12:07	0.80	6/19/2022 13:49	28.73
6/20/2022 13:33	84.41	6/19/2022 12:50	-0.06	6/19/2022 13:20	16.46	6/19/2022 12:08	0.78	6/19/2022 13:50	28.72
6/20/2022 13:34	84.43	6/19/2022 12:51	-0.05	6/19/2022 13:21	15.93	6/19/2022 12:09	0.80	6/19/2022 13:51	28.72
6/20/2022 13:35	84.39	6/19/2022 12:52	1.92	6/19/2022 13:22	15.45	6/19/2022 12:10	0.77	6/19/2022 13:52	28.71
6/20/2022 13:36	84.43	6/19/2022 12:53	7.46	6/19/2022 13:23	15.05	6/19/2022 12:11	0.73	6/19/2022 13:53	28.74
6/20/2022 13:37	84.41	6/19/2022 12:54	7.37	6/19/2022 13:24	14.67	6/19/2022 12:12	0.76	6/19/2022 13:54	28.70
6/20/2022 13:38	84.43	6/19/2022 12:55	6.14	6/19/2022 13:25	14.28	6/19/2022 12:13	0.76	6/19/2022 13:55	28.72
6/20/2022 13:39	84.40	6/19/2022 12:56	5.13	6/19/2022 13:26	13.95	6/19/2022 12:14	0.81	6/19/2022 13:56	28.73
6/20/2022 13:40	84.40	6/19/2022 12:57	4.33	6/19/2022 13:27	13.67	6/19/2022 12:15	0.75	6/19/2022 13:57	28.69
6/20/2022 13:41	84.42	6/19/2022 12:58	3.60	6/19/2022 13:28	13.46	6/19/2022 12:16	0.73	6/19/2022 13:58	28.68
6/20/2022 13:42	84.38	6/19/2022 12:59	2.99	6/19/2022 13:29	13.20	6/19/2022 12:17	0.80	6/19/2022 13:59	28.68
6/20/2022 13:43	84.41	6/19/2022 13:00	2.50	6/19/2022 13:30	13.01	6/19/2022 12:18	0.82	6/19/2022 14:00	28.72
6/20/2022 13:44	84.35	6/19/2022 13:01	2.15	6/19/2022 13:31	12.79	6/19/2022 12:19	0.81	6/19/2022 14:01	28.68
6/20/2022 13:45	84.39	6/19/2022 13:02	1.76	6/19/2022 13:32	12.59	6/19/2022 12:20	0.79	6/19/2022 14:02	28.70
6/20/2022 13:46	84.37	6/19/2022 13:03	1.46	6/19/2022 13:33	12.46	6/19/2022 12:21	0.86	6/19/2022 14:03	28.71
6/20/2022 13:47	84.37	6/19/2022 13:04	1.23	6/19/2022 13:34	12.28	6/19/2022 12:22	0.80	6/19/2022 14:04	28.69
6/20/2022 13:48	84.39	6/19/2022 13:05	1.06	6/19/2022 13:35	12.12	6/19/2022 12:23	0.83	6/19/2022 14:05	28.70
6/20/2022 13:49	84.39	6/19/2022 13:06	0.81	6/19/2022 13:36	12.02	6/19/2022 12:24	0.84	6/19/2022 14:06	28.66
6/20/2022 13:50	84.36	6/19/2022 13:07	0.66	6/19/2022 13:37	11.89	6/19/2022 12:25	0.81	6/19/2022 14:07	28.69
6/20/2022 13:51	84.38	6/19/2022 13:08	0.50	6/19/2022 13:38	11.79	6/19/2022 12:26	0.85	6/19/2022 14:08	28.68
6/20/2022 13:52	84.35	6/19/2022 13:09	0.42	6/19/2022 13:39	11.69	6/19/2022 12:27	0.83	6/19/2022 14:09	28.68
6/20/2022 13:53	84.38	6/19/2022 13:10	0.28	6/19/2022 13:40	11.63	6/19/2022 12:28	0.84	6/19/2022 14:10	28.71
6/20/2022 13:54	84.32	6/19/2022 13:11	0.17	6/19/2022 13:41	11.54	6/19/2022 12:29	0.82	6/19/2022 14:11	28.68
6/20/2022 13:55	84.38	6/19/2022 13:12	0.14	6/19/2022 13:42	11.47	6/19/2022 12:30	0.86	6/19/2022 14:12	28.68
6/20/2022 13:56	84.39	6/19/2022 13:13	0.08	6/19/2022 13:43	11.43	6/19/2022 12:31	0.85	6/19/2022 14:13	28.70
6/20/2022 13:57	84.35	6/19/2022 13:14	-0.01	6/19/2022 13:44	11.35	6/19/2022 12:32	0.87	6/19/2022 14:14	28.66
6/20/2022 13:58	84.36	6/19/2022 13:15	-0.05	6/19/2022 13:45	11.30	6/19/2022 12:33	0.83	6/19/2022 14:15	28.70
6/20/2022 13:59	84.38	6/19/2022 13:16	-0.06	6/19/2022 13:46	11.28	6/19/2022 12:34	0.86	6/19/2022 14:16	28.67
6/20/2022 14:00	84.34	6/19/2022 13:17	-0.03	6/19/2022 13:47	11.26	6/19/2022 12:35	0.81	6/19/2022 14:17	28.69
6/20/2022 14:01	84.36	6/19/2022 13:18	-0.07	6/19/2022 13:48	11.24	6/19/2022 12:36	0.80	6/19/2022 14:18	28.71
6/20/2022 14:02	84.36	6/19/2022 13:19	-0.05	6/19/2022 13:49	11.23	6/19/2022 12:37	0.80	6/19/2022 14:19	28.69
6/20/2022 14:03	84.36	6/19/2022 13:20	-0.03	6/19/2022 13:50	11.16	6/19/2022 12:38	0.80	6/19/2022 14:20	28.69
6/20/2022 14:04	84.36	6/19/2022 13:21	-0.07	6/19/2022 13:51	11.19	6/19/2022 12:39	0.82	6/19/2022 14:21	28.71
6/20/2022 14:05	84.32	6/19/2022 13:22	-0.09	6/19/2022 13:52	11.16	6/19/2022 12:40	0.76	6/19/2022 14:22	28.71
6/20/2022 14:06	84.38	6/19/2022 13:23	-0.04	6/19/2022 13:53	11.13	6/19/2022 12:41	0.76	6/19/2022 14:23	28.70
6/20/2022 14:07	84.34	6/19/2022 13:24	-0.06	6/19/2022 13:54	11.08	6/19/2022 12:42	0.75	6/19/2022 14:24	28.72
6/20/2022 14:08	84.34	6/19/2022 13:25	-0.02	6/19/2022 13:55	11.06	6/19/2022 12:43	0.78	6/19/2022 14:25	28.70
6/20/2022 14:09	84.32	6/19/2022 13:26	-0.02	6/19/2022 13:56	11.02	6/19/2022 12:44	0.72	6/19/2022 14:26	28.70
6/20/2022 14:10	84.35	6/19/2022 13:27	-0.05	6/19/2022 13:57	10.99	6/19/2022 12:45	0.77	6/19/2022 14:27	28.71
6/20/2022 14:11	84.32	6/19/2022 13:28	-0.04	6/19/2022 13:58	10.97	6/19/2022 12:46	0.74	6/19/2022 14:28	28.69
6/20/2022 14:12	84.34	6/19/2022 13:29	-0.09	6/19/2022 13:59	10.92	6/19/2022 12:47	0.77	6/19/2022 14:29	28.70
6/20/2022 14:13	84.32	6/19/2022 13:30	-0.03	6/19/2022 14:00	10.90	6/19/2022 12:48	0.71	6/19/2022 14:30	28.68
6/20/2022 14:14	84.28	6/19/2022 13:31	-0.06	6/19/2022 14:01	10.89	6/19/2022 12:49	0.78	6/19/2022 14:31	28.67
6/20/2022 14:15	84.32	6/19/2022 13:32	-0.08	6/19/2022 14:02	10.82	6/19/2022 12:50	0.75	6/19/2022 14:32	28.71
6/20/2022 14:16	84.30	6/19/2022 13:33	-0.08	6/19/2022 14:03	10.82	6/19/2022 12:51	0.78	6/19/2022 14:33	28.67
6/20/2022 14:17	84.29	6/19/2022 13:34	-0.09	6/19/2022 14:04	10.82	6/19/2022 12:52	0.76	6/19/2022 14:34	28.69
6/20/2022 14:18	84.28	6/19/2022 13:35	-0.01	6/19/2022 14:05	10.79	6/19/2022 12:53	0.77	6/19/2022 14:35	28.70
6/20/2022 14:19	84.30	6/19/2022 13:36	-0.06	6/19/2022 14:06	10.84	6/19/2022 12:54	0.78	6/19/2022 14:36	28.70
6/20/2022 14:20	84.32	6/19/2022 13:37	-0.05	6/19/2022 14:07	10.81	6/19/2022 12:55	0.86	6/19/2022 14:37	28.68
6/20/2022 14:21	84.29	6/19/2022 13:38	-0.07	6/19/2022 14:08	10.84	6/19/2022 12:56	0.84	6/19/2022 14:38	28.69
6/20/2022 14:22	84.29	6/19/2022 13:39	-0.04	6/19/2022 14:09	10.87	6/19/2022 12:57	0.83	6/19/2022 14:39	28.70
6/20/2022 14:23	84.30	6/19/2022 13:40	5.61	6/19/2022 14:10	10.86	6/19/2022 12:58	0.79	6/19/2022 14:40	28.68
6/20/2022 14:24	84.28	6/19/2022 13:41	6.61	6/19/2022 14:11	10.85	6/19/2022 12:59	0.77	6/19/2022 14:41	28.68
6/20/2022 14:25	84.28	6/19/2022 13:42	5.51	6/19/2022 14:12	10.81	6/19/2022 13:00	0.72	6/19/2022 14:42	28.68
6/20/2022 14:26	84.29	6/19/2022 13:43	4.59	6/19/2022 14:13	10.81	6/19/2022 13:01	0.76	6/19/2022 14:43	28.65
6/20/2022 14:27	84.28	6/19/2022 13:44	3.84	6/19/2022 14:14	10.82	6/19/2022 13:02	0.75	6/19/2022 14:44	28.68
6/20/2022 14:28	84.30	6/19/2022 13:45	3.23	6/19/2022 14:15	10.79	6/19/2022 13:03	0.74	6/19/2022 14:45	28.71
6/20/2022 14:29	84.26	6/19/2022 13:46	2.60	6/19/2022 14:16	10.76	6/19/2022 13:04	0.72	6/19/2022 14:46	28.70
6/20/2022 14:30	84.26	6/19/2022 13:47	2.24	6/19/2022 14:17	10.71	6/19/2022 13:05	0.73	6/19/2022 14:47	28.67
6/20/2022 14:31	84.26	6/19/2022 13:48	1.86	6/19/2022 14:18	10.72	6/19/2022 13:06	0.77	6/19/2022 14:48	28.67
6/20/2022 14:32	84.24	6/19/2022 13:49	1.62	6/19/2022 14:19	10.72	6/19/2022 13:07	0.72	6/19/2022 14:49	28.64
6/20/2022 14:33	84.25	6/19/2022 13:50	1.35	6/19/2022 14:20	10.68	6/19/2022 13:08	0.77	6/19/2022 14:50	28.67
6/20/2022 14:34	84.26	6/19/2022 13:51	1.14	6/19/2022 14:21	10.69	6/19/2022 13:09	0.77	6/19/2022 14:51	28.67
6/20/2022 14:35	84.29	6/19/2022 13:52	0.87	6/19/2022 14:22	10.67	6/19/2022 13:10	0.78	6/19/2022 14:52	28.70
6/20/2022 14:36	84.27	6/19/2022 13:53	0.75	6/19/2022 14:23	10.62	6/19/2022 13:11	0.75	6/19/2022 14:53	28.73
6/20/2022 14:37	84.28	6/19/2022 13:54	0.57	6/19/2022 14:24	10.61	6/19/2022 13:12	0.76	6/19/2022 14:54	28.73
6/20/2022 14:38	84.24	6/19/2022 13:55	0.43	6/19/2022 14:25	10.61	6/19/2022 13:13	0.75	6/19/2022 14:55	28.71
6/20/2022 14:39	84.24	6/19/2022 13:56	0.30	6/19/2022 14:26	10.62	6/19/2022 13:14	0.75	6/19/2022 14:56	28.68
6/20/2022 14:40	84.25	6/19/2022 13:57	0.20	6/19/2022 14:27	10.55	6/19/2022 13:15	0.77	6/19/2022 14:57	28.69
6/20/2022 14:41	84.21	6/19/2022 13:58	0.15	6/19/2022 14:28	10.53	6/19/2022 13:16	0.72	6/19/2022 14:58	28.70
6/20/2022 14:42	84.26	6/19/2022 13:59	0.06	6/19/2022 14:29	10.54	6/19/2022 13:17	0.74	6/19/2022 14:59	28.70
6/20/2022 14:43	84.28	6/19/2022 14:00	0.00	6/19/2022 14:30	10.51	6/19/2022 13:18	0.74	6/19/2022 15:00	28.70
6/20/2022 14:44	84.23	6/19/2022 14:01	-0.02	6/19/2022 14:31	10.56	6/19/2022 13:19	0.75	6/19/2022 15:01	28.67
6/20/2022 14:45	84.25	6/19/2022 14:02	-0.08	6/19/2022 14:32	10.55	6/19/2022 13:20	0.71	6/19/2022 15:02	28.67

6/20/2022 14:46	84.25	6/19/2022 14:03	-0.06	6/19/2022 14:33	10.55	6/19/2022 13:21	0.73	6/19/2022 15:03	28.68
6/20/2022 14:47	84.24	6/19/2022 14:04	-0.07	6/19/2022 14:34	10.57	6/19/2022 13:22	0.75	6/19/2022 15:04	28.68
6/20/2022 14:48	84.24	6/19/2022 14:05	-0.06	6/19/2022 14:35	10.58	6/19/2022 13:23	0.77	6/19/2022 15:05	28.68
6/20/2022 14:49	84.24	6/19/2022 14:06	-0.02	6/19/2022 14:36	10.56	6/19/2022 13:24	0.75	6/19/2022 15:06	28.73
6/20/2022 14:50	84.26	6/19/2022 14:07	-0.03	6/19/2022 14:37	10.60	6/19/2022 13:25	0.76	6/19/2022 15:07	28.70
6/20/2022 14:51	84.27	6/19/2022 14:08	-0.04	6/19/2022 14:38	10.62	6/19/2022 13:26	0.78	6/19/2022 15:08	28.68
6/20/2022 14:52	84.25	6/19/2022 14:09	-0.08	6/19/2022 14:39	10.60	6/19/2022 13:27	0.81	6/19/2022 15:09	28.70
6/20/2022 14:53	84.25	6/19/2022 14:10	-0.03	6/19/2022 14:40	10.64	6/19/2022 13:28	0.81	6/19/2022 15:10	28.70
6/20/2022 14:54	84.25	6/19/2022 14:11	-0.08	6/19/2022 14:41	10.61	6/19/2022 13:29	0.82	6/19/2022 15:11	28.65
6/20/2022 14:55	84.23	6/19/2022 14:12	-0.03	6/19/2022 14:42	10.62	6/19/2022 13:30	0.76	6/19/2022 15:12	28.71
6/20/2022 14:56	84.21	6/19/2022 14:13	-0.02	6/19/2022 14:43	10.61	6/19/2022 13:31	0.82	6/19/2022 15:13	28.71
6/20/2022 14:57	84.21	6/19/2022 14:14	-0.11	6/19/2022 14:44	10.64	6/19/2022 13:32	0.86	6/19/2022 15:14	28.65
6/20/2022 14:58	84.24	6/19/2022 14:15	-0.07	6/19/2022 14:45	10.60	6/19/2022 13:33	0.83	6/19/2022 15:15	28.68
6/20/2022 14:59	84.22	6/19/2022 14:16	-0.06	6/19/2022 14:46	10.57	6/19/2022 13:34	0.86	6/19/2022 15:16	28.69
6/20/2022 15:00	84.24	6/19/2022 14:17	-0.07	6/19/2022 14:47	10.55	6/19/2022 13:35	0.85	6/19/2022 15:17	28.66
6/20/2022 15:01	84.24	6/19/2022 14:18	-0.02	6/19/2022 14:48	10.56	6/19/2022 13:36	0.86	6/19/2022 15:18	28.68
6/20/2022 15:02	84.23	6/19/2022 14:19	-0.08	6/19/2022 14:49	10.54	6/19/2022 13:37	0.88	6/19/2022 15:19	28.67
6/20/2022 15:03	84.22	6/19/2022 14:20	-0.03	6/19/2022 14:50	10.54	6/19/2022 13:38	0.85	6/19/2022 15:20	28.66
6/20/2022 15:04	84.21	6/19/2022 14:21	-0.05	6/19/2022 14:51	10.50	6/19/2022 13:39	0.84	6/19/2022 15:21	28.68
6/20/2022 15:05	84.18	6/19/2022 14:22	-0.09	6/19/2022 14:52	10.50	6/19/2022 13:40	0.82	6/19/2022 15:22	28.69
6/20/2022 15:06	84.21	6/19/2022 14:23	-0.05	6/19/2022 14:53	10.51	6/19/2022 13:41	0.84	6/19/2022 15:23	28.66
6/20/2022 15:07	84.24	6/19/2022 14:24	-0.06	6/19/2022 14:54	10.52	6/19/2022 13:42	0.83	6/19/2022 15:24	28.67
6/20/2022 15:08	84.23	6/19/2022 14:25	-0.08	6/19/2022 14:55	10.54	6/19/2022 13:43	0.75	6/19/2022 15:25	28.64
6/20/2022 15:09	84.25	6/19/2022 14:26	-0.03	6/19/2022 14:56	10.53	6/19/2022 13:44	0.77	6/19/2022 15:26	28.68
6/20/2022 15:10	84.19	6/19/2022 14:27	-0.03	6/19/2022 14:57	10.55	6/19/2022 13:45	0.78	6/19/2022 15:27	28.63
6/20/2022 15:11	84.20	6/19/2022 14:28	-0.06	6/19/2022 14:58	10.53	6/19/2022 13:46	0.74	6/19/2022 15:28	28.66
6/20/2022 15:12	84.21	6/19/2022 14:29	-0.01	6/19/2022 14:59	10.54	6/19/2022 13:47	0.76	6/19/2022 15:29	28.66
6/20/2022 15:13	84.20	6/19/2022 14:30	-0.07	6/19/2022 15:00	10.59	6/19/2022 13:48	0.77	6/19/2022 15:30	28.66
6/20/2022 15:14	84.19	6/19/2022 14:31	-0.05	6/19/2022 15:01	10.54	6/19/2022 13:49	0.80	6/19/2022 15:31	28.66
6/20/2022 15:15	84.16	6/19/2022 14:32	-0.06	6/19/2022 15:02	10.53	6/19/2022 13:50	0.86	6/19/2022 15:32	28.68
6/20/2022 15:16	84.22	6/19/2022 14:33	-0.06	6/19/2022 15:03	10.52	6/19/2022 13:51	0.82	6/19/2022 15:33	28.68
6/20/2022 15:17	84.22	6/19/2022 14:34	-0.04	6/19/2022 15:04	10.49	6/19/2022 13:52	0.85	6/19/2022 15:34	28.65
6/20/2022 15:18	84.20	6/19/2022 14:35	-0.05	6/19/2022 15:05	10.52	6/19/2022 13:53	0.84	6/19/2022 15:35	28.66
6/20/2022 15:19	84.19	6/19/2022 14:36	-0.08	6/19/2022 15:06	10.48	6/19/2022 13:54	0.83	6/19/2022 15:36	28.69
6/20/2022 15:20	84.18	6/19/2022 14:37	-0.04	6/19/2022 15:07	10.51	6/19/2022 13:55	0.82	6/19/2022 15:37	28.66
6/20/2022 15:21	84.17	6/19/2022 14:38	-0.08	6/19/2022 15:08	10.49	6/19/2022 13:56	0.82	6/19/2022 15:38	28.67
6/20/2022 15:22	84.20	6/19/2022 14:39	-0.04	6/19/2022 15:09	10.47	6/19/2022 13:57	0.82	6/19/2022 15:39	28.66
6/20/2022 15:23	84.18	6/19/2022 14:40	-0.05	6/19/2022 15:10	10.42	6/19/2022 13:58	0.85	6/19/2022 15:40	28.63
6/20/2022 15:24	84.22	6/19/2022 14:41	-0.02	6/19/2022 15:11	10.45	6/19/2022 13:59	0.84	6/19/2022 15:41	28.64
6/20/2022 15:25	84.16	6/19/2022 14:42	-0.05	6/19/2022 15:12	10.43	6/19/2022 14:00	0.80	6/19/2022 15:42	28.66
6/20/2022 15:26	84.18	6/19/2022 14:43	-0.05	6/19/2022 15:13	10.42	6/19/2022 14:01	0.83	6/19/2022 15:43	28.65
6/20/2022 15:27	84.20	6/19/2022 14:44	-0.07	6/19/2022 15:14	10.40	6/19/2022 14:02	0.82	6/19/2022 15:44	28.64
6/20/2022 15:28	84.18	6/19/2022 14:45	-0.08	6/19/2022 15:15	10.37	6/19/2022 14:03	0.80	6/19/2022 15:45	28.65
6/20/2022 15:29	84.18	6/19/2022 14:46	-0.05	6/19/2022 15:16	10.38	6/19/2022 14:04	0.83	6/19/2022 15:46	28.66
6/20/2022 15:30	84.14	6/19/2022 14:47	0.50	6/19/2022 15:17	10.36	6/19/2022 14:05	0.78	6/19/2022 15:47	28.67
6/20/2022 15:31	84.21	6/19/2022 14:48	6.35	6/19/2022 15:18	10.37	6/19/2022 14:06	0.80	6/19/2022 15:48	28.65
6/20/2022 15:32	84.17	6/19/2022 14:49	6.62	6/19/2022 15:19	10.36	6/19/2022 14:07	0.78	6/19/2022 15:49	28.66
6/20/2022 15:33	84.19	6/19/2022 14:50	5.46	6/19/2022 15:20	10.32	6/19/2022 14:08	0.78	6/19/2022 15:50	28.69
6/20/2022 15:34	84.20	6/19/2022 14:51	4.56	6/19/2022 15:21	10.36	6/19/2022 14:09	0.76	6/19/2022 15:51	28.67
6/20/2022 15:35	84.16	6/19/2022 14:52	3.84	6/19/2022 15:22	10.30	6/19/2022 14:10	0.79	6/19/2022 15:52	28.68
6/20/2022 15:36	84.12	6/19/2022 14:53	3.22	6/19/2022 15:23	10.36	6/19/2022 14:11	0.77	6/19/2022 15:53	28.67
6/20/2022 15:37	84.14	6/19/2022 14:54	2.68	6/19/2022 15:24	10.37	6/19/2022 14:12	0.74	6/19/2022 15:54	28.64
6/20/2022 15:38	84.19	6/19/2022 14:55	2.22	6/19/2022 15:25	10.40	6/19/2022 14:13	0.75	6/19/2022 15:55	28.63
6/20/2022 15:39	84.16	6/19/2022 14:56	2.78	6/19/2022 15:26	10.41	6/19/2022 14:14	0.75	6/19/2022 15:56	28.66
6/20/2022 15:40	84.16	6/19/2022 14:57	8.31	6/19/2022 15:27	10.40	6/19/2022 14:15	0.74	6/19/2022 15:57	28.66
6/20/2022 15:41	84.18	6/19/2022 14:58	8.41	6/19/2022 15:28	10.42	6/19/2022 14:16	0.80	6/19/2022 15:58	28.67
6/20/2022 15:42	84.15	6/19/2022 14:59	6.98	6/19/2022 15:29	10.41	6/19/2022 14:17	0.81	6/19/2022 15:59	28.67
6/20/2022 15:43	84.13	6/19/2022 15:00	5.83	6/19/2022 15:30	10.41	6/19/2022 14:18	0.79	6/19/2022 16:00	28.67
6/20/2022 15:44	84.16	6/19/2022 15:01	4.87	6/19/2022 15:31	10.38	6/19/2022 14:19	0.78	6/19/2022 16:01	28.68
6/20/2022 15:45	84.18	6/19/2022 15:02	4.13	6/19/2022 15:32	10.40	6/19/2022 14:20	0.84	6/19/2022 16:02	28.66
6/20/2022 15:46	84.15	6/19/2022 15:03	3.45	6/19/2022 15:33	14.51	6/19/2022 14:21	0.87	6/19/2022 16:03	28.64
6/20/2022 15:47	84.14	6/19/2022 15:04	2.87	6/19/2022 15:34	13.94	6/19/2022 14:22	0.85	6/19/2022 16:04	28.65
6/20/2022 15:48	84.17	6/19/2022 15:05	2.44	6/19/2022 15:35	13.49	6/19/2022 14:23	0.88	6/19/2022 16:05	28.68
6/20/2022 15:49	84.12	6/19/2022 15:06	2.04	6/19/2022 15:36	13.11	6/19/2022 14:24	0.90	6/19/2022 16:06	28.65
6/20/2022 15:50	84.12	6/19/2022 15:07	1.71	6/19/2022 15:37	12.80	6/19/2022 14:25	0.85	6/19/2022 16:07	28.66
6/20/2022 15:51	84.19	6/19/2022 15:08	1.44	6/19/2022 15:38	12.53	6/19/2022 14:26	0.91	6/19/2022 16:08	28.66
6/20/2022 15:52	84.13	6/19/2022 15:09	1.20	6/19/2022 15:39	12.31	6/19/2022 14:27	0.88	6/19/2022 16:09	28.64
6/20/2022 15:53	84.17	6/19/2022 15:10	0.97	6/19/2022 15:40	12.06	6/19/2022 14:28	0.86	6/19/2022 16:10	28.68
6/20/2022 15:54	84.15	6/19/2022 15:11	0.83	6/19/2022 15:41	11.95	6/19/2022 14:29	0.87	6/19/2022 16:11	28.64
6/20/2022 15:55	84.11	6/19/2022 15:12	0.63	6/19/2022 15:42	11.74	6/19/2022 14:30	0.80	6/19/2022 16:12	28.68
6/20/2022 15:56	84.19	6/19/2022 15:13	0.51	6/19/2022 15:43	11.59	6/19/2022 14:31	0.82	6/19/2022 16:13	28.67
6/20/2022 15:57	84.15	6/19/2022 15:14	0.36	6/19/2022 15:44	11.48	6/19/2022 14:32	0.82	6/19/2022 16:14	28.65
6/20/2022 15:58	84.14	6/19/2022 15:15	0.27	6/19/2022 15:45	11.39	6/19/2022 14:33	0.80	6/19/2022 16:15	28.65
6/20/2022 15:59	84.15	6/19/2022 15:16	0.18	6/19/2022 15:46	11.31	6/19/2022 14:34	0.84	6/19/2022 16:16	28.67
6/20/2022 16:00	84.13	6/19/2022 15:17	0.09	6/19/2022 15:47	11.21	6/19/2022 14:35	0.81	6/19/2022 16:17	28.68
6/20/2022 16:01	84.14	6/19/2022 15:18	0.03	6/19/2022 15:48	11.19	6/19/2022 14:36	0.75	6/19/2022 16:18	28.64
6/20/2022 16:02	84.16	6/19/2022 15:19	-0.03	6/19/2022 15:49	11.12	6/19/2022 14:37	0.79	6/19/2022 16:19	28.63
6/20/2022 16:03	84.13	6/19/2022 15:20	-0.03	6/19/2022 15:50	11.07	6/19/2022 14:38	0.74	6/19/2022 16:20	28.67
6/20/2022 16:04	84.12	6/19/2022 15:21	-0.05	6/19/2022 15:51	11.03	6/19/2022 14:39	0.76	6/19/2022 16:21	28.70
6/20/2022 16:05	84.11	6/19/2022 15:22	-0.06	6/19/2022 15:52	10.95	6/19/2022 14:40	0.73	6/19/2022 16:22	28.71
6/20/2022 16:06	84.16	6/19/2022 15:23	-0.06	6/19/2022 15:53	10.94	6/19/2022 14:41	0.79	6/19/2022 16:23	28.69
6/20/2022 16:07	84.14	6/19/2022 15:24	-0.04	6/19/2022 15:54	10.87	6/19/2022 14:42	0.76	6/19/2022 16:24	28.68
6/20/2022 16:08	84.09	6/19/2022 15:25	-0.08	6/19/2022 15:55	10.83	6/19/2022 14:43	0.73	6/19/2022 16:25	28.68
6/20/2022 16:09	84.14	6/19/2022 15:26	-0.07	6/19/2022 15:56	10.80	6/19/2022 14:44	0.83	6/19/2022 16:26	28.69
6/20/2022 16:10	87.13	6/19/2022 15:27	-0.09	6/19/2022 15:57	10.78	6/19/2022 14:45	0.81	6/19/2022 16:27	28.68
6/20/2022 16:11	90.25	6/19/2022 15:28	-0.07	6/19/2022 15:58	10.71	6/19/2022 14:46	0.86	6/19/2022 16:28	28.67
6/20/2022 16:12	91.94	6/19/2022 15:29	0.00	6/19/2022 15:59	10.68	6/19/2022 14:47	0.86	6/19/2022 16:29	28.64
6/20/2022 16:13	89.28	6/19/2022 15:30	-0.02	6/19/2022 16:00	10.70	6/19/2022 14:48	0.92	6/19/2022 16:30	28.70

6/20/2022 16:14	87.59	6/19/2022 15:31	-0.09	6/19/2022 16:01	10.69	6/19/2022 14:49	0.80	6/19/2022 16:31	28.67
6/20/2022 16:15	86.63	6/19/2022 15:32	-0.08	6/19/2022 16:02	10.64	6/19/2022 14:50	0.80	6/19/2022 16:32	28.68
6/20/2022 16:16	85.99	6/19/2022 15:33	-0.03	6/19/2022 16:03	10.58	6/19/2022 14:51	0.80	6/19/2022 16:33	28.67
6/20/2022 16:17	85.59	6/19/2022 15:34	-0.08	6/19/2022 16:04	10.59	6/19/2022 14:52	0.78	6/19/2022 16:34	28.65
6/20/2022 16:18	85.34	6/19/2022 15:35	-0.05	6/19/2022 16:05	10.56	6/19/2022 14:53	0.80	6/19/2022 16:35	28.66
6/20/2022 16:19	85.16	6/19/2022 15:36	-0.08	6/19/2022 16:06	10.54	6/19/2022 14:54	0.83	6/19/2022 16:36	28.71
6/20/2022 16:20	85.03	6/19/2022 15:37	-0.04	6/19/2022 16:07	10.54	6/19/2022 14:55	0.81	6/19/2022 16:37	28.71
6/20/2022 16:21	84.94	6/19/2022 15:38	-0.07	6/19/2022 16:08	10.51	6/19/2022 14:56	0.82	6/19/2022 16:38	28.72
6/20/2022 16:22	84.86	6/19/2022 15:39	-0.04	6/19/2022 16:09	10.50	6/19/2022 14:57	0.88	6/19/2022 16:39	28.74
6/20/2022 16:23	84.79	6/19/2022 15:40	-0.05	6/19/2022 16:10	10.48	6/19/2022 14:58	0.86	6/19/2022 16:40	28.73
6/20/2022 16:24	84.74	6/19/2022 15:41	-0.08	6/19/2022 16:11	10.46	6/19/2022 14:59	0.88	6/19/2022 16:41	28.68
6/20/2022 16:25	84.72	6/19/2022 15:42	-0.02	6/19/2022 16:12	10.47	6/19/2022 15:00	0.75	6/19/2022 16:42	28.71
6/20/2022 16:26	84.64	6/19/2022 15:43	-0.05	6/19/2022 16:13	10.47	6/19/2022 15:01	0.81	6/19/2022 16:43	28.70
6/20/2022 16:27	84.64	6/19/2022 15:44	-0.10	6/19/2022 16:14	10.44	6/19/2022 15:02	0.78	6/19/2022 16:44	28.68
6/20/2022 16:28	84.61	6/19/2022 15:45	-0.06	6/19/2022 16:15	10.44	6/19/2022 15:03	0.84	6/19/2022 16:45	28.71
6/20/2022 16:29	84.58	6/19/2022 15:46	-0.07	6/19/2022 16:16	10.47	6/19/2022 15:04	0.83	6/19/2022 16:46	28.69
6/20/2022 16:30	84.55	6/19/2022 15:47	-0.06	6/19/2022 16:17	10.44	6/19/2022 15:05	0.86	6/19/2022 16:47	28.70
6/20/2022 16:31	84.54	6/19/2022 15:48	4.61	6/19/2022 16:18	10.49	6/19/2022 15:06	0.88	6/19/2022 16:48	28.67
6/20/2022 16:32	84.56	6/19/2022 15:49	8.85	6/19/2022 16:19	10.45	6/19/2022 15:07	0.87	6/19/2022 16:49	28.71
6/20/2022 16:33	84.51	6/19/2022 15:50	7.28	6/19/2022 16:20	10.49	6/19/2022 15:08	0.84	6/19/2022 16:50	28.69
6/20/2022 16:34	84.51	6/19/2022 15:51	6.08	6/19/2022 16:21	10.47	6/19/2022 15:09	0.88	6/19/2022 16:51	28.67
6/20/2022 16:35	84.50	6/19/2022 15:52	5.15	6/19/2022 16:22	10.48	6/19/2022 15:10	0.84	6/19/2022 16:52	28.73
6/20/2022 16:36	84.48	6/19/2022 15:53	4.27	6/19/2022 16:23	10.50	6/19/2022 15:11	0.88	6/19/2022 16:53	28.68
6/20/2022 16:37	84.49	6/19/2022 15:54	3.61	6/19/2022 16:24	10.47	6/19/2022 15:12	0.87	6/19/2022 16:54	28.66
6/20/2022 16:38	84.47	6/19/2022 15:55	2.99	6/19/2022 16:25	10.47	6/19/2022 15:13	0.88	6/19/2022 16:55	28.69
6/20/2022 16:39	84.45	6/19/2022 15:56	2.51	6/19/2022 16:26	10.45	6/19/2022 15:14	0.92	6/19/2022 16:56	28.66
6/20/2022 16:40	84.46	6/19/2022 15:57	5.69	6/19/2022 16:27	10.47	6/19/2022 15:15	0.88	6/19/2022 16:57	28.69
6/20/2022 16:41	84.41	6/19/2022 15:58	9.18	6/19/2022 16:28	10.46	6/19/2022 15:16	0.89	6/19/2022 16:58	28.67
6/20/2022 16:42	84.45	6/19/2022 15:59	7.67	6/19/2022 16:29	10.46	6/19/2022 15:17	0.86	6/19/2022 16:59	28.66
6/20/2022 16:43	84.43	6/19/2022 16:00	6.38	6/19/2022 16:30	10.45	6/19/2022 15:18	0.87	6/19/2022 17:00	28.68
6/20/2022 16:44	84.40	6/19/2022 16:01	5.33	6/19/2022 16:31	10.44	6/19/2022 15:19	0.87	6/19/2022 17:01	28.68
6/20/2022 16:45	84.41	6/19/2022 16:02	4.52	6/19/2022 16:32	10.41	6/19/2022 15:20	0.84	6/19/2022 17:02	28.69
6/20/2022 16:46	84.38	6/19/2022 16:03	3.79	6/19/2022 16:33	10.42	6/19/2022 15:21	0.83	6/19/2022 17:03	28.67
6/20/2022 16:47	84.38	6/19/2022 16:04	3.16	6/19/2022 16:34	10.43	6/19/2022 15:22	0.74	6/19/2022 17:04	28.65
6/20/2022 16:48	84.38	6/19/2022 16:05	2.67	6/19/2022 16:35	10.38	6/19/2022 15:23	0.81	6/19/2022 17:05	28.70
6/20/2022 16:49	84.34	6/19/2022 16:06	2.24	6/19/2022 16:36	10.42	6/19/2022 15:24	0.82	6/19/2022 17:06	28.66
6/20/2022 16:50	84.37	6/19/2022 16:07	1.88	6/19/2022 16:37	10.40	6/19/2022 15:25	0.77	6/19/2022 17:07	28.69
6/20/2022 16:51	84.36	6/19/2022 16:08	1.61	6/19/2022 16:38	10.38	6/19/2022 15:26	0.77	6/19/2022 17:08	28.69
6/20/2022 16:52	84.36	6/19/2022 16:09	1.37	6/19/2022 16:39	10.36	6/19/2022 15:27	0.80	6/19/2022 17:09	28.69
6/20/2022 16:53	84.41	6/19/2022 16:10	1.12	6/19/2022 16:40	10.39	6/19/2022 15:28	0.75	6/19/2022 17:10	28.67
6/20/2022 16:54	84.38	6/19/2022 16:11	0.94	6/19/2022 16:41	10.37	6/19/2022 15:29	0.74	6/19/2022 17:11	28.67
6/20/2022 16:55	84.34	6/19/2022 16:12	0.75	6/19/2022 16:42	10.34	6/19/2022 15:30	0.77	6/19/2022 17:12	28.64
6/20/2022 16:56	84.37	6/19/2022 16:13	0.62	6/19/2022 16:43	10.33	6/19/2022 15:31	0.76	6/19/2022 17:13	28.70
6/20/2022 16:57	84.33	6/19/2022 16:14	0.49	6/19/2022 16:44	10.32	6/19/2022 15:32	0.74	6/19/2022 17:14	28.68
6/20/2022 16:58	84.32	6/19/2022 16:15	0.48	6/19/2022 16:45	10.31	6/19/2022 15:33	0.79	6/19/2022 17:15	28.69
6/20/2022 16:59	84.36	6/19/2022 16:16	0.41	6/19/2022 16:46	10.34	6/19/2022 15:34	0.76	6/19/2022 17:16	28.65
6/20/2022 17:00	84.34	6/19/2022 16:17	0.36	6/19/2022 16:47	10.37	6/19/2022 15:35	0.78	6/19/2022 17:17	28.72
6/20/2022 17:01	84.35	6/19/2022 16:18	0.26	6/19/2022 16:48	10.41	6/19/2022 15:36	0.78	6/19/2022 17:18	28.67
6/20/2022 17:02	84.31	6/19/2022 16:19	0.15	6/19/2022 16:49	10.40	6/19/2022 15:37	0.83	6/19/2022 17:19	28.67
6/20/2022 17:03	84.29	6/19/2022 16:20	0.11	6/19/2022 16:50	10.38	6/19/2022 15:38	0.83	6/19/2022 17:20	28.66
6/20/2022 17:04	84.30	6/19/2022 16:21	0.08	6/19/2022 16:51	10.41	6/19/2022 15:39	0.90	6/19/2022 17:21	28.63
6/20/2022 17:05	84.31	6/19/2022 16:22	-0.03	6/19/2022 16:52	10.38	6/19/2022 15:40	0.87	6/19/2022 17:22	28.67
6/20/2022 17:06	84.30	6/19/2022 16:23	-0.03	6/19/2022 16:53	10.42	6/19/2022 15:41	0.84	6/19/2022 17:23	28.71
6/20/2022 17:07	84.30	6/19/2022 16:24	-0.05	6/19/2022 16:54	10.43	6/19/2022 15:42	0.86	6/19/2022 17:24	28.68
6/20/2022 17:08	84.28	6/19/2022 16:25	-0.02	6/19/2022 16:55	10.40	6/19/2022 15:43	0.86	6/19/2022 17:25	28.65
6/20/2022 17:09	84.29	6/19/2022 16:26	-0.05	6/19/2022 16:56	10.43	6/19/2022 15:44	0.85	6/19/2022 17:26	28.66
6/20/2022 17:10	84.31	6/19/2022 16:27	-0.07	6/19/2022 16:57	10.40	6/19/2022 15:45	0.84	6/19/2022 17:27	28.64
6/20/2022 17:11	84.28	6/19/2022 16:28	-0.07	6/19/2022 16:58	10.42	6/19/2022 15:46	0.77	6/19/2022 17:28	28.66
6/20/2022 17:12	84.30	6/19/2022 16:29	-0.08	6/19/2022 16:59	10.38	6/19/2022 15:47	0.81	6/19/2022 17:29	28.66
6/20/2022 17:13	84.31	6/19/2022 16:30	-0.06	6/19/2022 17:00	10.40	6/19/2022 15:48	0.81	6/19/2022 17:30	28.66
6/20/2022 17:14	84.28	6/19/2022 16:31	-0.03	6/19/2022 17:01	10.42	6/19/2022 15:49	0.76	6/19/2022 17:31	28.61
6/20/2022 17:15	84.27	6/19/2022 16:32	-0.08	6/19/2022 17:02	10.36	6/19/2022 15:50	0.84	6/19/2022 17:32	28.64
6/20/2022 17:16	84.26	6/19/2022 16:33	-0.05	6/19/2022 17:03	10.37	6/19/2022 15:51	0.71	6/19/2022 17:33	28.64
6/20/2022 17:17	84.28	6/19/2022 16:34	-0.04	6/19/2022 17:04	10.35	6/19/2022 15:52	0.75	6/19/2022 17:34	28.62
6/20/2022 17:18	84.27	6/19/2022 16:35	-0.08	6/19/2022 17:05	10.34	6/19/2022 15:53	0.84	6/19/2022 17:35	28.64
6/20/2022 17:19	84.26	6/19/2022 16:36	-0.04	6/19/2022 17:06	10.36	6/19/2022 15:54	0.80	6/19/2022 17:36	28.64
6/20/2022 17:20	84.27	6/19/2022 16:37	-0.07	6/19/2022 17:07	10.39	6/19/2022 15:55	0.74	6/19/2022 17:37	28.64
6/20/2022 17:21	84.27	6/19/2022 16:38	-0.07	6/19/2022 17:08	10.34	6/19/2022 15:56	0.77	6/19/2022 17:38	28.67
6/20/2022 17:22	84.29	6/19/2022 16:39	2.89	6/19/2022 17:09	10.31	6/19/2022 15:57	0.80	6/19/2022 17:39	28.65
6/20/2022 17:23	84.26	6/19/2022 16:40	7.29	6/19/2022 17:10	10.35	6/19/2022 15:58	0.80	6/19/2022 17:40	28.62
6/20/2022 17:24	84.21	6/19/2022 16:41	6.02	6/19/2022 17:11	10.34	6/19/2022 15:59	0.89	6/19/2022 17:41	28.67
6/20/2022 17:25	84.25	6/19/2022 16:42	5.00	6/19/2022 17:12	10.35	6/19/2022 16:00	0.80	6/19/2022 17:42	28.67
6/20/2022 17:26	84.26	6/19/2022 16:43	4.19	6/19/2022 17:13	10.39	6/19/2022 16:01	0.74	6/19/2022 17:43	28.65
6/20/2022 17:27	84.27	6/19/2022 16:44	3.53	6/19/2022 17:14	10.39	6/19/2022 16:02	0.75	6/19/2022 17:44	28.66
6/20/2022 17:28	84.26	6/19/2022 16:45	2.89	6/19/2022 17:15	10.44	6/19/2022 16:03	0.82	6/19/2022 17:45	28.65
6/20/2022 17:29	84.25	6/19/2022 16:46	2.45	6/19/2022 17:16	10.44	6/19/2022 16:04	0.83	6/19/2022 17:46	28.64
6/20/2022 17:30	84.23	6/19/2022 16:47	2.04	6/19/2022 17:17	10.44	6/19/2022 16:05	0.85	6/19/2022 17:47	28.63
6/20/2022 17:31	84.24	6/19/2022 16:48	1.75	6/19/2022 17:18	10.44	6/19/2022 16:06	0.86	6/19/2022 17:48	28.63
6/20/2022 17:32	84.23	6/19/2022 16:49	1.46	6/19/2022 17:19	10.43	6/19/2022 16:07	0.80	6/19/2022 17:49	28.62
6/20/2022 17:33	84.18	6/19/2022 16:50	1.17	6/19/2022 17:20	10.45	6/19/2022 16:08	0.81	6/19/2022 17:50	28.65
6/20/2022 17:34	84.29	6/19/2022 16:51	0.96	6/19/2022 17:21	10.47	6/19/2022 16:09	0.76	6/19/2022 17:51	28.66
6/20/2022 17:35	84.22	6/19/2022 16:52	0.81	6/19/2022 17:22	10.48	6/19/2022 16:10	0.78	6/19/2022 17:52	28.66
6/20/2022 17:36	84.25	6/19/2022 16:53	0.63	6/19/2022 17:23	10.47	6/19/2022 16:11	0.82	6/19/2022 17:53	28.63
6/20/2022 17:37	84.22	6/19/2022 16:54	0.49	6/19/2022 17:24	10.50	6/19/2022 16:12	0.80	6/19/2022 17:54	28.63
6/20/2022 17:38	84.22	6/19/2022 16:55	0.38	6/19/2022 17:25	10.51	6/19/2022 16:13	0.84	6/19/2022 17:55	28.60
6/20/2022 17:39	84.21	6/19/2022 16:56	0.26	6/19/2022 17:26	10.49	6/19/2022 16:14	3.34	6/19/2022 17:56	28.61
6/20/2022 17:40	84.24	6/19/2022 16:57	0.18	6/19/2022 17:27	10.47	6/19/2022 16:15	7.24	6/19/2022 17:57	28.65
6/20/2022 17:41	84.19	6/19/2022 16:58	0.12	6/19/2022 17:28	10.53	6/19/2022 16:16	4.24	6/19/2022 17:58	28.66

6/20/2022 17:42	84.21	6/19/2022 16:59	0.00	6/19/2022 17:29	10.52	6/19/2022 16:17	2.07	6/19/2022 17:59	28.63
6/20/2022 17:43	84.19	6/19/2022 17:00	-0.09	6/19/2022 17:30	10.53	6/19/2022 16:18	0.85	6/19/2022 18:00	28.66
6/20/2022 17:44	84.22	6/19/2022 17:01	-0.04	6/19/2022 17:31	10.50	6/19/2022 16:19	0.82	6/19/2022 18:01	28.65
6/20/2022 17:45	84.18	6/19/2022 17:02	-0.05	6/19/2022 17:32	10.50	6/19/2022 16:20	0.78	6/19/2022 18:02	28.63
6/20/2022 17:46	84.18	6/19/2022 17:03	-0.05	6/19/2022 17:33	10.51	6/19/2022 16:21	0.80	6/19/2022 18:03	28.62
6/20/2022 17:47	84.21	6/19/2022 17:04	-0.10	6/19/2022 17:34	10.52	6/19/2022 16:22	0.79	6/19/2022 18:04	28.66
6/20/2022 17:48	84.21	6/19/2022 17:05	-0.04	6/19/2022 17:35	10.48	6/19/2022 16:23	0.77	6/19/2022 18:05	28.63
6/20/2022 17:49	84.19	6/19/2022 17:06	-0.03	6/19/2022 17:36	10.47	6/19/2022 16:24	0.77	6/19/2022 18:06	28.69
6/20/2022 17:50	84.19	6/19/2022 17:07	-0.01	6/19/2022 17:37	10.45	6/19/2022 16:25	0.78	6/19/2022 18:07	28.64
6/20/2022 17:51	84.19	6/19/2022 17:08	-0.03	6/19/2022 17:38	10.49	6/19/2022 16:26	0.82	6/19/2022 18:08	28.64
6/20/2022 17:52	84.16	6/19/2022 17:09	-0.06	6/19/2022 17:39	10.43	6/19/2022 16:27	0.78	6/19/2022 18:09	28.65
6/20/2022 17:53	84.19	6/19/2022 17:10	-0.07	6/19/2022 17:40	10.43	6/19/2022 16:28	0.82	6/19/2022 18:10	28.64
6/20/2022 17:54	84.20	6/19/2022 17:11	-0.06	6/19/2022 17:41	10.43	6/19/2022 16:29	0.80	6/19/2022 18:11	28.64
6/20/2022 17:55	84.17	6/19/2022 17:12	-0.08	6/19/2022 17:42	10.39	6/19/2022 16:30	0.85	6/19/2022 18:12	28.64
6/20/2022 17:56	84.19	6/19/2022 17:13	-0.05	6/19/2022 17:43	10.42	6/19/2022 16:31	0.82	6/19/2022 18:13	28.64
6/20/2022 17:57	84.17	6/19/2022 17:14	-0.03	6/19/2022 17:44	10.36	6/19/2022 16:32	0.88	6/19/2022 18:14	28.67
6/20/2022 17:58	84.21	6/19/2022 17:15	-0.05	6/19/2022 17:45	10.39	6/19/2022 16:33	0.84	6/19/2022 18:15	28.65
6/20/2022 17:59	84.18	6/19/2022 17:16	-0.06	6/19/2022 17:46	10.38	6/19/2022 16:34	0.83	6/19/2022 18:16	28.63
6/20/2022 18:00	84.19	6/19/2022 17:17	-0.08	6/19/2022 17:47	10.37	6/19/2022 16:35	0.79	6/19/2022 18:17	28.64
6/20/2022 18:01	84.19	6/19/2022 17:18	-0.09	6/19/2022 17:48	10.35	6/19/2022 16:36	0.84	6/19/2022 18:18	28.64
6/20/2022 18:02	84.16	6/19/2022 17:19	-0.07	6/19/2022 17:49	10.35	6/19/2022 16:37	0.84	6/19/2022 18:19	28.62
6/20/2022 18:03	84.19	6/19/2022 17:20	-0.08	6/19/2022 17:50	10.39	6/19/2022 16:38	0.87	6/19/2022 18:20	28.66
6/20/2022 18:04	84.14	6/19/2022 17:21	-0.07	6/19/2022 17:51	10.38	6/19/2022 16:39	0.86	6/19/2022 18:21	28.62
6/20/2022 18:05	84.15	6/19/2022 17:22	-0.10	6/19/2022 17:52	10.40	6/19/2022 16:40	0.87	6/19/2022 18:22	28.62
6/20/2022 18:06	84.19	6/19/2022 17:23	-0.09	6/19/2022 17:53	10.38	6/19/2022 16:41	0.81	6/19/2022 18:23	28.66
6/20/2022 18:07	84.18	6/19/2022 17:24	-0.05	6/19/2022 17:54	10.42	6/19/2022 16:42	0.76	6/19/2022 18:24	28.63
6/20/2022 18:08	84.17	6/19/2022 17:25	5.92	6/19/2022 17:55	10.43	6/19/2022 16:43	0.76	6/19/2022 18:25	28.63
6/20/2022 18:09	84.14	6/19/2022 17:26	6.69	6/19/2022 17:56	10.43	6/19/2022 16:44	0.81	6/19/2022 18:26	28.64
6/20/2022 18:10	84.14	6/19/2022 17:27	5.49	6/19/2022 17:57	10.40	6/19/2022 16:45	0.77	6/19/2022 18:27	28.64
6/20/2022 18:11	84.18	6/19/2022 17:28	4.65	6/19/2022 17:58	10.42	6/19/2022 16:46	0.79	6/19/2022 18:28	28.61
6/20/2022 18:12	84.16	6/19/2022 17:29	3.89	6/19/2022 17:59	10.44	6/19/2022 16:47	0.87	6/19/2022 18:29	28.63
6/20/2022 18:13	84.16	6/19/2022 17:30	3.28	6/19/2022 18:00	10.41	6/19/2022 16:48	0.84	6/19/2022 18:30	28.67
6/20/2022 18:14	84.13	6/19/2022 17:31	2.72	6/19/2022 18:01	10.38	6/19/2022 16:49	0.84	6/19/2022 18:31	28.76
6/20/2022 18:15	84.12	6/19/2022 17:32	2.31	6/19/2022 18:02	10.40	6/19/2022 16:50	0.84	6/19/2022 18:32	28.74
6/20/2022 18:16	84.15	6/19/2022 17:33	1.92	6/19/2022 18:03	10.38	6/19/2022 16:51	0.84	6/19/2022 18:33	28.71
6/20/2022 18:17	84.14	6/19/2022 17:34	1.62	6/19/2022 18:04	10.40	6/19/2022 16:52	0.80	6/19/2022 18:34	28.74
6/20/2022 18:18	84.18	6/19/2022 17:35	1.37	6/19/2022 18:05	10.39	6/19/2022 16:53	0.85	6/19/2022 18:35	28.70
6/20/2022 18:19	84.16	6/19/2022 17:36	1.14	6/19/2022 18:06	10.39	6/19/2022 16:54	0.83	6/19/2022 18:36	28.74
6/20/2022 18:20	84.13	6/19/2022 17:37	0.92	6/19/2022 18:07	10.38	6/19/2022 16:55	0.86	6/19/2022 18:37	28.72
6/20/2022 18:21	84.14	6/19/2022 17:38	0.74	6/19/2022 18:08	10.35	6/19/2022 16:56	0.81	6/19/2022 18:38	31.00
6/20/2022 18:22	84.14	6/19/2022 17:39	0.63	6/19/2022 18:09	10.37	6/19/2022 16:57	0.80	6/19/2022 18:39	29.69
6/20/2022 18:23	84.16	6/19/2022 17:40	0.47	6/19/2022 18:10	10.38	6/19/2022 16:58	0.79	6/19/2022 18:40	29.09
6/20/2022 18:24	84.18	6/19/2022 17:41	0.34	6/19/2022 18:11	10.34	6/19/2022 16:59	0.80	6/19/2022 18:41	28.80
6/20/2022 18:25	84.16	6/19/2022 17:42	0.23	6/19/2022 18:12	10.34	6/19/2022 17:00	0.78	6/19/2022 18:42	28.77
6/20/2022 18:26	84.14	6/19/2022 17:43	0.12	6/19/2022 18:13	10.35	6/19/2022 17:01	0.76	6/19/2022 18:43	28.77
6/20/2022 18:27	84.17	6/19/2022 17:44	0.08	6/19/2022 18:14	10.37	6/19/2022 17:02	0.81	6/19/2022 18:44	28.73
6/20/2022 18:28	84.13	6/19/2022 17:45	0.04	6/19/2022 18:15	10.36	6/19/2022 17:03	0.71	6/19/2022 18:45	28.74
6/20/2022 18:29	86.55	6/19/2022 17:46	-0.12	6/19/2022 18:16	10.29	6/19/2022 17:04	0.76	6/19/2022 18:46	28.78
6/20/2022 18:30	89.98	6/19/2022 17:47	-0.04	6/19/2022 18:17	10.34	6/19/2022 17:05	0.72	6/19/2022 18:47	28.80
6/20/2022 18:31	91.87	6/19/2022 17:48	-0.05	6/19/2022 18:18	10.32	6/19/2022 17:06	0.76	6/19/2022 18:48	28.79
6/20/2022 18:32	90.89	6/19/2022 17:49	-0.05	6/19/2022 18:19	10.30	6/19/2022 17:07	0.74	6/19/2022 18:49	28.75
6/20/2022 18:33	88.68	6/19/2022 17:50	-0.04	6/19/2022 18:20	10.35	6/19/2022 17:08	0.78	6/19/2022 18:50	28.73
6/20/2022 18:34	87.32	6/19/2022 17:51	-0.05	6/19/2022 18:21	10.40	6/19/2022 17:09	0.75	6/19/2022 18:51	28.74
6/20/2022 18:35	86.48	6/19/2022 17:52	-0.09	6/19/2022 18:22	10.39	6/19/2022 17:10	0.74	6/19/2022 18:52	28.72
6/20/2022 18:36	85.88	6/19/2022 17:53	-0.08	6/19/2022 18:23	10.37	6/19/2022 17:11	0.74	6/19/2022 18:53	28.73
6/20/2022 18:37	85.59	6/19/2022 17:54	-0.04	6/19/2022 18:24	10.40	6/19/2022 17:12	0.72	6/19/2022 18:54	28.76
6/20/2022 18:38	85.37	6/19/2022 17:55	-0.06	6/19/2022 18:25	10.39	6/19/2022 17:13	0.78	6/19/2022 18:55	28.74
6/20/2022 18:39	85.20	6/19/2022 17:56	-0.08	6/19/2022 18:26	10.43	6/19/2022 17:14	0.79	6/19/2022 18:56	28.73
6/20/2022 18:40	85.12	6/19/2022 17:57	-0.04	6/19/2022 18:27	10.44	6/19/2022 17:15	0.79	6/19/2022 18:57	28.70
6/20/2022 18:41	85.02	6/19/2022 17:58	-0.02	6/19/2022 18:28	10.39	6/19/2022 17:16	0.79	6/19/2022 18:58	28.73
6/20/2022 18:42	84.89	6/19/2022 17:59	-0.05	6/19/2022 18:29	10.43	6/19/2022 17:17	0.80	6/19/2022 18:59	28.73
6/20/2022 18:43	84.89	6/19/2022 18:00	-0.03	6/19/2022 18:30	10.42	6/19/2022 17:18	0.75	6/19/2022 19:00	28.70
6/20/2022 18:44	84.80	6/19/2022 18:01	-0.05	6/19/2022 18:31	10.42	6/19/2022 17:19	0.74	6/19/2022 19:01	28.69
6/20/2022 18:45	84.76	6/19/2022 18:02	-0.08	6/19/2022 18:32	10.45	6/19/2022 17:20	0.72	6/19/2022 19:02	28.70
6/20/2022 18:46	84.74	6/19/2022 18:03	-0.05	6/19/2022 18:33	10.40	6/19/2022 17:21	0.75	6/19/2022 19:03	28.70
6/20/2022 18:47	84.70	6/19/2022 18:04	-0.08	6/19/2022 18:34	10.38	6/19/2022 17:22	0.78	6/19/2022 19:04	28.70
6/20/2022 18:48	84.67	6/19/2022 18:05	-0.06	6/19/2022 18:35	10.39	6/19/2022 17:23	0.74	6/19/2022 19:05	28.73
6/20/2022 18:49	84.64	6/19/2022 18:06	-0.04	6/19/2022 18:36	10.38	6/19/2022 17:24	0.77	6/19/2022 19:06	28.68
6/20/2022 18:50	84.60	6/19/2022 18:07	-0.08	6/19/2022 18:37	10.38	6/19/2022 17:25	0.78	6/19/2022 19:07	28.70
6/20/2022 18:51	84.58	6/19/2022 18:08	-0.09	6/19/2022 18:38	10.38	6/19/2022 17:26	0.70	6/19/2022 19:08	28.71
6/20/2022 18:52	84.58	6/19/2022 18:09	-0.05	6/19/2022 18:39	10.36	6/19/2022 17:27	0.79	6/19/2022 19:09	28.69
6/20/2022 18:53	84.59	6/19/2022 18:10	-0.03	6/19/2022 18:40	10.41	6/19/2022 17:28	0.81	6/19/2022 19:10	28.67
6/20/2022 18:54	84.55	6/19/2022 18:11	-0.05	6/19/2022 18:41	10.37	6/19/2022 17:29	0.81	6/19/2022 19:11	28.70
6/20/2022 18:55	84.55	6/19/2022 18:12	-0.08	6/19/2022 18:42	10.34	6/19/2022 17:30	0.76	6/19/2022 19:12	28.68
6/20/2022 18:56	84.54	6/19/2022 18:13	-0.05	6/19/2022 18:43	10.38	6/19/2022 17:31	0.73	6/19/2022 19:13	28.66
6/20/2022 18:57	84.52	6/19/2022 18:14	-0.03	6/19/2022 18:44	10.35	6/19/2022 17:32	0.75	6/19/2022 19:14	28.72
6/20/2022 18:58	84.51	6/19/2022 18:15	-0.05	6/19/2022 18:45	10.38	6/19/2022 17:33	0.75	6/19/2022 19:15	28.68
6/20/2022 18:59	84.51	6/19/2022 18:16	-0.06	6/19/2022 18:46	10.36	6/19/2022 17:34	0.81	6/19/2022 19:16	28.66
6/20/2022 19:00	84.47	6/19/2022 18:17	-0.03	6/19/2022 18:47	10.41	6/19/2022 17:35	0.80	6/19/2022 19:17	28.66
6/20/2022 19:01	84.49	6/19/2022 18:18	-0.06	6/19/2022 18:48	10.41	6/19/2022 17:36	0.81	6/19/2022 19:18	28.69
6/20/2022 19:02	84.47	6/19/2022 18:19	-0.06	6/19/2022 18:49	10.44	6/19/2022 17:37	0.84	6/19/2022 19:19	28.68
6/20/2022 19:03	84.48	6/19/2022 18:20	-0.05	6/19/2022 18:50	10.41	6/19/2022 17:38	0.82	6/19/2022 19:20	28.67
6/20/2022 19:04	84.48	6/19/2022 18:21	-0.08	6/19/2022 18:51	10.41	6/19/2022 17:39	0.84	6/19/2022 19:21	28.65
6/20/2022 19:05	84.44	6/19/2022 18:22	-0.03	6/19/2022 18:52	10.40	6/19/2022 17:40	0.80	6/19/2022 19:22	28.68
6/20/2022 19:06	84.49	6/19/2022 18:23	-0.06	6/19/2022 18:53	10.43	6/19/2022 17:41	0.87	6/19/2022 19:23	28.69
6/20/2022 19:07	84.49	6/19/2022 18:24	-0.06	6/19/2022 18:54	10.43	6/19/2022 17:42	0.85	6/19/2022 19:24	28.67
6/20/2022 19:08	84.44	6/19/2022 18:25	-0.06	6/19/2022 18:55	10.40	6/19/2022 17:43	0.84	6/19/2022 19:25	28.65
6/20/2022 19:09	84.42	6/19/2022 18:26	-0.05	6/19/2022 18:56	10.40	6/19/2022 17:44	0.83	6/19/2022 19:26	28.69

6/20/2022 19:10	84.43	6/19/2022 18:27	-0.06	6/19/2022 18:57	10.42	6/19/2022 17:45	0.81	6/19/2022 19:27	28.68
6/20/2022 19:11	84.40	6/19/2022 18:28	-0.03	6/19/2022 18:58	10.41	6/19/2022 17:46	0.84	6/19/2022 19:28	28.66
6/20/2022 19:12	84.42	6/19/2022 18:29	-0.08	6/19/2022 18:59	10.39	6/19/2022 17:47	0.81	6/19/2022 19:29	28.66
6/20/2022 19:13	84.40	6/19/2022 18:30	-0.05	6/19/2022 19:00	10.42	6/19/2022 17:48	0.81	6/19/2022 19:30	28.68
6/20/2022 19:14	84.41	6/19/2022 18:31	-0.06	6/19/2022 19:01	10.39	6/19/2022 17:49	0.77	6/19/2022 19:31	28.66
6/20/2022 19:15	84.43	6/19/2022 18:32	0.51	6/19/2022 19:02	10.38	6/19/2022 17:50	0.77	6/19/2022 19:32	28.65
6/20/2022 19:16	84.38	6/19/2022 18:33	6.35	6/19/2022 19:03	10.40	6/19/2022 17:51	0.80	6/19/2022 19:33	28.66
6/20/2022 19:17	84.39	6/19/2022 18:34	6.54	6/19/2022 19:04	10.38	6/19/2022 17:52	0.70	6/19/2022 19:34	28.68
6/20/2022 19:18	84.41	6/19/2022 18:35	5.45	6/19/2022 19:05	10.35	6/19/2022 17:53	0.76	6/19/2022 19:35	28.66
6/20/2022 19:19	84.37	6/19/2022 18:36	4.55	6/19/2022 19:06	10.37	6/19/2022 17:54	0.76	6/19/2022 19:36	28.66
6/20/2022 19:20	84.37	6/19/2022 18:37	3.79	6/19/2022 19:07	10.38	6/19/2022 17:55	0.74	6/19/2022 19:37	28.63
6/20/2022 19:21	84.38	6/19/2022 18:38	3.19	6/19/2022 19:08	10.35	6/19/2022 17:56	0.71	6/19/2022 19:38	28.69
6/20/2022 19:22	84.38	6/19/2022 18:39	2.66	6/19/2022 19:09	10.36	6/19/2022 17:57	0.76	6/19/2022 19:39	28.67
6/20/2022 19:23	84.38	6/19/2022 18:40	2.22	6/19/2022 19:10	10.32	6/19/2022 17:58	0.72	6/19/2022 19:40	28.66
6/20/2022 19:24	84.37	6/19/2022 18:41	1.93	6/19/2022 19:11	10.39	6/19/2022 17:59	0.73	6/19/2022 19:41	28.64
6/20/2022 19:25	84.35	6/19/2022 18:42	1.57	6/19/2022 19:12	10.39	6/19/2022 18:00	0.72	6/19/2022 19:42	28.67
6/20/2022 19:26	84.36	6/19/2022 18:43	1.37	6/19/2022 19:13	10.39	6/19/2022 18:01	0.73	6/19/2022 19:43	28.66
6/20/2022 19:27	84.36	6/19/2022 18:44	1.14	6/19/2022 19:14	10.42	6/19/2022 18:02	0.72	6/19/2022 19:44	28.68
6/20/2022 19:28	84.37	6/19/2022 18:45	0.92	6/19/2022 19:15	10.39	6/19/2022 18:03	0.73	6/19/2022 19:45	28.63
6/20/2022 19:29	84.33	6/19/2022 18:46	0.75	6/19/2022 19:16	10.38	6/19/2022 18:04	0.76	6/19/2022 19:46	28.66
6/20/2022 19:30	84.35	6/19/2022 18:47	0.58	6/19/2022 19:17	10.42	6/19/2022 18:05	0.77	6/19/2022 19:47	28.68
6/20/2022 19:31	84.34	6/19/2022 18:48	0.43	6/19/2022 19:18	10.40	6/19/2022 18:06	0.70	6/19/2022 19:48	28.68
6/20/2022 19:32	84.34	6/19/2022 18:49	0.32	6/19/2022 19:19	10.41	6/19/2022 18:07	0.75	6/19/2022 19:49	28.67
6/20/2022 19:33	84.35	6/19/2022 18:50	0.21	6/19/2022 19:20	10.44	6/19/2022 18:08	0.75	6/19/2022 19:50	28.68
6/20/2022 19:34	84.36	6/19/2022 18:51	0.13	6/19/2022 19:21	10.38	6/19/2022 18:09	0.75	6/19/2022 19:51	28.66
6/20/2022 19:35	84.37	6/19/2022 18:52	0.12	6/19/2022 19:22	10.41	6/19/2022 18:10	0.71	6/19/2022 19:52	28.67
6/20/2022 19:36	84.38	6/19/2022 18:53	0.02	6/19/2022 19:23	10.39	6/19/2022 18:11	0.73	6/19/2022 19:53	28.64
6/20/2022 19:37	84.34	6/19/2022 18:54	-0.05	6/19/2022 19:24	10.38	6/19/2022 18:12	0.76	6/19/2022 19:54	28.67
6/20/2022 19:38	84.33	6/19/2022 18:55	-0.05	6/19/2022 19:25	10.37	6/19/2022 18:13	0.74	6/19/2022 19:55	28.62
6/20/2022 19:39	84.32	6/19/2022 18:56	-0.07	6/19/2022 19:26	10.38	6/19/2022 18:14	0.77	6/19/2022 19:56	28.63
6/20/2022 19:40	84.33	6/19/2022 18:57	-0.04	6/19/2022 19:27	10.37	6/19/2022 18:15	0.80	6/19/2022 19:57	28.65
6/20/2022 19:41	84.32	6/19/2022 18:58	-0.03	6/19/2022 19:28	10.36	6/19/2022 18:16	0.78	6/19/2022 19:58	28.66
6/20/2022 19:42	84.28	6/19/2022 18:59	-0.05	6/19/2022 19:29	10.34	6/19/2022 18:17	0.76	6/19/2022 19:59	28.67
6/20/2022 19:43	84.29	6/19/2022 19:00	-0.08	6/19/2022 19:30	10.39	6/19/2022 18:18	0.82	6/19/2022 20:00	28.60
6/20/2022 19:44	84.29	6/19/2022 19:01	-0.07	6/19/2022 19:31	10.34	6/19/2022 18:19	0.79	6/19/2022 20:01	28.68
6/20/2022 19:45	84.32	6/19/2022 19:02	-0.03	6/19/2022 19:32	10.36	6/19/2022 18:20	0.80	6/19/2022 20:02	28.66
6/20/2022 19:46	84.28	6/19/2022 19:03	-0.07	6/19/2022 19:33	10.32	6/19/2022 18:21	0.82	6/19/2022 20:03	28.66
6/20/2022 19:47	84.30	6/19/2022 19:04	-0.03	6/19/2022 19:34	10.33	6/19/2022 18:22	0.85	6/19/2022 20:04	28.62
6/20/2022 19:48	84.31	6/19/2022 19:05	-0.06	6/19/2022 19:35	10.35	6/19/2022 18:23	0.85	6/19/2022 20:05	28.64
6/20/2022 19:49	84.29	6/19/2022 19:06	-0.06	6/19/2022 19:36	10.37	6/19/2022 18:24	0.82	6/19/2022 20:06	28.60
6/20/2022 19:50	84.27	6/19/2022 19:07	-0.06	6/19/2022 19:37	10.41	6/19/2022 18:25	0.83	6/19/2022 20:07	28.67
6/20/2022 19:51	84.27	6/19/2022 19:08	-0.07	6/19/2022 19:38	10.40	6/19/2022 18:26	0.83	6/19/2022 20:08	28.65
6/20/2022 19:52	84.25	6/19/2022 19:09	-0.05	6/19/2022 19:39	10.42	6/19/2022 18:27	0.77	6/19/2022 20:09	28.67
6/20/2022 19:53	84.31	6/19/2022 19:10	-0.05	6/19/2022 19:40	10.43	6/19/2022 18:28	0.81	6/19/2022 20:10	28.65
6/20/2022 19:54	84.28	6/19/2022 19:11	-0.07	6/19/2022 19:41	10.40	6/19/2022 18:29	0.74	6/19/2022 20:11	28.63
6/20/2022 19:55	84.27	6/19/2022 19:12	-0.08	6/19/2022 19:42	10.40	6/19/2022 18:30	0.74	6/19/2022 20:12	28.64
6/20/2022 19:56	84.29	6/19/2022 19:13	-0.06	6/19/2022 19:43	10.45	6/19/2022 18:31	0.73	6/19/2022 20:13	28.65
6/20/2022 19:57	84.25	6/19/2022 19:14	-0.03	6/19/2022 19:44	10.41	6/19/2022 18:32	0.72	6/19/2022 20:14	28.64
6/20/2022 19:58	84.29	6/19/2022 19:15	-0.05	6/19/2022 19:45	10.39	6/19/2022 18:33	0.79	6/19/2022 20:15	28.66
6/20/2022 19:59	84.31	6/19/2022 19:16	-0.08	6/19/2022 19:46	10.42	6/19/2022 18:34	0.76	6/19/2022 20:16	28.65
6/20/2022 20:00	84.28	6/19/2022 19:17	-0.05	6/19/2022 19:47	10.41	6/19/2022 18:35	0.79	6/19/2022 20:17	28.66
6/20/2022 20:01	84.27	6/19/2022 19:18	-0.08	6/19/2022 19:48	10.40	6/19/2022 18:36	0.81	6/19/2022 20:18	28.65
6/20/2022 20:02	84.28	6/19/2022 19:19	-0.06	6/19/2022 19:49	10.39	6/19/2022 18:37	0.80	6/19/2022 20:19	28.63
6/20/2022 20:03	84.26	6/19/2022 19:20	-0.04	6/19/2022 19:50	10.35	6/19/2022 18:38	0.73	6/19/2022 20:20	28.64
6/20/2022 20:04	84.28	6/19/2022 19:21	-0.07	6/19/2022 19:51	10.38	6/19/2022 18:39	0.69	6/19/2022 20:21	28.68
6/20/2022 20:05	84.24	6/19/2022 19:22	-0.05	6/19/2022 19:52	10.37	6/19/2022 18:40	0.74	6/19/2022 20:22	28.63
6/20/2022 20:06	84.23	6/19/2022 19:23	-0.09	6/19/2022 19:53	10.34	6/19/2022 18:41	0.75	6/19/2022 20:23	28.63
6/20/2022 20:07	84.26	6/19/2022 19:24	-0.06	6/19/2022 19:54	10.36	6/19/2022 18:42	0.78	6/19/2022 20:24	28.63
6/20/2022 20:08	84.29	6/19/2022 19:25	-0.05	6/19/2022 19:55	10.36	6/19/2022 18:43	0.79	6/19/2022 20:25	28.65
6/20/2022 20:09	84.26	6/19/2022 19:26	-0.05	6/19/2022 19:56	10.32	6/19/2022 18:44	0.72	6/19/2022 20:26	28.65
6/20/2022 20:10	84.25	6/19/2022 19:27	-0.06	6/19/2022 19:57	10.36	6/19/2022 18:45	0.72	6/19/2022 20:27	28.67
6/20/2022 20:11	84.26	6/19/2022 19:28	-0.08	6/19/2022 19:58	10.33	6/19/2022 18:46	0.70	6/19/2022 20:28	28.65
6/20/2022 20:12	84.27	6/19/2022 19:29	-0.07	6/19/2022 19:59	10.34	6/19/2022 18:47	0.68	6/19/2022 20:29	28.63
6/20/2022 20:13	84.25	6/19/2022 19:30	-0.10	6/19/2022 20:00	10.36	6/19/2022 18:48	0.69	6/19/2022 20:30	28.67
6/20/2022 20:14	84.31	6/19/2022 19:31	-0.05	6/19/2022 20:01	10.37	6/19/2022 18:49	0.69	6/19/2022 20:31	28.66
6/20/2022 20:15	84.23	6/19/2022 19:32	-0.04	6/19/2022 20:02	10.41	6/19/2022 18:50	0.70	6/19/2022 20:32	28.66
6/20/2022 20:16	84.27	6/19/2022 19:33	-0.05	6/19/2022 20:03	10.43	6/19/2022 18:51	0.74	6/19/2022 20:33	28.62
6/20/2022 20:17	84.23	6/19/2022 19:34	-0.06	6/19/2022 20:04	10.43	6/19/2022 18:52	0.68	6/19/2022 20:34	28.64
6/20/2022 20:18	84.25	6/19/2022 19:35	-0.05	6/19/2022 20:05	10.42	6/19/2022 18:53	0.75	6/19/2022 20:35	28.63
6/20/2022 20:19	84.28	6/19/2022 19:36	-0.08	6/19/2022 20:06	10.47	6/19/2022 18:54	0.73	6/19/2022 20:36	28.64
6/20/2022 20:20	84.25	6/19/2022 19:37	-0.05	6/19/2022 20:07	10.42	6/19/2022 18:55	0.68	6/19/2022 20:37	28.58
6/20/2022 20:21	84.25	6/19/2022 19:38	5.47	6/19/2022 20:08	10.43	6/19/2022 18:56	0.73	6/19/2022 20:38	28.69
6/20/2022 20:22	84.22	6/19/2022 19:39	6.75	6/19/2022 20:09	10.43	6/19/2022 18:57	0.74	6/19/2022 20:39	28.63
6/20/2022 20:23	84.22	6/19/2022 19:40	5.59	6/19/2022 20:10	10.44	6/19/2022 18:58	0.70	6/19/2022 20:40	28.67
6/20/2022 20:24	84.23	6/19/2022 19:41	4.66	6/19/2022 20:11	10.46	6/19/2022 18:59	0.76	6/19/2022 20:41	28.64
6/20/2022 20:25	84.22	6/19/2022 19:42	3.92	6/19/2022 20:12	10.43	6/19/2022 19:00	0.70	6/19/2022 20:42	28.64
6/20/2022 20:26	84.19	6/19/2022 19:43	3.27	6/19/2022 20:13	10.44	6/19/2022 19:01	0.74	6/19/2022 20:43	28.65
6/20/2022 20:27	84.19	6/19/2022 19:44	2.67	6/19/2022 20:14	10.37	6/19/2022 19:02	0.75	6/19/2022 20:44	28.60
6/20/2022 20:28	84.26	6/19/2022 19:45	2.27	6/19/2022 20:15	10.41	6/19/2022 19:03	0.78	6/19/2022 20:45	28.63
6/20/2022 20:29	84.25	6/19/2022 19:46	1.88	6/19/2022 20:16	10.41	6/19/2022 19:04	0.76	6/19/2022 20:46	28.65
6/20/2022 20:30	84.25	6/19/2022 19:47	1.58	6/19/2022 20:17	10.38	6/19/2022 19:05	0.77	6/19/2022 20:47	28.66
6/20/2022 20:31	84.21	6/19/2022 19:48	1.37	6/19/2022 20:18	10.40	6/19/2022 19:06	0.76	6/19/2022 20:48	28.65
6/20/2022 20:32	84.22	6/19/2022 19:49	1.09	6/19/2022 20:19	10.42	6/19/2022 19:07	0.75	6/19/2022 20:49	28.66
6/20/2022 20:33	84.22	6/19/2022 19:50	0.92	6/19/2022 20:20	10.46	6/19/2022 19:08	0.73	6/19/2022 20:50	30.81
6/20/2022 20:34	84.23	6/19/2022 19:51	0.72	6/19/2022 20:21	10.43	6/19/2022 19:09	0.78	6/19/2022 20:51	29.60
6/20/2022 20:35	84.23	6/19/2022 19:52	0.59	6/19/2022 20:22	10.47	6/19/2022 19:10	0.73	6/19/2022 20:52	28.99
6/20/2022 20:36	84.24	6/19/2022 19:53	0.40	6/19/2022 20:23	10.47	6/19/2022 19:11	0.76	6/19/2022 20:53	28.79
6/20/2022 20:37	84.20	6/19/2022 19:54	0.28	6/19/2022 20:24	10.47	6/19/2022 19:12	0.80	6/19/2022 20:54	28.72

6/20/2022 20:38	84.18	6/19/2022 19:55	0.25	6/19/2022 20:25	10.51	6/19/2022 19:13	0.77	6/19/2022 20:55	28.70
6/20/2022 20:39	84.25	6/19/2022 19:56	0.14	6/19/2022 20:26	10.48	6/19/2022 19:14	0.80	6/19/2022 20:56	28.68
6/20/2022 20:40	84.21	6/19/2022 19:57	0.04	6/19/2022 20:27	10.48	6/19/2022 19:15	0.81	6/19/2022 20:57	28.68
6/20/2022 20:41	84.23	6/19/2022 19:58	0.00	6/19/2022 20:28	10.48	6/19/2022 19:16	0.81	6/19/2022 20:58	28.68
6/20/2022 20:42	84.20	6/19/2022 19:59	-0.05	6/19/2022 20:29	10.48	6/19/2022 19:17	0.83	6/19/2022 20:59	28.65
6/20/2022 20:43	84.18	6/19/2022 20:00	-0.05	6/19/2022 20:30	10.49	6/19/2022 19:18	0.78	6/19/2022 21:00	28.71
6/20/2022 20:44	84.21	6/19/2022 20:01	-0.09	6/19/2022 20:31	10.46	6/19/2022 19:19	0.83	6/19/2022 21:01	28.67
6/20/2022 20:45	84.15	6/19/2022 20:02	-0.04	6/19/2022 20:32	10.44	6/19/2022 19:20	0.82	6/19/2022 21:02	28.68
6/20/2022 20:46	84.19	6/19/2022 20:03	-0.04	6/19/2022 20:33	10.44	6/19/2022 19:21	0.80	6/19/2022 21:03	28.63
6/20/2022 20:47	84.17	6/19/2022 20:04	-0.07	6/19/2022 20:34	10.45	6/19/2022 19:22	0.79	6/19/2022 21:04	28.69
6/20/2022 20:48	84.20	6/19/2022 20:05	-0.08	6/19/2022 20:35	10.41	6/19/2022 19:23	0.80	6/19/2022 21:05	28.66
6/20/2022 20:49	84.18	6/19/2022 20:06	-0.04	6/19/2022 20:36	10.45	6/19/2022 19:24	0.81	6/19/2022 21:06	28.72
6/20/2022 20:50	84.21	6/19/2022 20:07	-0.07	6/19/2022 20:37	10.39	6/19/2022 19:25	0.76	6/19/2022 21:07	28.63
6/20/2022 20:51	84.20	6/19/2022 20:08	-0.05	6/19/2022 20:38	10.40	6/19/2022 19:26	0.74	6/19/2022 21:08	28.66
6/20/2022 20:52	84.20	6/19/2022 20:09	-0.04	6/19/2022 20:39	10.39	6/19/2022 19:27	0.76	6/19/2022 21:09	28.62
6/20/2022 20:53	84.19	6/19/2022 20:10	-0.06	6/19/2022 20:40	10.39	6/19/2022 19:28	0.73	6/19/2022 21:10	28.66
6/20/2022 20:54	84.16	6/19/2022 20:11	-0.07	6/19/2022 20:41	10.38	6/19/2022 19:29	0.72	6/19/2022 21:11	28.65
6/20/2022 20:55	84.19	6/19/2022 20:12	-0.08	6/19/2022 20:42	10.38	6/19/2022 19:30	0.65	6/19/2022 21:12	28.65
6/20/2022 20:56	84.19	6/19/2022 20:13	-0.05	6/19/2022 20:43	10.36	6/19/2022 19:31	0.71	6/19/2022 21:13	28.64
6/20/2022 20:57	84.19	6/19/2022 20:14	-0.03	6/19/2022 20:44	10.34	6/19/2022 19:32	0.69	6/19/2022 21:14	28.64
6/20/2022 20:58	84.17	6/19/2022 20:15	-0.05	6/19/2022 20:45	10.39	6/19/2022 19:33	0.68	6/19/2022 21:15	28.64
6/20/2022 20:59	84.15	6/19/2022 20:16	-0.07	6/19/2022 20:46	10.41	6/19/2022 19:34	0.66	6/19/2022 21:16	28.66
6/20/2022 21:00	84.17	6/19/2022 20:17	-0.06	6/19/2022 20:47	10.35	6/19/2022 19:35	0.69	6/19/2022 21:17	28.64
6/20/2022 21:01	84.18	6/19/2022 20:18	-0.05	6/19/2022 20:48	10.37	6/19/2022 19:36	0.67	6/19/2022 21:18	28.66
6/20/2022 21:02	84.16	6/19/2022 20:19	-0.07	6/19/2022 20:49	10.39	6/19/2022 19:37	0.72	6/19/2022 21:19	28.67
6/20/2022 21:03	84.14	6/19/2022 20:20	-0.09	6/19/2022 20:50	13.78	6/19/2022 19:38	0.69	6/19/2022 21:20	28.64
6/20/2022 21:04	84.15	6/19/2022 20:21	-0.05	6/19/2022 20:51	15.36	6/19/2022 19:39	0.68	6/19/2022 21:21	28.62
6/20/2022 21:05	84.19	6/19/2022 20:22	-0.11	6/19/2022 20:52	14.76	6/19/2022 19:40	0.71	6/19/2022 21:22	28.64
6/20/2022 21:06	84.16	6/19/2022 20:23	-0.08	6/19/2022 20:53	14.22	6/19/2022 19:41	0.75	6/19/2022 21:23	28.63
6/20/2022 21:07	84.17	6/19/2022 20:24	-0.09	6/19/2022 20:54	13.83	6/19/2022 19:42	0.82	6/19/2022 21:24	28.63
6/20/2022 21:08	84.14	6/19/2022 20:25	-0.06	6/19/2022 20:55	13.44	6/19/2022 19:43	0.77	6/19/2022 21:25	28.63
6/20/2022 21:09	84.16	6/19/2022 20:26	-0.06	6/19/2022 20:56	13.12	6/19/2022 19:44	0.73	6/19/2022 21:26	28.65
6/20/2022 21:10	84.19	6/19/2022 20:27	-0.03	6/19/2022 20:57	12.84	6/19/2022 19:45	0.76	6/19/2022 21:27	28.65
6/20/2022 21:11	84.17	6/19/2022 20:28	-0.07	6/19/2022 20:58	12.60	6/19/2022 19:46	0.76	6/19/2022 21:28	28.63
6/20/2022 21:12	84.14	6/19/2022 20:29	-0.06	6/19/2022 20:59	12.40	6/19/2022 19:47	0.69	6/19/2022 21:29	28.67
6/20/2022 21:13	84.16	6/19/2022 20:30	-0.05	6/19/2022 21:00	12.24	6/19/2022 19:48	0.71	6/19/2022 21:30	28.66
6/20/2022 21:14	84.17	6/19/2022 20:31	-0.04	6/19/2022 21:01	12.10	6/19/2022 19:49	0.72	6/19/2022 21:31	28.67
6/20/2022 21:15	84.12	6/19/2022 20:32	-0.11	6/19/2022 21:02	11.93	6/19/2022 19:50	0.71	6/19/2022 21:32	28.64
6/20/2022 21:16	84.15	6/19/2022 20:33	6.04	6/19/2022 21:03	11.81	6/19/2022 19:51	0.73	6/19/2022 21:33	28.68
6/20/2022 21:17	84.16	6/19/2022 20:34	7.18	6/19/2022 21:04	11.69	6/19/2022 19:52	0.71	6/19/2022 21:34	28.63
6/20/2022 21:18	84.18	6/19/2022 20:35	5.98	6/19/2022 21:05	11.58	6/19/2022 19:53	0.76	6/19/2022 21:35	28.63
6/20/2022 21:19	84.14	6/19/2022 20:36	4.99	6/19/2022 21:06	11.53	6/19/2022 19:54	0.75	6/19/2022 21:36	28.65
6/20/2022 21:20	84.14	6/19/2022 20:37	4.20	6/19/2022 21:07	11.45	6/19/2022 19:55	0.71	6/19/2022 21:37	28.64
6/20/2022 21:21	84.16	6/19/2022 20:38	3.51	6/19/2022 21:08	11.36	6/19/2022 19:56	0.71	6/19/2022 21:38	28.66
6/20/2022 21:22	84.14	6/19/2022 20:39	2.89	6/19/2022 21:09	11.30	6/19/2022 19:57	0.67	6/19/2022 21:39	28.61
6/20/2022 21:23	84.12	6/19/2022 20:40	2.40	6/19/2022 21:10	11.32	6/19/2022 19:58	0.71	6/19/2022 21:40	28.63
6/20/2022 21:24	84.14	6/19/2022 20:41	2.04	6/19/2022 21:11	11.21	6/19/2022 19:59	0.72	6/19/2022 21:41	28.65
6/20/2022 21:25	84.14	6/19/2022 20:42	1.69	6/19/2022 21:12	11.22	6/19/2022 20:00	0.70	6/19/2022 21:42	28.64
6/20/2022 21:26	84.17	6/19/2022 20:43	1.41	6/19/2022 21:13	11.17	6/19/2022 20:01	0.76	6/19/2022 21:43	28.65
6/20/2022 21:27	84.13	6/19/2022 20:44	1.22	6/19/2022 21:14	11.14	6/19/2022 20:02	0.78	6/19/2022 21:44	28.64
6/20/2022 21:28	84.15	6/19/2022 20:45	0.96	6/19/2022 21:15	11.10	6/19/2022 20:03	0.76	6/19/2022 21:45	28.63
6/20/2022 21:29	84.13	6/19/2022 20:46	0.77	6/19/2022 21:16	11.07	6/19/2022 20:04	0.74	6/19/2022 21:46	28.65
6/20/2022 21:30	84.15	6/19/2022 20:47	0.64	6/19/2022 21:17	11.03	6/19/2022 20:05	0.82	6/19/2022 21:47	28.63
6/20/2022 21:31	84.18	6/19/2022 20:48	0.47	6/19/2022 21:18	11.01	6/19/2022 20:06	0.77	6/19/2022 21:48	28.63
6/20/2022 21:32	84.15	6/19/2022 20:49	0.36	6/19/2022 21:19	10.97	6/19/2022 20:07	0.78	6/19/2022 21:49	28.63
6/20/2022 21:33	84.15	6/19/2022 20:50	0.28	6/19/2022 21:20	10.93	6/19/2022 20:08	0.79	6/19/2022 21:50	28.64
6/20/2022 21:34	84.16	6/19/2022 20:51	0.19	6/19/2022 21:21	10.91	6/19/2022 20:09	0.76	6/19/2022 21:51	28.64
6/20/2022 21:35	84.14	6/19/2022 20:52	0.12	6/19/2022 21:22	10.93	6/19/2022 20:10	0.78	6/19/2022 21:52	28.63
6/20/2022 21:36	84.14	6/19/2022 20:53	-0.03	6/19/2022 21:23	10.92	6/19/2022 20:11	0.80	6/19/2022 21:53	28.65
6/20/2022 21:37	84.14	6/19/2022 20:54	-0.05	6/19/2022 21:24	10.88	6/19/2022 20:12	0.75	6/19/2022 21:54	28.66
6/20/2022 21:38	84.13	6/19/2022 20:55	-0.01	6/19/2022 21:25	10.87	6/19/2022 20:13	0.75	6/19/2022 21:55	28.67
6/20/2022 21:39	84.15	6/19/2022 20:56	-0.10	6/19/2022 21:26	10.89	6/19/2022 20:14	0.76	6/19/2022 21:56	28.67
6/20/2022 21:40	84.10	6/19/2022 20:57	-0.02	6/19/2022 21:27	10.88	6/19/2022 20:15	0.73	6/19/2022 21:57	28.63
6/20/2022 21:41	84.18	6/19/2022 20:58	-0.04	6/19/2022 21:28	10.85	6/19/2022 20:16	0.74	6/19/2022 21:58	28.66
6/20/2022 21:42	84.16	6/19/2022 20:59	-0.06	6/19/2022 21:29	10.80	6/19/2022 20:17	0.74	6/19/2022 21:59	28.66
6/20/2022 21:43	84.15	6/19/2022 21:00	-0.05	6/19/2022 21:30	10.80	6/19/2022 20:18	0.71	6/19/2022 22:00	28.62
6/20/2022 21:44	84.16	6/19/2022 21:01	-0.04	6/19/2022 21:31	10.80	6/19/2022 20:19	0.70	6/19/2022 22:01	28.66
6/20/2022 21:45	84.09	6/19/2022 21:02	-0.06	6/19/2022 21:32	10.77	6/19/2022 20:20	0.76	6/19/2022 22:02	28.66
6/20/2022 21:46	84.13	6/19/2022 21:03	-0.04	6/19/2022 21:33	10.73	6/19/2022 20:21	0.70	6/19/2022 22:03	28.63
6/20/2022 21:47	84.13	6/19/2022 21:04	-0.07	6/19/2022 21:34	10.75	6/19/2022 20:22	0.64	6/19/2022 22:04	28.66
6/20/2022 21:48	84.14	6/19/2022 21:05	-0.06	6/19/2022 21:35	10.70	6/19/2022 20:23	0.66	6/19/2022 22:05	28.63
6/20/2022 21:49	84.16	6/19/2022 21:06	-0.08	6/19/2022 21:36	10.70	6/19/2022 20:24	0.69	6/19/2022 22:06	28.63
6/20/2022 21:50	84.11	6/19/2022 21:07	-0.05	6/19/2022 21:37	10.72	6/19/2022 20:25	0.73	6/19/2022 22:07	28.65
6/20/2022 21:51	84.09	6/19/2022 21:08	-0.05	6/19/2022 21:38	10.74	6/19/2022 20:26	0.70	6/19/2022 22:08	28.63
6/20/2022 21:52	84.10	6/19/2022 21:09	-0.05	6/19/2022 21:39	10.76	6/19/2022 20:27	0.67	6/19/2022 22:09	28.64
6/20/2022 21:53	84.11	6/19/2022 21:10	-0.05	6/19/2022 21:40	10.74	6/19/2022 20:28	0.64	6/19/2022 22:10	28.65
6/20/2022 21:54	84.11	6/19/2022 21:11	-0.08	6/19/2022 21:41	10.77	6/19/2022 20:29	0.66	6/19/2022 22:11	28.67
6/20/2022 21:55	84.11	6/19/2022 21:12	-0.05	6/19/2022 21:42	10.78	6/19/2022 20:30	0.68	6/19/2022 22:12	28.63
6/20/2022 21:56	84.13	6/19/2022 21:13	-0.07	6/19/2022 21:43	10.74	6/19/2022 20:31	0.70	6/19/2022 22:13	28.64
6/20/2022 21:57	84.11	6/19/2022 21:14	-0.07	6/19/2022 21:44	10.79	6/19/2022 20:32	0.66	6/19/2022 22:14	28.64
6/20/2022 21:58	84.08	6/19/2022 21:15	-0.10	6/19/2022 21:45	10.78	6/19/2022 20:33	0.67	6/19/2022 22:15	28.65
6/20/2022 21:59	84.10	6/19/2022 21:16	-0.09	6/19/2022 21:46	10.75	6/19/2022 20:34	0.65	6/19/2022 22:16	28.63
6/20/2022 22:00	84.10	6/19/2022 21:17	-0.10	6/19/2022 21:47	10.75	6/19/2022 20:35	0.71	6/19/2022 22:17	28.63
6/20/2022 22:01	84.11	6/19/2022 21:18	-0.06	6/19/2022 21:48	10.73	6/19/2022 20:36	0.79	6/19/2022 22:18	28.63
6/20/2022 22:02	84.09	6/19/2022 21:19	-0.05	6/19/2022 21:49	10.77	6/19/2022 20:37	0.74	6/19/2022 22:19	28.60
6/20/2022 22:03	84.10	6/19/2022 21:20	-0.07	6/19/2022 21:50	10.76	6/19/2022 20:38	0.65	6/19/2022 22:20	28.63
6/20/2022 22:04	84.13	6/19/2022 21:21	-0.07	6/19/2022 21:51	10.74	6/19/2022 20:39	0.67	6/19/2022 22:21	28.61
6/20/2022 22:05	84.12	6/19/2022 21:22	-0.10	6/19/2022 21:52	10.78	6/19/2022 20:40	0.64	6/19/2022 22:22	28.65

6/20/2022 22:06	84.10	6/19/2022 21:23	-0.04	6/19/2022 21:53	10.75	6/19/2022 20:41	0.63	6/19/2022 22:23	28.61
6/20/2022 22:07	84.13	6/19/2022 21:24	-0.05	6/19/2022 21:54	10.77	6/19/2022 20:42	0.66	6/19/2022 22:24	28.63
6/20/2022 22:08	84.10	6/19/2022 21:25	1.36	6/19/2022 21:55	10.75	6/19/2022 20:43	0.69	6/19/2022 22:25	28.60
6/20/2022 22:09	84.10	6/19/2022 21:26	7.00	6/19/2022 21:56	10.74	6/19/2022 20:44	0.65	6/19/2022 22:26	28.65
6/20/2022 22:10	84.10	6/19/2022 21:27	6.34	6/19/2022 21:57	10.72	6/19/2022 20:45	0.67	6/19/2022 22:27	28.64
6/20/2022 22:11	84.09	6/19/2022 21:28	5.26	6/19/2022 21:58	10.72	6/19/2022 20:46	0.65	6/19/2022 22:28	28.66
6/20/2022 22:12	84.10	6/19/2022 21:29	4.37	6/19/2022 21:59	10.72	6/19/2022 20:47	0.66	6/19/2022 22:29	28.62
6/20/2022 22:13	84.09	6/19/2022 21:30	3.66	6/19/2022 22:00	10.71	6/19/2022 20:48	0.66	6/19/2022 22:30	28.62
6/20/2022 22:14	84.06	6/19/2022 21:31	3.06	6/19/2022 22:01	10.72	6/19/2022 20:49	0.69	6/19/2022 22:31	28.60
6/20/2022 22:15	84.08	6/19/2022 21:32	2.52	6/19/2022 22:02	10.73	6/19/2022 20:50	0.65	6/19/2022 22:32	28.65
6/20/2022 22:16	84.13	6/19/2022 21:33	2.14	6/19/2022 22:03	10.77	6/19/2022 20:51	0.64	6/19/2022 22:33	28.60
6/20/2022 22:17	84.13	6/19/2022 21:34	1.79	6/19/2022 22:04	10.78	6/19/2022 20:52	0.66	6/19/2022 22:34	28.64
6/20/2022 22:18	84.09	6/19/2022 21:35	1.50	6/19/2022 22:05	10.78	6/19/2022 20:53	0.63	6/19/2022 22:35	28.68
6/20/2022 22:19	84.12	6/19/2022 21:36	1.25	6/19/2022 22:06	10.81	6/19/2022 20:54	0.67	6/19/2022 22:36	28.64
6/20/2022 22:20	84.16	6/19/2022 21:37	1.05	6/19/2022 22:07	10.82	6/19/2022 20:55	0.67	6/19/2022 22:37	28.64
6/20/2022 22:21	84.07	6/19/2022 21:38	0.80	6/19/2022 22:08	10.77	6/19/2022 20:56	0.65	6/19/2022 22:38	28.64
6/20/2022 22:22	84.08	6/19/2022 21:39	0.71	6/19/2022 22:09	10.81	6/19/2022 20:57	0.66	6/19/2022 22:39	28.65
6/20/2022 22:23	84.09	6/19/2022 21:40	0.51	6/19/2022 22:10	10.79	6/19/2022 20:58	0.67	6/19/2022 22:40	28.65
6/20/2022 22:24	84.09	6/19/2022 21:41	0.36	6/19/2022 22:11	10.78	6/19/2022 20:59	0.65	6/19/2022 22:41	28.62
6/20/2022 22:25	84.09	6/19/2022 21:42	0.28	6/19/2022 22:12	10.78	6/19/2022 21:00	0.66	6/19/2022 22:42	28.64
6/20/2022 22:26	84.09	6/19/2022 21:43	0.16	6/19/2022 22:13	10.80	6/19/2022 21:01	0.68	6/19/2022 22:43	28.65
6/20/2022 22:27	84.06	6/19/2022 21:44	0.11	6/19/2022 22:14	10.79	6/19/2022 21:02	0.70	6/19/2022 22:44	28.65
6/20/2022 22:28	84.09	6/19/2022 21:45	0.04	6/19/2022 22:15	10.79	6/19/2022 21:03	0.70	6/19/2022 22:45	28.64
6/20/2022 22:29	84.12	6/19/2022 21:46	-0.01	6/19/2022 22:16	10.78	6/19/2022 21:04	0.73	6/19/2022 22:46	28.64
6/20/2022 22:30	84.10	6/19/2022 21:47	-0.08	6/19/2022 22:17	10.80	6/19/2022 21:05	0.75	6/19/2022 22:47	28.61
6/20/2022 22:31	84.07	6/19/2022 21:48	-0.06	6/19/2022 22:18	10.76	6/19/2022 21:06	0.74	6/19/2022 22:48	28.66
6/20/2022 22:32	84.08	6/19/2022 21:49	-0.08	6/19/2022 22:19	10.79	6/19/2022 21:07	0.75	6/19/2022 22:49	28.64
6/20/2022 22:33	84.07	6/19/2022 21:50	-0.02	6/19/2022 22:20	10.73	6/19/2022 21:08	0.73	6/19/2022 22:50	28.62
6/20/2022 22:34	84.11	6/19/2022 21:51	-0.08	6/19/2022 22:21	10.75	6/19/2022 21:09	0.78	6/19/2022 22:51	28.63
6/20/2022 22:35	84.07	6/19/2022 21:52	-0.06	6/19/2022 22:22	10.74	6/19/2022 21:10	0.72	6/19/2022 22:52	28.69
6/20/2022 22:36	84.11	6/19/2022 21:53	-0.03	6/19/2022 22:23	10.72	6/19/2022 21:11	0.76	6/19/2022 22:53	28.62
6/20/2022 22:37	84.09	6/19/2022 21:54	-0.03	6/19/2022 22:24	10.71	6/19/2022 21:12	0.75	6/19/2022 22:54	28.62
6/20/2022 22:38	84.07	6/19/2022 21:55	-0.01	6/19/2022 22:25	10.67	6/19/2022 21:13	0.78	6/19/2022 22:55	28.65
6/20/2022 22:39	84.11	6/19/2022 21:56	-0.01	6/19/2022 22:26	10.67	6/19/2022 21:14	0.73	6/19/2022 22:56	28.63
6/20/2022 22:40	84.08	6/19/2022 21:57	-0.11	6/19/2022 22:27	10.67	6/19/2022 21:15	0.70	6/19/2022 22:57	28.64
6/20/2022 22:41	84.02	6/19/2022 21:58	-0.03	6/19/2022 22:28	10.64	6/19/2022 21:16	0.68	6/19/2022 22:58	28.62
6/20/2022 22:42	84.04	6/19/2022 21:59	-0.06	6/19/2022 22:29	10.61	6/19/2022 21:17	0.72	6/19/2022 22:59	28.63
6/20/2022 22:43	84.07	6/19/2022 22:00	-0.05	6/19/2022 22:30	10.60	6/19/2022 21:18	0.65	6/19/2022 23:00	28.63
6/20/2022 22:44	84.06	6/19/2022 22:01	-0.04	6/19/2022 22:31	10.59	6/19/2022 21:19	0.67	6/19/2022 23:01	28.64
6/20/2022 22:45	84.08	6/19/2022 22:02	-0.07	6/19/2022 22:32	10.62	6/19/2022 21:20	0.67	6/19/2022 23:02	28.64
6/20/2022 22:46	84.05	6/19/2022 22:03	-0.07	6/19/2022 22:33	10.58	6/19/2022 21:21	0.70	6/19/2022 23:03	28.63
6/20/2022 22:47	84.07	6/19/2022 22:04	-0.05	6/19/2022 22:34	10.63	6/19/2022 21:22	0.70	6/19/2022 23:04	28.63
6/20/2022 22:48	84.07	6/19/2022 22:05	-0.06	6/19/2022 22:35	10.62	6/19/2022 21:23	0.68	6/19/2022 23:05	28.63
6/20/2022 22:49	84.07	6/19/2022 22:06	-0.03	6/19/2022 22:36	10.60	6/19/2022 21:24	0.62	6/19/2022 23:06	28.68
6/20/2022 22:50	84.09	6/19/2022 22:07	-0.06	6/19/2022 22:37	10.60	6/19/2022 21:25	0.65	6/19/2022 23:07	28.64
6/20/2022 22:51	84.09	6/19/2022 22:08	-0.05	6/19/2022 22:38	10.64	6/19/2022 21:26	0.64	6/19/2022 23:08	28.71
6/20/2022 22:52	84.08	6/19/2022 22:09	-0.07	6/19/2022 22:39	10.59	6/19/2022 21:27	0.63	6/19/2022 23:09	28.68
6/20/2022 22:53	84.11	6/19/2022 22:10	-0.05	6/19/2022 22:40	10.57	6/19/2022 21:28	0.64	6/19/2022 23:10	28.70
6/20/2022 22:54	84.09	6/19/2022 22:11	-0.06	6/19/2022 22:41	10.58	6/19/2022 21:29	0.72	6/19/2022 23:11	28.72
6/20/2022 22:55	84.02	6/19/2022 22:12	-0.01	6/19/2022 22:42	10.56	6/19/2022 21:30	0.75	6/19/2022 23:12	28.67
6/20/2022 22:56	84.04	6/19/2022 22:13	-0.05	6/19/2022 22:43	10.56	6/19/2022 21:31	0.74	6/19/2022 23:13	30.83
6/20/2022 22:57	84.10	6/19/2022 22:14	-0.01	6/19/2022 22:44	10.56	6/19/2022 21:32	0.78	6/19/2022 23:14	29.78
6/20/2022 22:58	84.11	6/19/2022 22:15	-0.05	6/19/2022 22:45	10.53	6/19/2022 21:33	0.75	6/19/2022 23:15	29.07
6/20/2022 22:59	84.05	6/19/2022 22:16	-0.07	6/19/2022 22:46	10.56	6/19/2022 21:34	0.67	6/19/2022 23:16	28.83
6/20/2022 23:00	84.03	6/19/2022 22:17	-0.05	6/19/2022 22:47	10.52	6/19/2022 21:35	0.65	6/19/2022 23:17	28.81
6/20/2022 23:01	84.05	6/19/2022 22:18	-0.02	6/19/2022 22:48	10.53	6/19/2022 21:36	0.68	6/19/2022 23:18	28.80
6/20/2022 23:02	84.04	6/19/2022 22:19	-0.10	6/19/2022 22:49	10.50	6/19/2022 21:37	0.69	6/19/2022 23:19	28.75
6/20/2022 23:03	84.08	6/19/2022 22:20	-0.04	6/19/2022 22:50	10.50	6/19/2022 21:38	0.65	6/19/2022 23:20	28.73
6/20/2022 23:04	84.07	6/19/2022 22:21	-0.05	6/19/2022 22:51	10.48	6/19/2022 21:39	0.63	6/19/2022 23:21	28.75
6/20/2022 23:05	84.04	6/19/2022 22:22	-0.04	6/19/2022 22:52	10.50	6/19/2022 21:40	0.62	6/19/2022 23:22	28.74
6/20/2022 23:06	84.07	6/19/2022 22:23	-0.07	6/19/2022 22:53	10.52	6/19/2022 21:41	0.64	6/19/2022 23:23	28.74
6/20/2022 23:07	84.02	6/19/2022 22:24	-0.09	6/19/2022 22:54	10.56	6/19/2022 21:42	0.63	6/19/2022 23:24	28.73
6/20/2022 23:08	84.07	6/19/2022 22:25	1.86	6/19/2022 22:55	10.56	6/19/2022 21:43	0.65	6/19/2022 23:25	28.77
6/20/2022 23:09	84.06	6/19/2022 22:26	7.32	6/19/2022 22:56	10.56	6/19/2022 21:44	0.66	6/19/2022 23:26	28.71
6/20/2022 23:10	84.06	6/19/2022 22:27	6.28	6/19/2022 22:57	10.57	6/19/2022 21:45	0.65	6/19/2022 23:27	28.75
6/20/2022 23:11	84.08	6/19/2022 22:28	5.23	6/19/2022 22:58	10.55	6/19/2022 21:46	0.65	6/19/2022 23:28	28.71
6/20/2022 23:12	84.06	6/19/2022 22:29	4.34	6/19/2022 22:59	10.56	6/19/2022 21:47	0.67	6/19/2022 23:29	28.72
6/20/2022 23:13	84.06	6/19/2022 22:30	3.67	6/19/2022 23:00	10.57	6/19/2022 21:48	0.70	6/19/2022 23:30	28.70
6/20/2022 23:14	84.09	6/19/2022 22:31	3.05	6/19/2022 23:01	10.55	6/19/2022 21:49	0.69	6/19/2022 23:31	28.70
6/20/2022 23:15	84.06	6/19/2022 22:32	2.54	6/19/2022 23:02	10.55	6/19/2022 21:50	0.71	6/19/2022 23:32	28.72
6/20/2022 23:16	84.08	6/19/2022 22:33	2.11	6/19/2022 23:03	10.50	6/19/2022 21:51	0.77	6/19/2022 23:33	28.70
6/20/2022 23:17	84.08	6/19/2022 22:34	1.78	6/19/2022 23:04	10.54	6/19/2022 21:52	0.72	6/19/2022 23:34	28.68
6/20/2022 23:18	84.05	6/19/2022 22:35	1.49	6/19/2022 23:05	10.53	6/19/2022 21:53	0.73	6/19/2022 23:35	29.26
6/20/2022 23:19	84.10	6/19/2022 22:36	1.24	6/19/2022 23:06	10.55	6/19/2022 21:54	0.75	6/19/2022 23:36	30.09
6/20/2022 23:20	84.04	6/19/2022 22:37	1.01	6/19/2022 23:07	10.54	6/19/2022 21:55	0.76	6/19/2022 23:37	29.25
6/20/2022 23:21	84.03	6/19/2022 22:38	0.81	6/19/2022 23:08	10.57	6/19/2022 21:56	0.76	6/19/2022 23:38	30.37
6/20/2022 23:22	84.08	6/19/2022 22:39	0.68	6/19/2022 23:09	10.57	6/19/2022 21:57	0.77	6/19/2022 23:39	30.06
6/20/2022 23:23	84.06	6/19/2022 22:40	0.53	6/19/2022 23:10	10.57	6/19/2022 21:58	0.73	6/19/2022 23:40	29.26
6/20/2022 23:24	84.08	6/19/2022 22:41	0.42	6/19/2022 23:11	10.57	6/19/2022 21:59	0.73	6/19/2022 23:41	28.93
6/20/2022 23:25	87.75	6/19/2022 22:42	0.30	6/19/2022 23:12	10.60	6/19/2022 22:00	0.72	6/19/2022 23:42	28.81
6/20/2022 23:26	90.64	6/19/2022 22:43	0.19	6/19/2022 23:13	10.60	6/19/2022 22:01	0.72	6/19/2022 23:43	28.78
6/20/2022 23:27	92.36	6/19/2022 22:44	0.12	6/19/2022 23:14	10.57	6/19/2022 22:02	0.68	6/19/2022 23:44	28.73
6/20/2022 23:28	90.45	6/19/2022 22:45	0.03	6/19/2022 23:15	10.58	6/19/2022 22:03	0.66	6/19/2022 23:45	28.76
6/20/2022 23:29	88.43	6/19/2022 22:46	-0.04	6/19/2022 23:16	10.56	6/19/2022 22:04	0.64	6/19/2022 23:46	28.75
6/20/2022 23:30	87.17	6/19/2022 22:47	-0.03	6/19/2022 23:17	10.55	6/19/2022 22:05	0.68	6/19/2022 23:47	28.74
6/20/2022 23:31	86.38	6/19/2022 22:48	-0.08	6/19/2022 23:18	10.56	6/19/2022 22:06	0.62	6/19/2022 23:48	28.74
6/20/2022 23:32	85.90	6/19/2022 22:49	-0.04	6/19/2022 23:19	10.55	6/19/2022 22:07	0.63	6/19/2022 23:49	28.74
6/20/2022 23:33	85.53	6/19/2022 22:50	-0.09	6/19/2022 23:20	10.54	6/19/2022 22:08	0.60	6/19/2022 23:50	28.73

6/20/2022 23:34	85.31	6/19/2022 22:51	-0.05	6/19/2022 23:21	10.53	6/19/2022 22:09	0.61	6/19/2022 23:51	28.71
6/20/2022 23:35	85.17	6/19/2022 22:52	-0.05	6/19/2022 23:22	10.52	6/19/2022 22:10	0.64	6/19/2022 23:52	28.70
6/20/2022 23:36	85.07	6/19/2022 22:53	-0.08	6/19/2022 23:23	10.50	6/19/2022 22:11	0.60	6/19/2022 23:53	28.74
6/20/2022 23:37	84.92	6/19/2022 22:54	-0.06	6/19/2022 23:24	10.49	6/19/2022 22:12	0.61	6/19/2022 23:54	28.72
6/20/2022 23:38	84.87	6/19/2022 22:55	-0.06	6/19/2022 23:25	10.50	6/19/2022 22:13	0.62	6/19/2022 23:55	28.72
6/20/2022 23:39	84.82	6/19/2022 22:56	-0.07	6/19/2022 23:26	10.48	6/19/2022 22:14	0.64	6/19/2022 23:56	28.72
6/20/2022 23:40	84.75	6/19/2022 22:57	-0.05	6/19/2022 23:27	10.47	6/19/2022 22:15	0.59	6/19/2022 23:57	28.69
6/20/2022 23:41	84.70	6/19/2022 22:58	-0.08	6/19/2022 23:28	10.47	6/19/2022 22:16	0.63	6/19/2022 23:58	28.71
6/20/2022 23:42	84.70	6/19/2022 22:59	-0.09	6/19/2022 23:29	10.47	6/19/2022 22:17	0.63	6/19/2022 23:59	28.71
6/20/2022 23:43	84.66	6/19/2022 23:00	-0.05	6/19/2022 23:30	10.43	6/19/2022 22:18	0.62	6/20/2022 0:00	28.68
6/20/2022 23:44	84.64	6/19/2022 23:01	-0.07	6/19/2022 23:31	10.48	6/19/2022 22:19	0.67	6/20/2022 0:01	28.69
6/20/2022 23:45	84.58	6/19/2022 23:02	-0.06	6/19/2022 23:32	10.52	6/19/2022 22:20	0.65	6/20/2022 0:02	28.73
6/20/2022 23:46	84.57	6/19/2022 23:03	-0.07	6/19/2022 23:33	10.52	6/19/2022 22:21	0.65	6/20/2022 0:03	28.67
6/20/2022 23:47	84.54	6/19/2022 23:04	-0.03	6/19/2022 23:34	10.51	6/19/2022 22:22	0.64	6/20/2022 0:04	28.68
6/20/2022 23:48	84.54	6/19/2022 23:05	-0.01	6/19/2022 23:35	10.50	6/19/2022 22:23	0.62	6/20/2022 0:05	28.70
6/20/2022 23:49	84.54	6/19/2022 23:06	-0.08	6/19/2022 23:36	10.51	6/19/2022 22:24	0.70	6/20/2022 0:06	28.70
6/20/2022 23:50	84.47	6/19/2022 23:07	-0.03	6/19/2022 23:37	10.53	6/19/2022 22:25	0.68	6/20/2022 0:07	28.69
6/20/2022 23:51	84.48	6/19/2022 23:08	-0.08	6/19/2022 23:38	10.53	6/19/2022 22:26	0.68	6/20/2022 0:08	28.71
6/20/2022 23:52	84.53	6/19/2022 23:09	-0.05	6/19/2022 23:39	10.48	6/19/2022 22:27	0.62	6/20/2022 0:09	28.68
6/20/2022 23:53	84.47	6/19/2022 23:10	-0.07	6/19/2022 23:40	10.48	6/19/2022 22:28	0.61	6/20/2022 0:10	28.72
6/20/2022 23:54	84.49	6/19/2022 23:11	-0.04	6/19/2022 23:41	10.50	6/19/2022 22:29	0.64	6/20/2022 0:11	28.71
6/20/2022 23:55	84.45	6/19/2022 23:12	-0.05	6/19/2022 23:42	10.50	6/19/2022 22:30	0.66	6/20/2022 0:12	28.69
6/20/2022 23:56	84.46	6/19/2022 23:13	5.50	6/19/2022 23:43	10.47	6/19/2022 22:31	0.70	6/20/2022 0:13	28.68
6/20/2022 23:57	84.47	6/19/2022 23:14	6.67	6/19/2022 23:44	10.43	6/19/2022 22:32	0.75	6/20/2022 0:14	28.69
6/20/2022 23:58	84.45	6/19/2022 23:15	5.55	6/19/2022 23:45	10.46	6/19/2022 22:33	0.74	6/20/2022 0:15	28.68
6/20/2022 23:59	84.43	6/19/2022 23:16	4.65	6/19/2022 23:46	10.50	6/19/2022 22:34	0.74	6/20/2022 0:16	28.73
6/21/2022 0:00	84.40	6/19/2022 23:17	3.90	6/19/2022 23:47	10.50	6/19/2022 22:35	0.70	6/20/2022 0:17	28.67
6/21/2022 0:01	84.42	6/19/2022 23:18	3.29	6/19/2022 23:48	10.53	6/19/2022 22:36	0.72	6/20/2022 0:18	28.72
6/21/2022 0:02	84.37	6/19/2022 23:19	2.71	6/19/2022 23:49	10.51	6/19/2022 22:37	0.68	6/20/2022 0:19	28.68
6/21/2022 0:03	84.36	6/19/2022 23:20	2.27	6/19/2022 23:50	10.52	6/19/2022 22:38	0.74	6/20/2022 0:20	28.68
6/21/2022 0:04	84.39	6/19/2022 23:21	1.91	6/19/2022 23:51	10.52	6/19/2022 22:39	0.73	6/20/2022 0:21	28.69
6/21/2022 0:05	84.39	6/19/2022 23:22	1.59	6/19/2022 23:52	10.53	6/19/2022 22:40	0.70	6/20/2022 0:22	28.71
6/21/2022 0:06	84.35	6/19/2022 23:23	1.31	6/19/2022 23:53	10.55	6/19/2022 22:41	0.73	6/20/2022 0:23	28.68
6/21/2022 0:07	84.38	6/19/2022 23:24	1.12	6/19/2022 23:54	10.54	6/19/2022 22:42	0.72	6/20/2022 0:24	28.68
6/21/2022 0:08	84.38	6/19/2022 23:25	0.89	6/19/2022 23:55	10.52	6/19/2022 22:43	0.70	6/20/2022 0:25	28.71
6/21/2022 0:09	84.35	6/19/2022 23:26	0.73	6/19/2022 23:56	10.51	6/19/2022 22:44	0.71	6/20/2022 0:26	28.68
6/21/2022 0:10	84.36	6/19/2022 23:27	0.58	6/19/2022 23:57	10.53	6/19/2022 22:45	0.69	6/20/2022 0:27	28.70
6/21/2022 0:11	84.32	6/19/2022 23:28	0.44	6/19/2022 23:58	10.53	6/19/2022 22:46	0.74	6/20/2022 0:28	28.71
6/21/2022 0:12	84.35	6/19/2022 23:29	0.30	6/19/2022 23:59	10.50	6/19/2022 22:47	0.71	6/20/2022 0:29	28.72
6/21/2022 0:13	84.32	6/19/2022 23:30	0.24	6/20/2022 0:00	10.49	6/19/2022 22:48	0.61	6/20/2022 0:30	28.68
6/21/2022 0:14	84.34	6/19/2022 23:31	0.11	6/20/2022 0:01	10.49	6/19/2022 22:49	0.65	6/20/2022 0:31	28.71
6/21/2022 0:15	84.38	6/19/2022 23:32	0.06	6/20/2022 0:02	10.48	6/19/2022 22:50	0.65	6/20/2022 0:32	28.67
6/21/2022 0:16	84.36	6/19/2022 23:33	0.00	6/20/2022 0:03	10.47	6/19/2022 22:51	0.72	6/20/2022 0:33	28.68
6/21/2022 0:17	84.35	6/19/2022 23:34	-0.02	6/20/2022 0:04	10.46	6/19/2022 22:52	0.67	6/20/2022 0:34	28.68
6/21/2022 0:18	84.36	6/19/2022 23:35	-0.04	6/20/2022 0:05	10.47	6/19/2022 22:53	0.70	6/20/2022 0:35	28.66
6/21/2022 0:19	84.33	6/19/2022 23:36	-0.08	6/20/2022 0:06	10.46	6/19/2022 22:54	0.70	6/20/2022 0:36	28.69
6/21/2022 0:20	84.34	6/19/2022 23:37	-0.08	6/20/2022 0:07	10.42	6/19/2022 22:55	0.71	6/20/2022 0:37	28.71
6/21/2022 0:21	84.30	6/19/2022 23:38	-0.03	6/20/2022 0:08	10.41	6/19/2022 22:56	0.70	6/20/2022 0:38	28.70
6/21/2022 0:22	84.30	6/19/2022 23:39	-0.09	6/20/2022 0:09	10.41	6/19/2022 22:57	0.76	6/20/2022 0:39	28.67
6/21/2022 0:23	84.28	6/19/2022 23:40	-0.08	6/20/2022 0:10	10.44	6/19/2022 22:58	0.70	6/20/2022 0:40	28.68
6/21/2022 0:24	84.30	6/19/2022 23:41	-0.07	6/20/2022 0:11	11.03	6/19/2022 22:59	0.74	6/20/2022 0:41	28.68
6/21/2022 0:25	84.28	6/19/2022 23:42	-0.08	6/20/2022 0:12	14.98	6/19/2022 23:00	0.71	6/20/2022 0:42	28.70
6/21/2022 0:26	84.34	6/19/2022 23:43	-0.09	6/20/2022 0:13	14.42	6/19/2022 23:01	0.71	6/20/2022 0:43	28.66
6/21/2022 0:27	84.30	6/19/2022 23:44	-0.06	6/20/2022 0:14	13.91	6/19/2022 23:02	0.65	6/20/2022 0:44	28.69
6/21/2022 0:28	84.27	6/19/2022 23:45	0.00	6/20/2022 0:15	13.52	6/19/2022 23:03	0.65	6/20/2022 0:45	28.67
6/21/2022 0:29	84.33	6/19/2022 23:46	-0.09	6/20/2022 0:16	13.14	6/19/2022 23:04	0.66	6/20/2022 0:46	28.69
6/21/2022 0:30	84.27	6/19/2022 23:47	-0.05	6/20/2022 0:17	12.84	6/19/2022 23:05	0.66	6/20/2022 0:47	28.70
6/21/2022 0:31	84.27	6/19/2022 23:48	-0.07	6/20/2022 0:18	12.56	6/19/2022 23:06	0.63	6/20/2022 0:48	28.74
6/21/2022 0:32	84.25	6/19/2022 23:49	-0.05	6/20/2022 0:19	12.36	6/19/2022 23:07	0.64	6/20/2022 0:49	28.67
6/21/2022 0:33	84.23	6/19/2022 23:50	-0.07	6/20/2022 0:20	12.19	6/19/2022 23:08	0.57	6/20/2022 0:50	28.66
6/21/2022 0:34	84.27	6/19/2022 23:51	-0.05	6/20/2022 0:21	12.02	6/19/2022 23:09	0.61	6/20/2022 0:51	28.66
6/21/2022 0:35	84.24	6/19/2022 23:52	-0.06	6/20/2022 0:22	11.84	6/19/2022 23:10	0.59	6/20/2022 0:52	28.65
6/21/2022 0:36	84.23	6/19/2022 23:53	-0.08	6/20/2022 0:23	11.74	6/19/2022 23:11	0.62	6/20/2022 0:53	28.68
6/21/2022 0:37	84.26	6/19/2022 23:54	-0.06	6/20/2022 0:24	11.62	6/19/2022 23:12	0.61	6/20/2022 0:54	28.67
6/21/2022 0:38	84.29	6/19/2022 23:55	-0.08	6/20/2022 0:25	11.53	6/19/2022 23:13	0.61	6/20/2022 0:55	28.66
6/21/2022 0:39	84.26	6/19/2022 23:56	-0.08	6/20/2022 0:26	11.42	6/19/2022 23:14	0.61	6/20/2022 0:56	28.69
6/21/2022 0:40	84.24	6/19/2022 23:57	-0.07	6/20/2022 0:27	11.38	6/19/2022 23:15	0.63	6/20/2022 0:57	28.68
6/21/2022 0:41	84.26	6/19/2022 23:58	-0.06	6/20/2022 0:28	11.23	6/19/2022 23:16	0.67	6/20/2022 0:58	28.68
6/21/2022 0:42	84.27	6/19/2022 23:59	-0.04	6/20/2022 0:29	11.19	6/19/2022 23:17	0.69	6/20/2022 0:59	28.68
6/21/2022 0:43	84.25	6/20/2022 0:00	-0.10	6/20/2022 0:30	11.13	6/19/2022 23:18	0.66	6/20/2022 1:00	28.70
6/21/2022 0:44	84.24	6/20/2022 0:01	-0.04	6/20/2022 0:31	11.07	6/19/2022 23:19	0.72	6/20/2022 1:01	28.69
6/21/2022 0:45	84.27	6/20/2022 0:02	-0.06	6/20/2022 0:32	11.01	6/19/2022 23:20	0.63	6/20/2022 1:02	28.70
6/21/2022 0:46	84.23	6/20/2022 0:03	-0.04	6/20/2022 0:33	10.92	6/19/2022 23:21	0.68	6/20/2022 1:03	28.68
6/21/2022 0:47	84.24	6/20/2022 0:04	-0.06	6/20/2022 0:34	10.88	6/19/2022 23:22	0.64	6/20/2022 1:04	28.68
6/21/2022 0:48	84.19	6/20/2022 0:05	-0.06	6/20/2022 0:35	10.84	6/19/2022 23:23	0.63	6/20/2022 1:05	28.67
6/21/2022 0:49	84.22	6/20/2022 0:06	-0.02	6/20/2022 0:36	10.83	6/19/2022 23:24	0.62	6/20/2022 1:06	28.66
6/21/2022 0:50	84.23	6/20/2022 0:07	-0.06	6/20/2022 0:37	10.80	6/19/2022 23:25	0.61	6/20/2022 1:07	28.70
6/21/2022 0:51	84.30	6/20/2022 0:08	-0.04	6/20/2022 0:38	10.81	6/19/2022 23:26	0.62	6/20/2022 1:08	28.69
6/21/2022 0:52	84.28	6/20/2022 0:09	-0.03	6/20/2022 0:39	10.78	6/19/2022 23:27	0.57	6/20/2022 1:09	28.65
6/21/2022 0:53	84.22	6/20/2022 0:10	-0.04	6/20/2022 0:40	10.78	6/19/2022 23:28	0.60	6/20/2022 1:10	28.71
6/21/2022 0:54	84.25	6/20/2022 0:11	-0.06	6/20/2022 0:41	10.79	6/19/2022 23:29	0.57	6/20/2022 1:11	28.68
6/21/2022 0:55	84.25	6/20/2022 0:12	-0.10	6/20/2022 0:42	10.75	6/19/2022 23:30	0.59	6/20/2022 1:12	28.70
6/21/2022 0:56	84.26	6/20/2022 0:13	-0.07	6/20/2022 0:43	10.72	6/19/2022 23:31	0.63	6/20/2022 1:13	28.66
6/21/2022 0:57	84.24	6/20/2022 0:14	-0.09	6/20/2022 0:44	10.71	6/19/2022 23:32	0.61	6/20/2022 1:14	28.67
6/21/2022 0:58	84.24	6/20/2022 0:15	-0.08	6/20/2022 0:45	10.71	6/19/2022 23:33	0.61	6/20/2022 1:15	28.68
6/21/2022 0:59	84.21	6/20/2022 0:16	-0.08	6/20/2022 0:46	10.67	6/19/2022 23:34	0.63	6/20/2022 1:16	28.67
6/21/2022 1:00	84.24	6/20/2022 0:17	-0.08	6/20/2022 0:47	10.70	6/19/2022 23:35	0.64	6/20/2022 1:17	28.69
6/21/2022 1:01	84.22	6/20/2022 0:18	-0.03	6/20/2022 0:48	10.69	6/19/2022 23:36	0.62	6/20/2022 1:18	28.69

6/21/2022 1:02	84.19	6/20/2022 0:19	-0.01	6/20/2022 0:49	10.64	6/19/2022 23:37	0.65	6/20/2022 1:19	28.67
6/21/2022 1:03	84.21	6/20/2022 0:20	5.93	6/20/2022 0:50	10.62	6/19/2022 23:38	0.64	6/20/2022 1:20	28.68
6/21/2022 1:04	84.24	6/20/2022 0:21	6.53	6/20/2022 0:51	10.58	6/19/2022 23:39	0.67	6/20/2022 1:21	28.67
6/21/2022 1:05	84.21	6/20/2022 0:22	5.45	6/20/2022 0:52	10.56	6/19/2022 23:40	0.60	6/20/2022 1:22	28.70
6/21/2022 1:06	84.20	6/20/2022 0:23	4.53	6/20/2022 0:53	10.60	6/19/2022 23:41	0.64	6/20/2022 1:23	28.67
6/21/2022 1:07	84.16	6/20/2022 0:24	3.83	6/20/2022 0:54	10.57	6/19/2022 23:42	0.64	6/20/2022 1:24	28.68
6/21/2022 1:08	84.18	6/20/2022 0:25	3.16	6/20/2022 0:55	10.57	6/19/2022 23:43	0.61	6/20/2022 1:25	28.70
6/21/2022 1:09	84.18	6/20/2022 0:26	2.66	6/20/2022 0:56	10.58	6/19/2022 23:44	0.66	6/20/2022 1:26	28.66
6/21/2022 1:10	84.25	6/20/2022 0:27	2.20	6/20/2022 0:57	10.58	6/19/2022 23:45	0.66	6/20/2022 1:27	28.69
6/21/2022 1:11	84.22	6/20/2022 0:28	1.90	6/20/2022 0:58	10.54	6/19/2022 23:46	0.66	6/20/2022 1:28	28.67
6/21/2022 1:12	84.17	6/20/2022 0:29	1.52	6/20/2022 0:59	10.59	6/19/2022 23:47	0.68	6/20/2022 1:29	28.65
6/21/2022 1:13	84.19	6/20/2022 0:30	1.34	6/20/2022 1:00	10.64	6/19/2022 23:48	0.68	6/20/2022 1:30	28.65
6/21/2022 1:14	84.17	6/20/2022 0:31	1.10	6/20/2022 1:01	10.58	6/19/2022 23:49	0.70	6/20/2022 1:31	28.68
6/21/2022 1:15	84.21	6/20/2022 0:32	0.89	6/20/2022 1:02	10.59	6/19/2022 23:50	0.67	6/20/2022 1:32	28.66
6/21/2022 1:16	84.22	6/20/2022 0:33	0.70	6/20/2022 1:03	10.59	6/19/2022 23:51	0.68	6/20/2022 1:33	28.67
6/21/2022 1:17	84.17	6/20/2022 0:34	0.57	6/20/2022 1:04	10.58	6/19/2022 23:52	0.69	6/20/2022 1:34	28.69
6/21/2022 1:18	84.20	6/20/2022 0:35	0.44	6/20/2022 1:05	10.58	6/19/2022 23:53	0.68	6/20/2022 1:35	28.69
6/21/2022 1:19	84.19	6/20/2022 0:36	0.27	6/20/2022 1:06	10.55	6/19/2022 23:54	0.65	6/20/2022 1:36	28.68
6/21/2022 1:20	84.17	6/20/2022 0:37	0.23	6/20/2022 1:07	10.57	6/19/2022 23:55	0.67	6/20/2022 1:37	28.68
6/21/2022 1:21	84.22	6/20/2022 0:38	0.16	6/20/2022 1:08	10.53	6/19/2022 23:56	0.71	6/20/2022 1:38	28.70
6/21/2022 1:22	84.18	6/20/2022 0:39	0.06	6/20/2022 1:09	10.52	6/19/2022 23:57	0.69	6/20/2022 1:39	28.67
6/21/2022 1:23	84.12	6/20/2022 0:40	0.05	6/20/2022 1:10	10.50	6/19/2022 23:58	0.70	6/20/2022 1:40	28.68
6/21/2022 1:24	84.17	6/20/2022 0:41	-0.02	6/20/2022 1:11	10.53	6/19/2022 23:59	0.71	6/20/2022 1:41	28.70
6/21/2022 1:25	84.23	6/20/2022 0:42	-0.02	6/20/2022 1:12	10.49	6/20/2022 0:00	0.69	6/20/2022 1:42	28.70
6/21/2022 1:26	84.14	6/20/2022 0:43	-0.05	6/20/2022 1:13	10.45	6/20/2022 0:01	0.66	6/20/2022 1:43	28.67
6/21/2022 1:27	84.20	6/20/2022 0:44	-0.08	6/20/2022 1:14	10.51	6/20/2022 0:02	0.67	6/20/2022 1:44	28.65
6/21/2022 1:28	84.16	6/20/2022 0:45	-0.04	6/20/2022 1:15	10.46	6/20/2022 0:03	0.70	6/20/2022 1:45	28.66
6/21/2022 1:29	84.12	6/20/2022 0:46	-0.08	6/20/2022 1:16	10.44	6/20/2022 0:04	0.69	6/20/2022 1:46	28.68
6/21/2022 1:30	84.15	6/20/2022 0:47	-0.06	6/20/2022 1:17	10.43	6/20/2022 0:05	0.70	6/20/2022 1:47	28.73
6/21/2022 1:31	84.15	6/20/2022 0:48	-0.04	6/20/2022 1:18	10.47	6/20/2022 0:06	0.66	6/20/2022 1:48	28.69
6/21/2022 1:32	84.22	6/20/2022 0:49	-0.02	6/20/2022 1:19	10.42	6/20/2022 0:07	0.71	6/20/2022 1:49	28.70
6/21/2022 1:33	84.14	6/20/2022 0:50	-0.09	6/20/2022 1:20	10.47	6/20/2022 0:08	0.67	6/20/2022 1:50	28.65
6/21/2022 1:34	84.17	6/20/2022 0:51	-0.05	6/20/2022 1:21	10.43	6/20/2022 0:09	0.69	6/20/2022 1:51	28.65
6/21/2022 1:35	84.14	6/20/2022 0:52	-0.05	6/20/2022 1:22	10.43	6/20/2022 0:10	0.71	6/20/2022 1:52	28.66
6/21/2022 1:36	84.18	6/20/2022 0:53	-0.10	6/20/2022 1:23	10.43	6/20/2022 0:11	0.67	6/20/2022 1:53	28.66
6/21/2022 1:37	84.16	6/20/2022 0:54	-0.07	6/20/2022 1:24	10.40	6/20/2022 0:12	0.70	6/20/2022 1:54	28.67
6/21/2022 1:38	84.16	6/20/2022 0:55	-0.07	6/20/2022 1:25	10.39	6/20/2022 0:13	0.61	6/20/2022 1:55	28.66
6/21/2022 1:39	84.15	6/20/2022 0:56	-0.08	6/20/2022 1:26	10.42	6/20/2022 0:14	0.67	6/20/2022 1:56	28.66
6/21/2022 1:40	84.11	6/20/2022 0:57	-0.05	6/20/2022 1:27	10.38	6/20/2022 0:15	0.60	6/20/2022 1:57	28.64
6/21/2022 1:41	84.10	6/20/2022 0:58	-0.04	6/20/2022 1:28	10.42	6/20/2022 0:16	0.65	6/20/2022 1:58	28.67
6/21/2022 1:42	84.11	6/20/2022 0:59	-0.06	6/20/2022 1:29	10.41	6/20/2022 0:17	0.60	6/20/2022 1:59	28.67
6/21/2022 1:43	84.12	6/20/2022 1:00	-0.07	6/20/2022 1:30	10.47	6/20/2022 0:18	0.59	6/20/2022 2:00	28.67
6/21/2022 1:44	84.10	6/20/2022 1:01	-0.07	6/20/2022 1:31	10.42	6/20/2022 0:19	0.62	6/20/2022 2:01	28.68
6/21/2022 1:45	84.15	6/20/2022 1:02	-0.04	6/20/2022 1:32	10.44	6/20/2022 0:20	0.59	6/20/2022 2:02	28.68
6/21/2022 1:46	84.17	6/20/2022 1:03	-0.07	6/20/2022 1:33	10.47	6/20/2022 0:21	0.59	6/20/2022 2:03	28.68
6/21/2022 1:47	84.13	6/20/2022 1:04	-0.05	6/20/2022 1:34	10.48	6/20/2022 0:22	0.67	6/20/2022 2:04	28.67
6/21/2022 1:48	84.14	6/20/2022 1:05	-0.07	6/20/2022 1:35	10.49	6/20/2022 0:23	0.61	6/20/2022 2:05	28.71
6/21/2022 1:49	84.13	6/20/2022 1:06	-0.05	6/20/2022 1:36	10.44	6/20/2022 0:24	0.56	6/20/2022 2:06	28.69
6/21/2022 1:50	84.12	6/20/2022 1:07	-0.07	6/20/2022 1:37	10.47	6/20/2022 0:25	0.59	6/20/2022 2:07	28.65
6/21/2022 1:51	84.17	6/20/2022 1:08	-0.04	6/20/2022 1:38	10.49	6/20/2022 0:26	0.59	6/20/2022 2:08	28.68
6/21/2022 1:52	84.12	6/20/2022 1:09	-0.07	6/20/2022 1:39	10.44	6/20/2022 0:27	0.62	6/20/2022 2:09	28.70
6/21/2022 1:53	84.07	6/20/2022 1:10	-0.06	6/20/2022 1:40	10.45	6/20/2022 0:28	0.66	6/20/2022 2:10	28.67
6/21/2022 1:54	84.15	6/20/2022 1:11	-0.02	6/20/2022 1:41	10.45	6/20/2022 0:29	0.65	6/20/2022 2:11	28.68
6/21/2022 1:55	84.17	6/20/2022 1:12	-0.06	6/20/2022 1:42	10.44	6/20/2022 0:30	0.67	6/20/2022 2:12	28.71
6/21/2022 1:56	84.12	6/20/2022 1:13	-0.06	6/20/2022 1:43	10.45	6/20/2022 0:31	0.67	6/20/2022 2:13	28.68
6/21/2022 1:57	84.08	6/20/2022 1:14	-0.08	6/20/2022 1:44	10.47	6/20/2022 0:32	0.72	6/20/2022 2:14	28.68
6/21/2022 1:58	84.13	6/20/2022 1:15	-0.09	6/20/2022 1:45	10.45	6/20/2022 0:33	0.71	6/20/2022 2:15	28.67
6/21/2022 1:59	84.13	6/20/2022 1:16	-0.05	6/20/2022 1:46	10.41	6/20/2022 0:34	0.66	6/20/2022 2:16	28.66
6/21/2022 2:00	84.10	6/20/2022 1:17	0.00	6/20/2022 1:47	10.40	6/20/2022 0:35	0.67	6/20/2022 2:17	28.70
6/21/2022 2:01	84.16	6/20/2022 1:18	-0.05	6/20/2022 1:48	10.39	6/20/2022 0:36	0.70	6/20/2022 2:18	28.67
6/21/2022 2:02	84.12	6/20/2022 1:19	-0.05	6/20/2022 1:49	10.40	6/20/2022 0:37	0.70	6/20/2022 2:19	28.68
6/21/2022 2:03	84.16	6/20/2022 1:20	-0.08	6/20/2022 1:50	10.39	6/20/2022 0:38	0.68	6/20/2022 2:20	28.64
6/21/2022 2:04	84.16	6/20/2022 1:21	-0.08	6/20/2022 1:51	10.41	6/20/2022 0:39	0.72	6/20/2022 2:21	28.69
6/21/2022 2:05	84.11	6/20/2022 1:22	-0.04	6/20/2022 1:52	10.37	6/20/2022 0:40	0.68	6/20/2022 2:22	28.67
6/21/2022 2:06	84.13	6/20/2022 1:23	-0.09	6/20/2022 1:53	10.42	6/20/2022 0:41	0.69	6/20/2022 2:23	28.68
6/21/2022 2:07	84.12	6/20/2022 1:24	2.55	6/20/2022 1:54	10.40	6/20/2022 0:42	0.69	6/20/2022 2:24	28.67
6/21/2022 2:08	84.15	6/20/2022 1:25	7.38	6/20/2022 1:55	10.37	6/20/2022 0:43	0.70	6/20/2022 2:25	28.69
6/21/2022 2:09	84.15	6/20/2022 1:26	6.13	6/20/2022 1:56	10.36	6/20/2022 0:44	0.63	6/20/2022 2:26	28.69
6/21/2022 2:10	84.10	6/20/2022 1:27	5.11	6/20/2022 1:57	10.39	6/20/2022 0:45	0.65	6/20/2022 2:27	28.74
6/21/2022 2:11	84.13	6/20/2022 1:28	4.28	6/20/2022 1:58	10.37	6/20/2022 0:46	0.65	6/20/2022 2:28	28.70
6/21/2022 2:12	84.13	6/20/2022 1:29	3.56	6/20/2022 1:59	10.41	6/20/2022 0:47	0.67	6/20/2022 2:29	28.68
6/21/2022 2:13	84.16	6/20/2022 1:30	2.93	6/20/2022 2:00	10.38	6/20/2022 0:48	0.64	6/20/2022 2:30	28.64
6/21/2022 2:14	84.10	6/20/2022 1:31	2.49	6/20/2022 2:01	10.38	6/20/2022 0:49	0.66	6/20/2022 2:31	28.66
6/21/2022 2:15	84.16	6/20/2022 1:32	2.11	6/20/2022 2:02	10.41	6/20/2022 0:50	0.63	6/20/2022 2:32	28.65
6/21/2022 2:16	84.17	6/20/2022 1:33	1.73	6/20/2022 2:03	10.45	6/20/2022 0:51	0.63	6/20/2022 2:33	28.68
6/21/2022 2:17	84.14	6/20/2022 1:34	1.49	6/20/2022 2:04	10.47	6/20/2022 0:52	0.62	6/20/2022 2:34	28.68
6/21/2022 2:18	84.10	6/20/2022 1:35	1.24	6/20/2022 2:05	10.42	6/20/2022 0:53	0.64	6/20/2022 2:35	28.68
6/21/2022 2:19	84.09	6/20/2022 1:36	1.01	6/20/2022 2:06	10.44	6/20/2022 0:54	0.65	6/20/2022 2:36	28.68
6/21/2022 2:20	84.08	6/20/2022 1:37	0.84	6/20/2022 2:07	10.44	6/20/2022 0:55	0.64	6/20/2022 2:37	28.66
6/21/2022 2:21	84.09	6/20/2022 1:38	0.66	6/20/2022 2:08	10.44	6/20/2022 0:56	0.65	6/20/2022 2:38	28.67
6/21/2022 2:22	84.15	6/20/2022 1:39	0.50	6/20/2022 2:09	10.43	6/20/2022 0:57	0.62	6/20/2022 2:39	28.67
6/21/2022 2:23	84.08	6/20/2022 1:40	0.41	6/20/2022 2:10	10.46	6/20/2022 0:58	0.63	6/20/2022 2:40	28.69
6/21/2022 2:24	84.08	6/20/2022 1:41	0.26	6/20/2022 2:11	10.45	6/20/2022 0:59	0.62	6/20/2022 2:41	28.72
6/21/2022 2:25	84.15	6/20/2022 1:42	0.17	6/20/2022 2:12	10.40	6/20/2022 1:00	0.60	6/20/2022 2:42	28.66
6/21/2022 2:26	84.15	6/20/2022 1:43	0.11	6/20/2022 2:13	10.44	6/20/2022 1:01	0.62	6/20/2022 2:43	28.65
6/21/2022 2:27	84.08	6/20/2022 1:44	0.11	6/20/2022 2:14	10.42	6/20/2022 1:02	0.59	6/20/2022 2:44	28.67
6/21/2022 2:28	84.07	6/20/2022 1:45	-0.04	6/20/2022 2:15	10.40	6/20/2022 1:03	0.58	6/20/2022 2:45	28.69
6/21/2022 2:29	84.09	6/20/2022 1:46	-0.04	6/20/2022 2:16	10.38	6/20/2022 1:04	0.62	6/20/2022 2:46	28.67

6/21/2022 2:30	84.05	6/20/2022 1:47	-0.05	6/20/2022 2:17	10.41	6/20/2022 1:05	0.58	6/20/2022 2:47	28.68
6/21/2022 2:31	84.08	6/20/2022 1:48	-0.10	6/20/2022 2:18	10.40	6/20/2022 1:06	0.59	6/20/2022 2:48	28.66
6/21/2022 2:32	84.08	6/20/2022 1:49	-0.08	6/20/2022 2:19	10.40	6/20/2022 1:07	0.58	6/20/2022 2:49	28.67
6/21/2022 2:33	84.11	6/20/2022 1:50	-0.08	6/20/2022 2:20	10.41	6/20/2022 1:08	0.61	6/20/2022 2:50	28.67
6/21/2022 2:34	84.09	6/20/2022 1:51	-0.06	6/20/2022 2:21	10.35	6/20/2022 1:09	0.62	6/20/2022 2:51	28.66
6/21/2022 2:35	84.16	6/20/2022 1:52	-0.10	6/20/2022 2:22	10.37	6/20/2022 1:10	0.59	6/20/2022 2:52	28.70
6/21/2022 2:36	84.12	6/20/2022 1:53	-0.09	6/20/2022 2:23	10.39	6/20/2022 1:11	0.58	6/20/2022 2:53	28.69
6/21/2022 2:37	84.10	6/20/2022 1:54	-0.08	6/20/2022 2:24	10.38	6/20/2022 1:12	0.62	6/20/2022 2:54	28.70
6/21/2022 2:38	84.11	6/20/2022 1:55	-0.07	6/20/2022 2:25	10.38	6/20/2022 1:13	0.60	6/20/2022 2:55	28.66
6/21/2022 2:39	84.10	6/20/2022 1:56	-0.11	6/20/2022 2:26	10.42	6/20/2022 1:14	0.61	6/20/2022 2:56	28.68
6/21/2022 2:40	84.09	6/20/2022 1:57	-0.04	6/20/2022 2:27	10.43	6/20/2022 1:15	0.62	6/20/2022 2:57	28.66
6/21/2022 2:41	84.10	6/20/2022 1:58	-0.11	6/20/2022 2:28	10.45	6/20/2022 1:16	0.57	6/20/2022 2:58	28.67
6/21/2022 2:42	84.08	6/20/2022 1:59	-0.05	6/20/2022 2:29	10.51	6/20/2022 1:17	0.59	6/20/2022 2:59	28.68
6/21/2022 2:43	84.07	6/20/2022 2:00	-0.08	6/20/2022 2:30	10.46	6/20/2022 1:18	0.62	6/20/2022 3:00	28.68
6/21/2022 2:44	84.08	6/20/2022 2:01	-0.07	6/20/2022 2:31	10.47	6/20/2022 1:19	0.59	6/20/2022 3:01	28.66
6/21/2022 2:45	84.10	6/20/2022 2:02	-0.03	6/20/2022 2:32	10.46	6/20/2022 1:20	0.62	6/20/2022 3:02	28.70
6/21/2022 2:46	84.04	6/20/2022 2:03	-0.04	6/20/2022 2:33	10.50	6/20/2022 1:21	0.65	6/20/2022 3:03	28.68
6/21/2022 2:47	84.08	6/20/2022 2:04	-0.07	6/20/2022 2:34	10.48	6/20/2022 1:22	0.64	6/20/2022 3:04	28.70
6/21/2022 2:48	84.09	6/20/2022 2:05	-0.09	6/20/2022 2:35	10.48	6/20/2022 1:23	0.64	6/20/2022 3:05	28.67
6/21/2022 2:49	84.07	6/20/2022 2:06	-0.03	6/20/2022 2:36	10.46	6/20/2022 1:24	0.64	6/20/2022 3:06	28.66
6/21/2022 2:50	84.11	6/20/2022 2:07	-0.06	6/20/2022 2:37	10.46	6/20/2022 1:25	0.62	6/20/2022 3:07	28.64
6/21/2022 2:51	84.04	6/20/2022 2:08	-0.06	6/20/2022 2:38	10.46	6/20/2022 1:26	0.61	6/20/2022 3:08	28.65
6/21/2022 2:52	84.12	6/20/2022 2:09	-0.06	6/20/2022 2:39	10.43	6/20/2022 1:27	0.62	6/20/2022 3:09	28.66
6/21/2022 2:53	84.07	6/20/2022 2:10	-0.08	6/20/2022 2:40	10.47	6/20/2022 1:28	0.68	6/20/2022 3:10	28.66
6/21/2022 2:54	84.07	6/20/2022 2:11	-0.05	6/20/2022 2:41	10.42	6/20/2022 1:29	0.69	6/20/2022 3:11	28.67
6/21/2022 2:55	84.08	6/20/2022 2:12	-0.11	6/20/2022 2:42	10.43	6/20/2022 1:30	0.71	6/20/2022 3:12	28.65
6/21/2022 2:56	84.04	6/20/2022 2:13	-0.03	6/20/2022 2:43	10.42	6/20/2022 1:31	0.66	6/20/2022 3:13	28.67
6/21/2022 2:57	84.08	6/20/2022 2:14	-0.07	6/20/2022 2:44	10.42	6/20/2022 1:32	0.64	6/20/2022 3:14	28.70
6/21/2022 2:58	84.06	6/20/2022 2:15	-0.05	6/20/2022 2:45	10.43	6/20/2022 1:33	0.61	6/20/2022 3:15	28.70
6/21/2022 2:59	84.03	6/20/2022 2:16	-0.07	6/20/2022 2:46	10.38	6/20/2022 1:34	0.58	6/20/2022 3:16	28.69
6/21/2022 3:00	84.10	6/20/2022 2:17	-0.03	6/20/2022 2:47	10.40	6/20/2022 1:35	0.58	6/20/2022 3:17	28.66
6/21/2022 3:01	84.08	6/20/2022 2:18	-0.06	6/20/2022 2:48	10.41	6/20/2022 1:36	0.64	6/20/2022 3:18	28.66
6/21/2022 3:02	84.04	6/20/2022 2:19	-0.02	6/20/2022 2:49	10.39	6/20/2022 1:37	0.62	6/20/2022 3:19	28.65
6/21/2022 3:03	84.07	6/20/2022 2:20	-0.08	6/20/2022 2:50	10.39	6/20/2022 1:38	0.63	6/20/2022 3:20	28.66
6/21/2022 3:04	84.05	6/20/2022 2:21	-0.06	6/20/2022 2:51	10.40	6/20/2022 1:39	0.59	6/20/2022 3:21	28.65
6/21/2022 3:05	84.02	6/20/2022 2:22	-0.02	6/20/2022 2:52	10.37	6/20/2022 1:40	0.62	6/20/2022 3:22	28.64
6/21/2022 3:06	84.01	6/20/2022 2:23	-0.03	6/20/2022 2:53	10.41	6/20/2022 1:41	0.61	6/20/2022 3:23	28.70
6/21/2022 3:07	84.07	6/20/2022 2:24	1.80	6/20/2022 2:54	10.35	6/20/2022 1:42	0.61	6/20/2022 3:24	28.66
6/21/2022 3:08	84.01	6/20/2022 2:25	7.35	6/20/2022 2:55	10.41	6/20/2022 1:43	0.63	6/20/2022 3:25	28.68
6/21/2022 3:09	84.04	6/20/2022 2:26	6.30	6/20/2022 2:56	10.36	6/20/2022 1:44	0.62	6/20/2022 3:26	28.69
6/21/2022 3:10	84.03	6/20/2022 2:27	5.19	6/20/2022 2:57	10.40	6/20/2022 1:45	0.61	6/20/2022 3:27	28.69
6/21/2022 3:11	84.07	6/20/2022 2:28	4.36	6/20/2022 2:58	10.44	6/20/2022 1:46	0.60	6/20/2022 3:28	28.65
6/21/2022 3:12	84.07	6/20/2022 2:29	3.69	6/20/2022 2:59	10.43	6/20/2022 1:47	0.58	6/20/2022 3:29	28.70
6/21/2022 3:13	84.11	6/20/2022 2:30	3.05	6/20/2022 3:00	10.47	6/20/2022 1:48	0.60	6/20/2022 3:30	28.68
6/21/2022 3:14	84.08	6/20/2022 2:31	2.51	6/20/2022 3:01	10.43	6/20/2022 1:49	0.60	6/20/2022 3:31	28.66
6/21/2022 3:15	84.06	6/20/2022 2:32	2.16	6/20/2022 3:02	10.48	6/20/2022 1:50	0.60	6/20/2022 3:32	28.65
6/21/2022 3:16	84.05	6/20/2022 2:33	1.82	6/20/2022 3:03	10.46	6/20/2022 1:51	0.56	6/20/2022 3:33	28.66
6/21/2022 3:17	84.04	6/20/2022 2:34	1.51	6/20/2022 3:04	10.43	6/20/2022 1:52	0.58	6/20/2022 3:34	28.70
6/21/2022 3:18	84.02	6/20/2022 2:35	1.22	6/20/2022 3:05	10.42	6/20/2022 1:53	0.60	6/20/2022 3:35	28.68
6/21/2022 3:19	84.03	6/20/2022 2:36	1.04	6/20/2022 3:06	10.45	6/20/2022 1:54	0.54	6/20/2022 3:36	28.67
6/21/2022 3:20	84.07	6/20/2022 2:37	0.82	6/20/2022 3:07	10.44	6/20/2022 1:55	0.59	6/20/2022 3:37	28.69
6/21/2022 3:21	84.09	6/20/2022 2:38	0.64	6/20/2022 3:08	10.41	6/20/2022 1:56	0.57	6/20/2022 3:38	28.66
6/21/2022 3:22	84.05	6/20/2022 2:39	0.53	6/20/2022 3:09	10.42	6/20/2022 1:57	0.58	6/20/2022 3:39	28.69
6/21/2022 3:23	84.10	6/20/2022 2:40	0.39	6/20/2022 3:10	10.41	6/20/2022 1:58	0.59	6/20/2022 3:40	28.69
6/21/2022 3:24	84.05	6/20/2022 2:41	0.28	6/20/2022 3:11	10.41	6/20/2022 1:59	0.60	6/20/2022 3:41	28.67
6/21/2022 3:25	84.10	6/20/2022 2:42	0.19	6/20/2022 3:12	10.42	6/20/2022 2:00	0.55	6/20/2022 3:42	28.67
6/21/2022 3:26	84.02	6/20/2022 2:43	0.09	6/20/2022 3:13	10.42	6/20/2022 2:01	0.58	6/20/2022 3:43	28.69
6/21/2022 3:27	84.04	6/20/2022 2:44	0.00	6/20/2022 3:14	10.41	6/20/2022 2:02	0.59	6/20/2022 3:44	28.70
6/21/2022 3:28	84.06	6/20/2022 2:45	0.00	6/20/2022 3:15	10.39	6/20/2022 2:03	0.58	6/20/2022 3:45	28.69
6/21/2022 3:29	84.02	6/20/2022 2:46	-0.06	6/20/2022 3:16	10.41	6/20/2022 2:04	0.60	6/20/2022 3:46	28.69
6/21/2022 3:30	84.04	6/20/2022 2:47	-0.03	6/20/2022 3:17	10.37	6/20/2022 2:05	0.59	6/20/2022 3:47	28.67
6/21/2022 3:31	84.09	6/20/2022 2:48	-0.05	6/20/2022 3:18	10.38	6/20/2022 2:06	0.61	6/20/2022 3:48	28.67
6/21/2022 3:32	84.12	6/20/2022 2:49	-0.06	6/20/2022 3:19	10.39	6/20/2022 2:07	0.62	6/20/2022 3:49	28.68
6/21/2022 3:33	84.03	6/20/2022 2:50	-0.03	6/20/2022 3:20	10.39	6/20/2022 2:08	0.62	6/20/2022 3:50	28.64
6/21/2022 3:34	84.07	6/20/2022 2:51	-0.05	6/20/2022 3:21	10.37	6/20/2022 2:09	0.59	6/20/2022 3:51	28.64
6/21/2022 3:35	84.04	6/20/2022 2:52	-0.05	6/20/2022 3:22	10.34	6/20/2022 2:10	0.66	6/20/2022 3:52	28.64
6/21/2022 3:36	84.07	6/20/2022 2:53	-0.08	6/20/2022 3:23	10.36	6/20/2022 2:11	0.62	6/20/2022 3:53	28.69
6/21/2022 3:37	84.05	6/20/2022 2:54	-0.04	6/20/2022 3:24	10.33	6/20/2022 2:12	0.66	6/20/2022 3:54	28.67
6/21/2022 3:38	84.06	6/20/2022 2:55	-0.07	6/20/2022 3:25	10.34	6/20/2022 2:13	0.67	6/20/2022 3:55	28.66
6/21/2022 3:39	84.06	6/20/2022 2:56	-0.05	6/20/2022 3:26	10.35	6/20/2022 2:14	0.68	6/20/2022 3:56	28.68
6/21/2022 3:40	84.02	6/20/2022 2:57	-0.05	6/20/2022 3:27	10.34	6/20/2022 2:15	0.69	6/20/2022 3:57	28.67
6/21/2022 3:41	84.00	6/20/2022 2:58	-0.09	6/20/2022 3:28	10.36	6/20/2022 2:16	0.66	6/20/2022 3:58	28.70
6/21/2022 3:42	84.06	6/20/2022 2:59	-0.04	6/20/2022 3:29	10.38	6/20/2022 2:17	0.68	6/20/2022 3:59	28.66
6/21/2022 3:43	84.04	6/20/2022 3:00	-0.05	6/20/2022 3:30	10.40	6/20/2022 2:18	0.68	6/20/2022 4:00	28.66
6/21/2022 3:44	84.08	6/20/2022 3:01	-0.09	6/20/2022 3:31	10.41	6/20/2022 2:19	0.70	6/20/2022 4:01	28.67
6/21/2022 3:45	84.05	6/20/2022 3:02	-0.08	6/20/2022 3:32	10.44	6/20/2022 2:20	0.64	6/20/2022 4:02	28.68
6/21/2022 3:46	84.04	6/20/2022 3:03	-0.07	6/20/2022 3:33	10.42	6/20/2022 2:21	0.65	6/20/2022 4:03	28.64
6/21/2022 3:47	84.06	6/20/2022 3:04	-0.05	6/20/2022 3:34	10.43	6/20/2022 2:22	0.68	6/20/2022 4:04	28.69
6/21/2022 3:48	83.98	6/20/2022 3:05	-0.08	6/20/2022 3:35	10.44	6/20/2022 2:23	0.66	6/20/2022 4:05	28.67
6/21/2022 3:49	84.07	6/20/2022 3:06	-0.05	6/20/2022 3:36	10.43	6/20/2022 2:24	0.63	6/20/2022 4:06	28.65
6/21/2022 3:50	84.06	6/20/2022 3:07	-0.04	6/20/2022 3:37	10.41	6/20/2022 2:25	0.66	6/20/2022 4:07	28.68
6/21/2022 3:51	84.04	6/20/2022 3:08	-0.05	6/20/2022 3:38	10.43	6/20/2022 2:26	0.70	6/20/2022 4:08	28.65
6/21/2022 3:52	84.00	6/20/2022 3:09	-0.05	6/20/2022 3:39	10.44	6/20/2022 2:27	0.62	6/20/2022 4:09	28.70
6/21/2022 3:53	84.04	6/20/2022 3:10	-0.10	6/20/2022 3:40	10.45	6/20/2022 2:28	0.57	6/20/2022 4:10	28.66
6/21/2022 3:54	84.04	6/20/2022 3:11	-0.06	6/20/2022 3:41	10.43	6/20/2022 2:29	0.57	6/20/2022 4:11	28.65
6/21/2022 3:55	84.02	6/20/2022 3:12	-0.02	6/20/2022 3:42	10.39	6/20/2022 2:30	0.59	6/20/2022 4:12	28.68
6/21/2022 3:56	84.03	6/20/2022 3:13	-0.05	6/20/2022 3:43	10.41	6/20/2022 2:31	0.61	6/20/2022 4:13	28.68
6/21/2022 3:57	84.02	6/20/2022 3:14	-0.05	6/20/2022 3:44	10.38	6/20/2022 2:32	0.63	6/20/2022 4:14	28.64

6/21/2022 3:58	84.00	6/20/2022 3:15	-0.07	6/20/2022 3:45	10.43	6/20/2022 2:33	0.63	6/20/2022 4:15	28.68
6/21/2022 3:59	84.01	6/20/2022 3:16	-0.03	6/20/2022 3:46	10.38	6/20/2022 2:34	0.72	6/20/2022 4:16	28.66
6/21/2022 4:00	84.10	6/20/2022 3:17	-0.04	6/20/2022 3:47	10.40	6/20/2022 2:35	0.70	6/20/2022 4:17	28.68
6/21/2022 4:01	83.99	6/20/2022 3:18	-0.08	6/20/2022 3:48	10.39	6/20/2022 2:36	0.66	6/20/2022 4:18	28.69
6/21/2022 4:02	84.03	6/20/2022 3:19	-0.07	6/20/2022 3:49	10.37	6/20/2022 2:37	0.65	6/20/2022 4:19	28.64
6/21/2022 4:03	84.01	6/20/2022 3:20	-0.07	6/20/2022 3:50	10.40	6/20/2022 2:38	0.64	6/20/2022 4:20	28.67
6/21/2022 4:04	84.00	6/20/2022 3:21	-0.05	6/20/2022 3:51	10.37	6/20/2022 2:39	0.62	6/20/2022 4:21	28.68
6/21/2022 4:05	84.03	6/20/2022 3:22	-0.07	6/20/2022 3:52	10.35	6/20/2022 2:40	0.67	6/20/2022 4:22	28.68
6/21/2022 4:06	84.04	6/20/2022 3:23	-0.06	6/20/2022 3:53	10.33	6/20/2022 2:41	0.65	6/20/2022 4:23	28.66
6/21/2022 4:07	84.00	6/20/2022 3:24	-0.03	6/20/2022 3:54	10.35	6/20/2022 2:42	0.66	6/20/2022 4:24	28.68
6/21/2022 4:08	84.02	6/20/2022 3:25	-0.06	6/20/2022 3:55	10.33	6/20/2022 2:43	0.62	6/20/2022 4:25	28.68
6/21/2022 4:09	84.07	6/20/2022 3:26	-0.06	6/20/2022 3:56	10.41	6/20/2022 2:44	0.73	6/20/2022 4:26	28.69
6/21/2022 4:10	83.98	6/20/2022 3:27	-0.05	6/20/2022 3:57	10.35	6/20/2022 2:45	0.68	6/20/2022 4:27	28.67
6/21/2022 4:11	83.99	6/20/2022 3:28	-0.07	6/20/2022 3:58	10.39	6/20/2022 2:46	0.67	6/20/2022 4:28	28.72
6/21/2022 4:12	84.07	6/20/2022 3:29	-0.08	6/20/2022 3:59	10.34	6/20/2022 2:47	0.68	6/20/2022 4:29	28.66
6/21/2022 4:13	84.03	6/20/2022 3:30	-0.02	6/20/2022 4:00	10.34	6/20/2022 2:48	0.70	6/20/2022 4:30	28.67
6/21/2022 4:14	84.01	6/20/2022 3:31	4.38	6/20/2022 4:01	10.38	6/20/2022 2:49	0.69	6/20/2022 4:31	28.67
6/21/2022 4:15	84.04	6/20/2022 3:32	6.91	6/20/2022 4:02	10.39	6/20/2022 2:50	0.70	6/20/2022 4:32	28.69
6/21/2022 4:16	83.99	6/20/2022 3:33	5.74	6/20/2022 4:03	10.42	6/20/2022 2:51	0.67	6/20/2022 4:33	28.67
6/21/2022 4:17	83.99	6/20/2022 3:34	4.76	6/20/2022 4:04	10.44	6/20/2022 2:52	0.66	6/20/2022 4:34	28.67
6/21/2022 4:18	83.97	6/20/2022 3:35	3.99	6/20/2022 4:05	10.41	6/20/2022 2:53	0.66	6/20/2022 4:35	28.68
6/21/2022 4:19	84.05	6/20/2022 3:36	3.34	6/20/2022 4:06	10.43	6/20/2022 2:54	0.65	6/20/2022 4:36	28.63
6/21/2022 4:20	84.00	6/20/2022 3:37	2.76	6/20/2022 4:07	10.39	6/20/2022 2:55	0.65	6/20/2022 4:37	28.68
6/21/2022 4:21	84.04	6/20/2022 3:38	2.32	6/20/2022 4:08	10.40	6/20/2022 2:56	0.65	6/20/2022 4:38	28.68
6/21/2022 4:22	84.06	6/20/2022 3:39	1.95	6/20/2022 4:09	10.43	6/20/2022 2:57	0.64	6/20/2022 4:39	28.68
6/21/2022 4:23	84.04	6/20/2022 3:40	1.64	6/20/2022 4:10	10.41	6/20/2022 2:58	0.58	6/20/2022 4:40	28.68
6/21/2022 4:24	84.01	6/20/2022 3:41	1.36	6/20/2022 4:11	10.44	6/20/2022 2:59	0.58	6/20/2022 4:41	28.68
6/21/2022 4:25	83.95	6/20/2022 3:42	1.13	6/20/2022 4:12	10.41	6/20/2022 3:00	0.59	6/20/2022 4:42	28.66
6/21/2022 4:26	84.03	6/20/2022 3:43	0.91	6/20/2022 4:13	10.43	6/20/2022 3:01	0.58	6/20/2022 4:43	28.70
6/21/2022 4:27	84.02	6/20/2022 3:44	0.77	6/20/2022 4:14	10.42	6/20/2022 3:02	0.57	6/20/2022 4:44	28.68
6/21/2022 4:28	84.02	6/20/2022 3:45	0.58	6/20/2022 4:15	10.43	6/20/2022 3:03	0.57	6/20/2022 4:45	28.69
6/21/2022 4:29	84.00	6/20/2022 3:46	0.47	6/20/2022 4:16	10.42	6/20/2022 3:04	0.55	6/20/2022 4:46	28.66
6/21/2022 4:30	83.94	6/20/2022 3:47	0.31	6/20/2022 4:17	10.40	6/20/2022 3:05	0.59	6/20/2022 4:47	28.70
6/21/2022 4:31	84.00	6/20/2022 3:48	0.26	6/20/2022 4:18	10.37	6/20/2022 3:06	0.58	6/20/2022 4:48	28.67
6/21/2022 4:32	83.97	6/20/2022 3:49	0.16	6/20/2022 4:19	10.38	6/20/2022 3:07	0.59	6/20/2022 4:49	28.66
6/21/2022 4:33	84.05	6/20/2022 3:50	0.10	6/20/2022 4:20	10.36	6/20/2022 3:08	0.58	6/20/2022 4:50	28.68
6/21/2022 4:34	83.99	6/20/2022 3:51	0.01	6/20/2022 4:21	10.35	6/20/2022 3:09	0.57	6/20/2022 4:51	28.70
6/21/2022 4:35	84.01	6/20/2022 3:52	-0.05	6/20/2022 4:22	10.36	6/20/2022 3:10	0.58	6/20/2022 4:52	28.67
6/21/2022 4:36	83.96	6/20/2022 3:53	-0.05	6/20/2022 4:23	10.36	6/20/2022 3:11	0.57	6/20/2022 4:53	28.66
6/21/2022 4:37	83.95	6/20/2022 3:54	-0.05	6/20/2022 4:24	10.35	6/20/2022 3:12	0.56	6/20/2022 4:54	28.70
6/21/2022 4:38	83.99	6/20/2022 3:55	-0.08	6/20/2022 4:25	10.36	6/20/2022 3:13	0.59	6/20/2022 4:55	28.67
6/21/2022 4:39	83.97	6/20/2022 3:56	-0.09	6/20/2022 4:26	10.33	6/20/2022 3:14	0.58	6/20/2022 4:56	28.69
6/21/2022 4:40	84.04	6/20/2022 3:57	-0.03	6/20/2022 4:27	10.34	6/20/2022 3:15	0.62	6/20/2022 4:57	28.68
6/21/2022 4:41	84.05	6/20/2022 3:58	-0.03	6/20/2022 4:28	10.33	6/20/2022 3:16	0.59	6/20/2022 4:58	28.69
6/21/2022 4:42	84.00	6/20/2022 3:59	-0.04	6/20/2022 4:29	10.34	6/20/2022 3:17	0.60	6/20/2022 4:59	28.70
6/21/2022 4:43	83.97	6/20/2022 4:00	-0.04	6/20/2022 4:30	10.34	6/20/2022 3:18	0.61	6/20/2022 5:00	28.69
6/21/2022 4:44	83.98	6/20/2022 4:01	-0.05	6/20/2022 4:31	10.41	6/20/2022 3:19	0.59	6/20/2022 5:01	28.70
6/21/2022 4:45	84.01	6/20/2022 4:02	-0.01	6/20/2022 4:32	10.36	6/20/2022 3:20	0.57	6/20/2022 5:02	28.66
6/21/2022 4:46	84.00	6/20/2022 4:03	-0.04	6/20/2022 4:33	10.41	6/20/2022 3:21	0.60	6/20/2022 5:03	28.67
6/21/2022 4:47	84.03	6/20/2022 4:04	-0.09	6/20/2022 4:34	10.39	6/20/2022 3:22	0.59	6/20/2022 5:04	28.68
6/21/2022 4:48	84.00	6/20/2022 4:05	-0.06	6/20/2022 4:35	10.40	6/20/2022 3:23	0.58	6/20/2022 5:05	28.66
6/21/2022 4:49	84.00	6/20/2022 4:06	-0.06	6/20/2022 4:36	10.40	6/20/2022 3:24	0.66	6/20/2022 5:06	28.65
6/21/2022 4:50	83.98	6/20/2022 4:07	-0.09	6/20/2022 4:37	10.45	6/20/2022 3:25	0.63	6/20/2022 5:07	28.67
6/21/2022 4:51	84.04	6/20/2022 4:08	-0.07	6/20/2022 4:38	10.41	6/20/2022 3:26	0.66	6/20/2022 5:08	28.68
6/21/2022 4:52	83.98	6/20/2022 4:09	-0.08	6/20/2022 4:39	10.39	6/20/2022 3:27	0.64	6/20/2022 5:09	28.65
6/21/2022 4:53	83.98	6/20/2022 4:10	-0.05	6/20/2022 4:40	10.41	6/20/2022 3:28	0.64	6/20/2022 5:10	28.65
6/21/2022 4:54	84.03	6/20/2022 4:11	-0.02	6/20/2022 4:41	10.41	6/20/2022 3:29	0.71	6/20/2022 5:11	28.65
6/21/2022 4:55	83.99	6/20/2022 4:12	-0.01	6/20/2022 4:42	10.43	6/20/2022 3:30	0.65	6/20/2022 5:12	28.66
6/21/2022 4:56	83.97	6/20/2022 4:13	-0.04	6/20/2022 4:43	10.44	6/20/2022 3:31	0.67	6/20/2022 5:13	28.67
6/21/2022 4:57	83.99	6/20/2022 4:14	-0.04	6/20/2022 4:44	10.43	6/20/2022 3:32	0.66	6/20/2022 5:14	28.65
6/21/2022 4:58	84.00	6/20/2022 4:15	-0.07	6/20/2022 4:45	10.37	6/20/2022 3:33	0.58	6/20/2022 5:15	28.68
6/21/2022 4:59	83.95	6/20/2022 4:16	-0.06	6/20/2022 4:46	10.40	6/20/2022 3:34	0.56	6/20/2022 5:16	28.67
6/21/2022 5:00	84.02	6/20/2022 4:17	-0.05	6/20/2022 4:47	10.40	6/20/2022 3:35	0.59	6/20/2022 5:17	28.67
6/21/2022 5:01	84.03	6/20/2022 4:18	-0.05	6/20/2022 4:48	10.40	6/20/2022 3:36	0.70	6/20/2022 5:18	28.72
6/21/2022 5:02	83.98	6/20/2022 4:19	-0.07	6/20/2022 4:49	10.37	6/20/2022 3:37	0.68	6/20/2022 5:19	28.70
6/21/2022 5:03	84.02	6/20/2022 4:20	-0.07	6/20/2022 4:50	10.39	6/20/2022 3:38	0.71	6/20/2022 5:20	28.67
6/21/2022 5:04	84.01	6/20/2022 4:21	-0.03	6/20/2022 4:51	10.37	6/20/2022 3:39	0.62	6/20/2022 5:21	28.68
6/21/2022 5:05	84.00	6/20/2022 4:22	-0.08	6/20/2022 4:52	10.38	6/20/2022 3:40	0.62	6/20/2022 5:22	28.68
6/21/2022 5:06	83.96	6/20/2022 4:23	-0.04	6/20/2022 4:53	10.35	6/20/2022 3:41	0.60	6/20/2022 5:23	28.69
6/21/2022 5:07	83.97	6/20/2022 4:24	-0.11	6/20/2022 4:54	10.35	6/20/2022 3:42	0.59	6/20/2022 5:24	28.69
6/21/2022 5:08	83.95	6/20/2022 4:25	-0.07	6/20/2022 4:55	10.35	6/20/2022 3:43	0.59	6/20/2022 5:25	28.67
6/21/2022 5:09	83.97	6/20/2022 4:26	-0.06	6/20/2022 4:56	10.37	6/20/2022 3:44	0.56	6/20/2022 5:26	28.68
6/21/2022 5:10	83.97	6/20/2022 4:27	-0.04	6/20/2022 4:57	10.36	6/20/2022 3:45	0.56	6/20/2022 5:27	28.69
6/21/2022 5:11	83.95	6/20/2022 4:28	-0.09	6/20/2022 4:58	10.39	6/20/2022 3:46	0.54	6/20/2022 5:28	28.67
6/21/2022 5:12	83.99	6/20/2022 4:29	-0.06	6/20/2022 4:59	10.43	6/20/2022 3:47	0.60	6/20/2022 5:29	28.70
6/21/2022 5:13	84.00	6/20/2022 4:30	-0.05	6/20/2022 5:00	10.46	6/20/2022 3:48	0.61	6/20/2022 5:30	28.68
6/21/2022 5:14	83.96	6/20/2022 4:31	-0.03	6/20/2022 5:01	10.49	6/20/2022 3:49	0.60	6/20/2022 5:31	28.65
6/21/2022 5:15	83.98	6/20/2022 4:32	-0.05	6/20/2022 5:02	10.55	6/20/2022 3:50	0.61	6/20/2022 5:32	28.68
6/21/2022 5:16	83.95	6/20/2022 4:33	-0.04	6/20/2022 5:03	10.57	6/20/2022 3:51	0.57	6/20/2022 5:33	28.71
6/21/2022 5:17	83.97	6/20/2022 4:34	0.00	6/20/2022 5:04	10.65	6/20/2022 3:52	0.59	6/20/2022 5:34	28.67
6/21/2022 5:18	83.95	6/20/2022 4:35	1.95	6/20/2022 5:05	10.67	6/20/2022 3:53	0.64	6/20/2022 5:35	28.71
6/21/2022 5:19	84.01	6/20/2022 4:36	7.45	6/20/2022 5:06	10.76	6/20/2022 3:54	0.63	6/20/2022 5:36	28.66
6/21/2022 5:20	83.99	6/20/2022 4:37	6.21	6/20/2022 5:07	10.79	6/20/2022 3:55	0.69	6/20/2022 5:37	28.69
6/21/2022 5:21	83.99	6/20/2022 4:38	5.14	6/20/2022 5:08	10.82	6/20/2022 3:56	0.66	6/20/2022 5:38	28.70
6/21/2022 5:22	83.99	6/20/2022 4:39	4.23	6/20/2022 5:09	10.82	6/20/2022 3:57	0.70	6/20/2022 5:39	28.68
6/21/2022 5:23	83.93	6/20/2022 4:40	3.62	6/20/2022 5:10	10.88	6/20/2022 3:58	0.71	6/20/2022 5:40	28.66
6/21/2022 5:24	83.97	6/20/2022 4:41	3.02	6/20/2022 5:11	10.90	6/20/2022 3:59	0.67	6/20/2022 5:41	28.66
6/21/2022 5:25	83.96	6/20/2022 4:42	2.48	6/20/2022 5:12	10.95	6/20/2022 4:00	0.71	6/20/2022 5:42	28.70

6/21/2022 5:26	84.01	6/20/2022 4:43	2.12	6/20/2022 5:13	10.97	6/20/2022 4:01	0.71	6/20/2022 5:43	28.66
6/21/2022 5:27	83.93	6/20/2022 4:44	1.77	6/20/2022 5:14	11.03	6/20/2022 4:02	0.66	6/20/2022 5:44	28.68
6/21/2022 5:28	84.01	6/20/2022 4:45	1.48	6/20/2022 5:15	11.02	6/20/2022 4:03	0.71	6/20/2022 5:45	28.63
6/21/2022 5:29	83.98	6/20/2022 4:46	1.23	6/20/2022 5:16	11.03	6/20/2022 4:04	0.69	6/20/2022 5:46	28.66
6/21/2022 5:30	84.03	6/20/2022 4:47	0.99	6/20/2022 5:17	11.01	6/20/2022 4:05	0.63	6/20/2022 5:47	28.70
6/21/2022 5:31	83.96	6/20/2022 4:48	0.77	6/20/2022 5:18	11.03	6/20/2022 4:06	0.60	6/20/2022 5:48	28.69
6/21/2022 5:32	83.95	6/20/2022 4:49	0.69	6/20/2022 5:19	11.03	6/20/2022 4:07	0.72	6/20/2022 5:49	28.67
6/21/2022 5:33	83.92	6/20/2022 4:50	0.46	6/20/2022 5:20	11.04	6/20/2022 4:08	0.66	6/20/2022 5:50	28.68
6/21/2022 5:34	83.99	6/20/2022 4:51	0.37	6/20/2022 5:21	11.04	6/20/2022 4:09	0.65	6/20/2022 5:51	28.73
6/21/2022 5:35	83.94	6/20/2022 4:52	0.25	6/20/2022 5:22	11.02	6/20/2022 4:10	0.66	6/20/2022 5:52	28.69
6/21/2022 5:36	83.99	6/20/2022 4:53	0.13	6/20/2022 5:23	10.99	6/20/2022 4:11	0.66	6/20/2022 5:53	28.70
6/21/2022 5:37	83.95	6/20/2022 4:54	0.09	6/20/2022 5:24	10.96	6/20/2022 4:12	0.63	6/20/2022 5:54	28.68
6/21/2022 5:38	83.97	6/20/2022 4:55	0.04	6/20/2022 5:25	10.95	6/20/2022 4:13	0.62	6/20/2022 5:55	28.66
6/21/2022 5:39	83.99	6/20/2022 4:56	-0.07	6/20/2022 5:26	10.91	6/20/2022 4:14	0.63	6/20/2022 5:56	28.66
6/21/2022 5:40	83.98	6/20/2022 4:57	-0.05	6/20/2022 5:27	10.85	6/20/2022 4:15	0.60	6/20/2022 5:57	28.70
6/21/2022 5:41	84.00	6/20/2022 4:58	-0.07	6/20/2022 5:28	10.86	6/20/2022 4:16	0.60	6/20/2022 5:58	28.68
6/21/2022 5:42	83.99	6/20/2022 4:59	-0.08	6/20/2022 5:29	10.85	6/20/2022 4:17	0.57	6/20/2022 5:59	28.70
6/21/2022 5:43	83.92	6/20/2022 5:00	-0.09	6/20/2022 5:30	10.81	6/20/2022 4:18	0.59	6/20/2022 6:00	28.68
6/21/2022 5:44	84.00	6/20/2022 5:01	-0.07	6/20/2022 5:31	10.83	6/20/2022 4:19	0.62	6/20/2022 6:01	28.69
6/21/2022 5:45	83.94	6/20/2022 5:02	-0.08	6/20/2022 5:32	10.80	6/20/2022 4:20	0.60	6/20/2022 6:02	28.66
6/21/2022 5:46	84.00	6/20/2022 5:03	-0.10	6/20/2022 5:33	10.84	6/20/2022 4:21	0.59	6/20/2022 6:03	28.67
6/21/2022 5:47	83.94	6/20/2022 5:04	-0.03	6/20/2022 5:34	10.80	6/20/2022 4:22	0.55	6/20/2022 6:04	28.67
6/21/2022 5:48	83.94	6/20/2022 5:05	-0.10	6/20/2022 5:35	10.83	6/20/2022 4:23	0.58	6/20/2022 6:05	28.70
6/21/2022 5:49	83.97	6/20/2022 5:06	-0.04	6/20/2022 5:36	10.84	6/20/2022 4:24	0.57	6/20/2022 6:06	28.65
6/21/2022 5:50	83.99	6/20/2022 5:07	-0.05	6/20/2022 5:37	10.81	6/20/2022 4:25	0.59	6/20/2022 6:07	28.69
6/21/2022 5:51	83.96	6/20/2022 5:08	-0.03	6/20/2022 5:38	10.80	6/20/2022 4:26	0.58	6/20/2022 6:08	28.68
6/21/2022 5:52	83.93	6/20/2022 5:09	-0.07	6/20/2022 5:39	10.76	6/20/2022 4:27	0.58	6/20/2022 6:09	28.68
6/21/2022 5:53	83.96	6/20/2022 5:10	-0.06	6/20/2022 5:40	10.75	6/20/2022 4:28	0.62	6/20/2022 6:10	28.68
6/21/2022 5:54	83.99	6/20/2022 5:11	-0.09	6/20/2022 5:41	10.72	6/20/2022 4:29	0.61	6/20/2022 6:11	28.69
6/21/2022 5:55	83.97	6/20/2022 5:12	-0.02	6/20/2022 5:42	10.74	6/20/2022 4:30	0.57	6/20/2022 6:12	28.63
6/21/2022 5:56	83.99	6/20/2022 5:13	-0.08	6/20/2022 5:43	10.73	6/20/2022 4:31	0.58	6/20/2022 6:13	28.68
6/21/2022 5:57	83.91	6/20/2022 5:14	-0.03	6/20/2022 5:44	10.70	6/20/2022 4:32	0.63	6/20/2022 6:14	28.68
6/21/2022 5:58	83.95	6/20/2022 5:15	-0.06	6/20/2022 5:45	10.67	6/20/2022 4:33	0.62	6/20/2022 6:15	28.68
6/21/2022 5:59	84.00	6/20/2022 5:16	-0.07	6/20/2022 5:46	10.69	6/20/2022 4:34	0.59	6/20/2022 6:16	28.68
6/21/2022 6:00	83.97	6/20/2022 5:17	-0.05	6/20/2022 5:47	10.68	6/20/2022 4:35	0.62	6/20/2022 6:17	28.64
6/21/2022 6:01	83.94	6/20/2022 5:18	-0.05	6/20/2022 5:48	10.60	6/20/2022 4:36	0.64	6/20/2022 6:18	28.67
6/21/2022 6:02	83.98	6/20/2022 5:19	-0.05	6/20/2022 5:49	10.62	6/20/2022 4:37	0.62	6/20/2022 6:19	28.65
6/21/2022 6:03	84.00	6/20/2022 5:20	-0.06	6/20/2022 5:50	10.57	6/20/2022 4:38	0.57	6/20/2022 6:20	28.67
6/21/2022 6:04	83.99	6/20/2022 5:21	-0.06	6/20/2022 5:51	10.59	6/20/2022 4:39	0.58	6/20/2022 6:21	28.66
6/21/2022 6:05	83.98	6/20/2022 5:22	-0.05	6/20/2022 5:52	10.54	6/20/2022 4:40	0.64	6/20/2022 6:22	28.70
6/21/2022 6:06	83.95	6/20/2022 5:23	-0.03	6/20/2022 5:53	10.56	6/20/2022 4:41	0.69	6/20/2022 6:23	28.68
6/21/2022 6:07	83.93	6/20/2022 5:24	-0.07	6/20/2022 5:54	10.55	6/20/2022 4:42	0.65	6/20/2022 6:24	28.69
6/21/2022 6:08	83.96	6/20/2022 5:25	-0.09	6/20/2022 5:55	10.56	6/20/2022 4:43	0.70	6/20/2022 6:25	28.66
6/21/2022 6:09	83.92	6/20/2022 5:26	-0.03	6/20/2022 5:56	10.59	6/20/2022 4:44	0.70	6/20/2022 6:26	28.68
6/21/2022 6:10	83.94	6/20/2022 5:27	-0.10	6/20/2022 5:57	10.61	6/20/2022 4:45	0.68	6/20/2022 6:27	28.68
6/21/2022 6:11	83.91	6/20/2022 5:28	-0.04	6/20/2022 5:58	10.63	6/20/2022 4:46	0.67	6/20/2022 6:28	28.67
6/21/2022 6:12	83.91	6/20/2022 5:29	-0.05	6/20/2022 5:59	10.61	6/20/2022 4:47	0.67	6/20/2022 6:29	28.68
6/21/2022 6:13	83.99	6/20/2022 5:30	-0.05	6/20/2022 6:00	10.61	6/20/2022 4:48	0.65	6/20/2022 6:30	28.70
6/21/2022 6:14	83.92	6/20/2022 5:31	-0.06	6/20/2022 6:01	10.61	6/20/2022 4:49	0.64	6/20/2022 6:31	28.70
6/21/2022 6:15	83.94	6/20/2022 5:32	-0.05	6/20/2022 6:02	10.60	6/20/2022 4:50	0.66	6/20/2022 6:32	28.68
6/21/2022 6:16	83.93	6/20/2022 5:33	-0.07	6/20/2022 6:03	10.61	6/20/2022 4:51	0.69	6/20/2022 6:33	28.68
6/21/2022 6:17	83.93	6/20/2022 5:34	-0.03	6/20/2022 6:04	10.59	6/20/2022 4:52	0.64	6/20/2022 6:34	28.70
6/21/2022 6:18	83.91	6/20/2022 5:35	-0.01	6/20/2022 6:05	10.58	6/20/2022 4:53	0.67	6/20/2022 6:35	28.68
6/21/2022 6:19	83.96	6/20/2022 5:36	-0.05	6/20/2022 6:06	10.62	6/20/2022 4:54	0.66	6/20/2022 6:36	28.71
6/21/2022 6:20	83.90	6/20/2022 5:37	-0.09	6/20/2022 6:07	10.62	6/20/2022 4:55	0.69	6/20/2022 6:37	28.65
6/21/2022 6:21	83.97	6/20/2022 5:38	-0.07	6/20/2022 6:08	10.58	6/20/2022 4:56	0.66	6/20/2022 6:38	28.67
6/21/2022 6:22	83.95	6/20/2022 5:39	0.46	6/20/2022 6:09	10.62	6/20/2022 4:57	0.67	6/20/2022 6:39	28.68
6/21/2022 6:23	83.94	6/20/2022 5:40	6.25	6/20/2022 6:10	10.61	6/20/2022 4:58	0.69	6/20/2022 6:40	28.68
6/21/2022 6:24	83.95	6/20/2022 5:41	6.40	6/20/2022 6:11	10.66	6/20/2022 4:59	0.70	6/20/2022 6:41	28.71
6/21/2022 6:25	83.92	6/20/2022 5:42	5.36	6/20/2022 6:12	10.64	6/20/2022 5:00	0.68	6/20/2022 6:42	28.69
6/21/2022 6:26	83.92	6/20/2022 5:43	4.47	6/20/2022 6:13	10.66	6/20/2022 5:01	0.63	6/20/2022 6:43	28.70
6/21/2022 6:27	83.92	6/20/2022 5:44	3.72	6/20/2022 6:14	10.62	6/20/2022 5:02	0.66	6/20/2022 6:44	28.69
6/21/2022 6:28	83.93	6/20/2022 5:45	3.10	6/20/2022 6:15	10.60	6/20/2022 5:03	0.64	6/20/2022 6:45	28.72
6/21/2022 6:29	83.94	6/20/2022 5:46	2.58	6/20/2022 6:16	10.58	6/20/2022 5:04	0.61	6/20/2022 6:46	28.70
6/21/2022 6:30	83.99	6/20/2022 5:47	2.20	6/20/2022 6:17	10.60	6/20/2022 5:05	0.67	6/20/2022 6:47	28.70
6/21/2022 6:31	83.97	6/20/2022 5:48	1.80	6/20/2022 6:18	10.61	6/20/2022 5:06	0.67	6/20/2022 6:48	28.69
6/21/2022 6:32	83.94	6/20/2022 5:49	1.48	6/20/2022 6:19	10.57	6/20/2022 5:07	0.66	6/20/2022 6:49	28.69
6/21/2022 6:33	83.94	6/20/2022 5:50	1.28	6/20/2022 6:20	10.55	6/20/2022 5:08	0.63	6/20/2022 6:50	28.68
6/21/2022 6:34	83.91	6/20/2022 5:51	1.02	6/20/2022 6:21	10.58	6/20/2022 5:09	0.62	6/20/2022 6:51	28.66
6/21/2022 6:35	83.92	6/20/2022 5:52	0.87	6/20/2022 6:22	10.56	6/20/2022 5:10	0.66	6/20/2022 6:52	28.70
6/21/2022 6:36	83.93	6/20/2022 5:53	0.68	6/20/2022 6:23	10.55	6/20/2022 5:11	0.65	6/20/2022 6:53	28.67
6/21/2022 6:37	83.99	6/20/2022 5:54	0.54	6/20/2022 6:24	10.60	6/20/2022 5:12	0.69	6/20/2022 6:54	28.63
6/21/2022 6:38	83.87	6/20/2022 5:55	0.43	6/20/2022 6:25	10.65	6/20/2022 5:13	0.66	6/20/2022 6:55	28.70
6/21/2022 6:39	83.95	6/20/2022 5:56	0.29	6/20/2022 6:26	10.62	6/20/2022 5:14	0.66	6/20/2022 6:56	28.68
6/21/2022 6:40	83.93	6/20/2022 5:57	0.20	6/20/2022 6:27	10.64	6/20/2022 5:15	0.65	6/20/2022 6:57	28.68
6/21/2022 6:41	83.92	6/20/2022 5:58	0.10	6/20/2022 6:28	10.62	6/20/2022 5:16	0.63	6/20/2022 6:58	28.67
6/21/2022 6:42	83.98	6/20/2022 5:59	0.07	6/20/2022 6:29	10.64	6/20/2022 5:17	0.64	6/20/2022 6:59	28.70
6/21/2022 6:43	83.95	6/20/2022 6:00	0.01	6/20/2022 6:30	10.65	6/20/2022 5:18	0.67	6/20/2022 7:00	28.69
6/21/2022 6:44	83.90	6/20/2022 6:01	-0.06	6/20/2022 6:31	10.63	6/20/2022 5:19	0.67	6/20/2022 7:01	28.68
6/21/2022 6:45	83.90	6/20/2022 6:02	-0.07	6/20/2022 6:32	10.65	6/20/2022 5:20	0.68	6/20/2022 7:02	30.92
6/21/2022 6:46	85.75	6/20/2022 6:03	-0.05	6/20/2022 6:33	10.69	6/20/2022 5:21	0.67	6/20/2022 7:03	29.89
6/21/2022 6:47	89.46	6/20/2022 6:04	-0.09	6/20/2022 6:34	10.69	6/20/2022 5:22	0.64	6/20/2022 7:04	31.09
6/21/2022 6:48	91.74	6/20/2022 6:05	-0.05	6/20/2022 6:35	10.74	6/20/2022 5:23	0.69	6/20/2022 7:05	32.14
6/21/2022 6:49	92.98	6/20/2022 6:06	-0.10	6/20/2022 6:36	10.73	6/20/2022 5:24	0.68	6/20/2022 7:06	30.57
6/21/2022 6:50	90.19	6/20/2022 6:07	-0.05	6/20/2022 6:37	10.72	6/20/2022 5:25	0.68	6/20/2022 7:07	31.58
6/21/2022 6:51	88.24	6/20/2022 6:08	-0.04	6/20/2022 6:38	10.74	6/20/2022 5:26	0.64	6/20/2022 7:08	32.38
6/21/2022 6:52	87.08	6/20/2022 6:09	-0.04	6/20/2022 6:39	10.74	6/20/2022 5:27	0.65	6/20/2022 7:09	30.80
6/21/2022 6:53	86.32	6/20/2022 6:10	-0.05	6/20/2022 6:40	10.72	6/20/2022 5:28	0.65	6/20/2022 7:10	31.82

6/21/2022 6:54	85.78	6/20/2022 6:11	-0.06	6/20/2022 6:41	10.71	6/20/2022 5:29	0.65	6/20/2022 7:11	32.44
6/21/2022 6:55	85.45	6/20/2022 6:12	-0.05	6/20/2022 6:42	10.69	6/20/2022 5:30	0.64	6/20/2022 7:12	30.93
6/21/2022 6:56	85.28	6/20/2022 6:13	-0.06	6/20/2022 6:43	10.70	6/20/2022 5:31	0.60	6/20/2022 7:13	31.91
6/21/2022 6:57	85.08	6/20/2022 6:14	-0.04	6/20/2022 6:44	10.71	6/20/2022 5:32	0.61	6/20/2022 7:14	32.46
6/21/2022 6:58	84.97	6/20/2022 6:15	-0.05	6/20/2022 6:45	10.69	6/20/2022 5:33	0.59	6/20/2022 7:15	31.05
6/21/2022 6:59	84.88	6/20/2022 6:16	-0.04	6/20/2022 6:46	10.71	6/20/2022 5:34	0.58	6/20/2022 7:16	32.01
6/21/2022 7:00	84.79	6/20/2022 6:17	-0.03	6/20/2022 6:47	10.72	6/20/2022 5:35	0.59	6/20/2022 7:17	32.46
6/21/2022 7:01	84.76	6/20/2022 6:18	-0.07	6/20/2022 6:48	10.70	6/20/2022 5:36	0.56	6/20/2022 7:18	31.09
6/21/2022 7:02	84.66	6/20/2022 6:19	-0.04	6/20/2022 6:49	10.70	6/20/2022 5:37	0.54	6/20/2022 7:19	32.08
6/21/2022 7:03	84.66	6/20/2022 6:20	-0.06	6/20/2022 6:50	10.74	6/20/2022 5:38	0.55	6/20/2022 7:20	32.49
6/21/2022 7:04	84.59	6/20/2022 6:21	-0.10	6/20/2022 6:51	10.69	6/20/2022 5:39	0.53	6/20/2022 7:21	31.09
6/21/2022 7:05	84.60	6/20/2022 6:22	-0.09	6/20/2022 6:52	10.66	6/20/2022 5:40	0.60	6/20/2022 7:22	32.12
6/21/2022 7:06	84.54	6/20/2022 6:23	-0.05	6/20/2022 6:53	10.66	6/20/2022 5:41	0.58	6/20/2022 7:23	31.75
6/21/2022 7:07	84.53	6/20/2022 6:24	-0.05	6/20/2022 6:54	10.65	6/20/2022 5:42	0.60	6/20/2022 7:24	31.32
6/21/2022 7:08	84.47	6/20/2022 6:25	-0.04	6/20/2022 6:55	10.67	6/20/2022 5:43	0.69	6/20/2022 7:25	32.52
6/21/2022 7:09	84.48	6/20/2022 6:26	-0.03	6/20/2022 6:56	10.63	6/20/2022 5:44	0.62	6/20/2022 7:26	30.82
6/21/2022 7:10	84.42	6/20/2022 6:27	-0.07	6/20/2022 6:57	10.61	6/20/2022 5:45	0.53	6/20/2022 7:27	31.89
6/21/2022 7:11	84.44	6/20/2022 6:28	-0.04	6/20/2022 6:58	10.59	6/20/2022 5:46	0.56	6/20/2022 7:28	31.48
6/21/2022 7:12	84.43	6/20/2022 6:29	0.01	6/20/2022 6:59	10.60	6/20/2022 5:47	0.61	6/20/2022 7:29	31.31
6/21/2022 7:13	84.42	6/20/2022 6:30	0.05	6/20/2022 7:00	10.58	6/20/2022 5:48	0.58	6/20/2022 7:30	32.59
6/21/2022 7:14	84.44	6/20/2022 6:31	0.05	6/20/2022 7:01	10.56	6/20/2022 5:49	0.64	6/20/2022 7:31	30.83
6/21/2022 7:15	84.42	6/20/2022 6:32	0.01	6/20/2022 7:02	10.54	6/20/2022 5:50	0.65	6/20/2022 7:32	31.98
6/21/2022 7:16	84.35	6/20/2022 6:33	-0.06	6/20/2022 7:03	10.54	6/20/2022 5:51	0.65	6/20/2022 7:33	31.33
6/21/2022 7:17	84.42	6/20/2022 6:34	-0.05	6/20/2022 7:04	10.54	6/20/2022 5:52	0.66	6/20/2022 7:34	31.43
6/21/2022 7:18	84.44	6/20/2022 6:35	-0.07	6/20/2022 7:05	10.50	6/20/2022 5:53	0.64	6/20/2022 7:35	32.53
6/21/2022 7:19	84.36	6/20/2022 6:36	-0.06	6/20/2022 7:06	10.48	6/20/2022 5:54	0.65	6/20/2022 7:36	30.90
6/21/2022 7:20	84.36	6/20/2022 6:37	-0.04	6/20/2022 7:07	10.48	6/20/2022 5:55	0.63	6/20/2022 7:37	32.09
6/21/2022 7:21	84.35	6/20/2022 6:38	-0.03	6/20/2022 7:08	10.48	6/20/2022 5:56	0.61	6/20/2022 7:38	31.31
6/21/2022 7:22	84.31	6/20/2022 6:39	-0.05	6/20/2022 7:09	10.49	6/20/2022 5:57	0.64	6/20/2022 7:39	31.50
6/21/2022 7:23	84.35	6/20/2022 6:40	-0.08	6/20/2022 7:10	10.51	6/20/2022 5:58	0.64	6/20/2022 7:40	32.49
6/21/2022 7:24	84.32	6/20/2022 6:41	-0.04	6/20/2022 7:11	10.47	6/20/2022 5:59	0.61	6/20/2022 7:41	31.02
6/21/2022 7:25	84.28	6/20/2022 6:42	-0.05	6/20/2022 7:12	10.48	6/20/2022 6:00	0.61	6/20/2022 7:42	33.88
6/21/2022 7:26	84.31	6/20/2022 6:43	2.18	6/20/2022 7:13	10.51	6/20/2022 6:01	0.60	6/20/2022 7:43	35.36
6/21/2022 7:27	84.34	6/20/2022 6:44	7.39	6/20/2022 7:14	10.51	6/20/2022 6:02	0.61	6/20/2022 7:44	36.40
6/21/2022 7:28	84.29	6/20/2022 6:45	6.09	6/20/2022 7:15	10.51	6/20/2022 6:03	0.57	6/20/2022 7:45	37.10
6/21/2022 7:29	84.26	6/20/2022 6:46	5.06	6/20/2022 7:16	10.54	6/20/2022 6:04	0.56	6/20/2022 7:46	37.48
6/21/2022 7:30	84.34	6/20/2022 6:47	4.29	6/20/2022 7:17	10.59	6/20/2022 6:05	0.57	6/20/2022 7:47	37.43
6/21/2022 7:31	84.31	6/20/2022 6:48	3.55	6/20/2022 7:18	10.60	6/20/2022 6:06	0.53	6/20/2022 7:48	37.51
6/21/2022 7:32	84.27	6/20/2022 6:49	2.97	6/20/2022 7:19	10.62	6/20/2022 6:07	0.52	6/20/2022 7:49	37.81
6/21/2022 7:33	84.31	6/20/2022 6:50	2.46	6/20/2022 7:20	10.65	6/20/2022 6:08	0.55	6/20/2022 7:50	38.06
6/21/2022 7:34	84.30	6/20/2022 6:51	2.12	6/20/2022 7:21	10.69	6/20/2022 6:09	0.58	6/20/2022 7:51	38.30
6/21/2022 7:35	84.21	6/20/2022 6:52	1.75	6/20/2022 7:22	10.67	6/20/2022 6:10	0.56	6/20/2022 7:52	38.47
6/21/2022 7:36	84.24	6/20/2022 6:53	1.46	6/20/2022 7:23	10.67	6/20/2022 6:11	0.54	6/20/2022 7:53	38.64
6/21/2022 7:37	84.22	6/20/2022 6:54	1.19	6/20/2022 7:24	10.68	6/20/2022 6:12	0.56	6/20/2022 7:54	38.75
6/21/2022 7:38	84.25	6/20/2022 6:55	0.99	6/20/2022 7:25	10.68	6/20/2022 6:13	0.53	6/20/2022 7:55	38.92
6/21/2022 7:39	84.27	6/20/2022 6:56	0.80	6/20/2022 7:26	10.69	6/20/2022 6:14	0.58	6/20/2022 7:56	38.98
6/21/2022 7:40	84.24	6/20/2022 6:57	0.62	6/20/2022 7:27	10.75	6/20/2022 6:15	0.58	6/20/2022 7:57	39.09
6/21/2022 7:41	84.24	6/20/2022 6:58	0.48	6/20/2022 7:28	10.73	6/20/2022 6:16	0.55	6/20/2022 7:58	39.23
6/21/2022 7:42	84.19	6/20/2022 6:59	0.41	6/20/2022 7:29	10.76	6/20/2022 6:17	0.51	6/20/2022 7:59	38.97
6/21/2022 7:43	84.19	6/20/2022 7:00	0.26	6/20/2022 7:30	10.74	6/20/2022 6:18	0.55	6/20/2022 8:00	38.65
6/21/2022 7:44	84.25	6/20/2022 7:01	0.17	6/20/2022 7:31	10.76	6/20/2022 6:19	0.55	6/20/2022 8:01	38.61
6/21/2022 7:45	84.28	6/20/2022 7:02	0.11	6/20/2022 7:32	10.72	6/20/2022 6:20	0.52	6/20/2022 8:02	37.96
6/21/2022 7:46	84.19	6/20/2022 7:03	0.08	6/20/2022 7:33	10.72	6/20/2022 6:21	0.54	6/20/2022 8:03	37.22
6/21/2022 7:47	84.22	6/20/2022 7:04	-0.03	6/20/2022 7:34	10.77	6/20/2022 6:22	0.58	6/20/2022 8:04	37.34
6/21/2022 7:48	84.27	6/20/2022 7:05	-0.07	6/20/2022 7:35	10.77	6/20/2022 6:23	0.57	6/20/2022 8:05	36.18
6/21/2022 7:49	84.16	6/20/2022 7:06	-0.03	6/20/2022 7:36	10.78	6/20/2022 6:24	0.61	6/20/2022 8:06	34.86
6/21/2022 7:50	84.25	6/20/2022 7:07	-0.08	6/20/2022 7:37	10.78	6/20/2022 6:25	0.61	6/20/2022 8:07	33.86
6/21/2022 7:51	84.20	6/20/2022 7:08	-0.08	6/20/2022 7:38	10.73	6/20/2022 6:26	0.61	6/20/2022 8:08	34.41
6/21/2022 7:52	84.26	6/20/2022 7:09	-0.04	6/20/2022 7:39	10.76	6/20/2022 6:27	0.60	6/20/2022 8:09	32.16
6/21/2022 7:53	84.17	6/20/2022 7:10	-0.05	6/20/2022 7:40	10.72	6/20/2022 6:28	4.35	6/20/2022 8:10	32.93
6/21/2022 7:54	84.21	6/20/2022 7:11	-0.05	6/20/2022 7:41	10.74	6/20/2022 6:29	8.16	6/20/2022 8:11	33.33
6/21/2022 7:55	84.18	6/20/2022 7:12	-0.05	6/20/2022 7:42	10.73	6/20/2022 6:30	4.94	6/20/2022 8:12	31.90
6/21/2022 7:56	84.23	6/20/2022 7:13	-0.07	6/20/2022 7:43	10.74	6/20/2022 6:31	2.50	6/20/2022 8:13	32.80
6/21/2022 7:57	84.18	6/20/2022 7:14	-0.03	6/20/2022 7:44	10.75	6/20/2022 6:32	0.71	6/20/2022 8:14	32.38
6/21/2022 7:58	84.18	6/20/2022 7:15	4.73	6/20/2022 7:45	10.72	6/20/2022 6:33	0.60	6/20/2022 8:15	31.98
6/21/2022 7:59	84.19	6/20/2022 7:16	9.29	6/20/2022 7:46	10.73	6/20/2022 6:34	0.58	6/20/2022 8:16	33.18
6/21/2022 8:00	84.15	6/20/2022 7:17	7.71	6/20/2022 7:47	10.74	6/20/2022 6:35	0.54	6/20/2022 8:17	31.47
6/21/2022 8:01	84.20	6/20/2022 7:18	6.41	6/20/2022 7:48	10.77	6/20/2022 6:36	0.54	6/20/2022 8:18	32.58
6/21/2022 8:02	84.14	6/20/2022 7:19	5.34	6/20/2022 7:49	10.73	6/20/2022 6:37	0.53	6/20/2022 8:19	31.96
6/21/2022 8:03	84.19	6/20/2022 7:20	4.67	6/20/2022 7:50	10.72	6/20/2022 6:38	0.52	6/20/2022 8:20	31.98
6/21/2022 8:04	84.20	6/20/2022 7:21	10.03	6/20/2022 7:51	10.74	6/20/2022 6:39	0.55	6/20/2022 8:21	33.11
6/21/2022 8:05	84.21	6/20/2022 7:22	12.04	6/20/2022 7:52	10.74	6/20/2022 6:40	0.57	6/20/2022 8:22	31.46
6/21/2022 8:06	84.13	6/20/2022 7:23	10.11	6/20/2022 7:53	10.72	6/20/2022 6:41	0.60	6/20/2022 8:23	30.42
6/21/2022 8:07	84.17	6/20/2022 7:24	8.43	6/20/2022 7:54	10.73	6/20/2022 6:42	0.59	6/20/2022 8:24	29.95
6/21/2022 8:08	84.16	6/20/2022 7:25	7.14	6/20/2022 7:55	10.72	6/20/2022 6:43	0.55	6/20/2022 8:25	29.73
6/21/2022 8:09	84.13	6/20/2022 7:26	5.94	6/20/2022 7:56	10.73	6/20/2022 6:44	0.54	6/20/2022 8:26	29.68
6/21/2022 8:10	84.12	6/20/2022 7:27	5.07	6/20/2022 7:57	10.76	6/20/2022 6:45	0.56	6/20/2022 8:27	29.63
6/21/2022 8:11	84.17	6/20/2022 7:28	4.29	6/20/2022 7:58	10.77	6/20/2022 6:46	0.57	6/20/2022 8:28	29.56
6/21/2022 8:12	84.16	6/20/2022 7:29	3.63	6/20/2022 7:59	10.82	6/20/2022 6:47	0.57	6/20/2022 8:29	29.56
6/21/2022 8:13	84.13	6/20/2022 7:30	3.00	6/20/2022 8:00	10.86	6/20/2022 6:48	0.63	6/20/2022 8:30	29.52
6/21/2022 8:14	84.20	6/20/2022 7:31	2.54	6/20/2022 8:01	10.83	6/20/2022 6:49	0.64	6/20/2022 8:31	29.52
6/21/2022 8:15	84.17	6/20/2022 7:32	2.17	6/20/2022 8:02	10.86	6/20/2022 6:50	0.64	6/20/2022 8:32	29.55
6/21/2022 8:16	84.16	6/20/2022 7:33	1.85	6/20/2022 8:03	10.90	6/20/2022 6:51	0.60	6/20/2022 8:33	29.50
6/21/2022 8:17	84.11	6/20/2022 7:34	1.58	6/20/2022 8:04	10.93	6/20/2022 6:52	0.55	6/20/2022 8:34	29.48
6/21/2022 8:18	84.13	6/20/2022 7:35	1.31	6/20/2022 8:05	10.97	6/20/2022 6:53	0.57	6/20/2022 8:35	29.47
6/21/2022 8:19	84.22	6/20/2022 7:36	1.10	6/20/2022 8:06	10.99	6/20/2022 6:54	0.58	6/20/2022 8:36	29.43
6/21/2022 8:20	84.16	6/20/2022 7:37	0.89	6/20/2022 8:07	11.00	6/20/2022 6:55	0.54	6/20/2022 8:37	29.44
6/21/2022 8:21	84.14	6/20/2022 7:38	0.92	6/20/2022 8:08	11.03	6/20/2022 6:56	0.53	6/20/2022 8:38	29.40

6/21/2022 8:22	84.17	6/20/2022 7:39	6.81	6/20/2022 8:09	11.03	6/20/2022 6:57	0.53	6/20/2022 8:39	29.42
6/21/2022 8:23	84.11	6/20/2022 7:40	10.31	6/20/2022 8:10	11.07	6/20/2022 6:58	0.52	6/20/2022 8:40	29.40
6/21/2022 8:24	84.15	6/20/2022 7:41	8.61	6/20/2022 8:11	11.08	6/20/2022 6:59	0.56	6/20/2022 8:41	29.37
6/21/2022 8:25	84.16	6/20/2022 7:42	7.22	6/20/2022 8:12	11.08	6/20/2022 7:00	0.52	6/20/2022 8:42	29.33
6/21/2022 8:26	84.12	6/20/2022 7:43	6.07	6/20/2022 8:13	11.09	6/20/2022 7:01	0.54	6/20/2022 8:43	29.34
6/21/2022 8:27	84.15	6/20/2022 7:44	5.09	6/20/2022 8:14	11.07	6/20/2022 7:02	0.52	6/20/2022 8:44	29.34
6/21/2022 8:28	84.11	6/20/2022 7:45	4.28	6/20/2022 8:15	11.05	6/20/2022 7:03	0.55	6/20/2022 8:45	29.33
6/21/2022 8:29	84.16	6/20/2022 7:46	3.64	6/20/2022 8:16	11.02	6/20/2022 7:04	0.56	6/20/2022 8:46	29.36
6/21/2022 8:30	84.19	6/20/2022 7:47	3.02	6/20/2022 8:17	10.98	6/20/2022 7:05	0.56	6/20/2022 8:47	29.31
6/21/2022 8:31	84.15	6/20/2022 7:48	2.57	6/20/2022 8:18	10.99	6/20/2022 7:06	0.56	6/20/2022 8:48	29.44
6/21/2022 8:32	84.07	6/20/2022 7:49	2.19	6/20/2022 8:19	10.96	6/20/2022 7:07	0.58	6/20/2022 8:49	31.05
6/21/2022 8:33	84.10	6/20/2022 7:50	1.83	6/20/2022 8:20	10.93	6/20/2022 7:08	0.62	6/20/2022 8:50	30.02
6/21/2022 8:34	84.17	6/20/2022 7:51	1.59	6/20/2022 8:21	10.91	6/20/2022 7:09	0.63	6/20/2022 8:51	29.55
6/21/2022 8:35	84.08	6/20/2022 7:52	1.31	6/20/2022 8:22	10.91	6/20/2022 7:10	0.66	6/20/2022 8:52	29.37
6/21/2022 8:36	84.13	6/20/2022 7:53	1.05	6/20/2022 8:23	10.87	6/20/2022 7:11	0.63	6/20/2022 8:53	29.31
6/21/2022 8:37	86.88	6/20/2022 7:54	0.91	6/20/2022 8:24	10.86	6/20/2022 7:12	0.60	6/20/2022 8:54	29.28
6/21/2022 8:38	90.10	6/20/2022 7:55	0.76	6/20/2022 8:25	10.81	6/20/2022 7:13	0.61	6/20/2022 8:55	29.30
6/21/2022 8:39	92.11	6/20/2022 7:56	0.63	6/20/2022 8:26	10.83	6/20/2022 7:14	0.63	6/20/2022 8:56	29.24
6/21/2022 8:40	93.43	6/20/2022 7:57	0.63	6/20/2022 8:27	10.76	6/20/2022 7:15	0.64	6/20/2022 8:57	29.28
6/21/2022 8:41	92.84	6/20/2022 7:58	0.55	6/20/2022 8:28	10.78	6/20/2022 7:16	0.63	6/20/2022 8:58	29.25
6/21/2022 8:42	90.14	6/20/2022 7:59	0.44	6/20/2022 8:29	10.73	6/20/2022 7:17	0.59	6/20/2022 8:59	29.22
6/21/2022 8:43	88.45	6/20/2022 8:00	0.36	6/20/2022 8:30	10.74	6/20/2022 7:18	0.58	6/20/2022 9:00	29.24
6/21/2022 8:44	87.30	6/20/2022 8:01	0.22	6/20/2022 8:31	10.71	6/20/2022 7:19	0.56	6/20/2022 9:01	29.23
6/21/2022 8:45	86.64	6/20/2022 8:02	0.20	6/20/2022 8:32	10.68	6/20/2022 7:20	0.59	6/20/2022 9:02	29.25
6/21/2022 8:46	86.14	6/20/2022 8:03	0.17	6/20/2022 8:33	10.74	6/20/2022 7:21	0.64	6/20/2022 9:03	29.23
6/21/2022 8:47	85.77	6/20/2022 8:04	0.08	6/20/2022 8:34	10.74	6/20/2022 7:22	0.62	6/20/2022 9:04	29.21
6/21/2022 8:48	85.55	6/20/2022 8:05	0.01	6/20/2022 8:35	10.73	6/20/2022 7:23	0.54	6/20/2022 9:05	29.22
6/21/2022 8:49	85.38	6/20/2022 8:06	-0.04	6/20/2022 8:36	10.74	6/20/2022 7:24	0.60	6/20/2022 9:06	29.23
6/21/2022 8:50	85.31	6/20/2022 8:07	-0.07	6/20/2022 8:37	10.75	6/20/2022 7:25	0.64	6/20/2022 9:07	29.26
6/21/2022 8:51	85.23	6/20/2022 8:08	0.93	6/20/2022 8:38	10.70	6/20/2022 7:26	0.51	6/20/2022 9:08	29.27
6/21/2022 8:52	85.17	6/20/2022 8:09	6.73	6/20/2022 8:39	10.71	6/20/2022 7:27	0.56	6/20/2022 9:09	29.26
6/21/2022 8:53	85.05	6/20/2022 8:10	7.74	6/20/2022 8:40	10.70	6/20/2022 7:28	0.66	6/20/2022 9:10	29.24
6/21/2022 8:54	85.03	6/20/2022 8:11	6.45	6/20/2022 8:41	10.68	6/20/2022 7:29	0.60	6/20/2022 9:11	29.20
6/21/2022 8:55	84.97	6/20/2022 8:12	5.39	6/20/2022 8:42	10.70	6/20/2022 7:30	0.51	6/20/2022 9:12	29.22
6/21/2022 8:56	84.89	6/20/2022 8:13	4.50	6/20/2022 8:43	10.68	6/20/2022 7:31	0.58	6/20/2022 9:13	29.19
6/21/2022 8:57	84.89	6/20/2022 8:14	3.80	6/20/2022 8:44	10.62	6/20/2022 7:32	0.54	6/20/2022 9:14	29.19
6/21/2022 8:58	84.89	6/20/2022 8:15	3.21	6/20/2022 8:45	10.63	6/20/2022 7:33	0.54	6/20/2022 9:15	29.20
6/21/2022 8:59	84.83	6/20/2022 8:16	2.68	6/20/2022 8:46	10.64	6/20/2022 7:34	0.55	6/20/2022 9:16	29.17
6/21/2022 9:00	84.78	6/20/2022 8:17	2.24	6/20/2022 8:47	10.61	6/20/2022 7:35	0.55	6/20/2022 9:17	29.16
6/21/2022 9:01	84.79	6/20/2022 8:18	1.88	6/20/2022 8:48	10.63	6/20/2022 7:36	0.51	6/20/2022 9:18	29.16
6/21/2022 9:02	84.81	6/20/2022 8:19	1.61	6/20/2022 8:49	10.58	6/20/2022 7:37	0.49	6/20/2022 9:19	29.18
6/21/2022 9:03	84.73	6/20/2022 8:20	1.33	6/20/2022 8:50	10.56	6/20/2022 7:38	0.54	6/20/2022 9:20	29.16
6/21/2022 9:04	84.71	6/20/2022 8:21	1.15	6/20/2022 8:51	10.60	6/20/2022 7:39	0.57	6/20/2022 9:21	29.14
6/21/2022 9:05	84.66	6/20/2022 8:22	0.95	6/20/2022 8:52	10.59	6/20/2022 7:40	0.55	6/20/2022 9:22	29.14
6/21/2022 9:06	84.65	6/20/2022 8:23	0.74	6/20/2022 8:53	10.60	6/20/2022 7:41	0.57	6/20/2022 9:23	29.12
6/21/2022 9:07	84.67	6/20/2022 8:24	0.63	6/20/2022 8:54	10.59	6/20/2022 7:42	0.52	6/20/2022 9:24	29.09
6/21/2022 9:08	84.67	6/20/2022 8:25	0.50	6/20/2022 8:55	10.63	6/20/2022 7:43	0.51	6/20/2022 9:25	29.14
6/21/2022 9:09	84.61	6/20/2022 8:26	0.37	6/20/2022 8:56	10.65	6/20/2022 7:44	0.65	6/20/2022 9:26	31.24
6/21/2022 9:10	84.60	6/20/2022 8:27	0.26	6/20/2022 8:57	10.63	6/20/2022 7:45	0.55	6/20/2022 9:27	30.01
6/21/2022 9:11	84.58	6/20/2022 8:28	0.24	6/20/2022 8:58	10.64	6/20/2022 7:46	0.52	6/20/2022 9:28	29.47
6/21/2022 9:12	84.61	6/20/2022 8:29	0.11	6/20/2022 8:59	10.64	6/20/2022 7:47	0.52	6/20/2022 9:29	29.25
6/21/2022 9:13	84.61	6/20/2022 8:30	0.04	6/20/2022 9:00	10.62	6/20/2022 7:48	0.57	6/20/2022 9:30	29.16
6/21/2022 9:14	84.52	6/20/2022 8:31	0.03	6/20/2022 9:01	10.63	6/20/2022 7:49	0.58	6/20/2022 9:31	29.16
6/21/2022 9:15	84.54	6/20/2022 8:32	-0.04	6/20/2022 9:02	10.62	6/20/2022 7:50	0.58	6/20/2022 9:32	29.15
6/21/2022 9:16	84.55	6/20/2022 8:33	-0.07	6/20/2022 9:03	10.60	6/20/2022 7:51	0.57	6/20/2022 9:33	29.17
6/21/2022 9:17	84.58	6/20/2022 8:34	-0.05	6/20/2022 9:04	10.62	6/20/2022 7:52	0.61	6/20/2022 9:34	29.17
6/21/2022 9:18	84.55	6/20/2022 8:35	-0.03	6/20/2022 9:05	10.60	6/20/2022 7:53	0.62	6/20/2022 9:35	29.11
6/21/2022 9:19	84.48	6/20/2022 8:36	-0.07	6/20/2022 9:06	10.62	6/20/2022 7:54	0.61	6/20/2022 9:36	29.14
6/21/2022 9:20	84.48	6/20/2022 8:37	-0.07	6/20/2022 9:07	10.62	6/20/2022 7:55	0.61	6/20/2022 9:37	29.07
6/21/2022 9:21	84.55	6/20/2022 8:38	-0.05	6/20/2022 9:08	10.64	6/20/2022 7:56	4.28	6/20/2022 9:38	29.09
6/21/2022 9:22	84.48	6/20/2022 8:39	-0.04	6/20/2022 9:09	10.64	6/20/2022 7:57	6.85	6/20/2022 9:39	29.10
6/21/2022 9:23	84.51	6/20/2022 8:40	-0.06	6/20/2022 9:10	10.66	6/20/2022 7:58	3.94	6/20/2022 9:40	29.12
6/21/2022 9:24	84.46	6/20/2022 8:41	-0.06	6/20/2022 9:11	10.67	6/20/2022 7:59	1.77	6/20/2022 9:41	29.07
6/21/2022 9:25	84.49	6/20/2022 8:42	-0.04	6/20/2022 9:12	10.69	6/20/2022 8:00	0.49	6/20/2022 9:42	29.09
6/21/2022 9:26	84.50	6/20/2022 8:43	-0.07	6/20/2022 9:13	10.70	6/20/2022 8:01	0.49	6/20/2022 9:43	29.07
6/21/2022 9:27	84.47	6/20/2022 8:44	-0.06	6/20/2022 9:14	10.64	6/20/2022 8:02	0.57	6/20/2022 9:44	29.08
6/21/2022 9:28	84.52	6/20/2022 8:45	-0.07	6/20/2022 9:15	10.63	6/20/2022 8:03	0.55	6/20/2022 9:45	29.07
6/21/2022 9:29	84.53	6/20/2022 8:46	3.63	6/20/2022 9:16	10.62	6/20/2022 8:04	0.57	6/20/2022 9:46	29.10
6/21/2022 9:30	84.48	6/20/2022 8:47	8.47	6/20/2022 9:17	10.66	6/20/2022 8:05	0.60	6/20/2022 9:47	29.07
6/21/2022 9:31	84.53	6/20/2022 8:48	7.28	6/20/2022 9:18	10.68	6/20/2022 8:06	0.57	6/20/2022 9:48	29.07
6/21/2022 9:32	84.49	6/20/2022 8:49	6.07	6/20/2022 9:19	10.73	6/20/2022 8:07	0.57	6/20/2022 9:49	29.05
6/21/2022 9:33	84.52	6/20/2022 8:50	5.08	6/20/2022 9:20	10.73	6/20/2022 8:08	0.55	6/20/2022 9:50	29.05
6/21/2022 9:34	84.49	6/20/2022 8:51	4.28	6/20/2022 9:21	10.78	6/20/2022 8:09	0.59	6/20/2022 9:51	29.10
6/21/2022 9:35	84.45	6/20/2022 8:52	3.60	6/20/2022 9:22	10.75	6/20/2022 8:10	0.61	6/20/2022 9:52	29.09
6/21/2022 9:36	84.48	6/20/2022 8:53	3.00	6/20/2022 9:23	10.78	6/20/2022 8:11	0.60	6/20/2022 9:53	29.03
6/21/2022 9:37	84.44	6/20/2022 8:54	2.53	6/20/2022 9:24	10.83	6/20/2022 8:12	0.53	6/20/2022 9:54	29.04
6/21/2022 9:38	84.45	6/20/2022 8:55	2.10	6/20/2022 9:25	10.83	6/20/2022 8:13	0.55	6/20/2022 9:55	29.04
6/21/2022 9:39	84.42	6/20/2022 8:56	1.74	6/20/2022 9:26	10.82	6/20/2022 8:14	0.61	6/20/2022 9:56	29.05
6/21/2022 9:40	84.42	6/20/2022 8:57	1.49	6/20/2022 9:27	10.81	6/20/2022 8:15	0.66	6/20/2022 9:57	29.03
6/21/2022 9:41	84.42	6/20/2022 8:58	1.32	6/20/2022 9:28	10.83	6/20/2022 8:16	0.64	6/20/2022 9:58	29.03
6/21/2022 9:42	84.41	6/20/2022 8:59	1.21	6/20/2022 9:29	10.80	6/20/2022 8:17	0.59	6/20/2022 9:59	29.06
6/21/2022 9:43	84.42	6/20/2022 9:00	1.10	6/20/2022 9:30	10.79	6/20/2022 8:18	0.59	6/20/2022 10:00	29.05
6/21/2022 9:44	84.45	6/20/2022 9:01	0.98	6/20/2022 9:31	10.80	6/20/2022 8:19	0.58	6/20/2022 10:01	29.01
6/21/2022 9:45	84.45	6/20/2022 9:02	0.81	6/20/2022 9:32	10.78	6/20/2022 8:20	0.56	6/20/2022 10:02	29.01
6/21/2022 9:46	84.44	6/20/2022 9:03	5.82	6/20/2022 9:33	10.76	6/20/2022 8:21	0.55	6/20/2022 10:03	29.01
6/21/2022 9:47	84.41	6/20/2022 9:04	8.40	6/20/2022 9:34	10.74	6/20/2022 8:22	0.54	6/20/2022 10:04	29.03
6/21/2022 9:48	84.43	6/20/2022 9:05	7.01	6/20/2022 9:35	14.69	6/20/2022 8:23	0.54	6/20/2022 10:05	29.02
6/21/2022 9:49	84.42	6/20/2022 9:06	6.02	6/20/2022 9:36	14.17	6/20/2022 8:24	0.59	6/20/2022 10:06	29.01

6/21/2022 9:50	84.40	6/20/2022 9:07	5.16	6/20/2022 9:37	13.72	6/20/2022 8:25	0.60	6/20/2022 10:07	29.00
6/21/2022 9:51	84.39	6/20/2022 9:08	4.42	6/20/2022 9:38	13.40	6/20/2022 8:26	0.62	6/20/2022 10:08	29.02
6/21/2022 9:52	84.41	6/20/2022 9:09	3.82	6/20/2022 9:39	13.04	6/20/2022 8:27	0.57	6/20/2022 10:09	29.03
6/21/2022 9:53	84.42	6/20/2022 9:10	3.16	6/20/2022 9:40	12.83	6/20/2022 8:28	0.59	6/20/2022 10:10	29.03
6/21/2022 9:54	84.40	6/20/2022 9:11	2.67	6/20/2022 9:41	12.59	6/20/2022 8:29	0.59	6/20/2022 10:11	29.00
6/21/2022 9:55	84.39	6/20/2022 9:12	2.25	6/20/2022 9:42	12.40	6/20/2022 8:30	0.62	6/20/2022 10:12	29.03
6/21/2022 9:56	84.41	6/20/2022 9:13	1.99	6/20/2022 9:43	12.21	6/20/2022 8:31	0.58	6/20/2022 10:13	28.97
6/21/2022 9:57	84.41	6/20/2022 9:14	1.83	6/20/2022 9:44	12.04	6/20/2022 8:32	0.63	6/20/2022 10:14	29.02
6/21/2022 9:58	84.36	6/20/2022 9:15	1.61	6/20/2022 9:45	11.92	6/20/2022 8:33	0.61	6/20/2022 10:15	28.95
6/21/2022 9:59	84.37	6/20/2022 9:16	1.45	6/20/2022 9:46	11.76	6/20/2022 8:34	0.63	6/20/2022 10:16	28.98
6/21/2022 10:00	84.38	6/20/2022 9:17	1.23	6/20/2022 9:47	11.69	6/20/2022 8:35	0.63	6/20/2022 10:17	28.98
6/21/2022 10:01	84.37	6/20/2022 9:18	1.07	6/20/2022 9:48	11.57	6/20/2022 8:36	0.62	6/20/2022 10:18	29.01
6/21/2022 10:02	84.37	6/20/2022 9:19	0.89	6/20/2022 9:49	11.47	6/20/2022 8:37	0.63	6/20/2022 10:19	29.03
6/21/2022 10:03	84.37	6/20/2022 9:20	0.75	6/20/2022 9:50	11.39	6/20/2022 8:38	0.61	6/20/2022 10:20	29.05
6/21/2022 10:04	84.38	6/20/2022 9:21	0.59	6/20/2022 9:51	11.27	6/20/2022 8:39	0.60	6/20/2022 10:21	29.04
6/21/2022 10:05	84.34	6/20/2022 9:22	0.47	6/20/2022 9:52	11.24	6/20/2022 8:40	0.59	6/20/2022 10:22	29.03
6/21/2022 10:06	88.03	6/20/2022 9:23	0.37	6/20/2022 9:53	11.15	6/20/2022 8:41	0.60	6/20/2022 10:23	28.99
6/21/2022 10:07	90.90	6/20/2022 9:24	0.26	6/20/2022 9:54	11.11	6/20/2022 8:42	0.56	6/20/2022 10:24	29.04
6/21/2022 10:08	92.68	6/20/2022 9:25	0.16	6/20/2022 9:55	10.99	6/20/2022 8:43	0.59	6/20/2022 10:25	29.01
6/21/2022 10:09	93.42	6/20/2022 9:26	0.11	6/20/2022 9:56	11.04	6/20/2022 8:44	0.56	6/20/2022 10:26	29.03
6/21/2022 10:10	90.45	6/20/2022 9:27	0.07	6/20/2022 9:57	10.95	6/20/2022 8:45	0.54	6/20/2022 10:27	28.98
6/21/2022 10:11	88.66	6/20/2022 9:28	0.02	6/20/2022 9:58	10.91	6/20/2022 8:46	0.54	6/20/2022 10:28	29.01
6/21/2022 10:12	87.46	6/20/2022 9:29	-0.05	6/20/2022 9:59	10.89	6/20/2022 8:47	0.55	6/20/2022 10:29	29.02
6/21/2022 10:13	86.72	6/20/2022 9:30	-0.03	6/20/2022 10:00	10.87	6/20/2022 8:48	0.64	6/20/2022 10:30	29.04
6/21/2022 10:14	86.22	6/20/2022 9:31	-0.03	6/20/2022 10:01	10.78	6/20/2022 8:49	0.58	6/20/2022 10:31	29.00
6/21/2022 10:15	85.94	6/20/2022 9:32	-0.06	6/20/2022 10:02	10.77	6/20/2022 8:50	0.52	6/20/2022 10:32	29.00
6/21/2022 10:16	85.69	6/20/2022 9:33	-0.04	6/20/2022 10:03	10.77	6/20/2022 8:51	0.60	6/20/2022 10:33	29.02
6/21/2022 10:17	85.52	6/20/2022 9:34	-0.03	6/20/2022 10:04	10.77	6/20/2022 8:52	0.66	6/20/2022 10:34	29.02
6/21/2022 10:18	85.41	6/20/2022 9:35	-0.07	6/20/2022 10:05	10.74	6/20/2022 8:53	0.62	6/20/2022 10:35	29.01
6/21/2022 10:19	85.32	6/20/2022 9:36	-0.06	6/20/2022 10:06	10.76	6/20/2022 8:54	0.59	6/20/2022 10:36	29.01
6/21/2022 10:20	85.25	6/20/2022 9:37	-0.04	6/20/2022 10:07	10.72	6/20/2022 8:55	0.55	6/20/2022 10:37	28.99
6/21/2022 10:21	85.20	6/20/2022 9:38	-0.01	6/20/2022 10:08	10.74	6/20/2022 8:56	0.54	6/20/2022 10:38	29.00
6/21/2022 10:22	85.15	6/20/2022 9:39	-0.07	6/20/2022 10:09	10.72	6/20/2022 8:57	0.57	6/20/2022 10:39	28.94
6/21/2022 10:23	85.09	6/20/2022 9:40	-0.04	6/20/2022 10:10	10.72	6/20/2022 8:58	7.54	6/20/2022 10:40	28.99
6/21/2022 10:24	85.06	6/20/2022 9:41	-0.05	6/20/2022 10:11	10.71	6/20/2022 8:59	7.14	6/20/2022 10:41	28.98
6/21/2022 10:25	84.99	6/20/2022 9:42	-0.12	6/20/2022 10:12	10.66	6/20/2022 9:00	4.20	6/20/2022 10:42	28.96
6/21/2022 10:26	84.99	6/20/2022 9:43	-0.08	6/20/2022 10:13	10.67	6/20/2022 9:01	2.00	6/20/2022 10:43	28.98
6/21/2022 10:27	84.96	6/20/2022 9:44	-0.10	6/20/2022 10:14	10.65	6/20/2022 9:02	0.59	6/20/2022 10:44	28.96
6/21/2022 10:28	84.95	6/20/2022 9:45	-0.06	6/20/2022 10:15	10.62	6/20/2022 9:03	0.60	6/20/2022 10:45	28.98
6/21/2022 10:29	84.94	6/20/2022 9:46	-0.08	6/20/2022 10:16	10.60	6/20/2022 9:04	0.56	6/20/2022 10:46	28.98
6/21/2022 10:30	84.90	6/20/2022 9:47	-0.07	6/20/2022 10:17	10.60	6/20/2022 9:05	4.29	6/20/2022 10:47	28.99
6/21/2022 10:31	84.86	6/20/2022 9:48	-0.06	6/20/2022 10:18	10.62	6/20/2022 9:06	8.96	6/20/2022 10:48	28.98
6/21/2022 10:32	84.84	6/20/2022 9:49	-0.06	6/20/2022 10:19	10.59	6/20/2022 9:07	5.66	6/20/2022 10:49	28.96
6/21/2022 10:33	84.78	6/20/2022 9:50	0.01	6/20/2022 10:20	10.54	6/20/2022 9:08	3.09	6/20/2022 10:50	29.82
6/21/2022 10:34	84.82	6/20/2022 9:51	0.03	6/20/2022 10:21	10.54	6/20/2022 9:09	1.35	6/20/2022 10:51	30.55
6/21/2022 10:35	84.82	6/20/2022 9:52	5.10	6/20/2022 10:22	10.55	6/20/2022 9:10	0.64	6/20/2022 10:52	29.64
6/21/2022 10:36	84.78	6/20/2022 9:53	6.88	6/20/2022 10:23	10.52	6/20/2022 9:11	0.53	6/20/2022 10:53	29.23
6/21/2022 10:37	84.80	6/20/2022 9:54	5.70	6/20/2022 10:24	10.53	6/20/2022 9:12	0.53	6/20/2022 10:54	29.07
6/21/2022 10:38	84.73	6/20/2022 9:55	4.80	6/20/2022 10:25	10.51	6/20/2022 9:13	7.14	6/20/2022 10:55	28.99
6/21/2022 10:39	84.74	6/20/2022 9:56	4.05	6/20/2022 10:26	10.48	6/20/2022 9:14	7.36	6/20/2022 10:56	28.98
6/21/2022 10:40	84.75	6/20/2022 9:57	3.39	6/20/2022 10:27	10.46	6/20/2022 9:15	4.42	6/20/2022 10:57	28.98
6/21/2022 10:41	84.73	6/20/2022 9:58	2.80	6/20/2022 10:28	10.48	6/20/2022 9:16	2.21	6/20/2022 10:58	29.00
6/21/2022 10:42	84.76	6/20/2022 9:59	2.36	6/20/2022 10:29	10.43	6/20/2022 9:17	0.65	6/20/2022 10:59	28.98
6/21/2022 10:43	84.72	6/20/2022 10:00	2.08	6/20/2022 10:30	10.42	6/20/2022 9:18	0.54	6/20/2022 11:00	29.01
6/21/2022 10:44	84.72	6/20/2022 10:01	1.91	6/20/2022 10:31	10.47	6/20/2022 9:19	0.57	6/20/2022 11:01	28.95
6/21/2022 10:45	84.72	6/20/2022 10:02	1.65	6/20/2022 10:32	10.45	6/20/2022 9:20	0.57	6/20/2022 11:02	28.96
6/21/2022 10:46	84.69	6/20/2022 10:03	1.43	6/20/2022 10:33	10.46	6/20/2022 9:21	0.64	6/20/2022 11:03	28.96
6/21/2022 10:47	84.71	6/20/2022 10:04	1.18	6/20/2022 10:34	10.49	6/20/2022 9:22	0.66	6/20/2022 11:04	28.98
6/21/2022 10:48	84.67	6/20/2022 10:05	1.00	6/20/2022 10:35	10.49	6/20/2022 9:23	0.65	6/20/2022 11:05	28.99
6/21/2022 10:49	84.72	6/20/2022 10:06	0.82	6/20/2022 10:36	10.53	6/20/2022 9:24	0.62	6/20/2022 11:06	28.98
6/21/2022 10:50	84.66	6/20/2022 10:07	0.68	6/20/2022 10:37	10.52	6/20/2022 9:25	0.66	6/20/2022 11:07	28.96
6/21/2022 10:51	84.68	6/20/2022 10:08	0.52	6/20/2022 10:38	10.55	6/20/2022 9:26	0.62	6/20/2022 11:08	28.95
6/21/2022 10:52	84.65	6/20/2022 10:09	0.42	6/20/2022 10:39	10.52	6/20/2022 9:27	0.65	6/20/2022 11:09	28.96
6/21/2022 10:53	84.63	6/20/2022 10:10	0.30	6/20/2022 10:40	10.55	6/20/2022 9:28	0.65	6/20/2022 11:10	28.95
6/21/2022 10:54	84.64	6/20/2022 10:11	0.24	6/20/2022 10:41	10.49	6/20/2022 9:29	0.62	6/20/2022 11:11	28.93
6/21/2022 10:55	84.61	6/20/2022 10:12	0.15	6/20/2022 10:42	10.50	6/20/2022 9:30	0.63	6/20/2022 11:12	28.95
6/21/2022 10:56	84.66	6/20/2022 10:13	0.04	6/20/2022 10:43	10.50	6/20/2022 9:31	0.60	6/20/2022 11:13	28.93
6/21/2022 10:57	84.65	6/20/2022 10:14	0.05	6/20/2022 10:44	10.50	6/20/2022 9:32	0.64	6/20/2022 11:14	28.92
6/21/2022 10:58	84.61	6/20/2022 10:15	-0.05	6/20/2022 10:45	10.52	6/20/2022 9:33	0.61	6/20/2022 11:15	28.98
6/21/2022 10:59	84.63	6/20/2022 10:16	-0.10	6/20/2022 10:46	10.48	6/20/2022 9:34	0.61	6/20/2022 11:16	28.94
6/21/2022 11:00	84.61	6/20/2022 10:17	-0.08	6/20/2022 10:47	10.50	6/20/2022 9:35	0.62	6/20/2022 11:17	28.94
6/21/2022 11:01	84.58	6/20/2022 10:18	-0.02	6/20/2022 10:48	10.48	6/20/2022 9:36	0.64	6/20/2022 11:18	28.94
6/21/2022 11:02	84.59	6/20/2022 10:19	-0.07	6/20/2022 10:49	10.46	6/20/2022 9:37	0.58	6/20/2022 11:19	28.91
6/21/2022 11:03	84.61	6/20/2022 10:20	-0.03	6/20/2022 10:50	10.46	6/20/2022 9:38	0.62	6/20/2022 11:20	28.92
6/21/2022 11:04	84.59	6/20/2022 10:21	-0.06	6/20/2022 10:51	10.45	6/20/2022 9:39	0.62	6/20/2022 11:21	28.91
6/21/2022 11:05	84.57	6/20/2022 10:22	-0.07	6/20/2022 10:52	10.45	6/20/2022 9:40	0.59	6/20/2022 11:22	28.92
6/21/2022 11:06	84.56	6/20/2022 10:23	-0.06	6/20/2022 10:53	10.46	6/20/2022 9:41	0.66	6/20/2022 11:23	30.60
6/21/2022 11:07	84.58	6/20/2022 10:24	-0.08	6/20/2022 10:54	10.43	6/20/2022 9:42	0.63	6/20/2022 11:24	30.16
6/21/2022 11:08	84.59	6/20/2022 10:25	-0.05	6/20/2022 10:55	10.44	6/20/2022 9:43	0.61	6/20/2022 11:25	29.40
6/21/2022 11:09	84.56	6/20/2022 10:26	-0.03	6/20/2022 10:56	10.45	6/20/2022 9:44	0.65	6/20/2022 11:26	29.14
6/21/2022 11:10	84.56	6/20/2022 10:27	-0.03	6/20/2022 10:57	10.50	6/20/2022 9:45	0.65	6/20/2022 11:27	29.00
6/21/2022 11:11	84.58	6/20/2022 10:28	-0.04	6/20/2022 10:58	10.46	6/20/2022 9:46	0.65	6/20/2022 11:28	28.96
6/21/2022 11:12	84.52	6/20/2022 10:29	-0.05	6/20/2022 10:59	10.86	6/20/2022 9:47	0.64	6/20/2022 11:29	28.95
6/21/2022 11:13	84.57	6/20/2022 10:30	-0.06	6/20/2022 11:00	15.35	6/20/2022 9:48	0.65	6/20/2022 11:30	28.95
6/21/2022 11:14	84.53	6/20/2022 10:31	-0.03	6/20/2022 11:01	14.72	6/20/2022 9:49	2.94	6/20/2022 11:31	28.95
6/21/2022 11:15	84.56	6/20/2022 10:32	-0.07	6/20/2022 11:02	14.23	6/20/2022 9:50	8.86	6/20/2022 11:32	28.97
6/21/2022 11:16	84.55	6/20/2022 10:33	-0.03	6/20/2022 11:03	13.76	6/20/2022 9:51	5.44	6/20/2022 11:33	28.93
6/21/2022 11:17	84.56	6/20/2022 10:34	-0.04	6/20/2022 11:04	13.42	6/20/2022 9:52	2.85	6/20/2022 11:34	28.98

6/21/2022 11:18	84.54	6/20/2022 10:35	-0.06	6/20/2022 11:05	13.10	6/20/2022 9:53	1.08	6/20/2022 11:35	28.96
6/21/2022 11:19	84.55	6/20/2022 10:36	-0.04	6/20/2022 11:06	12.84	6/20/2022 9:54	0.63	6/20/2022 11:36	28.96
6/21/2022 11:20	84.53	6/20/2022 10:37	-0.07	6/20/2022 11:07	12.55	6/20/2022 9:55	0.60	6/20/2022 11:37	28.94
6/21/2022 11:21	84.52	6/20/2022 10:38	-0.06	6/20/2022 11:08	12.32	6/20/2022 9:56	0.54	6/20/2022 11:38	28.91
6/21/2022 11:22	84.52	6/20/2022 10:39	1.96	6/20/2022 11:09	12.11	6/20/2022 9:57	0.57	6/20/2022 11:39	28.95
6/21/2022 11:23	84.49	6/20/2022 10:40	7.38	6/20/2022 11:10	11.95	6/20/2022 9:58	0.61	6/20/2022 11:40	28.92
6/21/2022 11:24	84.52	6/20/2022 10:41	6.24	6/20/2022 11:11	11.83	6/20/2022 9:59	0.80	6/20/2022 11:41	28.93
6/21/2022 11:25	84.51	6/20/2022 10:42	5.21	6/20/2022 11:12	11.65	6/20/2022 10:00	7.74	6/20/2022 11:42	28.93
6/21/2022 11:26	84.48	6/20/2022 10:43	4.33	6/20/2022 11:13	11.56	6/20/2022 10:01	6.30	6/20/2022 11:43	29.80
6/21/2022 11:27	84.48	6/20/2022 10:44	3.67	6/20/2022 11:14	11.45	6/20/2022 10:02	3.57	6/20/2022 11:44	30.41
6/21/2022 11:28	84.44	6/20/2022 10:45	3.07	6/20/2022 11:15	11.35	6/20/2022 10:03	1.57	6/20/2022 11:45	29.56
6/21/2022 11:29	84.52	6/20/2022 10:46	2.59	6/20/2022 11:16	11.26	6/20/2022 10:04	0.57	6/20/2022 11:46	29.21
6/21/2022 11:30	84.50	6/20/2022 10:47	2.16	6/20/2022 11:17	11.15	6/20/2022 10:05	0.56	6/20/2022 11:47	29.16
6/21/2022 11:31	84.49	6/20/2022 10:48	1.85	6/20/2022 11:18	11.09	6/20/2022 10:06	0.57	6/20/2022 11:48	29.17
6/21/2022 11:32	84.49	6/20/2022 10:49	1.58	6/20/2022 11:19	11.04	6/20/2022 10:07	0.57	6/20/2022 11:49	29.17
6/21/2022 11:33	84.51	6/20/2022 10:50	1.31	6/20/2022 11:20	11.02	6/20/2022 10:08	0.59	6/20/2022 11:50	29.21
6/21/2022 11:34	84.50	6/20/2022 10:51	1.09	6/20/2022 11:21	10.97	6/20/2022 10:09	0.54	6/20/2022 11:51	29.21
6/21/2022 11:35	84.45	6/20/2022 10:52	0.93	6/20/2022 11:22	10.87	6/20/2022 10:10	0.59	6/20/2022 11:52	29.23
6/21/2022 11:36	84.48	6/20/2022 10:53	0.74	6/20/2022 11:23	10.88	6/20/2022 10:11	0.59	6/20/2022 11:53	29.26
6/21/2022 11:37	84.46	6/20/2022 10:54	0.61	6/20/2022 11:24	10.85	6/20/2022 10:12	0.61	6/20/2022 11:54	29.23
6/21/2022 11:38	84.45	6/20/2022 10:55	0.47	6/20/2022 11:25	10.82	6/20/2022 10:13	0.65	6/20/2022 11:55	29.14
6/21/2022 11:39	84.46	6/20/2022 10:56	0.35	6/20/2022 11:26	10.76	6/20/2022 10:14	0.62	6/20/2022 11:56	29.13
6/21/2022 11:40	84.44	6/20/2022 10:57	0.26	6/20/2022 11:27	10.77	6/20/2022 10:15	0.63	6/20/2022 11:57	29.15
6/21/2022 11:41	84.47	6/20/2022 10:58	0.19	6/20/2022 11:28	10.76	6/20/2022 10:16	0.63	6/20/2022 11:58	29.18
6/21/2022 11:42	84.50	6/20/2022 10:59	0.10	6/20/2022 11:29	10.71	6/20/2022 10:17	0.64	6/20/2022 11:59	29.13
6/21/2022 11:43	84.44	6/20/2022 11:00	0.08	6/20/2022 11:30	10.76	6/20/2022 10:18	0.60	6/20/2022 12:00	29.14
6/21/2022 11:44	84.48	6/20/2022 11:01	0.04	6/20/2022 11:31	10.73	6/20/2022 10:19	0.58	6/20/2022 12:01	29.13
6/21/2022 11:45	84.45	6/20/2022 11:02	-0.07	6/20/2022 11:32	10.73	6/20/2022 10:20	0.60	6/20/2022 12:02	29.12
6/21/2022 11:46	86.70	6/20/2022 11:03	-0.05	6/20/2022 11:33	10.67	6/20/2022 10:21	0.55	6/20/2022 12:03	29.08
6/21/2022 11:47	90.18	6/20/2022 11:04	-0.04	6/20/2022 11:34	10.67	6/20/2022 10:22	0.58	6/20/2022 12:04	29.11
6/21/2022 11:48	92.11	6/20/2022 11:05	-0.07	6/20/2022 11:35	10.64	6/20/2022 10:23	0.58	6/20/2022 12:05	29.10
6/21/2022 11:49	90.07	6/20/2022 11:06	-0.07	6/20/2022 11:36	10.63	6/20/2022 10:24	0.61	6/20/2022 12:06	29.10
6/21/2022 11:50	88.27	6/20/2022 11:07	-0.03	6/20/2022 11:37	10.59	6/20/2022 10:25	0.55	6/20/2022 12:07	29.06
6/21/2022 11:51	87.11	6/20/2022 11:08	-0.07	6/20/2022 11:38	10.61	6/20/2022 10:26	0.55	6/20/2022 12:08	29.06
6/21/2022 11:52	86.42	6/20/2022 11:09	-0.05	6/20/2022 11:39	10.61	6/20/2022 10:27	0.55	6/20/2022 12:09	29.06
6/21/2022 11:53	85.99	6/20/2022 11:10	-0.07	6/20/2022 11:40	10.61	6/20/2022 10:28	0.58	6/20/2022 12:10	29.09
6/21/2022 11:54	85.70	6/20/2022 11:11	-0.03	6/20/2022 11:41	10.56	6/20/2022 10:29	0.57	6/20/2022 12:11	29.04
6/21/2022 11:55	85.51	6/20/2022 11:12	-0.05	6/20/2022 11:42	10.59	6/20/2022 10:30	0.58	6/20/2022 12:12	29.01
6/21/2022 11:56	85.37	6/20/2022 11:13	-0.05	6/20/2022 11:43	10.53	6/20/2022 10:31	0.55	6/20/2022 12:13	29.01
6/21/2022 11:57	85.24	6/20/2022 11:14	-0.03	6/20/2022 11:44	10.52	6/20/2022 10:32	0.56	6/20/2022 12:14	29.04
6/21/2022 11:58	85.22	6/20/2022 11:15	-0.08	6/20/2022 11:45	10.53	6/20/2022 10:33	0.57	6/20/2022 12:15	29.01
6/21/2022 11:59	85.13	6/20/2022 11:16	-0.08	6/20/2022 11:46	10.52	6/20/2022 10:34	0.56	6/20/2022 12:16	28.99
6/21/2022 12:00	85.08	6/20/2022 11:17	-0.09	6/20/2022 11:47	10.52	6/20/2022 10:35	0.55	6/20/2022 12:17	29.03
6/21/2022 12:01	85.05	6/20/2022 11:18	-0.09	6/20/2022 11:48	10.47	6/20/2022 10:36	0.53	6/20/2022 12:18	29.01
6/21/2022 12:02	84.98	6/20/2022 11:19	-0.05	6/20/2022 11:49	10.53	6/20/2022 10:37	0.53	6/20/2022 12:19	29.03
6/21/2022 12:03	84.99	6/20/2022 11:20	-0.05	6/20/2022 11:50	10.47	6/20/2022 10:38	0.55	6/20/2022 12:20	29.04
6/21/2022 12:04	84.92	6/20/2022 11:21	-0.04	6/20/2022 11:51	10.45	6/20/2022 10:39	0.56	6/20/2022 12:21	29.07
6/21/2022 12:05	84.90	6/20/2022 11:22	-0.03	6/20/2022 11:52	10.44	6/20/2022 10:40	0.58	6/20/2022 12:22	29.06
6/21/2022 12:06	84.86	6/20/2022 11:23	-0.04	6/20/2022 11:53	10.42	6/20/2022 10:41	0.55	6/20/2022 12:23	29.10
6/21/2022 12:07	84.88	6/20/2022 11:24	-0.05	6/20/2022 11:54	12.56	6/20/2022 10:42	0.61	6/20/2022 12:24	29.11
6/21/2022 12:08	84.82	6/20/2022 11:25	2.82	6/20/2022 11:55	14.22	6/20/2022 10:43	0.63	6/20/2022 12:25	29.07
6/21/2022 12:09	84.88	6/20/2022 11:26	7.24	6/20/2022 11:56	13.72	6/20/2022 10:44	0.59	6/20/2022 12:26	29.05
6/21/2022 12:10	84.85	6/20/2022 11:27	6.01	6/20/2022 11:57	13.34	6/20/2022 10:45	0.55	6/20/2022 12:27	29.05
6/21/2022 12:11	84.84	6/20/2022 11:28	5.02	6/20/2022 11:58	13.02	6/20/2022 10:46	0.58	6/20/2022 12:28	29.04
6/21/2022 12:12	84.81	6/20/2022 11:29	4.21	6/20/2022 11:59	12.78	6/20/2022 10:47	0.67	6/20/2022 12:29	29.01
6/21/2022 12:13	84.77	6/20/2022 11:30	3.55	6/20/2022 12:00	12.51	6/20/2022 10:48	0.64	6/20/2022 12:30	29.00
6/21/2022 12:14	84.82	6/20/2022 11:31	2.91	6/20/2022 12:01	12.26	6/20/2022 10:49	0.64	6/20/2022 12:31	29.02
6/21/2022 12:15	84.77	6/20/2022 11:32	2.52	6/20/2022 12:02	12.15	6/20/2022 10:50	0.57	6/20/2022 12:32	29.03
6/21/2022 12:16	84.76	6/20/2022 11:33	2.19	6/20/2022 12:03	11.95	6/20/2022 10:51	0.57	6/20/2022 12:33	29.04
6/21/2022 12:17	84.77	6/20/2022 11:34	1.79	6/20/2022 12:04	11.73	6/20/2022 10:52	0.55	6/20/2022 12:34	28.99
6/21/2022 12:18	84.76	6/20/2022 11:35	1.50	6/20/2022 12:05	11.64	6/20/2022 10:53	0.58	6/20/2022 12:35	29.01
6/21/2022 12:19	84.76	6/20/2022 11:36	1.32	6/20/2022 12:06	11.59	6/20/2022 10:54	0.53	6/20/2022 12:36	28.99
6/21/2022 12:20	84.74	6/20/2022 11:37	1.08	6/20/2022 12:07	11.45	6/20/2022 10:55	0.56	6/20/2022 12:37	29.00
6/21/2022 12:21	84.74	6/20/2022 11:38	0.92	6/20/2022 12:08	11.37	6/20/2022 10:56	0.57	6/20/2022 12:38	29.02
6/21/2022 12:22	84.69	6/20/2022 11:39	0.71	6/20/2022 12:09	11.27	6/20/2022 10:57	0.51	6/20/2022 12:39	28.97
6/21/2022 12:23	84.69	6/20/2022 11:40	0.56	6/20/2022 12:10	11.22	6/20/2022 10:58	0.53	6/20/2022 12:40	28.99
6/21/2022 12:24	84.69	6/20/2022 11:41	0.44	6/20/2022 12:11	11.09	6/20/2022 10:59	0.51	6/20/2022 12:41	29.01
6/21/2022 12:25	84.70	6/20/2022 11:42	0.34	6/20/2022 12:12	11.05	6/20/2022 11:00	0.53	6/20/2022 12:42	29.01
6/21/2022 12:26	84.70	6/20/2022 11:43	0.29	6/20/2022 12:13	11.00	6/20/2022 11:01	0.59	6/20/2022 12:43	29.00
6/21/2022 12:27	84.69	6/20/2022 11:44	0.16	6/20/2022 12:14	10.93	6/20/2022 11:02	0.55	6/20/2022 12:44	29.01
6/21/2022 12:28	84.68	6/20/2022 11:45	0.16	6/20/2022 12:15	10.91	6/20/2022 11:03	0.57	6/20/2022 12:45	28.98
6/21/2022 12:29	84.68	6/20/2022 11:46	0.12	6/20/2022 12:16	10.87	6/20/2022 11:04	0.58	6/20/2022 12:46	28.98
6/21/2022 12:30	84.63	6/20/2022 11:47	0.05	6/20/2022 12:17	10.82	6/20/2022 11:05	0.56	6/20/2022 12:47	29.01
6/21/2022 12:31	84.66	6/20/2022 11:48	-0.01	6/20/2022 12:18	10.78	6/20/2022 11:06	0.59	6/20/2022 12:48	29.01
6/21/2022 12:32	84.64	6/20/2022 11:49	-0.06	6/20/2022 12:19	10.73	6/20/2022 11:07	0.58	6/20/2022 12:49	28.99
6/21/2022 12:33	84.66	6/20/2022 11:50	-0.08	6/20/2022 12:20	10.71	6/20/2022 11:08	0.58	6/20/2022 12:50	29.00
6/21/2022 12:34	84.67	6/20/2022 11:51	-0.09	6/20/2022 12:21	10.67	6/20/2022 11:09	0.53	6/20/2022 12:51	29.01
6/21/2022 12:35	84.64	6/20/2022 11:52	0.46	6/20/2022 12:22	10.68	6/20/2022 11:10	0.58	6/20/2022 12:52	31.35
6/21/2022 12:36	84.64	6/20/2022 11:53	6.41	6/20/2022 12:23	10.62	6/20/2022 11:11	0.56	6/20/2022 12:53	30.07
6/21/2022 12:37	84.62	6/20/2022 11:54	7.38	6/20/2022 12:24	10.61	6/20/2022 11:12	0.57	6/20/2022 12:54	31.80
6/21/2022 12:38	84.59	6/20/2022 11:55	6.11	6/20/2022 12:25	10.61	6/20/2022 11:13	0.58	6/20/2022 12:55	30.43
6/21/2022 12:39	84.65	6/20/2022 11:56	5.10	6/20/2022 12:26	10.56	6/20/2022 11:14	0.59	6/20/2022 12:56	29.57
6/21/2022 12:40	84.60	6/20/2022 11:57	4.35	6/20/2022 12:27	10.59	6/20/2022 11:15	0.55	6/20/2022 12:57	29.27
6/21/2022 12:41	84.58	6/20/2022 11:58	3.70	6/20/2022 12:28	10.52	6/20/2022 11:16	0.54	6/20/2022 12:58	29.14
6/21/2022 12:42	84.62	6/20/2022 11:59	3.04	6/20/2022 12:29	10.57	6/20/2022 11:17	0.56	6/20/2022 12:59	29.08
6/21/2022 12:43	84.56	6/20/2022 12:00	2.57	6/20/2022 12:30	10.59	6/20/2022 11:18	0.59	6/20/2022 13:00	29.09
6/21/2022 12:44	84.58	6/20/2022 12:01	2.16	6/20/2022 12:31	10.55	6/20/2022 11:19	0.62	6/20/2022 13:01	29.07
6/21/2022 12:45	84.58	6/20/2022 12:02	1.89	6/20/2022 12:32	10.56	6/20/2022 11:20	0.60	6/20/2022 13:02	29.07

6/21/2022 12:46	84.59	6/20/2022 12:03	1.53	6/20/2022 12:33	10.55	6/20/2022 11:21	0.56	6/20/2022 13:03	29.06
6/21/2022 12:47	84.58	6/20/2022 12:04	1.29	6/20/2022 12:34	10.52	6/20/2022 11:22	0.55	6/20/2022 13:04	29.02
6/21/2022 12:48	84.57	6/20/2022 12:05	1.10	6/20/2022 12:35	10.58	6/20/2022 11:23	0.56	6/20/2022 13:05	29.07
6/21/2022 12:49	84.60	6/20/2022 12:06	0.90	6/20/2022 12:36	10.54	6/20/2022 11:24	0.55	6/20/2022 13:06	29.04
6/21/2022 12:50	84.54	6/20/2022 12:07	0.73	6/20/2022 12:37	10.59	6/20/2022 11:25	0.57	6/20/2022 13:07	29.05
6/21/2022 12:51	84.54	6/20/2022 12:08	0.62	6/20/2022 12:38	10.53	6/20/2022 11:26	0.56	6/20/2022 13:08	29.04
6/21/2022 12:52	84.54	6/20/2022 12:09	0.50	6/20/2022 12:39	10.54	6/20/2022 11:27	0.51	6/20/2022 13:09	29.07
6/21/2022 12:53	84.55	6/20/2022 12:10	0.37	6/20/2022 12:40	10.51	6/20/2022 11:28	0.57	6/20/2022 13:10	29.06
6/21/2022 12:54	84.58	6/20/2022 12:11	0.30	6/20/2022 12:41	10.54	6/20/2022 11:29	0.64	6/20/2022 13:11	29.06
6/21/2022 12:55	84.56	6/20/2022 12:12	0.18	6/20/2022 12:42	10.52	6/20/2022 11:30	0.60	6/20/2022 13:12	29.05
6/21/2022 12:56	84.56	6/20/2022 12:13	0.20	6/20/2022 12:43	10.50	6/20/2022 11:31	0.54	6/20/2022 13:13	29.02
6/21/2022 12:57	84.55	6/20/2022 12:14	0.10	6/20/2022 12:44	10.47	6/20/2022 11:32	0.57	6/20/2022 13:14	31.13
6/21/2022 12:58	84.55	6/20/2022 12:15	0.01	6/20/2022 12:45	10.47	6/20/2022 11:33	0.59	6/20/2022 13:15	29.92
6/21/2022 12:59	84.50	6/20/2022 12:16	-0.01	6/20/2022 12:46	10.44	6/20/2022 11:34	0.65	6/20/2022 13:16	31.69
6/21/2022 13:00	84.53	6/20/2022 12:17	-0.08	6/20/2022 12:47	10.50	6/20/2022 11:35	0.65	6/20/2022 13:17	30.23
6/21/2022 13:01	84.54	6/20/2022 12:18	-0.05	6/20/2022 12:48	10.46	6/20/2022 11:36	0.57	6/20/2022 13:18	29.53
6/21/2022 13:02	84.52	6/20/2022 12:19	-0.08	6/20/2022 12:49	10.51	6/20/2022 11:37	0.50	6/20/2022 13:19	29.29
6/21/2022 13:03	84.50	6/20/2022 12:20	-0.07	6/20/2022 12:50	10.50	6/20/2022 11:38	0.55	6/20/2022 13:20	29.19
6/21/2022 13:04	84.52	6/20/2022 12:21	-0.03	6/20/2022 12:51	10.53	6/20/2022 11:39	0.57	6/20/2022 13:21	29.14
6/21/2022 13:05	84.53	6/20/2022 12:22	-0.08	6/20/2022 12:52	10.52	6/20/2022 11:40	0.57	6/20/2022 13:22	29.16
6/21/2022 13:06	84.53	6/20/2022 12:23	-0.07	6/20/2022 12:53	10.54	6/20/2022 11:41	0.63	6/20/2022 13:23	29.15
6/21/2022 13:07	84.50	6/20/2022 12:24	-0.03	6/20/2022 12:54	10.47	6/20/2022 11:42	0.63	6/20/2022 13:24	30.97
6/21/2022 13:08	84.52	6/20/2022 12:25	-0.05	6/20/2022 12:55	10.50	6/20/2022 11:43	0.57	6/20/2022 13:25	29.88
6/21/2022 13:09	84.52	6/20/2022 12:26	-0.08	6/20/2022 12:56	10.53	6/20/2022 11:44	0.55	6/20/2022 13:26	30.98
6/21/2022 13:10	84.52	6/20/2022 12:27	-0.07	6/20/2022 12:57	10.50	6/20/2022 11:45	0.53	6/20/2022 13:27	30.58
6/21/2022 13:11	84.50	6/20/2022 12:28	-0.10	6/20/2022 12:58	10.49	6/20/2022 11:46	0.53	6/20/2022 13:28	29.72
6/21/2022 13:12	84.52	6/20/2022 12:29	-0.06	6/20/2022 12:59	10.46	6/20/2022 11:47	0.60	6/20/2022 13:29	29.39
6/21/2022 13:13	84.51	6/20/2022 12:30	-0.05	6/20/2022 13:00	10.50	6/20/2022 11:48	0.59	6/20/2022 13:30	29.27
6/21/2022 13:14	84.54	6/20/2022 12:31	-0.04	6/20/2022 13:01	10.49	6/20/2022 11:49	0.63	6/20/2022 13:31	29.25
6/21/2022 13:15	84.56	6/20/2022 12:32	-0.04	6/20/2022 13:02	10.46	6/20/2022 11:50	0.67	6/20/2022 13:32	29.21
6/21/2022 13:16	84.49	6/20/2022 12:33	-0.05	6/20/2022 13:03	10.43	6/20/2022 11:51	0.66	6/20/2022 13:33	29.21
6/21/2022 13:17	84.47	6/20/2022 12:34	-0.08	6/20/2022 13:04	10.45	6/20/2022 11:52	0.61	6/20/2022 13:34	29.26
6/21/2022 13:18	84.51	6/20/2022 12:35	-0.06	6/20/2022 13:05	10.41	6/20/2022 11:53	0.57	6/20/2022 13:35	29.20
6/21/2022 13:19	84.48	6/20/2022 12:36	-0.06	6/20/2022 13:06	10.42	6/20/2022 11:54	0.53	6/20/2022 13:36	29.24
6/21/2022 13:20	84.50	6/20/2022 12:37	-0.09	6/20/2022 13:07	10.41	6/20/2022 11:55	0.60	6/20/2022 13:37	29.23
6/21/2022 13:21	84.46	6/20/2022 12:38	-0.06	6/20/2022 13:08	10.43	6/20/2022 11:56	0.61	6/20/2022 13:38	29.24
6/21/2022 13:22	84.50	6/20/2022 12:39	-0.05	6/20/2022 13:09	10.43	6/20/2022 11:57	0.58	6/20/2022 13:39	29.24
6/21/2022 13:23	84.46	6/20/2022 12:40	-0.05	6/20/2022 13:10	10.40	6/20/2022 11:58	0.58	6/20/2022 13:40	29.20
6/21/2022 13:24	84.45	6/20/2022 12:41	-0.10	6/20/2022 13:11	10.36	6/20/2022 11:59	0.63	6/20/2022 13:41	29.22
6/21/2022 13:25	84.49	6/20/2022 12:42	-0.05	6/20/2022 13:12	10.35	6/20/2022 12:00	0.61	6/20/2022 13:42	29.19
6/21/2022 13:26	84.49	6/20/2022 12:43	-0.03	6/20/2022 13:13	10.39	6/20/2022 12:01	0.53	6/20/2022 13:43	29.21
6/21/2022 13:27	84.47	6/20/2022 12:44	-0.03	6/20/2022 13:14	10.40	6/20/2022 12:02	0.55	6/20/2022 13:44	29.23
6/21/2022 13:28	84.46	6/20/2022 12:45	-0.06	6/20/2022 13:15	10.42	6/20/2022 12:03	0.57	6/20/2022 13:45	29.26
6/21/2022 13:29	84.52	6/20/2022 12:46	-0.04	6/20/2022 13:16	10.36	6/20/2022 12:04	0.63	6/20/2022 13:46	29.20
6/21/2022 13:30	84.47	6/20/2022 12:47	-0.04	6/20/2022 13:17	10.43	6/20/2022 12:05	0.67	6/20/2022 13:47	29.24
6/21/2022 13:31	84.48	6/20/2022 12:48	-0.08	6/20/2022 13:18	10.39	6/20/2022 12:06	0.62	6/20/2022 13:48	29.27
6/21/2022 13:32	84.48	6/20/2022 12:49	-0.10	6/20/2022 13:19	10.39	6/20/2022 12:07	0.58	6/20/2022 13:49	29.23
6/21/2022 13:33	84.48	6/20/2022 12:50	-0.05	6/20/2022 13:20	10.44	6/20/2022 12:08	0.58	6/20/2022 13:50	29.29
6/21/2022 13:34	84.50	6/20/2022 12:51	-0.01	6/20/2022 13:21	10.46	6/20/2022 12:09	0.56	6/20/2022 13:51	29.26
6/21/2022 13:35	84.49	6/20/2022 12:52	-0.05	6/20/2022 13:22	10.47	6/20/2022 12:10	0.53	6/20/2022 13:52	29.26
6/21/2022 13:36	84.47	6/20/2022 12:53	-0.03	6/20/2022 13:23	10.44	6/20/2022 12:11	0.54	6/20/2022 13:53	29.21
6/21/2022 13:37	84.48	6/20/2022 12:54	-0.08	6/20/2022 13:24	10.49	6/20/2022 12:12	0.54	6/20/2022 13:54	29.22
6/21/2022 13:38	84.47	6/20/2022 12:55	2.92	6/20/2022 13:25	10.42	6/20/2022 12:13	0.57	6/20/2022 13:55	29.23
6/21/2022 13:39	84.48	6/20/2022 12:56	7.37	6/20/2022 13:26	10.47	6/20/2022 12:14	0.58	6/20/2022 13:56	29.30
6/21/2022 13:40	84.47	6/20/2022 12:57	6.12	6/20/2022 13:27	10.42	6/20/2022 12:15	0.62	6/20/2022 13:57	29.27
6/21/2022 13:41	84.48	6/20/2022 12:58	5.10	6/20/2022 13:28	10.41	6/20/2022 12:16	0.63	6/20/2022 13:58	29.27
6/21/2022 13:42	84.44	6/20/2022 12:59	4.29	6/20/2022 13:29	10.39	6/20/2022 12:17	0.67	6/20/2022 13:59	29.26
6/21/2022 13:43	84.48	6/20/2022 13:00	3.61	6/20/2022 13:30	10.43	6/20/2022 12:18	0.67	6/20/2022 14:00	29.28
6/21/2022 13:44	84.47	6/20/2022 13:01	2.99	6/20/2022 13:31	10.43	6/20/2022 12:19	0.66	6/20/2022 14:01	29.28
6/21/2022 13:45	84.45	6/20/2022 13:02	2.52	6/20/2022 13:32	10.41	6/20/2022 12:20	0.66	6/20/2022 14:02	29.29
6/21/2022 13:46	84.47	6/20/2022 13:03	2.12	6/20/2022 13:33	10.42	6/20/2022 12:21	0.66	6/20/2022 14:03	29.29
6/21/2022 13:47	84.44	6/20/2022 13:04	1.80	6/20/2022 13:34	10.41	6/20/2022 12:22	0.63	6/20/2022 14:04	29.30
6/21/2022 13:48	84.44	6/20/2022 13:05	1.55	6/20/2022 13:35	10.36	6/20/2022 12:23	0.58	6/20/2022 14:05	29.28
6/21/2022 13:49	84.48	6/20/2022 13:06	1.29	6/20/2022 13:36	10.40	6/20/2022 12:24	0.54	6/20/2022 14:06	29.31
6/21/2022 13:50	84.43	6/20/2022 13:07	1.08	6/20/2022 13:37	10.38	6/20/2022 12:25	0.53	6/20/2022 14:07	29.31
6/21/2022 13:51	84.43	6/20/2022 13:08	0.89	6/20/2022 13:38	10.38	6/20/2022 12:26	0.54	6/20/2022 14:08	29.31
6/21/2022 13:52	84.45	6/20/2022 13:09	0.71	6/20/2022 13:39	10.37	6/20/2022 12:27	0.56	6/20/2022 14:09	29.32
6/21/2022 13:53	84.44	6/20/2022 13:10	0.60	6/20/2022 13:40	10.37	6/20/2022 12:28	0.59	6/20/2022 14:10	29.31
6/21/2022 13:54	84.47	6/20/2022 13:11	0.51	6/20/2022 13:41	10.38	6/20/2022 12:29	0.64	6/20/2022 14:11	29.39
6/21/2022 13:55	84.40	6/20/2022 13:12	0.37	6/20/2022 13:42	10.37	6/20/2022 12:30	0.63	6/20/2022 14:12	29.30
6/21/2022 13:56	84.42	6/20/2022 13:13	0.33	6/20/2022 13:43	10.35	6/20/2022 12:31	0.61	6/20/2022 14:13	29.34
6/21/2022 13:57	84.43	6/20/2022 13:14	0.25	6/20/2022 13:44	10.35	6/20/2022 12:32	0.67	6/20/2022 14:14	29.37
6/21/2022 13:58	84.45	6/20/2022 13:15	0.18	6/20/2022 13:45	10.32	6/20/2022 12:33	0.64	6/20/2022 14:15	29.34
6/21/2022 13:59	84.38	6/20/2022 13:16	0.14	6/20/2022 13:46	10.36	6/20/2022 12:34	0.65	6/20/2022 14:16	29.33
6/21/2022 14:00	84.41	6/20/2022 13:17	0.07	6/20/2022 13:47	10.34	6/20/2022 12:35	0.65	6/20/2022 14:17	29.34
6/21/2022 14:01	84.44	6/20/2022 13:18	0.03	6/20/2022 13:48	10.40	6/20/2022 12:36	0.52	6/20/2022 14:18	29.37
6/21/2022 14:02	84.41	6/20/2022 13:19	-0.02	6/20/2022 13:49	10.36	6/20/2022 12:37	0.53	6/20/2022 14:19	29.34
6/21/2022 14:03	84.38	6/20/2022 13:20	-0.02	6/20/2022 13:50	10.40	6/20/2022 12:38	0.60	6/20/2022 14:20	29.36
6/21/2022 14:04	84.40	6/20/2022 13:21	-0.05	6/20/2022 13:51	10.37	6/20/2022 12:39	0.58	6/20/2022 14:21	29.38
6/21/2022 14:05	84.37	6/20/2022 13:22	-0.07	6/20/2022 13:52	10.41	6/20/2022 12:40	0.60	6/20/2022 14:22	29.38
6/21/2022 14:06	84.39	6/20/2022 13:23	-0.06	6/20/2022 13:53	10.40	6/20/2022 12:41	0.64	6/20/2022 14:23	29.37
6/21/2022 14:07	84.43	6/20/2022 13:24	-0.08	6/20/2022 13:54	10.41	6/20/2022 12:42	0.67	6/20/2022 14:24	29.38
6/21/2022 14:08	84.41	6/20/2022 13:25	4.52	6/20/2022 13:55	10.46	6/20/2022 12:43	0.60	6/20/2022 14:25	29.39
6/21/2022 14:09	84.38	6/20/2022 13:26	8.70	6/20/2022 13:56	10.42	6/20/2022 12:44	0.57	6/20/2022 14:26	29.42
6/21/2022 14:10	84.37	6/20/2022 13:27	7.24	6/20/2022 13:57	10.39	6/20/2022 12:45	0.55	6/20/2022 14:27	29.42
6/21/2022 14:11	84.41	6/20/2022 13:28	6.05	6/20/2022 13:58	12.16	6/20/2022 12:46	0.56	6/20/2022 14:28	29.42
6/21/2022 14:12	84.39	6/20/2022 13:29	5.05	6/20/2022 13:59	15.64	6/20/2022 12:47	0.61	6/20/2022 14:29	29.41
6/21/2022 14:13	84.37	6/20/2022 13:30	4.30	6/20/2022 14:00	14.93	6/20/2022 12:48	0.66	6/20/2022 14:30	29.45

6/21/2022 14:14	84.38	6/20/2022 13:31	3.67	6/20/2022 14:01	14.41	6/20/2022 12:49	0.66	6/20/2022 14:31	29.42
6/21/2022 14:15	84.40	6/20/2022 13:32	3.02	6/20/2022 14:02	13.89	6/20/2022 12:50	0.68	6/20/2022 14:32	29.44
6/21/2022 14:16	84.35	6/20/2022 13:33	2.55	6/20/2022 14:03	13.55	6/20/2022 12:51	0.64	6/20/2022 14:33	29.43
6/21/2022 14:17	84.39	6/20/2022 13:34	2.13	6/20/2022 14:04	13.19	6/20/2022 12:52	0.58	6/20/2022 14:34	29.44
6/21/2022 14:18	84.41	6/20/2022 13:35	1.86	6/20/2022 14:05	12.88	6/20/2022 12:53	0.56	6/20/2022 14:35	29.42
6/21/2022 14:19	84.38	6/20/2022 13:36	1.61	6/20/2022 14:06	12.63	6/20/2022 12:54	0.57	6/20/2022 14:36	29.44
6/21/2022 14:20	84.38	6/20/2022 13:37	1.35	6/20/2022 14:07	12.40	6/20/2022 12:55	0.59	6/20/2022 14:37	29.44
6/21/2022 14:21	84.38	6/20/2022 13:38	1.16	6/20/2022 14:08	12.18	6/20/2022 12:56	0.59	6/20/2022 14:38	29.46
6/21/2022 14:22	84.38	6/20/2022 13:39	0.91	6/20/2022 14:09	12.02	6/20/2022 12:57	0.61	6/20/2022 14:39	29.48
6/21/2022 14:23	84.36	6/20/2022 13:40	0.81	6/20/2022 14:10	11.86	6/20/2022 12:58	0.58	6/20/2022 14:40	29.47
6/21/2022 14:24	84.38	6/20/2022 13:41	0.63	6/20/2022 14:11	11.70	6/20/2022 12:59	0.64	6/20/2022 14:41	29.47
6/21/2022 14:25	84.34	6/20/2022 13:42	0.52	6/20/2022 14:12	11.58	6/20/2022 13:00	0.61	6/20/2022 14:42	29.49
6/21/2022 14:26	84.37	6/20/2022 13:43	0.40	6/20/2022 14:13	11.46	6/20/2022 13:01	0.56	6/20/2022 14:43	29.47
6/21/2022 14:27	84.34	6/20/2022 13:44	0.33	6/20/2022 14:14	11.35	6/20/2022 13:02	0.63	6/20/2022 14:44	29.49
6/21/2022 14:28	84.38	6/20/2022 13:45	0.23	6/20/2022 14:15	11.27	6/20/2022 13:03	0.64	6/20/2022 14:45	29.48
6/21/2022 14:29	84.38	6/20/2022 13:46	0.19	6/20/2022 14:16	11.17	6/20/2022 13:04	0.55	6/20/2022 14:46	29.49
6/21/2022 14:30	84.36	6/20/2022 13:47	0.15	6/20/2022 14:17	11.11	6/20/2022 13:05	0.54	6/20/2022 14:47	29.49
6/21/2022 14:31	84.36	6/20/2022 13:48	0.14	6/20/2022 14:18	11.04	6/20/2022 13:06	0.63	6/20/2022 14:48	29.50
6/21/2022 14:32	84.38	6/20/2022 13:49	0.07	6/20/2022 14:19	11.00	6/20/2022 13:07	0.63	6/20/2022 14:49	29.51
6/21/2022 14:33	84.38	6/20/2022 13:50	0.04	6/20/2022 14:20	10.95	6/20/2022 13:08	0.57	6/20/2022 14:50	29.53
6/21/2022 14:34	84.34	6/20/2022 13:51	-0.02	6/20/2022 14:21	10.91	6/20/2022 13:09	0.57	6/20/2022 14:51	29.55
6/21/2022 14:35	84.35	6/20/2022 13:52	-0.05	6/20/2022 14:22	10.94	6/20/2022 13:10	0.68	6/20/2022 14:52	29.52
6/21/2022 14:36	84.34	6/20/2022 13:53	-0.03	6/20/2022 14:23	10.89	6/20/2022 13:11	0.67	6/20/2022 14:53	29.51
6/21/2022 14:37	84.35	6/20/2022 13:54	0.91	6/20/2022 14:24	10.84	6/20/2022 13:12	0.57	6/20/2022 14:54	29.55
6/21/2022 14:38	84.36	6/20/2022 13:55	6.67	6/20/2022 14:25	10.81	6/20/2022 13:13	0.54	6/20/2022 14:55	29.55
6/21/2022 14:39	84.34	6/20/2022 13:56	6.55	6/20/2022 14:26	10.77	6/20/2022 13:14	0.67	6/20/2022 14:56	29.57
6/21/2022 14:40	84.34	6/20/2022 13:57	5.48	6/20/2022 14:27	10.77	6/20/2022 13:15	0.60	6/20/2022 14:57	29.53
6/21/2022 14:41	84.39	6/20/2022 13:58	4.62	6/20/2022 14:28	10.71	6/20/2022 13:16	0.57	6/20/2022 14:58	29.53
6/21/2022 14:42	84.35	6/20/2022 13:59	3.91	6/20/2022 14:29	10.77	6/20/2022 13:17	0.62	6/20/2022 14:59	29.53
6/21/2022 14:43	84.33	6/20/2022 14:00	3.30	6/20/2022 14:30	10.72	6/20/2022 13:18	0.64	6/20/2022 15:00	29.55
6/21/2022 14:44	84.38	6/20/2022 14:01	2.76	6/20/2022 14:31	10.71	6/20/2022 13:19	0.59	6/20/2022 15:01	29.58
6/21/2022 14:45	84.35	6/20/2022 14:02	2.32	6/20/2022 14:32	10.66	6/20/2022 13:20	0.57	6/20/2022 15:02	29.56
6/21/2022 14:46	84.36	6/20/2022 14:03	2.01	6/20/2022 14:33	10.62	6/20/2022 13:21	0.58	6/20/2022 15:03	29.55
6/21/2022 14:47	84.33	6/20/2022 14:04	1.68	6/20/2022 14:34	10.66	6/20/2022 13:22	0.66	6/20/2022 15:04	29.61
6/21/2022 14:48	84.33	6/20/2022 14:05	1.43	6/20/2022 14:35	10.61	6/20/2022 13:23	0.64	6/20/2022 15:05	29.60
6/21/2022 14:49	84.35	6/20/2022 14:06	1.19	6/20/2022 14:36	10.56	6/20/2022 13:24	0.51	6/20/2022 15:06	29.60
6/21/2022 14:50	84.35	6/20/2022 14:07	0.97	6/20/2022 14:37	10.56	6/20/2022 13:25	0.62	6/20/2022 15:07	29.60
6/21/2022 14:51	84.33	6/20/2022 14:08	0.87	6/20/2022 14:38	10.55	6/20/2022 13:26	0.64	6/20/2022 15:08	29.60
6/21/2022 14:52	85.98	6/20/2022 14:09	0.73	6/20/2022 14:39	10.52	6/20/2022 13:27	0.59	6/20/2022 15:09	29.59
6/21/2022 14:53	89.55	6/20/2022 14:10	0.60	6/20/2022 14:40	10.50	6/20/2022 13:28	0.64	6/20/2022 15:10	29.60
6/21/2022 14:54	91.61	6/20/2022 14:11	0.47	6/20/2022 14:41	10.50	6/20/2022 13:29	0.58	6/20/2022 15:11	29.61
6/21/2022 14:55	91.41	6/20/2022 14:12	0.37	6/20/2022 14:42	10.49	6/20/2022 13:30	0.65	6/20/2022 15:12	29.63
6/21/2022 14:56	89.10	6/20/2022 14:13	0.32	6/20/2022 14:43	10.50	6/20/2022 13:31	0.57	6/20/2022 15:13	29.64
6/21/2022 14:57	87.64	6/20/2022 14:14	0.24	6/20/2022 14:44	10.45	6/20/2022 13:32	0.60	6/20/2022 15:14	29.64
6/21/2022 14:58	86.72	6/20/2022 14:15	0.19	6/20/2022 14:45	10.49	6/20/2022 13:33	0.63	6/20/2022 15:15	29.62
6/21/2022 14:59	86.17	6/20/2022 14:16	0.14	6/20/2022 14:46	10.43	6/20/2022 13:34	0.55	6/20/2022 15:16	29.65
6/21/2022 15:00	85.81	6/20/2022 14:17	0.08	6/20/2022 14:47	10.45	6/20/2022 13:35	0.63	6/20/2022 15:17	29.66
6/21/2022 15:01	85.54	6/20/2022 14:18	0.05	6/20/2022 14:48	10.42	6/20/2022 13:36	0.60	6/20/2022 15:18	29.64
6/21/2022 15:02	85.38	6/20/2022 14:19	0.00	6/20/2022 14:49	10.42	6/20/2022 13:37	0.58	6/20/2022 15:19	29.59
6/21/2022 15:03	85.26	6/20/2022 14:20	0.02	6/20/2022 14:50	10.44	6/20/2022 13:38	0.61	6/20/2022 15:20	29.67
6/21/2022 15:04	85.17	6/20/2022 14:21	-0.05	6/20/2022 14:51	10.46	6/20/2022 13:39	0.63	6/20/2022 15:21	29.69
6/21/2022 15:05	85.07	6/20/2022 14:22	-0.04	6/20/2022 14:52	10.45	6/20/2022 13:40	0.57	6/20/2022 15:22	29.68
6/21/2022 15:06	85.03	6/20/2022 14:23	-0.05	6/20/2022 14:53	10.48	6/20/2022 13:41	0.61	6/20/2022 15:23	29.69
6/21/2022 15:07	85.02	6/20/2022 14:24	-0.03	6/20/2022 14:54	10.48	6/20/2022 13:42	0.66	6/20/2022 15:24	29.73
6/21/2022 15:08	84.92	6/20/2022 14:25	-0.07	6/20/2022 14:55	10.49	6/20/2022 13:43	0.56	6/20/2022 15:25	29.72
6/21/2022 15:09	84.89	6/20/2022 14:26	-0.05	6/20/2022 14:56	10.48	6/20/2022 13:44	0.57	6/20/2022 15:26	29.74
6/21/2022 15:10	84.91	6/20/2022 14:27	-0.05	6/20/2022 14:57	10.46	6/20/2022 13:45	0.69	6/20/2022 15:27	29.79
6/21/2022 15:11	84.85	6/20/2022 14:28	-0.04	6/20/2022 14:58	10.48	6/20/2022 13:46	0.58	6/20/2022 15:28	29.79
6/21/2022 15:12	84.86	6/20/2022 14:29	-0.07	6/20/2022 14:59	10.50	6/20/2022 13:47	0.57	6/20/2022 15:29	29.83
6/21/2022 15:13	84.83	6/20/2022 14:30	-0.07	6/20/2022 15:00	10.48	6/20/2022 13:48	0.69	6/20/2022 15:30	29.80
6/21/2022 15:14	84.79	6/20/2022 14:31	-0.07	6/20/2022 15:01	10.45	6/20/2022 13:49	0.53	6/20/2022 15:31	29.78
6/21/2022 15:15	84.81	6/20/2022 14:32	-0.04	6/20/2022 15:02	10.40	6/20/2022 13:50	0.53	6/20/2022 15:32	29.78
6/21/2022 15:16	84.75	6/20/2022 14:33	-0.04	6/20/2022 15:03	10.47	6/20/2022 13:51	0.65	6/20/2022 15:33	29.80
6/21/2022 15:17	84.75	6/20/2022 14:34	-0.07	6/20/2022 15:04	10.46	6/20/2022 13:52	0.65	6/20/2022 15:34	29.79
6/21/2022 15:18	84.76	6/20/2022 14:35	-0.05	6/20/2022 15:05	10.43	6/20/2022 13:53	0.57	6/20/2022 15:35	29.77
6/21/2022 15:19	84.73	6/20/2022 14:36	-0.08	6/20/2022 15:06	10.41	6/20/2022 13:54	0.58	6/20/2022 15:36	29.81
6/21/2022 15:20	84.72	6/20/2022 14:37	-0.07	6/20/2022 15:07	10.43	6/20/2022 13:55	0.67	6/20/2022 15:37	29.78
6/21/2022 15:21	84.73	6/20/2022 14:38	-0.04	6/20/2022 15:08	10.42	6/20/2022 13:56	0.58	6/20/2022 15:38	29.80
6/21/2022 15:22	84.67	6/20/2022 14:39	4.16	6/20/2022 15:09	10.41	6/20/2022 13:57	0.66	6/20/2022 15:39	29.80
6/21/2022 15:23	84.69	6/20/2022 14:40	7.00	6/20/2022 15:10	10.41	6/20/2022 13:58	0.59	6/20/2022 15:40	29.80
6/21/2022 15:24	84.64	6/20/2022 14:41	5.82	6/20/2022 15:11	10.39	6/20/2022 13:59	0.67	6/20/2022 15:41	29.83
6/21/2022 15:25	84.72	6/20/2022 14:42	4.91	6/20/2022 15:12	10.40	6/20/2022 14:00	0.55	6/20/2022 15:42	29.82
6/21/2022 15:26	84.64	6/20/2022 14:43	4.11	6/20/2022 15:13	10.37	6/20/2022 14:01	0.65	6/20/2022 15:43	29.79
6/21/2022 15:27	84.66	6/20/2022 14:44	3.45	6/20/2022 15:14	10.43	6/20/2022 14:02	0.55	6/20/2022 15:44	29.79
6/21/2022 15:28	84.65	6/20/2022 14:45	2.89	6/20/2022 15:15	10.34	6/20/2022 14:03	0.60	6/20/2022 15:45	29.83
6/21/2022 15:29	84.64	6/20/2022 14:46	2.46	6/20/2022 15:16	10.39	6/20/2022 14:04	0.68	6/20/2022 15:46	29.80
6/21/2022 15:30	84.62	6/20/2022 14:47	2.08	6/20/2022 15:17	10.36	6/20/2022 14:05	0.55	6/20/2022 15:47	29.79
6/21/2022 15:31	84.61	6/20/2022 14:48	1.77	6/20/2022 15:18	10.40	6/20/2022 14:06	0.61	6/20/2022 15:48	29.84
6/21/2022 15:32	84.62	6/20/2022 14:49	1.57	6/20/2022 15:19	12.67	6/20/2022 14:07	0.67	6/20/2022 15:49	29.81
6/21/2022 15:33	84.65	6/20/2022 14:50	1.34	6/20/2022 15:20	14.70	6/20/2022 14:08	0.54	6/20/2022 15:50	29.84
6/21/2022 15:34	84.61	6/20/2022 14:51	1.21	6/20/2022 15:21	14.14	6/20/2022 14:09	0.59	6/20/2022 15:51	29.83
6/21/2022 15:35	84.59	6/20/2022 14:52	1.14	6/20/2022 15:22	13.69	6/20/2022 14:10	0.65	6/20/2022 15:52	29.82
6/21/2022 15:36	84.58	6/20/2022 14:53	1.03	6/20/2022 15:23	13.34	6/20/2022 14:11	0.56	6/20/2022 15:53	29.89
6/21/2022 15:37	84.61	6/20/2022 14:54	0.84	6/20/2022 15:24	12.97	6/20/2022 14:12	0.58	6/20/2022 15:54	29.85
6/21/2022 15:38	84.59	6/20/2022 14:55	0.66	6/20/2022 15:25	12.76	6/20/2022 14:13	0.67	6/20/2022 15:55	29.84
6/21/2022 15:39	84.58	6/20/2022 14:56	0.60	6/20/2022 15:26	12.51	6/20/2022 14:14	0.61	6/20/2022 15:56	29.83
6/21/2022 15:40	84.54	6/20/2022 14:57	0.50	6/20/2022 15:27	12.23	6/20/2022 14:15	0.60	6/20/2022 15:57	29.83
6/21/2022 15:41	84.56	6/20/2022 14:58	0.39	6/20/2022 15:28	12.10	6/20/2022 14:16	0.62	6/20/2022 15:58	29.86

6/21/2022 15:42	84.55	6/20/2022 14:59	0.33	6/20/2022 15:29	11.95	6/20/2022 14:17	0.67	6/20/2022 15:59	29.86
6/21/2022 15:43	84.58	6/20/2022 15:00	0.26	6/20/2022 15:30	11.78	6/20/2022 14:18	0.57	6/20/2022 16:00	29.86
6/21/2022 15:44	84.55	6/20/2022 15:01	0.19	6/20/2022 15:31	11.64	6/20/2022 14:19	0.61	6/20/2022 16:01	29.87
6/21/2022 15:45	84.52	6/20/2022 15:02	0.13	6/20/2022 15:32	11.55	6/20/2022 14:20	0.66	6/20/2022 16:02	29.87
6/21/2022 15:46	84.55	6/20/2022 15:03	0.14	6/20/2022 15:33	11.46	6/20/2022 14:21	0.57	6/20/2022 16:03	29.87
6/21/2022 15:47	84.59	6/20/2022 15:04	0.11	6/20/2022 15:34	11.36	6/20/2022 14:22	0.62	6/20/2022 16:04	29.86
6/21/2022 15:48	84.54	6/20/2022 15:05	0.06	6/20/2022 15:35	11.25	6/20/2022 14:23	0.62	6/20/2022 16:05	29.86
6/21/2022 15:49	84.59	6/20/2022 15:06	0.03	6/20/2022 15:36	11.18	6/20/2022 14:24	0.57	6/20/2022 16:06	29.87
6/21/2022 15:50	84.52	6/20/2022 15:07	-0.01	6/20/2022 15:37	11.08	6/20/2022 14:25	0.64	6/20/2022 16:07	29.86
6/21/2022 15:51	84.56	6/20/2022 15:08	0.00	6/20/2022 15:38	11.02	6/20/2022 14:26	0.64	6/20/2022 16:08	29.92
6/21/2022 15:52	84.53	6/20/2022 15:09	-0.08	6/20/2022 15:39	10.97	6/20/2022 14:27	0.56	6/20/2022 16:09	29.90
6/21/2022 15:53	84.55	6/20/2022 15:10	-0.06	6/20/2022 15:40	10.90	6/20/2022 14:28	0.66	6/20/2022 16:10	29.92
6/21/2022 15:54	84.55	6/20/2022 15:11	-0.08	6/20/2022 15:41	10.88	6/20/2022 14:29	0.63	6/20/2022 16:11	29.89
6/21/2022 15:55	84.53	6/20/2022 15:12	-0.04	6/20/2022 15:42	10.81	6/20/2022 14:30	0.54	6/20/2022 16:12	29.93
6/21/2022 15:56	84.52	6/20/2022 15:13	-0.03	6/20/2022 15:43	10.80	6/20/2022 14:31	0.62	6/20/2022 16:13	29.92
6/21/2022 15:57	84.53	6/20/2022 15:14	-0.04	6/20/2022 15:44	10.77	6/20/2022 14:32	0.63	6/20/2022 16:14	29.91
6/21/2022 15:58	84.45	6/20/2022 15:15	-0.06	6/20/2022 15:45	10.75	6/20/2022 14:33	0.56	6/20/2022 16:15	29.88
6/21/2022 15:59	84.54	6/20/2022 15:16	1.30	6/20/2022 15:46	10.67	6/20/2022 14:34	0.63	6/20/2022 16:16	29.94
6/21/2022 16:00	84.49	6/20/2022 15:17	7.02	6/20/2022 15:47	10.67	6/20/2022 14:35	0.58	6/20/2022 16:17	29.94
6/21/2022 16:01	84.49	6/20/2022 15:18	7.61	6/20/2022 15:48	10.62	6/20/2022 14:36	0.56	6/20/2022 16:18	29.89
6/21/2022 16:02	84.48	6/20/2022 15:19	6.33	6/20/2022 15:49	10.61	6/20/2022 14:37	0.64	6/20/2022 16:19	29.94
6/21/2022 16:03	84.51	6/20/2022 15:20	5.34	6/20/2022 15:50	10.62	6/20/2022 14:38	0.59	6/20/2022 16:20	29.95
6/21/2022 16:04	84.52	6/20/2022 15:21	4.48	6/20/2022 15:51	10.60	6/20/2022 14:39	0.58	6/20/2022 16:21	29.97
6/21/2022 16:05	84.49	6/20/2022 15:22	3.80	6/20/2022 15:52	10.62	6/20/2022 14:40	0.63	6/20/2022 16:22	30.00
6/21/2022 16:06	84.47	6/20/2022 15:23	3.21	6/20/2022 15:53	10.60	6/20/2022 14:41	0.58	6/20/2022 16:23	29.93
6/21/2022 16:07	84.48	6/20/2022 15:24	2.71	6/20/2022 15:54	10.61	6/20/2022 14:42	0.60	6/20/2022 16:24	29.96
6/21/2022 16:08	84.47	6/20/2022 15:25	2.31	6/20/2022 15:55	10.59	6/20/2022 14:43	0.62	6/20/2022 16:25	29.96
6/21/2022 16:09	84.44	6/20/2022 15:26	1.97	6/20/2022 15:56	10.62	6/20/2022 14:44	0.61	6/20/2022 16:26	29.94
6/21/2022 16:10	84.47	6/20/2022 15:27	1.72	6/20/2022 15:57	10.61	6/20/2022 14:45	0.63	6/20/2022 16:27	29.96
6/21/2022 16:11	84.46	6/20/2022 15:28	1.40	6/20/2022 15:58	10.59	6/20/2022 14:46	0.60	6/20/2022 16:28	29.96
6/21/2022 16:12	84.47	6/20/2022 15:29	1.26	6/20/2022 15:59	10.54	6/20/2022 14:47	0.69	6/20/2022 16:29	29.95
6/21/2022 16:13	84.45	6/20/2022 15:30	1.04	6/20/2022 16:00	10.57	6/20/2022 14:48	0.57	6/20/2022 16:30	29.97
6/21/2022 16:14	84.47	6/20/2022 15:31	0.90	6/20/2022 16:01	10.56	6/20/2022 14:49	0.64	6/20/2022 16:31	29.99
6/21/2022 16:15	84.45	6/20/2022 15:32	0.77	6/20/2022 16:02	10.55	6/20/2022 14:50	5.31	6/20/2022 16:32	29.96
6/21/2022 16:16	84.48	6/20/2022 15:33	0.65	6/20/2022 16:03	10.48	6/20/2022 14:51	6.50	6/20/2022 16:33	30.00
6/21/2022 16:17	84.46	6/20/2022 15:34	0.50	6/20/2022 16:04	10.51	6/20/2022 14:52	3.83	6/20/2022 16:34	29.98
6/21/2022 16:18	84.48	6/20/2022 15:35	5.14	6/20/2022 16:05	10.48	6/20/2022 14:53	1.89	6/20/2022 16:35	30.00
6/21/2022 16:19	84.45	6/20/2022 15:36	7.87	6/20/2022 16:06	10.51	6/20/2022 14:54	0.65	6/20/2022 16:36	30.01
6/21/2022 16:20	84.45	6/20/2022 15:37	6.55	6/20/2022 16:07	10.52	6/20/2022 14:55	0.57	6/20/2022 16:37	30.02
6/21/2022 16:21	84.47	6/20/2022 15:38	5.49	6/20/2022 16:08	10.52	6/20/2022 14:56	0.66	6/20/2022 16:38	30.02
6/21/2022 16:22	84.44	6/20/2022 15:39	4.64	6/20/2022 16:09	10.50	6/20/2022 14:57	0.59	6/20/2022 16:39	29.99
6/21/2022 16:23	84.42	6/20/2022 15:40	3.93	6/20/2022 16:10	10.57	6/20/2022 14:58	0.61	6/20/2022 16:40	30.03
6/21/2022 16:24	84.43	6/20/2022 15:41	3.37	6/20/2022 16:11	10.56	6/20/2022 14:59	0.61	6/20/2022 16:41	29.99
6/21/2022 16:25	84.45	6/20/2022 15:42	2.83	6/20/2022 16:12	13.98	6/20/2022 15:00	0.60	6/20/2022 16:42	30.05
6/21/2022 16:26	84.45	6/20/2022 15:43	2.40	6/20/2022 16:13	15.17	6/20/2022 15:01	0.69	6/20/2022 16:43	30.00
6/21/2022 16:27	84.42	6/20/2022 15:44	2.06	6/20/2022 16:14	14.58	6/20/2022 15:02	0.61	6/20/2022 16:44	30.00
6/21/2022 16:28	84.43	6/20/2022 15:45	1.78	6/20/2022 16:15	14.13	6/20/2022 15:03	0.58	6/20/2022 16:45	30.02
6/21/2022 16:29	84.46	6/20/2022 15:46	1.53	6/20/2022 16:16	13.71	6/20/2022 15:04	0.63	6/20/2022 16:46	30.05
6/21/2022 16:30	84.47	6/20/2022 15:47	1.29	6/20/2022 16:17	13.35	6/20/2022 15:05	0.56	6/20/2022 16:47	30.02
6/21/2022 16:31	84.42	6/20/2022 15:48	1.13	6/20/2022 16:18	13.06	6/20/2022 15:06	0.69	6/20/2022 16:48	30.04
6/21/2022 16:32	84.40	6/20/2022 15:49	0.97	6/20/2022 16:19	12.77	6/20/2022 15:07	0.61	6/20/2022 16:49	30.03
6/21/2022 16:33	84.43	6/20/2022 15:50	0.80	6/20/2022 16:20	12.53	6/20/2022 15:08	0.59	6/20/2022 16:50	30.03
6/21/2022 16:34	88.20	6/20/2022 15:51	0.68	6/20/2022 16:21	12.30	6/20/2022 15:09	0.69	6/20/2022 16:51	30.03
6/21/2022 16:35	91.05	6/20/2022 15:52	0.53	6/20/2022 16:22	12.14	6/20/2022 15:10	0.63	6/20/2022 16:52	30.06
6/21/2022 16:36	92.62	6/20/2022 15:53	0.44	6/20/2022 16:23	11.91	6/20/2022 15:11	0.63	6/20/2022 16:53	32.20
6/21/2022 16:37	90.10	6/20/2022 15:54	0.39	6/20/2022 16:24	11.76	6/20/2022 15:12	0.59	6/20/2022 16:54	30.96
6/21/2022 16:38	88.30	6/20/2022 15:55	0.33	6/20/2022 16:25	11.69	6/20/2022 15:13	0.59	6/20/2022 16:55	30.40
6/21/2022 16:39	87.17	6/20/2022 15:56	0.25	6/20/2022 16:26	11.54	6/20/2022 15:14	0.66	6/20/2022 16:56	30.18
6/21/2022 16:40	86.53	6/20/2022 15:57	0.90	6/20/2022 16:27	11.44	6/20/2022 15:15	0.58	6/20/2022 16:57	30.17
6/21/2022 16:41	86.02	6/20/2022 15:58	6.81	6/20/2022 16:28	11.34	6/20/2022 15:16	0.60	6/20/2022 16:58	30.13
6/21/2022 16:42	85.75	6/20/2022 15:59	8.97	6/20/2022 16:29	11.28	6/20/2022 15:17	0.62	6/20/2022 16:59	30.10
6/21/2022 16:43	85.57	6/20/2022 16:00	7.48	6/20/2022 16:30	11.13	6/20/2022 15:18	0.64	6/20/2022 17:00	30.11
6/21/2022 16:44	85.42	6/20/2022 16:01	6.30	6/20/2022 16:31	11.12	6/20/2022 15:19	0.63	6/20/2022 17:01	30.14
6/21/2022 16:45	85.27	6/20/2022 16:02	5.31	6/20/2022 16:32	11.08	6/20/2022 15:20	0.62	6/20/2022 17:02	30.12
6/21/2022 16:46	85.24	6/20/2022 16:03	4.51	6/20/2022 16:33	10.96	6/20/2022 15:21	0.63	6/20/2022 17:03	30.13
6/21/2022 16:47	85.16	6/20/2022 16:04	3.82	6/20/2022 16:34	10.92	6/20/2022 15:22	0.66	6/20/2022 17:04	30.13
6/21/2022 16:48	85.09	6/20/2022 16:05	3.26	6/20/2022 16:35	10.89	6/20/2022 15:23	0.61	6/20/2022 17:05	30.11
6/21/2022 16:49	85.09	6/20/2022 16:06	2.75	6/20/2022 16:36	10.83	6/20/2022 15:24	0.67	6/20/2022 17:06	30.10
6/21/2022 16:50	85.04	6/20/2022 16:07	6.02	6/20/2022 16:37	10.82	6/20/2022 15:25	0.62	6/20/2022 17:07	30.15
6/21/2022 16:51	85.00	6/20/2022 16:08	10.15	6/20/2022 16:38	10.81	6/20/2022 15:26	0.70	6/20/2022 17:08	30.10
6/21/2022 16:52	84.91	6/20/2022 16:09	8.48	6/20/2022 16:39	10.77	6/20/2022 15:27	0.60	6/20/2022 17:09	30.14
6/21/2022 16:53	84.93	6/20/2022 16:10	7.18	6/20/2022 16:40	10.81	6/20/2022 15:28	0.64	6/20/2022 17:10	30.13
6/21/2022 16:54	84.91	6/20/2022 16:11	6.04	6/20/2022 16:41	10.78	6/20/2022 15:29	0.64	6/20/2022 17:11	30.14
6/21/2022 16:55	84.87	6/20/2022 16:12	5.10	6/20/2022 16:42	10.77	6/20/2022 15:30	0.56	6/20/2022 17:12	30.12
6/21/2022 16:56	84.91	6/20/2022 16:13	4.33	6/20/2022 16:43	10.73	6/20/2022 15:31	0.68	6/20/2022 17:13	30.13
6/21/2022 16:57	84.87	6/20/2022 16:14	3.73	6/20/2022 16:44	10.71	6/20/2022 15:32	0.58	6/20/2022 17:14	30.16
6/21/2022 16:58	84.85	6/20/2022 16:15	3.11	6/20/2022 16:45	10.70	6/20/2022 15:33	0.66	6/20/2022 17:15	30.18
6/21/2022 16:59	84.83	6/20/2022 16:16	2.68	6/20/2022 16:46	10.70	6/20/2022 15:34	0.54	6/20/2022 17:16	30.18
6/21/2022 17:00	84.81	6/20/2022 16:17	2.34	6/20/2022 16:47	10.63	6/20/2022 15:35	0.65	6/20/2022 17:17	30.11
6/21/2022 17:01	84.79	6/20/2022 16:18	1.96	6/20/2022 16:48	10.58	6/20/2022 15:36	0.62	6/20/2022 17:18	30.16
6/21/2022 17:02	84.81	6/20/2022 16:19	1.71	6/20/2022 16:49	10.63	6/20/2022 15:37	0.68	6/20/2022 17:19	30.15
6/21/2022 17:03	84.76	6/20/2022 16:20	1.45	6/20/2022 16:50	10.62	6/20/2022 15:38	0.65	6/20/2022 17:20	30.18
6/21/2022 17:04	84.81	6/20/2022 16:21	1.28	6/20/2022 16:51	10.57	6/20/2022 15:39	0.60	6/20/2022 17:21	30.20
6/21/2022 17:05	84.75	6/20/2022 16:22	1.10	6/20/2022 16:52	10.55	6/20/2022 15:40	0.69	6/20/2022 17:22	30.17
6/21/2022 17:06	84.77	6/20/2022 16:23	0.93	6/20/2022 16:53	10.56	6/20/2022 15:41	0.61	6/20/2022 17:23	30.18
6/21/2022 17:07	84.75	6/20/2022 16:24	0.79	6/20/2022 16:54	10.52	6/20/2022 15:42	0.64	6/20/2022 17:24	30.17
6/21/2022 17:08	84.77	6/20/2022 16:25	0.69	6/20/2022 16:55	10.52	6/20/2022 15:43	0.62	6/20/2022 17:25	30.17
6/21/2022 17:09	84.72	6/20/2022 16:26	0.62	6/20/2022 16:56	10.53	6/20/2022 15:44	0.63	6/20/2022 17:26	30.18

6/21/2022 17:10	84.71	6/20/2022 16:27	0.47	6/20/2022 16:57	10.49	6/20/2022 15:45	0.62	6/20/2022 17:27	30.19
6/21/2022 17:11	84.71	6/20/2022 16:28	0.43	6/20/2022 16:58	10.51	6/20/2022 15:46	0.69	6/20/2022 17:28	30.17
6/21/2022 17:12	84.67	6/20/2022 16:29	0.32	6/20/2022 16:59	10.51	6/20/2022 15:47	0.60	6/20/2022 17:29	30.19
6/21/2022 17:13	84.70	6/20/2022 16:30	0.30	6/20/2022 17:00	10.48	6/20/2022 15:48	0.70	6/20/2022 17:30	30.23
6/21/2022 17:14	84.68	6/20/2022 16:31	0.21	6/20/2022 17:01	10.47	6/20/2022 15:49	0.58	6/20/2022 17:31	30.21
6/21/2022 17:15	84.68	6/20/2022 16:32	0.23	6/20/2022 17:02	10.47	6/20/2022 15:50	0.70	6/20/2022 17:32	30.18
6/21/2022 17:16	84.67	6/20/2022 16:33	0.15	6/20/2022 17:03	10.45	6/20/2022 15:51	0.60	6/20/2022 17:33	30.17
6/21/2022 17:17	84.68	6/20/2022 16:34	0.11	6/20/2022 17:04	11.84	6/20/2022 15:52	0.61	6/20/2022 17:34	30.20
6/21/2022 17:18	84.68	6/20/2022 16:35	0.09	6/20/2022 17:05	16.17	6/20/2022 15:53	0.66	6/20/2022 17:35	30.21
6/21/2022 17:19	84.65	6/20/2022 16:36	0.07	6/20/2022 17:06	16.54	6/20/2022 15:54	0.61	6/20/2022 17:36	30.25
6/21/2022 17:20	84.68	6/20/2022 16:37	0.07	6/20/2022 17:07	15.99	6/20/2022 15:55	0.70	6/20/2022 17:37	30.20
6/21/2022 17:21	84.65	6/20/2022 16:38	0.04	6/20/2022 17:08	20.00	6/20/2022 15:56	0.57	6/20/2022 17:38	30.21
6/21/2022 17:22	84.64	6/20/2022 16:39	0.06	6/20/2022 17:09	21.62	6/20/2022 15:57	0.64	6/20/2022 17:39	30.28
6/21/2022 17:23	84.67	6/20/2022 16:40	0.01	6/20/2022 17:10	20.46	6/20/2022 15:58	0.67	6/20/2022 17:40	30.25
6/21/2022 17:24	84.64	6/20/2022 16:41	0.00	6/20/2022 17:11	20.95	6/20/2022 15:59	0.63	6/20/2022 17:41	30.26
6/21/2022 17:25	84.62	6/20/2022 16:42	0.00	6/20/2022 17:12	24.20	6/20/2022 16:00	0.63	6/20/2022 17:42	30.21
6/21/2022 17:26	84.66	6/20/2022 16:43	-0.03	6/20/2022 17:13	22.80	6/20/2022 16:01	0.70	6/20/2022 17:43	30.24
6/21/2022 17:27	84.64	6/20/2022 16:44	-0.03	6/20/2022 17:14	21.57	6/20/2022 16:02	0.62	6/20/2022 17:44	30.27
6/21/2022 17:28	84.61	6/20/2022 16:45	-0.05	6/20/2022 17:15	20.47	6/20/2022 16:03	0.61	6/20/2022 17:45	30.21
6/21/2022 17:29	84.63	6/20/2022 16:46	4.50	6/20/2022 17:16	19.53	6/20/2022 16:04	0.64	6/20/2022 17:46	30.26
6/21/2022 17:30	84.61	6/20/2022 16:47	7.04	6/20/2022 17:17	18.64	6/20/2022 16:05	0.65	6/20/2022 17:47	30.24
6/21/2022 17:31	84.61	6/20/2022 16:48	5.95	6/20/2022 17:18	17.87	6/20/2022 16:06	0.63	6/20/2022 17:48	30.25
6/21/2022 17:32	84.61	6/20/2022 16:49	5.05	6/20/2022 17:19	17.18	6/20/2022 16:07	0.66	6/20/2022 17:49	30.26
6/21/2022 17:33	84.62	6/20/2022 16:50	4.32	6/20/2022 17:20	16.57	6/20/2022 16:08	0.72	6/20/2022 17:50	30.26
6/21/2022 17:34	84.58	6/20/2022 16:51	3.64	6/20/2022 17:21	16.03	6/20/2022 16:09	0.62	6/20/2022 17:51	30.27
6/21/2022 17:35	84.58	6/20/2022 16:52	3.08	6/20/2022 17:22	15.52	6/20/2022 16:10	0.61	6/20/2022 17:52	30.26
6/21/2022 17:36	84.58	6/20/2022 16:53	2.60	6/20/2022 17:23	15.06	6/20/2022 16:11	0.61	6/20/2022 17:53	30.26
6/21/2022 17:37	84.61	6/20/2022 16:54	2.25	6/20/2022 17:24	14.71	6/20/2022 16:12	0.65	6/20/2022 17:54	30.28
6/21/2022 17:38	84.62	6/20/2022 16:55	1.94	6/20/2022 17:25	14.35	6/20/2022 16:13	0.59	6/20/2022 17:55	30.23
6/21/2022 17:39	84.59	6/20/2022 16:56	1.65	6/20/2022 17:26	13.99	6/20/2022 16:14	0.66	6/20/2022 17:56	30.29
6/21/2022 17:40	84.58	6/20/2022 16:57	1.45	6/20/2022 17:27	13.74	6/20/2022 16:15	0.60	6/20/2022 17:57	30.28
6/21/2022 17:41	84.60	6/20/2022 16:58	1.27	6/20/2022 17:28	13.46	6/20/2022 16:16	0.57	6/20/2022 17:58	32.23
6/21/2022 17:42	84.62	6/20/2022 16:59	1.07	6/20/2022 17:29	13.19	6/20/2022 16:17	0.67	6/20/2022 17:59	33.56
6/21/2022 17:43	84.60	6/20/2022 17:00	0.90	6/20/2022 17:30	13.00	6/20/2022 16:18	0.60	6/20/2022 18:00	34.50
6/21/2022 17:44	84.57	6/20/2022 17:01	0.76	6/20/2022 17:31	12.77	6/20/2022 16:19	0.61	6/20/2022 18:01	34.47
6/21/2022 17:45	84.58	6/20/2022 17:02	0.69	6/20/2022 17:32	12.58	6/20/2022 16:20	0.64	6/20/2022 18:02	34.24
6/21/2022 17:46	84.55	6/20/2022 17:03	0.53	6/20/2022 17:33	12.48	6/20/2022 16:21	0.58	6/20/2022 18:03	33.86
6/21/2022 17:47	84.55	6/20/2022 17:04	0.49	6/20/2022 17:34	12.27	6/20/2022 16:22	0.68	6/20/2022 18:04	34.10
6/21/2022 17:48	84.57	6/20/2022 17:05	0.44	6/20/2022 17:35	12.18	6/20/2022 16:23	0.59	6/20/2022 18:05	34.60
6/21/2022 17:49	84.57	6/20/2022 17:06	0.29	6/20/2022 17:36	12.07	6/20/2022 16:24	0.70	6/20/2022 18:06	35.13
6/21/2022 17:50	84.55	6/20/2022 17:07	0.22	6/20/2022 17:37	11.96	6/20/2022 16:25	0.60	6/20/2022 18:07	35.61
6/21/2022 17:51	84.55	6/20/2022 17:08	0.22	6/20/2022 17:38	11.86	6/20/2022 16:26	0.62	6/20/2022 18:08	33.23
6/21/2022 17:52	84.55	6/20/2022 17:09	0.19	6/20/2022 17:39	11.76	6/20/2022 16:27	0.60	6/20/2022 18:09	31.80
6/21/2022 17:53	84.55	6/20/2022 17:10	0.13	6/20/2022 17:40	11.70	6/20/2022 16:28	0.68	6/20/2022 18:10	31.07
6/21/2022 17:54	84.56	6/20/2022 17:11	0.11	6/20/2022 17:41	11.63	6/20/2022 16:29	0.63	6/20/2022 18:11	30.79
6/21/2022 17:55	84.52	6/20/2022 17:12	0.08	6/20/2022 17:42	11.55	6/20/2022 16:30	0.65	6/20/2022 18:12	30.69
6/21/2022 17:56	84.54	6/20/2022 17:13	0.02	6/20/2022 17:43	11.46	6/20/2022 16:31	0.62	6/20/2022 18:13	30.64
6/21/2022 17:57	84.55	6/20/2022 17:14	0.08	6/20/2022 17:44	11.42	6/20/2022 16:32	0.68	6/20/2022 18:14	30.60
6/21/2022 17:58	84.56	6/20/2022 17:15	0.03	6/20/2022 17:45	11.33	6/20/2022 16:33	0.63	6/20/2022 18:15	30.60
6/21/2022 17:59	84.51	6/20/2022 17:16	0.00	6/20/2022 17:46	11.31	6/20/2022 16:34	0.61	6/20/2022 18:16	30.56
6/21/2022 18:00	84.53	6/20/2022 17:17	-0.01	6/20/2022 17:47	11.23	6/20/2022 16:35	0.71	6/20/2022 18:17	30.61
6/21/2022 18:01	84.53	6/20/2022 17:18	-0.04	6/20/2022 17:48	11.16	6/20/2022 16:36	0.63	6/20/2022 18:18	30.53
6/21/2022 18:02	84.50	6/20/2022 17:19	-0.03	6/20/2022 17:49	11.10	6/20/2022 16:37	0.68	6/20/2022 18:19	30.56
6/21/2022 18:03	84.51	6/20/2022 17:20	-0.04	6/20/2022 17:50	11.08	6/20/2022 16:38	0.63	6/20/2022 18:20	30.56
6/21/2022 18:04	84.56	6/20/2022 17:21	-0.05	6/20/2022 17:51	11.05	6/20/2022 16:39	0.67	6/20/2022 18:21	30.55
6/21/2022 18:05	84.52	6/20/2022 17:22	-0.03	6/20/2022 17:52	11.01	6/20/2022 16:40	0.64	6/20/2022 18:22	30.57
6/21/2022 18:06	84.52	6/20/2022 17:23	-0.05	6/20/2022 17:53	10.99	6/20/2022 16:41	0.69	6/20/2022 18:23	30.50
6/21/2022 18:07	84.51	6/20/2022 17:24	-0.06	6/20/2022 17:54	10.92	6/20/2022 16:42	0.60	6/20/2022 18:24	30.57
6/21/2022 18:08	84.52	6/20/2022 17:25	-0.07	6/20/2022 17:55	10.93	6/20/2022 16:43	0.68	6/20/2022 18:25	30.56
6/21/2022 18:09	84.56	6/20/2022 17:26	-0.02	6/20/2022 17:56	10.88	6/20/2022 16:44	0.59	6/20/2022 18:26	30.56
6/21/2022 18:10	84.49	6/20/2022 17:27	-0.07	6/20/2022 17:57	10.86	6/20/2022 16:45	0.64	6/20/2022 18:27	30.56
6/21/2022 18:11	84.50	6/20/2022 17:28	-0.08	6/20/2022 17:58	10.88	6/20/2022 16:46	5.25	6/20/2022 18:28	30.52
6/21/2022 18:12	84.52	6/20/2022 17:29	-0.05	6/20/2022 17:59	10.86	6/20/2022 16:47	6.56	6/20/2022 18:29	30.53
6/21/2022 18:13	84.49	6/20/2022 17:30	-0.09	6/20/2022 18:00	10.83	6/20/2022 16:48	4.06	6/20/2022 18:30	30.50
6/21/2022 18:14	84.50	6/20/2022 17:31	-0.07	6/20/2022 18:01	10.84	6/20/2022 16:49	2.18	6/20/2022 18:31	30.56
6/21/2022 18:15	84.52	6/20/2022 17:32	-0.04	6/20/2022 18:02	10.80	6/20/2022 16:50	0.79	6/20/2022 18:32	30.51
6/21/2022 18:16	84.51	6/20/2022 17:33	-0.07	6/20/2022 18:03	10.80	6/20/2022 16:51	0.68	6/20/2022 18:33	30.53
6/21/2022 18:17	84.51	6/20/2022 17:34	-0.05	6/20/2022 18:04	10.78	6/20/2022 16:52	0.68	6/20/2022 18:34	30.49
6/21/2022 18:18	84.45	6/20/2022 17:35	-0.03	6/20/2022 18:05	10.76	6/20/2022 16:53	0.68	6/20/2022 18:35	30.53
6/21/2022 18:19	84.49	6/20/2022 17:36	-0.01	6/20/2022 18:06	10.77	6/20/2022 16:54	0.61	6/20/2022 18:36	30.54
6/21/2022 18:20	84.51	6/20/2022 17:37	-0.05	6/20/2022 18:07	10.70	6/20/2022 16:55	0.63	6/20/2022 18:37	30.53
6/21/2022 18:21	84.48	6/20/2022 17:38	-0.05	6/20/2022 18:08	10.70	6/20/2022 16:56	0.61	6/20/2022 18:38	30.53
6/21/2022 18:22	84.49	6/20/2022 17:39	-0.05	6/20/2022 18:09	10.71	6/20/2022 16:57	0.70	6/20/2022 18:39	30.54
6/21/2022 18:23	84.45	6/20/2022 17:40	-0.04	6/20/2022 18:10	10.65	6/20/2022 16:58	0.60	6/20/2022 18:40	32.08
6/21/2022 18:24	84.50	6/20/2022 17:41	-0.07	6/20/2022 18:11	10.68	6/20/2022 16:59	0.71	6/20/2022 18:41	31.63
6/21/2022 18:25	84.47	6/20/2022 17:42	-0.05	6/20/2022 18:12	10.62	6/20/2022 17:00	0.62	6/20/2022 18:42	30.93
6/21/2022 18:26	84.49	6/20/2022 17:43	-0.08	6/20/2022 18:13	10.62	6/20/2022 17:01	0.61	6/20/2022 18:43	30.68
6/21/2022 18:27	84.47	6/20/2022 17:44	-0.06	6/20/2022 18:14	10.63	6/20/2022 17:02	0.66	6/20/2022 18:44	30.65
6/21/2022 18:28	84.47	6/20/2022 17:45	-0.07	6/20/2022 18:15	10.58	6/20/2022 17:03	0.59	6/20/2022 18:45	30.57
6/21/2022 18:29	84.45	6/20/2022 17:46	-0.03	6/20/2022 18:16	10.59	6/20/2022 17:04	0.73	6/20/2022 18:46	30.58
6/21/2022 18:30	84.44	6/20/2022 17:47	-0.06	6/20/2022 18:17	10.58	6/20/2022 17:05	0.63	6/20/2022 18:47	30.60
6/21/2022 18:31	84.48	6/20/2022 17:48	-0.01	6/20/2022 18:18	10.55	6/20/2022 17:06	0.69	6/20/2022 18:48	30.58
6/21/2022 18:32	84.43	6/20/2022 17:49	-0.10	6/20/2022 18:19	10.54	6/20/2022 17:07	0.58	6/20/2022 18:49	30.59
6/21/2022 18:33	84.45	6/20/2022 17:50	-0.04	6/20/2022 18:20	10.56	6/20/2022 17:08	0.65	6/20/2022 18:50	30.56
6/21/2022 18:34	84.49	6/20/2022 17:51	-0.06	6/20/2022 18:21	10.57	6/20/2022 17:09	0.61	6/20/2022 18:51	30.57
6/21/2022 18:35	84.45	6/20/2022 17:52	-0.04	6/20/2022 18:22	10.59	6/20/2022 17:10	0.65	6/20/2022 18:52	30.56
6/21/2022 18:36	84.48	6/20/2022 17:53	3.98	6/20/2022 18:23	10.58	6/20/2022 17:11	0.68	6/20/2022 18:53	30.54
6/21/2022 18:37	84.46	6/20/2022 17:54	7.03	6/20/2022 18:24	10.59	6/20/2022 17:12	0.61	6/20/2022 18:54	30.59

6/21/2022 18:38	84.41	6/20/2022 17:55	5.85	6/20/2022 18:25	10.60	6/20/2022 17:13	0.62	6/20/2022 18:55	30.55
6/21/2022 18:39	84.47	6/20/2022 17:56	4.89	6/20/2022 18:26	10.56	6/20/2022 17:14	0.65	6/20/2022 18:56	30.54
6/21/2022 18:40	84.43	6/20/2022 17:57	4.17	6/20/2022 18:27	10.59	6/20/2022 17:15	0.63	6/20/2022 18:57	30.60
6/21/2022 18:41	84.44	6/20/2022 17:58	3.53	6/20/2022 18:28	10.57	6/20/2022 17:16	0.65	6/20/2022 18:58	30.58
6/21/2022 18:42	86.15	6/20/2022 17:59	2.95	6/20/2022 18:29	10.53	6/20/2022 17:17	0.57	6/20/2022 18:59	30.56
6/21/2022 18:43	89.93	6/20/2022 18:00	2.54	6/20/2022 18:30	10.56	6/20/2022 17:18	0.70	6/20/2022 19:00	30.59
6/21/2022 18:44	92.19	6/20/2022 18:01	2.18	6/20/2022 18:31	10.58	6/20/2022 17:19	0.64	6/20/2022 19:01	30.56
6/21/2022 18:45	93.28	6/20/2022 18:02	1.89	6/20/2022 18:32	10.57	6/20/2022 17:20	0.68	6/20/2022 19:02	30.58
6/21/2022 18:46	90.32	6/20/2022 18:03	1.62	6/20/2022 18:33	10.55	6/20/2022 17:21	0.60	6/20/2022 19:03	30.60
6/21/2022 18:47	88.50	6/20/2022 18:04	1.33	6/20/2022 18:34	10.53	6/20/2022 17:22	0.70	6/20/2022 19:04	30.60
6/21/2022 18:48	87.35	6/20/2022 18:05	1.20	6/20/2022 18:35	10.55	6/20/2022 17:23	0.60	6/20/2022 19:05	30.59
6/21/2022 18:49	86.66	6/20/2022 18:06	0.98	6/20/2022 18:36	10.53	6/20/2022 17:24	0.70	6/20/2022 19:06	30.59
6/21/2022 18:50	86.17	6/20/2022 18:07	0.87	6/20/2022 18:37	10.51	6/20/2022 17:25	0.59	6/20/2022 19:07	30.61
6/21/2022 18:51	85.88	6/20/2022 18:08	0.74	6/20/2022 18:38	10.47	6/20/2022 17:26	0.69	6/20/2022 19:08	30.58
6/21/2022 18:52	85.66	6/20/2022 18:09	0.63	6/20/2022 18:39	10.43	6/20/2022 17:27	0.61	6/20/2022 19:09	30.65
6/21/2022 18:53	85.54	6/20/2022 18:10	0.51	6/20/2022 18:40	10.47	6/20/2022 17:28	0.68	6/20/2022 19:10	30.61
6/21/2022 18:54	85.40	6/20/2022 18:11	0.43	6/20/2022 18:41	10.50	6/20/2022 17:29	0.63	6/20/2022 19:11	30.64
6/21/2022 18:55	85.35	6/20/2022 18:12	0.38	6/20/2022 18:42	10.50	6/20/2022 17:30	0.73	6/20/2022 19:12	30.63
6/21/2022 18:56	85.24	6/20/2022 18:13	0.28	6/20/2022 18:43	10.51	6/20/2022 17:31	0.64	6/20/2022 19:13	30.63
6/21/2022 18:57	85.21	6/20/2022 18:14	0.26	6/20/2022 18:44	10.52	6/20/2022 17:32	0.69	6/20/2022 19:14	30.65
6/21/2022 18:58	85.17	6/20/2022 18:15	0.20	6/20/2022 18:45	10.51	6/20/2022 17:33	0.61	6/20/2022 19:15	30.65
6/21/2022 18:59	85.14	6/20/2022 18:16	0.16	6/20/2022 18:46	10.56	6/20/2022 17:34	0.66	6/20/2022 19:16	30.63
6/21/2022 19:00	85.11	6/20/2022 18:17	0.15	6/20/2022 18:47	10.52	6/20/2022 17:35	0.58	6/20/2022 19:17	30.66
6/21/2022 19:01	85.09	6/20/2022 18:18	0.13	6/20/2022 18:48	10.55	6/20/2022 17:36	0.75	6/20/2022 19:18	30.65
6/21/2022 19:02	85.02	6/20/2022 18:19	0.08	6/20/2022 18:49	10.50	6/20/2022 17:37	0.61	6/20/2022 19:19	30.66
6/21/2022 19:03	85.00	6/20/2022 18:20	0.03	6/20/2022 18:50	10.54	6/20/2022 17:38	0.71	6/20/2022 19:20	30.63
6/21/2022 19:04	84.98	6/20/2022 18:21	0.03	6/20/2022 18:51	10.48	6/20/2022 17:39	0.60	6/20/2022 19:21	30.66
6/21/2022 19:05	84.99	6/20/2022 18:22	0.01	6/20/2022 18:52	10.53	6/20/2022 17:40	0.70	6/20/2022 19:22	30.66
6/21/2022 19:06	84.98	6/20/2022 18:23	0.00	6/20/2022 18:53	10.49	6/20/2022 17:41	0.61	6/20/2022 19:23	30.63
6/21/2022 19:07	84.97	6/20/2022 18:24	0.01	6/20/2022 18:54	10.50	6/20/2022 17:42	0.68	6/20/2022 19:24	30.67
6/21/2022 19:08	84.94	6/20/2022 18:25	1.91	6/20/2022 18:55	10.48	6/20/2022 17:43	0.64	6/20/2022 19:25	30.67
6/21/2022 19:09	84.92	6/20/2022 18:26	7.54	6/20/2022 18:56	10.47	6/20/2022 17:44	0.66	6/20/2022 19:26	30.63
6/21/2022 19:10	84.92	6/20/2022 18:27	6.96	6/20/2022 18:57	10.49	6/20/2022 17:45	0.68	6/20/2022 19:27	30.65
6/21/2022 19:11	84.88	6/20/2022 18:28	5.84	6/20/2022 18:58	10.49	6/20/2022 17:46	0.60	6/20/2022 19:28	30.67
6/21/2022 19:12	84.84	6/20/2022 18:29	4.91	6/20/2022 18:59	10.50	6/20/2022 17:47	0.68	6/20/2022 19:29	30.65
6/21/2022 19:13	84.86	6/20/2022 18:30	4.16	6/20/2022 19:00	10.52	6/20/2022 17:48	0.62	6/20/2022 19:30	30.65
6/21/2022 19:14	84.86	6/20/2022 18:31	3.56	6/20/2022 19:01	10.47	6/20/2022 17:49	0.71	6/20/2022 19:31	31.51
6/21/2022 19:15	84.82	6/20/2022 18:32	2.99	6/20/2022 19:02	10.52	6/20/2022 17:50	0.60	6/20/2022 19:32	32.06
6/21/2022 19:16	84.86	6/20/2022 18:33	2.56	6/20/2022 19:03	10.55	6/20/2022 17:51	0.70	6/20/2022 19:33	31.19
6/21/2022 19:17	84.82	6/20/2022 18:34	2.12	6/20/2022 19:04	10.53	6/20/2022 17:52	0.61	6/20/2022 19:34	30.88
6/21/2022 19:18	84.84	6/20/2022 18:35	1.89	6/20/2022 19:05	10.55	6/20/2022 17:53	0.71	6/20/2022 19:35	32.58
6/21/2022 19:19	84.78	6/20/2022 18:36	1.57	6/20/2022 19:06	10.54	6/20/2022 17:54	0.66	6/20/2022 19:36	31.50
6/21/2022 19:20	84.79	6/20/2022 18:37	1.39	6/20/2022 19:07	10.57	6/20/2022 17:55	0.63	6/20/2022 19:37	30.97
6/21/2022 19:21	84.78	6/20/2022 18:38	1.18	6/20/2022 19:08	10.55	6/20/2022 17:56	0.63	6/20/2022 19:38	30.82
6/21/2022 19:22	84.79	6/20/2022 18:39	1.05	6/20/2022 19:09	10.52	6/20/2022 17:57	0.63	6/20/2022 19:39	30.74
6/21/2022 19:23	84.76	6/20/2022 18:40	0.87	6/20/2022 19:10	10.57	6/20/2022 17:58	0.63	6/20/2022 19:40	30.75
6/21/2022 19:24	84.77	6/20/2022 18:41	0.76	6/20/2022 19:11	10.53	6/20/2022 17:59	0.75	6/20/2022 19:41	30.71
6/21/2022 19:25	84.77	6/20/2022 18:42	0.61	6/20/2022 19:12	10.53	6/20/2022 18:00	0.64	6/20/2022 19:42	30.73
6/21/2022 19:26	84.77	6/20/2022 18:43	0.55	6/20/2022 19:13	10.53	6/20/2022 18:01	0.62	6/20/2022 19:43	30.70
6/21/2022 19:27	84.78	6/20/2022 18:44	0.46	6/20/2022 19:14	10.50	6/20/2022 18:02	0.64	6/20/2022 19:44	30.74
6/21/2022 19:28	84.74	6/20/2022 18:45	0.38	6/20/2022 19:15	10.47	6/20/2022 18:03	0.64	6/20/2022 19:45	30.69
6/21/2022 19:29	84.76	6/20/2022 18:46	0.31	6/20/2022 19:16	10.50	6/20/2022 18:04	0.61	6/20/2022 19:46	30.70
6/21/2022 19:30	84.74	6/20/2022 18:47	0.26	6/20/2022 19:17	10.46	6/20/2022 18:05	0.65	6/20/2022 19:47	30.68
6/21/2022 19:31	84.72	6/20/2022 18:48	0.24	6/20/2022 19:18	10.49	6/20/2022 18:06	0.64	6/20/2022 19:48	30.70
6/21/2022 19:32	84.74	6/20/2022 18:49	3.05	6/20/2022 19:19	10.48	6/20/2022 18:07	0.63	6/20/2022 19:49	30.73
6/21/2022 19:33	84.70	6/20/2022 18:50	8.75	6/20/2022 19:20	10.40	6/20/2022 18:08	0.69	6/20/2022 19:50	30.70
6/21/2022 19:34	84.72	6/20/2022 18:51	6.96	6/20/2022 19:21	10.42	6/20/2022 18:09	0.61	6/20/2022 19:51	30.74
6/21/2022 19:35	84.75	6/20/2022 18:52	5.89	6/20/2022 19:22	10.43	6/20/2022 18:10	0.66	6/20/2022 19:52	30.74
6/21/2022 19:36	84.70	6/20/2022 18:53	4.97	6/20/2022 19:23	10.43	6/20/2022 18:11	0.60	6/20/2022 19:53	30.73
6/21/2022 19:37	84.71	6/20/2022 18:54	4.21	6/20/2022 19:24	10.42	6/20/2022 18:12	0.65	6/20/2022 19:54	30.71
6/21/2022 19:38	84.69	6/20/2022 18:55	3.59	6/20/2022 19:25	10.46	6/20/2022 18:13	0.65	6/20/2022 19:55	30.70
6/21/2022 19:39	84.69	6/20/2022 18:56	2.97	6/20/2022 19:26	10.45	6/20/2022 18:14	0.62	6/20/2022 19:56	30.74
6/21/2022 19:40	84.69	6/20/2022 18:57	2.53	6/20/2022 19:27	10.48	6/20/2022 18:15	0.69	6/20/2022 19:57	30.76
6/21/2022 19:41	84.71	6/20/2022 18:58	2.18	6/20/2022 19:28	10.48	6/20/2022 18:16	0.63	6/20/2022 19:58	30.77
6/21/2022 19:42	84.71	6/20/2022 18:59	1.93	6/20/2022 19:29	10.52	6/20/2022 18:17	0.71	6/20/2022 19:59	30.70
6/21/2022 19:43	84.70	6/20/2022 19:00	1.67	6/20/2022 19:30	10.49	6/20/2022 18:18	0.65	6/20/2022 20:00	30.74
6/21/2022 19:44	84.70	6/20/2022 19:01	1.44	6/20/2022 19:31	10.49	6/20/2022 18:19	0.63	6/20/2022 20:01	30.74
6/21/2022 19:45	84.71	6/20/2022 19:02	1.22	6/20/2022 19:32	10.50	6/20/2022 18:20	0.67	6/20/2022 20:02	30.73
6/21/2022 19:46	84.70	6/20/2022 19:03	1.05	6/20/2022 19:33	10.48	6/20/2022 18:21	0.64	6/20/2022 20:03	30.73
6/21/2022 19:47	84.69	6/20/2022 19:04	0.91	6/20/2022 19:34	10.44	6/20/2022 18:22	0.70	6/20/2022 20:04	30.76
6/21/2022 19:48	84.71	6/20/2022 19:05	0.80	6/20/2022 19:35	10.46	6/20/2022 18:23	0.60	6/20/2022 20:05	30.75
6/21/2022 19:49	84.64	6/20/2022 19:06	0.64	6/20/2022 19:36	10.47	6/20/2022 18:24	0.61	6/20/2022 20:06	30.74
6/21/2022 19:50	84.67	6/20/2022 19:07	0.58	6/20/2022 19:37	10.47	6/20/2022 18:25	0.68	6/20/2022 20:07	30.77
6/21/2022 19:51	84.66	6/20/2022 19:08	0.48	6/20/2022 19:38	10.48	6/20/2022 18:26	0.64	6/20/2022 20:08	30.75
6/21/2022 19:52	84.67	6/20/2022 19:09	0.40	6/20/2022 19:39	10.47	6/20/2022 18:27	0.62	6/20/2022 20:09	30.73
6/21/2022 19:53	84.64	6/20/2022 19:10	0.36	6/20/2022 19:40	10.48	6/20/2022 18:28	0.64	6/20/2022 20:10	30.74
6/21/2022 19:54	84.63	6/20/2022 19:11	0.27	6/20/2022 19:41	10.49	6/20/2022 18:29	0.64	6/20/2022 20:11	30.73
6/21/2022 19:55	84.65	6/20/2022 19:12	0.29	6/20/2022 19:42	10.50	6/20/2022 18:30	0.65	6/20/2022 20:12	30.76
6/21/2022 19:56	84.65	6/20/2022 19:13	0.20	6/20/2022 19:43	10.51	6/20/2022 18:31	0.64	6/20/2022 20:13	30.78
6/21/2022 19:57	84.64	6/20/2022 19:14	0.18	6/20/2022 19:44	10.53	6/20/2022 18:32	0.71	6/20/2022 20:14	30.80
6/21/2022 19:58	84.63	6/20/2022 19:15	0.15	6/20/2022 19:45	10.50	6/20/2022 18:33	0.62	6/20/2022 20:15	30.77
6/21/2022 19:59	84.63	6/20/2022 19:16	0.10	6/20/2022 19:46	10.55	6/20/2022 18:34	0.60	6/20/2022 20:16	30.79
6/21/2022 20:00	84.64	6/20/2022 19:17	0.14	6/20/2022 19:47	10.54	6/20/2022 18:35	0.65	6/20/2022 20:17	30.73
6/21/2022 20:01	84.64	6/20/2022 19:18	0.08	6/20/2022 19:48	10.51	6/20/2022 18:36	0.71	6/20/2022 20:18	30.76
6/21/2022 20:02	84.63	6/20/2022 19:19	0.04	6/20/2022 19:49	10.56	6/20/2022 18:37	0.66	6/20/2022 20:19	30.74
6/21/2022 20:03	84.63	6/20/2022 19:20	0.06	6/20/2022 19:50	10.56	6/20/2022 18:38	0.63	6/20/2022 20:20	30.77
6/21/2022 20:04	84.61	6/20/2022 19:21	0.08	6/20/2022 19:51	10.54	6/20/2022 18:39	0.73	6/20/2022 20:21	30.75
6/21/2022 20:05	84.62	6/20/2022 19:22	0.04	6/20/2022 19:52	10.57	6/20/2022 18:40	0.63	6/20/2022 20:22	30.78

6/21/2022 20:06	84.60	6/20/2022 19:23	0.11	6/20/2022 19:53	10.58	6/20/2022 18:41	0.60	6/20/2022 20:23	30.77
6/21/2022 20:07	84.59	6/20/2022 19:24	0.21	6/20/2022 19:54	10.61	6/20/2022 18:42	0.67	6/20/2022 20:24	30.81
6/21/2022 20:08	84.63	6/20/2022 19:25	5.94	6/20/2022 19:55	10.54	6/20/2022 18:43	0.68	6/20/2022 20:25	30.78
6/21/2022 20:09	84.62	6/20/2022 19:26	6.96	6/20/2022 19:56	10.53	6/20/2022 18:44	0.64	6/20/2022 20:26	30.77
6/21/2022 20:10	84.59	6/20/2022 19:27	5.88	6/20/2022 19:57	10.53	6/20/2022 18:45	0.67	6/20/2022 20:27	30.79
6/21/2022 20:11	84.61	6/20/2022 19:28	4.94	6/20/2022 19:58	10.56	6/20/2022 18:46	0.63	6/20/2022 20:28	30.78
6/21/2022 20:12	84.59	6/20/2022 19:29	4.20	6/20/2022 19:59	10.54	6/20/2022 18:47	0.65	6/20/2022 20:29	30.78
6/21/2022 20:13	84.58	6/20/2022 19:30	3.54	6/20/2022 20:00	10.51	6/20/2022 18:48	0.67	6/20/2022 20:30	30.80
6/21/2022 20:14	84.60	6/20/2022 19:31	3.00	6/20/2022 20:01	10.54	6/20/2022 18:49	0.63	6/20/2022 20:31	30.80
6/21/2022 20:15	84.60	6/20/2022 19:32	2.51	6/20/2022 20:02	10.51	6/20/2022 18:50	0.62	6/20/2022 20:32	30.80
6/21/2022 20:16	84.61	6/20/2022 19:33	2.21	6/20/2022 20:03	10.50	6/20/2022 18:51	0.61	6/20/2022 20:33	30.78
6/21/2022 20:17	84.59	6/20/2022 19:34	1.91	6/20/2022 20:04	10.50	6/20/2022 18:52	0.66	6/20/2022 20:34	30.79
6/21/2022 20:18	84.59	6/20/2022 19:35	1.67	6/20/2022 20:05	10.49	6/20/2022 18:53	0.66	6/20/2022 20:35	30.78
6/21/2022 20:19	84.56	6/20/2022 19:36	1.46	6/20/2022 20:06	10.47	6/20/2022 18:54	0.67	6/20/2022 20:36	30.82
6/21/2022 20:20	84.58	6/20/2022 19:37	1.23	6/20/2022 20:07	10.48	6/20/2022 18:55	0.60	6/20/2022 20:37	30.78
6/21/2022 20:21	84.60	6/20/2022 19:38	1.09	6/20/2022 20:08	10.45	6/20/2022 18:56	0.63	6/20/2022 20:38	30.81
6/21/2022 20:22	84.59	6/20/2022 19:39	0.90	6/20/2022 20:09	10.45	6/20/2022 18:57	0.64	6/20/2022 20:39	30.80
6/21/2022 20:23	84.57	6/20/2022 19:40	0.81	6/20/2022 20:10	10.44	6/20/2022 18:58	0.65	6/20/2022 20:40	30.79
6/21/2022 20:24	84.57	6/20/2022 19:41	0.69	6/20/2022 20:11	10.44	6/20/2022 18:59	0.65	6/20/2022 20:41	30.78
6/21/2022 20:25	84.52	6/20/2022 19:42	0.61	6/20/2022 20:12	10.45	6/20/2022 19:00	0.71	6/20/2022 20:42	30.82
6/21/2022 20:26	84.60	6/20/2022 19:43	0.50	6/20/2022 20:13	10.44	6/20/2022 19:01	0.62	6/20/2022 20:43	30.81
6/21/2022 20:27	84.55	6/20/2022 19:44	0.42	6/20/2022 20:14	10.46	6/20/2022 19:02	0.60	6/20/2022 20:44	30.80
6/21/2022 20:28	84.56	6/20/2022 19:45	0.36	6/20/2022 20:15	10.45	6/20/2022 19:03	0.64	6/20/2022 20:45	30.83
6/21/2022 20:29	84.58	6/20/2022 19:46	0.30	6/20/2022 20:16	10.47	6/20/2022 19:04	0.67	6/20/2022 20:46	30.80
6/21/2022 20:30	84.56	6/20/2022 19:47	0.27	6/20/2022 20:17	10.51	6/20/2022 19:05	0.63	6/20/2022 20:47	30.86
6/21/2022 20:31	84.55	6/20/2022 19:48	2.69	6/20/2022 20:18	10.47	6/20/2022 19:06	0.62	6/20/2022 20:48	30.83
6/21/2022 20:32	84.58	6/20/2022 19:49	8.13	6/20/2022 20:19	10.47	6/20/2022 19:07	0.67	6/20/2022 20:49	30.83
6/21/2022 20:33	84.52	6/20/2022 19:50	7.48	6/20/2022 20:20	10.50	6/20/2022 19:08	0.65	6/20/2022 20:50	30.82
6/21/2022 20:34	84.56	6/20/2022 19:51	6.30	6/20/2022 20:21	10.50	6/20/2022 19:09	0.60	6/20/2022 20:51	30.83
6/21/2022 20:35	84.55	6/20/2022 19:52	5.26	6/20/2022 20:22	10.48	6/20/2022 19:10	0.69	6/20/2022 20:52	30.84
6/21/2022 20:36	84.53	6/20/2022 19:53	4.44	6/20/2022 20:23	10.46	6/20/2022 19:11	0.63	6/20/2022 20:53	30.81
6/21/2022 20:37	84.54	6/20/2022 19:54	3.75	6/20/2022 20:24	10.47	6/20/2022 19:12	0.62	6/20/2022 20:54	30.81
6/21/2022 20:38	84.52	6/20/2022 19:55	3.23	6/20/2022 20:25	10.47	6/20/2022 19:13	0.65	6/20/2022 20:55	30.83
6/21/2022 20:39	84.55	6/20/2022 19:56	2.74	6/20/2022 20:26	10.44	6/20/2022 19:14	0.66	6/20/2022 20:56	30.84
6/21/2022 20:40	84.54	6/20/2022 19:57	2.37	6/20/2022 20:27	10.43	6/20/2022 19:15	0.62	6/20/2022 20:57	30.89
6/21/2022 20:41	84.58	6/20/2022 19:58	2.08	6/20/2022 20:28	10.39	6/20/2022 19:16	0.66	6/20/2022 20:58	30.88
6/21/2022 20:42	84.53	6/20/2022 19:59	1.79	6/20/2022 20:29	10.39	6/20/2022 19:17	0.61	6/20/2022 20:59	30.85
6/21/2022 20:43	84.53	6/20/2022 20:00	1.54	6/20/2022 20:30	10.41	6/20/2022 19:18	0.63	6/20/2022 21:00	30.85
6/21/2022 20:44	84.52	6/20/2022 20:01	1.37	6/20/2022 20:31	10.43	6/20/2022 19:19	0.68	6/20/2022 21:01	30.87
6/21/2022 20:45	84.56	6/20/2022 20:02	1.21	6/20/2022 20:32	10.41	6/20/2022 19:20	0.61	6/20/2022 21:02	30.88
6/21/2022 20:46	84.51	6/20/2022 20:03	1.01	6/20/2022 20:33	10.41	6/20/2022 19:21	0.62	6/20/2022 21:03	30.86
6/21/2022 20:47	84.55	6/20/2022 20:04	0.89	6/20/2022 20:34	10.41	6/20/2022 19:22	4.05	6/20/2022 21:04	30.87
6/21/2022 20:48	84.54	6/20/2022 20:05	0.75	6/20/2022 20:35	10.38	6/20/2022 19:23	7.52	6/20/2022 21:05	30.83
6/21/2022 20:49	84.51	6/20/2022 20:06	0.66	6/20/2022 20:36	10.41	6/20/2022 19:24	4.67	6/20/2022 21:06	30.86
6/21/2022 20:50	84.52	6/20/2022 20:07	6.57	6/20/2022 20:37	10.39	6/20/2022 19:25	2.56	6/20/2022 21:07	30.88
6/21/2022 20:51	84.50	6/20/2022 20:08	8.81	6/20/2022 20:38	10.37	6/20/2022 19:26	1.20	6/20/2022 21:08	30.86
6/21/2022 20:52	84.50	6/20/2022 20:09	7.35	6/20/2022 20:39	10.41	6/20/2022 19:27	0.73	6/20/2022 21:09	30.85
6/21/2022 20:53	84.50	6/20/2022 20:10	6.18	6/20/2022 20:40	10.43	6/20/2022 19:28	0.68	6/20/2022 21:10	30.87
6/21/2022 20:54	84.51	6/20/2022 20:11	5.26	6/20/2022 20:41	10.43	6/20/2022 19:29	0.68	6/20/2022 21:11	30.88
6/21/2022 20:55	84.55	6/20/2022 20:12	4.50	6/20/2022 20:42	10.43	6/20/2022 19:30	0.67	6/20/2022 21:12	30.89
6/21/2022 20:56	84.49	6/20/2022 20:13	3.82	6/20/2022 20:43	10.48	6/20/2022 19:31	0.63	6/20/2022 21:13	30.89
6/21/2022 20:57	84.52	6/20/2022 20:14	3.28	6/20/2022 20:44	10.45	6/20/2022 19:32	0.62	6/20/2022 21:14	30.89
6/21/2022 20:58	84.49	6/20/2022 20:15	2.75	6/20/2022 20:45	10.45	6/20/2022 19:33	0.64	6/20/2022 21:15	30.91
6/21/2022 20:59	84.48	6/20/2022 20:16	2.43	6/20/2022 20:46	10.47	6/20/2022 19:34	0.64	6/20/2022 21:16	30.86
6/21/2022 21:00	84.53	6/20/2022 20:17	2.06	6/20/2022 20:47	10.42	6/20/2022 19:35	0.71	6/20/2022 21:17	30.90
6/21/2022 21:01	84.49	6/20/2022 20:18	1.80	6/20/2022 20:48	10.42	6/20/2022 19:36	0.63	6/20/2022 21:18	30.88
6/21/2022 21:02	84.51	6/20/2022 20:19	1.57	6/20/2022 20:49	10.45	6/20/2022 19:37	0.60	6/20/2022 21:19	30.85
6/21/2022 21:03	84.47	6/20/2022 20:20	1.42	6/20/2022 20:50	10.45	6/20/2022 19:38	0.59	6/20/2022 21:20	30.88
6/21/2022 21:04	84.46	6/20/2022 20:21	1.17	6/20/2022 20:51	10.42	6/20/2022 19:39	0.69	6/20/2022 21:21	30.92
6/21/2022 21:05	84.53	6/20/2022 20:22	1.03	6/20/2022 20:52	10.39	6/20/2022 19:40	0.68	6/20/2022 21:22	30.82
6/21/2022 21:06	84.52	6/20/2022 20:23	0.89	6/20/2022 20:53	10.42	6/20/2022 19:41	0.61	6/20/2022 21:23	30.90
6/21/2022 21:07	84.52	6/20/2022 20:24	0.81	6/20/2022 20:54	10.40	6/20/2022 19:42	0.66	6/20/2022 21:24	30.89
6/21/2022 21:08	84.53	6/20/2022 20:25	0.68	6/20/2022 20:55	10.38	6/20/2022 19:43	0.66	6/20/2022 21:25	30.91
6/21/2022 21:09	84.50	6/20/2022 20:26	0.63	6/20/2022 20:56	10.39	6/20/2022 19:44	0.60	6/20/2022 21:26	30.92
6/21/2022 21:10	84.50	6/20/2022 20:27	0.61	6/20/2022 20:57	10.38	6/20/2022 19:45	0.70	6/20/2022 21:27	30.92
6/21/2022 21:11	84.50	6/20/2022 20:28	0.63	6/20/2022 20:58	10.40	6/20/2022 19:46	0.65	6/20/2022 21:28	30.91
6/21/2022 21:12	84.46	6/20/2022 20:29	0.64	6/20/2022 20:59	10.36	6/20/2022 19:47	0.63	6/20/2022 21:29	30.92
6/21/2022 21:13	84.51	6/20/2022 20:30	0.64	6/20/2022 21:00	10.36	6/20/2022 19:48	0.68	6/20/2022 21:30	30.87
6/21/2022 21:14	84.50	6/20/2022 20:31	4.05	6/20/2022 21:01	10.35	6/20/2022 19:49	0.66	6/20/2022 21:31	30.90
6/21/2022 21:15	84.48	6/20/2022 20:32	7.84	6/20/2022 21:02	10.35	6/20/2022 19:50	0.66	6/20/2022 21:32	30.92
6/21/2022 21:16	84.48	6/20/2022 20:33	6.60	6/20/2022 21:03	10.38	6/20/2022 19:51	0.60	6/20/2022 21:33	30.92
6/21/2022 21:17	84.50	6/20/2022 20:34	5.52	6/20/2022 21:04	10.39	6/20/2022 19:52	0.67	6/20/2022 21:34	30.97
6/21/2022 21:18	84.47	6/20/2022 20:35	4.72	6/20/2022 21:05	10.40	6/20/2022 19:53	0.67	6/20/2022 21:35	30.94
6/21/2022 21:19	84.45	6/20/2022 20:36	4.02	6/20/2022 21:06	10.46	6/20/2022 19:54	0.63	6/20/2022 21:36	30.93
6/21/2022 21:20	84.51	6/20/2022 20:37	3.43	6/20/2022 21:07	10.42	6/20/2022 19:55	0.63	6/20/2022 21:37	30.95
6/21/2022 21:21	84.52	6/20/2022 20:38	2.87	6/20/2022 21:08	10.46	6/20/2022 19:56	0.61	6/20/2022 21:38	30.94
6/21/2022 21:22	84.49	6/20/2022 20:39	2.54	6/20/2022 21:09	10.47	6/20/2022 19:57	0.60	6/20/2022 21:39	30.96
6/21/2022 21:23	84.50	6/20/2022 20:40	2.16	6/20/2022 21:10	10.43	6/20/2022 19:58	0.61	6/20/2022 21:40	32.92
6/21/2022 21:24	84.47	6/20/2022 20:41	1.88	6/20/2022 21:11	10.44	6/20/2022 19:59	0.65	6/20/2022 21:41	31.71
6/21/2022 21:25	84.49	6/20/2022 20:42	1.62	6/20/2022 21:12	10.42	6/20/2022 20:00	0.63	6/20/2022 21:42	31.25
6/21/2022 21:26	84.43	6/20/2022 20:43	1.41	6/20/2022 21:13	10.44	6/20/2022 20:01	0.61	6/20/2022 21:43	31.07
6/21/2022 21:27	84.45	6/20/2022 20:44	1.24	6/20/2022 21:14	10.45	6/20/2022 20:02	0.61	6/20/2022 21:44	31.03
6/21/2022 21:28	84.50	6/20/2022 20:45	1.09	6/20/2022 21:15	10.45	6/20/2022 20:03	0.61	6/20/2022 21:45	31.03
6/21/2022 21:29	84.45	6/20/2022 20:46	1.23	6/20/2022 21:16	10.45	6/20/2022 20:04	0.65	6/20/2022 21:46	30.98
6/21/2022 21:30	84.43	6/20/2022 20:47	7.11	6/20/2022 21:17	10.43	6/20/2022 20:05	0.68	6/20/2022 21:47	30.99
6/21/2022 21:31	84.48	6/20/2022 20:48	10.40	6/20/2022 21:18	10.41	6/20/2022 20:06	0.64	6/20/2022 21:48	30.96
6/21/2022 21:32	84.44	6/20/2022 20:49	8.78	6/20/2022 21:19	10.39	6/20/2022 20:07	0.65	6/20/2022 21:49	30.98
6/21/2022 21:33	84.48	6/20/2022 20:50	7.42	6/20/2022 21:20	10.38	6/20/2022 20:08	0.60	6/20/2022 21:50	31.00

6/21/2022 21:34	84.46	6/20/2022 20:51	6.25	6/20/2022 21:21	10.41	6/20/2022 20:09	0.59	6/20/2022 21:51	31.00
6/21/2022 21:35	84.47	6/20/2022 20:52	5.32	6/20/2022 21:22	10.40	6/20/2022 20:10	0.60	6/20/2022 21:52	30.94
6/21/2022 21:36	84.43	6/20/2022 20:53	4.52	6/20/2022 21:23	10.45	6/20/2022 20:11	0.62	6/20/2022 21:53	30.98
6/21/2022 21:37	84.46	6/20/2022 20:54	3.87	6/20/2022 21:24	10.43	6/20/2022 20:12	0.62	6/20/2022 21:54	33.01
6/21/2022 21:38	84.45	6/20/2022 20:55	3.31	6/20/2022 21:25	10.47	6/20/2022 20:13	0.57	6/20/2022 21:55	31.87
6/21/2022 21:39	84.46	6/20/2022 20:56	2.81	6/20/2022 21:26	10.51	6/20/2022 20:14	0.62	6/20/2022 21:56	31.30
6/21/2022 21:40	84.44	6/20/2022 20:57	2.43	6/20/2022 21:27	10.52	6/20/2022 20:15	0.63	6/20/2022 21:57	31.12
6/21/2022 21:41	84.46	6/20/2022 20:58	2.11	6/20/2022 21:28	10.51	6/20/2022 20:16	0.64	6/20/2022 21:58	31.09
6/21/2022 21:42	84.48	6/20/2022 20:59	1.83	6/20/2022 21:29	10.48	6/20/2022 20:17	0.64	6/20/2022 21:59	31.07
6/21/2022 21:43	84.43	6/20/2022 21:00	1.66	6/20/2022 21:30	10.47	6/20/2022 20:18	0.59	6/20/2022 22:00	31.04
6/21/2022 21:44	84.45	6/20/2022 21:01	1.39	6/20/2022 21:31	10.50	6/20/2022 20:19	0.61	6/20/2022 22:01	31.03
6/21/2022 21:45	84.45	6/20/2022 21:02	1.25	6/20/2022 21:32	10.48	6/20/2022 20:20	0.63	6/20/2022 22:02	31.02
6/21/2022 21:46	84.44	6/20/2022 21:03	1.08	6/20/2022 21:33	10.48	6/20/2022 20:21	0.70	6/20/2022 22:03	31.05
6/21/2022 21:47	84.47	6/20/2022 21:04	0.94	6/20/2022 21:34	10.47	6/20/2022 20:22	0.66	6/20/2022 22:04	31.03
6/21/2022 21:48	84.45	6/20/2022 21:05	0.84	6/20/2022 21:35	10.48	6/20/2022 20:23	0.63	6/20/2022 22:05	31.03
6/21/2022 21:49	84.48	6/20/2022 21:06	0.68	6/20/2022 21:36	10.44	6/20/2022 20:24	0.59	6/20/2022 22:06	31.03
6/21/2022 21:50	84.46	6/20/2022 21:07	0.63	6/20/2022 21:37	10.46	6/20/2022 20:25	0.63	6/20/2022 22:07	31.05
6/21/2022 21:51	84.43	6/20/2022 21:08	0.53	6/20/2022 21:38	10.50	6/20/2022 20:26	0.66	6/20/2022 22:08	31.01
6/21/2022 21:52	84.40	6/20/2022 21:09	0.52	6/20/2022 21:39	10.44	6/20/2022 20:27	6.54	6/20/2022 22:09	31.05
6/21/2022 21:53	84.45	6/20/2022 21:10	0.43	6/20/2022 21:40	10.43	6/20/2022 20:28	7.56	6/20/2022 22:10	31.02
6/21/2022 21:54	84.44	6/20/2022 21:11	0.36	6/20/2022 21:41	10.45	6/20/2022 20:29	4.76	6/20/2022 22:11	31.04
6/21/2022 21:55	84.42	6/20/2022 21:12	0.31	6/20/2022 21:42	10.43	6/20/2022 20:30	2.68	6/20/2022 22:12	31.04
6/21/2022 21:56	84.47	6/20/2022 21:13	0.25	6/20/2022 21:43	10.42	6/20/2022 20:31	1.23	6/20/2022 22:13	31.05
6/21/2022 21:57	84.42	6/20/2022 21:14	0.27	6/20/2022 21:44	10.44	6/20/2022 20:32	0.70	6/20/2022 22:14	31.04
6/21/2022 21:58	84.40	6/20/2022 21:15	0.23	6/20/2022 21:45	10.38	6/20/2022 20:33	0.70	6/20/2022 22:15	31.04
6/21/2022 21:59	84.43	6/20/2022 21:16	0.24	6/20/2022 21:46	10.42	6/20/2022 20:34	0.72	6/20/2022 22:16	31.05
6/21/2022 22:00	84.38	6/20/2022 21:17	0.19	6/20/2022 21:47	10.40	6/20/2022 20:35	0.70	6/20/2022 22:17	31.04
6/21/2022 22:01	84.42	6/20/2022 21:18	0.13	6/20/2022 21:48	10.38	6/20/2022 20:36	0.69	6/20/2022 22:18	31.05
6/21/2022 22:02	84.40	6/20/2022 21:19	0.16	6/20/2022 21:49	10.42	6/20/2022 20:37	0.70	6/20/2022 22:19	31.07
6/21/2022 22:03	84.41	6/20/2022 21:20	0.14	6/20/2022 21:50	10.36	6/20/2022 20:38	0.65	6/20/2022 22:20	31.05
6/21/2022 22:04	84.43	6/20/2022 21:21	0.16	6/20/2022 21:51	10.38	6/20/2022 20:39	0.70	6/20/2022 22:21	31.06
6/21/2022 22:05	84.43	6/20/2022 21:22	0.13	6/20/2022 21:52	10.38	6/20/2022 20:40	0.69	6/20/2022 22:22	31.06
6/21/2022 22:06	84.41	6/20/2022 21:23	0.11	6/20/2022 21:53	10.38	6/20/2022 20:41	0.69	6/20/2022 22:23	31.05
6/21/2022 22:07	84.43	6/20/2022 21:24	0.09	6/20/2022 21:54	10.38	6/20/2022 20:42	0.61	6/20/2022 22:24	31.07
6/21/2022 22:08	84.37	6/20/2022 21:25	0.11	6/20/2022 21:55	10.38	6/20/2022 20:43	0.62	6/20/2022 22:25	31.04
6/21/2022 22:09	84.41	6/20/2022 21:26	5.05	6/20/2022 21:56	10.42	6/20/2022 20:44	0.63	6/20/2022 22:26	31.03
6/21/2022 22:10	84.43	6/20/2022 21:27	7.05	6/20/2022 21:57	10.39	6/20/2022 20:45	0.65	6/20/2022 22:27	31.05
6/21/2022 22:11	84.40	6/20/2022 21:28	5.89	6/20/2022 21:58	10.42	6/20/2022 20:46	0.62	6/20/2022 22:28	31.05
6/21/2022 22:12	84.39	6/20/2022 21:29	5.00	6/20/2022 21:59	10.45	6/20/2022 20:47	0.62	6/20/2022 22:29	31.06
6/21/2022 22:13	84.43	6/20/2022 21:30	4.24	6/20/2022 22:00	10.41	6/20/2022 20:48	0.60	6/20/2022 22:30	31.06
6/21/2022 22:14	84.42	6/20/2022 21:31	3.64	6/20/2022 22:01	10.41	6/20/2022 20:49	0.60	6/20/2022 22:31	31.02
6/21/2022 22:15	84.40	6/20/2022 21:32	3.09	6/20/2022 22:02	10.45	6/20/2022 20:50	0.61	6/20/2022 22:32	31.07
6/21/2022 22:16	84.39	6/20/2022 21:33	2.66	6/20/2022 22:03	10.44	6/20/2022 20:51	0.60	6/20/2022 22:33	31.10
6/21/2022 22:17	84.41	6/20/2022 21:34	2.30	6/20/2022 22:04	10.43	6/20/2022 20:52	0.64	6/20/2022 22:34	31.11
6/21/2022 22:18	84.39	6/20/2022 21:35	1.98	6/20/2022 22:05	10.43	6/20/2022 20:53	0.64	6/20/2022 22:35	31.08
6/21/2022 22:19	84.42	6/20/2022 21:36	1.71	6/20/2022 22:06	10.42	6/20/2022 20:54	0.61	6/20/2022 22:36	31.08
6/21/2022 22:20	84.41	6/20/2022 21:37	1.53	6/20/2022 22:07	10.40	6/20/2022 20:55	0.64	6/20/2022 22:37	31.07
6/21/2022 22:21	84.37	6/20/2022 21:38	1.32	6/20/2022 22:08	10.40	6/20/2022 20:56	0.64	6/20/2022 22:38	31.08
6/21/2022 22:22	84.42	6/20/2022 21:39	1.14	6/20/2022 22:09	10.39	6/20/2022 20:57	0.62	6/20/2022 22:39	31.06
6/21/2022 22:23	84.36	6/20/2022 21:40	0.98	6/20/2022 22:10	10.41	6/20/2022 20:58	0.69	6/20/2022 22:40	31.08
6/21/2022 22:24	84.38	6/20/2022 21:41	0.82	6/20/2022 22:11	10.39	6/20/2022 20:59	0.71	6/20/2022 22:41	31.09
6/21/2022 22:25	84.39	6/20/2022 21:42	0.75	6/20/2022 22:12	10.38	6/20/2022 21:00	0.69	6/20/2022 22:42	31.08
6/21/2022 22:26	84.37	6/20/2022 21:43	0.64	6/20/2022 22:13	10.41	6/20/2022 21:01	0.66	6/20/2022 22:43	31.08
6/21/2022 22:27	84.42	6/20/2022 21:44	0.56	6/20/2022 22:14	10.39	6/20/2022 21:02	0.66	6/20/2022 22:44	31.09
6/21/2022 22:28	84.39	6/20/2022 21:45	0.52	6/20/2022 22:15	10.38	6/20/2022 21:03	0.64	6/20/2022 22:45	31.06
6/21/2022 22:29	84.39	6/20/2022 21:46	0.42	6/20/2022 22:16	10.35	6/20/2022 21:04	0.62	6/20/2022 22:46	31.05
6/21/2022 22:30	84.40	6/20/2022 21:47	0.41	6/20/2022 22:17	10.39	6/20/2022 21:05	0.59	6/20/2022 22:47	31.13
6/21/2022 22:31	84.39	6/20/2022 21:48	0.30	6/20/2022 22:18	10.36	6/20/2022 21:06	0.63	6/20/2022 22:48	31.08
6/21/2022 22:32	84.40	6/20/2022 21:49	0.36	6/20/2022 22:19	10.38	6/20/2022 21:07	0.64	6/20/2022 22:49	31.12
6/21/2022 22:33	84.36	6/20/2022 21:50	0.26	6/20/2022 22:20	10.39	6/20/2022 21:08	0.70	6/20/2022 22:50	31.09
6/21/2022 22:34	84.37	6/20/2022 21:51	0.25	6/20/2022 22:21	10.35	6/20/2022 21:09	0.62	6/20/2022 22:51	31.11
6/21/2022 22:35	84.42	6/20/2022 21:52	0.20	6/20/2022 22:22	10.38	6/20/2022 21:10	0.60	6/20/2022 22:52	31.10
6/21/2022 22:36	84.38	6/20/2022 21:53	0.18	6/20/2022 22:23	10.33	6/20/2022 21:11	0.61	6/20/2022 22:53	31.14
6/21/2022 22:37	84.37	6/20/2022 21:54	0.17	6/20/2022 22:24	10.41	6/20/2022 21:12	0.62	6/20/2022 22:54	31.08
6/21/2022 22:38	84.37	6/20/2022 21:55	0.15	6/20/2022 22:25	10.39	6/20/2022 21:13	0.71	6/20/2022 22:55	31.12
6/21/2022 22:39	84.36	6/20/2022 21:56	0.13	6/20/2022 22:26	10.42	6/20/2022 21:14	0.63	6/20/2022 22:56	31.13
6/21/2022 22:40	84.39	6/20/2022 21:57	0.14	6/20/2022 22:27	10.43	6/20/2022 21:15	0.61	6/20/2022 22:57	31.14
6/21/2022 22:41	84.38	6/20/2022 21:58	0.09	6/20/2022 22:28	10.43	6/20/2022 21:16	0.63	6/20/2022 22:58	31.14
6/21/2022 22:42	84.37	6/20/2022 21:59	0.09	6/20/2022 22:29	10.44	6/20/2022 21:17	0.60	6/20/2022 22:59	31.15
6/21/2022 22:43	84.37	6/20/2022 22:00	0.10	6/20/2022 22:30	10.43	6/20/2022 21:18	0.68	6/20/2022 23:00	31.11
6/21/2022 22:44	84.37	6/20/2022 22:01	0.07	6/20/2022 22:31	10.44	6/20/2022 21:19	0.65	6/20/2022 23:01	31.13
6/21/2022 22:45	84.39	6/20/2022 22:02	0.03	6/20/2022 22:32	10.46	6/20/2022 21:20	0.66	6/20/2022 23:02	31.13
6/21/2022 22:46	84.37	6/20/2022 22:03	0.04	6/20/2022 22:33	10.42	6/20/2022 21:21	0.60	6/20/2022 23:03	31.13
6/21/2022 22:47	84.39	6/20/2022 22:04	0.05	6/20/2022 22:34	10.45	6/20/2022 21:22	0.60	6/20/2022 23:04	31.17
6/21/2022 22:48	84.40	6/20/2022 22:05	0.05	6/20/2022 22:35	10.49	6/20/2022 21:23	0.62	6/20/2022 23:05	31.16
6/21/2022 22:49	84.38	6/20/2022 22:06	0.03	6/20/2022 22:36	10.48	6/20/2022 21:24	0.65	6/20/2022 23:06	31.16
6/21/2022 22:50	84.35	6/20/2022 22:07	0.08	6/20/2022 22:37	10.48	6/20/2022 21:25	0.67	6/20/2022 23:07	31.13
6/21/2022 22:51	84.38	6/20/2022 22:08	0.01	6/20/2022 22:38	10.53	6/20/2022 21:26	0.62	6/20/2022 23:08	31.18
6/21/2022 22:52	84.37	6/20/2022 22:09	0.03	6/20/2022 22:39	10.50	6/20/2022 21:27	0.62	6/20/2022 23:09	31.22
6/21/2022 22:53	84.37	6/20/2022 22:10	0.07	6/20/2022 22:40	10.53	6/20/2022 21:28	0.63	6/20/2022 23:10	31.22
6/21/2022 22:54	84.37	6/20/2022 22:11	0.04	6/20/2022 22:41	10.48	6/20/2022 21:29	0.60	6/20/2022 23:11	31.21
6/21/2022 22:55	84.34	6/20/2022 22:12	0.05	6/20/2022 22:42	10.50	6/20/2022 21:30	0.61	6/20/2022 23:12	31.21
6/21/2022 22:56	84.39	6/20/2022 22:13	0.03	6/20/2022 22:43	10.49	6/20/2022 21:31	0.62	6/20/2022 23:13	31.21
6/21/2022 22:57	84.36	6/20/2022 22:14	0.07	6/20/2022 22:44	10.47	6/20/2022 21:32	0.66	6/20/2022 23:14	31.20
6/21/2022 22:58	84.36	6/20/2022 22:15	0.02	6/20/2022 22:45	10.49	6/20/2022 21:33	0.62	6/20/2022 23:15	31.17
6/21/2022 22:59	84.36	6/20/2022 22:16	-0.01	6/20/2022 22:46	10.50	6/20/2022 21:34	0.61	6/20/2022 23:16	31.19
6/21/2022 23:00	84.39	6/20/2022 22:17	5.97	6/20/2022 22:47	10.54	6/20/2022 21:35	0.62	6/20/2022 23:17	31.18
6/21/2022 23:01	84.33	6/20/2022 22:18	6.72	6/20/2022 22:48	10.54	6/20/2022 21:36	0.67	6/20/2022 23:18	31.17

6/21/2022 23:02	84.37	6/20/2022 22:19	5.61	6/20/2022 22:49	10.53	6/20/2022 21:37	0.71	6/20/2022 23:19	31.21
6/21/2022 23:03	84.36	6/20/2022 22:20	4.72	6/20/2022 22:50	10.55	6/20/2022 21:38	0.64	6/20/2022 23:20	31.19
6/21/2022 23:04	84.35	6/20/2022 22:21	4.06	6/20/2022 22:51	10.56	6/20/2022 21:39	0.61	6/20/2022 23:21	31.21
6/21/2022 23:05	84.32	6/20/2022 22:22	3.46	6/20/2022 22:52	10.55	6/20/2022 21:40	0.57	6/20/2022 23:22	31.19
6/21/2022 23:06	84.33	6/20/2022 22:23	2.91	6/20/2022 22:53	10.52	6/20/2022 21:41	0.60	6/20/2022 23:23	33.12
6/21/2022 23:07	84.35	6/20/2022 22:24	2.55	6/20/2022 22:54	10.55	6/20/2022 21:42	0.64	6/20/2022 23:24	32.00
6/21/2022 23:08	84.38	6/20/2022 22:25	2.16	6/20/2022 22:55	10.52	6/20/2022 21:43	0.66	6/20/2022 23:25	31.53
6/21/2022 23:09	84.32	6/20/2022 22:26	1.89	6/20/2022 22:56	10.54	6/20/2022 21:44	0.59	6/20/2022 23:26	31.36
6/21/2022 23:10	84.35	6/20/2022 22:27	1.61	6/20/2022 22:57	10.56	6/20/2022 21:45	0.63	6/20/2022 23:27	31.26
6/21/2022 23:11	84.36	6/20/2022 22:28	1.40	6/20/2022 22:58	10.61	6/20/2022 21:46	0.58	6/20/2022 23:28	31.27
6/21/2022 23:12	84.31	6/20/2022 22:29	1.22	6/20/2022 22:59	10.59	6/20/2022 21:47	0.61	6/20/2022 23:29	31.26
6/21/2022 23:13	84.35	6/20/2022 22:30	1.06	6/20/2022 23:00	10.56	6/20/2022 21:48	0.65	6/20/2022 23:30	31.21
6/21/2022 23:14	84.34	6/20/2022 22:31	0.92	6/20/2022 23:01	10.56	6/20/2022 21:49	0.66	6/20/2022 23:31	31.25
6/21/2022 23:15	84.37	6/20/2022 22:32	0.80	6/20/2022 23:02	10.59	6/20/2022 21:50	0.61	6/20/2022 23:32	31.22
6/21/2022 23:16	84.34	6/20/2022 22:33	0.76	6/20/2022 23:03	10.58	6/20/2022 21:51	0.60	6/20/2022 23:33	31.27
6/21/2022 23:17	84.36	6/20/2022 22:34	0.64	6/20/2022 23:04	10.59	6/20/2022 21:52	0.69	6/20/2022 23:34	31.22
6/21/2022 23:18	84.36	6/20/2022 22:35	0.53	6/20/2022 23:05	10.54	6/20/2022 21:53	0.64	6/20/2022 23:35	31.26
6/21/2022 23:19	84.34	6/20/2022 22:36	0.51	6/20/2022 23:06	10.57	6/20/2022 21:54	0.61	6/20/2022 23:36	31.23
6/21/2022 23:20	84.36	6/20/2022 22:37	0.42	6/20/2022 23:07	10.52	6/20/2022 21:55	0.61	6/20/2022 23:37	31.26
6/21/2022 23:21	84.30	6/20/2022 22:38	0.35	6/20/2022 23:08	10.52	6/20/2022 21:56	0.60	6/20/2022 23:38	31.23
6/21/2022 23:22	84.31	6/20/2022 22:39	0.31	6/20/2022 23:09	10.51	6/20/2022 21:57	0.65	6/20/2022 23:39	31.22
6/21/2022 23:23	84.35	6/20/2022 22:40	0.28	6/20/2022 23:10	10.50	6/20/2022 21:58	0.69	6/20/2022 23:40	31.26
6/21/2022 23:24	84.35	6/20/2022 22:41	0.25	6/20/2022 23:11	10.54	6/20/2022 21:59	0.63	6/20/2022 23:41	31.23
6/21/2022 23:25	84.37	6/20/2022 22:42	0.23	6/20/2022 23:12	10.52	6/20/2022 22:00	0.61	6/20/2022 23:42	31.24
6/21/2022 23:26	84.34	6/20/2022 22:43	0.19	6/20/2022 23:13	10.50	6/20/2022 22:01	0.65	6/20/2022 23:43	31.23
6/21/2022 23:27	84.35	6/20/2022 22:44	0.11	6/20/2022 23:14	10.49	6/20/2022 22:02	0.67	6/20/2022 23:44	31.26
6/21/2022 23:28	84.29	6/20/2022 22:45	0.15	6/20/2022 23:15	10.48	6/20/2022 22:03	0.60	6/20/2022 23:45	31.26
6/21/2022 23:29	84.34	6/20/2022 22:46	0.17	6/20/2022 23:16	10.47	6/20/2022 22:04	0.60	6/20/2022 23:46	31.22
6/21/2022 23:30	84.35	6/20/2022 22:47	0.12	6/20/2022 23:17	10.46	6/20/2022 22:05	0.60	6/20/2022 23:47	31.20
6/21/2022 23:31	84.25	6/20/2022 22:48	0.12	6/20/2022 23:18	10.43	6/20/2022 22:06	0.65	6/20/2022 23:48	31.24
6/21/2022 23:32	84.30	6/20/2022 22:49	0.15	6/20/2022 23:19	10.41	6/20/2022 22:07	0.65	6/20/2022 23:49	31.26
6/21/2022 23:33	84.33	6/20/2022 22:50	0.07	6/20/2022 23:20	10.43	6/20/2022 22:08	0.61	6/20/2022 23:50	31.26
6/21/2022 23:34	84.36	6/20/2022 22:51	0.10	6/20/2022 23:21	10.43	6/20/2022 22:09	0.60	6/20/2022 23:51	31.28
6/21/2022 23:35	84.32	6/20/2022 22:52	0.06	6/20/2022 23:22	10.42	6/20/2022 22:10	0.65	6/20/2022 23:52	31.21
6/21/2022 23:36	84.31	6/20/2022 22:53	0.08	6/20/2022 23:23	10.43	6/20/2022 22:11	0.65	6/20/2022 23:53	31.23
6/21/2022 23:37	84.29	6/20/2022 22:54	0.07	6/20/2022 23:24	10.40	6/20/2022 22:12	0.62	6/20/2022 23:54	31.25
6/21/2022 23:38	84.32	6/20/2022 22:55	0.04	6/20/2022 23:25	10.41	6/20/2022 22:13	0.65	6/20/2022 23:55	31.25
6/21/2022 23:39	84.36	6/20/2022 22:56	0.03	6/20/2022 23:26	10.39	6/20/2022 22:14	0.67	6/20/2022 23:56	31.28
6/21/2022 23:40	84.30	6/20/2022 22:57	0.07	6/20/2022 23:27	10.38	6/20/2022 22:15	0.61	6/20/2022 23:57	31.26
6/21/2022 23:41	84.33	6/20/2022 22:58	0.03	6/20/2022 23:28	10.42	6/20/2022 22:16	0.59	6/20/2022 23:58	31.27
6/21/2022 23:42	84.29	6/20/2022 22:59	0.05	6/20/2022 23:29	10.39	6/20/2022 22:17	0.58	6/20/2022 23:59	31.27
6/21/2022 23:43	84.33	6/20/2022 23:00	0.00	6/20/2022 23:30	10.43	6/20/2022 22:18	0.60	6/21/2022 0:00	31.29
6/21/2022 23:44	84.34	6/20/2022 23:01	0.05	6/20/2022 23:31	10.43	6/20/2022 22:19	0.59	6/21/2022 0:01	31.27
6/21/2022 23:45	84.32	6/20/2022 23:02	0.06	6/20/2022 23:32	10.44	6/20/2022 22:20	0.62	6/21/2022 0:02	31.26
6/21/2022 23:46	84.30	6/20/2022 23:03	0.02	6/20/2022 23:33	10.43	6/20/2022 22:21	0.60	6/21/2022 0:03	31.27
6/21/2022 23:47	84.30	6/20/2022 23:04	-0.02	6/20/2022 23:34	10.43	6/20/2022 22:22	0.63	6/21/2022 0:04	31.28
6/21/2022 23:48	84.33	6/20/2022 23:05	0.01	6/20/2022 23:35	10.50	6/20/2022 22:23	0.58	6/21/2022 0:05	31.27
6/21/2022 23:49	84.31	6/20/2022 23:06	0.04	6/20/2022 23:36	10.46	6/20/2022 22:24	0.61	6/21/2022 0:06	31.29
6/21/2022 23:50	84.29	6/20/2022 23:07	0.01	6/20/2022 23:37	10.48	6/20/2022 22:25	0.57	6/21/2022 0:07	31.29
6/21/2022 23:51	84.33	6/20/2022 23:08	0.02	6/20/2022 23:38	10.47	6/20/2022 22:26	0.62	6/21/2022 0:08	31.27
6/21/2022 23:52	84.29	6/20/2022 23:09	0.01	6/20/2022 23:39	10.45	6/20/2022 22:27	0.60	6/21/2022 0:09	31.28
6/21/2022 23:53	84.29	6/20/2022 23:10	0.05	6/20/2022 23:40	10.44	6/20/2022 22:28	0.63	6/21/2022 0:10	31.29
6/21/2022 23:54	84.28	6/20/2022 23:11	0.04	6/20/2022 23:41	10.43	6/20/2022 22:29	0.70	6/21/2022 0:11	31.27
6/21/2022 23:55	84.28	6/20/2022 23:12	0.02	6/20/2022 23:42	10.44	6/20/2022 22:30	0.62	6/21/2022 0:12	31.30
6/21/2022 23:56	84.29	6/20/2022 23:13	-0.01	6/20/2022 23:43	10.45	6/20/2022 22:31	0.71	6/21/2022 0:13	31.29
6/21/2022 23:57	84.28	6/20/2022 23:14	4.21	6/20/2022 23:44	10.45	6/20/2022 22:32	0.66	6/21/2022 0:14	31.29
6/21/2022 23:58	84.31	6/20/2022 23:15	7.21	6/20/2022 23:45	10.47	6/20/2022 22:33	0.67	6/21/2022 0:15	31.28
6/21/2022 23:59	84.33	6/20/2022 23:16	6.06	6/20/2022 23:46	10.43	6/20/2022 22:34	0.65	6/21/2022 0:16	31.30
6/22/2022 0:00	84.26	6/20/2022 23:17	5.09	6/20/2022 23:47	10.40	6/20/2022 22:35	0.64	6/21/2022 0:17	31.32
6/22/2022 0:01	84.26	6/20/2022 23:18	4.32	6/20/2022 23:48	10.42	6/20/2022 22:36	0.57	6/21/2022 0:18	31.29
6/22/2022 0:02	84.27	6/20/2022 23:19	3.73	6/20/2022 23:49	10.43	6/20/2022 22:37	0.60	6/21/2022 0:19	31.27
6/22/2022 0:03	84.27	6/20/2022 23:20	3.11	6/20/2022 23:50	10.39	6/20/2022 22:38	0.61	6/21/2022 0:20	31.30
6/22/2022 0:04	84.29	6/20/2022 23:21	2.67	6/20/2022 23:51	10.40	6/20/2022 22:39	0.63	6/21/2022 0:21	31.30
6/22/2022 0:05	84.30	6/20/2022 23:22	2.26	6/20/2022 23:52	10.40	6/20/2022 22:40	0.70	6/21/2022 0:22	31.29
6/22/2022 0:06	84.33	6/20/2022 23:23	1.98	6/20/2022 23:53	10.36	6/20/2022 22:41	0.63	6/21/2022 0:23	31.32
6/22/2022 0:07	84.29	6/20/2022 23:24	1.71	6/20/2022 23:54	10.39	6/20/2022 22:42	0.57	6/21/2022 0:24	31.33
6/22/2022 0:08	84.25	6/20/2022 23:25	1.46	6/20/2022 23:55	10.34	6/20/2022 22:43	0.63	6/21/2022 0:25	31.25
6/22/2022 0:09	84.26	6/20/2022 23:26	1.28	6/20/2022 23:56	10.36	6/20/2022 22:44	0.59	6/21/2022 0:26	31.36
6/22/2022 0:10	84.30	6/20/2022 23:27	1.15	6/20/2022 23:57	10.36	6/20/2022 22:45	0.70	6/21/2022 0:27	31.31
6/22/2022 0:11	84.25	6/20/2022 23:28	0.97	6/20/2022 23:58	10.36	6/20/2022 22:46	0.70	6/21/2022 0:28	31.32
6/22/2022 0:12	84.30	6/20/2022 23:29	0.83	6/20/2022 23:59	10.36	6/20/2022 22:47	0.62	6/21/2022 0:29	31.33
6/22/2022 0:13	84.29	6/20/2022 23:30	0.76	6/21/2022 0:00	10.41	6/20/2022 22:48	0.60	6/21/2022 0:30	31.32
6/22/2022 0:14	84.25	6/20/2022 23:31	0.69	6/21/2022 0:01	10.37	6/20/2022 22:49	0.61	6/21/2022 0:31	31.32
6/22/2022 0:15	84.29	6/20/2022 23:32	0.59	6/21/2022 0:02	13.28	6/20/2022 22:50	0.63	6/21/2022 0:32	31.35
6/22/2022 0:16	84.25	6/20/2022 23:33	0.48	6/21/2022 0:03	13.95	6/20/2022 22:51	0.71	6/21/2022 0:33	31.32
6/22/2022 0:17	84.27	6/20/2022 23:34	0.42	6/21/2022 0:04	13.51	6/20/2022 22:52	0.67	6/21/2022 0:34	31.37
6/22/2022 0:18	84.27	6/20/2022 23:35	0.37	6/21/2022 0:05	13.15	6/20/2022 22:53	0.70	6/21/2022 0:35	31.32
6/22/2022 0:19	84.28	6/20/2022 23:36	0.34	6/21/2022 0:06	12.86	6/20/2022 22:54	0.66	6/21/2022 0:36	31.31
6/22/2022 0:20	84.26	6/20/2022 23:37	0.31	6/21/2022 0:07	12.56	6/20/2022 22:55	0.58	6/21/2022 0:37	31.37
6/22/2022 0:21	84.25	6/20/2022 23:38	0.26	6/21/2022 0:08	12.34	6/20/2022 22:56	0.58	6/21/2022 0:38	31.35
6/22/2022 0:22	84.26	6/20/2022 23:39	0.22	6/21/2022 0:09	12.18	6/20/2022 22:57	0.60	6/21/2022 0:39	31.32
6/22/2022 0:23	84.26	6/20/2022 23:40	0.19	6/21/2022 0:10	11.96	6/20/2022 22:58	0.71	6/21/2022 0:40	31.34
6/22/2022 0:24	84.27	6/20/2022 23:41	0.21	6/21/2022 0:11	11.83	6/20/2022 22:59	0.60	6/21/2022 0:41	31.34
6/22/2022 0:25	84.28	6/20/2022 23:42	0.16	6/21/2022 0:12	11.66	6/20/2022 23:00	0.61	6/21/2022 0:42	31.35
6/22/2022 0:26	84.30	6/20/2022 23:43	0.14	6/21/2022 0:13	11.59	6/20/2022 23:01	0.62	6/21/2022 0:43	32.35
6/22/2022 0:27	84.27	6/20/2022 23:44	0.12	6/21/2022 0:14	11.45	6/20/2022 23:02	0.72	6/21/2022 0:44	32.73
6/22/2022 0:28	84.26	6/20/2022 23:45	0.12	6/21/2022 0:15	11.35	6/20/2022 23:03	0.69	6/21/2022 0:45	33.91
6/22/2022 0:29	84.27	6/20/2022 23:46	0.11	6/21/2022 0:16	11.21	6/20/2022 23:04	0.61	6/21/2022 0:46	32.85

6/22/2022 0:30	84.26	6/20/2022 23:47	0.13	6/21/2022 0:17	11.20	6/20/2022 23:05	0.59	6/21/2022 0:47	32.01
6/22/2022 0:31	84.22	6/20/2022 23:48	0.07	6/21/2022 0:18	11.09	6/20/2022 23:06	0.64	6/21/2022 0:48	31.66
6/22/2022 0:32	84.23	6/20/2022 23:49	0.08	6/21/2022 0:19	11.05	6/20/2022 23:07	0.68	6/21/2022 0:49	31.49
6/22/2022 0:33	84.29	6/20/2022 23:50	0.04	6/21/2022 0:20	10.99	6/20/2022 23:08	0.60	6/21/2022 0:50	33.02
6/22/2022 0:34	84.26	6/20/2022 23:51	0.05	6/21/2022 0:21	10.94	6/20/2022 23:09	0.59	6/21/2022 0:51	32.65
6/22/2022 0:35	84.28	6/20/2022 23:52	0.06	6/21/2022 0:22	10.89	6/20/2022 23:10	0.63	6/21/2022 0:52	34.30
6/22/2022 0:36	84.27	6/20/2022 23:53	0.09	6/21/2022 0:23	10.83	6/20/2022 23:11	0.67	6/21/2022 0:53	32.82
6/22/2022 0:37	84.24	6/20/2022 23:54	0.06	6/21/2022 0:24	10.82	6/20/2022 23:12	0.64	6/21/2022 0:54	34.13
6/22/2022 0:38	84.21	6/20/2022 23:55	0.00	6/21/2022 0:25	10.77	6/20/2022 23:13	0.68	6/21/2022 0:55	32.96
6/22/2022 0:39	84.23	6/20/2022 23:56	0.06	6/21/2022 0:26	10.75	6/20/2022 23:14	0.62	6/21/2022 0:56	33.79
6/22/2022 0:40	84.27	6/20/2022 23:57	0.05	6/21/2022 0:27	10.67	6/20/2022 23:15	0.63	6/21/2022 0:57	34.10
6/22/2022 0:41	84.27	6/20/2022 23:58	0.03	6/21/2022 0:28	10.69	6/20/2022 23:16	0.61	6/21/2022 0:58	33.44
6/22/2022 0:42	84.31	6/20/2022 23:59	0.05	6/21/2022 0:29	10.67	6/20/2022 23:17	0.59	6/21/2022 0:59	34.86
6/22/2022 0:43	84.24	6/21/2022 0:00	0.04	6/21/2022 0:30	10.65	6/20/2022 23:18	0.60	6/21/2022 1:00	33.11
6/22/2022 0:44	84.25	6/21/2022 0:01	0.01	6/21/2022 0:31	10.62	6/20/2022 23:19	0.60	6/21/2022 1:01	34.41
6/22/2022 0:45	84.24	6/21/2022 0:02	0.03	6/21/2022 0:32	10.59	6/20/2022 23:20	0.59	6/21/2022 1:02	32.87
6/22/2022 0:46	84.23	6/21/2022 0:03	0.06	6/21/2022 0:33	10.60	6/20/2022 23:21	0.60	6/21/2022 1:03	32.10
6/22/2022 0:47	84.23	6/21/2022 0:04	0.02	6/21/2022 0:34	10.60	6/20/2022 23:22	0.61	6/21/2022 1:04	31.81
6/22/2022 0:48	84.20	6/21/2022 0:05	0.06	6/21/2022 0:35	10.58	6/20/2022 23:23	0.63	6/21/2022 1:05	31.67
6/22/2022 0:49	84.20	6/21/2022 0:06	-0.02	6/21/2022 0:36	10.62	6/20/2022 23:24	0.66	6/21/2022 1:06	31.66
6/22/2022 0:50	84.25	6/21/2022 0:07	-0.03	6/21/2022 0:37	10.62	6/20/2022 23:25	0.64	6/21/2022 1:07	31.65
6/22/2022 0:51	84.20	6/21/2022 0:08	0.02	6/21/2022 0:38	10.59	6/20/2022 23:26	0.68	6/21/2022 1:08	31.58
6/22/2022 0:52	84.23	6/21/2022 0:09	0.03	6/21/2022 0:39	10.58	6/20/2022 23:27	0.59	6/21/2022 1:09	31.60
6/22/2022 0:53	84.21	6/21/2022 0:10	0.02	6/21/2022 0:40	10.60	6/20/2022 23:28	0.59	6/21/2022 1:10	31.61
6/22/2022 0:54	84.25	6/21/2022 0:11	5.65	6/21/2022 0:41	10.56	6/20/2022 23:29	0.61	6/21/2022 1:11	31.60
6/22/2022 0:55	84.22	6/21/2022 0:12	6.84	6/21/2022 0:42	10.56	6/20/2022 23:30	0.60	6/21/2022 1:12	31.62
6/22/2022 0:56	84.23	6/21/2022 0:13	5.75	6/21/2022 0:43	10.54	6/20/2022 23:31	0.63	6/21/2022 1:13	33.11
6/22/2022 0:57	84.24	6/21/2022 0:14	4.81	6/21/2022 0:44	10.54	6/20/2022 23:32	0.60	6/21/2022 1:14	32.15
6/22/2022 0:58	84.25	6/21/2022 0:15	4.11	6/21/2022 0:45	10.55	6/20/2022 23:33	0.59	6/21/2022 1:15	31.82
6/22/2022 0:59	84.25	6/21/2022 0:16	3.53	6/21/2022 0:46	10.53	6/20/2022 23:34	0.61	6/21/2022 1:16	31.64
6/22/2022 1:00	84.22	6/21/2022 0:17	2.91	6/21/2022 0:47	10.51	6/20/2022 23:35	0.63	6/21/2022 1:17	31.63
6/22/2022 1:01	84.21	6/21/2022 0:18	2.57	6/21/2022 0:48	10.53	6/20/2022 23:36	0.61	6/21/2022 1:18	31.59
6/22/2022 1:02	84.22	6/21/2022 0:19	2.20	6/21/2022 0:49	10.43	6/20/2022 23:37	0.70	6/21/2022 1:19	31.58
6/22/2022 1:03	84.25	6/21/2022 0:20	1.90	6/21/2022 0:50	10.49	6/20/2022 23:38	0.63	6/21/2022 1:20	31.57
6/22/2022 1:04	84.21	6/21/2022 0:21	1.68	6/21/2022 0:51	10.50	6/20/2022 23:39	0.58	6/21/2022 1:21	33.31
6/22/2022 1:05	84.21	6/21/2022 0:22	1.46	6/21/2022 0:52	10.46	6/20/2022 23:40	0.59	6/21/2022 1:22	32.26
6/22/2022 1:06	84.25	6/21/2022 0:23	1.25	6/21/2022 0:53	10.48	6/20/2022 23:41	0.58	6/21/2022 1:23	31.81
6/22/2022 1:07	84.23	6/21/2022 0:24	1.08	6/21/2022 0:54	10.47	6/20/2022 23:42	0.63	6/21/2022 1:24	31.67
6/22/2022 1:08	84.17	6/21/2022 0:25	0.98	6/21/2022 0:55	10.46	6/20/2022 23:43	0.60	6/21/2022 1:25	31.63
6/22/2022 1:09	84.21	6/21/2022 0:26	0.84	6/21/2022 0:56	10.41	6/20/2022 23:44	0.61	6/21/2022 1:26	31.56
6/22/2022 1:10	84.23	6/21/2022 0:27	0.70	6/21/2022 0:57	10.44	6/20/2022 23:45	0.60	6/21/2022 1:27	31.59
6/22/2022 1:11	84.21	6/21/2022 0:28	0.63	6/21/2022 0:58	10.43	6/20/2022 23:46	0.61	6/21/2022 1:28	31.61
6/22/2022 1:12	84.25	6/21/2022 0:29	0.57	6/21/2022 0:59	10.39	6/20/2022 23:47	0.62	6/21/2022 1:29	33.12
6/22/2022 1:13	84.26	6/21/2022 0:30	0.46	6/21/2022 1:00	10.40	6/20/2022 23:48	0.65	6/21/2022 1:30	32.72
6/22/2022 1:14	84.21	6/21/2022 0:31	0.42	6/21/2022 1:01	10.40	6/20/2022 23:49	0.67	6/21/2022 1:31	32.01
6/22/2022 1:15	84.23	6/21/2022 0:32	0.37	6/21/2022 1:02	10.40	6/20/2022 23:50	0.66	6/21/2022 1:32	31.74
6/22/2022 1:16	84.21	6/21/2022 0:33	0.32	6/21/2022 1:03	10.41	6/20/2022 23:51	0.63	6/21/2022 1:33	31.63
6/22/2022 1:17	84.25	6/21/2022 0:34	0.30	6/21/2022 1:04	10.38	6/20/2022 23:52	0.60	6/21/2022 1:34	31.64
6/22/2022 1:18	84.21	6/21/2022 0:35	0.27	6/21/2022 1:05	10.42	6/20/2022 23:53	0.64	6/21/2022 1:35	31.61
6/22/2022 1:19	84.24	6/21/2022 0:36	0.23	6/21/2022 1:06	10.40	6/20/2022 23:54	0.60	6/21/2022 1:36	31.60
6/22/2022 1:20	84.23	6/21/2022 0:37	0.23	6/21/2022 1:07	10.44	6/20/2022 23:55	0.57	6/21/2022 1:37	31.63
6/22/2022 1:21	84.21	6/21/2022 0:38	0.23	6/21/2022 1:08	10.41	6/20/2022 23:56	0.59	6/21/2022 1:38	33.33
6/22/2022 1:22	84.20	6/21/2022 0:39	0.15	6/21/2022 1:09	10.44	6/20/2022 23:57	0.60	6/21/2022 1:39	32.28
6/22/2022 1:23	84.22	6/21/2022 0:40	0.14	6/21/2022 1:10	10.49	6/20/2022 23:58	0.58	6/21/2022 1:40	31.87
6/22/2022 1:24	84.25	6/21/2022 0:41	0.17	6/21/2022 1:11	10.46	6/20/2022 23:59	0.60	6/21/2022 1:41	31.72
6/22/2022 1:25	84.21	6/21/2022 0:42	0.14	6/21/2022 1:12	10.45	6/21/2022 0:00	0.60	6/21/2022 1:42	31.64
6/22/2022 1:26	84.23	6/21/2022 0:43	0.11	6/21/2022 1:13	10.48	6/21/2022 0:01	0.64	6/21/2022 1:43	31.63
6/22/2022 1:27	84.23	6/21/2022 0:44	0.11	6/21/2022 1:14	10.46	6/21/2022 0:02	0.62	6/21/2022 1:44	31.63
6/22/2022 1:28	84.22	6/21/2022 0:45	0.13	6/21/2022 1:15	10.48	6/21/2022 0:03	0.61	6/21/2022 1:45	31.71
6/22/2022 1:29	84.21	6/21/2022 0:46	0.08	6/21/2022 1:16	10.47	6/21/2022 0:04	0.66	6/21/2022 1:46	33.13
6/22/2022 1:30	84.25	6/21/2022 0:47	0.12	6/21/2022 1:17	10.50	6/21/2022 0:05	0.66	6/21/2022 1:47	32.20
6/22/2022 1:31	84.20	6/21/2022 0:48	0.10	6/21/2022 1:18	10.46	6/21/2022 0:06	0.67	6/21/2022 1:48	31.84
6/22/2022 1:32	84.21	6/21/2022 0:49	0.06	6/21/2022 1:19	10.45	6/21/2022 0:07	0.59	6/21/2022 1:49	31.70
6/22/2022 1:33	84.22	6/21/2022 0:50	0.07	6/21/2022 1:20	10.43	6/21/2022 0:08	0.59	6/21/2022 1:50	31.66
6/22/2022 1:34	84.17	6/21/2022 0:51	0.09	6/21/2022 1:21	10.45	6/21/2022 0:09	0.63	6/21/2022 1:51	31.66
6/22/2022 1:35	84.21	6/21/2022 0:52	0.12	6/21/2022 1:22	10.42	6/21/2022 0:10	0.58	6/21/2022 1:52	31.66
6/22/2022 1:36	84.21	6/21/2022 0:53	0.05	6/21/2022 1:23	10.40	6/21/2022 0:11	0.61	6/21/2022 1:53	32.64
6/22/2022 1:37	84.16	6/21/2022 0:54	0.05	6/21/2022 1:24	10.37	6/21/2022 0:12	0.57	6/21/2022 1:54	32.90
6/22/2022 1:38	84.19	6/21/2022 0:55	0.03	6/21/2022 1:25	10.42	6/21/2022 0:13	0.58	6/21/2022 1:55	32.15
6/22/2022 1:39	84.21	6/21/2022 0:56	0.07	6/21/2022 1:26	10.39	6/21/2022 0:14	0.59	6/21/2022 1:56	31.82
6/22/2022 1:40	84.22	6/21/2022 0:57	0.07	6/21/2022 1:27	10.37	6/21/2022 0:15	0.57	6/21/2022 1:57	31.73
6/22/2022 1:41	84.21	6/21/2022 0:58	0.04	6/21/2022 1:28	10.40	6/21/2022 0:16	0.61	6/21/2022 1:58	31.63
6/22/2022 1:42	84.24	6/21/2022 0:59	0.05	6/21/2022 1:29	10.38	6/21/2022 0:17	0.57	6/21/2022 1:59	31.69
6/22/2022 1:43	84.16	6/21/2022 1:00	0.09	6/21/2022 1:30	10.39	6/21/2022 0:18	0.59	6/21/2022 2:00	31.64
6/22/2022 1:44	84.21	6/21/2022 1:01	0.05	6/21/2022 1:31	10.37	6/21/2022 0:19	0.59	6/21/2022 2:01	31.64
6/22/2022 1:45	84.20	6/21/2022 1:02	0.01	6/21/2022 1:32	10.39	6/21/2022 0:20	0.60	6/21/2022 2:02	31.64
6/22/2022 1:46	84.19	6/21/2022 1:03	0.02	6/21/2022 1:33	10.36	6/21/2022 0:21	0.63	6/21/2022 2:03	31.63
6/22/2022 1:47	84.18	6/21/2022 1:04	0.05	6/21/2022 1:34	10.37	6/21/2022 0:22	0.58	6/21/2022 2:04	31.65
6/22/2022 1:48	84.20	6/21/2022 1:05	0.06	6/21/2022 1:35	10.35	6/21/2022 0:23	0.59	6/21/2022 2:05	31.66
6/22/2022 1:49	84.19	6/21/2022 1:06	4.99	6/21/2022 1:36	10.36	6/21/2022 0:24	0.56	6/21/2022 2:06	33.90
6/22/2022 1:50	84.20	6/21/2022 1:07	7.09	6/21/2022 1:37	10.37	6/21/2022 0:25	0.59	6/21/2022 2:07	32.62
6/22/2022 1:51	84.22	6/21/2022 1:08	5.89	6/21/2022 1:38	10.38	6/21/2022 0:26	0.57	6/21/2022 2:08	33.21
6/22/2022 1:52	84.18	6/21/2022 1:09	4.99	6/21/2022 1:39	10.35	6/21/2022 0:27	0.59	6/21/2022 2:09	33.19
6/22/2022 1:53	84.15	6/21/2022 1:10	4.25	6/21/2022 1:40	10.41	6/21/2022 0:28	0.65	6/21/2022 2:10	32.73
6/22/2022 1:54	84.18	6/21/2022 1:11	3.61	6/21/2022 1:41	10.41	6/21/2022 0:29	0.59	6/21/2022 2:11	33.57
6/22/2022 1:55	84.19	6/21/2022 1:12	3.05	6/21/2022 1:42	10.38	6/21/2022 0:30	0.60	6/21/2022 2:12	32.80
6/22/2022 1:56	84.19	6/21/2022 1:13	2.63	6/21/2022 1:43	10.42	6/21/2022 0:31	0.58	6/21/2022 2:13	33.68
6/22/2022 1:57	84.21	6/21/2022 1:14	2.27	6/21/2022 1:44	10.45	6/21/2022 0:32	0.59	6/21/2022 2:14	32.83

6/22/2022 1:58	84.17	6/21/2022 1:15	1.95	6/21/2022 1:45	10.46	6/21/2022 0:33	0.61	6/21/2022 2:15	33.82
6/22/2022 1:59	84.19	6/21/2022 1:16	1.72	6/21/2022 1:46	10.44	6/21/2022 0:34	0.67	6/21/2022 2:16	33.73
6/22/2022 2:00	84.19	6/21/2022 1:17	1.54	6/21/2022 1:47	10.42	6/21/2022 0:35	0.69	6/21/2022 2:17	33.71
6/22/2022 2:01	84.23	6/21/2022 1:18	1.28	6/21/2022 1:48	10.46	6/21/2022 0:36	0.66	6/21/2022 2:18	33.93
6/22/2022 2:02	84.22	6/21/2022 1:19	1.10	6/21/2022 1:49	10.46	6/21/2022 0:37	0.67	6/21/2022 2:19	33.61
6/22/2022 2:03	84.17	6/21/2022 1:20	1.02	6/21/2022 1:50	10.44	6/21/2022 0:38	0.55	6/21/2022 2:20	32.54
6/22/2022 2:04	84.19	6/21/2022 1:21	0.85	6/21/2022 1:51	10.41	6/21/2022 0:39	0.59	6/21/2022 2:21	32.11
6/22/2022 2:05	84.12	6/21/2022 1:22	0.76	6/21/2022 1:52	10.40	6/21/2022 0:40	0.63	6/21/2022 2:22	32.97
6/22/2022 2:06	84.16	6/21/2022 1:23	0.67	6/21/2022 1:53	10.41	6/21/2022 0:41	0.70	6/21/2022 2:23	33.28
6/22/2022 2:07	84.20	6/21/2022 1:24	0.55	6/21/2022 1:54	10.42	6/21/2022 0:42	0.59	6/21/2022 2:24	34.62
6/22/2022 2:08	84.17	6/21/2022 1:25	0.50	6/21/2022 1:55	10.40	6/21/2022 0:43	0.59	6/21/2022 2:25	33.35
6/22/2022 2:09	84.16	6/21/2022 1:26	0.46	6/21/2022 1:56	10.42	6/21/2022 0:44	0.62	6/21/2022 2:26	34.68
6/22/2022 2:10	84.18	6/21/2022 1:27	0.43	6/21/2022 1:57	10.42	6/21/2022 0:45	0.58	6/21/2022 2:27	33.17
6/22/2022 2:11	84.16	6/21/2022 1:28	0.35	6/21/2022 1:58	10.39	6/21/2022 0:46	0.60	6/21/2022 2:28	32.38
6/22/2022 2:12	84.20	6/21/2022 1:29	0.33	6/21/2022 1:59	10.37	6/21/2022 0:47	0.59	6/21/2022 2:29	32.09
6/22/2022 2:13	84.20	6/21/2022 1:30	0.28	6/21/2022 2:00	10.38	6/21/2022 0:48	0.63	6/21/2022 2:30	31.94
6/22/2022 2:14	84.16	6/21/2022 1:31	0.24	6/21/2022 2:01	10.39	6/21/2022 0:49	0.57	6/21/2022 2:31	31.87
6/22/2022 2:15	84.18	6/21/2022 1:32	0.22	6/21/2022 2:02	10.35	6/21/2022 0:50	0.67	6/21/2022 2:32	31.85
6/22/2022 2:16	84.21	6/21/2022 1:33	0.20	6/21/2022 2:03	10.40	6/21/2022 0:51	0.69	6/21/2022 2:33	31.85
6/22/2022 2:17	84.13	6/21/2022 1:34	0.19	6/21/2022 2:04	10.35	6/21/2022 0:52	0.68	6/21/2022 2:34	31.83
6/22/2022 2:18	84.20	6/21/2022 1:35	0.16	6/21/2022 2:05	10.37	6/21/2022 0:53	0.68	6/21/2022 2:35	31.84
6/22/2022 2:19	84.18	6/21/2022 1:36	0.12	6/21/2022 2:06	10.34	6/21/2022 0:54	0.59	6/21/2022 2:36	31.81
6/22/2022 2:20	84.17	6/21/2022 1:37	0.14	6/21/2022 2:07	10.40	6/21/2022 0:55	0.61	6/21/2022 2:37	31.79
6/22/2022 2:21	84.16	6/21/2022 1:38	0.10	6/21/2022 2:08	10.36	6/21/2022 0:56	0.60	6/21/2022 2:38	31.82
6/22/2022 2:22	84.12	6/21/2022 1:39	0.13	6/21/2022 2:09	10.36	6/21/2022 0:57	0.62	6/21/2022 2:39	31.82
6/22/2022 2:23	84.15	6/21/2022 1:40	0.12	6/21/2022 2:10	10.35	6/21/2022 0:58	0.61	6/21/2022 2:40	31.79
6/22/2022 2:24	84.15	6/21/2022 1:41	0.12	6/21/2022 2:11	10.36	6/21/2022 0:59	0.59	6/21/2022 2:41	31.83
6/22/2022 2:25	84.17	6/21/2022 1:42	0.09	6/21/2022 2:12	10.38	6/21/2022 1:00	0.66	6/21/2022 2:42	31.78
6/22/2022 2:26	84.14	6/21/2022 1:43	0.10	6/21/2022 2:13	10.38	6/21/2022 1:01	0.62	6/21/2022 2:43	31.81
6/22/2022 2:27	84.15	6/21/2022 1:44	0.11	6/21/2022 2:14	10.42	6/21/2022 1:02	0.60	6/21/2022 2:44	31.83
6/22/2022 2:28	84.17	6/21/2022 1:45	0.07	6/21/2022 2:15	10.42	6/21/2022 1:03	0.63	6/21/2022 2:45	31.80
6/22/2022 2:29	84.17	6/21/2022 1:46	0.09	6/21/2022 2:16	10.39	6/21/2022 1:04	0.61	6/21/2022 2:46	31.76
6/22/2022 2:30	84.17	6/21/2022 1:47	0.05	6/21/2022 2:17	10.47	6/21/2022 1:05	0.60	6/21/2022 2:47	31.75
6/22/2022 2:31	84.18	6/21/2022 1:48	0.11	6/21/2022 2:18	10.41	6/21/2022 1:06	0.61	6/21/2022 2:48	31.78
6/22/2022 2:32	84.14	6/21/2022 1:49	0.08	6/21/2022 2:19	10.44	6/21/2022 1:07	0.59	6/21/2022 2:49	31.79
6/22/2022 2:33	84.17	6/21/2022 1:50	0.06	6/21/2022 2:20	10.48	6/21/2022 1:08	0.62	6/21/2022 2:50	31.78
6/22/2022 2:34	84.15	6/21/2022 1:51	0.07	6/21/2022 2:21	10.44	6/21/2022 1:09	0.63	6/21/2022 2:51	31.79
6/22/2022 2:35	84.21	6/21/2022 1:52	0.11	6/21/2022 2:22	10.44	6/21/2022 1:10	0.60	6/21/2022 2:52	31.77
6/22/2022 2:36	84.19	6/21/2022 1:53	0.07	6/21/2022 2:23	10.44	6/21/2022 1:11	0.62	6/21/2022 2:53	31.80
6/22/2022 2:37	84.12	6/21/2022 1:54	0.10	6/21/2022 2:24	10.42	6/21/2022 1:12	0.61	6/21/2022 2:54	31.78
6/22/2022 2:38	84.18	6/21/2022 1:55	0.06	6/21/2022 2:25	10.42	6/21/2022 1:13	0.63	6/21/2022 2:55	31.78
6/22/2022 2:39	84.13	6/21/2022 1:56	0.07	6/21/2022 2:26	10.43	6/21/2022 1:14	0.61	6/21/2022 2:56	31.77
6/22/2022 2:40	84.14	6/21/2022 1:57	0.08	6/21/2022 2:27	10.40	6/21/2022 1:15	0.61	6/21/2022 2:57	31.78
6/22/2022 2:41	84.20	6/21/2022 1:58	0.05	6/21/2022 2:28	10.39	6/21/2022 1:16	0.63	6/21/2022 2:58	31.76
6/22/2022 2:42	84.15	6/21/2022 1:59	0.11	6/21/2022 2:29	10.40	6/21/2022 1:17	0.61	6/21/2022 2:59	31.78
6/22/2022 2:43	84.15	6/21/2022 2:00	0.09	6/21/2022 2:30	10.41	6/21/2022 1:18	0.64	6/21/2022 3:00	31.76
6/22/2022 2:44	84.13	6/21/2022 2:01	1.86	6/21/2022 2:31	10.41	6/21/2022 1:19	0.59	6/21/2022 3:01	31.81
6/22/2022 2:45	84.13	6/21/2022 2:02	7.44	6/21/2022 2:32	10.39	6/21/2022 1:20	0.62	6/21/2022 3:02	31.80
6/22/2022 2:46	84.10	6/21/2022 2:03	6.49	6/21/2022 2:33	10.39	6/21/2022 1:21	0.59	6/21/2022 3:03	31.78
6/22/2022 2:47	84.15	6/21/2022 2:04	5.44	6/21/2022 2:34	10.39	6/21/2022 1:22	0.60	6/21/2022 3:04	31.77
6/22/2022 2:48	84.14	6/21/2022 2:05	4.59	6/21/2022 2:35	10.38	6/21/2022 1:23	0.60	6/21/2022 3:05	31.78
6/22/2022 2:49	84.19	6/21/2022 2:06	3.92	6/21/2022 2:36	10.36	6/21/2022 1:24	0.62	6/21/2022 3:06	31.77
6/22/2022 2:50	84.12	6/21/2022 2:07	3.36	6/21/2022 2:37	10.39	6/21/2022 1:25	0.62	6/21/2022 3:07	31.78
6/22/2022 2:51	84.12	6/21/2022 2:08	2.81	6/21/2022 2:38	10.36	6/21/2022 1:26	0.62	6/21/2022 3:08	31.77
6/22/2022 2:52	84.12	6/21/2022 2:09	2.44	6/21/2022 2:39	10.36	6/21/2022 1:27	0.57	6/21/2022 3:09	31.78
6/22/2022 2:53	84.21	6/21/2022 2:10	2.14	6/21/2022 2:40	10.36	6/21/2022 1:28	0.63	6/21/2022 3:10	31.79
6/22/2022 2:54	84.08	6/21/2022 2:11	1.86	6/21/2022 2:41	10.37	6/21/2022 1:29	0.60	6/21/2022 3:11	31.75
6/22/2022 2:55	84.12	6/21/2022 2:12	1.62	6/21/2022 2:42	10.35	6/21/2022 1:30	0.66	6/21/2022 3:12	31.76
6/22/2022 2:56	84.15	6/21/2022 2:13	1.37	6/21/2022 2:43	10.37	6/21/2022 1:31	0.68	6/21/2022 3:13	31.75
6/22/2022 2:57	84.11	6/21/2022 2:14	1.22	6/21/2022 2:44	10.35	6/21/2022 1:32	0.71	6/21/2022 3:14	31.77
6/22/2022 2:58	84.15	6/21/2022 2:15	1.10	6/21/2022 2:45	10.37	6/21/2022 1:33	0.60	6/21/2022 3:15	31.76
6/22/2022 2:59	84.14	6/21/2022 2:16	0.94	6/21/2022 2:46	10.40	6/21/2022 1:34	0.62	6/21/2022 3:16	31.75
6/22/2022 3:00	84.12	6/21/2022 2:17	0.79	6/21/2022 2:47	10.40	6/21/2022 1:35	0.59	6/21/2022 3:17	31.76
6/22/2022 3:01	84.19	6/21/2022 2:18	0.73	6/21/2022 2:48	10.42	6/21/2022 1:36	0.62	6/21/2022 3:18	31.77
6/22/2022 3:02	84.09	6/21/2022 2:19	0.61	6/21/2022 2:49	10.39	6/21/2022 1:37	0.60	6/21/2022 3:19	31.76
6/22/2022 3:03	84.16	6/21/2022 2:20	0.56	6/21/2022 2:50	10.43	6/21/2022 1:38	0.64	6/21/2022 3:20	31.73
6/22/2022 3:04	84.11	6/21/2022 2:21	0.46	6/21/2022 2:51	10.45	6/21/2022 1:39	0.60	6/21/2022 3:21	31.78
6/22/2022 3:05	84.15	6/21/2022 2:22	0.47	6/21/2022 2:52	10.44	6/21/2022 1:40	0.60	6/21/2022 3:22	31.76
6/22/2022 3:06	84.16	6/21/2022 2:23	0.41	6/21/2022 2:53	10.45	6/21/2022 1:41	0.66	6/21/2022 3:23	31.79
6/22/2022 3:07	84.12	6/21/2022 2:24	0.35	6/21/2022 2:54	10.44	6/21/2022 1:42	0.62	6/21/2022 3:24	31.78
6/22/2022 3:08	84.10	6/21/2022 2:25	0.28	6/21/2022 2:55	10.43	6/21/2022 1:43	0.60	6/21/2022 3:25	31.77
6/22/2022 3:09	84.13	6/21/2022 2:26	0.32	6/21/2022 2:56	10.44	6/21/2022 1:44	0.61	6/21/2022 3:26	31.78
6/22/2022 3:10	84.13	6/21/2022 2:27	0.24	6/21/2022 2:57	10.42	6/21/2022 1:45	0.61	6/21/2022 3:27	31.80
6/22/2022 3:11	84.13	6/21/2022 2:28	0.23	6/21/2022 2:58	10.43	6/21/2022 1:46	0.60	6/21/2022 3:28	31.76
6/22/2022 3:12	84.13	6/21/2022 2:29	0.21	6/21/2022 2:59	10.40	6/21/2022 1:47	0.61	6/21/2022 3:29	31.77
6/22/2022 3:13	84.11	6/21/2022 2:30	0.18	6/21/2022 3:00	10.42	6/21/2022 1:48	0.58	6/21/2022 3:30	31.77
6/22/2022 3:14	84.09	6/21/2022 2:31	0.14	6/21/2022 3:01	10.38	6/21/2022 1:49	0.58	6/21/2022 3:31	31.79
6/22/2022 3:15	84.11	6/21/2022 2:32	0.17	6/21/2022 3:02	10.39	6/21/2022 1:50	0.69	6/21/2022 3:32	31.76
6/22/2022 3:16	84.14	6/21/2022 2:33	0.18	6/21/2022 3:03	10.39	6/21/2022 1:51	0.60	6/21/2022 3:33	31.75
6/22/2022 3:17	84.14	6/21/2022 2:34	0.12	6/21/2022 3:04	10.38	6/21/2022 1:52	0.56	6/21/2022 3:34	31.83
6/22/2022 3:18	84.09	6/21/2022 2:35	0.16	6/21/2022 3:05	10.38	6/21/2022 1:53	0.60	6/21/2022 3:35	31.79
6/22/2022 3:19	84.16	6/21/2022 2:36	0.13	6/21/2022 3:06	10.37	6/21/2022 1:54	0.65	6/21/2022 3:36	31.80
6/22/2022 3:20	84.12	6/21/2022 2:37	0.08	6/21/2022 3:07	10.37	6/21/2022 1:55	0.68	6/21/2022 3:37	31.78
6/22/2022 3:21	84.15	6/21/2022 2:38	0.15	6/21/2022 3:08	10.38	6/21/2022 1:56	0.63	6/21/2022 3:38	31.79
6/22/2022 3:22	84.12	6/21/2022 2:39	0.12	6/21/2022 3:09	10.34	6/21/2022 1:57	0.62	6/21/2022 3:39	31.78
6/22/2022 3:23	84.09	6/21/2022 2:40	0.11	6/21/2022 3:10	10.34	6/21/2022 1:58	0.64	6/21/2022 3:40	31.78
6/22/2022 3:24	84.14	6/21/2022 2:41	0.09	6/21/2022 3:11	10.34	6/21/2022 1:59	0.61	6/21/2022 3:41	31.79
6/22/2022 3:25	84.08	6/21/2022 2:42	0.09	6/21/2022 3:12	10.33	6/21/2022 2:00	0.62	6/21/2022 3:42	31.78

6/22/2022 3:26	84.15	6/21/2022 2:43	0.10	6/21/2022 3:13	10.34	6/21/2022 2:01	0.61	6/21/2022 3:43	31.79
6/22/2022 3:27	84.09	6/21/2022 2:44	0.12	6/21/2022 3:14	10.35	6/21/2022 2:02	0.63	6/21/2022 3:44	31.78
6/22/2022 3:28	84.12	6/21/2022 2:45	0.08	6/21/2022 3:15	10.35	6/21/2022 2:03	0.63	6/21/2022 3:45	31.77
6/22/2022 3:29	84.11	6/21/2022 2:46	0.07	6/21/2022 3:16	10.34	6/21/2022 2:04	0.60	6/21/2022 3:46	31.76
6/22/2022 3:30	84.09	6/21/2022 2:47	0.07	6/21/2022 3:17	10.32	6/21/2022 2:05	0.61	6/21/2022 3:47	31.78
6/22/2022 3:31	84.08	6/21/2022 2:48	0.06	6/21/2022 3:18	10.38	6/21/2022 2:06	0.61	6/21/2022 3:48	31.83
6/22/2022 3:32	84.10	6/21/2022 2:49	0.08	6/21/2022 3:19	10.39	6/21/2022 2:07	0.59	6/21/2022 3:49	31.79
6/22/2022 3:33	84.12	6/21/2022 2:50	0.07	6/21/2022 3:20	10.37	6/21/2022 2:08	0.63	6/21/2022 3:50	31.80
6/22/2022 3:34	84.12	6/21/2022 2:51	0.09	6/21/2022 3:21	10.40	6/21/2022 2:09	0.65	6/21/2022 3:51	31.79
6/22/2022 3:35	84.09	6/21/2022 2:52	0.08	6/21/2022 3:22	10.38	6/21/2022 2:10	0.63	6/21/2022 3:52	31.79
6/22/2022 3:36	84.09	6/21/2022 2:53	0.06	6/21/2022 3:23	10.40	6/21/2022 2:11	0.63	6/21/2022 3:53	31.79
6/22/2022 3:37	84.08	6/21/2022 2:54	0.04	6/21/2022 3:24	10.39	6/21/2022 2:12	0.61	6/21/2022 3:54	31.81
6/22/2022 3:38	84.11	6/21/2022 2:55	0.02	6/21/2022 3:25	10.40	6/21/2022 2:13	0.64	6/21/2022 3:55	31.81
6/22/2022 3:39	84.08	6/21/2022 2:56	0.04	6/21/2022 3:26	10.42	6/21/2022 2:14	0.63	6/21/2022 3:56	31.78
6/22/2022 3:40	84.07	6/21/2022 2:57	5.21	6/21/2022 3:27	10.43	6/21/2022 2:15	0.67	6/21/2022 3:57	31.78
6/22/2022 3:41	84.05	6/21/2022 2:58	6.92	6/21/2022 3:28	10.45	6/21/2022 2:16	0.64	6/21/2022 3:58	31.82
6/22/2022 3:42	84.14	6/21/2022 2:59	5.81	6/21/2022 3:29	10.41	6/21/2022 2:17	0.70	6/21/2022 3:59	31.78
6/22/2022 3:43	84.12	6/21/2022 3:00	4.91	6/21/2022 3:30	10.40	6/21/2022 2:18	0.61	6/21/2022 4:00	31.82
6/22/2022 3:44	84.13	6/21/2022 3:01	4.17	6/21/2022 3:31	10.40	6/21/2022 2:19	0.62	6/21/2022 4:01	31.81
6/22/2022 3:45	84.11	6/21/2022 3:02	3.56	6/21/2022 3:32	10.42	6/21/2022 2:20	0.61	6/21/2022 4:02	31.80
6/22/2022 3:46	84.11	6/21/2022 3:03	3.02	6/21/2022 3:33	10.36	6/21/2022 2:21	0.61	6/21/2022 4:03	31.83
6/22/2022 3:47	84.13	6/21/2022 3:04	2.56	6/21/2022 3:34	10.38	6/21/2022 2:22	0.63	6/21/2022 4:04	31.83
6/22/2022 3:48	84.07	6/21/2022 3:05	2.23	6/21/2022 3:35	10.37	6/21/2022 2:23	0.61	6/21/2022 4:05	31.81
6/22/2022 3:49	84.08	6/21/2022 3:06	1.94	6/21/2022 3:36	10.37	6/21/2022 2:24	0.62	6/21/2022 4:06	31.79
6/22/2022 3:50	84.10	6/21/2022 3:07	1.68	6/21/2022 3:37	10.38	6/21/2022 2:25	0.67	6/21/2022 4:07	31.78
6/22/2022 3:51	84.08	6/21/2022 3:08	1.44	6/21/2022 3:38	10.38	6/21/2022 2:26	0.62	6/21/2022 4:08	31.81
6/22/2022 3:52	84.10	6/21/2022 3:09	1.29	6/21/2022 3:39	10.38	6/21/2022 2:27	0.62	6/21/2022 4:09	31.84
6/22/2022 3:53	84.12	6/21/2022 3:10	1.16	6/21/2022 3:40	10.41	6/21/2022 2:28	0.61	6/21/2022 4:10	31.83
6/22/2022 3:54	84.13	6/21/2022 3:11	0.97	6/21/2022 3:41	10.47	6/21/2022 2:29	0.60	6/21/2022 4:11	31.82
6/22/2022 3:55	84.10	6/21/2022 3:12	0.90	6/21/2022 3:42	10.44	6/21/2022 2:30	0.61	6/21/2022 4:12	31.83
6/22/2022 3:56	84.13	6/21/2022 3:13	0.74	6/21/2022 3:43	10.52	6/21/2022 2:31	0.59	6/21/2022 4:13	31.83
6/22/2022 3:57	84.13	6/21/2022 3:14	0.64	6/21/2022 3:44	10.46	6/21/2022 2:32	0.69	6/21/2022 4:14	31.85
6/22/2022 3:58	84.09	6/21/2022 3:15	0.56	6/21/2022 3:45	10.50	6/21/2022 2:33	0.63	6/21/2022 4:15	31.80
6/22/2022 3:59	84.09	6/21/2022 3:16	0.50	6/21/2022 3:46	10.50	6/21/2022 2:34	0.65	6/21/2022 4:16	31.83
6/22/2022 4:00	84.09	6/21/2022 3:17	0.48	6/21/2022 3:47	10.50	6/21/2022 2:35	0.62	6/21/2022 4:17	31.82
6/22/2022 4:01	84.13	6/21/2022 3:18	0.41	6/21/2022 3:48	10.50	6/21/2022 2:36	0.60	6/21/2022 4:18	31.83
6/22/2022 4:02	84.07	6/21/2022 3:19	0.35	6/21/2022 3:49	10.51	6/21/2022 2:37	0.64	6/21/2022 4:19	31.84
6/22/2022 4:03	84.08	6/21/2022 3:20	0.30	6/21/2022 3:50	10.47	6/21/2022 2:38	0.60	6/21/2022 4:20	31.87
6/22/2022 4:04	84.14	6/21/2022 3:21	0.32	6/21/2022 3:51	10.50	6/21/2022 2:39	0.61	6/21/2022 4:21	31.83
6/22/2022 4:05	84.11	6/21/2022 3:22	0.27	6/21/2022 3:52	10.47	6/21/2022 2:40	0.67	6/21/2022 4:22	31.84
6/22/2022 4:06	84.10	6/21/2022 3:23	0.25	6/21/2022 3:53	10.48	6/21/2022 2:41	0.61	6/21/2022 4:23	31.82
6/22/2022 4:07	84.11	6/21/2022 3:24	0.21	6/21/2022 3:54	10.49	6/21/2022 2:42	0.61	6/21/2022 4:24	31.83
6/22/2022 4:08	84.10	6/21/2022 3:25	0.21	6/21/2022 3:55	10.52	6/21/2022 2:43	0.58	6/21/2022 4:25	31.85
6/22/2022 4:09	84.09	6/21/2022 3:26	0.16	6/21/2022 3:56	10.51	6/21/2022 2:44	0.59	6/21/2022 4:26	31.87
6/22/2022 4:10	84.10	6/21/2022 3:27	0.16	6/21/2022 3:57	10.53	6/21/2022 2:45	0.60	6/21/2022 4:27	31.87
6/22/2022 4:11	84.08	6/21/2022 3:28	0.17	6/21/2022 3:58	10.51	6/21/2022 2:46	0.72	6/21/2022 4:28	31.83
6/22/2022 4:12	84.07	6/21/2022 3:29	0.15	6/21/2022 3:59	10.52	6/21/2022 2:47	0.61	6/21/2022 4:29	31.87
6/22/2022 4:13	84.10	6/21/2022 3:30	0.15	6/21/2022 4:00	10.54	6/21/2022 2:48	0.60	6/21/2022 4:30	31.86
6/22/2022 4:14	84.09	6/21/2022 3:31	0.13	6/21/2022 4:01	10.53	6/21/2022 2:49	0.63	6/21/2022 4:31	31.84
6/22/2022 4:15	84.11	6/21/2022 3:32	0.12	6/21/2022 4:02	10.54	6/21/2022 2:50	0.60	6/21/2022 4:32	31.86
6/22/2022 4:16	84.06	6/21/2022 3:33	0.12	6/21/2022 4:03	10.51	6/21/2022 2:51	0.62	6/21/2022 4:33	31.86
6/22/2022 4:17	84.10	6/21/2022 3:34	0.13	6/21/2022 4:04	10.51	6/21/2022 2:52	0.61	6/21/2022 4:34	31.84
6/22/2022 4:18	84.10	6/21/2022 3:35	0.10	6/21/2022 4:05	10.51	6/21/2022 2:53	0.64	6/21/2022 4:35	31.87
6/22/2022 4:19	84.07	6/21/2022 3:36	0.08	6/21/2022 4:06	10.51	6/21/2022 2:54	0.63	6/21/2022 4:36	31.88
6/22/2022 4:20	84.10	6/21/2022 3:37	0.09	6/21/2022 4:07	10.51	6/21/2022 2:55	0.61	6/21/2022 4:37	31.86
6/22/2022 4:21	84.07	6/21/2022 3:38	0.09	6/21/2022 4:08	10.48	6/21/2022 2:56	0.61	6/21/2022 4:38	31.85
6/22/2022 4:22	84.05	6/21/2022 3:39	0.14	6/21/2022 4:09	10.46	6/21/2022 2:57	0.62	6/21/2022 4:39	31.86
6/22/2022 4:23	84.11	6/21/2022 3:40	0.08	6/21/2022 4:10	10.48	6/21/2022 2:58	0.64	6/21/2022 4:40	31.88
6/22/2022 4:24	84.05	6/21/2022 3:41	0.06	6/21/2022 4:11	10.45	6/21/2022 2:59	0.65	6/21/2022 4:41	31.88
6/22/2022 4:25	84.11	6/21/2022 3:42	0.05	6/21/2022 4:12	10.50	6/21/2022 3:00	0.61	6/21/2022 4:42	31.87
6/22/2022 4:26	84.10	6/21/2022 3:43	-0.01	6/21/2022 4:13	10.46	6/21/2022 3:01	0.63	6/21/2022 4:43	31.86
6/22/2022 4:27	84.05	6/21/2022 3:44	0.05	6/21/2022 4:14	10.44	6/21/2022 3:02	0.63	6/21/2022 4:44	31.88
6/22/2022 4:28	84.14	6/21/2022 3:45	0.07	6/21/2022 4:15	10.43	6/21/2022 3:03	0.64	6/21/2022 4:45	31.86
6/22/2022 4:29	84.06	6/21/2022 3:46	0.04	6/21/2022 4:16	10.41	6/21/2022 3:04	0.61	6/21/2022 4:46	31.87
6/22/2022 4:30	84.09	6/21/2022 3:47	0.03	6/21/2022 4:17	10.42	6/21/2022 3:05	0.60	6/21/2022 4:47	31.87
6/22/2022 4:31	84.03	6/21/2022 3:48	0.07	6/21/2022 4:18	10.43	6/21/2022 3:06	0.64	6/21/2022 4:48	31.87
6/22/2022 4:32	84.07	6/21/2022 3:49	0.09	6/21/2022 4:19	10.38	6/21/2022 3:07	0.62	6/21/2022 4:49	31.88
6/22/2022 4:33	84.12	6/21/2022 3:50	0.07	6/21/2022 4:20	10.38	6/21/2022 3:08	0.66	6/21/2022 4:50	31.87
6/22/2022 4:34	84.08	6/21/2022 3:51	0.09	6/21/2022 4:21	10.41	6/21/2022 3:09	0.62	6/21/2022 4:51	31.88
6/22/2022 4:35	84.05	6/21/2022 3:52	4.96	6/21/2022 4:22	10.40	6/21/2022 3:10	0.65	6/21/2022 4:52	31.87
6/22/2022 4:36	84.07	6/21/2022 3:53	7.14	6/21/2022 4:23	10.41	6/21/2022 3:11	0.61	6/21/2022 4:53	31.90
6/22/2022 4:37	84.09	6/21/2022 3:54	5.99	6/21/2022 4:24	10.42	6/21/2022 3:12	0.65	6/21/2022 4:54	31.87
6/22/2022 4:38	84.09	6/21/2022 3:55	5.05	6/21/2022 4:25	10.46	6/21/2022 3:13	0.59	6/21/2022 4:55	31.90
6/22/2022 4:39	84.11	6/21/2022 3:56	4.31	6/21/2022 4:26	10.43	6/21/2022 3:14	0.65	6/21/2022 4:56	31.87
6/22/2022 4:40	84.03	6/21/2022 3:57	3.64	6/21/2022 4:27	10.42	6/21/2022 3:15	0.65	6/21/2022 4:57	31.89
6/22/2022 4:41	84.05	6/21/2022 3:58	3.12	6/21/2022 4:28	10.42	6/21/2022 3:16	0.59	6/21/2022 4:58	31.92
6/22/2022 4:42	84.08	6/21/2022 3:59	2.67	6/21/2022 4:29	10.45	6/21/2022 3:17	0.64	6/21/2022 4:59	31.89
6/22/2022 4:43	84.06	6/21/2022 4:00	2.27	6/21/2022 4:30	10.43	6/21/2022 3:18	0.58	6/21/2022 5:00	31.94
6/22/2022 4:44	84.06	6/21/2022 4:01	2.02	6/21/2022 4:31	10.44	6/21/2022 3:19	0.59	6/21/2022 5:01	31.89
6/22/2022 4:45	84.03	6/21/2022 4:02	1.75	6/21/2022 4:32	10.49	6/21/2022 3:20	0.62	6/21/2022 5:02	31.89
6/22/2022 4:46	84.07	6/21/2022 4:03	1.57	6/21/2022 4:33	10.47	6/21/2022 3:21	0.65	6/21/2022 5:03	31.87
6/22/2022 4:47	84.10	6/21/2022 4:04	1.41	6/21/2022 4:34	10.43	6/21/2022 3:22	0.63	6/21/2022 5:04	31.91
6/22/2022 4:48	84.07	6/21/2022 4:05	1.27	6/21/2022 4:35	10.46	6/21/2022 3:23	0.64	6/21/2022 5:05	31.91
6/22/2022 4:49	84.01	6/21/2022 4:06	1.17	6/21/2022 4:36	10.45	6/21/2022 3:24	0.62	6/21/2022 5:06	31.95
6/22/2022 4:50	84.03	6/21/2022 4:07	1.01	6/21/2022 4:37	10.43	6/21/2022 3:25	0.61	6/21/2022 5:07	31.90
6/22/2022 4:51	84.07	6/21/2022 4:08	0.93	6/21/2022 4:38	10.47	6/21/2022 3:26	0.62	6/21/2022 5:08	31.90
6/22/2022 4:52	84.11	6/21/2022 4:09	0.87	6/21/2022 4:39	10.44	6/21/2022 3:27	0.62	6/21/2022 5:09	31.91
6/22/2022 4:53	84.06	6/21/2022 4:10	0.82	6/21/2022 4:40	10.42	6/21/2022 3:28	0.62	6/21/2022 5:10	31.92

6/22/2022 4:54	84.02	6/21/2022 4:11	0.70	6/21/2022 4:41	10.43	6/21/2022 3:29	0.60	6/21/2022 5:11	31.92
6/22/2022 4:55	84.09	6/21/2022 4:12	0.67	6/21/2022 4:42	10.39	6/21/2022 3:30	0.63	6/21/2022 5:12	31.91
6/22/2022 4:56	84.05	6/21/2022 4:13	0.66	6/21/2022 4:43	10.37	6/21/2022 3:31	0.63	6/21/2022 5:13	31.92
6/22/2022 4:57	84.03	6/21/2022 4:14	0.63	6/21/2022 4:44	10.39	6/21/2022 3:32	0.61	6/21/2022 5:14	31.92
6/22/2022 4:58	84.08	6/21/2022 4:15	0.61	6/21/2022 4:45	10.38	6/21/2022 3:33	0.59	6/21/2022 5:15	31.91
6/22/2022 4:59	84.08	6/21/2022 4:16	0.54	6/21/2022 4:46	10.38	6/21/2022 3:34	0.64	6/21/2022 5:16	31.93
6/22/2022 5:00	84.06	6/21/2022 4:17	0.58	6/21/2022 4:47	10.39	6/21/2022 3:35	0.64	6/21/2022 5:17	31.92
6/22/2022 5:01	84.11	6/21/2022 4:18	0.54	6/21/2022 4:48	10.40	6/21/2022 3:36	0.60	6/21/2022 5:18	31.93
6/22/2022 5:02	84.08	6/21/2022 4:19	0.56	6/21/2022 4:49	10.37	6/21/2022 3:37	0.65	6/21/2022 5:19	31.92
6/22/2022 5:03	84.07	6/21/2022 4:20	0.58	6/21/2022 4:50	10.37	6/21/2022 3:38	0.61	6/21/2022 5:20	31.89
6/22/2022 5:04	84.10	6/21/2022 4:21	0.62	6/21/2022 4:51	10.38	6/21/2022 3:39	0.65	6/21/2022 5:21	31.92
6/22/2022 5:05	84.04	6/21/2022 4:22	0.60	6/21/2022 4:52	10.35	6/21/2022 3:40	0.62	6/21/2022 5:22	31.95
6/22/2022 5:06	84.06	6/21/2022 4:23	0.57	6/21/2022 4:53	10.39	6/21/2022 3:41	0.68	6/21/2022 5:23	31.95
6/22/2022 5:07	84.08	6/21/2022 4:24	0.58	6/21/2022 4:54	10.37	6/21/2022 3:42	0.65	6/21/2022 5:24	31.95
6/22/2022 5:08	84.05	6/21/2022 4:25	0.60	6/21/2022 4:55	10.41	6/21/2022 3:43	0.63	6/21/2022 5:25	31.96
6/22/2022 5:09	84.10	6/21/2022 4:26	0.62	6/21/2022 4:56	10.43	6/21/2022 3:44	0.63	6/21/2022 5:26	31.96
6/22/2022 5:10	84.07	6/21/2022 4:27	0.61	6/21/2022 4:57	10.48	6/21/2022 3:45	0.56	6/21/2022 5:27	31.90
6/22/2022 5:11	84.06	6/21/2022 4:28	0.59	6/21/2022 4:58	10.45	6/21/2022 3:46	0.68	6/21/2022 5:28	31.95
6/22/2022 5:12	84.09	6/21/2022 4:29	0.60	6/21/2022 4:59	10.49	6/21/2022 3:47	0.63	6/21/2022 5:29	31.90
6/22/2022 5:13	84.11	6/21/2022 4:30	0.65	6/21/2022 5:00	10.58	6/21/2022 3:48	0.61	6/21/2022 5:30	31.96
6/22/2022 5:14	84.07	6/21/2022 4:31	0.63	6/21/2022 5:01	10.60	6/21/2022 3:49	0.62	6/21/2022 5:31	31.94
6/22/2022 5:15	84.08	6/21/2022 4:32	0.65	6/21/2022 5:02	10.61	6/21/2022 3:50	0.56	6/21/2022 5:32	31.96
6/22/2022 5:16	84.09	6/21/2022 4:33	0.65	6/21/2022 5:03	10.67	6/21/2022 3:51	0.62	6/21/2022 5:33	31.98
6/22/2022 5:17	84.07	6/21/2022 4:34	0.64	6/21/2022 5:04	10.74	6/21/2022 3:52	0.64	6/21/2022 5:34	31.95
6/22/2022 5:18	84.06	6/21/2022 4:35	0.63	6/21/2022 5:05	10.73	6/21/2022 3:53	0.58	6/21/2022 5:35	31.96
6/22/2022 5:19	84.06	6/21/2022 4:36	0.68	6/21/2022 5:06	10.79	6/21/2022 3:54	0.62	6/21/2022 5:36	32.01
6/22/2022 5:20	84.04	6/21/2022 4:37	0.67	6/21/2022 5:07	10.78	6/21/2022 3:55	0.62	6/21/2022 5:37	31.98
6/22/2022 5:21	84.00	6/21/2022 4:38	0.69	6/21/2022 5:08	10.84	6/21/2022 3:56	0.62	6/21/2022 5:38	31.97
6/22/2022 5:22	84.04	6/21/2022 4:39	0.70	6/21/2022 5:09	10.90	6/21/2022 3:57	0.64	6/21/2022 5:39	31.96
6/22/2022 5:23	84.09	6/21/2022 4:40	0.70	6/21/2022 5:10	10.94	6/21/2022 3:58	0.63	6/21/2022 5:40	31.97
6/22/2022 5:24	84.08	6/21/2022 4:41	0.70	6/21/2022 5:11	10.94	6/21/2022 3:59	0.62	6/21/2022 5:41	31.96
6/22/2022 5:25	84.05	6/21/2022 4:42	0.68	6/21/2022 5:12	10.95	6/21/2022 4:00	0.63	6/21/2022 5:42	31.96
6/22/2022 5:26	84.04	6/21/2022 4:43	0.69	6/21/2022 5:13	10.91	6/21/2022 4:01	0.63	6/21/2022 5:43	31.93
6/22/2022 5:27	84.09	6/21/2022 4:44	0.73	6/21/2022 5:14	10.91	6/21/2022 4:02	0.63	6/21/2022 5:44	31.92
6/22/2022 5:28	84.08	6/21/2022 4:45	0.70	6/21/2022 5:15	10.93	6/21/2022 4:03	0.61	6/21/2022 5:45	31.94
6/22/2022 5:29	84.06	6/21/2022 4:46	0.69	6/21/2022 5:16	10.91	6/21/2022 4:04	0.64	6/21/2022 5:46	31.97
6/22/2022 5:30	84.11	6/21/2022 4:47	0.72	6/21/2022 5:17	10.91	6/21/2022 4:05	0.60	6/21/2022 5:47	31.96
6/22/2022 5:31	84.03	6/21/2022 4:48	6.18	6/21/2022 5:18	10.92	6/21/2022 4:06	0.61	6/21/2022 5:48	31.98
6/22/2022 5:32	84.06	6/21/2022 4:49	7.58	6/21/2022 5:19	10.93	6/21/2022 4:07	0.65	6/21/2022 5:49	31.95
6/22/2022 5:33	84.05	6/21/2022 4:50	6.41	6/21/2022 5:20	10.93	6/21/2022 4:08	0.65	6/21/2022 5:50	31.98
6/22/2022 5:34	84.07	6/21/2022 4:51	5.50	6/21/2022 5:21	10.92	6/21/2022 4:09	0.63	6/21/2022 5:51	31.99
6/22/2022 5:35	84.05	6/21/2022 4:52	4.78	6/21/2022 5:22	10.89	6/21/2022 4:10	0.64	6/21/2022 5:52	31.99
6/22/2022 5:36	84.02	6/21/2022 4:53	4.20	6/21/2022 5:23	10.86	6/21/2022 4:11	0.61	6/21/2022 5:53	31.94
6/22/2022 5:37	84.07	6/21/2022 4:54	3.68	6/21/2022 5:24	10.84	6/21/2022 4:12	0.63	6/21/2022 5:54	32.01
6/22/2022 5:38	84.05	6/21/2022 4:55	3.24	6/21/2022 5:25	10.84	6/21/2022 4:13	0.65	6/21/2022 5:55	31.98
6/22/2022 5:39	84.09	6/21/2022 4:56	2.85	6/21/2022 5:26	10.83	6/21/2022 4:14	0.61	6/21/2022 5:56	31.98
6/22/2022 5:40	84.00	6/21/2022 4:57	2.62	6/21/2022 5:27	10.83	6/21/2022 4:15	0.65	6/21/2022 5:57	31.99
6/22/2022 5:41	84.01	6/21/2022 4:58	2.35	6/21/2022 5:28	10.81	6/21/2022 4:16	0.63	6/21/2022 5:58	32.01
6/22/2022 5:42	84.06	6/21/2022 4:59	2.10	6/21/2022 5:29	10.80	6/21/2022 4:17	0.66	6/21/2022 5:59	31.95
6/22/2022 5:43	84.06	6/21/2022 5:00	1.96	6/21/2022 5:30	10.75	6/21/2022 4:18	0.64	6/21/2022 6:00	32.02
6/22/2022 5:44	84.02	6/21/2022 5:01	1.77	6/21/2022 5:31	10.74	6/21/2022 4:19	0.68	6/21/2022 6:01	31.99
6/22/2022 5:45	84.05	6/21/2022 5:02	1.63	6/21/2022 5:32	10.72	6/21/2022 4:20	0.69	6/21/2022 6:02	31.97
6/22/2022 5:46	84.02	6/21/2022 5:03	1.54	6/21/2022 5:33	10.70	6/21/2022 4:21	0.65	6/21/2022 6:03	32.01
6/22/2022 5:47	84.07	6/21/2022 5:04	1.44	6/21/2022 5:34	10.69	6/21/2022 4:22	0.66	6/21/2022 6:04	32.02
6/22/2022 5:48	84.02	6/21/2022 5:05	1.36	6/21/2022 5:35	10.67	6/21/2022 4:23	0.64	6/21/2022 6:05	31.98
6/22/2022 5:49	84.04	6/21/2022 5:06	1.29	6/21/2022 5:36	10.68	6/21/2022 4:24	0.65	6/21/2022 6:06	32.02
6/22/2022 5:50	84.06	6/21/2022 5:07	1.25	6/21/2022 5:37	10.65	6/21/2022 4:25	0.69	6/21/2022 6:07	32.02
6/22/2022 5:51	84.01	6/21/2022 5:08	1.17	6/21/2022 5:38	10.60	6/21/2022 4:26	0.68	6/21/2022 6:08	32.02
6/22/2022 5:52	84.05	6/21/2022 5:09	1.12	6/21/2022 5:39	10.60	6/21/2022 4:27	0.69	6/21/2022 6:09	32.00
6/22/2022 5:53	84.04	6/21/2022 5:10	1.07	6/21/2022 5:40	10.59	6/21/2022 4:28	0.67	6/21/2022 6:10	32.02
6/22/2022 5:54	84.03	6/21/2022 5:11	1.02	6/21/2022 5:41	10.58	6/21/2022 4:29	0.68	6/21/2022 6:11	31.99
6/22/2022 5:55	84.10	6/21/2022 5:12	0.97	6/21/2022 5:42	10.58	6/21/2022 4:30	0.66	6/21/2022 6:12	32.04
6/22/2022 5:56	84.05	6/21/2022 5:13	0.99	6/21/2022 5:43	10.59	6/21/2022 4:31	0.66	6/21/2022 6:13	31.98
6/22/2022 5:57	84.03	6/21/2022 5:14	1.00	6/21/2022 5:44	10.61	6/21/2022 4:32	0.69	6/21/2022 6:14	32.01
6/22/2022 5:58	84.00	6/21/2022 5:15	0.93	6/21/2022 5:45	10.63	6/21/2022 4:33	0.70	6/21/2022 6:15	32.03
6/22/2022 5:59	84.06	6/21/2022 5:16	0.90	6/21/2022 5:46	10.60	6/21/2022 4:34	0.69	6/21/2022 6:16	32.02
6/22/2022 6:00	84.03	6/21/2022 5:17	0.87	6/21/2022 5:47	10.61	6/21/2022 4:35	0.67	6/21/2022 6:17	32.06
6/22/2022 6:01	84.02	6/21/2022 5:18	0.88	6/21/2022 5:48	10.60	6/21/2022 4:36	0.71	6/21/2022 6:18	32.02
6/22/2022 6:02	84.02	6/21/2022 5:19	0.86	6/21/2022 5:49	10.61	6/21/2022 4:37	0.66	6/21/2022 6:19	32.02
6/22/2022 6:03	84.04	6/21/2022 5:20	0.87	6/21/2022 5:50	10.61	6/21/2022 4:38	0.66	6/21/2022 6:20	32.03
6/22/2022 6:04	84.07	6/21/2022 5:21	0.86	6/21/2022 5:51	10.59	6/21/2022 4:39	0.66	6/21/2022 6:21	32.02
6/22/2022 6:05	84.03	6/21/2022 5:22	0.87	6/21/2022 5:52	10.57	6/21/2022 4:40	0.68	6/21/2022 6:22	32.02
6/22/2022 6:06	84.02	6/21/2022 5:23	0.82	6/21/2022 5:53	10.58	6/21/2022 4:41	0.65	6/21/2022 6:23	32.03
6/22/2022 6:07	84.09	6/21/2022 5:24	0.83	6/21/2022 5:54	10.57	6/21/2022 4:42	0.66	6/21/2022 6:24	32.03
6/22/2022 6:08	84.02	6/21/2022 5:25	0.87	6/21/2022 5:55	10.56	6/21/2022 4:43	0.64	6/21/2022 6:25	32.04
6/22/2022 6:09	84.01	6/21/2022 5:26	0.83	6/21/2022 5:56	10.55	6/21/2022 4:44	0.67	6/21/2022 6:26	32.02
6/22/2022 6:10	84.04	6/21/2022 5:27	0.84	6/21/2022 5:57	10.54	6/21/2022 4:45	0.68	6/21/2022 6:27	32.02
6/22/2022 6:11	84.00	6/21/2022 5:28	0.78	6/21/2022 5:58	10.51	6/21/2022 4:46	0.68	6/21/2022 6:28	32.03
6/22/2022 6:12	84.06	6/21/2022 5:29	0.80	6/21/2022 5:59	10.51	6/21/2022 4:47	0.67	6/21/2022 6:29	32.01
6/22/2022 6:13	84.02	6/21/2022 5:30	0.79	6/21/2022 6:00	10.49	6/21/2022 4:48	0.67	6/21/2022 6:30	32.04
6/22/2022 6:14	84.01	6/21/2022 5:31	0.79	6/21/2022 6:01	10.51	6/21/2022 4:49	0.69	6/21/2022 6:31	32.03
6/22/2022 6:15	84.01	6/21/2022 5:32	0.81	6/21/2022 6:02	10.49	6/21/2022 4:50	0.67	6/21/2022 6:32	32.05
6/22/2022 6:16	83.97	6/21/2022 5:33	0.78	6/21/2022 6:03	10.48	6/21/2022 4:51	0.69	6/21/2022 6:33	32.03
6/22/2022 6:17	83.99	6/21/2022 5:34	0.79	6/21/2022 6:04	10.47	6/21/2022 4:52	0.69	6/21/2022 6:34	32.03
6/22/2022 6:18	84.03	6/21/2022 5:35	0.83	6/21/2022 6:05	10.47	6/21/2022 4:53	0.74	6/21/2022 6:35	32.05
6/22/2022 6:19	83.98	6/21/2022 5:36	0.79	6/21/2022 6:06	10.45	6/21/2022 4:54	0.70	6/21/2022 6:36	32.03
6/22/2022 6:20	84.02	6/21/2022 5:37	0.81	6/21/2022 6:07	10.44	6/21/2022 4:55	0.67	6/21/2022 6:37	32.02
6/22/2022 6:21	84.04	6/21/2022 5:38	0.79	6/21/2022 6:08	10.46	6/21/2022 4:56	0.68	6/21/2022 6:38	32.04

6/22/2022 6:22	84.00	6/21/2022 5:39	0.80	6/21/2022 6:09	10.45	6/21/2022 4:57	0.67	6/21/2022 6:39	32.06
6/22/2022 6:23	84.04	6/21/2022 5:40	0.77	6/21/2022 6:10	10.43	6/21/2022 4:58	0.66	6/21/2022 6:40	32.04
6/22/2022 6:24	84.02	6/21/2022 5:41	0.80	6/21/2022 6:11	10.45	6/21/2022 4:59	0.65	6/21/2022 6:41	32.06
6/22/2022 6:25	84.08	6/21/2022 5:42	0.73	6/21/2022 6:12	10.48	6/21/2022 5:00	0.68	6/21/2022 6:42	32.06
6/22/2022 6:26	84.00	6/21/2022 5:43	5.50	6/21/2022 6:13	10.47	6/21/2022 5:01	0.66	6/21/2022 6:43	32.08
6/22/2022 6:27	84.02	6/21/2022 5:44	7.84	6/21/2022 6:14	10.49	6/21/2022 5:02	0.67	6/21/2022 6:44	32.09
6/22/2022 6:28	84.06	6/21/2022 5:45	6.67	6/21/2022 6:15	10.50	6/21/2022 5:03	0.67	6/21/2022 6:45	32.11
6/22/2022 6:29	83.97	6/21/2022 5:46	5.70	6/21/2022 6:16	10.50	6/21/2022 5:04	0.65	6/21/2022 6:46	32.11
6/22/2022 6:30	83.99	6/21/2022 5:47	4.94	6/21/2022 6:17	10.53	6/21/2022 5:05	0.67	6/21/2022 6:47	32.11
6/22/2022 6:31	84.06	6/21/2022 5:48	4.32	6/21/2022 6:18	10.56	6/21/2022 5:06	0.66	6/21/2022 6:48	32.11
6/22/2022 6:32	84.06	6/21/2022 5:49	3.80	6/21/2022 6:19	10.53	6/21/2022 5:07	0.70	6/21/2022 6:49	32.08
6/22/2022 6:33	84.00	6/21/2022 5:50	3.31	6/21/2022 6:20	10.59	6/21/2022 5:08	0.65	6/21/2022 6:50	32.11
6/22/2022 6:34	84.04	6/21/2022 5:51	2.95	6/21/2022 6:21	10.63	6/21/2022 5:09	0.65	6/21/2022 6:51	32.11
6/22/2022 6:35	84.00	6/21/2022 5:52	2.63	6/21/2022 6:22	10.58	6/21/2022 5:10	0.67	6/21/2022 6:52	32.12
6/22/2022 6:36	84.02	6/21/2022 5:53	2.39	6/21/2022 6:23	10.62	6/21/2022 5:11	0.66	6/21/2022 6:53	32.11
6/22/2022 6:37	84.04	6/21/2022 5:54	2.17	6/21/2022 6:24	10.66	6/21/2022 5:12	0.62	6/21/2022 6:54	32.09
6/22/2022 6:38	84.07	6/21/2022 5:55	2.01	6/21/2022 6:25	10.65	6/21/2022 5:13	0.67	6/21/2022 6:55	32.09
6/22/2022 6:39	84.07	6/21/2022 5:56	1.80	6/21/2022 6:26	10.65	6/21/2022 5:14	0.63	6/21/2022 6:56	32.11
6/22/2022 6:40	84.05	6/21/2022 5:57	1.67	6/21/2022 6:27	10.62	6/21/2022 5:15	0.65	6/21/2022 6:57	32.06
6/22/2022 6:41	84.08	6/21/2022 5:58	1.63	6/21/2022 6:28	10.62	6/21/2022 5:16	0.65	6/21/2022 6:58	32.11
6/22/2022 6:42	84.02	6/21/2022 5:59	1.52	6/21/2022 6:29	10.60	6/21/2022 5:17	0.65	6/21/2022 6:59	32.13
6/22/2022 6:43	83.98	6/21/2022 6:00	1.42	6/21/2022 6:30	10.63	6/21/2022 5:18	0.64	6/21/2022 7:00	32.09
6/22/2022 6:44	84.01	6/21/2022 6:01	1.37	6/21/2022 6:31	10.59	6/21/2022 5:19	0.64	6/21/2022 7:01	32.08
6/22/2022 6:45	84.00	6/21/2022 6:02	1.30	6/21/2022 6:32	10.57	6/21/2022 5:20	0.66	6/21/2022 7:02	32.11
6/22/2022 6:46	84.07	6/21/2022 6:03	1.27	6/21/2022 6:33	10.59	6/21/2022 5:21	0.66	6/21/2022 7:03	32.10
6/22/2022 6:47	83.99	6/21/2022 6:04	1.20	6/21/2022 6:34	10.58	6/21/2022 5:22	0.63	6/21/2022 7:04	32.11
6/22/2022 6:48	84.06	6/21/2022 6:05	1.21	6/21/2022 6:35	10.59	6/21/2022 5:23	0.64	6/21/2022 7:05	32.11
6/22/2022 6:49	83.99	6/21/2022 6:06	1.17	6/21/2022 6:36	10.61	6/21/2022 5:24	0.66	6/21/2022 7:06	32.13
6/22/2022 6:50	84.05	6/21/2022 6:07	1.16	6/21/2022 6:37	10.59	6/21/2022 5:25	0.63	6/21/2022 7:07	32.12
6/22/2022 6:51	83.99	6/21/2022 6:08	1.11	6/21/2022 6:38	10.61	6/21/2022 5:26	0.66	6/21/2022 7:08	32.13
6/22/2022 6:52	84.02	6/21/2022 6:09	1.12	6/21/2022 6:39	10.63	6/21/2022 5:27	0.61	6/21/2022 7:09	32.13
6/22/2022 6:53	83.98	6/21/2022 6:10	1.09	6/21/2022 6:40	10.64	6/21/2022 5:28	0.65	6/21/2022 7:10	32.12
6/22/2022 6:54	84.10	6/21/2022 6:11	4.58	6/21/2022 6:41	10.60	6/21/2022 5:29	0.64	6/21/2022 7:11	32.12
6/22/2022 6:55	84.00	6/21/2022 6:12	9.75	6/21/2022 6:42	10.60	6/21/2022 5:30	0.63	6/21/2022 7:12	32.10
6/22/2022 6:56	84.04	6/21/2022 6:13	9.84	6/21/2022 6:43	10.60	6/21/2022 5:31	0.64	6/21/2022 7:13	32.09
6/22/2022 6:57	84.03	6/21/2022 6:14	8.46	6/21/2022 6:44	10.61	6/21/2022 5:32	0.63	6/21/2022 7:14	32.09
6/22/2022 6:58	84.05	6/21/2022 6:15	7.33	6/21/2022 6:45	10.60	6/21/2022 5:33	0.61	6/21/2022 7:15	32.11
6/22/2022 6:59	84.03	6/21/2022 6:16	6.41	6/21/2022 6:46	10.61	6/21/2022 5:34	0.62	6/21/2022 7:16	32.11
6/22/2022 7:00	84.01	6/21/2022 6:17	5.65	6/21/2022 6:47	10.58	6/21/2022 5:35	0.60	6/21/2022 7:17	32.09
6/22/2022 7:01	84.03	6/21/2022 6:18	4.97	6/21/2022 6:48	10.57	6/21/2022 5:36	0.59	6/21/2022 7:18	32.09
6/22/2022 7:02	84.06	6/21/2022 6:19	9.14	6/21/2022 6:49	10.54	6/21/2022 5:37	0.65	6/21/2022 7:19	32.11
6/22/2022 7:03	84.07	6/21/2022 6:20	11.46	6/21/2022 6:50	10.56	6/21/2022 5:38	0.63	6/21/2022 7:20	32.13
6/22/2022 7:04	84.02	6/21/2022 6:21	9.81	6/21/2022 6:51	10.53	6/21/2022 5:39	0.59	6/21/2022 7:21	32.09
6/22/2022 7:05	84.02	6/21/2022 6:22	8.39	6/21/2022 6:52	10.54	6/21/2022 5:40	0.60	6/21/2022 7:22	32.10
6/22/2022 7:06	84.05	6/21/2022 6:23	7.21	6/21/2022 6:53	10.53	6/21/2022 5:41	0.66	6/21/2022 7:23	32.13
6/22/2022 7:07	87.72	6/21/2022 6:24	6.20	6/21/2022 6:54	10.55	6/21/2022 5:42	0.66	6/21/2022 7:24	32.12
6/22/2022 7:08	90.57	6/21/2022 6:25	5.44	6/21/2022 6:55	10.57	6/21/2022 5:43	0.65	6/21/2022 7:25	32.15
6/22/2022 7:09	92.41	6/21/2022 6:26	4.78	6/21/2022 6:56	10.55	6/21/2022 5:44	0.64	6/21/2022 7:26	32.15
6/22/2022 7:10	93.46	6/21/2022 6:27	4.22	6/21/2022 6:57	10.56	6/21/2022 5:45	0.71	6/21/2022 7:27	32.16
6/22/2022 7:11	92.16	6/21/2022 6:28	3.77	6/21/2022 6:58	10.60	6/21/2022 5:46	0.65	6/21/2022 7:28	32.13
6/22/2022 7:12	89.69	6/21/2022 6:29	3.36	6/21/2022 6:59	10.56	6/21/2022 5:47	0.67	6/21/2022 7:29	32.10
6/22/2022 7:13	88.08	6/21/2022 6:30	3.04	6/21/2022 7:00	10.58	6/21/2022 5:48	0.65	6/21/2022 7:30	32.14
6/22/2022 7:14	87.04	6/21/2022 6:31	2.74	6/21/2022 7:01	10.59	6/21/2022 5:49	0.62	6/21/2022 7:31	32.14
6/22/2022 7:15	86.40	6/21/2022 6:32	2.49	6/21/2022 7:02	10.57	6/21/2022 5:50	0.63	6/21/2022 7:32	32.11
6/22/2022 7:16	85.99	6/21/2022 6:33	2.33	6/21/2022 7:03	10.55	6/21/2022 5:51	0.61	6/21/2022 7:33	32.15
6/22/2022 7:17	85.68	6/21/2022 6:34	2.17	6/21/2022 7:04	10.54	6/21/2022 5:52	0.60	6/21/2022 7:34	32.12
6/22/2022 7:18	85.46	6/21/2022 6:35	4.30	6/21/2022 7:05	10.58	6/21/2022 5:53	0.65	6/21/2022 7:35	32.14
6/22/2022 7:19	85.32	6/21/2022 6:36	9.66	6/21/2022 7:06	10.56	6/21/2022 5:54	0.63	6/21/2022 7:36	32.11
6/22/2022 7:20	85.20	6/21/2022 6:37	10.40	6/21/2022 7:07	10.51	6/21/2022 5:55	0.63	6/21/2022 7:37	33.74
6/22/2022 7:21	85.08	6/21/2022 6:38	8.90	6/21/2022 7:08	10.53	6/21/2022 5:56	0.60	6/21/2022 7:38	32.78
6/22/2022 7:22	85.05	6/21/2022 6:39	7.57	6/21/2022 7:09	10.53	6/21/2022 5:57	0.59	6/21/2022 7:39	32.42
6/22/2022 7:23	84.98	6/21/2022 6:40	6.52	6/21/2022 7:10	10.49	6/21/2022 5:58	0.67	6/21/2022 7:40	32.27
6/22/2022 7:24	84.97	6/21/2022 6:41	9.87	6/21/2022 7:11	10.50	6/21/2022 5:59	0.64	6/21/2022 7:41	32.24
6/22/2022 7:25	84.90	6/21/2022 6:42	13.23	6/21/2022 7:12	10.51	6/21/2022 6:00	0.60	6/21/2022 7:42	32.25
6/22/2022 7:26	84.84	6/21/2022 6:43	11.22	6/21/2022 7:13	10.46	6/21/2022 6:01	0.64	6/21/2022 7:43	32.23
6/22/2022 7:27	84.81	6/21/2022 6:44	9.64	6/21/2022 7:14	10.45	6/21/2022 6:02	0.64	6/21/2022 7:44	32.23
6/22/2022 7:28	84.81	6/21/2022 6:45	8.24	6/21/2022 7:15	10.48	6/21/2022 6:03	0.66	6/21/2022 7:45	32.19
6/22/2022 7:29	84.75	6/21/2022 6:46	7.11	6/21/2022 7:16	10.44	6/21/2022 6:04	0.65	6/21/2022 7:46	32.21
6/22/2022 7:30	84.74	6/21/2022 6:47	6.14	6/21/2022 7:17	10.45	6/21/2022 6:05	0.63	6/21/2022 7:47	32.19
6/22/2022 7:31	84.73	6/21/2022 6:48	5.36	6/21/2022 7:18	10.46	6/21/2022 6:06	0.60	6/21/2022 7:48	32.20
6/22/2022 7:32	84.70	6/21/2022 6:49	4.71	6/21/2022 7:19	10.42	6/21/2022 6:07	0.59	6/21/2022 7:49	32.18
6/22/2022 7:33	84.68	6/21/2022 6:50	4.16	6/21/2022 7:20	10.41	6/21/2022 6:08	0.63	6/21/2022 7:50	32.20
6/22/2022 7:34	84.65	6/21/2022 6:51	3.69	6/21/2022 7:21	10.43	6/21/2022 6:09	0.61	6/21/2022 7:51	32.18
6/22/2022 7:35	84.66	6/21/2022 6:52	3.30	6/21/2022 7:22	10.41	6/21/2022 6:10	0.60	6/21/2022 7:52	32.16
6/22/2022 7:36	84.61	6/21/2022 6:53	2.92	6/21/2022 7:23	10.43	6/21/2022 6:11	0.65	6/21/2022 7:53	32.19
6/22/2022 7:37	84.64	6/21/2022 6:54	2.63	6/21/2022 7:24	10.44	6/21/2022 6:12	0.65	6/21/2022 7:54	32.19
6/22/2022 7:38	84.61	6/21/2022 6:55	2.46	6/21/2022 7:25	10.45	6/21/2022 6:13	0.66	6/21/2022 7:55	32.19
6/22/2022 7:39	84.60	6/21/2022 6:56	2.22	6/21/2022 7:26	10.49	6/21/2022 6:14	6.91	6/21/2022 7:56	32.19
6/22/2022 7:40	84.58	6/21/2022 6:57	2.04	6/21/2022 7:27	10.48	6/21/2022 6:15	8.41	6/21/2022 7:57	32.21
6/22/2022 7:41	84.58	6/21/2022 6:58	1.86	6/21/2022 7:28	10.50	6/21/2022 6:16	5.87	6/21/2022 7:58	32.17
6/22/2022 7:42	84.54	6/21/2022 6:59	1.74	6/21/2022 7:29	10.46	6/21/2022 6:17	4.08	6/21/2022 7:59	32.21
6/22/2022 7:43	84.55	6/21/2022 7:00	1.54	6/21/2022 7:30	10.50	6/21/2022 6:18	2.66	6/21/2022 8:00	32.21
6/22/2022 7:44	84.58	6/21/2022 7:01	1.51	6/21/2022 7:31	10.47	6/21/2022 6:19	1.68	6/21/2022 8:01	32.20
6/22/2022 7:45	84.49	6/21/2022 7:02	1.33	6/21/2022 7:32	10.51	6/21/2022 6:20	0.91	6/21/2022 8:02	32.17
6/22/2022 7:46	84.53	6/21/2022 7:03	1.24	6/21/2022 7:33	10.47	6/21/2022 6:21	0.68	6/21/2022 8:03	32.21
6/22/2022 7:47	84.48	6/21/2022 7:04	1.17	6/21/2022 7:34	10.47	6/21/2022 6:22	0.67	6/21/2022 8:04	32.21
6/22/2022 7:48	84.47	6/21/2022 7:05	1.09	6/21/2022 7:35	10.51	6/21/2022 6:23	0.67	6/21/2022 8:05	32.23
6/22/2022 7:49	84.53	6/21/2022 7:06	1.04	6/21/2022 7:36	10.50	6/21/2022 6:24	0.67	6/21/2022 8:06	32.23

6/22/2022 7:50	84.51	6/21/2022 7:07	0.98	6/21/2022 7:37	10.51	6/21/2022 6:25	0.67	6/21/2022 8:07	34.00
6/22/2022 7:51	84.47	6/21/2022 7:08	0.88	6/21/2022 7:38	10.54	6/21/2022 6:26	0.66	6/21/2022 8:08	32.94
6/22/2022 7:52	84.42	6/21/2022 7:09	0.85	6/21/2022 7:39	10.56	6/21/2022 6:27	0.64	6/21/2022 8:09	32.48
6/22/2022 7:53	84.50	6/21/2022 7:10	0.82	6/21/2022 7:40	10.56	6/21/2022 6:28	0.64	6/21/2022 8:10	32.27
6/22/2022 7:54	84.51	6/21/2022 7:11	0.76	6/21/2022 7:41	10.61	6/21/2022 6:29	0.64	6/21/2022 8:11	32.25
6/22/2022 7:55	84.46	6/21/2022 7:12	0.72	6/21/2022 7:42	10.57	6/21/2022 6:30	0.66	6/21/2022 8:12	32.21
6/22/2022 7:56	84.47	6/21/2022 7:13	0.68	6/21/2022 7:43	10.59	6/21/2022 6:31	0.64	6/21/2022 8:13	32.21
6/22/2022 7:57	84.41	6/21/2022 7:14	0.70	6/21/2022 7:44	10.55	6/21/2022 6:32	0.66	6/21/2022 8:14	32.23
6/22/2022 7:58	84.46	6/21/2022 7:15	0.65	6/21/2022 7:45	10.54	6/21/2022 6:33	0.66	6/21/2022 8:15	32.22
6/22/2022 7:59	84.47	6/21/2022 7:16	0.61	6/21/2022 7:46	10.56	6/21/2022 6:34	0.66	6/21/2022 8:16	32.23
6/22/2022 8:00	84.43	6/21/2022 7:17	0.60	6/21/2022 7:47	10.54	6/21/2022 6:35	0.64	6/21/2022 8:17	32.25
6/22/2022 8:01	84.45	6/21/2022 7:18	0.59	6/21/2022 7:48	10.54	6/21/2022 6:36	0.63	6/21/2022 8:18	32.22
6/22/2022 8:02	84.40	6/21/2022 7:19	0.53	6/21/2022 7:49	10.55	6/21/2022 6:37	0.69	6/21/2022 8:19	32.25
6/22/2022 8:03	84.44	6/21/2022 7:20	0.50	6/21/2022 7:50	10.54	6/21/2022 6:38	0.65	6/21/2022 8:20	32.25
6/22/2022 8:04	84.47	6/21/2022 7:21	0.55	6/21/2022 7:51	10.51	6/21/2022 6:39	0.68	6/21/2022 8:21	32.23
6/22/2022 8:05	84.42	6/21/2022 7:22	0.49	6/21/2022 7:52	10.52	6/21/2022 6:40	0.66	6/21/2022 8:22	32.23
6/22/2022 8:06	84.42	6/21/2022 7:23	3.45	6/21/2022 7:53	10.48	6/21/2022 6:41	0.65	6/21/2022 8:23	32.23
6/22/2022 8:07	84.38	6/21/2022 7:24	7.90	6/21/2022 7:54	10.51	6/21/2022 6:42	0.66	6/21/2022 8:24	32.25
6/22/2022 8:08	84.38	6/21/2022 7:25	6.65	6/21/2022 7:55	10.49	6/21/2022 6:43	0.68	6/21/2022 8:25	32.24
6/22/2022 8:09	84.38	6/21/2022 7:26	5.63	6/21/2022 7:56	10.48	6/21/2022 6:44	0.65	6/21/2022 8:26	32.23
6/22/2022 8:10	84.38	6/21/2022 7:27	4.81	6/21/2022 7:57	10.49	6/21/2022 6:45	0.66	6/21/2022 8:27	32.23
6/22/2022 8:11	84.36	6/21/2022 7:28	4.18	6/21/2022 7:58	10.47	6/21/2022 6:46	0.65	6/21/2022 8:28	32.21
6/22/2022 8:12	84.40	6/21/2022 7:29	3.57	6/21/2022 7:59	10.45	6/21/2022 6:47	0.64	6/21/2022 8:29	32.23
6/22/2022 8:13	84.39	6/21/2022 7:30	3.10	6/21/2022 8:00	10.40	6/21/2022 6:48	0.65	6/21/2022 8:30	32.23
6/22/2022 8:14	84.37	6/21/2022 7:31	2.70	6/21/2022 8:01	10.41	6/21/2022 6:49	0.68	6/21/2022 8:31	32.23
6/22/2022 8:15	84.41	6/21/2022 7:32	2.38	6/21/2022 8:02	10.46	6/21/2022 6:50	0.67	6/21/2022 8:32	32.23
6/22/2022 8:16	84.44	6/21/2022 7:33	2.08	6/21/2022 8:03	10.42	6/21/2022 6:51	0.64	6/21/2022 8:33	32.25
6/22/2022 8:17	84.39	6/21/2022 7:34	1.87	6/21/2022 8:04	10.44	6/21/2022 6:52	0.65	6/21/2022 8:34	32.28
6/22/2022 8:18	84.39	6/21/2022 7:35	1.64	6/21/2022 8:05	10.46	6/21/2022 6:53	0.65	6/21/2022 8:35	32.22
6/22/2022 8:19	84.33	6/21/2022 7:36	1.49	6/21/2022 8:06	10.42	6/21/2022 6:54	0.62	6/21/2022 8:36	32.24
6/22/2022 8:20	84.35	6/21/2022 7:37	1.35	6/21/2022 8:07	10.42	6/21/2022 6:55	0.61	6/21/2022 8:37	32.22
6/22/2022 8:21	84.41	6/21/2022 7:38	1.22	6/21/2022 8:08	10.48	6/21/2022 6:56	0.64	6/21/2022 8:38	32.25
6/22/2022 8:22	84.40	6/21/2022 7:39	1.11	6/21/2022 8:09	10.48	6/21/2022 6:57	0.64	6/21/2022 8:39	32.23
6/22/2022 8:23	84.39	6/21/2022 7:40	1.01	6/21/2022 8:10	10.47	6/21/2022 6:58	0.61	6/21/2022 8:40	32.22
6/22/2022 8:24	84.39	6/21/2022 7:41	0.92	6/21/2022 8:11	10.52	6/21/2022 6:59	0.61	6/21/2022 8:41	32.21
6/22/2022 8:25	84.35	6/21/2022 7:42	0.83	6/21/2022 8:12	10.46	6/21/2022 7:00	0.59	6/21/2022 8:42	32.26
6/22/2022 8:26	84.39	6/21/2022 7:43	0.78	6/21/2022 8:13	10.51	6/21/2022 7:01	0.61	6/21/2022 8:43	32.24
6/22/2022 8:27	84.35	6/21/2022 7:44	0.71	6/21/2022 8:14	10.48	6/21/2022 7:02	0.58	6/21/2022 8:44	32.24
6/22/2022 8:28	84.35	6/21/2022 7:45	0.69	6/21/2022 8:15	10.46	6/21/2022 7:03	0.59	6/21/2022 8:45	32.26
6/22/2022 8:29	84.32	6/21/2022 7:46	0.61	6/21/2022 8:16	10.50	6/21/2022 7:04	0.57	6/21/2022 8:46	32.24
6/22/2022 8:30	84.32	6/21/2022 7:47	0.60	6/21/2022 8:17	10.46	6/21/2022 7:05	0.55	6/21/2022 8:47	32.21
6/22/2022 8:31	84.29	6/21/2022 7:48	0.55	6/21/2022 8:18	10.46	6/21/2022 7:06	0.59	6/21/2022 8:48	32.25
6/22/2022 8:32	84.31	6/21/2022 7:49	0.55	6/21/2022 8:19	10.46	6/21/2022 7:07	0.60	6/21/2022 8:49	33.92
6/22/2022 8:33	84.33	6/21/2022 7:50	0.48	6/21/2022 8:20	10.48	6/21/2022 7:08	0.56	6/21/2022 8:50	33.57
6/22/2022 8:34	84.36	6/21/2022 7:51	0.47	6/21/2022 8:21	10.44	6/21/2022 7:09	0.61	6/21/2022 8:51	32.76
6/22/2022 8:35	84.30	6/21/2022 7:52	0.43	6/21/2022 8:22	10.51	6/21/2022 7:10	0.61	6/21/2022 8:52	32.43
6/22/2022 8:36	84.32	6/21/2022 7:53	0.46	6/21/2022 8:23	10.51	6/21/2022 7:11	0.59	6/21/2022 8:53	32.33
6/22/2022 8:37	84.33	6/21/2022 7:54	0.46	6/21/2022 8:24	10.46	6/21/2022 7:12	0.56	6/21/2022 8:54	32.29
6/22/2022 8:38	84.36	6/21/2022 7:55	0.44	6/21/2022 8:25	10.51	6/21/2022 7:13	0.58	6/21/2022 8:55	32.32
6/22/2022 8:39	84.29	6/21/2022 7:56	0.40	6/21/2022 8:26	10.52	6/21/2022 7:14	0.61	6/21/2022 8:56	32.33
6/22/2022 8:40	84.34	6/21/2022 7:57	0.37	6/21/2022 8:27	10.51	6/21/2022 7:15	0.58	6/21/2022 8:57	32.30
6/22/2022 8:41	84.35	6/21/2022 7:58	0.41	6/21/2022 8:28	10.55	6/21/2022 7:16	0.55	6/21/2022 8:58	32.32
6/22/2022 8:42	84.32	6/21/2022 7:59	0.34	6/21/2022 8:29	10.52	6/21/2022 7:17	0.58	6/21/2022 8:59	32.29
6/22/2022 8:43	84.34	6/21/2022 8:00	0.36	6/21/2022 8:30	10.51	6/21/2022 7:18	0.59	6/21/2022 9:00	32.30
6/22/2022 8:44	84.32	6/21/2022 8:01	0.36	6/21/2022 8:31	10.50	6/21/2022 7:19	0.59	6/21/2022 9:01	32.27
6/22/2022 8:45	84.30	6/21/2022 8:02	0.36	6/21/2022 8:32	10.51	6/21/2022 7:20	0.57	6/21/2022 9:02	32.31
6/22/2022 8:46	84.36	6/21/2022 8:03	0.33	6/21/2022 8:33	10.51	6/21/2022 7:21	0.55	6/21/2022 9:03	32.30
6/22/2022 8:47	84.30	6/21/2022 8:04	0.43	6/21/2022 8:34	10.50	6/21/2022 7:22	0.60	6/21/2022 9:04	32.28
6/22/2022 8:48	84.32	6/21/2022 8:05	0.33	6/21/2022 8:35	10.46	6/21/2022 7:23	0.59	6/21/2022 9:05	32.25
6/22/2022 8:49	84.37	6/21/2022 8:06	0.36	6/21/2022 8:36	10.49	6/21/2022 7:24	0.60	6/21/2022 9:06	32.28
6/22/2022 8:50	84.30	6/21/2022 8:07	0.34	6/21/2022 8:37	10.47	6/21/2022 7:25	0.58	6/21/2022 9:07	32.27
6/22/2022 8:51	84.31	6/21/2022 8:08	0.32	6/21/2022 8:38	10.46	6/21/2022 7:26	0.60	6/21/2022 9:08	32.31
6/22/2022 8:52	84.32	6/21/2022 8:09	0.35	6/21/2022 8:39	10.43	6/21/2022 7:27	0.61	6/21/2022 9:09	32.26
6/22/2022 8:53	84.26	6/21/2022 8:10	0.33	6/21/2022 8:40	10.42	6/21/2022 7:28	0.59	6/21/2022 9:10	32.30
6/22/2022 8:54	84.31	6/21/2022 8:11	0.33	6/21/2022 8:41	10.44	6/21/2022 7:29	0.61	6/21/2022 9:11	32.29
6/22/2022 8:55	84.31	6/21/2022 8:12	0.30	6/21/2022 8:42	10.43	6/21/2022 7:30	0.57	6/21/2022 9:12	32.26
6/22/2022 8:56	84.29	6/21/2022 8:13	0.31	6/21/2022 8:43	10.39	6/21/2022 7:31	0.58	6/21/2022 9:13	32.29
6/22/2022 8:57	84.29	6/21/2022 8:14	0.31	6/21/2022 8:44	10.48	6/21/2022 7:32	0.58	6/21/2022 9:14	32.27
6/22/2022 8:58	84.33	6/21/2022 8:15	0.33	6/21/2022 8:45	10.41	6/21/2022 7:33	0.61	6/21/2022 9:15	32.31
6/22/2022 8:59	84.26	6/21/2022 8:16	0.36	6/21/2022 8:46	10.73	6/21/2022 7:34	0.57	6/21/2022 9:16	32.34
6/22/2022 9:00	84.30	6/21/2022 8:17	0.29	6/21/2022 8:47	15.25	6/21/2022 7:35	0.60	6/21/2022 9:17	32.38
6/22/2022 9:01	84.26	6/21/2022 8:18	1.02	6/21/2022 8:48	14.60	6/21/2022 7:36	0.58	6/21/2022 9:18	32.42
6/22/2022 9:02	84.29	6/21/2022 8:19	6.85	6/21/2022 8:49	14.08	6/21/2022 7:37	0.57	6/21/2022 9:19	32.47
6/22/2022 9:03	84.31	6/21/2022 8:20	6.81	6/21/2022 8:50	13.61	6/21/2022 7:38	0.61	6/21/2022 9:20	32.49
6/22/2022 9:04	84.32	6/21/2022 8:21	5.76	6/21/2022 8:51	13.23	6/21/2022 7:39	0.58	6/21/2022 9:21	32.52
6/22/2022 9:05	84.26	6/21/2022 8:22	4.88	6/21/2022 8:52	12.97	6/21/2022 7:40	0.59	6/21/2022 9:22	32.52
6/22/2022 9:06	84.25	6/21/2022 8:23	4.21	6/21/2022 8:53	12.71	6/21/2022 7:41	0.57	6/21/2022 9:23	32.59
6/22/2022 9:07	84.25	6/21/2022 8:24	3.60	6/21/2022 8:54	12.47	6/21/2022 7:42	0.61	6/21/2022 9:24	32.58
6/22/2022 9:08	84.31	6/21/2022 8:25	3.11	6/21/2022 8:55	12.29	6/21/2022 7:43	0.61	6/21/2022 9:25	34.51
6/22/2022 9:09	84.26	6/21/2022 8:26	2.67	6/21/2022 8:56	12.12	6/21/2022 7:44	0.60	6/21/2022 9:26	33.34
6/22/2022 9:10	84.28	6/21/2022 8:27	2.37	6/21/2022 8:57	11.94	6/21/2022 7:45	0.58	6/21/2022 9:27	32.82
6/22/2022 9:11	84.33	6/21/2022 8:28	2.06	6/21/2022 8:58	11.79	6/21/2022 7:46	0.59	6/21/2022 9:28	32.63
6/22/2022 9:12	84.29	6/21/2022 8:29	1.81	6/21/2022 8:59	11.66	6/21/2022 7:47	0.60	6/21/2022 9:29	32.58
6/22/2022 9:13	84.32	6/21/2022 8:30	1.59	6/21/2022 9:00	11.55	6/21/2022 7:48	0.59	6/21/2022 9:30	32.52
6/22/2022 9:14	84.24	6/21/2022 8:31	1.41	6/21/2022 9:01	11.40	6/21/2022 7:49	0.60	6/21/2022 9:31	32.50
6/22/2022 9:15	84.31	6/21/2022 8:32	1.31	6/21/2022 9:02	11.37	6/21/2022 7:50	0.57	6/21/2022 9:32	32.46
6/22/2022 9:16	84.27	6/21/2022 8:33	1.19	6/21/2022 9:03	11.28	6/21/2022 7:51	0.61	6/21/2022 9:33	32.50
6/22/2022 9:17	84.24	6/21/2022 8:34	1.03	6/21/2022 9:04	11.21	6/21/2022 7:52	0.57	6/21/2022 9:34	32.52

6/22/2022 9:18	84.24	6/21/2022 8:35	0.91	6/21/2022 9:05	11.10	6/21/2022 7:53	0.56	6/21/2022 9:35	32.50
6/22/2022 9:19	84.29	6/21/2022 8:36	0.84	6/21/2022 9:06	11.06	6/21/2022 7:54	0.58	6/21/2022 9:36	32.51
6/22/2022 9:20	84.29	6/21/2022 8:37	0.76	6/21/2022 9:07	11.05	6/21/2022 7:55	0.59	6/21/2022 9:37	32.50
6/22/2022 9:21	84.30	6/21/2022 8:38	0.71	6/21/2022 9:08	10.96	6/21/2022 7:56	0.57	6/21/2022 9:38	32.47
6/22/2022 9:22	84.29	6/21/2022 8:39	0.66	6/21/2022 9:09	10.93	6/21/2022 7:57	0.57	6/21/2022 9:39	32.44
6/22/2022 9:23	84.27	6/21/2022 8:40	0.65	6/21/2022 9:10	10.95	6/21/2022 7:58	0.59	6/21/2022 9:40	32.45
6/22/2022 9:24	84.22	6/21/2022 8:41	0.55	6/21/2022 9:11	10.93	6/21/2022 7:59	0.60	6/21/2022 9:41	32.46
6/22/2022 9:25	84.22	6/21/2022 8:42	0.50	6/21/2022 9:12	10.87	6/21/2022 8:00	0.57	6/21/2022 9:42	32.51
6/22/2022 9:26	84.24	6/21/2022 8:43	0.46	6/21/2022 9:13	10.82	6/21/2022 8:01	0.60	6/21/2022 9:43	32.48
6/22/2022 9:27	84.26	6/21/2022 8:44	3.08	6/21/2022 9:14	10.82	6/21/2022 8:02	0.57	6/21/2022 9:44	32.48
6/22/2022 9:28	84.23	6/21/2022 8:45	8.44	6/21/2022 9:15	10.79	6/21/2022 8:03	0.59	6/21/2022 9:45	32.55
6/22/2022 9:29	84.28	6/21/2022 8:46	7.16	6/21/2022 9:16	10.77	6/21/2022 8:04	0.55	6/21/2022 9:46	32.48
6/22/2022 9:30	84.26	6/21/2022 8:47	6.00	6/21/2022 9:17	10.75	6/21/2022 8:05	0.60	6/21/2022 9:47	32.50
6/22/2022 9:31	84.26	6/21/2022 8:48	5.14	6/21/2022 9:18	10.70	6/21/2022 8:06	0.57	6/21/2022 9:48	32.47
6/22/2022 9:32	84.22	6/21/2022 8:49	4.38	6/21/2022 9:19	10.74	6/21/2022 8:07	0.56	6/21/2022 9:49	32.49
6/22/2022 9:33	84.24	6/21/2022 8:50	3.80	6/21/2022 9:20	10.66	6/21/2022 8:08	0.61	6/21/2022 9:50	32.50
6/22/2022 9:34	84.24	6/21/2022 8:51	3.28	6/21/2022 9:21	10.69	6/21/2022 8:09	0.60	6/21/2022 9:51	32.49
6/22/2022 9:35	84.26	6/21/2022 8:52	2.82	6/21/2022 9:22	10.61	6/21/2022 8:10	0.60	6/21/2022 9:52	32.47
6/22/2022 9:36	84.28	6/21/2022 8:53	2.50	6/21/2022 9:23	10.63	6/21/2022 8:11	0.62	6/21/2022 9:53	32.45
6/22/2022 9:37	84.29	6/21/2022 8:54	2.16	6/21/2022 9:24	10.58	6/21/2022 8:12	0.58	6/21/2022 9:54	32.48
6/22/2022 9:38	84.25	6/21/2022 8:55	1.91	6/21/2022 9:25	10.61	6/21/2022 8:13	0.60	6/21/2022 9:55	32.47
6/22/2022 9:39	84.21	6/21/2022 8:56	1.69	6/21/2022 9:26	10.59	6/21/2022 8:14	0.62	6/21/2022 9:56	32.46
6/22/2022 9:40	84.21	6/21/2022 8:57	1.50	6/21/2022 9:27	10.59	6/21/2022 8:15	0.58	6/21/2022 9:57	32.43
6/22/2022 9:41	84.21	6/21/2022 8:58	1.36	6/21/2022 9:28	10.53	6/21/2022 8:16	0.59	6/21/2022 9:58	32.43
6/22/2022 9:42	84.22	6/21/2022 8:59	1.21	6/21/2022 9:29	10.56	6/21/2022 8:17	0.58	6/21/2022 9:59	32.43
6/22/2022 9:43	84.21	6/21/2022 9:00	1.07	6/21/2022 9:30	10.51	6/21/2022 8:18	0.60	6/21/2022 10:00	32.45
6/22/2022 9:44	84.21	6/21/2022 9:01	0.97	6/21/2022 9:31	10.51	6/21/2022 8:19	0.61	6/21/2022 10:01	32.43
6/22/2022 9:45	84.21	6/21/2022 9:02	0.87	6/21/2022 9:32	10.48	6/21/2022 8:20	0.63	6/21/2022 10:02	32.45
6/22/2022 9:46	84.19	6/21/2022 9:03	0.85	6/21/2022 9:33	10.47	6/21/2022 8:21	0.60	6/21/2022 10:03	32.42
6/22/2022 9:47	84.22	6/21/2022 9:04	0.81	6/21/2022 9:34	10.45	6/21/2022 8:22	0.64	6/21/2022 10:04	32.44
6/22/2022 9:48	84.22	6/21/2022 9:05	0.75	6/21/2022 9:35	10.47	6/21/2022 8:23	0.63	6/21/2022 10:05	32.43
6/22/2022 9:49	84.20	6/21/2022 9:06	0.73	6/21/2022 9:36	10.44	6/21/2022 8:24	0.59	6/21/2022 10:06	32.43
6/22/2022 9:50	84.25	6/21/2022 9:07	0.71	6/21/2022 9:37	10.47	6/21/2022 8:25	0.59	6/21/2022 10:07	32.44
6/22/2022 9:51	84.27	6/21/2022 9:08	0.80	6/21/2022 9:38	10.43	6/21/2022 8:26	0.60	6/21/2022 10:08	32.43
6/22/2022 9:52	84.21	6/21/2022 9:09	0.83	6/21/2022 9:39	10.47	6/21/2022 8:27	0.62	6/21/2022 10:09	32.45
6/22/2022 9:53	84.24	6/21/2022 9:10	0.80	6/21/2022 9:40	10.47	6/21/2022 8:28	0.58	6/21/2022 10:10	32.43
6/22/2022 9:54	84.21	6/21/2022 9:11	0.94	6/21/2022 9:41	10.50	6/21/2022 8:29	0.63	6/21/2022 10:11	32.45
6/22/2022 9:55	84.22	6/21/2022 9:12	6.89	6/21/2022 9:42	10.44	6/21/2022 8:30	0.55	6/21/2022 10:12	32.44
6/22/2022 9:56	84.26	6/21/2022 9:13	7.26	6/21/2022 9:43	10.47	6/21/2022 8:31	0.58	6/21/2022 10:13	32.40
6/22/2022 9:57	84.21	6/21/2022 9:14	6.15	6/21/2022 9:44	10.52	6/21/2022 8:32	0.58	6/21/2022 10:14	32.44
6/22/2022 9:58	84.22	6/21/2022 9:15	5.26	6/21/2022 9:45	10.50	6/21/2022 8:33	0.59	6/21/2022 10:15	32.42
6/22/2022 9:59	84.23	6/21/2022 9:16	4.54	6/21/2022 9:46	10.47	6/21/2022 8:34	0.60	6/21/2022 10:16	32.46
6/22/2022 10:00	84.21	6/21/2022 9:17	3.88	6/21/2022 9:47	10.48	6/21/2022 8:35	0.61	6/21/2022 10:17	32.43
6/22/2022 10:01	84.20	6/21/2022 9:18	3.37	6/21/2022 9:48	10.50	6/21/2022 8:36	0.55	6/21/2022 10:18	32.46
6/22/2022 10:02	84.20	6/21/2022 9:19	2.86	6/21/2022 9:49	10.49	6/21/2022 8:37	0.61	6/21/2022 10:19	32.43
6/22/2022 10:03	84.20	6/21/2022 9:20	2.56	6/21/2022 9:50	10.52	6/21/2022 8:38	0.60	6/21/2022 10:20	32.43
6/22/2022 10:04	84.18	6/21/2022 9:21	2.25	6/21/2022 9:51	10.47	6/21/2022 8:39	0.58	6/21/2022 10:21	32.41
6/22/2022 10:05	84.18	6/21/2022 9:22	1.99	6/21/2022 9:52	10.46	6/21/2022 8:40	0.58	6/21/2022 10:22	32.43
6/22/2022 10:06	84.24	6/21/2022 9:23	1.77	6/21/2022 9:53	10.47	6/21/2022 8:41	0.60	6/21/2022 10:23	32.42
6/22/2022 10:07	84.19	6/21/2022 9:24	1.57	6/21/2022 9:54	10.45	6/21/2022 8:42	0.61	6/21/2022 10:24	32.42
6/22/2022 10:08	84.18	6/21/2022 9:25	1.42	6/21/2022 9:55	10.43	6/21/2022 8:43	0.60	6/21/2022 10:25	32.44
6/22/2022 10:09	84.23	6/21/2022 9:26	1.27	6/21/2022 9:56	10.42	6/21/2022 8:44	0.59	6/21/2022 10:26	32.61
6/22/2022 10:10	84.15	6/21/2022 9:27	1.14	6/21/2022 9:57	10.43	6/21/2022 8:45	0.61	6/21/2022 10:27	34.07
6/22/2022 10:11	84.18	6/21/2022 9:28	1.07	6/21/2022 9:58	10.40	6/21/2022 8:46	0.60	6/21/2022 10:28	33.08
6/22/2022 10:12	84.22	6/21/2022 9:29	1.02	6/21/2022 9:59	10.41	6/21/2022 8:47	0.62	6/21/2022 10:29	32.66
6/22/2022 10:13	84.18	6/21/2022 9:30	0.87	6/21/2022 10:00	10.42	6/21/2022 8:48	0.62	6/21/2022 10:30	32.53
6/22/2022 10:14	84.19	6/21/2022 9:31	0.80	6/21/2022 10:01	10.43	6/21/2022 8:49	0.61	6/21/2022 10:31	32.52
6/22/2022 10:15	84.20	6/21/2022 9:32	0.73	6/21/2022 10:02	10.47	6/21/2022 8:50	0.62	6/21/2022 10:32	32.46
6/22/2022 10:16	84.16	6/21/2022 9:33	0.65	6/21/2022 10:03	10.48	6/21/2022 8:51	0.60	6/21/2022 10:33	32.51
6/22/2022 10:17	84.14	6/21/2022 9:34	0.67	6/21/2022 10:04	10.49	6/21/2022 8:52	0.58	6/21/2022 10:34	32.50
6/22/2022 10:18	84.21	6/21/2022 9:35	0.53	6/21/2022 10:05	10.48	6/21/2022 8:53	0.61	6/21/2022 10:35	32.47
6/22/2022 10:19	84.19	6/21/2022 9:36	0.54	6/21/2022 10:06	10.48	6/21/2022 8:54	0.61	6/21/2022 10:36	32.45
6/22/2022 10:20	84.18	6/21/2022 9:37	0.48	6/21/2022 10:07	10.48	6/21/2022 8:55	0.61	6/21/2022 10:37	32.48
6/22/2022 10:21	84.14	6/21/2022 9:38	0.47	6/21/2022 10:08	13.35	6/21/2022 8:56	0.61	6/21/2022 10:38	32.43
6/22/2022 10:22	84.21	6/21/2022 9:39	0.44	6/21/2022 10:09	14.94	6/21/2022 8:57	0.59	6/21/2022 10:39	34.20
6/22/2022 10:23	84.19	6/21/2022 9:40	0.42	6/21/2022 10:10	14.32	6/21/2022 8:58	0.56	6/21/2022 10:40	35.28
6/22/2022 10:24	84.19	6/21/2022 9:41	0.43	6/21/2022 10:11	13.86	6/21/2022 8:59	0.58	6/21/2022 10:41	34.11
6/22/2022 10:25	84.20	6/21/2022 9:42	0.40	6/21/2022 10:12	13.54	6/21/2022 9:00	0.58	6/21/2022 10:42	35.12
6/22/2022 10:26	84.15	6/21/2022 9:43	0.44	6/21/2022 10:13	13.15	6/21/2022 9:01	0.56	6/21/2022 10:43	35.35
6/22/2022 10:27	84.21	6/21/2022 9:44	0.39	6/21/2022 10:14	12.84	6/21/2022 9:02	0.62	6/21/2022 10:44	34.58
6/22/2022 10:28	84.23	6/21/2022 9:45	0.39	6/21/2022 10:15	12.58	6/21/2022 9:03	0.60	6/21/2022 10:45	35.60
6/22/2022 10:29	84.20	6/21/2022 9:46	0.36	6/21/2022 10:16	12.39	6/21/2022 9:04	0.58	6/21/2022 10:46	35.27
6/22/2022 10:30	84.21	6/21/2022 9:47	0.39	6/21/2022 10:17	12.17	6/21/2022 9:05	0.60	6/21/2022 10:47	34.82
6/22/2022 10:31	84.17	6/21/2022 9:48	0.35	6/21/2022 10:18	12.01	6/21/2022 9:06	4.32	6/21/2022 10:48	35.84
6/22/2022 10:32	84.17	6/21/2022 9:49	0.35	6/21/2022 10:19	11.89	6/21/2022 9:07	8.02	6/21/2022 10:49	35.86
6/22/2022 10:33	84.17	6/21/2022 9:50	0.33	6/21/2022 10:20	11.76	6/21/2022 9:08	5.27	6/21/2022 10:50	34.85
6/22/2022 10:34	84.14	6/21/2022 9:51	0.32	6/21/2022 10:21	11.63	6/21/2022 9:09	3.17	6/21/2022 10:51	35.76
6/22/2022 10:35	84.18	6/21/2022 9:52	0.31	6/21/2022 10:22	11.51	6/21/2022 9:10	1.71	6/21/2022 10:52	34.24
6/22/2022 10:36	84.23	6/21/2022 9:53	0.33	6/21/2022 10:23	11.42	6/21/2022 9:11	0.66	6/21/2022 10:53	35.22
6/22/2022 10:37	84.16	6/21/2022 9:54	0.30	6/21/2022 10:24	11.38	6/21/2022 9:12	0.65	6/21/2022 10:54	33.79
6/22/2022 10:38	84.18	6/21/2022 9:55	0.33	6/21/2022 10:25	11.30	6/21/2022 9:13	0.64	6/21/2022 10:55	33.16
6/22/2022 10:39	84.21	6/21/2022 9:56	0.31	6/21/2022 10:26	11.27	6/21/2022 9:14	0.69	6/21/2022 10:56	35.08
6/22/2022 10:40	84.19	6/21/2022 9:57	0.32	6/21/2022 10:27	11.19	6/21/2022 9:15	0.64	6/21/2022 10:57	33.76
6/22/2022 10:41	84.15	6/21/2022 9:58	0.33	6/21/2022 10:28	11.12	6/21/2022 9:16	0.64	6/21/2022 10:58	33.11
6/22/2022 10:42	84.17	6/21/2022 9:59	0.29	6/21/2022 10:29	11.05	6/21/2022 9:17	0.67	6/21/2022 10:59	34.99
6/22/2022 10:43	84.19	6/21/2022 10:00	0.28	6/21/2022 10:30	11.01	6/21/2022 9:18	0.62	6/21/2022 11:00	34.67
6/22/2022 10:44	84.12	6/21/2022 10:01	0.28	6/21/2022 10:31	10.94	6/21/2022 9:19	0.63	6/21/2022 11:01	35.06
6/22/2022 10:45	84.20	6/21/2022 10:02	0.32	6/21/2022 10:32	10.93	6/21/2022 9:20	0.62	6/21/2022 11:02	36.01

6/22/2022 10:46	84.19	6/21/2022 10:03	0.29	6/21/2022 10:33	10.87	6/21/2022 9:21	0.62	6/21/2022 11:03	36.56
6/22/2022 10:47	84.17	6/21/2022 10:04	0.37	6/21/2022 10:34	10.84	6/21/2022 9:22	0.64	6/21/2022 11:04	35.77
6/22/2022 10:48	84.18	6/21/2022 10:05	0.48	6/21/2022 10:35	10.78	6/21/2022 9:23	0.64	6/21/2022 11:05	35.58
6/22/2022 10:49	84.16	6/21/2022 10:06	0.54	6/21/2022 10:36	10.79	6/21/2022 9:24	0.60	6/21/2022 11:06	36.41
6/22/2022 10:50	84.17	6/21/2022 10:07	0.57	6/21/2022 10:37	10.74	6/21/2022 9:25	0.62	6/21/2022 11:07	35.79
6/22/2022 10:51	84.12	6/21/2022 10:08	0.59	6/21/2022 10:38	10.74	6/21/2022 9:26	0.62	6/21/2022 11:08	35.52
6/22/2022 10:52	84.13	6/21/2022 10:09	0.61	6/21/2022 10:39	10.71	6/21/2022 9:27	0.60	6/21/2022 11:09	34.06
6/22/2022 10:53	84.14	6/21/2022 10:10	1.72	6/21/2022 10:40	10.66	6/21/2022 9:28	0.61	6/21/2022 11:10	33.32
6/22/2022 10:54	84.14	6/21/2022 10:11	7.43	6/21/2022 10:41	10.65	6/21/2022 9:29	0.66	6/21/2022 11:11	33.03
6/22/2022 10:55	84.15	6/21/2022 10:12	7.02	6/21/2022 10:42	10.64	6/21/2022 9:30	0.60	6/21/2022 11:12	32.90
6/22/2022 10:56	84.13	6/21/2022 10:13	5.89	6/21/2022 10:43	10.66	6/21/2022 9:31	0.62	6/21/2022 11:13	32.85
6/22/2022 10:57	84.15	6/21/2022 10:14	5.07	6/21/2022 10:44	10.64	6/21/2022 9:32	0.61	6/21/2022 11:14	32.87
6/22/2022 10:58	84.21	6/21/2022 10:15	4.31	6/21/2022 10:45	10.69	6/21/2022 9:33	0.65	6/21/2022 11:15	32.82
6/22/2022 10:59	84.20	6/21/2022 10:16	3.71	6/21/2022 10:46	10.66	6/21/2022 9:34	0.61	6/21/2022 11:16	32.77
6/22/2022 11:00	84.16	6/21/2022 10:17	3.21	6/21/2022 10:47	10.65	6/21/2022 9:35	0.60	6/21/2022 11:17	32.79
6/22/2022 11:01	84.18	6/21/2022 10:18	2.75	6/21/2022 10:48	10.63	6/21/2022 9:36	0.63	6/21/2022 11:18	32.77
6/22/2022 11:02	84.15	6/21/2022 10:19	2.42	6/21/2022 10:49	10.63	6/21/2022 9:37	0.59	6/21/2022 11:19	32.77
6/22/2022 11:03	84.14	6/21/2022 10:20	2.10	6/21/2022 10:50	10.59	6/21/2022 9:38	0.59	6/21/2022 11:20	32.77
6/22/2022 11:04	84.13	6/21/2022 10:21	1.86	6/21/2022 10:51	10.64	6/21/2022 9:39	0.59	6/21/2022 11:21	32.75
6/22/2022 11:05	84.14	6/21/2022 10:22	1.66	6/21/2022 10:52	10.64	6/21/2022 9:40	0.58	6/21/2022 11:22	32.72
6/22/2022 11:06	84.16	6/21/2022 10:23	1.47	6/21/2022 10:53	10.65	6/21/2022 9:41	0.58	6/21/2022 11:23	32.71
6/22/2022 11:07	84.13	6/21/2022 10:24	1.31	6/21/2022 10:54	10.67	6/21/2022 9:42	0.59	6/21/2022 11:24	32.74
6/22/2022 11:08	84.17	6/21/2022 10:25	1.16	6/21/2022 10:55	10.67	6/21/2022 9:43	0.58	6/21/2022 11:25	32.69
6/22/2022 11:09	84.20	6/21/2022 10:26	1.00	6/21/2022 10:56	10.69	6/21/2022 9:44	0.57	6/21/2022 11:26	32.74
6/22/2022 11:10	84.09	6/21/2022 10:27	0.95	6/21/2022 10:57	10.65	6/21/2022 9:45	0.61	6/21/2022 11:27	32.72
6/22/2022 11:11	84.11	6/21/2022 10:28	0.88	6/21/2022 10:58	10.66	6/21/2022 9:46	0.58	6/21/2022 11:28	32.70
6/22/2022 11:12	84.09	6/21/2022 10:29	0.79	6/21/2022 10:59	10.66	6/21/2022 9:47	0.61	6/21/2022 11:29	32.68
6/22/2022 11:13	84.11	6/21/2022 10:30	0.74	6/21/2022 11:00	10.61	6/21/2022 9:48	0.58	6/21/2022 11:30	32.71
6/22/2022 11:14	84.12	6/21/2022 10:31	0.83	6/21/2022 11:01	10.65	6/21/2022 9:49	0.58	6/21/2022 11:31	32.69
6/22/2022 11:15	84.14	6/21/2022 10:32	0.92	6/21/2022 11:02	10.62	6/21/2022 9:50	0.57	6/21/2022 11:32	32.69
6/22/2022 11:16	84.15	6/21/2022 10:33	0.92	6/21/2022 11:03	10.60	6/21/2022 9:51	0.62	6/21/2022 11:33	32.68
6/22/2022 11:17	84.15	6/21/2022 10:34	0.88	6/21/2022 11:04	10.61	6/21/2022 9:52	0.58	6/21/2022 11:34	32.67
6/22/2022 11:18	84.15	6/21/2022 10:35	0.79	6/21/2022 11:05	10.54	6/21/2022 9:53	0.60	6/21/2022 11:35	32.66
6/22/2022 11:19	84.12	6/21/2022 10:36	0.75	6/21/2022 11:06	10.54	6/21/2022 9:54	0.56	6/21/2022 11:36	32.67
6/22/2022 11:20	84.12	6/21/2022 10:37	0.69	6/21/2022 11:07	10.58	6/21/2022 9:55	0.59	6/21/2022 11:37	32.69
6/22/2022 11:21	84.11	6/21/2022 10:38	0.66	6/21/2022 11:08	10.55	6/21/2022 9:56	0.61	6/21/2022 11:38	32.66
6/22/2022 11:22	84.14	6/21/2022 10:39	0.61	6/21/2022 11:09	10.59	6/21/2022 9:57	0.61	6/21/2022 11:39	32.62
6/22/2022 11:23	84.11	6/21/2022 10:40	0.56	6/21/2022 11:10	10.58	6/21/2022 9:58	0.62	6/21/2022 11:40	32.68
6/22/2022 11:24	84.13	6/21/2022 10:41	0.52	6/21/2022 11:11	10.61	6/21/2022 9:59	0.58	6/21/2022 11:41	32.66
6/22/2022 11:25	84.09	6/21/2022 10:42	0.46	6/21/2022 11:12	10.58	6/21/2022 10:00	0.60	6/21/2022 11:42	32.62
6/22/2022 11:26	84.15	6/21/2022 10:43	0.48	6/21/2022 11:13	10.60	6/21/2022 10:01	0.59	6/21/2022 11:43	32.65
6/22/2022 11:27	84.19	6/21/2022 10:44	0.46	6/21/2022 11:14	10.61	6/21/2022 10:02	0.60	6/21/2022 11:44	32.65
6/22/2022 11:28	84.16	6/21/2022 10:45	0.46	6/21/2022 11:15	10.58	6/21/2022 10:03	0.58	6/21/2022 11:45	32.66
6/22/2022 11:29	84.12	6/21/2022 10:46	0.44	6/21/2022 11:16	10.61	6/21/2022 10:04	7.26	6/21/2022 11:46	32.66
6/22/2022 11:30	84.09	6/21/2022 10:47	0.40	6/21/2022 11:17	10.59	6/21/2022 10:05	8.08	6/21/2022 11:47	32.64
6/22/2022 11:31	84.15	6/21/2022 10:48	0.32	6/21/2022 11:18	10.58	6/21/2022 10:06	5.30	6/21/2022 11:48	32.63
6/22/2022 11:32	84.12	6/21/2022 10:49	0.38	6/21/2022 11:19	10.57	6/21/2022 10:07	3.21	6/21/2022 11:49	32.66
6/22/2022 11:33	84.10	6/21/2022 10:50	0.38	6/21/2022 11:20	10.58	6/21/2022 10:08	1.75	6/21/2022 11:50	32.62
6/22/2022 11:34	84.13	6/21/2022 10:51	0.47	6/21/2022 11:21	10.55	6/21/2022 10:09	0.65	6/21/2022 11:51	32.66
6/22/2022 11:35	84.15	6/21/2022 10:52	3.66	6/21/2022 11:22	10.54	6/21/2022 10:10	0.67	6/21/2022 11:52	32.62
6/22/2022 11:36	84.16	6/21/2022 10:53	8.10	6/21/2022 11:23	10.53	6/21/2022 10:11	0.64	6/21/2022 11:53	32.64
6/22/2022 11:37	84.09	6/21/2022 10:54	6.81	6/21/2022 11:24	10.55	6/21/2022 10:12	0.65	6/21/2022 11:54	32.66
6/22/2022 11:38	84.09	6/21/2022 10:55	5.76	6/21/2022 11:25	10.53	6/21/2022 10:13	0.67	6/21/2022 11:55	32.62
6/22/2022 11:39	84.09	6/21/2022 10:56	4.96	6/21/2022 11:26	10.54	6/21/2022 10:14	0.64	6/21/2022 11:56	32.66
6/22/2022 11:40	84.05	6/21/2022 10:57	4.23	6/21/2022 11:27	10.56	6/21/2022 10:15	0.68	6/21/2022 11:57	32.64
6/22/2022 11:41	84.15	6/21/2022 10:58	3.64	6/21/2022 11:28	10.56	6/21/2022 10:16	0.64	6/21/2022 11:58	32.64
6/22/2022 11:42	84.12	6/21/2022 10:59	3.13	6/21/2022 11:29	10.58	6/21/2022 10:17	0.66	6/21/2022 11:59	32.61
6/22/2022 11:43	84.14	6/21/2022 11:00	2.72	6/21/2022 11:30	10.59	6/21/2022 10:18	0.65	6/21/2022 12:00	32.62
6/22/2022 11:44	84.11	6/21/2022 11:01	2.39	6/21/2022 11:31	10.59	6/21/2022 10:19	0.65	6/21/2022 12:01	32.62
6/22/2022 11:45	84.15	6/21/2022 11:02	2.10	6/21/2022 11:32	10.59	6/21/2022 10:20	0.66	6/21/2022 12:02	32.62
6/22/2022 11:46	84.15	6/21/2022 11:03	1.85	6/21/2022 11:33	10.55	6/21/2022 10:21	0.65	6/21/2022 12:03	32.65
6/22/2022 11:47	84.12	6/21/2022 11:04	1.67	6/21/2022 11:34	10.59	6/21/2022 10:22	0.65	6/21/2022 12:04	32.63
6/22/2022 11:48	84.08	6/21/2022 11:05	1.46	6/21/2022 11:35	10.54	6/21/2022 10:23	0.65	6/21/2022 12:05	34.63
6/22/2022 11:49	84.09	6/21/2022 11:06	1.34	6/21/2022 11:36	10.74	6/21/2022 10:24	0.62	6/21/2022 12:06	33.47
6/22/2022 11:50	84.07	6/21/2022 11:07	1.16	6/21/2022 11:37	14.79	6/21/2022 10:25	0.69	6/21/2022 12:07	32.92
6/22/2022 11:51	84.10	6/21/2022 11:08	1.04	6/21/2022 11:38	14.23	6/21/2022 10:26	0.59	6/21/2022 12:08	32.77
6/22/2022 11:52	84.08	6/21/2022 11:09	0.96	6/21/2022 11:39	13.78	6/21/2022 10:27	0.63	6/21/2022 12:09	32.70
6/22/2022 11:53	84.13	6/21/2022 11:10	0.85	6/21/2022 11:40	13.40	6/21/2022 10:28	0.64	6/21/2022 12:10	32.68
6/22/2022 11:54	84.12	6/21/2022 11:11	0.78	6/21/2022 11:41	13.10	6/21/2022 10:29	0.68	6/21/2022 12:11	32.66
6/22/2022 11:55	84.04	6/21/2022 11:12	0.77	6/21/2022 11:42	12.82	6/21/2022 10:30	6.10	6/21/2022 12:12	32.64
6/22/2022 11:56	84.13	6/21/2022 11:13	0.66	6/21/2022 11:43	12.58	6/21/2022 10:31	9.40	6/21/2022 12:13	32.68
6/22/2022 11:57	84.09	6/21/2022 11:14	0.60	6/21/2022 11:44	12.37	6/21/2022 10:32	6.33	6/21/2022 12:14	32.66
6/22/2022 11:58	84.13	6/21/2022 11:15	0.54	6/21/2022 11:45	12.15	6/21/2022 10:33	4.07	6/21/2022 12:15	32.64
6/22/2022 11:59	84.09	6/21/2022 11:16	0.51	6/21/2022 11:46	12.02	6/21/2022 10:34	2.35	6/21/2022 12:16	32.64
6/22/2022 12:00	84.14	6/21/2022 11:17	0.51	6/21/2022 11:47	11.87	6/21/2022 10:35	1.06	6/21/2022 12:17	32.68
6/22/2022 12:01	84.09	6/21/2022 11:18	0.51	6/21/2022 11:48	11.73	6/21/2022 10:36	0.63	6/21/2022 12:18	32.63
6/22/2022 12:02	84.07	6/21/2022 11:19	0.42	6/21/2022 11:49	11.61	6/21/2022 10:37	0.65	6/21/2022 12:19	32.65
6/22/2022 12:03	84.12	6/21/2022 11:20	0.46	6/21/2022 11:50	11.52	6/21/2022 10:38	0.63	6/21/2022 12:20	32.66
6/22/2022 12:04	84.04	6/21/2022 11:21	0.41	6/21/2022 11:51	11.44	6/21/2022 10:39	0.67	6/21/2022 12:21	32.65
6/22/2022 12:05	84.10	6/21/2022 11:22	0.37	6/21/2022 11:52	11.32	6/21/2022 10:40	0.62	6/21/2022 12:22	32.65
6/22/2022 12:06	84.10	6/21/2022 11:23	0.39	6/21/2022 11:53	11.28	6/21/2022 10:41	0.60	6/21/2022 12:23	32.65
6/22/2022 12:07	84.09	6/21/2022 11:24	0.37	6/21/2022 11:54	11.20	6/21/2022 10:42	0.61	6/21/2022 12:24	32.68
6/22/2022 12:08	86.28	6/21/2022 11:25	0.36	6/21/2022 11:55	11.11	6/21/2022 10:43	0.62	6/21/2022 12:25	32.64
6/22/2022 12:09	89.63	6/21/2022 11:26	0.35	6/21/2022 11:56	11.06	6/21/2022 10:44	0.61	6/21/2022 12:26	32.65
6/22/2022 12:10	91.57	6/21/2022 11:27	0.32	6/21/2022 11:57	10.98	6/21/2022 10:45	0.63	6/21/2022 12:27	32.64
6/22/2022 12:11	90.26	6/21/2022 11:28	0.34	6/21/2022 11:58	10.99	6/21/2022 10:46	0.61	6/21/2022 12:28	32.67
6/22/2022 12:12	88.24	6/21/2022 11:29	0.31	6/21/2022 11:59	10.93	6/21/2022 10:47	0.64	6/21/2022 12:29	32.64
6/22/2022 12:13	87.03	6/21/2022 11:30	0.32	6/21/2022 12:00	10.93	6/21/2022 10:48	0.57	6/21/2022 12:30	32.63

6/22/2022 12:14	86.20	6/21/2022 11:31	0.32	6/21/2022 12:01	10.94	6/21/2022 10:49	0.66	6/21/2022 12:31	32.66
6/22/2022 12:15	85.81	6/21/2022 11:32	0.31	6/21/2022 12:02	10.91	6/21/2022 10:50	5.37	6/21/2022 12:32	32.66
6/22/2022 12:16	85.48	6/21/2022 11:33	0.33	6/21/2022 12:03	10.88	6/21/2022 10:51	8.82	6/21/2022 12:33	32.68
6/22/2022 12:17	85.23	6/21/2022 11:34	0.27	6/21/2022 12:04	10.88	6/21/2022 10:52	5.83	6/21/2022 12:34	32.63
6/22/2022 12:18	85.04	6/21/2022 11:35	0.31	6/21/2022 12:05	10.79	6/21/2022 10:53	3.71	6/21/2022 12:35	32.64
6/22/2022 12:19	85.02	6/21/2022 11:36	0.26	6/21/2022 12:06	10.76	6/21/2022 10:54	2.14	6/21/2022 12:36	32.64
6/22/2022 12:20	84.87	6/21/2022 11:37	0.28	6/21/2022 12:07	10.79	6/21/2022 10:55	1.05	6/21/2022 12:37	32.62
6/22/2022 12:21	84.85	6/21/2022 11:38	0.32	6/21/2022 12:08	10.73	6/21/2022 10:56	0.67	6/21/2022 12:38	32.66
6/22/2022 12:22	84.76	6/21/2022 11:39	0.27	6/21/2022 12:09	10.72	6/21/2022 10:57	0.67	6/21/2022 12:39	32.65
6/22/2022 12:23	84.73	6/21/2022 11:40	0.26	6/21/2022 12:10	10.69	6/21/2022 10:58	0.64	6/21/2022 12:40	32.66
6/22/2022 12:24	84.70	6/21/2022 11:41	0.30	6/21/2022 12:11	10.67	6/21/2022 10:59	0.68	6/21/2022 12:41	32.63
6/22/2022 12:25	84.63	6/21/2022 11:42	0.34	6/21/2022 12:12	10.65	6/21/2022 11:00	0.71	6/21/2022 12:42	32.66
6/22/2022 12:26	84.68	6/21/2022 11:43	0.25	6/21/2022 12:13	10.66	6/21/2022 11:01	0.68	6/21/2022 12:43	32.67
6/22/2022 12:27	84.62	6/21/2022 11:44	0.29	6/21/2022 12:14	10.64	6/21/2022 11:02	0.65	6/21/2022 12:44	32.67
6/22/2022 12:28	84.59	6/21/2022 11:45	0.27	6/21/2022 12:15	10.60	6/21/2022 11:03	0.64	6/21/2022 12:45	32.63
6/22/2022 12:29	84.55	6/21/2022 11:46	0.28	6/21/2022 12:16	10.62	6/21/2022 11:04	0.63	6/21/2022 12:46	32.64
6/22/2022 12:30	84.52	6/21/2022 11:47	0.26	6/21/2022 12:17	10.62	6/21/2022 11:05	0.65	6/21/2022 12:47	32.63
6/22/2022 12:31	84.53	6/21/2022 11:48	0.28	6/21/2022 12:18	10.60	6/21/2022 11:06	0.64	6/21/2022 12:48	32.64
6/22/2022 12:32	84.49	6/21/2022 11:49	0.27	6/21/2022 12:19	10.60	6/21/2022 11:07	0.63	6/21/2022 12:49	32.66
6/22/2022 12:33	84.47	6/21/2022 11:50	0.28	6/21/2022 12:20	10.58	6/21/2022 11:08	0.62	6/21/2022 12:50	32.66
6/22/2022 12:34	84.48	6/21/2022 11:51	5.33	6/21/2022 12:21	10.62	6/21/2022 11:09	0.66	6/21/2022 12:51	32.64
6/22/2022 12:35	84.46	6/21/2022 11:52	7.22	6/21/2022 12:22	10.61	6/21/2022 11:10	0.67	6/21/2022 12:52	32.64
6/22/2022 12:36	84.48	6/21/2022 11:53	6.08	6/21/2022 12:23	10.59	6/21/2022 11:11	0.63	6/21/2022 12:53	32.63
6/22/2022 12:37	84.42	6/21/2022 11:54	5.12	6/21/2022 12:24	10.63	6/21/2022 11:12	0.63	6/21/2022 12:54	32.69
6/22/2022 12:38	84.44	6/21/2022 11:55	4.39	6/21/2022 12:25	10.60	6/21/2022 11:13	0.63	6/21/2022 12:55	32.64
6/22/2022 12:39	84.43	6/21/2022 11:56	3.79	6/21/2022 12:26	10.55	6/21/2022 11:14	0.60	6/21/2022 12:56	32.64
6/22/2022 12:40	84.41	6/21/2022 11:57	3.26	6/21/2022 12:27	10.58	6/21/2022 11:15	0.61	6/21/2022 12:57	32.63
6/22/2022 12:41	84.49	6/21/2022 11:58	2.78	6/21/2022 12:28	10.54	6/21/2022 11:16	0.64	6/21/2022 12:58	32.64
6/22/2022 12:42	84.45	6/21/2022 11:59	2.43	6/21/2022 12:29	10.58	6/21/2022 11:17	0.63	6/21/2022 12:59	32.68
6/22/2022 12:43	84.41	6/21/2022 12:00	2.10	6/21/2022 12:30	10.55	6/21/2022 11:18	0.61	6/21/2022 13:00	32.67
6/22/2022 12:44	84.45	6/21/2022 12:01	1.88	6/21/2022 12:31	10.51	6/21/2022 11:19	0.61	6/21/2022 13:01	32.66
6/22/2022 12:45	84.37	6/21/2022 12:02	1.68	6/21/2022 12:32	10.54	6/21/2022 11:20	0.63	6/21/2022 13:02	32.67
6/22/2022 12:46	84.41	6/21/2022 12:03	1.46	6/21/2022 12:33	10.52	6/21/2022 11:21	0.63	6/21/2022 13:03	32.71
6/22/2022 12:47	84.42	6/21/2022 12:04	1.33	6/21/2022 12:34	10.50	6/21/2022 11:22	0.62	6/21/2022 13:04	32.72
6/22/2022 12:48	84.35	6/21/2022 12:05	1.24	6/21/2022 12:35	10.49	6/21/2022 11:23	0.63	6/21/2022 13:05	32.72
6/22/2022 12:49	84.37	6/21/2022 12:06	1.05	6/21/2022 12:36	10.46	6/21/2022 11:24	0.60	6/21/2022 13:06	32.70
6/22/2022 12:50	84.36	6/21/2022 12:07	0.95	6/21/2022 12:37	10.49	6/21/2022 11:25	0.62	6/21/2022 13:07	32.69
6/22/2022 12:51	84.35	6/21/2022 12:08	0.86	6/21/2022 12:38	10.51	6/21/2022 11:26	0.61	6/21/2022 13:08	32.71
6/22/2022 12:52	84.41	6/21/2022 12:09	0.81	6/21/2022 12:39	10.46	6/21/2022 11:27	0.64	6/21/2022 13:09	32.72
6/22/2022 12:53	84.37	6/21/2022 12:10	0.74	6/21/2022 12:40	10.46	6/21/2022 11:28	0.64	6/21/2022 13:10	32.71
6/22/2022 12:54	84.36	6/21/2022 12:11	0.66	6/21/2022 12:41	10.45	6/21/2022 11:29	0.62	6/21/2022 13:11	32.96
6/22/2022 12:55	84.38	6/21/2022 12:12	0.59	6/21/2022 12:42	10.49	6/21/2022 11:30	0.61	6/21/2022 13:12	34.16
6/22/2022 12:56	84.41	6/21/2022 12:13	0.58	6/21/2022 12:43	10.48	6/21/2022 11:31	0.62	6/21/2022 13:13	33.28
6/22/2022 12:57	84.32	6/21/2022 12:14	0.53	6/21/2022 12:44	10.49	6/21/2022 11:32	0.60	6/21/2022 13:14	32.93
6/22/2022 12:58	84.35	6/21/2022 12:15	0.52	6/21/2022 12:45	10.48	6/21/2022 11:33	0.62	6/21/2022 13:15	32.82
6/22/2022 12:59	84.36	6/21/2022 12:16	0.53	6/21/2022 12:46	10.47	6/21/2022 11:34	0.62	6/21/2022 13:16	32.76
6/22/2022 13:00	84.35	6/21/2022 12:17	0.47	6/21/2022 12:47	10.51	6/21/2022 11:35	0.61	6/21/2022 13:17	32.74
6/22/2022 13:01	84.31	6/21/2022 12:18	0.40	6/21/2022 12:48	10.51	6/21/2022 11:36	0.66	6/21/2022 13:18	32.74
6/22/2022 13:02	84.34	6/21/2022 12:19	0.43	6/21/2022 12:49	10.50	6/21/2022 11:37	0.65	6/21/2022 13:19	32.72
6/22/2022 13:03	84.38	6/21/2022 12:20	0.38	6/21/2022 12:50	10.47	6/21/2022 11:38	0.63	6/21/2022 13:20	32.73
6/22/2022 13:04	84.28	6/21/2022 12:21	0.41	6/21/2022 12:51	10.51	6/21/2022 11:39	0.60	6/21/2022 13:21	32.75
6/22/2022 13:05	84.33	6/21/2022 12:22	0.37	6/21/2022 12:52	10.51	6/21/2022 11:40	0.62	6/21/2022 13:22	32.71
6/22/2022 13:06	84.27	6/21/2022 12:23	0.36	6/21/2022 12:53	10.50	6/21/2022 11:41	0.65	6/21/2022 13:23	32.68
6/22/2022 13:07	84.30	6/21/2022 12:24	0.37	6/21/2022 12:54	10.48	6/21/2022 11:42	0.62	6/21/2022 13:24	32.71
6/22/2022 13:08	84.34	6/21/2022 12:25	0.31	6/21/2022 12:55	10.47	6/21/2022 11:43	0.58	6/21/2022 13:25	32.72
6/22/2022 13:09	84.32	6/21/2022 12:26	0.36	6/21/2022 12:56	10.49	6/21/2022 11:44	0.62	6/21/2022 13:26	32.68
6/22/2022 13:10	84.33	6/21/2022 12:27	0.35	6/21/2022 12:57	10.48	6/21/2022 11:45	0.63	6/21/2022 13:27	32.71
6/22/2022 13:11	84.25	6/21/2022 12:28	0.35	6/21/2022 12:58	10.48	6/21/2022 11:46	0.62	6/21/2022 13:28	32.70
6/22/2022 13:12	84.29	6/21/2022 12:29	0.31	6/21/2022 12:59	13.26	6/21/2022 11:47	0.63	6/21/2022 13:29	32.69
6/22/2022 13:13	84.25	6/21/2022 12:30	0.33	6/21/2022 13:00	14.61	6/21/2022 11:48	0.62	6/21/2022 13:30	32.71
6/22/2022 13:14	84.32	6/21/2022 12:31	0.28	6/21/2022 13:01	14.06	6/21/2022 11:49	0.64	6/21/2022 13:31	32.69
6/22/2022 13:15	84.28	6/21/2022 12:32	0.35	6/21/2022 13:02	13.62	6/21/2022 11:50	0.62	6/21/2022 13:32	32.69
6/22/2022 13:16	84.33	6/21/2022 12:33	0.35	6/21/2022 13:03	13.22	6/21/2022 11:51	0.61	6/21/2022 13:33	32.72
6/22/2022 13:17	84.30	6/21/2022 12:34	0.32	6/21/2022 13:04	12.93	6/21/2022 11:52	0.64	6/21/2022 13:34	32.68
6/22/2022 13:18	84.28	6/21/2022 12:35	0.33	6/21/2022 13:05	12.63	6/21/2022 11:53	0.62	6/21/2022 13:35	32.69
6/22/2022 13:19	84.29	6/21/2022 12:36	0.30	6/21/2022 13:06	12.42	6/21/2022 11:54	0.61	6/21/2022 13:36	32.69
6/22/2022 13:20	84.23	6/21/2022 12:37	0.32	6/21/2022 13:07	12.18	6/21/2022 11:55	0.63	6/21/2022 13:37	32.71
6/22/2022 13:21	84.29	6/21/2022 12:38	0.31	6/21/2022 13:08	12.02	6/21/2022 11:56	0.62	6/21/2022 13:38	32.73
6/22/2022 13:22	84.24	6/21/2022 12:39	0.27	6/21/2022 13:09	11.87	6/21/2022 11:57	0.65	6/21/2022 13:39	32.72
6/22/2022 13:23	84.29	6/21/2022 12:40	0.31	6/21/2022 13:10	11.75	6/21/2022 11:58	0.64	6/21/2022 13:40	32.72
6/22/2022 13:24	84.30	6/21/2022 12:41	0.33	6/21/2022 13:11	11.61	6/21/2022 11:59	0.63	6/21/2022 13:41	32.71
6/22/2022 13:25	84.25	6/21/2022 12:42	0.30	6/21/2022 13:12	11.53	6/21/2022 12:00	0.63	6/21/2022 13:42	32.69
6/22/2022 13:26	84.24	6/21/2022 12:43	0.28	6/21/2022 13:13	11.43	6/21/2022 12:01	0.59	6/21/2022 13:43	32.72
6/22/2022 13:27	84.23	6/21/2022 12:44	0.29	6/21/2022 13:14	11.36	6/21/2022 12:02	0.64	6/21/2022 13:44	32.72
6/22/2022 13:28	84.24	6/21/2022 12:45	0.30	6/21/2022 13:15	11.27	6/21/2022 12:03	0.61	6/21/2022 13:45	32.73
6/22/2022 13:29	84.22	6/21/2022 12:46	0.28	6/21/2022 13:16	11.17	6/21/2022 12:04	0.61	6/21/2022 13:46	32.70
6/22/2022 13:30	84.27	6/21/2022 12:47	0.29	6/21/2022 13:17	11.11	6/21/2022 12:05	0.59	6/21/2022 13:47	32.70
6/22/2022 13:31	84.28	6/21/2022 12:48	0.31	6/21/2022 13:18	11.05	6/21/2022 12:06	0.61	6/21/2022 13:48	32.70
6/22/2022 13:32	84.24	6/21/2022 12:49	0.28	6/21/2022 13:19	11.02	6/21/2022 12:07	0.61	6/21/2022 13:49	32.70
6/22/2022 13:33	84.22	6/21/2022 12:50	0.67	6/21/2022 13:20	10.97	6/21/2022 12:08	0.56	6/21/2022 13:50	32.68
6/22/2022 13:34	84.30	6/21/2022 12:51	6.59	6/21/2022 13:21	10.92	6/21/2022 12:09	0.58	6/21/2022 13:51	32.76
6/22/2022 13:35	84.28	6/21/2022 12:52	6.89	6/21/2022 13:22	10.88	6/21/2022 12:10	0.54	6/21/2022 13:52	32.70
6/22/2022 13:36	84.21	6/21/2022 12:53	5.80	6/21/2022 13:23	10.84	6/21/2022 12:11	0.61	6/21/2022 13:53	32.74
6/22/2022 13:37	84.22	6/21/2022 12:54	4.92	6/21/2022 13:24	10.82	6/21/2022 12:12	0.59	6/21/2022 13:54	32.72
6/22/2022 13:38	84.23	6/21/2022 12:55	4.21	6/21/2022 13:25	10.76	6/21/2022 12:13	0.58	6/21/2022 13:55	32.70
6/22/2022 13:39	84.26	6/21/2022 12:56	3.64	6/21/2022 13:26	10.73	6/21/2022 12:14	0.59	6/21/2022 13:56	32.75
6/22/2022 13:40	84.27	6/21/2022 12:57	3.15	6/21/2022 13:27	10.72	6/21/2022 12:15	0.63	6/21/2022 13:57	32.69
6/22/2022 13:41	84.28	6/21/2022 12:58	2.71	6/21/2022 13:28	10.66	6/21/2022 12:16	0.58	6/21/2022 13:58	32.70

6/22/2022 13:42	84.24	6/21/2022 12:59	2.35	6/21/2022 13:29	10.66	6/21/2022 12:17	0.57	6/21/2022 13:59	32.75
6/22/2022 13:43	84.19	6/21/2022 13:00	2.06	6/21/2022 13:30	10.62	6/21/2022 12:18	0.62	6/21/2022 14:00	32.71
6/22/2022 13:44	84.20	6/21/2022 13:01	1.86	6/21/2022 13:31	10.60	6/21/2022 12:19	0.59	6/21/2022 14:01	32.69
6/22/2022 13:45	84.21	6/21/2022 13:02	1.67	6/21/2022 13:32	10.58	6/21/2022 12:20	0.59	6/21/2022 14:02	32.72
6/22/2022 13:46	84.25	6/21/2022 13:03	1.47	6/21/2022 13:33	10.64	6/21/2022 12:21	0.63	6/21/2022 14:03	32.69
6/22/2022 13:47	84.29	6/21/2022 13:04	1.33	6/21/2022 13:34	10.63	6/21/2022 12:22	0.56	6/21/2022 14:04	32.71
6/22/2022 13:48	84.26	6/21/2022 13:05	1.19	6/21/2022 13:35	10.58	6/21/2022 12:23	0.59	6/21/2022 14:05	32.71
6/22/2022 13:49	84.27	6/21/2022 13:06	1.05	6/21/2022 13:36	10.60	6/21/2022 12:24	0.61	6/21/2022 14:06	32.76
6/22/2022 13:50	84.26	6/21/2022 13:07	1.02	6/21/2022 13:37	10.57	6/21/2022 12:25	0.62	6/21/2022 14:07	32.71
6/22/2022 13:51	84.24	6/21/2022 13:08	0.89	6/21/2022 13:38	10.57	6/21/2022 12:26	0.65	6/21/2022 14:08	32.69
6/22/2022 13:52	84.25	6/21/2022 13:09	0.83	6/21/2022 13:39	10.60	6/21/2022 12:27	0.61	6/21/2022 14:09	32.67
6/22/2022 13:53	84.22	6/21/2022 13:10	0.77	6/21/2022 13:40	10.58	6/21/2022 12:28	0.59	6/21/2022 14:10	32.72
6/22/2022 13:54	84.26	6/21/2022 13:11	0.77	6/21/2022 13:41	10.57	6/21/2022 12:29	0.58	6/21/2022 14:11	32.71
6/22/2022 13:55	84.24	6/21/2022 13:12	0.72	6/21/2022 13:42	10.56	6/21/2022 12:30	0.60	6/21/2022 14:12	32.73
6/22/2022 13:56	84.26	6/21/2022 13:13	0.67	6/21/2022 13:43	10.54	6/21/2022 12:31	0.55	6/21/2022 14:13	32.71
6/22/2022 13:57	84.22	6/21/2022 13:14	0.64	6/21/2022 13:44	10.53	6/21/2022 12:32	0.60	6/21/2022 14:14	32.73
6/22/2022 13:58	84.21	6/21/2022 13:15	0.57	6/21/2022 13:45	10.52	6/21/2022 12:33	0.60	6/21/2022 14:15	32.71
6/22/2022 13:59	84.25	6/21/2022 13:16	0.56	6/21/2022 13:46	10.52	6/21/2022 12:34	0.58	6/21/2022 14:16	32.72
6/22/2022 14:00	84.21	6/21/2022 13:17	0.55	6/21/2022 13:47	10.50	6/21/2022 12:35	0.57	6/21/2022 14:17	32.76
6/22/2022 14:01	84.20	6/21/2022 13:18	0.50	6/21/2022 13:48	10.51	6/21/2022 12:36	0.60	6/21/2022 14:18	32.71
6/22/2022 14:02	84.27	6/21/2022 13:19	0.52	6/21/2022 13:49	10.51	6/21/2022 12:37	0.60	6/21/2022 14:19	32.71
6/22/2022 14:03	84.22	6/21/2022 13:20	0.49	6/21/2022 13:50	10.50	6/21/2022 12:38	0.62	6/21/2022 14:20	32.70
6/22/2022 14:04	84.29	6/21/2022 13:21	0.42	6/21/2022 13:51	10.43	6/21/2022 12:39	0.59	6/21/2022 14:21	32.69
6/22/2022 14:05	84.20	6/21/2022 13:22	0.43	6/21/2022 13:52	10.48	6/21/2022 12:40	0.58	6/21/2022 14:22	32.71
6/22/2022 14:06	84.23	6/21/2022 13:23	0.40	6/21/2022 13:53	10.43	6/21/2022 12:41	0.60	6/21/2022 14:23	32.70
6/22/2022 14:07	84.27	6/21/2022 13:24	0.42	6/21/2022 13:54	10.41	6/21/2022 12:42	0.55	6/21/2022 14:24	32.71
6/22/2022 14:08	84.21	6/21/2022 13:25	0.39	6/21/2022 13:55	10.43	6/21/2022 12:43	0.57	6/21/2022 14:25	32.73
6/22/2022 14:09	84.26	6/21/2022 13:26	0.37	6/21/2022 13:56	10.44	6/21/2022 12:44	0.58	6/21/2022 14:26	32.74
6/22/2022 14:10	84.29	6/21/2022 13:27	0.41	6/21/2022 13:57	10.45	6/21/2022 12:45	0.59	6/21/2022 14:27	32.72
6/22/2022 14:11	84.26	6/21/2022 13:28	0.39	6/21/2022 13:58	10.46	6/21/2022 12:46	0.58	6/21/2022 14:28	32.74
6/22/2022 14:12	84.20	6/21/2022 13:29	0.37	6/21/2022 13:59	10.47	6/21/2022 12:47	0.59	6/21/2022 14:29	32.73
6/22/2022 14:13	84.24	6/21/2022 13:30	0.32	6/21/2022 14:00	10.49	6/21/2022 12:48	0.58	6/21/2022 14:30	32.73
6/22/2022 14:14	84.23	6/21/2022 13:31	0.36	6/21/2022 14:01	10.49	6/21/2022 12:49	0.59	6/21/2022 14:31	32.75
6/22/2022 14:15	84.22	6/21/2022 13:32	0.31	6/21/2022 14:02	10.47	6/21/2022 12:50	0.60	6/21/2022 14:32	32.74
6/22/2022 14:16	84.26	6/21/2022 13:33	0.29	6/21/2022 14:03	10.48	6/21/2022 12:51	0.62	6/21/2022 14:33	32.74
6/22/2022 14:17	84.18	6/21/2022 13:34	0.32	6/21/2022 14:04	10.45	6/21/2022 12:52	0.61	6/21/2022 14:34	32.76
6/22/2022 14:18	84.24	6/21/2022 13:35	0.28	6/21/2022 14:05	10.45	6/21/2022 12:53	0.61	6/21/2022 14:35	32.73
6/22/2022 14:19	84.24	6/21/2022 13:36	0.33	6/21/2022 14:06	10.47	6/21/2022 12:54	0.64	6/21/2022 14:36	32.72
6/22/2022 14:20	84.20	6/21/2022 13:37	0.31	6/21/2022 14:07	10.46	6/21/2022 12:55	0.61	6/21/2022 14:37	32.76
6/22/2022 14:21	84.27	6/21/2022 13:38	0.32	6/21/2022 14:08	10.48	6/21/2022 12:56	0.60	6/21/2022 14:38	32.70
6/22/2022 14:22	84.22	6/21/2022 13:39	0.31	6/21/2022 14:09	10.45	6/21/2022 12:57	0.60	6/21/2022 14:39	32.73
6/22/2022 14:23	84.21	6/21/2022 13:40	0.26	6/21/2022 14:10	10.44	6/21/2022 12:58	0.63	6/21/2022 14:40	32.76
6/22/2022 14:24	84.21	6/21/2022 13:41	0.34	6/21/2022 14:11	10.43	6/21/2022 12:59	0.59	6/21/2022 14:41	32.74
6/22/2022 14:25	84.27	6/21/2022 13:42	0.33	6/21/2022 14:12	14.17	6/21/2022 13:00	0.59	6/21/2022 14:42	32.71
6/22/2022 14:26	84.22	6/21/2022 13:43	0.29	6/21/2022 14:13	13.95	6/21/2022 13:01	0.58	6/21/2022 14:43	32.74
6/22/2022 14:27	84.23	6/21/2022 13:44	0.29	6/21/2022 14:14	13.51	6/21/2022 13:02	0.60	6/21/2022 14:44	32.75
6/22/2022 14:28	84.25	6/21/2022 13:45	0.28	6/21/2022 14:15	13.13	6/21/2022 13:03	0.61	6/21/2022 14:45	32.80
6/22/2022 14:29	84.25	6/21/2022 13:46	1.13	6/21/2022 14:16	12.78	6/21/2022 13:04	0.62	6/21/2022 14:46	32.82
6/22/2022 14:30	84.22	6/21/2022 13:47	6.89	6/21/2022 14:17	12.51	6/21/2022 13:05	0.59	6/21/2022 14:47	32.81
6/22/2022 14:31	84.24	6/21/2022 13:48	6.91	6/21/2022 14:18	12.30	6/21/2022 13:06	0.62	6/21/2022 14:48	32.77
6/22/2022 14:32	84.15	6/21/2022 13:49	5.86	6/21/2022 14:19	12.06	6/21/2022 13:07	0.58	6/21/2022 14:49	32.81
6/22/2022 14:33	84.23	6/21/2022 13:50	4.96	6/21/2022 14:20	11.89	6/21/2022 13:08	0.59	6/21/2022 14:50	32.78
6/22/2022 14:34	84.18	6/21/2022 13:51	4.21	6/21/2022 14:21	11.76	6/21/2022 13:09	0.59	6/21/2022 14:51	32.77
6/22/2022 14:35	84.15	6/21/2022 13:52	3.67	6/21/2022 14:22	11.66	6/21/2022 13:10	0.62	6/21/2022 14:52	32.80
6/22/2022 14:36	84.22	6/21/2022 13:53	3.19	6/21/2022 14:23	11.54	6/21/2022 13:11	0.64	6/21/2022 14:53	32.77
6/22/2022 14:37	84.18	6/21/2022 13:54	2.73	6/21/2022 14:24	11.44	6/21/2022 13:12	0.61	6/21/2022 14:54	32.77
6/22/2022 14:38	84.20	6/21/2022 13:55	2.53	6/21/2022 14:25	11.38	6/21/2022 13:13	0.62	6/21/2022 14:55	32.78
6/22/2022 14:39	84.25	6/21/2022 13:56	2.34	6/21/2022 14:26	11.29	6/21/2022 13:14	0.62	6/21/2022 14:56	32.81
6/22/2022 14:40	84.21	6/21/2022 13:57	2.18	6/21/2022 14:27	11.21	6/21/2022 13:15	0.65	6/21/2022 14:57	32.78
6/22/2022 14:41	84.24	6/21/2022 13:58	1.99	6/21/2022 14:28	11.17	6/21/2022 13:16	0.64	6/21/2022 14:58	32.80
6/22/2022 14:42	84.22	6/21/2022 13:59	1.81	6/21/2022 14:29	11.09	6/21/2022 13:17	0.63	6/21/2022 14:59	32.81
6/22/2022 14:43	84.18	6/21/2022 14:00	1.60	6/21/2022 14:30	11.04	6/21/2022 13:18	0.60	6/21/2022 15:00	32.78
6/22/2022 14:44	84.16	6/21/2022 14:01	1.45	6/21/2022 14:31	10.98	6/21/2022 13:19	0.60	6/21/2022 15:01	32.76
6/22/2022 14:45	84.16	6/21/2022 14:02	1.28	6/21/2022 14:32	10.92	6/21/2022 13:20	0.61	6/21/2022 15:02	32.78
6/22/2022 14:46	84.21	6/21/2022 14:03	1.14	6/21/2022 14:33	10.90	6/21/2022 13:21	0.61	6/21/2022 15:03	32.77
6/22/2022 14:47	84.22	6/21/2022 14:04	1.07	6/21/2022 14:34	10.85	6/21/2022 13:22	0.59	6/21/2022 15:04	32.80
6/22/2022 14:48	84.18	6/21/2022 14:05	0.94	6/21/2022 14:35	10.82	6/21/2022 13:23	0.61	6/21/2022 15:05	32.77
6/22/2022 14:49	84.24	6/21/2022 14:06	0.87	6/21/2022 14:36	10.80	6/21/2022 13:24	0.65	6/21/2022 15:06	32.74
6/22/2022 14:50	84.20	6/21/2022 14:07	0.82	6/21/2022 14:37	10.73	6/21/2022 13:25	0.60	6/21/2022 15:07	32.77
6/22/2022 14:51	84.17	6/21/2022 14:08	0.75	6/21/2022 14:38	10.72	6/21/2022 13:26	0.60	6/21/2022 15:08	32.76
6/22/2022 14:52	84.18	6/21/2022 14:09	0.67	6/21/2022 14:39	10.71	6/21/2022 13:27	0.62	6/21/2022 15:09	32.79
6/22/2022 14:53	84.19	6/21/2022 14:10	0.68	6/21/2022 14:40	10.66	6/21/2022 13:28	0.62	6/21/2022 15:10	32.77
6/22/2022 14:54	84.17	6/21/2022 14:11	0.62	6/21/2022 14:41	10.67	6/21/2022 13:29	0.64	6/21/2022 15:11	32.78
6/22/2022 14:55	84.16	6/21/2022 14:12	0.58	6/21/2022 14:42	10.62	6/21/2022 13:30	0.63	6/21/2022 15:12	32.79
6/22/2022 14:56	84.15	6/21/2022 14:13	0.53	6/21/2022 14:43	10.61	6/21/2022 13:31	0.61	6/21/2022 15:13	32.78
6/22/2022 14:57	84.17	6/21/2022 14:14	0.50	6/21/2022 14:44	10.58	6/21/2022 13:32	0.61	6/21/2022 15:14	32.79
6/22/2022 14:58	84.15	6/21/2022 14:15	0.44	6/21/2022 14:45	10.62	6/21/2022 13:33	0.60	6/21/2022 15:15	32.80
6/22/2022 14:59	84.15	6/21/2022 14:16	0.42	6/21/2022 14:46	10.63	6/21/2022 13:34	0.61	6/21/2022 15:16	32.79
6/22/2022 15:00	84.18	6/21/2022 14:17	0.41	6/21/2022 14:47	10.61	6/21/2022 13:35	0.59	6/21/2022 15:17	32.83
6/22/2022 15:01	84.24	6/21/2022 14:18	0.42	6/21/2022 14:48	10.59	6/21/2022 13:36	0.60	6/21/2022 15:18	32.81
6/22/2022 15:02	84.18	6/21/2022 14:19	0.44	6/21/2022 14:49	10.58	6/21/2022 13:37	0.59	6/21/2022 15:19	32.79
6/22/2022 15:03	84.19	6/21/2022 14:20	0.39	6/21/2022 14:50	10.60	6/21/2022 13:38	0.60	6/21/2022 15:20	32.76
6/22/2022 15:04	84.21	6/21/2022 14:21	0.37	6/21/2022 14:51	10.60	6/21/2022 13:39	0.57	6/21/2022 15:21	32.80
6/22/2022 15:05	84.21	6/21/2022 14:22	0.36	6/21/2022 14:52	10.56	6/21/2022 13:40	0.59	6/21/2022 15:22	32.80
6/22/2022 15:06	84.14	6/21/2022 14:23	0.33	6/21/2022 14:53	10.60	6/21/2022 13:41	0.63	6/21/2022 15:23	32.80
6/22/2022 15:07	84.16	6/21/2022 14:24	0.33	6/21/2022 14:54	10.57	6/21/2022 13:42	0.61	6/21/2022 15:24	32.78
6/22/2022 15:08	84.19	6/21/2022 14:25	0.31	6/21/2022 14:55	10.57	6/21/2022 13:43	0.59	6/21/2022 15:25	32.79
6/22/2022 15:09	84.25	6/21/2022 14:26	0.30	6/21/2022 14:56	10.58	6/21/2022 13:44	0.62	6/21/2022 15:26	32.79

6/22/2022 15:10	84.19	6/21/2022 14:27	0.32	6/21/2022 14:57	10.53	6/21/2022 13:45	0.64	6/21/2022 15:27	32.82
6/22/2022 15:11	84.20	6/21/2022 14:28	0.29	6/21/2022 14:58	10.52	6/21/2022 13:46	0.61	6/21/2022 15:28	32.78
6/22/2022 15:12	84.19	6/21/2022 14:29	0.32	6/21/2022 14:59	10.54	6/21/2022 13:47	0.58	6/21/2022 15:29	32.80
6/22/2022 15:13	84.12	6/21/2022 14:30	5.10	6/21/2022 15:00	10.51	6/21/2022 13:48	0.66	6/21/2022 15:30	32.83
6/22/2022 15:14	84.15	6/21/2022 14:31	7.27	6/21/2022 15:01	10.51	6/21/2022 13:49	0.65	6/21/2022 15:31	32.78
6/22/2022 15:15	84.16	6/21/2022 14:32	6.13	6/21/2022 15:02	10.54	6/21/2022 13:50	0.64	6/21/2022 15:32	32.78
6/22/2022 15:16	84.20	6/21/2022 14:33	5.20	6/21/2022 15:03	10.50	6/21/2022 13:51	0.63	6/21/2022 15:33	32.81
6/22/2022 15:17	84.12	6/21/2022 14:34	4.47	6/21/2022 15:04	10.47	6/21/2022 13:52	0.63	6/21/2022 15:34	32.77
6/22/2022 15:18	84.13	6/21/2022 14:35	3.82	6/21/2022 15:05	10.49	6/21/2022 13:53	0.62	6/21/2022 15:35	33.00
6/22/2022 15:19	84.17	6/21/2022 14:36	3.30	6/21/2022 15:06	10.43	6/21/2022 13:54	4.53	6/21/2022 15:36	34.26
6/22/2022 15:20	84.15	6/21/2022 14:37	2.82	6/21/2022 15:07	10.45	6/21/2022 13:55	10.74	6/21/2022 15:37	33.40
6/22/2022 15:21	88.14	6/21/2022 14:38	2.44	6/21/2022 15:08	10.44	6/21/2022 13:56	7.22	6/21/2022 15:38	33.00
6/22/2022 15:22	90.95	6/21/2022 14:39	2.19	6/21/2022 15:09	10.47	6/21/2022 13:57	4.79	6/21/2022 15:39	32.88
6/22/2022 15:23	92.75	6/21/2022 14:40	1.92	6/21/2022 15:10	10.42	6/21/2022 13:58	2.90	6/21/2022 15:40	32.84
6/22/2022 15:24	93.81	6/21/2022 14:41	1.70	6/21/2022 15:11	10.50	6/21/2022 13:59	1.61	6/21/2022 15:41	32.84
6/22/2022 15:25	94.56	6/21/2022 14:42	1.48	6/21/2022 15:12	10.52	6/21/2022 14:00	0.69	6/21/2022 15:42	32.81
6/22/2022 15:26	93.14	6/21/2022 14:43	1.34	6/21/2022 15:13	10.50	6/21/2022 14:01	0.68	6/21/2022 15:43	32.83
6/22/2022 15:27	90.48	6/21/2022 14:44	1.17	6/21/2022 15:14	10.54	6/21/2022 14:02	0.70	6/21/2022 15:44	32.85
6/22/2022 15:28	88.78	6/21/2022 14:45	1.09	6/21/2022 15:15	10.50	6/21/2022 14:03	0.68	6/21/2022 15:45	32.84
6/22/2022 15:29	87.63	6/21/2022 14:46	0.94	6/21/2022 15:16	10.53	6/21/2022 14:04	0.70	6/21/2022 15:46	32.83
6/22/2022 15:30	86.90	6/21/2022 14:47	0.87	6/21/2022 15:17	10.55	6/21/2022 14:05	0.65	6/21/2022 15:47	32.80
6/22/2022 15:31	86.43	6/21/2022 14:48	0.80	6/21/2022 15:18	10.51	6/21/2022 14:06	0.66	6/21/2022 15:48	32.83
6/22/2022 15:32	86.14	6/21/2022 14:49	0.73	6/21/2022 15:19	10.52	6/21/2022 14:07	0.68	6/21/2022 15:49	32.83
6/22/2022 15:33	85.81	6/21/2022 14:50	0.68	6/21/2022 15:20	10.53	6/21/2022 14:08	0.66	6/21/2022 15:50	32.84
6/22/2022 15:34	85.72	6/21/2022 14:51	0.59	6/21/2022 15:21	10.50	6/21/2022 14:09	0.67	6/21/2022 15:51	32.84
6/22/2022 15:35	85.53	6/21/2022 14:52	0.59	6/21/2022 15:22	10.50	6/21/2022 14:10	0.65	6/21/2022 15:52	32.83
6/22/2022 15:36	85.41	6/21/2022 14:53	0.54	6/21/2022 15:23	10.49	6/21/2022 14:11	0.68	6/21/2022 15:53	32.81
6/22/2022 15:37	85.36	6/21/2022 14:54	0.52	6/21/2022 15:24	10.48	6/21/2022 14:12	0.64	6/21/2022 15:54	32.82
6/22/2022 15:38	85.29	6/21/2022 14:55	0.46	6/21/2022 15:25	10.48	6/21/2022 14:13	0.66	6/21/2022 15:55	32.82
6/22/2022 15:39	85.23	6/21/2022 14:56	0.43	6/21/2022 15:26	10.51	6/21/2022 14:14	0.65	6/21/2022 15:56	32.82
6/22/2022 15:40	85.16	6/21/2022 14:57	0.43	6/21/2022 15:27	10.53	6/21/2022 14:15	0.69	6/21/2022 15:57	32.85
6/22/2022 15:41	85.14	6/21/2022 14:58	0.43	6/21/2022 15:28	10.49	6/21/2022 14:16	0.66	6/21/2022 15:58	32.83
6/22/2022 15:42	85.16	6/21/2022 14:59	0.39	6/21/2022 15:29	10.50	6/21/2022 14:17	0.66	6/21/2022 15:59	32.81
6/22/2022 15:43	85.08	6/21/2022 15:00	0.40	6/21/2022 15:30	10.53	6/21/2022 14:18	0.64	6/21/2022 16:00	32.83
6/22/2022 15:44	85.10	6/21/2022 15:01	0.36	6/21/2022 15:31	10.53	6/21/2022 14:19	0.63	6/21/2022 16:01	32.85
6/22/2022 15:45	85.00	6/21/2022 15:02	0.37	6/21/2022 15:32	10.53	6/21/2022 14:20	0.63	6/21/2022 16:02	32.81
6/22/2022 15:46	84.96	6/21/2022 15:03	0.36	6/21/2022 15:33	10.53	6/21/2022 14:21	0.66	6/21/2022 16:03	32.83
6/22/2022 15:47	84.94	6/21/2022 15:04	0.39	6/21/2022 15:34	10.53	6/21/2022 14:22	0.63	6/21/2022 16:04	32.81
6/22/2022 15:48	84.95	6/21/2022 15:05	0.32	6/21/2022 15:35	10.50	6/21/2022 14:23	0.63	6/21/2022 16:05	32.85
6/22/2022 15:49	84.86	6/21/2022 15:06	0.33	6/21/2022 15:36	10.50	6/21/2022 14:24	0.64	6/21/2022 16:06	32.79
6/22/2022 15:50	84.91	6/21/2022 15:07	0.30	6/21/2022 15:37	10.50	6/21/2022 14:25	0.67	6/21/2022 16:07	32.84
6/22/2022 15:51	84.87	6/21/2022 15:08	0.36	6/21/2022 15:38	10.51	6/21/2022 14:26	0.64	6/21/2022 16:08	32.83
6/22/2022 15:52	84.91	6/21/2022 15:09	0.32	6/21/2022 15:39	10.50	6/21/2022 14:27	0.63	6/21/2022 16:09	32.85
6/22/2022 15:53	84.82	6/21/2022 15:10	0.29	6/21/2022 15:40	10.51	6/21/2022 14:28	0.64	6/21/2022 16:10	32.85
6/22/2022 15:54	84.79	6/21/2022 15:11	0.30	6/21/2022 15:41	10.48	6/21/2022 14:29	0.65	6/21/2022 16:11	34.55
6/22/2022 15:55	84.87	6/21/2022 15:12	0.29	6/21/2022 15:42	10.47	6/21/2022 14:30	0.66	6/21/2022 16:12	33.56
6/22/2022 15:56	84.85	6/21/2022 15:13	0.31	6/21/2022 15:43	10.45	6/21/2022 14:31	0.72	6/21/2022 16:13	35.30
6/22/2022 15:57	84.80	6/21/2022 15:14	0.31	6/21/2022 15:44	10.42	6/21/2022 14:32	0.67	6/21/2022 16:14	33.92
6/22/2022 15:58	84.76	6/21/2022 15:15	0.29	6/21/2022 15:45	10.45	6/21/2022 14:33	0.65	6/21/2022 16:15	35.46
6/22/2022 15:59	84.74	6/21/2022 15:16	0.30	6/21/2022 15:46	10.42	6/21/2022 14:34	0.67	6/21/2022 16:16	34.21
6/22/2022 16:00	84.77	6/21/2022 15:17	0.29	6/21/2022 15:47	10.45	6/21/2022 14:35	0.66	6/21/2022 16:17	34.94
6/22/2022 16:01	84.68	6/21/2022 15:18	0.30	6/21/2022 15:48	10.44	6/21/2022 14:36	0.67	6/21/2022 16:18	34.46
6/22/2022 16:02	84.76	6/21/2022 15:19	0.32	6/21/2022 15:49	10.46	6/21/2022 14:37	0.65	6/21/2022 16:19	33.56
6/22/2022 16:03	84.67	6/21/2022 15:20	0.29	6/21/2022 15:50	10.43	6/21/2022 14:38	0.64	6/21/2022 16:20	33.16
6/22/2022 16:04	84.67	6/21/2022 15:21	0.30	6/21/2022 15:51	10.43	6/21/2022 14:39	0.64	6/21/2022 16:21	33.02
6/22/2022 16:05	84.68	6/21/2022 15:22	0.31	6/21/2022 15:52	10.48	6/21/2022 14:40	0.67	6/21/2022 16:22	32.99
6/22/2022 16:06	84.71	6/21/2022 15:23	0.32	6/21/2022 15:53	10.45	6/21/2022 14:41	0.64	6/21/2022 16:23	32.98
6/22/2022 16:07	88.29	6/21/2022 15:24	0.27	6/21/2022 15:54	10.47	6/21/2022 14:42	0.64	6/21/2022 16:24	32.95
6/22/2022 16:08	91.33	6/21/2022 15:25	0.29	6/21/2022 15:55	10.48	6/21/2022 14:43	0.65	6/21/2022 16:25	32.92
6/22/2022 16:09	93.14	6/21/2022 15:26	0.26	6/21/2022 15:56	10.49	6/21/2022 14:44	0.67	6/21/2022 16:26	32.97
6/22/2022 16:10	94.13	6/21/2022 15:27	0.26	6/21/2022 15:57	10.51	6/21/2022 14:45	0.63	6/21/2022 16:27	32.94
6/22/2022 16:11	91.95	6/21/2022 15:28	0.26	6/21/2022 15:58	10.51	6/21/2022 14:46	0.65	6/21/2022 16:28	32.95
6/22/2022 16:12	89.71	6/21/2022 15:29	0.28	6/21/2022 15:59	10.47	6/21/2022 14:47	0.64	6/21/2022 16:29	32.95
6/22/2022 16:13	88.29	6/21/2022 15:30	3.95	6/21/2022 16:00	10.48	6/21/2022 14:48	0.67	6/21/2022 16:30	32.91
6/22/2022 16:14	87.40	6/21/2022 15:31	7.60	6/21/2022 16:01	10.49	6/21/2022 14:49	0.65	6/21/2022 16:31	32.96
6/22/2022 16:15	86.77	6/21/2022 15:32	6.38	6/21/2022 16:02	10.45	6/21/2022 14:50	0.62	6/21/2022 16:32	32.93
6/22/2022 16:16	86.41	6/21/2022 15:33	5.42	6/21/2022 16:03	10.48	6/21/2022 14:51	0.64	6/21/2022 16:33	32.92
6/22/2022 16:17	86.12	6/21/2022 15:34	4.58	6/21/2022 16:04	10.50	6/21/2022 14:52	0.62	6/21/2022 16:34	32.94
6/22/2022 16:18	85.92	6/21/2022 15:35	3.97	6/21/2022 16:05	10.48	6/21/2022 14:53	0.65	6/21/2022 16:35	32.93
6/22/2022 16:19	85.75	6/21/2022 15:36	3.42	6/21/2022 16:06	10.48	6/21/2022 14:54	0.65	6/21/2022 16:36	32.94
6/22/2022 16:20	85.70	6/21/2022 15:37	2.92	6/21/2022 16:07	10.43	6/21/2022 14:55	0.66	6/21/2022 16:37	32.97
6/22/2022 16:21	85.58	6/21/2022 15:38	2.54	6/21/2022 16:08	10.43	6/21/2022 14:56	0.63	6/21/2022 16:38	32.94
6/22/2022 16:22	85.54	6/21/2022 15:39	2.19	6/21/2022 16:09	10.44	6/21/2022 14:57	0.63	6/21/2022 16:39	32.90
6/22/2022 16:23	85.45	6/21/2022 15:40	1.97	6/21/2022 16:10	10.43	6/21/2022 14:58	0.68	6/21/2022 16:40	32.90
6/22/2022 16:24	85.45	6/21/2022 15:41	1.76	6/21/2022 16:11	10.41	6/21/2022 14:59	0.65	6/21/2022 16:41	32.93
6/22/2022 16:25	85.35	6/21/2022 15:42	1.53	6/21/2022 16:12	10.44	6/21/2022 15:00	0.64	6/21/2022 16:42	32.91
6/22/2022 16:26	85.36	6/21/2022 15:43	1.40	6/21/2022 16:13	10.37	6/21/2022 15:01	0.64	6/21/2022 16:43	32.90
6/22/2022 16:27	85.29	6/21/2022 15:44	1.21	6/21/2022 16:14	10.43	6/21/2022 15:02	0.64	6/21/2022 16:44	32.95
6/22/2022 16:28	85.32	6/21/2022 15:45	1.11	6/21/2022 16:15	10.39	6/21/2022 15:03	0.64	6/21/2022 16:45	32.93
6/22/2022 16:29	85.24	6/21/2022 15:46	1.00	6/21/2022 16:16	10.44	6/21/2022 15:04	0.66	6/21/2022 16:46	32.91
6/22/2022 16:30	85.22	6/21/2022 15:47	0.88	6/21/2022 16:17	10.44	6/21/2022 15:05	0.66	6/21/2022 16:47	32.91
6/22/2022 16:31	85.21	6/21/2022 15:48	0.83	6/21/2022 16:18	10.46	6/21/2022 15:06	0.66	6/21/2022 16:48	32.91
6/22/2022 16:32	85.20	6/21/2022 15:49	0.75	6/21/2022 16:19	10.47	6/21/2022 15:07	0.64	6/21/2022 16:49	32.90
6/22/2022 16:33	85.18	6/21/2022 15:50	0.70	6/21/2022 16:20	10.48	6/21/2022 15:08	0.63	6/21/2022 16:50	32.91
6/22/2022 16:34	85.18	6/21/2022 15:51	0.62	6/21/2022 16:21	10.48	6/21/2022 15:09	0.66	6/21/2022 16:51	32.91
6/22/2022 16:35	85.18	6/21/2022 15:52	0.54	6/21/2022 16:22	10.49	6/21/2022 15:10	0.65	6/21/2022 16:52	32.92
6/22/2022 16:36	85.06	6/21/2022 15:53	0.55	6/21/2022 16:23	10.48	6/21/2022 15:11	0.65	6/21/2022 16:53	32.90
6/22/2022 16:37	85.09	6/21/2022 15:54	0.53	6/21/2022 16:24	10.50	6/21/2022 15:12	0.65	6/21/2022 16:54	32.92

6/22/2022 16:38	85.10	6/21/2022 15:55	0.47	6/21/2022 16:25	10.44	6/21/2022 15:13	0.65	6/21/2022 16:55	32.91
6/22/2022 16:39	85.07	6/21/2022 15:56	0.42	6/21/2022 16:26	10.52	6/21/2022 15:14	0.67	6/21/2022 16:56	32.91
6/22/2022 16:40	85.02	6/21/2022 15:57	0.42	6/21/2022 16:27	10.49	6/21/2022 15:15	0.66	6/21/2022 16:57	32.87
6/22/2022 16:41	85.00	6/21/2022 15:58	0.39	6/21/2022 16:28	10.46	6/21/2022 15:16	0.65	6/21/2022 16:58	32.94
6/22/2022 16:42	85.07	6/21/2022 15:59	0.43	6/21/2022 16:29	10.49	6/21/2022 15:17	0.67	6/21/2022 16:59	32.91
6/22/2022 16:43	85.00	6/21/2022 16:00	0.34	6/21/2022 16:30	10.48	6/21/2022 15:18	0.67	6/21/2022 17:00	32.92
6/22/2022 16:44	85.00	6/21/2022 16:01	5.37	6/21/2022 16:31	10.50	6/21/2022 15:19	0.61	6/21/2022 17:01	32.90
6/22/2022 16:45	85.03	6/21/2022 16:02	7.87	6/21/2022 16:32	10.53	6/21/2022 15:20	0.66	6/21/2022 17:02	32.93
6/22/2022 16:46	84.92	6/21/2022 16:03	6.64	6/21/2022 16:33	10.54	6/21/2022 15:21	0.65	6/21/2022 17:03	32.91
6/22/2022 16:47	84.91	6/21/2022 16:04	5.60	6/21/2022 16:34	10.54	6/21/2022 15:22	0.63	6/21/2022 17:04	32.93
6/22/2022 16:48	84.96	6/21/2022 16:05	4.80	6/21/2022 16:35	10.55	6/21/2022 15:23	0.62	6/21/2022 17:05	32.91
6/22/2022 16:49	84.98	6/21/2022 16:06	4.11	6/21/2022 16:36	10.55	6/21/2022 15:24	0.63	6/21/2022 17:06	32.91
6/22/2022 16:50	84.95	6/21/2022 16:07	3.54	6/21/2022 16:37	10.51	6/21/2022 15:25	0.66	6/21/2022 17:07	32.89
6/22/2022 16:51	84.96	6/21/2022 16:08	3.08	6/21/2022 16:38	10.52	6/21/2022 15:26	0.66	6/21/2022 17:08	32.92
6/22/2022 16:52	84.89	6/21/2022 16:09	2.66	6/21/2022 16:39	10.54	6/21/2022 15:27	0.65	6/21/2022 17:09	32.92
6/22/2022 16:53	84.93	6/21/2022 16:10	2.34	6/21/2022 16:40	10.50	6/21/2022 15:28	0.63	6/21/2022 17:10	32.89
6/22/2022 16:54	84.87	6/21/2022 16:11	1.99	6/21/2022 16:41	10.49	6/21/2022 15:29	0.63	6/21/2022 17:11	32.91
6/22/2022 16:55	84.93	6/21/2022 16:12	1.80	6/21/2022 16:42	10.48	6/21/2022 15:30	0.62	6/21/2022 17:12	32.90
6/22/2022 16:56	84.89	6/21/2022 16:13	1.60	6/21/2022 16:43	10.49	6/21/2022 15:31	0.70	6/21/2022 17:13	32.97
6/22/2022 16:57	84.87	6/21/2022 16:14	1.38	6/21/2022 16:44	10.46	6/21/2022 15:32	0.68	6/21/2022 17:14	32.89
6/22/2022 16:58	84.85	6/21/2022 16:15	6.00	6/21/2022 16:45	10.50	6/21/2022 15:33	0.68	6/21/2022 17:15	32.93
6/22/2022 16:59	84.85	6/21/2022 16:16	8.17	6/21/2022 16:46	10.52	6/21/2022 15:34	0.64	6/21/2022 17:16	33.36
6/22/2022 17:00	84.87	6/21/2022 16:17	6.87	6/21/2022 16:47	10.50	6/21/2022 15:35	0.68	6/21/2022 17:17	34.38
6/22/2022 17:01	84.88	6/21/2022 16:18	5.82	6/21/2022 16:48	10.54	6/21/2022 15:36	0.68	6/21/2022 17:18	33.51
6/22/2022 17:02	84.85	6/21/2022 16:19	4.97	6/21/2022 16:49	10.50	6/21/2022 15:37	0.66	6/21/2022 17:19	33.13
6/22/2022 17:03	84.80	6/21/2022 16:20	4.31	6/21/2022 16:50	10.56	6/21/2022 15:38	0.63	6/21/2022 17:20	33.02
6/22/2022 17:04	84.78	6/21/2022 16:21	3.70	6/21/2022 16:51	10.54	6/21/2022 15:39	0.66	6/21/2022 17:21	32.98
6/22/2022 17:05	84.80	6/21/2022 16:22	3.18	6/21/2022 16:52	10.53	6/21/2022 15:40	0.59	6/21/2022 17:22	32.98
6/22/2022 17:06	84.79	6/21/2022 16:23	2.72	6/21/2022 16:53	10.54	6/21/2022 15:41	0.65	6/21/2022 17:23	32.99
6/22/2022 17:07	84.85	6/21/2022 16:24	2.39	6/21/2022 16:54	10.50	6/21/2022 15:42	0.65	6/21/2022 17:24	32.93
6/22/2022 17:08	84.81	6/21/2022 16:25	2.17	6/21/2022 16:55	10.55	6/21/2022 15:43	0.64	6/21/2022 17:25	32.95
6/22/2022 17:09	84.81	6/21/2022 16:26	1.87	6/21/2022 16:56	10.52	6/21/2022 15:44	0.64	6/21/2022 17:26	32.95
6/22/2022 17:10	84.82	6/21/2022 16:27	1.68	6/21/2022 16:57	10.46	6/21/2022 15:45	0.64	6/21/2022 17:27	32.93
6/22/2022 17:11	84.77	6/21/2022 16:28	1.53	6/21/2022 16:58	10.49	6/21/2022 15:46	0.63	6/21/2022 17:28	32.93
6/22/2022 17:12	84.79	6/21/2022 16:29	1.35	6/21/2022 16:59	10.50	6/21/2022 15:47	0.64	6/21/2022 17:29	32.96
6/22/2022 17:13	84.74	6/21/2022 16:30	1.19	6/21/2022 17:00	10.48	6/21/2022 15:48	0.65	6/21/2022 17:30	32.93
6/22/2022 17:14	84.79	6/21/2022 16:31	1.12	6/21/2022 17:01	10.45	6/21/2022 15:49	0.66	6/21/2022 17:31	32.96
6/22/2022 17:15	84.76	6/21/2022 16:32	0.98	6/21/2022 17:02	10.43	6/21/2022 15:50	0.62	6/21/2022 17:32	32.95
6/22/2022 17:16	84.76	6/21/2022 16:33	0.90	6/21/2022 17:03	10.47	6/21/2022 15:51	0.65	6/21/2022 17:33	32.97
6/22/2022 17:17	84.77	6/21/2022 16:34	0.81	6/21/2022 17:04	10.45	6/21/2022 15:52	0.66	6/21/2022 17:34	32.95
6/22/2022 17:18	84.78	6/21/2022 16:35	0.76	6/21/2022 17:05	10.47	6/21/2022 15:53	0.66	6/21/2022 17:35	32.95
6/22/2022 17:19	84.73	6/21/2022 16:36	0.72	6/21/2022 17:06	10.44	6/21/2022 15:54	0.66	6/21/2022 17:36	32.97
6/22/2022 17:20	84.71	6/21/2022 16:37	0.63	6/21/2022 17:07	10.49	6/21/2022 15:55	0.65	6/21/2022 17:37	32.93
6/22/2022 17:21	84.73	6/21/2022 16:38	0.59	6/21/2022 17:08	10.43	6/21/2022 15:56	0.67	6/21/2022 17:38	32.96
6/22/2022 17:22	84.78	6/21/2022 16:39	0.58	6/21/2022 17:09	10.40	6/21/2022 15:57	0.64	6/21/2022 17:39	32.98
6/22/2022 17:23	84.75	6/21/2022 16:40	0.54	6/21/2022 17:10	10.44	6/21/2022 15:58	0.68	6/21/2022 17:40	32.92
6/22/2022 17:24	84.76	6/21/2022 16:41	0.55	6/21/2022 17:11	10.43	6/21/2022 15:59	0.67	6/21/2022 17:41	32.91
6/22/2022 17:25	84.73	6/21/2022 16:42	0.53	6/21/2022 17:12	10.44	6/21/2022 16:00	0.67	6/21/2022 17:42	32.96
6/22/2022 17:26	84.75	6/21/2022 16:43	0.51	6/21/2022 17:13	10.45	6/21/2022 16:01	0.66	6/21/2022 17:43	32.96
6/22/2022 17:27	84.77	6/21/2022 16:44	0.48	6/21/2022 17:14	10.41	6/21/2022 16:02	0.67	6/21/2022 17:44	32.94
6/22/2022 17:28	84.77	6/21/2022 16:45	0.43	6/21/2022 17:15	10.41	6/21/2022 16:03	0.68	6/21/2022 17:45	32.99
6/22/2022 17:29	84.71	6/21/2022 16:46	0.47	6/21/2022 17:16	10.44	6/21/2022 16:04	0.69	6/21/2022 17:46	32.95
6/22/2022 17:30	84.74	6/21/2022 16:47	0.41	6/21/2022 17:17	10.47	6/21/2022 16:05	0.70	6/21/2022 17:47	32.96
6/22/2022 17:31	84.73	6/21/2022 16:48	0.46	6/21/2022 17:18	10.44	6/21/2022 16:06	0.69	6/21/2022 17:48	32.97
6/22/2022 17:32	84.63	6/21/2022 16:49	0.42	6/21/2022 17:19	10.51	6/21/2022 16:07	0.70	6/21/2022 17:49	32.97
6/22/2022 17:33	84.67	6/21/2022 16:50	0.41	6/21/2022 17:20	10.50	6/21/2022 16:08	0.66	6/21/2022 17:50	32.94
6/22/2022 17:34	84.68	6/21/2022 16:51	0.38	6/21/2022 17:21	10.46	6/21/2022 16:09	0.67	6/21/2022 17:51	32.96
6/22/2022 17:35	84.69	6/21/2022 16:52	0.40	6/21/2022 17:22	10.45	6/21/2022 16:10	0.67	6/21/2022 17:52	32.93
6/22/2022 17:36	84.73	6/21/2022 16:53	0.37	6/21/2022 17:23	10.47	6/21/2022 16:11	0.68	6/21/2022 17:53	32.99
6/22/2022 17:37	84.66	6/21/2022 16:54	0.38	6/21/2022 17:24	10.48	6/21/2022 16:12	0.62	6/21/2022 17:54	32.95
6/22/2022 17:38	84.66	6/21/2022 16:55	0.34	6/21/2022 17:25	10.44	6/21/2022 16:13	0.67	6/21/2022 17:55	32.94
6/22/2022 17:39	84.65	6/21/2022 16:56	0.33	6/21/2022 17:26	10.48	6/21/2022 16:14	0.62	6/21/2022 17:56	32.93
6/22/2022 17:40	84.69	6/21/2022 16:57	0.33	6/21/2022 17:27	10.45	6/21/2022 16:15	0.68	6/21/2022 17:57	32.97
6/22/2022 17:41	84.71	6/21/2022 16:58	0.33	6/21/2022 17:28	10.43	6/21/2022 16:16	0.70	6/21/2022 17:58	32.96
6/22/2022 17:42	84.66	6/21/2022 16:59	0.34	6/21/2022 17:29	10.44	6/21/2022 16:17	0.69	6/21/2022 17:59	32.96
6/22/2022 17:43	84.60	6/21/2022 17:00	0.33	6/21/2022 17:30	10.44	6/21/2022 16:18	0.64	6/21/2022 18:00	32.95
6/22/2022 17:44	84.65	6/21/2022 17:01	0.33	6/21/2022 17:31	10.43	6/21/2022 16:19	0.65	6/21/2022 18:01	32.98
6/22/2022 17:45	84.73	6/21/2022 17:02	0.33	6/21/2022 17:32	10.42	6/21/2022 16:20	0.69	6/21/2022 18:02	32.95
6/22/2022 17:46	84.66	6/21/2022 17:03	0.31	6/21/2022 17:33	10.43	6/21/2022 16:21	0.69	6/21/2022 18:03	32.95
6/22/2022 17:47	84.67	6/21/2022 17:04	0.28	6/21/2022 17:34	10.45	6/21/2022 16:22	0.68	6/21/2022 18:04	33.00
6/22/2022 17:48	84.69	6/21/2022 17:05	0.30	6/21/2022 17:35	10.41	6/21/2022 16:23	0.65	6/21/2022 18:05	32.97
6/22/2022 17:49	84.66	6/21/2022 17:06	0.32	6/21/2022 17:36	10.43	6/21/2022 16:24	0.64	6/21/2022 18:06	32.94
6/22/2022 17:50	84.66	6/21/2022 17:07	0.34	6/21/2022 17:37	10.40	6/21/2022 16:25	0.64	6/21/2022 18:07	32.95
6/22/2022 17:51	84.63	6/21/2022 17:08	4.33	6/21/2022 17:38	10.43	6/21/2022 16:26	0.64	6/21/2022 18:08	34.56
6/22/2022 17:52	84.67	6/21/2022 17:09	7.77	6/21/2022 17:39	10.39	6/21/2022 16:27	0.67	6/21/2022 18:09	33.60
6/22/2022 17:53	84.64	6/21/2022 17:10	6.49	6/21/2022 17:40	10.39	6/21/2022 16:28	0.68	6/21/2022 18:10	33.24
6/22/2022 17:54	84.65	6/21/2022 17:11	5.52	6/21/2022 17:41	10.38	6/21/2022 16:29	0.70	6/21/2022 18:11	33.10
6/22/2022 17:55	84.64	6/21/2022 17:12	4.73	6/21/2022 17:42	10.41	6/21/2022 16:30	0.66	6/21/2022 18:12	33.01
6/22/2022 17:56	84.63	6/21/2022 17:13	4.10	6/21/2022 17:43	10.41	6/21/2022 16:31	0.66	6/21/2022 18:13	32.99
6/22/2022 17:57	84.59	6/21/2022 17:14	3.49	6/21/2022 17:44	10.35	6/21/2022 16:32	0.64	6/21/2022 18:14	33.04
6/22/2022 17:58	84.64	6/21/2022 17:15	2.98	6/21/2022 17:45	10.40	6/21/2022 16:33	0.68	6/21/2022 18:15	33.01
6/22/2022 17:59	84.61	6/21/2022 17:16	2.67	6/21/2022 17:46	10.37	6/21/2022 16:34	0.64	6/21/2022 18:16	32.99
6/22/2022 18:00	84.65	6/21/2022 17:17	2.28	6/21/2022 17:47	13.90	6/21/2022 16:35	0.66	6/21/2022 18:17	33.01
6/22/2022 18:01	84.59	6/21/2022 17:18	2.04	6/21/2022 17:48	14.54	6/21/2022 16:36	0.67	6/21/2022 18:18	33.01
6/22/2022 18:02	84.60	6/21/2022 17:19	1.80	6/21/2022 17:49	14.05	6/21/2022 16:37	0.66	6/21/2022 18:19	33.00
6/22/2022 18:03	84.61	6/21/2022 17:20	1.58	6/21/2022 17:50	13.67	6/21/2022 16:38	0.69	6/21/2022 18:20	33.02
6/22/2022 18:04	84.65	6/21/2022 17:21	1.39	6/21/2022 17:51	13.29	6/21/2022 16:39	0.65	6/21/2022 18:21	33.00
6/22/2022 18:05	84.57	6/21/2022 17:22	1.23	6/21/2022 17:52	12.94	6/21/2022 16:40	0.68	6/21/2022 18:22	33.00

6/22/2022 18:06	84.64	6/21/2022 17:23	1.12	6/21/2022 17:53	12.69	6/21/2022 16:41	0.62	6/21/2022 18:23	33.00
6/22/2022 18:07	84.60	6/21/2022 17:24	1.04	6/21/2022 17:54	12.44	6/21/2022 16:42	0.68	6/21/2022 18:24	32.99
6/22/2022 18:08	84.60	6/21/2022 17:25	0.92	6/21/2022 17:55	12.25	6/21/2022 16:43	0.69	6/21/2022 18:25	33.00
6/22/2022 18:09	84.62	6/21/2022 17:26	0.81	6/21/2022 17:56	12.08	6/21/2022 16:44	0.65	6/21/2022 18:26	33.01
6/22/2022 18:10	84.64	6/21/2022 17:27	0.75	6/21/2022 17:57	11.91	6/21/2022 16:45	0.64	6/21/2022 18:27	33.00
6/22/2022 18:11	84.56	6/21/2022 17:28	0.71	6/21/2022 17:58	11.79	6/21/2022 16:46	0.66	6/21/2022 18:28	32.99
6/22/2022 18:12	84.61	6/21/2022 17:29	0.67	6/21/2022 17:59	11.63	6/21/2022 16:47	0.68	6/21/2022 18:29	32.99
6/22/2022 18:13	84.64	6/21/2022 17:30	0.63	6/21/2022 18:00	11.51	6/21/2022 16:48	0.66	6/21/2022 18:30	32.97
6/22/2022 18:14	84.63	6/21/2022 17:31	0.58	6/21/2022 18:01	11.43	6/21/2022 16:49	0.66	6/21/2022 18:31	32.99
6/22/2022 18:15	84.59	6/21/2022 17:32	0.53	6/21/2022 18:02	11.32	6/21/2022 16:50	0.62	6/21/2022 18:32	33.01
6/22/2022 18:16	84.63	6/21/2022 17:33	0.52	6/21/2022 18:03	11.27	6/21/2022 16:51	0.64	6/21/2022 18:33	33.02
6/22/2022 18:17	84.57	6/21/2022 17:34	0.48	6/21/2022 18:04	11.19	6/21/2022 16:52	0.66	6/21/2022 18:34	32.99
6/22/2022 18:18	84.56	6/21/2022 17:35	0.48	6/21/2022 18:05	11.13	6/21/2022 16:53	0.66	6/21/2022 18:35	33.00
6/22/2022 18:19	84.63	6/21/2022 17:36	0.47	6/21/2022 18:06	11.01	6/21/2022 16:54	0.65	6/21/2022 18:36	33.01
6/22/2022 18:20	84.58	6/21/2022 17:37	0.45	6/21/2022 18:07	11.04	6/21/2022 16:55	0.65	6/21/2022 18:37	33.01
6/22/2022 18:21	84.60	6/21/2022 17:38	0.44	6/21/2022 18:08	10.92	6/21/2022 16:56	0.66	6/21/2022 18:38	33.03
6/22/2022 18:22	84.56	6/21/2022 17:39	0.38	6/21/2022 18:09	10.89	6/21/2022 16:57	0.65	6/21/2022 18:39	33.02
6/22/2022 18:23	84.60	6/21/2022 17:40	0.43	6/21/2022 18:10	10.85	6/21/2022 16:58	0.65	6/21/2022 18:40	32.99
6/22/2022 18:24	84.61	6/21/2022 17:41	0.37	6/21/2022 18:11	10.80	6/21/2022 16:59	0.64	6/21/2022 18:41	33.02
6/22/2022 18:25	84.53	6/21/2022 17:42	0.32	6/21/2022 18:12	10.75	6/21/2022 17:00	0.68	6/21/2022 18:42	33.02
6/22/2022 18:26	84.56	6/21/2022 17:43	0.34	6/21/2022 18:13	10.74	6/21/2022 17:01	0.65	6/21/2022 18:43	33.04
6/22/2022 18:27	84.56	6/21/2022 17:44	0.37	6/21/2022 18:14	10.76	6/21/2022 17:02	0.63	6/21/2022 18:44	32.98
6/22/2022 18:28	84.57	6/21/2022 17:45	0.38	6/21/2022 18:15	10.74	6/21/2022 17:03	0.65	6/21/2022 18:45	33.01
6/22/2022 18:29	84.59	6/21/2022 17:46	0.34	6/21/2022 18:16	10.72	6/21/2022 17:04	0.63	6/21/2022 18:46	33.01
6/22/2022 18:30	84.54	6/21/2022 17:47	0.35	6/21/2022 18:17	10.70	6/21/2022 17:05	0.63	6/21/2022 18:47	33.02
6/22/2022 18:31	84.59	6/21/2022 17:48	0.36	6/21/2022 18:18	10.73	6/21/2022 17:06	0.66	6/21/2022 18:48	33.03
6/22/2022 18:32	84.59	6/21/2022 17:49	0.35	6/21/2022 18:19	10.70	6/21/2022 17:07	0.68	6/21/2022 18:49	33.02
6/22/2022 18:33	84.55	6/21/2022 17:50	0.35	6/21/2022 18:20	10.70	6/21/2022 17:08	0.66	6/21/2022 18:50	33.01
6/22/2022 18:34	84.58	6/21/2022 17:51	0.33	6/21/2022 18:21	10.67	6/21/2022 17:09	0.66	6/21/2022 18:51	33.00
6/22/2022 18:35	84.60	6/21/2022 17:52	0.35	6/21/2022 18:22	10.69	6/21/2022 17:10	0.70	6/21/2022 18:52	33.01
6/22/2022 18:36	84.56	6/21/2022 17:53	0.28	6/21/2022 18:23	10.65	6/21/2022 17:11	0.70	6/21/2022 18:53	33.00
6/22/2022 18:37	84.57	6/21/2022 17:54	0.32	6/21/2022 18:24	10.66	6/21/2022 17:12	0.67	6/21/2022 18:54	32.99
6/22/2022 18:38	84.57	6/21/2022 17:55	0.33	6/21/2022 18:25	10.64	6/21/2022 17:13	0.69	6/21/2022 18:55	33.03
6/22/2022 18:39	84.55	6/21/2022 17:56	0.30	6/21/2022 18:26	10.62	6/21/2022 17:14	0.66	6/21/2022 18:56	33.04
6/22/2022 18:40	84.53	6/21/2022 17:57	0.32	6/21/2022 18:27	10.63	6/21/2022 17:15	0.66	6/21/2022 18:57	33.00
6/22/2022 18:41	84.55	6/21/2022 17:58	0.32	6/21/2022 18:28	10.63	6/21/2022 17:16	0.66	6/21/2022 18:58	32.99
6/22/2022 18:42	84.55	6/21/2022 17:59	0.29	6/21/2022 18:29	10.64	6/21/2022 17:17	0.66	6/21/2022 18:59	32.98
6/22/2022 18:43	84.55	6/21/2022 18:00	0.28	6/21/2022 18:30	10.66	6/21/2022 17:18	0.66	6/21/2022 19:00	33.01
6/22/2022 18:44	84.51	6/21/2022 18:01	0.33	6/21/2022 18:31	10.64	6/21/2022 17:19	0.69	6/21/2022 19:01	32.98
6/22/2022 18:45	84.53	6/21/2022 18:02	0.34	6/21/2022 18:32	10.66	6/21/2022 17:20	0.64	6/21/2022 19:02	33.03
6/22/2022 18:46	84.56	6/21/2022 18:03	0.30	6/21/2022 18:33	10.66	6/21/2022 17:21	0.63	6/21/2022 19:03	33.00
6/22/2022 18:47	84.48	6/21/2022 18:04	0.29	6/21/2022 18:34	10.65	6/21/2022 17:22	0.63	6/21/2022 19:04	33.04
6/22/2022 18:48	84.54	6/21/2022 18:05	0.32	6/21/2022 18:35	10.62	6/21/2022 17:23	0.65	6/21/2022 19:05	33.01
6/22/2022 18:49	84.56	6/21/2022 18:06	0.32	6/21/2022 18:36	10.64	6/21/2022 17:24	0.63	6/21/2022 19:06	33.00
6/22/2022 18:50	84.54	6/21/2022 18:07	0.33	6/21/2022 18:37	10.59	6/21/2022 17:25	0.67	6/21/2022 19:07	33.01
6/22/2022 18:51	84.53	6/21/2022 18:08	0.31	6/21/2022 18:38	10.58	6/21/2022 17:26	0.65	6/21/2022 19:08	33.03
6/22/2022 18:52	84.52	6/21/2022 18:09	0.33	6/21/2022 18:39	10.57	6/21/2022 17:27	0.62	6/21/2022 19:09	33.00
6/22/2022 18:53	84.52	6/21/2022 18:10	0.30	6/21/2022 18:40	10.57	6/21/2022 17:28	0.66	6/21/2022 19:10	32.99
6/22/2022 18:54	84.53	6/21/2022 18:11	1.18	6/21/2022 18:41	10.59	6/21/2022 17:29	0.67	6/21/2022 19:11	33.03
6/22/2022 18:55	84.54	6/21/2022 18:12	6.99	6/21/2022 18:42	10.62	6/21/2022 17:30	0.63	6/21/2022 19:12	33.04
6/22/2022 18:56	84.56	6/21/2022 18:13	7.00	6/21/2022 18:43	10.63	6/21/2022 17:31	0.64	6/21/2022 19:13	33.02
6/22/2022 18:57	84.49	6/21/2022 18:14	5.89	6/21/2022 18:44	10.60	6/21/2022 17:32	0.65	6/21/2022 19:14	33.01
6/22/2022 18:58	84.53	6/21/2022 18:15	5.01	6/21/2022 18:45	10.64	6/21/2022 17:33	0.67	6/21/2022 19:15	33.06
6/22/2022 18:59	84.52	6/21/2022 18:16	4.29	6/21/2022 18:46	10.62	6/21/2022 17:34	0.63	6/21/2022 19:16	33.01
6/22/2022 19:00	84.52	6/21/2022 18:17	3.70	6/21/2022 18:47	10.60	6/21/2022 17:35	0.66	6/21/2022 19:17	33.04
6/22/2022 19:01	84.51	6/21/2022 18:18	3.16	6/21/2022 18:48	10.61	6/21/2022 17:36	0.64	6/21/2022 19:18	33.00
6/22/2022 19:02	84.46	6/21/2022 18:19	2.75	6/21/2022 18:49	10.62	6/21/2022 17:37	0.62	6/21/2022 19:19	33.03
6/22/2022 19:03	84.57	6/21/2022 18:20	2.41	6/21/2022 18:50	10.58	6/21/2022 17:38	0.64	6/21/2022 19:20	33.06
6/22/2022 19:04	84.52	6/21/2022 18:21	2.12	6/21/2022 18:51	10.60	6/21/2022 17:39	0.66	6/21/2022 19:21	33.03
6/22/2022 19:05	84.49	6/21/2022 18:22	1.91	6/21/2022 18:52	10.61	6/21/2022 17:40	0.65	6/21/2022 19:22	33.04
6/22/2022 19:06	84.51	6/21/2022 18:23	1.72	6/21/2022 18:53	10.57	6/21/2022 17:41	0.64	6/21/2022 19:23	33.01
6/22/2022 19:07	84.48	6/21/2022 18:24	1.52	6/21/2022 18:54	10.59	6/21/2022 17:42	0.61	6/21/2022 19:24	33.02
6/22/2022 19:08	84.51	6/21/2022 18:25	1.39	6/21/2022 18:55	10.56	6/21/2022 17:43	0.61	6/21/2022 19:25	33.02
6/22/2022 19:09	84.53	6/21/2022 18:26	1.26	6/21/2022 18:56	10.55	6/21/2022 17:44	0.64	6/21/2022 19:26	33.06
6/22/2022 19:10	84.49	6/21/2022 18:27	1.08	6/21/2022 18:57	10.57	6/21/2022 17:45	0.62	6/21/2022 19:27	33.01
6/22/2022 19:11	84.46	6/21/2022 18:28	1.03	6/21/2022 18:58	10.58	6/21/2022 17:46	0.64	6/21/2022 19:28	33.02
6/22/2022 19:12	84.47	6/21/2022 18:29	0.91	6/21/2022 18:59	10.65	6/21/2022 17:47	0.63	6/21/2022 19:29	33.04
6/22/2022 19:13	84.51	6/21/2022 18:30	0.87	6/21/2022 19:00	10.61	6/21/2022 17:48	0.67	6/21/2022 19:30	33.03
6/22/2022 19:14	84.50	6/21/2022 18:31	0.77	6/21/2022 19:01	10.61	6/21/2022 17:49	0.62	6/21/2022 19:31	33.03
6/22/2022 19:15	84.53	6/21/2022 18:32	0.71	6/21/2022 19:02	10.60	6/21/2022 17:50	0.64	6/21/2022 19:32	33.03
6/22/2022 19:16	84.53	6/21/2022 18:33	0.65	6/21/2022 19:03	10.63	6/21/2022 17:51	0.64	6/21/2022 19:33	33.05
6/22/2022 19:17	84.52	6/21/2022 18:34	0.63	6/21/2022 19:04	10.62	6/21/2022 17:52	0.63	6/21/2022 19:34	33.03
6/22/2022 19:18	84.49	6/21/2022 18:35	0.56	6/21/2022 19:05	10.63	6/21/2022 17:53	0.65	6/21/2022 19:35	33.02
6/22/2022 19:19	84.52	6/21/2022 18:36	0.56	6/21/2022 19:06	10.65	6/21/2022 17:54	0.61	6/21/2022 19:36	33.05
6/22/2022 19:20	84.49	6/21/2022 18:37	2.22	6/21/2022 19:07	10.60	6/21/2022 17:55	0.60	6/21/2022 19:37	33.08
6/22/2022 19:21	84.52	6/21/2022 18:38	7.89	6/21/2022 19:08	10.60	6/21/2022 17:56	0.61	6/21/2022 19:38	33.10
6/22/2022 19:22	84.49	6/21/2022 18:39	9.09	6/21/2022 19:09	10.60	6/21/2022 17:57	0.63	6/21/2022 19:39	33.16
6/22/2022 19:23	84.47	6/21/2022 18:40	7.61	6/21/2022 19:10	10.57	6/21/2022 17:58	0.61	6/21/2022 19:40	33.15
6/22/2022 19:24	84.47	6/21/2022 18:41	6.46	6/21/2022 19:11	10.59	6/21/2022 17:59	0.60	6/21/2022 19:41	33.15
6/22/2022 19:25	84.48	6/21/2022 18:42	5.50	6/21/2022 19:12	10.55	6/21/2022 18:00	0.62	6/21/2022 19:42	33.19
6/22/2022 19:26	84.47	6/21/2022 18:43	4.73	6/21/2022 19:13	10.60	6/21/2022 18:01	0.64	6/21/2022 19:43	33.13
6/22/2022 19:27	84.44	6/21/2022 18:44	4.06	6/21/2022 19:14	10.57	6/21/2022 18:02	0.64	6/21/2022 19:44	33.16
6/22/2022 19:28	84.50	6/21/2022 18:45	3.53	6/21/2022 19:15	10.54	6/21/2022 18:03	0.61	6/21/2022 19:45	33.17
6/22/2022 19:29	84.48	6/21/2022 18:46	3.02	6/21/2022 19:16	10.51	6/21/2022 18:04	0.59	6/21/2022 19:46	33.16
6/22/2022 19:30	84.47	6/21/2022 18:47	2.66	6/21/2022 19:17	10.53	6/21/2022 18:05	0.66	6/21/2022 19:47	33.13
6/22/2022 19:31	84.43	6/21/2022 18:48	2.30	6/21/2022 19:18	10.52	6/21/2022 18:06	0.63	6/21/2022 19:48	33.14
6/22/2022 19:32	84.49	6/21/2022 18:49	2.07	6/21/2022 19:19	10.50	6/21/2022 18:07	0.63	6/21/2022 19:49	33.12
6/22/2022 19:33	84.44	6/21/2022 18:50	1.82	6/21/2022 19:20	10.46	6/21/2022 18:08	0.65	6/21/2022 19:50	33.14

6/22/2022 19:34	84.46	6/21/2022 18:51	1.61	6/21/2022 19:21	10.50	6/21/2022 18:09	0.61	6/21/2022 19:51	33.14
6/22/2022 19:35	84.47	6/21/2022 18:52	1.48	6/21/2022 19:22	10.50	6/21/2022 18:10	0.65	6/21/2022 19:52	33.10
6/22/2022 19:36	84.48	6/21/2022 18:53	1.33	6/21/2022 19:23	10.49	6/21/2022 18:11	0.58	6/21/2022 19:53	33.12
6/22/2022 19:37	84.49	6/21/2022 18:54	1.18	6/21/2022 19:24	10.51	6/21/2022 18:12	0.65	6/21/2022 19:54	33.15
6/22/2022 19:38	84.50	6/21/2022 18:55	1.07	6/21/2022 19:25	10.51	6/21/2022 18:13	0.66	6/21/2022 19:55	33.10
6/22/2022 19:39	84.48	6/21/2022 18:56	1.01	6/21/2022 19:26	10.54	6/21/2022 18:14	0.68	6/21/2022 19:56	33.09
6/22/2022 19:40	84.50	6/21/2022 18:57	0.90	6/21/2022 19:27	10.52	6/21/2022 18:15	0.66	6/21/2022 19:57	33.12
6/22/2022 19:41	84.50	6/21/2022 18:58	0.81	6/21/2022 19:28	10.56	6/21/2022 18:16	0.67	6/21/2022 19:58	33.11
6/22/2022 19:42	84.45	6/21/2022 18:59	0.75	6/21/2022 19:29	10.53	6/21/2022 18:17	0.64	6/21/2022 19:59	33.11
6/22/2022 19:43	84.45	6/21/2022 19:00	0.70	6/21/2022 19:30	10.52	6/21/2022 18:18	0.67	6/21/2022 20:00	33.12
6/22/2022 19:44	84.46	6/21/2022 19:01	0.65	6/21/2022 19:31	10.56	6/21/2022 18:19	0.62	6/21/2022 20:01	33.12
6/22/2022 19:45	84.47	6/21/2022 19:02	0.78	6/21/2022 19:32	10.55	6/21/2022 18:20	0.63	6/21/2022 20:02	33.08
6/22/2022 19:46	84.43	6/21/2022 19:03	0.86	6/21/2022 19:33	10.52	6/21/2022 18:21	0.67	6/21/2022 20:03	33.13
6/22/2022 19:47	84.45	6/21/2022 19:04	0.88	6/21/2022 19:34	10.51	6/21/2022 18:22	0.63	6/21/2022 20:04	33.11
6/22/2022 19:48	84.44	6/21/2022 19:05	0.87	6/21/2022 19:35	10.53	6/21/2022 18:23	0.64	6/21/2022 20:05	33.09
6/22/2022 19:49	84.42	6/21/2022 19:06	0.83	6/21/2022 19:36	10.55	6/21/2022 18:24	0.64	6/21/2022 20:06	33.10
6/22/2022 19:50	84.49	6/21/2022 19:07	0.75	6/21/2022 19:37	10.50	6/21/2022 18:25	0.64	6/21/2022 20:07	33.09
6/22/2022 19:51	84.45	6/21/2022 19:08	0.66	6/21/2022 19:38	10.47	6/21/2022 18:26	0.64	6/21/2022 20:08	33.09
6/22/2022 19:52	84.41	6/21/2022 19:09	0.68	6/21/2022 19:39	10.49	6/21/2022 18:27	0.62	6/21/2022 20:09	33.10
6/22/2022 19:53	84.43	6/21/2022 19:10	0.64	6/21/2022 19:40	10.52	6/21/2022 18:28	0.63	6/21/2022 20:10	33.12
6/22/2022 19:54	84.46	6/21/2022 19:11	0.61	6/21/2022 19:41	10.46	6/21/2022 18:29	0.64	6/21/2022 20:11	33.10
6/22/2022 19:55	84.49	6/21/2022 19:12	0.57	6/21/2022 19:42	10.45	6/21/2022 18:30	0.63	6/21/2022 20:12	33.10
6/22/2022 19:56	84.40	6/21/2022 19:13	0.53	6/21/2022 19:43	10.42	6/21/2022 18:31	0.61	6/21/2022 20:13	33.10
6/22/2022 19:57	84.43	6/21/2022 19:14	0.52	6/21/2022 19:44	10.46	6/21/2022 18:32	0.66	6/21/2022 20:14	33.14
6/22/2022 19:58	84.49	6/21/2022 19:15	0.48	6/21/2022 19:45	10.46	6/21/2022 18:33	0.60	6/21/2022 20:15	33.12
6/22/2022 19:59	84.41	6/21/2022 19:16	0.48	6/21/2022 19:46	10.46	6/21/2022 18:34	0.61	6/21/2022 20:16	33.10
6/22/2022 20:00	84.43	6/21/2022 19:17	0.44	6/21/2022 19:47	10.46	6/21/2022 18:35	0.62	6/21/2022 20:17	33.08
6/22/2022 20:01	84.44	6/21/2022 19:18	1.45	6/21/2022 19:48	10.47	6/21/2022 18:36	0.63	6/21/2022 20:18	33.12
6/22/2022 20:02	84.44	6/21/2022 19:19	7.24	6/21/2022 19:49	10.47	6/21/2022 18:37	0.64	6/21/2022 20:19	33.07
6/22/2022 20:03	84.44	6/21/2022 19:20	6.89	6/21/2022 19:50	10.51	6/21/2022 18:38	0.65	6/21/2022 20:20	33.15
6/22/2022 20:04	84.43	6/21/2022 19:21	5.81	6/21/2022 19:51	10.52	6/21/2022 18:39	0.62	6/21/2022 20:21	33.11
6/22/2022 20:05	84.39	6/21/2022 19:22	4.96	6/21/2022 19:52	10.49	6/21/2022 18:40	0.65	6/21/2022 20:22	33.10
6/22/2022 20:06	84.43	6/21/2022 19:23	4.26	6/21/2022 19:53	10.51	6/21/2022 18:41	0.70	6/21/2022 20:23	33.07
6/22/2022 20:07	84.42	6/21/2022 19:24	3.65	6/21/2022 19:54	10.52	6/21/2022 18:42	0.66	6/21/2022 20:24	33.12
6/22/2022 20:08	84.40	6/21/2022 19:25	3.15	6/21/2022 19:55	10.51	6/21/2022 18:43	0.63	6/21/2022 20:25	33.13
6/22/2022 20:09	84.43	6/21/2022 19:26	2.74	6/21/2022 19:56	10.47	6/21/2022 18:44	0.67	6/21/2022 20:26	33.12
6/22/2022 20:10	84.43	6/21/2022 19:27	2.41	6/21/2022 19:57	10.51	6/21/2022 18:45	0.66	6/21/2022 20:27	33.13
6/22/2022 20:11	84.40	6/21/2022 19:28	2.10	6/21/2022 19:58	10.49	6/21/2022 18:46	0.62	6/21/2022 20:28	33.13
6/22/2022 20:12	84.42	6/21/2022 19:29	1.88	6/21/2022 19:59	10.46	6/21/2022 18:47	0.63	6/21/2022 20:29	33.09
6/22/2022 20:13	84.42	6/21/2022 19:30	1.69	6/21/2022 20:00	10.47	6/21/2022 18:48	0.64	6/21/2022 20:30	33.12
6/22/2022 20:14	84.44	6/21/2022 19:31	1.51	6/21/2022 20:01	10.48	6/21/2022 18:49	0.65	6/21/2022 20:31	33.10
6/22/2022 20:15	84.42	6/21/2022 19:32	1.37	6/21/2022 20:02	10.48	6/21/2022 18:50	0.63	6/21/2022 20:32	33.14
6/22/2022 20:16	84.45	6/21/2022 19:33	1.21	6/21/2022 20:03	10.47	6/21/2022 18:51	0.62	6/21/2022 20:33	33.11
6/22/2022 20:17	84.42	6/21/2022 19:34	1.07	6/21/2022 20:04	10.44	6/21/2022 18:52	0.65	6/21/2022 20:34	33.12
6/22/2022 20:18	87.84	6/21/2022 19:35	0.96	6/21/2022 20:05	10.45	6/21/2022 18:53	0.66	6/21/2022 20:35	33.12
6/22/2022 20:19	91.01	6/21/2022 19:36	4.25	6/21/2022 20:06	10.45	6/21/2022 18:54	0.61	6/21/2022 20:36	33.12
6/22/2022 20:20	93.05	6/21/2022 19:37	8.16	6/21/2022 20:07	10.43	6/21/2022 18:55	0.65	6/21/2022 20:37	33.12
6/22/2022 20:21	94.39	6/21/2022 19:38	6.86	6/21/2022 20:08	10.40	6/21/2022 18:56	0.67	6/21/2022 20:38	33.09
6/22/2022 20:22	92.82	6/21/2022 19:39	5.78	6/21/2022 20:09	10.48	6/21/2022 18:57	0.62	6/21/2022 20:39	33.11
6/22/2022 20:23	90.21	6/21/2022 19:40	5.00	6/21/2022 20:10	10.44	6/21/2022 18:58	0.64	6/21/2022 20:40	33.13
6/22/2022 20:24	88.58	6/21/2022 19:41	4.27	6/21/2022 20:11	10.43	6/21/2022 18:59	0.66	6/21/2022 20:41	33.12
6/22/2022 20:25	87.52	6/21/2022 19:42	3.69	6/21/2022 20:12	10.39	6/21/2022 19:00	0.63	6/21/2022 20:42	33.14
6/22/2022 20:26	86.90	6/21/2022 19:43	3.21	6/21/2022 20:13	10.40	6/21/2022 19:01	4.03	6/21/2022 20:43	33.13
6/22/2022 20:27	86.39	6/21/2022 19:44	2.77	6/21/2022 20:14	10.40	6/21/2022 19:02	10.46	6/21/2022 20:44	33.13
6/22/2022 20:28	86.07	6/21/2022 19:45	2.42	6/21/2022 20:15	10.41	6/21/2022 19:03	7.07	6/21/2022 20:45	33.12
6/22/2022 20:29	85.88	6/21/2022 19:46	2.15	6/21/2022 20:16	10.42	6/21/2022 19:04	4.67	6/21/2022 20:46	33.11
6/22/2022 20:30	85.70	6/21/2022 19:47	1.91	6/21/2022 20:17	10.36	6/21/2022 19:05	2.81	6/21/2022 20:47	33.14
6/22/2022 20:31	85.62	6/21/2022 19:48	1.72	6/21/2022 20:18	10.40	6/21/2022 19:06	1.50	6/21/2022 20:48	33.14
6/22/2022 20:32	85.46	6/21/2022 19:49	1.51	6/21/2022 20:19	10.38	6/21/2022 19:07	0.71	6/21/2022 20:49	33.10
6/22/2022 20:33	85.43	6/21/2022 19:50	1.38	6/21/2022 20:20	10.45	6/21/2022 19:08	0.73	6/21/2022 20:50	33.12
6/22/2022 20:34	85.34	6/21/2022 19:51	1.27	6/21/2022 20:21	10.45	6/21/2022 19:09	0.68	6/21/2022 20:51	33.12
6/22/2022 20:35	85.28	6/21/2022 19:52	1.12	6/21/2022 20:22	10.45	6/21/2022 19:10	0.71	6/21/2022 20:52	33.10
6/22/2022 20:36	85.26	6/21/2022 19:53	1.02	6/21/2022 20:23	10.45	6/21/2022 19:11	0.71	6/21/2022 20:53	33.11
6/22/2022 20:37	85.27	6/21/2022 19:54	0.93	6/21/2022 20:24	10.44	6/21/2022 19:12	0.66	6/21/2022 20:54	33.15
6/22/2022 20:38	85.23	6/21/2022 19:55	0.88	6/21/2022 20:25	10.45	6/21/2022 19:13	0.71	6/21/2022 20:55	33.14
6/22/2022 20:39	85.18	6/21/2022 19:56	0.82	6/21/2022 20:26	10.46	6/21/2022 19:14	0.69	6/21/2022 20:56	33.14
6/22/2022 20:40	85.15	6/21/2022 19:57	0.74	6/21/2022 20:27	10.49	6/21/2022 19:15	0.69	6/21/2022 20:57	33.12
6/22/2022 20:41	85.06	6/21/2022 19:58	0.67	6/21/2022 20:28	10.45	6/21/2022 19:16	0.68	6/21/2022 20:58	33.13
6/22/2022 20:42	85.06	6/21/2022 19:59	0.63	6/21/2022 20:29	10.47	6/21/2022 19:17	0.69	6/21/2022 20:59	33.11
6/22/2022 20:43	85.08	6/21/2022 20:00	0.62	6/21/2022 20:30	10.48	6/21/2022 19:18	0.71	6/21/2022 21:00	33.11
6/22/2022 20:44	84.99	6/21/2022 20:01	0.56	6/21/2022 20:31	10.51	6/21/2022 19:19	0.70	6/21/2022 21:01	33.13
6/22/2022 20:45	85.05	6/21/2022 20:02	0.56	6/21/2022 20:32	10.52	6/21/2022 19:20	0.73	6/21/2022 21:02	33.14
6/22/2022 20:46	85.01	6/21/2022 20:03	0.54	6/21/2022 20:33	10.57	6/21/2022 19:21	0.69	6/21/2022 21:03	33.08
6/22/2022 20:47	84.97	6/21/2022 20:04	0.46	6/21/2022 20:34	10.59	6/21/2022 19:22	0.72	6/21/2022 21:04	33.13
6/22/2022 20:48	84.98	6/21/2022 20:05	0.48	6/21/2022 20:35	10.55	6/21/2022 19:23	0.65	6/21/2022 21:05	33.16
6/22/2022 20:49	84.98	6/21/2022 20:06	0.49	6/21/2022 20:36	10.58	6/21/2022 19:24	0.70	6/21/2022 21:06	33.12
6/22/2022 20:50	84.94	6/21/2022 20:07	0.46	6/21/2022 20:37	10.53	6/21/2022 19:25	0.68	6/21/2022 21:07	33.09
6/22/2022 20:51	84.92	6/21/2022 20:08	0.43	6/21/2022 20:38	10.60	6/21/2022 19:26	0.67	6/21/2022 21:08	33.15
6/22/2022 20:52	84.95	6/21/2022 20:09	0.45	6/21/2022 20:39	10.57	6/21/2022 19:27	0.66	6/21/2022 21:09	33.12
6/22/2022 20:53	84.87	6/21/2022 20:10	0.41	6/21/2022 20:40	10.59	6/21/2022 19:28	0.68	6/21/2022 21:10	33.14
6/22/2022 20:54	84.91	6/21/2022 20:11	0.40	6/21/2022 20:41	10.56	6/21/2022 19:29	0.70	6/21/2022 21:11	33.11
6/22/2022 20:55	84.89	6/21/2022 20:12	0.42	6/21/2022 20:42	10.58	6/21/2022 19:30	0.66	6/21/2022 21:12	33.15
6/22/2022 20:56	84.82	6/21/2022 20:13	0.40	6/21/2022 20:43	10.54	6/21/2022 19:31	0.68	6/21/2022 21:13	33.11
6/22/2022 20:57	84.84	6/21/2022 20:14	0.39	6/21/2022 20:44	10.56	6/21/2022 19:32	0.64	6/21/2022 21:14	33.15
6/22/2022 20:58	84.89	6/21/2022 20:15	0.41	6/21/2022 20:45	10.51	6/21/2022 19:33	0.67	6/21/2022 21:15	33.12
6/22/2022 20:59	84.87	6/21/2022 20:16	0.41	6/21/2022 20:46	10.53	6/21/2022 19:34	0.63	6/21/2022 21:16	33.16
6/22/2022 21:00	84.88	6/21/2022 20:17	0.36	6/21/2022 20:47	11.88	6/21/2022 19:35	0.66	6/21/2022 21:17	33.13
6/22/2022 21:01	84.78	6/21/2022 20:18	0.39	6/21/2022 20:48	14.23	6/21/2022 19:36	0.68	6/21/2022 21:18	33.14

6/22/2022 21:02	84.87	6/21/2022 20:19	0.37	6/21/2022 20:49	13.75	6/21/2022 19:37	0.69	6/21/2022 21:19	33.15
6/22/2022 21:03	84.81	6/21/2022 20:20	0.36	6/21/2022 20:50	13.36	6/21/2022 19:38	0.69	6/21/2022 21:20	33.15
6/22/2022 21:04	84.83	6/21/2022 20:21	3.69	6/21/2022 20:51	13.01	6/21/2022 19:39	0.68	6/21/2022 21:21	33.18
6/22/2022 21:05	84.81	6/21/2022 20:22	7.79	6/21/2022 20:52	12.71	6/21/2022 19:40	0.67	6/21/2022 21:22	33.16
6/22/2022 21:06	84.82	6/21/2022 20:23	6.66	6/21/2022 20:53	12.46	6/21/2022 19:41	0.65	6/21/2022 21:23	33.14
6/22/2022 21:07	84.83	6/21/2022 20:24	5.77	6/21/2022 20:54	12.25	6/21/2022 19:42	0.66	6/21/2022 21:24	33.14
6/22/2022 21:08	84.77	6/21/2022 20:25	4.96	6/21/2022 20:55	12.04	6/21/2022 19:43	0.67	6/21/2022 21:25	33.15
6/22/2022 21:09	84.79	6/21/2022 20:26	4.37	6/21/2022 20:56	11.86	6/21/2022 19:44	0.66	6/21/2022 21:26	33.13
6/22/2022 21:10	84.77	6/21/2022 20:27	3.76	6/21/2022 20:57	11.76	6/21/2022 19:45	0.67	6/21/2022 21:27	33.15
6/22/2022 21:11	84.77	6/21/2022 20:28	3.27	6/21/2022 20:58	11.58	6/21/2022 19:46	0.67	6/21/2022 21:28	33.16
6/22/2022 21:12	84.79	6/21/2022 20:29	2.81	6/21/2022 20:59	11.46	6/21/2022 19:47	0.65	6/21/2022 21:29	33.13
6/22/2022 21:13	84.77	6/21/2022 20:30	2.49	6/21/2022 21:00	11.38	6/21/2022 19:48	0.66	6/21/2022 21:30	33.13
6/22/2022 21:14	84.77	6/21/2022 20:31	2.20	6/21/2022 21:01	11.31	6/21/2022 19:49	0.63	6/21/2022 21:31	33.11
6/22/2022 21:15	84.75	6/21/2022 20:32	1.92	6/21/2022 21:02	11.24	6/21/2022 19:50	0.64	6/21/2022 21:32	33.12
6/22/2022 21:16	84.82	6/21/2022 20:33	1.73	6/21/2022 21:03	11.17	6/21/2022 19:51	0.66	6/21/2022 21:33	33.12
6/22/2022 21:17	84.76	6/21/2022 20:34	1.67	6/21/2022 21:04	11.14	6/21/2022 19:52	0.62	6/21/2022 21:34	33.15
6/22/2022 21:18	84.71	6/21/2022 20:35	1.59	6/21/2022 21:05	11.06	6/21/2022 19:53	0.64	6/21/2022 21:35	33.14
6/22/2022 21:19	84.74	6/21/2022 20:36	1.52	6/21/2022 21:06	11.05	6/21/2022 19:54	0.67	6/21/2022 21:36	33.12
6/22/2022 21:20	84.75	6/21/2022 20:37	1.47	6/21/2022 21:07	10.99	6/21/2022 19:55	0.66	6/21/2022 21:37	33.14
6/22/2022 21:21	84.72	6/21/2022 20:38	1.32	6/21/2022 21:08	10.93	6/21/2022 19:56	0.65	6/21/2022 21:38	33.15
6/22/2022 21:22	84.75	6/21/2022 20:39	1.19	6/21/2022 21:09	10.90	6/21/2022 19:57	0.66	6/21/2022 21:39	33.16
6/22/2022 21:23	84.74	6/21/2022 20:40	1.09	6/21/2022 21:10	10.89	6/21/2022 19:58	0.66	6/21/2022 21:40	33.13
6/22/2022 21:24	84.79	6/21/2022 20:41	1.04	6/21/2022 21:11	10.83	6/21/2022 19:59	0.64	6/21/2022 21:41	33.14
6/22/2022 21:25	84.75	6/21/2022 20:42	0.93	6/21/2022 21:12	10.81	6/21/2022 20:00	0.69	6/21/2022 21:42	33.13
6/22/2022 21:26	84.74	6/21/2022 20:43	0.85	6/21/2022 21:13	10.83	6/21/2022 20:01	0.64	6/21/2022 21:43	33.12
6/22/2022 21:27	84.70	6/21/2022 20:44	0.80	6/21/2022 21:14	10.75	6/21/2022 20:02	0.68	6/21/2022 21:44	33.16
6/22/2022 21:28	84.73	6/21/2022 20:45	0.75	6/21/2022 21:15	10.75	6/21/2022 20:03	0.62	6/21/2022 21:45	33.15
6/22/2022 21:29	84.74	6/21/2022 20:46	0.74	6/21/2022 21:16	10.70	6/21/2022 20:04	0.64	6/21/2022 21:46	33.16
6/22/2022 21:30	84.67	6/21/2022 20:47	0.66	6/21/2022 21:17	10.70	6/21/2022 20:05	0.62	6/21/2022 21:47	33.13
6/22/2022 21:31	84.72	6/21/2022 20:48	0.61	6/21/2022 21:18	10.69	6/21/2022 20:06	0.68	6/21/2022 21:48	33.15
6/22/2022 21:32	84.70	6/21/2022 20:49	0.60	6/21/2022 21:19	10.69	6/21/2022 20:07	0.64	6/21/2022 21:49	33.16
6/22/2022 21:33	84.66	6/21/2022 20:50	0.57	6/21/2022 21:20	10.65	6/21/2022 20:08	0.63	6/21/2022 21:50	33.15
6/22/2022 21:34	84.68	6/21/2022 20:51	0.54	6/21/2022 21:21	10.67	6/21/2022 20:09	0.63	6/21/2022 21:51	33.18
6/22/2022 21:35	84.69	6/21/2022 20:52	0.52	6/21/2022 21:22	10.67	6/21/2022 20:10	0.68	6/21/2022 21:52	33.16
6/22/2022 21:36	84.70	6/21/2022 20:53	0.48	6/21/2022 21:23	10.70	6/21/2022 20:11	0.64	6/21/2022 21:53	35.56
6/22/2022 21:37	84.68	6/21/2022 20:54	0.50	6/21/2022 21:24	10.65	6/21/2022 20:12	0.67	6/21/2022 21:54	34.26
6/22/2022 21:38	84.67	6/21/2022 20:55	0.49	6/21/2022 21:25	10.66	6/21/2022 20:13	0.65	6/21/2022 21:55	33.59
6/22/2022 21:39	84.73	6/21/2022 20:56	0.46	6/21/2022 21:26	10.64	6/21/2022 20:14	0.64	6/21/2022 21:56	33.33
6/22/2022 21:40	84.71	6/21/2022 20:57	0.43	6/21/2022 21:27	10.61	6/21/2022 20:15	0.65	6/21/2022 21:57	33.23
6/22/2022 21:41	84.65	6/21/2022 20:58	0.47	6/21/2022 21:28	10.62	6/21/2022 20:16	0.68	6/21/2022 21:58	33.24
6/22/2022 21:42	84.66	6/21/2022 20:59	0.39	6/21/2022 21:29	10.60	6/21/2022 20:17	0.64	6/21/2022 21:59	33.24
6/22/2022 21:43	84.64	6/21/2022 21:00	0.41	6/21/2022 21:30	10.61	6/21/2022 20:18	0.61	6/21/2022 22:00	33.20
6/22/2022 21:44	84.66	6/21/2022 21:01	0.39	6/21/2022 21:31	10.60	6/21/2022 20:19	0.62	6/21/2022 22:01	33.18
6/22/2022 21:45	84.69	6/21/2022 21:02	0.41	6/21/2022 21:32	10.63	6/21/2022 20:20	0.65	6/21/2022 22:02	33.21
6/22/2022 21:46	84.67	6/21/2022 21:03	0.35	6/21/2022 21:33	10.59	6/21/2022 20:21	0.67	6/21/2022 22:03	33.20
6/22/2022 21:47	84.68	6/21/2022 21:04	0.40	6/21/2022 21:34	10.62	6/21/2022 20:22	5.17	6/21/2022 22:04	33.18
6/22/2022 21:48	84.66	6/21/2022 21:05	0.43	6/21/2022 21:35	10.62	6/21/2022 20:23	8.41	6/21/2022 22:05	33.20
6/22/2022 21:49	84.66	6/21/2022 21:06	0.40	6/21/2022 21:36	10.63	6/21/2022 20:24	5.67	6/21/2022 22:06	34.99
6/22/2022 21:50	84.70	6/21/2022 21:07	0.41	6/21/2022 21:37	10.63	6/21/2022 20:25	3.69	6/21/2022 22:07	33.94
6/22/2022 21:51	84.65	6/21/2022 21:08	0.43	6/21/2022 21:38	10.65	6/21/2022 20:26	2.11	6/21/2022 22:08	33.49
6/22/2022 21:52	84.71	6/21/2022 21:09	0.37	6/21/2022 21:39	10.69	6/21/2022 20:27	1.08	6/21/2022 22:09	33.34
6/22/2022 21:53	84.67	6/21/2022 21:10	0.37	6/21/2022 21:40	10.67	6/21/2022 20:28	0.68	6/21/2022 22:10	33.23
6/22/2022 21:54	84.67	6/21/2022 21:11	0.38	6/21/2022 21:41	10.67	6/21/2022 20:29	0.72	6/21/2022 22:11	33.25
6/22/2022 21:55	84.65	6/21/2022 21:12	0.43	6/21/2022 21:42	10.69	6/21/2022 20:30	0.71	6/21/2022 22:12	33.23
6/22/2022 21:56	84.61	6/21/2022 21:13	0.40	6/21/2022 21:43	10.66	6/21/2022 20:31	0.70	6/21/2022 22:13	33.23
6/22/2022 21:57	84.64	6/21/2022 21:14	0.42	6/21/2022 21:44	10.72	6/21/2022 20:32	0.70	6/21/2022 22:14	33.20
6/22/2022 21:58	84.67	6/21/2022 21:15	0.39	6/21/2022 21:45	10.71	6/21/2022 20:33	3.31	6/21/2022 22:15	33.20
6/22/2022 21:59	84.66	6/21/2022 21:16	0.37	6/21/2022 21:46	10.78	6/21/2022 20:34	9.41	6/21/2022 22:16	33.19
6/22/2022 22:00	84.67	6/21/2022 21:17	0.32	6/21/2022 21:47	10.72	6/21/2022 20:35	6.30	6/21/2022 22:17	33.20
6/22/2022 22:01	84.60	6/21/2022 21:18	0.41	6/21/2022 21:48	10.72	6/21/2022 20:36	4.09	6/21/2022 22:18	33.24
6/22/2022 22:02	84.63	6/21/2022 21:19	0.37	6/21/2022 21:49	10.73	6/21/2022 20:37	2.46	6/21/2022 22:19	33.18
6/22/2022 22:03	84.62	6/21/2022 21:20	0.39	6/21/2022 21:50	10.73	6/21/2022 20:38	1.23	6/21/2022 22:20	33.20
6/22/2022 22:04	84.61	6/21/2022 21:21	0.41	6/21/2022 21:51	10.76	6/21/2022 20:39	0.69	6/21/2022 22:21	33.19
6/22/2022 22:05	84.59	6/21/2022 21:22	0.39	6/21/2022 21:52	10.77	6/21/2022 20:40	0.69	6/21/2022 22:22	33.21
6/22/2022 22:06	84.62	6/21/2022 21:23	0.40	6/21/2022 21:53	10.78	6/21/2022 20:41	0.69	6/21/2022 22:23	33.21
6/22/2022 22:07	84.61	6/21/2022 21:24	0.85	6/21/2022 21:54	10.75	6/21/2022 20:42	0.70	6/21/2022 22:24	33.21
6/22/2022 22:08	84.61	6/21/2022 21:25	6.73	6/21/2022 21:55	10.75	6/21/2022 20:43	0.68	6/21/2022 22:25	33.25
6/22/2022 22:09	84.57	6/21/2022 21:26	7.04	6/21/2022 21:56	10.81	6/21/2022 20:44	0.71	6/21/2022 22:26	33.18
6/22/2022 22:10	84.61	6/21/2022 21:27	5.89	6/21/2022 21:57	10.78	6/21/2022 20:45	0.71	6/21/2022 22:27	33.18
6/22/2022 22:11	84.62	6/21/2022 21:28	5.01	6/21/2022 21:58	10.75	6/21/2022 20:46	0.68	6/21/2022 22:28	33.22
6/22/2022 22:12	84.67	6/21/2022 21:29	4.34	6/21/2022 21:59	10.74	6/21/2022 20:47	0.66	6/21/2022 22:29	33.22
6/22/2022 22:13	84.65	6/21/2022 21:30	3.72	6/21/2022 22:00	10.72	6/21/2022 20:48	0.71	6/21/2022 22:30	33.25
6/22/2022 22:14	84.59	6/21/2022 21:31	3.23	6/21/2022 22:01	10.71	6/21/2022 20:49	0.73	6/21/2022 22:31	33.18
6/22/2022 22:15	84.60	6/21/2022 21:32	2.77	6/21/2022 22:02	10.71	6/21/2022 20:50	0.69	6/21/2022 22:32	33.23
6/22/2022 22:16	84.65	6/21/2022 21:33	2.44	6/21/2022 22:03	10.71	6/21/2022 20:51	0.69	6/21/2022 22:33	33.20
6/22/2022 22:17	84.59	6/21/2022 21:34	2.17	6/21/2022 22:04	10.72	6/21/2022 20:52	0.70	6/21/2022 22:34	33.19
6/22/2022 22:18	84.58	6/21/2022 21:35	1.92	6/21/2022 22:05	10.67	6/21/2022 20:53	0.70	6/21/2022 22:35	33.23
6/22/2022 22:19	84.64	6/21/2022 21:36	1.68	6/21/2022 22:06	10.63	6/21/2022 20:54	0.68	6/21/2022 22:36	33.23
6/22/2022 22:20	84.63	6/21/2022 21:37	1.53	6/21/2022 22:07	10.65	6/21/2022 20:55	0.70	6/21/2022 22:37	33.23
6/22/2022 22:21	84.64	6/21/2022 21:38	1.34	6/21/2022 22:08	10.64	6/21/2022 20:56	0.67	6/21/2022 22:38	33.20
6/22/2022 22:22	84.62	6/21/2022 21:39	1.22	6/21/2022 22:09	10.60	6/21/2022 20:57	0.66	6/21/2022 22:39	33.18
6/22/2022 22:23	84.62	6/21/2022 21:40	1.10	6/21/2022 22:10	10.65	6/21/2022 20:58	0.69	6/21/2022 22:40	33.22
6/22/2022 22:24	84.58	6/21/2022 21:41	1.01	6/21/2022 22:11	10.61	6/21/2022 20:59	0.68	6/21/2022 22:41	33.21
6/22/2022 22:25	84.58	6/21/2022 21:42	0.93	6/21/2022 22:12	10.66	6/21/2022 21:00	0.69	6/21/2022 22:42	33.18
6/22/2022 22:26	84.60	6/21/2022 21:43	0.86	6/21/2022 22:13	10.62	6/21/2022 21:01	0.67	6/21/2022 22:43	33.20
6/22/2022 22:27	84.57	6/21/2022 21:44	0.79	6/21/2022 22:14	10.58	6/21/2022 21:02	0.67	6/21/2022 22:44	33.21
6/22/2022 22:28	84.64	6/21/2022 21:45	0.75	6/21/2022 22:15	10.64	6/21/2022 21:03	0.66	6/21/2022 22:45	33.20
6/22/2022 22:29	84.56	6/21/2022 21:46	0.70	6/21/2022 22:16	10.60	6/21/2022 21:04	0.68	6/21/2022 22:46	33.20

6/22/2022 22:30	84.59	6/21/2022 21:47	0.66	6/21/2022 22:17	10.63	6/21/2022 21:05	0.68	6/21/2022 22:47	33.22
6/22/2022 22:31	84.57	6/21/2022 21:48	0.63	6/21/2022 22:18	10.62	6/21/2022 21:06	0.68	6/21/2022 22:48	33.19
6/22/2022 22:32	84.58	6/21/2022 21:49	0.56	6/21/2022 22:19	10.62	6/21/2022 21:07	0.66	6/21/2022 22:49	33.22
6/22/2022 22:33	84.57	6/21/2022 21:50	0.54	6/21/2022 22:20	10.62	6/21/2022 21:08	0.68	6/21/2022 22:50	33.24
6/22/2022 22:34	84.59	6/21/2022 21:51	0.49	6/21/2022 22:21	10.59	6/21/2022 21:09	0.70	6/21/2022 22:51	33.22
6/22/2022 22:35	84.56	6/21/2022 21:52	0.53	6/21/2022 22:22	10.59	6/21/2022 21:10	0.67	6/21/2022 22:52	33.18
6/22/2022 22:36	84.54	6/21/2022 21:53	0.46	6/21/2022 22:23	13.26	6/21/2022 21:11	0.65	6/21/2022 22:53	33.21
6/22/2022 22:37	84.52	6/21/2022 21:54	0.45	6/21/2022 22:24	14.02	6/21/2022 21:12	0.67	6/21/2022 22:54	33.22
6/22/2022 22:38	84.53	6/21/2022 21:55	0.46	6/21/2022 22:25	13.56	6/21/2022 21:13	0.68	6/21/2022 22:55	33.23
6/22/2022 22:39	84.55	6/21/2022 21:56	0.44	6/21/2022 22:26	16.35	6/21/2022 21:14	0.68	6/21/2022 22:56	33.19
6/22/2022 22:40	84.54	6/21/2022 21:57	0.45	6/21/2022 22:27	19.87	6/21/2022 21:15	0.65	6/21/2022 22:57	33.23
6/22/2022 22:41	84.54	6/21/2022 21:58	0.41	6/21/2022 22:28	18.80	6/21/2022 21:16	0.69	6/21/2022 22:58	33.23
6/22/2022 22:42	84.54	6/21/2022 21:59	0.43	6/21/2022 22:29	18.12	6/21/2022 21:17	0.68	6/21/2022 22:59	33.24
6/22/2022 22:43	84.53	6/21/2022 22:00	0.44	6/21/2022 22:30	21.93	6/21/2022 21:18	0.65	6/21/2022 23:00	33.20
6/22/2022 22:44	84.60	6/21/2022 22:01	0.39	6/21/2022 22:31	23.10	6/21/2022 21:19	0.65	6/21/2022 23:01	33.20
6/22/2022 22:45	84.57	6/21/2022 22:02	0.42	6/21/2022 22:32	21.80	6/21/2022 21:20	0.65	6/21/2022 23:02	33.23
6/22/2022 22:46	84.60	6/21/2022 22:03	0.40	6/21/2022 22:33	22.81	6/21/2022 21:21	0.70	6/21/2022 23:03	33.21
6/22/2022 22:47	84.58	6/21/2022 22:04	0.38	6/21/2022 22:34	26.10	6/21/2022 21:22	0.65	6/21/2022 23:04	33.23
6/22/2022 22:48	84.54	6/21/2022 22:05	0.40	6/21/2022 22:35	25.32	6/21/2022 21:23	0.67	6/21/2022 23:05	33.20
6/22/2022 22:49	84.54	6/21/2022 22:06	0.40	6/21/2022 22:36	23.87	6/21/2022 21:24	0.63	6/21/2022 23:06	33.23
6/22/2022 22:50	88.52	6/21/2022 22:07	0.39	6/21/2022 22:37	26.51	6/21/2022 21:25	0.66	6/21/2022 23:07	33.22
6/22/2022 22:51	91.34	6/21/2022 22:08	0.40	6/21/2022 22:38	28.54	6/21/2022 21:26	0.66	6/21/2022 23:08	33.23
6/22/2022 22:52	92.01	6/21/2022 22:09	0.43	6/21/2022 22:39	26.85	6/21/2022 21:27	0.66	6/21/2022 23:09	33.22
6/22/2022 22:53	90.04	6/21/2022 22:10	0.39	6/21/2022 22:40	26.18	6/21/2022 21:28	0.68	6/21/2022 23:10	33.25
6/22/2022 22:54	88.26	6/21/2022 22:11	0.36	6/21/2022 22:41	29.30	6/21/2022 21:29	0.70	6/21/2022 23:11	33.23
6/22/2022 22:55	87.25	6/21/2022 22:12	0.33	6/21/2022 22:42	29.53	6/21/2022 21:30	0.67	6/21/2022 23:12	33.24
6/22/2022 22:56	86.59	6/21/2022 22:13	0.34	6/21/2022 22:43	27.84	6/21/2022 21:31	0.68	6/21/2022 23:13	33.21
6/22/2022 22:57	86.13	6/21/2022 22:14	0.37	6/21/2022 22:44	26.28	6/21/2022 21:32	0.69	6/21/2022 23:14	33.24
6/22/2022 22:58	85.82	6/21/2022 22:15	0.36	6/21/2022 22:45	24.83	6/21/2022 21:33	0.68	6/21/2022 23:15	33.24
6/22/2022 22:59	85.69	6/21/2022 22:16	2.88	6/21/2022 22:46	23.55	6/21/2022 21:34	0.63	6/21/2022 23:16	33.30
6/22/2022 23:00	85.51	6/21/2022 22:17	8.02	6/21/2022 22:47	22.43	6/21/2022 21:35	0.66	6/21/2022 23:17	33.22
6/22/2022 23:01	85.44	6/21/2022 22:18	6.72	6/21/2022 22:48	21.40	6/21/2022 21:36	0.66	6/21/2022 23:18	33.24
6/22/2022 23:02	85.36	6/21/2022 22:19	5.66	6/21/2022 22:49	20.46	6/21/2022 21:37	0.67	6/21/2022 23:19	33.24
6/22/2022 23:03	85.26	6/21/2022 22:20	4.89	6/21/2022 22:50	19.61	6/21/2022 21:38	0.67	6/21/2022 23:20	33.23
6/22/2022 23:04	85.25	6/21/2022 22:21	4.17	6/21/2022 22:51	18.83	6/21/2022 21:39	0.66	6/21/2022 23:21	33.26
6/22/2022 23:05	85.21	6/21/2022 22:22	3.57	6/21/2022 22:52	18.14	6/21/2022 21:40	0.66	6/21/2022 23:22	33.24
6/22/2022 23:06	85.14	6/21/2022 22:23	3.08	6/21/2022 22:53	17.50	6/21/2022 21:41	0.63	6/21/2022 23:23	33.19
6/22/2022 23:07	85.14	6/21/2022 22:24	2.70	6/21/2022 22:54	16.88	6/21/2022 21:42	0.68	6/21/2022 23:24	35.08
6/22/2022 23:08	85.14	6/21/2022 22:25	2.29	6/21/2022 22:55	16.35	6/21/2022 21:43	0.64	6/21/2022 23:25	34.43
6/22/2022 23:09	85.06	6/21/2022 22:26	2.07	6/21/2022 22:56	15.87	6/21/2022 21:44	0.64	6/21/2022 23:26	33.71
6/22/2022 23:10	85.10	6/21/2022 22:27	1.84	6/21/2022 22:57	15.43	6/21/2022 21:45	0.65	6/21/2022 23:27	33.42
6/22/2022 23:11	85.05	6/21/2022 22:28	1.67	6/21/2022 22:58	15.04	6/21/2022 21:46	0.62	6/21/2022 23:28	33.31
6/22/2022 23:12	84.96	6/21/2022 22:29	1.47	6/21/2022 22:59	14.69	6/21/2022 21:47	0.68	6/21/2022 23:29	33.30
6/22/2022 23:13	84.97	6/21/2022 22:30	1.35	6/21/2022 23:00	14.40	6/21/2022 21:48	0.67	6/21/2022 23:30	33.25
6/22/2022 23:14	84.95	6/21/2022 22:31	1.19	6/21/2022 23:01	14.13	6/21/2022 21:49	0.65	6/21/2022 23:31	33.29
6/22/2022 23:15	84.95	6/21/2022 22:32	1.06	6/21/2022 23:02	13.81	6/21/2022 21:50	0.63	6/21/2022 23:32	33.29
6/22/2022 23:16	84.95	6/21/2022 22:33	0.96	6/21/2022 23:03	13.63	6/21/2022 21:51	0.66	6/21/2022 23:33	33.29
6/22/2022 23:17	84.90	6/21/2022 22:34	0.91	6/21/2022 23:04	13.40	6/21/2022 21:52	0.64	6/21/2022 23:34	33.28
6/22/2022 23:18	84.88	6/21/2022 22:35	0.84	6/21/2022 23:05	13.19	6/21/2022 21:53	0.68	6/21/2022 23:35	33.28
6/22/2022 23:19	84.86	6/21/2022 22:36	0.81	6/21/2022 23:06	13.05	6/21/2022 21:54	0.67	6/21/2022 23:36	33.27
6/22/2022 23:20	84.88	6/21/2022 22:37	0.73	6/21/2022 23:07	12.85	6/21/2022 21:55	0.70	6/21/2022 23:37	33.27
6/22/2022 23:21	84.88	6/21/2022 22:38	0.64	6/21/2022 23:08	12.69	6/21/2022 21:56	0.69	6/21/2022 23:38	33.24
6/22/2022 23:22	84.83	6/21/2022 22:39	0.66	6/21/2022 23:09	12.53	6/21/2022 21:57	0.64	6/21/2022 23:39	33.25
6/22/2022 23:23	84.89	6/21/2022 22:40	0.59	6/21/2022 23:10	12.41	6/21/2022 21:58	0.64	6/21/2022 23:40	33.23
6/22/2022 23:24	84.86	6/21/2022 22:41	0.58	6/21/2022 23:11	12.29	6/21/2022 21:59	0.64	6/21/2022 23:41	33.27
6/22/2022 23:25	84.85	6/21/2022 22:42	0.55	6/21/2022 23:12	12.15	6/21/2022 22:00	0.68	6/21/2022 23:42	33.25
6/22/2022 23:26	84.82	6/21/2022 22:43	0.51	6/21/2022 23:13	12.01	6/21/2022 22:01	0.65	6/21/2022 23:43	33.29
6/22/2022 23:27	84.85	6/21/2022 22:44	0.50	6/21/2022 23:14	11.98	6/21/2022 22:02	0.71	6/21/2022 23:44	33.29
6/22/2022 23:28	84.85	6/21/2022 22:45	0.44	6/21/2022 23:15	11.86	6/21/2022 22:03	0.66	6/21/2022 23:45	33.25
6/22/2022 23:29	84.81	6/21/2022 22:46	0.43	6/21/2022 23:16	11.81	6/21/2022 22:04	0.66	6/21/2022 23:46	33.26
6/22/2022 23:30	84.80	6/21/2022 22:47	0.51	6/21/2022 23:17	11.70	6/21/2022 22:05	0.69	6/21/2022 23:47	33.21
6/22/2022 23:31	84.81	6/21/2022 22:48	0.43	6/21/2022 23:18	11.61	6/21/2022 22:06	0.68	6/21/2022 23:48	33.26
6/22/2022 23:32	84.78	6/21/2022 22:49	0.46	6/21/2022 23:19	11.56	6/21/2022 22:07	0.67	6/21/2022 23:49	33.24
6/22/2022 23:33	84.76	6/21/2022 22:50	0.44	6/21/2022 23:20	11.48	6/21/2022 22:08	0.68	6/21/2022 23:50	33.24
6/22/2022 23:34	84.76	6/21/2022 22:51	0.42	6/21/2022 23:21	11.43	6/21/2022 22:09	0.65	6/21/2022 23:51	33.25
6/22/2022 23:35	84.75	6/21/2022 22:52	0.43	6/21/2022 23:22	11.38	6/21/2022 22:10	0.65	6/21/2022 23:52	33.27
6/22/2022 23:36	84.84	6/21/2022 22:53	0.38	6/21/2022 23:23	11.36	6/21/2022 22:11	0.68	6/21/2022 23:53	33.23
6/22/2022 23:37	84.79	6/21/2022 22:54	0.38	6/21/2022 23:24	11.35	6/21/2022 22:12	0.68	6/21/2022 23:54	33.23
6/22/2022 23:38	84.78	6/21/2022 22:55	0.39	6/21/2022 23:25	11.29	6/21/2022 22:13	0.66	6/21/2022 23:55	33.29
6/22/2022 23:39	84.77	6/21/2022 22:56	0.36	6/21/2022 23:26	11.26	6/21/2022 22:14	0.65	6/21/2022 23:56	33.26
6/22/2022 23:40	84.79	6/21/2022 22:57	0.38	6/21/2022 23:27	11.20	6/21/2022 22:15	0.66	6/21/2022 23:57	33.27
6/22/2022 23:41	84.75	6/21/2022 22:58	0.33	6/21/2022 23:28	11.20	6/21/2022 22:16	0.69	6/21/2022 23:58	33.24
6/22/2022 23:42	84.75	6/21/2022 22:59	0.36	6/21/2022 23:29	11.15	6/21/2022 22:17	0.66	6/21/2022 23:59	33.28
6/22/2022 23:43	84.78	6/21/2022 23:00	0.36	6/21/2022 23:30	11.12	6/21/2022 22:18	0.70	6/22/2022 0:00	33.26
6/22/2022 23:44	84.75	6/21/2022 23:01	0.39	6/21/2022 23:31	11.12	6/21/2022 22:19	0.71	6/22/2022 0:01	33.27
6/22/2022 23:45	84.80	6/21/2022 23:02	0.32	6/21/2022 23:32	11.07	6/21/2022 22:20	0.68	6/22/2022 0:02	33.25
6/22/2022 23:46	84.72	6/21/2022 23:03	0.35	6/21/2022 23:33	11.04	6/21/2022 22:21	0.70	6/22/2022 0:03	33.28
6/22/2022 23:47	84.73	6/21/2022 23:04	0.39	6/21/2022 23:34	10.99	6/21/2022 22:22	0.71	6/22/2022 0:04	33.27
6/22/2022 23:48	84.76	6/21/2022 23:05	0.36	6/21/2022 23:35	11.00	6/21/2022 22:23	0.70	6/22/2022 0:05	33.27
6/22/2022 23:49	84.78	6/21/2022 23:06	0.40	6/21/2022 23:36	10.95	6/21/2022 22:24	0.67	6/22/2022 0:06	33.29
6/22/2022 23:50	84.76	6/21/2022 23:07	0.39	6/21/2022 23:37	10.97	6/21/2022 22:25	0.66	6/22/2022 0:07	33.25
6/22/2022 23:51	84.72	6/21/2022 23:08	0.44	6/21/2022 23:38	10.92	6/21/2022 22:26	0.68	6/22/2022 0:08	33.27
6/22/2022 23:52	84.71	6/21/2022 23:09	0.36	6/21/2022 23:39	10.91	6/21/2022 22:27	0.69	6/22/2022 0:09	33.23
6/22/2022 23:53	84.71	6/21/2022 23:10	0.43	6/21/2022 23:40	10.85	6/21/2022 22:28	0.70	6/22/2022 0:10	33.27
6/22/2022 23:54	84.69	6/21/2022 23:11	0.40	6/21/2022 23:41	10.87	6/21/2022 22:29	0.70	6/22/2022 0:11	33.29
6/22/2022 23:55	84.69	6/21/2022 23:12	0.39	6/21/2022 23:42	10.83	6/21/2022 22:30	0.65	6/22/2022 0:12	33.25
6/22/2022 23:56	84.73	6/21/2022 23:13	0.41	6/21/2022 23:43	10.81	6/21/2022 22:31	0.66	6/22/2022 0:13	33.28
6/22/2022 23:57	84.74	6/21/2022 23:14	0.37	6/21/2022 23:44	10.78	6/21/2022 22:32	0.66	6/22/2022 0:14	33.26

6/22/2022 23:58	84.67	6/21/2022 23:15	0.34	6/21/2022 23:45	10.79	6/21/2022 22:33	0.69	6/22/2022 0:15	33.28
6/22/2022 23:59	84.70	6/21/2022 23:16	0.36	6/21/2022 23:46	10.72	6/21/2022 22:34	0.63	6/22/2022 0:16	33.28
6/23/2022 0:00	84.72	6/21/2022 23:17	0.38	6/21/2022 23:47	10.80	6/21/2022 22:35	0.63	6/22/2022 0:17	33.28
6/23/2022 0:01	84.69	6/21/2022 23:18	0.36	6/21/2022 23:48	10.76	6/21/2022 22:36	0.67	6/22/2022 0:18	33.26
6/23/2022 0:02	84.72	6/21/2022 23:19	3.61	6/21/2022 23:49	10.75	6/21/2022 22:37	0.66	6/22/2022 0:19	33.27
6/23/2022 0:03	84.73	6/21/2022 23:20	7.73	6/21/2022 23:50	10.78	6/21/2022 22:38	0.65	6/22/2022 0:20	33.27
6/23/2022 0:04	84.71	6/21/2022 23:21	6.47	6/21/2022 23:51	10.75	6/21/2022 22:39	0.66	6/22/2022 0:21	33.27
6/23/2022 0:05	84.69	6/21/2022 23:22	5.49	6/21/2022 23:52	10.76	6/21/2022 22:40	0.66	6/22/2022 0:22	33.26
6/23/2022 0:06	84.72	6/21/2022 23:23	4.64	6/21/2022 23:53	10.74	6/21/2022 22:41	0.67	6/22/2022 0:23	33.28
6/23/2022 0:07	84.69	6/21/2022 23:24	4.06	6/21/2022 23:54	10.74	6/21/2022 22:42	0.65	6/22/2022 0:24	33.26
6/23/2022 0:08	84.68	6/21/2022 23:25	3.48	6/21/2022 23:55	10.73	6/21/2022 22:43	0.64	6/22/2022 0:25	33.26
6/23/2022 0:09	84.65	6/21/2022 23:26	2.99	6/21/2022 23:56	10.73	6/21/2022 22:44	0.66	6/22/2022 0:26	33.28
6/23/2022 0:10	84.73	6/21/2022 23:27	2.58	6/21/2022 23:57	10.69	6/21/2022 22:45	0.68	6/22/2022 0:27	33.26
6/23/2022 0:11	84.68	6/21/2022 23:28	2.25	6/21/2022 23:58	10.71	6/21/2022 22:46	0.66	6/22/2022 0:28	33.27
6/23/2022 0:12	84.68	6/21/2022 23:29	2.00	6/21/2022 23:59	10.70	6/21/2022 22:47	0.68	6/22/2022 0:29	33.30
6/23/2022 0:13	84.66	6/21/2022 23:30	1.79	6/22/2022 0:00	10.71	6/21/2022 22:48	0.63	6/22/2022 0:30	33.28
6/23/2022 0:14	84.65	6/21/2022 23:31	1.64	6/22/2022 0:01	10.65	6/21/2022 22:49	0.65	6/22/2022 0:31	33.28
6/23/2022 0:15	84.63	6/21/2022 23:32	1.44	6/22/2022 0:02	10.67	6/21/2022 22:50	0.66	6/22/2022 0:32	33.27
6/23/2022 0:16	84.68	6/21/2022 23:33	1.28	6/22/2022 0:03	10.61	6/21/2022 22:51	0.70	6/22/2022 0:33	33.28
6/23/2022 0:17	84.63	6/21/2022 23:34	1.14	6/22/2022 0:04	10.65	6/21/2022 22:52	0.67	6/22/2022 0:34	33.29
6/23/2022 0:18	84.65	6/21/2022 23:35	1.07	6/22/2022 0:05	10.59	6/21/2022 22:53	0.67	6/22/2022 0:35	33.28
6/23/2022 0:19	84.62	6/21/2022 23:36	0.95	6/22/2022 0:06	10.58	6/21/2022 22:54	0.65	6/22/2022 0:36	33.25
6/23/2022 0:20	84.59	6/21/2022 23:37	0.89	6/22/2022 0:07	10.60	6/21/2022 22:55	0.68	6/22/2022 0:37	33.32
6/23/2022 0:21	84.68	6/21/2022 23:38	0.85	6/22/2022 0:08	10.59	6/21/2022 22:56	0.67	6/22/2022 0:38	33.27
6/23/2022 0:22	84.70	6/21/2022 23:39	0.78	6/22/2022 0:09	10.59	6/21/2022 22:57	0.66	6/22/2022 0:39	33.26
6/23/2022 0:23	84.67	6/21/2022 23:40	0.66	6/22/2022 0:10	10.58	6/21/2022 22:58	0.68	6/22/2022 0:40	33.28
6/23/2022 0:24	84.64	6/21/2022 23:41	0.67	6/22/2022 0:11	10.55	6/21/2022 22:59	0.67	6/22/2022 0:41	33.30
6/23/2022 0:25	84.61	6/21/2022 23:42	0.66	6/22/2022 0:12	10.56	6/21/2022 23:00	0.67	6/22/2022 0:42	33.29
6/23/2022 0:26	84.63	6/21/2022 23:43	0.61	6/22/2022 0:13	10.62	6/21/2022 23:01	0.65	6/22/2022 0:43	33.24
6/23/2022 0:27	84.64	6/21/2022 23:44	0.54	6/22/2022 0:14	10.61	6/21/2022 23:02	0.68	6/22/2022 0:44	33.28
6/23/2022 0:28	84.64	6/21/2022 23:45	0.53	6/22/2022 0:15	10.61	6/21/2022 23:03	0.68	6/22/2022 0:45	33.27
6/23/2022 0:29	84.65	6/21/2022 23:46	0.50	6/22/2022 0:16	10.63	6/21/2022 23:04	0.61	6/22/2022 0:46	33.25
6/23/2022 0:30	84.64	6/21/2022 23:47	0.52	6/22/2022 0:17	10.62	6/21/2022 23:05	0.70	6/22/2022 0:47	33.30
6/23/2022 0:31	84.61	6/21/2022 23:48	0.52	6/22/2022 0:18	10.63	6/21/2022 23:06	0.67	6/22/2022 0:48	33.29
6/23/2022 0:32	84.63	6/21/2022 23:49	0.48	6/22/2022 0:19	10.59	6/21/2022 23:07	0.64	6/22/2022 0:49	33.29
6/23/2022 0:33	84.59	6/21/2022 23:50	0.45	6/22/2022 0:20	10.62	6/21/2022 23:08	0.66	6/22/2022 0:50	33.29
6/23/2022 0:34	84.60	6/21/2022 23:51	0.45	6/22/2022 0:21	10.58	6/21/2022 23:09	0.65	6/22/2022 0:51	33.27
6/23/2022 0:35	84.59	6/21/2022 23:52	0.42	6/22/2022 0:22	10.59	6/21/2022 23:10	0.66	6/22/2022 0:52	33.27
6/23/2022 0:36	84.59	6/21/2022 23:53	0.43	6/22/2022 0:23	10.59	6/21/2022 23:11	0.67	6/22/2022 0:53	33.29
6/23/2022 0:37	84.64	6/21/2022 23:54	0.43	6/22/2022 0:24	10.57	6/21/2022 23:12	0.68	6/22/2022 0:54	33.26
6/23/2022 0:38	84.56	6/21/2022 23:55	0.41	6/22/2022 0:25	10.58	6/21/2022 23:13	0.64	6/22/2022 0:55	33.32
6/23/2022 0:39	84.56	6/21/2022 23:56	0.39	6/22/2022 0:26	10.56	6/21/2022 23:14	0.66	6/22/2022 0:56	33.28
6/23/2022 0:40	84.65	6/21/2022 23:57	0.40	6/22/2022 0:27	10.58	6/21/2022 23:15	0.66	6/22/2022 0:57	33.29
6/23/2022 0:41	84.59	6/21/2022 23:58	0.38	6/22/2022 0:28	10.54	6/21/2022 23:16	0.64	6/22/2022 0:58	33.28
6/23/2022 0:42	84.64	6/21/2022 23:59	0.40	6/22/2022 0:29	10.52	6/21/2022 23:17	0.66	6/22/2022 0:59	33.32
6/23/2022 0:43	84.63	6/22/2022 0:00	0.40	6/22/2022 0:30	10.51	6/21/2022 23:18	0.64	6/22/2022 1:00	33.30
6/23/2022 0:44	84.62	6/22/2022 0:01	0.40	6/22/2022 0:31	10.55	6/21/2022 23:19	0.67	6/22/2022 1:01	33.32
6/23/2022 0:45	84.63	6/22/2022 0:02	0.43	6/22/2022 0:32	10.51	6/21/2022 23:20	0.66	6/22/2022 1:02	33.32
6/23/2022 0:46	84.63	6/22/2022 0:03	0.39	6/22/2022 0:33	10.47	6/21/2022 23:21	0.69	6/22/2022 1:03	33.32
6/23/2022 0:47	84.62	6/22/2022 0:04	0.34	6/22/2022 0:34	10.45	6/21/2022 23:22	0.69	6/22/2022 1:04	33.29
6/23/2022 0:48	84.60	6/22/2022 0:05	0.41	6/22/2022 0:35	10.50	6/21/2022 23:23	0.66	6/22/2022 1:05	33.27
6/23/2022 0:49	84.59	6/22/2022 0:06	0.38	6/22/2022 0:36	10.54	6/21/2022 23:24	0.68	6/22/2022 1:06	33.30
6/23/2022 0:50	84.63	6/22/2022 0:07	0.36	6/22/2022 0:37	10.53	6/21/2022 23:25	0.68	6/22/2022 1:07	33.31
6/23/2022 0:51	84.59	6/22/2022 0:08	0.35	6/22/2022 0:38	10.55	6/21/2022 23:26	0.70	6/22/2022 1:08	33.32
6/23/2022 0:52	84.62	6/22/2022 0:09	0.39	6/22/2022 0:39	10.54	6/21/2022 23:27	0.66	6/22/2022 1:09	33.31
6/23/2022 0:53	84.62	6/22/2022 0:10	0.39	6/22/2022 0:40	10.52	6/21/2022 23:28	0.68	6/22/2022 1:10	33.30
6/23/2022 0:54	84.59	6/22/2022 0:11	0.38	6/22/2022 0:41	10.54	6/21/2022 23:29	0.69	6/22/2022 1:11	33.30
6/23/2022 0:55	84.53	6/22/2022 0:12	0.34	6/22/2022 0:42	10.55	6/21/2022 23:30	0.67	6/22/2022 1:12	33.30
6/23/2022 0:56	84.62	6/22/2022 0:13	0.33	6/22/2022 0:43	10.56	6/21/2022 23:31	0.66	6/22/2022 1:13	33.32
6/23/2022 0:57	84.58	6/22/2022 0:14	0.35	6/22/2022 0:44	10.53	6/21/2022 23:32	0.66	6/22/2022 1:14	33.31
6/23/2022 0:58	84.57	6/22/2022 0:15	0.34	6/22/2022 0:45	10.56	6/21/2022 23:33	0.68	6/22/2022 1:15	33.27
6/23/2022 0:59	84.55	6/22/2022 0:16	0.32	6/22/2022 0:46	10.55	6/21/2022 23:34	0.65	6/22/2022 1:16	33.29
6/23/2022 1:00	84.58	6/22/2022 0:17	0.36	6/22/2022 0:47	10.54	6/21/2022 23:35	0.66	6/22/2022 1:17	33.31
6/23/2022 1:01	84.54	6/22/2022 0:18	0.32	6/22/2022 0:48	10.52	6/21/2022 23:36	0.66	6/22/2022 1:18	33.30
6/23/2022 1:02	84.60	6/22/2022 0:19	0.35	6/22/2022 0:49	10.57	6/21/2022 23:37	0.64	6/22/2022 1:19	33.32
6/23/2022 1:03	84.57	6/22/2022 0:20	0.37	6/22/2022 0:50	10.48	6/21/2022 23:38	0.68	6/22/2022 1:20	33.32
6/23/2022 1:04	84.61	6/22/2022 0:21	0.36	6/22/2022 0:51	10.49	6/21/2022 23:39	0.65	6/22/2022 1:21	33.32
6/23/2022 1:05	84.56	6/22/2022 0:22	0.34	6/22/2022 0:52	10.52	6/21/2022 23:40	0.67	6/22/2022 1:22	33.33
6/23/2022 1:06	84.54	6/22/2022 0:23	4.59	6/22/2022 0:53	10.49	6/21/2022 23:41	0.65	6/22/2022 1:23	33.28
6/23/2022 1:07	84.56	6/22/2022 0:24	7.55	6/22/2022 0:54	10.50	6/21/2022 23:42	0.68	6/22/2022 1:24	33.31
6/23/2022 1:08	84.56	6/22/2022 0:25	6.38	6/22/2022 0:55	10.48	6/21/2022 23:43	0.67	6/22/2022 1:25	33.35
6/23/2022 1:09	84.53	6/22/2022 0:26	5.40	6/22/2022 0:56	10.46	6/21/2022 23:44	0.63	6/22/2022 1:26	33.34
6/23/2022 1:10	84.53	6/22/2022 0:27	4.63	6/22/2022 0:57	10.47	6/21/2022 23:45	0.64	6/22/2022 1:27	33.33
6/23/2022 1:11	84.58	6/22/2022 0:28	4.02	6/22/2022 0:58	10.45	6/21/2022 23:46	0.68	6/22/2022 1:28	33.36
6/23/2022 1:12	84.53	6/22/2022 0:29	3.46	6/22/2022 0:59	10.48	6/21/2022 23:47	0.64	6/22/2022 1:29	33.30
6/23/2022 1:13	84.55	6/22/2022 0:30	2.93	6/22/2022 1:00	10.48	6/21/2022 23:48	0.62	6/22/2022 1:30	33.29
6/23/2022 1:14	84.58	6/22/2022 0:31	2.57	6/22/2022 1:01	10.50	6/21/2022 23:49	0.64	6/22/2022 1:31	33.31
6/23/2022 1:15	84.54	6/22/2022 0:32	2.27	6/22/2022 1:02	10.49	6/21/2022 23:50	0.62	6/22/2022 1:32	33.36
6/23/2022 1:16	84.53	6/22/2022 0:33	1.96	6/22/2022 1:03	10.51	6/21/2022 23:51	0.66	6/22/2022 1:33	33.41
6/23/2022 1:17	84.58	6/22/2022 0:34	1.78	6/22/2022 1:04	10.54	6/21/2022 23:52	0.68	6/22/2022 1:34	33.42
6/23/2022 1:18	84.48	6/22/2022 0:35	1.56	6/22/2022 1:05	10.51	6/21/2022 23:53	0.65	6/22/2022 1:35	33.41
6/23/2022 1:19	84.54	6/22/2022 0:36	1.43	6/22/2022 1:06	10.50	6/21/2022 23:54	0.62	6/22/2022 1:36	33.41
6/23/2022 1:20	84.55	6/22/2022 0:37	1.29	6/22/2022 1:07	10.51	6/21/2022 23:55	0.66	6/22/2022 1:37	33.38
6/23/2022 1:21	84.57	6/22/2022 0:38	1.21	6/22/2022 1:08	10.53	6/21/2022 23:56	0.65	6/22/2022 1:38	33.38
6/23/2022 1:22	84.58	6/22/2022 0:39	1.07	6/22/2022 1:09	10.53	6/21/2022 23:57	0.64	6/22/2022 1:39	33.41
6/23/2022 1:23	84.56	6/22/2022 0:40	0.93	6/22/2022 1:10	10.53	6/21/2022 23:58	0.64	6/22/2022 1:40	33.38
6/23/2022 1:24	84.53	6/22/2022 0:41	0.89	6/22/2022 1:11	10.50	6/21/2022 23:59	0.65	6/22/2022 1:41	33.38
6/23/2022 1:25	84.56	6/22/2022 0:42	0.79	6/22/2022 1:12	10.50	6/22/2022 0:00	0.63	6/22/2022 1:42	33.38

6/23/2022 1:26	84.52	6/22/2022 0:43	0.74	6/22/2022 1:13	10.50	6/22/2022 0:01	0.65	6/22/2022 1:43	33.36
6/23/2022 1:27	84.54	6/22/2022 0:44	0.71	6/22/2022 1:14	10.50	6/22/2022 0:02	0.63	6/22/2022 1:44	33.41
6/23/2022 1:28	84.50	6/22/2022 0:45	0.64	6/22/2022 1:15	10.50	6/22/2022 0:03	0.65	6/22/2022 1:45	33.41
6/23/2022 1:29	84.55	6/22/2022 0:46	0.60	6/22/2022 1:16	10.45	6/22/2022 0:04	0.65	6/22/2022 1:46	33.37
6/23/2022 1:30	84.56	6/22/2022 0:47	0.60	6/22/2022 1:17	10.48	6/22/2022 0:05	0.66	6/22/2022 1:47	33.41
6/23/2022 1:31	84.56	6/22/2022 0:48	0.53	6/22/2022 1:18	10.47	6/22/2022 0:06	0.66	6/22/2022 1:48	33.38
6/23/2022 1:32	84.49	6/22/2022 0:49	0.52	6/22/2022 1:19	10.44	6/22/2022 0:07	0.66	6/22/2022 1:49	33.38
6/23/2022 1:33	84.50	6/22/2022 0:50	0.49	6/22/2022 1:20	10.46	6/22/2022 0:08	0.62	6/22/2022 1:50	33.36
6/23/2022 1:34	84.51	6/22/2022 0:51	0.54	6/22/2022 1:21	10.44	6/22/2022 0:09	0.66	6/22/2022 1:51	33.40
6/23/2022 1:35	84.52	6/22/2022 0:52	0.49	6/22/2022 1:22	10.42	6/22/2022 0:10	0.62	6/22/2022 1:52	33.34
6/23/2022 1:36	84.53	6/22/2022 0:53	0.43	6/22/2022 1:23	10.47	6/22/2022 0:11	0.63	6/22/2022 1:53	33.35
6/23/2022 1:37	84.51	6/22/2022 0:54	0.41	6/22/2022 1:24	10.49	6/22/2022 0:12	0.60	6/22/2022 1:54	33.37
6/23/2022 1:38	84.53	6/22/2022 0:55	0.44	6/22/2022 1:25	10.51	6/22/2022 0:13	0.66	6/22/2022 1:55	33.35
6/23/2022 1:39	84.51	6/22/2022 0:56	0.44	6/22/2022 1:26	10.47	6/22/2022 0:14	0.67	6/22/2022 1:56	33.36
6/23/2022 1:40	84.48	6/22/2022 0:57	0.41	6/22/2022 1:27	10.49	6/22/2022 0:15	0.66	6/22/2022 1:57	33.33
6/23/2022 1:41	84.52	6/22/2022 0:58	0.37	6/22/2022 1:28	10.50	6/22/2022 0:16	0.65	6/22/2022 1:58	33.35
6/23/2022 1:42	84.48	6/22/2022 0:59	0.43	6/22/2022 1:29	10.52	6/22/2022 0:17	0.67	6/22/2022 1:59	33.35
6/23/2022 1:43	84.53	6/22/2022 1:00	0.43	6/22/2022 1:30	10.47	6/22/2022 0:18	0.66	6/22/2022 2:00	33.36
6/23/2022 1:44	84.52	6/22/2022 1:01	0.41	6/22/2022 1:31	10.48	6/22/2022 0:19	0.65	6/22/2022 2:01	33.38
6/23/2022 1:45	84.51	6/22/2022 1:02	0.37	6/22/2022 1:32	10.48	6/22/2022 0:20	0.63	6/22/2022 2:02	33.34
6/23/2022 1:46	84.48	6/22/2022 1:03	0.39	6/22/2022 1:33	10.51	6/22/2022 0:21	0.66	6/22/2022 2:03	33.36
6/23/2022 1:47	84.52	6/22/2022 1:04	0.40	6/22/2022 1:34	10.50	6/22/2022 0:22	0.61	6/22/2022 2:04	33.38
6/23/2022 1:48	84.50	6/22/2022 1:05	0.38	6/22/2022 1:35	10.52	6/22/2022 0:23	0.64	6/22/2022 2:05	33.38
6/23/2022 1:49	84.52	6/22/2022 1:06	0.38	6/22/2022 1:36	10.47	6/22/2022 0:24	0.64	6/22/2022 2:06	33.34
6/23/2022 1:50	84.45	6/22/2022 1:07	0.36	6/22/2022 1:37	10.52	6/22/2022 0:25	0.69	6/22/2022 2:07	33.36
6/23/2022 1:51	84.53	6/22/2022 1:08	0.38	6/22/2022 1:38	10.57	6/22/2022 0:26	0.68	6/22/2022 2:08	33.36
6/23/2022 1:52	84.50	6/22/2022 1:09	0.40	6/22/2022 1:39	10.53	6/22/2022 0:27	0.72	6/22/2022 2:09	33.37
6/23/2022 1:53	84.53	6/22/2022 1:10	0.38	6/22/2022 1:40	10.54	6/22/2022 0:28	0.68	6/22/2022 2:10	33.39
6/23/2022 1:54	84.49	6/22/2022 1:11	0.37	6/22/2022 1:41	10.56	6/22/2022 0:29	0.64	6/22/2022 2:11	33.41
6/23/2022 1:55	84.50	6/22/2022 1:12	0.34	6/22/2022 1:42	10.57	6/22/2022 0:30	0.67	6/22/2022 2:12	33.39
6/23/2022 1:56	84.50	6/22/2022 1:13	0.35	6/22/2022 1:43	10.56	6/22/2022 0:31	0.66	6/22/2022 2:13	33.36
6/23/2022 1:57	84.51	6/22/2022 1:14	0.36	6/22/2022 1:44	10.56	6/22/2022 0:32	0.68	6/22/2022 2:14	33.39
6/23/2022 1:58	84.51	6/22/2022 1:15	0.37	6/22/2022 1:45	10.54	6/22/2022 0:33	0.69	6/22/2022 2:15	33.32
6/23/2022 1:59	84.46	6/22/2022 1:16	0.36	6/22/2022 1:46	10.51	6/22/2022 0:34	0.68	6/22/2022 2:16	33.32
6/23/2022 2:00	84.47	6/22/2022 1:17	0.32	6/22/2022 1:47	10.55	6/22/2022 0:35	0.66	6/22/2022 2:17	33.33
6/23/2022 2:01	84.51	6/22/2022 1:18	0.37	6/22/2022 1:48	10.51	6/22/2022 0:36	0.67	6/22/2022 2:18	33.38
6/23/2022 2:02	84.46	6/22/2022 1:19	0.36	6/22/2022 1:49	10.52	6/22/2022 0:37	0.71	6/22/2022 2:19	33.40
6/23/2022 2:03	84.49	6/22/2022 1:20	0.38	6/22/2022 1:50	10.48	6/22/2022 0:38	0.66	6/22/2022 2:20	33.38
6/23/2022 2:04	84.44	6/22/2022 1:21	0.36	6/22/2022 1:51	10.49	6/22/2022 0:39	0.67	6/22/2022 2:21	33.34
6/23/2022 2:05	84.46	6/22/2022 1:22	0.33	6/22/2022 1:52	10.48	6/22/2022 0:40	0.67	6/22/2022 2:22	33.36
6/23/2022 2:06	84.46	6/22/2022 1:23	0.31	6/22/2022 1:53	10.47	6/22/2022 0:41	0.66	6/22/2022 2:23	33.38
6/23/2022 2:07	84.48	6/22/2022 1:24	0.34	6/22/2022 1:54	10.48	6/22/2022 0:42	0.66	6/22/2022 2:24	33.39
6/23/2022 2:08	84.49	6/22/2022 1:25	0.84	6/22/2022 1:55	10.48	6/22/2022 0:43	0.69	6/22/2022 2:25	33.36
6/23/2022 2:09	84.46	6/22/2022 1:26	6.75	6/22/2022 1:56	10.49	6/22/2022 0:44	0.67	6/22/2022 2:26	33.36
6/23/2022 2:10	84.50	6/22/2022 1:27	6.85	6/22/2022 1:57	10.41	6/22/2022 0:45	0.68	6/22/2022 2:27	33.37
6/23/2022 2:11	84.46	6/22/2022 1:28	5.81	6/22/2022 1:58	10.43	6/22/2022 0:46	0.68	6/22/2022 2:28	33.40
6/23/2022 2:12	84.47	6/22/2022 1:29	4.95	6/22/2022 1:59	10.46	6/22/2022 0:47	0.67	6/22/2022 2:29	33.39
6/23/2022 2:13	84.50	6/22/2022 1:30	4.26	6/22/2022 2:00	10.45	6/22/2022 0:48	0.69	6/22/2022 2:30	33.41
6/23/2022 2:14	84.48	6/22/2022 1:31	3.62	6/22/2022 2:01	10.44	6/22/2022 0:49	0.64	6/22/2022 2:31	33.42
6/23/2022 2:15	84.48	6/22/2022 1:32	3.16	6/22/2022 2:02	10.44	6/22/2022 0:50	0.68	6/22/2022 2:32	33.35
6/23/2022 2:16	84.45	6/22/2022 1:33	2.77	6/22/2022 2:03	10.42	6/22/2022 0:51	0.67	6/22/2022 2:33	33.42
6/23/2022 2:17	84.44	6/22/2022 1:34	2.42	6/22/2022 2:04	10.41	6/22/2022 0:52	0.68	6/22/2022 2:34	33.41
6/23/2022 2:18	84.48	6/22/2022 1:35	2.13	6/22/2022 2:05	10.39	6/22/2022 0:53	0.68	6/22/2022 2:35	33.36
6/23/2022 2:19	84.46	6/22/2022 1:36	1.89	6/22/2022 2:06	10.39	6/22/2022 0:54	0.70	6/22/2022 2:36	33.35
6/23/2022 2:20	84.45	6/22/2022 1:37	1.68	6/22/2022 2:07	10.40	6/22/2022 0:55	0.68	6/22/2022 2:37	33.38
6/23/2022 2:21	84.48	6/22/2022 1:38	1.48	6/22/2022 2:08	10.43	6/22/2022 0:56	0.68	6/22/2022 2:38	33.37
6/23/2022 2:22	84.48	6/22/2022 1:39	1.37	6/22/2022 2:09	10.45	6/22/2022 0:57	0.72	6/22/2022 2:39	33.37
6/23/2022 2:23	84.47	6/22/2022 1:40	1.24	6/22/2022 2:10	10.44	6/22/2022 0:58	0.69	6/22/2022 2:40	33.35
6/23/2022 2:24	84.45	6/22/2022 1:41	1.12	6/22/2022 2:11	10.44	6/22/2022 0:59	0.70	6/22/2022 2:41	33.36
6/23/2022 2:25	84.42	6/22/2022 1:42	1.02	6/22/2022 2:12	10.44	6/22/2022 1:00	0.66	6/22/2022 2:42	33.37
6/23/2022 2:26	84.47	6/22/2022 1:43	0.95	6/22/2022 2:13	10.47	6/22/2022 1:01	0.70	6/22/2022 2:43	33.40
6/23/2022 2:27	84.48	6/22/2022 1:44	0.88	6/22/2022 2:14	10.47	6/22/2022 1:02	0.70	6/22/2022 2:44	33.38
6/23/2022 2:28	84.49	6/22/2022 1:45	0.81	6/22/2022 2:15	10.50	6/22/2022 1:03	0.66	6/22/2022 2:45	33.41
6/23/2022 2:29	84.45	6/22/2022 1:46	0.72	6/22/2022 2:16	10.50	6/22/2022 1:04	0.67	6/22/2022 2:46	33.39
6/23/2022 2:30	84.48	6/22/2022 1:47	0.71	6/22/2022 2:17	10.48	6/22/2022 1:05	0.69	6/22/2022 2:47	33.39
6/23/2022 2:31	84.46	6/22/2022 1:48	0.64	6/22/2022 2:18	10.47	6/22/2022 1:06	0.69	6/22/2022 2:48	33.37
6/23/2022 2:32	84.46	6/22/2022 1:49	0.60	6/22/2022 2:19	10.47	6/22/2022 1:07	0.69	6/22/2022 2:49	33.38
6/23/2022 2:33	84.46	6/22/2022 1:50	0.60	6/22/2022 2:20	10.50	6/22/2022 1:08	0.64	6/22/2022 2:50	33.41
6/23/2022 2:34	84.47	6/22/2022 1:51	0.52	6/22/2022 2:21	10.42	6/22/2022 1:09	0.70	6/22/2022 2:51	33.39
6/23/2022 2:35	84.49	6/22/2022 1:52	0.51	6/22/2022 2:22	10.46	6/22/2022 1:10	0.71	6/22/2022 2:52	33.39
6/23/2022 2:36	84.43	6/22/2022 1:53	0.51	6/22/2022 2:23	10.45	6/22/2022 1:11	0.67	6/22/2022 2:53	33.38
6/23/2022 2:37	84.47	6/22/2022 1:54	0.45	6/22/2022 2:24	10.45	6/22/2022 1:12	0.68	6/22/2022 2:54	33.41
6/23/2022 2:38	84.45	6/22/2022 1:55	0.48	6/22/2022 2:25	10.44	6/22/2022 1:13	0.68	6/22/2022 2:55	33.40
6/23/2022 2:39	84.48	6/22/2022 1:56	0.49	6/22/2022 2:26	10.43	6/22/2022 1:14	0.67	6/22/2022 2:56	33.35
6/23/2022 2:40	84.44	6/22/2022 1:57	0.39	6/22/2022 2:27	10.40	6/22/2022 1:15	0.72	6/22/2022 2:57	33.38
6/23/2022 2:41	84.47	6/22/2022 1:58	0.42	6/22/2022 2:28	10.41	6/22/2022 1:16	0.65	6/22/2022 2:58	33.42
6/23/2022 2:42	84.50	6/22/2022 1:59	0.45	6/22/2022 2:29	10.39	6/22/2022 1:17	0.74	6/22/2022 2:59	33.39
6/23/2022 2:43	84.43	6/22/2022 2:00	0.43	6/22/2022 2:30	10.41	6/22/2022 1:18	0.72	6/22/2022 3:00	33.40
6/23/2022 2:44	84.46	6/22/2022 2:01	0.42	6/22/2022 2:31	10.39	6/22/2022 1:19	0.67	6/22/2022 3:01	33.41
6/23/2022 2:45	84.52	6/22/2022 2:02	0.43	6/22/2022 2:32	10.34	6/22/2022 1:20	0.69	6/22/2022 3:02	33.35
6/23/2022 2:46	84.46	6/22/2022 2:03	0.39	6/22/2022 2:33	10.39	6/22/2022 1:21	0.68	6/22/2022 3:03	33.36
6/23/2022 2:47	84.45	6/22/2022 2:04	0.42	6/22/2022 2:34	10.36	6/22/2022 1:22	0.70	6/22/2022 3:04	33.40
6/23/2022 2:48	84.44	6/22/2022 2:05	0.39	6/22/2022 2:35	10.38	6/22/2022 1:23	0.67	6/22/2022 3:05	33.39
6/23/2022 2:49	84.45	6/22/2022 2:06	0.39	6/22/2022 2:36	10.37	6/22/2022 1:24	0.69	6/22/2022 3:06	33.40
6/23/2022 2:50	84.45	6/22/2022 2:07	0.38	6/22/2022 2:37	10.37	6/22/2022 1:25	0.72	6/22/2022 3:07	33.41
6/23/2022 2:51	84.41	6/22/2022 2:08	0.37	6/22/2022 2:38	10.36	6/22/2022 1:26	0.72	6/22/2022 3:08	33.40
6/23/2022 2:52	84.51	6/22/2022 2:09	0.42	6/22/2022 2:39	10.39	6/22/2022 1:27	0.74	6/22/2022 3:09	33.37
6/23/2022 2:53	84.42	6/22/2022 2:10	0.39	6/22/2022 2:40	10.43	6/22/2022 1:28	0.78	6/22/2022 3:10	33.41

6/23/2022 2:54	84.47	6/22/2022 2:11	0.39	6/22/2022 2:41	10.43	6/22/2022 1:29	0.71	6/22/2022 3:11	33.41
6/23/2022 2:55	84.44	6/22/2022 2:12	0.33	6/22/2022 2:42	10.45	6/22/2022 1:30	0.73	6/22/2022 3:12	33.42
6/23/2022 2:56	84.43	6/22/2022 2:13	0.33	6/22/2022 2:43	10.46	6/22/2022 1:31	0.70	6/22/2022 3:13	33.41
6/23/2022 2:57	84.44	6/22/2022 2:14	0.33	6/22/2022 2:44	10.46	6/22/2022 1:32	0.68	6/22/2022 3:14	33.42
6/23/2022 2:58	84.47	6/22/2022 2:15	0.37	6/22/2022 2:45	10.43	6/22/2022 1:33	0.66	6/22/2022 3:15	33.36
6/23/2022 2:59	84.45	6/22/2022 2:16	0.37	6/22/2022 2:46	10.47	6/22/2022 1:34	0.67	6/22/2022 3:16	33.42
6/23/2022 3:00	84.47	6/22/2022 2:17	0.39	6/22/2022 2:47	10.44	6/22/2022 1:35	0.72	6/22/2022 3:17	33.37
6/23/2022 3:01	84.42	6/22/2022 2:18	0.35	6/22/2022 2:48	10.44	6/22/2022 1:36	0.67	6/22/2022 3:18	33.38
6/23/2022 3:02	84.39	6/22/2022 2:19	0.36	6/22/2022 2:49	10.46	6/22/2022 1:37	0.69	6/22/2022 3:19	33.42
6/23/2022 3:03	84.42	6/22/2022 2:20	0.39	6/22/2022 2:50	10.43	6/22/2022 1:38	0.70	6/22/2022 3:20	33.41
6/23/2022 3:04	84.46	6/22/2022 2:21	0.36	6/22/2022 2:51	10.44	6/22/2022 1:39	0.70	6/22/2022 3:21	33.40
6/23/2022 3:05	87.87	6/22/2022 2:22	0.35	6/22/2022 2:52	10.41	6/22/2022 1:40	0.74	6/22/2022 3:22	33.42
6/23/2022 3:06	90.82	6/22/2022 2:23	0.37	6/22/2022 2:53	10.41	6/22/2022 1:41	0.72	6/22/2022 3:23	33.38
6/23/2022 3:07	92.66	6/22/2022 2:24	0.37	6/22/2022 2:54	10.42	6/22/2022 1:42	0.71	6/22/2022 3:24	33.41
6/23/2022 3:08	93.07	6/22/2022 2:25	0.39	6/22/2022 2:55	10.39	6/22/2022 1:43	0.68	6/22/2022 3:25	33.41
6/23/2022 3:09	90.22	6/22/2022 2:26	1.46	6/22/2022 2:56	10.41	6/22/2022 1:44	0.66	6/22/2022 3:26	33.43
6/23/2022 3:10	88.51	6/22/2022 2:27	7.20	6/22/2022 2:57	10.41	6/22/2022 1:45	0.69	6/22/2022 3:27	33.38
6/23/2022 3:11	87.40	6/22/2022 2:28	6.82	6/22/2022 2:58	10.41	6/22/2022 1:46	0.69	6/22/2022 3:28	33.43
6/23/2022 3:12	86.68	6/22/2022 2:29	5.77	6/22/2022 2:59	10.36	6/22/2022 1:47	0.71	6/22/2022 3:29	33.40
6/23/2022 3:13	86.22	6/22/2022 2:30	4.94	6/22/2022 3:00	10.38	6/22/2022 1:48	0.67	6/22/2022 3:30	33.44
6/23/2022 3:14	85.92	6/22/2022 2:31	4.19	6/22/2022 3:01	10.35	6/22/2022 1:49	0.68	6/22/2022 3:31	33.45
6/23/2022 3:15	85.72	6/22/2022 2:32	3.67	6/22/2022 3:02	10.38	6/22/2022 1:50	0.71	6/22/2022 3:32	33.43
6/23/2022 3:16	85.55	6/22/2022 2:33	3.14	6/22/2022 3:03	10.34	6/22/2022 1:51	0.69	6/22/2022 3:33	33.43
6/23/2022 3:17	85.45	6/22/2022 2:34	2.69	6/22/2022 3:04	10.37	6/22/2022 1:52	0.67	6/22/2022 3:34	33.40
6/23/2022 3:18	85.37	6/22/2022 2:35	2.36	6/22/2022 3:05	10.36	6/22/2022 1:53	0.72	6/22/2022 3:35	33.43
6/23/2022 3:19	85.31	6/22/2022 2:36	2.12	6/22/2022 3:06	10.37	6/22/2022 1:54	0.66	6/22/2022 3:36	33.42
6/23/2022 3:20	85.28	6/22/2022 2:37	1.83	6/22/2022 3:07	10.36	6/22/2022 1:55	0.65	6/22/2022 3:37	33.41
6/23/2022 3:21	85.23	6/22/2022 2:38	1.66	6/22/2022 3:08	10.35	6/22/2022 1:56	0.67	6/22/2022 3:38	33.42
6/23/2022 3:22	85.15	6/22/2022 2:39	1.51	6/22/2022 3:09	10.37	6/22/2022 1:57	0.66	6/22/2022 3:39	33.46
6/23/2022 3:23	85.10	6/22/2022 2:40	1.31	6/22/2022 3:10	10.41	6/22/2022 1:58	0.67	6/22/2022 3:40	33.41
6/23/2022 3:24	85.09	6/22/2022 2:41	1.18	6/22/2022 3:11	10.41	6/22/2022 1:59	0.68	6/22/2022 3:41	33.46
6/23/2022 3:25	85.09	6/22/2022 2:42	1.10	6/22/2022 3:12	10.40	6/22/2022 2:00	0.64	6/22/2022 3:42	33.41
6/23/2022 3:26	85.01	6/22/2022 2:43	1.03	6/22/2022 3:13	10.46	6/22/2022 2:01	0.66	6/22/2022 3:43	33.41
6/23/2022 3:27	85.00	6/22/2022 2:44	0.91	6/22/2022 3:14	10.44	6/22/2022 2:02	0.69	6/22/2022 3:44	33.48
6/23/2022 3:28	85.01	6/22/2022 2:45	0.82	6/22/2022 3:15	10.44	6/22/2022 2:03	0.68	6/22/2022 3:45	33.47
6/23/2022 3:29	84.98	6/22/2022 2:46	0.75	6/22/2022 3:16	10.40	6/22/2022 2:04	0.67	6/22/2022 3:46	33.47
6/23/2022 3:30	84.93	6/22/2022 2:47	0.69	6/22/2022 3:17	10.40	6/22/2022 2:05	0.68	6/22/2022 3:47	33.43
6/23/2022 3:31	84.96	6/22/2022 2:48	0.66	6/22/2022 3:18	10.43	6/22/2022 2:06	0.67	6/22/2022 3:48	33.44
6/23/2022 3:32	84.95	6/22/2022 2:49	0.62	6/22/2022 3:19	10.42	6/22/2022 2:07	0.66	6/22/2022 3:49	33.41
6/23/2022 3:33	84.91	6/22/2022 2:50	0.60	6/22/2022 3:20	10.44	6/22/2022 2:08	0.66	6/22/2022 3:50	33.43
6/23/2022 3:34	84.92	6/22/2022 2:51	0.53	6/22/2022 3:21	10.43	6/22/2022 2:09	0.71	6/22/2022 3:51	33.45
6/23/2022 3:35	84.91	6/22/2022 2:52	0.53	6/22/2022 3:22	10.41	6/22/2022 2:10	0.70	6/22/2022 3:52	33.45
6/23/2022 3:36	87.58	6/22/2022 2:53	0.52	6/22/2022 3:23	10.40	6/22/2022 2:11	0.71	6/22/2022 3:53	33.40
6/23/2022 3:37	90.86	6/22/2022 2:54	0.51	6/22/2022 3:24	10.43	6/22/2022 2:12	0.67	6/22/2022 3:54	33.45
6/23/2022 3:38	92.77	6/22/2022 2:55	0.45	6/22/2022 3:25	10.39	6/22/2022 2:13	0.69	6/22/2022 3:55	33.44
6/23/2022 3:39	92.32	6/22/2022 2:56	0.46	6/22/2022 3:26	10.39	6/22/2022 2:14	0.66	6/22/2022 3:56	33.42
6/23/2022 3:40	89.88	6/22/2022 2:57	0.46	6/22/2022 3:27	10.39	6/22/2022 2:15	0.67	6/22/2022 3:57	33.46
6/23/2022 3:41	88.38	6/22/2022 2:58	0.41	6/22/2022 3:28	10.38	6/22/2022 2:16	0.65	6/22/2022 3:58	33.45
6/23/2022 3:42	87.41	6/22/2022 2:59	0.41	6/22/2022 3:29	10.39	6/22/2022 2:17	0.66	6/22/2022 3:59	33.45
6/23/2022 3:43	86.80	6/22/2022 3:00	0.43	6/22/2022 3:30	10.40	6/22/2022 2:18	0.67	6/22/2022 4:00	33.45
6/23/2022 3:44	86.37	6/22/2022 3:01	0.38	6/22/2022 3:31	10.40	6/22/2022 2:19	0.67	6/22/2022 4:01	33.44
6/23/2022 3:45	86.11	6/22/2022 3:02	0.40	6/22/2022 3:32	10.39	6/22/2022 2:20	0.69	6/22/2022 4:02	33.48
6/23/2022 3:46	85.93	6/22/2022 3:03	0.43	6/22/2022 3:33	10.37	6/22/2022 2:21	0.72	6/22/2022 4:03	33.46
6/23/2022 3:47	85.79	6/22/2022 3:04	0.37	6/22/2022 3:34	10.40	6/22/2022 2:22	0.66	6/22/2022 4:04	33.48
6/23/2022 3:48	85.67	6/22/2022 3:05	0.39	6/22/2022 3:35	10.38	6/22/2022 2:23	0.68	6/22/2022 4:05	33.45
6/23/2022 3:49	85.63	6/22/2022 3:06	0.41	6/22/2022 3:36	10.33	6/22/2022 2:24	0.68	6/22/2022 4:06	33.41
6/23/2022 3:50	85.58	6/22/2022 3:07	0.36	6/22/2022 3:37	10.32	6/22/2022 2:25	0.68	6/22/2022 4:07	33.49
6/23/2022 3:51	85.51	6/22/2022 3:08	0.35	6/22/2022 3:38	10.34	6/22/2022 2:26	0.66	6/22/2022 4:08	33.47
6/23/2022 3:52	85.46	6/22/2022 3:09	0.37	6/22/2022 3:39	10.33	6/22/2022 2:27	0.66	6/22/2022 4:09	33.46
6/23/2022 3:53	85.45	6/22/2022 3:10	0.35	6/22/2022 3:40	10.37	6/22/2022 2:28	0.76	6/22/2022 4:10	33.43
6/23/2022 3:54	85.38	6/22/2022 3:11	0.36	6/22/2022 3:41	10.38	6/22/2022 2:29	0.74	6/22/2022 4:11	33.47
6/23/2022 3:55	85.39	6/22/2022 3:12	0.35	6/22/2022 3:42	10.41	6/22/2022 2:30	0.72	6/22/2022 4:12	33.47
6/23/2022 3:56	85.30	6/22/2022 3:13	0.37	6/22/2022 3:43	10.42	6/22/2022 2:31	0.72	6/22/2022 4:13	33.50
6/23/2022 3:57	85.27	6/22/2022 3:14	0.38	6/22/2022 3:44	10.45	6/22/2022 2:32	0.71	6/22/2022 4:14	33.45
6/23/2022 3:58	85.33	6/22/2022 3:15	0.39	6/22/2022 3:45	10.42	6/22/2022 2:33	0.73	6/22/2022 4:15	33.45
6/23/2022 3:59	85.30	6/22/2022 3:16	0.33	6/22/2022 3:46	10.42	6/22/2022 2:34	0.68	6/22/2022 4:16	33.45
6/23/2022 4:00	85.28	6/22/2022 3:17	0.35	6/22/2022 3:47	10.44	6/22/2022 2:35	0.69	6/22/2022 4:17	33.45
6/23/2022 4:01	85.23	6/22/2022 3:18	0.33	6/22/2022 3:48	10.41	6/22/2022 2:36	0.72	6/22/2022 4:18	33.41
6/23/2022 4:02	85.18	6/22/2022 3:19	0.35	6/22/2022 3:49	10.42	6/22/2022 2:37	0.69	6/22/2022 4:19	33.47
6/23/2022 4:03	85.18	6/22/2022 3:20	0.39	6/22/2022 3:50	10.45	6/22/2022 2:38	0.72	6/22/2022 4:20	33.46
6/23/2022 4:04	85.18	6/22/2022 3:21	0.40	6/22/2022 3:51	10.39	6/22/2022 2:39	0.68	6/22/2022 4:21	33.46
6/23/2022 4:05	85.14	6/22/2022 3:22	0.31	6/22/2022 3:52	10.43	6/22/2022 2:40	0.72	6/22/2022 4:22	33.46
6/23/2022 4:06	85.18	6/22/2022 3:23	0.35	6/22/2022 3:53	10.42	6/22/2022 2:41	0.69	6/22/2022 4:23	33.48
6/23/2022 4:07	85.17	6/22/2022 3:24	0.36	6/22/2022 3:54	10.40	6/22/2022 2:42	0.74	6/22/2022 4:24	33.48
6/23/2022 4:08	85.12	6/22/2022 3:25	0.36	6/22/2022 3:55	10.40	6/22/2022 2:43	0.69	6/22/2022 4:25	33.45
6/23/2022 4:09	88.33	6/22/2022 3:26	0.35	6/22/2022 3:56	10.36	6/22/2022 2:44	0.68	6/22/2022 4:26	33.51
6/23/2022 4:10	91.43	6/22/2022 3:27	0.34	6/22/2022 3:57	10.39	6/22/2022 2:45	0.73	6/22/2022 4:27	33.47
6/23/2022 4:11	93.17	6/22/2022 3:28	4.65	6/22/2022 3:58	10.37	6/22/2022 2:46	0.69	6/22/2022 4:28	33.46
6/23/2022 4:12	92.25	6/22/2022 3:29	7.42	6/22/2022 3:59	10.39	6/22/2022 2:47	0.70	6/22/2022 4:29	33.47
6/23/2022 4:13	89.89	6/22/2022 3:30	6.23	6/22/2022 4:00	10.35	6/22/2022 2:48	0.68	6/22/2022 4:30	33.46
6/23/2022 4:14	88.43	6/22/2022 3:31	5.35	6/22/2022 4:01	10.39	6/22/2022 2:49	0.71	6/22/2022 4:31	33.45
6/23/2022 4:15	87.55	6/22/2022 3:32	4.52	6/22/2022 4:02	10.39	6/22/2022 2:50	0.70	6/22/2022 4:32	33.48
6/23/2022 4:16	86.92	6/22/2022 3:33	3.90	6/22/2022 4:03	10.35	6/22/2022 2:51	0.70	6/22/2022 4:33	33.48
6/23/2022 4:17	86.55	6/22/2022 3:34	3.38	6/22/2022 4:04	10.36	6/22/2022 2:52	0.69	6/22/2022 4:34	33.44
6/23/2022 4:18	86.30	6/22/2022 3:35	2.90	6/22/2022 4:05	10.34	6/22/2022 2:53	0.68	6/22/2022 4:35	33.49
6/23/2022 4:19	86.10	6/22/2022 3:36	2.54	6/22/2022 4:06	10.36	6/22/2022 2:54	0.72	6/22/2022 4:36	33.46
6/23/2022 4:20	86.02	6/22/2022 3:37	2.26	6/22/2022 4:07	10.35	6/22/2022 2:55	0.67	6/22/2022 4:37	33.49
6/23/2022 4:21	85.90	6/22/2022 3:38	2.02	6/22/2022 4:08	10.32	6/22/2022 2:56	0.73	6/22/2022 4:38	33.51

6/23/2022 4:22	85.84	6/22/2022 3:39	1.77	6/22/2022 4:09	10.34	6/22/2022 2:57	0.71	6/22/2022 4:39	33.44
6/23/2022 4:23	85.74	6/22/2022 3:40	1.60	6/22/2022 4:10	10.35	6/22/2022 2:58	0.67	6/22/2022 4:40	33.46
6/23/2022 4:24	85.69	6/22/2022 3:41	1.40	6/22/2022 4:11	10.37	6/22/2022 2:59	0.74	6/22/2022 4:41	33.43
6/23/2022 4:25	85.68	6/22/2022 3:42	1.25	6/22/2022 4:12	10.40	6/22/2022 3:00	0.70	6/22/2022 4:42	33.48
6/23/2022 4:26	85.61	6/22/2022 3:43	1.13	6/22/2022 4:13	10.38	6/22/2022 3:01	0.73	6/22/2022 4:43	33.52
6/23/2022 4:27	85.57	6/22/2022 3:44	1.02	6/22/2022 4:14	10.43	6/22/2022 3:02	0.72	6/22/2022 4:44	33.51
6/23/2022 4:28	85.59	6/22/2022 3:45	0.97	6/22/2022 4:15	10.39	6/22/2022 3:03	0.70	6/22/2022 4:45	33.49
6/23/2022 4:29	85.56	6/22/2022 3:46	0.88	6/22/2022 4:16	10.42	6/22/2022 3:04	0.73	6/22/2022 4:46	33.47
6/23/2022 4:30	85.50	6/22/2022 3:47	0.77	6/22/2022 4:17	10.40	6/22/2022 3:05	0.66	6/22/2022 4:47	33.49
6/23/2022 4:31	85.48	6/22/2022 3:48	0.71	6/22/2022 4:18	10.41	6/22/2022 3:06	0.77	6/22/2022 4:48	33.49
6/23/2022 4:32	85.49	6/22/2022 3:49	0.71	6/22/2022 4:19	10.40	6/22/2022 3:07	0.70	6/22/2022 4:49	33.49
6/23/2022 4:33	85.45	6/22/2022 3:50	0.62	6/22/2022 4:20	10.40	6/22/2022 3:08	0.74	6/22/2022 4:50	33.47
6/23/2022 4:34	85.42	6/22/2022 3:51	0.62	6/22/2022 4:21	10.43	6/22/2022 3:09	0.72	6/22/2022 4:51	33.50
6/23/2022 4:35	85.43	6/22/2022 3:52	0.58	6/22/2022 4:22	10.41	6/22/2022 3:10	0.72	6/22/2022 4:52	33.51
6/23/2022 4:36	85.35	6/22/2022 3:53	0.57	6/22/2022 4:23	10.40	6/22/2022 3:11	0.72	6/22/2022 4:53	33.49
6/23/2022 4:37	85.36	6/22/2022 3:54	0.52	6/22/2022 4:24	10.41	6/22/2022 3:12	0.69	6/22/2022 4:54	33.49
6/23/2022 4:38	85.31	6/22/2022 3:55	0.49	6/22/2022 4:25	10.37	6/22/2022 3:13	0.70	6/22/2022 4:55	33.48
6/23/2022 4:39	85.32	6/22/2022 3:56	0.50	6/22/2022 4:26	10.39	6/22/2022 3:14	0.73	6/22/2022 4:56	33.52
6/23/2022 4:40	85.33	6/22/2022 3:57	0.44	6/22/2022 4:27	10.38	6/22/2022 3:15	0.73	6/22/2022 4:57	33.52
6/23/2022 4:41	85.33	6/22/2022 3:58	0.44	6/22/2022 4:28	10.37	6/22/2022 3:16	0.70	6/22/2022 4:58	33.48
6/23/2022 4:42	85.34	6/22/2022 3:59	0.43	6/22/2022 4:29	10.35	6/22/2022 3:17	0.69	6/22/2022 4:59	33.48
6/23/2022 4:43	85.32	6/22/2022 4:00	0.47	6/22/2022 4:30	10.38	6/22/2022 3:18	0.71	6/22/2022 5:00	33.49
6/23/2022 4:44	85.31	6/22/2022 4:01	0.44	6/22/2022 4:31	10.40	6/22/2022 3:19	0.75	6/22/2022 5:01	33.48
6/23/2022 4:45	85.29	6/22/2022 4:02	0.43	6/22/2022 4:32	10.33	6/22/2022 3:20	0.69	6/22/2022 5:02	33.53
6/23/2022 4:46	85.32	6/22/2022 4:03	0.41	6/22/2022 4:33	10.36	6/22/2022 3:21	0.73	6/22/2022 5:03	33.52
6/23/2022 4:47	85.29	6/22/2022 4:04	0.41	6/22/2022 4:34	10.37	6/22/2022 3:22	0.72	6/22/2022 5:04	33.49
6/23/2022 4:48	85.27	6/22/2022 4:05	0.42	6/22/2022 4:35	10.34	6/22/2022 3:23	0.75	6/22/2022 5:05	33.47
6/23/2022 4:49	85.30	6/22/2022 4:06	0.36	6/22/2022 4:36	10.33	6/22/2022 3:24	0.72	6/22/2022 5:06	33.48
6/23/2022 4:50	85.26	6/22/2022 4:07	0.39	6/22/2022 4:37	10.36	6/22/2022 3:25	0.71	6/22/2022 5:07	33.48
6/23/2022 4:51	85.20	6/22/2022 4:08	0.42	6/22/2022 4:38	10.30	6/22/2022 3:26	0.72	6/22/2022 5:08	33.51
6/23/2022 4:52	85.17	6/22/2022 4:09	0.41	6/22/2022 4:39	10.31	6/22/2022 3:27	0.70	6/22/2022 5:09	33.48
6/23/2022 4:53	85.19	6/22/2022 4:10	0.37	6/22/2022 4:40	10.35	6/22/2022 3:28	0.73	6/22/2022 5:10	33.51
6/23/2022 4:54	85.19	6/22/2022 4:11	0.36	6/22/2022 4:41	10.35	6/22/2022 3:29	0.76	6/22/2022 5:11	33.49
6/23/2022 4:55	85.16	6/22/2022 4:12	0.33	6/22/2022 4:42	10.35	6/22/2022 3:30	0.72	6/22/2022 5:12	33.51
6/23/2022 4:56	85.17	6/22/2022 4:13	0.40	6/22/2022 4:43	10.36	6/22/2022 3:31	0.72	6/22/2022 5:13	33.50
6/23/2022 4:57	85.20	6/22/2022 4:14	0.38	6/22/2022 4:44	10.41	6/22/2022 3:32	0.75	6/22/2022 5:14	33.48
6/23/2022 4:58	85.16	6/22/2022 4:15	0.36	6/22/2022 4:45	10.39	6/22/2022 3:33	0.74	6/22/2022 5:15	33.49
6/23/2022 4:59	85.18	6/22/2022 4:16	0.34	6/22/2022 4:46	10.42	6/22/2022 3:34	0.74	6/22/2022 5:16	33.52
6/23/2022 5:00	85.15	6/22/2022 4:17	0.36	6/22/2022 4:47	10.39	6/22/2022 3:35	0.70	6/22/2022 5:17	33.48
6/23/2022 5:01	85.14	6/22/2022 4:18	0.38	6/22/2022 4:48	10.40	6/22/2022 3:36	0.72	6/22/2022 5:18	33.51
6/23/2022 5:02	85.15	6/22/2022 4:19	0.37	6/22/2022 4:49	10.41	6/22/2022 3:37	0.75	6/22/2022 5:19	33.50
6/23/2022 5:03	85.16	6/22/2022 4:20	0.33	6/22/2022 4:50	10.40	6/22/2022 3:38	0.73	6/22/2022 5:20	33.47
6/23/2022 5:04	85.13	6/22/2022 4:21	0.36	6/22/2022 4:51	10.37	6/22/2022 3:39	0.74	6/22/2022 5:21	33.53
6/23/2022 5:05	85.14	6/22/2022 4:22	0.35	6/22/2022 4:52	10.40	6/22/2022 3:40	0.70	6/22/2022 5:22	33.48
6/23/2022 5:06	85.12	6/22/2022 4:23	0.34	6/22/2022 4:53	10.40	6/22/2022 3:41	0.70	6/22/2022 5:23	33.52
6/23/2022 5:07	85.11	6/22/2022 4:24	0.36	6/22/2022 4:54	10.38	6/22/2022 3:42	0.70	6/22/2022 5:24	33.49
6/23/2022 5:08	85.13	6/22/2022 4:25	0.36	6/22/2022 4:55	10.34	6/22/2022 3:43	0.73	6/22/2022 5:25	33.53
6/23/2022 5:09	85.16	6/22/2022 4:26	0.34	6/22/2022 4:56	10.38	6/22/2022 3:44	0.71	6/22/2022 5:26	33.50
6/23/2022 5:10	85.09	6/22/2022 4:27	0.35	6/22/2022 4:57	10.39	6/22/2022 3:45	0.72	6/22/2022 5:27	33.53
6/23/2022 5:11	85.09	6/22/2022 4:28	0.35	6/22/2022 4:58	10.37	6/22/2022 3:46	0.71	6/22/2022 5:28	33.48
6/23/2022 5:12	85.07	6/22/2022 4:29	0.36	6/22/2022 4:59	10.36	6/22/2022 3:47	0.70	6/22/2022 5:29	33.50
6/23/2022 5:13	85.09	6/22/2022 4:30	6.29	6/22/2022 5:00	10.36	6/22/2022 3:48	0.71	6/22/2022 5:30	33.49
6/23/2022 5:14	85.09	6/22/2022 4:31	7.12	6/22/2022 5:01	10.35	6/22/2022 3:49	0.72	6/22/2022 5:31	33.52
6/23/2022 5:15	85.06	6/22/2022 4:32	5.98	6/22/2022 5:02	10.35	6/22/2022 3:50	0.71	6/22/2022 5:32	33.53
6/23/2022 5:16	85.06	6/22/2022 4:33	5.08	6/22/2022 5:03	10.33	6/22/2022 3:51	0.70	6/22/2022 5:33	33.52
6/23/2022 5:17	85.12	6/22/2022 4:34	4.38	6/22/2022 5:04	10.35	6/22/2022 3:52	0.71	6/22/2022 5:34	33.48
6/23/2022 5:18	85.03	6/22/2022 4:35	3.75	6/22/2022 5:05	10.33	6/22/2022 3:53	0.69	6/22/2022 5:35	33.50
6/23/2022 5:19	85.03	6/22/2022 4:36	3.25	6/22/2022 5:06	10.40	6/22/2022 3:54	0.71	6/22/2022 5:36	33.55
6/23/2022 5:20	85.00	6/22/2022 4:37	2.80	6/22/2022 5:07	10.44	6/22/2022 3:55	0.73	6/22/2022 5:37	33.51
6/23/2022 5:21	85.04	6/22/2022 4:38	2.44	6/22/2022 5:08	10.44	6/22/2022 3:56	0.70	6/22/2022 5:38	33.52
6/23/2022 5:22	85.02	6/22/2022 4:39	2.17	6/22/2022 5:09	10.47	6/22/2022 3:57	0.65	6/22/2022 5:39	33.53
6/23/2022 5:23	85.05	6/22/2022 4:40	1.91	6/22/2022 5:10	10.56	6/22/2022 3:58	0.70	6/22/2022 5:40	33.54
6/23/2022 5:24	85.01	6/22/2022 4:41	1.71	6/22/2022 5:11	10.57	6/22/2022 3:59	0.71	6/22/2022 5:41	33.53
6/23/2022 5:25	85.04	6/22/2022 4:42	1.53	6/22/2022 5:12	10.63	6/22/2022 4:00	0.69	6/22/2022 5:42	33.53
6/23/2022 5:26	85.03	6/22/2022 4:43	1.35	6/22/2022 5:13	10.67	6/22/2022 4:01	0.67	6/22/2022 5:43	33.46
6/23/2022 5:27	85.05	6/22/2022 4:44	1.26	6/22/2022 5:14	10.71	6/22/2022 4:02	0.69	6/22/2022 5:44	33.53
6/23/2022 5:28	85.00	6/22/2022 4:45	1.07	6/22/2022 5:15	10.77	6/22/2022 4:03	0.69	6/22/2022 5:45	33.53
6/23/2022 5:29	85.07	6/22/2022 4:46	1.01	6/22/2022 5:16	10.80	6/22/2022 4:04	0.72	6/22/2022 5:46	33.56
6/23/2022 5:30	85.00	6/22/2022 4:47	0.97	6/22/2022 5:17	10.83	6/22/2022 4:05	0.69	6/22/2022 5:47	33.56
6/23/2022 5:31	85.03	6/22/2022 4:48	0.85	6/22/2022 5:18	10.87	6/22/2022 4:06	0.69	6/22/2022 5:48	33.49
6/23/2022 5:32	85.01	6/22/2022 4:49	0.81	6/22/2022 5:19	10.85	6/22/2022 4:07	0.72	6/22/2022 5:49	33.53
6/23/2022 5:33	85.01	6/22/2022 4:50	0.77	6/22/2022 5:20	10.90	6/22/2022 4:08	0.68	6/22/2022 5:50	33.54
6/23/2022 5:34	85.00	6/22/2022 4:51	0.70	6/22/2022 5:21	10.93	6/22/2022 4:09	0.69	6/22/2022 5:51	33.52
6/23/2022 5:35	85.00	6/22/2022 4:52	0.61	6/22/2022 5:22	10.94	6/22/2022 4:10	0.72	6/22/2022 5:52	33.55
6/23/2022 5:36	85.00	6/22/2022 4:53	0.62	6/22/2022 5:23	10.96	6/22/2022 4:11	0.72	6/22/2022 5:53	33.53
6/23/2022 5:37	85.01	6/22/2022 4:54	0.56	6/22/2022 5:24	10.98	6/22/2022 4:12	0.72	6/22/2022 5:54	33.53
6/23/2022 5:38	85.02	6/22/2022 4:55	0.51	6/22/2022 5:25	10.99	6/22/2022 4:13	0.73	6/22/2022 5:55	33.51
6/23/2022 5:39	85.00	6/22/2022 4:56	0.53	6/22/2022 5:26	11.02	6/22/2022 4:14	0.71	6/22/2022 5:56	33.55
6/23/2022 5:40	85.00	6/22/2022 4:57	0.49	6/22/2022 5:27	10.96	6/22/2022 4:15	0.70	6/22/2022 5:57	33.51
6/23/2022 5:41	84.95	6/22/2022 4:58	0.49	6/22/2022 5:28	10.97	6/22/2022 4:16	0.74	6/22/2022 5:58	33.55
6/23/2022 5:42	84.97	6/22/2022 4:59	0.45	6/22/2022 5:29	10.96	6/22/2022 4:17	0.73	6/22/2022 5:59	33.57
6/23/2022 5:43	84.93	6/22/2022 5:00	0.46	6/22/2022 5:30	10.95	6/22/2022 4:18	0.70	6/22/2022 6:00	33.55
6/23/2022 5:44	84.97	6/22/2022 5:01	0.46	6/22/2022 5:31	10.94	6/22/2022 4:19	0.69	6/22/2022 6:01	33.56
6/23/2022 5:45	84.96	6/22/2022 5:02	0.44	6/22/2022 5:32	10.89	6/22/2022 4:20	0.70	6/22/2022 6:02	33.53
6/23/2022 5:46	84.97	6/22/2022 5:03	0.39	6/22/2022 5:33	10.90	6/22/2022 4:21	0.69	6/22/2022 6:03	33.53
6/23/2022 5:47	84.99	6/22/2022 5:04	0.43	6/22/2022 5:34	10.86	6/22/2022 4:22	0.70	6/22/2022 6:04	33.56
6/23/2022 5:48	84.96	6/22/2022 5:05	0.41	6/22/2022 5:35	10.83	6/22/2022 4:23	0.71	6/22/2022 6:05	33.56
6/23/2022 5:49	84.93	6/22/2022 5:06	0.42	6/22/2022 5:36	10.82	6/22/2022 4:24	0.69	6/22/2022 6:06	33.57

6/23/2022 5:50	84.94	6/22/2022 5:07	0.43	6/22/2022 5:37	10.79	6/22/2022 4:25	0.69	6/22/2022 6:07	33.56
6/23/2022 5:51	84.99	6/22/2022 5:08	0.43	6/22/2022 5:38	10.79	6/22/2022 4:26	0.72	6/22/2022 6:08	33.54
6/23/2022 5:52	84.93	6/22/2022 5:09	0.41	6/22/2022 5:39	10.79	6/22/2022 4:27	0.68	6/22/2022 6:09	33.55
6/23/2022 5:53	84.93	6/22/2022 5:10	0.47	6/22/2022 5:40	10.75	6/22/2022 4:28	0.72	6/22/2022 6:10	33.55
6/23/2022 5:54	84.95	6/22/2022 5:11	0.43	6/22/2022 5:41	10.78	6/22/2022 4:29	0.70	6/22/2022 6:11	33.57
6/23/2022 5:55	84.94	6/22/2022 5:12	0.35	6/22/2022 5:42	10.78	6/22/2022 4:30	0.74	6/22/2022 6:12	33.55
6/23/2022 5:56	84.92	6/22/2022 5:13	0.37	6/22/2022 5:43	10.76	6/22/2022 4:31	0.76	6/22/2022 6:13	33.56
6/23/2022 5:57	84.93	6/22/2022 5:14	0.40	6/22/2022 5:44	10.75	6/22/2022 4:32	0.76	6/22/2022 6:14	33.56
6/23/2022 5:58	84.93	6/22/2022 5:15	0.42	6/22/2022 5:45	10.77	6/22/2022 4:33	0.79	6/22/2022 6:15	33.56
6/23/2022 5:59	84.96	6/22/2022 5:16	0.36	6/22/2022 5:46	10.76	6/22/2022 4:34	0.73	6/22/2022 6:16	33.57
6/23/2022 6:00	84.93	6/22/2022 5:17	0.39	6/22/2022 5:47	10.71	6/22/2022 4:35	0.75	6/22/2022 6:17	33.56
6/23/2022 6:01	84.92	6/22/2022 5:18	0.36	6/22/2022 5:48	10.74	6/22/2022 4:36	0.74	6/22/2022 6:18	33.52
6/23/2022 6:02	84.92	6/22/2022 5:19	0.39	6/22/2022 5:49	10.77	6/22/2022 4:37	0.72	6/22/2022 6:19	33.55
6/23/2022 6:03	84.90	6/22/2022 5:20	0.37	6/22/2022 5:50	10.78	6/22/2022 4:38	0.77	6/22/2022 6:20	33.53
6/23/2022 6:04	84.91	6/22/2022 5:21	0.40	6/22/2022 5:51	10.77	6/22/2022 4:39	0.69	6/22/2022 6:21	33.55
6/23/2022 6:05	84.94	6/22/2022 5:22	0.40	6/22/2022 5:52	10.73	6/22/2022 4:40	0.71	6/22/2022 6:22	33.54
6/23/2022 6:06	84.94	6/22/2022 5:23	0.33	6/22/2022 5:53	10.78	6/22/2022 4:41	0.69	6/22/2022 6:23	33.57
6/23/2022 6:07	84.89	6/22/2022 5:24	0.37	6/22/2022 5:54	10.76	6/22/2022 4:42	0.73	6/22/2022 6:24	33.57
6/23/2022 6:08	84.93	6/22/2022 5:25	0.38	6/22/2022 5:55	10.71	6/22/2022 4:43	0.70	6/22/2022 6:25	33.55
6/23/2022 6:09	84.89	6/22/2022 5:26	0.36	6/22/2022 5:56	10.75	6/22/2022 4:44	0.68	6/22/2022 6:26	33.55
6/23/2022 6:10	84.92	6/22/2022 5:27	0.33	6/22/2022 5:57	10.72	6/22/2022 4:45	0.74	6/22/2022 6:27	33.54
6/23/2022 6:11	84.90	6/22/2022 5:28	0.41	6/22/2022 5:58	10.70	6/22/2022 4:46	0.74	6/22/2022 6:28	33.59
6/23/2022 6:12	84.88	6/22/2022 5:29	0.36	6/22/2022 5:59	10.66	6/22/2022 4:47	0.73	6/22/2022 6:29	33.54
6/23/2022 6:13	84.88	6/22/2022 5:30	0.37	6/22/2022 6:00	10.69	6/22/2022 4:48	0.73	6/22/2022 6:30	33.55
6/23/2022 6:14	84.92	6/22/2022 5:31	0.35	6/22/2022 6:01	10.64	6/22/2022 4:49	0.74	6/22/2022 6:31	33.55
6/23/2022 6:15	84.95	6/22/2022 5:32	6.23	6/22/2022 6:02	10.66	6/22/2022 4:50	0.72	6/22/2022 6:32	33.56
6/23/2022 6:16	84.89	6/22/2022 5:33	7.20	6/22/2022 6:03	10.62	6/22/2022 4:51	0.75	6/22/2022 6:33	33.56
6/23/2022 6:17	84.87	6/22/2022 5:34	6.11	6/22/2022 6:04	10.60	6/22/2022 4:52	0.71	6/22/2022 6:34	33.58
6/23/2022 6:18	84.89	6/22/2022 5:35	5.17	6/22/2022 6:05	10.58	6/22/2022 4:53	0.70	6/22/2022 6:35	33.56
6/23/2022 6:19	84.89	6/22/2022 5:36	4.45	6/22/2022 6:06	10.57	6/22/2022 4:54	0.75	6/22/2022 6:36	33.56
6/23/2022 6:20	84.86	6/22/2022 5:37	3.84	6/22/2022 6:07	10.55	6/22/2022 4:55	0.72	6/22/2022 6:37	33.56
6/23/2022 6:21	84.88	6/22/2022 5:38	3.29	6/22/2022 6:08	10.57	6/22/2022 4:56	0.72	6/22/2022 6:38	33.54
6/23/2022 6:22	84.90	6/22/2022 5:39	2.82	6/22/2022 6:09	10.57	6/22/2022 4:57	0.74	6/22/2022 6:39	33.56
6/23/2022 6:23	84.90	6/22/2022 5:40	2.51	6/22/2022 6:10	10.57	6/22/2022 4:58	0.70	6/22/2022 6:40	33.57
6/23/2022 6:24	84.88	6/22/2022 5:41	2.18	6/22/2022 6:11	10.50	6/22/2022 4:59	0.73	6/22/2022 6:41	33.56
6/23/2022 6:25	84.93	6/22/2022 5:42	1.93	6/22/2022 6:12	10.50	6/22/2022 5:00	0.74	6/22/2022 6:42	33.55
6/23/2022 6:26	84.91	6/22/2022 5:43	1.75	6/22/2022 6:13	10.48	6/22/2022 5:01	0.69	6/22/2022 6:43	33.58
6/23/2022 6:27	84.90	6/22/2022 5:44	1.56	6/22/2022 6:14	10.50	6/22/2022 5:02	0.73	6/22/2022 6:44	33.56
6/23/2022 6:28	84.92	6/22/2022 5:45	1.40	6/22/2022 6:15	10.46	6/22/2022 5:03	0.69	6/22/2022 6:45	33.59
6/23/2022 6:29	84.92	6/22/2022 5:46	1.25	6/22/2022 6:16	10.50	6/22/2022 5:04	0.70	6/22/2022 6:46	33.57
6/23/2022 6:30	84.90	6/22/2022 5:47	1.14	6/22/2022 6:17	10.49	6/22/2022 5:05	0.76	6/22/2022 6:47	33.54
6/23/2022 6:31	84.84	6/22/2022 5:48	1.05	6/22/2022 6:18	10.51	6/22/2022 5:06	0.71	6/22/2022 6:48	33.63
6/23/2022 6:32	84.86	6/22/2022 5:49	0.98	6/22/2022 6:19	10.51	6/22/2022 5:07	0.72	6/22/2022 6:49	33.60
6/23/2022 6:33	84.87	6/22/2022 5:50	0.87	6/22/2022 6:20	10.50	6/22/2022 5:08	0.70	6/22/2022 6:50	33.57
6/23/2022 6:34	84.86	6/22/2022 5:51	0.81	6/22/2022 6:21	10.51	6/22/2022 5:09	0.74	6/22/2022 6:51	33.57
6/23/2022 6:35	84.87	6/22/2022 5:52	0.76	6/22/2022 6:22	10.52	6/22/2022 5:10	0.72	6/22/2022 6:52	33.61
6/23/2022 6:36	84.90	6/22/2022 5:53	0.70	6/22/2022 6:23	10.50	6/22/2022 5:11	0.69	6/22/2022 6:53	33.59
6/23/2022 6:37	84.86	6/22/2022 5:54	0.61	6/22/2022 6:24	10.48	6/22/2022 5:12	0.70	6/22/2022 6:54	33.56
6/23/2022 6:38	84.81	6/22/2022 5:55	0.62	6/22/2022 6:25	10.56	6/22/2022 5:13	0.72	6/22/2022 6:55	33.56
6/23/2022 6:39	84.88	6/22/2022 5:56	0.60	6/22/2022 6:26	10.53	6/22/2022 5:14	0.72	6/22/2022 6:56	33.56
6/23/2022 6:40	84.83	6/22/2022 5:57	0.57	6/22/2022 6:27	10.54	6/22/2022 5:15	0.72	6/22/2022 6:57	33.60
6/23/2022 6:41	84.88	6/22/2022 5:58	0.54	6/22/2022 6:28	10.57	6/22/2022 5:16	0.71	6/22/2022 6:58	33.57
6/23/2022 6:42	84.86	6/22/2022 5:59	0.50	6/22/2022 6:29	10.57	6/22/2022 5:17	0.75	6/22/2022 6:59	33.56
6/23/2022 6:43	84.86	6/22/2022 6:00	0.53	6/22/2022 6:30	10.56	6/22/2022 5:18	0.72	6/22/2022 7:00	33.60
6/23/2022 6:44	84.87	6/22/2022 6:01	0.48	6/22/2022 6:31	10.57	6/22/2022 5:19	0.74	6/22/2022 7:01	33.55
6/23/2022 6:45	84.85	6/22/2022 6:02	0.44	6/22/2022 6:32	10.55	6/22/2022 5:20	0.72	6/22/2022 7:02	33.62
6/23/2022 6:46	84.85	6/22/2022 6:03	0.47	6/22/2022 6:33	10.56	6/22/2022 5:21	0.72	6/22/2022 7:03	33.59
6/23/2022 6:47	84.83	6/22/2022 6:04	0.45	6/22/2022 6:34	10.58	6/22/2022 5:22	0.75	6/22/2022 7:04	33.58
6/23/2022 6:48	84.86	6/22/2022 6:05	0.42	6/22/2022 6:35	10.58	6/22/2022 5:23	0.73	6/22/2022 7:05	33.57
6/23/2022 6:49	84.85	6/22/2022 6:06	0.44	6/22/2022 6:36	10.59	6/22/2022 5:24	0.75	6/22/2022 7:06	33.58
6/23/2022 6:50	84.79	6/22/2022 6:07	0.44	6/22/2022 6:37	10.59	6/22/2022 5:25	0.73	6/22/2022 7:07	33.59
6/23/2022 6:51	84.82	6/22/2022 6:08	0.37	6/22/2022 6:38	10.59	6/22/2022 5:26	0.72	6/22/2022 7:08	33.59
6/23/2022 6:52	84.83	6/22/2022 6:09	0.40	6/22/2022 6:39	10.61	6/22/2022 5:27	0.72	6/22/2022 7:09	33.61
6/23/2022 6:53	84.82	6/22/2022 6:10	0.42	6/22/2022 6:40	10.60	6/22/2022 5:28	0.74	6/22/2022 7:10	33.60
6/23/2022 6:54	84.84	6/22/2022 6:11	0.39	6/22/2022 6:41	10.61	6/22/2022 5:29	0.71	6/22/2022 7:11	33.56
6/23/2022 6:55	84.83	6/22/2022 6:12	0.37	6/22/2022 6:42	10.58	6/22/2022 5:30	0.71	6/22/2022 7:12	33.61
6/23/2022 6:56	84.80	6/22/2022 6:13	0.40	6/22/2022 6:43	10.54	6/22/2022 5:31	0.70	6/22/2022 7:13	33.63
6/23/2022 6:57	84.83	6/22/2022 6:14	0.38	6/22/2022 6:44	10.61	6/22/2022 5:32	0.72	6/22/2022 7:14	33.61
6/23/2022 6:58	84.81	6/22/2022 6:15	0.42	6/22/2022 6:45	10.56	6/22/2022 5:33	0.78	6/22/2022 7:15	33.60
6/23/2022 6:59	84.82	6/22/2022 6:16	0.41	6/22/2022 6:46	10.56	6/22/2022 5:34	0.76	6/22/2022 7:16	33.60
6/23/2022 7:00	84.84	6/22/2022 6:17	0.40	6/22/2022 6:47	10.54	6/22/2022 5:35	0.74	6/22/2022 7:17	33.59
6/23/2022 7:01	84.84	6/22/2022 6:18	0.38	6/22/2022 6:48	10.57	6/22/2022 5:36	0.76	6/22/2022 7:18	33.61
6/23/2022 7:02	84.81	6/22/2022 6:19	0.39	6/22/2022 6:49	10.51	6/22/2022 5:37	0.73	6/22/2022 7:19	33.65
6/23/2022 7:03	84.78	6/22/2022 6:20	0.36	6/22/2022 6:50	10.51	6/22/2022 5:38	0.72	6/22/2022 7:20	33.57
6/23/2022 7:04	84.82	6/22/2022 6:21	0.35	6/22/2022 6:51	10.50	6/22/2022 5:39	0.76	6/22/2022 7:21	33.59
6/23/2022 7:05	84.81	6/22/2022 6:22	0.39	6/22/2022 6:52	10.47	6/22/2022 5:40	0.75	6/22/2022 7:22	33.60
6/23/2022 7:06	84.76	6/22/2022 6:23	0.36	6/22/2022 6:53	10.46	6/22/2022 5:41	0.74	6/22/2022 7:23	33.59
6/23/2022 7:07	84.86	6/22/2022 6:24	0.36	6/22/2022 6:54	10.51	6/22/2022 5:42	0.71	6/22/2022 7:24	33.59
6/23/2022 7:08	84.80	6/22/2022 6:25	0.39	6/22/2022 6:55	10.46	6/22/2022 5:43	0.74	6/22/2022 7:25	33.65
6/23/2022 7:09	84.80	6/22/2022 6:26	0.39	6/22/2022 6:56	10.53	6/22/2022 5:44	0.75	6/22/2022 7:26	33.59
6/23/2022 7:10	84.80	6/22/2022 6:27	0.50	6/22/2022 6:57	10.51	6/22/2022 5:45	0.73	6/22/2022 7:27	33.59
6/23/2022 7:11	84.78	6/22/2022 6:28	0.57	6/22/2022 6:58	10.52	6/22/2022 5:46	0.76	6/22/2022 7:28	33.64
6/23/2022 7:12	84.79	6/22/2022 6:29	0.59	6/22/2022 6:59	10.52	6/22/2022 5:47	0.72	6/22/2022 7:29	33.62
6/23/2022 7:13	84.78	6/22/2022 6:30	0.61	6/22/2022 7:00	10.53	6/22/2022 5:48	0.75	6/22/2022 7:30	33.61
6/23/2022 7:14	84.81	6/22/2022 6:31	0.65	6/22/2022 7:01	10.51	6/22/2022 5:49	0.71	6/22/2022 7:31	33.65
6/23/2022 7:15	84.74	6/22/2022 6:32	6.71	6/22/2022 7:02	10.52	6/22/2022 5:50	0.74	6/22/2022 7:32	33.64
6/23/2022 7:16	84.80	6/22/2022 6:33	7.73	6/22/2022 7:03	10.54	6/22/2022 5:51	0.74	6/22/2022 7:33	33.60
6/23/2022 7:17	84.80	6/22/2022 6:34	6.52	6/22/2022 7:04	10.51	6/22/2022 5:52	0.73	6/22/2022 7:34	33.60

6/23/2022 7:18	84.75	6/22/2022 6:35	5.54	6/22/2022 7:05	10.51	6/22/2022 5:53	0.71	6/22/2022 7:35	33.66
6/23/2022 7:19	84.74	6/22/2022 6:36	4.74	6/22/2022 7:06	10.51	6/22/2022 5:54	0.74	6/22/2022 7:36	33.62
6/23/2022 7:20	84.75	6/22/2022 6:37	4.09	6/22/2022 7:07	10.51	6/22/2022 5:55	0.72	6/22/2022 7:37	33.62
6/23/2022 7:21	84.80	6/22/2022 6:38	3.56	6/22/2022 7:08	10.49	6/22/2022 5:56	0.72	6/22/2022 7:38	33.63
6/23/2022 7:22	84.79	6/22/2022 6:39	3.06	6/22/2022 7:09	10.51	6/22/2022 5:57	0.73	6/22/2022 7:39	33.63
6/23/2022 7:23	84.79	6/22/2022 6:40	2.66	6/22/2022 7:10	10.46	6/22/2022 5:58	0.73	6/22/2022 7:40	33.62
6/23/2022 7:24	84.78	6/22/2022 6:41	7.31	6/22/2022 7:11	10.41	6/22/2022 5:59	0.71	6/22/2022 7:41	33.63
6/23/2022 7:25	84.80	6/22/2022 6:42	11.40	6/22/2022 7:12	10.46	6/22/2022 6:00	0.72	6/22/2022 7:42	33.62
6/23/2022 7:26	84.78	6/22/2022 6:43	9.67	6/22/2022 7:13	10.42	6/22/2022 6:01	0.70	6/22/2022 7:43	33.61
6/23/2022 7:27	84.76	6/22/2022 6:44	8.18	6/22/2022 7:14	10.41	6/22/2022 6:02	0.72	6/22/2022 7:44	33.63
6/23/2022 7:28	84.76	6/22/2022 6:45	7.08	6/22/2022 7:15	10.42	6/22/2022 6:03	0.73	6/22/2022 7:45	33.60
6/23/2022 7:29	84.76	6/22/2022 6:46	6.13	6/22/2022 7:16	10.40	6/22/2022 6:04	0.71	6/22/2022 7:46	33.63
6/23/2022 7:30	84.77	6/22/2022 6:47	5.33	6/22/2022 7:17	10.42	6/22/2022 6:05	0.73	6/22/2022 7:47	33.62
6/23/2022 7:31	84.76	6/22/2022 6:48	4.59	6/22/2022 7:18	10.41	6/22/2022 6:06	0.70	6/22/2022 7:48	33.63
6/23/2022 7:32	84.78	6/22/2022 6:49	4.03	6/22/2022 7:19	10.47	6/22/2022 6:07	0.71	6/22/2022 7:49	33.62
6/23/2022 7:33	84.80	6/22/2022 6:50	3.52	6/22/2022 7:20	10.46	6/22/2022 6:08	0.70	6/22/2022 7:50	33.62
6/23/2022 7:34	84.77	6/22/2022 6:51	7.90	6/22/2022 7:21	10.44	6/22/2022 6:09	0.67	6/22/2022 7:51	33.62
6/23/2022 7:35	84.78	6/22/2022 6:52	9.87	6/22/2022 7:22	10.47	6/22/2022 6:10	0.72	6/22/2022 7:52	33.65
6/23/2022 7:36	84.74	6/22/2022 6:53	8.34	6/22/2022 7:23	10.49	6/22/2022 6:11	0.73	6/22/2022 7:53	33.63
6/23/2022 7:37	84.76	6/22/2022 6:54	7.09	6/22/2022 7:24	10.48	6/22/2022 6:12	0.73	6/22/2022 7:54	33.61
6/23/2022 7:38	84.78	6/22/2022 6:55	6.08	6/22/2022 7:25	10.48	6/22/2022 6:13	0.67	6/22/2022 7:55	33.61
6/23/2022 7:39	84.77	6/22/2022 6:56	5.22	6/22/2022 7:26	10.49	6/22/2022 6:14	0.74	6/22/2022 7:56	33.63
6/23/2022 7:40	84.76	6/22/2022 6:57	4.55	6/22/2022 7:27	10.49	6/22/2022 6:15	0.69	6/22/2022 7:57	33.61
6/23/2022 7:41	84.77	6/22/2022 6:58	3.89	6/22/2022 7:28	10.49	6/22/2022 6:16	0.72	6/22/2022 7:58	33.64
6/23/2022 7:42	84.76	6/22/2022 6:59	3.43	6/22/2022 7:29	10.50	6/22/2022 6:17	0.71	6/22/2022 7:59	33.66
6/23/2022 7:43	84.76	6/22/2022 7:00	2.94	6/22/2022 7:30	10.48	6/22/2022 6:18	0.73	6/22/2022 8:00	33.66
6/23/2022 7:44	84.78	6/22/2022 7:01	2.64	6/22/2022 7:31	10.50	6/22/2022 6:19	0.71	6/22/2022 8:01	33.65
6/23/2022 7:45	84.77	6/22/2022 7:02	2.34	6/22/2022 7:32	10.43	6/22/2022 6:20	0.70	6/22/2022 8:02	33.63
6/23/2022 7:46	84.76	6/22/2022 7:03	2.07	6/22/2022 7:33	10.45	6/22/2022 6:21	0.70	6/22/2022 8:03	33.64
6/23/2022 7:47	84.76	6/22/2022 7:04	1.86	6/22/2022 7:34	10.44	6/22/2022 6:22	0.71	6/22/2022 8:04	33.67
6/23/2022 7:48	84.75	6/22/2022 7:05	1.71	6/22/2022 7:35	10.42	6/22/2022 6:23	0.70	6/22/2022 8:05	33.66
6/23/2022 7:49	84.76	6/22/2022 7:06	1.54	6/22/2022 7:36	10.47	6/22/2022 6:24	0.71	6/22/2022 8:06	33.63
6/23/2022 7:50	84.77	6/22/2022 7:07	1.41	6/22/2022 7:37	10.49	6/22/2022 6:25	0.70	6/22/2022 8:07	33.63
6/23/2022 7:51	84.78	6/22/2022 7:08	1.24	6/22/2022 7:38	10.49	6/22/2022 6:26	3.15	6/22/2022 8:08	33.65
6/23/2022 7:52	84.74	6/22/2022 7:09	1.17	6/22/2022 7:39	10.50	6/22/2022 6:27	8.09	6/22/2022 8:09	33.58
6/23/2022 7:53	84.79	6/22/2022 7:10	1.05	6/22/2022 7:40	10.53	6/22/2022 6:28	5.35	6/22/2022 8:10	33.65
6/23/2022 7:54	84.74	6/22/2022 7:11	1.00	6/22/2022 7:41	10.53	6/22/2022 6:29	3.29	6/22/2022 8:11	33.62
6/23/2022 7:55	84.75	6/22/2022 7:12	0.90	6/22/2022 7:42	10.52	6/22/2022 6:30	1.86	6/22/2022 8:12	33.66
6/23/2022 7:56	84.77	6/22/2022 7:13	0.83	6/22/2022 7:43	10.54	6/22/2022 6:31	0.83	6/22/2022 8:13	33.63
6/23/2022 7:57	84.71	6/22/2022 7:14	0.77	6/22/2022 7:44	10.51	6/22/2022 6:32	0.79	6/22/2022 8:14	33.67
6/23/2022 7:58	84.74	6/22/2022 7:15	0.74	6/22/2022 7:45	10.52	6/22/2022 6:33	0.81	6/22/2022 8:15	33.64
6/23/2022 7:59	84.77	6/22/2022 7:16	0.73	6/22/2022 7:46	10.50	6/22/2022 6:34	0.80	6/22/2022 8:16	33.63
6/23/2022 8:00	84.72	6/22/2022 7:17	3.94	6/22/2022 7:47	10.50	6/22/2022 6:35	0.80	6/22/2022 8:17	33.67
6/23/2022 8:01	84.71	6/22/2022 7:18	9.11	6/22/2022 7:48	10.51	6/22/2022 6:36	0.77	6/22/2022 8:18	33.60
6/23/2022 8:02	84.70	6/22/2022 7:19	7.79	6/22/2022 7:49	10.48	6/22/2022 6:37	0.79	6/22/2022 8:19	33.65
6/23/2022 8:03	84.69	6/22/2022 7:20	6.58	6/22/2022 7:50	10.46	6/22/2022 6:38	0.79	6/22/2022 8:20	33.63
6/23/2022 8:04	84.73	6/22/2022 7:21	5.62	6/22/2022 7:51	10.46	6/22/2022 6:39	0.75	6/22/2022 8:21	33.61
6/23/2022 8:05	84.74	6/22/2022 7:22	4.83	6/22/2022 7:52	10.50	6/22/2022 6:40	0.79	6/22/2022 8:22	33.65
6/23/2022 8:06	84.70	6/22/2022 7:23	4.20	6/22/2022 7:53	10.43	6/22/2022 6:41	0.80	6/22/2022 8:23	33.66
6/23/2022 8:07	84.71	6/22/2022 7:24	3.64	6/22/2022 7:54	10.44	6/22/2022 6:42	0.76	6/22/2022 8:24	33.65
6/23/2022 8:08	84.75	6/22/2022 7:25	3.17	6/22/2022 7:55	10.41	6/22/2022 6:43	0.77	6/22/2022 8:25	33.63
6/23/2022 8:09	84.74	6/22/2022 7:26	2.70	6/22/2022 7:56	10.42	6/22/2022 6:44	6.62	6/22/2022 8:26	33.63
6/23/2022 8:10	84.70	6/22/2022 7:27	2.43	6/22/2022 7:57	10.44	6/22/2022 6:45	7.12	6/22/2022 8:27	33.68
6/23/2022 8:11	84.68	6/22/2022 7:28	2.14	6/22/2022 7:58	10.50	6/22/2022 6:46	4.82	6/22/2022 8:28	33.65
6/23/2022 8:12	84.70	6/22/2022 7:29	1.91	6/22/2022 7:59	10.49	6/22/2022 6:47	2.96	6/22/2022 8:29	33.67
6/23/2022 8:13	84.71	6/22/2022 7:30	1.74	6/22/2022 8:00	10.49	6/22/2022 6:48	1.75	6/22/2022 8:30	35.00
6/23/2022 8:14	84.71	6/22/2022 7:31	1.53	6/22/2022 8:01	10.48	6/22/2022 6:49	0.80	6/22/2022 8:31	34.81
6/23/2022 8:15	84.71	6/22/2022 7:32	1.44	6/22/2022 8:02	10.50	6/22/2022 6:50	0.79	6/22/2022 8:32	34.12
6/23/2022 8:16	84.70	6/22/2022 7:33	1.31	6/22/2022 8:03	10.54	6/22/2022 6:51	0.80	6/22/2022 8:33	33.81
6/23/2022 8:17	84.67	6/22/2022 7:34	1.20	6/22/2022 8:04	10.48	6/22/2022 6:52	0.80	6/22/2022 8:34	33.74
6/23/2022 8:18	84.72	6/22/2022 7:35	1.09	6/22/2022 8:05	10.50	6/22/2022 6:53	0.80	6/22/2022 8:35	33.74
6/23/2022 8:19	84.71	6/22/2022 7:36	0.99	6/22/2022 8:06	10.49	6/22/2022 6:54	0.82	6/22/2022 8:36	33.69
6/23/2022 8:20	84.73	6/22/2022 7:37	0.93	6/22/2022 8:07	10.48	6/22/2022 6:55	0.82	6/22/2022 8:37	33.71
6/23/2022 8:21	84.72	6/22/2022 7:38	0.87	6/22/2022 8:08	10.45	6/22/2022 6:56	0.78	6/22/2022 8:38	33.70
6/23/2022 8:22	84.71	6/22/2022 7:39	0.83	6/22/2022 8:09	10.44	6/22/2022 6:57	0.76	6/22/2022 8:39	33.67
6/23/2022 8:23	84.71	6/22/2022 7:40	0.74	6/22/2022 8:10	10.48	6/22/2022 6:58	0.78	6/22/2022 8:40	33.68
6/23/2022 8:24	84.71	6/22/2022 7:41	0.73	6/22/2022 8:11	10.48	6/22/2022 6:59	0.73	6/22/2022 8:41	33.69
6/23/2022 8:25	84.72	6/22/2022 7:42	0.70	6/22/2022 8:12	10.49	6/22/2022 7:00	0.77	6/22/2022 8:42	33.67
6/23/2022 8:26	84.72	6/22/2022 7:43	0.66	6/22/2022 8:13	10.52	6/22/2022 7:01	0.78	6/22/2022 8:43	33.66
6/23/2022 8:27	84.71	6/22/2022 7:44	0.60	6/22/2022 8:14	10.55	6/22/2022 7:02	0.77	6/22/2022 8:44	33.70
6/23/2022 8:28	84.73	6/22/2022 7:45	0.59	6/22/2022 8:15	10.57	6/22/2022 7:03	0.73	6/22/2022 8:45	33.69
6/23/2022 8:29	84.69	6/22/2022 7:46	0.63	6/22/2022 8:16	10.55	6/22/2022 7:04	0.75	6/22/2022 8:46	33.68
6/23/2022 8:30	84.70	6/22/2022 7:47	0.56	6/22/2022 8:17	10.56	6/22/2022 7:05	0.73	6/22/2022 8:47	33.70
6/23/2022 8:31	84.70	6/22/2022 7:48	0.61	6/22/2022 8:18	10.55	6/22/2022 7:06	0.80	6/22/2022 8:48	33.65
6/23/2022 8:32	84.70	6/22/2022 7:49	5.40	6/22/2022 8:19	10.58	6/22/2022 7:07	0.77	6/22/2022 8:49	33.65
6/23/2022 8:33	84.68	6/22/2022 7:50	10.24	6/22/2022 8:20	10.57	6/22/2022 7:08	0.71	6/22/2022 8:50	33.69
6/23/2022 8:34	84.69	6/22/2022 7:51	9.18	6/22/2022 8:21	10.53	6/22/2022 7:09	0.76	6/22/2022 8:51	33.69
6/23/2022 8:35	84.66	6/22/2022 7:52	7.75	6/22/2022 8:22	10.51	6/22/2022 7:10	0.74	6/22/2022 8:52	34.64
6/23/2022 8:36	84.66	6/22/2022 7:53	6.60	6/22/2022 8:23	10.52	6/22/2022 7:11	0.75	6/22/2022 8:53	35.16
6/23/2022 8:37	84.71	6/22/2022 7:54	5.57	6/22/2022 8:24	10.51	6/22/2022 7:12	0.77	6/22/2022 8:54	34.31
6/23/2022 8:38	84.67	6/22/2022 7:55	4.83	6/22/2022 8:25	10.52	6/22/2022 7:13	0.75	6/22/2022 8:55	33.92
6/23/2022 8:39	84.70	6/22/2022 7:56	4.22	6/22/2022 8:26	10.53	6/22/2022 7:14	0.76	6/22/2022 8:56	33.76
6/23/2022 8:40	84.68	6/22/2022 7:57	3.65	6/22/2022 8:27	10.53	6/22/2022 7:15	0.77	6/22/2022 8:57	33.73
6/23/2022 8:41	84.68	6/22/2022 7:58	3.14	6/22/2022 8:28	10.54	6/22/2022 7:16	0.78	6/22/2022 8:58	33.74
6/23/2022 8:42	84.65	6/22/2022 7:59	2.79	6/22/2022 8:29	10.57	6/22/2022 7:17	0.73	6/22/2022 8:59	33.76
6/23/2022 8:43	84.73	6/22/2022 8:00	2.45	6/22/2022 8:30	11.02	6/22/2022 7:18	0.79	6/22/2022 9:00	33.79
6/23/2022 8:44	84.68	6/22/2022 8:01	2.18	6/22/2022 8:31	14.32	6/22/2022 7:19	0.76	6/22/2022 9:01	33.78
6/23/2022 8:45	84.69	6/22/2022 8:02	1.96	6/22/2022 8:32	13.81	6/22/2022 7:20	0.79	6/22/2022 9:02	33.72

6/23/2022 8:46	84.67	6/22/2022 8:03	1.76	6/22/2022 8:33	13.42	6/22/2022 7:21	0.77	6/22/2022 9:03	33.77
6/23/2022 8:47	84.64	6/22/2022 8:04	1.55	6/22/2022 8:34	13.10	6/22/2022 7:22	0.76	6/22/2022 9:04	33.73
6/23/2022 8:48	84.69	6/22/2022 8:05	1.44	6/22/2022 8:35	12.80	6/22/2022 7:23	0.74	6/22/2022 9:05	33.76
6/23/2022 8:49	84.63	6/22/2022 8:06	1.29	6/22/2022 8:36	12.54	6/22/2022 7:24	0.77	6/22/2022 9:06	33.74
6/23/2022 8:50	84.65	6/22/2022 8:07	1.16	6/22/2022 8:37	15.54	6/22/2022 7:25	0.73	6/22/2022 9:07	33.72
6/23/2022 8:51	84.63	6/22/2022 8:08	1.07	6/22/2022 8:38	18.93	6/22/2022 7:26	0.76	6/22/2022 9:08	33.74
6/23/2022 8:52	84.68	6/22/2022 8:09	1.03	6/22/2022 8:39	17.96	6/22/2022 7:27	0.75	6/22/2022 9:09	33.73
6/23/2022 8:53	84.65	6/22/2022 8:10	0.94	6/22/2022 8:40	17.75	6/22/2022 7:28	0.73	6/22/2022 9:10	33.73
6/23/2022 8:54	84.68	6/22/2022 8:11	0.86	6/22/2022 8:41	21.56	6/22/2022 7:29	0.76	6/22/2022 9:11	33.74
6/23/2022 8:55	84.70	6/22/2022 8:12	0.84	6/22/2022 8:42	22.44	6/22/2022 7:30	0.75	6/22/2022 9:12	33.73
6/23/2022 8:56	84.66	6/22/2022 8:13	0.77	6/22/2022 8:43	21.20	6/22/2022 7:31	0.72	6/22/2022 9:13	33.74
6/23/2022 8:57	84.66	6/22/2022 8:14	0.73	6/22/2022 8:44	22.67	6/22/2022 7:32	0.75	6/22/2022 9:14	33.76
6/23/2022 8:58	84.66	6/22/2022 8:15	0.71	6/22/2022 8:45	25.94	6/22/2022 7:33	0.74	6/22/2022 9:15	33.73
6/23/2022 8:59	84.68	6/22/2022 8:16	0.66	6/22/2022 8:46	24.69	6/22/2022 7:34	0.72	6/22/2022 9:16	33.71
6/23/2022 9:00	84.67	6/22/2022 8:17	0.68	6/22/2022 8:47	23.34	6/22/2022 7:35	0.74	6/22/2022 9:17	33.75
6/23/2022 9:01	84.65	6/22/2022 8:18	0.62	6/22/2022 8:48	22.10	6/22/2022 7:36	0.76	6/22/2022 9:18	33.74
6/23/2022 9:02	84.61	6/22/2022 8:19	0.61	6/22/2022 8:49	20.97	6/22/2022 7:37	0.70	6/22/2022 9:19	33.74
6/23/2022 9:03	84.67	6/22/2022 8:20	0.59	6/22/2022 8:50	19.99	6/22/2022 7:38	0.73	6/22/2022 9:20	33.73
6/23/2022 9:04	84.67	6/22/2022 8:21	0.55	6/22/2022 8:51	19.14	6/22/2022 7:39	0.74	6/22/2022 9:21	33.73
6/23/2022 9:05	84.68	6/22/2022 8:22	0.55	6/22/2022 8:52	18.29	6/22/2022 7:40	0.71	6/22/2022 9:22	33.73
6/23/2022 9:06	84.66	6/22/2022 8:23	0.51	6/22/2022 8:53	17.60	6/22/2022 7:41	0.73	6/22/2022 9:23	33.76
6/23/2022 9:07	84.66	6/22/2022 8:24	0.54	6/22/2022 8:54	16.96	6/22/2022 7:42	0.73	6/22/2022 9:24	33.70
6/23/2022 9:08	84.65	6/22/2022 8:25	0.54	6/22/2022 8:55	16.34	6/22/2022 7:43	0.72	6/22/2022 9:25	33.73
6/23/2022 9:09	84.65	6/22/2022 8:26	0.54	6/22/2022 8:56	15.85	6/22/2022 7:44	0.72	6/22/2022 9:26	33.72
6/23/2022 9:10	84.65	6/22/2022 8:27	0.52	6/22/2022 8:57	15.41	6/22/2022 7:45	0.71	6/22/2022 9:27	33.70
6/23/2022 9:11	84.64	6/22/2022 8:28	0.49	6/22/2022 8:58	14.98	6/22/2022 7:46	0.74	6/22/2022 9:28	33.76
6/23/2022 9:12	84.65	6/22/2022 8:29	0.52	6/22/2022 8:59	14.61	6/22/2022 7:47	0.73	6/22/2022 9:29	33.71
6/23/2022 9:13	84.61	6/22/2022 8:30	0.52	6/22/2022 9:00	14.28	6/22/2022 7:48	0.77	6/22/2022 9:30	33.75
6/23/2022 9:14	84.67	6/22/2022 8:31	0.53	6/22/2022 9:01	13.94	6/22/2022 7:49	0.72	6/22/2022 9:31	33.72
6/23/2022 9:15	84.64	6/22/2022 8:32	0.48	6/22/2022 9:02	16.56	6/22/2022 7:50	0.77	6/22/2022 9:32	33.74
6/23/2022 9:16	84.61	6/22/2022 8:33	0.51	6/22/2022 9:03	17.84	6/22/2022 7:51	0.81	6/22/2022 9:33	33.71
6/23/2022 9:17	84.63	6/22/2022 8:34	0.52	6/22/2022 9:04	17.09	6/22/2022 7:52	0.79	6/22/2022 9:34	33.74
6/23/2022 9:18	84.63	6/22/2022 8:35	0.52	6/22/2022 9:05	16.47	6/22/2022 7:53	0.77	6/22/2022 9:35	35.16
6/23/2022 9:19	84.61	6/22/2022 8:36	0.51	6/22/2022 9:06	15.88	6/22/2022 7:54	0.75	6/22/2022 9:36	35.05
6/23/2022 9:20	84.64	6/22/2022 8:37	0.49	6/22/2022 9:07	15.38	6/22/2022 7:55	0.76	6/22/2022 9:37	34.23
6/23/2022 9:21	84.63	6/22/2022 8:38	0.51	6/22/2022 9:08	14.92	6/22/2022 7:56	0.75	6/22/2022 9:38	33.94
6/23/2022 9:22	84.66	6/22/2022 8:39	0.47	6/22/2022 9:09	14.50	6/22/2022 7:57	0.75	6/22/2022 9:39	33.78
6/23/2022 9:23	84.63	6/22/2022 8:40	0.50	6/22/2022 9:10	14.17	6/22/2022 7:58	0.76	6/22/2022 9:40	33.78
6/23/2022 9:24	84.62	6/22/2022 8:41	0.48	6/22/2022 9:11	13.82	6/22/2022 7:59	0.72	6/22/2022 9:41	33.76
6/23/2022 9:25	84.61	6/22/2022 8:42	5.44	6/22/2022 9:12	13.55	6/22/2022 8:00	0.75	6/22/2022 9:42	33.83
6/23/2022 9:26	84.63	6/22/2022 8:43	7.54	6/22/2022 9:13	13.30	6/22/2022 8:01	0.74	6/22/2022 9:43	33.73
6/23/2022 9:27	84.60	6/22/2022 8:44	6.35	6/22/2022 9:14	13.07	6/22/2022 8:02	0.70	6/22/2022 9:44	33.71
6/23/2022 9:28	84.63	6/22/2022 8:45	5.42	6/22/2022 9:15	12.83	6/22/2022 8:03	0.71	6/22/2022 9:45	33.75
6/23/2022 9:29	84.60	6/22/2022 8:46	4.62	6/22/2022 9:16	12.64	6/22/2022 8:04	0.71	6/22/2022 9:46	33.74
6/23/2022 9:30	84.61	6/22/2022 8:47	4.05	6/22/2022 9:17	12.48	6/22/2022 8:05	0.73	6/22/2022 9:47	33.75
6/23/2022 9:31	84.62	6/22/2022 8:48	3.48	6/22/2022 9:18	12.33	6/22/2022 8:06	0.74	6/22/2022 9:48	33.73
6/23/2022 9:32	84.62	6/22/2022 8:49	3.01	6/22/2022 9:19	12.25	6/22/2022 8:07	0.75	6/22/2022 9:49	33.75
6/23/2022 9:33	84.61	6/22/2022 8:50	2.65	6/22/2022 9:20	12.12	6/22/2022 8:08	0.72	6/22/2022 9:50	33.77
6/23/2022 9:34	84.64	6/22/2022 8:51	2.32	6/22/2022 9:21	12.03	6/22/2022 8:09	0.73	6/22/2022 9:51	33.73
6/23/2022 9:35	84.63	6/22/2022 8:52	2.04	6/22/2022 9:22	11.91	6/22/2022 8:10	0.74	6/22/2022 9:52	33.74
6/23/2022 9:36	84.62	6/22/2022 8:53	1.85	6/22/2022 9:23	11.82	6/22/2022 8:11	0.73	6/22/2022 9:53	33.74
6/23/2022 9:37	84.59	6/22/2022 8:54	1.63	6/22/2022 9:24	11.69	6/22/2022 8:12	0.75	6/22/2022 9:54	33.74
6/23/2022 9:38	84.59	6/22/2022 8:55	1.51	6/22/2022 9:25	11.67	6/22/2022 8:13	0.72	6/22/2022 9:55	33.74
6/23/2022 9:39	84.60	6/22/2022 8:56	1.39	6/22/2022 9:26	11.58	6/22/2022 8:14	0.75	6/22/2022 9:56	33.73
6/23/2022 9:40	84.64	6/22/2022 8:57	1.26	6/22/2022 9:27	11.53	6/22/2022 8:15	0.72	6/22/2022 9:57	33.77
6/23/2022 9:41	84.61	6/22/2022 8:58	1.13	6/22/2022 9:28	11.47	6/22/2022 8:16	0.72	6/22/2022 9:58	33.75
6/23/2022 9:42	84.65	6/22/2022 8:59	1.03	6/22/2022 9:29	11.39	6/22/2022 8:17	0.71	6/22/2022 9:59	33.75
6/23/2022 9:43	84.62	6/22/2022 9:00	0.97	6/22/2022 9:30	11.32	6/22/2022 8:18	0.74	6/22/2022 10:00	33.74
6/23/2022 9:44	87.03	6/22/2022 9:01	0.88	6/22/2022 9:31	11.25	6/22/2022 8:19	0.75	6/22/2022 10:01	33.76
6/23/2022 9:45	90.55	6/22/2022 9:02	0.81	6/22/2022 9:32	11.20	6/22/2022 8:20	0.74	6/22/2022 10:02	33.74
6/23/2022 9:46	92.66	6/22/2022 9:03	0.79	6/22/2022 9:33	11.17	6/22/2022 8:21	0.75	6/22/2022 10:03	33.75
6/23/2022 9:47	92.83	6/22/2022 9:04	0.74	6/22/2022 9:34	11.15	6/22/2022 8:22	0.73	6/22/2022 10:04	33.74
6/23/2022 9:48	90.11	6/22/2022 9:05	0.72	6/22/2022 9:35	11.14	6/22/2022 8:23	0.73	6/22/2022 10:05	33.75
6/23/2022 9:49	88.45	6/22/2022 9:06	0.70	6/22/2022 9:36	11.12	6/22/2022 8:24	0.71	6/22/2022 10:06	33.75
6/23/2022 9:50	87.41	6/22/2022 9:07	0.61	6/22/2022 9:37	11.09	6/22/2022 8:25	0.74	6/22/2022 10:07	33.79
6/23/2022 9:51	86.71	6/22/2022 9:08	0.62	6/22/2022 9:38	11.06	6/22/2022 8:26	0.69	6/22/2022 10:08	33.74
6/23/2022 9:52	86.30	6/22/2022 9:09	0.58	6/22/2022 9:39	11.06	6/22/2022 8:27	0.72	6/22/2022 10:09	33.75
6/23/2022 9:53	86.02	6/22/2022 9:10	0.61	6/22/2022 9:40	11.00	6/22/2022 8:28	0.75	6/22/2022 10:10	33.75
6/23/2022 9:54	85.80	6/22/2022 9:11	0.55	6/22/2022 9:41	10.97	6/22/2022 8:29	0.73	6/22/2022 10:11	33.75
6/23/2022 9:55	85.68	6/22/2022 9:12	0.55	6/22/2022 9:42	10.93	6/22/2022 8:30	0.68	6/22/2022 10:12	33.75
6/23/2022 9:56	85.55	6/22/2022 9:13	0.56	6/22/2022 9:43	10.91	6/22/2022 8:31	0.74	6/22/2022 10:13	33.73
6/23/2022 9:57	85.44	6/22/2022 9:14	0.54	6/22/2022 9:44	10.89	6/22/2022 8:32	0.71	6/22/2022 10:14	33.77
6/23/2022 9:58	85.43	6/22/2022 9:15	0.56	6/22/2022 9:45	10.86	6/22/2022 8:33	0.75	6/22/2022 10:15	33.76
6/23/2022 9:59	85.33	6/22/2022 9:16	0.53	6/22/2022 9:46	10.86	6/22/2022 8:34	0.73	6/22/2022 10:16	33.76
6/23/2022 10:00	85.31	6/22/2022 9:17	0.54	6/22/2022 9:47	10.89	6/22/2022 8:35	0.70	6/22/2022 10:17	33.74
6/23/2022 10:01	85.29	6/22/2022 9:18	0.54	6/22/2022 9:48	10.87	6/22/2022 8:36	0.72	6/22/2022 10:18	33.75
6/23/2022 10:02	85.23	6/22/2022 9:19	0.50	6/22/2022 9:49	10.90	6/22/2022 8:37	0.71	6/22/2022 10:19	33.73
6/23/2022 10:03	85.17	6/22/2022 9:20	0.50	6/22/2022 9:50	10.90	6/22/2022 8:38	0.70	6/22/2022 10:20	33.75
6/23/2022 10:04	85.21	6/22/2022 9:21	0.57	6/22/2022 9:51	10.86	6/22/2022 8:39	0.70	6/22/2022 10:21	33.77
6/23/2022 10:05	85.19	6/22/2022 9:22	0.45	6/22/2022 9:52	10.86	6/22/2022 8:40	0.73	6/22/2022 10:22	33.72
6/23/2022 10:06	85.17	6/22/2022 9:23	0.52	6/22/2022 9:53	10.89	6/22/2022 8:41	0.70	6/22/2022 10:23	33.77
6/23/2022 10:07	85.16	6/22/2022 9:24	0.51	6/22/2022 9:54	10.90	6/22/2022 8:42	0.72	6/22/2022 10:24	33.78
6/23/2022 10:08	85.09	6/22/2022 9:25	0.50	6/22/2022 9:55	10.93	6/22/2022 8:43	0.73	6/22/2022 10:25	33.76
6/23/2022 10:09	85.04	6/22/2022 9:26	0.46	6/22/2022 9:56	10.95	6/22/2022 8:44	0.73	6/22/2022 10:26	33.77
6/23/2022 10:10	85.09	6/22/2022 9:27	0.47	6/22/2022 9:57	11.00	6/22/2022 8:45	0.74	6/22/2022 10:27	33.70
6/23/2022 10:11	85.08	6/22/2022 9:28	0.44	6/22/2022 9:58	11.02	6/22/2022 8:46	0.73	6/22/2022 10:28	33.75
6/23/2022 10:12	85.06	6/22/2022 9:29	0.45	6/22/2022 9:59	11.03	6/22/2022 8:47	0.73	6/22/2022 10:29	33.77
6/23/2022 10:13	85.00	6/22/2022 9:30	0.43	6/22/2022 10:00	11.03	6/22/2022 8:48	0.73	6/22/2022 10:30	33.75

6/23/2022 10:14	85.09	6/22/2022 9:31	0.49	6/22/2022 10:01	11.05	6/22/2022 8:49	0.74	6/22/2022 10:31	33.71
6/23/2022 10:15	85.05	6/22/2022 9:32	0.45	6/22/2022 10:02	11.02	6/22/2022 8:50	0.74	6/22/2022 10:32	33.76
6/23/2022 10:16	85.00	6/22/2022 9:33	0.44	6/22/2022 10:03	10.99	6/22/2022 8:51	0.75	6/22/2022 10:33	33.77
6/23/2022 10:17	85.01	6/22/2022 9:34	0.41	6/22/2022 10:04	15.01	6/22/2022 8:52	0.71	6/22/2022 10:34	33.74
6/23/2022 10:18	85.00	6/22/2022 9:35	0.48	6/22/2022 10:05	14.66	6/22/2022 8:53	0.72	6/22/2022 10:35	33.74
6/23/2022 10:19	84.98	6/22/2022 9:36	0.49	6/22/2022 10:06	14.19	6/22/2022 8:54	0.70	6/22/2022 10:36	33.76
6/23/2022 10:20	85.02	6/22/2022 9:37	0.41	6/22/2022 10:07	13.81	6/22/2022 8:55	0.70	6/22/2022 10:37	33.78
6/23/2022 10:21	84.94	6/22/2022 9:38	0.44	6/22/2022 10:08	13.46	6/22/2022 8:56	0.71	6/22/2022 10:38	33.81
6/23/2022 10:22	84.92	6/22/2022 9:39	0.43	6/22/2022 10:09	13.26	6/22/2022 8:57	0.71	6/22/2022 10:39	33.83
6/23/2022 10:23	84.96	6/22/2022 9:40	0.45	6/22/2022 10:10	13.05	6/22/2022 8:58	0.67	6/22/2022 10:40	33.81
6/23/2022 10:24	84.94	6/22/2022 9:41	0.45	6/22/2022 10:11	12.81	6/22/2022 8:59	0.68	6/22/2022 10:41	33.81
6/23/2022 10:25	84.93	6/22/2022 9:42	0.48	6/22/2022 10:12	12.62	6/22/2022 9:00	0.69	6/22/2022 10:42	33.83
6/23/2022 10:26	84.91	6/22/2022 9:43	0.43	6/22/2022 10:13	12.51	6/22/2022 9:01	0.71	6/22/2022 10:43	33.80
6/23/2022 10:27	84.97	6/22/2022 9:44	0.42	6/22/2022 10:14	12.32	6/22/2022 9:02	0.71	6/22/2022 10:44	33.81
6/23/2022 10:28	84.95	6/22/2022 9:45	0.45	6/22/2022 10:15	12.23	6/22/2022 9:03	0.69	6/22/2022 10:45	33.79
6/23/2022 10:29	84.93	6/22/2022 9:46	0.45	6/22/2022 10:16	12.08	6/22/2022 9:04	0.74	6/22/2022 10:46	33.82
6/23/2022 10:30	84.94	6/22/2022 9:47	4.33	6/22/2022 10:17	12.02	6/22/2022 9:05	0.73	6/22/2022 10:47	33.80
6/23/2022 10:31	84.95	6/22/2022 9:48	7.58	6/22/2022 10:18	11.89	6/22/2022 9:06	0.70	6/22/2022 10:48	33.78
6/23/2022 10:32	84.96	6/22/2022 9:49	6.37	6/22/2022 10:19	11.80	6/22/2022 9:07	0.72	6/22/2022 10:49	33.79
6/23/2022 10:33	84.94	6/22/2022 9:50	5.40	6/22/2022 10:20	11.76	6/22/2022 9:08	0.69	6/22/2022 10:50	33.79
6/23/2022 10:34	84.89	6/22/2022 9:51	4.66	6/22/2022 10:21	11.69	6/22/2022 9:09	0.71	6/22/2022 10:51	33.79
6/23/2022 10:35	84.92	6/22/2022 9:52	4.06	6/22/2022 10:22	11.62	6/22/2022 9:10	0.70	6/22/2022 10:52	33.79
6/23/2022 10:36	84.93	6/22/2022 9:53	3.42	6/22/2022 10:23	11.58	6/22/2022 9:11	0.67	6/22/2022 10:53	33.79
6/23/2022 10:37	84.88	6/22/2022 9:54	3.03	6/22/2022 10:24	11.49	6/22/2022 9:12	0.70	6/22/2022 10:54	33.78
6/23/2022 10:38	84.87	6/22/2022 9:55	2.61	6/22/2022 10:25	11.44	6/22/2022 9:13	0.74	6/22/2022 10:55	33.82
6/23/2022 10:39	84.89	6/22/2022 9:56	2.32	6/22/2022 10:26	11.39	6/22/2022 9:14	0.75	6/22/2022 10:56	33.85
6/23/2022 10:40	84.86	6/22/2022 9:57	2.08	6/22/2022 10:27	11.40	6/22/2022 9:15	0.75	6/22/2022 10:57	33.86
6/23/2022 10:41	84.91	6/22/2022 9:58	1.83	6/22/2022 10:28	11.33	6/22/2022 9:16	0.71	6/22/2022 10:58	33.90
6/23/2022 10:42	84.89	6/22/2022 9:59	1.67	6/22/2022 10:29	11.29	6/22/2022 9:17	0.71	6/22/2022 10:59	33.93
6/23/2022 10:43	84.85	6/22/2022 10:00	1.49	6/22/2022 10:30	11.26	6/22/2022 9:18	0.72	6/22/2022 11:00	35.05
6/23/2022 10:44	87.22	6/22/2022 10:01	1.36	6/22/2022 10:31	11.22	6/22/2022 9:19	0.70	6/22/2022 11:01	35.24
6/23/2022 10:45	90.69	6/22/2022 10:02	1.22	6/22/2022 10:32	11.22	6/22/2022 9:20	0.70	6/22/2022 11:02	34.48
6/23/2022 10:46	92.66	6/22/2022 10:03	1.13	6/22/2022 10:33	11.19	6/22/2022 9:21	0.70	6/22/2022 11:03	34.14
6/23/2022 10:47	92.06	6/22/2022 10:04	1.06	6/22/2022 10:34	11.18	6/22/2022 9:22	0.70	6/22/2022 11:04	34.02
6/23/2022 10:48	89.69	6/22/2022 10:05	0.94	6/22/2022 10:35	11.14	6/22/2022 9:23	0.70	6/22/2022 11:05	33.99
6/23/2022 10:49	88.19	6/22/2022 10:06	0.87	6/22/2022 10:36	11.09	6/22/2022 9:24	0.73	6/22/2022 11:06	33.99
6/23/2022 10:50	87.30	6/22/2022 10:07	0.84	6/22/2022 10:37	11.08	6/22/2022 9:25	0.71	6/22/2022 11:07	33.97
6/23/2022 10:51	86.78	6/22/2022 10:08	0.76	6/22/2022 10:38	11.01	6/22/2022 9:26	0.71	6/22/2022 11:08	33.94
6/23/2022 10:52	86.34	6/22/2022 10:09	0.77	6/22/2022 10:39	11.02	6/22/2022 9:27	0.69	6/22/2022 11:09	33.92
6/23/2022 10:53	86.06	6/22/2022 10:10	0.65	6/22/2022 10:40	10.96	6/22/2022 9:28	0.72	6/22/2022 11:10	33.92
6/23/2022 10:54	85.90	6/22/2022 10:11	0.66	6/22/2022 10:41	10.94	6/22/2022 9:29	0.70	6/22/2022 11:11	33.93
6/23/2022 10:55	85.80	6/22/2022 10:12	0.62	6/22/2022 10:42	10.92	6/22/2022 9:30	0.72	6/22/2022 11:12	33.91
6/23/2022 10:56	85.70	6/22/2022 10:13	0.60	6/22/2022 10:43	10.88	6/22/2022 9:31	0.68	6/22/2022 11:13	33.90
6/23/2022 10:57	85.64	6/22/2022 10:14	0.58	6/22/2022 10:44	10.85	6/22/2022 9:32	0.72	6/22/2022 11:14	33.90
6/23/2022 10:58	85.60	6/22/2022 10:15	0.55	6/22/2022 10:45	10.83	6/22/2022 9:33	0.73	6/22/2022 11:15	33.89
6/23/2022 10:59	85.55	6/22/2022 10:16	0.53	6/22/2022 10:46	10.81	6/22/2022 9:34	0.73	6/22/2022 11:16	33.87
6/23/2022 11:00	85.48	6/22/2022 10:17	0.54	6/22/2022 10:47	10.77	6/22/2022 9:35	0.68	6/22/2022 11:17	33.92
6/23/2022 11:01	85.46	6/22/2022 10:18	0.54	6/22/2022 10:48	10.80	6/22/2022 9:36	0.72	6/22/2022 11:18	33.92
6/23/2022 11:02	85.44	6/22/2022 10:19	0.54	6/22/2022 10:49	10.78	6/22/2022 9:37	0.74	6/22/2022 11:19	33.85
6/23/2022 11:03	85.40	6/22/2022 10:20	0.48	6/22/2022 10:50	10.78	6/22/2022 9:38	0.70	6/22/2022 11:20	33.89
6/23/2022 11:04	85.34	6/22/2022 10:21	0.48	6/22/2022 10:51	10.80	6/22/2022 9:39	0.70	6/22/2022 11:21	33.88
6/23/2022 11:05	85.37	6/22/2022 10:22	0.48	6/22/2022 10:52	10.80	6/22/2022 9:40	0.72	6/22/2022 11:22	33.88
6/23/2022 11:06	85.31	6/22/2022 10:23	0.47	6/22/2022 10:53	10.80	6/22/2022 9:41	0.71	6/22/2022 11:23	33.89
6/23/2022 11:07	85.28	6/22/2022 10:24	0.51	6/22/2022 10:54	10.84	6/22/2022 9:42	0.72	6/22/2022 11:24	33.86
6/23/2022 11:08	85.33	6/22/2022 10:25	0.43	6/22/2022 10:55	10.85	6/22/2022 9:43	0.68	6/22/2022 11:25	33.84
6/23/2022 11:09	85.26	6/22/2022 10:26	0.45	6/22/2022 10:56	10.85	6/22/2022 9:44	0.70	6/22/2022 11:26	33.87
6/23/2022 11:10	85.28	6/22/2022 10:27	0.46	6/22/2022 10:57	10.83	6/22/2022 9:45	0.70	6/22/2022 11:27	33.87
6/23/2022 11:11	85.26	6/22/2022 10:28	0.45	6/22/2022 10:58	10.85	6/22/2022 9:46	0.71	6/22/2022 11:28	33.89
6/23/2022 11:12	85.21	6/22/2022 10:29	0.44	6/22/2022 10:59	10.88	6/22/2022 9:47	0.72	6/22/2022 11:29	33.86
6/23/2022 11:13	85.25	6/22/2022 10:30	0.47	6/22/2022 11:00	10.82	6/22/2022 9:48	0.76	6/22/2022 11:30	33.86
6/23/2022 11:14	85.20	6/22/2022 10:31	0.44	6/22/2022 11:01	10.82	6/22/2022 9:49	0.74	6/22/2022 11:31	33.84
6/23/2022 11:15	85.23	6/22/2022 10:32	0.44	6/22/2022 11:02	10.83	6/22/2022 9:50	0.74	6/22/2022 11:32	33.82
6/23/2022 11:16	85.24	6/22/2022 10:33	0.41	6/22/2022 11:03	10.82	6/22/2022 9:51	0.78	6/22/2022 11:33	33.86
6/23/2022 11:17	85.22	6/22/2022 10:34	0.41	6/22/2022 11:04	10.83	6/22/2022 9:52	0.71	6/22/2022 11:34	33.84
6/23/2022 11:18	85.15	6/22/2022 10:35	0.41	6/22/2022 11:05	10.85	6/22/2022 9:53	0.73	6/22/2022 11:35	33.87
6/23/2022 11:19	85.18	6/22/2022 10:36	0.44	6/22/2022 11:06	10.85	6/22/2022 9:54	0.72	6/22/2022 11:36	33.86
6/23/2022 11:20	85.11	6/22/2022 10:37	0.41	6/22/2022 11:07	10.83	6/22/2022 9:55	0.73	6/22/2022 11:37	33.85
6/23/2022 11:21	85.14	6/22/2022 10:38	0.46	6/22/2022 11:08	10.86	6/22/2022 9:56	0.70	6/22/2022 11:38	33.88
6/23/2022 11:22	85.11	6/22/2022 10:39	0.41	6/22/2022 11:09	10.84	6/22/2022 9:57	0.71	6/22/2022 11:39	33.87
6/23/2022 11:23	85.11	6/22/2022 10:40	0.44	6/22/2022 11:10	10.86	6/22/2022 9:58	0.73	6/22/2022 11:40	33.86
6/23/2022 11:24	85.14	6/22/2022 10:41	0.42	6/22/2022 11:11	10.90	6/22/2022 9:59	0.70	6/22/2022 11:41	33.88
6/23/2022 11:25	85.09	6/22/2022 10:42	0.42	6/22/2022 11:12	10.89	6/22/2022 10:00	0.70	6/22/2022 11:42	33.86
6/23/2022 11:26	85.10	6/22/2022 10:43	0.42	6/22/2022 11:13	10.89	6/22/2022 10:01	0.70	6/22/2022 11:43	33.85
6/23/2022 11:27	85.10	6/22/2022 10:44	0.41	6/22/2022 11:14	10.82	6/22/2022 10:02	0.73	6/22/2022 11:44	33.84
6/23/2022 11:28	85.09	6/22/2022 10:45	0.43	6/22/2022 11:15	10.88	6/22/2022 10:03	0.71	6/22/2022 11:45	33.83
6/23/2022 11:29	85.10	6/22/2022 10:46	0.43	6/22/2022 11:16	10.85	6/22/2022 10:04	0.74	6/22/2022 11:46	33.86
6/23/2022 11:30	85.07	6/22/2022 10:47	0.47	6/22/2022 11:17	10.87	6/22/2022 10:05	0.74	6/22/2022 11:47	33.85
6/23/2022 11:31	85.06	6/22/2022 10:48	0.48	6/22/2022 11:18	10.89	6/22/2022 10:06	0.70	6/22/2022 11:48	33.84
6/23/2022 11:32	85.10	6/22/2022 10:49	1.41	6/22/2022 11:19	10.90	6/22/2022 10:07	0.69	6/22/2022 11:49	33.85
6/23/2022 11:33	85.08	6/22/2022 10:50	7.17	6/22/2022 11:20	10.87	6/22/2022 10:08	0.76	6/22/2022 11:50	33.86
6/23/2022 11:34	85.07	6/22/2022 10:51	7.10	6/22/2022 11:21	10.87	6/22/2022 10:09	0.71	6/22/2022 11:51	33.81
6/23/2022 11:35	85.05	6/22/2022 10:52	6.01	6/22/2022 11:22	10.87	6/22/2022 10:10	0.74	6/22/2022 11:52	33.88
6/23/2022 11:36	85.04	6/22/2022 10:53	5.17	6/22/2022 11:23	10.88	6/22/2022 10:11	0.73	6/22/2022 11:53	33.83
6/23/2022 11:37	85.06	6/22/2022 10:54	4.44	6/22/2022 11:24	10.89	6/22/2022 10:12	0.70	6/22/2022 11:54	33.87
6/23/2022 11:38	85.03	6/22/2022 10:55	3.85	6/22/2022 11:25	10.84	6/22/2022 10:13	0.70	6/22/2022 11:55	33.85
6/23/2022 11:39	85.04	6/22/2022 10:56	3.27	6/22/2022 11:26	10.85	6/22/2022 10:14	0.74	6/22/2022 11:56	33.85
6/23/2022 11:40	84.99	6/22/2022 10:57	2.81	6/22/2022 11:27	10.78	6/22/2022 10:15	0.71	6/22/2022 11:57	35.72
6/23/2022 11:41	85.05	6/22/2022 10:58	2.53	6/22/2022 11:28	10.81	6/22/2022 10:16	0.74	6/22/2022 11:58	35.07

6/23/2022 11:42	85.01	6/22/2022 10:59	2.22	6/22/2022 11:29	10.81	6/22/2022 10:17	0.72	6/22/2022 11:59	34.32
6/23/2022 11:43	85.01	6/22/2022 11:00	1.99	6/22/2022 11:30	10.83	6/22/2022 10:18	0.70	6/22/2022 12:00	34.01
6/23/2022 11:44	84.98	6/22/2022 11:01	1.75	6/22/2022 11:31	10.84	6/22/2022 10:19	0.74	6/22/2022 12:01	33.93
6/23/2022 11:45	85.01	6/22/2022 11:02	1.58	6/22/2022 11:32	10.82	6/22/2022 10:20	0.72	6/22/2022 12:02	33.88
6/23/2022 11:46	84.99	6/22/2022 11:03	1.43	6/22/2022 11:33	10.81	6/22/2022 10:21	0.74	6/22/2022 12:03	33.91
6/23/2022 11:47	85.03	6/22/2022 11:04	1.32	6/22/2022 11:34	10.84	6/22/2022 10:22	0.71	6/22/2022 12:04	33.84
6/23/2022 11:48	84.96	6/22/2022 11:05	1.20	6/22/2022 11:35	10.84	6/22/2022 10:23	0.74	6/22/2022 12:05	33.87
6/23/2022 11:49	84.95	6/22/2022 11:06	1.12	6/22/2022 11:36	10.85	6/22/2022 10:24	0.69	6/22/2022 12:06	33.85
6/23/2022 11:50	84.99	6/22/2022 11:07	1.03	6/22/2022 11:37	10.88	6/22/2022 10:25	0.70	6/22/2022 12:07	33.90
6/23/2022 11:51	84.97	6/22/2022 11:08	0.94	6/22/2022 11:38	10.87	6/22/2022 10:26	0.73	6/22/2022 12:08	33.91
6/23/2022 11:52	84.97	6/22/2022 11:09	0.86	6/22/2022 11:39	11.94	6/22/2022 10:27	0.72	6/22/2022 12:09	33.94
6/23/2022 11:53	84.96	6/22/2022 11:10	0.79	6/22/2022 11:40	15.44	6/22/2022 10:28	0.70	6/22/2022 12:10	33.95
6/23/2022 11:54	84.96	6/22/2022 11:11	0.77	6/22/2022 11:41	14.88	6/22/2022 10:29	0.72	6/22/2022 12:11	34.01
6/23/2022 11:55	84.96	6/22/2022 11:12	0.71	6/22/2022 11:42	14.40	6/22/2022 10:30	0.71	6/22/2022 12:12	34.03
6/23/2022 11:56	84.97	6/22/2022 11:13	0.65	6/22/2022 11:43	13.97	6/22/2022 10:31	0.72	6/22/2022 12:13	34.03
6/23/2022 11:57	84.95	6/22/2022 11:14	0.69	6/22/2022 11:44	13.68	6/22/2022 10:32	0.72	6/22/2022 12:14	34.03
6/23/2022 11:58	84.94	6/22/2022 11:15	0.62	6/22/2022 11:45	13.36	6/22/2022 10:33	0.75	6/22/2022 12:15	34.00
6/23/2022 11:59	84.96	6/22/2022 11:16	0.59	6/22/2022 11:46	13.10	6/22/2022 10:34	0.71	6/22/2022 12:16	34.00
6/23/2022 12:00	84.91	6/22/2022 11:17	0.61	6/22/2022 11:47	12.91	6/22/2022 10:35	0.75	6/22/2022 12:17	34.00
6/23/2022 12:01	84.97	6/22/2022 11:18	0.54	6/22/2022 11:48	12.68	6/22/2022 10:36	0.71	6/22/2022 12:18	33.98
6/23/2022 12:02	84.94	6/22/2022 11:19	0.53	6/22/2022 11:49	12.50	6/22/2022 10:37	0.76	6/22/2022 12:19	34.00
6/23/2022 12:03	84.94	6/22/2022 11:20	0.50	6/22/2022 11:50	12.34	6/22/2022 10:38	0.68	6/22/2022 12:20	33.98
6/23/2022 12:04	84.98	6/22/2022 11:21	0.52	6/22/2022 11:51	12.19	6/22/2022 10:39	0.71	6/22/2022 12:21	33.92
6/23/2022 12:05	84.95	6/22/2022 11:22	0.53	6/22/2022 11:52	12.05	6/22/2022 10:40	0.73	6/22/2022 12:22	33.95
6/23/2022 12:06	84.93	6/22/2022 11:23	0.52	6/22/2022 11:53	11.96	6/22/2022 10:41	0.75	6/22/2022 12:23	33.94
6/23/2022 12:07	84.94	6/22/2022 11:24	0.49	6/22/2022 11:54	11.87	6/22/2022 10:42	0.74	6/22/2022 12:24	33.97
6/23/2022 12:08	84.94	6/22/2022 11:25	0.50	6/22/2022 11:55	11.76	6/22/2022 10:43	0.72	6/22/2022 12:25	34.04
6/23/2022 12:09	84.98	6/22/2022 11:26	0.49	6/22/2022 11:56	11.64	6/22/2022 10:44	0.71	6/22/2022 12:26	34.04
6/23/2022 12:10	84.93	6/22/2022 11:27	0.48	6/22/2022 11:57	11.53	6/22/2022 10:45	0.71	6/22/2022 12:27	34.07
6/23/2022 12:11	84.91	6/22/2022 11:28	0.49	6/22/2022 11:58	11.49	6/22/2022 10:46	0.72	6/22/2022 12:28	34.14
6/23/2022 12:12	84.85	6/22/2022 11:29	0.45	6/22/2022 11:59	11.43	6/22/2022 10:47	0.72	6/22/2022 12:29	34.14
6/23/2022 12:13	84.96	6/22/2022 11:30	0.44	6/22/2022 12:00	11.38	6/22/2022 10:48	0.72	6/22/2022 12:30	34.14
6/23/2022 12:14	84.89	6/22/2022 11:31	0.45	6/22/2022 12:01	11.29	6/22/2022 10:49	0.71	6/22/2022 12:31	34.13
6/23/2022 12:15	84.90	6/22/2022 11:32	0.44	6/22/2022 12:02	11.31	6/22/2022 10:50	0.70	6/22/2022 12:32	34.11
6/23/2022 12:16	84.89	6/22/2022 11:33	0.44	6/22/2022 12:03	11.24	6/22/2022 10:51	0.75	6/22/2022 12:33	34.11
6/23/2022 12:17	84.88	6/22/2022 11:34	0.46	6/22/2022 12:04	11.25	6/22/2022 10:52	0.76	6/22/2022 12:34	34.07
6/23/2022 12:18	84.90	6/22/2022 11:35	0.44	6/22/2022 12:05	11.25	6/22/2022 10:53	0.75	6/22/2022 12:35	34.08
6/23/2022 12:19	84.93	6/22/2022 11:36	0.47	6/22/2022 12:06	11.24	6/22/2022 10:54	0.74	6/22/2022 12:36	34.04
6/23/2022 12:20	84.92	6/22/2022 11:37	0.46	6/22/2022 12:07	11.22	6/22/2022 10:55	0.74	6/22/2022 12:37	34.06
6/23/2022 12:21	84.92	6/22/2022 11:38	0.43	6/22/2022 12:08	11.21	6/22/2022 10:56	0.75	6/22/2022 12:38	34.06
6/23/2022 12:22	84.87	6/22/2022 11:39	0.46	6/22/2022 12:09	11.18	6/22/2022 10:57	0.74	6/22/2022 12:39	34.06
6/23/2022 12:23	84.91	6/22/2022 11:40	0.42	6/22/2022 12:10	11.18	6/22/2022 10:58	0.73	6/22/2022 12:40	34.04
6/23/2022 12:24	84.89	6/22/2022 11:41	0.41	6/22/2022 12:11	11.16	6/22/2022 10:59	0.73	6/22/2022 12:41	34.06
6/23/2022 12:25	84.91	6/22/2022 11:42	0.41	6/22/2022 12:12	11.11	6/22/2022 11:00	0.71	6/22/2022 12:42	34.02
6/23/2022 12:26	84.87	6/22/2022 11:43	0.46	6/22/2022 12:13	11.08	6/22/2022 11:01	0.75	6/22/2022 12:43	34.04
6/23/2022 12:27	84.83	6/22/2022 11:44	0.44	6/22/2022 12:14	11.07	6/22/2022 11:02	0.74	6/22/2022 12:44	34.04
6/23/2022 12:28	84.88	6/22/2022 11:45	0.44	6/22/2022 12:15	11.01	6/22/2022 11:03	0.69	6/22/2022 12:45	34.04
6/23/2022 12:29	84.85	6/22/2022 11:46	0.41	6/22/2022 12:16	11.00	6/22/2022 11:04	0.72	6/22/2022 12:46	34.00
6/23/2022 12:30	84.85	6/22/2022 11:47	0.45	6/22/2022 12:17	11.03	6/22/2022 11:05	0.70	6/22/2022 12:47	34.00
6/23/2022 12:31	84.88	6/22/2022 11:48	0.40	6/22/2022 12:18	11.01	6/22/2022 11:06	0.74	6/22/2022 12:48	33.97
6/23/2022 12:32	84.87	6/22/2022 11:49	0.44	6/22/2022 12:19	10.99	6/22/2022 11:07	0.69	6/22/2022 12:49	34.02
6/23/2022 12:33	84.86	6/22/2022 11:50	0.43	6/22/2022 12:20	10.96	6/22/2022 11:08	0.74	6/22/2022 12:50	33.99
6/23/2022 12:34	84.83	6/22/2022 11:51	0.41	6/22/2022 12:21	10.93	6/22/2022 11:09	0.74	6/22/2022 12:51	33.98
6/23/2022 12:35	84.87	6/22/2022 11:52	0.46	6/22/2022 12:22	10.97	6/22/2022 11:10	0.74	6/22/2022 12:52	33.99
6/23/2022 12:36	84.86	6/22/2022 11:53	5.68	6/22/2022 12:23	10.96	6/22/2022 11:11	0.77	6/22/2022 12:53	34.01
6/23/2022 12:37	84.86	6/22/2022 11:54	7.44	6/22/2022 12:24	10.92	6/22/2022 11:12	0.73	6/22/2022 12:54	33.98
6/23/2022 12:38	84.83	6/22/2022 11:55	6.30	6/22/2022 12:25	10.89	6/22/2022 11:13	0.71	6/22/2022 12:55	33.97
6/23/2022 12:39	84.86	6/22/2022 11:56	5.33	6/22/2022 12:26	10.91	6/22/2022 11:14	0.73	6/22/2022 12:56	34.01
6/23/2022 12:40	84.86	6/22/2022 11:57	4.58	6/22/2022 12:27	10.89	6/22/2022 11:15	0.72	6/22/2022 12:57	34.00
6/23/2022 12:41	84.86	6/22/2022 11:58	3.93	6/22/2022 12:28	10.81	6/22/2022 11:16	0.74	6/22/2022 12:58	33.97
6/23/2022 12:42	84.80	6/22/2022 11:59	3.43	6/22/2022 12:29	10.80	6/22/2022 11:17	0.69	6/22/2022 12:59	33.97
6/23/2022 12:43	84.88	6/22/2022 12:00	2.96	6/22/2022 12:30	10.81	6/22/2022 11:18	0.71	6/22/2022 13:00	33.98
6/23/2022 12:44	84.85	6/22/2022 12:01	2.62	6/22/2022 12:31	10.79	6/22/2022 11:19	0.70	6/22/2022 13:01	34.06
6/23/2022 12:45	84.88	6/22/2022 12:02	2.29	6/22/2022 12:32	10.80	6/22/2022 11:20	0.72	6/22/2022 13:02	35.65
6/23/2022 12:46	84.84	6/22/2022 12:03	2.02	6/22/2022 12:33	10.77	6/22/2022 11:21	0.71	6/22/2022 13:03	34.63
6/23/2022 12:47	84.86	6/22/2022 12:04	1.83	6/22/2022 12:34	10.76	6/22/2022 11:22	0.74	6/22/2022 13:04	34.23
6/23/2022 12:48	84.84	6/22/2022 12:05	1.65	6/22/2022 12:35	10.78	6/22/2022 11:23	0.70	6/22/2022 13:05	34.06
6/23/2022 12:49	84.84	6/22/2022 12:06	1.52	6/22/2022 12:36	10.81	6/22/2022 11:24	0.67	6/22/2022 13:06	34.00
6/23/2022 12:50	89.35	6/22/2022 12:07	1.35	6/22/2022 12:37	10.76	6/22/2022 11:25	0.70	6/22/2022 13:07	34.07
6/23/2022 12:51	91.98	6/22/2022 12:08	1.24	6/22/2022 12:38	10.76	6/22/2022 11:26	0.71	6/22/2022 13:08	33.99
6/23/2022 12:52	93.43	6/22/2022 12:09	1.15	6/22/2022 12:39	10.73	6/22/2022 11:27	0.70	6/22/2022 13:09	34.00
6/23/2022 12:53	90.95	6/22/2022 12:10	1.06	6/22/2022 12:40	10.74	6/22/2022 11:28	0.75	6/22/2022 13:10	33.95
6/23/2022 12:54	89.00	6/22/2022 12:11	0.99	6/22/2022 12:41	10.71	6/22/2022 11:29	0.72	6/22/2022 13:11	34.00
6/23/2022 12:55	87.81	6/22/2022 12:12	0.91	6/22/2022 12:42	10.70	6/22/2022 11:30	0.71	6/22/2022 13:12	33.96
6/23/2022 12:56	87.04	6/22/2022 12:13	0.87	6/22/2022 12:43	10.73	6/22/2022 11:31	0.69	6/22/2022 13:13	33.98
6/23/2022 12:57	86.55	6/22/2022 12:14	0.82	6/22/2022 12:44	10.68	6/22/2022 11:32	0.73	6/22/2022 13:14	33.97
6/23/2022 12:58	86.30	6/22/2022 12:15	0.75	6/22/2022 12:45	10.66	6/22/2022 11:33	0.72	6/22/2022 13:15	33.97
6/23/2022 12:59	86.05	6/22/2022 12:16	0.77	6/22/2022 12:46	10.69	6/22/2022 11:34	0.71	6/22/2022 13:16	34.00
6/23/2022 13:00	85.87	6/22/2022 12:17	0.69	6/22/2022 12:47	10.67	6/22/2022 11:35	0.72	6/22/2022 13:17	34.00
6/23/2022 13:01	85.77	6/22/2022 12:18	0.65	6/22/2022 12:48	10.68	6/22/2022 11:36	0.71	6/22/2022 13:18	34.03
6/23/2022 13:02	85.66	6/22/2022 12:19	0.62	6/22/2022 12:49	10.68	6/22/2022 11:37	0.75	6/22/2022 13:19	34.05
6/23/2022 13:03	85.57	6/22/2022 12:20	0.62	6/22/2022 12:50	10.68	6/22/2022 11:38	0.75	6/22/2022 13:20	34.06
6/23/2022 13:04	85.55	6/22/2022 12:21	0.63	6/22/2022 12:51	10.64	6/22/2022 11:39	0.72	6/22/2022 13:21	34.13
6/23/2022 13:05	85.51	6/22/2022 12:22	0.57	6/22/2022 12:52	10.67	6/22/2022 11:40	0.69	6/22/2022 13:22	34.08
6/23/2022 13:06	85.49	6/22/2022 12:23	0.51	6/22/2022 12:53	10.70	6/22/2022 11:41	0.73	6/22/2022 13:23	34.08
6/23/2022 13:07	85.44	6/22/2022 12:24	0.53	6/22/2022 12:54	10.64	6/22/2022 11:42	0.73	6/22/2022 13:24	34.11
6/23/2022 13:08	85.41	6/22/2022 12:25	0.51	6/22/2022 12:55	10.65	6/22/2022 11:43	0.73	6/22/2022 13:25	34.11
6/23/2022 13:09	85.39	6/22/2022 12:26	0.50	6/22/2022 12:56	10.68	6/22/2022 11:44	0.75	6/22/2022 13:26	34.10

6/23/2022 13:10	85.40	6/22/2022 12:27	0.53	6/22/2022 12:57	10.67	6/22/2022 11:45	0.71	6/22/2022 13:27	34.02
6/23/2022 13:11	85.36	6/22/2022 12:28	0.51	6/22/2022 12:58	10.64	6/22/2022 11:46	0.70	6/22/2022 13:28	34.08
6/23/2022 13:12	85.34	6/22/2022 12:29	0.52	6/22/2022 12:59	10.63	6/22/2022 11:47	0.75	6/22/2022 13:29	34.08
6/23/2022 13:13	85.30	6/22/2022 12:30	0.49	6/22/2022 13:00	10.61	6/22/2022 11:48	0.69	6/22/2022 13:30	34.06
6/23/2022 13:14	85.27	6/22/2022 12:31	0.48	6/22/2022 13:01	10.60	6/22/2022 11:49	0.72	6/22/2022 13:31	34.03
6/23/2022 13:15	85.28	6/22/2022 12:32	0.50	6/22/2022 13:02	10.61	6/22/2022 11:50	0.72	6/22/2022 13:32	34.05
6/23/2022 13:16	85.25	6/22/2022 12:33	0.51	6/22/2022 13:03	10.54	6/22/2022 11:51	0.72	6/22/2022 13:33	34.06
6/23/2022 13:17	85.23	6/22/2022 12:34	0.50	6/22/2022 13:04	10.60	6/22/2022 11:52	0.72	6/22/2022 13:34	34.05
6/23/2022 13:18	85.23	6/22/2022 12:35	0.48	6/22/2022 13:05	10.60	6/22/2022 11:53	0.71	6/22/2022 13:35	34.17
6/23/2022 13:19	85.18	6/22/2022 12:36	0.50	6/22/2022 13:06	10.59	6/22/2022 11:54	0.77	6/22/2022 13:36	34.17
6/23/2022 13:20	85.18	6/22/2022 12:37	0.46	6/22/2022 13:07	10.63	6/22/2022 11:55	0.72	6/22/2022 13:37	34.18
6/23/2022 13:21	85.21	6/22/2022 12:38	0.46	6/22/2022 13:08	10.63	6/22/2022 11:56	0.80	6/22/2022 13:38	34.17
6/23/2022 13:22	85.21	6/22/2022 12:39	0.46	6/22/2022 13:09	10.69	6/22/2022 11:57	0.76	6/22/2022 13:39	34.23
6/23/2022 13:23	85.17	6/22/2022 12:40	0.49	6/22/2022 13:10	10.67	6/22/2022 11:58	0.72	6/22/2022 13:40	34.24
6/23/2022 13:24	85.11	6/22/2022 12:41	0.48	6/22/2022 13:11	10.67	6/22/2022 11:59	0.73	6/22/2022 13:41	34.21
6/23/2022 13:25	85.13	6/22/2022 12:42	0.44	6/22/2022 13:12	10.67	6/22/2022 12:00	0.75	6/22/2022 13:42	34.21
6/23/2022 13:26	85.14	6/22/2022 12:43	0.47	6/22/2022 13:13	10.67	6/22/2022 12:01	0.73	6/22/2022 13:43	34.19
6/23/2022 13:27	85.16	6/22/2022 12:44	0.49	6/22/2022 13:14	10.65	6/22/2022 12:02	0.74	6/22/2022 13:44	34.17
6/23/2022 13:28	85.13	6/22/2022 12:45	0.48	6/22/2022 13:15	10.66	6/22/2022 12:03	0.77	6/22/2022 13:45	34.15
6/23/2022 13:29	85.15	6/22/2022 12:46	0.46	6/22/2022 13:16	10.65	6/22/2022 12:04	0.74	6/22/2022 13:46	34.14
6/23/2022 13:30	85.13	6/22/2022 12:47	0.45	6/22/2022 13:17	10.63	6/22/2022 12:05	0.71	6/22/2022 13:47	34.16
6/23/2022 13:31	85.13	6/22/2022 12:48	0.51	6/22/2022 13:18	10.68	6/22/2022 12:06	0.74	6/22/2022 13:48	34.12
6/23/2022 13:32	85.08	6/22/2022 12:49	0.46	6/22/2022 13:19	10.67	6/22/2022 12:07	0.72	6/22/2022 13:49	34.10
6/23/2022 13:33	85.08	6/22/2022 12:50	0.48	6/22/2022 13:20	10.69	6/22/2022 12:08	0.71	6/22/2022 13:50	34.13
6/23/2022 13:34	85.07	6/22/2022 12:51	0.40	6/22/2022 13:21	10.65	6/22/2022 12:09	0.73	6/22/2022 13:51	34.12
6/23/2022 13:35	85.09	6/22/2022 12:52	0.44	6/22/2022 13:22	10.67	6/22/2022 12:10	0.69	6/22/2022 13:52	34.12
6/23/2022 13:36	85.09	6/22/2022 12:53	0.45	6/22/2022 13:23	10.67	6/22/2022 12:11	0.70	6/22/2022 13:53	34.10
6/23/2022 13:37	85.08	6/22/2022 12:54	0.44	6/22/2022 13:24	10.65	6/22/2022 12:12	0.68	6/22/2022 13:54	34.09
6/23/2022 13:38	85.09	6/22/2022 12:55	0.42	6/22/2022 13:25	10.66	6/22/2022 12:13	0.70	6/22/2022 13:55	34.05
6/23/2022 13:39	85.07	6/22/2022 12:56	4.05	6/22/2022 13:26	10.64	6/22/2022 12:14	0.70	6/22/2022 13:56	34.09
6/23/2022 13:40	85.05	6/22/2022 12:57	7.66	6/22/2022 13:27	10.64	6/22/2022 12:15	0.73	6/22/2022 13:57	34.09
6/23/2022 13:41	85.02	6/22/2022 12:58	6.47	6/22/2022 13:28	10.65	6/22/2022 12:16	0.69	6/22/2022 13:58	34.07
6/23/2022 13:42	85.06	6/22/2022 12:59	5.46	6/22/2022 13:29	10.63	6/22/2022 12:17	0.72	6/22/2022 13:59	34.09
6/23/2022 13:43	85.04	6/22/2022 13:00	4.69	6/22/2022 13:30	10.62	6/22/2022 12:18	0.73	6/22/2022 14:00	34.09
6/23/2022 13:44	85.03	6/22/2022 13:01	4.08	6/22/2022 13:31	10.64	6/22/2022 12:19	0.74	6/22/2022 14:01	34.04
6/23/2022 13:45	85.03	6/22/2022 13:02	3.53	6/22/2022 13:32	10.60	6/22/2022 12:20	0.73	6/22/2022 14:02	34.06
6/23/2022 13:46	85.02	6/22/2022 13:03	3.05	6/22/2022 13:33	10.60	6/22/2022 12:21	0.71	6/22/2022 14:03	34.09
6/23/2022 13:47	85.01	6/22/2022 13:04	2.68	6/22/2022 13:34	10.56	6/22/2022 12:22	0.71	6/22/2022 14:04	34.06
6/23/2022 13:48	84.99	6/22/2022 13:05	2.33	6/22/2022 13:35	10.55	6/22/2022 12:23	0.74	6/22/2022 14:05	34.06
6/23/2022 13:49	84.99	6/22/2022 13:06	2.10	6/22/2022 13:36	10.55	6/22/2022 12:24	0.70	6/22/2022 14:06	34.04
6/23/2022 13:50	84.97	6/22/2022 13:07	1.89	6/22/2022 13:37	10.56	6/22/2022 12:25	0.70	6/22/2022 14:07	34.02
6/23/2022 13:51	84.98	6/22/2022 13:08	1.65	6/22/2022 13:38	10.53	6/22/2022 12:26	0.71	6/22/2022 14:08	34.23
6/23/2022 13:52	84.98	6/22/2022 13:09	1.53	6/22/2022 13:39	10.55	6/22/2022 12:27	0.68	6/22/2022 14:09	35.55
6/23/2022 13:53	85.04	6/22/2022 13:10	1.39	6/22/2022 13:40	10.49	6/22/2022 12:28	0.72	6/22/2022 14:10	34.65
6/23/2022 13:54	85.02	6/22/2022 13:11	1.30	6/22/2022 13:41	10.53	6/22/2022 12:29	0.74	6/22/2022 14:11	34.26
6/23/2022 13:55	85.00	6/22/2022 13:12	1.15	6/22/2022 13:42	10.53	6/22/2022 12:30	0.72	6/22/2022 14:12	34.17
6/23/2022 13:56	85.01	6/22/2022 13:13	1.03	6/22/2022 13:43	10.55	6/22/2022 12:31	0.72	6/22/2022 14:13	34.08
6/23/2022 13:57	84.99	6/22/2022 13:14	0.96	6/22/2022 13:44	10.59	6/22/2022 12:32	0.71	6/22/2022 14:14	34.07
6/23/2022 13:58	85.01	6/22/2022 13:15	0.93	6/22/2022 13:45	10.58	6/22/2022 12:33	0.71	6/22/2022 14:15	34.07
6/23/2022 13:59	84.97	6/22/2022 13:16	0.85	6/22/2022 13:46	10.53	6/22/2022 12:34	0.71	6/22/2022 14:16	34.06
6/23/2022 14:00	84.98	6/22/2022 13:17	0.83	6/22/2022 13:47	14.14	6/22/2022 12:35	0.71	6/22/2022 14:17	34.06
6/23/2022 14:01	84.99	6/22/2022 13:18	0.78	6/22/2022 13:48	15.64	6/22/2022 12:36	0.70	6/22/2022 14:18	34.09
6/23/2022 14:02	84.97	6/22/2022 13:19	0.72	6/22/2022 13:49	15.02	6/22/2022 12:37	0.76	6/22/2022 14:19	34.17
6/23/2022 14:03	84.97	6/22/2022 13:20	0.69	6/22/2022 13:50	14.50	6/22/2022 12:38	0.69	6/22/2022 14:20	34.19
6/23/2022 14:04	84.96	6/22/2022 13:21	0.70	6/22/2022 13:51	14.04	6/22/2022 12:39	0.68	6/22/2022 14:21	34.26
6/23/2022 14:05	84.97	6/22/2022 13:22	0.65	6/22/2022 13:52	13.63	6/22/2022 12:40	0.75	6/22/2022 14:22	34.26
6/23/2022 14:06	84.94	6/22/2022 13:23	0.62	6/22/2022 13:53	13.29	6/22/2022 12:41	0.72	6/22/2022 14:23	34.27
6/23/2022 14:07	84.97	6/22/2022 13:24	0.62	6/22/2022 13:54	13.01	6/22/2022 12:42	0.71	6/22/2022 14:24	34.28
6/23/2022 14:08	84.94	6/22/2022 13:25	0.58	6/22/2022 13:55	12.75	6/22/2022 12:43	0.70	6/22/2022 14:25	34.28
6/23/2022 14:09	84.98	6/22/2022 13:26	0.56	6/22/2022 13:56	12.48	6/22/2022 12:44	0.73	6/22/2022 14:26	34.22
6/23/2022 14:10	84.98	6/22/2022 13:27	0.56	6/22/2022 13:57	12.32	6/22/2022 12:45	0.74	6/22/2022 14:27	34.25
6/23/2022 14:11	84.93	6/22/2022 13:28	0.50	6/22/2022 13:58	12.11	6/22/2022 12:46	0.69	6/22/2022 14:28	34.23
6/23/2022 14:12	84.98	6/22/2022 13:29	0.56	6/22/2022 13:59	11.95	6/22/2022 12:47	0.72	6/22/2022 14:29	34.19
6/23/2022 14:13	84.93	6/22/2022 13:30	0.50	6/22/2022 14:00	11.82	6/22/2022 12:48	0.72	6/22/2022 14:30	34.21
6/23/2022 14:14	84.95	6/22/2022 13:31	0.47	6/22/2022 14:01	11.70	6/22/2022 12:49	0.71	6/22/2022 14:31	34.14
6/23/2022 14:15	84.92	6/22/2022 13:32	0.52	6/22/2022 14:02	11.54	6/22/2022 12:50	0.72	6/22/2022 14:32	34.18
6/23/2022 14:16	84.93	6/22/2022 13:33	0.48	6/22/2022 14:03	11.48	6/22/2022 12:51	0.74	6/22/2022 14:33	34.18
6/23/2022 14:17	84.93	6/22/2022 13:34	0.51	6/22/2022 14:04	11.36	6/22/2022 12:52	0.74	6/22/2022 14:34	34.16
6/23/2022 14:18	84.95	6/22/2022 13:35	0.48	6/22/2022 14:05	11.30	6/22/2022 12:53	0.70	6/22/2022 14:35	34.15
6/23/2022 14:19	84.95	6/22/2022 13:36	0.49	6/22/2022 14:06	11.25	6/22/2022 12:54	0.70	6/22/2022 14:36	34.14
6/23/2022 14:20	84.93	6/22/2022 13:37	0.45	6/22/2022 14:07	11.22	6/22/2022 12:55	0.72	6/22/2022 14:37	34.15
6/23/2022 14:21	84.91	6/22/2022 13:38	0.50	6/22/2022 14:08	11.16	6/22/2022 12:56	0.71	6/22/2022 14:38	34.14
6/23/2022 14:22	84.92	6/22/2022 13:39	0.48	6/22/2022 14:09	11.12	6/22/2022 12:57	0.74	6/22/2022 14:39	34.12
6/23/2022 14:23	84.95	6/22/2022 13:40	0.46	6/22/2022 14:10	11.03	6/22/2022 12:58	0.73	6/22/2022 14:40	34.13
6/23/2022 14:24	84.94	6/22/2022 13:41	0.43	6/22/2022 14:11	11.03	6/22/2022 12:59	0.72	6/22/2022 14:41	34.11
6/23/2022 14:25	84.90	6/22/2022 13:42	0.49	6/22/2022 14:12	10.98	6/22/2022 13:00	0.76	6/22/2022 14:42	34.12
6/23/2022 14:26	84.91	6/22/2022 13:43	0.40	6/22/2022 14:13	10.96	6/22/2022 13:01	0.73	6/22/2022 14:43	34.11
6/23/2022 14:27	84.92	6/22/2022 13:44	0.48	6/22/2022 14:14	10.91	6/22/2022 13:02	0.76	6/22/2022 14:44	34.10
6/23/2022 14:28	84.91	6/22/2022 13:45	0.41	6/22/2022 14:15	10.86	6/22/2022 13:03	0.72	6/22/2022 14:45	34.08
6/23/2022 14:29	84.91	6/22/2022 13:46	0.44	6/22/2022 14:16	10.86	6/22/2022 13:04	0.73	6/22/2022 14:46	34.06
6/23/2022 14:30	84.88	6/22/2022 13:47	0.43	6/22/2022 14:17	10.81	6/22/2022 13:05	0.72	6/22/2022 14:47	34.18
6/23/2022 14:31	84.89	6/22/2022 13:48	0.46	6/22/2022 14:18	10.79	6/22/2022 13:06	0.71	6/22/2022 14:48	34.18
6/23/2022 14:32	84.88	6/22/2022 13:49	0.42	6/22/2022 14:19	10.75	6/22/2022 13:07	0.70	6/22/2022 14:49	34.20
6/23/2022 14:33	84.89	6/22/2022 13:50	0.46	6/22/2022 14:20	10.75	6/22/2022 13:08	0.72	6/22/2022 14:50	34.20
6/23/2022 14:34	84.89	6/22/2022 13:51	0.44	6/22/2022 14:21	10.74	6/22/2022 13:09	0.72	6/22/2022 14:51	34.13
6/23/2022 14:35	84.87	6/22/2022 13:52	0.41	6/22/2022 14:22	10.71	6/22/2022 13:10	0.69	6/22/2022 14:52	34.14
6/23/2022 14:36	84.86	6/22/2022 13:53	0.46	6/22/2022 14:23	10.73	6/22/2022 13:11	0.73	6/22/2022 14:53	34.16
6/23/2022 14:37	84.86	6/22/2022 13:54	0.46	6/22/2022 14:24	10.69	6/22/2022 13:12	0.72	6/22/2022 14:54	34.14

6/23/2022 14:38	84.91	6/22/2022 13:55	0.44	6/22/2022 14:25	10.72	6/22/2022 13:13	0.70	6/22/2022 14:55	34.16
6/23/2022 14:39	84.87	6/22/2022 13:56	0.43	6/22/2022 14:26	10.70	6/22/2022 13:14	0.74	6/22/2022 14:56	34.14
6/23/2022 14:40	84.91	6/22/2022 13:57	0.43	6/22/2022 14:27	10.75	6/22/2022 13:15	0.74	6/22/2022 14:57	34.10
6/23/2022 14:41	84.90	6/22/2022 13:58	3.25	6/22/2022 14:28	10.71	6/22/2022 13:16	0.69	6/22/2022 14:58	34.11
6/23/2022 14:42	84.90	6/22/2022 13:59	7.87	6/22/2022 14:29	10.72	6/22/2022 13:17	0.73	6/22/2022 14:59	34.13
6/23/2022 14:43	84.88	6/22/2022 14:00	6.63	6/22/2022 14:30	10.69	6/22/2022 13:18	0.73	6/22/2022 15:00	34.10
6/23/2022 14:44	84.87	6/22/2022 14:01	5.61	6/22/2022 14:31	10.70	6/22/2022 13:19	0.72	6/22/2022 15:01	34.46
6/23/2022 14:45	84.82	6/22/2022 14:02	4.80	6/22/2022 14:32	10.69	6/22/2022 13:20	0.74	6/22/2022 15:02	35.61
6/23/2022 14:46	84.87	6/22/2022 14:03	4.11	6/22/2022 14:33	10.66	6/22/2022 13:21	0.73	6/22/2022 15:03	34.66
6/23/2022 14:47	84.84	6/22/2022 14:04	3.55	6/22/2022 14:34	10.61	6/22/2022 13:22	0.69	6/22/2022 15:04	34.34
6/23/2022 14:48	84.85	6/22/2022 14:05	3.12	6/22/2022 14:35	10.64	6/22/2022 13:23	0.71	6/22/2022 15:05	34.20
6/23/2022 14:49	84.88	6/22/2022 14:06	2.68	6/22/2022 14:36	10.64	6/22/2022 13:24	0.69	6/22/2022 15:06	34.15
6/23/2022 14:50	84.87	6/22/2022 14:07	2.40	6/22/2022 14:37	10.60	6/22/2022 13:25	0.72	6/22/2022 15:07	34.14
6/23/2022 14:51	84.88	6/22/2022 14:08	2.09	6/22/2022 14:38	10.61	6/22/2022 13:26	0.72	6/22/2022 15:08	34.15
6/23/2022 14:52	84.89	6/22/2022 14:09	1.91	6/22/2022 14:39	10.59	6/22/2022 13:27	0.73	6/22/2022 15:09	34.10
6/23/2022 14:53	84.84	6/22/2022 14:10	1.69	6/22/2022 14:40	10.61	6/22/2022 13:28	0.74	6/22/2022 15:10	34.16
6/23/2022 14:54	84.81	6/22/2022 14:11	1.53	6/22/2022 14:41	10.55	6/22/2022 13:29	0.73	6/22/2022 15:11	34.09
6/23/2022 14:55	84.82	6/22/2022 14:12	1.33	6/22/2022 14:42	10.57	6/22/2022 13:30	0.73	6/22/2022 15:12	34.12
6/23/2022 14:56	84.85	6/22/2022 14:13	1.23	6/22/2022 14:43	10.54	6/22/2022 13:31	0.74	6/22/2022 15:13	34.12
6/23/2022 14:57	84.89	6/22/2022 14:14	1.16	6/22/2022 14:44	10.51	6/22/2022 13:32	0.71	6/22/2022 15:14	34.11
6/23/2022 14:58	84.83	6/22/2022 14:15	1.07	6/22/2022 14:45	10.51	6/22/2022 13:33	0.71	6/22/2022 15:15	34.09
6/23/2022 14:59	84.85	6/22/2022 14:16	0.98	6/22/2022 14:46	10.55	6/22/2022 13:34	0.72	6/22/2022 15:16	34.08
6/23/2022 15:00	84.79	6/22/2022 14:17	0.91	6/22/2022 14:47	10.54	6/22/2022 13:35	0.74	6/22/2022 15:17	36.01
6/23/2022 15:01	84.83	6/22/2022 14:18	0.84	6/22/2022 14:48	10.58	6/22/2022 13:36	0.76	6/22/2022 15:18	34.89
6/23/2022 15:02	84.81	6/22/2022 14:19	0.78	6/22/2022 14:49	10.54	6/22/2022 13:37	0.70	6/22/2022 15:19	34.39
6/23/2022 15:03	84.84	6/22/2022 14:20	0.76	6/22/2022 14:50	10.56	6/22/2022 13:38	0.73	6/22/2022 15:20	34.25
6/23/2022 15:04	84.77	6/22/2022 14:21	0.73	6/22/2022 14:51	10.54	6/22/2022 13:39	0.75	6/22/2022 15:21	34.16
6/23/2022 15:05	84.83	6/22/2022 14:22	0.69	6/22/2022 14:52	10.55	6/22/2022 13:40	0.70	6/22/2022 15:22	34.12
6/23/2022 15:06	84.80	6/22/2022 14:23	0.66	6/22/2022 14:53	10.59	6/22/2022 13:41	0.76	6/22/2022 15:23	34.13
6/23/2022 15:07	84.78	6/22/2022 14:24	0.62	6/22/2022 14:54	10.55	6/22/2022 13:42	0.76	6/22/2022 15:24	34.12
6/23/2022 15:08	84.80	6/22/2022 14:25	0.55	6/22/2022 14:55	10.56	6/22/2022 13:43	0.72	6/22/2022 15:25	34.12
6/23/2022 15:09	84.82	6/22/2022 14:26	0.59	6/22/2022 14:56	10.54	6/22/2022 13:44	0.70	6/22/2022 15:26	34.14
6/23/2022 15:10	84.85	6/22/2022 14:27	0.53	6/22/2022 14:57	10.52	6/22/2022 13:45	0.70	6/22/2022 15:27	34.18
6/23/2022 15:11	84.83	6/22/2022 14:28	0.57	6/22/2022 14:58	10.51	6/22/2022 13:46	0.70	6/22/2022 15:28	36.32
6/23/2022 15:12	84.80	6/22/2022 14:29	0.52	6/22/2022 14:59	10.49	6/22/2022 13:47	0.71	6/22/2022 15:29	35.11
6/23/2022 15:13	84.81	6/22/2022 14:30	0.52	6/22/2022 15:00	10.50	6/22/2022 13:48	0.72	6/22/2022 15:30	34.53
6/23/2022 15:14	84.80	6/22/2022 14:31	0.54	6/22/2022 15:01	10.48	6/22/2022 13:49	0.74	6/22/2022 15:31	34.31
6/23/2022 15:15	84.78	6/22/2022 14:32	0.54	6/22/2022 15:02	10.47	6/22/2022 13:50	0.72	6/22/2022 15:32	34.22
6/23/2022 15:16	84.81	6/22/2022 14:33	0.50	6/22/2022 15:03	10.51	6/22/2022 13:51	0.71	6/22/2022 15:33	34.21
6/23/2022 15:17	84.78	6/22/2022 14:34	0.53	6/22/2022 15:04	10.48	6/22/2022 13:52	0.75	6/22/2022 15:34	34.17
6/23/2022 15:18	84.78	6/22/2022 14:35	0.50	6/22/2022 15:05	10.47	6/22/2022 13:53	0.72	6/22/2022 15:35	34.18
6/23/2022 15:19	84.77	6/22/2022 14:36	0.47	6/22/2022 15:06	10.45	6/22/2022 13:54	0.67	6/22/2022 15:36	36.26
6/23/2022 15:20	84.79	6/22/2022 14:37	0.49	6/22/2022 15:07	10.45	6/22/2022 13:55	0.73	6/22/2022 15:37	35.06
6/23/2022 15:21	84.76	6/22/2022 14:38	0.47	6/22/2022 15:08	10.44	6/22/2022 13:56	0.70	6/22/2022 15:38	34.51
6/23/2022 15:22	84.80	6/22/2022 14:39	0.50	6/22/2022 15:09	10.44	6/22/2022 13:57	0.71	6/22/2022 15:39	34.29
6/23/2022 15:23	84.77	6/22/2022 14:40	0.48	6/22/2022 15:10	10.49	6/22/2022 13:58	0.71	6/22/2022 15:40	34.22
6/23/2022 15:24	84.79	6/22/2022 14:41	0.48	6/22/2022 15:11	10.45	6/22/2022 13:59	0.74	6/22/2022 15:41	34.19
6/23/2022 15:25	84.78	6/22/2022 14:42	0.44	6/22/2022 15:12	10.48	6/22/2022 14:00	0.75	6/22/2022 15:42	34.15
6/23/2022 15:26	84.74	6/22/2022 14:43	0.48	6/22/2022 15:13	10.52	6/22/2022 14:01	0.78	6/22/2022 15:43	34.17
6/23/2022 15:27	84.80	6/22/2022 14:44	0.46	6/22/2022 15:14	10.51	6/22/2022 14:02	0.78	6/22/2022 15:44	34.17
6/23/2022 15:28	84.79	6/22/2022 14:45	0.46	6/22/2022 15:15	10.54	6/22/2022 14:03	0.79	6/22/2022 15:45	34.16
6/23/2022 15:29	84.76	6/22/2022 14:46	0.45	6/22/2022 15:16	10.50	6/22/2022 14:04	0.73	6/22/2022 15:46	34.19
6/23/2022 15:30	84.78	6/22/2022 14:47	0.46	6/22/2022 15:17	10.50	6/22/2022 14:05	0.74	6/22/2022 15:47	34.13
6/23/2022 15:31	84.72	6/22/2022 14:48	0.47	6/22/2022 15:18	10.49	6/22/2022 14:06	0.76	6/22/2022 15:48	34.15
6/23/2022 15:32	84.73	6/22/2022 14:49	0.44	6/22/2022 15:19	10.52	6/22/2022 14:07	0.73	6/22/2022 15:49	34.16
6/23/2022 15:33	84.79	6/22/2022 14:50	0.44	6/22/2022 15:20	10.54	6/22/2022 14:08	0.74	6/22/2022 15:50	34.15
6/23/2022 15:34	84.73	6/22/2022 14:51	0.42	6/22/2022 15:21	10.54	6/22/2022 14:09	0.74	6/22/2022 15:51	34.16
6/23/2022 15:35	84.75	6/22/2022 14:52	0.45	6/22/2022 15:22	10.57	6/22/2022 14:10	0.75	6/22/2022 15:52	34.14
6/23/2022 15:36	84.77	6/22/2022 14:53	0.44	6/22/2022 15:23	10.60	6/22/2022 14:11	0.75	6/22/2022 15:53	35.87
6/23/2022 15:37	84.75	6/22/2022 14:54	0.47	6/22/2022 15:24	10.61	6/22/2022 14:12	0.70	6/22/2022 15:54	34.90
6/23/2022 15:38	84.77	6/22/2022 14:55	0.45	6/22/2022 15:25	10.64	6/22/2022 14:13	0.73	6/22/2022 15:55	34.44
6/23/2022 15:39	84.73	6/22/2022 14:56	0.45	6/22/2022 15:26	10.65	6/22/2022 14:14	0.69	6/22/2022 15:56	34.26
6/23/2022 15:40	84.76	6/22/2022 14:57	0.45	6/22/2022 15:27	10.61	6/22/2022 14:15	0.70	6/22/2022 15:57	34.17
6/23/2022 15:41	84.75	6/22/2022 14:58	0.45	6/22/2022 15:28	10.68	6/22/2022 14:16	0.71	6/22/2022 15:58	34.17
6/23/2022 15:42	84.76	6/22/2022 14:59	0.47	6/22/2022 15:29	10.66	6/22/2022 14:17	0.69	6/22/2022 15:59	34.16
6/23/2022 15:43	84.78	6/22/2022 15:00	1.66	6/22/2022 15:30	11.76	6/22/2022 14:18	0.71	6/22/2022 16:00	34.14
6/23/2022 15:44	84.73	6/22/2022 15:01	7.39	6/22/2022 15:31	15.41	6/22/2022 14:19	0.71	6/22/2022 16:01	34.14
6/23/2022 15:45	84.72	6/22/2022 15:02	6.96	6/22/2022 15:32	14.81	6/22/2022 14:20	0.69	6/22/2022 16:02	34.15
6/23/2022 15:46	84.74	6/22/2022 15:03	5.87	6/22/2022 15:33	14.30	6/22/2022 14:21	0.72	6/22/2022 16:03	34.15
6/23/2022 15:47	84.74	6/22/2022 15:04	5.03	6/22/2022 15:34	13.85	6/22/2022 14:22	0.72	6/22/2022 16:04	34.13
6/23/2022 15:48	84.75	6/22/2022 15:05	4.35	6/22/2022 15:35	13.52	6/22/2022 14:23	0.70	6/22/2022 16:05	34.13
6/23/2022 15:49	84.74	6/22/2022 15:06	3.78	6/22/2022 15:36	13.20	6/22/2022 14:24	0.71	6/22/2022 16:06	34.15
6/23/2022 15:50	84.74	6/22/2022 15:07	3.26	6/22/2022 15:37	12.90	6/22/2022 14:25	0.74	6/22/2022 16:07	34.11
6/23/2022 15:51	84.77	6/22/2022 15:08	2.81	6/22/2022 15:38	12.61	6/22/2022 14:26	0.75	6/22/2022 16:08	36.02
6/23/2022 15:52	84.76	6/22/2022 15:09	2.48	6/22/2022 15:39	12.40	6/22/2022 14:27	0.68	6/22/2022 16:09	34.95
6/23/2022 15:53	84.73	6/22/2022 15:10	2.22	6/22/2022 15:40	12.21	6/22/2022 14:28	0.73	6/22/2022 16:10	34.44
6/23/2022 15:54	84.72	6/22/2022 15:11	1.96	6/22/2022 15:41	12.04	6/22/2022 14:29	0.72	6/22/2022 16:11	34.24
6/23/2022 15:55	84.72	6/22/2022 15:12	1.82	6/22/2022 15:42	11.89	6/22/2022 14:30	0.74	6/22/2022 16:12	34.18
6/23/2022 15:56	84.73	6/22/2022 15:13	1.61	6/22/2022 15:43	11.79	6/22/2022 14:31	0.73	6/22/2022 16:13	34.15
6/23/2022 15:57	84.72	6/22/2022 15:14	1.43	6/22/2022 15:44	11.65	6/22/2022 14:32	0.73	6/22/2022 16:14	34.16
6/23/2022 15:58	84.73	6/22/2022 15:15	1.31	6/22/2022 15:45	11.53	6/22/2022 14:33	0.71	6/22/2022 16:15	34.16
6/23/2022 15:59	84.71	6/22/2022 15:16	1.21	6/22/2022 15:46	11.40	6/22/2022 14:34	0.70	6/22/2022 16:16	34.16
6/23/2022 16:00	84.75	6/22/2022 15:17	1.08	6/22/2022 15:47	11.34	6/22/2022 14:35	0.73	6/22/2022 16:17	34.12
6/23/2022 16:01	84.73	6/22/2022 15:18	0.99	6/22/2022 15:48	11.28	6/22/2022 14:36	0.73	6/22/2022 16:18	34.12
6/23/2022 16:02	84.74	6/22/2022 15:19	0.92	6/22/2022 15:49	11.20	6/22/2022 14:37	0.70	6/22/2022 16:19	34.15
6/23/2022 16:03	84.74	6/22/2022 15:20	0.88	6/22/2022 15:50	11.16	6/22/2022 14:38	0.69	6/22/2022 16:20	34.11
6/23/2022 16:04	84.76	6/22/2022 15:21	0.81	6/22/2022 15:51	11.10	6/22/2022 14:39	0.73	6/22/2022 16:21	34.13
6/23/2022 16:05	84.71	6/22/2022 15:22	0.75	6/22/2022 15:52	11.06	6/22/2022 14:40	0.70	6/22/2022 16:22	34.11

6/23/2022 16:06	84.73	6/22/2022 15:23	0.74	6/22/2022 15:53	11.02	6/22/2022 14:41	0.72	6/22/2022 16:23	34.11
6/23/2022 16:07	84.72	6/22/2022 15:24	0.71	6/22/2022 15:54	10.98	6/22/2022 14:42	0.72	6/22/2022 16:24	34.13
6/23/2022 16:08	84.71	6/22/2022 15:25	0.64	6/22/2022 15:55	10.99	6/22/2022 14:43	0.70	6/22/2022 16:25	34.14
6/23/2022 16:09	84.72	6/22/2022 15:26	0.66	6/22/2022 15:56	10.93	6/22/2022 14:44	0.69	6/22/2022 16:26	34.10
6/23/2022 16:10	84.75	6/22/2022 15:27	0.62	6/22/2022 15:57	10.89	6/22/2022 14:45	0.70	6/22/2022 16:27	34.10
6/23/2022 16:11	84.72	6/22/2022 15:28	0.61	6/22/2022 15:58	10.88	6/22/2022 14:46	0.72	6/22/2022 16:28	34.11
6/23/2022 16:12	84.69	6/22/2022 15:29	0.60	6/22/2022 15:59	10.83	6/22/2022 14:47	0.70	6/22/2022 16:29	34.15
6/23/2022 16:13	84.70	6/22/2022 15:30	0.58	6/22/2022 16:00	10.80	6/22/2022 14:48	0.72	6/22/2022 16:30	34.15
6/23/2022 16:14	84.68	6/22/2022 15:31	0.54	6/22/2022 16:01	10.78	6/22/2022 14:49	0.74	6/22/2022 16:31	34.12
6/23/2022 16:15	84.71	6/22/2022 15:32	0.54	6/22/2022 16:02	10.76	6/22/2022 14:50	0.71	6/22/2022 16:32	34.14
6/23/2022 16:16	84.72	6/22/2022 15:33	0.54	6/22/2022 16:03	10.75	6/22/2022 14:51	0.71	6/22/2022 16:33	34.15
6/23/2022 16:17	84.72	6/22/2022 15:34	0.50	6/22/2022 16:04	10.69	6/22/2022 14:52	0.71	6/22/2022 16:34	34.13
6/23/2022 16:18	84.70	6/22/2022 15:35	0.49	6/22/2022 16:05	10.69	6/22/2022 14:53	0.73	6/22/2022 16:35	34.11
6/23/2022 16:19	84.71	6/22/2022 15:36	0.50	6/22/2022 16:06	10.70	6/22/2022 14:54	0.70	6/22/2022 16:36	34.10
6/23/2022 16:20	84.69	6/22/2022 15:37	0.50	6/22/2022 16:07	10.67	6/22/2022 14:55	0.74	6/22/2022 16:37	34.07
6/23/2022 16:21	84.70	6/22/2022 15:38	0.47	6/22/2022 16:08	10.63	6/22/2022 14:56	0.71	6/22/2022 16:38	34.12
6/23/2022 16:22	84.68	6/22/2022 15:39	0.46	6/22/2022 16:09	10.62	6/22/2022 14:57	0.70	6/22/2022 16:39	34.13
6/23/2022 16:23	84.69	6/22/2022 15:40	0.48	6/22/2022 16:10	10.61	6/22/2022 14:58	0.72	6/22/2022 16:40	34.14
6/23/2022 16:24	84.70	6/22/2022 15:41	0.50	6/22/2022 16:11	10.62	6/22/2022 14:59	0.74	6/22/2022 16:41	34.11
6/23/2022 16:25	84.74	6/22/2022 15:42	0.46	6/22/2022 16:12	10.60	6/22/2022 15:00	0.72	6/22/2022 16:42	34.12
6/23/2022 16:26	84.69	6/22/2022 15:43	0.47	6/22/2022 16:13	10.63	6/22/2022 15:01	0.73	6/22/2022 16:43	36.31
6/23/2022 16:27	84.66	6/22/2022 15:44	0.51	6/22/2022 16:14	10.62	6/22/2022 15:02	0.74	6/22/2022 16:44	35.18
6/23/2022 16:28	84.71	6/22/2022 15:45	0.47	6/22/2022 16:15	10.63	6/22/2022 15:03	0.72	6/22/2022 16:45	34.54
6/23/2022 16:29	84.68	6/22/2022 15:46	0.48	6/22/2022 16:16	10.64	6/22/2022 15:04	0.76	6/22/2022 16:46	34.30
6/23/2022 16:30	84.71	6/22/2022 15:47	0.47	6/22/2022 16:17	10.63	6/22/2022 15:05	0.76	6/22/2022 16:47	34.14
6/23/2022 16:31	84.72	6/22/2022 15:48	0.46	6/22/2022 16:18	10.61	6/22/2022 15:06	0.75	6/22/2022 16:48	34.15
6/23/2022 16:32	84.70	6/22/2022 15:49	0.44	6/22/2022 16:19	10.59	6/22/2022 15:07	0.76	6/22/2022 16:49	34.13
6/23/2022 16:33	84.67	6/22/2022 15:50	0.44	6/22/2022 16:20	10.60	6/22/2022 15:08	0.72	6/22/2022 16:50	34.14
6/23/2022 16:34	84.69	6/22/2022 15:51	0.46	6/22/2022 16:21	10.61	6/22/2022 15:09	0.73	6/22/2022 16:51	34.12
6/23/2022 16:35	84.70	6/22/2022 15:52	0.45	6/22/2022 16:22	10.61	6/22/2022 15:10	0.71	6/22/2022 16:52	34.15
6/23/2022 16:36	84.64	6/22/2022 15:53	0.44	6/22/2022 16:23	10.55	6/22/2022 15:11	0.74	6/22/2022 16:53	34.13
6/23/2022 16:37	84.68	6/22/2022 15:54	0.46	6/22/2022 16:24	10.53	6/22/2022 15:12	0.74	6/22/2022 16:54	34.13
6/23/2022 16:38	84.70	6/22/2022 15:55	0.43	6/22/2022 16:25	10.54	6/22/2022 15:13	0.72	6/22/2022 16:55	34.10
6/23/2022 16:39	84.69	6/22/2022 15:56	0.44	6/22/2022 16:26	10.56	6/22/2022 15:14	0.78	6/22/2022 16:56	34.13
6/23/2022 16:40	84.69	6/22/2022 15:57	0.44	6/22/2022 16:27	10.52	6/22/2022 15:15	0.71	6/22/2022 16:57	34.16
6/23/2022 16:41	84.71	6/22/2022 15:58	0.45	6/22/2022 16:28	10.49	6/22/2022 15:16	0.74	6/22/2022 16:58	34.13
6/23/2022 16:42	84.73	6/22/2022 15:59	0.43	6/22/2022 16:29	10.51	6/22/2022 15:17	0.70	6/22/2022 16:59	34.13
6/23/2022 16:43	84.65	6/22/2022 16:00	0.47	6/22/2022 16:30	10.51	6/22/2022 15:18	0.71	6/22/2022 17:00	34.15
6/23/2022 16:44	84.69	6/22/2022 16:01	0.47	6/22/2022 16:31	10.51	6/22/2022 15:19	0.69	6/22/2022 17:01	34.10
6/23/2022 16:45	84.70	6/22/2022 16:02	0.45	6/22/2022 16:32	10.47	6/22/2022 15:20	0.69	6/22/2022 17:02	34.15
6/23/2022 16:46	84.67	6/22/2022 16:03	4.83	6/22/2022 16:33	10.50	6/22/2022 15:21	0.71	6/22/2022 17:03	34.11
6/23/2022 16:47	84.70	6/22/2022 16:04	7.45	6/22/2022 16:34	10.43	6/22/2022 15:22	0.70	6/22/2022 17:04	34.13
6/23/2022 16:48	84.67	6/22/2022 16:05	6.26	6/22/2022 16:35	10.46	6/22/2022 15:23	0.70	6/22/2022 17:05	34.14
6/23/2022 16:49	84.67	6/22/2022 16:06	5.33	6/22/2022 16:36	10.47	6/22/2022 15:24	0.71	6/22/2022 17:06	34.09
6/23/2022 16:50	84.65	6/22/2022 16:07	4.58	6/22/2022 16:37	10.49	6/22/2022 15:25	0.69	6/22/2022 17:07	34.14
6/23/2022 16:51	84.67	6/22/2022 16:08	3.96	6/22/2022 16:38	10.48	6/22/2022 15:26	0.69	6/22/2022 17:08	34.12
6/23/2022 16:52	84.65	6/22/2022 16:09	3.43	6/22/2022 16:39	10.48	6/22/2022 15:27	0.68	6/22/2022 17:09	34.11
6/23/2022 16:53	84.67	6/22/2022 16:10	2.97	6/22/2022 16:40	10.50	6/22/2022 15:28	0.70	6/22/2022 17:10	34.09
6/23/2022 16:54	84.67	6/22/2022 16:11	2.55	6/22/2022 16:41	10.55	6/22/2022 15:29	0.69	6/22/2022 17:11	34.10
6/23/2022 16:55	84.69	6/22/2022 16:12	2.30	6/22/2022 16:42	10.52	6/22/2022 15:30	0.74	6/22/2022 17:12	34.13
6/23/2022 16:56	84.70	6/22/2022 16:13	2.06	6/22/2022 16:43	10.49	6/22/2022 15:31	0.68	6/22/2022 17:13	34.13
6/23/2022 16:57	84.67	6/22/2022 16:14	1.83	6/22/2022 16:44	10.50	6/22/2022 15:32	0.68	6/22/2022 17:14	34.08
6/23/2022 16:58	84.67	6/22/2022 16:15	1.65	6/22/2022 16:45	10.53	6/22/2022 15:33	0.69	6/22/2022 17:15	34.11
6/23/2022 16:59	84.67	6/22/2022 16:16	1.43	6/22/2022 16:46	10.49	6/22/2022 15:34	0.70	6/22/2022 17:16	34.15
6/23/2022 17:00	84.70	6/22/2022 16:17	1.32	6/22/2022 16:47	10.48	6/22/2022 15:35	0.69	6/22/2022 17:17	34.10
6/23/2022 17:01	84.67	6/22/2022 16:18	1.22	6/22/2022 16:48	10.47	6/22/2022 15:36	0.68	6/22/2022 17:18	34.08
6/23/2022 17:02	84.66	6/22/2022 16:19	1.12	6/22/2022 16:49	10.48	6/22/2022 15:37	0.70	6/22/2022 17:19	34.15
6/23/2022 17:03	84.63	6/22/2022 16:20	1.00	6/22/2022 16:50	10.46	6/22/2022 15:38	0.71	6/22/2022 17:20	34.10
6/23/2022 17:04	84.62	6/22/2022 16:21	0.97	6/22/2022 16:51	10.47	6/22/2022 15:39	0.71	6/22/2022 17:21	34.10
6/23/2022 17:05	84.65	6/22/2022 16:22	0.90	6/22/2022 16:52	10.43	6/22/2022 15:40	0.71	6/22/2022 17:22	34.09
6/23/2022 17:06	84.67	6/22/2022 16:23	0.86	6/22/2022 16:53	10.46	6/22/2022 15:41	0.76	6/22/2022 17:23	34.14
6/23/2022 17:07	84.63	6/22/2022 16:24	0.77	6/22/2022 16:54	10.43	6/22/2022 15:42	0.71	6/22/2022 17:24	34.07
6/23/2022 17:08	84.69	6/22/2022 16:25	5.90	6/22/2022 16:55	10.42	6/22/2022 15:43	0.69	6/22/2022 17:25	34.12
6/23/2022 17:09	84.65	6/22/2022 16:26	8.34	6/22/2022 16:56	10.40	6/22/2022 15:44	0.73	6/22/2022 17:26	34.10
6/23/2022 17:10	84.69	6/22/2022 16:27	7.06	6/22/2022 16:57	10.42	6/22/2022 15:45	0.73	6/22/2022 17:27	34.10
6/23/2022 17:11	84.67	6/22/2022 16:28	6.02	6/22/2022 16:58	10.41	6/22/2022 15:46	0.71	6/22/2022 17:28	34.14
6/23/2022 17:12	84.67	6/22/2022 16:29	5.14	6/22/2022 16:59	10.42	6/22/2022 15:47	0.74	6/22/2022 17:29	34.09
6/23/2022 17:13	84.68	6/22/2022 16:30	4.42	6/22/2022 17:00	10.46	6/22/2022 15:48	0.72	6/22/2022 17:30	34.15
6/23/2022 17:14	84.69	6/22/2022 16:31	3.82	6/22/2022 17:01	10.47	6/22/2022 15:49	0.73	6/22/2022 17:31	34.09
6/23/2022 17:15	84.65	6/22/2022 16:32	3.33	6/22/2022 17:02	10.45	6/22/2022 15:50	0.73	6/22/2022 17:32	34.11
6/23/2022 17:16	84.68	6/22/2022 16:33	2.86	6/22/2022 17:03	10.46	6/22/2022 15:51	0.70	6/22/2022 17:33	34.13
6/23/2022 17:17	84.62	6/22/2022 16:34	2.55	6/22/2022 17:04	10.47	6/22/2022 15:52	0.72	6/22/2022 17:34	34.11
6/23/2022 17:18	84.65	6/22/2022 16:35	2.28	6/22/2022 17:05	10.48	6/22/2022 15:53	0.72	6/22/2022 17:35	34.08
6/23/2022 17:19	84.65	6/22/2022 16:36	2.03	6/22/2022 17:06	10.45	6/22/2022 15:54	0.72	6/22/2022 17:36	35.12
6/23/2022 17:20	84.68	6/22/2022 16:37	1.82	6/22/2022 17:07	10.48	6/22/2022 15:55	0.72	6/22/2022 17:37	35.45
6/23/2022 17:21	84.67	6/22/2022 16:38	1.64	6/22/2022 17:08	10.47	6/22/2022 15:56	0.74	6/22/2022 17:38	34.65
6/23/2022 17:22	84.65	6/22/2022 16:39	1.49	6/22/2022 17:09	10.49	6/22/2022 15:57	0.72	6/22/2022 17:39	34.28
6/23/2022 17:23	84.65	6/22/2022 16:40	1.36	6/22/2022 17:10	10.48	6/22/2022 15:58	0.76	6/22/2022 17:40	34.19
6/23/2022 17:24	84.65	6/22/2022 16:41	1.24	6/22/2022 17:11	10.44	6/22/2022 15:59	0.73	6/22/2022 17:41	34.18
6/23/2022 17:25	84.65	6/22/2022 16:42	1.15	6/22/2022 17:12	10.47	6/22/2022 16:00	0.71	6/22/2022 17:42	34.18
6/23/2022 17:26	84.68	6/22/2022 16:43	1.08	6/22/2022 17:13	10.45	6/22/2022 16:01	0.74	6/22/2022 17:43	34.18
6/23/2022 17:27	84.68	6/22/2022 16:44	0.98	6/22/2022 17:14	10.43	6/22/2022 16:02	0.75	6/22/2022 17:44	34.13
6/23/2022 17:28	84.67	6/22/2022 16:45	0.95	6/22/2022 17:15	10.44	6/22/2022 16:03	0.74	6/22/2022 17:45	34.14
6/23/2022 17:29	84.66	6/22/2022 16:46	0.87	6/22/2022 17:16	10.47	6/22/2022 16:04	0.73	6/22/2022 17:46	34.16
6/23/2022 17:30	84.69	6/22/2022 16:47	0.83	6/22/2022 17:17	10.42	6/22/2022 16:05	0.75	6/22/2022 17:47	34.15
6/23/2022 17:31	84.67	6/22/2022 16:48	0.77	6/22/2022 17:18	10.40	6/22/2022 16:06	0.78	6/22/2022 17:48	34.13
6/23/2022 17:32	84.64	6/22/2022 16:49	0.73	6/22/2022 17:19	10.42	6/22/2022 16:07	0.75	6/22/2022 17:49	34.14
6/23/2022 17:33	84.62	6/22/2022 16:50	0.70	6/22/2022 17:20	10.39	6/22/2022 16:08	0.71	6/22/2022 17:50	34.13

6/23/2022 17:34	84.65	6/22/2022 16:51	0.68	6/22/2022 17:21	10.40	6/22/2022 16:09	0.77	6/22/2022 17:51	34.14
6/23/2022 17:35	84.66	6/22/2022 16:52	0.62	6/22/2022 17:22	10.42	6/22/2022 16:10	0.72	6/22/2022 17:52	34.13
6/23/2022 17:36	84.62	6/22/2022 16:53	0.63	6/22/2022 17:23	10.40	6/22/2022 16:11	0.72	6/22/2022 17:53	34.13
6/23/2022 17:37	84.63	6/22/2022 16:54	0.63	6/22/2022 17:24	10.40	6/22/2022 16:12	0.73	6/22/2022 17:54	34.12
6/23/2022 17:38	84.66	6/22/2022 16:55	0.61	6/22/2022 17:25	10.44	6/22/2022 16:13	0.72	6/22/2022 17:55	34.15
6/23/2022 17:39	84.62	6/22/2022 16:56	0.57	6/22/2022 17:26	10.40	6/22/2022 16:14	0.71	6/22/2022 17:56	34.14
6/23/2022 17:40	84.64	6/22/2022 16:57	0.54	6/22/2022 17:27	10.43	6/22/2022 16:15	0.71	6/22/2022 17:57	34.15
6/23/2022 17:41	84.64	6/22/2022 16:58	0.57	6/22/2022 17:28	10.42	6/22/2022 16:16	0.73	6/22/2022 17:58	34.12
6/23/2022 17:42	84.61	6/22/2022 16:59	0.49	6/22/2022 17:29	10.46	6/22/2022 16:17	0.74	6/22/2022 17:59	34.13
6/23/2022 17:43	84.65	6/22/2022 17:00	0.51	6/22/2022 17:30	10.44	6/22/2022 16:18	0.73	6/22/2022 18:00	34.18
6/23/2022 17:44	84.67	6/22/2022 17:01	0.55	6/22/2022 17:31	11.31	6/22/2022 16:19	0.71	6/22/2022 18:01	34.23
6/23/2022 17:45	84.65	6/22/2022 17:02	0.52	6/22/2022 17:32	15.69	6/22/2022 16:20	0.78	6/22/2022 18:02	34.18
6/23/2022 17:46	84.63	6/22/2022 17:03	0.47	6/22/2022 17:33	15.14	6/22/2022 16:21	0.73	6/22/2022 18:03	34.22
6/23/2022 17:47	84.66	6/22/2022 17:04	0.50	6/22/2022 17:34	14.56	6/22/2022 16:22	0.71	6/22/2022 18:04	34.21
6/23/2022 17:48	84.64	6/22/2022 17:05	0.57	6/22/2022 17:35	14.11	6/22/2022 16:23	0.70	6/22/2022 18:05	34.18
6/23/2022 17:49	84.63	6/22/2022 17:06	0.52	6/22/2022 17:36	13.69	6/22/2022 16:24	0.74	6/22/2022 18:06	34.18
6/23/2022 17:50	84.64	6/22/2022 17:07	0.49	6/22/2022 17:37	13.29	6/22/2022 16:25	0.71	6/22/2022 18:07	34.15
6/23/2022 17:51	84.65	6/22/2022 17:08	0.55	6/22/2022 17:38	12.99	6/22/2022 16:26	0.76	6/22/2022 18:08	36.17
6/23/2022 17:52	84.62	6/22/2022 17:09	0.46	6/22/2022 17:39	12.73	6/22/2022 16:27	0.72	6/22/2022 18:09	35.21
6/23/2022 17:53	84.61	6/22/2022 17:10	0.47	6/22/2022 17:40	12.48	6/22/2022 16:28	0.73	6/22/2022 18:10	34.56
6/23/2022 17:54	84.62	6/22/2022 17:11	0.48	6/22/2022 17:41	12.24	6/22/2022 16:29	0.77	6/22/2022 18:11	34.31
6/23/2022 17:55	84.62	6/22/2022 17:12	0.43	6/22/2022 17:42	12.11	6/22/2022 16:30	0.72	6/22/2022 18:12	34.24
6/23/2022 17:56	84.61	6/22/2022 17:13	0.48	6/22/2022 17:43	11.92	6/22/2022 16:31	0.73	6/22/2022 18:13	34.21
6/23/2022 17:57	84.70	6/22/2022 17:14	0.49	6/22/2022 17:44	11.77	6/22/2022 16:32	0.72	6/22/2022 18:14	34.18
6/23/2022 17:58	84.62	6/22/2022 17:15	0.47	6/22/2022 17:45	11.64	6/22/2022 16:33	0.75	6/22/2022 18:15	34.17
6/23/2022 17:59	84.62	6/22/2022 17:16	5.04	6/22/2022 17:46	11.52	6/22/2022 16:34	0.74	6/22/2022 18:16	34.16
6/23/2022 18:00	84.62	6/22/2022 17:17	7.67	6/22/2022 17:47	11.44	6/22/2022 16:35	0.74	6/22/2022 18:17	34.20
6/23/2022 18:01	84.60	6/22/2022 17:18	6.50	6/22/2022 17:48	11.36	6/22/2022 16:36	0.72	6/22/2022 18:18	34.20
6/23/2022 18:02	84.57	6/22/2022 17:19	5.66	6/22/2022 17:49	11.29	6/22/2022 16:37	0.73	6/22/2022 18:19	34.19
6/23/2022 18:03	84.61	6/22/2022 17:20	4.92	6/22/2022 17:50	11.21	6/22/2022 16:38	0.74	6/22/2022 18:20	34.14
6/23/2022 18:04	84.63	6/22/2022 17:21	4.34	6/22/2022 17:51	11.19	6/22/2022 16:39	0.68	6/22/2022 18:21	34.19
6/23/2022 18:05	84.62	6/22/2022 17:22	3.80	6/22/2022 17:52	11.12	6/22/2022 16:40	0.74	6/22/2022 18:22	34.14
6/23/2022 18:06	84.60	6/22/2022 17:23	3.33	6/22/2022 17:53	11.10	6/22/2022 16:41	0.72	6/22/2022 18:23	34.16
6/23/2022 18:07	84.59	6/22/2022 17:24	2.85	6/22/2022 17:54	11.00	6/22/2022 16:42	0.74	6/22/2022 18:24	34.15
6/23/2022 18:08	84.59	6/22/2022 17:25	2.50	6/22/2022 17:55	10.96	6/22/2022 16:43	0.74	6/22/2022 18:25	34.14
6/23/2022 18:09	84.61	6/22/2022 17:26	2.25	6/22/2022 17:56	10.97	6/22/2022 16:44	0.76	6/22/2022 18:26	34.15
6/23/2022 18:10	84.63	6/22/2022 17:27	2.02	6/22/2022 17:57	10.91	6/22/2022 16:45	0.73	6/22/2022 18:27	34.16
6/23/2022 18:11	84.61	6/22/2022 17:28	1.82	6/22/2022 17:58	10.83	6/22/2022 16:46	0.72	6/22/2022 18:28	34.19
6/23/2022 18:12	84.59	6/22/2022 17:29	1.62	6/22/2022 17:59	10.82	6/22/2022 16:47	0.74	6/22/2022 18:29	34.17
6/23/2022 18:13	84.62	6/22/2022 17:30	1.46	6/22/2022 18:00	10.79	6/22/2022 16:48	0.72	6/22/2022 18:30	34.13
6/23/2022 18:14	84.64	6/22/2022 17:31	1.36	6/22/2022 18:01	10.78	6/22/2022 16:49	0.69	6/22/2022 18:31	34.16
6/23/2022 18:15	84.63	6/22/2022 17:32	1.24	6/22/2022 18:02	10.74	6/22/2022 16:50	0.70	6/22/2022 18:32	34.18
6/23/2022 18:16	84.60	6/22/2022 17:33	1.16	6/22/2022 18:03	10.69	6/22/2022 16:51	0.70	6/22/2022 18:33	34.19
6/23/2022 18:17	84.56	6/22/2022 17:34	1.07	6/22/2022 18:04	10.71	6/22/2022 16:52	0.73	6/22/2022 18:34	34.20
6/23/2022 18:18	84.62	6/22/2022 17:35	1.00	6/22/2022 18:05	10.68	6/22/2022 16:53	0.76	6/22/2022 18:35	34.17
6/23/2022 18:19	84.59	6/22/2022 17:36	0.91	6/22/2022 18:06	10.62	6/22/2022 16:54	0.72	6/22/2022 18:36	34.19
6/23/2022 18:20	84.60	6/22/2022 17:37	0.87	6/22/2022 18:07	10.61	6/22/2022 16:55	0.74	6/22/2022 18:37	34.14
6/23/2022 18:21	84.59	6/22/2022 17:38	0.81	6/22/2022 18:08	10.62	6/22/2022 16:56	0.71	6/22/2022 18:38	34.17
6/23/2022 18:22	84.61	6/22/2022 17:39	0.78	6/22/2022 18:09	10.65	6/22/2022 16:57	0.73	6/22/2022 18:39	34.14
6/23/2022 18:23	85.67	6/22/2022 17:40	0.73	6/22/2022 18:10	10.61	6/22/2022 16:58	0.72	6/22/2022 18:40	34.16
6/23/2022 18:24	89.48	6/22/2022 17:41	0.72	6/22/2022 18:11	10.66	6/22/2022 16:59	0.71	6/22/2022 18:41	34.16
6/23/2022 18:25	91.74	6/22/2022 17:42	0.70	6/22/2022 18:12	10.61	6/22/2022 17:00	0.74	6/22/2022 18:42	34.18
6/23/2022 18:26	91.23	6/22/2022 17:43	0.69	6/22/2022 18:13	10.62	6/22/2022 17:01	0.71	6/22/2022 18:43	34.12
6/23/2022 18:27	89.04	6/22/2022 17:44	0.62	6/22/2022 18:14	10.62	6/22/2022 17:02	0.72	6/22/2022 18:44	34.17
6/23/2022 18:28	87.71	6/22/2022 17:45	0.61	6/22/2022 18:15	10.64	6/22/2022 17:03	0.72	6/22/2022 18:45	34.14
6/23/2022 18:29	86.84	6/22/2022 17:46	0.60	6/22/2022 18:16	10.58	6/22/2022 17:04	0.74	6/22/2022 18:46	34.10
6/23/2022 18:30	86.29	6/22/2022 17:47	0.59	6/22/2022 18:17	10.64	6/22/2022 17:05	0.76	6/22/2022 18:47	34.17
6/23/2022 18:31	85.98	6/22/2022 17:48	0.57	6/22/2022 18:18	10.65	6/22/2022 17:06	0.73	6/22/2022 18:48	34.12
6/23/2022 18:32	85.72	6/22/2022 17:49	0.54	6/22/2022 18:19	10.63	6/22/2022 17:07	0.70	6/22/2022 18:49	34.16
6/23/2022 18:33	85.55	6/22/2022 17:50	0.58	6/22/2022 18:20	10.67	6/22/2022 17:08	0.69	6/22/2022 18:50	34.15
6/23/2022 18:34	85.46	6/22/2022 17:51	0.53	6/22/2022 18:21	10.67	6/22/2022 17:09	0.75	6/22/2022 18:51	34.15
6/23/2022 18:35	85.40	6/22/2022 17:52	0.51	6/22/2022 18:22	10.67	6/22/2022 17:10	0.75	6/22/2022 18:52	34.14
6/23/2022 18:36	85.32	6/22/2022 17:53	0.57	6/22/2022 18:23	10.65	6/22/2022 17:11	0.71	6/22/2022 18:53	34.19
6/23/2022 18:37	85.29	6/22/2022 17:54	0.54	6/22/2022 18:24	10.64	6/22/2022 17:12	0.74	6/22/2022 18:54	34.13
6/23/2022 18:38	85.24	6/22/2022 17:55	0.52	6/22/2022 18:25	10.67	6/22/2022 17:13	0.75	6/22/2022 18:55	34.13
6/23/2022 18:39	85.23	6/22/2022 17:56	0.51	6/22/2022 18:26	10.62	6/22/2022 17:14	0.73	6/22/2022 18:56	34.15
6/23/2022 18:40	85.15	6/22/2022 17:57	0.50	6/22/2022 18:27	10.60	6/22/2022 17:15	0.73	6/22/2022 18:57	34.14
6/23/2022 18:41	85.15	6/22/2022 17:58	0.52	6/22/2022 18:28	10.60	6/22/2022 17:16	0.71	6/22/2022 18:58	34.15
6/23/2022 18:42	85.12	6/22/2022 17:59	0.53	6/22/2022 18:29	10.56	6/22/2022 17:17	0.74	6/22/2022 18:59	34.15
6/23/2022 18:43	85.04	6/22/2022 18:00	0.48	6/22/2022 18:30	10.56	6/22/2022 17:18	6.22	6/22/2022 19:00	34.16
6/23/2022 18:44	85.09	6/22/2022 18:01	0.49	6/22/2022 18:31	10.54	6/22/2022 17:19	7.04	6/22/2022 19:01	34.17
6/23/2022 18:45	85.06	6/22/2022 18:02	0.52	6/22/2022 18:32	10.58	6/22/2022 17:20	4.69	6/22/2022 19:02	34.18
6/23/2022 18:46	85.04	6/22/2022 18:03	0.48	6/22/2022 18:33	10.54	6/22/2022 17:21	2.99	6/22/2022 19:03	34.13
6/23/2022 18:47	85.03	6/22/2022 18:04	0.48	6/22/2022 18:34	10.56	6/22/2022 17:22	1.75	6/22/2022 19:04	34.14
6/23/2022 18:48	85.01	6/22/2022 18:05	0.47	6/22/2022 18:35	10.55	6/22/2022 17:23	0.83	6/22/2022 19:05	34.83
6/23/2022 18:49	84.99	6/22/2022 18:06	0.46	6/22/2022 18:36	10.56	6/22/2022 17:24	0.84	6/22/2022 19:06	35.77
6/23/2022 18:50	85.01	6/22/2022 18:07	0.48	6/22/2022 18:37	10.56	6/22/2022 17:25	0.82	6/22/2022 19:07	34.80
6/23/2022 18:51	85.00	6/22/2022 18:08	0.49	6/22/2022 18:38	10.57	6/22/2022 17:26	0.80	6/22/2022 19:08	34.42
6/23/2022 18:52	84.98	6/22/2022 18:09	0.50	6/22/2022 18:39	10.59	6/22/2022 17:27	0.83	6/22/2022 19:09	34.22
6/23/2022 18:53	84.98	6/22/2022 18:10	0.48	6/22/2022 18:40	10.56	6/22/2022 17:28	0.85	6/22/2022 19:10	34.22
6/23/2022 18:54	84.93	6/22/2022 18:11	0.48	6/22/2022 18:41	10.61	6/22/2022 17:29	0.81	6/22/2022 19:11	34.20
6/23/2022 18:55	84.93	6/22/2022 18:12	0.46	6/22/2022 18:42	10.58	6/22/2022 17:30	0.80	6/22/2022 19:12	34.23
6/23/2022 18:56	84.93	6/22/2022 18:13	0.48	6/22/2022 18:43	10.57	6/22/2022 17:31	0.85	6/22/2022 19:13	34.17
6/23/2022 18:57	84.96	6/22/2022 18:14	0.46	6/22/2022 18:44	10.55	6/22/2022 17:32	0.83	6/22/2022 19:14	34.18
6/23/2022 18:58	84.89	6/22/2022 18:15	3.66	6/22/2022 18:45	10.54	6/22/2022 17:33	0.78	6/22/2022 19:15	34.19
6/23/2022 18:59	84.93	6/22/2022 18:16	7.84	6/22/2022 18:46	10.53	6/22/2022 17:34	0.83	6/22/2022 19:16	34.16
6/23/2022 19:00	84.88	6/22/2022 18:17	6.61	6/22/2022 18:47	10.52	6/22/2022 17:35	0.81	6/22/2022 19:17	34.19
6/23/2022 19:01	84.90	6/22/2022 18:18	5.61	6/22/2022 18:48	10.51	6/22/2022 17:36	0.81	6/22/2022 19:18	34.17

6/23/2022 19:02	84.87	6/22/2022 18:19	4.82	6/22/2022 18:49	10.53	6/22/2022 17:37	0.80	6/22/2022 19:19	34.17
6/23/2022 19:03	84.91	6/22/2022 18:20	4.12	6/22/2022 18:50	10.55	6/22/2022 17:38	0.81	6/22/2022 19:20	34.19
6/23/2022 19:04	84.90	6/22/2022 18:21	3.64	6/22/2022 18:51	10.55	6/22/2022 17:39	0.78	6/22/2022 19:21	34.18
6/23/2022 19:05	84.85	6/22/2022 18:22	3.14	6/22/2022 18:52	10.52	6/22/2022 17:40	0.78	6/22/2022 19:22	34.14
6/23/2022 19:06	84.88	6/22/2022 18:23	2.67	6/22/2022 18:53	10.54	6/22/2022 17:41	0.79	6/22/2022 19:23	34.17
6/23/2022 19:07	84.87	6/22/2022 18:24	2.44	6/22/2022 18:54	10.55	6/22/2022 17:42	0.79	6/22/2022 19:24	34.15
6/23/2022 19:08	84.84	6/22/2022 18:25	2.17	6/22/2022 18:55	10.55	6/22/2022 17:43	0.79	6/22/2022 19:25	34.19
6/23/2022 19:09	84.86	6/22/2022 18:26	1.91	6/22/2022 18:56	10.52	6/22/2022 17:44	0.80	6/22/2022 19:26	34.20
6/23/2022 19:10	84.87	6/22/2022 18:27	1.71	6/22/2022 18:57	10.57	6/22/2022 17:45	0.79	6/22/2022 19:27	34.20
6/23/2022 19:11	84.87	6/22/2022 18:28	1.53	6/22/2022 18:58	10.54	6/22/2022 17:46	0.82	6/22/2022 19:28	34.15
6/23/2022 19:12	84.87	6/22/2022 18:29	1.42	6/22/2022 18:59	10.54	6/22/2022 17:47	0.77	6/22/2022 19:29	34.20
6/23/2022 19:13	84.87	6/22/2022 18:30	1.27	6/22/2022 19:00	10.52	6/22/2022 17:48	0.78	6/22/2022 19:30	34.16
6/23/2022 19:14	84.84	6/22/2022 18:31	1.19	6/22/2022 19:01	10.50	6/22/2022 17:49	0.78	6/22/2022 19:31	34.15
6/23/2022 19:15	84.85	6/22/2022 18:32	6.04	6/22/2022 19:02	10.49	6/22/2022 17:50	0.78	6/22/2022 19:32	34.15
6/23/2022 19:16	84.85	6/22/2022 18:33	10.80	6/22/2022 19:03	10.51	6/22/2022 17:51	0.80	6/22/2022 19:33	34.18
6/23/2022 19:17	84.85	6/22/2022 18:34	9.39	6/22/2022 19:04	10.49	6/22/2022 17:52	0.76	6/22/2022 19:34	34.18
6/23/2022 19:18	84.80	6/22/2022 18:35	7.96	6/22/2022 19:05	10.47	6/22/2022 17:53	0.78	6/22/2022 19:35	34.18
6/23/2022 19:19	84.83	6/22/2022 18:36	6.75	6/22/2022 19:06	10.45	6/22/2022 17:54	0.78	6/22/2022 19:36	34.17
6/23/2022 19:20	84.85	6/22/2022 18:37	8.67	6/22/2022 19:07	10.47	6/22/2022 17:55	0.79	6/22/2022 19:37	34.19
6/23/2022 19:21	84.86	6/22/2022 18:38	12.72	6/22/2022 19:08	10.45	6/22/2022 17:56	0.79	6/22/2022 19:38	34.14
6/23/2022 19:22	84.82	6/22/2022 18:39	10.72	6/22/2022 19:09	10.45	6/22/2022 17:57	0.76	6/22/2022 19:39	34.17
6/23/2022 19:23	84.78	6/22/2022 18:40	9.16	6/22/2022 19:10	10.47	6/22/2022 17:58	0.75	6/22/2022 19:40	34.16
6/23/2022 19:24	84.80	6/22/2022 18:41	7.77	6/22/2022 19:11	10.47	6/22/2022 17:59	0.81	6/22/2022 19:41	34.18
6/23/2022 19:25	84.81	6/22/2022 18:42	6.67	6/22/2022 19:12	10.48	6/22/2022 18:00	0.77	6/22/2022 19:42	34.19
6/23/2022 19:26	84.81	6/22/2022 18:43	5.72	6/22/2022 19:13	10.49	6/22/2022 18:01	0.77	6/22/2022 19:43	34.16
6/23/2022 19:27	84.82	6/22/2022 18:44	4.97	6/22/2022 19:14	11.20	6/22/2022 18:02	0.78	6/22/2022 19:44	34.19
6/23/2022 19:28	84.82	6/22/2022 18:45	4.32	6/22/2022 19:15	14.46	6/22/2022 18:03	0.78	6/22/2022 19:45	34.14
6/23/2022 19:29	84.82	6/22/2022 18:46	3.79	6/22/2022 19:16	13.93	6/22/2022 18:04	0.79	6/22/2022 19:46	34.16
6/23/2022 19:30	84.81	6/22/2022 18:47	3.30	6/22/2022 19:17	13.54	6/22/2022 18:05	0.80	6/22/2022 19:47	34.16
6/23/2022 19:31	84.77	6/22/2022 18:48	2.90	6/22/2022 19:18	13.19	6/22/2022 18:06	0.81	6/22/2022 19:48	35.14
6/23/2022 19:32	84.80	6/22/2022 18:49	2.56	6/22/2022 19:19	12.87	6/22/2022 18:07	0.80	6/22/2022 19:49	35.48
6/23/2022 19:33	84.79	6/22/2022 18:50	2.34	6/22/2022 19:20	12.57	6/22/2022 18:08	0.76	6/22/2022 19:50	34.67
6/23/2022 19:34	84.82	6/22/2022 18:51	2.11	6/22/2022 19:21	12.36	6/22/2022 18:09	0.76	6/22/2022 19:51	34.36
6/23/2022 19:35	84.79	6/22/2022 18:52	1.91	6/22/2022 19:22	12.12	6/22/2022 18:10	0.80	6/22/2022 19:52	34.24
6/23/2022 19:36	84.77	6/22/2022 18:53	1.73	6/22/2022 19:23	12.01	6/22/2022 18:11	0.75	6/22/2022 19:53	34.23
6/23/2022 19:37	84.78	6/22/2022 18:54	1.57	6/22/2022 19:24	11.81	6/22/2022 18:12	0.81	6/22/2022 19:54	34.22
6/23/2022 19:38	84.77	6/22/2022 18:55	1.39	6/22/2022 19:25	13.36	6/22/2022 18:13	0.80	6/22/2022 19:55	34.20
6/23/2022 19:39	84.78	6/22/2022 18:56	1.31	6/22/2022 19:26	15.26	6/22/2022 18:14	0.75	6/22/2022 19:56	34.18
6/23/2022 19:40	84.76	6/22/2022 18:57	1.23	6/22/2022 19:27	14.67	6/22/2022 18:15	0.79	6/22/2022 19:57	34.21
6/23/2022 19:41	84.80	6/22/2022 18:58	1.12	6/22/2022 19:28	14.23	6/22/2022 18:16	0.82	6/22/2022 19:58	34.19
6/23/2022 19:42	84.80	6/22/2022 18:59	1.04	6/22/2022 19:29	13.79	6/22/2022 18:17	0.82	6/22/2022 19:59	34.20
6/23/2022 19:43	84.78	6/22/2022 19:00	1.00	6/22/2022 19:30	13.42	6/22/2022 18:18	0.84	6/22/2022 20:00	34.18
6/23/2022 19:44	84.80	6/22/2022 19:01	0.97	6/22/2022 19:31	13.14	6/22/2022 18:19	0.82	6/22/2022 20:01	34.19
6/23/2022 19:45	84.78	6/22/2022 19:02	0.91	6/22/2022 19:32	12.85	6/22/2022 18:20	0.81	6/22/2022 20:02	34.20
6/23/2022 19:46	84.78	6/22/2022 19:03	0.85	6/22/2022 19:33	12.58	6/22/2022 18:21	0.80	6/22/2022 20:03	34.18
6/23/2022 19:47	84.77	6/22/2022 19:04	0.78	6/22/2022 19:34	12.37	6/22/2022 18:22	0.76	6/22/2022 20:04	34.20
6/23/2022 19:48	84.75	6/22/2022 19:05	0.78	6/22/2022 19:35	12.15	6/22/2022 18:23	0.81	6/22/2022 20:05	34.20
6/23/2022 19:49	84.77	6/22/2022 19:06	0.78	6/22/2022 19:36	12.01	6/22/2022 18:24	0.83	6/22/2022 20:06	34.15
6/23/2022 19:50	84.75	6/22/2022 19:07	0.78	6/22/2022 19:37	11.88	6/22/2022 18:25	0.77	6/22/2022 20:07	34.19
6/23/2022 19:51	84.77	6/22/2022 19:08	0.70	6/22/2022 19:38	11.79	6/22/2022 18:26	0.80	6/22/2022 20:08	34.20
6/23/2022 19:52	84.74	6/22/2022 19:09	0.69	6/22/2022 19:39	11.70	6/22/2022 18:27	0.79	6/22/2022 20:09	34.18
6/23/2022 19:53	84.78	6/22/2022 19:10	0.65	6/22/2022 19:40	11.55	6/22/2022 18:28	0.79	6/22/2022 20:10	34.19
6/23/2022 19:54	84.78	6/22/2022 19:11	0.64	6/22/2022 19:41	11.48	6/22/2022 18:29	0.75	6/22/2022 20:11	34.18
6/23/2022 19:55	84.74	6/22/2022 19:12	4.77	6/22/2022 19:42	11.41	6/22/2022 18:30	0.78	6/22/2022 20:12	34.19
6/23/2022 19:56	84.78	6/22/2022 19:13	8.61	6/22/2022 19:43	11.33	6/22/2022 18:31	0.82	6/22/2022 20:13	34.18
6/23/2022 19:57	84.79	6/22/2022 19:14	7.28	6/22/2022 19:44	11.27	6/22/2022 18:32	0.78	6/22/2022 20:14	34.19
6/23/2022 19:58	84.78	6/22/2022 19:15	6.21	6/22/2022 19:45	11.20	6/22/2022 18:33	0.82	6/22/2022 20:15	34.20
6/23/2022 19:59	84.79	6/22/2022 19:16	5.31	6/22/2022 19:46	11.16	6/22/2022 18:34	0.81	6/22/2022 20:16	34.18
6/23/2022 20:00	84.79	6/22/2022 19:17	4.59	6/22/2022 19:47	11.07	6/22/2022 18:35	0.86	6/22/2022 20:17	34.19
6/23/2022 20:01	84.77	6/22/2022 19:18	3.99	6/22/2022 19:48	11.03	6/22/2022 18:36	0.85	6/22/2022 20:18	34.16
6/23/2022 20:02	84.76	6/22/2022 19:19	3.49	6/22/2022 19:49	10.93	6/22/2022 18:37	0.80	6/22/2022 20:19	34.18
6/23/2022 20:03	84.77	6/22/2022 19:20	3.05	6/22/2022 19:50	10.95	6/22/2022 18:38	0.85	6/22/2022 20:20	34.15
6/23/2022 20:04	84.76	6/22/2022 19:21	2.63	6/22/2022 19:51	10.91	6/22/2022 18:39	0.84	6/22/2022 20:21	34.19
6/23/2022 20:05	84.74	6/22/2022 19:22	2.40	6/22/2022 19:52	10.86	6/22/2022 18:40	0.82	6/22/2022 20:22	34.20
6/23/2022 20:06	84.76	6/22/2022 19:23	2.15	6/22/2022 19:53	10.83	6/22/2022 18:41	0.80	6/22/2022 20:23	34.20
6/23/2022 20:07	84.75	6/22/2022 19:24	1.91	6/22/2022 19:54	10.77	6/22/2022 18:42	0.83	6/22/2022 20:24	34.18
6/23/2022 20:08	84.78	6/22/2022 19:25	1.69	6/22/2022 19:55	10.76	6/22/2022 18:43	0.80	6/22/2022 20:25	34.17
6/23/2022 20:09	84.79	6/22/2022 19:26	1.57	6/22/2022 19:56	10.71	6/22/2022 18:44	0.80	6/22/2022 20:26	34.23
6/23/2022 20:10	84.72	6/22/2022 19:27	1.42	6/22/2022 19:57	10.72	6/22/2022 18:45	0.81	6/22/2022 20:27	34.20
6/23/2022 20:11	84.75	6/22/2022 19:28	1.29	6/22/2022 19:58	10.71	6/22/2022 18:46	0.82	6/22/2022 20:28	34.17
6/23/2022 20:12	84.74	6/22/2022 19:29	1.23	6/22/2022 19:59	10.71	6/22/2022 18:47	0.81	6/22/2022 20:29	34.16
6/23/2022 20:13	85.38	6/22/2022 19:30	1.11	6/22/2022 20:00	10.65	6/22/2022 18:48	0.78	6/22/2022 20:30	34.21
6/23/2022 20:14	89.58	6/22/2022 19:31	1.06	6/22/2022 20:01	10.61	6/22/2022 18:49	0.81	6/22/2022 20:31	34.19
6/23/2022 20:15	91.98	6/22/2022 19:32	0.97	6/22/2022 20:02	10.61	6/22/2022 18:50	0.80	6/22/2022 20:32	34.20
6/23/2022 20:16	93.30	6/22/2022 19:33	0.93	6/22/2022 20:03	10.58	6/22/2022 18:51	0.81	6/22/2022 20:33	34.17
6/23/2022 20:17	90.67	6/22/2022 19:34	0.87	6/22/2022 20:04	10.59	6/22/2022 18:52	0.78	6/22/2022 20:34	35.23
6/23/2022 20:18	88.80	6/22/2022 19:35	0.83	6/22/2022 20:05	10.56	6/22/2022 18:53	0.78	6/22/2022 20:35	35.63
6/23/2022 20:19	87.66	6/22/2022 19:36	0.80	6/22/2022 20:06	10.55	6/22/2022 18:54	0.76	6/22/2022 20:36	34.77
6/23/2022 20:20	86.90	6/22/2022 19:37	0.76	6/22/2022 20:07	10.53	6/22/2022 18:55	0.79	6/22/2022 20:37	34.42
6/23/2022 20:21	86.45	6/22/2022 19:38	0.74	6/22/2022 20:08	10.56	6/22/2022 18:56	0.78	6/22/2022 20:38	34.30
6/23/2022 20:22	86.13	6/22/2022 19:39	0.72	6/22/2022 20:09	10.58	6/22/2022 18:57	0.78	6/22/2022 20:39	34.24
6/23/2022 20:23	85.95	6/22/2022 19:40	0.66	6/22/2022 20:10	10.55	6/22/2022 18:58	0.78	6/22/2022 20:40	34.20
6/23/2022 20:24	85.79	6/22/2022 19:41	0.68	6/22/2022 20:11	10.55	6/22/2022 18:59	0.77	6/22/2022 20:41	34.22
6/23/2022 20:25	85.69	6/22/2022 19:42	0.65	6/22/2022 20:12	10.54	6/22/2022 19:00	0.80	6/22/2022 20:42	34.21
6/23/2022 20:26	85.60	6/22/2022 19:43	0.65	6/22/2022 20:13	10.51	6/22/2022 19:01	0.81	6/22/2022 20:43	34.22
6/23/2022 20:27	85.52	6/22/2022 19:44	0.58	6/22/2022 20:14	10.57	6/22/2022 19:02	0.77	6/22/2022 20:44	34.23
6/23/2022 20:28	85.44	6/22/2022 19:45	5.10	6/22/2022 20:15	10.52	6/22/2022 19:03	0.78	6/22/2022 20:45	34.23
6/23/2022 20:29	85.41	6/22/2022 19:46	7.68	6/22/2022 20:16	10.54	6/22/2022 19:04	0.76	6/22/2022 20:46	34.24

6/23/2022 20:30	85.34	6/22/2022 19:47	6.47	6/22/2022 20:17	10.55	6/22/2022 19:05	0.83	6/22/2022 20:47	34.19
6/23/2022 20:31	85.35	6/22/2022 19:48	5.57	6/22/2022 20:18	10.51	6/22/2022 19:06	0.77	6/22/2022 20:48	34.21
6/23/2022 20:32	85.36	6/22/2022 19:49	4.76	6/22/2022 20:19	10.53	6/22/2022 19:07	0.78	6/22/2022 20:49	34.23
6/23/2022 20:33	85.30	6/22/2022 19:50	4.27	6/22/2022 20:20	10.51	6/22/2022 19:08	0.76	6/22/2022 20:50	34.20
6/23/2022 20:34	85.27	6/22/2022 19:51	3.83	6/22/2022 20:21	10.54	6/22/2022 19:09	0.77	6/22/2022 20:51	34.21
6/23/2022 20:35	85.29	6/22/2022 19:52	3.51	6/22/2022 20:22	10.52	6/22/2022 19:10	0.77	6/22/2022 20:52	34.23
6/23/2022 20:36	85.24	6/22/2022 19:53	3.12	6/22/2022 20:23	10.51	6/22/2022 19:11	0.80	6/22/2022 20:53	34.19
6/23/2022 20:37	85.22	6/22/2022 19:54	2.78	6/22/2022 20:24	10.52	6/22/2022 19:12	0.77	6/22/2022 20:54	34.19
6/23/2022 20:38	85.23	6/22/2022 19:55	2.48	6/22/2022 20:25	10.57	6/22/2022 19:13	0.80	6/22/2022 20:55	34.26
6/23/2022 20:39	85.21	6/22/2022 19:56	2.20	6/22/2022 20:26	10.55	6/22/2022 19:14	0.82	6/22/2022 20:56	34.20
6/23/2022 20:40	85.21	6/22/2022 19:57	2.00	6/22/2022 20:27	10.57	6/22/2022 19:15	0.80	6/22/2022 20:57	34.22
6/23/2022 20:41	85.17	6/22/2022 19:58	1.80	6/22/2022 20:28	10.56	6/22/2022 19:16	0.79	6/22/2022 20:58	34.20
6/23/2022 20:42	85.16	6/22/2022 19:59	1.73	6/22/2022 20:29	10.55	6/22/2022 19:17	0.81	6/22/2022 20:59	34.21
6/23/2022 20:43	85.13	6/22/2022 20:00	1.73	6/22/2022 20:30	10.55	6/22/2022 19:18	0.81	6/22/2022 21:00	34.19
6/23/2022 20:44	85.11	6/22/2022 20:01	1.65	6/22/2022 20:31	10.57	6/22/2022 19:19	0.78	6/22/2022 21:01	34.23
6/23/2022 20:45	85.15	6/22/2022 20:02	1.59	6/22/2022 20:32	10.60	6/22/2022 19:20	0.81	6/22/2022 21:02	34.18
6/23/2022 20:46	85.08	6/22/2022 20:03	1.46	6/22/2022 20:33	10.57	6/22/2022 19:21	0.81	6/22/2022 21:03	34.22
6/23/2022 20:47	85.08	6/22/2022 20:04	1.38	6/22/2022 20:34	10.56	6/22/2022 19:22	0.81	6/22/2022 21:04	34.22
6/23/2022 20:48	85.09	6/22/2022 20:05	1.26	6/22/2022 20:35	10.54	6/22/2022 19:23	0.79	6/22/2022 21:05	34.20
6/23/2022 20:49	85.09	6/22/2022 20:06	1.21	6/22/2022 20:36	10.55	6/22/2022 19:24	0.79	6/22/2022 21:06	34.21
6/23/2022 20:50	85.09	6/22/2022 20:07	1.13	6/22/2022 20:37	10.55	6/22/2022 19:25	0.77	6/22/2022 21:07	34.18
6/23/2022 20:51	85.09	6/22/2022 20:08	1.05	6/22/2022 20:38	10.55	6/22/2022 19:26	0.81	6/22/2022 21:08	34.17
6/23/2022 20:52	85.06	6/22/2022 20:09	1.00	6/22/2022 20:39	10.52	6/22/2022 19:27	0.76	6/22/2022 21:09	34.18
6/23/2022 20:53	85.06	6/22/2022 20:10	0.93	6/22/2022 20:40	10.55	6/22/2022 19:28	0.80	6/22/2022 21:10	34.20
6/23/2022 20:54	85.05	6/22/2022 20:11	0.87	6/22/2022 20:41	10.56	6/22/2022 19:29	0.77	6/22/2022 21:11	34.17
6/23/2022 20:55	85.04	6/22/2022 20:12	0.86	6/22/2022 20:42	10.52	6/22/2022 19:30	0.78	6/22/2022 21:12	34.22
6/23/2022 20:56	85.00	6/22/2022 20:13	0.81	6/22/2022 20:43	10.59	6/22/2022 19:31	0.80	6/22/2022 21:13	34.19
6/23/2022 20:57	85.05	6/22/2022 20:14	0.79	6/22/2022 20:44	10.59	6/22/2022 19:32	0.77	6/22/2022 21:14	34.19
6/23/2022 20:58	85.04	6/22/2022 20:15	0.74	6/22/2022 20:45	10.59	6/22/2022 19:33	0.76	6/22/2022 21:15	34.22
6/23/2022 20:59	85.00	6/22/2022 20:16	0.75	6/22/2022 20:46	10.58	6/22/2022 19:34	0.81	6/22/2022 21:16	34.19
6/23/2022 21:00	84.99	6/22/2022 20:17	0.73	6/22/2022 20:47	10.60	6/22/2022 19:35	0.79	6/22/2022 21:17	34.23
6/23/2022 21:01	85.00	6/22/2022 20:18	0.68	6/22/2022 20:48	10.59	6/22/2022 19:36	0.78	6/22/2022 21:18	34.21
6/23/2022 21:02	85.01	6/22/2022 20:19	0.65	6/22/2022 20:49	10.59	6/22/2022 19:37	0.75	6/22/2022 21:19	34.19
6/23/2022 21:03	84.99	6/22/2022 20:20	0.64	6/22/2022 20:50	10.61	6/22/2022 19:38	0.76	6/22/2022 21:20	34.21
6/23/2022 21:04	84.97	6/22/2022 20:21	0.67	6/22/2022 20:51	10.55	6/22/2022 19:39	0.75	6/22/2022 21:21	34.21
6/23/2022 21:05	84.97	6/22/2022 20:22	0.66	6/22/2022 20:52	10.56	6/22/2022 19:40	0.79	6/22/2022 21:22	34.24
6/23/2022 21:06	85.02	6/22/2022 20:23	0.61	6/22/2022 20:53	10.60	6/22/2022 19:41	0.73	6/22/2022 21:23	34.22
6/23/2022 21:07	84.98	6/22/2022 20:24	0.62	6/22/2022 20:54	10.56	6/22/2022 19:42	0.77	6/22/2022 21:24	34.19
6/23/2022 21:08	84.98	6/22/2022 20:25	0.63	6/22/2022 20:55	10.57	6/22/2022 19:43	0.77	6/22/2022 21:25	34.23
6/23/2022 21:09	84.96	6/22/2022 20:26	0.56	6/22/2022 20:56	10.57	6/22/2022 19:44	0.77	6/22/2022 21:26	34.22
6/23/2022 21:10	84.94	6/22/2022 20:27	0.57	6/22/2022 20:57	10.63	6/22/2022 19:45	0.77	6/22/2022 21:27	34.21
6/23/2022 21:11	84.98	6/22/2022 20:28	0.57	6/22/2022 20:58	10.61	6/22/2022 19:46	0.79	6/22/2022 21:28	34.23
6/23/2022 21:12	84.98	6/22/2022 20:29	0.59	6/22/2022 20:59	10.60	6/22/2022 19:47	0.82	6/22/2022 21:29	34.21
6/23/2022 21:13	84.94	6/22/2022 20:30	0.58	6/22/2022 21:00	10.59	6/22/2022 19:48	0.78	6/22/2022 21:30	34.24
6/23/2022 21:14	84.97	6/22/2022 20:31	0.56	6/22/2022 21:01	10.56	6/22/2022 19:49	3.62	6/22/2022 21:31	34.19
6/23/2022 21:15	84.94	6/22/2022 20:32	0.58	6/22/2022 21:02	10.54	6/22/2022 19:50	10.43	6/22/2022 21:32	34.24
6/23/2022 21:16	84.97	6/22/2022 20:33	0.58	6/22/2022 21:03	10.59	6/22/2022 19:51	8.18	6/22/2022 21:33	34.25
6/23/2022 21:17	84.96	6/22/2022 20:34	0.53	6/22/2022 21:04	10.60	6/22/2022 19:52	5.67	6/22/2022 21:34	34.21
6/23/2022 21:18	84.96	6/22/2022 20:35	0.52	6/22/2022 21:05	10.59	6/22/2022 19:53	3.77	6/22/2022 21:35	34.22
6/23/2022 21:19	84.98	6/22/2022 20:36	0.56	6/22/2022 21:06	10.61	6/22/2022 19:54	2.31	6/22/2022 21:36	34.21
6/23/2022 21:20	84.95	6/22/2022 20:37	0.56	6/22/2022 21:07	10.61	6/22/2022 19:55	1.28	6/22/2022 21:37	34.19
6/23/2022 21:21	84.95	6/22/2022 20:38	0.53	6/22/2022 21:08	10.61	6/22/2022 19:56	0.83	6/22/2022 21:38	34.20
6/23/2022 21:22	84.94	6/22/2022 20:39	0.56	6/22/2022 21:09	10.59	6/22/2022 19:57	0.86	6/22/2022 21:39	34.23
6/23/2022 21:23	84.95	6/22/2022 20:40	0.54	6/22/2022 21:10	10.64	6/22/2022 19:58	1.81	6/22/2022 21:40	34.20
6/23/2022 21:24	84.92	6/22/2022 20:41	4.70	6/22/2022 21:11	10.58	6/22/2022 19:59	9.10	6/22/2022 21:41	34.25
6/23/2022 21:25	84.94	6/22/2022 20:42	7.79	6/22/2022 21:12	10.61	6/22/2022 20:00	6.96	6/22/2022 21:42	34.21
6/23/2022 21:26	84.92	6/22/2022 20:43	6.54	6/22/2022 21:13	10.60	6/22/2022 20:01	4.68	6/22/2022 21:43	34.24
6/23/2022 21:27	84.92	6/22/2022 20:44	5.51	6/22/2022 21:14	10.64	6/22/2022 20:02	2.97	6/22/2022 21:44	34.23
6/23/2022 21:28	84.89	6/22/2022 20:45	4.85	6/22/2022 21:15	10.66	6/22/2022 20:03	1.71	6/22/2022 21:45	34.20
6/23/2022 21:29	84.95	6/22/2022 20:46	4.16	6/22/2022 21:16	10.64	6/22/2022 20:04	0.80	6/22/2022 21:46	34.18
6/23/2022 21:30	84.91	6/22/2022 20:47	3.60	6/22/2022 21:17	10.63	6/22/2022 20:05	0.84	6/22/2022 21:47	34.19
6/23/2022 21:31	84.91	6/22/2022 20:48	3.13	6/22/2022 21:18	10.63	6/22/2022 20:06	0.84	6/22/2022 21:48	34.23
6/23/2022 21:32	84.93	6/22/2022 20:49	2.77	6/22/2022 21:19	10.63	6/22/2022 20:07	0.84	6/22/2022 21:49	34.19
6/23/2022 21:33	84.87	6/22/2022 20:50	2.47	6/22/2022 21:20	10.63	6/22/2022 20:08	0.81	6/22/2022 21:50	34.19
6/23/2022 21:34	84.89	6/22/2022 20:51	2.12	6/22/2022 21:21	10.62	6/22/2022 20:09	0.83	6/22/2022 21:51	34.20
6/23/2022 21:35	84.92	6/22/2022 20:52	1.97	6/22/2022 21:22	10.58	6/22/2022 20:10	0.83	6/22/2022 21:52	34.21
6/23/2022 21:36	84.86	6/22/2022 20:53	1.77	6/22/2022 21:23	10.58	6/22/2022 20:11	0.82	6/22/2022 21:53	34.56
6/23/2022 21:37	84.91	6/22/2022 20:54	1.61	6/22/2022 21:24	10.56	6/22/2022 20:12	0.84	6/22/2022 21:54	35.80
6/23/2022 21:38	84.88	6/22/2022 20:55	1.46	6/22/2022 21:25	10.95	6/22/2022 20:13	0.84	6/22/2022 21:55	34.86
6/23/2022 21:39	84.87	6/22/2022 20:56	1.32	6/22/2022 21:26	15.39	6/22/2022 20:14	0.83	6/22/2022 21:56	34.44
6/23/2022 21:40	84.87	6/22/2022 20:57	1.17	6/22/2022 21:27	15.24	6/22/2022 20:15	0.80	6/22/2022 21:57	34.34
6/23/2022 21:41	84.86	6/22/2022 20:58	1.10	6/22/2022 21:28	14.63	6/22/2022 20:16	0.82	6/22/2022 21:58	34.31
6/23/2022 21:42	84.88	6/22/2022 20:59	1.08	6/22/2022 21:29	14.13	6/22/2022 20:17	0.80	6/22/2022 21:59	34.29
6/23/2022 21:43	84.89	6/22/2022 21:00	0.95	6/22/2022 21:30	13.72	6/22/2022 20:18	0.83	6/22/2022 22:00	34.25
6/23/2022 21:44	84.85	6/22/2022 21:01	0.95	6/22/2022 21:31	13.37	6/22/2022 20:19	0.80	6/22/2022 22:01	34.20
6/23/2022 21:45	84.91	6/22/2022 21:02	0.87	6/22/2022 21:32	13.05	6/22/2022 20:20	0.79	6/22/2022 22:02	34.25
6/23/2022 21:46	84.87	6/22/2022 21:03	0.84	6/22/2022 21:33	12.78	6/22/2022 20:21	0.80	6/22/2022 22:03	34.26
6/23/2022 21:47	84.86	6/22/2022 21:04	0.79	6/22/2022 21:34	12.54	6/22/2022 20:22	0.82	6/22/2022 22:04	34.24
6/23/2022 21:48	84.90	6/22/2022 21:05	0.76	6/22/2022 21:35	12.34	6/22/2022 20:23	0.82	6/22/2022 22:05	34.23
6/23/2022 21:49	84.88	6/22/2022 21:06	0.74	6/22/2022 21:36	12.19	6/22/2022 20:24	0.79	6/22/2022 22:06	34.23
6/23/2022 21:50	84.85	6/22/2022 21:07	0.70	6/22/2022 21:37	12.06	6/22/2022 20:25	0.79	6/22/2022 22:07	34.24
6/23/2022 21:51	84.86	6/22/2022 21:08	0.70	6/22/2022 21:38	11.89	6/22/2022 20:26	0.81	6/22/2022 22:08	34.28
6/23/2022 21:52	84.88	6/22/2022 21:09	0.62	6/22/2022 21:39	11.79	6/22/2022 20:27	0.79	6/22/2022 22:09	36.15
6/23/2022 21:53	84.90	6/22/2022 21:10	0.64	6/22/2022 21:40	11.70	6/22/2022 20:28	0.78	6/22/2022 22:10	35.03
6/23/2022 21:54	84.85	6/22/2022 21:11	0.66	6/22/2022 21:41	11.63	6/22/2022 20:29	0.80	6/22/2022 22:11	34.53
6/23/2022 21:55	84.87	6/22/2022 21:12	0.58	6/22/2022 21:42	11.54	6/22/2022 20:30	0.82	6/22/2022 22:12	34.36
6/23/2022 21:56	84.85	6/22/2022 21:13	0.63	6/22/2022 21:43	11.46	6/22/2022 20:31	0.79	6/22/2022 22:13	34.33
6/23/2022 21:57	84.85	6/22/2022 21:14	0.61	6/22/2022 21:44	11.44	6/22/2022 20:32	0.78	6/22/2022 22:14	34.24

6/23/2022 21:58	84.88	6/22/2022 21:15	0.57	6/22/2022 21:45	11.38	6/22/2022 20:33	0.79	6/22/2022 22:15	34.28
6/23/2022 21:59	84.86	6/22/2022 21:16	0.56	6/22/2022 21:46	11.29	6/22/2022 20:34	0.76	6/22/2022 22:16	34.24
6/23/2022 22:00	84.87	6/22/2022 21:17	0.60	6/22/2022 21:47	11.21	6/22/2022 20:35	0.76	6/22/2022 22:17	34.30
6/23/2022 22:01	84.83	6/22/2022 21:18	0.56	6/22/2022 21:48	11.16	6/22/2022 20:36	0.78	6/22/2022 22:18	34.26
6/23/2022 22:02	84.85	6/22/2022 21:19	0.59	6/22/2022 21:49	11.16	6/22/2022 20:37	0.77	6/22/2022 22:19	34.27
6/23/2022 22:03	84.87	6/22/2022 21:20	0.57	6/22/2022 21:50	11.07	6/22/2022 20:38	0.79	6/22/2022 22:20	34.24
6/23/2022 22:04	84.82	6/22/2022 21:21	0.52	6/22/2022 21:51	11.05	6/22/2022 20:39	0.76	6/22/2022 22:21	34.24
6/23/2022 22:05	84.87	6/22/2022 21:22	0.54	6/22/2022 21:52	11.02	6/22/2022 20:40	0.80	6/22/2022 22:22	34.27
6/23/2022 22:06	84.86	6/22/2022 21:23	0.56	6/22/2022 21:53	11.00	6/22/2022 20:41	0.80	6/22/2022 22:23	34.25
6/23/2022 22:07	84.84	6/22/2022 21:24	0.52	6/22/2022 21:54	10.97	6/22/2022 20:42	0.81	6/22/2022 22:24	34.21
6/23/2022 22:08	84.87	6/22/2022 21:25	0.49	6/22/2022 21:55	10.88	6/22/2022 20:43	0.81	6/22/2022 22:25	34.27
6/23/2022 22:09	84.79	6/22/2022 21:26	0.55	6/22/2022 21:56	10.84	6/22/2022 20:44	0.80	6/22/2022 22:26	34.26
6/23/2022 22:10	84.84	6/22/2022 21:27	0.55	6/22/2022 21:57	10.81	6/22/2022 20:45	0.83	6/22/2022 22:27	34.27
6/23/2022 22:11	84.83	6/22/2022 21:28	0.54	6/22/2022 21:58	10.82	6/22/2022 20:46	0.84	6/22/2022 22:28	34.27
6/23/2022 22:12	84.81	6/22/2022 21:29	0.53	6/22/2022 21:59	10.75	6/22/2022 20:47	0.79	6/22/2022 22:29	34.25
6/23/2022 22:13	84.78	6/22/2022 21:30	0.51	6/22/2022 22:00	10.76	6/22/2022 20:48	0.82	6/22/2022 22:30	34.25
6/23/2022 22:14	84.81	6/22/2022 21:31	0.57	6/22/2022 22:01	10.75	6/22/2022 20:49	0.82	6/22/2022 22:31	34.26
6/23/2022 22:15	84.82	6/22/2022 21:32	0.53	6/22/2022 22:02	10.71	6/22/2022 20:50	0.79	6/22/2022 22:32	34.24
6/23/2022 22:16	84.79	6/22/2022 21:33	0.51	6/22/2022 22:03	10.68	6/22/2022 20:51	0.79	6/22/2022 22:33	34.27
6/23/2022 22:17	84.84	6/22/2022 21:34	0.52	6/22/2022 22:04	10.64	6/22/2022 20:52	0.81	6/22/2022 22:34	34.27
6/23/2022 22:18	84.82	6/22/2022 21:35	0.49	6/22/2022 22:05	10.67	6/22/2022 20:53	0.80	6/22/2022 22:35	34.25
6/23/2022 22:19	84.83	6/22/2022 21:36	0.49	6/22/2022 22:06	10.62	6/22/2022 20:54	0.77	6/22/2022 22:36	34.25
6/23/2022 22:20	84.81	6/22/2022 21:37	5.68	6/22/2022 22:07	10.64	6/22/2022 20:55	0.80	6/22/2022 22:37	34.27
6/23/2022 22:21	84.80	6/22/2022 21:38	8.09	6/22/2022 22:08	10.67	6/22/2022 20:56	0.76	6/22/2022 22:38	34.28
6/23/2022 22:22	84.80	6/22/2022 21:39	6.84	6/22/2022 22:09	10.67	6/22/2022 20:57	0.80	6/22/2022 22:39	34.22
6/23/2022 22:23	84.87	6/22/2022 21:40	5.81	6/22/2022 22:10	10.61	6/22/2022 20:58	0.79	6/22/2022 22:40	34.25
6/23/2022 22:24	84.84	6/22/2022 21:41	5.02	6/22/2022 22:11	10.63	6/22/2022 20:59	0.76	6/22/2022 22:41	34.23
6/23/2022 22:25	84.78	6/22/2022 21:42	4.31	6/22/2022 22:12	10.63	6/22/2022 21:00	0.79	6/22/2022 22:42	34.24
6/23/2022 22:26	84.80	6/22/2022 21:43	3.75	6/22/2022 22:13	10.63	6/22/2022 21:01	0.78	6/22/2022 22:43	34.24
6/23/2022 22:27	84.81	6/22/2022 21:44	3.23	6/22/2022 22:14	10.65	6/22/2022 21:02	0.77	6/22/2022 22:44	34.22
6/23/2022 22:28	84.82	6/22/2022 21:45	2.79	6/22/2022 22:15	10.60	6/22/2022 21:03	0.79	6/22/2022 22:45	34.27
6/23/2022 22:29	84.80	6/22/2022 21:46	2.50	6/22/2022 22:16	10.60	6/22/2022 21:04	0.80	6/22/2022 22:46	34.25
6/23/2022 22:30	84.78	6/22/2022 21:47	2.21	6/22/2022 22:17	10.55	6/22/2022 21:05	0.79	6/22/2022 22:47	34.25
6/23/2022 22:31	84.83	6/22/2022 21:48	1.98	6/22/2022 22:18	10.58	6/22/2022 21:06	0.80	6/22/2022 22:48	34.27
6/23/2022 22:32	84.81	6/22/2022 21:49	1.80	6/22/2022 22:19	10.59	6/22/2022 21:07	0.81	6/22/2022 22:49	34.24
6/23/2022 22:33	84.79	6/22/2022 21:50	1.63	6/22/2022 22:20	10.57	6/22/2022 21:08	0.79	6/22/2022 22:50	34.22
6/23/2022 22:34	84.77	6/22/2022 21:51	1.48	6/22/2022 22:21	10.52	6/22/2022 21:09	0.82	6/22/2022 22:51	34.26
6/23/2022 22:35	84.79	6/22/2022 21:52	1.38	6/22/2022 22:22	10.53	6/22/2022 21:10	0.78	6/22/2022 22:52	34.24
6/23/2022 22:36	84.79	6/22/2022 21:53	1.24	6/22/2022 22:23	10.54	6/22/2022 21:11	0.79	6/22/2022 22:53	34.23
6/23/2022 22:37	84.76	6/22/2022 21:54	1.18	6/22/2022 22:24	13.68	6/22/2022 21:12	0.80	6/22/2022 22:54	34.23
6/23/2022 22:38	84.79	6/22/2022 21:55	1.09	6/22/2022 22:25	13.98	6/22/2022 21:13	0.76	6/22/2022 22:55	34.25
6/23/2022 22:39	84.76	6/22/2022 21:56	1.00	6/22/2022 22:26	13.49	6/22/2022 21:14	0.69	6/22/2022 22:56	34.24
6/23/2022 22:40	84.81	6/22/2022 21:57	0.95	6/22/2022 22:27	13.18	6/22/2022 21:15	0.81	6/22/2022 22:57	34.25
6/23/2022 22:41	84.80	6/22/2022 21:58	0.91	6/22/2022 22:28	12.84	6/22/2022 21:16	0.77	6/22/2022 22:58	34.27
6/23/2022 22:42	84.79	6/22/2022 21:59	0.82	6/22/2022 22:29	12.58	6/22/2022 21:17	0.77	6/22/2022 22:59	34.26
6/23/2022 22:43	84.80	6/22/2022 22:00	0.81	6/22/2022 22:30	12.33	6/22/2022 21:18	0.76	6/22/2022 23:00	34.28
6/23/2022 22:44	84.79	6/22/2022 22:01	0.81	6/22/2022 22:31	12.10	6/22/2022 21:19	0.78	6/22/2022 23:01	34.28
6/23/2022 22:45	84.79	6/22/2022 22:02	0.74	6/22/2022 22:32	11.97	6/22/2022 21:20	0.80	6/22/2022 23:02	34.28
6/23/2022 22:46	84.74	6/22/2022 22:03	0.72	6/22/2022 22:33	11.80	6/22/2022 21:21	0.77	6/22/2022 23:03	34.26
6/23/2022 22:47	84.77	6/22/2022 22:04	0.71	6/22/2022 22:34	11.59	6/22/2022 21:22	0.78	6/22/2022 23:04	34.24
6/23/2022 22:48	84.77	6/22/2022 22:05	0.69	6/22/2022 22:35	11.49	6/22/2022 21:23	0.79	6/22/2022 23:05	35.07
6/23/2022 22:49	84.77	6/22/2022 22:06	0.70	6/22/2022 22:36	11.39	6/22/2022 21:24	0.80	6/22/2022 23:06	35.53
6/23/2022 22:50	84.80	6/22/2022 22:07	0.62	6/22/2022 22:37	11.33	6/22/2022 21:25	0.81	6/22/2022 23:07	34.74
6/23/2022 22:51	84.79	6/22/2022 22:08	0.59	6/22/2022 22:38	11.24	6/22/2022 21:26	0.77	6/22/2022 23:08	34.44
6/23/2022 22:52	84.78	6/22/2022 22:09	0.63	6/22/2022 22:39	11.17	6/22/2022 21:27	0.79	6/22/2022 23:09	34.34
6/23/2022 22:53	84.77	6/22/2022 22:10	0.61	6/22/2022 22:40	11.09	6/22/2022 21:28	0.76	6/22/2022 23:10	34.30
6/23/2022 22:54	84.79	6/22/2022 22:11	0.62	6/22/2022 22:41	11.08	6/22/2022 21:29	0.76	6/22/2022 23:11	34.29
6/23/2022 22:55	84.77	6/22/2022 22:12	0.59	6/22/2022 22:42	11.02	6/22/2022 21:30	0.79	6/22/2022 23:12	34.30
6/23/2022 22:56	84.73	6/22/2022 22:13	0.55	6/22/2022 22:43	10.98	6/22/2022 21:31	0.76	6/22/2022 23:13	34.31
6/23/2022 22:57	84.75	6/22/2022 22:14	0.60	6/22/2022 22:44	10.95	6/22/2022 21:32	0.78	6/22/2022 23:14	34.24
6/23/2022 22:58	84.79	6/22/2022 22:15	0.57	6/22/2022 22:45	10.90	6/22/2022 21:33	0.79	6/22/2022 23:15	34.26
6/23/2022 22:59	84.78	6/22/2022 22:16	0.58	6/22/2022 22:46	10.87	6/22/2022 21:34	0.78	6/22/2022 23:16	34.31
6/23/2022 23:00	84.78	6/22/2022 22:17	0.54	6/22/2022 22:47	10.86	6/22/2022 21:35	0.77	6/22/2022 23:17	34.29
6/23/2022 23:01	84.79	6/22/2022 22:18	0.52	6/22/2022 22:48	10.83	6/22/2022 21:36	0.75	6/22/2022 23:18	34.27
6/23/2022 23:02	84.72	6/22/2022 22:19	0.53	6/22/2022 22:49	10.82	6/22/2022 21:37	0.77	6/22/2022 23:19	34.27
6/23/2022 23:03	84.76	6/22/2022 22:20	0.58	6/22/2022 22:50	10.76	6/22/2022 21:38	0.79	6/22/2022 23:20	34.25
6/23/2022 23:04	84.77	6/22/2022 22:21	0.55	6/22/2022 22:51	10.75	6/22/2022 21:39	0.84	6/22/2022 23:21	34.26
6/23/2022 23:05	84.75	6/22/2022 22:22	0.55	6/22/2022 22:52	10.71	6/22/2022 21:40	0.78	6/22/2022 23:22	34.25
6/23/2022 23:06	84.74	6/22/2022 22:23	0.55	6/22/2022 22:53	10.66	6/22/2022 21:41	0.80	6/22/2022 23:23	34.28
6/23/2022 23:07	84.73	6/22/2022 22:24	0.52	6/22/2022 22:54	10.68	6/22/2022 21:42	0.77	6/22/2022 23:24	34.26
6/23/2022 23:08	84.75	6/22/2022 22:25	0.56	6/22/2022 22:55	10.62	6/22/2022 21:43	0.79	6/22/2022 23:25	34.25
6/23/2022 23:09	84.77	6/22/2022 22:26	0.53	6/22/2022 22:56	10.63	6/22/2022 21:44	0.76	6/22/2022 23:26	34.27
6/23/2022 23:10	84.78	6/22/2022 22:27	0.52	6/22/2022 22:57	10.62	6/22/2022 21:45	0.78	6/22/2022 23:27	34.27
6/23/2022 23:11	84.79	6/22/2022 22:28	0.51	6/22/2022 22:58	10.58	6/22/2022 21:46	0.80	6/22/2022 23:28	34.27
6/23/2022 23:12	84.75	6/22/2022 22:29	0.53	6/22/2022 22:59	10.56	6/22/2022 21:47	0.76	6/22/2022 23:29	34.25
6/23/2022 23:13	84.75	6/22/2022 22:30	0.52	6/22/2022 23:00	10.56	6/22/2022 21:48	0.79	6/22/2022 23:30	34.26
6/23/2022 23:14	84.74	6/22/2022 22:31	0.53	6/22/2022 23:01	10.56	6/22/2022 21:49	0.77	6/22/2022 23:31	34.28
6/23/2022 23:15	84.74	6/22/2022 22:32	0.54	6/22/2022 23:02	10.59	6/22/2022 21:50	0.81	6/22/2022 23:32	34.29
6/23/2022 23:16	84.75	6/22/2022 22:33	0.53	6/22/2022 23:03	10.58	6/22/2022 21:51	0.79	6/22/2022 23:33	34.24
6/23/2022 23:17	84.77	6/22/2022 22:34	0.49	6/22/2022 23:04	10.59	6/22/2022 21:52	0.78	6/22/2022 23:34	34.24
6/23/2022 23:18	84.73	6/22/2022 22:35	0.55	6/22/2022 23:05	10.61	6/22/2022 21:53	0.74	6/22/2022 23:35	34.27
6/23/2022 23:19	84.81	6/22/2022 22:36	0.50	6/22/2022 23:06	10.59	6/22/2022 21:54	0.78	6/22/2022 23:36	34.28
6/23/2022 23:20	84.73	6/22/2022 22:37	0.53	6/22/2022 23:07	10.61	6/22/2022 21:55	0.74	6/22/2022 23:37	34.24
6/23/2022 23:21	84.74	6/22/2022 22:38	2.21	6/22/2022 23:08	10.59	6/22/2022 21:56	0.78	6/22/2022 23:38	34.26
6/23/2022 23:22	84.75	6/22/2022 22:39	7.83	6/22/2022 23:09	10.56	6/22/2022 21:57	0.76	6/22/2022 23:39	34.22
6/23/2022 23:23	84.75	6/22/2022 22:40	7.00	6/22/2022 23:10	10.59	6/22/2022 21:58	0.76	6/22/2022 23:40	34.29
6/23/2022 23:24	84.75	6/22/2022 22:41	5.91	6/22/2022 23:11	10.57	6/22/2022 21:59	0.72	6/22/2022 23:41	34.27
6/23/2022 23:25	84.76	6/22/2022 22:42	5.09	6/22/2022 23:12	10.56	6/22/2022 22:00	0.78	6/22/2022 23:42	34.26

6/23/2022 23:26	84.73	6/22/2022 22:43	4.43	6/22/2022 23:13	10.58	6/22/2022 22:01	0.76	6/22/2022 23:43	34.22
6/23/2022 23:27	84.77	6/22/2022 22:44	3.86	6/22/2022 23:14	10.58	6/22/2022 22:02	0.74	6/22/2022 23:44	34.27
6/23/2022 23:28	84.75	6/22/2022 22:45	3.36	6/22/2022 23:15	10.54	6/22/2022 22:03	0.74	6/22/2022 23:45	34.28
6/23/2022 23:29	84.71	6/22/2022 22:46	2.90	6/22/2022 23:16	10.52	6/22/2022 22:04	0.77	6/22/2022 23:46	34.28
6/23/2022 23:30	84.68	6/22/2022 22:47	2.58	6/22/2022 23:17	10.50	6/22/2022 22:05	0.76	6/22/2022 23:47	34.25
6/23/2022 23:31	84.72	6/22/2022 22:48	2.30	6/22/2022 23:18	10.48	6/22/2022 22:06	0.76	6/22/2022 23:48	34.28
6/23/2022 23:32	84.77	6/22/2022 22:49	2.04	6/22/2022 23:19	10.52	6/22/2022 22:07	0.77	6/22/2022 23:49	34.28
6/23/2022 23:33	84.73	6/22/2022 22:50	1.83	6/22/2022 23:20	10.49	6/22/2022 22:08	0.79	6/22/2022 23:50	34.25
6/23/2022 23:34	84.73	6/22/2022 22:51	1.67	6/22/2022 23:21	10.45	6/22/2022 22:09	0.76	6/22/2022 23:51	34.28
6/23/2022 23:35	84.76	6/22/2022 22:52	1.50	6/22/2022 23:22	10.43	6/22/2022 22:10	0.78	6/22/2022 23:52	34.29
6/23/2022 23:36	84.71	6/22/2022 22:53	1.36	6/22/2022 23:23	10.45	6/22/2022 22:11	0.78	6/22/2022 23:53	34.30
6/23/2022 23:37	84.74	6/22/2022 22:54	1.29	6/22/2022 23:24	10.47	6/22/2022 22:12	0.76	6/22/2022 23:54	34.28
6/23/2022 23:38	84.71	6/22/2022 22:55	1.16	6/22/2022 23:25	10.47	6/22/2022 22:13	0.74	6/22/2022 23:55	34.24
6/23/2022 23:39	84.74	6/22/2022 22:56	1.12	6/22/2022 23:26	10.42	6/22/2022 22:14	0.76	6/22/2022 23:56	34.27
6/23/2022 23:40	84.73	6/22/2022 22:57	1.01	6/22/2022 23:27	10.42	6/22/2022 22:15	0.77	6/22/2022 23:57	34.24
6/23/2022 23:41	84.72	6/22/2022 22:58	0.96	6/22/2022 23:28	10.39	6/22/2022 22:16	0.76	6/22/2022 23:58	34.26
6/23/2022 23:42	84.67	6/22/2022 22:59	0.95	6/22/2022 23:29	10.40	6/22/2022 22:17	0.73	6/22/2022 23:59	34.28
6/23/2022 23:43	84.72	6/22/2022 23:00	0.90	6/22/2022 23:30	10.44	6/22/2022 22:18	0.74	6/23/2022 0:00	34.26
6/23/2022 23:44	84.72	6/22/2022 23:01	0.80	6/22/2022 23:31	10.39	6/22/2022 22:19	0.74	6/23/2022 0:01	34.25
6/23/2022 23:45	84.75	6/22/2022 23:02	0.81	6/22/2022 23:32	10.38	6/22/2022 22:20	0.75	6/23/2022 0:02	34.28
6/23/2022 23:46	84.71	6/22/2022 23:03	0.76	6/22/2022 23:33	10.39	6/22/2022 22:21	0.75	6/23/2022 0:03	34.28
6/23/2022 23:47	84.72	6/22/2022 23:04	0.76	6/22/2022 23:34	10.43	6/22/2022 22:22	0.73	6/23/2022 0:04	34.25
6/23/2022 23:48	84.71	6/22/2022 23:05	0.67	6/22/2022 23:35	10.43	6/22/2022 22:23	0.76	6/23/2022 0:05	34.27
6/23/2022 23:49	84.72	6/22/2022 23:06	0.66	6/22/2022 23:36	10.46	6/22/2022 22:24	0.77	6/23/2022 0:06	34.32
6/23/2022 23:50	84.71	6/22/2022 23:07	0.68	6/22/2022 23:37	10.47	6/22/2022 22:25	0.79	6/23/2022 0:07	34.34
6/23/2022 23:51	84.70	6/22/2022 23:08	0.65	6/22/2022 23:38	10.50	6/22/2022 22:26	0.75	6/23/2022 0:08	34.32
6/23/2022 23:52	84.71	6/22/2022 23:09	0.63	6/22/2022 23:39	10.49	6/22/2022 22:27	0.73	6/23/2022 0:09	34.33
6/23/2022 23:53	89.18	6/22/2022 23:10	0.63	6/22/2022 23:40	10.46	6/22/2022 22:28	0.76	6/23/2022 0:10	34.33
6/23/2022 23:54	91.80	6/22/2022 23:11	0.62	6/22/2022 23:41	10.44	6/22/2022 22:29	0.78	6/23/2022 0:11	34.31
6/23/2022 23:55	93.28	6/22/2022 23:12	0.60	6/22/2022 23:42	10.48	6/22/2022 22:30	0.75	6/23/2022 0:12	34.33
6/23/2022 23:56	90.75	6/22/2022 23:13	0.56	6/22/2022 23:43	10.46	6/22/2022 22:31	0.75	6/23/2022 0:13	34.33
6/23/2022 23:57	88.86	6/22/2022 23:14	0.61	6/22/2022 23:44	10.47	6/22/2022 22:32	0.76	6/23/2022 0:14	34.28
6/23/2022 23:58	87.66	6/22/2022 23:15	0.55	6/22/2022 23:45	10.45	6/22/2022 22:33	0.75	6/23/2022 0:15	34.30
6/23/2022 23:59	86.89	6/22/2022 23:16	0.58	6/22/2022 23:46	10.43	6/22/2022 22:34	0.78	6/23/2022 0:16	34.33
6/24/2022 0:00	86.43	6/22/2022 23:17	0.57	6/22/2022 23:47	10.45	6/22/2022 22:35	0.76	6/23/2022 0:17	34.29
6/24/2022 0:01	86.10	6/22/2022 23:18	0.59	6/22/2022 23:48	10.41	6/22/2022 22:36	0.76	6/23/2022 0:18	34.30
6/24/2022 0:02	85.92	6/22/2022 23:19	0.57	6/22/2022 23:49	10.43	6/22/2022 22:37	0.76	6/23/2022 0:19	34.30
6/24/2022 0:03	85.75	6/22/2022 23:20	0.57	6/22/2022 23:50	10.41	6/22/2022 22:38	0.70	6/23/2022 0:20	34.28
6/24/2022 0:04	85.62	6/22/2022 23:21	0.57	6/22/2022 23:51	10.36	6/22/2022 22:39	0.78	6/23/2022 0:21	34.32
6/24/2022 0:05	85.57	6/22/2022 23:22	0.57	6/22/2022 23:52	10.38	6/22/2022 22:40	0.83	6/23/2022 0:22	34.27
6/24/2022 0:06	85.50	6/22/2022 23:23	0.56	6/22/2022 23:53	10.39	6/22/2022 22:41	0.82	6/23/2022 0:23	34.31
6/24/2022 0:07	85.46	6/22/2022 23:24	0.61	6/22/2022 23:54	10.41	6/22/2022 22:42	0.79	6/23/2022 0:24	34.30
6/24/2022 0:08	85.40	6/22/2022 23:25	0.59	6/22/2022 23:55	10.39	6/22/2022 22:43	0.77	6/23/2022 0:25	34.32
6/24/2022 0:09	85.37	6/22/2022 23:26	0.52	6/22/2022 23:56	10.34	6/22/2022 22:44	0.80	6/23/2022 0:26	34.30
6/24/2022 0:10	85.32	6/22/2022 23:27	0.57	6/22/2022 23:57	10.38	6/22/2022 22:45	0.79	6/23/2022 0:27	34.32
6/24/2022 0:11	85.30	6/22/2022 23:28	0.59	6/22/2022 23:58	10.36	6/22/2022 22:46	0.79	6/23/2022 0:28	34.33
6/24/2022 0:12	85.25	6/22/2022 23:29	0.52	6/22/2022 23:59	10.38	6/22/2022 22:47	0.81	6/23/2022 0:29	34.29
6/24/2022 0:13	85.25	6/22/2022 23:30	0.55	6/23/2022 0:00	10.35	6/22/2022 22:48	0.74	6/23/2022 0:30	34.28
6/24/2022 0:14	85.25	6/22/2022 23:31	0.54	6/23/2022 0:01	10.32	6/22/2022 22:49	0.73	6/23/2022 0:31	34.29
6/24/2022 0:15	85.25	6/22/2022 23:32	0.52	6/23/2022 0:02	10.35	6/22/2022 22:50	0.76	6/23/2022 0:32	34.33
6/24/2022 0:16	85.18	6/22/2022 23:33	0.55	6/23/2022 0:03	10.38	6/22/2022 22:51	0.77	6/23/2022 0:33	34.32
6/24/2022 0:17	85.18	6/22/2022 23:34	0.52	6/23/2022 0:04	10.35	6/22/2022 22:52	0.76	6/23/2022 0:34	34.27
6/24/2022 0:18	85.14	6/22/2022 23:35	0.52	6/23/2022 0:05	10.37	6/22/2022 22:53	0.74	6/23/2022 0:35	34.31
6/24/2022 0:19	85.18	6/22/2022 23:36	0.51	6/23/2022 0:06	10.38	6/22/2022 22:54	0.75	6/23/2022 0:36	34.30
6/24/2022 0:20	85.15	6/22/2022 23:37	1.53	6/23/2022 0:07	10.41	6/22/2022 22:55	0.74	6/23/2022 0:37	34.28
6/24/2022 0:21	85.12	6/22/2022 23:38	7.32	6/23/2022 0:08	10.41	6/22/2022 22:56	0.76	6/23/2022 0:38	34.31
6/24/2022 0:22	85.13	6/22/2022 23:39	7.09	6/23/2022 0:09	10.41	6/22/2022 22:57	0.75	6/23/2022 0:39	34.28
6/24/2022 0:23	85.08	6/22/2022 23:40	6.00	6/23/2022 0:10	10.40	6/22/2022 22:58	0.74	6/23/2022 0:40	34.28
6/24/2022 0:24	85.12	6/22/2022 23:41	5.13	6/23/2022 0:11	10.43	6/22/2022 22:59	0.73	6/23/2022 0:41	34.30
6/24/2022 0:25	85.08	6/22/2022 23:42	4.40	6/23/2022 0:12	10.47	6/22/2022 23:00	0.78	6/23/2022 0:42	34.26
6/24/2022 0:26	85.11	6/22/2022 23:43	3.85	6/23/2022 0:13	10.44	6/22/2022 23:01	0.69	6/23/2022 0:43	34.29
6/24/2022 0:27	85.08	6/22/2022 23:44	3.29	6/23/2022 0:14	10.43	6/22/2022 23:02	0.74	6/23/2022 0:44	34.29
6/24/2022 0:28	85.08	6/22/2022 23:45	2.85	6/23/2022 0:15	10.45	6/22/2022 23:03	0.75	6/23/2022 0:45	34.31
6/24/2022 0:29	85.05	6/22/2022 23:46	2.56	6/23/2022 0:16	10.43	6/22/2022 23:04	0.74	6/23/2022 0:46	34.29
6/24/2022 0:30	85.08	6/22/2022 23:47	2.27	6/23/2022 0:17	10.40	6/22/2022 23:05	0.74	6/23/2022 0:47	34.31
6/24/2022 0:31	85.07	6/22/2022 23:48	2.01	6/23/2022 0:18	10.38	6/22/2022 23:06	0.80	6/23/2022 0:48	34.27
6/24/2022 0:32	85.03	6/22/2022 23:49	1.82	6/23/2022 0:19	10.41	6/22/2022 23:07	0.75	6/23/2022 0:49	34.27
6/24/2022 0:33	85.05	6/22/2022 23:50	1.65	6/23/2022 0:20	10.38	6/22/2022 23:08	0.74	6/23/2022 0:50	34.28
6/24/2022 0:34	85.04	6/22/2022 23:51	1.48	6/23/2022 0:21	10.42	6/22/2022 23:09	0.74	6/23/2022 0:51	34.31
6/24/2022 0:35	85.03	6/22/2022 23:52	1.39	6/23/2022 0:22	10.37	6/22/2022 23:10	0.73	6/23/2022 0:52	34.29
6/24/2022 0:36	84.98	6/22/2022 23:53	1.26	6/23/2022 0:23	10.41	6/22/2022 23:11	0.75	6/23/2022 0:53	34.29
6/24/2022 0:37	84.99	6/22/2022 23:54	1.14	6/23/2022 0:24	10.39	6/22/2022 23:12	0.77	6/23/2022 0:54	34.31
6/24/2022 0:38	85.02	6/22/2022 23:55	1.07	6/23/2022 0:25	10.39	6/22/2022 23:13	0.73	6/23/2022 0:55	34.25
6/24/2022 0:39	84.98	6/22/2022 23:56	0.99	6/23/2022 0:26	10.36	6/22/2022 23:14	0.77	6/23/2022 0:56	34.30
6/24/2022 0:40	84.94	6/22/2022 23:57	0.97	6/23/2022 0:27	10.37	6/22/2022 23:15	0.75	6/23/2022 0:57	34.32
6/24/2022 0:41	85.00	6/22/2022 23:58	0.88	6/23/2022 0:28	10.35	6/22/2022 23:16	0.78	6/23/2022 0:58	34.25
6/24/2022 0:42	84.99	6/22/2022 23:59	0.85	6/23/2022 0:29	10.35	6/22/2022 23:17	0.79	6/23/2022 0:59	34.31
6/24/2022 0:43	84.95	6/23/2022 0:00	0.81	6/23/2022 0:30	10.32	6/22/2022 23:18	0.78	6/23/2022 1:00	34.31
6/24/2022 0:44	84.97	6/23/2022 0:01	0.77	6/23/2022 0:31	10.35	6/22/2022 23:19	0.81	6/23/2022 1:01	34.30
6/24/2022 0:45	84.97	6/23/2022 0:02	0.73	6/23/2022 0:32	10.38	6/22/2022 23:20	0.79	6/23/2022 1:02	34.32
6/24/2022 0:46	84.97	6/23/2022 0:03	0.69	6/23/2022 0:33	10.39	6/22/2022 23:21	0.75	6/23/2022 1:03	34.24
6/24/2022 0:47	84.98	6/23/2022 0:04	0.71	6/23/2022 0:34	10.42	6/22/2022 23:22	0.75	6/23/2022 1:04	34.31
6/24/2022 0:48	84.93	6/23/2022 0:05	0.65	6/23/2022 0:35	10.42	6/22/2022 23:23	0.79	6/23/2022 1:05	34.31
6/24/2022 0:49	84.92	6/23/2022 0:06	0.64	6/23/2022 0:36	10.44	6/22/2022 23:24	0.74	6/23/2022 1:06	34.30
6/24/2022 0:50	84.97	6/23/2022 0:07	0.63	6/23/2022 0:37	10.43	6/22/2022 23:25	0.75	6/23/2022 1:07	34.25
6/24/2022 0:51	84.93	6/23/2022 0:08	0.65	6/23/2022 0:38	10.44	6/22/2022 23:26	0.75	6/23/2022 1:08	34.28
6/24/2022 0:52	84.98	6/23/2022 0:09	0.61	6/23/2022 0:39	10.44	6/22/2022 23:27	0.77	6/23/2022 1:09	34.28
6/24/2022 0:53	84.96	6/23/2022 0:10	0.60	6/23/2022 0:40	10.40	6/22/2022 23:28	0.74	6/23/2022 1:10	34.31

6/24/2022 0:54	84.93	6/23/2022 0:11	0.58	6/23/2022 0:41	10.45	6/22/2022 23:29	0.74	6/23/2022 1:11	34.31
6/24/2022 0:55	84.93	6/23/2022 0:12	0.62	6/23/2022 0:42	10.46	6/22/2022 23:30	0.79	6/23/2022 1:12	34.29
6/24/2022 0:56	84.94	6/23/2022 0:13	0.60	6/23/2022 0:43	10.44	6/22/2022 23:31	0.78	6/23/2022 1:13	34.31
6/24/2022 0:57	84.92	6/23/2022 0:14	0.59	6/23/2022 0:44	10.44	6/22/2022 23:32	0.74	6/23/2022 1:14	34.30
6/24/2022 0:58	84.93	6/23/2022 0:15	0.56	6/23/2022 0:45	10.43	6/22/2022 23:33	0.74	6/23/2022 1:15	34.29
6/24/2022 0:59	84.93	6/23/2022 0:16	0.57	6/23/2022 0:46	10.42	6/22/2022 23:34	0.77	6/23/2022 1:16	34.31
6/24/2022 1:00	84.89	6/23/2022 0:17	0.51	6/23/2022 0:47	10.43	6/22/2022 23:35	0.79	6/23/2022 1:17	34.31
6/24/2022 1:01	84.93	6/23/2022 0:18	0.56	6/23/2022 0:48	10.41	6/22/2022 23:36	0.80	6/23/2022 1:18	34.27
6/24/2022 1:02	84.91	6/23/2022 0:19	0.53	6/23/2022 0:49	10.36	6/22/2022 23:37	0.76	6/23/2022 1:19	34.30
6/24/2022 1:03	84.91	6/23/2022 0:20	0.51	6/23/2022 0:50	10.38	6/22/2022 23:38	0.81	6/23/2022 1:20	34.27
6/24/2022 1:04	84.91	6/23/2022 0:21	0.55	6/23/2022 0:51	10.40	6/22/2022 23:39	0.78	6/23/2022 1:21	34.32
6/24/2022 1:05	84.91	6/23/2022 0:22	0.56	6/23/2022 0:52	10.38	6/22/2022 23:40	0.83	6/23/2022 1:22	34.29
6/24/2022 1:06	84.95	6/23/2022 0:23	0.50	6/23/2022 0:53	10.36	6/22/2022 23:41	0.83	6/23/2022 1:23	34.31
6/24/2022 1:07	84.90	6/23/2022 0:24	0.57	6/23/2022 0:54	10.39	6/22/2022 23:42	0.74	6/23/2022 1:24	34.29
6/24/2022 1:08	84.89	6/23/2022 0:25	0.54	6/23/2022 0:55	10.38	6/22/2022 23:43	0.79	6/23/2022 1:25	34.31
6/24/2022 1:09	84.91	6/23/2022 0:26	0.51	6/23/2022 0:56	10.36	6/22/2022 23:44	0.75	6/23/2022 1:26	34.33
6/24/2022 1:10	84.93	6/23/2022 0:27	0.53	6/23/2022 0:57	10.37	6/22/2022 23:45	0.76	6/23/2022 1:27	34.29
6/24/2022 1:11	84.88	6/23/2022 0:28	0.51	6/23/2022 0:58	10.37	6/22/2022 23:46	0.76	6/23/2022 1:28	34.31
6/24/2022 1:12	84.90	6/23/2022 0:29	0.58	6/23/2022 0:59	10.39	6/22/2022 23:47	0.76	6/23/2022 1:29	34.34
6/24/2022 1:13	84.91	6/23/2022 0:30	0.53	6/23/2022 1:00	10.35	6/22/2022 23:48	0.79	6/23/2022 1:30	34.30
6/24/2022 1:14	84.88	6/23/2022 0:31	0.52	6/23/2022 1:01	10.34	6/22/2022 23:49	0.77	6/23/2022 1:31	34.31
6/24/2022 1:15	84.90	6/23/2022 0:32	0.51	6/23/2022 1:02	10.31	6/22/2022 23:50	0.77	6/23/2022 1:32	34.27
6/24/2022 1:16	84.87	6/23/2022 0:33	0.55	6/23/2022 1:03	10.37	6/22/2022 23:51	0.80	6/23/2022 1:33	34.29
6/24/2022 1:17	84.89	6/23/2022 0:34	0.51	6/23/2022 1:04	10.38	6/22/2022 23:52	0.76	6/23/2022 1:34	34.31
6/24/2022 1:18	84.89	6/23/2022 0:35	0.53	6/23/2022 1:05	10.38	6/22/2022 23:53	0.77	6/23/2022 1:35	34.31
6/24/2022 1:19	84.90	6/23/2022 0:36	0.51	6/23/2022 1:06	10.40	6/22/2022 23:54	0.74	6/23/2022 1:36	34.31
6/24/2022 1:20	84.87	6/23/2022 0:37	0.53	6/23/2022 1:07	10.41	6/22/2022 23:55	0.71	6/23/2022 1:37	34.30
6/24/2022 1:21	84.86	6/23/2022 0:38	0.54	6/23/2022 1:08	10.40	6/22/2022 23:56	0.72	6/23/2022 1:38	34.30
6/24/2022 1:22	84.90	6/23/2022 0:39	0.51	6/23/2022 1:09	10.41	6/22/2022 23:57	0.74	6/23/2022 1:39	34.27
6/24/2022 1:23	84.87	6/23/2022 0:40	0.54	6/23/2022 1:10	10.39	6/22/2022 23:58	0.79	6/23/2022 1:40	34.31
6/24/2022 1:24	84.90	6/23/2022 0:41	0.53	6/23/2022 1:11	10.43	6/22/2022 23:59	0.77	6/23/2022 1:41	34.31
6/24/2022 1:25	84.86	6/23/2022 0:42	2.12	6/23/2022 1:12	10.43	6/23/2022 0:00	0.77	6/23/2022 1:42	34.32
6/24/2022 1:26	84.87	6/23/2022 0:43	7.71	6/23/2022 1:13	10.40	6/23/2022 0:01	0.75	6/23/2022 1:43	34.36
6/24/2022 1:27	84.85	6/23/2022 0:44	7.04	6/23/2022 1:14	10.40	6/23/2022 0:02	0.76	6/23/2022 1:44	34.34
6/24/2022 1:28	84.88	6/23/2022 0:45	5.98	6/23/2022 1:15	10.43	6/23/2022 0:03	0.77	6/23/2022 1:45	34.31
6/24/2022 1:29	84.84	6/23/2022 0:46	5.13	6/23/2022 1:16	10.38	6/23/2022 0:04	0.77	6/23/2022 1:46	34.33
6/24/2022 1:30	84.87	6/23/2022 0:47	4.40	6/23/2022 1:17	10.38	6/23/2022 0:05	0.81	6/23/2022 1:47	34.30
6/24/2022 1:31	84.85	6/23/2022 0:48	3.83	6/23/2022 1:18	10.38	6/23/2022 0:06	0.77	6/23/2022 1:48	34.28
6/24/2022 1:32	84.80	6/23/2022 0:49	3.38	6/23/2022 1:19	10.40	6/23/2022 0:07	0.76	6/23/2022 1:49	34.28
6/24/2022 1:33	84.84	6/23/2022 0:50	2.88	6/23/2022 1:20	10.40	6/23/2022 0:08	0.78	6/23/2022 1:50	34.30
6/24/2022 1:34	84.89	6/23/2022 0:51	2.56	6/23/2022 1:21	10.36	6/23/2022 0:09	0.77	6/23/2022 1:51	34.30
6/24/2022 1:35	84.86	6/23/2022 0:52	2.28	6/23/2022 1:22	10.37	6/23/2022 0:10	0.77	6/23/2022 1:52	34.30
6/24/2022 1:36	84.86	6/23/2022 0:53	2.04	6/23/2022 1:23	10.32	6/23/2022 0:11	0.74	6/23/2022 1:53	34.30
6/24/2022 1:37	84.81	6/23/2022 0:54	1.82	6/23/2022 1:24	10.36	6/23/2022 0:12	0.79	6/23/2022 1:54	34.33
6/24/2022 1:38	84.81	6/23/2022 0:55	1.65	6/23/2022 1:25	10.35	6/23/2022 0:13	0.79	6/23/2022 1:55	34.30
6/24/2022 1:39	84.87	6/23/2022 0:56	1.50	6/23/2022 1:26	10.39	6/23/2022 0:14	0.77	6/23/2022 1:56	34.28
6/24/2022 1:40	84.84	6/23/2022 0:57	1.37	6/23/2022 1:27	10.34	6/23/2022 0:15	0.77	6/23/2022 1:57	34.34
6/24/2022 1:41	84.81	6/23/2022 0:58	1.24	6/23/2022 1:28	10.34	6/23/2022 0:16	0.78	6/23/2022 1:58	34.30
6/24/2022 1:42	84.87	6/23/2022 0:59	1.16	6/23/2022 1:29	10.34	6/23/2022 0:17	0.76	6/23/2022 1:59	34.33
6/24/2022 1:43	84.85	6/23/2022 1:00	1.08	6/23/2022 1:30	10.31	6/23/2022 0:18	0.79	6/23/2022 2:00	34.29
6/24/2022 1:44	84.84	6/23/2022 1:01	1.03	6/23/2022 1:31	10.32	6/23/2022 0:19	0.77	6/23/2022 2:01	34.31
6/24/2022 1:45	84.80	6/23/2022 1:02	0.92	6/23/2022 1:32	10.31	6/23/2022 0:20	0.80	6/23/2022 2:02	34.30
6/24/2022 1:46	84.85	6/23/2022 1:03	0.90	6/23/2022 1:33	10.33	6/23/2022 0:21	0.81	6/23/2022 2:03	34.33
6/24/2022 1:47	84.83	6/23/2022 1:04	0.88	6/23/2022 1:34	10.35	6/23/2022 0:22	0.78	6/23/2022 2:04	34.31
6/24/2022 1:48	84.84	6/23/2022 1:05	0.81	6/23/2022 1:35	10.33	6/23/2022 0:23	0.80	6/23/2022 2:05	34.31
6/24/2022 1:49	84.82	6/23/2022 1:06	0.79	6/23/2022 1:36	10.34	6/23/2022 0:24	0.78	6/23/2022 2:06	34.30
6/24/2022 1:50	84.81	6/23/2022 1:07	0.78	6/23/2022 1:37	10.39	6/23/2022 0:25	0.78	6/23/2022 2:07	34.29
6/24/2022 1:51	84.82	6/23/2022 1:08	0.71	6/23/2022 1:38	10.37	6/23/2022 0:26	0.78	6/23/2022 2:08	34.31
6/24/2022 1:52	84.83	6/23/2022 1:09	0.70	6/23/2022 1:39	10.35	6/23/2022 0:27	0.80	6/23/2022 2:09	34.26
6/24/2022 1:53	84.84	6/23/2022 1:10	0.68	6/23/2022 1:40	10.38	6/23/2022 0:28	0.76	6/23/2022 2:10	34.30
6/24/2022 1:54	84.79	6/23/2022 1:11	0.71	6/23/2022 1:41	10.35	6/23/2022 0:29	0.79	6/23/2022 2:11	34.33
6/24/2022 1:55	84.82	6/23/2022 1:12	0.66	6/23/2022 1:42	10.39	6/23/2022 0:30	0.76	6/23/2022 2:12	34.31
6/24/2022 1:56	84.80	6/23/2022 1:13	0.58	6/23/2022 1:43	10.38	6/23/2022 0:31	0.78	6/23/2022 2:13	34.33
6/24/2022 1:57	84.84	6/23/2022 1:14	0.61	6/23/2022 1:44	10.40	6/23/2022 0:32	0.81	6/23/2022 2:14	34.30
6/24/2022 1:58	84.78	6/23/2022 1:15	0.61	6/23/2022 1:45	10.38	6/23/2022 0:33	0.76	6/23/2022 2:15	34.30
6/24/2022 1:59	84.84	6/23/2022 1:16	0.58	6/23/2022 1:46	10.37	6/23/2022 0:34	0.79	6/23/2022 2:16	34.34
6/24/2022 2:00	84.81	6/23/2022 1:17	0.62	6/23/2022 1:47	10.39	6/23/2022 0:35	0.75	6/23/2022 2:17	34.31
6/24/2022 2:01	84.78	6/23/2022 1:18	0.59	6/23/2022 1:48	10.38	6/23/2022 0:36	0.76	6/23/2022 2:18	34.33
6/24/2022 2:02	84.76	6/23/2022 1:19	0.54	6/23/2022 1:49	10.36	6/23/2022 0:37	0.80	6/23/2022 2:19	34.30
6/24/2022 2:03	84.81	6/23/2022 1:20	0.56	6/23/2022 1:50	10.35	6/23/2022 0:38	0.79	6/23/2022 2:20	34.33
6/24/2022 2:04	84.82	6/23/2022 1:21	0.57	6/23/2022 1:51	10.32	6/23/2022 0:39	0.76	6/23/2022 2:21	34.31
6/24/2022 2:05	84.78	6/23/2022 1:22	0.59	6/23/2022 1:52	10.37	6/23/2022 0:40	0.77	6/23/2022 2:22	34.36
6/24/2022 2:06	84.80	6/23/2022 1:23	0.55	6/23/2022 1:53	10.32	6/23/2022 0:41	0.76	6/23/2022 2:23	34.30
6/24/2022 2:07	84.79	6/23/2022 1:24	0.56	6/23/2022 1:54	10.35	6/23/2022 0:42	0.77	6/23/2022 2:24	34.36
6/24/2022 2:08	84.82	6/23/2022 1:25	0.54	6/23/2022 1:55	10.35	6/23/2022 0:43	0.79	6/23/2022 2:25	34.28
6/24/2022 2:09	84.79	6/23/2022 1:26	0.56	6/23/2022 1:56	10.36	6/23/2022 0:44	0.82	6/23/2022 2:26	34.33
6/24/2022 2:10	84.77	6/23/2022 1:27	0.52	6/23/2022 1:57	10.33	6/23/2022 0:45	0.80	6/23/2022 2:27	34.32
6/24/2022 2:11	84.79	6/23/2022 1:28	0.55	6/23/2022 1:58	10.33	6/23/2022 0:46	0.78	6/23/2022 2:28	34.28
6/24/2022 2:12	84.78	6/23/2022 1:29	0.55	6/23/2022 1:59	10.30	6/23/2022 0:47	0.78	6/23/2022 2:29	34.32
6/24/2022 2:13	84.78	6/23/2022 1:30	0.53	6/23/2022 2:00	10.32	6/23/2022 0:48	0.79	6/23/2022 2:30	34.32
6/24/2022 2:14	84.79	6/23/2022 1:31	0.54	6/23/2022 2:01	10.32	6/23/2022 0:49	0.80	6/23/2022 2:31	34.32
6/24/2022 2:15	84.80	6/23/2022 1:32	0.52	6/23/2022 2:02	10.33	6/23/2022 0:50	0.79	6/23/2022 2:32	34.30
6/24/2022 2:16	84.82	6/23/2022 1:33	0.54	6/23/2022 2:03	10.33	6/23/2022 0:51	0.81	6/23/2022 2:33	34.32
6/24/2022 2:17	84.79	6/23/2022 1:34	0.55	6/23/2022 2:04	10.30	6/23/2022 0:52	0.75	6/23/2022 2:34	34.33
6/24/2022 2:18	84.80	6/23/2022 1:35	0.54	6/23/2022 2:05	10.32	6/23/2022 0:53	0.80	6/23/2022 2:35	34.33
6/24/2022 2:19	84.77	6/23/2022 1:36	0.51	6/23/2022 2:06	10.34	6/23/2022 0:54	0.75	6/23/2022 2:36	34.33
6/24/2022 2:20	84.76	6/23/2022 1:37	0.53	6/23/2022 2:07	10.32	6/23/2022 0:55	0.78	6/23/2022 2:37	34.33
6/24/2022 2:21	84.80	6/23/2022 1:38	0.51	6/23/2022 2:08	10.35	6/23/2022 0:56	0.78	6/23/2022 2:38	34.32

6/24/2022 2:22	84.76	6/23/2022 1:39	0.54	6/23/2022 2:09	10.34	6/23/2022 0:57	0.78	6/23/2022 2:39	34.30
6/24/2022 2:23	84.77	6/23/2022 1:40	0.54	6/23/2022 2:10	10.39	6/23/2022 0:58	0.76	6/23/2022 2:40	34.31
6/24/2022 2:24	84.78	6/23/2022 1:41	0.54	6/23/2022 2:11	10.40	6/23/2022 0:59	0.79	6/23/2022 2:41	34.32
6/24/2022 2:25	84.81	6/23/2022 1:42	0.56	6/23/2022 2:12	10.38	6/23/2022 1:00	0.78	6/23/2022 2:42	34.34
6/24/2022 2:26	84.78	6/23/2022 1:43	0.53	6/23/2022 2:13	10.37	6/23/2022 1:01	0.77	6/23/2022 2:43	34.34
6/24/2022 2:27	84.76	6/23/2022 1:44	0.51	6/23/2022 2:14	10.37	6/23/2022 1:02	0.72	6/23/2022 2:44	34.30
6/24/2022 2:28	84.76	6/23/2022 1:45	0.49	6/23/2022 2:15	10.42	6/23/2022 1:03	0.79	6/23/2022 2:45	34.33
6/24/2022 2:29	84.78	6/23/2022 1:46	6.38	6/23/2022 2:16	10.37	6/23/2022 1:04	0.77	6/23/2022 2:46	34.32
6/24/2022 2:30	84.76	6/23/2022 1:47	7.39	6/23/2022 2:17	10.39	6/23/2022 1:05	0.78	6/23/2022 2:47	34.33
6/24/2022 2:31	84.78	6/23/2022 1:48	6.25	6/23/2022 2:18	10.38	6/23/2022 1:06	0.78	6/23/2022 2:48	34.33
6/24/2022 2:32	84.78	6/23/2022 1:49	5.32	6/23/2022 2:19	10.38	6/23/2022 1:07	0.74	6/23/2022 2:49	34.32
6/24/2022 2:33	84.77	6/23/2022 1:50	4.59	6/23/2022 2:20	10.36	6/23/2022 1:08	0.76	6/23/2022 2:50	34.33
6/24/2022 2:34	84.82	6/23/2022 1:51	3.97	6/23/2022 2:21	10.32	6/23/2022 1:09	0.79	6/23/2022 2:51	34.36
6/24/2022 2:35	84.77	6/23/2022 1:52	3.47	6/23/2022 2:22	10.37	6/23/2022 1:10	0.79	6/23/2022 2:52	34.33
6/24/2022 2:36	84.80	6/23/2022 1:53	2.99	6/23/2022 2:23	10.36	6/23/2022 1:11	0.76	6/23/2022 2:53	34.37
6/24/2022 2:37	84.76	6/23/2022 1:54	2.62	6/23/2022 2:24	10.35	6/23/2022 1:12	0.79	6/23/2022 2:54	34.30
6/24/2022 2:38	84.80	6/23/2022 1:55	2.35	6/23/2022 2:25	10.34	6/23/2022 1:13	0.79	6/23/2022 2:55	34.33
6/24/2022 2:39	84.78	6/23/2022 1:56	2.13	6/23/2022 2:26	10.34	6/23/2022 1:14	0.79	6/23/2022 2:56	34.33
6/24/2022 2:40	84.76	6/23/2022 1:57	1.87	6/23/2022 2:27	10.34	6/23/2022 1:15	0.78	6/23/2022 2:57	34.32
6/24/2022 2:41	84.76	6/23/2022 1:58	1.72	6/23/2022 2:28	10.36	6/23/2022 1:16	0.78	6/23/2022 2:58	34.34
6/24/2022 2:42	84.77	6/23/2022 1:59	1.56	6/23/2022 2:29	10.32	6/23/2022 1:17	0.79	6/23/2022 2:59	34.32
6/24/2022 2:43	84.73	6/23/2022 2:00	1.39	6/23/2022 2:30	10.30	6/23/2022 1:18	0.84	6/23/2022 3:00	34.35
6/24/2022 2:44	84.75	6/23/2022 2:01	1.31	6/23/2022 2:31	10.35	6/23/2022 1:19	0.79	6/23/2022 3:01	34.33
6/24/2022 2:45	84.83	6/23/2022 2:02	1.17	6/23/2022 2:32	10.32	6/23/2022 1:20	0.79	6/23/2022 3:02	34.30
6/24/2022 2:46	84.80	6/23/2022 2:03	1.08	6/23/2022 2:33	10.32	6/23/2022 1:21	0.80	6/23/2022 3:03	34.32
6/24/2022 2:47	84.80	6/23/2022 2:04	1.03	6/23/2022 2:34	10.29	6/23/2022 1:22	0.76	6/23/2022 3:04	34.32
6/24/2022 2:48	84.76	6/23/2022 2:05	0.98	6/23/2022 2:35	10.32	6/23/2022 1:23	0.79	6/23/2022 3:05	34.37
6/24/2022 2:49	84.78	6/23/2022 2:06	0.89	6/23/2022 2:36	10.27	6/23/2022 1:24	0.80	6/23/2022 3:06	34.33
6/24/2022 2:50	84.78	6/23/2022 2:07	0.81	6/23/2022 2:37	10.33	6/23/2022 1:25	0.82	6/23/2022 3:07	34.34
6/24/2022 2:51	84.77	6/23/2022 2:08	0.81	6/23/2022 2:38	10.31	6/23/2022 1:26	0.75	6/23/2022 3:08	34.32
6/24/2022 2:52	84.78	6/23/2022 2:09	0.74	6/23/2022 2:39	10.32	6/23/2022 1:27	0.79	6/23/2022 3:09	34.36
6/24/2022 2:53	84.76	6/23/2022 2:10	0.73	6/23/2022 2:40	10.40	6/23/2022 1:28	0.83	6/23/2022 3:10	34.33
6/24/2022 2:54	84.75	6/23/2022 2:11	0.68	6/23/2022 2:41	10.33	6/23/2022 1:29	0.77	6/23/2022 3:11	34.34
6/24/2022 2:55	84.75	6/23/2022 2:12	0.70	6/23/2022 2:42	10.41	6/23/2022 1:30	0.79	6/23/2022 3:12	34.32
6/24/2022 2:56	84.73	6/23/2022 2:13	0.65	6/23/2022 2:43	10.39	6/23/2022 1:31	0.82	6/23/2022 3:13	34.34
6/24/2022 2:57	84.74	6/23/2022 2:14	0.67	6/23/2022 2:44	10.37	6/23/2022 1:32	0.77	6/23/2022 3:14	34.33
6/24/2022 2:58	84.73	6/23/2022 2:15	0.63	6/23/2022 2:45	10.37	6/23/2022 1:33	0.83	6/23/2022 3:15	34.35
6/24/2022 2:59	84.75	6/23/2022 2:16	0.67	6/23/2022 2:46	10.36	6/23/2022 1:34	0.77	6/23/2022 3:16	34.36
6/24/2022 3:00	84.78	6/23/2022 2:17	0.61	6/23/2022 2:47	10.38	6/23/2022 1:35	0.80	6/23/2022 3:17	34.32
6/24/2022 3:01	84.77	6/23/2022 2:18	0.59	6/23/2022 2:48	10.38	6/23/2022 1:36	0.80	6/23/2022 3:18	34.32
6/24/2022 3:02	84.75	6/23/2022 2:19	0.58	6/23/2022 2:49	10.39	6/23/2022 1:37	0.78	6/23/2022 3:19	34.32
6/24/2022 3:03	84.75	6/23/2022 2:20	0.62	6/23/2022 2:50	10.38	6/23/2022 1:38	0.77	6/23/2022 3:20	34.32
6/24/2022 3:04	84.77	6/23/2022 2:21	0.58	6/23/2022 2:51	10.38	6/23/2022 1:39	0.79	6/23/2022 3:21	34.35
6/24/2022 3:05	84.76	6/23/2022 2:22	0.60	6/23/2022 2:52	10.39	6/23/2022 1:40	0.79	6/23/2022 3:22	34.34
6/24/2022 3:06	84.73	6/23/2022 2:23	0.54	6/23/2022 2:53	10.36	6/23/2022 1:41	0.80	6/23/2022 3:23	34.31
6/24/2022 3:07	84.76	6/23/2022 2:24	0.56	6/23/2022 2:54	10.34	6/23/2022 1:42	0.78	6/23/2022 3:24	34.31
6/24/2022 3:08	84.71	6/23/2022 2:25	0.57	6/23/2022 2:55	10.38	6/23/2022 1:43	0.79	6/23/2022 3:25	34.35
6/24/2022 3:09	84.72	6/23/2022 2:26	0.57	6/23/2022 2:56	10.35	6/23/2022 1:44	0.79	6/23/2022 3:26	34.34
6/24/2022 3:10	84.70	6/23/2022 2:27	0.56	6/23/2022 2:57	10.38	6/23/2022 1:45	0.81	6/23/2022 3:27	34.34
6/24/2022 3:11	84.73	6/23/2022 2:28	0.54	6/23/2022 2:58	10.32	6/23/2022 1:46	0.80	6/23/2022 3:28	34.32
6/24/2022 3:12	84.73	6/23/2022 2:29	0.53	6/23/2022 2:59	10.31	6/23/2022 1:47	0.85	6/23/2022 3:29	34.33
6/24/2022 3:13	84.72	6/23/2022 2:30	0.52	6/23/2022 3:00	10.30	6/23/2022 1:48	0.84	6/23/2022 3:30	34.34
6/24/2022 3:14	84.75	6/23/2022 2:31	0.57	6/23/2022 3:01	10.33	6/23/2022 1:49	0.79	6/23/2022 3:31	34.31
6/24/2022 3:15	84.76	6/23/2022 2:32	0.53	6/23/2022 3:02	10.33	6/23/2022 1:50	0.81	6/23/2022 3:32	34.34
6/24/2022 3:16	84.74	6/23/2022 2:33	0.56	6/23/2022 3:03	10.32	6/23/2022 1:51	0.84	6/23/2022 3:33	34.36
6/24/2022 3:17	84.75	6/23/2022 2:34	0.58	6/23/2022 3:04	10.30	6/23/2022 1:52	0.80	6/23/2022 3:34	34.33
6/24/2022 3:18	84.70	6/23/2022 2:35	0.54	6/23/2022 3:05	10.29	6/23/2022 1:53	0.82	6/23/2022 3:35	34.35
6/24/2022 3:19	84.73	6/23/2022 2:36	0.55	6/23/2022 3:06	10.32	6/23/2022 1:54	0.80	6/23/2022 3:36	34.34
6/24/2022 3:20	84.73	6/23/2022 2:37	0.51	6/23/2022 3:07	10.33	6/23/2022 1:55	0.81	6/23/2022 3:37	34.34
6/24/2022 3:21	84.73	6/23/2022 2:38	0.51	6/23/2022 3:08	10.38	6/23/2022 1:56	0.76	6/23/2022 3:38	34.33
6/24/2022 3:22	84.75	6/23/2022 2:39	0.55	6/23/2022 3:09	10.35	6/23/2022 1:57	0.83	6/23/2022 3:39	34.36
6/24/2022 3:23	84.75	6/23/2022 2:40	0.51	6/23/2022 3:10	10.41	6/23/2022 1:58	0.78	6/23/2022 3:40	34.37
6/24/2022 3:24	84.71	6/23/2022 2:41	0.52	6/23/2022 3:11	10.40	6/23/2022 1:59	0.80	6/23/2022 3:41	34.35
6/24/2022 3:25	84.73	6/23/2022 2:42	0.52	6/23/2022 3:12	10.42	6/23/2022 2:00	0.80	6/23/2022 3:42	34.34
6/24/2022 3:26	84.71	6/23/2022 2:43	0.51	6/23/2022 3:13	10.42	6/23/2022 2:01	0.75	6/23/2022 3:43	34.36
6/24/2022 3:27	84.74	6/23/2022 2:44	0.50	6/23/2022 3:14	10.45	6/23/2022 2:02	0.78	6/23/2022 3:44	34.33
6/24/2022 3:28	84.73	6/23/2022 2:45	0.55	6/23/2022 3:15	10.42	6/23/2022 2:03	0.78	6/23/2022 3:45	34.36
6/24/2022 3:29	84.75	6/23/2022 2:46	0.50	6/23/2022 3:16	10.44	6/23/2022 2:04	0.80	6/23/2022 3:46	34.32
6/24/2022 3:30	84.74	6/23/2022 2:47	0.49	6/23/2022 3:17	10.40	6/23/2022 2:05	0.79	6/23/2022 3:47	34.32
6/24/2022 3:31	84.72	6/23/2022 2:48	4.12	6/23/2022 3:18	10.45	6/23/2022 2:06	0.80	6/23/2022 3:48	34.34
6/24/2022 3:32	84.72	6/23/2022 2:49	7.93	6/23/2022 3:19	10.44	6/23/2022 2:07	0.80	6/23/2022 3:49	34.37
6/24/2022 3:33	84.75	6/23/2022 2:50	6.65	6/23/2022 3:20	10.40	6/23/2022 2:08	0.78	6/23/2022 3:50	34.35
6/24/2022 3:34	84.75	6/23/2022 2:51	5.68	6/23/2022 3:21	10.44	6/23/2022 2:09	0.79	6/23/2022 3:51	34.36
6/24/2022 3:35	84.69	6/23/2022 2:52	4.90	6/23/2022 3:22	10.44	6/23/2022 2:10	0.77	6/23/2022 3:52	34.35
6/24/2022 3:36	84.68	6/23/2022 2:53	4.20	6/23/2022 3:23	10.41	6/23/2022 2:11	0.79	6/23/2022 3:53	34.33
6/24/2022 3:37	84.74	6/23/2022 2:54	3.67	6/23/2022 3:24	10.40	6/23/2022 2:12	0.79	6/23/2022 3:54	34.31
6/24/2022 3:38	84.71	6/23/2022 2:55	3.19	6/23/2022 3:25	10.39	6/23/2022 2:13	0.79	6/23/2022 3:55	34.33
6/24/2022 3:39	84.72	6/23/2022 2:56	2.76	6/23/2022 3:26	10.38	6/23/2022 2:14	0.77	6/23/2022 3:56	34.36
6/24/2022 3:40	84.73	6/23/2022 2:57	2.44	6/23/2022 3:27	10.37	6/23/2022 2:15	0.79	6/23/2022 3:57	34.36
6/24/2022 3:41	84.69	6/23/2022 2:58	2.20	6/23/2022 3:28	10.40	6/23/2022 2:16	0.79	6/23/2022 3:58	34.34
6/24/2022 3:42	84.69	6/23/2022 2:59	1.93	6/23/2022 3:29	10.35	6/23/2022 2:17	0.78	6/23/2022 3:59	34.34
6/24/2022 3:43	84.72	6/23/2022 3:00	1.77	6/23/2022 3:30	10.34	6/23/2022 2:18	0.79	6/23/2022 4:00	34.39
6/24/2022 3:44	84.73	6/23/2022 3:01	1.60	6/23/2022 3:31	10.35	6/23/2022 2:19	0.79	6/23/2022 4:01	34.37
6/24/2022 3:45	84.72	6/23/2022 3:02	1.44	6/23/2022 3:32	10.34	6/23/2022 2:20	0.78	6/23/2022 4:02	34.36
6/24/2022 3:46	84.70	6/23/2022 3:03	1.33	6/23/2022 3:33	10.35	6/23/2022 2:21	0.77	6/23/2022 4:03	34.38
6/24/2022 3:47	84.73	6/23/2022 3:04	1.24	6/23/2022 3:34	10.37	6/23/2022 2:22	0.77	6/23/2022 4:04	34.35
6/24/2022 3:48	84.71	6/23/2022 3:05	1.14	6/23/2022 3:35	10.33	6/23/2022 2:23	0.76	6/23/2022 4:05	34.36
6/24/2022 3:49	84.69	6/23/2022 3:06	1.07	6/23/2022 3:36	10.37	6/23/2022 2:24	0.81	6/23/2022 4:06	34.33

6/24/2022 3:50	84.73	6/23/2022 3:07	0.99	6/23/2022 3:37	10.31	6/23/2022 2:25	0.75	6/23/2022 4:07	34.33
6/24/2022 3:51	84.66	6/23/2022 3:08	0.90	6/23/2022 3:38	10.31	6/23/2022 2:26	0.78	6/23/2022 4:08	34.38
6/24/2022 3:52	84.69	6/23/2022 3:09	0.89	6/23/2022 3:39	10.31	6/23/2022 2:27	0.80	6/23/2022 4:09	34.35
6/24/2022 3:53	84.71	6/23/2022 3:10	0.80	6/23/2022 3:40	10.37	6/23/2022 2:28	0.80	6/23/2022 4:10	34.34
6/24/2022 3:54	84.72	6/23/2022 3:11	0.78	6/23/2022 3:41	10.34	6/23/2022 2:29	0.79	6/23/2022 4:11	34.38
6/24/2022 3:55	84.71	6/23/2022 3:12	0.76	6/23/2022 3:42	10.39	6/23/2022 2:30	0.82	6/23/2022 4:12	34.39
6/24/2022 3:56	84.67	6/23/2022 3:13	0.72	6/23/2022 3:43	10.38	6/23/2022 2:31	0.79	6/23/2022 4:13	34.34
6/24/2022 3:57	84.72	6/23/2022 3:14	0.69	6/23/2022 3:44	10.39	6/23/2022 2:32	0.81	6/23/2022 4:14	34.37
6/24/2022 3:58	84.67	6/23/2022 3:15	0.71	6/23/2022 3:45	10.39	6/23/2022 2:33	0.81	6/23/2022 4:15	34.38
6/24/2022 3:59	84.68	6/23/2022 3:16	0.64	6/23/2022 3:46	10.38	6/23/2022 2:34	0.78	6/23/2022 4:16	34.35
6/24/2022 4:00	84.72	6/23/2022 3:17	0.64	6/23/2022 3:47	10.40	6/23/2022 2:35	0.81	6/23/2022 4:17	34.35
6/24/2022 4:01	84.68	6/23/2022 3:18	0.70	6/23/2022 3:48	10.41	6/23/2022 2:36	0.79	6/23/2022 4:18	34.37
6/24/2022 4:02	84.70	6/23/2022 3:19	0.61	6/23/2022 3:49	10.37	6/23/2022 2:37	0.80	6/23/2022 4:19	34.37
6/24/2022 4:03	84.67	6/23/2022 3:20	0.60	6/23/2022 3:50	10.39	6/23/2022 2:38	0.83	6/23/2022 4:20	34.37
6/24/2022 4:04	84.69	6/23/2022 3:21	0.60	6/23/2022 3:51	10.39	6/23/2022 2:39	0.80	6/23/2022 4:21	34.37
6/24/2022 4:05	84.68	6/23/2022 3:22	0.58	6/23/2022 3:52	10.37	6/23/2022 2:40	0.78	6/23/2022 4:22	34.37
6/24/2022 4:06	84.70	6/23/2022 3:23	0.61	6/23/2022 3:53	10.43	6/23/2022 2:41	0.79	6/23/2022 4:23	34.34
6/24/2022 4:07	84.67	6/23/2022 3:24	0.56	6/23/2022 3:54	10.40	6/23/2022 2:42	0.79	6/23/2022 4:24	34.35
6/24/2022 4:08	84.68	6/23/2022 3:25	0.55	6/23/2022 3:55	10.38	6/23/2022 2:43	0.81	6/23/2022 4:25	34.38
6/24/2022 4:09	84.70	6/23/2022 3:26	0.57	6/23/2022 3:56	10.39	6/23/2022 2:44	0.80	6/23/2022 4:26	34.37
6/24/2022 4:10	84.74	6/23/2022 3:27	0.53	6/23/2022 3:57	10.33	6/23/2022 2:45	0.81	6/23/2022 4:27	34.38
6/24/2022 4:11	84.67	6/23/2022 3:28	0.54	6/23/2022 3:58	10.37	6/23/2022 2:46	0.81	6/23/2022 4:28	34.36
6/24/2022 4:12	84.70	6/23/2022 3:29	0.55	6/23/2022 3:59	10.35	6/23/2022 2:47	0.81	6/23/2022 4:29	34.35
6/24/2022 4:13	84.71	6/23/2022 3:30	0.56	6/23/2022 4:00	10.36	6/23/2022 2:48	0.79	6/23/2022 4:30	34.34
6/24/2022 4:14	84.67	6/23/2022 3:31	0.55	6/23/2022 4:01	10.34	6/23/2022 2:49	0.79	6/23/2022 4:31	34.40
6/24/2022 4:15	84.68	6/23/2022 3:32	0.52	6/23/2022 4:02	10.33	6/23/2022 2:50	0.82	6/23/2022 4:32	34.39
6/24/2022 4:16	84.70	6/23/2022 3:33	0.53	6/23/2022 4:03	10.34	6/23/2022 2:51	0.84	6/23/2022 4:33	34.37
6/24/2022 4:17	84.67	6/23/2022 3:34	0.55	6/23/2022 4:04	10.33	6/23/2022 2:52	0.85	6/23/2022 4:34	34.35
6/24/2022 4:18	84.68	6/23/2022 3:35	0.49	6/23/2022 4:05	10.32	6/23/2022 2:53	0.82	6/23/2022 4:35	34.38
6/24/2022 4:19	84.68	6/23/2022 3:36	0.56	6/23/2022 4:06	10.29	6/23/2022 2:54	0.85	6/23/2022 4:36	34.38
6/24/2022 4:20	84.65	6/23/2022 3:37	0.54	6/23/2022 4:07	10.31	6/23/2022 2:55	0.85	6/23/2022 4:37	34.35
6/24/2022 4:21	84.67	6/23/2022 3:38	0.55	6/23/2022 4:08	10.30	6/23/2022 2:56	0.84	6/23/2022 4:38	34.35
6/24/2022 4:22	84.68	6/23/2022 3:39	0.56	6/23/2022 4:09	10.32	6/23/2022 2:57	0.81	6/23/2022 4:39	34.34
6/24/2022 4:23	84.68	6/23/2022 3:40	0.51	6/23/2022 4:10	10.31	6/23/2022 2:58	0.83	6/23/2022 4:40	34.38
6/24/2022 4:24	84.72	6/23/2022 3:41	0.52	6/23/2022 4:11	10.33	6/23/2022 2:59	0.82	6/23/2022 4:41	34.34
6/24/2022 4:25	84.66	6/23/2022 3:42	0.54	6/23/2022 4:12	10.32	6/23/2022 3:00	0.84	6/23/2022 4:42	34.38
6/24/2022 4:26	84.70	6/23/2022 3:43	0.56	6/23/2022 4:13	10.39	6/23/2022 3:01	0.82	6/23/2022 4:43	34.36
6/24/2022 4:27	84.68	6/23/2022 3:44	0.47	6/23/2022 4:14	10.39	6/23/2022 3:02	0.79	6/23/2022 4:44	34.39
6/24/2022 4:28	84.66	6/23/2022 3:45	0.54	6/23/2022 4:15	10.39	6/23/2022 3:03	0.81	6/23/2022 4:45	34.39
6/24/2022 4:29	84.71	6/23/2022 3:46	0.52	6/23/2022 4:16	10.38	6/23/2022 3:04	0.81	6/23/2022 4:46	34.38
6/24/2022 4:30	84.69	6/23/2022 3:47	0.53	6/23/2022 4:17	10.39	6/23/2022 3:05	0.82	6/23/2022 4:47	34.37
6/24/2022 4:31	84.70	6/23/2022 3:48	0.52	6/23/2022 4:18	10.37	6/23/2022 3:06	0.78	6/23/2022 4:48	34.36
6/24/2022 4:32	84.68	6/23/2022 3:49	0.55	6/23/2022 4:19	10.41	6/23/2022 3:07	0.80	6/23/2022 4:49	34.39
6/24/2022 4:33	84.63	6/23/2022 3:50	0.48	6/23/2022 4:20	10.39	6/23/2022 3:08	0.83	6/23/2022 4:50	34.41
6/24/2022 4:34	84.68	6/23/2022 3:51	5.25	6/23/2022 4:21	10.40	6/23/2022 3:09	0.84	6/23/2022 4:51	34.38
6/24/2022 4:35	84.73	6/23/2022 3:52	7.64	6/23/2022 4:22	10.40	6/23/2022 3:10	0.79	6/23/2022 4:52	34.38
6/24/2022 4:36	84.67	6/23/2022 3:53	6.44	6/23/2022 4:23	10.41	6/23/2022 3:11	0.80	6/23/2022 4:53	34.39
6/24/2022 4:37	84.70	6/23/2022 3:54	5.52	6/23/2022 4:24	10.39	6/23/2022 3:12	0.81	6/23/2022 4:54	34.39
6/24/2022 4:38	84.67	6/23/2022 3:55	4.75	6/23/2022 4:25	10.40	6/23/2022 3:13	0.80	6/23/2022 4:55	34.42
6/24/2022 4:39	84.66	6/23/2022 3:56	4.08	6/23/2022 4:26	10.36	6/23/2022 3:14	0.84	6/23/2022 4:56	34.36
6/24/2022 4:40	84.70	6/23/2022 3:57	3.60	6/23/2022 4:27	10.38	6/23/2022 3:15	0.82	6/23/2022 4:57	34.40
6/24/2022 4:41	84.64	6/23/2022 3:58	3.05	6/23/2022 4:28	10.34	6/23/2022 3:16	0.80	6/23/2022 4:58	34.40
6/24/2022 4:42	84.67	6/23/2022 3:59	2.73	6/23/2022 4:29	10.33	6/23/2022 3:17	0.84	6/23/2022 4:59	34.40
6/24/2022 4:43	84.63	6/23/2022 4:00	2.39	6/23/2022 4:30	10.35	6/23/2022 3:18	0.80	6/23/2022 5:00	34.39
6/24/2022 4:44	84.67	6/23/2022 4:01	2.12	6/23/2022 4:31	10.34	6/23/2022 3:19	0.85	6/23/2022 5:01	34.40
6/24/2022 4:45	84.66	6/23/2022 4:02	1.90	6/23/2022 4:32	10.35	6/23/2022 3:20	0.81	6/23/2022 5:02	34.39
6/24/2022 4:46	84.66	6/23/2022 4:03	1.77	6/23/2022 4:33	10.32	6/23/2022 3:21	0.80	6/23/2022 5:03	34.39
6/24/2022 4:47	84.64	6/23/2022 4:04	1.63	6/23/2022 4:34	10.35	6/23/2022 3:22	0.80	6/23/2022 5:04	34.40
6/24/2022 4:48	84.67	6/23/2022 4:05	1.52	6/23/2022 4:35	10.34	6/23/2022 3:23	0.81	6/23/2022 5:05	34.38
6/24/2022 4:49	84.64	6/23/2022 4:06	1.42	6/23/2022 4:36	10.35	6/23/2022 3:24	0.81	6/23/2022 5:06	34.41
6/24/2022 4:50	84.66	6/23/2022 4:07	1.35	6/23/2022 4:37	10.33	6/23/2022 3:25	0.81	6/23/2022 5:07	34.36
6/24/2022 4:51	84.64	6/23/2022 4:08	1.32	6/23/2022 4:38	10.33	6/23/2022 3:26	0.82	6/23/2022 5:08	34.37
6/24/2022 4:52	84.62	6/23/2022 4:09	1.25	6/23/2022 4:39	10.32	6/23/2022 3:27	0.81	6/23/2022 5:09	34.36
6/24/2022 4:53	84.65	6/23/2022 4:10	1.19	6/23/2022 4:40	10.31	6/23/2022 3:28	0.82	6/23/2022 5:10	34.40
6/24/2022 4:54	84.69	6/23/2022 4:11	1.14	6/23/2022 4:41	10.34	6/23/2022 3:29	0.83	6/23/2022 5:11	34.42
6/24/2022 4:55	84.66	6/23/2022 4:12	1.12	6/23/2022 4:42	10.31	6/23/2022 3:30	0.83	6/23/2022 5:12	34.39
6/24/2022 4:56	84.68	6/23/2022 4:13	1.03	6/23/2022 4:43	10.34	6/23/2022 3:31	0.84	6/23/2022 5:13	34.39
6/24/2022 4:57	84.65	6/23/2022 4:14	1.02	6/23/2022 4:44	10.30	6/23/2022 3:32	0.81	6/23/2022 5:14	34.42
6/24/2022 4:58	84.65	6/23/2022 4:15	1.07	6/23/2022 4:45	10.37	6/23/2022 3:33	0.82	6/23/2022 5:15	34.39
6/24/2022 4:59	84.64	6/23/2022 4:16	0.99	6/23/2022 4:46	10.38	6/23/2022 3:34	0.84	6/23/2022 5:16	34.36
6/24/2022 5:00	84.63	6/23/2022 4:17	1.02	6/23/2022 4:47	10.39	6/23/2022 3:35	0.83	6/23/2022 5:17	34.39
6/24/2022 5:01	84.63	6/23/2022 4:18	1.00	6/23/2022 4:48	10.38	6/23/2022 3:36	0.81	6/23/2022 5:18	34.38
6/24/2022 5:02	84.68	6/23/2022 4:19	1.01	6/23/2022 4:49	10.38	6/23/2022 3:37	0.81	6/23/2022 5:19	34.39
6/24/2022 5:03	84.63	6/23/2022 4:20	1.02	6/23/2022 4:50	10.43	6/23/2022 3:38	0.82	6/23/2022 5:20	34.41
6/24/2022 5:04	84.63	6/23/2022 4:21	1.02	6/23/2022 4:51	10.41	6/23/2022 3:39	0.85	6/23/2022 5:21	34.39
6/24/2022 5:05	84.64	6/23/2022 4:22	1.01	6/23/2022 4:52	10.37	6/23/2022 3:40	0.80	6/23/2022 5:22	34.39
6/24/2022 5:06	84.66	6/23/2022 4:23	1.02	6/23/2022 4:53	10.37	6/23/2022 3:41	0.79	6/23/2022 5:23	34.38
6/24/2022 5:07	84.68	6/23/2022 4:24	1.01	6/23/2022 4:54	10.35	6/23/2022 3:42	0.82	6/23/2022 5:24	34.38
6/24/2022 5:08	84.64	6/23/2022 4:25	1.02	6/23/2022 4:55	10.35	6/23/2022 3:43	0.81	6/23/2022 5:25	34.37
6/24/2022 5:09	84.66	6/23/2022 4:26	1.01	6/23/2022 4:56	10.37	6/23/2022 3:44	0.80	6/23/2022 5:26	34.39
6/24/2022 5:10	84.65	6/23/2022 4:27	1.02	6/23/2022 4:57	10.39	6/23/2022 3:45	0.82	6/23/2022 5:27	34.41
6/24/2022 5:11	84.63	6/23/2022 4:28	1.09	6/23/2022 4:58	10.38	6/23/2022 3:46	0.81	6/23/2022 5:28	34.41
6/24/2022 5:12	84.68	6/23/2022 4:29	1.10	6/23/2022 4:59	10.38	6/23/2022 3:47	0.79	6/23/2022 5:29	34.41
6/24/2022 5:13	84.64	6/23/2022 4:30	1.09	6/23/2022 5:00	10.36	6/23/2022 3:48	0.82	6/23/2022 5:30	34.42
6/24/2022 5:14	84.62	6/23/2022 4:31	1.06	6/23/2022 5:01	10.35	6/23/2022 3:49	0.82	6/23/2022 5:31	34.40
6/24/2022 5:15	84.66	6/23/2022 4:32	1.07	6/23/2022 5:02	10.36	6/23/2022 3:50	0.87	6/23/2022 5:32	34.40
6/24/2022 5:16	84.66	6/23/2022 4:33	1.08	6/23/2022 5:03	10.34	6/23/2022 3:51	0.82	6/23/2022 5:33	34.42
6/24/2022 5:17	84.61	6/23/2022 4:34	1.12	6/23/2022 5:04	10.35	6/23/2022 3:52	0.88	6/23/2022 5:34	34.39

6/24/2022 5:18	84.64	6/23/2022 4:35	1.10	6/23/2022 5:05	10.40	6/23/2022 3:53	0.84	6/23/2022 5:35	34.42
6/24/2022 5:19	84.63	6/23/2022 4:36	1.07	6/23/2022 5:06	10.40	6/23/2022 3:54	0.84	6/23/2022 5:36	34.39
6/24/2022 5:20	84.64	6/23/2022 4:37	1.10	6/23/2022 5:07	10.45	6/23/2022 3:55	0.88	6/23/2022 5:37	34.42
6/24/2022 5:21	84.61	6/23/2022 4:38	1.09	6/23/2022 5:08	10.52	6/23/2022 3:56	0.83	6/23/2022 5:38	34.41
6/24/2022 5:22	84.66	6/23/2022 4:39	1.08	6/23/2022 5:09	10.51	6/23/2022 3:57	0.82	6/23/2022 5:39	34.39
6/24/2022 5:23	84.65	6/23/2022 4:40	1.10	6/23/2022 5:10	10.51	6/23/2022 3:58	0.83	6/23/2022 5:40	34.42
6/24/2022 5:24	84.63	6/23/2022 4:41	1.15	6/23/2022 5:11	10.58	6/23/2022 3:59	0.82	6/23/2022 5:41	34.43
6/24/2022 5:25	84.63	6/23/2022 4:42	1.11	6/23/2022 5:12	10.63	6/23/2022 4:00	0.81	6/23/2022 5:42	34.44
6/24/2022 5:26	84.65	6/23/2022 4:43	1.16	6/23/2022 5:13	10.67	6/23/2022 4:01	0.84	6/23/2022 5:43	34.38
6/24/2022 5:27	84.62	6/23/2022 4:44	1.12	6/23/2022 5:14	10.70	6/23/2022 4:02	0.87	6/23/2022 5:44	34.38
6/24/2022 5:28	84.63	6/23/2022 4:45	1.11	6/23/2022 5:15	10.76	6/23/2022 4:03	0.85	6/23/2022 5:45	34.41
6/24/2022 5:29	84.60	6/23/2022 4:46	1.16	6/23/2022 5:16	10.75	6/23/2022 4:04	0.85	6/23/2022 5:46	34.43
6/24/2022 5:30	84.63	6/23/2022 4:47	1.19	6/23/2022 5:17	10.81	6/23/2022 4:05	0.83	6/23/2022 5:47	34.42
6/24/2022 5:31	84.65	6/23/2022 4:48	1.17	6/23/2022 5:18	10.82	6/23/2022 4:06	0.83	6/23/2022 5:48	34.39
6/24/2022 5:32	84.63	6/23/2022 4:49	1.17	6/23/2022 5:19	10.79	6/23/2022 4:07	0.88	6/23/2022 5:49	34.42
6/24/2022 5:33	84.61	6/23/2022 4:50	1.21	6/23/2022 5:20	10.82	6/23/2022 4:08	0.82	6/23/2022 5:50	34.42
6/24/2022 5:34	84.64	6/23/2022 4:51	1.20	6/23/2022 5:21	10.84	6/23/2022 4:09	0.86	6/23/2022 5:51	34.42
6/24/2022 5:35	84.65	6/23/2022 4:52	1.20	6/23/2022 5:22	10.81	6/23/2022 4:10	0.82	6/23/2022 5:52	34.41
6/24/2022 5:36	84.60	6/23/2022 4:53	1.60	6/23/2022 5:23	10.82	6/23/2022 4:11	0.81	6/23/2022 5:53	34.42
6/24/2022 5:37	84.62	6/23/2022 4:54	7.54	6/23/2022 5:24	10.77	6/23/2022 4:12	0.85	6/23/2022 5:54	34.42
6/24/2022 5:38	84.60	6/23/2022 4:55	7.91	6/23/2022 5:25	10.80	6/23/2022 4:13	0.86	6/23/2022 5:55	34.37
6/24/2022 5:39	84.64	6/23/2022 4:56	6.78	6/23/2022 5:26	10.77	6/23/2022 4:14	0.85	6/23/2022 5:56	34.40
6/24/2022 5:40	84.61	6/23/2022 4:57	5.87	6/23/2022 5:27	10.74	6/23/2022 4:15	0.83	6/23/2022 5:57	34.43
6/24/2022 5:41	84.58	6/23/2022 4:58	5.15	6/23/2022 5:28	10.73	6/23/2022 4:16	0.83	6/23/2022 5:58	34.42
6/24/2022 5:42	84.66	6/23/2022 4:59	4.56	6/23/2022 5:29	10.75	6/23/2022 4:17	0.82	6/23/2022 5:59	34.40
6/24/2022 5:43	84.61	6/23/2022 5:00	4.00	6/23/2022 5:30	10.71	6/23/2022 4:18	0.86	6/23/2022 6:00	34.44
6/24/2022 5:44	84.59	6/23/2022 5:01	3.63	6/23/2022 5:31	10.74	6/23/2022 4:19	0.83	6/23/2022 6:01	34.40
6/24/2022 5:45	84.62	6/23/2022 5:02	3.24	6/23/2022 5:32	10.72	6/23/2022 4:20	0.85	6/23/2022 6:02	34.42
6/24/2022 5:46	84.61	6/23/2022 5:03	2.92	6/23/2022 5:33	10.74	6/23/2022 4:21	0.85	6/23/2022 6:03	34.43
6/24/2022 5:47	84.61	6/23/2022 5:04	2.65	6/23/2022 5:34	10.77	6/23/2022 4:22	0.84	6/23/2022 6:04	34.41
6/24/2022 5:48	84.62	6/23/2022 5:05	2.45	6/23/2022 5:35	10.72	6/23/2022 4:23	0.87	6/23/2022 6:05	34.40
6/24/2022 5:49	84.63	6/23/2022 5:06	2.29	6/23/2022 5:36	10.77	6/23/2022 4:24	0.82	6/23/2022 6:06	34.36
6/24/2022 5:50	84.60	6/23/2022 5:07	2.15	6/23/2022 5:37	10.78	6/23/2022 4:25	0.85	6/23/2022 6:07	34.43
6/24/2022 5:51	84.63	6/23/2022 5:08	2.01	6/23/2022 5:38	10.78	6/23/2022 4:26	0.85	6/23/2022 6:08	34.42
6/24/2022 5:52	84.64	6/23/2022 5:09	1.89	6/23/2022 5:39	10.77	6/23/2022 4:27	0.85	6/23/2022 6:09	34.45
6/24/2022 5:53	84.61	6/23/2022 5:10	1.80	6/23/2022 5:40	10.75	6/23/2022 4:28	0.86	6/23/2022 6:10	34.43
6/24/2022 5:54	84.63	6/23/2022 5:11	1.74	6/23/2022 5:41	10.75	6/23/2022 4:29	0.87	6/23/2022 6:11	34.44
6/24/2022 5:55	84.65	6/23/2022 5:12	1.68	6/23/2022 5:42	10.74	6/23/2022 4:30	0.85	6/23/2022 6:12	34.44
6/24/2022 5:56	84.65	6/23/2022 5:13	1.63	6/23/2022 5:43	10.72	6/23/2022 4:31	0.83	6/23/2022 6:13	34.42
6/24/2022 5:57	84.62	6/23/2022 5:14	1.60	6/23/2022 5:44	10.73	6/23/2022 4:32	0.83	6/23/2022 6:14	34.44
6/24/2022 5:58	84.63	6/23/2022 5:15	1.49	6/23/2022 5:45	10.70	6/23/2022 4:33	0.78	6/23/2022 6:15	34.42
6/24/2022 5:59	84.61	6/23/2022 5:16	1.47	6/23/2022 5:46	10.69	6/23/2022 4:34	0.83	6/23/2022 6:16	34.45
6/24/2022 6:00	84.57	6/23/2022 5:17	1.40	6/23/2022 5:47	10.66	6/23/2022 4:35	0.87	6/23/2022 6:17	34.42
6/24/2022 6:01	84.60	6/23/2022 5:18	1.39	6/23/2022 5:48	10.64	6/23/2022 4:36	0.87	6/23/2022 6:18	34.45
6/24/2022 6:02	84.60	6/23/2022 5:19	1.39	6/23/2022 5:49	10.64	6/23/2022 4:37	0.86	6/23/2022 6:19	34.43
6/24/2022 6:03	84.59	6/23/2022 5:20	1.36	6/23/2022 5:50	10.61	6/23/2022 4:38	0.87	6/23/2022 6:20	34.43
6/24/2022 6:04	84.62	6/23/2022 5:21	1.38	6/23/2022 5:51	10.56	6/23/2022 4:39	0.83	6/23/2022 6:21	34.42
6/24/2022 6:05	84.62	6/23/2022 5:22	1.38	6/23/2022 5:52	10.62	6/23/2022 4:40	0.87	6/23/2022 6:22	34.46
6/24/2022 6:06	84.58	6/23/2022 5:23	1.30	6/23/2022 5:53	10.61	6/23/2022 4:41	0.87	6/23/2022 6:23	34.42
6/24/2022 6:07	84.59	6/23/2022 5:24	1.29	6/23/2022 5:54	10.59	6/23/2022 4:42	0.87	6/23/2022 6:24	34.46
6/24/2022 6:08	84.60	6/23/2022 5:25	1.29	6/23/2022 5:55	10.60	6/23/2022 4:43	0.83	6/23/2022 6:25	34.42
6/24/2022 6:09	84.60	6/23/2022 5:26	1.31	6/23/2022 5:56	10.59	6/23/2022 4:44	0.85	6/23/2022 6:26	34.44
6/24/2022 6:10	84.63	6/23/2022 5:27	1.28	6/23/2022 5:57	10.54	6/23/2022 4:45	0.86	6/23/2022 6:27	34.46
6/24/2022 6:11	84.63	6/23/2022 5:28	1.26	6/23/2022 5:58	10.59	6/23/2022 4:46	0.85	6/23/2022 6:28	34.47
6/24/2022 6:12	84.62	6/23/2022 5:29	1.28	6/23/2022 5:59	10.59	6/23/2022 4:47	0.87	6/23/2022 6:29	34.46
6/24/2022 6:13	84.60	6/23/2022 5:30	1.24	6/23/2022 6:00	10.60	6/23/2022 4:48	0.88	6/23/2022 6:30	34.42
6/24/2022 6:14	84.58	6/23/2022 5:31	1.25	6/23/2022 6:01	10.59	6/23/2022 4:49	0.88	6/23/2022 6:31	34.48
6/24/2022 6:15	84.59	6/23/2022 5:32	1.23	6/23/2022 6:02	10.54	6/23/2022 4:50	0.87	6/23/2022 6:32	34.43
6/24/2022 6:16	84.63	6/23/2022 5:33	1.20	6/23/2022 6:03	10.63	6/23/2022 4:51	0.85	6/23/2022 6:33	34.43
6/24/2022 6:17	84.56	6/23/2022 5:34	1.20	6/23/2022 6:04	10.59	6/23/2022 4:52	0.85	6/23/2022 6:34	34.41
6/24/2022 6:18	84.62	6/23/2022 5:35	1.23	6/23/2022 6:05	10.61	6/23/2022 4:53	0.89	6/23/2022 6:35	34.44
6/24/2022 6:19	84.60	6/23/2022 5:36	1.19	6/23/2022 6:06	10.62	6/23/2022 4:54	0.89	6/23/2022 6:36	34.43
6/24/2022 6:20	84.63	6/23/2022 5:37	1.22	6/23/2022 6:07	10.60	6/23/2022 4:55	0.90	6/23/2022 6:37	34.45
6/24/2022 6:21	84.60	6/23/2022 5:38	1.27	6/23/2022 6:08	10.62	6/23/2022 4:56	0.92	6/23/2022 6:38	34.45
6/24/2022 6:22	84.63	6/23/2022 5:39	1.19	6/23/2022 6:09	10.61	6/23/2022 4:57	0.87	6/23/2022 6:39	34.45
6/24/2022 6:23	84.62	6/23/2022 5:40	1.24	6/23/2022 6:10	10.61	6/23/2022 4:58	0.87	6/23/2022 6:40	34.43
6/24/2022 6:24	84.58	6/23/2022 5:41	1.22	6/23/2022 6:11	10.60	6/23/2022 4:59	0.88	6/23/2022 6:41	34.43
6/24/2022 6:25	84.60	6/23/2022 5:42	1.20	6/23/2022 6:12	10.60	6/23/2022 5:00	0.85	6/23/2022 6:42	34.44
6/24/2022 6:26	84.59	6/23/2022 5:43	1.23	6/23/2022 6:13	10.60	6/23/2022 5:01	0.87	6/23/2022 6:43	34.44
6/24/2022 6:27	84.57	6/23/2022 5:44	1.25	6/23/2022 6:14	10.56	6/23/2022 5:02	0.84	6/23/2022 6:44	34.46
6/24/2022 6:28	84.62	6/23/2022 5:45	1.24	6/23/2022 6:15	10.59	6/23/2022 5:03	0.87	6/23/2022 6:45	34.42
6/24/2022 6:29	84.58	6/23/2022 5:46	1.22	6/23/2022 6:16	10.59	6/23/2022 5:04	0.85	6/23/2022 6:46	34.47
6/24/2022 6:30	84.59	6/23/2022 5:47	1.22	6/23/2022 6:17	10.61	6/23/2022 5:05	0.88	6/23/2022 6:47	34.46
6/24/2022 6:31	84.57	6/23/2022 5:48	1.25	6/23/2022 6:18	10.64	6/23/2022 5:06	0.83	6/23/2022 6:48	34.44
6/24/2022 6:32	84.60	6/23/2022 5:49	1.23	6/23/2022 6:19	10.63	6/23/2022 5:07	0.87	6/23/2022 6:49	34.44
6/24/2022 6:33	84.60	6/23/2022 5:50	1.24	6/23/2022 6:20	10.65	6/23/2022 5:08	0.84	6/23/2022 6:50	34.43
6/24/2022 6:34	84.60	6/23/2022 5:51	1.24	6/23/2022 6:21	10.65	6/23/2022 5:09	0.81	6/23/2022 6:51	34.44
6/24/2022 6:35	84.62	6/23/2022 5:52	1.21	6/23/2022 6:22	10.63	6/23/2022 5:10	0.87	6/23/2022 6:52	34.47
6/24/2022 6:36	84.58	6/23/2022 5:53	1.25	6/23/2022 6:23	10.61	6/23/2022 5:11	0.89	6/23/2022 6:53	34.40
6/24/2022 6:37	84.57	6/23/2022 5:54	1.25	6/23/2022 6:24	10.62	6/23/2022 5:12	0.85	6/23/2022 6:54	34.45
6/24/2022 6:38	84.59	6/23/2022 5:55	1.31	6/23/2022 6:25	10.64	6/23/2022 5:13	0.87	6/23/2022 6:55	34.45
6/24/2022 6:39	84.55	6/23/2022 5:56	5.17	6/23/2022 6:26	10.60	6/23/2022 5:14	0.86	6/23/2022 6:56	34.44
6/24/2022 6:40	84.62	6/23/2022 5:57	8.53	6/23/2022 6:27	10.61	6/23/2022 5:15	0.85	6/23/2022 6:57	34.43
6/24/2022 6:41	84.61	6/23/2022 5:58	7.29	6/23/2022 6:28	10.63	6/23/2022 5:16	0.85	6/23/2022 6:58	34.44
6/24/2022 6:42	84.59	6/23/2022 5:59	6.27	6/23/2022 6:29	10.61	6/23/2022 5:17	0.86	6/23/2022 6:59	34.44
6/24/2022 6:43	84.58	6/23/2022 6:00	5.47	6/23/2022 6:30	10.62	6/23/2022 5:18	0.85	6/23/2022 7:00	34.46
6/24/2022 6:44	84.59	6/23/2022 6:01	4.81	6/23/2022 6:31	10.64	6/23/2022 5:19	0.85	6/23/2022 7:01	34.41
6/24/2022 6:45	84.57	6/23/2022 6:02	4.27	6/23/2022 6:32	10.62	6/23/2022 5:20	0.87	6/23/2022 7:02	36.19

6/24/2022 6:46	84.61	6/23/2022 6:03	3.82	6/23/2022 6:33	10.66	6/23/2022 5:21	0.85	6/23/2022 7:03	37.41
6/24/2022 6:47	84.56	6/23/2022 6:04	3.43	6/23/2022 6:34	10.65	6/23/2022 5:22	0.85	6/23/2022 7:04	36.33
6/24/2022 6:48	84.61	6/23/2022 6:05	3.14	6/23/2022 6:35	10.70	6/23/2022 5:23	0.84	6/23/2022 7:05	36.93
6/24/2022 6:49	84.61	6/23/2022 6:06	2.85	6/23/2022 6:36	10.68	6/23/2022 5:24	0.83	6/23/2022 7:06	38.02
6/24/2022 6:50	84.60	6/23/2022 6:07	2.69	6/23/2022 6:37	10.72	6/23/2022 5:25	0.83	6/23/2022 7:07	37.16
6/24/2022 6:51	84.57	6/23/2022 6:08	2.46	6/23/2022 6:38	10.71	6/23/2022 5:26	0.87	6/23/2022 7:08	36.99
6/24/2022 6:52	84.56	6/23/2022 6:09	2.30	6/23/2022 6:39	10.70	6/23/2022 5:27	0.83	6/23/2022 7:09	37.93
6/24/2022 6:53	84.60	6/23/2022 6:10	2.19	6/23/2022 6:40	10.67	6/23/2022 5:28	0.83	6/23/2022 7:10	37.61
6/24/2022 6:54	84.60	6/23/2022 6:11	2.07	6/23/2022 6:41	10.75	6/23/2022 5:29	0.81	6/23/2022 7:11	36.87
6/24/2022 6:55	84.60	6/23/2022 6:12	1.97	6/23/2022 6:42	10.75	6/23/2022 5:30	0.83	6/23/2022 7:12	37.81
6/24/2022 6:56	84.60	6/23/2022 6:13	1.90	6/23/2022 6:43	10.76	6/23/2022 5:31	0.86	6/23/2022 7:13	38.05
6/24/2022 6:57	84.61	6/23/2022 6:14	1.81	6/23/2022 6:44	10.81	6/23/2022 5:32	0.86	6/23/2022 7:14	36.77
6/24/2022 6:58	84.60	6/23/2022 6:15	1.83	6/23/2022 6:45	10.78	6/23/2022 5:33	0.83	6/23/2022 7:15	37.61
6/24/2022 6:59	84.62	6/23/2022 6:16	1.78	6/23/2022 6:46	10.79	6/23/2022 5:34	0.84	6/23/2022 7:16	38.37
6/24/2022 7:00	84.60	6/23/2022 6:17	1.72	6/23/2022 6:47	10.77	6/23/2022 5:35	0.85	6/23/2022 7:17	36.91
6/24/2022 7:01	84.63	6/23/2022 6:18	1.65	6/23/2022 6:48	10.76	6/23/2022 5:36	0.85	6/23/2022 7:18	37.49
6/24/2022 7:02	84.56	6/23/2022 6:19	1.63	6/23/2022 6:49	10.74	6/23/2022 5:37	0.83	6/23/2022 7:19	38.42
6/24/2022 7:03	84.56	6/23/2022 6:20	1.65	6/23/2022 6:50	10.74	6/23/2022 5:38	0.82	6/23/2022 7:20	37.42
6/24/2022 7:04	84.58	6/23/2022 6:21	1.55	6/23/2022 6:51	10.79	6/23/2022 5:39	0.78	6/23/2022 7:21	37.30
6/24/2022 7:05	84.59	6/23/2022 6:22	1.61	6/23/2022 6:52	10.77	6/23/2022 5:40	0.83	6/23/2022 7:22	38.19
6/24/2022 7:06	84.57	6/23/2022 6:23	1.56	6/23/2022 6:53	10.77	6/23/2022 5:41	0.84	6/23/2022 7:23	37.06
6/24/2022 7:07	84.62	6/23/2022 6:24	1.54	6/23/2022 6:54	10.77	6/23/2022 5:42	0.85	6/23/2022 7:24	37.24
6/24/2022 7:08	84.59	6/23/2022 6:25	1.51	6/23/2022 6:55	10.77	6/23/2022 5:43	0.83	6/23/2022 7:25	38.30
6/24/2022 7:09	84.58	6/23/2022 6:26	1.64	6/23/2022 6:56	10.76	6/23/2022 5:44	0.86	6/23/2022 7:26	36.53
6/24/2022 7:10	84.60	6/23/2022 6:27	1.68	6/23/2022 6:57	10.73	6/23/2022 5:45	0.83	6/23/2022 7:27	37.50
6/24/2022 7:11	84.56	6/23/2022 6:28	1.81	6/23/2022 6:58	10.71	6/23/2022 5:46	0.86	6/23/2022 7:28	37.67
6/24/2022 7:12	84.59	6/23/2022 6:29	1.83	6/23/2022 6:59	10.76	6/23/2022 5:47	0.85	6/23/2022 7:29	36.84
6/24/2022 7:13	84.56	6/23/2022 6:30	1.86	6/23/2022 7:00	10.70	6/23/2022 5:48	0.87	6/23/2022 7:30	37.94
6/24/2022 7:14	84.54	6/23/2022 6:31	1.81	6/23/2022 7:01	10.71	6/23/2022 5:49	0.83	6/23/2022 7:31	36.90
6/24/2022 7:15	84.61	6/23/2022 6:32	1.83	6/23/2022 7:02	10.68	6/23/2022 5:50	0.82	6/23/2022 7:32	37.20
6/24/2022 7:16	84.62	6/23/2022 6:33	1.74	6/23/2022 7:03	10.69	6/23/2022 5:51	0.88	6/23/2022 7:33	38.25
6/24/2022 7:17	84.58	6/23/2022 6:34	1.65	6/23/2022 7:04	10.70	6/23/2022 5:52	0.86	6/23/2022 7:34	36.60
6/24/2022 7:18	84.59	6/23/2022 6:35	1.67	6/23/2022 7:05	10.63	6/23/2022 5:53	0.87	6/23/2022 7:35	37.62
6/24/2022 7:19	84.58	6/23/2022 6:36	1.58	6/23/2022 7:06	10.61	6/23/2022 5:54	0.83	6/23/2022 7:36	37.59
6/24/2022 7:20	84.57	6/23/2022 6:37	1.60	6/23/2022 7:07	10.61	6/23/2022 5:55	0.85	6/23/2022 7:37	36.90
6/24/2022 7:21	84.58	6/23/2022 6:38	1.55	6/23/2022 7:08	10.61	6/23/2022 5:56	0.88	6/23/2022 7:38	38.05
6/24/2022 7:22	84.58	6/23/2022 6:39	1.57	6/23/2022 7:09	10.61	6/23/2022 5:57	0.84	6/23/2022 7:39	36.82
6/24/2022 7:23	84.56	6/23/2022 6:40	1.51	6/23/2022 7:10	10.59	6/23/2022 5:58	0.86	6/23/2022 7:40	37.29
6/24/2022 7:24	84.56	6/23/2022 6:41	1.49	6/23/2022 7:11	10.55	6/23/2022 5:59	0.87	6/23/2022 7:41	38.23
6/24/2022 7:25	84.58	6/23/2022 6:42	6.75	6/23/2022 7:12	10.59	6/23/2022 6:00	0.84	6/23/2022 7:42	39.99
6/24/2022 7:26	84.58	6/23/2022 6:43	10.70	6/23/2022 7:13	10.55	6/23/2022 6:01	0.87	6/23/2022 7:43	41.13
6/24/2022 7:27	84.60	6/23/2022 6:44	9.17	6/23/2022 7:14	10.58	6/23/2022 6:02	0.84	6/23/2022 7:44	41.89
6/24/2022 7:28	84.59	6/23/2022 6:45	7.85	6/23/2022 7:15	10.57	6/23/2022 6:03	0.86	6/23/2022 7:45	42.46
6/24/2022 7:29	84.60	6/23/2022 6:46	6.74	6/23/2022 7:16	10.61	6/23/2022 6:04	0.88	6/23/2022 7:46	42.78
6/24/2022 7:30	84.56	6/23/2022 6:47	7.39	6/23/2022 7:17	10.62	6/23/2022 6:05	0.83	6/23/2022 7:47	43.10
6/24/2022 7:31	84.60	6/23/2022 6:48	12.35	6/23/2022 7:18	10.59	6/23/2022 6:06	0.84	6/23/2022 7:48	43.35
6/24/2022 7:32	84.55	6/23/2022 6:49	13.43	6/23/2022 7:19	10.62	6/23/2022 6:07	0.86	6/23/2022 7:49	43.64
6/24/2022 7:33	84.60	6/23/2022 6:50	11.56	6/23/2022 7:20	10.65	6/23/2022 6:08	0.84	6/23/2022 7:50	43.90
6/24/2022 7:34	84.57	6/23/2022 6:51	9.97	6/23/2022 7:21	10.58	6/23/2022 6:09	0.87	6/23/2022 7:51	44.07
6/24/2022 7:35	84.57	6/23/2022 6:52	8.52	6/23/2022 7:22	10.62	6/23/2022 6:10	0.86	6/23/2022 7:52	44.22
6/24/2022 7:36	84.55	6/23/2022 6:53	7.33	6/23/2022 7:23	10.62	6/23/2022 6:11	0.86	6/23/2022 7:53	44.27
6/24/2022 7:37	84.55	6/23/2022 6:54	6.44	6/23/2022 7:24	10.61	6/23/2022 6:12	0.85	6/23/2022 7:54	44.39
6/24/2022 7:38	84.59	6/23/2022 6:55	5.62	6/23/2022 7:25	10.62	6/23/2022 6:13	0.83	6/23/2022 7:55	44.49
6/24/2022 7:39	84.54	6/23/2022 6:56	4.99	6/23/2022 7:26	10.59	6/23/2022 6:14	0.85	6/23/2022 7:56	44.61
6/24/2022 7:40	84.57	6/23/2022 6:57	4.41	6/23/2022 7:27	10.57	6/23/2022 6:15	0.85	6/23/2022 7:57	44.70
6/24/2022 7:41	84.61	6/23/2022 6:58	3.96	6/23/2022 7:28	10.57	6/23/2022 6:16	0.84	6/23/2022 7:58	44.79
6/24/2022 7:42	84.60	6/23/2022 6:59	3.51	6/23/2022 7:29	10.53	6/23/2022 6:17	0.82	6/23/2022 7:59	44.86
6/24/2022 7:43	84.55	6/23/2022 7:00	3.17	6/23/2022 7:30	10.57	6/23/2022 6:18	0.81	6/23/2022 8:00	44.98
6/24/2022 7:44	84.58	6/23/2022 7:01	2.82	6/23/2022 7:31	10.60	6/23/2022 6:19	0.82	6/23/2022 8:01	45.03
6/24/2022 7:45	84.57	6/23/2022 7:02	2.58	6/23/2022 7:32	10.56	6/23/2022 6:20	0.85	6/23/2022 8:02	43.64
6/24/2022 7:46	84.55	6/23/2022 7:03	2.37	6/23/2022 7:33	10.58	6/23/2022 6:21	0.82	6/23/2022 8:03	41.85
6/24/2022 7:47	84.57	6/23/2022 7:04	2.16	6/23/2022 7:34	10.56	6/23/2022 6:22	0.82	6/23/2022 8:04	40.72
6/24/2022 7:48	84.54	6/23/2022 7:05	2.03	6/23/2022 7:35	10.60	6/23/2022 6:23	0.85	6/23/2022 8:05	40.39
6/24/2022 7:49	84.56	6/23/2022 7:06	1.84	6/23/2022 7:36	10.60	6/23/2022 6:24	0.80	6/23/2022 8:06	40.23
6/24/2022 7:50	84.56	6/23/2022 7:07	1.74	6/23/2022 7:37	10.59	6/23/2022 6:25	0.86	6/23/2022 8:07	40.38
6/24/2022 7:51	84.62	6/23/2022 7:08	1.65	6/23/2022 7:38	10.58	6/23/2022 6:26	7.38	6/23/2022 8:08	40.33
6/24/2022 7:52	84.61	6/23/2022 7:09	1.53	6/23/2022 7:39	10.56	6/23/2022 6:27	8.47	6/23/2022 8:09	38.30
6/24/2022 7:53	84.57	6/23/2022 7:10	1.43	6/23/2022 7:40	10.55	6/23/2022 6:28	6.13	6/23/2022 8:10	38.86
6/24/2022 7:54	84.58	6/23/2022 7:11	1.40	6/23/2022 7:41	10.56	6/23/2022 6:29	4.44	6/23/2022 8:11	38.69
6/24/2022 7:55	84.56	6/23/2022 7:12	1.32	6/23/2022 7:42	10.55	6/23/2022 6:30	3.07	6/23/2022 8:12	37.73
6/24/2022 7:56	84.60	6/23/2022 7:13	1.25	6/23/2022 7:43	10.54	6/23/2022 6:31	2.14	6/23/2022 8:13	38.71
6/24/2022 7:57	84.58	6/23/2022 7:14	1.23	6/23/2022 7:44	10.51	6/23/2022 6:32	1.41	6/23/2022 8:14	37.56
6/24/2022 7:58	84.57	6/23/2022 7:15	1.20	6/23/2022 7:45	10.52	6/23/2022 6:33	0.91	6/23/2022 8:15	37.84
6/24/2022 7:59	84.53	6/23/2022 7:16	6.17	6/23/2022 7:46	10.53	6/23/2022 6:34	0.90	6/23/2022 8:16	38.84
6/24/2022 8:00	84.57	6/23/2022 7:17	9.60	6/23/2022 7:47	10.52	6/23/2022 6:35	0.89	6/23/2022 8:17	37.90
6/24/2022 8:01	84.54	6/23/2022 7:18	8.14	6/23/2022 7:48	10.52	6/23/2022 6:36	0.89	6/23/2022 8:18	37.88
6/24/2022 8:02	84.61	6/23/2022 7:19	6.96	6/23/2022 7:49	10.56	6/23/2022 6:37	0.87	6/23/2022 8:19	39.04
6/24/2022 8:03	84.57	6/23/2022 7:20	5.97	6/23/2022 7:50	10.58	6/23/2022 6:38	0.90	6/23/2022 8:20	39.23
6/24/2022 8:04	84.57	6/23/2022 7:21	5.20	6/23/2022 7:51	10.61	6/23/2022 6:39	0.89	6/23/2022 8:21	37.86
6/24/2022 8:05	84.57	6/23/2022 7:22	4.53	6/23/2022 7:52	10.58	6/23/2022 6:40	0.89	6/23/2022 8:22	36.55
6/24/2022 8:06	84.57	6/23/2022 7:23	4.77	6/23/2022 7:53	10.56	6/23/2022 6:41	0.91	6/23/2022 8:23	35.88
6/24/2022 8:07	84.58	6/23/2022 7:24	10.11	6/23/2022 7:54	10.58	6/23/2022 6:42	0.92	6/23/2022 8:24	35.56
6/24/2022 8:08	84.55	6/23/2022 7:25	10.49	6/23/2022 7:55	10.61	6/23/2022 6:43	0.91	6/23/2022 8:25	35.49
6/24/2022 8:09	84.60	6/23/2022 7:26	8.97	6/23/2022 7:56	10.59	6/23/2022 6:44	0.89	6/23/2022 8:26	35.38
6/24/2022 8:10	84.56	6/23/2022 7:27	7.68	6/23/2022 7:57	10.56	6/23/2022 6:45	0.92	6/23/2022 8:27	35.35
6/24/2022 8:11	84.59	6/23/2022 7:28	6.56	6/23/2022 7:58	10.54	6/23/2022 6:46	0.90	6/23/2022 8:28	35.35
6/24/2022 8:12	84.55	6/23/2022 7:29	5.70	6/23/2022 7:59	10.54	6/23/2022 6:47	0.91	6/23/2022 8:29	35.30
6/24/2022 8:13	84.55	6/23/2022 7:30	4.96	6/23/2022 8:00	10.56	6/23/2022 6:48	0.89	6/23/2022 8:30	35.28

6/24/2022 8:14	84.56	6/23/2022 7:31	4.36	6/23/2022 8:01	10.51	6/23/2022 6:49	0.91	6/23/2022 8:31	35.28
6/24/2022 8:15	84.59	6/23/2022 7:32	3.82	6/23/2022 8:02	10.52	6/23/2022 6:50	0.94	6/23/2022 8:32	35.25
6/24/2022 8:16	84.56	6/23/2022 7:33	3.39	6/23/2022 8:03	10.48	6/23/2022 6:51	0.89	6/23/2022 8:33	35.24
6/24/2022 8:17	84.59	6/23/2022 7:34	3.00	6/23/2022 8:04	10.50	6/23/2022 6:52	0.89	6/23/2022 8:34	35.21
6/24/2022 8:18	84.56	6/23/2022 7:35	2.68	6/23/2022 8:05	10.48	6/23/2022 6:53	0.91	6/23/2022 8:35	35.19
6/24/2022 8:19	84.60	6/23/2022 7:36	2.40	6/23/2022 8:06	10.46	6/23/2022 6:54	0.95	6/23/2022 8:36	35.18
6/24/2022 8:20	84.56	6/23/2022 7:37	2.23	6/23/2022 8:07	10.46	6/23/2022 6:55	0.93	6/23/2022 8:37	35.17
6/24/2022 8:21	84.58	6/23/2022 7:38	2.01	6/23/2022 8:08	10.48	6/23/2022 6:56	0.88	6/23/2022 8:38	35.18
6/24/2022 8:22	84.61	6/23/2022 7:39	1.87	6/23/2022 8:09	10.48	6/23/2022 6:57	0.91	6/23/2022 8:39	35.18
6/24/2022 8:23	84.56	6/23/2022 7:40	1.69	6/23/2022 8:10	10.50	6/23/2022 6:58	0.91	6/23/2022 8:40	35.14
6/24/2022 8:24	84.60	6/23/2022 7:41	1.56	6/23/2022 8:11	10.55	6/23/2022 6:59	0.93	6/23/2022 8:41	35.12
6/24/2022 8:25	84.58	6/23/2022 7:42	1.52	6/23/2022 8:12	10.55	6/23/2022 7:00	0.89	6/23/2022 8:42	35.12
6/24/2022 8:26	84.57	6/23/2022 7:43	1.39	6/23/2022 8:13	10.55	6/23/2022 7:01	0.87	6/23/2022 8:43	35.12
6/24/2022 8:27	84.56	6/23/2022 7:44	1.35	6/23/2022 8:14	10.51	6/23/2022 7:02	0.89	6/23/2022 8:44	35.10
6/24/2022 8:28	84.55	6/23/2022 7:45	1.25	6/23/2022 8:15	10.54	6/23/2022 7:03	0.91	6/23/2022 8:45	35.14
6/24/2022 8:29	84.56	6/23/2022 7:46	1.17	6/23/2022 8:16	10.56	6/23/2022 7:04	0.88	6/23/2022 8:46	35.16
6/24/2022 8:30	84.57	6/23/2022 7:47	1.19	6/23/2022 8:17	10.57	6/23/2022 7:05	0.89	6/23/2022 8:47	35.18
6/24/2022 8:31	84.53	6/23/2022 7:48	1.12	6/23/2022 8:18	10.57	6/23/2022 7:06	0.93	6/23/2022 8:48	35.13
6/24/2022 8:32	84.57	6/23/2022 7:49	1.08	6/23/2022 8:19	10.56	6/23/2022 7:07	0.91	6/23/2022 8:49	35.11
6/24/2022 8:33	84.54	6/23/2022 7:50	1.02	6/23/2022 8:20	10.54	6/23/2022 7:08	0.88	6/23/2022 8:50	35.11
6/24/2022 8:34	84.56	6/23/2022 7:51	1.02	6/23/2022 8:21	10.54	6/23/2022 7:09	0.89	6/23/2022 8:51	35.07
6/24/2022 8:35	84.59	6/23/2022 7:52	0.96	6/23/2022 8:22	10.50	6/23/2022 7:10	0.86	6/23/2022 8:52	35.09
6/24/2022 8:36	84.56	6/23/2022 7:53	0.97	6/23/2022 8:23	10.51	6/23/2022 7:11	0.89	6/23/2022 8:53	35.05
6/24/2022 8:37	84.57	6/23/2022 7:54	0.91	6/23/2022 8:24	10.52	6/23/2022 7:12	0.92	6/23/2022 8:54	35.07
6/24/2022 8:38	84.60	6/23/2022 7:55	0.90	6/23/2022 8:25	10.51	6/23/2022 7:13	0.91	6/23/2022 8:55	35.07
6/24/2022 8:39	84.55	6/23/2022 7:56	0.90	6/23/2022 8:26	10.51	6/23/2022 7:14	0.89	6/23/2022 8:56	35.03
6/24/2022 8:40	84.55	6/23/2022 7:57	0.85	6/23/2022 8:27	10.47	6/23/2022 7:15	0.91	6/23/2022 8:57	35.04
6/24/2022 8:41	84.58	6/23/2022 7:58	0.88	6/23/2022 8:28	10.50	6/23/2022 7:16	0.90	6/23/2022 8:58	35.03
6/24/2022 8:42	84.57	6/23/2022 7:59	0.82	6/23/2022 8:29	10.46	6/23/2022 7:17	0.93	6/23/2022 8:59	35.00
6/24/2022 8:43	84.55	6/23/2022 8:00	0.82	6/23/2022 8:30	10.48	6/23/2022 7:18	0.89	6/23/2022 9:00	35.03
6/24/2022 8:44	84.54	6/23/2022 8:01	0.81	6/23/2022 8:31	10.48	6/23/2022 7:19	0.89	6/23/2022 9:01	35.00
6/24/2022 8:45	84.55	6/23/2022 8:02	0.82	6/23/2022 8:32	10.46	6/23/2022 7:20	0.84	6/23/2022 9:02	37.18
6/24/2022 8:46	84.56	6/23/2022 8:03	0.82	6/23/2022 8:33	10.43	6/23/2022 7:21	0.91	6/23/2022 9:03	36.09
6/24/2022 8:47	84.53	6/23/2022 8:04	0.82	6/23/2022 8:34	13.14	6/23/2022 7:22	0.92	6/23/2022 9:04	35.36
6/24/2022 8:48	84.58	6/23/2022 8:05	0.77	6/23/2022 8:35	17.28	6/23/2022 7:23	0.89	6/23/2022 9:05	35.16
6/24/2022 8:49	84.59	6/23/2022 8:06	0.79	6/23/2022 8:36	17.91	6/23/2022 7:24	0.91	6/23/2022 9:06	35.05
6/24/2022 8:50	84.55	6/23/2022 8:07	0.80	6/23/2022 8:37	17.03	6/23/2022 7:25	0.89	6/23/2022 9:07	35.03
6/24/2022 8:51	84.57	6/23/2022 8:08	0.82	6/23/2022 8:38	19.51	6/23/2022 7:26	0.86	6/23/2022 9:08	34.99
6/24/2022 8:52	84.55	6/23/2022 8:09	0.80	6/23/2022 8:39	23.02	6/23/2022 7:27	0.88	6/23/2022 9:09	35.01
6/24/2022 8:53	84.52	6/23/2022 8:10	0.80	6/23/2022 8:40	22.96	6/23/2022 7:28	0.92	6/23/2022 9:10	35.00
6/24/2022 8:54	84.51	6/23/2022 8:11	0.76	6/23/2022 8:41	21.69	6/23/2022 7:29	0.89	6/23/2022 9:11	34.99
6/24/2022 8:55	84.54	6/23/2022 8:12	0.82	6/23/2022 8:42	24.10	6/23/2022 7:30	0.89	6/23/2022 9:12	34.98
6/24/2022 8:56	84.57	6/23/2022 8:13	0.79	6/23/2022 8:43	26.68	6/23/2022 7:31	0.89	6/23/2022 9:13	34.98
6/24/2022 8:57	84.52	6/23/2022 8:14	0.80	6/23/2022 8:44	25.06	6/23/2022 7:32	0.90	6/23/2022 9:14	34.96
6/24/2022 8:58	84.56	6/23/2022 8:15	0.77	6/23/2022 8:45	23.62	6/23/2022 7:33	0.89	6/23/2022 9:15	34.94
6/24/2022 8:59	84.53	6/23/2022 8:16	0.77	6/23/2022 8:46	22.38	6/23/2022 7:34	0.92	6/23/2022 9:16	34.95
6/24/2022 9:00	84.57	6/23/2022 8:17	0.78	6/23/2022 8:47	21.28	6/23/2022 7:35	0.87	6/23/2022 9:17	34.96
6/24/2022 9:01	84.54	6/23/2022 8:18	0.77	6/23/2022 8:48	20.31	6/23/2022 7:36	0.84	6/23/2022 9:18	34.96
6/24/2022 9:02	84.57	6/23/2022 8:19	5.38	6/23/2022 8:49	19.38	6/23/2022 7:37	0.83	6/23/2022 9:19	34.96
6/24/2022 9:03	84.57	6/23/2022 8:20	7.89	6/23/2022 8:50	18.59	6/23/2022 7:38	0.85	6/23/2022 9:20	34.92
6/24/2022 9:04	84.56	6/23/2022 8:21	6.70	6/23/2022 8:51	17.87	6/23/2022 7:39	0.88	6/23/2022 9:21	34.94
6/24/2022 9:05	84.57	6/23/2022 8:22	5.70	6/23/2022 8:52	17.22	6/23/2022 7:40	0.83	6/23/2022 9:22	34.93
6/24/2022 9:06	84.55	6/23/2022 8:23	4.96	6/23/2022 8:53	16.65	6/23/2022 7:41	0.86	6/23/2022 9:23	34.93
6/24/2022 9:07	84.54	6/23/2022 8:24	4.30	6/23/2022 8:54	16.11	6/23/2022 7:42	0.84	6/23/2022 9:24	34.90
6/24/2022 9:08	84.53	6/23/2022 8:25	3.80	6/23/2022 8:55	15.64	6/23/2022 7:43	0.88	6/23/2022 9:25	34.91
6/24/2022 9:09	84.51	6/23/2022 8:26	3.30	6/23/2022 8:56	15.24	6/23/2022 7:44	0.85	6/23/2022 9:26	34.88
6/24/2022 9:10	84.56	6/23/2022 8:27	2.89	6/23/2022 8:57	14.85	6/23/2022 7:45	0.81	6/23/2022 9:27	34.89
6/24/2022 9:11	84.52	6/23/2022 8:28	2.58	6/23/2022 8:58	14.46	6/23/2022 7:46	0.86	6/23/2022 9:28	34.92
6/24/2022 9:12	84.53	6/23/2022 8:29	2.40	6/23/2022 8:59	14.18	6/23/2022 7:47	0.84	6/23/2022 9:29	34.89
6/24/2022 9:13	84.52	6/23/2022 8:30	2.14	6/23/2022 9:00	13.88	6/23/2022 7:48	0.85	6/23/2022 9:30	34.91
6/24/2022 9:14	84.54	6/23/2022 8:31	1.90	6/23/2022 9:01	13.59	6/23/2022 7:49	0.86	6/23/2022 9:31	34.90
6/24/2022 9:15	84.56	6/23/2022 8:32	1.76	6/23/2022 9:02	13.38	6/23/2022 7:50	0.86	6/23/2022 9:32	34.89
6/24/2022 9:16	84.54	6/23/2022 8:33	1.63	6/23/2022 9:03	13.13	6/23/2022 7:51	0.87	6/23/2022 9:33	34.88
6/24/2022 9:17	84.53	6/23/2022 8:34	1.49	6/23/2022 9:04	12.93	6/23/2022 7:52	0.84	6/23/2022 9:34	34.89
6/24/2022 9:18	84.55	6/23/2022 8:35	1.38	6/23/2022 9:05	12.74	6/23/2022 7:53	0.85	6/23/2022 9:35	34.88
6/24/2022 9:19	84.56	6/23/2022 8:36	1.31	6/23/2022 9:06	12.58	6/23/2022 7:54	0.86	6/23/2022 9:36	34.89
6/24/2022 9:20	84.51	6/23/2022 8:37	1.24	6/23/2022 9:07	12.43	6/23/2022 7:55	0.86	6/23/2022 9:37	34.87
6/24/2022 9:21	84.52	6/23/2022 8:38	1.19	6/23/2022 9:08	12.27	6/23/2022 7:56	0.85	6/23/2022 9:38	34.89
6/24/2022 9:22	84.56	6/23/2022 8:39	1.12	6/23/2022 9:09	15.34	6/23/2022 7:57	0.84	6/23/2022 9:39	34.86
6/24/2022 9:23	84.54	6/23/2022 8:40	1.07	6/23/2022 9:10	15.63	6/23/2022 7:58	0.85	6/23/2022 9:40	34.85
6/24/2022 9:24	84.54	6/23/2022 8:41	1.02	6/23/2022 9:11	15.07	6/23/2022 7:59	0.85	6/23/2022 9:41	34.88
6/24/2022 9:25	84.54	6/23/2022 8:42	0.97	6/23/2022 9:12	14.64	6/23/2022 8:00	0.85	6/23/2022 9:42	34.88
6/24/2022 9:26	84.56	6/23/2022 8:43	0.95	6/23/2022 9:13	14.22	6/23/2022 8:01	0.88	6/23/2022 9:43	34.86
6/24/2022 9:27	84.56	6/23/2022 8:44	0.94	6/23/2022 9:14	13.87	6/23/2022 8:02	0.89	6/23/2022 9:44	34.86
6/24/2022 9:28	84.58	6/23/2022 8:45	0.90	6/23/2022 9:15	13.54	6/23/2022 8:03	0.86	6/23/2022 9:45	34.87
6/24/2022 9:29	84.54	6/23/2022 8:46	0.87	6/23/2022 9:16	13.24	6/23/2022 8:04	0.87	6/23/2022 9:46	34.83
6/24/2022 9:30	84.54	6/23/2022 8:47	0.84	6/23/2022 9:17	13.01	6/23/2022 8:05	0.87	6/23/2022 9:47	34.84
6/24/2022 9:31	84.53	6/23/2022 8:48	0.85	6/23/2022 9:18	12.79	6/23/2022 8:06	0.85	6/23/2022 9:48	34.82
6/24/2022 9:32	84.50	6/23/2022 8:49	0.80	6/23/2022 9:19	12.58	6/23/2022 8:07	0.87	6/23/2022 9:49	34.85
6/24/2022 9:33	84.54	6/23/2022 8:50	0.81	6/23/2022 9:20	12.40	6/23/2022 8:08	0.85	6/23/2022 9:50	34.85
6/24/2022 9:34	84.54	6/23/2022 8:51	0.81	6/23/2022 9:21	12.27	6/23/2022 8:09	0.83	6/23/2022 9:51	34.85
6/24/2022 9:35	84.54	6/23/2022 8:52	0.78	6/23/2022 9:22	12.13	6/23/2022 8:10	0.84	6/23/2022 9:52	34.88
6/24/2022 9:36	84.56	6/23/2022 8:53	6.24	6/23/2022 9:23	12.05	6/23/2022 8:11	0.85	6/23/2022 9:53	34.82
6/24/2022 9:37	84.56	6/23/2022 8:54	7.68	6/23/2022 9:24	11.93	6/23/2022 8:12	0.88	6/23/2022 9:54	34.84
6/24/2022 9:38	84.53	6/23/2022 8:55	6.49	6/23/2022 9:25	11.85	6/23/2022 8:13	0.86	6/23/2022 9:55	34.81
6/24/2022 9:39	84.50	6/23/2022 8:56	5.61	6/23/2022 9:26	11.76	6/23/2022 8:14	0.86	6/23/2022 9:56	34.83
6/24/2022 9:40	84.59	6/23/2022 8:57	4.85	6/23/2022 9:27	11.65	6/23/2022 8:15	0.85	6/23/2022 9:57	34.82
6/24/2022 9:41	84.49	6/23/2022 8:58	4.24	6/23/2022 9:28	11.58	6/23/2022 8:16	0.84	6/23/2022 9:58	34.83

6/24/2022 9:42	84.53	6/23/2022 8:59	3.71	6/23/2022 9:29	11.53	6/23/2022 8:17	0.84	6/23/2022 9:59	34.81
6/24/2022 9:43	84.53	6/23/2022 9:00	3.25	6/23/2022 9:30	11.41	6/23/2022 8:18	0.83	6/23/2022 10:00	34.80
6/24/2022 9:44	84.56	6/23/2022 9:01	2.89	6/23/2022 9:31	11.38	6/23/2022 8:19	0.85	6/23/2022 10:01	34.81
6/24/2022 9:45	84.50	6/23/2022 9:02	2.56	6/23/2022 9:32	11.32	6/23/2022 8:20	0.88	6/23/2022 10:02	34.84
6/24/2022 9:46	84.54	6/23/2022 9:03	2.27	6/23/2022 9:33	11.24	6/23/2022 8:21	0.90	6/23/2022 10:03	34.86
6/24/2022 9:47	84.55	6/23/2022 9:04	2.11	6/23/2022 9:34	11.22	6/23/2022 8:22	0.87	6/23/2022 10:04	34.83
6/24/2022 9:48	84.56	6/23/2022 9:05	1.93	6/23/2022 9:35	11.18	6/23/2022 8:23	0.88	6/23/2022 10:05	34.82
6/24/2022 9:49	84.50	6/23/2022 9:06	1.74	6/23/2022 9:36	11.15	6/23/2022 8:24	0.89	6/23/2022 10:06	34.83
6/24/2022 9:50	84.53	6/23/2022 9:07	1.61	6/23/2022 9:37	11.08	6/23/2022 8:25	0.86	6/23/2022 10:07	34.79
6/24/2022 9:51	84.52	6/23/2022 9:08	1.52	6/23/2022 9:38	11.04	6/23/2022 8:26	0.86	6/23/2022 10:08	34.83
6/24/2022 9:52	84.52	6/23/2022 9:09	1.40	6/23/2022 9:39	11.02	6/23/2022 8:27	0.87	6/23/2022 10:09	34.81
6/24/2022 9:53	84.50	6/23/2022 9:10	1.31	6/23/2022 9:40	11.05	6/23/2022 8:28	0.85	6/23/2022 10:10	34.81
6/24/2022 9:54	84.52	6/23/2022 9:11	1.46	6/23/2022 9:41	11.01	6/23/2022 8:29	0.85	6/23/2022 10:11	34.81
6/24/2022 9:55	84.54	6/23/2022 9:12	7.40	6/23/2022 9:42	10.99	6/23/2022 8:30	0.87	6/23/2022 10:12	34.84
6/24/2022 9:56	84.52	6/23/2022 9:13	8.19	6/23/2022 9:43	11.01	6/23/2022 8:31	0.82	6/23/2022 10:13	34.80
6/24/2022 9:57	84.52	6/23/2022 9:14	6.98	6/23/2022 9:44	10.98	6/23/2022 8:32	0.85	6/23/2022 10:14	34.80
6/24/2022 9:58	84.48	6/23/2022 9:15	5.98	6/23/2022 9:45	10.94	6/23/2022 8:33	0.84	6/23/2022 10:15	34.81
6/24/2022 9:59	84.52	6/23/2022 9:16	5.19	6/23/2022 9:46	10.96	6/23/2022 8:34	0.89	6/23/2022 10:16	34.80
6/24/2022 10:00	84.48	6/23/2022 9:17	4.47	6/23/2022 9:47	10.93	6/23/2022 8:35	0.84	6/23/2022 10:17	34.81
6/24/2022 10:01	84.54	6/23/2022 9:18	3.91	6/23/2022 9:48	10.91	6/23/2022 8:36	0.88	6/23/2022 10:18	34.80
6/24/2022 10:02	84.50	6/23/2022 9:19	3.43	6/23/2022 9:49	10.88	6/23/2022 8:37	0.83	6/23/2022 10:19	36.78
6/24/2022 10:03	84.49	6/23/2022 9:20	2.97	6/23/2022 9:50	10.92	6/23/2022 8:38	0.83	6/23/2022 10:20	35.84
6/24/2022 10:04	84.53	6/23/2022 9:21	2.71	6/23/2022 9:51	10.86	6/23/2022 8:39	0.85	6/23/2022 10:21	35.23
6/24/2022 10:05	84.53	6/23/2022 9:22	2.37	6/23/2022 9:52	10.86	6/23/2022 8:40	0.85	6/23/2022 10:22	34.98
6/24/2022 10:06	84.53	6/23/2022 9:23	2.18	6/23/2022 9:53	10.82	6/23/2022 8:41	0.82	6/23/2022 10:23	34.85
6/24/2022 10:07	84.52	6/23/2022 9:24	5.23	6/23/2022 9:54	10.80	6/23/2022 8:42	0.83	6/23/2022 10:24	34.87
6/24/2022 10:08	84.55	6/23/2022 9:25	10.21	6/23/2022 9:55	10.78	6/23/2022 8:43	0.84	6/23/2022 10:25	34.85
6/24/2022 10:09	84.52	6/23/2022 9:26	8.67	6/23/2022 9:56	10.76	6/23/2022 8:44	0.86	6/23/2022 10:26	34.86
6/24/2022 10:10	88.64	6/23/2022 9:27	7.35	6/23/2022 9:57	10.73	6/23/2022 8:45	0.82	6/23/2022 10:27	34.84
6/24/2022 10:11	91.35	6/23/2022 9:28	6.35	6/23/2022 9:58	10.73	6/23/2022 8:46	0.81	6/23/2022 10:28	34.81
6/24/2022 10:12	92.89	6/23/2022 9:29	5.40	6/23/2022 9:59	10.71	6/23/2022 8:47	0.85	6/23/2022 10:29	34.85
6/24/2022 10:13	90.63	6/23/2022 9:30	4.73	6/23/2022 10:00	10.70	6/23/2022 8:48	0.88	6/23/2022 10:30	34.81
6/24/2022 10:14	88.70	6/23/2022 9:31	4.16	6/23/2022 10:01	10.73	6/23/2022 8:49	0.86	6/23/2022 10:31	34.81
6/24/2022 10:15	87.48	6/23/2022 9:32	3.62	6/23/2022 10:02	10.72	6/23/2022 8:50	0.84	6/23/2022 10:32	34.82
6/24/2022 10:16	86.75	6/23/2022 9:33	3.25	6/23/2022 10:03	10.71	6/23/2022 8:51	0.83	6/23/2022 10:33	34.80
6/24/2022 10:17	86.28	6/23/2022 9:34	2.79	6/23/2022 10:04	10.76	6/23/2022 8:52	0.84	6/23/2022 10:34	34.83
6/24/2022 10:18	85.94	6/23/2022 9:35	2.53	6/23/2022 10:05	10.74	6/23/2022 8:53	0.86	6/23/2022 10:35	34.79
6/24/2022 10:19	85.71	6/23/2022 9:36	2.25	6/23/2022 10:06	10.76	6/23/2022 8:54	0.91	6/23/2022 10:36	34.80
6/24/2022 10:20	85.54	6/23/2022 9:37	8.03	6/23/2022 10:07	10.74	6/23/2022 8:55	0.92	6/23/2022 10:37	34.85
6/24/2022 10:21	85.42	6/23/2022 9:38	8.60	6/23/2022 10:08	10.72	6/23/2022 8:56	0.88	6/23/2022 10:38	34.79
6/24/2022 10:22	85.36	6/23/2022 9:39	7.36	6/23/2022 10:09	10.75	6/23/2022 8:57	0.87	6/23/2022 10:39	34.81
6/24/2022 10:23	85.30	6/23/2022 9:40	6.28	6/23/2022 10:10	10.72	6/23/2022 8:58	0.85	6/23/2022 10:40	34.77
6/24/2022 10:24	85.24	6/23/2022 9:41	5.40	6/23/2022 10:11	10.71	6/23/2022 8:59	0.85	6/23/2022 10:41	34.78
6/24/2022 10:25	85.20	6/23/2022 9:42	4.72	6/23/2022 10:12	10.70	6/23/2022 9:00	0.85	6/23/2022 10:42	34.79
6/24/2022 10:26	85.21	6/23/2022 9:43	4.15	6/23/2022 10:13	10.66	6/23/2022 9:01	0.86	6/23/2022 10:43	34.80
6/24/2022 10:27	85.15	6/23/2022 9:44	3.67	6/23/2022 10:14	10.64	6/23/2022 9:02	0.84	6/23/2022 10:44	34.85
6/24/2022 10:28	85.09	6/23/2022 9:45	3.24	6/23/2022 10:15	10.64	6/23/2022 9:03	0.83	6/23/2022 10:45	34.91
6/24/2022 10:29	85.08	6/23/2022 9:46	2.83	6/23/2022 10:16	10.62	6/23/2022 9:04	0.83	6/23/2022 10:46	36.54
6/24/2022 10:30	85.09	6/23/2022 9:47	2.51	6/23/2022 10:17	10.63	6/23/2022 9:05	0.82	6/23/2022 10:47	35.61
6/24/2022 10:31	85.06	6/23/2022 9:48	2.28	6/23/2022 10:18	10.59	6/23/2022 9:06	0.84	6/23/2022 10:48	35.22
6/24/2022 10:32	85.04	6/23/2022 9:49	7.67	6/23/2022 10:19	10.59	6/23/2022 9:07	0.81	6/23/2022 10:49	35.12
6/24/2022 10:33	85.00	6/23/2022 9:50	9.04	6/23/2022 10:20	10.57	6/23/2022 9:08	0.84	6/23/2022 10:50	35.07
6/24/2022 10:34	85.01	6/23/2022 9:51	7.66	6/23/2022 10:21	10.57	6/23/2022 9:09	0.86	6/23/2022 10:51	35.06
6/24/2022 10:35	84.98	6/23/2022 9:52	6.54	6/23/2022 10:22	10.56	6/23/2022 9:10	0.82	6/23/2022 10:52	35.03
6/24/2022 10:36	84.96	6/23/2022 9:53	5.67	6/23/2022 10:23	10.57	6/23/2022 9:11	0.84	6/23/2022 10:53	35.03
6/24/2022 10:37	84.95	6/23/2022 9:54	4.93	6/23/2022 10:24	10.54	6/23/2022 9:12	0.84	6/23/2022 10:54	35.00
6/24/2022 10:38	84.91	6/23/2022 9:55	4.29	6/23/2022 10:25	10.53	6/23/2022 9:13	0.89	6/23/2022 10:55	34.96
6/24/2022 10:39	84.89	6/23/2022 9:56	3.80	6/23/2022 10:26	10.53	6/23/2022 9:14	0.88	6/23/2022 10:56	34.99
6/24/2022 10:40	84.89	6/23/2022 9:57	3.35	6/23/2022 10:27	10.54	6/23/2022 9:15	0.87	6/23/2022 10:57	34.95
6/24/2022 10:41	84.89	6/23/2022 9:58	2.87	6/23/2022 10:28	10.58	6/23/2022 9:16	0.87	6/23/2022 10:58	34.97
6/24/2022 10:42	84.92	6/23/2022 9:59	2.62	6/23/2022 10:29	10.55	6/23/2022 9:17	0.86	6/23/2022 10:59	34.97
6/24/2022 10:43	84.88	6/23/2022 10:00	2.34	6/23/2022 10:30	10.58	6/23/2022 9:18	0.86	6/23/2022 11:00	34.94
6/24/2022 10:44	84.86	6/23/2022 10:01	4.57	6/23/2022 10:31	10.56	6/23/2022 9:19	0.85	6/23/2022 11:01	34.92
6/24/2022 10:45	84.83	6/23/2022 10:02	9.73	6/23/2022 10:32	10.58	6/23/2022 9:20	0.89	6/23/2022 11:02	36.88
6/24/2022 10:46	84.91	6/23/2022 10:03	8.49	6/23/2022 10:33	10.61	6/23/2022 9:21	0.86	6/23/2022 11:03	35.74
6/24/2022 10:47	84.87	6/23/2022 10:04	7.19	6/23/2022 10:34	10.67	6/23/2022 9:22	0.86	6/23/2022 11:04	35.19
6/24/2022 10:48	84.89	6/23/2022 10:05	6.22	6/23/2022 10:35	10.68	6/23/2022 9:23	0.84	6/23/2022 11:05	35.04
6/24/2022 10:49	84.85	6/23/2022 10:06	5.35	6/23/2022 10:36	10.69	6/23/2022 9:24	0.83	6/23/2022 11:06	34.98
6/24/2022 10:50	84.87	6/23/2022 10:07	4.66	6/23/2022 10:37	13.43	6/23/2022 9:25	0.87	6/23/2022 11:07	34.95
6/24/2022 10:51	84.82	6/23/2022 10:08	4.10	6/23/2022 10:38	14.76	6/23/2022 9:26	0.90	6/23/2022 11:08	34.91
6/24/2022 10:52	84.82	6/23/2022 10:09	3.62	6/23/2022 10:39	14.27	6/23/2022 9:27	0.85	6/23/2022 11:09	35.36
6/24/2022 10:53	84.82	6/23/2022 10:10	3.19	6/23/2022 10:40	13.82	6/23/2022 9:28	0.86	6/23/2022 11:10	36.35
6/24/2022 10:54	84.82	6/23/2022 10:11	2.81	6/23/2022 10:41	13.43	6/23/2022 9:29	0.89	6/23/2022 11:11	35.51
6/24/2022 10:55	84.87	6/23/2022 10:12	2.51	6/23/2022 10:42	13.10	6/23/2022 9:30	0.83	6/23/2022 11:12	35.11
6/24/2022 10:56	84.81	6/23/2022 10:13	2.28	6/23/2022 10:43	12.87	6/23/2022 9:31	0.90	6/23/2022 11:13	35.01
6/24/2022 10:57	84.80	6/23/2022 10:14	2.10	6/23/2022 10:44	12.63	6/23/2022 9:32	0.86	6/23/2022 11:14	34.96
6/24/2022 10:58	84.77	6/23/2022 10:15	1.91	6/23/2022 10:45	12.37	6/23/2022 9:33	0.86	6/23/2022 11:15	34.96
6/24/2022 10:59	84.82	6/23/2022 10:16	1.77	6/23/2022 10:46	12.17	6/23/2022 9:34	0.88	6/23/2022 11:16	34.92
6/24/2022 11:00	84.82	6/23/2022 10:17	1.64	6/23/2022 10:47	12.04	6/23/2022 9:35	0.80	6/23/2022 11:17	34.91
6/24/2022 11:01	84.79	6/23/2022 10:18	5.94	6/23/2022 10:48	11.89	6/23/2022 9:36	0.86	6/23/2022 11:18	34.96
6/24/2022 11:02	84.82	6/23/2022 10:19	8.89	6/23/2022 10:49	11.79	6/23/2022 9:37	0.86	6/23/2022 11:19	34.96
6/24/2022 11:03	84.73	6/23/2022 10:20	7.54	6/23/2022 10:50	11.63	6/23/2022 9:38	0.88	6/23/2022 11:20	34.97
6/24/2022 11:04	84.75	6/23/2022 10:21	6.49	6/23/2022 10:51	11.52	6/23/2022 9:39	0.89	6/23/2022 11:21	34.96
6/24/2022 11:05	84.77	6/23/2022 10:22	5.57	6/23/2022 10:52	11.45	6/23/2022 9:40	0.89	6/23/2022 11:22	34.97
6/24/2022 11:06	84.76	6/23/2022 10:23	4.84	6/23/2022 10:53	11.32	6/23/2022 9:41	0.88	6/23/2022 11:23	34.94
6/24/2022 11:07	84.75	6/23/2022 10:24	4.22	6/23/2022 10:54	11.28	6/23/2022 9:42	0.89	6/23/2022 11:24	34.93
6/24/2022 11:08	84.79	6/23/2022 10:25	3.72	6/23/2022 10:55	11.20	6/23/2022 9:43	0.85	6/23/2022 11:25	34.91
6/24/2022 11:09	84.74	6/23/2022 10:26	3.28	6/23/2022 10:56	11.12	6/23/2022 9:44	0.84	6/23/2022 11:26	34.93

6/24/2022 11:10	84.77	6/23/2022 10:27	2.87	6/23/2022 10:57	11.08	6/23/2022 9:45	0.82	6/23/2022 11:27	34.92
6/24/2022 11:11	84.76	6/23/2022 10:28	2.59	6/23/2022 10:58	11.02	6/23/2022 9:46	0.84	6/23/2022 11:28	34.91
6/24/2022 11:12	84.75	6/23/2022 10:29	2.33	6/23/2022 10:59	10.97	6/23/2022 9:47	0.85	6/23/2022 11:29	34.93
6/24/2022 11:13	84.75	6/23/2022 10:30	2.10	6/23/2022 11:00	10.93	6/23/2022 9:48	0.81	6/23/2022 11:30	34.91
6/24/2022 11:14	84.74	6/23/2022 10:31	1.97	6/23/2022 11:01	10.87	6/23/2022 9:49	0.86	6/23/2022 11:31	34.89
6/24/2022 11:15	84.74	6/23/2022 10:32	1.77	6/23/2022 11:02	10.89	6/23/2022 9:50	0.87	6/23/2022 11:32	34.90
6/24/2022 11:16	84.76	6/23/2022 10:33	2.92	6/23/2022 11:03	10.87	6/23/2022 9:51	0.89	6/23/2022 11:33	34.89
6/24/2022 11:17	84.74	6/23/2022 10:34	8.59	6/23/2022 11:04	10.81	6/23/2022 9:52	0.88	6/23/2022 11:34	34.90
6/24/2022 11:18	84.75	6/23/2022 10:35	9.27	6/23/2022 11:05	10.84	6/23/2022 9:53	0.84	6/23/2022 11:35	34.86
6/24/2022 11:19	84.74	6/23/2022 10:36	7.91	6/23/2022 11:06	10.82	6/23/2022 9:54	0.85	6/23/2022 11:36	34.91
6/24/2022 11:20	84.76	6/23/2022 10:37	6.76	6/23/2022 11:07	10.76	6/23/2022 9:55	0.88	6/23/2022 11:37	34.92
6/24/2022 11:21	84.75	6/23/2022 10:38	5.81	6/23/2022 11:08	10.77	6/23/2022 9:56	0.85	6/23/2022 11:38	34.89
6/24/2022 11:22	84.71	6/23/2022 10:39	5.04	6/23/2022 11:09	10.77	6/23/2022 9:57	0.85	6/23/2022 11:39	34.89
6/24/2022 11:23	84.72	6/23/2022 10:40	4.40	6/23/2022 11:10	10.76	6/23/2022 9:58	0.86	6/23/2022 11:40	34.90
6/24/2022 11:24	84.71	6/23/2022 10:41	3.91	6/23/2022 11:11	10.75	6/23/2022 9:59	0.86	6/23/2022 11:41	34.85
6/24/2022 11:25	84.73	6/23/2022 10:42	3.42	6/23/2022 11:12	10.70	6/23/2022 10:00	0.84	6/23/2022 11:42	34.85
6/24/2022 11:26	84.73	6/23/2022 10:43	2.95	6/23/2022 11:13	10.69	6/23/2022 10:01	0.82	6/23/2022 11:43	34.87
6/24/2022 11:27	84.74	6/23/2022 10:44	2.65	6/23/2022 11:14	10.70	6/23/2022 10:02	0.84	6/23/2022 11:44	34.94
6/24/2022 11:28	84.75	6/23/2022 10:45	2.43	6/23/2022 11:15	10.70	6/23/2022 10:03	0.88	6/23/2022 11:45	34.91
6/24/2022 11:29	84.75	6/23/2022 10:46	2.18	6/23/2022 11:16	10.65	6/23/2022 10:04	0.86	6/23/2022 11:46	34.91
6/24/2022 11:30	84.72	6/23/2022 10:47	2.01	6/23/2022 11:17	10.64	6/23/2022 10:05	0.86	6/23/2022 11:47	34.88
6/24/2022 11:31	84.75	6/23/2022 10:48	6.18	6/23/2022 11:18	10.65	6/23/2022 10:06	0.85	6/23/2022 11:48	34.94
6/24/2022 11:32	84.74	6/23/2022 10:49	10.01	6/23/2022 11:19	10.65	6/23/2022 10:07	0.85	6/23/2022 11:49	34.89
6/24/2022 11:33	84.71	6/23/2022 10:50	8.52	6/23/2022 11:20	10.59	6/23/2022 10:08	0.80	6/23/2022 11:50	34.88
6/24/2022 11:34	84.70	6/23/2022 10:51	7.26	6/23/2022 11:21	10.59	6/23/2022 10:09	0.85	6/23/2022 11:51	34.86
6/24/2022 11:35	84.73	6/23/2022 10:52	6.23	6/23/2022 11:22	10.62	6/23/2022 10:10	0.84	6/23/2022 11:52	34.86
6/24/2022 11:36	84.70	6/23/2022 10:53	5.35	6/23/2022 11:23	10.62	6/23/2022 10:11	0.84	6/23/2022 11:53	34.88
6/24/2022 11:37	84.73	6/23/2022 10:54	4.68	6/23/2022 11:24	10.61	6/23/2022 10:12	0.84	6/23/2022 11:54	34.86
6/24/2022 11:38	84.67	6/23/2022 10:55	4.10	6/23/2022 11:25	10.63	6/23/2022 10:13	0.84	6/23/2022 11:55	34.88
6/24/2022 11:39	84.71	6/23/2022 10:56	3.63	6/23/2022 11:26	10.61	6/23/2022 10:14	0.85	6/23/2022 11:56	34.85
6/24/2022 11:40	84.71	6/23/2022 10:57	3.19	6/23/2022 11:27	10.61	6/23/2022 10:15	0.84	6/23/2022 11:57	34.87
6/24/2022 11:41	84.75	6/23/2022 10:58	2.84	6/23/2022 11:28	10.60	6/23/2022 10:16	0.82	6/23/2022 11:58	34.86
6/24/2022 11:42	84.69	6/23/2022 10:59	2.54	6/23/2022 11:29	10.65	6/23/2022 10:17	0.82	6/23/2022 11:59	34.88
6/24/2022 11:43	84.67	6/23/2022 11:00	2.30	6/23/2022 11:30	10.61	6/23/2022 10:18	0.79	6/23/2022 12:00	34.86
6/24/2022 11:44	84.72	6/23/2022 11:01	2.15	6/23/2022 11:31	10.61	6/23/2022 10:19	0.81	6/23/2022 12:01	34.83
6/24/2022 11:45	84.71	6/23/2022 11:02	1.92	6/23/2022 11:32	10.59	6/23/2022 10:20	0.88	6/23/2022 12:02	34.88
6/24/2022 11:46	84.71	6/23/2022 11:03	1.79	6/23/2022 11:33	10.58	6/23/2022 10:21	0.85	6/23/2022 12:03	34.82
6/24/2022 11:47	84.69	6/23/2022 11:04	1.62	6/23/2022 11:34	10.59	6/23/2022 10:22	0.83	6/23/2022 12:04	34.86
6/24/2022 11:48	84.73	6/23/2022 11:05	1.51	6/23/2022 11:35	10.59	6/23/2022 10:23	0.86	6/23/2022 12:05	34.81
6/24/2022 11:49	84.72	6/23/2022 11:06	1.41	6/23/2022 11:36	10.58	6/23/2022 10:24	0.86	6/23/2022 12:06	34.83
6/24/2022 11:50	84.70	6/23/2022 11:07	1.30	6/23/2022 11:37	10.56	6/23/2022 10:25	0.82	6/23/2022 12:07	34.85
6/24/2022 11:51	84.68	6/23/2022 11:08	1.25	6/23/2022 11:38	10.53	6/23/2022 10:26	0.82	6/23/2022 12:08	34.89
6/24/2022 11:52	84.69	6/23/2022 11:09	1.18	6/23/2022 11:39	10.54	6/23/2022 10:27	0.83	6/23/2022 12:09	34.93
6/24/2022 11:53	84.71	6/23/2022 11:10	1.14	6/23/2022 11:40	10.52	6/23/2022 10:28	0.85	6/23/2022 12:10	34.92
6/24/2022 11:54	84.69	6/23/2022 11:11	1.06	6/23/2022 11:41	10.52	6/23/2022 10:29	0.79	6/23/2022 12:11	34.94
6/24/2022 11:55	84.69	6/23/2022 11:12	1.07	6/23/2022 11:42	10.52	6/23/2022 10:30	0.81	6/23/2022 12:12	34.89
6/24/2022 11:56	84.69	6/23/2022 11:13	1.00	6/23/2022 11:43	10.51	6/23/2022 10:31	0.80	6/23/2022 12:13	35.95
6/24/2022 11:57	84.67	6/23/2022 11:14	5.78	6/23/2022 11:44	10.47	6/23/2022 10:32	0.82	6/23/2022 12:14	36.28
6/24/2022 11:58	84.68	6/23/2022 11:15	8.12	6/23/2022 11:45	10.50	6/23/2022 10:33	0.80	6/23/2022 12:15	35.41
6/24/2022 11:59	84.67	6/23/2022 11:16	6.88	6/23/2022 11:46	10.51	6/23/2022 10:34	0.84	6/23/2022 12:16	35.11
6/24/2022 12:00	84.69	6/23/2022 11:17	5.92	6/23/2022 11:47	10.46	6/23/2022 10:35	0.81	6/23/2022 12:17	34.97
6/24/2022 12:01	84.65	6/23/2022 11:18	5.11	6/23/2022 11:48	10.45	6/23/2022 10:36	0.88	6/23/2022 12:18	34.92
6/24/2022 12:02	84.69	6/23/2022 11:19	4.44	6/23/2022 11:49	10.46	6/23/2022 10:37	0.81	6/23/2022 12:19	34.90
6/24/2022 12:03	84.71	6/23/2022 11:20	3.88	6/23/2022 11:50	10.47	6/23/2022 10:38	0.86	6/23/2022 12:20	34.90
6/24/2022 12:04	84.68	6/23/2022 11:21	3.41	6/23/2022 11:51	10.45	6/23/2022 10:39	0.81	6/23/2022 12:21	34.90
6/24/2022 12:05	84.67	6/23/2022 11:22	3.00	6/23/2022 11:52	10.47	6/23/2022 10:40	0.82	6/23/2022 12:22	34.92
6/24/2022 12:06	84.65	6/23/2022 11:23	2.68	6/23/2022 11:53	10.48	6/23/2022 10:41	0.88	6/23/2022 12:23	34.87
6/24/2022 12:07	84.69	6/23/2022 11:24	2.43	6/23/2022 11:54	10.50	6/23/2022 10:42	0.83	6/23/2022 12:24	34.92
6/24/2022 12:08	84.67	6/23/2022 11:25	2.19	6/23/2022 11:55	10.51	6/23/2022 10:43	0.79	6/23/2022 12:25	34.85
6/24/2022 12:09	84.66	6/23/2022 11:26	1.96	6/23/2022 11:56	10.54	6/23/2022 10:44	0.83	6/23/2022 12:26	34.87
6/24/2022 12:10	84.67	6/23/2022 11:27	1.83	6/23/2022 11:57	10.50	6/23/2022 10:45	0.79	6/23/2022 12:27	34.88
6/24/2022 12:11	84.66	6/23/2022 11:28	1.67	6/23/2022 11:58	10.53	6/23/2022 10:46	0.82	6/23/2022 12:28	34.87
6/24/2022 12:12	84.69	6/23/2022 11:29	1.59	6/23/2022 11:59	10.54	6/23/2022 10:47	0.80	6/23/2022 12:29	34.87
6/24/2022 12:13	84.63	6/23/2022 11:30	1.45	6/23/2022 12:00	10.52	6/23/2022 10:48	0.79	6/23/2022 12:30	34.84
6/24/2022 12:14	84.64	6/23/2022 11:31	1.36	6/23/2022 12:01	10.53	6/23/2022 10:49	0.85	6/23/2022 12:31	34.87
6/24/2022 12:15	84.65	6/23/2022 11:32	1.29	6/23/2022 12:02	10.49	6/23/2022 10:50	0.84	6/23/2022 12:32	34.85
6/24/2022 12:16	84.65	6/23/2022 11:33	4.72	6/23/2022 12:03	10.48	6/23/2022 10:51	0.83	6/23/2022 12:33	34.84
6/24/2022 12:17	84.66	6/23/2022 11:34	8.93	6/23/2022 12:04	10.48	6/23/2022 10:52	0.82	6/23/2022 12:34	36.48
6/24/2022 12:18	84.66	6/23/2022 11:35	7.57	6/23/2022 12:05	10.52	6/23/2022 10:53	0.80	6/23/2022 12:35	35.48
6/24/2022 12:19	84.68	6/23/2022 11:36	6.50	6/23/2022 12:06	10.46	6/23/2022 10:54	0.84	6/23/2022 12:36	37.17
6/24/2022 12:20	84.68	6/23/2022 11:37	5.57	6/23/2022 12:07	10.50	6/23/2022 10:55	0.82	6/23/2022 12:37	35.89
6/24/2022 12:21	84.63	6/23/2022 11:38	4.81	6/23/2022 12:08	10.44	6/23/2022 10:56	0.82	6/23/2022 12:38	35.27
6/24/2022 12:22	84.65	6/23/2022 11:39	4.23	6/23/2022 12:09	10.47	6/23/2022 10:57	0.78	6/23/2022 12:39	35.04
6/24/2022 12:23	84.65	6/23/2022 11:40	3.67	6/23/2022 12:10	10.47	6/23/2022 10:58	0.80	6/23/2022 12:40	34.96
6/24/2022 12:24	84.66	6/23/2022 11:41	3.27	6/23/2022 12:11	10.44	6/23/2022 10:59	0.81	6/23/2022 12:41	36.18
6/24/2022 12:25	84.64	6/23/2022 11:42	2.87	6/23/2022 12:12	10.43	6/23/2022 11:00	0.80	6/23/2022 12:42	36.20
6/24/2022 12:26	84.63	6/23/2022 11:43	2.59	6/23/2022 12:13	10.41	6/23/2022 11:01	0.81	6/23/2022 12:43	37.78
6/24/2022 12:27	84.63	6/23/2022 11:44	2.34	6/23/2022 12:14	10.43	6/23/2022 11:02	0.80	6/23/2022 12:44	36.28
6/24/2022 12:28	84.61	6/23/2022 11:45	2.15	6/23/2022 12:15	10.45	6/23/2022 11:03	0.79	6/23/2022 12:45	37.44
6/24/2022 12:29	84.63	6/23/2022 11:46	1.96	6/23/2022 12:16	10.44	6/23/2022 11:04	0.79	6/23/2022 12:46	36.23
6/24/2022 12:30	84.64	6/23/2022 11:47	3.15	6/23/2022 12:17	10.41	6/23/2022 11:05	0.81	6/23/2022 12:47	35.47
6/24/2022 12:31	84.66	6/23/2022 11:48	8.70	6/23/2022 12:18	10.46	6/23/2022 11:06	0.80	6/23/2022 12:48	35.16
6/24/2022 12:32	84.65	6/23/2022 11:49	8.29	6/23/2022 12:19	10.46	6/23/2022 11:07	0.80	6/23/2022 12:49	35.04
6/24/2022 12:33	84.66	6/23/2022 11:50	7.09	6/23/2022 12:20	10.47	6/23/2022 11:08	0.76	6/23/2022 12:50	34.98
6/24/2022 12:34	84.62	6/23/2022 11:51	6.08	6/23/2022 12:21	10.51	6/23/2022 11:09	0.80	6/23/2022 12:51	34.96
6/24/2022 12:35	84.66	6/23/2022 11:52	5.22	6/23/2022 12:22	10.49	6/23/2022 11:10	0.82	6/23/2022 12:52	34.96
6/24/2022 12:36	84.63	6/23/2022 11:53	4.57	6/23/2022 12:23	10.49	6/23/2022 11:11	0.79	6/23/2022 12:53	34.92
6/24/2022 12:37	84.64	6/23/2022 11:54	4.03	6/23/2022 12:24	10.50	6/23/2022 11:12	0.81	6/23/2022 12:54	34.93

6/24/2022 12:38	84.61	6/23/2022 11:55	3.49	6/23/2022 12:25	10.51	6/23/2022 11:13	0.81	6/23/2022 12:55	34.96
6/24/2022 12:39	84.64	6/23/2022 11:56	3.09	6/23/2022 12:26	10.50	6/23/2022 11:14	0.79	6/23/2022 12:56	34.91
6/24/2022 12:40	84.63	6/23/2022 11:57	2.78	6/23/2022 12:27	10.48	6/23/2022 11:15	0.79	6/23/2022 12:57	34.95
6/24/2022 12:41	84.62	6/23/2022 11:58	2.48	6/23/2022 12:28	10.46	6/23/2022 11:16	0.82	6/23/2022 12:58	34.93
6/24/2022 12:42	84.60	6/23/2022 11:59	2.27	6/23/2022 12:29	10.47	6/23/2022 11:17	0.84	6/23/2022 12:59	34.91
6/24/2022 12:43	84.61	6/23/2022 12:00	2.07	6/23/2022 12:30	10.50	6/23/2022 11:18	0.81	6/23/2022 13:00	34.91
6/24/2022 12:44	84.59	6/23/2022 12:01	1.87	6/23/2022 12:31	10.46	6/23/2022 11:19	0.84	6/23/2022 13:01	34.89
6/24/2022 12:45	84.63	6/23/2022 12:02	1.72	6/23/2022 12:32	10.43	6/23/2022 11:20	0.80	6/23/2022 13:02	34.91
6/24/2022 12:46	84.64	6/23/2022 12:03	1.58	6/23/2022 12:33	10.44	6/23/2022 11:21	0.83	6/23/2022 13:03	34.90
6/24/2022 12:47	84.58	6/23/2022 12:04	3.59	6/23/2022 12:34	10.46	6/23/2022 11:22	0.82	6/23/2022 13:04	34.90
6/24/2022 12:48	84.62	6/23/2022 12:05	8.95	6/23/2022 12:35	10.43	6/23/2022 11:23	0.79	6/23/2022 13:05	34.91
6/24/2022 12:49	84.59	6/23/2022 12:06	8.07	6/23/2022 12:36	10.43	6/23/2022 11:24	0.82	6/23/2022 13:06	36.85
6/24/2022 12:50	84.65	6/23/2022 12:07	6.87	6/23/2022 12:37	10.42	6/23/2022 11:25	0.81	6/23/2022 13:07	35.94
6/24/2022 12:51	84.60	6/23/2022 12:08	5.92	6/23/2022 12:38	10.41	6/23/2022 11:26	0.82	6/23/2022 13:08	35.32
6/24/2022 12:52	84.63	6/23/2022 12:09	5.11	6/23/2022 12:39	10.41	6/23/2022 11:27	0.82	6/23/2022 13:09	35.06
6/24/2022 12:53	84.60	6/23/2022 12:10	4.47	6/23/2022 12:40	10.40	6/23/2022 11:28	0.80	6/23/2022 13:10	34.95
6/24/2022 12:54	84.61	6/23/2022 12:11	3.88	6/23/2022 12:41	10.39	6/23/2022 11:29	0.81	6/23/2022 13:11	34.93
6/24/2022 12:55	84.62	6/23/2022 12:12	3.42	6/23/2022 12:42	10.41	6/23/2022 11:30	0.79	6/23/2022 13:12	34.92
6/24/2022 12:56	84.62	6/23/2022 12:13	3.04	6/23/2022 12:43	10.43	6/23/2022 11:31	0.80	6/23/2022 13:13	35.33
6/24/2022 12:57	84.63	6/23/2022 12:14	2.68	6/23/2022 12:44	10.49	6/23/2022 11:32	0.80	6/23/2022 13:14	36.27
6/24/2022 12:58	84.59	6/23/2022 12:15	2.46	6/23/2022 12:45	12.28	6/23/2022 11:33	0.81	6/23/2022 13:15	35.42
6/24/2022 12:59	84.61	6/23/2022 12:16	7.31	6/23/2022 12:46	16.56	6/23/2022 11:34	0.84	6/23/2022 13:16	37.07
6/24/2022 13:00	84.61	6/23/2022 12:17	11.93	6/23/2022 12:47	15.72	6/23/2022 11:35	0.83	6/23/2022 13:17	35.87
6/24/2022 13:01	84.61	6/23/2022 12:18	10.47	6/23/2022 12:48	15.09	6/23/2022 11:36	0.84	6/23/2022 13:18	35.28
6/24/2022 13:02	84.58	6/23/2022 12:19	8.95	6/23/2022 12:49	14.56	6/23/2022 11:37	0.85	6/23/2022 13:19	35.06
6/24/2022 13:03	84.59	6/23/2022 12:20	7.63	6/23/2022 12:50	14.10	6/23/2022 11:38	0.80	6/23/2022 13:20	35.00
6/24/2022 13:04	84.61	6/23/2022 12:21	6.55	6/23/2022 12:51	13.73	6/23/2022 11:39	0.81	6/23/2022 13:21	34.97
6/24/2022 13:05	84.56	6/23/2022 12:22	5.68	6/23/2022 12:52	13.33	6/23/2022 11:40	0.81	6/23/2022 13:22	34.96
6/24/2022 13:06	84.59	6/23/2022 12:23	4.93	6/23/2022 12:53	13.06	6/23/2022 11:41	0.85	6/23/2022 13:23	34.96
6/24/2022 13:07	84.55	6/23/2022 12:24	4.31	6/23/2022 12:54	12.83	6/23/2022 11:42	0.78	6/23/2022 13:24	34.94
6/24/2022 13:08	84.58	6/23/2022 12:25	3.81	6/23/2022 12:55	12.55	6/23/2022 11:43	0.82	6/23/2022 13:25	34.91
6/24/2022 13:09	84.56	6/23/2022 12:26	3.40	6/23/2022 12:56	12.35	6/23/2022 11:44	0.80	6/23/2022 13:26	34.93
6/24/2022 13:10	84.59	6/23/2022 12:27	6.33	6/23/2022 12:57	12.16	6/23/2022 11:45	0.80	6/23/2022 13:27	34.94
6/24/2022 13:11	84.58	6/23/2022 12:28	10.32	6/23/2022 12:58	11.98	6/23/2022 11:46	0.80	6/23/2022 13:28	34.90
6/24/2022 13:12	84.59	6/23/2022 12:29	8.75	6/23/2022 12:59	11.82	6/23/2022 11:47	0.80	6/23/2022 13:29	34.88
6/24/2022 13:13	84.62	6/23/2022 12:30	7.49	6/23/2022 13:00	11.74	6/23/2022 11:48	0.82	6/23/2022 13:30	34.86
6/24/2022 13:14	84.58	6/23/2022 12:31	6.47	6/23/2022 13:01	11.60	6/23/2022 11:49	0.82	6/23/2022 13:31	34.91
6/24/2022 13:15	84.57	6/23/2022 12:32	5.60	6/23/2022 13:02	11.46	6/23/2022 11:50	0.84	6/23/2022 13:32	34.90
6/24/2022 13:16	84.57	6/23/2022 12:33	4.88	6/23/2022 13:03	11.41	6/23/2022 11:51	0.86	6/23/2022 13:33	34.90
6/24/2022 13:17	84.60	6/23/2022 12:34	4.26	6/23/2022 13:04	11.29	6/23/2022 11:52	0.83	6/23/2022 13:34	34.92
6/24/2022 13:18	84.55	6/23/2022 12:35	3.78	6/23/2022 13:05	11.21	6/23/2022 11:53	0.85	6/23/2022 13:35	34.88
6/24/2022 13:19	84.60	6/23/2022 12:36	3.30	6/23/2022 13:06	11.16	6/23/2022 11:54	0.83	6/23/2022 13:36	34.85
6/24/2022 13:20	84.59	6/23/2022 12:37	2.95	6/23/2022 13:07	11.13	6/23/2022 11:55	0.82	6/23/2022 13:37	34.87
6/24/2022 13:21	84.55	6/23/2022 12:38	2.63	6/23/2022 13:08	11.09	6/23/2022 11:56	0.84	6/23/2022 13:38	34.85
6/24/2022 13:22	84.55	6/23/2022 12:39	2.39	6/23/2022 13:09	11.08	6/23/2022 11:57	0.83	6/23/2022 13:39	34.87
6/24/2022 13:23	84.58	6/23/2022 12:40	2.21	6/23/2022 13:10	11.05	6/23/2022 11:58	0.83	6/23/2022 13:40	34.86
6/24/2022 13:24	84.60	6/23/2022 12:41	2.02	6/23/2022 13:11	10.97	6/23/2022 11:59	0.81	6/23/2022 13:41	34.84
6/24/2022 13:25	84.58	6/23/2022 12:42	1.84	6/23/2022 13:12	10.93	6/23/2022 12:00	0.79	6/23/2022 13:42	34.86
6/24/2022 13:26	84.55	6/23/2022 12:43	1.71	6/23/2022 13:13	10.92	6/23/2022 12:01	0.81	6/23/2022 13:43	34.87
6/24/2022 13:27	84.61	6/23/2022 12:44	1.57	6/23/2022 13:14	10.86	6/23/2022 12:02	0.80	6/23/2022 13:44	34.89
6/24/2022 13:28	84.56	6/23/2022 12:45	1.46	6/23/2022 13:15	10.87	6/23/2022 12:03	0.81	6/23/2022 13:45	34.89
6/24/2022 13:29	84.58	6/23/2022 12:46	2.68	6/23/2022 13:16	10.86	6/23/2022 12:04	0.80	6/23/2022 13:46	34.88
6/24/2022 13:30	84.57	6/23/2022 12:47	8.28	6/23/2022 13:17	10.81	6/23/2022 12:05	0.78	6/23/2022 13:47	34.85
6/24/2022 13:31	84.55	6/23/2022 12:48	7.89	6/23/2022 13:18	10.78	6/23/2022 12:06	0.82	6/23/2022 13:48	34.90
6/24/2022 13:32	84.58	6/23/2022 12:49	6.77	6/23/2022 13:19	10.78	6/23/2022 12:07	0.84	6/23/2022 13:49	34.94
6/24/2022 13:33	84.59	6/23/2022 12:50	5.82	6/23/2022 13:20	10.75	6/23/2022 12:08	0.82	6/23/2022 13:50	34.93
6/24/2022 13:34	84.58	6/23/2022 12:51	5.09	6/23/2022 13:21	10.76	6/23/2022 12:09	0.84	6/23/2022 13:51	34.92
6/24/2022 13:35	84.53	6/23/2022 12:52	4.43	6/23/2022 13:22	10.76	6/23/2022 12:10	0.84	6/23/2022 13:52	34.92
6/24/2022 13:36	84.55	6/23/2022 12:53	3.87	6/23/2022 13:23	10.75	6/23/2022 12:11	0.81	6/23/2022 13:53	34.91
6/24/2022 13:37	84.55	6/23/2022 12:54	3.42	6/23/2022 13:24	10.75	6/23/2022 12:12	0.82	6/23/2022 13:54	34.92
6/24/2022 13:38	84.56	6/23/2022 12:55	2.99	6/23/2022 13:25	10.71	6/23/2022 12:13	0.83	6/23/2022 13:55	34.90
6/24/2022 13:39	84.56	6/23/2022 12:56	2.72	6/23/2022 13:26	10.71	6/23/2022 12:14	0.78	6/23/2022 13:56	34.89
6/24/2022 13:40	84.57	6/23/2022 12:57	2.43	6/23/2022 13:27	10.68	6/23/2022 12:15	0.82	6/23/2022 13:57	34.89
6/24/2022 13:41	84.57	6/23/2022 12:58	2.25	6/23/2022 13:28	10.67	6/23/2022 12:16	0.82	6/23/2022 13:58	34.90
6/24/2022 13:42	84.55	6/23/2022 12:59	2.01	6/23/2022 13:29	10.72	6/23/2022 12:17	0.84	6/23/2022 13:59	34.89
6/24/2022 13:43	84.57	6/23/2022 13:00	1.86	6/23/2022 13:30	10.66	6/23/2022 12:18	0.83	6/23/2022 14:00	34.88
6/24/2022 13:44	84.54	6/23/2022 13:01	1.72	6/23/2022 13:31	10.61	6/23/2022 12:19	0.87	6/23/2022 14:01	34.89
6/24/2022 13:45	84.55	6/23/2022 13:02	1.61	6/23/2022 13:32	10.61	6/23/2022 12:20	0.81	6/23/2022 14:02	34.88
6/24/2022 13:46	84.54	6/23/2022 13:03	1.44	6/23/2022 13:33	10.64	6/23/2022 12:21	0.84	6/23/2022 14:03	34.88
6/24/2022 13:47	84.55	6/23/2022 13:04	1.38	6/23/2022 13:34	10.60	6/23/2022 12:22	0.84	6/23/2022 14:04	34.89
6/24/2022 13:48	84.50	6/23/2022 13:05	1.34	6/23/2022 13:35	10.68	6/23/2022 12:23	0.82	6/23/2022 14:05	34.87
6/24/2022 13:49	84.60	6/23/2022 13:06	5.72	6/23/2022 13:36	10.62	6/23/2022 12:24	0.81	6/23/2022 14:06	34.89
6/24/2022 13:50	84.59	6/23/2022 13:07	8.63	6/23/2022 13:37	10.62	6/23/2022 12:25	0.80	6/23/2022 14:07	34.88
6/24/2022 13:51	84.55	6/23/2022 13:08	7.35	6/23/2022 13:38	10.68	6/23/2022 12:26	0.78	6/23/2022 14:08	34.86
6/24/2022 13:52	84.58	6/23/2022 13:09	6.24	6/23/2022 13:39	10.64	6/23/2022 12:27	0.81	6/23/2022 14:09	34.88
6/24/2022 13:53	84.52	6/23/2022 13:10	5.43	6/23/2022 13:40	10.64	6/23/2022 12:28	0.81	6/23/2022 14:10	34.84
6/24/2022 13:54	84.54	6/23/2022 13:11	4.69	6/23/2022 13:41	10.62	6/23/2022 12:29	0.85	6/23/2022 14:11	34.84
6/24/2022 13:55	84.57	6/23/2022 13:12	4.14	6/23/2022 13:42	10.62	6/23/2022 12:30	0.82	6/23/2022 14:12	34.85
6/24/2022 13:56	84.55	6/23/2022 13:13	3.66	6/23/2022 13:43	10.60	6/23/2022 12:31	0.85	6/23/2022 14:13	34.85
6/24/2022 13:57	84.56	6/23/2022 13:14	3.24	6/23/2022 13:44	10.64	6/23/2022 12:32	0.81	6/23/2022 14:14	34.84
6/24/2022 13:58	84.57	6/23/2022 13:15	2.83	6/23/2022 13:45	10.63	6/23/2022 12:33	0.84	6/23/2022 14:15	34.87
6/24/2022 13:59	84.53	6/23/2022 13:16	2.52	6/23/2022 13:46	10.63	6/23/2022 12:34	0.84	6/23/2022 14:16	34.86
6/24/2022 14:00	84.55	6/23/2022 13:17	2.35	6/23/2022 13:47	10.58	6/23/2022 12:35	0.81	6/23/2022 14:17	34.83
6/24/2022 14:01	84.52	6/23/2022 13:18	2.11	6/23/2022 13:48	12.40	6/23/2022 12:36	0.80	6/23/2022 14:18	34.82
6/24/2022 14:02	84.50	6/23/2022 13:19	1.91	6/23/2022 13:49	14.40	6/23/2022 12:37	0.80	6/23/2022 14:19	34.84
6/24/2022 14:03	84.52	6/23/2022 13:20	1.81	6/23/2022 13:50	13.92	6/23/2022 12:38	0.81	6/23/2022 14:20	34.84
6/24/2022 14:04	84.55	6/23/2022 13:21	1.62	6/23/2022 13:51	13.51	6/23/2022 12:39	0.78	6/23/2022 14:21	34.86
6/24/2022 14:05	84.57	6/23/2022 13:22	1.50	6/23/2022 13:52	13.16	6/23/2022 12:40	0.83	6/23/2022 14:22	34.83

6/24/2022 14:06	84.49	6/23/2022 13:23	1.39	6/23/2022 13:53	12.83	6/23/2022 12:41	0.81	6/23/2022 14:23	34.84
6/24/2022 14:07	84.57	6/23/2022 13:24	5.43	6/23/2022 13:54	12.60	6/23/2022 12:42	0.81	6/23/2022 14:24	34.85
6/24/2022 14:08	84.53	6/23/2022 13:25	9.15	6/23/2022 13:55	12.37	6/23/2022 12:43	0.80	6/23/2022 14:25	34.85
6/24/2022 14:09	84.52	6/23/2022 13:26	7.76	6/23/2022 13:56	12.16	6/23/2022 12:44	0.79	6/23/2022 14:26	34.88
6/24/2022 14:10	84.50	6/23/2022 13:27	6.66	6/23/2022 13:57	12.00	6/23/2022 12:45	0.80	6/23/2022 14:27	34.88
6/24/2022 14:11	84.53	6/23/2022 13:28	5.69	6/23/2022 13:58	11.83	6/23/2022 12:46	0.80	6/23/2022 14:28	34.88
6/24/2022 14:12	84.49	6/23/2022 13:29	5.00	6/23/2022 13:59	11.71	6/23/2022 12:47	0.81	6/23/2022 14:29	34.85
6/24/2022 14:13	84.50	6/23/2022 13:30	4.37	6/23/2022 14:00	11.59	6/23/2022 12:48	0.81	6/23/2022 14:30	34.91
6/24/2022 14:14	84.52	6/23/2022 13:31	3.81	6/23/2022 14:01	11.51	6/23/2022 12:49	0.79	6/23/2022 14:31	34.88
6/24/2022 14:15	84.56	6/23/2022 13:32	3.37	6/23/2022 14:02	11.47	6/23/2022 12:50	0.83	6/23/2022 14:32	34.90
6/24/2022 14:16	84.49	6/23/2022 13:33	3.00	6/23/2022 14:03	11.35	6/23/2022 12:51	0.84	6/23/2022 14:33	34.88
6/24/2022 14:17	84.55	6/23/2022 13:34	2.67	6/23/2022 14:04	11.29	6/23/2022 12:52	0.79	6/23/2022 14:34	34.85
6/24/2022 14:18	88.01	6/23/2022 13:35	2.38	6/23/2022 14:05	11.20	6/23/2022 12:53	0.80	6/23/2022 14:35	34.91
6/24/2022 14:19	90.96	6/23/2022 13:36	2.21	6/23/2022 14:06	11.16	6/23/2022 12:54	0.75	6/23/2022 14:36	34.89
6/24/2022 14:20	92.59	6/23/2022 13:37	2.00	6/23/2022 14:07	11.10	6/23/2022 12:55	0.83	6/23/2022 14:37	34.84
6/24/2022 14:21	90.87	6/23/2022 13:38	1.84	6/23/2022 14:08	11.05	6/23/2022 12:56	0.80	6/23/2022 14:38	34.92
6/24/2022 14:22	88.86	6/23/2022 13:39	1.68	6/23/2022 14:09	11.05	6/23/2022 12:57	0.86	6/23/2022 14:39	34.86
6/24/2022 14:23	87.59	6/23/2022 13:40	5.78	6/23/2022 14:10	11.01	6/23/2022 12:58	0.79	6/23/2022 14:40	34.86
6/24/2022 14:24	86.81	6/23/2022 13:41	8.87	6/23/2022 14:11	10.96	6/23/2022 12:59	0.77	6/23/2022 14:41	34.90
6/24/2022 14:25	86.32	6/23/2022 13:42	7.52	6/23/2022 14:12	10.93	6/23/2022 13:00	0.79	6/23/2022 14:42	34.83
6/24/2022 14:26	85.93	6/23/2022 13:43	6.41	6/23/2022 14:13	10.93	6/23/2022 13:01	0.82	6/23/2022 14:43	34.86
6/24/2022 14:27	85.75	6/23/2022 13:44	5.58	6/23/2022 14:14	10.86	6/23/2022 13:02	0.77	6/23/2022 14:44	34.85
6/24/2022 14:28	85.59	6/23/2022 13:45	4.82	6/23/2022 14:15	10.85	6/23/2022 13:03	0.81	6/23/2022 14:45	34.84
6/24/2022 14:29	85.42	6/23/2022 13:46	4.21	6/23/2022 14:16	10.84	6/23/2022 13:04	0.81	6/23/2022 14:46	34.85
6/24/2022 14:30	85.40	6/23/2022 13:47	3.70	6/23/2022 14:17	10.85	6/23/2022 13:05	0.78	6/23/2022 14:47	34.83
6/24/2022 14:31	85.30	6/23/2022 13:48	3.30	6/23/2022 14:18	10.86	6/23/2022 13:06	0.82	6/23/2022 14:48	34.85
6/24/2022 14:32	85.25	6/23/2022 13:49	2.91	6/23/2022 14:19	10.79	6/23/2022 13:07	0.84	6/23/2022 14:49	34.88
6/24/2022 14:33	85.19	6/23/2022 13:50	2.61	6/23/2022 14:20	10.78	6/23/2022 13:08	0.82	6/23/2022 14:50	34.82
6/24/2022 14:34	85.16	6/23/2022 13:51	2.40	6/23/2022 14:21	10.79	6/23/2022 13:09	0.81	6/23/2022 14:51	34.88
6/24/2022 14:35	85.10	6/23/2022 13:52	2.16	6/23/2022 14:22	10.76	6/23/2022 13:10	0.80	6/23/2022 14:52	34.84
6/24/2022 14:36	85.12	6/23/2022 13:53	1.98	6/23/2022 14:23	10.76	6/23/2022 13:11	0.82	6/23/2022 14:53	34.81
6/24/2022 14:37	85.09	6/23/2022 13:54	1.83	6/23/2022 14:24	10.73	6/23/2022 13:12	0.81	6/23/2022 14:54	34.80
6/24/2022 14:38	85.06	6/23/2022 13:55	1.72	6/23/2022 14:25	10.69	6/23/2022 13:13	0.82	6/23/2022 14:55	34.78
6/24/2022 14:39	85.04	6/23/2022 13:56	1.55	6/23/2022 14:26	10.70	6/23/2022 13:14	0.84	6/23/2022 14:56	34.82
6/24/2022 14:40	85.03	6/23/2022 13:57	1.48	6/23/2022 14:27	10.69	6/23/2022 13:15	0.84	6/23/2022 14:57	34.80
6/24/2022 14:41	84.99	6/23/2022 13:58	1.41	6/23/2022 14:28	10.67	6/23/2022 13:16	0.85	6/23/2022 14:58	34.80
6/24/2022 14:42	84.97	6/23/2022 13:59	1.33	6/23/2022 14:29	10.58	6/23/2022 13:17	0.80	6/23/2022 14:59	34.83
6/24/2022 14:43	84.98	6/23/2022 14:00	1.28	6/23/2022 14:30	10.63	6/23/2022 13:18	0.82	6/23/2022 15:00	37.04
6/24/2022 14:44	84.94	6/23/2022 14:01	1.19	6/23/2022 14:31	10.62	6/23/2022 13:19	0.77	6/23/2022 15:01	35.77
6/24/2022 14:45	84.93	6/23/2022 14:02	1.15	6/23/2022 14:32	10.57	6/23/2022 13:20	0.81	6/23/2022 15:02	35.19
6/24/2022 14:46	84.91	6/23/2022 14:03	1.08	6/23/2022 14:33	10.56	6/23/2022 13:21	0.79	6/23/2022 15:03	34.99
6/24/2022 14:47	84.87	6/23/2022 14:04	1.04	6/23/2022 14:34	10.58	6/23/2022 13:22	0.76	6/23/2022 15:04	34.92
6/24/2022 14:48	84.86	6/23/2022 14:05	1.02	6/23/2022 14:35	10.61	6/23/2022 13:23	0.78	6/23/2022 15:05	34.88
6/24/2022 14:49	84.90	6/23/2022 14:06	5.03	6/23/2022 14:36	10.57	6/23/2022 13:24	0.81	6/23/2022 15:06	34.87
6/24/2022 14:50	84.90	6/23/2022 14:07	8.39	6/23/2022 14:37	10.60	6/23/2022 13:25	0.79	6/23/2022 15:07	34.85
6/24/2022 14:51	84.87	6/23/2022 14:08	7.11	6/23/2022 14:38	10.64	6/23/2022 13:26	0.85	6/23/2022 15:08	34.90
6/24/2022 14:52	84.82	6/23/2022 14:09	6.08	6/23/2022 14:39	10.62	6/23/2022 13:27	0.81	6/23/2022 15:09	34.86
6/24/2022 14:53	84.91	6/23/2022 14:10	5.24	6/23/2022 14:40	10.62	6/23/2022 13:28	0.80	6/23/2022 15:10	34.89
6/24/2022 14:54	84.86	6/23/2022 14:11	4.55	6/23/2022 14:41	10.60	6/23/2022 13:29	0.81	6/23/2022 15:11	34.90
6/24/2022 14:55	84.83	6/23/2022 14:12	3.96	6/23/2022 14:42	10.63	6/23/2022 13:30	0.85	6/23/2022 15:12	34.89
6/24/2022 14:56	84.84	6/23/2022 14:13	3.51	6/23/2022 14:43	10.62	6/23/2022 13:31	0.82	6/23/2022 15:13	34.87
6/24/2022 14:57	84.85	6/23/2022 14:14	3.07	6/23/2022 14:44	10.62	6/23/2022 13:32	0.82	6/23/2022 15:14	34.88
6/24/2022 14:58	84.86	6/23/2022 14:15	2.72	6/23/2022 14:45	10.59	6/23/2022 13:33	0.80	6/23/2022 15:15	36.55
6/24/2022 14:59	84.83	6/23/2022 14:16	2.45	6/23/2022 14:46	10.58	6/23/2022 13:34	0.77	6/23/2022 15:16	35.55
6/24/2022 15:00	84.83	6/23/2022 14:17	2.24	6/23/2022 14:47	10.58	6/23/2022 13:35	0.79	6/23/2022 15:17	35.11
6/24/2022 15:01	84.82	6/23/2022 14:18	2.03	6/23/2022 14:48	10.55	6/23/2022 13:36	0.80	6/23/2022 15:18	34.95
6/24/2022 15:02	84.81	6/23/2022 14:19	1.87	6/23/2022 14:49	10.56	6/23/2022 13:37	0.84	6/23/2022 15:19	34.96
6/24/2022 15:03	84.83	6/23/2022 14:20	1.70	6/23/2022 14:50	10.57	6/23/2022 13:38	0.78	6/23/2022 15:20	34.88
6/24/2022 15:04	84.79	6/23/2022 14:21	1.55	6/23/2022 14:51	10.52	6/23/2022 13:39	0.80	6/23/2022 15:21	34.90
6/24/2022 15:05	84.80	6/23/2022 14:22	1.43	6/23/2022 14:52	11.13	6/23/2022 13:40	0.80	6/23/2022 15:22	34.89
6/24/2022 15:06	84.78	6/23/2022 14:23	1.37	6/23/2022 14:53	14.83	6/23/2022 13:41	0.82	6/23/2022 15:23	34.88
6/24/2022 15:07	84.75	6/23/2022 14:24	1.32	6/23/2022 14:54	14.23	6/23/2022 13:42	0.82	6/23/2022 15:24	34.88
6/24/2022 15:08	84.75	6/23/2022 14:25	1.22	6/23/2022 14:55	13.82	6/23/2022 13:43	0.78	6/23/2022 15:25	34.87
6/24/2022 15:09	84.77	6/23/2022 14:26	4.94	6/23/2022 14:56	13.40	6/23/2022 13:44	0.84	6/23/2022 15:26	36.80
6/24/2022 15:10	84.77	6/23/2022 14:27	9.98	6/23/2022 14:57	13.06	6/23/2022 13:45	0.80	6/23/2022 15:27	35.67
6/24/2022 15:11	84.78	6/23/2022 14:28	8.76	6/23/2022 14:58	12.77	6/23/2022 13:46	0.84	6/23/2022 15:28	35.21
6/24/2022 15:12	84.78	6/23/2022 14:29	7.45	6/23/2022 14:59	12.54	6/23/2022 13:47	0.82	6/23/2022 15:29	35.01
6/24/2022 15:13	84.78	6/23/2022 14:30	6.42	6/23/2022 15:00	12.33	6/23/2022 13:48	0.78	6/23/2022 15:30	34.92
6/24/2022 15:14	84.78	6/23/2022 14:31	5.53	6/23/2022 15:01	12.18	6/23/2022 13:49	0.84	6/23/2022 15:31	34.92
6/24/2022 15:15	84.74	6/23/2022 14:32	4.80	6/23/2022 15:02	12.00	6/23/2022 13:50	0.80	6/23/2022 15:32	34.91
6/24/2022 15:16	84.75	6/23/2022 14:33	4.25	6/23/2022 15:03	11.88	6/23/2022 13:51	0.80	6/23/2022 15:33	34.89
6/24/2022 15:17	84.74	6/23/2022 14:34	3.68	6/23/2022 15:04	11.72	6/23/2022 13:52	0.76	6/23/2022 15:34	34.92
6/24/2022 15:18	84.77	6/23/2022 14:35	3.29	6/23/2022 15:05	11.61	6/23/2022 13:53	0.79	6/23/2022 15:35	34.86
6/24/2022 15:19	84.76	6/23/2022 14:36	2.86	6/23/2022 15:06	11.53	6/23/2022 13:54	0.80	6/23/2022 15:36	34.88
6/24/2022 15:20	84.71	6/23/2022 14:37	2.56	6/23/2022 15:07	11.43	6/23/2022 13:55	0.82	6/23/2022 15:37	34.90
6/24/2022 15:21	84.76	6/23/2022 14:38	2.29	6/23/2022 15:08	11.37	6/23/2022 13:56	0.79	6/23/2022 15:38	34.87
6/24/2022 15:22	84.73	6/23/2022 14:39	2.09	6/23/2022 15:09	11.28	6/23/2022 13:57	0.76	6/23/2022 15:39	34.84
6/24/2022 15:23	84.74	6/23/2022 14:40	1.91	6/23/2022 15:10	11.21	6/23/2022 13:58	0.79	6/23/2022 15:40	34.84
6/24/2022 15:24	84.75	6/23/2022 14:41	1.75	6/23/2022 15:11	11.14	6/23/2022 13:59	0.80	6/23/2022 15:41	34.85
6/24/2022 15:25	84.71	6/23/2022 14:42	1.61	6/23/2022 15:12	11.10	6/23/2022 14:00	0.80	6/23/2022 15:42	34.87
6/24/2022 15:26	84.73	6/23/2022 14:43	1.52	6/23/2022 15:13	11.05	6/23/2022 14:01	0.81	6/23/2022 15:43	34.86
6/24/2022 15:27	84.73	6/23/2022 14:44	1.43	6/23/2022 15:14	11.01	6/23/2022 14:02	0.78	6/23/2022 15:44	34.88
6/24/2022 15:28	84.74	6/23/2022 14:45	1.36	6/23/2022 15:15	10.92	6/23/2022 14:03	0.80	6/23/2022 15:45	36.17
6/24/2022 15:29	84.73	6/23/2022 14:46	1.28	6/23/2022 15:16	10.92	6/23/2022 14:04	0.78	6/23/2022 15:46	35.37
6/24/2022 15:30	84.71	6/23/2022 14:47	1.17	6/23/2022 15:17	10.90	6/23/2022 14:05	0.81	6/23/2022 15:47	35.03
6/24/2022 15:31	84.74	6/23/2022 14:48	1.14	6/23/2022 15:18	10.84	6/23/2022 14:06	0.80	6/23/2022 15:48	34.96
6/24/2022 15:32	84.73	6/23/2022 14:49	1.07	6/23/2022 15:19	10.83	6/23/2022 14:07	0.80	6/23/2022 15:49	34.88
6/24/2022 15:33	84.73	6/23/2022 14:50	1.06	6/23/2022 15:20	10.83	6/23/2022 14:08	0.83	6/23/2022 15:50	34.90

6/24/2022 15:34	84.67	6/23/2022 14:51	1.00	6/23/2022 15:21	10.83	6/23/2022 14:09	0.81	6/23/2022 15:51	34.89
6/24/2022 15:35	84.71	6/23/2022 14:52	0.96	6/23/2022 15:22	10.82	6/23/2022 14:10	0.83	6/23/2022 15:52	34.87
6/24/2022 15:36	84.68	6/23/2022 14:53	0.93	6/23/2022 15:23	10.82	6/23/2022 14:11	0.86	6/23/2022 15:53	34.84
6/24/2022 15:37	84.73	6/23/2022 14:54	4.82	6/23/2022 15:24	10.76	6/23/2022 14:12	0.81	6/23/2022 15:54	34.86
6/24/2022 15:38	84.71	6/23/2022 14:55	8.24	6/23/2022 15:25	10.76	6/23/2022 14:13	0.82	6/23/2022 15:55	34.85
6/24/2022 15:39	84.76	6/23/2022 14:56	6.99	6/23/2022 15:26	10.75	6/23/2022 14:14	0.81	6/23/2022 15:56	34.85
6/24/2022 15:40	84.68	6/23/2022 14:57	5.94	6/23/2022 15:27	10.76	6/23/2022 14:15	0.83	6/23/2022 15:57	34.87
6/24/2022 15:41	84.71	6/23/2022 14:58	5.14	6/23/2022 15:28	10.72	6/23/2022 14:16	0.79	6/23/2022 15:58	34.91
6/24/2022 15:42	84.68	6/23/2022 14:59	4.50	6/23/2022 15:29	10.72	6/23/2022 14:17	0.81	6/23/2022 15:59	34.85
6/24/2022 15:43	84.69	6/23/2022 15:00	3.92	6/23/2022 15:30	10.72	6/23/2022 14:18	0.81	6/23/2022 16:00	34.84
6/24/2022 15:44	84.72	6/23/2022 15:01	3.48	6/23/2022 15:31	10.70	6/23/2022 14:19	0.82	6/23/2022 16:01	34.84
6/24/2022 15:45	84.66	6/23/2022 15:02	3.05	6/23/2022 15:32	10.66	6/23/2022 14:20	0.79	6/23/2022 16:02	34.89
6/24/2022 15:46	84.69	6/23/2022 15:03	2.75	6/23/2022 15:33	10.66	6/23/2022 14:21	0.80	6/23/2022 16:03	34.80
6/24/2022 15:47	84.66	6/23/2022 15:04	6.34	6/23/2022 15:34	10.58	6/23/2022 14:22	0.79	6/23/2022 16:04	34.86
6/24/2022 15:48	84.71	6/23/2022 15:05	10.43	6/23/2022 15:35	10.60	6/23/2022 14:23	0.80	6/23/2022 16:05	34.88
6/24/2022 15:49	84.69	6/23/2022 15:06	8.87	6/23/2022 15:36	10.57	6/23/2022 14:24	0.77	6/23/2022 16:06	34.82
6/24/2022 15:50	84.67	6/23/2022 15:07	7.58	6/23/2022 15:37	10.63	6/23/2022 14:25	0.81	6/23/2022 16:07	34.84
6/24/2022 15:51	84.65	6/23/2022 15:08	6.51	6/23/2022 15:38	10.57	6/23/2022 14:26	0.80	6/23/2022 16:08	34.86
6/24/2022 15:52	84.67	6/23/2022 15:09	5.56	6/23/2022 15:39	10.57	6/23/2022 14:27	0.78	6/23/2022 16:09	34.83
6/24/2022 15:53	84.70	6/23/2022 15:10	4.90	6/23/2022 15:40	12.81	6/23/2022 14:28	0.84	6/23/2022 16:10	34.84
6/24/2022 15:54	84.64	6/23/2022 15:11	4.26	6/23/2022 15:41	15.58	6/23/2022 14:29	0.82	6/23/2022 16:11	34.86
6/24/2022 15:55	84.67	6/23/2022 15:12	3.76	6/23/2022 15:42	14.93	6/23/2022 14:30	0.85	6/23/2022 16:12	34.83
6/24/2022 15:56	84.66	6/23/2022 15:13	3.27	6/23/2022 15:43	14.45	6/23/2022 14:31	0.83	6/23/2022 16:13	34.83
6/24/2022 15:57	84.70	6/23/2022 15:14	2.88	6/23/2022 15:44	13.98	6/23/2022 14:32	0.81	6/23/2022 16:14	34.83
6/24/2022 15:58	84.62	6/23/2022 15:15	2.61	6/23/2022 15:45	13.64	6/23/2022 14:33	0.84	6/23/2022 16:15	34.85
6/24/2022 15:59	84.68	6/23/2022 15:16	2.31	6/23/2022 15:46	13.30	6/23/2022 14:34	0.81	6/23/2022 16:16	34.86
6/24/2022 16:00	84.64	6/23/2022 15:17	2.15	6/23/2022 15:47	12.99	6/23/2022 14:35	0.80	6/23/2022 16:17	34.83
6/24/2022 16:01	84.65	6/23/2022 15:18	1.98	6/23/2022 15:48	12.78	6/23/2022 14:36	0.78	6/23/2022 16:18	34.82
6/24/2022 16:02	84.63	6/23/2022 15:19	1.78	6/23/2022 15:49	12.52	6/23/2022 14:37	0.80	6/23/2022 16:19	34.84
6/24/2022 16:03	84.64	6/23/2022 15:20	1.64	6/23/2022 15:50	12.34	6/23/2022 14:38	0.81	6/23/2022 16:20	34.84
6/24/2022 16:04	84.68	6/23/2022 15:21	1.52	6/23/2022 15:51	12.19	6/23/2022 14:39	0.81	6/23/2022 16:21	34.80
6/24/2022 16:05	84.64	6/23/2022 15:22	1.45	6/23/2022 15:52	12.02	6/23/2022 14:40	0.83	6/23/2022 16:22	34.85
6/24/2022 16:06	84.69	6/23/2022 15:23	1.35	6/23/2022 15:53	11.86	6/23/2022 14:41	0.75	6/23/2022 16:23	34.85
6/24/2022 16:07	84.68	6/23/2022 15:24	1.21	6/23/2022 15:54	11.73	6/23/2022 14:42	0.81	6/23/2022 16:24	34.87
6/24/2022 16:08	84.65	6/23/2022 15:25	1.23	6/23/2022 15:55	11.63	6/23/2022 14:43	0.84	6/23/2022 16:25	36.97
6/24/2022 16:09	84.64	6/23/2022 15:26	1.12	6/23/2022 15:56	11.54	6/23/2022 14:44	0.83	6/23/2022 16:26	35.80
6/24/2022 16:10	84.65	6/23/2022 15:27	1.09	6/23/2022 15:57	11.49	6/23/2022 14:45	0.82	6/23/2022 16:27	35.18
6/24/2022 16:11	84.65	6/23/2022 15:28	1.06	6/23/2022 15:58	11.41	6/23/2022 14:46	0.81	6/23/2022 16:28	35.00
6/24/2022 16:12	84.66	6/23/2022 15:29	1.02	6/23/2022 15:59	11.31	6/23/2022 14:47	0.82	6/23/2022 16:29	34.89
6/24/2022 16:13	84.65	6/23/2022 15:30	0.97	6/23/2022 16:00	11.27	6/23/2022 14:48	0.81	6/23/2022 16:30	34.89
6/24/2022 16:14	84.62	6/23/2022 15:31	0.96	6/23/2022 16:01	11.21	6/23/2022 14:49	0.82	6/23/2022 16:31	34.85
6/24/2022 16:15	84.60	6/23/2022 15:32	0.94	6/23/2022 16:02	11.16	6/23/2022 14:50	0.82	6/23/2022 16:32	34.87
6/24/2022 16:16	84.63	6/23/2022 15:33	0.88	6/23/2022 16:03	11.13	6/23/2022 14:51	0.82	6/23/2022 16:33	34.87
6/24/2022 16:17	84.65	6/23/2022 15:34	0.85	6/23/2022 16:04	11.09	6/23/2022 14:52	0.80	6/23/2022 16:34	34.83
6/24/2022 16:18	84.62	6/23/2022 15:35	0.87	6/23/2022 16:05	11.02	6/23/2022 14:53	0.80	6/23/2022 16:35	34.86
6/24/2022 16:19	84.66	6/23/2022 15:36	0.82	6/23/2022 16:06	11.00	6/23/2022 14:54	0.83	6/23/2022 16:36	34.85
6/24/2022 16:20	84.66	6/23/2022 15:37	0.78	6/23/2022 16:07	10.97	6/23/2022 14:55	0.81	6/23/2022 16:37	34.85
6/24/2022 16:21	84.67	6/23/2022 15:38	0.84	6/23/2022 16:08	10.96	6/23/2022 14:56	0.82	6/23/2022 16:38	35.99
6/24/2022 16:22	84.63	6/23/2022 15:39	0.78	6/23/2022 16:09	10.91	6/23/2022 14:57	0.84	6/23/2022 16:39	36.10
6/24/2022 16:23	84.64	6/23/2022 15:40	0.76	6/23/2022 16:10	10.87	6/23/2022 14:58	0.83	6/23/2022 16:40	35.31
6/24/2022 16:24	84.63	6/23/2022 15:41	0.79	6/23/2022 16:11	10.83	6/23/2022 14:59	0.83	6/23/2022 16:41	35.02
6/24/2022 16:25	84.63	6/23/2022 15:42	0.76	6/23/2022 16:12	10.87	6/23/2022 15:00	0.84	6/23/2022 16:42	34.95
6/24/2022 16:26	84.62	6/23/2022 15:43	0.75	6/23/2022 16:13	10.85	6/23/2022 15:01	0.91	6/23/2022 16:43	34.89
6/24/2022 16:27	84.58	6/23/2022 15:44	0.78	6/23/2022 16:14	10.84	6/23/2022 15:02	0.83	6/23/2022 16:44	34.91
6/24/2022 16:28	84.63	6/23/2022 15:45	0.77	6/23/2022 16:15	10.83	6/23/2022 15:03	0.83	6/23/2022 16:45	34.89
6/24/2022 16:29	84.61	6/23/2022 15:46	0.73	6/23/2022 16:16	10.82	6/23/2022 15:04	0.88	6/23/2022 16:46	34.83
6/24/2022 16:30	84.60	6/23/2022 15:47	0.75	6/23/2022 16:17	10.78	6/23/2022 15:05	0.83	6/23/2022 16:47	34.88
6/24/2022 16:31	84.64	6/23/2022 15:48	0.75	6/23/2022 16:18	10.79	6/23/2022 15:06	0.88	6/23/2022 16:48	34.87
6/24/2022 16:32	84.66	6/23/2022 15:49	0.74	6/23/2022 16:19	10.76	6/23/2022 15:07	0.85	6/23/2022 16:49	34.86
6/24/2022 16:33	84.63	6/23/2022 15:50	0.70	6/23/2022 16:20	10.73	6/23/2022 15:08	0.88	6/23/2022 16:50	34.85
6/24/2022 16:34	84.65	6/23/2022 15:51	0.69	6/23/2022 16:21	10.77	6/23/2022 15:09	0.86	6/23/2022 16:51	34.87
6/24/2022 16:35	84.59	6/23/2022 15:52	0.76	6/23/2022 16:22	10.71	6/23/2022 15:10	0.86	6/23/2022 16:52	34.88
6/24/2022 16:36	84.58	6/23/2022 15:53	3.31	6/23/2022 16:23	10.71	6/23/2022 15:11	0.90	6/23/2022 16:53	34.83
6/24/2022 16:37	84.65	6/23/2022 15:54	8.75	6/23/2022 16:24	10.68	6/23/2022 15:12	0.87	6/23/2022 16:54	34.88
6/24/2022 16:38	84.60	6/23/2022 15:55	8.17	6/23/2022 16:25	10.67	6/23/2022 15:13	0.84	6/23/2022 16:55	34.87
6/24/2022 16:39	84.62	6/23/2022 15:56	6.91	6/23/2022 16:26	10.69	6/23/2022 15:14	0.85	6/23/2022 16:56	34.88
6/24/2022 16:40	84.58	6/23/2022 15:57	5.94	6/23/2022 16:27	10.64	6/23/2022 15:15	0.85	6/23/2022 16:57	34.83
6/24/2022 16:41	84.63	6/23/2022 15:58	5.13	6/23/2022 16:28	10.63	6/23/2022 15:16	0.86	6/23/2022 16:58	34.82
6/24/2022 16:42	84.59	6/23/2022 15:59	4.43	6/23/2022 16:29	10.64	6/23/2022 15:17	0.86	6/23/2022 16:59	34.87
6/24/2022 16:43	84.59	6/23/2022 16:00	3.89	6/23/2022 16:30	10.60	6/23/2022 15:18	0.86	6/23/2022 17:00	34.83
6/24/2022 16:44	84.62	6/23/2022 16:01	3.43	6/23/2022 16:31	10.60	6/23/2022 15:19	0.81	6/23/2022 17:01	34.88
6/24/2022 16:45	84.61	6/23/2022 16:02	3.01	6/23/2022 16:32	10.57	6/23/2022 15:20	0.82	6/23/2022 17:02	34.88
6/24/2022 16:46	84.61	6/23/2022 16:03	2.62	6/23/2022 16:33	10.56	6/23/2022 15:21	0.84	6/23/2022 17:03	34.80
6/24/2022 16:47	84.62	6/23/2022 16:04	2.46	6/23/2022 16:34	10.55	6/23/2022 15:22	0.86	6/23/2022 17:04	34.83
6/24/2022 16:48	84.58	6/23/2022 16:05	2.37	6/23/2022 16:35	10.53	6/23/2022 15:23	0.85	6/23/2022 17:05	34.80
6/24/2022 16:49	84.59	6/23/2022 16:06	2.20	6/23/2022 16:36	10.55	6/23/2022 15:24	0.85	6/23/2022 17:06	34.83
6/24/2022 16:50	84.56	6/23/2022 16:07	2.11	6/23/2022 16:37	10.57	6/23/2022 15:25	0.85	6/23/2022 17:07	34.87
6/24/2022 16:51	84.59	6/23/2022 16:08	1.90	6/23/2022 16:38	10.62	6/23/2022 15:26	0.83	6/23/2022 17:08	34.83
6/24/2022 16:52	84.58	6/23/2022 16:09	1.79	6/23/2022 16:39	10.61	6/23/2022 15:27	0.83	6/23/2022 17:09	34.85
6/24/2022 16:53	84.57	6/23/2022 16:10	1.62	6/23/2022 16:40	10.61	6/23/2022 15:28	0.82	6/23/2022 17:10	34.82
6/24/2022 16:54	84.56	6/23/2022 16:11	1.52	6/23/2022 16:41	10.60	6/23/2022 15:29	0.86	6/23/2022 17:11	34.83
6/24/2022 16:55	84.57	6/23/2022 16:12	1.44	6/23/2022 16:42	10.58	6/23/2022 15:30	0.85	6/23/2022 17:12	34.86
6/24/2022 16:56	84.60	6/23/2022 16:13	1.41	6/23/2022 16:43	10.58	6/23/2022 15:31	0.83	6/23/2022 17:13	34.87
6/24/2022 16:57	84.60	6/23/2022 16:14	1.25	6/23/2022 16:44	10.61	6/23/2022 15:32	0.85	6/23/2022 17:14	34.86
6/24/2022 16:58	84.59	6/23/2022 16:15	1.23	6/23/2022 16:45	10.57	6/23/2022 15:33	0.85	6/23/2022 17:15	34.84
6/24/2022 16:59	84.58	6/23/2022 16:16	3.33	6/23/2022 16:46	10.55	6/23/2022 15:34	0.86	6/23/2022 17:16	34.81
6/24/2022 17:00	84.61	6/23/2022 16:17	8.78	6/23/2022 16:47	10.55	6/23/2022 15:35	0.84	6/23/2022 17:17	34.82
6/24/2022 17:01	84.60	6/23/2022 16:18	8.30	6/23/2022 16:48	10.56	6/23/2022 15:36	0.86	6/23/2022 17:18	34.85

6/24/2022 17:02	84.60	6/23/2022 16:19	7.08	6/23/2022 16:49	10.53	6/23/2022 15:37	0.82	6/23/2022 17:19	34.84
6/24/2022 17:03	84.61	6/23/2022 16:20	6.10	6/23/2022 16:50	10.54	6/23/2022 15:38	0.83	6/23/2022 17:20	34.84
6/24/2022 17:04	84.57	6/23/2022 16:21	5.28	6/23/2022 16:51	10.54	6/23/2022 15:39	0.86	6/23/2022 17:21	34.84
6/24/2022 17:05	84.56	6/23/2022 16:22	4.54	6/23/2022 16:52	10.53	6/23/2022 15:40	0.86	6/23/2022 17:22	34.85
6/24/2022 17:06	84.60	6/23/2022 16:23	4.02	6/23/2022 16:53	10.53	6/23/2022 15:41	0.85	6/23/2022 17:23	34.86
6/24/2022 17:07	84.56	6/23/2022 16:24	3.48	6/23/2022 16:54	10.49	6/23/2022 15:42	0.82	6/23/2022 17:24	34.81
6/24/2022 17:08	84.53	6/23/2022 16:25	3.10	6/23/2022 16:55	10.51	6/23/2022 15:43	0.85	6/23/2022 17:25	34.83
6/24/2022 17:09	84.54	6/23/2022 16:26	2.73	6/23/2022 16:56	10.51	6/23/2022 15:44	0.84	6/23/2022 17:26	34.82
6/24/2022 17:10	84.54	6/23/2022 16:27	2.47	6/23/2022 16:57	10.49	6/23/2022 15:45	0.85	6/23/2022 17:27	34.85
6/24/2022 17:11	84.60	6/23/2022 16:28	2.19	6/23/2022 16:58	10.49	6/23/2022 15:46	0.83	6/23/2022 17:28	34.84
6/24/2022 17:12	84.56	6/23/2022 16:29	1.98	6/23/2022 16:59	10.49	6/23/2022 15:47	0.83	6/23/2022 17:29	34.83
6/24/2022 17:13	84.59	6/23/2022 16:30	1.84	6/23/2022 17:00	10.49	6/23/2022 15:48	0.84	6/23/2022 17:30	34.81
6/24/2022 17:14	84.53	6/23/2022 16:31	1.70	6/23/2022 17:01	10.54	6/23/2022 15:49	0.87	6/23/2022 17:31	34.83
6/24/2022 17:15	84.58	6/23/2022 16:32	3.53	6/23/2022 17:02	10.50	6/23/2022 15:50	0.85	6/23/2022 17:32	34.85
6/24/2022 17:16	84.59	6/23/2022 16:33	8.92	6/23/2022 17:03	10.53	6/23/2022 15:51	0.85	6/23/2022 17:33	34.84
6/24/2022 17:17	84.56	6/23/2022 16:34	7.65	6/23/2022 17:04	10.49	6/23/2022 15:52	0.85	6/23/2022 17:34	34.83
6/24/2022 17:18	84.59	6/23/2022 16:35	6.53	6/23/2022 17:05	10.55	6/23/2022 15:53	0.86	6/23/2022 17:35	34.82
6/24/2022 17:19	84.56	6/23/2022 16:36	5.66	6/23/2022 17:06	10.53	6/23/2022 15:54	0.87	6/23/2022 17:36	34.82
6/24/2022 17:20	84.56	6/23/2022 16:37	4.89	6/23/2022 17:07	10.55	6/23/2022 15:55	0.91	6/23/2022 17:37	34.80
6/24/2022 17:21	84.57	6/23/2022 16:38	4.26	6/23/2022 17:08	10.52	6/23/2022 15:56	0.83	6/23/2022 17:38	34.78
6/24/2022 17:22	84.57	6/23/2022 16:39	3.72	6/23/2022 17:09	10.51	6/23/2022 15:57	0.84	6/23/2022 17:39	34.83
6/24/2022 17:23	84.55	6/23/2022 16:40	3.33	6/23/2022 17:10	10.54	6/23/2022 15:58	0.84	6/23/2022 17:40	34.78
6/24/2022 17:24	84.57	6/23/2022 16:41	2.88	6/23/2022 17:11	10.53	6/23/2022 15:59	0.85	6/23/2022 17:41	34.78
6/24/2022 17:25	84.59	6/23/2022 16:42	2.57	6/23/2022 17:12	10.54	6/23/2022 16:00	0.84	6/23/2022 17:42	34.84
6/24/2022 17:26	84.55	6/23/2022 16:43	2.34	6/23/2022 17:13	10.51	6/23/2022 16:01	0.81	6/23/2022 17:43	34.80
6/24/2022 17:27	84.59	6/23/2022 16:44	2.11	6/23/2022 17:14	10.51	6/23/2022 16:02	0.82	6/23/2022 17:44	34.79
6/24/2022 17:28	84.54	6/23/2022 16:45	1.95	6/23/2022 17:15	10.49	6/23/2022 16:03	0.85	6/23/2022 17:45	34.78
6/24/2022 17:29	84.58	6/23/2022 16:46	1.74	6/23/2022 17:16	10.51	6/23/2022 16:04	7.38	6/23/2022 17:46	34.77
6/24/2022 17:30	84.57	6/23/2022 16:47	1.62	6/23/2022 17:17	10.58	6/23/2022 16:05	7.35	6/23/2022 17:47	34.74
6/24/2022 17:31	84.56	6/23/2022 16:48	1.52	6/23/2022 17:18	10.51	6/23/2022 16:06	5.05	6/23/2022 17:48	34.77
6/24/2022 17:32	84.57	6/23/2022 16:49	1.43	6/23/2022 17:19	10.49	6/23/2022 16:07	3.25	6/23/2022 17:49	34.76
6/24/2022 17:33	84.55	6/23/2022 16:50	1.34	6/23/2022 17:20	10.47	6/23/2022 16:08	1.99	6/23/2022 17:50	34.78
6/24/2022 17:34	84.55	6/23/2022 16:51	1.26	6/23/2022 17:21	10.46	6/23/2022 16:09	1.02	6/23/2022 17:51	34.79
6/24/2022 17:35	84.55	6/23/2022 16:52	1.20	6/23/2022 17:22	10.46	6/23/2022 16:10	0.90	6/23/2022 17:52	34.74
6/24/2022 17:36	84.58	6/23/2022 16:53	1.16	6/23/2022 17:23	10.47	6/23/2022 16:11	0.94	6/23/2022 17:53	34.79
6/24/2022 17:37	84.58	6/23/2022 16:54	1.09	6/23/2022 17:24	10.46	6/23/2022 16:12	0.93	6/23/2022 17:54	34.76
6/24/2022 17:38	84.56	6/23/2022 16:55	1.02	6/23/2022 17:25	10.48	6/23/2022 16:13	0.90	6/23/2022 17:55	34.78
6/24/2022 17:39	84.57	6/23/2022 16:56	1.03	6/23/2022 17:26	10.50	6/23/2022 16:14	0.92	6/23/2022 17:56	34.75
6/24/2022 17:40	84.56	6/23/2022 16:57	0.96	6/23/2022 17:27	10.51	6/23/2022 16:15	0.89	6/23/2022 17:57	34.74
6/24/2022 17:41	84.56	6/23/2022 16:58	0.93	6/23/2022 17:28	10.53	6/23/2022 16:16	0.95	6/23/2022 17:58	34.76
6/24/2022 17:42	84.55	6/23/2022 16:59	0.92	6/23/2022 17:29	10.51	6/23/2022 16:17	0.96	6/23/2022 17:59	34.72
6/24/2022 17:43	84.54	6/23/2022 17:00	0.91	6/23/2022 17:30	10.51	6/23/2022 16:18	0.91	6/23/2022 18:00	34.75
6/24/2022 17:44	84.52	6/23/2022 17:01	0.86	6/23/2022 17:31	10.51	6/23/2022 16:19	0.93	6/23/2022 18:01	34.71
6/24/2022 17:45	84.54	6/23/2022 17:02	0.88	6/23/2022 17:32	10.55	6/23/2022 16:20	0.92	6/23/2022 18:02	34.72
6/24/2022 17:46	84.55	6/23/2022 17:03	0.86	6/23/2022 17:33	10.51	6/23/2022 16:21	0.91	6/23/2022 18:03	34.70
6/24/2022 17:47	84.53	6/23/2022 17:04	0.80	6/23/2022 17:34	10.54	6/23/2022 16:22	0.92	6/23/2022 18:04	34.69
6/24/2022 17:48	84.56	6/23/2022 17:05	0.82	6/23/2022 17:35	10.49	6/23/2022 16:23	0.94	6/23/2022 18:05	34.68
6/24/2022 17:49	84.51	6/23/2022 17:06	0.79	6/23/2022 17:36	10.48	6/23/2022 16:24	0.88	6/23/2022 18:06	34.70
6/24/2022 17:50	84.54	6/23/2022 17:07	0.76	6/23/2022 17:37	10.50	6/23/2022 16:25	0.95	6/23/2022 18:07	34.69
6/24/2022 17:51	84.55	6/23/2022 17:08	0.77	6/23/2022 17:38	10.50	6/23/2022 16:26	0.96	6/23/2022 18:08	34.72
6/24/2022 17:52	84.56	6/23/2022 17:09	0.80	6/23/2022 17:39	10.46	6/23/2022 16:27	0.92	6/23/2022 18:09	34.67
6/24/2022 17:53	84.55	6/23/2022 17:10	0.76	6/23/2022 17:40	10.49	6/23/2022 16:28	0.93	6/23/2022 18:10	34.69
6/24/2022 17:54	84.51	6/23/2022 17:11	0.75	6/23/2022 17:41	10.49	6/23/2022 16:29	0.91	6/23/2022 18:11	34.66
6/24/2022 17:55	84.53	6/23/2022 17:12	0.79	6/23/2022 17:42	10.50	6/23/2022 16:30	0.87	6/23/2022 18:12	34.62
6/24/2022 17:56	84.55	6/23/2022 17:13	0.80	6/23/2022 17:43	10.45	6/23/2022 16:31	0.87	6/23/2022 18:13	34.67
6/24/2022 17:57	84.51	6/23/2022 17:14	0.78	6/23/2022 17:44	10.45	6/23/2022 16:32	0.87	6/23/2022 18:14	34.67
6/24/2022 17:58	84.52	6/23/2022 17:15	0.79	6/23/2022 17:45	10.46	6/23/2022 16:33	0.95	6/23/2022 18:15	34.66
6/24/2022 17:59	84.54	6/23/2022 17:16	0.75	6/23/2022 17:46	10.44	6/23/2022 16:34	0.90	6/23/2022 18:16	34.64
6/24/2022 18:00	84.53	6/23/2022 17:17	0.81	6/23/2022 17:47	10.45	6/23/2022 16:35	0.91	6/23/2022 18:17	34.66
6/24/2022 18:01	84.54	6/23/2022 17:18	0.78	6/23/2022 17:48	10.45	6/23/2022 16:36	0.90	6/23/2022 18:18	34.62
6/24/2022 18:02	84.53	6/23/2022 17:19	0.75	6/23/2022 17:49	10.45	6/23/2022 16:37	0.94	6/23/2022 18:19	34.63
6/24/2022 18:03	84.55	6/23/2022 17:20	0.74	6/23/2022 17:50	10.44	6/23/2022 16:38	0.91	6/23/2022 18:20	34.64
6/24/2022 18:04	84.49	6/23/2022 17:21	0.74	6/23/2022 17:51	10.49	6/23/2022 16:39	0.90	6/23/2022 18:21	34.60
6/24/2022 18:05	84.54	6/23/2022 17:22	0.75	6/23/2022 17:52	10.48	6/23/2022 16:40	0.90	6/23/2022 18:22	34.63
6/24/2022 18:06	84.51	6/23/2022 17:23	0.73	6/23/2022 17:53	10.49	6/23/2022 16:41	0.90	6/23/2022 18:23	34.61
6/24/2022 18:07	84.56	6/23/2022 17:24	0.75	6/23/2022 17:54	10.50	6/23/2022 16:42	0.87	6/23/2022 18:24	34.62
6/24/2022 18:08	84.52	6/23/2022 17:25	0.73	6/23/2022 17:55	10.53	6/23/2022 16:43	0.86	6/23/2022 18:25	34.63
6/24/2022 18:09	84.52	6/23/2022 17:26	0.73	6/23/2022 17:56	10.50	6/23/2022 16:44	0.89	6/23/2022 18:26	34.59
6/24/2022 18:10	84.52	6/23/2022 17:27	0.76	6/23/2022 17:57	10.52	6/23/2022 16:45	0.89	6/23/2022 18:27	34.59
6/24/2022 18:11	84.52	6/23/2022 17:28	3.32	6/23/2022 17:58	10.55	6/23/2022 16:46	0.89	6/23/2022 18:28	34.55
6/24/2022 18:12	84.55	6/23/2022 17:29	8.37	6/23/2022 17:59	10.51	6/23/2022 16:47	0.87	6/23/2022 18:29	34.60
6/24/2022 18:13	84.52	6/23/2022 17:30	7.03	6/23/2022 18:00	10.53	6/23/2022 16:48	0.88	6/23/2022 18:30	34.58
6/24/2022 18:14	84.52	6/23/2022 17:31	5.98	6/23/2022 18:01	10.48	6/23/2022 16:49	0.90	6/23/2022 18:31	36.27
6/24/2022 18:15	84.50	6/23/2022 17:32	5.15	6/23/2022 18:02	10.51	6/23/2022 16:50	0.92	6/23/2022 18:32	35.28
6/24/2022 18:16	84.50	6/23/2022 17:33	4.48	6/23/2022 18:03	10.50	6/23/2022 16:51	0.91	6/23/2022 18:33	34.84
6/24/2022 18:17	84.52	6/23/2022 17:34	3.90	6/23/2022 18:04	10.49	6/23/2022 16:52	0.89	6/23/2022 18:34	34.66
6/24/2022 18:18	84.52	6/23/2022 17:35	3.43	6/23/2022 18:05	10.46	6/23/2022 16:53	0.90	6/23/2022 18:35	34.63
6/24/2022 18:19	84.51	6/23/2022 17:36	3.00	6/23/2022 18:06	10.51	6/23/2022 16:54	0.90	6/23/2022 18:36	34.60
6/24/2022 18:20	84.54	6/23/2022 17:37	2.63	6/23/2022 18:07	10.53	6/23/2022 16:55	0.90	6/23/2022 18:37	34.57
6/24/2022 18:21	84.53	6/23/2022 17:38	2.37	6/23/2022 18:08	10.50	6/23/2022 16:56	0.91	6/23/2022 18:38	34.58
6/24/2022 18:22	84.48	6/23/2022 17:39	2.15	6/23/2022 18:09	10.50	6/23/2022 16:57	0.90	6/23/2022 18:39	34.55
6/24/2022 18:23	84.48	6/23/2022 17:40	1.96	6/23/2022 18:10	10.49	6/23/2022 16:58	0.88	6/23/2022 18:40	34.53
6/24/2022 18:24	84.54	6/23/2022 17:41	1.84	6/23/2022 18:11	10.53	6/23/2022 16:59	0.87	6/23/2022 18:41	34.52
6/24/2022 18:25	84.55	6/23/2022 17:42	1.66	6/23/2022 18:12	10.51	6/23/2022 17:00	0.91	6/23/2022 18:42	34.57
6/24/2022 18:26	84.50	6/23/2022 17:43	1.55	6/23/2022 18:13	10.53	6/23/2022 17:01	0.92	6/23/2022 18:43	34.53
6/24/2022 18:27	84.52	6/23/2022 17:44	1.47	6/23/2022 18:14	10.54	6/23/2022 17:02	0.91	6/23/2022 18:44	34.64
6/24/2022 18:28	84.48	6/23/2022 17:45	1.37	6/23/2022 18:15	10.53	6/23/2022 17:03	0.87	6/23/2022 18:45	34.67
6/24/2022 18:29	84.52	6/23/2022 17:46	1.27	6/23/2022 18:16	10.54	6/23/2022 17:04	0.85	6/23/2022 18:46	34.68

6/24/2022 18:30	84.52	6/23/2022 17:47	1.20	6/23/2022 18:17	10.54	6/23/2022 17:05	0.90	6/23/2022 18:47	34.64
6/24/2022 18:31	84.51	6/23/2022 17:48	1.11	6/23/2022 18:18	10.52	6/23/2022 17:06	0.90	6/23/2022 18:48	34.65
6/24/2022 18:32	84.51	6/23/2022 17:49	1.09	6/23/2022 18:19	10.51	6/23/2022 17:07	0.89	6/23/2022 18:49	34.62
6/24/2022 18:33	84.50	6/23/2022 17:50	1.04	6/23/2022 18:20	14.11	6/23/2022 17:08	0.88	6/23/2022 18:50	34.63
6/24/2022 18:34	84.55	6/23/2022 17:51	0.99	6/23/2022 18:21	14.68	6/23/2022 17:09	0.88	6/23/2022 18:51	34.61
6/24/2022 18:35	84.48	6/23/2022 17:52	0.93	6/23/2022 18:22	14.15	6/23/2022 17:10	0.91	6/23/2022 18:52	34.56
6/24/2022 18:36	84.51	6/23/2022 17:53	0.92	6/23/2022 18:23	13.70	6/23/2022 17:11	0.86	6/23/2022 18:53	34.55
6/24/2022 18:37	84.49	6/23/2022 17:54	0.89	6/23/2022 18:24	13.35	6/23/2022 17:12	0.89	6/23/2022 18:54	34.54
6/24/2022 18:38	84.53	6/23/2022 17:55	0.87	6/23/2022 18:25	12.97	6/23/2022 17:13	0.91	6/23/2022 18:55	34.58
6/24/2022 18:39	84.54	6/23/2022 17:56	0.80	6/23/2022 18:26	12.71	6/23/2022 17:14	0.90	6/23/2022 18:56	34.54
6/24/2022 18:40	84.52	6/23/2022 17:57	0.83	6/23/2022 18:27	12.51	6/23/2022 17:15	0.90	6/23/2022 18:57	34.54
6/24/2022 18:41	84.50	6/23/2022 17:58	0.83	6/23/2022 18:28	12.33	6/23/2022 17:16	0.90	6/23/2022 18:58	34.51
6/24/2022 18:42	84.50	6/23/2022 17:59	0.83	6/23/2022 18:29	12.14	6/23/2022 17:17	0.89	6/23/2022 18:59	34.51
6/24/2022 18:43	84.51	6/23/2022 18:00	0.78	6/23/2022 18:30	12.00	6/23/2022 17:18	0.89	6/23/2022 19:00	34.53
6/24/2022 18:44	84.54	6/23/2022 18:01	0.78	6/23/2022 18:31	11.88	6/23/2022 17:19	0.88	6/23/2022 19:01	34.49
6/24/2022 18:45	84.53	6/23/2022 18:02	0.78	6/23/2022 18:32	11.74	6/23/2022 17:20	0.88	6/23/2022 19:02	34.47
6/24/2022 18:46	84.51	6/23/2022 18:03	0.73	6/23/2022 18:33	11.66	6/23/2022 17:21	0.86	6/23/2022 19:03	34.47
6/24/2022 18:47	84.48	6/23/2022 18:04	0.72	6/23/2022 18:34	11.55	6/23/2022 17:22	0.85	6/23/2022 19:04	34.48
6/24/2022 18:48	86.82	6/23/2022 18:05	0.75	6/23/2022 18:35	11.47	6/23/2022 17:23	0.90	6/23/2022 19:05	34.46
6/24/2022 18:49	90.28	6/23/2022 18:06	0.76	6/23/2022 18:36	11.40	6/23/2022 17:24	0.87	6/23/2022 19:06	34.47
6/24/2022 18:50	92.26	6/23/2022 18:07	0.70	6/23/2022 18:37	11.32	6/23/2022 17:25	0.88	6/23/2022 19:07	34.45
6/24/2022 18:51	91.14	6/23/2022 18:08	0.71	6/23/2022 18:38	11.24	6/23/2022 17:26	0.90	6/23/2022 19:08	34.44
6/24/2022 18:52	88.96	6/23/2022 18:09	0.72	6/23/2022 18:39	11.17	6/23/2022 17:27	0.86	6/23/2022 19:09	34.45
6/24/2022 18:53	87.67	6/23/2022 18:10	0.73	6/23/2022 18:40	11.10	6/23/2022 17:28	0.90	6/23/2022 19:10	34.41
6/24/2022 18:54	86.80	6/23/2022 18:11	0.72	6/23/2022 18:41	11.05	6/23/2022 17:29	0.92	6/23/2022 19:11	34.41
6/24/2022 18:55	86.26	6/23/2022 18:12	0.73	6/23/2022 18:42	10.99	6/23/2022 17:30	0.92	6/23/2022 19:12	34.41
6/24/2022 18:56	85.94	6/23/2022 18:13	0.71	6/23/2022 18:43	10.97	6/23/2022 17:31	0.95	6/23/2022 19:13	34.41
6/24/2022 18:57	85.70	6/23/2022 18:14	0.66	6/23/2022 18:44	10.92	6/23/2022 17:32	0.91	6/23/2022 19:14	34.38
6/24/2022 18:58	85.52	6/23/2022 18:15	0.68	6/23/2022 18:45	10.92	6/23/2022 17:33	0.90	6/23/2022 19:15	34.39
6/24/2022 18:59	85.42	6/23/2022 18:16	0.66	6/23/2022 18:46	10.81	6/23/2022 17:34	0.90	6/23/2022 19:16	34.39
6/24/2022 19:00	85.32	6/23/2022 18:17	0.66	6/23/2022 18:47	10.82	6/23/2022 17:35	0.89	6/23/2022 19:17	34.36
6/24/2022 19:01	85.31	6/23/2022 18:18	0.69	6/23/2022 18:48	10.81	6/23/2022 17:36	0.87	6/23/2022 19:18	34.37
6/24/2022 19:02	85.21	6/23/2022 18:19	0.65	6/23/2022 18:49	10.79	6/23/2022 17:37	0.90	6/23/2022 19:19	34.38
6/24/2022 19:03	85.19	6/23/2022 18:20	0.65	6/23/2022 18:50	10.81	6/23/2022 17:38	0.85	6/23/2022 19:20	34.35
6/24/2022 19:04	85.14	6/23/2022 18:21	0.81	6/23/2022 18:51	10.78	6/23/2022 17:39	0.90	6/23/2022 19:21	34.34
6/24/2022 19:05	85.09	6/23/2022 18:22	0.91	6/23/2022 18:52	10.78	6/23/2022 17:40	0.87	6/23/2022 19:22	34.35
6/24/2022 19:06	85.07	6/23/2022 18:23	0.90	6/23/2022 18:53	10.77	6/23/2022 17:41	0.84	6/23/2022 19:23	34.33
6/24/2022 19:07	85.09	6/23/2022 18:24	0.91	6/23/2022 18:54	10.77	6/23/2022 17:42	0.92	6/23/2022 19:24	34.35
6/24/2022 19:08	85.04	6/23/2022 18:25	0.92	6/23/2022 18:55	10.71	6/23/2022 17:43	0.87	6/23/2022 19:25	34.34
6/24/2022 19:09	85.02	6/23/2022 18:26	0.88	6/23/2022 18:56	10.76	6/23/2022 17:44	0.86	6/23/2022 19:26	34.29
6/24/2022 19:10	85.04	6/23/2022 18:27	0.90	6/23/2022 18:57	10.74	6/23/2022 17:45	0.83	6/23/2022 19:27	34.28
6/24/2022 19:11	84.97	6/23/2022 18:28	0.90	6/23/2022 18:58	10.70	6/23/2022 17:46	0.86	6/23/2022 19:28	34.31
6/24/2022 19:12	84.97	6/23/2022 18:29	0.82	6/23/2022 18:59	10.74	6/23/2022 17:47	0.88	6/23/2022 19:29	34.29
6/24/2022 19:13	84.96	6/23/2022 18:30	0.81	6/23/2022 19:00	10.72	6/23/2022 17:48	0.87	6/23/2022 19:30	34.29
6/24/2022 19:14	84.92	6/23/2022 18:31	0.73	6/23/2022 19:01	10.76	6/23/2022 17:49	0.87	6/23/2022 19:31	34.30
6/24/2022 19:15	84.97	6/23/2022 18:32	0.74	6/23/2022 19:02	10.75	6/23/2022 17:50	0.89	6/23/2022 19:32	34.29
6/24/2022 19:16	84.88	6/23/2022 18:33	6.29	6/23/2022 19:03	10.76	6/23/2022 17:51	0.84	6/23/2022 19:33	34.28
6/24/2022 19:17	84.88	6/23/2022 18:34	7.64	6/23/2022 19:04	10.76	6/23/2022 17:52	0.86	6/23/2022 19:34	34.25
6/24/2022 19:18	84.87	6/23/2022 18:35	6.48	6/23/2022 19:05	10.76	6/23/2022 17:53	0.87	6/23/2022 19:35	34.26
6/24/2022 19:19	84.91	6/23/2022 18:36	5.52	6/23/2022 19:06	10.74	6/23/2022 17:54	0.88	6/23/2022 19:36	34.27
6/24/2022 19:20	84.88	6/23/2022 18:37	4.81	6/23/2022 19:07	10.73	6/23/2022 17:55	0.91	6/23/2022 19:37	34.28
6/24/2022 19:21	84.88	6/23/2022 18:38	4.15	6/23/2022 19:08	10.69	6/23/2022 17:56	0.86	6/23/2022 19:38	34.25
6/24/2022 19:22	84.86	6/23/2022 18:39	3.63	6/23/2022 19:09	10.74	6/23/2022 17:57	0.85	6/23/2022 19:39	34.24
6/24/2022 19:23	84.84	6/23/2022 18:40	3.22	6/23/2022 19:10	10.64	6/23/2022 17:58	0.83	6/23/2022 19:40	34.26
6/24/2022 19:24	84.86	6/23/2022 18:41	2.77	6/23/2022 19:11	10.69	6/23/2022 17:59	0.81	6/23/2022 19:41	34.21
6/24/2022 19:25	84.87	6/23/2022 18:42	2.49	6/23/2022 19:12	10.68	6/23/2022 18:00	0.85	6/23/2022 19:42	34.24
6/24/2022 19:26	84.87	6/23/2022 18:43	2.24	6/23/2022 19:13	10.66	6/23/2022 18:01	0.88	6/23/2022 19:43	34.23
6/24/2022 19:27	84.84	6/23/2022 18:44	2.01	6/23/2022 19:14	10.62	6/23/2022 18:02	0.84	6/23/2022 19:44	34.22
6/24/2022 19:28	84.80	6/23/2022 18:45	1.83	6/23/2022 19:15	10.60	6/23/2022 18:03	0.86	6/23/2022 19:45	34.21
6/24/2022 19:29	84.84	6/23/2022 18:46	1.67	6/23/2022 19:16	10.60	6/23/2022 18:04	0.91	6/23/2022 19:46	34.22
6/24/2022 19:30	84.79	6/23/2022 18:47	1.59	6/23/2022 19:17	10.60	6/23/2022 18:05	0.86	6/23/2022 19:47	34.20
6/24/2022 19:31	84.81	6/23/2022 18:48	1.42	6/23/2022 19:18	10.60	6/23/2022 18:06	0.85	6/23/2022 19:48	34.21
6/24/2022 19:32	84.80	6/23/2022 18:49	1.31	6/23/2022 19:19	10.59	6/23/2022 18:07	0.82	6/23/2022 19:49	34.19
6/24/2022 19:33	84.75	6/23/2022 18:50	1.25	6/23/2022 19:20	10.56	6/23/2022 18:08	0.86	6/23/2022 19:50	34.15
6/24/2022 19:34	84.82	6/23/2022 18:51	1.14	6/23/2022 19:21	10.56	6/23/2022 18:09	0.84	6/23/2022 19:51	36.33
6/24/2022 19:35	84.80	6/23/2022 18:52	5.43	6/23/2022 19:22	10.54	6/23/2022 18:10	0.82	6/23/2022 19:52	35.11
6/24/2022 19:36	84.82	6/23/2022 18:53	10.36	6/23/2022 19:23	10.56	6/23/2022 18:11	0.84	6/23/2022 19:53	34.51
6/24/2022 19:37	84.79	6/23/2022 18:54	9.25	6/23/2022 19:24	10.54	6/23/2022 18:12	0.86	6/23/2022 19:54	34.33
6/24/2022 19:38	84.77	6/23/2022 18:55	7.84	6/23/2022 19:25	10.51	6/23/2022 18:13	0.84	6/23/2022 19:55	36.27
6/24/2022 19:39	84.78	6/23/2022 18:56	6.69	6/23/2022 19:26	10.49	6/23/2022 18:14	0.85	6/23/2022 19:56	35.22
6/24/2022 19:40	84.80	6/23/2022 18:57	5.72	6/23/2022 19:27	10.49	6/23/2022 18:15	0.82	6/23/2022 19:57	34.61
6/24/2022 19:41	84.76	6/23/2022 18:58	4.99	6/23/2022 19:28	10.49	6/23/2022 18:16	0.88	6/23/2022 19:58	34.32
6/24/2022 19:42	88.51	6/23/2022 18:59	4.30	6/23/2022 19:29	10.47	6/23/2022 18:17	0.84	6/23/2022 19:59	34.23
6/24/2022 19:43	91.56	6/23/2022 19:00	3.77	6/23/2022 19:30	10.47	6/23/2022 18:18	0.84	6/23/2022 20:00	34.22
6/24/2022 19:44	93.40	6/23/2022 19:01	3.35	6/23/2022 19:31	10.51	6/23/2022 18:19	0.84	6/23/2022 20:01	34.23
6/24/2022 19:45	94.53	6/23/2022 19:02	2.95	6/23/2022 19:32	10.55	6/23/2022 18:20	3.47	6/23/2022 20:02	34.17
6/24/2022 19:46	92.67	6/23/2022 19:03	2.58	6/23/2022 19:33	10.57	6/23/2022 18:21	9.64	6/23/2022 20:03	34.16
6/24/2022 19:47	90.24	6/23/2022 19:04	2.33	6/23/2022 19:34	10.61	6/23/2022 18:22	6.52	6/23/2022 20:04	34.13
6/24/2022 19:48	88.69	6/23/2022 19:05	2.10	6/23/2022 19:35	10.55	6/23/2022 18:23	4.38	6/23/2022 20:05	34.17
6/24/2022 19:49	87.68	6/23/2022 19:06	1.89	6/23/2022 19:36	10.59	6/23/2022 18:24	2.76	6/23/2022 20:06	34.13
6/24/2022 19:50	87.08	6/23/2022 19:07	1.75	6/23/2022 19:37	10.61	6/23/2022 18:25	1.50	6/23/2022 20:07	34.17
6/24/2022 19:51	86.66	6/23/2022 19:08	1.63	6/23/2022 19:38	10.59	6/23/2022 18:26	0.92	6/23/2022 20:08	34.10
6/24/2022 19:52	86.34	6/23/2022 19:09	1.47	6/23/2022 19:39	10.58	6/23/2022 18:27	0.94	6/23/2022 20:09	34.14
6/24/2022 19:53	87.59	6/23/2022 19:10	1.35	6/23/2022 19:40	10.61	6/23/2022 18:28	0.91	6/23/2022 20:10	34.13
6/24/2022 19:54	91.36	6/23/2022 19:11	1.27	6/23/2022 19:41	10.59	6/23/2022 18:29	0.90	6/23/2022 20:11	34.14
6/24/2022 19:55	93.70	6/23/2022 19:12	1.23	6/23/2022 19:42	10.58	6/23/2022 18:30	0.92	6/23/2022 20:12	34.14
6/24/2022 19:56	95.22	6/23/2022 19:13	1.13	6/23/2022 19:43	10.61	6/23/2022 18:31	0.89	6/23/2022 20:13	34.14
6/24/2022 19:57	96.27	6/23/2022 19:14	1.05	6/23/2022 19:44	10.56	6/23/2022 18:32	0.89	6/23/2022 20:14	34.15

6/24/2022 19:58	96.89	6/23/2022 19:15	0.97	6/23/2022 19:45	10.55	6/23/2022 18:33	0.91	6/23/2022 20:15	34.17
6/24/2022 19:59	97.26	6/23/2022 19:16	0.97	6/23/2022 19:46	10.56	6/23/2022 18:34	0.89	6/23/2022 20:16	34.21
6/24/2022 20:00	94.94	6/23/2022 19:17	0.96	6/23/2022 19:47	10.54	6/23/2022 18:35	0.91	6/23/2022 20:17	34.19
6/24/2022 20:01	92.20	6/23/2022 19:18	0.88	6/23/2022 19:48	10.53	6/23/2022 18:36	0.89	6/23/2022 20:18	34.24
6/24/2022 20:02	90.55	6/23/2022 19:19	0.81	6/23/2022 19:49	10.54	6/23/2022 18:37	0.89	6/23/2022 20:19	34.28
6/24/2022 20:03	89.40	6/23/2022 19:20	0.78	6/23/2022 19:50	10.50	6/23/2022 18:38	0.92	6/23/2022 20:20	34.23
6/24/2022 20:04	88.61	6/23/2022 19:21	1.77	6/23/2022 19:51	10.53	6/23/2022 18:39	0.89	6/23/2022 20:21	34.22
6/24/2022 20:05	88.06	6/23/2022 19:22	7.49	6/23/2022 19:52	10.49	6/23/2022 18:40	0.91	6/23/2022 20:22	34.19
6/24/2022 20:06	87.61	6/23/2022 19:23	7.35	6/23/2022 19:53	10.48	6/23/2022 18:41	0.88	6/23/2022 20:23	34.20
6/24/2022 20:07	91.01	6/23/2022 19:24	6.27	6/23/2022 19:54	10.49	6/23/2022 18:42	0.91	6/23/2022 20:24	34.14
6/24/2022 20:08	93.78	6/23/2022 19:25	5.39	6/23/2022 19:55	10.50	6/23/2022 18:43	0.90	6/23/2022 20:25	34.15
6/24/2022 20:09	95.49	6/23/2022 19:26	4.67	6/23/2022 19:56	10.47	6/23/2022 18:44	0.87	6/23/2022 20:26	34.13
6/24/2022 20:10	96.60	6/23/2022 19:27	4.04	6/23/2022 19:57	10.47	6/23/2022 18:45	0.88	6/23/2022 20:27	34.12
6/24/2022 20:11	97.17	6/23/2022 19:28	3.54	6/23/2022 19:58	10.49	6/23/2022 18:46	0.93	6/23/2022 20:28	34.09
6/24/2022 20:12	95.44	6/23/2022 19:29	3.13	6/23/2022 19:59	10.45	6/23/2022 18:47	0.87	6/23/2022 20:29	34.19
6/24/2022 20:13	92.74	6/23/2022 19:30	2.72	6/23/2022 20:00	10.44	6/23/2022 18:48	0.91	6/23/2022 20:30	34.22
6/24/2022 20:14	91.04	6/23/2022 19:31	2.38	6/23/2022 20:01	10.46	6/23/2022 18:49	0.87	6/23/2022 20:31	34.25
6/24/2022 20:15	89.93	6/23/2022 19:32	2.22	6/23/2022 20:02	10.46	6/23/2022 18:50	0.89	6/23/2022 20:32	34.24
6/24/2022 20:16	89.19	6/23/2022 19:33	1.98	6/23/2022 20:03	10.42	6/23/2022 18:51	0.89	6/23/2022 20:33	34.27
6/24/2022 20:17	88.61	6/23/2022 19:34	1.82	6/23/2022 20:04	10.44	6/23/2022 18:52	0.89	6/23/2022 20:34	34.21
6/24/2022 20:18	91.59	6/23/2022 19:35	1.67	6/23/2022 20:05	10.55	6/23/2022 18:53	0.88	6/23/2022 20:35	34.19
6/24/2022 20:19	94.44	6/23/2022 19:36	1.51	6/23/2022 20:06	10.53	6/23/2022 18:54	0.89	6/23/2022 20:36	34.13
6/24/2022 20:20	96.19	6/23/2022 19:37	1.38	6/23/2022 20:07	10.53	6/23/2022 18:55	0.94	6/23/2022 20:37	34.17
6/24/2022 20:21	97.28	6/23/2022 19:38	1.32	6/23/2022 20:08	10.55	6/23/2022 18:56	0.91	6/23/2022 20:38	34.13
6/24/2022 20:22	97.91	6/23/2022 19:39	1.18	6/23/2022 20:09	10.55	6/23/2022 18:57	0.92	6/23/2022 20:39	34.12
6/24/2022 20:23	98.23	6/23/2022 19:40	1.10	6/23/2022 20:10	10.55	6/23/2022 18:58	0.84	6/23/2022 20:40	34.13
6/24/2022 20:24	95.56	6/23/2022 19:41	1.07	6/23/2022 20:11	10.52	6/23/2022 18:59	0.86	6/23/2022 20:41	34.10
6/24/2022 20:25	93.08	6/23/2022 19:42	1.00	6/23/2022 20:12	10.49	6/23/2022 19:00	0.86	6/23/2022 20:42	34.07
6/24/2022 20:26	91.58	6/23/2022 19:43	0.99	6/23/2022 20:13	10.53	6/23/2022 19:01	0.90	6/23/2022 20:43	34.06
6/24/2022 20:27	90.53	6/23/2022 19:44	5.38	6/23/2022 20:14	10.52	6/23/2022 19:02	0.88	6/23/2022 20:44	34.06
6/24/2022 20:28	89.82	6/23/2022 19:45	8.71	6/23/2022 20:15	10.53	6/23/2022 19:03	0.88	6/23/2022 20:45	34.07
6/24/2022 20:29	89.28	6/23/2022 19:46	7.37	6/23/2022 20:16	10.53	6/23/2022 19:04	0.86	6/23/2022 20:46	34.04
6/24/2022 20:30	88.85	6/23/2022 19:47	6.28	6/23/2022 20:17	10.53	6/23/2022 19:05	0.83	6/23/2022 20:47	34.04
6/24/2022 20:31	88.54	6/23/2022 19:48	5.43	6/23/2022 20:18	10.57	6/23/2022 19:06	0.84	6/23/2022 20:48	34.06
6/24/2022 20:32	88.25	6/23/2022 19:49	4.67	6/23/2022 20:19	10.54	6/23/2022 19:07	0.87	6/23/2022 20:49	34.03
6/24/2022 20:33	88.06	6/23/2022 19:50	4.08	6/23/2022 20:20	10.57	6/23/2022 19:08	0.87	6/23/2022 20:50	34.00
6/24/2022 20:34	87.91	6/23/2022 19:51	3.57	6/23/2022 20:21	10.58	6/23/2022 19:09	0.87	6/23/2022 20:51	33.99
6/24/2022 20:35	87.76	6/23/2022 19:52	3.12	6/23/2022 20:22	10.55	6/23/2022 19:10	0.82	6/23/2022 20:52	33.96
6/24/2022 20:36	87.61	6/23/2022 19:53	2.73	6/23/2022 20:23	10.60	6/23/2022 19:11	0.85	6/23/2022 20:53	34.00
6/24/2022 20:37	87.53	6/23/2022 19:54	2.47	6/23/2022 20:24	10.59	6/23/2022 19:12	0.84	6/23/2022 20:54	33.99
6/24/2022 20:38	87.44	6/23/2022 19:55	2.30	6/23/2022 20:25	10.58	6/23/2022 19:13	0.91	6/23/2022 20:55	33.98
6/24/2022 20:39	87.36	6/23/2022 19:56	2.19	6/23/2022 20:26	10.59	6/23/2022 19:14	0.84	6/23/2022 20:56	34.00
6/24/2022 20:40	87.28	6/23/2022 19:57	2.11	6/23/2022 20:27	10.58	6/23/2022 19:15	0.85	6/23/2022 20:57	33.96
6/24/2022 20:41	87.18	6/23/2022 19:58	2.02	6/23/2022 20:28	10.58	6/23/2022 19:16	0.87	6/23/2022 20:58	33.93
6/24/2022 20:42	87.10	6/23/2022 19:59	1.87	6/23/2022 20:29	10.55	6/23/2022 19:17	0.83	6/23/2022 20:59	33.92
6/24/2022 20:43	87.11	6/23/2022 20:00	1.70	6/23/2022 20:30	10.53	6/23/2022 19:18	0.82	6/23/2022 21:00	33.92
6/24/2022 20:44	87.07	6/23/2022 20:01	1.65	6/23/2022 20:31	10.51	6/23/2022 19:19	0.88	6/23/2022 21:01	33.94
6/24/2022 20:45	87.00	6/23/2022 20:02	1.48	6/23/2022 20:32	10.53	6/23/2022 19:20	0.86	6/23/2022 21:02	33.94
6/24/2022 20:46	86.94	6/23/2022 20:03	1.40	6/23/2022 20:33	10.53	6/23/2022 19:21	0.86	6/23/2022 21:03	33.89
6/24/2022 20:47	86.92	6/23/2022 20:04	1.32	6/23/2022 20:34	10.53	6/23/2022 19:22	0.85	6/23/2022 21:04	33.94
6/24/2022 20:48	86.87	6/23/2022 20:05	1.35	6/23/2022 20:35	10.50	6/23/2022 19:23	0.89	6/23/2022 21:05	33.92
6/24/2022 20:49	86.84	6/23/2022 20:06	1.34	6/23/2022 20:36	10.49	6/23/2022 19:24	0.89	6/23/2022 21:06	33.90
6/24/2022 20:50	86.80	6/23/2022 20:07	1.33	6/23/2022 20:37	10.51	6/23/2022 19:25	0.88	6/23/2022 21:07	33.90
6/24/2022 20:51	86.77	6/23/2022 20:08	1.32	6/23/2022 20:38	10.45	6/23/2022 19:26	0.89	6/23/2022 21:08	33.89
6/24/2022 20:52	86.72	6/23/2022 20:09	1.21	6/23/2022 20:39	10.46	6/23/2022 19:27	0.88	6/23/2022 21:09	33.89
6/24/2022 20:53	86.68	6/23/2022 20:10	1.14	6/23/2022 20:40	10.48	6/23/2022 19:28	0.83	6/23/2022 21:10	33.90
6/24/2022 20:54	86.69	6/23/2022 20:11	1.07	6/23/2022 20:41	10.43	6/23/2022 19:29	0.87	6/23/2022 21:11	33.87
6/24/2022 20:55	86.66	6/23/2022 20:12	1.04	6/23/2022 20:42	10.46	6/23/2022 19:30	0.89	6/23/2022 21:12	33.84
6/24/2022 20:56	86.63	6/23/2022 20:13	1.01	6/23/2022 20:43	10.44	6/23/2022 19:31	0.90	6/23/2022 21:13	33.84
6/24/2022 20:57	86.58	6/23/2022 20:14	1.42	6/23/2022 20:44	10.43	6/23/2022 19:32	0.84	6/23/2022 21:14	33.84
6/24/2022 20:58	90.86	6/23/2022 20:15	7.29	6/23/2022 20:45	10.48	6/23/2022 19:33	0.85	6/23/2022 21:15	33.85
6/24/2022 20:59	93.35	6/23/2022 20:16	7.60	6/23/2022 20:46	10.45	6/23/2022 19:34	0.84	6/23/2022 21:16	33.82
6/24/2022 21:00	94.47	6/23/2022 20:17	6.41	6/23/2022 20:47	10.50	6/23/2022 19:35	0.85	6/23/2022 21:17	33.81
6/24/2022 21:01	91.67	6/23/2022 20:18	5.55	6/23/2022 20:48	10.49	6/23/2022 19:36	0.86	6/23/2022 21:18	33.80
6/24/2022 21:02	90.05	6/23/2022 20:19	4.81	6/23/2022 20:49	10.47	6/23/2022 19:37	0.85	6/23/2022 21:19	33.76
6/24/2022 21:03	89.06	6/23/2022 20:20	4.16	6/23/2022 20:50	10.53	6/23/2022 19:38	0.85	6/23/2022 21:20	33.80
6/24/2022 21:04	88.34	6/23/2022 20:21	3.62	6/23/2022 20:51	10.51	6/23/2022 19:39	0.85	6/23/2022 21:21	33.81
6/24/2022 21:05	87.98	6/23/2022 20:22	3.24	6/23/2022 20:52	10.57	6/23/2022 19:40	0.86	6/23/2022 21:22	33.80
6/24/2022 21:06	87.64	6/23/2022 20:23	2.79	6/23/2022 20:53	10.55	6/23/2022 19:41	0.85	6/23/2022 21:23	33.82
6/24/2022 21:07	87.48	6/23/2022 20:24	2.47	6/23/2022 20:54	10.56	6/23/2022 19:42	0.84	6/23/2022 21:24	33.83
6/24/2022 21:08	87.34	6/23/2022 20:25	2.24	6/23/2022 20:55	10.55	6/23/2022 19:43	0.81	6/23/2022 21:25	33.79
6/24/2022 21:09	87.21	6/23/2022 20:26	2.01	6/23/2022 20:56	10.55	6/23/2022 19:44	0.87	6/23/2022 21:26	35.89
6/24/2022 21:10	87.13	6/23/2022 20:27	1.85	6/23/2022 20:57	10.55	6/23/2022 19:45	0.84	6/23/2022 21:27	34.70
6/24/2022 21:11	87.02	6/23/2022 20:28	1.70	6/23/2022 20:58	10.56	6/23/2022 19:46	0.89	6/23/2022 21:28	34.11
6/24/2022 21:12	86.99	6/23/2022 20:29	1.52	6/23/2022 20:59	10.53	6/23/2022 19:47	0.86	6/23/2022 21:29	33.89
6/24/2022 21:13	86.92	6/23/2022 20:30	1.37	6/23/2022 21:00	10.54	6/23/2022 19:48	0.84	6/23/2022 21:30	35.74
6/24/2022 21:14	86.88	6/23/2022 20:31	1.30	6/23/2022 21:01	10.51	6/23/2022 19:49	0.85	6/23/2022 21:31	34.62
6/24/2022 21:15	86.84	6/23/2022 20:32	1.19	6/23/2022 21:02	10.51	6/23/2022 19:50	0.85	6/23/2022 21:32	34.07
6/24/2022 21:16	86.82	6/23/2022 20:33	1.12	6/23/2022 21:03	10.49	6/23/2022 19:51	0.83	6/23/2022 21:33	33.91
6/24/2022 21:17	86.75	6/23/2022 20:34	1.08	6/23/2022 21:04	10.49	6/23/2022 19:52	0.85	6/23/2022 21:34	33.84
6/24/2022 21:18	86.71	6/23/2022 20:35	0.99	6/23/2022 21:05	10.46	6/23/2022 19:53	0.85	6/23/2022 21:35	33.82
6/24/2022 21:19	86.68	6/23/2022 20:36	0.95	6/23/2022 21:06	10.49	6/23/2022 19:54	1.39	6/23/2022 21:36	33.79
6/24/2022 21:20	86.70	6/23/2022 20:37	0.90	6/23/2022 21:07	10.48	6/23/2022 19:55	8.78	6/23/2022 21:37	33.78
6/24/2022 21:21	86.63	6/23/2022 20:38	0.89	6/23/2022 21:08	10.43	6/23/2022 19:56	9.66	6/23/2022 21:38	33.76
6/24/2022 21:22	86.62	6/23/2022 20:39	0.82	6/23/2022 21:09	10.45	6/23/2022 19:57	6.66	6/23/2022 21:39	33.75
6/24/2022 21:23	86.62	6/23/2022 20:40	0.77	6/23/2022 21:10	10.43	6/23/2022 19:58	4.43	6/23/2022 21:40	33.77
6/24/2022 21:24	86.60	6/23/2022 20:41	0.81	6/23/2022 21:11	10.43	6/23/2022 19:59	2.69	6/23/2022 21:41	33.74
6/24/2022 21:25	86.58	6/23/2022 20:42	0.87	6/23/2022 21:12	10.44	6/23/2022 20:00	1.54	6/23/2022 21:42	33.73

6/24/2022 21:26	86.54	6/23/2022 20:43	0.91	6/23/2022 21:13	10.44	6/23/2022 20:01	0.86	6/23/2022 21:43	33.73
6/24/2022 21:27	86.51	6/23/2022 20:44	0.93	6/23/2022 21:14	10.41	6/23/2022 20:02	0.88	6/23/2022 21:44	33.74
6/24/2022 21:28	86.52	6/23/2022 20:45	0.89	6/23/2022 21:15	10.41	6/23/2022 20:03	0.87	6/23/2022 21:45	33.67
6/24/2022 21:29	86.52	6/23/2022 20:46	0.89	6/23/2022 21:16	10.40	6/23/2022 20:04	4.63	6/23/2022 21:46	33.70
6/24/2022 21:30	86.46	6/23/2022 20:47	0.86	6/23/2022 21:17	10.43	6/23/2022 20:05	8.55	6/23/2022 21:47	33.74
6/24/2022 21:31	86.47	6/23/2022 20:48	0.81	6/23/2022 21:18	10.43	6/23/2022 20:06	5.77	6/23/2022 21:48	33.69
6/24/2022 21:32	86.44	6/23/2022 20:49	0.78	6/23/2022 21:19	10.44	6/23/2022 20:07	3.70	6/23/2022 21:49	33.69
6/24/2022 21:33	86.44	6/23/2022 20:50	0.77	6/23/2022 21:20	10.44	6/23/2022 20:08	2.22	6/23/2022 21:50	33.70
6/24/2022 21:34	86.41	6/23/2022 20:51	0.72	6/23/2022 21:21	10.48	6/23/2022 20:09	1.08	6/23/2022 21:51	33.69
6/24/2022 21:35	86.40	6/23/2022 20:52	0.74	6/23/2022 21:22	10.49	6/23/2022 20:10	0.89	6/23/2022 21:52	33.67
6/24/2022 21:36	86.41	6/23/2022 20:53	0.73	6/23/2022 21:23	10.47	6/23/2022 20:11	0.84	6/23/2022 21:53	33.70
6/24/2022 21:37	86.37	6/23/2022 20:54	0.66	6/23/2022 21:24	10.50	6/23/2022 20:12	0.86	6/23/2022 21:54	33.66
6/24/2022 21:38	86.38	6/23/2022 20:55	0.68	6/23/2022 21:25	10.47	6/23/2022 20:13	0.88	6/23/2022 21:55	33.64
6/24/2022 21:39	86.34	6/23/2022 20:56	0.67	6/23/2022 21:26	10.50	6/23/2022 20:14	0.89	6/23/2022 21:56	33.62
6/24/2022 21:40	86.37	6/23/2022 20:57	0.63	6/23/2022 21:27	10.51	6/23/2022 20:15	0.86	6/23/2022 21:57	33.66
6/24/2022 21:41	86.30	6/23/2022 20:58	0.64	6/23/2022 21:28	10.48	6/23/2022 20:16	0.89	6/23/2022 21:58	33.65
6/24/2022 21:42	86.32	6/23/2022 20:59	0.62	6/23/2022 21:29	10.48	6/23/2022 20:17	0.86	6/23/2022 21:59	33.65
6/24/2022 21:43	86.31	6/23/2022 21:00	0.63	6/23/2022 21:30	10.47	6/23/2022 20:18	0.89	6/23/2022 22:00	33.65
6/24/2022 21:44	86.28	6/23/2022 21:01	0.60	6/23/2022 21:31	10.48	6/23/2022 20:19	0.92	6/23/2022 22:01	33.61
6/24/2022 21:45	86.28	6/23/2022 21:02	0.59	6/23/2022 21:32	10.46	6/23/2022 20:20	0.88	6/23/2022 22:02	35.53
6/24/2022 21:46	86.29	6/23/2022 21:03	0.60	6/23/2022 21:33	10.48	6/23/2022 20:21	0.87	6/23/2022 22:03	34.39
6/24/2022 21:47	86.28	6/23/2022 21:04	0.59	6/23/2022 21:34	10.44	6/23/2022 20:22	0.87	6/23/2022 22:04	33.91
6/24/2022 21:48	86.24	6/23/2022 21:05	0.62	6/23/2022 21:35	10.49	6/23/2022 20:23	0.82	6/23/2022 22:05	33.71
6/24/2022 21:49	86.25	6/23/2022 21:06	0.57	6/23/2022 21:36	10.44	6/23/2022 20:24	0.87	6/23/2022 22:06	33.65
6/24/2022 21:50	86.24	6/23/2022 21:07	0.59	6/23/2022 21:37	10.44	6/23/2022 20:25	0.86	6/23/2022 22:07	33.64
6/24/2022 21:51	86.29	6/23/2022 21:08	0.57	6/23/2022 21:38	10.47	6/23/2022 20:26	0.85	6/23/2022 22:08	33.60
6/24/2022 21:52	86.22	6/23/2022 21:09	0.59	6/23/2022 21:39	10.43	6/23/2022 20:27	0.83	6/23/2022 22:09	33.64
6/24/2022 21:53	86.19	6/23/2022 21:10	0.59	6/23/2022 21:40	10.43	6/23/2022 20:28	0.83	6/23/2022 22:10	33.60
6/24/2022 21:54	86.21	6/23/2022 21:11	3.93	6/23/2022 21:41	10.43	6/23/2022 20:29	0.82	6/23/2022 22:11	33.59
6/24/2022 21:55	86.20	6/23/2022 21:12	8.50	6/23/2022 21:42	10.40	6/23/2022 20:30	0.85	6/23/2022 22:12	33.62
6/24/2022 21:56	86.23	6/23/2022 21:13	7.18	6/23/2022 21:43	10.38	6/23/2022 20:31	0.87	6/23/2022 22:13	33.59
6/24/2022 21:57	86.21	6/23/2022 21:14	6.10	6/23/2022 21:44	10.43	6/23/2022 20:32	0.82	6/23/2022 22:14	33.58
6/24/2022 21:58	86.23	6/23/2022 21:15	5.22	6/23/2022 21:45	10.40	6/23/2022 20:33	0.79	6/23/2022 22:15	33.59
6/24/2022 21:59	86.20	6/23/2022 21:16	4.54	6/23/2022 21:46	10.38	6/23/2022 20:34	0.83	6/23/2022 22:16	33.53
6/24/2022 22:00	86.19	6/23/2022 21:17	3.94	6/23/2022 21:47	10.37	6/23/2022 20:35	0.86	6/23/2022 22:17	33.56
6/24/2022 22:01	86.16	6/23/2022 21:18	3.44	6/23/2022 21:48	10.35	6/23/2022 20:36	0.86	6/23/2022 22:18	33.56
6/24/2022 22:02	86.18	6/23/2022 21:19	2.94	6/23/2022 21:49	10.39	6/23/2022 20:37	0.83	6/23/2022 22:19	33.54
6/24/2022 22:03	86.13	6/23/2022 21:20	2.60	6/23/2022 21:50	10.43	6/23/2022 20:38	0.84	6/23/2022 22:20	33.55
6/24/2022 22:04	86.17	6/23/2022 21:21	2.35	6/23/2022 21:51	10.45	6/23/2022 20:39	0.83	6/23/2022 22:21	33.52
6/24/2022 22:05	86.11	6/23/2022 21:22	2.04	6/23/2022 21:52	10.46	6/23/2022 20:40	0.80	6/23/2022 22:22	33.53
6/24/2022 22:06	86.20	6/23/2022 21:23	1.90	6/23/2022 21:53	10.47	6/23/2022 20:41	6.45	6/23/2022 22:23	33.53
6/24/2022 22:07	90.45	6/23/2022 21:24	1.68	6/23/2022 21:54	14.26	6/23/2022 20:42	6.27	6/23/2022 22:24	33.54
6/24/2022 22:08	92.88	6/23/2022 21:25	1.55	6/23/2022 21:55	13.79	6/23/2022 20:43	4.01	6/23/2022 22:25	33.54
6/24/2022 22:09	94.29	6/23/2022 21:26	1.42	6/23/2022 21:56	13.31	6/23/2022 20:44	2.31	6/23/2022 22:26	33.54
6/24/2022 22:10	92.07	6/23/2022 21:27	1.28	6/23/2022 21:57	12.99	6/23/2022 20:45	1.14	6/23/2022 22:27	33.52
6/24/2022 22:11	90.17	6/23/2022 21:28	1.19	6/23/2022 21:58	12.71	6/23/2022 20:46	0.89	6/23/2022 22:28	33.51
6/24/2022 22:12	88.98	6/23/2022 21:29	1.12	6/23/2022 21:59	12.43	6/23/2022 20:47	0.88	6/23/2022 22:29	33.49
6/24/2022 22:13	88.24	6/23/2022 21:30	1.03	6/23/2022 22:00	12.25	6/23/2022 20:48	0.88	6/23/2022 22:30	33.48
6/24/2022 22:14	87.76	6/23/2022 21:31	0.98	6/23/2022 22:01	12.03	6/23/2022 20:49	0.88	6/23/2022 22:31	33.49
6/24/2022 22:15	87.44	6/23/2022 21:32	0.94	6/23/2022 22:02	11.90	6/23/2022 20:50	0.83	6/23/2022 22:32	33.50
6/24/2022 22:16	87.19	6/23/2022 21:33	0.92	6/23/2022 22:03	11.71	6/23/2022 20:51	0.87	6/23/2022 22:33	33.44
6/24/2022 22:17	87.08	6/23/2022 21:34	0.81	6/23/2022 22:04	11.59	6/23/2022 20:52	0.85	6/23/2022 22:34	33.50
6/24/2022 22:18	86.95	6/23/2022 21:35	0.76	6/23/2022 22:05	11.49	6/23/2022 20:53	0.88	6/23/2022 22:35	33.46
6/24/2022 22:19	86.88	6/23/2022 21:36	0.74	6/23/2022 22:06	11.37	6/23/2022 20:54	0.83	6/23/2022 22:36	33.51
6/24/2022 22:20	86.76	6/23/2022 21:37	0.70	6/23/2022 22:07	11.30	6/23/2022 20:55	0.87	6/23/2022 22:37	33.46
6/24/2022 22:21	86.75	6/23/2022 21:38	0.69	6/23/2022 22:08	11.20	6/23/2022 20:56	0.85	6/23/2022 22:38	33.46
6/24/2022 22:22	86.66	6/23/2022 21:39	0.68	6/23/2022 22:09	11.12	6/23/2022 20:57	0.85	6/23/2022 22:39	33.47
6/24/2022 22:23	86.63	6/23/2022 21:40	0.70	6/23/2022 22:10	11.06	6/23/2022 20:58	0.87	6/23/2022 22:40	33.42
6/24/2022 22:24	86.59	6/23/2022 21:41	0.69	6/23/2022 22:11	11.03	6/23/2022 20:59	0.85	6/23/2022 22:41	33.45
6/24/2022 22:25	86.57	6/23/2022 21:42	0.61	6/23/2022 22:12	10.96	6/23/2022 21:00	0.83	6/23/2022 22:42	33.43
6/24/2022 22:26	86.52	6/23/2022 21:43	0.64	6/23/2022 22:13	10.92	6/23/2022 21:01	0.84	6/23/2022 22:43	33.44
6/24/2022 22:27	86.51	6/23/2022 21:44	0.60	6/23/2022 22:14	10.88	6/23/2022 21:02	0.79	6/23/2022 22:44	33.49
6/24/2022 22:28	86.51	6/23/2022 21:45	0.59	6/23/2022 22:15	10.77	6/23/2022 21:03	0.85	6/23/2022 22:45	33.49
6/24/2022 22:29	86.45	6/23/2022 21:46	0.59	6/23/2022 22:16	10.77	6/23/2022 21:04	0.87	6/23/2022 22:46	33.49
6/24/2022 22:30	86.48	6/23/2022 21:47	0.59	6/23/2022 22:17	10.73	6/23/2022 21:05	0.85	6/23/2022 22:47	33.53
6/24/2022 22:31	86.44	6/23/2022 21:48	0.59	6/23/2022 22:18	10.71	6/23/2022 21:06	0.86	6/23/2022 22:48	33.58
6/24/2022 22:32	86.40	6/23/2022 21:49	0.57	6/23/2022 22:19	10.67	6/23/2022 21:07	0.83	6/23/2022 22:49	33.55
6/24/2022 22:33	86.39	6/23/2022 21:50	0.55	6/23/2022 22:20	10.68	6/23/2022 21:08	0.82	6/23/2022 22:50	33.55
6/24/2022 22:34	86.36	6/23/2022 21:51	0.52	6/23/2022 22:21	10.62	6/23/2022 21:09	0.84	6/23/2022 22:51	33.54
6/24/2022 22:35	86.39	6/23/2022 21:52	0.58	6/23/2022 22:22	10.66	6/23/2022 21:10	0.84	6/23/2022 22:52	33.51
6/24/2022 22:36	86.35	6/23/2022 21:53	0.53	6/23/2022 22:23	10.67	6/23/2022 21:11	0.79	6/23/2022 22:53	33.53
6/24/2022 22:37	86.31	6/23/2022 21:54	0.52	6/23/2022 22:24	10.65	6/23/2022 21:12	0.87	6/23/2022 22:54	33.54
6/24/2022 22:38	86.34	6/23/2022 21:55	0.50	6/23/2022 22:25	10.66	6/23/2022 21:13	0.84	6/23/2022 22:55	33.53
6/24/2022 22:39	86.35	6/23/2022 21:56	0.54	6/23/2022 22:26	10.63	6/23/2022 21:14	0.83	6/23/2022 22:56	33.54
6/24/2022 22:40	86.28	6/23/2022 21:57	0.49	6/23/2022 22:27	10.61	6/23/2022 21:15	0.86	6/23/2022 22:57	33.53
6/24/2022 22:41	86.29	6/23/2022 21:58	0.52	6/23/2022 22:28	10.61	6/23/2022 21:16	0.82	6/23/2022 22:58	33.53
6/24/2022 22:42	86.26	6/23/2022 21:59	0.49	6/23/2022 22:29	10.61	6/23/2022 21:17	0.83	6/23/2022 22:59	33.51
6/24/2022 22:43	86.27	6/23/2022 22:00	0.50	6/23/2022 22:30	10.61	6/23/2022 21:18	0.84	6/23/2022 23:00	33.50
6/24/2022 22:44	86.22	6/23/2022 22:01	0.49	6/23/2022 22:31	10.56	6/23/2022 21:19	0.85	6/23/2022 23:01	33.48
6/24/2022 22:45	86.20	6/23/2022 22:02	0.54	6/23/2022 22:32	10.61	6/23/2022 21:20	0.83	6/23/2022 23:02	33.53
6/24/2022 22:46	86.22	6/23/2022 22:03	0.50	6/23/2022 22:33	10.61	6/23/2022 21:21	0.83	6/23/2022 23:03	33.54
6/24/2022 22:47	86.20	6/23/2022 22:04	0.48	6/23/2022 22:34	10.59	6/23/2022 21:22	0.79	6/23/2022 23:04	33.56
6/24/2022 22:48	86.21	6/23/2022 22:05	0.56	6/23/2022 22:35	10.53	6/23/2022 21:23	0.85	6/23/2022 23:05	33.62
6/24/2022 22:49	86.18	6/23/2022 22:06	0.48	6/23/2022 22:36	10.55	6/23/2022 21:24	0.83	6/23/2022 23:06	33.61
6/24/2022 22:50	86.21	6/23/2022 22:07	4.97	6/23/2022 22:37	10.55	6/23/2022 21:25	0.83	6/23/2022 23:07	33.59
6/24/2022 22:51	86.18	6/23/2022 22:08	7.49	6/23/2022 22:38	10.51	6/23/2022 21:26	0.81	6/23/2022 23:08	33.58
6/24/2022 22:52	86.17	6/23/2022 22:09	6.36	6/23/2022 22:39	10.54	6/23/2022 21:27	0.84	6/23/2022 23:09	33.56
6/24/2022 22:53	86.17	6/23/2022 22:10	5.41	6/23/2022 22:40	10.48	6/23/2022 21:28	0.82	6/23/2022 23:10	33.52

6/24/2022 22:54	86.16	6/23/2022 22:11	4.63	6/23/2022 22:41	10.53	6/23/2022 21:29	0.84	6/23/2022 23:11	33.51
6/24/2022 22:55	86.13	6/23/2022 22:12	4.04	6/23/2022 22:42	10.51	6/23/2022 21:30	0.83	6/23/2022 23:12	33.53
6/24/2022 22:56	86.19	6/23/2022 22:13	3.46	6/23/2022 22:43	10.53	6/23/2022 21:31	0.83	6/23/2022 23:13	33.52
6/24/2022 22:57	86.15	6/23/2022 22:14	3.02	6/23/2022 22:44	10.53	6/23/2022 21:32	0.81	6/23/2022 23:14	33.52
6/24/2022 22:58	86.13	6/23/2022 22:15	2.67	6/23/2022 22:45	10.55	6/23/2022 21:33	0.81	6/23/2022 23:15	33.47
6/24/2022 22:59	86.16	6/23/2022 22:16	2.39	6/23/2022 22:46	10.58	6/23/2022 21:34	0.84	6/23/2022 23:16	33.48
6/24/2022 23:00	86.10	6/23/2022 22:17	2.07	6/23/2022 22:47	10.60	6/23/2022 21:35	0.82	6/23/2022 23:17	33.47
6/24/2022 23:01	86.14	6/23/2022 22:18	1.83	6/23/2022 22:48	10.58	6/23/2022 21:36	0.86	6/23/2022 23:18	33.43
6/24/2022 23:02	86.10	6/23/2022 22:19	1.70	6/23/2022 22:49	10.56	6/23/2022 21:37	0.82	6/23/2022 23:19	33.41
6/24/2022 23:03	86.08	6/23/2022 22:20	1.55	6/23/2022 22:50	10.55	6/23/2022 21:38	0.82	6/23/2022 23:20	33.44
6/24/2022 23:04	86.04	6/23/2022 22:21	1.40	6/23/2022 22:51	10.53	6/23/2022 21:39	0.81	6/23/2022 23:21	33.44
6/24/2022 23:05	86.10	6/23/2022 22:22	1.26	6/23/2022 22:52	10.53	6/23/2022 21:40	0.83	6/23/2022 23:22	33.44
6/24/2022 23:06	86.07	6/23/2022 22:23	1.20	6/23/2022 22:53	10.53	6/23/2022 21:41	0.81	6/23/2022 23:23	33.40
6/24/2022 23:07	86.07	6/23/2022 22:24	1.09	6/23/2022 22:54	10.52	6/23/2022 21:42	0.80	6/23/2022 23:24	33.39
6/24/2022 23:08	86.06	6/23/2022 22:25	0.99	6/23/2022 22:55	10.54	6/23/2022 21:43	0.82	6/23/2022 23:25	33.38
6/24/2022 23:09	86.06	6/23/2022 22:26	0.91	6/23/2022 22:56	10.51	6/23/2022 21:44	0.81	6/23/2022 23:26	33.39
6/24/2022 23:10	86.06	6/23/2022 22:27	0.85	6/23/2022 22:57	10.48	6/23/2022 21:45	0.84	6/23/2022 23:27	33.40
6/24/2022 23:11	86.05	6/23/2022 22:28	0.82	6/23/2022 22:58	10.48	6/23/2022 21:46	0.79	6/23/2022 23:28	33.37
6/24/2022 23:12	86.08	6/23/2022 22:29	0.79	6/23/2022 22:59	10.53	6/23/2022 21:47	0.83	6/23/2022 23:29	33.35
6/24/2022 23:13	86.05	6/23/2022 22:30	0.77	6/23/2022 23:00	10.47	6/23/2022 21:48	0.82	6/23/2022 23:30	33.36
6/24/2022 23:14	86.04	6/23/2022 22:31	0.70	6/23/2022 23:01	10.47	6/23/2022 21:49	0.81	6/23/2022 23:31	33.35
6/24/2022 23:15	86.04	6/23/2022 22:32	0.66	6/23/2022 23:02	10.45	6/23/2022 21:50	0.82	6/23/2022 23:32	33.35
6/24/2022 23:16	86.02	6/23/2022 22:33	0.65	6/23/2022 23:03	10.46	6/23/2022 21:51	0.79	6/23/2022 23:33	33.33
6/24/2022 23:17	86.02	6/23/2022 22:34	0.61	6/23/2022 23:04	10.45	6/23/2022 21:52	0.82	6/23/2022 23:34	33.36
6/24/2022 23:18	86.02	6/23/2022 22:35	0.56	6/23/2022 23:05	10.42	6/23/2022 21:53	0.80	6/23/2022 23:35	33.34
6/24/2022 23:19	86.04	6/23/2022 22:36	0.56	6/23/2022 23:06	10.46	6/23/2022 21:54	0.82	6/23/2022 23:36	33.32
6/24/2022 23:20	86.00	6/23/2022 22:37	0.58	6/23/2022 23:07	10.41	6/23/2022 21:55	0.79	6/23/2022 23:37	33.32
6/24/2022 23:21	86.02	6/23/2022 22:38	0.57	6/23/2022 23:08	10.40	6/23/2022 21:56	0.83	6/23/2022 23:38	33.29
6/24/2022 23:22	86.00	6/23/2022 22:39	0.54	6/23/2022 23:09	10.41	6/23/2022 21:57	0.81	6/23/2022 23:39	33.31
6/24/2022 23:23	85.99	6/23/2022 22:40	0.53	6/23/2022 23:10	10.43	6/23/2022 21:58	0.84	6/23/2022 23:40	33.31
6/24/2022 23:24	86.00	6/23/2022 22:41	0.55	6/23/2022 23:11	10.40	6/23/2022 21:59	0.79	6/23/2022 23:41	33.31
6/24/2022 23:25	85.97	6/23/2022 22:42	0.54	6/23/2022 23:12	10.42	6/23/2022 22:00	0.85	6/23/2022 23:42	33.33
6/24/2022 23:26	86.01	6/23/2022 22:43	0.52	6/23/2022 23:13	10.44	6/23/2022 22:01	0.82	6/23/2022 23:43	33.34
6/24/2022 23:27	85.99	6/23/2022 22:44	0.50	6/23/2022 23:14	10.43	6/23/2022 22:02	0.82	6/23/2022 23:44	33.36
6/24/2022 23:28	85.99	6/23/2022 22:45	0.51	6/23/2022 23:15	10.43	6/23/2022 22:03	0.84	6/23/2022 23:45	33.33
6/24/2022 23:29	85.98	6/23/2022 22:46	0.51	6/23/2022 23:16	10.45	6/23/2022 22:04	0.80	6/23/2022 23:46	33.30
6/24/2022 23:30	86.00	6/23/2022 22:47	0.46	6/23/2022 23:17	10.51	6/23/2022 22:05	0.84	6/23/2022 23:47	33.34
6/24/2022 23:31	85.97	6/23/2022 22:48	0.49	6/23/2022 23:18	10.50	6/23/2022 22:06	0.80	6/23/2022 23:48	33.29
6/24/2022 23:32	85.97	6/23/2022 22:49	0.48	6/23/2022 23:19	10.49	6/23/2022 22:07	0.84	6/23/2022 23:49	33.29
6/24/2022 23:33	85.93	6/23/2022 22:50	0.50	6/23/2022 23:20	10.50	6/23/2022 22:08	0.86	6/23/2022 23:50	33.28
6/24/2022 23:34	85.94	6/23/2022 22:51	0.49	6/23/2022 23:21	10.50	6/23/2022 22:09	0.81	6/23/2022 23:51	33.26
6/24/2022 23:35	85.92	6/23/2022 22:52	0.50	6/23/2022 23:22	10.48	6/23/2022 22:10	0.86	6/23/2022 23:52	33.31
6/24/2022 23:36	85.93	6/23/2022 22:53	0.44	6/23/2022 23:23	10.49	6/23/2022 22:11	0.86	6/23/2022 23:53	33.26
6/24/2022 23:37	85.91	6/23/2022 22:54	0.48	6/23/2022 23:24	10.48	6/23/2022 22:12	0.83	6/23/2022 23:54	33.24
6/24/2022 23:38	85.93	6/23/2022 22:55	0.47	6/23/2022 23:25	10.48	6/23/2022 22:13	0.83	6/23/2022 23:55	33.24
6/24/2022 23:39	85.95	6/23/2022 22:56	0.48	6/23/2022 23:26	10.47	6/23/2022 22:14	0.83	6/23/2022 23:56	33.23
6/24/2022 23:40	85.93	6/23/2022 22:57	0.48	6/23/2022 23:27	10.44	6/23/2022 22:15	0.80	6/23/2022 23:57	33.24
6/24/2022 23:41	85.90	6/23/2022 22:58	0.48	6/23/2022 23:28	10.46	6/23/2022 22:16	0.77	6/23/2022 23:58	33.21
6/24/2022 23:42	85.89	6/23/2022 22:59	0.45	6/23/2022 23:29	10.44	6/23/2022 22:17	0.82	6/23/2022 23:59	33.23
6/24/2022 23:43	85.93	6/23/2022 23:00	0.48	6/23/2022 23:30	10.46	6/23/2022 22:18	0.83	6/24/2022 0:00	33.25
6/24/2022 23:44	85.91	6/23/2022 23:01	0.48	6/23/2022 23:31	10.46	6/23/2022 22:19	0.79	6/24/2022 0:01	33.23
6/24/2022 23:45	85.89	6/23/2022 23:02	0.47	6/23/2022 23:32	10.43	6/23/2022 22:20	0.83	6/24/2022 0:02	33.26
6/24/2022 23:46	85.87	6/23/2022 23:03	0.49	6/23/2022 23:33	10.42	6/23/2022 22:21	0.77	6/24/2022 0:03	33.20
6/24/2022 23:47	85.88	6/23/2022 23:04	0.48	6/23/2022 23:34	10.42	6/23/2022 22:22	0.83	6/24/2022 0:04	33.22
6/24/2022 23:48	85.89	6/23/2022 23:05	0.47	6/23/2022 23:35	10.44	6/23/2022 22:23	0.84	6/24/2022 0:05	33.24
6/24/2022 23:49	85.87	6/23/2022 23:06	0.48	6/23/2022 23:36	10.40	6/23/2022 22:24	0.77	6/24/2022 0:06	33.19
6/24/2022 23:50	85.88	6/23/2022 23:07	0.43	6/23/2022 23:37	10.41	6/23/2022 22:25	0.79	6/24/2022 0:07	33.23
6/24/2022 23:51	85.87	6/23/2022 23:08	0.44	6/23/2022 23:38	10.44	6/23/2022 22:26	0.82	6/24/2022 0:08	33.16
6/24/2022 23:52	85.86	6/23/2022 23:09	0.50	6/23/2022 23:39	10.38	6/23/2022 22:27	0.81	6/24/2022 0:09	34.94
6/24/2022 23:53	85.84	6/23/2022 23:10	5.23	6/23/2022 23:40	10.40	6/23/2022 22:28	0.78	6/24/2022 0:10	34.37
6/24/2022 23:54	85.87	6/23/2022 23:11	7.52	6/23/2022 23:41	10.40	6/23/2022 22:29	0.83	6/24/2022 0:11	33.61
6/24/2022 23:55	85.85	6/23/2022 23:12	6.33	6/23/2022 23:42	10.36	6/23/2022 22:30	0.84	6/24/2022 0:12	33.34
6/24/2022 23:56	85.84	6/23/2022 23:13	5.36	6/23/2022 23:43	10.37	6/23/2022 22:31	0.83	6/24/2022 0:13	33.25
6/24/2022 23:57	85.85	6/23/2022 23:14	4.64	6/23/2022 23:44	10.43	6/23/2022 22:32	0.82	6/24/2022 0:14	33.23
6/24/2022 23:58	85.85	6/23/2022 23:15	4.03	6/23/2022 23:45	10.44	6/23/2022 22:33	0.80	6/24/2022 0:15	33.20
6/24/2022 23:59	85.85	6/23/2022 23:16	3.45	6/23/2022 23:46	10.45	6/23/2022 22:34	0.77	6/24/2022 0:16	33.19
6/25/2022 0:00	85.80	6/23/2022 23:17	3.02	6/23/2022 23:47	10.46	6/23/2022 22:35	0.86	6/24/2022 0:17	33.19
6/25/2022 0:01	85.82	6/23/2022 23:18	2.65	6/23/2022 23:48	10.48	6/23/2022 22:36	0.79	6/24/2022 0:18	33.17
6/25/2022 0:02	85.85	6/23/2022 23:19	2.35	6/23/2022 23:49	10.48	6/23/2022 22:37	0.78	6/24/2022 0:19	33.16
6/25/2022 0:03	85.80	6/23/2022 23:20	2.02	6/23/2022 23:50	14.38	6/23/2022 22:38	0.83	6/24/2022 0:20	33.16
6/25/2022 0:04	85.85	6/23/2022 23:21	1.87	6/23/2022 23:51	13.89	6/23/2022 22:39	0.81	6/24/2022 0:21	33.13
6/25/2022 0:05	85.83	6/23/2022 23:22	1.70	6/23/2022 23:52	13.46	6/23/2022 22:40	0.82	6/24/2022 0:22	33.16
6/25/2022 0:06	85.84	6/23/2022 23:23	1.48	6/23/2022 23:53	13.10	6/23/2022 22:41	0.82	6/24/2022 0:23	33.13
6/25/2022 0:07	85.80	6/23/2022 23:24	1.37	6/23/2022 23:54	12.81	6/23/2022 22:42	0.79	6/24/2022 0:24	33.16
6/25/2022 0:08	85.81	6/23/2022 23:25	1.25	6/23/2022 23:55	12.50	6/23/2022 22:43	0.78	6/24/2022 0:25	33.13
6/25/2022 0:09	85.77	6/23/2022 23:26	1.10	6/23/2022 23:56	12.27	6/23/2022 22:44	0.83	6/24/2022 0:26	33.12
6/25/2022 0:10	85.83	6/23/2022 23:27	1.03	6/23/2022 23:57	12.08	6/23/2022 22:45	0.80	6/24/2022 0:27	33.14
6/25/2022 0:11	85.82	6/23/2022 23:28	0.94	6/23/2022 23:58	11.92	6/23/2022 22:46	0.80	6/24/2022 0:28	33.12
6/25/2022 0:12	85.78	6/23/2022 23:29	0.92	6/23/2022 23:59	11.73	6/23/2022 22:47	0.78	6/24/2022 0:29	33.09
6/25/2022 0:13	85.85	6/23/2022 23:30	0.82	6/24/2022 0:00	11.67	6/23/2022 22:48	0.81	6/24/2022 0:30	33.10
6/25/2022 0:14	85.77	6/23/2022 23:31	0.78	6/24/2022 0:01	11.52	6/23/2022 22:49	0.76	6/24/2022 0:31	33.10
6/25/2022 0:15	85.79	6/23/2022 23:32	0.73	6/24/2022 0:02	11.39	6/23/2022 22:50	0.80	6/24/2022 0:32	33.09
6/25/2022 0:16	85.80	6/23/2022 23:33	0.70	6/24/2022 0:03	11.31	6/23/2022 22:51	0.80	6/24/2022 0:33	33.11
6/25/2022 0:17	85.79	6/23/2022 23:34	0.66	6/24/2022 0:04	11.26	6/23/2022 22:52	0.84	6/24/2022 0:34	33.08
6/25/2022 0:18	85.80	6/23/2022 23:35	0.66	6/24/2022 0:05	11.17	6/23/2022 22:53	0.81	6/24/2022 0:35	33.11
6/25/2022 0:19	85.75	6/23/2022 23:36	0.58	6/24/2022 0:06	11.07	6/23/2022 22:54	0.79	6/24/2022 0:36	33.14
6/25/2022 0:20	85.73	6/23/2022 23:37	0.58	6/24/2022 0:07	10.99	6/23/2022 22:55	0.79	6/24/2022 0:37	33.13
6/25/2022 0:21	85.77	6/23/2022 23:38	0.56	6/24/2022 0:08	11.01	6/23/2022 22:56	0.78	6/24/2022 0:38	33.12

6/25/2022 0:22	85.79	6/23/2022 23:39	0.54	6/24/2022 0:09	10.94	6/23/2022 22:57	0.80	6/24/2022 0:39	33.15
6/25/2022 0:23	85.74	6/23/2022 23:40	0.55	6/24/2022 0:10	10.87	6/23/2022 22:58	0.82	6/24/2022 0:40	33.12
6/25/2022 0:24	85.77	6/23/2022 23:41	0.52	6/24/2022 0:11	10.84	6/23/2022 22:59	0.79	6/24/2022 0:41	34.97
6/25/2022 0:25	85.76	6/23/2022 23:42	0.51	6/24/2022 0:12	10.79	6/23/2022 23:00	0.79	6/24/2022 0:42	34.42
6/25/2022 0:26	85.72	6/23/2022 23:43	0.51	6/24/2022 0:13	10.77	6/23/2022 23:01	0.77	6/24/2022 0:43	35.05
6/25/2022 0:27	85.73	6/23/2022 23:44	0.49	6/24/2022 0:14	10.75	6/23/2022 23:02	0.78	6/24/2022 0:44	35.58
6/25/2022 0:28	85.73	6/23/2022 23:45	0.48	6/24/2022 0:15	10.72	6/23/2022 23:03	0.81	6/24/2022 0:45	34.83
6/25/2022 0:29	85.74	6/23/2022 23:46	0.48	6/24/2022 0:16	10.69	6/23/2022 23:04	0.82	6/24/2022 0:46	33.87
6/25/2022 0:30	85.71	6/23/2022 23:47	0.46	6/24/2022 0:17	10.68	6/23/2022 23:05	0.82	6/24/2022 0:47	33.41
6/25/2022 0:31	85.68	6/23/2022 23:48	0.47	6/24/2022 0:18	10.74	6/23/2022 23:06	0.84	6/24/2022 0:48	33.22
6/25/2022 0:32	85.70	6/23/2022 23:49	0.39	6/24/2022 0:19	10.67	6/23/2022 23:07	0.83	6/24/2022 0:49	34.82
6/25/2022 0:33	85.73	6/23/2022 23:50	0.49	6/24/2022 0:20	10.67	6/23/2022 23:08	0.82	6/24/2022 0:50	34.40
6/25/2022 0:34	85.70	6/23/2022 23:51	0.46	6/24/2022 0:21	10.67	6/23/2022 23:09	0.84	6/24/2022 0:51	36.00
6/25/2022 0:35	85.74	6/23/2022 23:52	0.43	6/24/2022 0:22	10.67	6/23/2022 23:10	0.81	6/24/2022 0:52	34.43
6/25/2022 0:36	85.76	6/23/2022 23:53	0.44	6/24/2022 0:23	10.66	6/23/2022 23:11	0.86	6/24/2022 0:53	35.64
6/25/2022 0:37	85.71	6/23/2022 23:54	0.43	6/24/2022 0:24	10.64	6/23/2022 23:12	0.86	6/24/2022 0:54	35.04
6/25/2022 0:38	85.73	6/23/2022 23:55	0.41	6/24/2022 0:25	10.62	6/23/2022 23:13	0.82	6/24/2022 0:55	35.31
6/25/2022 0:39	85.73	6/23/2022 23:56	0.46	6/24/2022 0:26	10.63	6/23/2022 23:14	0.85	6/24/2022 0:56	36.08
6/25/2022 0:40	85.70	6/23/2022 23:57	0.41	6/24/2022 0:27	10.60	6/23/2022 23:15	0.83	6/24/2022 0:57	34.95
6/25/2022 0:41	85.70	6/23/2022 23:58	0.41	6/24/2022 0:28	10.60	6/23/2022 23:16	0.83	6/24/2022 0:58	36.25
6/25/2022 0:42	85.68	6/23/2022 23:59	0.41	6/24/2022 0:29	10.58	6/23/2022 23:17	0.83	6/24/2022 0:59	34.63
6/25/2022 0:43	85.73	6/24/2022 0:00	0.42	6/24/2022 0:30	10.60	6/23/2022 23:18	0.83	6/24/2022 1:00	33.79
6/25/2022 0:44	85.69	6/24/2022 0:01	0.43	6/24/2022 0:31	10.55	6/23/2022 23:19	0.80	6/24/2022 1:01	33.45
6/25/2022 0:45	85.67	6/24/2022 0:02	0.41	6/24/2022 0:32	10.56	6/23/2022 23:20	0.81	6/24/2022 1:02	33.28
6/25/2022 0:46	85.67	6/24/2022 0:03	0.42	6/24/2022 0:33	10.57	6/23/2022 23:21	0.82	6/24/2022 1:03	33.24
6/25/2022 0:47	85.67	6/24/2022 0:04	0.46	6/24/2022 0:34	10.52	6/23/2022 23:22	0.84	6/24/2022 1:04	33.21
6/25/2022 0:48	85.71	6/24/2022 0:05	0.43	6/24/2022 0:35	10.50	6/23/2022 23:23	0.82	6/24/2022 1:05	33.19
6/25/2022 0:49	85.72	6/24/2022 0:06	0.43	6/24/2022 0:36	10.50	6/23/2022 23:24	0.84	6/24/2022 1:06	33.19
6/25/2022 0:50	85.66	6/24/2022 0:07	0.41	6/24/2022 0:37	10.50	6/23/2022 23:25	0.83	6/24/2022 1:07	34.76
6/25/2022 0:51	85.65	6/24/2022 0:08	0.44	6/24/2022 0:38	10.49	6/23/2022 23:26	0.81	6/24/2022 1:08	33.81
6/25/2022 0:52	85.66	6/24/2022 0:09	0.45	6/24/2022 0:39	10.48	6/23/2022 23:27	0.78	6/24/2022 1:09	33.40
6/25/2022 0:53	85.68	6/24/2022 0:10	0.37	6/24/2022 0:40	10.45	6/23/2022 23:28	0.78	6/24/2022 1:10	33.22
6/25/2022 0:54	85.70	6/24/2022 0:11	0.97	6/24/2022 0:41	10.48	6/23/2022 23:29	0.81	6/24/2022 1:11	33.18
6/25/2022 0:55	85.66	6/24/2022 0:12	6.84	6/24/2022 0:42	10.44	6/23/2022 23:30	0.80	6/24/2022 1:12	33.13
6/25/2022 0:56	85.66	6/24/2022 0:13	7.11	6/24/2022 0:43	10.42	6/23/2022 23:31	0.84	6/24/2022 1:13	33.13
6/25/2022 0:57	85.65	6/24/2022 0:14	6.05	6/24/2022 0:44	10.43	6/23/2022 23:32	0.82	6/24/2022 1:14	34.70
6/25/2022 0:58	85.64	6/24/2022 0:15	5.10	6/24/2022 0:45	10.44	6/23/2022 23:33	0.82	6/24/2022 1:15	34.20
6/25/2022 0:59	85.64	6/24/2022 0:16	4.43	6/24/2022 0:46	10.45	6/23/2022 23:34	0.80	6/24/2022 1:16	33.52
6/25/2022 1:00	85.64	6/24/2022 0:17	3.81	6/24/2022 0:47	10.47	6/23/2022 23:35	0.81	6/24/2022 1:17	33.27
6/25/2022 1:01	85.65	6/24/2022 0:18	3.29	6/24/2022 0:48	10.46	6/23/2022 23:36	0.83	6/24/2022 1:18	33.17
6/25/2022 1:02	85.64	6/24/2022 0:19	2.88	6/24/2022 0:49	10.50	6/23/2022 23:37	0.79	6/24/2022 1:19	33.11
6/25/2022 1:03	85.64	6/24/2022 0:20	2.50	6/24/2022 0:50	10.56	6/23/2022 23:38	0.80	6/24/2022 1:20	33.12
6/25/2022 1:04	85.63	6/24/2022 0:21	2.23	6/24/2022 0:51	10.51	6/23/2022 23:39	0.84	6/24/2022 1:21	33.10
6/25/2022 1:05	85.63	6/24/2022 0:22	1.95	6/24/2022 0:52	10.53	6/23/2022 23:40	0.80	6/24/2022 1:22	33.44
6/25/2022 1:06	85.66	6/24/2022 0:23	1.80	6/24/2022 0:53	10.53	6/23/2022 23:41	0.80	6/24/2022 1:23	34.49
6/25/2022 1:07	85.67	6/24/2022 0:24	1.58	6/24/2022 0:54	10.55	6/23/2022 23:42	0.81	6/24/2022 1:24	33.63
6/25/2022 1:08	85.62	6/24/2022 0:25	1.42	6/24/2022 0:55	10.53	6/23/2022 23:43	0.85	6/24/2022 1:25	33.30
6/25/2022 1:09	85.64	6/24/2022 0:26	1.31	6/24/2022 0:56	10.55	6/23/2022 23:44	0.84	6/24/2022 1:26	33.11
6/25/2022 1:10	85.62	6/24/2022 0:27	1.21	6/24/2022 0:57	10.52	6/23/2022 23:45	0.81	6/24/2022 1:27	33.09
6/25/2022 1:11	85.63	6/24/2022 0:28	1.07	6/24/2022 0:58	10.53	6/23/2022 23:46	0.83	6/24/2022 1:28	33.10
6/25/2022 1:12	85.61	6/24/2022 0:29	1.00	6/24/2022 0:59	10.54	6/23/2022 23:47	0.85	6/24/2022 1:29	33.03
6/25/2022 1:13	85.61	6/24/2022 0:30	0.93	6/24/2022 1:00	10.53	6/23/2022 23:48	0.80	6/24/2022 1:30	33.03
6/25/2022 1:14	85.59	6/24/2022 0:31	0.84	6/24/2022 1:01	10.48	6/23/2022 23:49	0.82	6/24/2022 1:31	34.89
6/25/2022 1:15	85.61	6/24/2022 0:32	0.76	6/24/2022 1:02	10.50	6/23/2022 23:50	0.82	6/24/2022 1:32	33.81
6/25/2022 1:16	85.59	6/24/2022 0:33	0.75	6/24/2022 1:03	10.51	6/23/2022 23:51	0.78	6/24/2022 1:33	33.31
6/25/2022 1:17	85.60	6/24/2022 0:34	0.75	6/24/2022 1:04	10.51	6/23/2022 23:52	0.82	6/24/2022 1:34	33.12
6/25/2022 1:18	85.59	6/24/2022 0:35	0.67	6/24/2022 1:05	10.46	6/23/2022 23:53	0.80	6/24/2022 1:35	33.12
6/25/2022 1:19	85.59	6/24/2022 0:36	0.66	6/24/2022 1:06	10.48	6/23/2022 23:54	0.82	6/24/2022 1:36	33.05
6/25/2022 1:20	85.60	6/24/2022 0:37	0.62	6/24/2022 1:07	10.49	6/23/2022 23:55	0.87	6/24/2022 1:37	33.06
6/25/2022 1:21	85.59	6/24/2022 0:38	0.60	6/24/2022 1:08	10.50	6/23/2022 23:56	0.80	6/24/2022 1:38	33.74
6/25/2022 1:22	85.56	6/24/2022 0:39	0.56	6/24/2022 1:09	10.45	6/23/2022 23:57	0.81	6/24/2022 1:39	34.33
6/25/2022 1:23	85.57	6/24/2022 0:40	0.58	6/24/2022 1:10	10.43	6/23/2022 23:58	0.82	6/24/2022 1:40	33.53
6/25/2022 1:24	85.59	6/24/2022 0:41	0.51	6/24/2022 1:11	10.46	6/23/2022 23:59	0.84	6/24/2022 1:41	33.17
6/25/2022 1:25	85.55	6/24/2022 0:42	0.50	6/24/2022 1:12	10.43	6/24/2022 0:00	0.78	6/24/2022 1:42	33.07
6/25/2022 1:26	85.61	6/24/2022 0:43	0.51	6/24/2022 1:13	10.45	6/24/2022 0:01	0.81	6/24/2022 1:43	33.02
6/25/2022 1:27	85.56	6/24/2022 0:44	0.48	6/24/2022 1:14	10.42	6/24/2022 0:02	0.83	6/24/2022 1:44	33.02
6/25/2022 1:28	85.55	6/24/2022 0:45	0.50	6/24/2022 1:15	10.41	6/24/2022 0:03	0.84	6/24/2022 1:45	33.00
6/25/2022 1:29	85.55	6/24/2022 0:46	0.46	6/24/2022 1:16	10.42	6/24/2022 0:04	0.80	6/24/2022 1:46	34.91
6/25/2022 1:30	85.56	6/24/2022 0:47	0.50	6/24/2022 1:17	10.45	6/24/2022 0:05	0.80	6/24/2022 1:47	33.99
6/25/2022 1:31	85.55	6/24/2022 0:48	0.48	6/24/2022 1:18	10.46	6/24/2022 0:06	0.81	6/24/2022 1:48	33.33
6/25/2022 1:32	85.61	6/24/2022 0:49	0.48	6/24/2022 1:19	10.44	6/24/2022 0:07	0.80	6/24/2022 1:49	33.12
6/25/2022 1:33	85.56	6/24/2022 0:50	0.50	6/24/2022 1:20	10.44	6/24/2022 0:08	0.82	6/24/2022 1:50	33.01
6/25/2022 1:34	85.55	6/24/2022 0:51	0.48	6/24/2022 1:21	10.50	6/24/2022 0:09	0.80	6/24/2022 1:51	33.00
6/25/2022 1:35	85.55	6/24/2022 0:52	0.49	6/24/2022 1:22	10.50	6/24/2022 0:10	0.81	6/24/2022 1:52	32.99
6/25/2022 1:36	85.55	6/24/2022 0:53	0.49	6/24/2022 1:23	10.51	6/24/2022 0:11	0.82	6/24/2022 1:53	32.96
6/25/2022 1:37	85.59	6/24/2022 0:54	0.46	6/24/2022 1:24	10.51	6/24/2022 0:12	0.83	6/24/2022 1:54	34.61
6/25/2022 1:38	85.58	6/24/2022 0:55	0.46	6/24/2022 1:25	10.47	6/24/2022 0:13	0.84	6/24/2022 1:55	33.65
6/25/2022 1:39	85.55	6/24/2022 0:56	0.44	6/24/2022 1:26	10.50	6/24/2022 0:14	0.85	6/24/2022 1:56	33.21
6/25/2022 1:40	85.55	6/24/2022 0:57	0.46	6/24/2022 1:27	10.50	6/24/2022 0:15	0.84	6/24/2022 1:57	33.03
6/25/2022 1:41	85.57	6/24/2022 0:58	0.47	6/24/2022 1:28	10.46	6/24/2022 0:16	0.85	6/24/2022 1:58	32.97
6/25/2022 1:42	85.54	6/24/2022 0:59	0.46	6/24/2022 1:29	10.48	6/24/2022 0:17	0.81	6/24/2022 1:59	32.98
6/25/2022 1:43	85.52	6/24/2022 1:00	0.42	6/24/2022 1:30	10.45	6/24/2022 0:18	0.84	6/24/2022 2:00	32.96
6/25/2022 1:44	85.55	6/24/2022 1:01	0.39	6/24/2022 1:31	10.45	6/24/2022 0:19	0.86	6/24/2022 2:01	32.97
6/25/2022 1:45	85.53	6/24/2022 1:02	0.42	6/24/2022 1:32	10.47	6/24/2022 0:20	0.84	6/24/2022 2:02	32.95
6/25/2022 1:46	85.52	6/24/2022 1:03	0.45	6/24/2022 1:33	10.48	6/24/2022 0:21	0.81	6/24/2022 2:03	32.95
6/25/2022 1:47	85.52	6/24/2022 1:04	0.44	6/24/2022 1:34	10.46	6/24/2022 0:22	0.83	6/24/2022 2:04	32.98
6/25/2022 1:48	85.52	6/24/2022 1:05	0.45	6/24/2022 1:35	10.51	6/24/2022 0:23	0.79	6/24/2022 2:05	34.74
6/25/2022 1:49	85.54	6/24/2022 1:06	0.39	6/24/2022 1:36	10.52	6/24/2022 0:24	0.82	6/24/2022 2:06	33.65

6/25/2022 1:50	85.51	6/24/2022 1:07	0.43	6/24/2022 1:37	10.51	6/24/2022 0:25	0.80	6/24/2022 2:07	35.55
6/25/2022 1:51	85.54	6/24/2022 1:08	0.44	6/24/2022 1:38	10.53	6/24/2022 0:26	0.81	6/24/2022 2:08	34.08
6/25/2022 1:52	85.51	6/24/2022 1:09	0.45	6/24/2022 1:39	10.55	6/24/2022 0:27	0.84	6/24/2022 2:09	35.45
6/25/2022 1:53	85.51	6/24/2022 1:10	0.36	6/24/2022 1:40	10.54	6/24/2022 0:28	0.81	6/24/2022 2:10	34.35
6/25/2022 1:54	85.51	6/24/2022 1:11	0.41	6/24/2022 1:41	10.58	6/24/2022 0:29	0.82	6/24/2022 2:11	35.55
6/25/2022 1:55	85.53	6/24/2022 1:12	0.45	6/24/2022 1:42	10.56	6/24/2022 0:30	0.83	6/24/2022 2:12	34.41
6/25/2022 1:56	85.52	6/24/2022 1:13	2.94	6/24/2022 1:43	10.53	6/24/2022 0:31	0.80	6/24/2022 2:13	35.62
6/25/2022 1:57	85.50	6/24/2022 1:14	7.99	6/24/2022 1:44	10.50	6/24/2022 0:32	0.81	6/24/2022 2:14	34.51
6/25/2022 1:58	85.47	6/24/2022 1:15	6.65	6/24/2022 1:45	10.54	6/24/2022 0:33	0.83	6/24/2022 2:15	36.06
6/25/2022 1:59	85.50	6/24/2022 1:16	5.63	6/24/2022 1:46	10.50	6/24/2022 0:34	0.80	6/24/2022 2:16	34.39
6/25/2022 2:00	85.53	6/24/2022 1:17	4.85	6/24/2022 1:47	10.50	6/24/2022 0:35	0.83	6/24/2022 2:17	35.96
6/25/2022 2:01	85.51	6/24/2022 1:18	4.15	6/24/2022 1:48	10.54	6/24/2022 0:36	0.78	6/24/2022 2:18	34.41
6/25/2022 2:02	85.47	6/24/2022 1:19	3.60	6/24/2022 1:49	10.49	6/24/2022 0:37	0.80	6/24/2022 2:19	33.58
6/25/2022 2:03	85.51	6/24/2022 1:20	3.14	6/24/2022 1:50	10.49	6/24/2022 0:38	0.81	6/24/2022 2:20	33.26
6/25/2022 2:04	85.48	6/24/2022 1:21	2.69	6/24/2022 1:51	10.46	6/24/2022 0:39	0.85	6/24/2022 2:21	35.14
6/25/2022 2:05	85.46	6/24/2022 1:22	2.35	6/24/2022 1:52	10.48	6/24/2022 0:40	0.81	6/24/2022 2:22	34.07
6/25/2022 2:06	85.50	6/24/2022 1:23	2.12	6/24/2022 1:53	10.47	6/24/2022 0:41	0.79	6/24/2022 2:23	35.14
6/25/2022 2:07	85.49	6/24/2022 1:24	1.88	6/24/2022 1:54	10.49	6/24/2022 0:42	0.82	6/24/2022 2:24	34.92
6/25/2022 2:08	85.49	6/24/2022 1:25	1.69	6/24/2022 1:55	10.46	6/24/2022 0:43	0.79	6/24/2022 2:25	34.90
6/25/2022 2:09	85.50	6/24/2022 1:26	1.48	6/24/2022 1:56	10.47	6/24/2022 0:44	0.81	6/24/2022 2:26	33.81
6/25/2022 2:10	85.50	6/24/2022 1:27	1.38	6/24/2022 1:57	10.45	6/24/2022 0:45	0.82	6/24/2022 2:27	33.38
6/25/2022 2:11	85.50	6/24/2022 1:28	1.24	6/24/2022 1:58	10.43	6/24/2022 0:46	0.85	6/24/2022 2:28	33.14
6/25/2022 2:12	85.50	6/24/2022 1:29	1.11	6/24/2022 1:59	10.46	6/24/2022 0:47	0.79	6/24/2022 2:29	33.09
6/25/2022 2:13	85.49	6/24/2022 1:30	1.02	6/24/2022 2:00	10.40	6/24/2022 0:48	0.81	6/24/2022 2:30	33.06
6/25/2022 2:14	85.48	6/24/2022 1:31	0.94	6/24/2022 2:01	10.42	6/24/2022 0:49	0.82	6/24/2022 2:31	33.00
6/25/2022 2:15	85.49	6/24/2022 1:32	0.87	6/24/2022 2:02	10.41	6/24/2022 0:50	0.85	6/24/2022 2:32	33.00
6/25/2022 2:16	85.47	6/24/2022 1:33	0.82	6/24/2022 2:03	10.39	6/24/2022 0:51	0.80	6/24/2022 2:33	32.97
6/25/2022 2:17	85.48	6/24/2022 1:34	0.80	6/24/2022 2:04	10.43	6/24/2022 0:52	0.81	6/24/2022 2:34	32.94
6/25/2022 2:18	85.47	6/24/2022 1:35	0.73	6/24/2022 2:05	10.42	6/24/2022 0:53	0.80	6/24/2022 2:35	32.94
6/25/2022 2:19	85.45	6/24/2022 1:36	0.67	6/24/2022 2:06	10.40	6/24/2022 0:54	0.83	6/24/2022 2:36	32.97
6/25/2022 2:20	85.45	6/24/2022 1:37	0.67	6/24/2022 2:07	10.44	6/24/2022 0:55	0.80	6/24/2022 2:37	32.95
6/25/2022 2:21	85.42	6/24/2022 1:38	0.60	6/24/2022 2:08	10.49	6/24/2022 0:56	0.79	6/24/2022 2:38	32.93
6/25/2022 2:22	85.43	6/24/2022 1:39	0.61	6/24/2022 2:09	10.46	6/24/2022 0:57	0.79	6/24/2022 2:39	32.93
6/25/2022 2:23	85.45	6/24/2022 1:40	0.55	6/24/2022 2:10	10.48	6/24/2022 0:58	0.83	6/24/2022 2:40	32.91
6/25/2022 2:24	85.44	6/24/2022 1:41	0.52	6/24/2022 2:11	10.50	6/24/2022 0:59	0.80	6/24/2022 2:41	32.87
6/25/2022 2:25	85.42	6/24/2022 1:42	0.49	6/24/2022 2:12	10.50	6/24/2022 1:00	0.79	6/24/2022 2:42	32.87
6/25/2022 2:26	85.45	6/24/2022 1:43	0.53	6/24/2022 2:13	10.47	6/24/2022 1:01	0.81	6/24/2022 2:43	32.87
6/25/2022 2:27	85.47	6/24/2022 1:44	0.49	6/24/2022 2:14	10.48	6/24/2022 1:02	0.82	6/24/2022 2:44	32.92
6/25/2022 2:28	85.42	6/24/2022 1:45	0.45	6/24/2022 2:15	10.45	6/24/2022 1:03	0.83	6/24/2022 2:45	32.88
6/25/2022 2:29	85.45	6/24/2022 1:46	0.45	6/24/2022 2:16	10.47	6/24/2022 1:04	0.81	6/24/2022 2:46	32.90
6/25/2022 2:30	85.43	6/24/2022 1:47	0.46	6/24/2022 2:17	10.47	6/24/2022 1:05	0.80	6/24/2022 2:47	32.89
6/25/2022 2:31	85.45	6/24/2022 1:48	0.40	6/24/2022 2:18	10.47	6/24/2022 1:06	0.85	6/24/2022 2:48	32.84
6/25/2022 2:32	85.42	6/24/2022 1:49	0.43	6/24/2022 2:19	10.45	6/24/2022 1:07	0.84	6/24/2022 2:49	32.84
6/25/2022 2:33	85.42	6/24/2022 1:50	0.42	6/24/2022 2:20	10.47	6/24/2022 1:08	0.83	6/24/2022 2:50	32.84
6/25/2022 2:34	85.41	6/24/2022 1:51	0.43	6/24/2022 2:21	10.45	6/24/2022 1:09	0.83	6/24/2022 2:51	32.89
6/25/2022 2:35	85.43	6/24/2022 1:52	0.43	6/24/2022 2:22	10.44	6/24/2022 1:10	0.85	6/24/2022 2:52	32.84
6/25/2022 2:36	85.42	6/24/2022 1:53	0.39	6/24/2022 2:23	10.45	6/24/2022 1:11	0.84	6/24/2022 2:53	32.82
6/25/2022 2:37	85.42	6/24/2022 1:54	0.46	6/24/2022 2:24	10.46	6/24/2022 1:12	0.81	6/24/2022 2:54	32.84
6/25/2022 2:38	85.42	6/24/2022 1:55	0.41	6/24/2022 2:25	10.42	6/24/2022 1:13	0.84	6/24/2022 2:55	32.84
6/25/2022 2:39	85.44	6/24/2022 1:56	0.39	6/24/2022 2:26	10.41	6/24/2022 1:14	0.85	6/24/2022 2:56	32.81
6/25/2022 2:40	85.44	6/24/2022 1:57	0.35	6/24/2022 2:27	10.44	6/24/2022 1:15	0.84	6/24/2022 2:57	32.79
6/25/2022 2:41	85.41	6/24/2022 1:58	0.39	6/24/2022 2:28	10.40	6/24/2022 1:16	0.82	6/24/2022 2:58	32.80
6/25/2022 2:42	85.38	6/24/2022 1:59	0.42	6/24/2022 2:29	10.43	6/24/2022 1:17	0.83	6/24/2022 2:59	32.77
6/25/2022 2:43	85.41	6/24/2022 2:00	0.35	6/24/2022 2:30	10.43	6/24/2022 1:18	0.81	6/24/2022 3:00	32.80
6/25/2022 2:44	85.42	6/24/2022 2:01	0.42	6/24/2022 2:31	10.40	6/24/2022 1:19	0.87	6/24/2022 3:01	32.76
6/25/2022 2:45	85.41	6/24/2022 2:02	0.41	6/24/2022 2:32	10.42	6/24/2022 1:20	0.84	6/24/2022 3:02	32.77
6/25/2022 2:46	85.43	6/24/2022 2:03	0.40	6/24/2022 2:33	10.42	6/24/2022 1:21	0.83	6/24/2022 3:03	32.77
6/25/2022 2:47	85.38	6/24/2022 2:04	0.38	6/24/2022 2:34	10.39	6/24/2022 1:22	0.82	6/24/2022 3:04	32.78
6/25/2022 2:48	85.41	6/24/2022 2:05	0.39	6/24/2022 2:35	10.39	6/24/2022 1:23	0.83	6/24/2022 3:05	32.77
6/25/2022 2:49	85.41	6/24/2022 2:06	0.40	6/24/2022 2:36	10.39	6/24/2022 1:24	0.83	6/24/2022 3:06	32.73
6/25/2022 2:50	85.44	6/24/2022 2:07	0.40	6/24/2022 2:37	10.40	6/24/2022 1:25	0.82	6/24/2022 3:07	32.75
6/25/2022 2:51	85.38	6/24/2022 2:08	0.40	6/24/2022 2:38	10.43	6/24/2022 1:26	0.81	6/24/2022 3:08	32.76
6/25/2022 2:52	85.38	6/24/2022 2:09	0.41	6/24/2022 2:39	10.45	6/24/2022 1:27	0.81	6/24/2022 3:09	32.75
6/25/2022 2:53	85.41	6/24/2022 2:10	0.37	6/24/2022 2:40	10.44	6/24/2022 1:28	0.85	6/24/2022 3:10	32.73
6/25/2022 2:54	85.42	6/24/2022 2:11	0.36	6/24/2022 2:41	10.48	6/24/2022 1:29	0.84	6/24/2022 3:11	32.72
6/25/2022 2:55	85.39	6/24/2022 2:12	0.36	6/24/2022 2:42	10.48	6/24/2022 1:30	0.82	6/24/2022 3:12	32.73
6/25/2022 2:56	85.42	6/24/2022 2:13	0.37	6/24/2022 2:43	10.50	6/24/2022 1:31	0.84	6/24/2022 3:13	32.72
6/25/2022 2:57	85.35	6/24/2022 2:14	0.37	6/24/2022 2:44	10.48	6/24/2022 1:32	0.82	6/24/2022 3:14	32.76
6/25/2022 2:58	85.40	6/24/2022 2:15	6.29	6/24/2022 2:45	10.46	6/24/2022 1:33	0.85	6/24/2022 3:15	32.72
6/25/2022 2:59	85.40	6/24/2022 2:16	7.08	6/24/2022 2:46	10.44	6/24/2022 1:34	0.81	6/24/2022 3:16	32.75
6/25/2022 3:00	85.36	6/24/2022 2:17	5.96	6/24/2022 2:47	10.47	6/24/2022 1:35	0.81	6/24/2022 3:17	32.70
6/25/2022 3:01	85.39	6/24/2022 2:18	5.08	6/24/2022 2:48	10.46	6/24/2022 1:36	0.81	6/24/2022 3:18	32.72
6/25/2022 3:02	85.37	6/24/2022 2:19	4.38	6/24/2022 2:49	10.46	6/24/2022 1:37	0.80	6/24/2022 3:19	32.71
6/25/2022 3:03	85.40	6/24/2022 2:20	3.80	6/24/2022 2:50	10.46	6/24/2022 1:38	0.79	6/24/2022 3:20	32.70
6/25/2022 3:04	85.40	6/24/2022 2:21	3.26	6/24/2022 2:51	10.45	6/24/2022 1:39	0.81	6/24/2022 3:21	32.68
6/25/2022 3:05	85.37	6/24/2022 2:22	2.75	6/24/2022 2:52	10.47	6/24/2022 1:40	0.81	6/24/2022 3:22	32.65
6/25/2022 3:06	85.40	6/24/2022 2:23	2.45	6/24/2022 2:53	10.45	6/24/2022 1:41	0.80	6/24/2022 3:23	32.67
6/25/2022 3:07	85.36	6/24/2022 2:24	2.19	6/24/2022 2:54	10.43	6/24/2022 1:42	0.82	6/24/2022 3:24	32.64
6/25/2022 3:08	85.39	6/24/2022 2:25	1.94	6/24/2022 2:55	10.43	6/24/2022 1:43	0.85	6/24/2022 3:25	32.70
6/25/2022 3:09	85.39	6/24/2022 2:26	1.72	6/24/2022 2:56	10.43	6/24/2022 1:44	0.81	6/24/2022 3:26	32.69
6/25/2022 3:10	85.34	6/24/2022 2:27	1.52	6/24/2022 2:57	10.42	6/24/2022 1:45	0.87	6/24/2022 3:27	32.67
6/25/2022 3:11	85.36	6/24/2022 2:28	1.38	6/24/2022 2:58	10.41	6/24/2022 1:46	0.81	6/24/2022 3:28	32.63
6/25/2022 3:12	85.35	6/24/2022 2:29	1.26	6/24/2022 2:59	10.45	6/24/2022 1:47	0.80	6/24/2022 3:29	32.66
6/25/2022 3:13	85.42	6/24/2022 2:30	1.08	6/24/2022 3:00	10.42	6/24/2022 1:48	0.80	6/24/2022 3:30	32.65
6/25/2022 3:14	85.36	6/24/2022 2:31	1.03	6/24/2022 3:01	10.41	6/24/2022 1:49	0.82	6/24/2022 3:31	32.69
6/25/2022 3:15	85.35	6/24/2022 2:32	0.93	6/24/2022 3:02	10.37	6/24/2022 1:50	0.82	6/24/2022 3:32	32.66
6/25/2022 3:16	85.40	6/24/2022 2:33	0.87	6/24/2022 3:03	10.44	6/24/2022 1:51	0.82	6/24/2022 3:33	32.63
6/25/2022 3:17	85.37	6/24/2022 2:34	0.81	6/24/2022 3:04	10.40	6/24/2022 1:52	0.80	6/24/2022 3:34	32.64

6/25/2022 3:18	85.33	6/24/2022 2:35	0.70	6/24/2022 3:05	10.39	6/24/2022 1:53	0.84	6/24/2022 3:35	32.62
6/25/2022 3:19	85.37	6/24/2022 2:36	0.68	6/24/2022 3:06	10.41	6/24/2022 1:54	0.82	6/24/2022 3:36	32.63
6/25/2022 3:20	85.37	6/24/2022 2:37	0.70	6/24/2022 3:07	10.38	6/24/2022 1:55	0.83	6/24/2022 3:37	32.65
6/25/2022 3:21	85.40	6/24/2022 2:38	0.61	6/24/2022 3:08	10.38	6/24/2022 1:56	0.84	6/24/2022 3:38	32.63
6/25/2022 3:22	85.33	6/24/2022 2:39	0.59	6/24/2022 3:09	10.42	6/24/2022 1:57	0.82	6/24/2022 3:39	32.66
6/25/2022 3:23	85.34	6/24/2022 2:40	0.55	6/24/2022 3:10	10.45	6/24/2022 1:58	0.85	6/24/2022 3:40	32.63
6/25/2022 3:24	85.32	6/24/2022 2:41	0.55	6/24/2022 3:11	10.48	6/24/2022 1:59	0.82	6/24/2022 3:41	32.60
6/25/2022 3:25	85.37	6/24/2022 2:42	0.52	6/24/2022 3:12	10.45	6/24/2022 2:00	0.83	6/24/2022 3:42	32.62
6/25/2022 3:26	85.33	6/24/2022 2:43	0.48	6/24/2022 3:13	10.46	6/24/2022 2:01	0.83	6/24/2022 3:43	32.60
6/25/2022 3:27	85.34	6/24/2022 2:44	0.43	6/24/2022 3:14	10.47	6/24/2022 2:02	0.85	6/24/2022 3:44	32.58
6/25/2022 3:28	85.30	6/24/2022 2:45	0.43	6/24/2022 3:15	10.47	6/24/2022 2:03	0.85	6/24/2022 3:45	32.60
6/25/2022 3:29	85.32	6/24/2022 2:46	0.45	6/24/2022 3:16	10.45	6/24/2022 2:04	0.84	6/24/2022 3:46	32.60
6/25/2022 3:30	85.34	6/24/2022 2:47	0.48	6/24/2022 3:17	10.51	6/24/2022 2:05	0.85	6/24/2022 3:47	32.61
6/25/2022 3:31	85.31	6/24/2022 2:48	0.41	6/24/2022 3:18	10.47	6/24/2022 2:06	0.83	6/24/2022 3:48	32.62
6/25/2022 3:32	85.32	6/24/2022 2:49	0.44	6/24/2022 3:19	10.45	6/24/2022 2:07	0.83	6/24/2022 3:49	32.59
6/25/2022 3:33	85.30	6/24/2022 2:50	0.41	6/24/2022 3:20	10.43	6/24/2022 2:08	0.82	6/24/2022 3:50	32.60
6/25/2022 3:34	85.32	6/24/2022 2:51	0.38	6/24/2022 3:21	10.45	6/24/2022 2:09	0.84	6/24/2022 3:51	32.60
6/25/2022 3:35	85.34	6/24/2022 2:52	0.41	6/24/2022 3:22	10.45	6/24/2022 2:10	0.84	6/24/2022 3:52	32.56
6/25/2022 3:36	85.34	6/24/2022 2:53	0.42	6/24/2022 3:23	10.40	6/24/2022 2:11	0.86	6/24/2022 3:53	32.56
6/25/2022 3:37	85.31	6/24/2022 2:54	0.38	6/24/2022 3:24	10.44	6/24/2022 2:12	0.85	6/24/2022 3:54	32.56
6/25/2022 3:38	85.34	6/24/2022 2:55	0.40	6/24/2022 3:25	10.46	6/24/2022 2:13	0.81	6/24/2022 3:55	32.58
6/25/2022 3:39	85.33	6/24/2022 2:56	0.41	6/24/2022 3:26	10.46	6/24/2022 2:14	0.85	6/24/2022 3:56	32.57
6/25/2022 3:40	85.34	6/24/2022 2:57	0.39	6/24/2022 3:27	10.39	6/24/2022 2:15	0.84	6/24/2022 3:57	32.55
6/25/2022 3:41	85.35	6/24/2022 2:58	0.38	6/24/2022 3:28	10.41	6/24/2022 2:16	0.84	6/24/2022 3:58	32.57
6/25/2022 3:42	85.30	6/24/2022 2:59	0.41	6/24/2022 3:29	10.42	6/24/2022 2:17	0.88	6/24/2022 3:59	32.54
6/25/2022 3:43	85.30	6/24/2022 3:00	0.32	6/24/2022 3:30	10.38	6/24/2022 2:18	0.84	6/24/2022 4:00	32.57
6/25/2022 3:44	85.37	6/24/2022 3:01	0.31	6/24/2022 3:31	10.40	6/24/2022 2:19	0.84	6/24/2022 4:01	32.58
6/25/2022 3:45	85.28	6/24/2022 3:02	0.35	6/24/2022 3:32	10.41	6/24/2022 2:20	0.85	6/24/2022 4:02	32.56
6/25/2022 3:46	85.34	6/24/2022 3:03	0.33	6/24/2022 3:33	10.42	6/24/2022 2:21	0.83	6/24/2022 4:03	32.57
6/25/2022 3:47	85.30	6/24/2022 3:04	0.33	6/24/2022 3:34	10.43	6/24/2022 2:22	0.84	6/24/2022 4:04	32.52
6/25/2022 3:48	85.30	6/24/2022 3:05	0.39	6/24/2022 3:35	10.42	6/24/2022 2:23	0.82	6/24/2022 4:05	32.51
6/25/2022 3:49	85.33	6/24/2022 3:06	0.38	6/24/2022 3:36	10.43	6/24/2022 2:24	0.82	6/24/2022 4:06	32.54
6/25/2022 3:50	85.31	6/24/2022 3:07	0.34	6/24/2022 3:37	10.38	6/24/2022 2:25	0.86	6/24/2022 4:07	32.54
6/25/2022 3:51	85.31	6/24/2022 3:08	0.34	6/24/2022 3:38	10.40	6/24/2022 2:26	0.87	6/24/2022 4:08	32.51
6/25/2022 3:52	85.31	6/24/2022 3:09	0.33	6/24/2022 3:39	10.36	6/24/2022 2:27	0.82	6/24/2022 4:09	32.53
6/25/2022 3:53	85.30	6/24/2022 3:10	0.33	6/24/2022 3:40	10.39	6/24/2022 2:28	0.84	6/24/2022 4:10	32.50
6/25/2022 3:54	85.29	6/24/2022 3:11	0.33	6/24/2022 3:41	10.39	6/24/2022 2:29	0.82	6/24/2022 4:11	32.53
6/25/2022 3:55	85.30	6/24/2022 3:12	0.35	6/24/2022 3:42	10.41	6/24/2022 2:30	0.80	6/24/2022 4:12	32.51
6/25/2022 3:56	85.27	6/24/2022 3:13	0.38	6/24/2022 3:43	10.44	6/24/2022 2:31	0.83	6/24/2022 4:13	32.53
6/25/2022 3:57	85.31	6/24/2022 3:14	0.34	6/24/2022 3:44	10.44	6/24/2022 2:32	0.84	6/24/2022 4:14	32.54
6/25/2022 3:58	85.29	6/24/2022 3:15	2.28	6/24/2022 3:45	10.45	6/24/2022 2:33	0.81	6/24/2022 4:15	32.50
6/25/2022 3:59	85.29	6/24/2022 3:16	7.85	6/24/2022 3:46	10.48	6/24/2022 2:34	0.85	6/24/2022 4:16	32.46
6/25/2022 4:00	85.28	6/24/2022 3:17	6.67	6/24/2022 3:47	10.46	6/24/2022 2:35	0.79	6/24/2022 4:17	32.52
6/25/2022 4:01	85.29	6/24/2022 3:18	5.65	6/24/2022 3:48	10.46	6/24/2022 2:36	0.84	6/24/2022 4:18	32.50
6/25/2022 4:02	85.32	6/24/2022 3:19	4.82	6/24/2022 3:49	10.50	6/24/2022 2:37	0.83	6/24/2022 4:19	32.51
6/25/2022 4:03	85.24	6/24/2022 3:20	4.12	6/24/2022 3:50	10.48	6/24/2022 2:38	0.81	6/24/2022 4:20	32.47
6/25/2022 4:04	85.33	6/24/2022 3:21	3.59	6/24/2022 3:51	10.46	6/24/2022 2:39	0.81	6/24/2022 4:21	32.54
6/25/2022 4:05	85.32	6/24/2022 3:22	3.09	6/24/2022 3:52	10.47	6/24/2022 2:40	0.82	6/24/2022 4:22	32.48
6/25/2022 4:06	85.26	6/24/2022 3:23	2.66	6/24/2022 3:53	10.47	6/24/2022 2:41	0.81	6/24/2022 4:23	32.49
6/25/2022 4:07	85.26	6/24/2022 3:24	2.33	6/24/2022 3:54	10.47	6/24/2022 2:42	0.84	6/24/2022 4:24	32.45
6/25/2022 4:08	85.26	6/24/2022 3:25	2.10	6/24/2022 3:55	10.43	6/24/2022 2:43	0.80	6/24/2022 4:25	32.47
6/25/2022 4:09	85.32	6/24/2022 3:26	1.80	6/24/2022 3:56	10.42	6/24/2022 2:44	0.84	6/24/2022 4:26	32.48
6/25/2022 4:10	85.29	6/24/2022 3:27	1.64	6/24/2022 3:57	10.46	6/24/2022 2:45	0.83	6/24/2022 4:27	32.47
6/25/2022 4:11	85.26	6/24/2022 3:28	1.46	6/24/2022 3:58	10.45	6/24/2022 2:46	0.83	6/24/2022 4:28	32.46
6/25/2022 4:12	85.29	6/24/2022 3:29	1.28	6/24/2022 3:59	10.43	6/24/2022 2:47	0.86	6/24/2022 4:29	32.49
6/25/2022 4:13	85.30	6/24/2022 3:30	1.18	6/24/2022 4:00	10.41	6/24/2022 2:48	0.86	6/24/2022 4:30	32.44
6/25/2022 4:14	85.27	6/24/2022 3:31	1.06	6/24/2022 4:01	10.44	6/24/2022 2:49	0.83	6/24/2022 4:31	32.49
6/25/2022 4:15	85.27	6/24/2022 3:32	0.95	6/24/2022 4:02	10.39	6/24/2022 2:50	0.82	6/24/2022 4:32	32.46
6/25/2022 4:16	85.29	6/24/2022 3:33	0.91	6/24/2022 4:03	10.40	6/24/2022 2:51	0.83	6/24/2022 4:33	32.46
6/25/2022 4:17	85.25	6/24/2022 3:34	0.82	6/24/2022 4:04	10.42	6/24/2022 2:52	0.82	6/24/2022 4:34	32.48
6/25/2022 4:18	85.27	6/24/2022 3:35	0.76	6/24/2022 4:05	10.39	6/24/2022 2:53	0.83	6/24/2022 4:35	32.43
6/25/2022 4:19	85.25	6/24/2022 3:36	0.71	6/24/2022 4:06	10.44	6/24/2022 2:54	0.82	6/24/2022 4:36	32.42
6/25/2022 4:20	85.27	6/24/2022 3:37	0.64	6/24/2022 4:07	10.36	6/24/2022 2:55	0.88	6/24/2022 4:37	32.42
6/25/2022 4:21	85.26	6/24/2022 3:38	0.59	6/24/2022 4:08	10.39	6/24/2022 2:56	0.85	6/24/2022 4:38	32.45
6/25/2022 4:22	85.25	6/24/2022 3:39	0.55	6/24/2022 4:09	10.36	6/24/2022 2:57	0.86	6/24/2022 4:39	32.47
6/25/2022 4:23	85.22	6/24/2022 3:40	0.55	6/24/2022 4:10	10.36	6/24/2022 2:58	0.81	6/24/2022 4:40	32.46
6/25/2022 4:24	85.29	6/24/2022 3:41	0.52	6/24/2022 4:11	10.32	6/24/2022 2:59	0.83	6/24/2022 4:41	32.44
6/25/2022 4:25	85.29	6/24/2022 3:42	0.46	6/24/2022 4:12	10.36	6/24/2022 3:00	0.84	6/24/2022 4:42	32.45
6/25/2022 4:26	85.25	6/24/2022 3:43	0.46	6/24/2022 4:13	10.42	6/24/2022 3:01	0.85	6/24/2022 4:43	32.45
6/25/2022 4:27	85.25	6/24/2022 3:44	0.44	6/24/2022 4:14	10.39	6/24/2022 3:02	0.82	6/24/2022 4:44	32.43
6/25/2022 4:28	85.22	6/24/2022 3:45	0.42	6/24/2022 4:15	10.42	6/24/2022 3:03	0.85	6/24/2022 4:45	32.45
6/25/2022 4:29	85.24	6/24/2022 3:46	0.39	6/24/2022 4:16	10.45	6/24/2022 3:04	0.84	6/24/2022 4:46	32.46
6/25/2022 4:30	85.24	6/24/2022 3:47	0.40	6/24/2022 4:17	10.48	6/24/2022 3:05	0.83	6/24/2022 4:47	32.41
6/25/2022 4:31	85.25	6/24/2022 3:48	0.39	6/24/2022 4:18	10.47	6/24/2022 3:06	0.81	6/24/2022 4:48	32.44
6/25/2022 4:32	85.23	6/24/2022 3:49	0.39	6/24/2022 4:19	10.46	6/24/2022 3:07	0.84	6/24/2022 4:49	32.46
6/25/2022 4:33	85.25	6/24/2022 3:50	0.39	6/24/2022 4:20	10.43	6/24/2022 3:08	0.84	6/24/2022 4:50	32.37
6/25/2022 4:34	85.26	6/24/2022 3:51	0.37	6/24/2022 4:21	10.42	6/24/2022 3:09	0.87	6/24/2022 4:51	32.41
6/25/2022 4:35	85.20	6/24/2022 3:52	0.36	6/24/2022 4:22	10.45	6/24/2022 3:10	0.82	6/24/2022 4:52	32.40
6/25/2022 4:36	85.24	6/24/2022 3:53	0.38	6/24/2022 4:23	10.47	6/24/2022 3:11	0.84	6/24/2022 4:53	32.39
6/25/2022 4:37	85.24	6/24/2022 3:54	0.35	6/24/2022 4:24	10.47	6/24/2022 3:12	0.84	6/24/2022 4:54	32.40
6/25/2022 4:38	85.23	6/24/2022 3:55	0.36	6/24/2022 4:25	10.48	6/24/2022 3:13	0.85	6/24/2022 4:55	32.43
6/25/2022 4:39	85.27	6/24/2022 3:56	0.31	6/24/2022 4:26	10.47	6/24/2022 3:14	0.83	6/24/2022 4:56	32.42
6/25/2022 4:40	85.25	6/24/2022 3:57	0.37	6/24/2022 4:27	10.43	6/24/2022 3:15	0.82	6/24/2022 4:57	32.36
6/25/2022 4:41	85.21	6/24/2022 3:58	0.35	6/24/2022 4:28	10.45	6/24/2022 3:16	0.88	6/24/2022 4:58	32.40
6/25/2022 4:42	85.17	6/24/2022 3:59	0.38	6/24/2022 4:29	10.42	6/24/2022 3:17	0.85	6/24/2022 4:59	32.39
6/25/2022 4:43	85.23	6/24/2022 4:00	0.33	6/24/2022 4:30	10.43	6/24/2022 3:18	0.85	6/24/2022 5:00	32.40
6/25/2022 4:44	85.25	6/24/2022 4:01	0.30	6/24/2022 4:31	10.43	6/24/2022 3:19	0.83	6/24/2022 5:01	32.38
6/25/2022 4:45	85.25	6/24/2022 4:02	0.34	6/24/2022 4:32	10.43	6/24/2022 3:20	0.85	6/24/2022 5:02	32.36

6/25/2022 4:46	85.25	6/24/2022 4:03	0.33	6/24/2022 4:33	10.42	6/24/2022 3:21	0.81	6/24/2022 5:03	32.36
6/25/2022 4:47	85.21	6/24/2022 4:04	0.32	6/24/2022 4:34	10.43	6/24/2022 3:22	0.80	6/24/2022 5:04	32.38
6/25/2022 4:48	85.24	6/24/2022 4:05	0.34	6/24/2022 4:35	10.40	6/24/2022 3:23	0.86	6/24/2022 5:05	32.40
6/25/2022 4:49	85.23	6/24/2022 4:06	0.37	6/24/2022 4:36	10.42	6/24/2022 3:24	0.84	6/24/2022 5:06	32.38
6/25/2022 4:50	85.22	6/24/2022 4:07	0.33	6/24/2022 4:37	10.41	6/24/2022 3:25	0.81	6/24/2022 5:07	32.39
6/25/2022 4:51	85.26	6/24/2022 4:08	0.33	6/24/2022 4:38	10.43	6/24/2022 3:26	0.83	6/24/2022 5:08	32.33
6/25/2022 4:52	85.24	6/24/2022 4:09	0.31	6/24/2022 4:39	10.39	6/24/2022 3:27	0.83	6/24/2022 5:09	32.35
6/25/2022 4:53	85.23	6/24/2022 4:10	0.30	6/24/2022 4:40	10.44	6/24/2022 3:28	0.83	6/24/2022 5:10	32.40
6/25/2022 4:54	85.23	6/24/2022 4:11	0.33	6/24/2022 4:41	10.34	6/24/2022 3:29	0.84	6/24/2022 5:11	32.36
6/25/2022 4:55	85.24	6/24/2022 4:12	0.31	6/24/2022 4:42	10.37	6/24/2022 3:30	0.80	6/24/2022 5:12	32.35
6/25/2022 4:56	85.22	6/24/2022 4:13	0.33	6/24/2022 4:43	10.38	6/24/2022 3:31	0.82	6/24/2022 5:13	32.37
6/25/2022 4:57	85.24	6/24/2022 4:14	0.28	6/24/2022 4:44	10.37	6/24/2022 3:32	0.83	6/24/2022 5:14	32.36
6/25/2022 4:58	85.22	6/24/2022 4:15	0.32	6/24/2022 4:45	10.38	6/24/2022 3:33	0.81	6/24/2022 5:15	32.40
6/25/2022 4:59	85.21	6/24/2022 4:16	0.94	6/24/2022 4:46	10.40	6/24/2022 3:34	0.84	6/24/2022 5:16	32.36
6/25/2022 5:00	85.18	6/24/2022 4:17	6.79	6/24/2022 4:47	10.43	6/24/2022 3:35	0.81	6/24/2022 5:17	32.35
6/25/2022 5:01	85.22	6/24/2022 4:18	7.00	6/24/2022 4:48	10.45	6/24/2022 3:36	0.82	6/24/2022 5:18	32.31
6/25/2022 5:02	85.17	6/24/2022 4:19	5.94	6/24/2022 4:49	10.44	6/24/2022 3:37	0.82	6/24/2022 5:19	32.32
6/25/2022 5:03	85.19	6/24/2022 4:20	5.06	6/24/2022 4:50	10.46	6/24/2022 3:38	0.79	6/24/2022 5:20	32.37
6/25/2022 5:04	85.19	6/24/2022 4:21	4.34	6/24/2022 4:51	10.47	6/24/2022 3:39	0.83	6/24/2022 5:21	32.34
6/25/2022 5:05	85.18	6/24/2022 4:22	3.72	6/24/2022 4:52	10.47	6/24/2022 3:40	0.83	6/24/2022 5:22	32.34
6/25/2022 5:06	85.20	6/24/2022 4:23	3.18	6/24/2022 4:53	10.48	6/24/2022 3:41	0.80	6/24/2022 5:23	32.37
6/25/2022 5:07	85.20	6/24/2022 4:24	2.75	6/24/2022 4:54	10.50	6/24/2022 3:42	0.84	6/24/2022 5:24	32.33
6/25/2022 5:08	85.22	6/24/2022 4:25	2.41	6/24/2022 4:55	10.48	6/24/2022 3:43	0.84	6/24/2022 5:25	32.31
6/25/2022 5:09	85.23	6/24/2022 4:26	2.13	6/24/2022 4:56	10.45	6/24/2022 3:44	0.84	6/24/2022 5:26	32.33
6/25/2022 5:10	85.20	6/24/2022 4:27	1.89	6/24/2022 4:57	10.45	6/24/2022 3:45	0.82	6/24/2022 5:27	32.31
6/25/2022 5:11	85.20	6/24/2022 4:28	1.70	6/24/2022 4:58	10.45	6/24/2022 3:46	0.82	6/24/2022 5:28	32.28
6/25/2022 5:12	85.19	6/24/2022 4:29	1.52	6/24/2022 4:59	10.45	6/24/2022 3:47	0.80	6/24/2022 5:29	32.34
6/25/2022 5:13	85.19	6/24/2022 4:30	1.37	6/24/2022 5:00	10.45	6/24/2022 3:48	0.87	6/24/2022 5:30	32.31
6/25/2022 5:14	85.21	6/24/2022 4:31	1.23	6/24/2022 5:01	10.45	6/24/2022 3:49	0.82	6/24/2022 5:31	32.31
6/25/2022 5:15	85.19	6/24/2022 4:32	1.08	6/24/2022 5:02	10.45	6/24/2022 3:50	0.81	6/24/2022 5:32	32.32
6/25/2022 5:16	85.18	6/24/2022 4:33	1.02	6/24/2022 5:03	10.50	6/24/2022 3:51	0.84	6/24/2022 5:33	32.33
6/25/2022 5:17	85.21	6/24/2022 4:34	0.87	6/24/2022 5:04	10.52	6/24/2022 3:52	0.84	6/24/2022 5:34	32.31
6/25/2022 5:18	85.19	6/24/2022 4:35	0.83	6/24/2022 5:05	10.61	6/24/2022 3:53	0.83	6/24/2022 5:35	32.30
6/25/2022 5:19	85.19	6/24/2022 4:36	0.71	6/24/2022 5:06	10.67	6/24/2022 3:54	0.82	6/24/2022 5:36	32.33
6/25/2022 5:20	85.18	6/24/2022 4:37	0.66	6/24/2022 5:07	10.75	6/24/2022 3:55	0.81	6/24/2022 5:37	32.31
6/25/2022 5:21	85.21	6/24/2022 4:38	0.64	6/24/2022 5:08	10.83	6/24/2022 3:56	0.82	6/24/2022 5:38	32.29
6/25/2022 5:22	85.18	6/24/2022 4:39	0.61	6/24/2022 5:09	10.89	6/24/2022 3:57	0.81	6/24/2022 5:39	32.28
6/25/2022 5:23	85.17	6/24/2022 4:40	0.57	6/24/2022 5:10	10.99	6/24/2022 3:58	0.83	6/24/2022 5:40	32.32
6/25/2022 5:24	85.17	6/24/2022 4:41	0.51	6/24/2022 5:11	11.06	6/24/2022 3:59	0.85	6/24/2022 5:41	32.31
6/25/2022 5:25	85.18	6/24/2022 4:42	0.52	6/24/2022 5:12	11.16	6/24/2022 4:00	0.84	6/24/2022 5:42	32.24
6/25/2022 5:26	85.21	6/24/2022 4:43	0.51	6/24/2022 5:13	11.27	6/24/2022 4:01	0.80	6/24/2022 5:43	32.33
6/25/2022 5:27	85.16	6/24/2022 4:44	0.51	6/24/2022 5:14	11.34	6/24/2022 4:02	0.83	6/24/2022 5:44	32.31
6/25/2022 5:28	85.16	6/24/2022 4:45	0.47	6/24/2022 5:15	11.40	6/24/2022 4:03	0.85	6/24/2022 5:45	32.25
6/25/2022 5:29	85.21	6/24/2022 4:46	0.41	6/24/2022 5:16	11.53	6/24/2022 4:04	0.80	6/24/2022 5:46	32.28
6/25/2022 5:30	85.17	6/24/2022 4:47	0.41	6/24/2022 5:17	11.59	6/24/2022 4:05	0.86	6/24/2022 5:47	32.30
6/25/2022 5:31	85.21	6/24/2022 4:48	0.41	6/24/2022 5:18	11.62	6/24/2022 4:06	0.81	6/24/2022 5:48	32.26
6/25/2022 5:32	85.17	6/24/2022 4:49	0.41	6/24/2022 5:19	11.72	6/24/2022 4:07	0.84	6/24/2022 5:49	32.23
6/25/2022 5:33	85.17	6/24/2022 4:50	0.36	6/24/2022 5:20	11.76	6/24/2022 4:08	0.86	6/24/2022 5:50	32.24
6/25/2022 5:34	85.14	6/24/2022 4:51	0.33	6/24/2022 5:21	11.81	6/24/2022 4:09	0.83	6/24/2022 5:51	32.28
6/25/2022 5:35	85.19	6/24/2022 4:52	0.34	6/24/2022 5:22	11.79	6/24/2022 4:10	0.84	6/24/2022 5:52	32.26
6/25/2022 5:36	85.18	6/24/2022 4:53	0.33	6/24/2022 5:23	11.86	6/24/2022 4:11	0.81	6/24/2022 5:53	32.27
6/25/2022 5:37	85.17	6/24/2022 4:54	0.36	6/24/2022 5:24	11.84	6/24/2022 4:12	0.82	6/24/2022 5:54	32.26
6/25/2022 5:38	85.18	6/24/2022 4:55	0.36	6/24/2022 5:25	11.79	6/24/2022 4:13	0.81	6/24/2022 5:55	32.29
6/25/2022 5:39	85.17	6/24/2022 4:56	0.36	6/24/2022 5:26	11.81	6/24/2022 4:14	0.82	6/24/2022 5:56	32.26
6/25/2022 5:40	85.15	6/24/2022 4:57	0.33	6/24/2022 5:27	11.74	6/24/2022 4:15	0.83	6/24/2022 5:57	32.25
6/25/2022 5:41	85.21	6/24/2022 4:58	0.36	6/24/2022 5:28	11.79	6/24/2022 4:16	0.83	6/24/2022 5:58	32.24
6/25/2022 5:42	85.16	6/24/2022 4:59	0.32	6/24/2022 5:29	11.74	6/24/2022 4:17	0.85	6/24/2022 5:59	32.26
6/25/2022 5:43	85.17	6/24/2022 5:00	0.33	6/24/2022 5:30	11.76	6/24/2022 4:18	0.84	6/24/2022 6:00	32.24
6/25/2022 5:44	85.15	6/24/2022 5:01	0.33	6/24/2022 5:31	11.70	6/24/2022 4:19	0.85	6/24/2022 6:01	32.24
6/25/2022 5:45	85.20	6/24/2022 5:02	0.34	6/24/2022 5:32	11.69	6/24/2022 4:20	0.81	6/24/2022 6:02	32.18
6/25/2022 5:46	85.14	6/24/2022 5:03	0.33	6/24/2022 5:33	11.66	6/24/2022 4:21	0.81	6/24/2022 6:03	32.28
6/25/2022 5:47	85.17	6/24/2022 5:04	0.29	6/24/2022 5:34	11.62	6/24/2022 4:22	0.84	6/24/2022 6:04	32.26
6/25/2022 5:48	85.16	6/24/2022 5:05	0.30	6/24/2022 5:35	11.57	6/24/2022 4:23	0.83	6/24/2022 6:05	32.22
6/25/2022 5:49	85.17	6/24/2022 5:06	0.33	6/24/2022 5:36	11.57	6/24/2022 4:24	0.86	6/24/2022 6:06	32.22
6/25/2022 5:50	85.17	6/24/2022 5:07	0.30	6/24/2022 5:37	11.52	6/24/2022 4:25	0.83	6/24/2022 6:07	32.24
6/25/2022 5:51	85.16	6/24/2022 5:08	0.29	6/24/2022 5:38	11.47	6/24/2022 4:26	0.84	6/24/2022 6:08	32.21
6/25/2022 5:52	85.17	6/24/2022 5:09	0.28	6/24/2022 5:39	11.43	6/24/2022 4:27	0.84	6/24/2022 6:09	32.21
6/25/2022 5:53	85.18	6/24/2022 5:10	0.33	6/24/2022 5:40	11.37	6/24/2022 4:28	0.81	6/24/2022 6:10	32.23
6/25/2022 5:54	85.17	6/24/2022 5:11	0.29	6/24/2022 5:41	11.34	6/24/2022 4:29	0.84	6/24/2022 6:11	32.23
6/25/2022 5:55	85.17	6/24/2022 5:12	0.33	6/24/2022 5:42	11.33	6/24/2022 4:30	0.82	6/24/2022 6:12	32.23
6/25/2022 5:56	85.15	6/24/2022 5:13	0.28	6/24/2022 5:43	11.32	6/24/2022 4:31	0.82	6/24/2022 6:13	32.25
6/25/2022 5:57	85.19	6/24/2022 5:14	1.27	6/24/2022 5:44	11.30	6/24/2022 4:32	0.84	6/24/2022 6:14	32.22
6/25/2022 5:58	85.15	6/24/2022 5:15	7.07	6/24/2022 5:45	11.32	6/24/2022 4:33	0.80	6/24/2022 6:15	32.22
6/25/2022 5:59	85.15	6/24/2022 5:16	6.96	6/24/2022 5:46	11.26	6/24/2022 4:34	0.88	6/24/2022 6:16	32.23
6/25/2022 6:00	85.16	6/24/2022 5:17	5.82	6/24/2022 5:47	11.20	6/24/2022 4:35	0.82	6/24/2022 6:17	32.23
6/25/2022 6:01	85.14	6/24/2022 5:18	4.99	6/24/2022 5:48	11.16	6/24/2022 4:36	0.81	6/24/2022 6:18	32.21
6/25/2022 6:02	85.11	6/24/2022 5:19	4.30	6/24/2022 5:49	11.18	6/24/2022 4:37	0.82	6/24/2022 6:19	32.20
6/25/2022 6:03	85.18	6/24/2022 5:20	3.67	6/24/2022 5:50	11.12	6/24/2022 4:38	0.80	6/24/2022 6:20	32.21
6/25/2022 6:04	85.19	6/24/2022 5:21	3.17	6/24/2022 5:51	11.10	6/24/2022 4:39	0.84	6/24/2022 6:21	32.21
6/25/2022 6:05	85.16	6/24/2022 5:22	2.75	6/24/2022 5:52	11.05	6/24/2022 4:40	0.83	6/24/2022 6:22	32.19
6/25/2022 6:06	85.14	6/24/2022 5:23	2.42	6/24/2022 5:53	11.05	6/24/2022 4:41	0.86	6/24/2022 6:23	32.20
6/25/2022 6:07	85.13	6/24/2022 5:24	2.11	6/24/2022 5:54	11.03	6/24/2022 4:42	0.83	6/24/2022 6:24	32.18
6/25/2022 6:08	85.13	6/24/2022 5:25	1.84	6/24/2022 5:55	11.02	6/24/2022 4:43	0.83	6/24/2022 6:25	32.19
6/25/2022 6:09	85.17	6/24/2022 5:26	1.66	6/24/2022 5:56	10.99	6/24/2022 4:44	0.82	6/24/2022 6:26	32.19
6/25/2022 6:10	85.16	6/24/2022 5:27	1.44	6/24/2022 5:57	10.91	6/24/2022 4:45	0.86	6/24/2022 6:27	32.18
6/25/2022 6:11	85.16	6/24/2022 5:28	1.33	6/24/2022 5:58	10.90	6/24/2022 4:46	0.80	6/24/2022 6:28	32.20
6/25/2022 6:12	85.14	6/24/2022 5:29	1.19	6/24/2022 5:59	10.88	6/24/2022 4:47	0.84	6/24/2022 6:29	32.19
6/25/2022 6:13	85.14	6/24/2022 5:30	1.05	6/24/2022 6:00	10.89	6/24/2022 4:48	0.85	6/24/2022 6:30	32.19

6/25/2022 6:14	85.16	6/24/2022 5:31	0.99	6/24/2022 6:01	10.90	6/24/2022 4:49	0.82	6/24/2022 6:31	32.15
6/25/2022 6:15	85.12	6/24/2022 5:32	0.88	6/24/2022 6:02	10.90	6/24/2022 4:50	0.85	6/24/2022 6:32	32.17
6/25/2022 6:16	85.14	6/24/2022 5:33	0.82	6/24/2022 6:03	10.88	6/24/2022 4:51	0.86	6/24/2022 6:33	32.22
6/25/2022 6:17	85.13	6/24/2022 5:34	0.75	6/24/2022 6:04	10.88	6/24/2022 4:52	0.85	6/24/2022 6:34	32.19
6/25/2022 6:18	85.14	6/24/2022 5:35	0.69	6/24/2022 6:05	10.87	6/24/2022 4:53	0.83	6/24/2022 6:35	32.18
6/25/2022 6:19	85.11	6/24/2022 5:36	0.65	6/24/2022 6:06	10.90	6/24/2022 4:54	0.82	6/24/2022 6:36	32.18
6/25/2022 6:20	85.13	6/24/2022 5:37	0.60	6/24/2022 6:07	10.84	6/24/2022 4:55	0.84	6/24/2022 6:37	32.16
6/25/2022 6:21	85.12	6/24/2022 5:38	0.56	6/24/2022 6:08	10.82	6/24/2022 4:56	0.83	6/24/2022 6:38	32.16
6/25/2022 6:22	85.13	6/24/2022 5:39	0.53	6/24/2022 6:09	10.81	6/24/2022 4:57	0.82	6/24/2022 6:39	32.17
6/25/2022 6:23	85.12	6/24/2022 5:40	0.48	6/24/2022 6:10	10.81	6/24/2022 4:58	0.83	6/24/2022 6:40	32.19
6/25/2022 6:24	85.11	6/24/2022 5:41	0.45	6/24/2022 6:11	10.78	6/24/2022 4:59	0.85	6/24/2022 6:41	32.16
6/25/2022 6:25	85.10	6/24/2022 5:42	0.46	6/24/2022 6:12	10.80	6/24/2022 5:00	0.83	6/24/2022 6:42	32.16
6/25/2022 6:26	85.11	6/24/2022 5:43	0.41	6/24/2022 6:13	10.77	6/24/2022 5:01	0.81	6/24/2022 6:43	32.15
6/25/2022 6:27	85.13	6/24/2022 5:44	0.44	6/24/2022 6:14	10.80	6/24/2022 5:02	0.83	6/24/2022 6:44	32.16
6/25/2022 6:28	85.12	6/24/2022 5:45	0.39	6/24/2022 6:15	10.79	6/24/2022 5:03	0.85	6/24/2022 6:45	32.15
6/25/2022 6:29	85.13	6/24/2022 5:46	0.40	6/24/2022 6:16	10.82	6/24/2022 5:04	0.86	6/24/2022 6:46	32.16
6/25/2022 6:30	85.16	6/24/2022 5:47	0.34	6/24/2022 6:17	10.77	6/24/2022 5:05	0.83	6/24/2022 6:47	32.16
6/25/2022 6:31	85.09	6/24/2022 5:48	0.36	6/24/2022 6:18	10.81	6/24/2022 5:06	0.85	6/24/2022 6:48	32.12
6/25/2022 6:32	85.08	6/24/2022 5:49	0.35	6/24/2022 6:19	10.78	6/24/2022 5:07	0.86	6/24/2022 6:49	32.15
6/25/2022 6:33	85.07	6/24/2022 5:50	0.35	6/24/2022 6:20	10.76	6/24/2022 5:08	0.82	6/24/2022 6:50	32.16
6/25/2022 6:34	85.11	6/24/2022 5:51	0.36	6/24/2022 6:21	10.75	6/24/2022 5:09	0.85	6/24/2022 6:51	32.13
6/25/2022 6:35	85.07	6/24/2022 5:52	0.35	6/24/2022 6:22	10.72	6/24/2022 5:10	0.84	6/24/2022 6:52	32.15
6/25/2022 6:36	85.11	6/24/2022 5:53	0.33	6/24/2022 6:23	10.74	6/24/2022 5:11	0.83	6/24/2022 6:53	32.14
6/25/2022 6:37	85.11	6/24/2022 5:54	0.34	6/24/2022 6:24	10.73	6/24/2022 5:12	0.87	6/24/2022 6:54	32.15
6/25/2022 6:38	85.13	6/24/2022 5:55	0.34	6/24/2022 6:25	10.71	6/24/2022 5:13	0.83	6/24/2022 6:55	32.11
6/25/2022 6:39	85.13	6/24/2022 5:56	0.37	6/24/2022 6:26	10.73	6/24/2022 5:14	0.81	6/24/2022 6:56	32.10
6/25/2022 6:40	85.11	6/24/2022 5:57	0.33	6/24/2022 6:27	10.68	6/24/2022 5:15	0.84	6/24/2022 6:57	32.12
6/25/2022 6:41	85.09	6/24/2022 5:58	0.29	6/24/2022 6:28	10.68	6/24/2022 5:16	0.83	6/24/2022 6:58	32.13
6/25/2022 6:42	85.10	6/24/2022 5:59	0.33	6/24/2022 6:29	10.66	6/24/2022 5:17	0.83	6/24/2022 6:59	32.10
6/25/2022 6:43	85.10	6/24/2022 6:00	0.32	6/24/2022 6:30	10.67	6/24/2022 5:18	0.83	6/24/2022 7:00	32.13
6/25/2022 6:44	85.07	6/24/2022 6:01	0.33	6/24/2022 6:31	10.72	6/24/2022 5:19	0.86	6/24/2022 7:01	32.13
6/25/2022 6:45	85.11	6/24/2022 6:02	0.27	6/24/2022 6:32	10.71	6/24/2022 5:20	0.82	6/24/2022 7:02	32.09
6/25/2022 6:46	85.11	6/24/2022 6:03	0.29	6/24/2022 6:33	10.71	6/24/2022 5:21	0.83	6/24/2022 7:03	32.11
6/25/2022 6:47	85.08	6/24/2022 6:04	0.30	6/24/2022 6:34	10.69	6/24/2022 5:22	0.86	6/24/2022 7:04	32.12
6/25/2022 6:48	85.14	6/24/2022 6:05	0.30	6/24/2022 6:35	10.72	6/24/2022 5:23	0.83	6/24/2022 7:05	32.12
6/25/2022 6:49	85.09	6/24/2022 6:06	0.33	6/24/2022 6:36	10.71	6/24/2022 5:24	0.83	6/24/2022 7:06	32.11
6/25/2022 6:50	85.12	6/24/2022 6:07	0.27	6/24/2022 6:37	10.70	6/24/2022 5:25	0.85	6/24/2022 7:07	32.13
6/25/2022 6:51	85.07	6/24/2022 6:08	0.30	6/24/2022 6:38	10.69	6/24/2022 5:26	0.84	6/24/2022 7:08	32.10
6/25/2022 6:52	85.08	6/24/2022 6:09	0.26	6/24/2022 6:39	10.71	6/24/2022 5:27	0.81	6/24/2022 7:09	32.11
6/25/2022 6:53	85.09	6/24/2022 6:10	0.30	6/24/2022 6:40	10.73	6/24/2022 5:28	0.85	6/24/2022 7:10	32.10
6/25/2022 6:54	85.08	6/24/2022 6:11	0.30	6/24/2022 6:41	10.75	6/24/2022 5:29	0.79	6/24/2022 7:11	32.11
6/25/2022 6:55	85.08	6/24/2022 6:12	0.30	6/24/2022 6:42	10.77	6/24/2022 5:30	0.82	6/24/2022 7:12	32.12
6/25/2022 6:56	85.07	6/24/2022 6:13	0.32	6/24/2022 6:43	10.76	6/24/2022 5:31	0.82	6/24/2022 7:13	32.09
6/25/2022 6:57	85.08	6/24/2022 6:14	0.30	6/24/2022 6:44	10.76	6/24/2022 5:32	0.85	6/24/2022 7:14	32.10
6/25/2022 6:58	85.07	6/24/2022 6:15	0.30	6/24/2022 6:45	10.74	6/24/2022 5:33	0.85	6/24/2022 7:15	32.09
6/25/2022 6:59	85.10	6/24/2022 6:16	0.28	6/24/2022 6:46	10.75	6/24/2022 5:34	0.82	6/24/2022 7:16	32.11
6/25/2022 7:00	85.08	6/24/2022 6:17	0.28	6/24/2022 6:47	10.72	6/24/2022 5:35	0.88	6/24/2022 7:17	32.09
6/25/2022 7:01	85.09	6/24/2022 6:18	1.97	6/24/2022 6:48	10.75	6/24/2022 5:36	0.82	6/24/2022 7:18	32.08
6/25/2022 7:02	85.05	6/24/2022 6:19	7.65	6/24/2022 6:49	10.72	6/24/2022 5:37	0.80	6/24/2022 7:19	32.09
6/25/2022 7:03	85.10	6/24/2022 6:20	6.96	6/24/2022 6:50	10.72	6/24/2022 5:38	0.83	6/24/2022 7:20	32.06
6/25/2022 7:04	85.05	6/24/2022 6:21	5.97	6/24/2022 6:51	10.69	6/24/2022 5:39	0.81	6/24/2022 7:21	32.09
6/25/2022 7:05	85.06	6/24/2022 6:22	5.10	6/24/2022 6:52	10.72	6/24/2022 5:40	0.85	6/24/2022 7:22	32.08
6/25/2022 7:06	85.06	6/24/2022 6:23	4.42	6/24/2022 6:53	10.66	6/24/2022 5:41	0.82	6/24/2022 7:23	32.10
6/25/2022 7:07	85.05	6/24/2022 6:24	3.84	6/24/2022 6:54	10.66	6/24/2022 5:42	0.85	6/24/2022 7:24	32.07
6/25/2022 7:08	85.08	6/24/2022 6:25	3.34	6/24/2022 6:55	10.64	6/24/2022 5:43	0.84	6/24/2022 7:25	32.08
6/25/2022 7:09	85.09	6/24/2022 6:26	2.82	6/24/2022 6:56	10.63	6/24/2022 5:44	0.84	6/24/2022 7:26	32.07
6/25/2022 7:10	85.07	6/24/2022 6:27	2.50	6/24/2022 6:57	10.62	6/24/2022 5:45	0.81	6/24/2022 7:27	32.09
6/25/2022 7:11	85.11	6/24/2022 6:28	2.18	6/24/2022 6:58	10.61	6/24/2022 5:46	0.84	6/24/2022 7:28	32.08
6/25/2022 7:12	85.04	6/24/2022 6:29	1.92	6/24/2022 6:59	10.61	6/24/2022 5:47	0.83	6/24/2022 7:29	32.08
6/25/2022 7:13	85.10	6/24/2022 6:30	1.73	6/24/2022 7:00	10.61	6/24/2022 5:48	0.85	6/24/2022 7:30	32.07
6/25/2022 7:14	85.09	6/24/2022 6:31	1.54	6/24/2022 7:01	10.63	6/24/2022 5:49	0.83	6/24/2022 7:31	32.06
6/25/2022 7:15	85.10	6/24/2022 6:32	1.35	6/24/2022 7:02	10.65	6/24/2022 5:50	0.83	6/24/2022 7:32	32.07
6/25/2022 7:16	85.05	6/24/2022 6:33	1.24	6/24/2022 7:03	10.66	6/24/2022 5:51	0.83	6/24/2022 7:33	32.05
6/25/2022 7:17	85.06	6/24/2022 6:34	1.14	6/24/2022 7:04	10.67	6/24/2022 5:52	0.87	6/24/2022 7:34	32.07
6/25/2022 7:18	85.02	6/24/2022 6:35	0.98	6/24/2022 7:05	10.65	6/24/2022 5:53	0.86	6/24/2022 7:35	32.07
6/25/2022 7:19	85.05	6/24/2022 6:36	0.90	6/24/2022 7:06	10.65	6/24/2022 5:54	0.85	6/24/2022 7:36	32.08
6/25/2022 7:20	85.09	6/24/2022 6:37	6.22	6/24/2022 7:07	10.66	6/24/2022 5:55	0.83	6/24/2022 7:37	32.06
6/25/2022 7:21	85.07	6/24/2022 6:38	9.61	6/24/2022 7:08	10.70	6/24/2022 5:56	0.84	6/24/2022 7:38	32.08
6/25/2022 7:22	85.07	6/24/2022 6:39	8.10	6/24/2022 7:09	10.68	6/24/2022 5:57	0.85	6/24/2022 7:39	32.06
6/25/2022 7:23	85.08	6/24/2022 6:40	6.86	6/24/2022 7:10	10.67	6/24/2022 5:58	0.83	6/24/2022 7:40	32.07
6/25/2022 7:24	85.07	6/24/2022 6:41	5.82	6/24/2022 7:11	10.66	6/24/2022 5:59	0.83	6/24/2022 7:41	32.04
6/25/2022 7:25	85.05	6/24/2022 6:42	4.98	6/24/2022 7:12	10.66	6/24/2022 6:00	0.80	6/24/2022 7:42	32.04
6/25/2022 7:26	85.09	6/24/2022 6:43	4.27	6/24/2022 7:13	10.66	6/24/2022 6:01	0.82	6/24/2022 7:43	32.07
6/25/2022 7:27	85.06	6/24/2022 6:44	3.70	6/24/2022 7:14	10.62	6/24/2022 6:02	0.79	6/24/2022 7:44	32.04
6/25/2022 7:28	85.08	6/24/2022 6:45	3.19	6/24/2022 7:15	10.61	6/24/2022 6:03	0.81	6/24/2022 7:45	32.06
6/25/2022 7:29	85.05	6/24/2022 6:46	2.78	6/24/2022 7:16	10.61	6/24/2022 6:04	0.78	6/24/2022 7:46	32.05
6/25/2022 7:30	85.07	6/24/2022 6:47	2.46	6/24/2022 7:17	10.58	6/24/2022 6:05	0.83	6/24/2022 7:47	32.08
6/25/2022 7:31	85.06	6/24/2022 6:48	2.14	6/24/2022 7:18	10.59	6/24/2022 6:06	0.85	6/24/2022 7:48	32.06
6/25/2022 7:32	85.10	6/24/2022 6:49	1.92	6/24/2022 7:19	10.61	6/24/2022 6:07	0.83	6/24/2022 7:49	32.03
6/25/2022 7:33	85.10	6/24/2022 6:50	1.75	6/24/2022 7:20	10.53	6/24/2022 6:08	0.87	6/24/2022 7:50	32.04
6/25/2022 7:34	85.09	6/24/2022 6:51	7.56	6/24/2022 7:21	10.57	6/24/2022 6:09	0.84	6/24/2022 7:51	32.06
6/25/2022 7:35	85.05	6/24/2022 6:52	8.13	6/24/2022 7:22	10.53	6/24/2022 6:10	0.82	6/24/2022 7:52	32.04
6/25/2022 7:36	85.04	6/24/2022 6:53	6.89	6/24/2022 7:23	10.55	6/24/2022 6:11	0.84	6/24/2022 7:53	32.06
6/25/2022 7:37	85.08	6/24/2022 6:54	5.81	6/24/2022 7:24	10.52	6/24/2022 6:12	0.84	6/24/2022 7:54	32.05
6/25/2022 7:38	85.06	6/24/2022 6:55	5.03	6/24/2022 7:25	10.50	6/24/2022 6:13	0.82	6/24/2022 7:55	32.01
6/25/2022 7:39	85.05	6/24/2022 6:56	4.31	6/24/2022 7:26	10.52	6/24/2022 6:14	0.84	6/24/2022 7:56	32.04
6/25/2022 7:40	85.08	6/24/2022 6:57	3.72	6/24/2022 7:27	10.54	6/24/2022 6:15	0.86	6/24/2022 7:57	32.01
6/25/2022 7:41	85.08	6/24/2022 6:58	3.21	6/24/2022 7:28	10.53	6/24/2022 6:16	0.85	6/24/2022 7:58	32.91

6/25/2022 7:42	85.08	6/24/2022 6:59	2.78	6/24/2022 7:29	10.53	6/24/2022 6:17	0.84	6/24/2022 7:59	33.57
6/25/2022 7:43	85.08	6/24/2022 7:00	2.47	6/24/2022 7:30	10.59	6/24/2022 6:18	0.83	6/24/2022 8:00	32.59
6/25/2022 7:44	85.05	6/24/2022 7:01	2.20	6/24/2022 7:31	10.58	6/24/2022 6:19	7.66	6/24/2022 8:01	32.21
6/25/2022 7:45	85.04	6/24/2022 7:02	1.96	6/24/2022 7:32	10.56	6/24/2022 6:20	6.99	6/24/2022 8:02	32.13
6/25/2022 7:46	85.09	6/24/2022 7:03	1.68	6/24/2022 7:33	10.59	6/24/2022 6:21	4.49	6/24/2022 8:03	32.04
6/25/2022 7:47	85.07	6/24/2022 7:04	1.54	6/24/2022 7:34	10.58	6/24/2022 6:22	2.54	6/24/2022 8:04	32.04
6/25/2022 7:48	85.04	6/24/2022 7:05	1.40	6/24/2022 7:35	10.55	6/24/2022 6:23	1.20	6/24/2022 8:05	32.03
6/25/2022 7:49	85.08	6/24/2022 7:06	1.25	6/24/2022 7:36	10.55	6/24/2022 6:24	0.88	6/24/2022 8:06	32.04
6/25/2022 7:50	85.04	6/24/2022 7:07	1.15	6/24/2022 7:37	10.55	6/24/2022 6:25	0.82	6/24/2022 8:07	32.04
6/25/2022 7:51	85.10	6/24/2022 7:08	1.05	6/24/2022 7:38	10.54	6/24/2022 6:26	0.85	6/24/2022 8:08	32.09
6/25/2022 7:52	85.08	6/24/2022 7:09	0.95	6/24/2022 7:39	10.54	6/24/2022 6:27	0.80	6/24/2022 8:09	33.53
6/25/2022 7:53	85.05	6/24/2022 7:10	0.88	6/24/2022 7:40	10.53	6/24/2022 6:28	0.83	6/24/2022 8:10	33.44
6/25/2022 7:54	85.04	6/24/2022 7:11	0.78	6/24/2022 7:41	10.54	6/24/2022 6:29	0.83	6/24/2022 8:11	32.62
6/25/2022 7:55	85.05	6/24/2022 7:12	0.74	6/24/2022 7:42	10.56	6/24/2022 6:30	0.88	6/24/2022 8:12	32.32
6/25/2022 7:56	85.06	6/24/2022 7:13	0.65	6/24/2022 7:43	10.54	6/24/2022 6:31	0.84	6/24/2022 8:13	32.24
6/25/2022 7:57	85.05	6/24/2022 7:14	0.61	6/24/2022 7:44	10.53	6/24/2022 6:32	0.81	6/24/2022 8:14	32.24
6/25/2022 7:58	85.05	6/24/2022 7:15	0.61	6/24/2022 7:45	10.54	6/24/2022 6:33	0.86	6/24/2022 8:15	32.21
6/25/2022 7:59	85.04	6/24/2022 7:16	0.51	6/24/2022 7:46	10.52	6/24/2022 6:34	0.84	6/24/2022 8:16	32.18
6/25/2022 8:00	85.12	6/24/2022 7:17	0.50	6/24/2022 7:47	10.50	6/24/2022 6:35	0.84	6/24/2022 8:17	32.17
6/25/2022 8:01	85.04	6/24/2022 7:18	0.54	6/24/2022 7:48	10.48	6/24/2022 6:36	0.80	6/24/2022 8:18	32.17
6/25/2022 8:02	85.02	6/24/2022 7:19	0.47	6/24/2022 7:49	10.48	6/24/2022 6:37	0.84	6/24/2022 8:19	32.17
6/25/2022 8:03	85.09	6/24/2022 7:20	0.45	6/24/2022 7:50	10.51	6/24/2022 6:38	0.82	6/24/2022 8:20	32.15
6/25/2022 8:04	85.06	6/24/2022 7:21	0.45	6/24/2022 7:51	10.50	6/24/2022 6:39	0.84	6/24/2022 8:21	32.14
6/25/2022 8:05	85.00	6/24/2022 7:22	0.44	6/24/2022 7:52	10.46	6/24/2022 6:40	0.82	6/24/2022 8:22	32.13
6/25/2022 8:06	85.07	6/24/2022 7:23	0.41	6/24/2022 7:53	10.46	6/24/2022 6:41	0.82	6/24/2022 8:23	32.11
6/25/2022 8:07	85.08	6/24/2022 7:24	0.37	6/24/2022 7:54	10.49	6/24/2022 6:42	0.83	6/24/2022 8:24	32.15
6/25/2022 8:08	85.04	6/24/2022 7:25	0.40	6/24/2022 7:55	10.48	6/24/2022 6:43	0.84	6/24/2022 8:25	32.21
6/25/2022 8:09	85.09	6/24/2022 7:26	0.39	6/24/2022 7:56	10.49	6/24/2022 6:44	0.80	6/24/2022 8:26	32.16
6/25/2022 8:10	85.04	6/24/2022 7:27	0.39	6/24/2022 7:57	10.55	6/24/2022 6:45	0.82	6/24/2022 8:27	32.15
6/25/2022 8:11	85.07	6/24/2022 7:28	1.42	6/24/2022 7:58	10.53	6/24/2022 6:46	0.84	6/24/2022 8:28	32.15
6/25/2022 8:12	85.89	6/24/2022 7:29	7.16	6/24/2022 7:59	10.54	6/24/2022 6:47	0.79	6/24/2022 8:29	32.15
6/25/2022 8:13	89.95	6/24/2022 7:30	6.78	6/24/2022 8:00	10.54	6/24/2022 6:48	0.85	6/24/2022 8:30	32.11
6/25/2022 8:14	92.31	6/24/2022 7:31	5.79	6/24/2022 8:01	10.51	6/24/2022 6:49	0.81	6/24/2022 8:31	32.12
6/25/2022 8:15	92.32	6/24/2022 7:32	4.92	6/24/2022 8:02	10.55	6/24/2022 6:50	0.80	6/24/2022 8:32	32.12
6/25/2022 8:16	89.86	6/24/2022 7:33	4.23	6/24/2022 8:03	10.54	6/24/2022 6:51	0.79	6/24/2022 8:33	32.10
6/25/2022 8:17	88.36	6/24/2022 7:34	3.63	6/24/2022 8:04	10.55	6/24/2022 6:52	0.80	6/24/2022 8:34	32.08
6/25/2022 8:18	87.48	6/24/2022 7:35	3.14	6/24/2022 8:05	10.50	6/24/2022 6:53	0.82	6/24/2022 8:35	32.06
6/25/2022 8:19	86.86	6/24/2022 7:36	2.69	6/24/2022 8:06	11.44	6/24/2022 6:54	0.82	6/24/2022 8:36	32.09
6/25/2022 8:20	86.50	6/24/2022 7:37	2.40	6/24/2022 8:07	14.86	6/24/2022 6:55	0.81	6/24/2022 8:37	32.04
6/25/2022 8:21	86.23	6/24/2022 7:38	2.11	6/24/2022 8:08	14.35	6/24/2022 6:56	0.78	6/24/2022 8:38	32.08
6/25/2022 8:22	86.09	6/24/2022 7:39	1.85	6/24/2022 8:09	13.88	6/24/2022 6:57	0.78	6/24/2022 8:39	32.05
6/25/2022 8:23	85.99	6/24/2022 7:40	1.64	6/24/2022 8:10	13.43	6/24/2022 6:58	0.81	6/24/2022 8:40	32.04
6/25/2022 8:24	85.86	6/24/2022 7:41	1.48	6/24/2022 8:11	13.09	6/24/2022 6:59	0.81	6/24/2022 8:41	32.04
6/25/2022 8:25	85.81	6/24/2022 7:42	1.28	6/24/2022 8:12	12.85	6/24/2022 7:00	0.82	6/24/2022 8:42	32.07
6/25/2022 8:26	85.73	6/24/2022 7:43	1.19	6/24/2022 8:13	12.58	6/24/2022 7:01	0.80	6/24/2022 8:43	32.08
6/25/2022 8:27	85.70	6/24/2022 7:44	1.09	6/24/2022 8:14	12.34	6/24/2022 7:02	0.78	6/24/2022 8:44	32.04
6/25/2022 8:28	85.67	6/24/2022 7:45	0.97	6/24/2022 8:15	12.12	6/24/2022 7:03	0.82	6/24/2022 8:45	32.01
6/25/2022 8:29	85.63	6/24/2022 7:46	0.92	6/24/2022 8:16	11.98	6/24/2022 7:04	0.77	6/24/2022 8:46	32.01
6/25/2022 8:30	85.59	6/24/2022 7:47	0.83	6/24/2022 8:17	11.81	6/24/2022 7:05	0.80	6/24/2022 8:47	32.05
6/25/2022 8:31	85.56	6/24/2022 7:48	0.74	6/24/2022 8:18	11.68	6/24/2022 7:06	0.85	6/24/2022 8:48	32.03
6/25/2022 8:32	85.55	6/24/2022 7:49	0.68	6/24/2022 8:19	11.57	6/24/2022 7:07	0.81	6/24/2022 8:49	32.00
6/25/2022 8:33	85.55	6/24/2022 7:50	0.63	6/24/2022 8:20	11.48	6/24/2022 7:08	0.84	6/24/2022 8:50	31.99
6/25/2022 8:34	85.53	6/24/2022 7:51	0.59	6/24/2022 8:21	11.39	6/24/2022 7:09	0.80	6/24/2022 8:51	32.00
6/25/2022 8:35	85.48	6/24/2022 7:52	0.57	6/24/2022 8:22	11.34	6/24/2022 7:10	0.80	6/24/2022 8:52	32.01
6/25/2022 8:36	85.49	6/24/2022 7:53	0.54	6/24/2022 8:23	11.26	6/24/2022 7:11	0.85	6/24/2022 8:53	32.02
6/25/2022 8:37	85.50	6/24/2022 7:54	0.49	6/24/2022 8:24	11.24	6/24/2022 7:12	0.80	6/24/2022 8:54	31.99
6/25/2022 8:38	85.46	6/24/2022 7:55	0.48	6/24/2022 8:25	11.15	6/24/2022 7:13	0.79	6/24/2022 8:55	32.01
6/25/2022 8:39	85.45	6/24/2022 7:56	0.43	6/24/2022 8:26	11.11	6/24/2022 7:14	0.80	6/24/2022 8:56	32.01
6/25/2022 8:40	85.42	6/24/2022 7:57	0.42	6/24/2022 8:27	11.06	6/24/2022 7:15	0.84	6/24/2022 8:57	31.98
6/25/2022 8:41	85.44	6/24/2022 7:58	0.37	6/24/2022 8:28	11.02	6/24/2022 7:16	0.83	6/24/2022 8:58	31.96
6/25/2022 8:42	85.40	6/24/2022 7:59	0.43	6/24/2022 8:29	10.98	6/24/2022 7:17	0.84	6/24/2022 8:59	32.04
6/25/2022 8:43	85.41	6/24/2022 8:00	0.39	6/24/2022 8:30	10.96	6/24/2022 7:18	0.82	6/24/2022 9:00	32.02
6/25/2022 8:44	85.42	6/24/2022 8:01	0.40	6/24/2022 8:31	10.93	6/24/2022 7:19	0.82	6/24/2022 9:01	32.00
6/25/2022 8:45	85.37	6/24/2022 8:02	0.39	6/24/2022 8:32	10.94	6/24/2022 7:20	0.84	6/24/2022 9:02	32.03
6/25/2022 8:46	85.37	6/24/2022 8:03	0.40	6/24/2022 8:33	10.89	6/24/2022 7:21	0.83	6/24/2022 9:03	31.98
6/25/2022 8:47	85.39	6/24/2022 8:04	0.39	6/24/2022 8:34	10.92	6/24/2022 7:22	0.82	6/24/2022 9:04	32.00
6/25/2022 8:48	85.37	6/24/2022 8:05	0.43	6/24/2022 8:35	10.89	6/24/2022 7:23	0.81	6/24/2022 9:05	31.97
6/25/2022 8:49	85.40	6/24/2022 8:06	0.40	6/24/2022 8:36	10.91	6/24/2022 7:24	0.86	6/24/2022 9:06	31.97
6/25/2022 8:50	85.39	6/24/2022 8:07	0.40	6/24/2022 8:37	10.86	6/24/2022 7:25	0.81	6/24/2022 9:07	31.99
6/25/2022 8:51	85.35	6/24/2022 8:08	0.37	6/24/2022 8:38	10.86	6/24/2022 7:26	0.81	6/24/2022 9:08	31.97
6/25/2022 8:52	85.40	6/24/2022 8:09	0.38	6/24/2022 8:39	10.87	6/24/2022 7:27	0.80	6/24/2022 9:09	33.91
6/25/2022 8:53	85.35	6/24/2022 8:10	0.38	6/24/2022 8:40	10.83	6/24/2022 7:28	0.81	6/24/2022 9:10	33.17
6/25/2022 8:54	85.34	6/24/2022 8:11	0.37	6/24/2022 8:41	10.83	6/24/2022 7:29	0.84	6/24/2022 9:11	32.43
6/25/2022 8:55	85.35	6/24/2022 8:12	0.36	6/24/2022 8:42	10.81	6/24/2022 7:30	0.85	6/24/2022 9:12	32.15
6/25/2022 8:56	85.32	6/24/2022 8:13	0.37	6/24/2022 8:43	10.79	6/24/2022 7:31	0.79	6/24/2022 9:13	32.07
6/25/2022 8:57	85.36	6/24/2022 8:14	0.33	6/24/2022 8:44	10.77	6/24/2022 7:32	0.80	6/24/2022 9:14	32.02
6/25/2022 8:58	85.35	6/24/2022 8:15	0.35	6/24/2022 8:45	10.76	6/24/2022 7:33	0.78	6/24/2022 9:15	32.03
6/25/2022 8:59	85.35	6/24/2022 8:16	0.35	6/24/2022 8:46	10.73	6/24/2022 7:34	0.83	6/24/2022 9:16	31.99
6/25/2022 9:00	85.35	6/24/2022 8:17	0.32	6/24/2022 8:47	10.73	6/24/2022 7:35	0.81	6/24/2022 9:17	31.98
6/25/2022 9:01	85.33	6/24/2022 8:18	0.32	6/24/2022 8:48	10.69	6/24/2022 7:36	0.83	6/24/2022 9:18	32.00
6/25/2022 9:02	85.33	6/24/2022 8:19	0.34	6/24/2022 8:49	10.66	6/24/2022 7:37	0.83	6/24/2022 9:19	31.97
6/25/2022 9:03	85.32	6/24/2022 8:20	0.36	6/24/2022 8:50	10.66	6/24/2022 7:38	0.80	6/24/2022 9:20	32.01
6/25/2022 9:04	85.29	6/24/2022 8:21	0.32	6/24/2022 8:51	10.66	6/24/2022 7:39	0.79	6/24/2022 9:21	32.00
6/25/2022 9:05	85.33	6/24/2022 8:22	0.27	6/24/2022 8:52	10.65	6/24/2022 7:40	0.78	6/24/2022 9:22	32.03
6/25/2022 9:06	85.33	6/24/2022 8:23	0.29	6/24/2022 8:53	10.63	6/24/2022 7:41	0.78	6/24/2022 9:23	32.04
6/25/2022 9:07	85.29	6/24/2022 8:24	3.32	6/24/2022 8:54	10.61	6/24/2022 7:42	0.83	6/24/2022 9:24	32.01
6/25/2022 9:08	85.32	6/24/2022 8:25	7.75	6/24/2022 8:55	10.58	6/24/2022 7:43	0.81	6/24/2022 9:25	32.03
6/25/2022 9:09	85.31	6/24/2022 8:26	6.49	6/24/2022 8:56	10.62	6/24/2022 7:44	0.82	6/24/2022 9:26	32.03

6/25/2022 9:10	85.29	6/24/2022 8:27	5.55	6/24/2022 8:57	10.58	6/24/2022 7:45	0.81	6/24/2022 9:27	31.99
6/25/2022 9:11	85.28	6/24/2022 8:28	4.68	6/24/2022 8:58	10.61	6/24/2022 7:46	0.82	6/24/2022 9:28	32.01
6/25/2022 9:12	85.31	6/24/2022 8:29	4.05	6/24/2022 8:59	10.62	6/24/2022 7:47	0.80	6/24/2022 9:29	32.03
6/25/2022 9:13	85.28	6/24/2022 8:30	3.50	6/24/2022 9:00	10.64	6/24/2022 7:48	0.80	6/24/2022 9:30	32.06
6/25/2022 9:14	85.29	6/24/2022 8:31	2.98	6/24/2022 9:01	10.64	6/24/2022 7:49	0.79	6/24/2022 9:31	32.08
6/25/2022 9:15	85.27	6/24/2022 8:32	2.58	6/24/2022 9:02	10.62	6/24/2022 7:50	0.80	6/24/2022 9:32	32.05
6/25/2022 9:16	85.28	6/24/2022 8:33	2.23	6/24/2022 9:03	10.61	6/24/2022 7:51	0.82	6/24/2022 9:33	32.06
6/25/2022 9:17	85.27	6/24/2022 8:34	2.02	6/24/2022 9:04	10.61	6/24/2022 7:52	0.79	6/24/2022 9:34	32.01
6/25/2022 9:18	85.24	6/24/2022 8:35	1.77	6/24/2022 9:05	10.63	6/24/2022 7:53	0.80	6/24/2022 9:35	32.03
6/25/2022 9:19	85.28	6/24/2022 8:36	1.60	6/24/2022 9:06	10.61	6/24/2022 7:54	0.80	6/24/2022 9:36	32.04
6/25/2022 9:20	85.25	6/24/2022 8:37	1.42	6/24/2022 9:07	10.60	6/24/2022 7:55	0.80	6/24/2022 9:37	32.00
6/25/2022 9:21	85.23	6/24/2022 8:38	1.27	6/24/2022 9:08	10.58	6/24/2022 7:56	0.81	6/24/2022 9:38	32.00
6/25/2022 9:22	85.28	6/24/2022 8:39	1.11	6/24/2022 9:09	10.62	6/24/2022 7:57	0.77	6/24/2022 9:39	31.97
6/25/2022 9:23	85.25	6/24/2022 8:40	1.02	6/24/2022 9:10	10.57	6/24/2022 7:58	0.81	6/24/2022 9:40	31.98
6/25/2022 9:24	85.24	6/24/2022 8:41	0.93	6/24/2022 9:11	10.57	6/24/2022 7:59	0.81	6/24/2022 9:41	31.96
6/25/2022 9:25	85.21	6/24/2022 8:42	0.88	6/24/2022 9:12	10.56	6/24/2022 8:00	0.85	6/24/2022 9:42	32.00
6/25/2022 9:26	85.27	6/24/2022 8:43	0.82	6/24/2022 9:13	10.55	6/24/2022 8:01	0.85	6/24/2022 9:43	31.98
6/25/2022 9:27	85.23	6/24/2022 8:44	0.72	6/24/2022 9:14	10.58	6/24/2022 8:02	0.81	6/24/2022 9:44	31.95
6/25/2022 9:28	85.25	6/24/2022 8:45	0.66	6/24/2022 9:15	10.54	6/24/2022 8:03	0.80	6/24/2022 9:45	31.94
6/25/2022 9:29	85.25	6/24/2022 8:46	0.64	6/24/2022 9:16	10.52	6/24/2022 8:04	0.82	6/24/2022 9:46	31.97
6/25/2022 9:30	85.21	6/24/2022 8:47	0.56	6/24/2022 9:17	10.53	6/24/2022 8:05	0.83	6/24/2022 9:47	31.93
6/25/2022 9:31	85.26	6/24/2022 8:48	0.54	6/24/2022 9:18	10.49	6/24/2022 8:06	0.83	6/24/2022 9:48	31.91
6/25/2022 9:32	85.22	6/24/2022 8:49	0.50	6/24/2022 9:19	10.48	6/24/2022 8:07	0.86	6/24/2022 9:49	31.97
6/25/2022 9:33	85.25	6/24/2022 8:50	0.47	6/24/2022 9:20	10.50	6/24/2022 8:08	0.84	6/24/2022 9:50	31.89
6/25/2022 9:34	85.25	6/24/2022 8:51	0.45	6/24/2022 9:21	10.52	6/24/2022 8:09	0.82	6/24/2022 9:51	31.92
6/25/2022 9:35	85.22	6/24/2022 8:52	0.44	6/24/2022 9:22	10.49	6/24/2022 8:10	0.79	6/24/2022 9:52	31.99
6/25/2022 9:36	85.20	6/24/2022 8:53	0.43	6/24/2022 9:23	13.48	6/24/2022 8:11	0.86	6/24/2022 9:53	31.95
6/25/2022 9:37	85.22	6/24/2022 8:54	0.41	6/24/2022 9:24	17.18	6/24/2022 8:12	0.80	6/24/2022 9:54	31.94
6/25/2022 9:38	85.25	6/24/2022 8:55	1.33	6/24/2022 9:25	16.39	6/24/2022 8:13	0.84	6/24/2022 9:55	31.94
6/25/2022 9:39	85.24	6/24/2022 8:56	7.11	6/24/2022 9:26	16.18	6/24/2022 8:14	0.81	6/24/2022 9:56	31.91
6/25/2022 9:40	85.24	6/24/2022 8:57	7.07	6/24/2022 9:27	20.15	6/24/2022 8:15	0.85	6/24/2022 9:57	31.95
6/25/2022 9:41	85.20	6/24/2022 8:58	5.96	6/24/2022 9:28	21.05	6/24/2022 8:16	0.79	6/24/2022 9:58	31.90
6/25/2022 9:42	85.18	6/24/2022 8:59	5.07	6/24/2022 9:29	19.88	6/24/2022 8:17	0.81	6/24/2022 9:59	31.88
6/25/2022 9:43	85.24	6/24/2022 9:00	4.35	6/24/2022 9:30	18.93	6/24/2022 8:18	0.82	6/24/2022 10:00	31.93
6/25/2022 9:44	85.21	6/24/2022 9:01	3.74	6/24/2022 9:31	18.06	6/24/2022 8:19	0.82	6/24/2022 10:01	31.92
6/25/2022 9:45	85.21	6/24/2022 9:02	3.23	6/24/2022 9:32	17.32	6/24/2022 8:20	0.81	6/24/2022 10:02	31.87
6/25/2022 9:46	85.20	6/24/2022 9:03	2.79	6/24/2022 9:33	16.62	6/24/2022 8:21	0.81	6/24/2022 10:03	31.97
6/25/2022 9:47	85.21	6/24/2022 9:04	2.47	6/24/2022 9:34	16.05	6/24/2022 8:22	0.78	6/24/2022 10:04	31.99
6/25/2022 9:48	85.21	6/24/2022 9:05	2.18	6/24/2022 9:35	15.49	6/24/2022 8:23	0.81	6/24/2022 10:05	32.01
6/25/2022 9:49	85.19	6/24/2022 9:06	1.92	6/24/2022 9:36	14.99	6/24/2022 8:24	0.86	6/24/2022 10:06	32.07
6/25/2022 9:50	85.21	6/24/2022 9:07	1.66	6/24/2022 9:37	14.56	6/24/2022 8:25	0.79	6/24/2022 10:07	32.09
6/25/2022 9:51	85.17	6/24/2022 9:08	1.52	6/24/2022 9:38	14.18	6/24/2022 8:26	0.81	6/24/2022 10:08	32.13
6/25/2022 9:52	85.18	6/24/2022 9:09	1.35	6/24/2022 9:39	14.48	6/24/2022 8:27	0.81	6/24/2022 10:09	32.13
6/25/2022 9:53	85.19	6/24/2022 9:10	1.21	6/24/2022 9:40	18.73	6/24/2022 8:28	0.78	6/24/2022 10:10	32.16
6/25/2022 9:54	85.18	6/24/2022 9:11	1.09	6/24/2022 9:41	19.99	6/24/2022 8:29	0.77	6/24/2022 10:11	32.22
6/25/2022 9:55	85.18	6/24/2022 9:12	1.01	6/24/2022 9:42	19.00	6/24/2022 8:30	0.79	6/24/2022 10:12	32.21
6/25/2022 9:56	85.18	6/24/2022 9:13	0.91	6/24/2022 9:43	20.95	6/24/2022 8:31	0.83	6/24/2022 10:13	32.22
6/25/2022 9:57	85.20	6/24/2022 9:14	0.85	6/24/2022 9:44	24.33	6/24/2022 8:32	0.81	6/24/2022 10:14	32.22
6/25/2022 9:58	85.21	6/24/2022 9:15	2.73	6/24/2022 9:45	23.18	6/24/2022 8:33	0.80	6/24/2022 10:15	32.27
6/25/2022 9:59	85.15	6/24/2022 9:16	8.30	6/24/2022 9:46	22.04	6/24/2022 8:34	0.83	6/24/2022 10:16	32.27
6/25/2022 10:00	85.20	6/24/2022 9:17	8.40	6/24/2022 9:47	25.49	6/24/2022 8:35	0.82	6/24/2022 10:17	32.29
6/25/2022 10:01	85.13	6/24/2022 9:18	7.11	6/24/2022 9:48	26.76	6/24/2022 8:36	0.80	6/24/2022 10:18	32.95
6/25/2022 10:02	85.21	6/24/2022 9:19	6.07	6/24/2022 9:49	25.17	6/24/2022 8:37	0.79	6/24/2022 10:19	33.71
6/25/2022 10:03	85.18	6/24/2022 9:20	5.19	6/24/2022 9:50	23.80	6/24/2022 8:38	0.82	6/24/2022 10:20	32.87
6/25/2022 10:04	85.21	6/24/2022 9:21	4.43	6/24/2022 9:51	22.57	6/24/2022 8:39	0.83	6/24/2022 10:21	32.49
6/25/2022 10:05	85.16	6/24/2022 9:22	3.84	6/24/2022 9:52	21.50	6/24/2022 8:40	0.80	6/24/2022 10:22	32.32
6/25/2022 10:06	85.21	6/24/2022 9:23	3.30	6/24/2022 9:53	20.52	6/24/2022 8:41	0.81	6/24/2022 10:23	32.25
6/25/2022 10:07	85.17	6/24/2022 9:24	2.86	6/24/2022 9:54	19.59	6/24/2022 8:42	0.84	6/24/2022 10:24	32.22
6/25/2022 10:08	85.16	6/24/2022 9:25	2.49	6/24/2022 9:55	18.83	6/24/2022 8:43	0.82	6/24/2022 10:25	32.24
6/25/2022 10:09	85.13	6/24/2022 9:26	2.18	6/24/2022 9:56	18.07	6/24/2022 8:44	0.79	6/24/2022 10:26	32.17
6/25/2022 10:10	85.17	6/24/2022 9:27	1.92	6/24/2022 9:57	17.40	6/24/2022 8:45	0.82	6/24/2022 10:27	32.17
6/25/2022 10:11	85.16	6/24/2022 9:28	1.74	6/24/2022 9:58	16.86	6/24/2022 8:46	0.85	6/24/2022 10:28	32.17
6/25/2022 10:12	85.15	6/24/2022 9:29	1.52	6/24/2022 9:59	16.27	6/24/2022 8:47	0.83	6/24/2022 10:29	32.15
6/25/2022 10:13	85.17	6/24/2022 9:30	1.35	6/24/2022 10:00	15.77	6/24/2022 8:48	0.82	6/24/2022 10:30	32.10
6/25/2022 10:14	85.14	6/24/2022 9:31	1.25	6/24/2022 10:01	15.29	6/24/2022 8:49	0.87	6/24/2022 10:31	32.09
6/25/2022 10:15	85.15	6/24/2022 9:32	1.14	6/24/2022 10:02	14.92	6/24/2022 8:50	0.82	6/24/2022 10:32	32.09
6/25/2022 10:16	85.14	6/24/2022 9:33	1.02	6/24/2022 10:03	14.58	6/24/2022 8:51	0.83	6/24/2022 10:33	32.09
6/25/2022 10:17	85.14	6/24/2022 9:34	0.90	6/24/2022 10:04	14.25	6/24/2022 8:52	0.83	6/24/2022 10:34	32.04
6/25/2022 10:18	85.14	6/24/2022 9:35	0.87	6/24/2022 10:05	14.01	6/24/2022 8:53	0.85	6/24/2022 10:35	32.07
6/25/2022 10:19	85.14	6/24/2022 9:36	0.81	6/24/2022 10:06	13.74	6/24/2022 8:54	0.82	6/24/2022 10:36	32.06
6/25/2022 10:20	85.15	6/24/2022 9:37	3.93	6/24/2022 10:07	13.49	6/24/2022 8:55	0.84	6/24/2022 10:37	32.08
6/25/2022 10:21	85.13	6/24/2022 9:38	8.24	6/24/2022 10:08	13.30	6/24/2022 8:56	0.84	6/24/2022 10:38	33.43
6/25/2022 10:22	85.12	6/24/2022 9:39	6.95	6/24/2022 10:09	13.06	6/24/2022 8:57	0.82	6/24/2022 10:39	33.34
6/25/2022 10:23	85.15	6/24/2022 9:40	5.86	6/24/2022 10:10	12.91	6/24/2022 8:58	0.82	6/24/2022 10:40	32.57
6/25/2022 10:24	85.17	6/24/2022 9:41	5.02	6/24/2022 10:11	12.75	6/24/2022 8:59	0.81	6/24/2022 10:41	32.27
6/25/2022 10:25	85.17	6/24/2022 9:42	4.33	6/24/2022 10:12	12.58	6/24/2022 9:00	0.83	6/24/2022 10:42	32.17
6/25/2022 10:26	85.15	6/24/2022 9:43	3.74	6/24/2022 10:13	12.47	6/24/2022 9:01	0.83	6/24/2022 10:43	32.11
6/25/2022 10:27	85.12	6/24/2022 9:44	3.20	6/24/2022 10:14	12.34	6/24/2022 9:02	0.81	6/24/2022 10:44	32.10
6/25/2022 10:28	85.16	6/24/2022 9:45	2.74	6/24/2022 10:15	12.20	6/24/2022 9:03	0.83	6/24/2022 10:45	32.09
6/25/2022 10:29	85.12	6/24/2022 9:46	2.43	6/24/2022 10:16	12.11	6/24/2022 9:04	0.86	6/24/2022 10:46	32.07
6/25/2022 10:30	85.17	6/24/2022 9:47	2.13	6/24/2022 10:17	11.99	6/24/2022 9:05	0.80	6/24/2022 10:47	32.04
6/25/2022 10:31	85.13	6/24/2022 9:48	1.88	6/24/2022 10:18	11.88	6/24/2022 9:06	0.85	6/24/2022 10:48	32.04
6/25/2022 10:32	85.09	6/24/2022 9:49	1.69	6/24/2022 10:19	11.81	6/24/2022 9:07	0.82	6/24/2022 10:49	32.03
6/25/2022 10:33	85.12	6/24/2022 9:50	1.53	6/24/2022 10:20	11.71	6/24/2022 9:08	0.83	6/24/2022 10:50	32.01
6/25/2022 10:34	85.10	6/24/2022 9:51	1.33	6/24/2022 10:21	11.62	6/24/2022 9:09	0.81	6/24/2022 10:51	33.89
6/25/2022 10:35	85.16	6/24/2022 9:52	1.19	6/24/2022 10:22	11.52	6/24/2022 9:10	0.79	6/24/2022 10:52	32.76
6/25/2022 10:36	85.11	6/24/2022 9:53	1.12	6/24/2022 10:23	11.52	6/24/2022 9:11	0.81	6/24/2022 10:53	32.30
6/25/2022 10:37	85.10	6/24/2022 9:54	0.99	6/24/2022 10:24	11.41	6/24/2022 9:12	0.83	6/24/2022 10:54	32.16

6/25/2022 10:38	85.09	6/24/2022 9:55	0.91	6/24/2022 10:25	11.35	6/24/2022 9:13	0.82	6/24/2022 10:55	32.12
6/25/2022 10:39	85.13	6/24/2022 9:56	0.89	6/24/2022 10:26	11.32	6/24/2022 9:14	0.81	6/24/2022 10:56	32.07
6/25/2022 10:40	85.15	6/24/2022 9:57	0.79	6/24/2022 10:27	11.28	6/24/2022 9:15	0.83	6/24/2022 10:57	32.05
6/25/2022 10:41	85.10	6/24/2022 9:58	1.58	6/24/2022 10:28	11.27	6/24/2022 9:16	0.81	6/24/2022 10:58	32.05
6/25/2022 10:42	85.13	6/24/2022 9:59	7.35	6/24/2022 10:29	11.22	6/24/2022 9:17	0.80	6/24/2022 10:59	32.04
6/25/2022 10:43	85.10	6/24/2022 10:00	7.35	6/24/2022 10:30	11.17	6/24/2022 9:18	0.78	6/24/2022 11:00	32.02
6/25/2022 10:44	85.12	6/24/2022 10:01	6.23	6/24/2022 10:31	11.18	6/24/2022 9:19	0.78	6/24/2022 11:01	33.83
6/25/2022 10:45	85.10	6/24/2022 10:02	5.30	6/24/2022 10:32	11.16	6/24/2022 9:20	0.80	6/24/2022 11:02	33.21
6/25/2022 10:46	85.11	6/24/2022 10:03	4.51	6/24/2022 10:33	11.13	6/24/2022 9:21	0.77	6/24/2022 11:03	32.48
6/25/2022 10:47	85.11	6/24/2022 10:04	3.89	6/24/2022 10:34	11.07	6/24/2022 9:22	0.85	6/24/2022 11:04	32.22
6/25/2022 10:48	85.10	6/24/2022 10:05	3.43	6/24/2022 10:35	11.07	6/24/2022 9:23	0.82	6/24/2022 11:05	32.10
6/25/2022 10:49	85.07	6/24/2022 10:06	2.95	6/24/2022 10:36	11.02	6/24/2022 9:24	0.81	6/24/2022 11:06	32.08
6/25/2022 10:50	86.97	6/24/2022 10:07	2.53	6/24/2022 10:37	11.03	6/24/2022 9:25	0.76	6/24/2022 11:07	32.06
6/25/2022 10:51	90.65	6/24/2022 10:08	2.20	6/24/2022 10:38	10.97	6/24/2022 9:26	0.80	6/24/2022 11:08	32.01
6/25/2022 10:52	92.85	6/24/2022 10:09	1.97	6/24/2022 10:39	10.99	6/24/2022 9:27	0.80	6/24/2022 11:09	32.01
6/25/2022 10:53	94.36	6/24/2022 10:10	1.77	6/24/2022 10:40	10.93	6/24/2022 9:28	0.82	6/24/2022 11:10	32.04
6/25/2022 10:54	95.32	6/24/2022 10:11	1.58	6/24/2022 10:41	10.92	6/24/2022 9:29	0.77	6/24/2022 11:11	32.01
6/25/2022 10:55	95.93	6/24/2022 10:12	1.39	6/24/2022 10:42	10.84	6/24/2022 9:30	0.82	6/24/2022 11:12	31.99
6/25/2022 10:56	95.83	6/24/2022 10:13	1.29	6/24/2022 10:43	10.87	6/24/2022 9:31	0.80	6/24/2022 11:13	31.99
6/25/2022 10:57	92.57	6/24/2022 10:14	1.12	6/24/2022 10:44	10.85	6/24/2022 9:32	0.81	6/24/2022 11:14	31.98
6/25/2022 10:58	90.52	6/24/2022 10:15	1.03	6/24/2022 10:45	10.85	6/24/2022 9:33	0.83	6/24/2022 11:15	31.98
6/25/2022 10:59	89.22	6/24/2022 10:16	0.97	6/24/2022 10:46	10.80	6/24/2022 9:34	0.82	6/24/2022 11:16	31.99
6/25/2022 11:00	88.34	6/24/2022 10:17	0.84	6/24/2022 10:47	10.75	6/24/2022 9:35	0.84	6/24/2022 11:17	32.00
6/25/2022 11:01	87.74	6/24/2022 10:18	3.13	6/24/2022 10:48	10.80	6/24/2022 9:36	0.82	6/24/2022 11:18	31.97
6/25/2022 11:02	87.33	6/24/2022 10:19	8.54	6/24/2022 10:49	10.80	6/24/2022 9:37	0.79	6/24/2022 11:19	31.95
6/25/2022 11:03	90.13	6/24/2022 10:20	7.59	6/24/2022 10:50	10.80	6/24/2022 9:38	0.81	6/24/2022 11:20	31.93
6/25/2022 11:04	93.07	6/24/2022 10:21	6.44	6/24/2022 10:51	10.79	6/24/2022 9:39	0.81	6/24/2022 11:21	31.96
6/25/2022 11:05	94.95	6/24/2022 10:22	5.49	6/24/2022 10:52	10.81	6/24/2022 9:40	0.81	6/24/2022 11:22	31.98
6/25/2022 11:06	96.05	6/24/2022 10:23	4.70	6/24/2022 10:53	10.81	6/24/2022 9:41	0.81	6/24/2022 11:23	31.95
6/25/2022 11:07	96.73	6/24/2022 10:24	4.06	6/24/2022 10:54	10.78	6/24/2022 9:42	0.81	6/24/2022 11:24	31.94
6/25/2022 11:08	97.10	6/24/2022 10:25	3.50	6/24/2022 10:55	10.76	6/24/2022 9:43	0.77	6/24/2022 11:25	31.97
6/25/2022 11:09	94.49	6/24/2022 10:26	3.04	6/24/2022 10:56	10.77	6/24/2022 9:44	0.78	6/24/2022 11:26	31.91
6/25/2022 11:10	92.10	6/24/2022 10:27	2.64	6/24/2022 10:57	10.77	6/24/2022 9:45	0.80	6/24/2022 11:27	31.93
6/25/2022 11:11	90.61	6/24/2022 10:28	2.33	6/24/2022 10:58	10.74	6/24/2022 9:46	0.85	6/24/2022 11:28	31.90
6/25/2022 11:12	89.58	6/24/2022 10:29	2.08	6/24/2022 10:59	10.75	6/24/2022 9:47	0.82	6/24/2022 11:29	31.91
6/25/2022 11:13	88.89	6/24/2022 10:30	1.86	6/24/2022 11:00	10.74	6/24/2022 9:48	0.83	6/24/2022 11:30	31.92
6/25/2022 11:14	92.34	6/24/2022 10:31	1.64	6/24/2022 11:01	10.70	6/24/2022 9:49	0.80	6/24/2022 11:31	31.87
6/25/2022 11:15	94.88	6/24/2022 10:32	1.52	6/24/2022 11:02	10.71	6/24/2022 9:50	0.81	6/24/2022 11:32	31.91
6/25/2022 11:16	96.46	6/24/2022 10:33	2.37	6/24/2022 11:03	10.72	6/24/2022 9:51	0.84	6/24/2022 11:33	31.91
6/25/2022 11:17	97.52	6/24/2022 10:34	8.08	6/24/2022 11:04	10.68	6/24/2022 9:52	0.82	6/24/2022 11:34	31.90
6/25/2022 11:18	98.11	6/24/2022 10:35	10.49	6/24/2022 11:05	10.72	6/24/2022 9:53	0.84	6/24/2022 11:35	31.89
6/25/2022 11:19	98.39	6/24/2022 10:36	8.90	6/24/2022 11:06	10.65	6/24/2022 9:54	0.83	6/24/2022 11:36	31.88
6/25/2022 11:20	96.73	6/24/2022 10:37	7.52	6/24/2022 11:07	10.68	6/24/2022 9:55	0.85	6/24/2022 11:37	31.87
6/25/2022 11:21	93.88	6/24/2022 10:38	6.42	6/24/2022 11:08	10.68	6/24/2022 9:56	0.81	6/24/2022 11:38	31.90
6/25/2022 11:22	92.12	6/24/2022 10:39	5.47	6/24/2022 11:09	10.65	6/24/2022 9:57	0.84	6/24/2022 11:39	31.87
6/25/2022 11:23	90.96	6/24/2022 10:40	4.67	6/24/2022 11:10	10.61	6/24/2022 9:58	0.86	6/24/2022 11:40	31.87
6/25/2022 11:24	90.13	6/24/2022 10:41	7.11	6/24/2022 11:11	10.63	6/24/2022 9:59	0.82	6/24/2022 11:41	31.88
6/25/2022 11:25	89.55	6/24/2022 10:42	11.76	6/24/2022 11:12	10.62	6/24/2022 10:00	0.84	6/24/2022 11:42	31.91
6/25/2022 11:26	91.54	6/24/2022 10:43	10.25	6/24/2022 11:13	10.60	6/24/2022 10:01	0.84	6/24/2022 11:43	31.86
6/25/2022 11:27	94.65	6/24/2022 10:44	8.61	6/24/2022 11:14	10.59	6/24/2022 10:02	0.77	6/24/2022 11:44	31.90
6/25/2022 11:28	96.37	6/24/2022 10:45	7.38	6/24/2022 11:15	10.52	6/24/2022 10:03	0.78	6/24/2022 11:45	31.87
6/25/2022 11:29	97.47	6/24/2022 10:46	6.27	6/24/2022 11:16	10.58	6/24/2022 10:04	0.79	6/24/2022 11:46	31.84
6/25/2022 11:30	98.11	6/24/2022 10:47	5.43	6/24/2022 11:17	10.56	6/24/2022 10:05	0.81	6/24/2022 11:47	31.93
6/25/2022 11:31	98.44	6/24/2022 10:48	4.68	6/24/2022 11:18	10.58	6/24/2022 10:06	0.82	6/24/2022 11:48	31.90
6/25/2022 11:32	95.51	6/24/2022 10:49	4.04	6/24/2022 11:19	10.58	6/24/2022 10:07	0.80	6/24/2022 11:49	31.89
6/25/2022 11:33	93.31	6/24/2022 10:50	3.53	6/24/2022 11:20	10.59	6/24/2022 10:08	0.76	6/24/2022 11:50	31.91
6/25/2022 11:34	91.87	6/24/2022 10:51	3.08	6/24/2022 11:21	10.60	6/24/2022 10:09	0.84	6/24/2022 11:51	31.94
6/25/2022 11:35	90.91	6/24/2022 10:52	2.65	6/24/2022 11:22	10.62	6/24/2022 10:10	0.78	6/24/2022 11:52	31.93
6/25/2022 11:36	90.26	6/24/2022 10:53	2.33	6/24/2022 11:23	10.64	6/24/2022 10:11	0.85	6/24/2022 11:53	31.93
6/25/2022 11:37	89.72	6/24/2022 10:54	2.11	6/24/2022 11:24	10.62	6/24/2022 10:12	0.82	6/24/2022 11:54	31.93
6/25/2022 11:38	92.70	6/24/2022 10:55	1.87	6/24/2022 11:25	10.60	6/24/2022 10:13	0.80	6/24/2022 11:55	31.92
6/25/2022 11:39	95.43	6/24/2022 10:56	1.70	6/24/2022 11:26	10.63	6/24/2022 10:14	0.85	6/24/2022 11:56	31.90
6/25/2022 11:40	97.05	6/24/2022 10:57	1.53	6/24/2022 11:27	10.59	6/24/2022 10:15	0.81	6/24/2022 11:57	31.87
6/25/2022 11:41	98.06	6/24/2022 10:58	1.36	6/24/2022 11:28	10.63	6/24/2022 10:16	0.84	6/24/2022 11:58	31.88
6/25/2022 11:42	98.62	6/24/2022 10:59	6.02	6/24/2022 11:29	10.59	6/24/2022 10:17	0.83	6/24/2022 11:59	31.89
6/25/2022 11:43	98.91	6/24/2022 11:00	8.57	6/24/2022 11:30	10.57	6/24/2022 10:18	0.80	6/24/2022 12:00	31.90
6/25/2022 11:44	95.79	6/24/2022 11:01	7.22	6/24/2022 11:31	10.56	6/24/2022 10:19	0.81	6/24/2022 12:01	31.86
6/25/2022 11:45	93.69	6/24/2022 11:02	6.19	6/24/2022 11:32	10.54	6/24/2022 10:20	0.82	6/24/2022 12:02	31.83
6/25/2022 11:46	92.30	6/24/2022 11:03	5.28	6/24/2022 11:33	10.54	6/24/2022 10:21	0.80	6/24/2022 12:03	31.90
6/25/2022 11:47	91.32	6/24/2022 11:04	4.59	6/24/2022 11:34	10.55	6/24/2022 10:22	0.80	6/24/2022 12:04	31.85
6/25/2022 11:48	90.71	6/24/2022 11:05	3.98	6/24/2022 11:35	10.51	6/24/2022 10:23	0.79	6/24/2022 12:05	31.86
6/25/2022 11:49	90.19	6/24/2022 11:06	3.44	6/24/2022 11:36	10.50	6/24/2022 10:24	0.81	6/24/2022 12:06	31.82
6/25/2022 11:50	91.65	6/24/2022 11:07	2.92	6/24/2022 11:37	10.54	6/24/2022 10:25	0.83	6/24/2022 12:07	31.87
6/25/2022 11:51	95.03	6/24/2022 11:08	2.59	6/24/2022 11:38	10.57	6/24/2022 10:26	0.79	6/24/2022 12:08	31.82
6/25/2022 11:52	97.03	6/24/2022 11:09	2.27	6/24/2022 11:39	10.53	6/24/2022 10:27	0.80	6/24/2022 12:09	31.82
6/25/2022 11:53	98.25	6/24/2022 11:10	2.04	6/24/2022 11:40	10.54	6/24/2022 10:28	0.79	6/24/2022 12:10	31.83
6/25/2022 11:54	98.90	6/24/2022 11:11	1.78	6/24/2022 11:41	10.53	6/24/2022 10:29	0.77	6/24/2022 12:11	31.82
6/25/2022 11:55	99.28	6/24/2022 11:12	1.62	6/24/2022 11:42	10.56	6/24/2022 10:30	0.80	6/24/2022 12:12	31.83
6/25/2022 11:56	96.97	6/24/2022 11:13	1.45	6/24/2022 11:43	10.57	6/24/2022 10:31	0.79	6/24/2022 12:13	31.84
6/25/2022 11:57	94.57	6/24/2022 11:14	1.32	6/24/2022 11:44	10.57	6/24/2022 10:32	0.79	6/24/2022 12:14	31.84
6/25/2022 11:58	93.12	6/24/2022 11:15	1.19	6/24/2022 11:45	10.56	6/24/2022 10:33	0.80	6/24/2022 12:15	31.84
6/25/2022 11:59	91.99	6/24/2022 11:16	1.07	6/24/2022 11:46	10.58	6/24/2022 10:34	0.80	6/24/2022 12:16	31.83
6/25/2022 12:00	91.29	6/24/2022 11:17	1.01	6/24/2022 11:47	10.55	6/24/2022 10:35	0.81	6/24/2022 12:17	31.84
6/25/2022 12:01	90.78	6/24/2022 11:18	0.90	6/24/2022 11:48	10.65	6/24/2022 10:36	0.80	6/24/2022 12:18	31.85
6/25/2022 12:02	90.47	6/24/2022 11:19	0.78	6/24/2022 11:49	10.61	6/24/2022 10:37	0.82	6/24/2022 12:19	31.91
6/25/2022 12:03	94.59	6/24/2022 11:20	2.77	6/24/2022 11:50	10.65	6/24/2022 10:38	0.81	6/24/2022 12:20	31.90
6/25/2022 12:04	96.89	6/24/2022 11:21	8.27	6/24/2022 11:51	10.62	6/24/2022 10:39	0.81	6/24/2022 12:21	31.85
6/25/2022 12:05	98.33	6/24/2022 11:22	7.37	6/24/2022 11:52	10.64	6/24/2022 10:40	0.80	6/24/2022 12:22	31.86

6/25/2022 12:06	99.13	6/24/2022 11:23	6.21	6/24/2022 11:53	10.66	6/24/2022 10:41	0.81	6/24/2022 12:23	31.85
6/25/2022 12:07	99.56	6/24/2022 11:24	5.28	6/24/2022 11:54	10.67	6/24/2022 10:42	0.80	6/24/2022 12:24	31.83
6/25/2022 12:08	98.31	6/24/2022 11:25	4.60	6/24/2022 11:55	10.67	6/24/2022 10:43	0.81	6/24/2022 12:25	31.86
6/25/2022 12:09	95.57	6/24/2022 11:26	3.99	6/24/2022 11:56	10.69	6/24/2022 10:44	0.82	6/24/2022 12:26	31.84
6/25/2022 12:10	93.90	6/24/2022 11:27	3.41	6/24/2022 11:57	10.66	6/24/2022 10:45	0.80	6/24/2022 12:27	31.85
6/25/2022 12:11	92.75	6/24/2022 11:28	2.95	6/24/2022 11:58	10.71	6/24/2022 10:46	0.79	6/24/2022 12:28	34.25
6/25/2022 12:12	91.93	6/24/2022 11:29	2.60	6/24/2022 11:59	10.68	6/24/2022 10:47	0.81	6/24/2022 12:29	32.86
6/25/2022 12:13	91.33	6/24/2022 11:30	2.29	6/24/2022 12:00	10.71	6/24/2022 10:48	0.79	6/24/2022 12:30	32.23
6/25/2022 12:14	90.91	6/24/2022 11:31	2.01	6/24/2022 12:01	10.70	6/24/2022 10:49	0.78	6/24/2022 12:31	32.01
6/25/2022 12:15	94.13	6/24/2022 11:32	1.78	6/24/2022 12:02	10.72	6/24/2022 10:50	0.78	6/24/2022 12:32	31.93
6/25/2022 12:16	96.69	6/24/2022 11:33	1.64	6/24/2022 12:03	10.69	6/24/2022 10:51	0.78	6/24/2022 12:33	31.92
6/25/2022 12:17	98.22	6/24/2022 11:34	1.44	6/24/2022 12:04	10.71	6/24/2022 10:52	0.80	6/24/2022 12:34	31.91
6/25/2022 12:18	99.13	6/24/2022 11:35	1.27	6/24/2022 12:05	10.68	6/24/2022 10:53	0.79	6/24/2022 12:35	31.91
6/25/2022 12:19	99.62	6/24/2022 11:36	6.98	6/24/2022 12:06	10.70	6/24/2022 10:54	0.80	6/24/2022 12:36	31.93
6/25/2022 12:20	99.86	6/24/2022 11:37	11.22	6/24/2022 12:07	10.74	6/24/2022 10:55	0.82	6/24/2022 12:37	31.88
6/25/2022 12:21	97.08	6/24/2022 11:38	9.45	6/24/2022 12:08	10.72	6/24/2022 10:56	0.79	6/24/2022 12:38	31.86
6/25/2022 12:22	95.02	6/24/2022 11:39	7.99	6/24/2022 12:09	10.73	6/24/2022 10:57	0.80	6/24/2022 12:39	31.89
6/25/2022 12:23	93.71	6/24/2022 11:40	6.78	6/24/2022 12:10	10.68	6/24/2022 10:58	0.82	6/24/2022 12:40	31.85
6/25/2022 12:24	92.70	6/24/2022 11:41	5.81	6/24/2022 12:11	10.72	6/24/2022 10:59	0.81	6/24/2022 12:41	31.90
6/25/2022 12:25	91.99	6/24/2022 11:42	4.97	6/24/2022 12:12	10.73	6/24/2022 11:00	0.81	6/24/2022 12:42	31.90
6/25/2022 12:26	91.54	6/24/2022 11:43	4.32	6/24/2022 12:13	10.76	6/24/2022 11:01	0.82	6/24/2022 12:43	31.90
6/25/2022 12:27	92.74	6/24/2022 11:44	3.73	6/24/2022 12:14	10.72	6/24/2022 11:02	0.82	6/24/2022 12:44	31.85
6/25/2022 12:28	95.97	6/24/2022 11:45	3.23	6/24/2022 12:15	10.72	6/24/2022 11:03	0.81	6/24/2022 12:45	31.86
6/25/2022 12:29	97.84	6/24/2022 11:46	2.82	6/24/2022 12:16	10.77	6/24/2022 11:04	0.79	6/24/2022 12:46	31.86
6/25/2022 12:30	98.97	6/24/2022 11:47	2.45	6/24/2022 12:17	10.77	6/24/2022 11:05	0.82	6/24/2022 12:47	31.83
6/25/2022 12:31	99.64	6/24/2022 11:48	2.21	6/24/2022 12:18	10.74	6/24/2022 11:06	0.78	6/24/2022 12:48	31.86
6/25/2022 12:32	100.00	6/24/2022 11:49	3.57	6/24/2022 12:19	10.73	6/24/2022 11:07	0.83	6/24/2022 12:49	31.86
6/25/2022 12:33	100.17	6/24/2022 11:50	8.98	6/24/2022 12:20	10.73	6/24/2022 11:08	0.80	6/24/2022 12:50	31.82
6/25/2022 12:34	97.23	6/24/2022 11:51	8.35	6/24/2022 12:21	10.74	6/24/2022 11:09	0.83	6/24/2022 12:51	31.82
6/25/2022 12:35	95.31	6/24/2022 11:52	7.03	6/24/2022 12:22	10.70	6/24/2022 11:10	0.78	6/24/2022 12:52	31.85
6/25/2022 12:36	94.02	6/24/2022 11:53	5.99	6/24/2022 12:23	10.68	6/24/2022 11:11	0.79	6/24/2022 12:53	31.82
6/25/2022 12:37	93.10	6/24/2022 11:54	5.18	6/24/2022 12:24	10.65	6/24/2022 11:12	0.81	6/24/2022 12:54	31.81
6/25/2022 12:38	92.43	6/24/2022 11:55	4.45	6/24/2022 12:25	10.67	6/24/2022 11:13	0.82	6/24/2022 12:55	31.81
6/25/2022 12:39	91.90	6/24/2022 11:56	3.87	6/24/2022 12:26	10.63	6/24/2022 11:14	0.81	6/24/2022 12:56	31.80
6/25/2022 12:40	95.48	6/24/2022 11:57	3.36	6/24/2022 12:27	10.65	6/24/2022 11:15	0.81	6/24/2022 12:57	31.79
6/25/2022 12:41	97.80	6/24/2022 11:58	2.86	6/24/2022 12:28	10.66	6/24/2022 11:16	0.82	6/24/2022 12:58	31.78
6/25/2022 12:42	99.19	6/24/2022 11:59	2.54	6/24/2022 12:29	10.64	6/24/2022 11:17	0.81	6/24/2022 12:59	31.80
6/25/2022 12:43	100.07	6/24/2022 12:00	2.27	6/24/2022 12:30	10.67	6/24/2022 11:18	0.79	6/24/2022 13:00	31.83
6/25/2022 12:44	100.62	6/24/2022 12:01	1.98	6/24/2022 12:31	10.64	6/24/2022 11:19	0.84	6/24/2022 13:01	31.86
6/25/2022 12:45	100.92	6/24/2022 12:02	1.79	6/24/2022 12:32	10.65	6/24/2022 11:20	0.81	6/24/2022 13:02	31.86
6/25/2022 12:46	101.05	6/24/2022 12:03	1.61	6/24/2022 12:33	10.67	6/24/2022 11:21	0.83	6/24/2022 13:03	31.87
6/25/2022 12:47	98.43	6/24/2022 12:04	1.43	6/24/2022 12:34	10.63	6/24/2022 11:22	0.81	6/24/2022 13:04	31.80
6/25/2022 12:48	96.38	6/24/2022 12:05	1.26	6/24/2022 12:35	10.66	6/24/2022 11:23	0.83	6/24/2022 13:05	31.83
6/25/2022 12:49	95.01	6/24/2022 12:06	1.17	6/24/2022 12:36	10.67	6/24/2022 11:24	0.80	6/24/2022 13:06	31.84
6/25/2022 12:50	93.97	6/24/2022 12:07	1.07	6/24/2022 12:37	10.66	6/24/2022 11:25	0.81	6/24/2022 13:07	31.80
6/25/2022 12:51	93.22	6/24/2022 12:08	0.96	6/24/2022 12:38	10.67	6/24/2022 11:26	0.79	6/24/2022 13:08	31.80
6/25/2022 12:52	92.64	6/24/2022 12:09	0.89	6/24/2022 12:39	10.63	6/24/2022 11:27	0.79	6/24/2022 13:09	31.78
6/25/2022 12:53	95.92	6/24/2022 12:10	2.47	6/24/2022 12:40	10.60	6/24/2022 11:28	0.80	6/24/2022 13:10	31.80
6/25/2022 12:54	98.16	6/24/2022 12:11	8.02	6/24/2022 12:41	10.57	6/24/2022 11:29	0.81	6/24/2022 13:11	31.77
6/25/2022 12:55	99.55	6/24/2022 12:12	7.53	6/24/2022 12:42	10.62	6/24/2022 11:30	0.80	6/24/2022 13:12	31.76
6/25/2022 12:56	100.34	6/24/2022 12:13	6.38	6/24/2022 12:43	10.63	6/24/2022 11:31	0.81	6/24/2022 13:13	32.50
6/25/2022 12:57	99.68	6/24/2022 12:14	5.46	6/24/2022 12:44	10.64	6/24/2022 11:32	0.81	6/24/2022 13:14	33.18
6/25/2022 12:58	96.95	6/24/2022 12:15	4.69	6/24/2022 12:45	10.63	6/24/2022 11:33	0.81	6/24/2022 13:15	32.33
6/25/2022 12:59	95.36	6/24/2022 12:16	4.04	6/24/2022 12:46	10.65	6/24/2022 11:34	0.82	6/24/2022 13:16	31.98
6/25/2022 13:00	94.27	6/24/2022 12:17	3.48	6/24/2022 12:47	10.65	6/24/2022 11:35	0.82	6/24/2022 13:17	31.87
6/25/2022 13:01	93.45	6/24/2022 12:18	3.03	6/24/2022 12:48	10.68	6/24/2022 11:36	0.82	6/24/2022 13:18	31.81
6/25/2022 13:02	92.81	6/24/2022 12:19	2.61	6/24/2022 12:49	10.67	6/24/2022 11:37	0.82	6/24/2022 13:19	31.79
6/25/2022 13:03	92.38	6/24/2022 12:20	2.33	6/24/2022 12:50	10.67	6/24/2022 11:38	0.81	6/24/2022 13:20	31.78
6/25/2022 13:04	94.66	6/24/2022 12:21	2.04	6/24/2022 12:51	10.65	6/24/2022 11:39	0.82	6/24/2022 13:21	31.77
6/25/2022 13:05	97.53	6/24/2022 12:22	1.83	6/24/2022 12:52	10.60	6/24/2022 11:40	0.84	6/24/2022 13:22	31.75
6/25/2022 13:06	99.22	6/24/2022 12:23	1.68	6/24/2022 12:53	10.66	6/24/2022 11:41	0.80	6/24/2022 13:23	31.76
6/25/2022 13:07	100.21	6/24/2022 12:24	1.48	6/24/2022 12:54	10.63	6/24/2022 11:42	0.80	6/24/2022 13:24	31.74
6/25/2022 13:08	100.84	6/24/2022 12:25	1.33	6/24/2022 12:55	10.62	6/24/2022 11:43	0.82	6/24/2022 13:25	31.75
6/25/2022 13:09	101.24	6/24/2022 12:26	1.19	6/24/2022 12:56	10.62	6/24/2022 11:44	0.75	6/24/2022 13:26	31.75
6/25/2022 13:10	99.87	6/24/2022 12:27	1.07	6/24/2022 12:57	10.60	6/24/2022 11:45	0.77	6/24/2022 13:27	31.72
6/25/2022 13:11	97.39	6/24/2022 12:28	1.01	6/24/2022 12:58	10.57	6/24/2022 11:46	0.75	6/24/2022 13:28	31.73
6/25/2022 13:12	95.83	6/24/2022 12:29	0.91	6/24/2022 12:59	10.59	6/24/2022 11:47	0.79	6/24/2022 13:29	31.75
6/25/2022 13:13	94.74	6/24/2022 12:30	0.86	6/24/2022 13:00	10.59	6/24/2022 11:48	0.79	6/24/2022 13:30	31.73
6/25/2022 13:14	93.90	6/24/2022 12:31	0.75	6/24/2022 13:01	10.60	6/24/2022 11:49	0.78	6/24/2022 13:31	31.75
6/25/2022 13:15	97.28	6/24/2022 12:32	6.62	6/24/2022 13:02	10.64	6/24/2022 11:50	0.81	6/24/2022 13:32	31.73
6/25/2022 13:16	99.39	6/24/2022 12:33	7.59	6/24/2022 13:03	10.66	6/24/2022 11:51	0.81	6/24/2022 13:33	31.72
6/25/2022 13:17	100.62	6/24/2022 12:34	6.38	6/24/2022 13:04	10.70	6/24/2022 11:52	0.81	6/24/2022 13:34	31.72
6/25/2022 13:18	101.40	6/24/2022 12:35	5.49	6/24/2022 13:05	10.69	6/24/2022 11:53	0.80	6/24/2022 13:35	31.71
6/25/2022 13:19	101.85	6/24/2022 12:36	4.68	6/24/2022 13:06	10.72	6/24/2022 11:54	0.81	6/24/2022 13:36	31.73
6/25/2022 13:20	102.09	6/24/2022 12:37	4.07	6/24/2022 13:07	10.74	6/24/2022 11:55	0.82	6/24/2022 13:37	31.69
6/25/2022 13:21	101.66	6/24/2022 12:38	3.49	6/24/2022 13:08	10.69	6/24/2022 11:56	0.81	6/24/2022 13:38	31.71
6/25/2022 13:22	98.70	6/24/2022 12:39	3.01	6/24/2022 13:09	10.72	6/24/2022 11:57	0.82	6/24/2022 13:39	31.69
6/25/2022 13:23	96.99	6/24/2022 12:40	2.62	6/24/2022 13:10	10.67	6/24/2022 11:58	0.80	6/24/2022 13:40	31.73
6/25/2022 13:24	95.78	6/24/2022 12:41	2.29	6/24/2022 13:11	10.73	6/24/2022 11:59	0.84	6/24/2022 13:41	31.70
6/25/2022 13:25	94.92	6/24/2022 12:42	2.02	6/24/2022 13:12	10.72	6/24/2022 12:00	0.79	6/24/2022 13:42	31.73
6/25/2022 13:26	94.22	6/24/2022 12:43	1.85	6/24/2022 13:13	10.77	6/24/2022 12:01	0.82	6/24/2022 13:43	31.70
6/25/2022 13:27	93.63	6/24/2022 12:44	1.65	6/24/2022 13:14	10.79	6/24/2022 12:02	0.81	6/24/2022 13:44	31.67
6/25/2022 13:28	96.41	6/24/2022 12:45	1.45	6/24/2022 13:15	10.74	6/24/2022 12:03	0.79	6/24/2022 13:45	31.74
6/25/2022 13:29	98.87	6/24/2022 12:46	1.32	6/24/2022 13:16	10.81	6/24/2022 12:04	0.82	6/24/2022 13:46	31.67
6/25/2022 13:30	100.34	6/24/2022 12:47	1.20	6/24/2022 13:17	10.77	6/24/2022 12:05	0.82	6/24/2022 13:47	31.71
6/25/2022 13:31	101.28	6/24/2022 12:48	1.10	6/24/2022 13:18	10.79	6/24/2022 12:06	0.85	6/24/2022 13:48	31.69
6/25/2022 13:32	101.84	6/24/2022 12:49	1.01	6/24/2022 13:19	10.77	6/24/2022 12:07	0.83	6/24/2022 13:49	31.67
6/25/2022 13:33	102.23	6/24/2022 12:50	0.90	6/24/2022 13:20	10.78	6/24/2022 12:08	0.81	6/24/2022 13:50	31.66

6/25/2022 13:34	101.77	6/24/2022 12:51	0.86	6/24/2022 13:21	10.77	6/24/2022 12:09	0.80	6/24/2022 13:51	31.67
6/25/2022 13:35	98.82	6/24/2022 12:52	3.30	6/24/2022 13:22	10.71	6/24/2022 12:10	0.79	6/24/2022 13:52	31.70
6/25/2022 13:36	97.19	6/24/2022 12:53	8.49	6/24/2022 13:23	10.70	6/24/2022 12:11	0.82	6/24/2022 13:53	31.67
6/25/2022 13:37	96.03	6/24/2022 12:54	7.13	6/24/2022 13:24	10.68	6/24/2022 12:12	0.81	6/24/2022 13:54	31.67
6/25/2022 13:38	95.16	6/24/2022 12:55	6.03	6/24/2022 13:25	10.73	6/24/2022 12:13	0.82	6/24/2022 13:55	31.65
6/25/2022 13:39	94.51	6/24/2022 12:56	5.18	6/24/2022 13:26	10.76	6/24/2022 12:14	0.81	6/24/2022 13:56	31.66
6/25/2022 13:40	93.92	6/24/2022 12:57	4.45	6/24/2022 13:27	10.73	6/24/2022 12:15	0.81	6/24/2022 13:57	31.63
6/25/2022 13:41	95.74	6/24/2022 12:58	3.85	6/24/2022 13:28	10.75	6/24/2022 12:16	0.80	6/24/2022 13:58	31.69
6/25/2022 13:42	98.53	6/24/2022 12:59	3.31	6/24/2022 13:29	10.77	6/24/2022 12:17	0.80	6/24/2022 13:59	31.66
6/25/2022 13:43	100.24	6/24/2022 13:00	2.84	6/24/2022 13:30	10.73	6/24/2022 12:18	0.83	6/24/2022 14:00	31.66
6/25/2022 13:44	101.31	6/24/2022 13:01	2.53	6/24/2022 13:31	10.73	6/24/2022 12:19	0.81	6/24/2022 14:01	31.64
6/25/2022 13:45	101.92	6/24/2022 13:02	2.23	6/24/2022 13:32	10.79	6/24/2022 12:20	0.82	6/24/2022 14:02	31.69
6/25/2022 13:46	102.24	6/24/2022 13:03	1.98	6/24/2022 13:33	10.79	6/24/2022 12:21	0.83	6/24/2022 14:03	31.67
6/25/2022 13:47	100.72	6/24/2022 13:04	1.75	6/24/2022 13:34	10.77	6/24/2022 12:22	0.80	6/24/2022 14:04	31.66
6/25/2022 13:48	98.33	6/24/2022 13:05	1.52	6/24/2022 13:35	10.79	6/24/2022 12:23	0.84	6/24/2022 14:05	31.65
6/25/2022 13:49	96.87	6/24/2022 13:06	1.40	6/24/2022 13:36	10.78	6/24/2022 12:24	0.81	6/24/2022 14:06	31.62
6/25/2022 13:50	95.85	6/24/2022 13:07	1.26	6/24/2022 13:37	10.80	6/24/2022 12:25	0.83	6/24/2022 14:07	31.68
6/25/2022 13:51	95.08	6/24/2022 13:08	1.12	6/24/2022 13:38	10.74	6/24/2022 12:26	0.82	6/24/2022 14:08	31.63
6/25/2022 13:52	94.50	6/24/2022 13:09	1.00	6/24/2022 13:39	10.74	6/24/2022 12:27	0.85	6/24/2022 14:09	31.64
6/25/2022 13:53	93.99	6/24/2022 13:10	0.89	6/24/2022 13:40	10.78	6/24/2022 12:28	0.79	6/24/2022 14:10	31.61
6/25/2022 13:54	97.08	6/24/2022 13:11	0.87	6/24/2022 13:41	10.77	6/24/2022 12:29	0.84	6/24/2022 14:11	31.63
6/25/2022 13:55	99.34	6/24/2022 13:12	0.79	6/24/2022 13:42	10.69	6/24/2022 12:30	0.79	6/24/2022 14:12	31.65
6/25/2022 13:56	100.70	6/24/2022 13:13	6.12	6/24/2022 13:43	10.70	6/24/2022 12:31	0.81	6/24/2022 14:13	31.66
6/25/2022 13:57	101.53	6/24/2022 13:14	7.84	6/24/2022 13:44	10.67	6/24/2022 12:32	0.82	6/24/2022 14:14	31.59
6/25/2022 13:58	102.07	6/24/2022 13:15	6.57	6/24/2022 13:45	10.67	6/24/2022 12:33	0.85	6/24/2022 14:15	31.61
6/25/2022 13:59	102.38	6/24/2022 13:16	5.64	6/24/2022 13:46	10.67	6/24/2022 12:34	0.79	6/24/2022 14:16	31.59
6/25/2022 14:00	101.50	6/24/2022 13:17	4.87	6/24/2022 13:47	10.67	6/24/2022 12:35	0.83	6/24/2022 14:17	31.64
6/25/2022 14:01	98.92	6/24/2022 13:18	4.16	6/24/2022 13:48	10.61	6/24/2022 12:36	0.81	6/24/2022 14:18	31.60
6/25/2022 14:02	97.36	6/24/2022 13:19	3.60	6/24/2022 13:49	10.58	6/24/2022 12:37	0.80	6/24/2022 14:19	31.63
6/25/2022 14:03	96.34	6/24/2022 13:20	3.13	6/24/2022 13:50	10.57	6/24/2022 12:38	0.83	6/24/2022 14:20	31.61
6/25/2022 14:04	95.52	6/24/2022 13:21	2.66	6/24/2022 13:51	10.59	6/24/2022 12:39	0.83	6/24/2022 14:21	32.88
6/25/2022 14:05	94.86	6/24/2022 13:22	2.37	6/24/2022 13:52	10.58	6/24/2022 12:40	0.83	6/24/2022 14:22	32.92
6/25/2022 14:06	98.32	6/24/2022 13:23	2.04	6/24/2022 13:53	10.60	6/24/2022 12:41	0.81	6/24/2022 14:23	32.12
6/25/2022 14:07	100.31	6/24/2022 13:24	1.84	6/24/2022 13:54	10.60	6/24/2022 12:42	0.80	6/24/2022 14:24	31.83
6/25/2022 14:08	101.46	6/24/2022 13:25	1.67	6/24/2022 13:55	10.61	6/24/2022 12:43	0.82	6/24/2022 14:25	31.70
6/25/2022 14:09	102.27	6/24/2022 13:26	1.47	6/24/2022 13:56	10.56	6/24/2022 12:44	0.78	6/24/2022 14:26	31.66
6/25/2022 14:10	102.72	6/24/2022 13:27	1.31	6/24/2022 13:57	10.57	6/24/2022 12:45	0.82	6/24/2022 14:27	31.65
6/25/2022 14:11	102.93	6/24/2022 13:28	1.23	6/24/2022 13:58	10.60	6/24/2022 12:46	0.82	6/24/2022 14:28	31.64
6/25/2022 14:12	101.96	6/24/2022 13:29	1.05	6/24/2022 13:59	10.62	6/24/2022 12:47	0.82	6/24/2022 14:29	31.64
6/25/2022 14:13	99.39	6/24/2022 13:30	1.00	6/24/2022 14:00	10.60	6/24/2022 12:48	0.85	6/24/2022 14:30	31.62
6/25/2022 14:14	97.86	6/24/2022 13:31	0.88	6/24/2022 14:01	10.59	6/24/2022 12:49	0.85	6/24/2022 14:31	31.61
6/25/2022 14:15	96.80	6/24/2022 13:32	0.84	6/24/2022 14:02	10.63	6/24/2022 12:50	0.83	6/24/2022 14:32	31.61
6/25/2022 14:16	96.01	6/24/2022 13:33	5.02	6/24/2022 14:03	10.59	6/24/2022 12:51	0.82	6/24/2022 14:33	31.58
6/25/2022 14:17	95.40	6/24/2022 13:34	7.91	6/24/2022 14:04	10.62	6/24/2022 12:52	0.79	6/24/2022 14:34	31.63
6/25/2022 14:18	94.89	6/24/2022 13:35	6.66	6/24/2022 14:05	10.58	6/24/2022 12:53	0.80	6/24/2022 14:35	31.58
6/25/2022 14:19	97.21	6/24/2022 13:36	5.66	6/24/2022 14:06	10.56	6/24/2022 12:54	0.85	6/24/2022 14:36	31.61
6/25/2022 14:20	99.76	6/24/2022 13:37	4.85	6/24/2022 14:07	10.56	6/24/2022 12:55	0.83	6/24/2022 14:37	31.60
6/25/2022 14:21	101.27	6/24/2022 13:38	4.20	6/24/2022 14:08	10.55	6/24/2022 12:56	0.81	6/24/2022 14:38	31.63
6/25/2022 14:22	102.13	6/24/2022 13:39	3.60	6/24/2022 14:09	10.54	6/24/2022 12:57	0.83	6/24/2022 14:39	31.61
6/25/2022 14:23	102.71	6/24/2022 13:40	3.15	6/24/2022 14:10	10.52	6/24/2022 12:58	0.80	6/24/2022 14:40	31.60
6/25/2022 14:24	103.06	6/24/2022 13:41	2.74	6/24/2022 14:11	10.52	6/24/2022 12:59	0.79	6/24/2022 14:41	31.60
6/25/2022 14:25	103.24	6/24/2022 13:42	2.35	6/24/2022 14:12	10.51	6/24/2022 13:00	0.80	6/24/2022 14:42	31.62
6/25/2022 14:26	103.50	6/24/2022 13:43	2.05	6/24/2022 14:13	10.51	6/24/2022 13:01	0.83	6/24/2022 14:43	31.60
6/25/2022 14:27	103.77	6/24/2022 13:44	1.84	6/24/2022 14:14	10.47	6/24/2022 13:02	0.81	6/24/2022 14:44	31.62
6/25/2022 14:28	103.94	6/24/2022 13:45	1.63	6/24/2022 14:15	10.49	6/24/2022 13:03	0.85	6/24/2022 14:45	31.56
6/25/2022 14:29	104.09	6/24/2022 13:46	1.43	6/24/2022 14:16	10.47	6/24/2022 13:04	0.88	6/24/2022 14:46	31.62
6/25/2022 14:30	104.24	6/24/2022 13:47	1.36	6/24/2022 14:17	10.52	6/24/2022 13:05	0.84	6/24/2022 14:47	31.58
6/25/2022 14:31	104.35	6/24/2022 13:48	1.15	6/24/2022 14:18	10.52	6/24/2022 13:06	0.81	6/24/2022 14:48	31.57
6/25/2022 14:32	104.51	6/24/2022 13:49	1.09	6/24/2022 14:19	10.50	6/24/2022 13:07	0.83	6/24/2022 14:49	31.57
6/25/2022 14:33	104.62	6/24/2022 13:50	0.95	6/24/2022 14:20	10.54	6/24/2022 13:08	0.84	6/24/2022 14:50	31.61
6/25/2022 14:34	104.72	6/24/2022 13:51	0.90	6/24/2022 14:21	10.54	6/24/2022 13:09	0.84	6/24/2022 14:51	31.55
6/25/2022 14:35	104.85	6/24/2022 13:52	0.79	6/24/2022 14:22	10.54	6/24/2022 13:10	0.82	6/24/2022 14:52	31.58
6/25/2022 14:36	102.59	6/24/2022 13:53	0.78	6/24/2022 14:23	10.57	6/24/2022 13:11	0.79	6/24/2022 14:53	31.60
6/25/2022 14:37	100.65	6/24/2022 13:54	0.74	6/24/2022 14:24	10.53	6/24/2022 13:12	0.82	6/24/2022 14:54	31.57
6/25/2022 14:38	99.30	6/24/2022 13:55	0.64	6/24/2022 14:25	10.55	6/24/2022 13:13	0.82	6/24/2022 14:55	31.55
6/25/2022 14:39	98.37	6/24/2022 13:56	0.58	6/24/2022 14:26	10.53	6/24/2022 13:14	0.85	6/24/2022 14:56	33.45
6/25/2022 14:40	97.53	6/24/2022 13:57	0.56	6/24/2022 14:27	10.56	6/24/2022 13:15	0.83	6/24/2022 14:57	32.36
6/25/2022 14:41	97.90	6/24/2022 13:58	0.50	6/24/2022 14:28	10.53	6/24/2022 13:16	0.81	6/24/2022 14:58	31.87
6/25/2022 14:42	100.97	6/24/2022 13:59	0.48	6/24/2022 14:29	10.55	6/24/2022 13:17	0.84	6/24/2022 14:59	31.71
6/25/2022 14:43	102.66	6/24/2022 14:00	0.48	6/24/2022 14:30	10.54	6/24/2022 13:18	0.87	6/24/2022 15:00	31.65
6/25/2022 14:44	103.71	6/24/2022 14:01	0.46	6/24/2022 14:31	10.48	6/24/2022 13:19	0.84	6/24/2022 15:01	31.61
6/25/2022 14:45	104.38	6/24/2022 14:02	0.40	6/24/2022 14:32	10.48	6/24/2022 13:20	0.83	6/24/2022 15:02	31.61
6/25/2022 14:46	104.79	6/24/2022 14:03	0.40	6/24/2022 14:33	10.48	6/24/2022 13:21	0.85	6/24/2022 15:03	31.60
6/25/2022 14:47	105.03	6/24/2022 14:04	0.39	6/24/2022 14:34	10.49	6/24/2022 13:22	0.85	6/24/2022 15:04	31.57
6/25/2022 14:48	104.49	6/24/2022 14:05	0.39	6/24/2022 14:35	10.49	6/24/2022 13:23	0.83	6/24/2022 15:05	31.61
6/25/2022 14:49	101.68	6/24/2022 14:06	0.34	6/24/2022 14:36	10.45	6/24/2022 13:24	0.82	6/24/2022 15:06	31.58
6/25/2022 14:50	100.03	6/24/2022 14:07	0.35	6/24/2022 14:37	10.45	6/24/2022 13:25	0.85	6/24/2022 15:07	31.62
6/25/2022 14:51	98.95	6/24/2022 14:08	0.35	6/24/2022 14:38	10.48	6/24/2022 13:26	0.85	6/24/2022 15:08	31.56
6/25/2022 14:52	98.11	6/24/2022 14:09	0.30	6/24/2022 14:39	10.49	6/24/2022 13:27	0.78	6/24/2022 15:09	31.58
6/25/2022 14:53	97.92	6/24/2022 14:10	0.33	6/24/2022 14:40	10.50	6/24/2022 13:28	0.84	6/24/2022 15:10	31.57
6/25/2022 14:54	101.10	6/24/2022 14:11	0.33	6/24/2022 14:41	10.50	6/24/2022 13:29	0.83	6/24/2022 15:11	31.57
6/25/2022 14:55	102.85	6/24/2022 14:12	0.34	6/24/2022 14:42	10.52	6/24/2022 13:30	0.84	6/24/2022 15:12	31.58
6/25/2022 14:56	103.98	6/24/2022 14:13	0.31	6/24/2022 14:43	10.51	6/24/2022 13:31	0.85	6/24/2022 15:13	31.58
6/25/2022 14:57	104.65	6/24/2022 14:14	0.27	6/24/2022 14:44	10.53	6/24/2022 13:32	0.85	6/24/2022 15:14	31.61
6/25/2022 14:58	105.05	6/24/2022 14:15	0.32	6/24/2022 14:45	10.52	6/24/2022 13:33	0.89	6/24/2022 15:15	31.60
6/25/2022 14:59	105.33	6/24/2022 14:16	0.32	6/24/2022 14:46	10.52	6/24/2022 13:34	0.83	6/24/2022 15:16	31.54
6/25/2022 15:00	105.47	6/24/2022 14:17	0.33	6/24/2022 14:47	10.56	6/24/2022 13:35	0.85	6/24/2022 15:17	31.60
6/25/2022 15:01	105.56	6/24/2022 14:18	0.32	6/24/2022 14:48	10.53	6/24/2022 13:36	0.82	6/24/2022 15:18	31.54

6/25/2022 15:02	103.71	6/24/2022 14:19	3.36	6/24/2022 14:49	10.49	6/24/2022 13:37	0.85	6/24/2022 15:19	31.55
6/25/2022 15:03	101.55	6/24/2022 14:20	7.74	6/24/2022 14:50	10.51	6/24/2022 13:38	0.84	6/24/2022 15:20	31.55
6/25/2022 15:04	100.21	6/24/2022 14:21	6.51	6/24/2022 14:51	10.46	6/24/2022 13:39	0.83	6/24/2022 15:21	31.55
6/25/2022 15:05	99.25	6/24/2022 14:22	5.49	6/24/2022 14:52	10.49	6/24/2022 13:40	0.83	6/24/2022 15:22	31.56
6/25/2022 15:06	98.52	6/24/2022 14:23	4.72	6/24/2022 14:53	10.49	6/24/2022 13:41	0.82	6/24/2022 15:23	31.52
6/25/2022 15:07	98.66	6/24/2022 14:24	4.03	6/24/2022 14:54	10.48	6/24/2022 13:42	0.89	6/24/2022 15:24	31.54
6/25/2022 15:08	101.63	6/24/2022 14:25	3.48	6/24/2022 14:55	10.45	6/24/2022 13:43	0.82	6/24/2022 15:25	31.57
6/25/2022 15:09	103.29	6/24/2022 14:26	2.99	6/24/2022 14:56	10.48	6/24/2022 13:44	0.85	6/24/2022 15:26	31.54
6/25/2022 15:10	104.26	6/24/2022 14:27	2.61	6/24/2022 14:57	10.45	6/24/2022 13:45	0.85	6/24/2022 15:27	31.55
6/25/2022 15:11	104.94	6/24/2022 14:28	2.29	6/24/2022 14:58	10.52	6/24/2022 13:46	0.85	6/24/2022 15:28	31.53
6/25/2022 15:12	105.41	6/24/2022 14:29	2.04	6/24/2022 14:59	10.49	6/24/2022 13:47	0.85	6/24/2022 15:29	31.53
6/25/2022 15:13	105.62	6/24/2022 14:30	1.75	6/24/2022 15:00	10.52	6/24/2022 13:48	0.84	6/24/2022 15:30	31.52
6/25/2022 15:14	105.79	6/24/2022 14:31	1.53	6/24/2022 15:01	10.48	6/24/2022 13:49	0.90	6/24/2022 15:31	31.55
6/25/2022 15:15	105.87	6/24/2022 14:32	1.40	6/24/2022 15:02	10.53	6/24/2022 13:50	0.86	6/24/2022 15:32	31.54
6/25/2022 15:16	102.95	6/24/2022 14:33	1.28	6/24/2022 15:03	10.56	6/24/2022 13:51	0.85	6/24/2022 15:33	31.53
6/25/2022 15:17	101.23	6/24/2022 14:34	1.11	6/24/2022 15:04	10.54	6/24/2022 13:52	0.85	6/24/2022 15:34	31.54
6/25/2022 15:18	100.10	6/24/2022 14:35	0.99	6/24/2022 15:05	10.55	6/24/2022 13:53	0.85	6/24/2022 15:35	31.54
6/25/2022 15:19	99.27	6/24/2022 14:36	0.92	6/24/2022 15:06	10.56	6/24/2022 13:54	0.84	6/24/2022 15:36	31.49
6/25/2022 15:20	100.20	6/24/2022 14:37	0.85	6/24/2022 15:07	10.56	6/24/2022 13:55	0.84	6/24/2022 15:37	31.51
6/25/2022 15:21	102.82	6/24/2022 14:38	0.73	6/24/2022 15:08	10.53	6/24/2022 13:56	0.83	6/24/2022 15:38	31.52
6/25/2022 15:22	104.25	6/24/2022 14:39	0.74	6/24/2022 15:09	10.58	6/24/2022 13:57	0.84	6/24/2022 15:39	31.50
6/25/2022 15:23	105.15	6/24/2022 14:40	0.62	6/24/2022 15:10	10.52	6/24/2022 13:58	0.84	6/24/2022 15:40	31.51
6/25/2022 15:24	105.75	6/24/2022 14:41	0.61	6/24/2022 15:11	14.34	6/24/2022 13:59	0.83	6/24/2022 15:41	31.51
6/25/2022 15:25	106.04	6/24/2022 14:42	0.57	6/24/2022 15:12	14.70	6/24/2022 14:00	0.88	6/24/2022 15:42	31.52
6/25/2022 15:26	106.25	6/24/2022 14:43	0.56	6/24/2022 15:13	14.14	6/24/2022 14:01	0.85	6/24/2022 15:43	31.50
6/25/2022 15:27	106.03	6/24/2022 14:44	0.63	6/24/2022 15:14	13.72	6/24/2022 14:02	0.85	6/24/2022 15:44	31.54
6/25/2022 15:28	103.06	6/24/2022 14:45	0.68	6/24/2022 15:15	13.37	6/24/2022 14:03	0.84	6/24/2022 15:45	31.49
6/25/2022 15:29	101.47	6/24/2022 14:46	0.69	6/24/2022 15:16	13.07	6/24/2022 14:04	0.87	6/24/2022 15:46	31.51
6/25/2022 15:30	100.38	6/24/2022 14:47	0.56	6/24/2022 15:17	12.77	6/24/2022 14:05	0.88	6/24/2022 15:47	31.53
6/25/2022 15:31	99.55	6/24/2022 14:48	0.55	6/24/2022 15:18	12.51	6/24/2022 14:06	0.85	6/24/2022 15:48	31.49
6/25/2022 15:32	99.24	6/24/2022 14:49	0.56	6/24/2022 15:19	12.26	6/24/2022 14:07	0.83	6/24/2022 15:49	31.49
6/25/2022 15:33	102.41	6/24/2022 14:50	0.54	6/24/2022 15:20	12.09	6/24/2022 14:08	0.87	6/24/2022 15:50	31.50
6/25/2022 15:34	104.02	6/24/2022 14:51	1.71	6/24/2022 15:21	11.93	6/24/2022 14:09	0.84	6/24/2022 15:51	31.47
6/25/2022 15:35	104.99	6/24/2022 14:52	7.42	6/24/2022 15:22	11.81	6/24/2022 14:10	0.87	6/24/2022 15:52	31.48
6/25/2022 15:36	105.61	6/24/2022 14:53	7.09	6/24/2022 15:23	11.69	6/24/2022 14:11	0.84	6/24/2022 15:53	31.50
6/25/2022 15:37	105.97	6/24/2022 14:54	5.95	6/24/2022 15:24	11.62	6/24/2022 14:12	0.79	6/24/2022 15:54	31.49
6/25/2022 15:38	106.22	6/24/2022 14:55	5.08	6/24/2022 15:25	11.51	6/24/2022 14:13	0.87	6/24/2022 15:55	31.50
6/25/2022 15:39	106.43	6/24/2022 14:56	4.41	6/24/2022 15:26	11.44	6/24/2022 14:14	0.88	6/24/2022 15:56	31.48
6/25/2022 15:40	105.75	6/24/2022 14:57	3.72	6/24/2022 15:27	11.33	6/24/2022 14:15	0.90	6/24/2022 15:57	31.49
6/25/2022 15:41	103.07	6/24/2022 14:58	3.29	6/24/2022 15:28	11.30	6/24/2022 14:16	0.88	6/24/2022 15:58	31.50
6/25/2022 15:42	101.59	6/24/2022 14:59	2.77	6/24/2022 15:29	11.21	6/24/2022 14:17	0.90	6/24/2022 15:59	31.50
6/25/2022 15:43	100.57	6/24/2022 15:00	2.43	6/24/2022 15:30	11.12	6/24/2022 14:18	0.90	6/24/2022 16:00	31.46
6/25/2022 15:44	99.76	6/24/2022 15:01	2.11	6/24/2022 15:31	11.09	6/24/2022 14:19	0.88	6/24/2022 16:01	31.48
6/25/2022 15:45	99.17	6/24/2022 15:02	1.91	6/24/2022 15:32	11.03	6/24/2022 14:20	0.87	6/24/2022 16:02	31.52
6/25/2022 15:46	98.64	6/24/2022 15:03	1.68	6/24/2022 15:33	10.97	6/24/2022 14:21	0.85	6/24/2022 16:03	31.47
6/25/2022 15:47	98.09	6/24/2022 15:04	1.45	6/24/2022 15:34	10.97	6/24/2022 14:22	0.84	6/24/2022 16:04	31.47
6/25/2022 15:48	97.65	6/24/2022 15:05	1.34	6/24/2022 15:35	10.92	6/24/2022 14:23	0.85	6/24/2022 16:05	31.48
6/25/2022 15:49	97.24	6/24/2022 15:06	1.16	6/24/2022 15:36	10.92	6/24/2022 14:24	0.87	6/24/2022 16:06	31.47
6/25/2022 15:50	96.93	6/24/2022 15:07	1.10	6/24/2022 15:37	10.86	6/24/2022 14:25	0.89	6/24/2022 16:07	31.47
6/25/2022 15:51	96.63	6/24/2022 15:08	0.97	6/24/2022 15:38	10.80	6/24/2022 14:26	0.84	6/24/2022 16:08	31.50
6/25/2022 15:52	96.30	6/24/2022 15:09	0.85	6/24/2022 15:39	10.78	6/24/2022 14:27	0.88	6/24/2022 16:09	31.45
6/25/2022 15:53	96.08	6/24/2022 15:10	0.76	6/24/2022 15:40	10.75	6/24/2022 14:28	0.85	6/24/2022 16:10	31.49
6/25/2022 15:54	95.84	6/24/2022 15:11	0.69	6/24/2022 15:41	10.74	6/24/2022 14:29	0.87	6/24/2022 16:11	31.47
6/25/2022 15:55	95.65	6/24/2022 15:12	0.65	6/24/2022 15:42	10.70	6/24/2022 14:30	0.87	6/24/2022 16:12	31.45
6/25/2022 15:56	95.44	6/24/2022 15:13	0.63	6/24/2022 15:43	10.69	6/24/2022 14:31	0.84	6/24/2022 16:13	31.49
6/25/2022 15:57	95.21	6/24/2022 15:14	0.62	6/24/2022 15:44	10.69	6/24/2022 14:32	0.86	6/24/2022 16:14	31.44
6/25/2022 15:58	95.06	6/24/2022 15:15	0.54	6/24/2022 15:45	10.66	6/24/2022 14:33	0.87	6/24/2022 16:15	31.45
6/25/2022 15:59	94.90	6/24/2022 15:16	0.47	6/24/2022 15:46	10.66	6/24/2022 14:34	0.87	6/24/2022 16:16	31.47
6/25/2022 16:00	94.73	6/24/2022 15:17	0.47	6/24/2022 15:47	10.64	6/24/2022 14:35	0.89	6/24/2022 16:17	31.48
6/25/2022 16:01	94.59	6/24/2022 15:18	0.43	6/24/2022 15:48	10.67	6/24/2022 14:36	0.82	6/24/2022 16:18	31.45
6/25/2022 16:02	94.46	6/24/2022 15:19	0.46	6/24/2022 15:49	10.64	6/24/2022 14:37	0.87	6/24/2022 16:19	31.44
6/25/2022 16:03	94.29	6/24/2022 15:20	0.43	6/24/2022 15:50	10.67	6/24/2022 14:38	0.86	6/24/2022 16:20	31.47
6/25/2022 16:04	94.22	6/24/2022 15:21	0.37	6/24/2022 15:51	10.66	6/24/2022 14:39	0.86	6/24/2022 16:21	31.44
6/25/2022 16:05	94.12	6/24/2022 15:22	0.37	6/24/2022 15:52	10.64	6/24/2022 14:40	0.85	6/24/2022 16:22	31.42
6/25/2022 16:06	93.93	6/24/2022 15:23	0.36	6/24/2022 15:53	10.62	6/24/2022 14:41	0.89	6/24/2022 16:23	31.45
6/25/2022 16:07	97.69	6/24/2022 15:24	0.35	6/24/2022 15:54	10.60	6/24/2022 14:42	0.85	6/24/2022 16:24	31.46
6/25/2022 16:08	99.80	6/24/2022 15:25	0.33	6/24/2022 15:55	10.61	6/24/2022 14:43	5.30	6/24/2022 16:25	31.45
6/25/2022 16:09	100.99	6/24/2022 15:26	0.36	6/24/2022 15:56	10.61	6/24/2022 14:44	6.74	6/24/2022 16:26	31.43
6/25/2022 16:10	99.55	6/24/2022 15:27	0.35	6/24/2022 15:57	10.60	6/24/2022 14:45	4.08	6/24/2022 16:27	31.45
6/25/2022 16:11	97.82	6/24/2022 15:28	0.32	6/24/2022 15:58	10.57	6/24/2022 14:46	2.14	6/24/2022 16:28	31.43
6/25/2022 16:12	96.82	6/24/2022 15:29	0.29	6/24/2022 15:59	10.57	6/24/2022 14:47	0.89	6/24/2022 16:29	31.45
6/25/2022 16:13	96.08	6/24/2022 15:30	0.31	6/24/2022 16:00	10.58	6/24/2022 14:48	0.87	6/24/2022 16:30	31.43
6/25/2022 16:14	95.59	6/24/2022 15:31	0.29	6/24/2022 16:01	10.54	6/24/2022 14:49	0.85	6/24/2022 16:31	31.41
6/25/2022 16:15	95.22	6/24/2022 15:32	0.30	6/24/2022 16:02	10.51	6/24/2022 14:50	0.83	6/24/2022 16:32	31.44
6/25/2022 16:16	94.87	6/24/2022 15:33	5.55	6/24/2022 16:03	10.56	6/24/2022 14:51	0.88	6/24/2022 16:33	31.51
6/25/2022 16:17	94.62	6/24/2022 15:34	7.25	6/24/2022 16:04	10.55	6/24/2022 14:52	0.82	6/24/2022 16:34	31.47
6/25/2022 16:18	94.39	6/24/2022 15:35	6.15	6/24/2022 16:05	10.51	6/24/2022 14:53	0.82	6/24/2022 16:35	31.48
6/25/2022 16:19	94.26	6/24/2022 15:36	5.23	6/24/2022 16:06	10.53	6/24/2022 14:54	0.80	6/24/2022 16:36	31.50
6/25/2022 16:20	94.08	6/24/2022 15:37	4.47	6/24/2022 16:07	10.56	6/24/2022 14:55	0.88	6/24/2022 16:37	31.45
6/25/2022 16:21	93.93	6/24/2022 15:38	3.84	6/24/2022 16:08	10.57	6/24/2022 14:56	0.89	6/24/2022 16:38	31.45
6/25/2022 16:22	93.78	6/24/2022 15:39	3.32	6/24/2022 16:09	10.59	6/24/2022 14:57	0.81	6/24/2022 16:39	31.47
6/25/2022 16:23	93.65	6/24/2022 15:40	2.85	6/24/2022 16:10	10.56	6/24/2022 14:58	0.79	6/24/2022 16:40	31.46
6/25/2022 16:24	93.55	6/24/2022 15:41	2.50	6/24/2022 16:11	10.54	6/24/2022 14:59	0.84	6/24/2022 16:41	31.45
6/25/2022 16:25	93.47	6/24/2022 15:42	2.22	6/24/2022 16:12	10.59	6/24/2022 15:00	0.85	6/24/2022 16:42	31.45
6/25/2022 16:26	93.37	6/24/2022 15:43	1.90	6/24/2022 16:13	10.57	6/24/2022 15:01	0.76	6/24/2022 16:43	31.40
6/25/2022 16:27	93.31	6/24/2022 15:44	1.74	6/24/2022 16:14	10.55	6/24/2022 15:02	0.89	6/24/2022 16:44	31.50
6/25/2022 16:28	93.20	6/24/2022 15:45	1.49	6/24/2022 16:15	10.58	6/24/2022 15:03	0.81	6/24/2022 16:45	33.32
6/25/2022 16:29	93.16	6/24/2022 15:46	4.18	6/24/2022 16:16	10.52	6/24/2022 15:04	0.80	6/24/2022 16:46	32.22

6/25/2022 16:30	93.03	6/24/2022 15:47	9.30	6/24/2022 16:17	10.55	6/24/2022 15:05	0.79	6/24/2022 16:47	31.73
6/25/2022 16:31	93.00	6/24/2022 15:48	8.38	6/24/2022 16:18	10.54	6/24/2022 15:06	0.83	6/24/2022 16:48	31.56
6/25/2022 16:32	92.94	6/24/2022 15:49	7.09	6/24/2022 16:19	10.50	6/24/2022 15:07	0.82	6/24/2022 16:49	31.52
6/25/2022 16:33	92.85	6/24/2022 15:50	6.04	6/24/2022 16:20	10.50	6/24/2022 15:08	0.85	6/24/2022 16:50	33.35
6/25/2022 16:34	92.86	6/24/2022 15:51	5.14	6/24/2022 16:21	10.50	6/24/2022 15:09	0.86	6/24/2022 16:51	32.24
6/25/2022 16:35	92.76	6/24/2022 15:52	4.37	6/24/2022 16:22	10.49	6/24/2022 15:10	0.82	6/24/2022 16:52	31.74
6/25/2022 16:36	92.69	6/24/2022 15:53	3.78	6/24/2022 16:23	10.53	6/24/2022 15:11	0.81	6/24/2022 16:53	31.61
6/25/2022 16:37	92.66	6/24/2022 15:54	3.29	6/24/2022 16:24	10.48	6/24/2022 15:12	0.80	6/24/2022 16:54	31.52
6/25/2022 16:38	92.59	6/24/2022 15:55	2.82	6/24/2022 16:25	10.49	6/24/2022 15:13	0.90	6/24/2022 16:55	31.51
6/25/2022 16:39	92.56	6/24/2022 15:56	2.51	6/24/2022 16:26	10.52	6/24/2022 15:14	0.78	6/24/2022 16:56	31.51
6/25/2022 16:40	92.51	6/24/2022 15:57	2.18	6/24/2022 16:27	10.46	6/24/2022 15:15	0.90	6/24/2022 16:57	31.50
6/25/2022 16:41	92.49	6/24/2022 15:58	1.93	6/24/2022 16:28	10.47	6/24/2022 15:16	0.78	6/24/2022 16:58	31.53
6/25/2022 16:42	92.43	6/24/2022 15:59	1.73	6/24/2022 16:29	10.49	6/24/2022 15:17	0.87	6/24/2022 16:59	31.45
6/25/2022 16:43	92.39	6/24/2022 16:00	1.52	6/24/2022 16:30	10.50	6/24/2022 15:18	0.77	6/24/2022 17:00	31.46
6/25/2022 16:44	92.30	6/24/2022 16:01	1.33	6/24/2022 16:31	10.52	6/24/2022 15:19	0.88	6/24/2022 17:01	31.46
6/25/2022 16:45	92.34	6/24/2022 16:02	1.22	6/24/2022 16:32	10.52	6/24/2022 15:20	0.81	6/24/2022 17:02	31.46
6/25/2022 16:46	92.25	6/24/2022 16:03	1.12	6/24/2022 16:33	10.50	6/24/2022 15:21	0.91	6/24/2022 17:03	31.41
6/25/2022 16:47	92.23	6/24/2022 16:04	1.01	6/24/2022 16:34	10.53	6/24/2022 15:22	0.80	6/24/2022 17:04	31.48
6/25/2022 16:48	92.19	6/24/2022 16:05	0.91	6/24/2022 16:35	10.54	6/24/2022 15:23	0.85	6/24/2022 17:05	31.47
6/25/2022 16:49	92.17	6/24/2022 16:06	5.78	6/24/2022 16:36	10.55	6/24/2022 15:24	0.80	6/24/2022 17:06	31.46
6/25/2022 16:50	92.17	6/24/2022 16:07	8.03	6/24/2022 16:37	10.49	6/24/2022 15:25	0.88	6/24/2022 17:07	31.43
6/25/2022 16:51	92.07	6/24/2022 16:08	6.74	6/24/2022 16:38	10.53	6/24/2022 15:26	0.82	6/24/2022 17:08	31.46
6/25/2022 16:52	92.08	6/24/2022 16:09	5.72	6/24/2022 16:39	10.52	6/24/2022 15:27	0.85	6/24/2022 17:09	31.39
6/25/2022 16:53	92.01	6/24/2022 16:10	4.91	6/24/2022 16:40	10.52	6/24/2022 15:28	0.75	6/24/2022 17:10	31.44
6/25/2022 16:54	92.03	6/24/2022 16:11	4.19	6/24/2022 16:41	10.51	6/24/2022 15:29	0.82	6/24/2022 17:11	31.43
6/25/2022 16:55	91.97	6/24/2022 16:12	3.63	6/24/2022 16:42	10.51	6/24/2022 15:30	0.79	6/24/2022 17:12	31.42
6/25/2022 16:56	92.01	6/24/2022 16:13	3.16	6/24/2022 16:43	10.44	6/24/2022 15:31	0.85	6/24/2022 17:13	31.45
6/25/2022 16:57	91.91	6/24/2022 16:14	2.70	6/24/2022 16:44	10.51	6/24/2022 15:32	0.80	6/24/2022 17:14	31.39
6/25/2022 16:58	91.93	6/24/2022 16:15	2.37	6/24/2022 16:45	10.52	6/24/2022 15:33	0.82	6/24/2022 17:15	31.43
6/25/2022 16:59	91.90	6/24/2022 16:16	2.12	6/24/2022 16:46	10.48	6/24/2022 15:34	0.80	6/24/2022 17:16	31.43
6/25/2022 17:00	91.85	6/24/2022 16:17	1.88	6/24/2022 16:47	10.51	6/24/2022 15:35	0.80	6/24/2022 17:17	31.39
6/25/2022 17:01	91.82	6/24/2022 16:18	1.66	6/24/2022 16:48	10.51	6/24/2022 15:36	0.78	6/24/2022 17:18	31.43
6/25/2022 17:02	91.74	6/24/2022 16:19	1.47	6/24/2022 16:49	10.54	6/24/2022 15:37	0.80	6/24/2022 17:19	31.43
6/25/2022 17:03	91.77	6/24/2022 16:20	1.29	6/24/2022 16:50	10.53	6/24/2022 15:38	0.83	6/24/2022 17:20	31.41
6/25/2022 17:04	91.74	6/24/2022 16:21	1.20	6/24/2022 16:51	10.51	6/24/2022 15:39	0.89	6/24/2022 17:21	31.41
6/25/2022 17:05	91.68	6/24/2022 16:22	6.98	6/24/2022 16:52	10.53	6/24/2022 15:40	0.78	6/24/2022 17:22	31.42
6/25/2022 17:06	91.69	6/24/2022 16:23	8.17	6/24/2022 16:53	10.52	6/24/2022 15:41	0.78	6/24/2022 17:23	31.42
6/25/2022 17:07	91.67	6/24/2022 16:24	6.87	6/24/2022 16:54	10.54	6/24/2022 15:42	0.93	6/24/2022 17:24	31.44
6/25/2022 17:08	91.61	6/24/2022 16:25	5.88	6/24/2022 16:55	10.54	6/24/2022 15:43	0.80	6/24/2022 17:25	31.38
6/25/2022 17:09	91.63	6/24/2022 16:26	4.99	6/24/2022 16:56	10.58	6/24/2022 15:44	0.82	6/24/2022 17:26	33.50
6/25/2022 17:10	91.57	6/24/2022 16:27	4.32	6/24/2022 16:57	10.56	6/24/2022 15:45	0.88	6/24/2022 17:27	32.66
6/25/2022 17:11	91.60	6/24/2022 16:28	3.68	6/24/2022 16:58	10.59	6/24/2022 15:46	0.77	6/24/2022 17:28	31.88
6/25/2022 17:12	91.56	6/24/2022 16:29	3.21	6/24/2022 16:59	10.58	6/24/2022 15:47	0.89	6/24/2022 17:29	31.59
6/25/2022 17:13	91.55	6/24/2022 16:30	2.74	6/24/2022 17:00	10.59	6/24/2022 15:48	0.82	6/24/2022 17:30	31.46
6/25/2022 17:14	95.69	6/24/2022 16:31	2.42	6/24/2022 17:01	10.60	6/24/2022 15:49	0.81	6/24/2022 17:31	31.47
6/25/2022 17:15	98.04	6/24/2022 16:32	6.50	6/24/2022 17:02	10.62	6/24/2022 15:50	0.78	6/24/2022 17:32	31.41
6/25/2022 17:16	99.42	6/24/2022 16:33	9.35	6/24/2022 17:03	10.57	6/24/2022 15:51	0.80	6/24/2022 17:33	31.43
6/25/2022 17:17	100.31	6/24/2022 16:34	7.84	6/24/2022 17:04	10.61	6/24/2022 15:52	0.76	6/24/2022 17:34	31.42
6/25/2022 17:18	100.82	6/24/2022 16:35	6.70	6/24/2022 17:05	10.61	6/24/2022 15:53	0.82	6/24/2022 17:35	31.43
6/25/2022 17:19	98.62	6/24/2022 16:36	5.71	6/24/2022 17:06	10.59	6/24/2022 15:54	0.91	6/24/2022 17:36	31.42
6/25/2022 17:20	96.86	6/24/2022 16:37	4.93	6/24/2022 17:07	10.56	6/24/2022 15:55	0.81	6/24/2022 17:37	31.40
6/25/2022 17:21	95.77	6/24/2022 16:38	4.23	6/24/2022 17:08	10.59	6/24/2022 15:56	0.85	6/24/2022 17:38	31.38
6/25/2022 17:22	94.96	6/24/2022 16:39	3.64	6/24/2022 17:09	10.55	6/24/2022 15:57	0.78	6/24/2022 17:39	31.44
6/25/2022 17:23	94.37	6/24/2022 16:40	3.19	6/24/2022 17:10	10.61	6/24/2022 15:58	0.80	6/24/2022 17:40	31.39
6/25/2022 17:24	93.95	6/24/2022 16:41	2.75	6/24/2022 17:11	10.61	6/24/2022 15:59	0.88	6/24/2022 17:41	31.42
6/25/2022 17:25	93.55	6/24/2022 16:42	2.40	6/24/2022 17:12	10.63	6/24/2022 16:00	0.78	6/24/2022 17:42	31.41
6/25/2022 17:26	93.28	6/24/2022 16:43	2.11	6/24/2022 17:13	10.61	6/24/2022 16:01	0.85	6/24/2022 17:43	33.73
6/25/2022 17:27	93.08	6/24/2022 16:44	1.91	6/24/2022 17:14	10.60	6/24/2022 16:02	0.80	6/24/2022 17:44	34.86
6/25/2022 17:28	92.89	6/24/2022 16:45	1.67	6/24/2022 17:15	10.58	6/24/2022 16:03	0.89	6/24/2022 17:45	34.94
6/25/2022 17:29	92.72	6/24/2022 16:46	1.49	6/24/2022 17:16	10.58	6/24/2022 16:04	0.77	6/24/2022 17:46	34.95
6/25/2022 17:30	92.57	6/24/2022 16:47	1.35	6/24/2022 17:17	10.60	6/24/2022 16:05	0.81	6/24/2022 17:47	34.67
6/25/2022 17:31	92.46	6/24/2022 16:48	1.23	6/24/2022 17:18	10.59	6/24/2022 16:06	0.80	6/24/2022 17:48	35.03
6/25/2022 17:32	92.40	6/24/2022 16:49	1.11	6/24/2022 17:19	10.58	6/24/2022 16:07	0.81	6/24/2022 17:49	35.64
6/25/2022 17:33	92.29	6/24/2022 16:50	0.99	6/24/2022 17:20	10.57	6/24/2022 16:08	0.84	6/24/2022 17:50	36.13
6/25/2022 17:34	92.16	6/24/2022 16:51	0.90	6/24/2022 17:21	10.56	6/24/2022 16:09	0.80	6/24/2022 17:51	36.55
6/25/2022 17:35	92.12	6/24/2022 16:52	6.83	6/24/2022 17:22	10.58	6/24/2022 16:10	0.83	6/24/2022 17:52	36.20
6/25/2022 17:36	92.08	6/24/2022 16:53	7.79	6/24/2022 17:23	10.55	6/24/2022 16:11	0.79	6/24/2022 17:53	35.77
6/25/2022 17:37	94.99	6/24/2022 16:54	6.59	6/24/2022 17:24	10.55	6/24/2022 16:12	0.81	6/24/2022 17:54	35.43
6/25/2022 17:38	97.63	6/24/2022 16:55	5.58	6/24/2022 17:25	10.55	6/24/2022 16:13	0.91	6/24/2022 17:55	35.36
6/25/2022 17:39	99.18	6/24/2022 16:56	4.83	6/24/2022 17:26	10.49	6/24/2022 16:14	0.82	6/24/2022 17:56	33.48
6/25/2022 17:40	100.11	6/24/2022 16:57	4.15	6/24/2022 17:27	10.49	6/24/2022 16:15	0.77	6/24/2022 17:57	32.45
6/25/2022 17:41	97.38	6/24/2022 16:58	3.59	6/24/2022 17:28	10.53	6/24/2022 16:16	0.82	6/24/2022 17:58	31.98
6/25/2022 17:42	95.97	6/24/2022 16:59	3.11	6/24/2022 17:29	10.50	6/24/2022 16:17	0.80	6/24/2022 17:59	31.83
6/25/2022 17:43	94.99	6/24/2022 17:00	2.68	6/24/2022 17:30	10.48	6/24/2022 16:18	0.86	6/24/2022 18:00	31.75
6/25/2022 17:44	94.37	6/24/2022 17:01	2.35	6/24/2022 17:31	10.52	6/24/2022 16:19	0.81	6/24/2022 18:01	31.93
6/25/2022 17:45	93.89	6/24/2022 17:02	2.07	6/24/2022 17:32	10.48	6/24/2022 16:20	0.82	6/24/2022 18:02	33.27
6/25/2022 17:46	93.53	6/24/2022 17:03	1.86	6/24/2022 17:33	10.52	6/24/2022 16:21	0.89	6/24/2022 18:03	32.64
6/25/2022 17:47	93.26	6/24/2022 17:04	1.64	6/24/2022 17:34	10.47	6/24/2022 16:22	0.81	6/24/2022 18:04	33.51
6/25/2022 17:48	93.02	6/24/2022 17:05	1.46	6/24/2022 17:35	10.55	6/24/2022 16:23	0.79	6/24/2022 18:05	32.44
6/25/2022 17:49	92.83	6/24/2022 17:06	3.73	6/24/2022 17:36	10.52	6/24/2022 16:24	0.79	6/24/2022 18:06	31.92
6/25/2022 17:50	92.71	6/24/2022 17:07	9.10	6/24/2022 17:37	10.55	6/24/2022 16:25	0.88	6/24/2022 18:07	31.75
6/25/2022 17:51	92.55	6/24/2022 17:08	8.59	6/24/2022 17:38	10.55	6/24/2022 16:26	0.85	6/24/2022 18:08	31.69
6/25/2022 17:52	92.44	6/24/2022 17:09	7.25	6/24/2022 17:39	10.56	6/24/2022 16:27	0.79	6/24/2022 18:09	31.62
6/25/2022 17:53	92.34	6/24/2022 17:10	6.15	6/24/2022 17:40	10.54	6/24/2022 16:28	0.77	6/24/2022 18:10	31.62
6/25/2022 17:54	92.26	6/24/2022 17:11	5.28	6/24/2022 17:41	10.56	6/24/2022 16:29	0.82	6/24/2022 18:11	31.60
6/25/2022 17:55	92.19	6/24/2022 17:12	4.54	6/24/2022 17:42	10.53	6/24/2022 16:30	0.90	6/24/2022 18:12	31.72
6/25/2022 17:56	92.17	6/24/2022 17:13	3.94	6/24/2022 17:43	10.52	6/24/2022 16:31	0.87	6/24/2022 18:13	33.38
6/25/2022 17:57	92.05	6/24/2022 17:14	4.70	6/24/2022 17:44	10.54	6/24/2022 16:32	0.86	6/24/2022 18:14	32.29

6/25/2022 17:58	92.04	6/24/2022 17:15	9.95	6/24/2022 17:45	10.55	6/24/2022 16:33	0.83	6/24/2022 18:15	31.82
6/25/2022 17:59	91.96	6/24/2022 17:16	10.32	6/24/2022 17:46	10.52	6/24/2022 16:34	0.86	6/24/2022 18:16	31.67
6/25/2022 18:00	91.89	6/24/2022 17:17	8.73	6/24/2022 17:47	10.52	6/24/2022 16:35	0.80	6/24/2022 18:17	31.62
6/25/2022 18:01	91.83	6/24/2022 17:18	7.40	6/24/2022 17:48	10.49	6/24/2022 16:36	0.81	6/24/2022 18:18	31.59
6/25/2022 18:02	91.81	6/24/2022 17:19	6.32	6/24/2022 17:49	10.51	6/24/2022 16:37	0.76	6/24/2022 18:19	31.60
6/25/2022 18:03	91.79	6/24/2022 17:20	5.41	6/24/2022 17:50	10.51	6/24/2022 16:38	0.83	6/24/2022 18:20	31.55
6/25/2022 18:04	91.70	6/24/2022 17:21	4.66	6/24/2022 17:51	10.53	6/24/2022 16:39	0.89	6/24/2022 18:21	31.59
6/25/2022 18:05	91.71	6/24/2022 17:22	8.54	6/24/2022 17:52	10.53	6/24/2022 16:40	0.83	6/24/2022 18:22	31.56
6/25/2022 18:06	91.65	6/24/2022 17:23	11.74	6/24/2022 17:53	10.53	6/24/2022 16:41	0.81	6/24/2022 18:23	31.56
6/25/2022 18:07	91.67	6/24/2022 17:24	9.96	6/24/2022 17:54	10.59	6/24/2022 16:42	0.81	6/24/2022 18:24	31.52
6/25/2022 18:08	91.54	6/24/2022 17:25	8.41	6/24/2022 17:55	10.57	6/24/2022 16:43	0.85	6/24/2022 18:25	31.52
6/25/2022 18:09	91.55	6/24/2022 17:26	7.16	6/24/2022 17:56	10.54	6/24/2022 16:44	0.84	6/24/2022 18:26	31.51
6/25/2022 18:10	91.53	6/24/2022 17:27	6.15	6/24/2022 17:57	10.58	6/24/2022 16:45	0.87	6/24/2022 18:27	31.52
6/25/2022 18:11	91.53	6/24/2022 17:28	5.28	6/24/2022 17:58	10.51	6/24/2022 16:46	0.77	6/24/2022 18:28	31.49
6/25/2022 18:12	91.49	6/24/2022 17:29	4.56	6/24/2022 17:59	10.57	6/24/2022 16:47	0.86	6/24/2022 18:29	31.53
6/25/2022 18:13	91.44	6/24/2022 17:30	3.96	6/24/2022 18:00	10.55	6/24/2022 16:48	0.83	6/24/2022 18:30	31.50
6/25/2022 18:14	91.45	6/24/2022 17:31	3.43	6/24/2022 18:01	10.58	6/24/2022 16:49	0.82	6/24/2022 18:31	31.52
6/25/2022 18:15	91.38	6/24/2022 17:32	2.95	6/24/2022 18:02	10.55	6/24/2022 16:50	0.83	6/24/2022 18:32	31.48
6/25/2022 18:16	91.36	6/24/2022 17:33	2.61	6/24/2022 18:03	10.54	6/24/2022 16:51	0.80	6/24/2022 18:33	31.50
6/25/2022 18:17	91.35	6/24/2022 17:34	2.33	6/24/2022 18:04	10.53	6/24/2022 16:52	0.85	6/24/2022 18:34	31.46
6/25/2022 18:18	91.31	6/24/2022 17:35	6.68	6/24/2022 18:05	10.53	6/24/2022 16:53	0.81	6/24/2022 18:35	31.49
6/25/2022 18:19	91.29	6/24/2022 17:36	9.28	6/24/2022 18:06	14.73	6/24/2022 16:54	0.83	6/24/2022 18:36	31.49
6/25/2022 18:20	91.26	6/24/2022 17:37	7.84	6/24/2022 18:07	15.80	6/24/2022 16:55	0.78	6/24/2022 18:37	31.49
6/25/2022 18:21	91.25	6/24/2022 17:38	6.65	6/24/2022 18:08	15.13	6/24/2022 16:56	0.84	6/24/2022 18:38	31.47
6/25/2022 18:22	91.22	6/24/2022 17:39	5.73	6/24/2022 18:09	14.59	6/24/2022 16:57	0.79	6/24/2022 18:39	31.46
6/25/2022 18:23	91.21	6/24/2022 17:40	4.95	6/24/2022 18:10	14.09	6/24/2022 16:58	0.80	6/24/2022 18:40	31.45
6/25/2022 18:24	91.23	6/24/2022 17:41	4.26	6/24/2022 18:11	13.72	6/24/2022 16:59	0.82	6/24/2022 18:41	31.43
6/25/2022 18:25	91.18	6/24/2022 17:42	3.67	6/24/2022 18:12	13.43	6/24/2022 17:00	0.84	6/24/2022 18:42	31.43
6/25/2022 18:26	91.17	6/24/2022 17:43	3.20	6/24/2022 18:13	13.05	6/24/2022 17:01	0.80	6/24/2022 18:43	31.47
6/25/2022 18:27	91.17	6/24/2022 17:44	2.73	6/24/2022 18:14	12.85	6/24/2022 17:02	0.90	6/24/2022 18:44	31.46
6/25/2022 18:28	91.14	6/24/2022 17:45	2.46	6/24/2022 18:15	12.57	6/24/2022 17:03	0.78	6/24/2022 18:45	31.41
6/25/2022 18:29	91.11	6/24/2022 17:46	2.18	6/24/2022 18:16	12.36	6/24/2022 17:04	0.82	6/24/2022 18:46	31.42
6/25/2022 18:30	91.09	6/24/2022 17:47	1.92	6/24/2022 18:17	12.20	6/24/2022 17:05	0.87	6/24/2022 18:47	31.45
6/25/2022 18:31	91.09	6/24/2022 17:48	1.74	6/24/2022 18:18	12.06	6/24/2022 17:06	0.82	6/24/2022 18:48	31.42
6/25/2022 18:32	91.04	6/24/2022 17:49	1.69	6/24/2022 18:19	11.95	6/24/2022 17:07	0.87	6/24/2022 18:49	31.42
6/25/2022 18:33	91.01	6/24/2022 17:50	2.72	6/24/2022 18:20	11.75	6/24/2022 17:08	0.84	6/24/2022 18:50	31.42
6/25/2022 18:34	91.05	6/24/2022 17:51	8.43	6/24/2022 18:21	11.67	6/24/2022 17:09	0.82	6/24/2022 18:51	31.46
6/25/2022 18:35	91.00	6/24/2022 17:52	10.30	6/24/2022 18:22	11.48	6/24/2022 17:10	0.81	6/24/2022 18:52	31.42
6/25/2022 18:36	90.94	6/24/2022 17:53	8.73	6/24/2022 18:23	11.45	6/24/2022 17:11	0.81	6/24/2022 18:53	31.42
6/25/2022 18:37	91.00	6/24/2022 17:54	7.44	6/24/2022 18:24	11.37	6/24/2022 17:12	0.80	6/24/2022 18:54	31.42
6/25/2022 18:38	90.88	6/24/2022 17:55	6.47	6/24/2022 18:25	11.31	6/24/2022 17:13	0.89	6/24/2022 18:55	31.40
6/25/2022 18:39	90.96	6/24/2022 17:56	5.69	6/24/2022 18:26	11.25	6/24/2022 17:14	0.80	6/24/2022 18:56	31.38
6/25/2022 18:40	90.88	6/24/2022 17:57	4.98	6/24/2022 18:27	11.14	6/24/2022 17:15	0.83	6/24/2022 18:57	31.44
6/25/2022 18:41	90.90	6/24/2022 17:58	4.32	6/24/2022 18:28	11.16	6/24/2022 17:16	0.80	6/24/2022 18:58	31.42
6/25/2022 18:42	90.93	6/24/2022 17:59	3.85	6/24/2022 18:29	11.12	6/24/2022 17:17	0.81	6/24/2022 18:59	31.40
6/25/2022 18:43	90.88	6/24/2022 18:00	3.32	6/24/2022 18:30	11.04	6/24/2022 17:18	0.82	6/24/2022 19:00	31.39
6/25/2022 18:44	90.82	6/24/2022 18:01	2.85	6/24/2022 18:31	11.06	6/24/2022 17:19	0.83	6/24/2022 19:01	31.40
6/25/2022 18:45	90.82	6/24/2022 18:02	6.72	6/24/2022 18:32	11.04	6/24/2022 17:20	0.79	6/24/2022 19:02	31.40
6/25/2022 18:46	90.80	6/24/2022 18:03	9.87	6/24/2022 18:33	10.94	6/24/2022 17:21	0.78	6/24/2022 19:03	31.40
6/25/2022 18:47	90.84	6/24/2022 18:04	8.32	6/24/2022 18:34	10.96	6/24/2022 17:22	0.84	6/24/2022 19:04	31.40
6/25/2022 18:48	90.78	6/24/2022 18:05	7.03	6/24/2022 18:35	10.93	6/24/2022 17:23	0.84	6/24/2022 19:05	31.38
6/25/2022 18:49	90.75	6/24/2022 18:06	6.06	6/24/2022 18:36	10.89	6/24/2022 17:24	0.79	6/24/2022 19:06	31.38
6/25/2022 18:50	91.31	6/24/2022 18:07	5.24	6/24/2022 18:37	10.85	6/24/2022 17:25	0.81	6/24/2022 19:07	31.42
6/25/2022 18:51	95.24	6/24/2022 18:08	4.53	6/24/2022 18:38	10.83	6/24/2022 17:26	0.81	6/24/2022 19:08	31.41
6/25/2022 18:52	97.44	6/24/2022 18:09	3.90	6/24/2022 18:39	10.82	6/24/2022 17:27	0.83	6/24/2022 19:09	31.46
6/25/2022 18:53	98.77	6/24/2022 18:10	3.42	6/24/2022 18:40	10.74	6/24/2022 17:28	0.79	6/24/2022 19:10	31.43
6/25/2022 18:54	96.91	6/24/2022 18:11	2.98	6/24/2022 18:41	10.79	6/24/2022 17:29	0.84	6/24/2022 19:11	31.41
6/25/2022 18:55	95.13	6/24/2022 18:12	3.18	6/24/2022 18:42	10.76	6/24/2022 17:30	0.85	6/24/2022 19:12	31.45
6/25/2022 18:56	94.06	6/24/2022 18:13	8.74	6/24/2022 18:43	10.74	6/24/2022 17:31	0.82	6/24/2022 19:13	31.38
6/25/2022 18:57	93.33	6/24/2022 18:14	9.00	6/24/2022 18:44	10.69	6/24/2022 17:32	0.80	6/24/2022 19:14	31.41
6/25/2022 18:58	92.83	6/24/2022 18:15	7.64	6/24/2022 18:45	10.68	6/24/2022 17:33	0.81	6/24/2022 19:15	31.42
6/25/2022 18:59	92.47	6/24/2022 18:16	6.51	6/24/2022 18:46	10.66	6/24/2022 17:34	0.84	6/24/2022 19:16	31.36
6/25/2022 19:00	92.25	6/24/2022 18:17	5.59	6/24/2022 18:47	10.67	6/24/2022 17:35	0.83	6/24/2022 19:17	31.38
6/25/2022 19:01	92.02	6/24/2022 18:18	4.84	6/24/2022 18:48	10.69	6/24/2022 17:36	0.82	6/24/2022 19:18	31.40
6/25/2022 19:02	91.82	6/24/2022 18:19	4.20	6/24/2022 18:49	10.68	6/24/2022 17:37	0.81	6/24/2022 19:19	31.34
6/25/2022 19:03	91.71	6/24/2022 18:20	3.61	6/24/2022 18:50	10.69	6/24/2022 17:38	0.84	6/24/2022 19:20	31.40
6/25/2022 19:04	91.60	6/24/2022 18:21	3.17	6/24/2022 18:51	10.67	6/24/2022 17:39	0.81	6/24/2022 19:21	31.33
6/25/2022 19:05	91.51	6/24/2022 18:22	2.77	6/24/2022 18:52	10.71	6/24/2022 17:40	0.92	6/24/2022 19:22	31.38
6/25/2022 19:06	91.46	6/24/2022 18:23	2.43	6/24/2022 18:53	10.67	6/24/2022 17:41	0.90	6/24/2022 19:23	31.39
6/25/2022 19:07	91.36	6/24/2022 18:24	2.15	6/24/2022 18:54	10.66	6/24/2022 17:42	0.86	6/24/2022 19:24	31.37
6/25/2022 19:08	91.32	6/24/2022 18:25	1.91	6/24/2022 18:55	10.66	6/24/2022 17:43	0.81	6/24/2022 19:25	31.37
6/25/2022 19:09	91.28	6/24/2022 18:26	1.73	6/24/2022 18:56	10.62	6/24/2022 17:44	0.82	6/24/2022 19:26	31.34
6/25/2022 19:10	91.24	6/24/2022 18:27	1.54	6/24/2022 18:57	10.65	6/24/2022 17:45	0.84	6/24/2022 19:27	31.37
6/25/2022 19:11	91.19	6/24/2022 18:28	1.38	6/24/2022 18:58	10.62	6/24/2022 17:46	0.85	6/24/2022 19:28	31.38
6/25/2022 19:12	91.17	6/24/2022 18:29	1.26	6/24/2022 18:59	10.63	6/24/2022 17:47	0.78	6/24/2022 19:29	31.38
6/25/2022 19:13	91.10	6/24/2022 18:30	1.16	6/24/2022 19:00	10.62	6/24/2022 17:48	4.90	6/24/2022 19:30	31.37
6/25/2022 19:14	91.06	6/24/2022 18:31	2.77	6/24/2022 19:01	10.60	6/24/2022 17:49	10.14	6/24/2022 19:31	31.38
6/25/2022 19:15	91.03	6/24/2022 18:32	8.28	6/24/2022 19:02	10.56	6/24/2022 17:50	6.64	6/24/2022 19:32	31.35
6/25/2022 19:16	90.99	6/24/2022 18:33	7.61	6/24/2022 19:03	10.58	6/24/2022 17:51	4.13	6/24/2022 19:33	31.35
6/25/2022 19:17	90.96	6/24/2022 18:34	6.43	6/24/2022 19:04	10.59	6/24/2022 17:52	2.31	6/24/2022 19:34	31.33
6/25/2022 19:18	90.97	6/24/2022 18:35	5.52	6/24/2022 19:05	10.52	6/24/2022 17:53	1.08	6/24/2022 19:35	31.32
6/25/2022 19:19	90.92	6/24/2022 18:36	4.73	6/24/2022 19:06	10.55	6/24/2022 17:54	4.67	6/24/2022 19:36	31.36
6/25/2022 19:20	90.90	6/24/2022 18:37	4.10	6/24/2022 19:07	10.53	6/24/2022 17:55	8.92	6/24/2022 19:37	31.34
6/25/2022 19:21	90.90	6/24/2022 18:38	3.54	6/24/2022 19:08	10.56	6/24/2022 17:56	5.86	6/24/2022 19:38	31.36
6/25/2022 19:22	90.88	6/24/2022 18:39	3.04	6/24/2022 19:09	10.58	6/24/2022 17:57	3.58	6/24/2022 19:39	31.35
6/25/2022 19:23	90.84	6/24/2022 18:40	2.67	6/24/2022 19:10	10.56	6/24/2022 17:58	1.92	6/24/2022 19:40	31.34
6/25/2022 19:24	90.81	6/24/2022 18:41	2.38	6/24/2022 19:11	10.58	6/24/2022 17:59	0.87	6/24/2022 19:41	31.33
6/25/2022 19:25	90.76	6/24/2022 18:42	2.08	6/24/2022 19:12	10.59	6/24/2022 18:00	0.87	6/24/2022 19:42	31.33

6/25/2022 19:26	90.74	6/24/2022 18:43	1.85	6/24/2022 19:13	10.58	6/24/2022 18:01	0.84	6/24/2022 19:43	31.36
6/25/2022 19:27	90.73	6/24/2022 18:44	1.67	6/24/2022 19:14	10.58	6/24/2022 18:02	0.87	6/24/2022 19:44	31.34
6/25/2022 19:28	90.71	6/24/2022 18:45	1.50	6/24/2022 19:15	10.60	6/24/2022 18:03	0.89	6/24/2022 19:45	31.33
6/25/2022 19:29	90.69	6/24/2022 18:46	1.36	6/24/2022 19:16	10.59	6/24/2022 18:04	0.85	6/24/2022 19:46	31.31
6/25/2022 19:30	90.69	6/24/2022 18:47	4.83	6/24/2022 19:17	10.62	6/24/2022 18:05	0.88	6/24/2022 19:47	31.31
6/25/2022 19:31	90.68	6/24/2022 18:48	8.50	6/24/2022 19:18	10.58	6/24/2022 18:06	0.85	6/24/2022 19:48	31.32
6/25/2022 19:32	90.68	6/24/2022 18:49	7.20	6/24/2022 19:19	10.57	6/24/2022 18:07	0.87	6/24/2022 19:49	31.31
6/25/2022 19:33	90.64	6/24/2022 18:50	6.13	6/24/2022 19:20	10.56	6/24/2022 18:08	0.84	6/24/2022 19:50	31.29
6/25/2022 19:34	90.64	6/24/2022 18:51	5.18	6/24/2022 19:21	10.54	6/24/2022 18:09	0.85	6/24/2022 19:51	31.32
6/25/2022 19:35	90.56	6/24/2022 18:52	4.46	6/24/2022 19:22	10.55	6/24/2022 18:10	0.87	6/24/2022 19:52	31.32
6/25/2022 19:36	90.58	6/24/2022 18:53	3.90	6/24/2022 19:23	10.56	6/24/2022 18:11	0.85	6/24/2022 19:53	31.36
6/25/2022 19:37	90.58	6/24/2022 18:54	3.34	6/24/2022 19:24	10.52	6/24/2022 18:12	0.86	6/24/2022 19:54	31.30
6/25/2022 19:38	90.54	6/24/2022 18:55	2.89	6/24/2022 19:25	10.51	6/24/2022 18:13	0.90	6/24/2022 19:55	31.30
6/25/2022 19:39	90.54	6/24/2022 18:56	2.52	6/24/2022 19:26	10.50	6/24/2022 18:14	0.89	6/24/2022 19:56	31.32
6/25/2022 19:40	90.54	6/24/2022 18:57	2.29	6/24/2022 19:27	10.54	6/24/2022 18:15	0.89	6/24/2022 19:57	31.33
6/25/2022 19:41	90.54	6/24/2022 18:58	1.99	6/24/2022 19:28	10.50	6/24/2022 18:16	0.84	6/24/2022 19:58	31.31
6/25/2022 19:42	90.49	6/24/2022 18:59	1.77	6/24/2022 19:29	10.54	6/24/2022 18:17	0.81	6/24/2022 19:59	31.35
6/25/2022 19:43	90.53	6/24/2022 19:00	1.60	6/24/2022 19:30	10.58	6/24/2022 18:18	0.80	6/24/2022 20:00	31.31
6/25/2022 19:44	90.48	6/24/2022 19:01	1.38	6/24/2022 19:31	10.60	6/24/2022 18:19	0.80	6/24/2022 20:01	31.32
6/25/2022 19:45	90.48	6/24/2022 19:02	1.27	6/24/2022 19:32	10.54	6/24/2022 18:20	0.84	6/24/2022 20:02	31.29
6/25/2022 19:46	90.41	6/24/2022 19:03	1.41	6/24/2022 19:33	10.56	6/24/2022 18:21	0.79	6/24/2022 20:03	31.30
6/25/2022 19:47	90.42	6/24/2022 19:04	7.34	6/24/2022 19:34	10.55	6/24/2022 18:22	0.83	6/24/2022 20:04	31.33
6/25/2022 19:48	90.44	6/24/2022 19:05	8.86	6/24/2022 19:35	10.60	6/24/2022 18:23	0.83	6/24/2022 20:05	31.32
6/25/2022 19:49	90.41	6/24/2022 19:06	7.47	6/24/2022 19:36	10.57	6/24/2022 18:24	0.82	6/24/2022 20:06	31.26
6/25/2022 19:50	90.41	6/24/2022 19:07	6.37	6/24/2022 19:37	10.53	6/24/2022 18:25	0.77	6/24/2022 20:07	31.28
6/25/2022 19:51	90.42	6/24/2022 19:08	5.44	6/24/2022 19:38	10.62	6/24/2022 18:26	0.89	6/24/2022 20:08	31.33
6/25/2022 19:52	90.39	6/24/2022 19:09	4.69	6/24/2022 19:39	10.63	6/24/2022 18:27	0.81	6/24/2022 20:09	31.29
6/25/2022 19:53	90.38	6/24/2022 19:10	4.05	6/24/2022 19:40	10.61	6/24/2022 18:28	0.81	6/24/2022 20:10	31.31
6/25/2022 19:54	90.34	6/24/2022 19:11	3.53	6/24/2022 19:41	10.64	6/24/2022 18:29	0.83	6/24/2022 20:11	31.28
6/25/2022 19:55	90.37	6/24/2022 19:12	3.01	6/24/2022 19:42	10.62	6/24/2022 18:30	0.77	6/24/2022 20:12	31.26
6/25/2022 19:56	90.35	6/24/2022 19:13	2.63	6/24/2022 19:43	10.63	6/24/2022 18:31	0.87	6/24/2022 20:13	31.32
6/25/2022 19:57	90.31	6/24/2022 19:14	2.36	6/24/2022 19:44	10.65	6/24/2022 18:32	0.78	6/24/2022 20:14	31.31
6/25/2022 19:58	90.32	6/24/2022 19:15	2.08	6/24/2022 19:45	10.65	6/24/2022 18:33	0.81	6/24/2022 20:15	31.29
6/25/2022 19:59	90.31	6/24/2022 19:16	1.86	6/24/2022 19:46	10.63	6/24/2022 18:34	0.78	6/24/2022 20:16	31.30
6/25/2022 20:00	90.28	6/24/2022 19:17	1.64	6/24/2022 19:47	10.64	6/24/2022 18:35	0.82	6/24/2022 20:17	31.31
6/25/2022 20:01	90.28	6/24/2022 19:18	1.48	6/24/2022 19:48	10.64	6/24/2022 18:36	0.83	6/24/2022 20:18	31.31
6/25/2022 20:02	90.26	6/24/2022 19:19	1.33	6/24/2022 19:49	10.65	6/24/2022 18:37	0.79	6/24/2022 20:19	31.29
6/25/2022 20:03	90.27	6/24/2022 19:20	1.22	6/24/2022 19:50	10.66	6/24/2022 18:38	0.87	6/24/2022 20:20	31.27
6/25/2022 20:04	90.23	6/24/2022 19:21	1.07	6/24/2022 19:51	10.65	6/24/2022 18:39	0.86	6/24/2022 20:21	31.28
6/25/2022 20:05	90.25	6/24/2022 19:22	6.23	6/24/2022 19:52	10.67	6/24/2022 18:40	0.80	6/24/2022 20:22	31.27
6/25/2022 20:06	90.21	6/24/2022 19:23	8.25	6/24/2022 19:53	10.65	6/24/2022 18:41	0.84	6/24/2022 20:23	31.31
6/25/2022 20:07	90.22	6/24/2022 19:24	6.97	6/24/2022 19:54	10.70	6/24/2022 18:42	0.87	6/24/2022 20:24	31.26
6/25/2022 20:08	90.15	6/24/2022 19:25	5.93	6/24/2022 19:55	10.68	6/24/2022 18:43	0.79	6/24/2022 20:25	31.26
6/25/2022 20:09	90.19	6/24/2022 19:26	5.06	6/24/2022 19:56	10.66	6/24/2022 18:44	0.80	6/24/2022 20:26	31.30
6/25/2022 20:10	90.20	6/24/2022 19:27	4.34	6/24/2022 19:57	10.66	6/24/2022 18:45	0.79	6/24/2022 20:27	31.30
6/25/2022 20:11	90.16	6/24/2022 19:28	3.81	6/24/2022 19:58	10.70	6/24/2022 18:46	0.78	6/24/2022 20:28	31.29
6/25/2022 20:12	90.21	6/24/2022 19:29	3.41	6/24/2022 19:59	10.70	6/24/2022 18:47	0.87	6/24/2022 20:29	31.26
6/25/2022 20:13	90.19	6/24/2022 19:30	3.06	6/24/2022 20:00	10.72	6/24/2022 18:48	0.82	6/24/2022 20:30	31.28
6/25/2022 20:14	90.20	6/24/2022 19:31	2.73	6/24/2022 20:01	10.73	6/24/2022 18:49	0.82	6/24/2022 20:31	31.28
6/25/2022 20:15	90.16	6/24/2022 19:32	2.42	6/24/2022 20:02	10.75	6/24/2022 18:50	0.81	6/24/2022 20:32	31.28
6/25/2022 20:16	90.19	6/24/2022 19:33	2.13	6/24/2022 20:03	10.76	6/24/2022 18:51	0.81	6/24/2022 20:33	31.25
6/25/2022 20:17	90.13	6/24/2022 19:34	1.90	6/24/2022 20:04	10.77	6/24/2022 18:52	0.81	6/24/2022 20:34	31.25
6/25/2022 20:18	90.17	6/24/2022 19:35	1.71	6/24/2022 20:05	10.78	6/24/2022 18:53	0.78	6/24/2022 20:35	31.24
6/25/2022 20:19	90.08	6/24/2022 19:36	1.54	6/24/2022 20:06	10.81	6/24/2022 18:54	0.85	6/24/2022 20:36	31.26
6/25/2022 20:20	90.11	6/24/2022 19:37	1.39	6/24/2022 20:07	10.80	6/24/2022 18:55	0.81	6/24/2022 20:37	31.28
6/25/2022 20:21	90.11	6/24/2022 19:38	1.23	6/24/2022 20:08	10.80	6/24/2022 18:56	0.78	6/24/2022 20:38	31.28
6/25/2022 20:22	90.08	6/24/2022 19:39	1.14	6/24/2022 20:09	10.80	6/24/2022 18:57	0.83	6/24/2022 20:39	31.25
6/25/2022 20:23	90.08	6/24/2022 19:40	1.04	6/24/2022 20:10	10.80	6/24/2022 18:58	0.83	6/24/2022 20:40	31.25
6/25/2022 20:24	90.07	6/24/2022 19:41	4.95	6/24/2022 20:11	10.83	6/24/2022 18:59	0.77	6/24/2022 20:41	31.25
6/25/2022 20:25	90.04	6/24/2022 19:42	8.48	6/24/2022 20:12	10.79	6/24/2022 19:00	0.85	6/24/2022 20:42	31.26
6/25/2022 20:26	90.09	6/24/2022 19:43	7.15	6/24/2022 20:13	10.78	6/24/2022 19:01	0.80	6/24/2022 20:43	31.22
6/25/2022 20:27	90.02	6/24/2022 19:44	6.04	6/24/2022 20:14	10.78	6/24/2022 19:02	0.89	6/24/2022 20:44	31.27
6/25/2022 20:28	90.02	6/24/2022 19:45	5.21	6/24/2022 20:15	10.74	6/24/2022 19:03	0.83	6/24/2022 20:45	31.23
6/25/2022 20:29	90.02	6/24/2022 19:46	4.48	6/24/2022 20:16	10.76	6/24/2022 19:04	0.79	6/24/2022 20:46	31.24
6/25/2022 20:30	89.99	6/24/2022 19:47	3.85	6/24/2022 20:17	10.71	6/24/2022 19:05	0.82	6/24/2022 20:47	31.27
6/25/2022 20:31	89.99	6/24/2022 19:48	3.36	6/24/2022 20:18	10.72	6/24/2022 19:06	0.82	6/24/2022 20:48	31.24
6/25/2022 20:32	89.99	6/24/2022 19:49	2.91	6/24/2022 20:19	10.67	6/24/2022 19:07	0.78	6/24/2022 20:49	31.22
6/25/2022 20:33	89.99	6/24/2022 19:50	2.54	6/24/2022 20:20	10.70	6/24/2022 19:08	0.81	6/24/2022 20:50	31.25
6/25/2022 20:34	89.97	6/24/2022 19:51	2.23	6/24/2022 20:21	10.67	6/24/2022 19:09	0.82	6/24/2022 20:51	31.24
6/25/2022 20:35	89.99	6/24/2022 19:52	2.00	6/24/2022 20:22	10.67	6/24/2022 19:10	0.76	6/24/2022 20:52	31.24
6/25/2022 20:36	89.95	6/24/2022 19:53	1.74	6/24/2022 20:23	10.68	6/24/2022 19:11	0.89	6/24/2022 20:53	31.26
6/25/2022 20:37	89.95	6/24/2022 19:54	1.57	6/24/2022 20:24	10.64	6/24/2022 19:12	0.83	6/24/2022 20:54	31.24
6/25/2022 20:38	89.93	6/24/2022 19:55	1.39	6/24/2022 20:25	10.60	6/24/2022 19:13	0.83	6/24/2022 20:55	31.25
6/25/2022 20:39	89.87	6/24/2022 19:56	1.26	6/24/2022 20:26	10.66	6/24/2022 19:14	0.77	6/24/2022 20:56	31.22
6/25/2022 20:40	89.95	6/24/2022 19:57	1.13	6/24/2022 20:27	10.64	6/24/2022 19:15	0.88	6/24/2022 20:57	31.24
6/25/2022 20:41	89.89	6/24/2022 19:58	1.05	6/24/2022 20:28	10.67	6/24/2022 19:16	0.78	6/24/2022 20:58	31.23
6/25/2022 20:42	89.97	6/24/2022 19:59	0.94	6/24/2022 20:29	10.67	6/24/2022 19:17	0.86	6/24/2022 20:59	31.23
6/25/2022 20:43	89.86	6/24/2022 20:00	3.85	6/24/2022 20:30	10.67	6/24/2022 19:18	0.83	6/24/2022 21:00	31.22
6/25/2022 20:44	89.93	6/24/2022 20:01	8.69	6/24/2022 20:31	10.66	6/24/2022 19:19	0.79	6/24/2022 21:01	31.21
6/25/2022 20:45	89.86	6/24/2022 20:02	7.30	6/24/2022 20:32	10.67	6/24/2022 19:20	0.84	6/24/2022 21:02	31.25
6/25/2022 20:46	89.88	6/24/2022 20:03	6.15	6/24/2022 20:33	10.65	6/24/2022 19:21	0.77	6/24/2022 21:03	31.22
6/25/2022 20:47	89.82	6/24/2022 20:04	5.24	6/24/2022 20:34	10.65	6/24/2022 19:22	0.79	6/24/2022 21:04	31.23
6/25/2022 20:48	89.83	6/24/2022 20:05	4.55	6/24/2022 20:35	10.62	6/24/2022 19:23	0.79	6/24/2022 21:05	31.19
6/25/2022 20:49	89.87	6/24/2022 20:06	3.94	6/24/2022 20:36	10.63	6/24/2022 19:24	0.79	6/24/2022 21:06	31.21
6/25/2022 20:50	89.78	6/24/2022 20:07	3.38	6/24/2022 20:37	10.60	6/24/2022 19:25	0.82	6/24/2022 21:07	31.24
6/25/2022 20:51	89.84	6/24/2022 20:08	2.96	6/24/2022 20:38	10.62	6/24/2022 19:26	0.76	6/24/2022 21:08	31.24
6/25/2022 20:52	89.83	6/24/2022 20:09	2.56	6/24/2022 20:39	10.62	6/24/2022 19:27	0.79	6/24/2022 21:09	31.24
6/25/2022 20:53	89.82	6/24/2022 20:10	2.26	6/24/2022 20:40	10.60	6/24/2022 19:28	5.12	6/24/2022 21:10	31.19

6/25/2022 20:54	89.81	6/24/2022 20:11	2.01	6/24/2022 20:41	10.59	6/24/2022 19:29	7.63	6/24/2022 21:11	31.20
6/25/2022 20:55	89.83	6/24/2022 20:12	1.79	6/24/2022 20:42	10.58	6/24/2022 19:30	4.79	6/24/2022 21:12	31.22
6/25/2022 20:56	89.74	6/24/2022 20:13	1.59	6/24/2022 20:43	10.57	6/24/2022 19:31	2.68	6/24/2022 21:13	31.24
6/25/2022 20:57	89.81	6/24/2022 20:14	1.43	6/24/2022 20:44	11.83	6/24/2022 19:32	1.20	6/24/2022 21:14	31.20
6/25/2022 20:58	89.77	6/24/2022 20:15	1.30	6/24/2022 20:45	14.70	6/24/2022 19:33	0.82	6/24/2022 21:15	31.21
6/25/2022 20:59	89.81	6/24/2022 20:16	1.17	6/24/2022 20:46	14.16	6/24/2022 19:34	0.82	6/24/2022 21:16	31.18
6/25/2022 21:00	89.75	6/24/2022 20:17	1.04	6/24/2022 20:47	13.76	6/24/2022 19:35	0.76	6/24/2022 21:17	31.21
6/25/2022 21:01	89.79	6/24/2022 20:18	0.99	6/24/2022 20:48	13.37	6/24/2022 19:36	0.76	6/24/2022 21:18	31.22
6/25/2022 21:02	89.71	6/24/2022 20:19	2.28	6/24/2022 20:49	13.06	6/24/2022 19:37	0.86	6/24/2022 21:19	31.19
6/25/2022 21:03	89.73	6/24/2022 20:20	7.91	6/24/2022 20:50	12.83	6/24/2022 19:38	0.80	6/24/2022 21:20	31.15
6/25/2022 21:04	89.71	6/24/2022 20:21	7.48	6/24/2022 20:51	12.53	6/24/2022 19:39	0.77	6/24/2022 21:21	31.22
6/25/2022 21:05	89.75	6/24/2022 20:22	6.36	6/24/2022 20:52	12.34	6/24/2022 19:40	0.84	6/24/2022 21:22	31.20
6/25/2022 21:06	89.71	6/24/2022 20:23	5.47	6/24/2022 20:53	12.17	6/24/2022 19:41	0.79	6/24/2022 21:23	31.22
6/25/2022 21:07	89.70	6/24/2022 20:24	4.65	6/24/2022 20:54	12.00	6/24/2022 19:42	0.80	6/24/2022 21:24	31.22
6/25/2022 21:08	89.69	6/24/2022 20:25	4.00	6/24/2022 20:55	11.84	6/24/2022 19:43	0.75	6/24/2022 21:25	31.22
6/25/2022 21:09	89.72	6/24/2022 20:26	3.47	6/24/2022 20:56	11.77	6/24/2022 19:44	0.79	6/24/2022 21:26	31.20
6/25/2022 21:10	89.71	6/24/2022 20:27	2.98	6/24/2022 20:57	11.62	6/24/2022 19:45	0.79	6/24/2022 21:27	31.19
6/25/2022 21:11	89.64	6/24/2022 20:28	2.62	6/24/2022 20:58	11.56	6/24/2022 19:46	0.88	6/24/2022 21:28	31.20
6/25/2022 21:12	89.72	6/24/2022 20:29	2.31	6/24/2022 20:59	11.46	6/24/2022 19:47	0.82	6/24/2022 21:29	31.18
6/25/2022 21:13	89.62	6/24/2022 20:30	2.02	6/24/2022 21:00	11.40	6/24/2022 19:48	0.75	6/24/2022 21:30	31.19
6/25/2022 21:14	89.66	6/24/2022 20:31	1.85	6/24/2022 21:01	11.32	6/24/2022 19:49	0.77	6/24/2022 21:31	31.22
6/25/2022 21:15	89.65	6/24/2022 20:32	1.62	6/24/2022 21:02	11.34	6/24/2022 19:50	0.81	6/24/2022 21:32	31.20
6/25/2022 21:16	89.62	6/24/2022 20:33	1.48	6/24/2022 21:03	11.25	6/24/2022 19:51	0.82	6/24/2022 21:33	31.18
6/25/2022 21:17	89.66	6/24/2022 20:34	1.32	6/24/2022 21:04	11.21	6/24/2022 19:52	0.80	6/24/2022 21:34	31.22
6/25/2022 21:18	89.62	6/24/2022 20:35	1.18	6/24/2022 21:05	11.15	6/24/2022 19:53	0.82	6/24/2022 21:35	31.20
6/25/2022 21:19	89.62	6/24/2022 20:36	1.05	6/24/2022 21:06	11.11	6/24/2022 19:54	0.76	6/24/2022 21:36	31.19
6/25/2022 21:20	89.62	6/24/2022 20:37	0.91	6/24/2022 21:07	11.07	6/24/2022 19:55	0.84	6/24/2022 21:37	31.16
6/25/2022 21:21	89.59	6/24/2022 20:38	1.92	6/24/2022 21:08	11.04	6/24/2022 19:56	0.76	6/24/2022 21:38	31.19
6/25/2022 21:22	89.63	6/24/2022 20:39	7.68	6/24/2022 21:09	10.99	6/24/2022 19:57	0.86	6/24/2022 21:39	31.20
6/25/2022 21:23	89.61	6/24/2022 20:40	7.65	6/24/2022 21:10	11.02	6/24/2022 19:58	0.78	6/24/2022 21:40	31.19
6/25/2022 21:24	89.60	6/24/2022 20:41	6.49	6/24/2022 21:11	10.95	6/24/2022 19:59	0.85	6/24/2022 21:41	31.20
6/25/2022 21:25	89.53	6/24/2022 20:42	5.49	6/24/2022 21:12	10.97	6/24/2022 20:00	0.78	6/24/2022 21:42	31.17
6/25/2022 21:26	89.60	6/24/2022 20:43	4.75	6/24/2022 21:13	10.95	6/24/2022 20:01	0.81	6/24/2022 21:43	31.18
6/25/2022 21:27	89.56	6/24/2022 20:44	4.07	6/24/2022 21:14	10.95	6/24/2022 20:02	0.81	6/24/2022 21:44	31.20
6/25/2022 21:28	89.62	6/24/2022 20:45	3.55	6/24/2022 21:15	10.92	6/24/2022 20:03	0.82	6/24/2022 21:45	31.22
6/25/2022 21:29	89.57	6/24/2022 20:46	3.05	6/24/2022 21:16	10.91	6/24/2022 20:04	0.78	6/24/2022 21:46	31.19
6/25/2022 21:30	89.53	6/24/2022 20:47	2.64	6/24/2022 21:17	10.89	6/24/2022 20:05	0.82	6/24/2022 21:47	31.16
6/25/2022 21:31	89.55	6/24/2022 20:48	2.30	6/24/2022 21:18	10.83	6/24/2022 20:06	0.79	6/24/2022 21:48	31.16
6/25/2022 21:32	89.55	6/24/2022 20:49	2.10	6/24/2022 21:19	10.85	6/24/2022 20:07	0.77	6/24/2022 21:49	31.16
6/25/2022 21:33	89.53	6/24/2022 20:50	1.85	6/24/2022 21:20	10.81	6/24/2022 20:08	0.85	6/24/2022 21:50	31.21
6/25/2022 21:34	89.54	6/24/2022 20:51	1.64	6/24/2022 21:21	10.80	6/24/2022 20:09	0.79	6/24/2022 21:51	31.17
6/25/2022 21:35	89.53	6/24/2022 20:52	1.46	6/24/2022 21:22	10.76	6/24/2022 20:10	0.78	6/24/2022 21:52	31.19
6/25/2022 21:36	89.50	6/24/2022 20:53	1.29	6/24/2022 21:23	10.78	6/24/2022 20:11	0.87	6/24/2022 21:53	31.15
6/25/2022 21:37	89.53	6/24/2022 20:54	1.20	6/24/2022 21:24	10.75	6/24/2022 20:12	0.78	6/24/2022 21:54	31.20
6/25/2022 21:38	89.50	6/24/2022 20:55	1.06	6/24/2022 21:25	10.77	6/24/2022 20:13	0.77	6/24/2022 21:55	31.18
6/25/2022 21:39	89.47	6/24/2022 20:56	1.02	6/24/2022 21:26	12.41	6/24/2022 20:14	0.79	6/24/2022 21:56	31.15
6/25/2022 21:40	89.50	6/24/2022 20:57	1.53	6/24/2022 21:27	14.38	6/24/2022 20:15	0.77	6/24/2022 21:57	31.20
6/25/2022 21:41	89.50	6/24/2022 20:58	7.39	6/24/2022 21:28	13.88	6/24/2022 20:16	0.83	6/24/2022 21:58	31.14
6/25/2022 21:42	89.46	6/24/2022 20:59	7.69	6/24/2022 21:29	13.45	6/24/2022 20:17	0.78	6/24/2022 21:59	31.17
6/25/2022 21:43	89.47	6/24/2022 21:00	6.56	6/24/2022 21:30	13.14	6/24/2022 20:18	0.84	6/24/2022 22:00	31.19
6/25/2022 21:44	89.47	6/24/2022 21:01	5.57	6/24/2022 21:31	12.86	6/24/2022 20:19	0.76	6/24/2022 22:01	31.17
6/25/2022 21:45	89.41	6/24/2022 21:02	4.79	6/24/2022 21:32	12.62	6/24/2022 20:20	0.88	6/24/2022 22:02	31.17
6/25/2022 21:46	89.44	6/24/2022 21:03	4.08	6/24/2022 21:33	12.43	6/24/2022 20:21	0.83	6/24/2022 22:03	31.17
6/25/2022 21:47	89.44	6/24/2022 21:04	3.57	6/24/2022 21:34	12.25	6/24/2022 20:22	0.78	6/24/2022 22:04	31.20
6/25/2022 21:48	89.46	6/24/2022 21:05	3.10	6/24/2022 21:35	12.06	6/24/2022 20:23	0.81	6/24/2022 22:05	31.15
6/25/2022 21:49	89.47	6/24/2022 21:06	2.66	6/24/2022 21:36	11.97	6/24/2022 20:24	0.75	6/24/2022 22:06	31.14
6/25/2022 21:50	89.46	6/24/2022 21:07	2.36	6/24/2022 21:37	11.80	6/24/2022 20:25	0.75	6/24/2022 22:07	31.17
6/25/2022 21:51	89.48	6/24/2022 21:08	2.06	6/24/2022 21:38	11.72	6/24/2022 20:26	0.84	6/24/2022 22:08	31.16
6/25/2022 21:52	89.44	6/24/2022 21:09	1.86	6/24/2022 21:39	11.58	6/24/2022 20:27	0.78	6/24/2022 22:09	31.17
6/25/2022 21:53	89.44	6/24/2022 21:10	1.64	6/24/2022 21:40	11.51	6/24/2022 20:28	0.76	6/24/2022 22:10	31.16
6/25/2022 21:54	89.43	6/24/2022 21:11	5.98	6/24/2022 21:41	11.44	6/24/2022 20:29	0.88	6/24/2022 22:11	31.17
6/25/2022 21:55	89.39	6/24/2022 21:12	9.50	6/24/2022 21:42	11.36	6/24/2022 20:30	0.77	6/24/2022 22:12	31.16
6/25/2022 21:56	89.42	6/24/2022 21:13	8.04	6/24/2022 21:43	11.26	6/24/2022 20:31	0.84	6/24/2022 22:13	31.15
6/25/2022 21:57	89.37	6/24/2022 21:14	6.82	6/24/2022 21:44	11.23	6/24/2022 20:32	0.79	6/24/2022 22:14	31.15
6/25/2022 21:58	89.42	6/24/2022 21:15	5.85	6/24/2022 21:45	11.16	6/24/2022 20:33	0.82	6/24/2022 22:15	31.16
6/25/2022 21:59	89.41	6/24/2022 21:16	5.03	6/24/2022 21:46	11.09	6/24/2022 20:34	0.80	6/24/2022 22:16	31.16
6/25/2022 22:00	89.43	6/24/2022 21:17	4.33	6/24/2022 21:47	11.05	6/24/2022 20:35	0.79	6/24/2022 22:17	31.16
6/25/2022 22:01	89.36	6/24/2022 21:18	3.75	6/24/2022 21:48	11.03	6/24/2022 20:36	0.80	6/24/2022 22:18	31.15
6/25/2022 22:02	89.37	6/24/2022 21:19	3.26	6/24/2022 21:49	11.00	6/24/2022 20:37	0.75	6/24/2022 22:19	31.14
6/25/2022 22:03	89.37	6/24/2022 21:20	2.79	6/24/2022 21:50	10.94	6/24/2022 20:38	0.82	6/24/2022 22:20	31.17
6/25/2022 22:04	89.40	6/24/2022 21:21	2.42	6/24/2022 21:51	10.89	6/24/2022 20:39	0.74	6/24/2022 22:21	31.17
6/25/2022 22:05	89.41	6/24/2022 21:22	2.16	6/24/2022 21:52	10.89	6/24/2022 20:40	0.81	6/24/2022 22:22	31.16
6/25/2022 22:06	89.35	6/24/2022 21:23	1.93	6/24/2022 21:53	10.85	6/24/2022 20:41	0.82	6/24/2022 22:23	31.17
6/25/2022 22:07	89.33	6/24/2022 21:24	1.72	6/24/2022 21:54	10.84	6/24/2022 20:42	0.84	6/24/2022 22:24	31.18
6/25/2022 22:08	89.35	6/24/2022 21:25	1.54	6/24/2022 21:55	10.85	6/24/2022 20:43	0.84	6/24/2022 22:25	31.15
6/25/2022 22:09	89.34	6/24/2022 21:26	1.37	6/24/2022 21:56	10.84	6/24/2022 20:44	0.81	6/24/2022 22:26	31.15
6/25/2022 22:10	89.35	6/24/2022 21:27	1.23	6/24/2022 21:57	10.80	6/24/2022 20:45	0.75	6/24/2022 22:27	31.16
6/25/2022 22:11	89.36	6/24/2022 21:28	2.28	6/24/2022 21:58	10.83	6/24/2022 20:46	0.76	6/24/2022 22:28	31.14
6/25/2022 22:12	89.39	6/24/2022 21:29	7.95	6/24/2022 21:59	10.82	6/24/2022 20:47	0.83	6/24/2022 22:29	31.16
6/25/2022 22:13	89.35	6/24/2022 21:30	7.83	6/24/2022 22:00	10.79	6/24/2022 20:48	0.78	6/24/2022 22:30	31.11
6/25/2022 22:14	89.31	6/24/2022 21:31	6.64	6/24/2022 22:01	10.79	6/24/2022 20:49	0.77	6/24/2022 22:31	31.09
6/25/2022 22:15	89.35	6/24/2022 21:32	5.68	6/24/2022 22:02	10.75	6/24/2022 20:50	0.80	6/24/2022 22:32	31.13
6/25/2022 22:16	89.32	6/24/2022 21:33	4.88	6/24/2022 22:03	10.74	6/24/2022 20:51	0.77	6/24/2022 22:33	31.15
6/25/2022 22:17	89.28	6/24/2022 21:34	4.19	6/24/2022 22:04	10.75	6/24/2022 20:52	0.85	6/24/2022 22:34	31.16
6/25/2022 22:18	89.27	6/24/2022 21:35	3.66	6/24/2022 22:05	10.75	6/24/2022 20:53	0.75	6/24/2022 22:35	31.14
6/25/2022 22:19	89.30	6/24/2022 21:36	3.18	6/24/2022 22:06	10.74	6/24/2022 20:54	0.88	6/24/2022 22:36	31.16
6/25/2022 22:20	89.33	6/24/2022 21:37	2.75	6/24/2022 22:07	10.77	6/24/2022 20:55	0.75	6/24/2022 22:37	31.13
6/25/2022 22:21	89.27	6/24/2022 21:38	2.41	6/24/2022 22:08	10.79	6/24/2022 20:56	0.84	6/24/2022 22:38	31.15

6/25/2022 22:22	89.27	6/24/2022 21:39	2.13	6/24/2022 22:09	10.82	6/24/2022 20:57	0.81	6/24/2022 22:39	31.12
6/25/2022 22:23	89.31	6/24/2022 21:40	1.88	6/24/2022 22:10	10.86	6/24/2022 20:58	0.78	6/24/2022 22:40	31.15
6/25/2022 22:24	89.25	6/24/2022 21:41	1.70	6/24/2022 22:11	10.93	6/24/2022 20:59	0.79	6/24/2022 22:41	31.09
6/25/2022 22:25	89.30	6/24/2022 21:42	1.54	6/24/2022 22:12	10.88	6/24/2022 21:00	0.78	6/24/2022 22:42	31.11
6/25/2022 22:26	89.26	6/24/2022 21:43	1.36	6/24/2022 22:13	11.01	6/24/2022 21:01	0.74	6/24/2022 22:43	31.09
6/25/2022 22:27	89.25	6/24/2022 21:44	1.25	6/24/2022 22:14	11.02	6/24/2022 21:02	0.74	6/24/2022 22:44	31.11
6/25/2022 22:28	89.25	6/24/2022 21:45	1.09	6/24/2022 22:15	11.05	6/24/2022 21:03	0.78	6/24/2022 22:45	33.20
6/25/2022 22:29	89.23	6/24/2022 21:46	0.97	6/24/2022 22:16	11.09	6/24/2022 21:04	0.81	6/24/2022 22:46	31.99
6/25/2022 22:30	89.21	6/24/2022 21:47	0.89	6/24/2022 22:17	11.08	6/24/2022 21:05	0.80	6/24/2022 22:47	31.43
6/25/2022 22:31	89.27	6/24/2022 21:48	6.37	6/24/2022 22:18	11.14	6/24/2022 21:06	0.76	6/24/2022 22:48	31.26
6/25/2022 22:32	89.22	6/24/2022 21:49	7.92	6/24/2022 22:19	11.17	6/24/2022 21:07	0.79	6/24/2022 22:49	31.16
6/25/2022 22:33	89.24	6/24/2022 21:50	6.74	6/24/2022 22:20	11.15	6/24/2022 21:08	0.73	6/24/2022 22:50	31.16
6/25/2022 22:34	89.23	6/24/2022 21:51	5.72	6/24/2022 22:21	11.24	6/24/2022 21:09	0.82	6/24/2022 22:51	31.14
6/25/2022 22:35	89.17	6/24/2022 21:52	4.90	6/24/2022 22:22	11.24	6/24/2022 21:10	0.74	6/24/2022 22:52	31.13
6/25/2022 22:36	89.20	6/24/2022 21:53	4.22	6/24/2022 22:23	11.27	6/24/2022 21:11	0.78	6/24/2022 22:53	31.13
6/25/2022 22:37	89.19	6/24/2022 21:54	3.66	6/24/2022 22:24	11.29	6/24/2022 21:12	0.80	6/24/2022 22:54	31.12
6/25/2022 22:38	89.18	6/24/2022 21:55	3.14	6/24/2022 22:25	11.31	6/24/2022 21:13	0.78	6/24/2022 22:55	31.12
6/25/2022 22:39	89.20	6/24/2022 21:56	2.72	6/24/2022 22:26	11.33	6/24/2022 21:14	0.85	6/24/2022 22:56	31.13
6/25/2022 22:40	89.20	6/24/2022 21:57	2.43	6/24/2022 22:27	11.33	6/24/2022 21:15	0.78	6/24/2022 22:57	31.13
6/25/2022 22:41	89.20	6/24/2022 21:58	2.14	6/24/2022 22:28	11.37	6/24/2022 21:16	0.81	6/24/2022 22:58	31.13
6/25/2022 22:42	89.16	6/24/2022 21:59	1.90	6/24/2022 22:29	11.33	6/24/2022 21:17	0.76	6/24/2022 22:59	31.13
6/25/2022 22:43	89.16	6/24/2022 22:00	1.67	6/24/2022 22:30	11.32	6/24/2022 21:18	0.89	6/24/2022 23:00	31.11
6/25/2022 22:44	89.18	6/24/2022 22:01	1.51	6/24/2022 22:31	11.32	6/24/2022 21:19	0.78	6/24/2022 23:01	31.13
6/25/2022 22:45	89.14	6/24/2022 22:02	1.35	6/24/2022 22:32	11.32	6/24/2022 21:20	0.75	6/24/2022 23:02	31.15
6/25/2022 22:46	89.17	6/24/2022 22:03	1.22	6/24/2022 22:33	11.35	6/24/2022 21:21	0.86	6/24/2022 23:03	31.16
6/25/2022 22:47	89.11	6/24/2022 22:04	1.12	6/24/2022 22:34	11.27	6/24/2022 21:22	0.77	6/24/2022 23:04	31.13
6/25/2022 22:48	89.14	6/24/2022 22:05	1.02	6/24/2022 22:35	11.23	6/24/2022 21:23	0.82	6/24/2022 23:05	31.08
6/25/2022 22:49	89.14	6/24/2022 22:06	0.91	6/24/2022 22:36	11.22	6/24/2022 21:24	0.80	6/24/2022 23:06	31.15
6/25/2022 22:50	89.12	6/24/2022 22:07	6.12	6/24/2022 22:37	11.23	6/24/2022 21:25	0.75	6/24/2022 23:07	31.13
6/25/2022 22:51	89.12	6/24/2022 22:08	8.07	6/24/2022 22:38	11.18	6/24/2022 21:26	0.82	6/24/2022 23:08	31.12
6/25/2022 22:52	89.12	6/24/2022 22:09	6.81	6/24/2022 22:39	11.18	6/24/2022 21:27	0.77	6/24/2022 23:09	31.12
6/25/2022 22:53	89.08	6/24/2022 22:10	5.82	6/24/2022 22:40	11.13	6/24/2022 21:28	0.83	6/24/2022 23:10	31.11
6/25/2022 22:54	89.13	6/24/2022 22:11	4.97	6/24/2022 22:41	11.10	6/24/2022 21:29	0.76	6/24/2022 23:11	31.12
6/25/2022 22:55	89.14	6/24/2022 22:12	4.28	6/24/2022 22:42	11.08	6/24/2022 21:30	0.79	6/24/2022 23:12	31.12
6/25/2022 22:56	89.10	6/24/2022 22:13	3.68	6/24/2022 22:43	11.05	6/24/2022 21:31	0.79	6/24/2022 23:13	31.12
6/25/2022 22:57	89.07	6/24/2022 22:14	3.17	6/24/2022 22:44	11.04	6/24/2022 21:32	0.77	6/24/2022 23:14	31.11
6/25/2022 22:58	89.11	6/24/2022 22:15	2.78	6/24/2022 22:45	11.06	6/24/2022 21:33	0.77	6/24/2022 23:15	31.12
6/25/2022 22:59	89.07	6/24/2022 22:16	2.43	6/24/2022 22:46	10.99	6/24/2022 21:34	0.83	6/24/2022 23:16	31.07
6/25/2022 23:00	89.09	6/24/2022 22:17	2.15	6/24/2022 22:47	11.01	6/24/2022 21:35	0.80	6/24/2022 23:17	31.10
6/25/2022 23:01	89.08	6/24/2022 22:18	1.92	6/24/2022 22:48	11.00	6/24/2022 21:36	0.72	6/24/2022 23:18	31.12
6/25/2022 23:02	89.03	6/24/2022 22:19	1.73	6/24/2022 22:49	10.99	6/24/2022 21:37	0.75	6/24/2022 23:19	31.11
6/25/2022 23:03	89.09	6/24/2022 22:20	1.53	6/24/2022 22:50	10.96	6/24/2022 21:38	0.83	6/24/2022 23:20	31.11
6/25/2022 23:04	89.04	6/24/2022 22:21	1.36	6/24/2022 22:51	10.97	6/24/2022 21:39	0.73	6/24/2022 23:21	31.08
6/25/2022 23:05	89.05	6/24/2022 22:22	1.22	6/24/2022 22:52	10.92	6/24/2022 21:40	0.79	6/24/2022 23:22	31.11
6/25/2022 23:06	89.05	6/24/2022 22:23	1.10	6/24/2022 22:53	10.93	6/24/2022 21:41	0.82	6/24/2022 23:23	31.10
6/25/2022 23:07	89.05	6/24/2022 22:24	1.00	6/24/2022 22:54	10.91	6/24/2022 21:42	0.75	6/24/2022 23:24	31.06
6/25/2022 23:08	89.03	6/24/2022 22:25	0.88	6/24/2022 22:55	10.91	6/24/2022 21:43	0.81	6/24/2022 23:25	31.09
6/25/2022 23:09	89.00	6/24/2022 22:26	4.81	6/24/2022 22:56	10.90	6/24/2022 21:44	0.77	6/24/2022 23:26	31.11
6/25/2022 23:10	89.06	6/24/2022 22:27	8.36	6/24/2022 22:57	10.88	6/24/2022 21:45	0.78	6/24/2022 23:27	31.08
6/25/2022 23:11	89.05	6/24/2022 22:28	7.06	6/24/2022 22:58	10.85	6/24/2022 21:46	0.75	6/24/2022 23:28	31.08
6/25/2022 23:12	89.00	6/24/2022 22:29	6.01	6/24/2022 22:59	10.84	6/24/2022 21:47	0.85	6/24/2022 23:29	31.09
6/25/2022 23:13	88.97	6/24/2022 22:30	5.13	6/24/2022 23:00	10.81	6/24/2022 21:48	0.79	6/24/2022 23:30	31.11
6/25/2022 23:14	88.98	6/24/2022 22:31	4.41	6/24/2022 23:01	10.80	6/24/2022 21:49	0.80	6/24/2022 23:31	31.08
6/25/2022 23:15	89.08	6/24/2022 22:32	3.82	6/24/2022 23:02	12.75	6/24/2022 21:50	0.85	6/24/2022 23:32	31.10
6/25/2022 23:16	89.04	6/24/2022 22:33	3.34	6/24/2022 23:03	15.01	6/24/2022 21:51	0.77	6/24/2022 23:33	31.10
6/25/2022 23:17	88.98	6/24/2022 22:34	2.83	6/24/2022 23:04	14.48	6/24/2022 21:52	0.71	6/24/2022 23:34	31.08
6/25/2022 23:18	89.01	6/24/2022 22:35	2.53	6/24/2022 23:05	14.01	6/24/2022 21:53	0.73	6/24/2022 23:35	31.06
6/25/2022 23:19	88.96	6/24/2022 22:36	2.20	6/24/2022 23:06	13.62	6/24/2022 21:54	0.78	6/24/2022 23:36	31.08
6/25/2022 23:20	88.94	6/24/2022 22:37	1.93	6/24/2022 23:07	13.29	6/24/2022 21:55	0.88	6/24/2022 23:37	32.63
6/25/2022 23:21	89.02	6/24/2022 22:38	1.75	6/24/2022 23:08	12.98	6/24/2022 21:56	0.78	6/24/2022 23:38	31.67
6/25/2022 23:22	88.99	6/24/2022 22:39	1.54	6/24/2022 23:09	12.73	6/24/2022 21:57	0.73	6/24/2022 23:39	31.29
6/25/2022 23:23	89.01	6/24/2022 22:40	1.39	6/24/2022 23:10	12.50	6/24/2022 21:58	0.82	6/24/2022 23:40	31.18
6/25/2022 23:24	88.99	6/24/2022 22:41	2.73	6/24/2022 23:11	12.31	6/24/2022 21:59	0.78	6/24/2022 23:41	31.15
6/25/2022 23:25	88.96	6/24/2022 22:42	8.28	6/24/2022 23:12	12.13	6/24/2022 22:00	0.71	6/24/2022 23:42	31.13
6/25/2022 23:26	89.00	6/24/2022 22:43	7.94	6/24/2022 23:13	11.98	6/24/2022 22:01	0.80	6/24/2022 23:43	31.12
6/25/2022 23:27	88.92	6/24/2022 22:44	6.68	6/24/2022 23:14	11.87	6/24/2022 22:02	0.72	6/24/2022 23:44	31.14
6/25/2022 23:28	88.95	6/24/2022 22:45	5.74	6/24/2022 23:15	11.76	6/24/2022 22:03	0.81	6/24/2022 23:45	33.23
6/25/2022 23:29	89.00	6/24/2022 22:46	4.93	6/24/2022 23:16	11.67	6/24/2022 22:04	0.72	6/24/2022 23:46	32.20
6/25/2022 23:30	89.00	6/24/2022 22:47	4.24	6/24/2022 23:17	11.55	6/24/2022 22:05	0.83	6/24/2022 23:47	31.60
6/25/2022 23:31	88.92	6/24/2022 22:48	3.68	6/24/2022 23:18	11.53	6/24/2022 22:06	0.72	6/24/2022 23:48	31.29
6/25/2022 23:32	88.89	6/24/2022 22:49	3.19	6/24/2022 23:19	11.43	6/24/2022 22:07	0.82	6/24/2022 23:49	31.15
6/25/2022 23:33	88.93	6/24/2022 22:50	2.77	6/24/2022 23:20	11.39	6/24/2022 22:08	0.76	6/24/2022 23:50	31.15
6/25/2022 23:34	88.96	6/24/2022 22:51	2.42	6/24/2022 23:21	11.29	6/24/2022 22:09	0.73	6/24/2022 23:51	31.15
6/25/2022 23:35	88.91	6/24/2022 22:52	2.13	6/24/2022 23:22	11.25	6/24/2022 22:10	0.72	6/24/2022 23:52	31.09
6/25/2022 23:36	88.93	6/24/2022 22:53	1.93	6/24/2022 23:23	11.23	6/24/2022 22:11	0.84	6/24/2022 23:53	31.13
6/25/2022 23:37	88.90	6/24/2022 22:54	1.71	6/24/2022 23:24	11.20	6/24/2022 22:12	0.77	6/24/2022 23:54	31.11
6/25/2022 23:38	88.91	6/24/2022 22:55	1.50	6/24/2022 23:25	11.15	6/24/2022 22:13	0.74	6/24/2022 23:55	31.10
6/25/2022 23:39	90.15	6/24/2022 22:56	1.37	6/24/2022 23:26	11.07	6/24/2022 22:14	0.71	6/24/2022 23:56	31.13
6/25/2022 23:40	93.96	6/24/2022 22:57	1.23	6/24/2022 23:27	11.03	6/24/2022 22:15	0.83	6/24/2022 23:57	31.09
6/25/2022 23:41	96.06	6/24/2022 22:58	1.10	6/24/2022 23:28	11.05	6/24/2022 22:16	0.74	6/24/2022 23:58	31.12
6/25/2022 23:42	95.22	6/24/2022 22:59	1.04	6/24/2022 23:29	10.98	6/24/2022 22:17	0.71	6/24/2022 23:59	31.09
6/25/2022 23:43	93.18	6/24/2022 23:00	0.87	6/24/2022 23:30	10.92	6/24/2022 22:18	0.81	6/25/2022 0:00	31.09
6/25/2022 23:44	92.01	6/24/2022 23:01	6.13	6/24/2022 23:31	10.92	6/24/2022 22:19	0.73	6/25/2022 0:01	31.06
6/25/2022 23:45	91.28	6/24/2022 23:02	8.00	6/24/2022 23:32	10.89	6/24/2022 22:20	0.86	6/25/2022 0:02	31.11
6/25/2022 23:46	90.80	6/24/2022 23:03	6.77	6/24/2022 23:33	10.82	6/24/2022 22:21	0.70	6/25/2022 0:03	31.09
6/25/2022 23:47	90.47	6/24/2022 23:04	5.76	6/24/2022 23:34	10.83	6/24/2022 22:22	0.84	6/25/2022 0:04	31.10
6/25/2022 23:48	90.24	6/24/2022 23:05	4.94	6/24/2022 23:35	10.80	6/24/2022 22:23	0.73	6/25/2022 0:05	31.06
6/25/2022 23:49	90.05	6/24/2022 23:06	4.22	6/24/2022 23:36	10.81	6/24/2022 22:24	0.78	6/25/2022 0:06	31.11

6/25/2022 23:50	89.98	6/24/2022 23:07	3.67	6/24/2022 23:37	10.75	6/24/2022 22:25	0.75	6/25/2022 0:07	31.09
6/25/2022 23:51	89.80	6/24/2022 23:08	3.19	6/24/2022 23:38	10.79	6/24/2022 22:26	0.83	6/25/2022 0:08	31.08
6/25/2022 23:52	89.64	6/24/2022 23:09	2.76	6/24/2022 23:39	10.75	6/24/2022 22:27	0.75	6/25/2022 0:09	31.05
6/25/2022 23:53	89.58	6/24/2022 23:10	2.39	6/24/2022 23:40	10.69	6/24/2022 22:28	0.76	6/25/2022 0:10	31.06
6/25/2022 23:54	89.51	6/24/2022 23:11	2.16	6/24/2022 23:41	10.69	6/24/2022 22:29	0.75	6/25/2022 0:11	31.06
6/25/2022 23:55	89.50	6/24/2022 23:12	1.87	6/24/2022 23:42	10.73	6/24/2022 22:30	0.74	6/25/2022 0:12	31.06
6/25/2022 23:56	89.44	6/24/2022 23:13	1.70	6/24/2022 23:43	10.70	6/24/2022 22:31	0.80	6/25/2022 0:13	31.05
6/25/2022 23:57	89.46	6/24/2022 23:14	1.53	6/24/2022 23:44	10.70	6/24/2022 22:32	0.77	6/25/2022 0:14	31.09
6/25/2022 23:58	89.38	6/24/2022 23:15	1.30	6/24/2022 23:45	10.70	6/24/2022 22:33	0.78	6/25/2022 0:15	31.06
6/25/2022 23:59	89.35	6/24/2022 23:16	1.20	6/24/2022 23:46	10.74	6/24/2022 22:34	0.74	6/25/2022 0:16	31.06
6/26/2022 0:00	89.31	6/24/2022 23:17	1.07	6/24/2022 23:47	10.73	6/24/2022 22:35	0.78	6/25/2022 0:17	31.08
6/26/2022 0:01	89.29	6/24/2022 23:18	1.01	6/24/2022 23:48	10.70	6/24/2022 22:36	0.77	6/25/2022 0:18	31.06
6/26/2022 0:02	89.29	6/24/2022 23:19	0.88	6/24/2022 23:49	10.73	6/24/2022 22:37	0.75	6/25/2022 0:19	31.07
6/26/2022 0:03	89.26	6/24/2022 23:20	4.53	6/24/2022 23:50	10.72	6/24/2022 22:38	0.78	6/25/2022 0:20	31.10
6/26/2022 0:04	89.17	6/24/2022 23:21	8.50	6/24/2022 23:51	10.72	6/24/2022 22:39	0.70	6/25/2022 0:21	31.07
6/26/2022 0:05	89.18	6/24/2022 23:22	7.12	6/24/2022 23:52	10.65	6/24/2022 22:40	0.82	6/25/2022 0:22	31.04
6/26/2022 0:06	89.15	6/24/2022 23:23	6.07	6/24/2022 23:53	10.66	6/24/2022 22:41	0.71	6/25/2022 0:23	31.10
6/26/2022 0:07	89.18	6/24/2022 23:24	5.22	6/24/2022 23:54	10.66	6/24/2022 22:42	0.80	6/25/2022 0:24	31.06
6/26/2022 0:08	89.09	6/24/2022 23:25	4.46	6/24/2022 23:55	10.65	6/24/2022 22:43	0.80	6/25/2022 0:25	31.06
6/26/2022 0:09	89.15	6/24/2022 23:26	3.84	6/24/2022 23:56	10.65	6/24/2022 22:44	0.77	6/25/2022 0:26	31.06
6/26/2022 0:10	89.12	6/24/2022 23:27	3.33	6/24/2022 23:57	10.66	6/24/2022 22:45	0.75	6/25/2022 0:27	31.08
6/26/2022 0:11	89.13	6/24/2022 23:28	2.85	6/24/2022 23:58	10.64	6/24/2022 22:46	0.72	6/25/2022 0:28	31.04
6/26/2022 0:12	89.07	6/24/2022 23:29	2.53	6/24/2022 23:59	10.60	6/24/2022 22:47	0.76	6/25/2022 0:29	31.09
6/26/2022 0:13	89.08	6/24/2022 23:30	2.20	6/25/2022 0:00	10.60	6/24/2022 22:48	0.79	6/25/2022 0:30	31.03
6/26/2022 0:14	89.07	6/24/2022 23:31	1.96	6/25/2022 0:01	10.62	6/24/2022 22:49	0.74	6/25/2022 0:31	31.03
6/26/2022 0:15	89.06	6/24/2022 23:32	1.76	6/25/2022 0:02	10.59	6/24/2022 22:50	0.76	6/25/2022 0:32	31.05
6/26/2022 0:16	89.05	6/24/2022 23:33	1.55	6/25/2022 0:03	10.57	6/24/2022 22:51	0.79	6/25/2022 0:33	31.05
6/26/2022 0:17	89.04	6/24/2022 23:34	1.38	6/25/2022 0:04	10.60	6/24/2022 22:52	0.72	6/25/2022 0:34	31.04
6/26/2022 0:18	89.01	6/24/2022 23:35	1.22	6/25/2022 0:05	10.61	6/24/2022 22:53	0.81	6/25/2022 0:35	31.04
6/26/2022 0:19	88.95	6/24/2022 23:36	1.14	6/25/2022 0:06	10.56	6/24/2022 22:54	0.75	6/25/2022 0:36	31.05
6/26/2022 0:20	89.01	6/24/2022 23:37	1.00	6/25/2022 0:07	10.54	6/24/2022 22:55	0.77	6/25/2022 0:37	31.05
6/26/2022 0:21	88.96	6/24/2022 23:38	0.96	6/25/2022 0:08	10.54	6/24/2022 22:56	0.74	6/25/2022 0:38	31.04
6/26/2022 0:22	89.02	6/24/2022 23:39	2.29	6/25/2022 0:09	10.59	6/24/2022 22:57	0.74	6/25/2022 0:39	31.00
6/26/2022 0:23	88.99	6/24/2022 23:40	7.92	6/25/2022 0:10	10.58	6/24/2022 22:58	0.80	6/25/2022 0:40	31.04
6/26/2022 0:24	89.01	6/24/2022 23:41	7.58	6/25/2022 0:11	10.54	6/24/2022 22:59	0.76	6/25/2022 0:41	31.05
6/26/2022 0:25	88.98	6/24/2022 23:42	6.44	6/25/2022 0:12	10.58	6/24/2022 23:00	0.81	6/25/2022 0:42	31.05
6/26/2022 0:26	89.04	6/24/2022 23:43	5.49	6/25/2022 0:13	10.55	6/24/2022 23:01	0.74	6/25/2022 0:43	31.02
6/26/2022 0:27	88.95	6/24/2022 23:44	4.71	6/25/2022 0:14	10.61	6/24/2022 23:02	0.76	6/25/2022 0:44	31.02
6/26/2022 0:28	88.94	6/24/2022 23:45	4.04	6/25/2022 0:15	10.62	6/24/2022 23:03	0.77	6/25/2022 0:45	31.04
6/26/2022 0:29	88.91	6/24/2022 23:46	3.53	6/25/2022 0:16	10.62	6/24/2022 23:04	0.72	6/25/2022 0:46	31.03
6/26/2022 0:30	88.96	6/24/2022 23:47	3.06	6/25/2022 0:17	10.62	6/24/2022 23:05	0.76	6/25/2022 0:47	31.02
6/26/2022 0:31	88.91	6/24/2022 23:48	2.59	6/25/2022 0:18	10.63	6/24/2022 23:06	0.77	6/25/2022 0:48	31.05
6/26/2022 0:32	88.97	6/24/2022 23:49	2.31	6/25/2022 0:19	10.64	6/24/2022 23:07	0.83	6/25/2022 0:49	31.03
6/26/2022 0:33	88.91	6/24/2022 23:50	2.04	6/25/2022 0:20	10.63	6/24/2022 23:08	0.79	6/25/2022 0:50	31.05
6/26/2022 0:34	88.87	6/24/2022 23:51	1.82	6/25/2022 0:21	10.61	6/24/2022 23:09	0.73	6/25/2022 0:51	31.03
6/26/2022 0:35	88.92	6/24/2022 23:52	1.64	6/25/2022 0:22	10.61	6/24/2022 23:10	0.79	6/25/2022 0:52	31.05
6/26/2022 0:36	88.96	6/24/2022 23:53	1.46	6/25/2022 0:23	10.59	6/24/2022 23:11	0.73	6/25/2022 0:53	31.02
6/26/2022 0:37	88.86	6/24/2022 23:54	1.30	6/25/2022 0:24	10.60	6/24/2022 23:12	0.77	6/25/2022 0:54	31.04
6/26/2022 0:38	88.88	6/24/2022 23:55	1.17	6/25/2022 0:25	10.57	6/24/2022 23:13	0.77	6/25/2022 0:55	31.06
6/26/2022 0:39	88.87	6/24/2022 23:56	1.04	6/25/2022 0:26	10.57	6/24/2022 23:14	0.72	6/25/2022 0:56	31.03
6/26/2022 0:40	88.81	6/24/2022 23:57	0.96	6/25/2022 0:27	10.59	6/24/2022 23:15	0.82	6/25/2022 0:57	31.04
6/26/2022 0:41	88.86	6/24/2022 23:58	0.90	6/25/2022 0:28	10.60	6/24/2022 23:16	0.70	6/25/2022 0:58	31.05
6/26/2022 0:42	88.84	6/24/2022 23:59	5.74	6/25/2022 0:29	10.59	6/24/2022 23:17	0.81	6/25/2022 0:59	31.05
6/26/2022 0:43	88.86	6/25/2022 0:00	8.19	6/25/2022 0:30	10.57	6/24/2022 23:18	0.73	6/25/2022 1:00	30.99
6/26/2022 0:44	88.84	6/25/2022 0:01	6.88	6/25/2022 0:31	10.55	6/24/2022 23:19	0.85	6/25/2022 1:01	31.01
6/26/2022 0:45	88.86	6/25/2022 0:02	5.83	6/25/2022 0:32	10.58	6/24/2022 23:20	0.74	6/25/2022 1:02	31.00
6/26/2022 0:46	88.81	6/25/2022 0:03	5.01	6/25/2022 0:33	10.53	6/24/2022 23:21	0.79	6/25/2022 1:03	31.02
6/26/2022 0:47	88.81	6/25/2022 0:04	4.30	6/25/2022 0:34	10.52	6/24/2022 23:22	0.76	6/25/2022 1:04	31.03
6/26/2022 0:48	88.80	6/25/2022 0:05	3.74	6/25/2022 0:35	10.56	6/24/2022 23:23	0.76	6/25/2022 1:05	31.02
6/26/2022 0:49	88.78	6/25/2022 0:06	3.23	6/25/2022 0:36	10.54	6/24/2022 23:24	0.83	6/25/2022 1:06	31.03
6/26/2022 0:50	88.80	6/25/2022 0:07	2.80	6/25/2022 0:37	10.53	6/24/2022 23:25	0.80	6/25/2022 1:07	31.01
6/26/2022 0:51	88.76	6/25/2022 0:08	2.45	6/25/2022 0:38	10.53	6/24/2022 23:26	0.78	6/25/2022 1:08	31.02
6/26/2022 0:52	88.76	6/25/2022 0:09	2.18	6/25/2022 0:39	10.56	6/24/2022 23:27	0.76	6/25/2022 1:09	31.00
6/26/2022 0:53	88.80	6/25/2022 0:10	1.90	6/25/2022 0:40	10.53	6/24/2022 23:28	0.78	6/25/2022 1:10	30.99
6/26/2022 0:54	88.77	6/25/2022 0:11	1.69	6/25/2022 0:41	10.54	6/24/2022 23:29	0.76	6/25/2022 1:11	31.02
6/26/2022 0:55	88.80	6/25/2022 0:12	1.54	6/25/2022 0:42	10.54	6/24/2022 23:30	0.84	6/25/2022 1:12	30.99
6/26/2022 0:56	88.79	6/25/2022 0:13	1.35	6/25/2022 0:43	10.57	6/24/2022 23:31	0.72	6/25/2022 1:13	31.01
6/26/2022 0:57	88.79	6/25/2022 0:14	1.20	6/25/2022 0:44	10.59	6/24/2022 23:32	0.79	6/25/2022 1:14	30.99
6/26/2022 0:58	88.74	6/25/2022 0:15	1.08	6/25/2022 0:45	10.57	6/24/2022 23:33	0.75	6/25/2022 1:15	31.01
6/26/2022 0:59	88.71	6/25/2022 0:16	1.00	6/25/2022 0:46	10.58	6/24/2022 23:34	0.76	6/25/2022 1:16	31.01
6/26/2022 1:00	88.74	6/25/2022 0:17	0.90	6/25/2022 0:47	10.59	6/24/2022 23:35	0.73	6/25/2022 1:17	31.04
6/26/2022 1:01	88.75	6/25/2022 0:18	3.50	6/25/2022 0:48	10.59	6/24/2022 23:36	0.80	6/25/2022 1:18	30.98
6/26/2022 1:02	88.74	6/25/2022 0:19	8.71	6/25/2022 0:49	10.60	6/24/2022 23:37	0.72	6/25/2022 1:19	31.00
6/26/2022 1:03	88.69	6/25/2022 0:20	7.30	6/25/2022 0:50	10.56	6/24/2022 23:38	0.76	6/25/2022 1:20	31.02
6/26/2022 1:04	88.77	6/25/2022 0:21	6.16	6/25/2022 0:51	10.57	6/24/2022 23:39	0.76	6/25/2022 1:21	30.98
6/26/2022 1:05	88.70	6/25/2022 0:22	5.25	6/25/2022 0:52	10.55	6/24/2022 23:40	0.74	6/25/2022 1:22	30.97
6/26/2022 1:06	88.77	6/25/2022 0:23	4.54	6/25/2022 0:53	10.61	6/24/2022 23:41	0.73	6/25/2022 1:23	31.01
6/26/2022 1:07	88.72	6/25/2022 0:24	3.95	6/25/2022 0:54	10.58	6/24/2022 23:42	0.80	6/25/2022 1:24	31.00
6/26/2022 1:08	88.74	6/25/2022 0:25	3.40	6/25/2022 0:55	10.58	6/24/2022 23:43	0.82	6/25/2022 1:25	31.00
6/26/2022 1:09	88.77	6/25/2022 0:26	2.96	6/25/2022 0:56	10.54	6/24/2022 23:44	0.73	6/25/2022 1:26	31.00
6/26/2022 1:10	88.70	6/25/2022 0:27	2.53	6/25/2022 0:57	10.53	6/24/2022 23:45	0.72	6/25/2022 1:27	31.00
6/26/2022 1:11	88.74	6/25/2022 0:28	2.25	6/25/2022 0:58	10.56	6/24/2022 23:46	0.81	6/25/2022 1:28	31.00
6/26/2022 1:12	88.73	6/25/2022 0:29	1.98	6/25/2022 0:59	10.53	6/24/2022 23:47	0.74	6/25/2022 1:29	30.98
6/26/2022 1:13	88.71	6/25/2022 0:30	1.80	6/25/2022 1:00	10.54	6/24/2022 23:48	0.74	6/25/2022 1:30	30.99
6/26/2022 1:14	88.69	6/25/2022 0:31	1.59	6/25/2022 1:01	10.53	6/24/2022 23:49	0.76	6/25/2022 1:31	30.97
6/26/2022 1:15	88.71	6/25/2022 0:32	1.45	6/25/2022 1:02	10.52	6/24/2022 23:50	0.74	6/25/2022 1:32	31.00
6/26/2022 1:16	88.73	6/25/2022 0:33	1.29	6/25/2022 1:03	10.51	6/24/2022 23:51	0.84	6/25/2022 1:33	31.00
6/26/2022 1:17	88.66	6/25/2022 0:34	1.20	6/25/2022 1:04	10.52	6/24/2022 23:52	0.76	6/25/2022 1:34	30.97

6/26/2022 1:18	88.71	6/25/2022 0:35	1.12	6/25/2022 1:05	10.51	6/24/2022 23:53	0.82	6/25/2022 1:35	31.00
6/26/2022 1:19	88.67	6/25/2022 0:36	0.96	6/25/2022 1:06	10.48	6/24/2022 23:54	0.75	6/25/2022 1:36	31.00
6/26/2022 1:20	88.69	6/25/2022 0:37	1.60	6/25/2022 1:07	10.49	6/24/2022 23:55	0.78	6/25/2022 1:37	31.00
6/26/2022 1:21	88.70	6/25/2022 0:38	7.39	6/25/2022 1:08	10.51	6/24/2022 23:56	0.75	6/25/2022 1:38	31.00
6/26/2022 1:22	88.65	6/25/2022 0:39	7.76	6/25/2022 1:09	10.52	6/24/2022 23:57	0.82	6/25/2022 1:39	30.98
6/26/2022 1:23	88.68	6/25/2022 0:40	6.56	6/25/2022 1:10	10.51	6/24/2022 23:58	0.73	6/25/2022 1:40	30.98
6/26/2022 1:24	88.66	6/25/2022 0:41	5.63	6/25/2022 1:11	10.53	6/24/2022 23:59	0.82	6/25/2022 1:41	30.97
6/26/2022 1:25	88.60	6/25/2022 0:42	4.79	6/25/2022 1:12	10.53	6/25/2022 0:00	0.74	6/25/2022 1:42	30.95
6/26/2022 1:26	88.61	6/25/2022 0:43	4.13	6/25/2022 1:13	10.54	6/25/2022 0:01	0.76	6/25/2022 1:43	30.96
6/26/2022 1:27	88.63	6/25/2022 0:44	3.59	6/25/2022 1:14	10.53	6/25/2022 0:02	0.77	6/25/2022 1:44	30.97
6/26/2022 1:28	88.63	6/25/2022 0:45	3.08	6/25/2022 1:15	10.57	6/25/2022 0:03	0.83	6/25/2022 1:45	30.94
6/26/2022 1:29	88.66	6/25/2022 0:46	2.67	6/25/2022 1:16	10.59	6/25/2022 0:04	0.82	6/25/2022 1:46	31.00
6/26/2022 1:30	88.64	6/25/2022 0:47	2.35	6/25/2022 1:17	10.59	6/25/2022 0:05	0.76	6/25/2022 1:47	30.94
6/26/2022 1:31	88.63	6/25/2022 0:48	2.07	6/25/2022 1:18	10.56	6/25/2022 0:06	0.72	6/25/2022 1:48	31.00
6/26/2022 1:32	88.63	6/25/2022 0:49	1.84	6/25/2022 1:19	10.58	6/25/2022 0:07	0.82	6/25/2022 1:49	31.00
6/26/2022 1:33	88.64	6/25/2022 0:50	1.63	6/25/2022 1:20	10.55	6/25/2022 0:08	0.75	6/25/2022 1:50	30.95
6/26/2022 1:34	88.60	6/25/2022 0:51	1.46	6/25/2022 1:21	10.59	6/25/2022 0:09	0.74	6/25/2022 1:51	30.98
6/26/2022 1:35	88.62	6/25/2022 0:52	1.36	6/25/2022 1:22	10.54	6/25/2022 0:10	0.82	6/25/2022 1:52	30.94
6/26/2022 1:36	88.63	6/25/2022 0:53	1.18	6/25/2022 1:23	10.57	6/25/2022 0:11	0.78	6/25/2022 1:53	30.99
6/26/2022 1:37	88.56	6/25/2022 0:54	1.07	6/25/2022 1:24	10.54	6/25/2022 0:12	0.77	6/25/2022 1:54	30.97
6/26/2022 1:38	88.63	6/25/2022 0:55	0.91	6/25/2022 1:25	10.54	6/25/2022 0:13	0.79	6/25/2022 1:55	30.97
6/26/2022 1:39	88.61	6/25/2022 0:56	0.88	6/25/2022 1:26	10.52	6/25/2022 0:14	0.74	6/25/2022 1:56	30.96
6/26/2022 1:40	88.61	6/25/2022 0:57	5.59	6/25/2022 1:27	10.55	6/25/2022 0:15	0.76	6/25/2022 1:57	30.94
6/26/2022 1:41	88.54	6/25/2022 0:58	8.06	6/25/2022 1:28	10.53	6/25/2022 0:16	0.71	6/25/2022 1:58	31.03
6/26/2022 1:42	88.58	6/25/2022 0:59	6.78	6/25/2022 1:29	10.54	6/25/2022 0:17	0.80	6/25/2022 1:59	31.01
6/26/2022 1:43	88.55	6/25/2022 1:00	5.75	6/25/2022 1:30	10.50	6/25/2022 0:18	0.73	6/25/2022 2:00	31.04
6/26/2022 1:44	88.60	6/25/2022 1:01	4.95	6/25/2022 1:31	10.51	6/25/2022 0:19	0.81	6/25/2022 2:01	31.03
6/26/2022 1:45	88.54	6/25/2022 1:02	4.27	6/25/2022 1:32	10.50	6/25/2022 0:20	0.74	6/25/2022 2:02	31.01
6/26/2022 1:46	88.56	6/25/2022 1:03	3.70	6/25/2022 1:33	10.48	6/25/2022 0:21	0.74	6/25/2022 2:03	31.01
6/26/2022 1:47	88.56	6/25/2022 1:04	3.21	6/25/2022 1:34	10.44	6/25/2022 0:22	0.73	6/25/2022 2:04	31.02
6/26/2022 1:48	88.49	6/25/2022 1:05	2.76	6/25/2022 1:35	10.50	6/25/2022 0:23	0.79	6/25/2022 2:05	31.01
6/26/2022 1:49	88.56	6/25/2022 1:06	2.38	6/25/2022 1:36	10.50	6/25/2022 0:24	0.82	6/25/2022 2:06	31.02
6/26/2022 1:50	88.57	6/25/2022 1:07	2.12	6/25/2022 1:37	10.47	6/25/2022 0:25	0.72	6/25/2022 2:07	31.03
6/26/2022 1:51	88.56	6/25/2022 1:08	1.91	6/25/2022 1:38	10.50	6/25/2022 0:26	0.80	6/25/2022 2:08	31.02
6/26/2022 1:52	88.61	6/25/2022 1:09	1.63	6/25/2022 1:39	10.53	6/25/2022 0:27	0.83	6/25/2022 2:09	30.98
6/26/2022 1:53	88.57	6/25/2022 1:10	1.47	6/25/2022 1:40	10.55	6/25/2022 0:28	0.77	6/25/2022 2:10	31.01
6/26/2022 1:54	88.53	6/25/2022 1:11	1.33	6/25/2022 1:41	10.52	6/25/2022 0:29	0.81	6/25/2022 2:11	31.00
6/26/2022 1:55	88.54	6/25/2022 1:12	4.59	6/25/2022 1:42	10.55	6/25/2022 0:30	0.75	6/25/2022 2:12	30.98
6/26/2022 1:56	88.53	6/25/2022 1:13	8.91	6/25/2022 1:43	10.58	6/25/2022 0:31	0.74	6/25/2022 2:13	31.01
6/26/2022 1:57	88.51	6/25/2022 1:14	7.52	6/25/2022 1:44	10.53	6/25/2022 0:32	0.83	6/25/2022 2:14	30.97
6/26/2022 1:58	88.53	6/25/2022 1:15	6.35	6/25/2022 1:45	10.60	6/25/2022 0:33	0.76	6/25/2022 2:15	31.00
6/26/2022 1:59	88.55	6/25/2022 1:16	5.41	6/25/2022 1:46	10.56	6/25/2022 0:34	0.76	6/25/2022 2:16	30.96
6/26/2022 2:00	88.51	6/25/2022 1:17	4.67	6/25/2022 1:47	10.58	6/25/2022 0:35	0.80	6/25/2022 2:17	30.97
6/26/2022 2:01	88.51	6/25/2022 1:18	4.00	6/25/2022 1:48	10.56	6/25/2022 0:36	0.74	6/25/2022 2:18	30.98
6/26/2022 2:02	88.52	6/25/2022 1:19	3.46	6/25/2022 1:49	10.56	6/25/2022 0:37	0.78	6/25/2022 2:19	30.99
6/26/2022 2:03	88.50	6/25/2022 1:20	3.00	6/25/2022 1:50	10.52	6/25/2022 0:38	0.76	6/25/2022 2:20	30.99
6/26/2022 2:04	88.52	6/25/2022 1:21	2.62	6/25/2022 1:51	10.54	6/25/2022 0:39	0.75	6/25/2022 2:21	31.02
6/26/2022 2:05	88.44	6/25/2022 1:22	2.33	6/25/2022 1:52	10.53	6/25/2022 0:40	0.72	6/25/2022 2:22	31.04
6/26/2022 2:06	88.44	6/25/2022 1:23	2.07	6/25/2022 1:53	10.55	6/25/2022 0:41	0.72	6/25/2022 2:23	31.02
6/26/2022 2:07	88.47	6/25/2022 1:24	1.77	6/25/2022 1:54	10.53	6/25/2022 0:42	0.75	6/25/2022 2:24	31.01
6/26/2022 2:08	88.42	6/25/2022 1:25	1.58	6/25/2022 1:55	10.56	6/25/2022 0:43	0.75	6/25/2022 2:25	31.02
6/26/2022 2:09	88.51	6/25/2022 1:26	1.43	6/25/2022 1:56	10.59	6/25/2022 0:44	0.85	6/25/2022 2:26	31.00
6/26/2022 2:10	88.49	6/25/2022 1:27	1.31	6/25/2022 1:57	10.59	6/25/2022 0:45	0.74	6/25/2022 2:27	30.98
6/26/2022 2:11	88.49	6/25/2022 1:28	1.13	6/25/2022 1:58	10.59	6/25/2022 0:46	0.78	6/25/2022 2:28	31.04
6/26/2022 2:12	88.47	6/25/2022 1:29	1.04	6/25/2022 1:59	10.63	6/25/2022 0:47	0.82	6/25/2022 2:29	30.97
6/26/2022 2:13	88.47	6/25/2022 1:30	1.01	6/25/2022 2:00	10.60	6/25/2022 0:48	0.73	6/25/2022 2:30	31.01
6/26/2022 2:14	88.50	6/25/2022 1:31	2.97	6/25/2022 2:01	10.59	6/25/2022 0:49	0.80	6/25/2022 2:31	30.97
6/26/2022 2:15	88.46	6/25/2022 1:32	8.45	6/25/2022 2:02	10.60	6/25/2022 0:50	0.75	6/25/2022 2:32	30.96
6/26/2022 2:16	88.44	6/25/2022 1:33	7.33	6/25/2022 2:03	10.59	6/25/2022 0:51	0.80	6/25/2022 2:33	31.01
6/26/2022 2:17	88.39	6/25/2022 1:34	6.23	6/25/2022 2:04	10.60	6/25/2022 0:52	0.75	6/25/2022 2:34	31.01
6/26/2022 2:18	88.41	6/25/2022 1:35	5.30	6/25/2022 2:05	10.58	6/25/2022 0:53	0.75	6/25/2022 2:35	30.98
6/26/2022 2:19	88.39	6/25/2022 1:36	4.57	6/25/2022 2:06	10.62	6/25/2022 0:54	0.81	6/25/2022 2:36	30.94
6/26/2022 2:20	88.42	6/25/2022 1:37	3.97	6/25/2022 2:07	10.57	6/25/2022 0:55	0.72	6/25/2022 2:37	30.96
6/26/2022 2:21	88.41	6/25/2022 1:38	3.37	6/25/2022 2:08	10.59	6/25/2022 0:56	0.80	6/25/2022 2:38	30.95
6/26/2022 2:22	88.42	6/25/2022 1:39	2.91	6/25/2022 2:09	10.59	6/25/2022 0:57	0.69	6/25/2022 2:39	30.97
6/26/2022 2:23	88.43	6/25/2022 1:40	2.58	6/25/2022 2:10	10.54	6/25/2022 0:58	0.84	6/25/2022 2:40	31.00
6/26/2022 2:24	88.42	6/25/2022 1:41	2.25	6/25/2022 2:11	10.56	6/25/2022 0:59	0.83	6/25/2022 2:41	30.97
6/26/2022 2:25	88.39	6/25/2022 1:42	1.97	6/25/2022 2:12	10.56	6/25/2022 1:00	0.80	6/25/2022 2:42	30.95
6/26/2022 2:26	88.43	6/25/2022 1:43	1.75	6/25/2022 2:13	10.57	6/25/2022 1:01	0.86	6/25/2022 2:43	30.98
6/26/2022 2:27	88.35	6/25/2022 1:44	1.61	6/25/2022 2:14	10.55	6/25/2022 1:02	0.77	6/25/2022 2:44	30.93
6/26/2022 2:28	88.41	6/25/2022 1:45	1.41	6/25/2022 2:15	10.54	6/25/2022 1:03	0.75	6/25/2022 2:45	30.97
6/26/2022 2:29	88.39	6/25/2022 1:46	1.27	6/25/2022 2:16	10.48	6/25/2022 1:04	0.83	6/25/2022 2:46	30.97
6/26/2022 2:30	88.37	6/25/2022 1:47	1.09	6/25/2022 2:17	10.51	6/25/2022 1:05	0.78	6/25/2022 2:47	30.95
6/26/2022 2:31	88.37	6/25/2022 1:48	1.05	6/25/2022 2:18	10.52	6/25/2022 1:06	0.72	6/25/2022 2:48	30.96
6/26/2022 2:32	88.39	6/25/2022 1:49	0.92	6/25/2022 2:19	10.54	6/25/2022 1:07	0.80	6/25/2022 2:49	30.97
6/26/2022 2:33	88.37	6/25/2022 1:50	3.63	6/25/2022 2:20	10.53	6/25/2022 1:08	0.77	6/25/2022 2:50	30.97
6/26/2022 2:34	88.38	6/25/2022 1:51	8.73	6/25/2022 2:21	10.54	6/25/2022 1:09	0.82	6/25/2022 2:51	30.96
6/26/2022 2:35	88.38	6/25/2022 1:52	7.30	6/25/2022 2:22	10.51	6/25/2022 1:10	0.72	6/25/2022 2:52	30.98
6/26/2022 2:36	88.34	6/25/2022 1:53	6.17	6/25/2022 2:23	10.54	6/25/2022 1:11	0.76	6/25/2022 2:53	31.00
6/26/2022 2:37	88.34	6/25/2022 1:54	5.28	6/25/2022 2:24	10.56	6/25/2022 1:12	0.77	6/25/2022 2:54	30.96
6/26/2022 2:38	88.36	6/25/2022 1:55	4.57	6/25/2022 2:25	10.54	6/25/2022 1:13	0.78	6/25/2022 2:55	30.94
6/26/2022 2:39	88.36	6/25/2022 1:56	3.90	6/25/2022 2:26	10.55	6/25/2022 1:14	0.76	6/25/2022 2:56	30.94
6/26/2022 2:40	88.36	6/25/2022 1:57	3.40	6/25/2022 2:27	10.60	6/25/2022 1:15	0.72	6/25/2022 2:57	30.95
6/26/2022 2:41	88.34	6/25/2022 1:58	2.91	6/25/2022 2:28	10.59	6/25/2022 1:16	0.74	6/25/2022 2:58	30.95
6/26/2022 2:42	88.31	6/25/2022 1:59	2.57	6/25/2022 2:29	10.60	6/25/2022 1:17	0.74	6/25/2022 2:59	30.92
6/26/2022 2:43	88.39	6/25/2022 2:00	2.22	6/25/2022 2:30	10.60	6/25/2022 1:18	0.82	6/25/2022 3:00	30.95
6/26/2022 2:44	88.28	6/25/2022 2:01	1.98	6/25/2022 2:31	10.61	6/25/2022 1:19	0.76	6/25/2022 3:01	30.92
6/26/2022 2:45	88.31	6/25/2022 2:02	1.77	6/25/2022 2:32	10.56	6/25/2022 1:20	0.80	6/25/2022 3:02	30.93

6/26/2022 2:46	88.27	6/25/2022 2:03	1.56	6/25/2022 2:33	10.58	6/25/2022 1:21	0.81	6/25/2022 3:03	30.95
6/26/2022 2:47	88.33	6/25/2022 2:04	1.40	6/25/2022 2:34	10.57	6/25/2022 1:22	0.76	6/25/2022 3:04	30.94
6/26/2022 2:48	88.28	6/25/2022 2:05	1.27	6/25/2022 2:35	10.58	6/25/2022 1:23	0.84	6/25/2022 3:05	30.93
6/26/2022 2:49	88.33	6/25/2022 2:06	1.12	6/25/2022 2:36	10.55	6/25/2022 1:24	0.72	6/25/2022 3:06	30.95
6/26/2022 2:50	88.29	6/25/2022 2:07	2.76	6/25/2022 2:37	10.57	6/25/2022 1:25	0.82	6/25/2022 3:07	30.94
6/26/2022 2:51	88.31	6/25/2022 2:08	8.42	6/25/2022 2:38	10.56	6/25/2022 1:26	0.74	6/25/2022 3:08	30.93
6/26/2022 2:52	88.33	6/25/2022 2:09	9.88	6/25/2022 2:39	10.54	6/25/2022 1:27	0.79	6/25/2022 3:09	30.95
6/26/2022 2:53	88.28	6/25/2022 2:10	8.30	6/25/2022 2:40	10.53	6/25/2022 1:28	0.76	6/25/2022 3:10	30.92
6/26/2022 2:54	88.30	6/25/2022 2:11	7.04	6/25/2022 2:41	10.53	6/25/2022 1:29	0.84	6/25/2022 3:11	30.92
6/26/2022 2:55	88.27	6/25/2022 2:12	5.98	6/25/2022 2:42	10.50	6/25/2022 1:30	0.74	6/25/2022 3:12	30.94
6/26/2022 2:56	88.27	6/25/2022 2:13	5.14	6/25/2022 2:43	10.49	6/25/2022 1:31	0.83	6/25/2022 3:13	30.95
6/26/2022 2:57	88.27	6/25/2022 2:14	5.48	6/25/2022 2:44	10.51	6/25/2022 1:32	0.80	6/25/2022 3:14	30.95
6/26/2022 2:58	88.24	6/25/2022 2:15	10.66	6/25/2022 2:45	10.53	6/25/2022 1:33	0.74	6/25/2022 3:15	30.92
6/26/2022 2:59	88.29	6/25/2022 2:16	12.64	6/25/2022 2:46	10.51	6/25/2022 1:34	0.73	6/25/2022 3:16	30.95
6/26/2022 3:00	88.25	6/25/2022 2:17	10.72	6/25/2022 2:47	10.51	6/25/2022 1:35	0.77	6/25/2022 3:17	30.95
6/26/2022 3:01	88.33	6/25/2022 2:18	9.08	6/25/2022 2:48	10.51	6/25/2022 1:36	0.76	6/25/2022 3:18	30.87
6/26/2022 3:02	88.24	6/25/2022 2:19	7.73	6/25/2022 2:49	10.49	6/25/2022 1:37	0.83	6/25/2022 3:19	30.93
6/26/2022 3:03	88.27	6/25/2022 2:20	6.58	6/25/2022 2:50	10.53	6/25/2022 1:38	0.78	6/25/2022 3:20	30.90
6/26/2022 3:04	88.26	6/25/2022 2:21	5.64	6/25/2022 2:51	10.53	6/25/2022 1:39	0.75	6/25/2022 3:21	30.92
6/26/2022 3:05	88.30	6/25/2022 2:22	4.91	6/25/2022 2:52	10.54	6/25/2022 1:40	0.83	6/25/2022 3:22	30.90
6/26/2022 3:06	88.26	6/25/2022 2:23	4.22	6/25/2022 2:53	10.57	6/25/2022 1:41	0.78	6/25/2022 3:23	30.94
6/26/2022 3:07	88.25	6/25/2022 2:24	3.72	6/25/2022 2:54	10.55	6/25/2022 1:42	0.83	6/25/2022 3:24	30.92
6/26/2022 3:08	88.27	6/25/2022 2:25	3.22	6/25/2022 2:55	10.58	6/25/2022 1:43	0.78	6/25/2022 3:25	30.93
6/26/2022 3:09	88.22	6/25/2022 2:26	2.81	6/25/2022 2:56	10.59	6/25/2022 1:44	0.74	6/25/2022 3:26	30.93
6/26/2022 3:10	88.30	6/25/2022 2:27	2.49	6/25/2022 2:57	10.57	6/25/2022 1:45	0.76	6/25/2022 3:27	30.94
6/26/2022 3:11	88.28	6/25/2022 2:28	6.20	6/25/2022 2:58	10.58	6/25/2022 1:46	0.76	6/25/2022 3:28	30.94
6/26/2022 3:12	88.25	6/25/2022 2:29	10.14	6/25/2022 2:59	10.59	6/25/2022 1:47	0.83	6/25/2022 3:29	30.91
6/26/2022 3:13	88.25	6/25/2022 2:30	8.58	6/25/2022 3:00	10.61	6/25/2022 1:48	0.74	6/25/2022 3:30	30.93
6/26/2022 3:14	88.22	6/25/2022 2:31	7.29	6/25/2022 3:01	10.56	6/25/2022 1:49	0.80	6/25/2022 3:31	30.90
6/26/2022 3:15	88.18	6/25/2022 2:32	6.22	6/25/2022 3:02	10.52	6/25/2022 1:50	0.74	6/25/2022 3:32	30.94
6/26/2022 3:16	88.23	6/25/2022 2:33	5.35	6/25/2022 3:03	10.56	6/25/2022 1:51	0.80	6/25/2022 3:33	30.93
6/26/2022 3:17	88.20	6/25/2022 2:34	4.62	6/25/2022 3:04	10.56	6/25/2022 1:52	0.76	6/25/2022 3:34	30.93
6/26/2022 3:18	88.21	6/25/2022 2:35	3.99	6/25/2022 3:05	10.52	6/25/2022 1:53	0.76	6/25/2022 3:35	30.93
6/26/2022 3:19	88.25	6/25/2022 2:36	3.48	6/25/2022 3:06	10.54	6/25/2022 1:54	0.75	6/25/2022 3:36	30.91
6/26/2022 3:20	88.21	6/25/2022 2:37	3.01	6/25/2022 3:07	10.55	6/25/2022 1:55	0.76	6/25/2022 3:37	30.92
6/26/2022 3:21	88.27	6/25/2022 2:38	2.60	6/25/2022 3:08	10.53	6/25/2022 1:56	0.82	6/25/2022 3:38	30.95
6/26/2022 3:22	88.15	6/25/2022 2:39	2.28	6/25/2022 3:09	10.52	6/25/2022 1:57	0.76	6/25/2022 3:39	30.92
6/26/2022 3:23	88.22	6/25/2022 2:40	2.03	6/25/2022 3:10	10.55	6/25/2022 1:58	0.77	6/25/2022 3:40	30.93
6/26/2022 3:24	88.18	6/25/2022 2:41	1.86	6/25/2022 3:11	10.49	6/25/2022 1:59	0.82	6/25/2022 3:41	30.96
6/26/2022 3:25	88.28	6/25/2022 2:42	6.32	6/25/2022 3:12	10.51	6/25/2022 2:00	0.75	6/25/2022 3:42	30.90
6/26/2022 3:26	88.17	6/25/2022 2:43	9.54	6/25/2022 3:13	10.49	6/25/2022 2:01	0.86	6/25/2022 3:43	30.93
6/26/2022 3:27	88.20	6/25/2022 2:44	8.05	6/25/2022 3:14	10.51	6/25/2022 2:02	0.78	6/25/2022 3:44	30.87
6/26/2022 3:28	88.18	6/25/2022 2:45	6.87	6/25/2022 3:15	10.53	6/25/2022 2:03	0.79	6/25/2022 3:45	30.86
6/26/2022 3:29	88.19	6/25/2022 2:46	5.85	6/25/2022 3:16	10.55	6/25/2022 2:04	0.74	6/25/2022 3:46	30.88
6/26/2022 3:30	88.19	6/25/2022 2:47	5.02	6/25/2022 3:17	10.55	6/25/2022 2:05	0.74	6/25/2022 3:47	30.92
6/26/2022 3:31	88.14	6/25/2022 2:48	4.36	6/25/2022 3:18	10.54	6/25/2022 2:06	0.76	6/25/2022 3:48	30.89
6/26/2022 3:32	88.21	6/25/2022 2:49	3.76	6/25/2022 3:19	10.57	6/25/2022 2:07	0.75	6/25/2022 3:49	30.93
6/26/2022 3:33	88.18	6/25/2022 2:50	3.27	6/25/2022 3:20	10.58	6/25/2022 2:08	0.77	6/25/2022 3:50	30.90
6/26/2022 3:34	88.22	6/25/2022 2:51	2.83	6/25/2022 3:21	10.55	6/25/2022 2:09	0.79	6/25/2022 3:51	30.90
6/26/2022 3:35	88.15	6/25/2022 2:52	2.47	6/25/2022 3:22	10.56	6/25/2022 2:10	0.74	6/25/2022 3:52	30.95
6/26/2022 3:36	88.20	6/25/2022 2:53	2.19	6/25/2022 3:23	10.60	6/25/2022 2:11	0.75	6/25/2022 3:53	30.92
6/26/2022 3:37	88.16	6/25/2022 2:54	1.93	6/25/2022 3:24	10.56	6/25/2022 2:12	0.76	6/25/2022 3:54	30.91
6/26/2022 3:38	88.20	6/25/2022 2:55	1.73	6/25/2022 3:25	10.55	6/25/2022 2:13	0.75	6/25/2022 3:55	30.91
6/26/2022 3:39	88.19	6/25/2022 2:56	6.20	6/25/2022 3:26	10.57	6/25/2022 2:14	0.72	6/25/2022 3:56	30.90
6/26/2022 3:40	88.13	6/25/2022 2:57	9.52	6/25/2022 3:27	10.55	6/25/2022 2:15	0.80	6/25/2022 3:57	30.91
6/26/2022 3:41	88.19	6/25/2022 2:58	8.00	6/25/2022 3:28	10.52	6/25/2022 2:16	0.79	6/25/2022 3:58	30.90
6/26/2022 3:42	88.13	6/25/2022 2:59	6.80	6/25/2022 3:29	10.55	6/25/2022 2:17	0.74	6/25/2022 3:59	30.91
6/26/2022 3:43	88.13	6/25/2022 3:00	5.79	6/25/2022 3:30	10.55	6/25/2022 2:18	0.74	6/25/2022 4:00	30.89
6/26/2022 3:44	88.14	6/25/2022 3:01	5.03	6/25/2022 3:31	10.52	6/25/2022 2:19	0.75	6/25/2022 4:01	30.92
6/26/2022 3:45	88.15	6/25/2022 3:02	4.33	6/25/2022 3:32	10.53	6/25/2022 2:20	0.82	6/25/2022 4:02	30.88
6/26/2022 3:46	88.17	6/25/2022 3:03	3.74	6/25/2022 3:33	10.50	6/25/2022 2:21	0.79	6/25/2022 4:03	30.89
6/26/2022 3:47	88.11	6/25/2022 3:04	3.27	6/25/2022 3:34	10.51	6/25/2022 2:22	0.75	6/25/2022 4:04	30.88
6/26/2022 3:48	88.15	6/25/2022 3:05	2.80	6/25/2022 3:35	10.57	6/25/2022 2:23	0.79	6/25/2022 4:05	30.86
6/26/2022 3:49	88.11	6/25/2022 3:06	2.48	6/25/2022 3:36	10.54	6/25/2022 2:24	0.79	6/25/2022 4:06	30.87
6/26/2022 3:50	88.15	6/25/2022 3:07	2.20	6/25/2022 3:37	10.61	6/25/2022 2:25	0.83	6/25/2022 4:07	30.89
6/26/2022 3:51	88.09	6/25/2022 3:08	5.08	6/25/2022 3:38	10.59	6/25/2022 2:26	0.72	6/25/2022 4:08	30.88
6/26/2022 3:52	88.09	6/25/2022 3:09	10.18	6/25/2022 3:39	10.60	6/25/2022 2:27	0.82	6/25/2022 4:09	30.90
6/26/2022 3:53	88.15	6/25/2022 3:10	10.07	6/25/2022 3:40	10.63	6/25/2022 2:28	0.74	6/25/2022 4:10	30.92
6/26/2022 3:54	88.10	6/25/2022 3:11	8.52	6/25/2022 3:41	10.64	6/25/2022 2:29	0.69	6/25/2022 4:11	30.90
6/26/2022 3:55	88.07	6/25/2022 3:12	7.25	6/25/2022 3:42	10.63	6/25/2022 2:30	0.73	6/25/2022 4:12	30.87
6/26/2022 3:56	88.14	6/25/2022 3:13	6.19	6/25/2022 3:43	10.61	6/25/2022 2:31	0.83	6/25/2022 4:13	30.93
6/26/2022 3:57	88.06	6/25/2022 3:14	5.35	6/25/2022 3:44	10.61	6/25/2022 2:32	0.74	6/25/2022 4:14	30.89
6/26/2022 3:58	88.13	6/25/2022 3:15	6.56	6/25/2022 3:45	10.63	6/25/2022 2:33	0.77	6/25/2022 4:15	30.88
6/26/2022 3:59	88.10	6/25/2022 3:16	11.51	6/25/2022 3:46	10.63	6/25/2022 2:34	0.83	6/25/2022 4:16	30.87
6/26/2022 4:00	88.10	6/25/2022 3:17	12.33	6/25/2022 3:47	10.61	6/25/2022 2:35	0.77	6/25/2022 4:17	30.90
6/26/2022 4:01	88.05	6/25/2022 3:18	10.46	6/25/2022 3:48	10.61	6/25/2022 2:36	0.75	6/25/2022 4:18	30.91
6/26/2022 4:02	88.07	6/25/2022 3:19	8.90	6/25/2022 3:49	10.59	6/25/2022 2:37	0.83	6/25/2022 4:19	30.93
6/26/2022 4:03	88.11	6/25/2022 3:20	7.60	6/25/2022 3:50	10.56	6/25/2022 2:38	0.75	6/25/2022 4:20	30.86
6/26/2022 4:04	88.11	6/25/2022 3:21	6.50	6/25/2022 3:51	10.55	6/25/2022 2:39	0.71	6/25/2022 4:21	30.89
6/26/2022 4:05	88.05	6/25/2022 3:22	5.77	6/25/2022 3:52	10.57	6/25/2022 2:40	0.83	6/25/2022 4:22	30.91
6/26/2022 4:06	88.06	6/25/2022 3:23	10.95	6/25/2022 3:53	10.55	6/25/2022 2:41	0.72	6/25/2022 4:23	30.85
6/26/2022 4:07	88.09	6/25/2022 3:24	11.35	6/25/2022 3:54	10.57	6/25/2022 2:42	0.75	6/25/2022 4:24	30.86
6/26/2022 4:08	88.05	6/25/2022 3:25	9.66	6/25/2022 3:55	10.54	6/25/2022 2:43	0.80	6/25/2022 4:25	30.89
6/26/2022 4:09	88.11	6/25/2022 3:26	8.24	6/25/2022 3:56	10.55	6/25/2022 2:44	0.72	6/25/2022 4:26	30.90
6/26/2022 4:10	88.06	6/25/2022 3:27	7.01	6/25/2022 3:57	10.51	6/25/2022 2:45	0.78	6/25/2022 4:27	30.90
6/26/2022 4:11	88.06	6/25/2022 3:28	5.99	6/25/2022 3:58	10.53	6/25/2022 2:46	0.77	6/25/2022 4:28	30.90
6/26/2022 4:12	88.06	6/25/2022 3:29	5.18	6/25/2022 3:59	10.53	6/25/2022 2:47	0.74	6/25/2022 4:29	30.89
6/26/2022 4:13	88.09	6/25/2022 3:30	4.47	6/25/2022 4:00	10.48	6/25/2022 2:48	0.75	6/25/2022 4:30	30.87

6/26/2022 4:14	88.06	6/25/2022 3:31	3.93	6/25/2022 4:01	10.49	6/25/2022 2:49	0.79	6/25/2022 4:31	30.87
6/26/2022 4:15	88.04	6/25/2022 3:32	3.39	6/25/2022 4:02	10.50	6/25/2022 2:50	0.85	6/25/2022 4:32	30.86
6/26/2022 4:16	88.04	6/25/2022 3:33	2.95	6/25/2022 4:03	10.52	6/25/2022 2:51	0.76	6/25/2022 4:33	30.87
6/26/2022 4:17	88.06	6/25/2022 3:34	2.60	6/25/2022 4:04	10.52	6/25/2022 2:52	0.76	6/25/2022 4:34	30.87
6/26/2022 4:18	88.02	6/25/2022 3:35	2.28	6/25/2022 4:05	10.56	6/25/2022 2:53	0.82	6/25/2022 4:35	30.90
6/26/2022 4:19	88.03	6/25/2022 3:36	2.01	6/25/2022 4:06	10.60	6/25/2022 2:54	0.71	6/25/2022 4:36	30.90
6/26/2022 4:20	88.06	6/25/2022 3:37	1.84	6/25/2022 4:07	10.56	6/25/2022 2:55	0.82	6/25/2022 4:37	30.89
6/26/2022 4:21	88.05	6/25/2022 3:38	1.64	6/25/2022 4:08	10.58	6/25/2022 2:56	0.79	6/25/2022 4:38	30.84
6/26/2022 4:22	88.03	6/25/2022 3:39	1.47	6/25/2022 4:09	10.61	6/25/2022 2:57	0.82	6/25/2022 4:39	30.88
6/26/2022 4:23	88.05	6/25/2022 3:40	1.34	6/25/2022 4:10	10.56	6/25/2022 2:58	0.73	6/25/2022 4:40	30.91
6/26/2022 4:24	88.02	6/25/2022 3:41	1.20	6/25/2022 4:11	10.60	6/25/2022 2:59	0.77	6/25/2022 4:41	30.91
6/26/2022 4:25	88.02	6/25/2022 3:42	1.13	6/25/2022 4:12	10.56	6/25/2022 3:00	0.81	6/25/2022 4:42	30.85
6/26/2022 4:26	88.01	6/25/2022 3:43	5.05	6/25/2022 4:13	10.57	6/25/2022 3:01	0.74	6/25/2022 4:43	30.89
6/26/2022 4:27	88.01	6/25/2022 3:44	8.67	6/25/2022 4:14	10.57	6/25/2022 3:02	0.78	6/25/2022 4:44	30.87
6/26/2022 4:28	88.04	6/25/2022 3:45	7.33	6/25/2022 4:15	10.54	6/25/2022 3:03	0.72	6/25/2022 4:45	30.85
6/26/2022 4:29	88.04	6/25/2022 3:46	6.23	6/25/2022 4:16	10.55	6/25/2022 3:04	0.74	6/25/2022 4:46	30.86
6/26/2022 4:30	88.03	6/25/2022 3:47	5.32	6/25/2022 4:17	10.55	6/25/2022 3:05	0.80	6/25/2022 4:47	30.93
6/26/2022 4:31	88.01	6/25/2022 3:48	4.60	6/25/2022 4:18	10.55	6/25/2022 3:06	0.72	6/25/2022 4:48	30.89
6/26/2022 4:32	88.01	6/25/2022 3:49	3.94	6/25/2022 4:19	10.55	6/25/2022 3:07	0.79	6/25/2022 4:49	30.86
6/26/2022 4:33	87.99	6/25/2022 3:50	3.43	6/25/2022 4:20	10.53	6/25/2022 3:08	0.73	6/25/2022 4:50	30.88
6/26/2022 4:34	88.03	6/25/2022 3:51	2.97	6/25/2022 4:21	10.54	6/25/2022 3:09	0.75	6/25/2022 4:51	30.87
6/26/2022 4:35	88.02	6/25/2022 3:52	2.60	6/25/2022 4:22	10.53	6/25/2022 3:10	0.74	6/25/2022 4:52	30.88
6/26/2022 4:36	87.97	6/25/2022 3:53	2.31	6/25/2022 4:23	10.51	6/25/2022 3:11	0.75	6/25/2022 4:53	30.91
6/26/2022 4:37	88.00	6/25/2022 3:54	2.05	6/25/2022 4:24	10.54	6/25/2022 3:12	0.82	6/25/2022 4:54	30.86
6/26/2022 4:38	88.01	6/25/2022 3:55	1.82	6/25/2022 4:25	10.51	6/25/2022 3:13	0.76	6/25/2022 4:55	30.89
6/26/2022 4:39	88.04	6/25/2022 3:56	1.62	6/25/2022 4:26	10.48	6/25/2022 3:14	0.74	6/25/2022 4:56	30.89
6/26/2022 4:40	88.00	6/25/2022 3:57	1.44	6/25/2022 4:27	10.51	6/25/2022 3:15	0.73	6/25/2022 4:57	30.87
6/26/2022 4:41	87.97	6/25/2022 3:58	1.32	6/25/2022 4:28	10.49	6/25/2022 3:16	0.80	6/25/2022 4:58	30.88
6/26/2022 4:42	88.00	6/25/2022 3:59	1.18	6/25/2022 4:29	10.54	6/25/2022 3:17	0.73	6/25/2022 4:59	30.89
6/26/2022 4:43	88.06	6/25/2022 4:00	1.07	6/25/2022 4:30	10.52	6/25/2022 3:18	0.77	6/25/2022 5:00	30.84
6/26/2022 4:44	87.95	6/25/2022 4:01	0.97	6/25/2022 4:31	10.53	6/25/2022 3:19	0.77	6/25/2022 5:01	30.83
6/26/2022 4:45	87.94	6/25/2022 4:02	0.93	6/25/2022 4:32	10.54	6/25/2022 3:20	0.75	6/25/2022 5:02	30.88
6/26/2022 4:46	87.97	6/25/2022 4:03	2.57	6/25/2022 4:33	10.57	6/25/2022 3:21	0.78	6/25/2022 5:03	30.84
6/26/2022 4:47	87.93	6/25/2022 4:04	8.23	6/25/2022 4:34	10.53	6/25/2022 3:22	0.74	6/25/2022 5:04	30.82
6/26/2022 4:48	87.96	6/25/2022 4:05	7.75	6/25/2022 4:35	10.58	6/25/2022 3:23	0.76	6/25/2022 5:05	30.87
6/26/2022 4:49	87.97	6/25/2022 4:06	6.60	6/25/2022 4:36	10.56	6/25/2022 3:24	0.73	6/25/2022 5:06	30.86
6/26/2022 4:50	87.91	6/25/2022 4:07	5.65	6/25/2022 4:37	10.59	6/25/2022 3:25	0.75	6/25/2022 5:07	30.88
6/26/2022 4:51	87.95	6/25/2022 4:08	4.86	6/25/2022 4:38	10.58	6/25/2022 3:26	0.75	6/25/2022 5:08	30.86
6/26/2022 4:52	87.96	6/25/2022 4:09	4.27	6/25/2022 4:39	10.58	6/25/2022 3:27	0.72	6/25/2022 5:09	30.89
6/26/2022 4:53	87.96	6/25/2022 4:10	3.74	6/25/2022 4:40	10.57	6/25/2022 3:28	0.74	6/25/2022 5:10	30.87
6/26/2022 4:54	87.99	6/25/2022 4:11	3.30	6/25/2022 4:41	10.57	6/25/2022 3:29	0.75	6/25/2022 5:11	30.84
6/26/2022 4:55	87.93	6/25/2022 4:12	2.88	6/25/2022 4:42	10.57	6/25/2022 3:30	0.75	6/25/2022 5:12	30.86
6/26/2022 4:56	87.98	6/25/2022 4:13	2.55	6/25/2022 4:43	10.55	6/25/2022 3:31	0.71	6/25/2022 5:13	30.85
6/26/2022 4:57	87.92	6/25/2022 4:14	2.33	6/25/2022 4:44	10.52	6/25/2022 3:32	0.77	6/25/2022 5:14	30.88
6/26/2022 4:58	87.99	6/25/2022 4:15	2.08	6/25/2022 4:45	10.54	6/25/2022 3:33	0.82	6/25/2022 5:15	30.90
6/26/2022 4:59	87.94	6/25/2022 4:16	1.90	6/25/2022 4:46	10.52	6/25/2022 3:34	0.76	6/25/2022 5:16	30.86
6/26/2022 5:00	87.93	6/25/2022 4:17	1.70	6/25/2022 4:47	10.53	6/25/2022 3:35	0.75	6/25/2022 5:17	30.84
6/26/2022 5:01	87.97	6/25/2022 4:18	1.61	6/25/2022 4:48	10.55	6/25/2022 3:36	0.82	6/25/2022 5:18	30.86
6/26/2022 5:02	87.94	6/25/2022 4:19	1.51	6/25/2022 4:49	10.56	6/25/2022 3:37	0.75	6/25/2022 5:19	30.87
6/26/2022 5:03	87.95	6/25/2022 4:20	1.40	6/25/2022 4:50	10.51	6/25/2022 3:38	0.79	6/25/2022 5:20	30.87
6/26/2022 5:04	87.99	6/25/2022 4:21	1.35	6/25/2022 4:51	10.56	6/25/2022 3:39	0.73	6/25/2022 5:21	30.84
6/26/2022 5:05	87.90	6/25/2022 4:22	6.70	6/25/2022 4:52	10.55	6/25/2022 3:40	0.78	6/25/2022 5:22	30.85
6/26/2022 5:06	87.95	6/25/2022 4:23	8.69	6/25/2022 4:53	10.63	6/25/2022 3:41	0.73	6/25/2022 5:23	30.81
6/26/2022 5:07	87.94	6/25/2022 4:24	7.35	6/25/2022 4:54	10.65	6/25/2022 3:42	0.74	6/25/2022 5:24	30.88
6/26/2022 5:08	87.88	6/25/2022 4:25	6.34	6/25/2022 4:55	10.68	6/25/2022 3:43	0.73	6/25/2022 5:25	30.84
6/26/2022 5:09	87.89	6/25/2022 4:26	5.51	6/25/2022 4:56	10.69	6/25/2022 3:44	0.73	6/25/2022 5:26	30.86
6/26/2022 5:10	87.87	6/25/2022 4:27	4.78	6/25/2022 4:57	10.74	6/25/2022 3:45	0.73	6/25/2022 5:27	30.84
6/26/2022 5:11	87.91	6/25/2022 4:28	4.24	6/25/2022 4:58	10.77	6/25/2022 3:46	0.73	6/25/2022 5:28	30.84
6/26/2022 5:12	87.91	6/25/2022 4:29	3.71	6/25/2022 4:59	10.80	6/25/2022 3:47	0.77	6/25/2022 5:29	30.86
6/26/2022 5:13	87.94	6/25/2022 4:30	3.32	6/25/2022 5:00	10.85	6/25/2022 3:48	0.82	6/25/2022 5:30	30.82
6/26/2022 5:14	87.89	6/25/2022 4:31	2.93	6/25/2022 5:01	10.88	6/25/2022 3:49	0.77	6/25/2022 5:31	30.87
6/26/2022 5:15	87.93	6/25/2022 4:32	2.62	6/25/2022 5:02	10.92	6/25/2022 3:50	0.73	6/25/2022 5:32	30.83
6/26/2022 5:16	87.93	6/25/2022 4:33	2.37	6/25/2022 5:03	10.98	6/25/2022 3:51	0.80	6/25/2022 5:33	30.88
6/26/2022 5:17	87.89	6/25/2022 4:34	2.17	6/25/2022 5:04	11.02	6/25/2022 3:52	0.74	6/25/2022 5:34	30.83
6/26/2022 5:18	87.94	6/25/2022 4:35	2.09	6/25/2022 5:05	11.01	6/25/2022 3:53	0.77	6/25/2022 5:35	30.85
6/26/2022 5:19	87.95	6/25/2022 4:36	1.87	6/25/2022 5:06	11.06	6/25/2022 3:54	0.79	6/25/2022 5:36	30.85
6/26/2022 5:20	87.94	6/25/2022 4:37	1.76	6/25/2022 5:07	11.03	6/25/2022 3:55	0.76	6/25/2022 5:37	30.85
6/26/2022 5:21	87.91	6/25/2022 4:38	1.62	6/25/2022 5:08	11.01	6/25/2022 3:56	0.82	6/25/2022 5:38	30.84
6/26/2022 5:22	87.92	6/25/2022 4:39	1.55	6/25/2022 5:09	11.04	6/25/2022 3:57	0.71	6/25/2022 5:39	30.84
6/26/2022 5:23	87.89	6/25/2022 4:40	1.42	6/25/2022 5:10	11.05	6/25/2022 3:58	0.78	6/25/2022 5:40	30.85
6/26/2022 5:24	87.90	6/25/2022 4:41	1.42	6/25/2022 5:11	11.02	6/25/2022 3:59	0.71	6/25/2022 5:41	30.86
6/26/2022 5:25	87.87	6/25/2022 4:42	1.37	6/25/2022 5:12	10.99	6/25/2022 4:00	0.81	6/25/2022 5:42	30.86
6/26/2022 5:26	87.87	6/25/2022 4:43	5.71	6/25/2022 5:13	10.99	6/25/2022 4:01	0.76	6/25/2022 5:43	30.87
6/26/2022 5:27	87.85	6/25/2022 4:44	8.94	6/25/2022 5:14	10.97	6/25/2022 4:02	0.77	6/25/2022 5:44	30.86
6/26/2022 5:28	87.85	6/25/2022 4:45	7.61	6/25/2022 5:15	10.95	6/25/2022 4:03	0.76	6/25/2022 5:45	30.86
6/26/2022 5:29	87.85	6/25/2022 4:46	6.52	6/25/2022 5:16	10.95	6/25/2022 4:04	0.75	6/25/2022 5:46	30.85
6/26/2022 5:30	87.90	6/25/2022 4:47	5.70	6/25/2022 5:17	10.94	6/25/2022 4:05	0.73	6/25/2022 5:47	30.86
6/26/2022 5:31	87.90	6/25/2022 4:48	4.98	6/25/2022 5:18	10.97	6/25/2022 4:06	0.74	6/25/2022 5:48	30.82
6/26/2022 5:32	87.87	6/25/2022 4:49	4.38	6/25/2022 5:19	10.95	6/25/2022 4:07	0.70	6/25/2022 5:49	30.85
6/26/2022 5:33	87.83	6/25/2022 4:50	3.88	6/25/2022 5:20	10.95	6/25/2022 4:08	0.77	6/25/2022 5:50	30.84
6/26/2022 5:34	87.83	6/25/2022 4:51	3.43	6/25/2022 5:21	10.92	6/25/2022 4:09	0.71	6/25/2022 5:51	30.87
6/26/2022 5:35	87.81	6/25/2022 4:52	3.07	6/25/2022 5:22	10.90	6/25/2022 4:10	0.71	6/25/2022 5:52	30.87
6/26/2022 5:36	87.81	6/25/2022 4:53	2.74	6/25/2022 5:23	10.95	6/25/2022 4:11	0.69	6/25/2022 5:53	30.83
6/26/2022 5:37	87.88	6/25/2022 4:54	2.54	6/25/2022 5:24	10.96	6/25/2022 4:12	0.72	6/25/2022 5:54	30.82
6/26/2022 5:38	87.88	6/25/2022 4:55	2.34	6/25/2022 5:25	10.91	6/25/2022 4:13	0.74	6/25/2022 5:55	30.82
6/26/2022 5:39	87.89	6/25/2022 4:56	2.16	6/25/2022 5:26	10.93	6/25/2022 4:14	0.73	6/25/2022 5:56	30.84
6/26/2022 5:40	87.89	6/25/2022 4:57	2.03	6/25/2022 5:27	10.95	6/25/2022 4:15	0.76	6/25/2022 5:57	30.84
6/26/2022 5:41	87.84	6/25/2022 4:58	1.90	6/25/2022 5:28	10.94	6/25/2022 4:16	0.78	6/25/2022 5:58	30.84

6/26/2022 5:42	87.86	6/25/2022 4:59	1.74	6/25/2022 5:29	10.93	6/25/2022 4:17	0.75	6/25/2022 5:59	30.83
6/26/2022 5:43	87.89	6/25/2022 5:00	1.65	6/25/2022 5:30	10.89	6/25/2022 4:18	0.71	6/25/2022 6:00	30.83
6/26/2022 5:44	87.86	6/25/2022 5:01	1.61	6/25/2022 5:31	10.91	6/25/2022 4:19	0.72	6/25/2022 6:01	30.83
6/26/2022 5:45	87.78	6/25/2022 5:02	1.52	6/25/2022 5:32	10.91	6/25/2022 4:20	0.78	6/25/2022 6:02	30.85
6/26/2022 5:46	87.86	6/25/2022 5:03	1.48	6/25/2022 5:33	10.92	6/25/2022 4:21	0.73	6/25/2022 6:03	30.83
6/26/2022 5:47	87.83	6/25/2022 5:04	6.30	6/25/2022 5:34	10.86	6/25/2022 4:22	0.74	6/25/2022 6:04	30.83
6/26/2022 5:48	87.84	6/25/2022 5:05	8.84	6/25/2022 5:35	10.85	6/25/2022 4:23	0.78	6/25/2022 6:05	30.83
6/26/2022 5:49	87.84	6/25/2022 5:06	7.53	6/25/2022 5:36	10.85	6/25/2022 4:24	0.78	6/25/2022 6:06	30.82
6/26/2022 5:50	87.81	6/25/2022 5:07	6.56	6/25/2022 5:37	10.82	6/25/2022 4:25	0.78	6/25/2022 6:07	30.84
6/26/2022 5:51	87.74	6/25/2022 5:08	5.60	6/25/2022 5:38	10.82	6/25/2022 4:26	0.76	6/25/2022 6:08	30.86
6/26/2022 5:52	87.80	6/25/2022 5:09	4.92	6/25/2022 5:39	10.76	6/25/2022 4:27	0.74	6/25/2022 6:09	30.82
6/26/2022 5:53	87.83	6/25/2022 5:10	4.32	6/25/2022 5:40	10.76	6/25/2022 4:28	0.75	6/25/2022 6:10	30.84
6/26/2022 5:54	87.84	6/25/2022 5:11	3.85	6/25/2022 5:41	10.76	6/25/2022 4:29	0.78	6/25/2022 6:11	30.78
6/26/2022 5:55	87.76	6/25/2022 5:12	3.41	6/25/2022 5:42	10.75	6/25/2022 4:30	0.79	6/25/2022 6:12	30.82
6/26/2022 5:56	87.77	6/25/2022 5:13	3.05	6/25/2022 5:43	10.73	6/25/2022 4:31	0.79	6/25/2022 6:13	30.86
6/26/2022 5:57	87.82	6/25/2022 5:14	2.77	6/25/2022 5:44	10.70	6/25/2022 4:32	0.73	6/25/2022 6:14	30.84
6/26/2022 5:58	87.80	6/25/2022 5:15	2.51	6/25/2022 5:45	10.74	6/25/2022 4:33	0.78	6/25/2022 6:15	30.81
6/26/2022 5:59	87.78	6/25/2022 5:16	2.26	6/25/2022 5:46	10.75	6/25/2022 4:34	0.77	6/25/2022 6:16	30.86
6/26/2022 6:00	87.78	6/25/2022 5:17	2.07	6/25/2022 5:47	10.75	6/25/2022 4:35	0.73	6/25/2022 6:17	30.82
6/26/2022 6:01	87.80	6/25/2022 5:18	1.96	6/25/2022 5:48	10.74	6/25/2022 4:36	0.76	6/25/2022 6:18	30.84
6/26/2022 6:02	87.76	6/25/2022 5:19	1.89	6/25/2022 5:49	10.78	6/25/2022 4:37	0.77	6/25/2022 6:19	30.81
6/26/2022 6:03	87.78	6/25/2022 5:20	1.73	6/25/2022 5:50	10.77	6/25/2022 4:38	0.76	6/25/2022 6:20	30.81
6/26/2022 6:04	87.77	6/25/2022 5:21	1.67	6/25/2022 5:51	10.74	6/25/2022 4:39	0.75	6/25/2022 6:21	30.83
6/26/2022 6:05	87.77	6/25/2022 5:22	1.55	6/25/2022 5:52	10.73	6/25/2022 4:40	0.79	6/25/2022 6:22	30.81
6/26/2022 6:06	87.78	6/25/2022 5:23	1.45	6/25/2022 5:53	10.75	6/25/2022 4:41	0.79	6/25/2022 6:23	30.84
6/26/2022 6:07	87.80	6/25/2022 5:24	1.45	6/25/2022 5:54	10.75	6/25/2022 4:42	0.75	6/25/2022 6:24	30.83
6/26/2022 6:08	87.80	6/25/2022 5:25	7.12	6/25/2022 5:55	10.72	6/25/2022 4:43	0.75	6/25/2022 6:25	30.82
6/26/2022 6:09	87.79	6/25/2022 5:26	8.72	6/25/2022 5:56	10.75	6/25/2022 4:44	0.80	6/25/2022 6:26	30.85
6/26/2022 6:10	87.75	6/25/2022 5:27	7.39	6/25/2022 5:57	10.79	6/25/2022 4:45	0.82	6/25/2022 6:27	30.86
6/26/2022 6:11	87.79	6/25/2022 5:28	6.36	6/25/2022 5:58	10.78	6/25/2022 4:46	0.81	6/25/2022 6:28	30.83
6/26/2022 6:12	87.74	6/25/2022 5:29	5.52	6/25/2022 5:59	10.75	6/25/2022 4:47	0.79	6/25/2022 6:29	30.82
6/26/2022 6:13	87.77	6/25/2022 5:30	4.85	6/25/2022 6:00	10.78	6/25/2022 4:48	0.74	6/25/2022 6:30	30.86
6/26/2022 6:14	87.74	6/25/2022 5:31	4.27	6/25/2022 6:01	10.78	6/25/2022 4:49	0.79	6/25/2022 6:31	30.84
6/26/2022 6:15	87.74	6/25/2022 5:32	3.78	6/25/2022 6:02	10.80	6/25/2022 4:50	0.76	6/25/2022 6:32	30.85
6/26/2022 6:16	87.75	6/25/2022 5:33	3.37	6/25/2022 6:03	10.80	6/25/2022 4:51	0.75	6/25/2022 6:33	30.83
6/26/2022 6:17	87.72	6/25/2022 5:34	2.97	6/25/2022 6:04	10.83	6/25/2022 4:52	0.79	6/25/2022 6:34	30.82
6/26/2022 6:18	87.78	6/25/2022 5:35	2.72	6/25/2022 6:05	10.81	6/25/2022 4:53	0.79	6/25/2022 6:35	30.81
6/26/2022 6:19	87.74	6/25/2022 5:36	2.48	6/25/2022 6:06	10.83	6/25/2022 4:54	0.79	6/25/2022 6:36	30.84
6/26/2022 6:20	87.71	6/25/2022 5:37	2.28	6/25/2022 6:07	10.83	6/25/2022 4:55	0.76	6/25/2022 6:37	30.84
6/26/2022 6:21	87.72	6/25/2022 5:38	2.12	6/25/2022 6:08	10.79	6/25/2022 4:56	0.76	6/25/2022 6:38	30.84
6/26/2022 6:22	87.73	6/25/2022 5:39	1.96	6/25/2022 6:09	10.82	6/25/2022 4:57	0.76	6/25/2022 6:39	30.81
6/26/2022 6:23	87.76	6/25/2022 5:40	1.80	6/25/2022 6:10	10.80	6/25/2022 4:58	0.79	6/25/2022 6:40	30.85
6/26/2022 6:24	87.68	6/25/2022 5:41	1.67	6/25/2022 6:11	10.80	6/25/2022 4:59	0.72	6/25/2022 6:41	30.86
6/26/2022 6:25	87.75	6/25/2022 5:42	1.61	6/25/2022 6:12	10.79	6/25/2022 5:00	0.76	6/25/2022 6:42	30.84
6/26/2022 6:26	87.74	6/25/2022 5:43	1.55	6/25/2022 6:13	10.84	6/25/2022 5:01	0.77	6/25/2022 6:43	30.84
6/26/2022 6:27	87.79	6/25/2022 5:44	2.35	6/25/2022 6:14	10.83	6/25/2022 5:02	0.74	6/25/2022 6:44	30.84
6/26/2022 6:28	87.70	6/25/2022 5:45	8.18	6/25/2022 6:15	10.85	6/25/2022 5:03	0.78	6/25/2022 6:45	30.82
6/26/2022 6:29	87.73	6/25/2022 5:46	8.35	6/25/2022 6:16	10.85	6/25/2022 5:04	0.75	6/25/2022 6:46	30.82
6/26/2022 6:30	87.70	6/25/2022 5:47	7.13	6/25/2022 6:17	10.90	6/25/2022 5:05	0.75	6/25/2022 6:47	30.80
6/26/2022 6:31	87.70	6/25/2022 5:48	6.18	6/25/2022 6:18	10.85	6/25/2022 5:06	0.80	6/25/2022 6:48	30.77
6/26/2022 6:32	87.77	6/25/2022 5:49	5.37	6/25/2022 6:19	10.83	6/25/2022 5:07	0.78	6/25/2022 6:49	30.83
6/26/2022 6:33	87.70	6/25/2022 5:50	4.69	6/25/2022 6:20	10.87	6/25/2022 5:08	0.77	6/25/2022 6:50	30.82
6/26/2022 6:34	87.72	6/25/2022 5:51	4.13	6/25/2022 6:21	10.81	6/25/2022 5:09	0.78	6/25/2022 6:51	30.82
6/26/2022 6:35	87.72	6/25/2022 5:52	3.67	6/25/2022 6:22	10.80	6/25/2022 5:10	0.75	6/25/2022 6:52	30.80
6/26/2022 6:36	87.71	6/25/2022 5:53	3.28	6/25/2022 6:23	10.82	6/25/2022 5:11	0.76	6/25/2022 6:53	30.81
6/26/2022 6:37	87.69	6/25/2022 5:54	2.93	6/25/2022 6:24	10.79	6/25/2022 5:12	0.76	6/25/2022 6:54	30.82
6/26/2022 6:38	87.71	6/25/2022 5:55	2.65	6/25/2022 6:25	10.78	6/25/2022 5:13	0.77	6/25/2022 6:55	30.81
6/26/2022 6:39	87.68	6/25/2022 5:56	2.43	6/25/2022 6:26	10.73	6/25/2022 5:14	0.74	6/25/2022 6:56	30.82
6/26/2022 6:40	87.71	6/25/2022 5:57	2.22	6/25/2022 6:27	10.79	6/25/2022 5:15	0.73	6/25/2022 6:57	30.81
6/26/2022 6:41	87.72	6/25/2022 5:58	2.09	6/25/2022 6:28	10.73	6/25/2022 5:16	0.74	6/25/2022 6:58	30.82
6/26/2022 6:42	87.70	6/25/2022 5:59	1.98	6/25/2022 6:29	10.80	6/25/2022 5:17	0.76	6/25/2022 6:59	30.79
6/26/2022 6:43	87.68	6/25/2022 6:00	1.89	6/25/2022 6:30	10.82	6/25/2022 5:18	0.73	6/25/2022 7:00	30.80
6/26/2022 6:44	87.67	6/25/2022 6:01	1.78	6/25/2022 6:31	10.77	6/25/2022 5:19	0.76	6/25/2022 7:01	30.83
6/26/2022 6:45	87.65	6/25/2022 6:02	1.67	6/25/2022 6:32	10.82	6/25/2022 5:20	0.77	6/25/2022 7:02	30.84
6/26/2022 6:46	87.66	6/25/2022 6:03	1.60	6/25/2022 6:33	10.80	6/25/2022 5:21	0.71	6/25/2022 7:03	30.81
6/26/2022 6:47	87.71	6/25/2022 6:04	1.54	6/25/2022 6:34	10.75	6/25/2022 5:22	0.75	6/25/2022 7:04	30.83
6/26/2022 6:48	87.64	6/25/2022 6:05	4.23	6/25/2022 6:35	10.77	6/25/2022 5:23	0.74	6/25/2022 7:05	30.81
6/26/2022 6:49	87.69	6/25/2022 6:06	9.80	6/25/2022 6:36	10.76	6/25/2022 5:24	0.71	6/25/2022 7:06	30.79
6/26/2022 6:50	87.73	6/25/2022 6:07	8.05	6/25/2022 6:37	10.72	6/25/2022 5:25	0.73	6/25/2022 7:07	30.77
6/26/2022 6:51	87.64	6/25/2022 6:08	6.92	6/25/2022 6:38	10.71	6/25/2022 5:26	0.80	6/25/2022 7:08	30.81
6/26/2022 6:52	87.68	6/25/2022 6:09	5.99	6/25/2022 6:39	10.75	6/25/2022 5:27	0.80	6/25/2022 7:09	30.83
6/26/2022 6:53	87.66	6/25/2022 6:10	5.26	6/25/2022 6:40	10.73	6/25/2022 5:28	0.77	6/25/2022 7:10	30.80
6/26/2022 6:54	87.65	6/25/2022 6:11	4.61	6/25/2022 6:41	10.71	6/25/2022 5:29	0.78	6/25/2022 7:11	30.82
6/26/2022 6:55	87.65	6/25/2022 6:12	4.10	6/25/2022 6:42	10.73	6/25/2022 5:30	0.75	6/25/2022 7:12	30.80
6/26/2022 6:56	87.63	6/25/2022 6:13	3.68	6/25/2022 6:43	10.76	6/25/2022 5:31	0.77	6/25/2022 7:13	30.81
6/26/2022 6:57	87.68	6/25/2022 6:14	3.27	6/25/2022 6:44	10.81	6/25/2022 5:32	0.73	6/25/2022 7:14	30.81
6/26/2022 6:58	87.67	6/25/2022 6:15	3.00	6/25/2022 6:45	10.76	6/25/2022 5:33	0.72	6/25/2022 7:15	30.81
6/26/2022 6:59	87.62	6/25/2022 6:16	2.81	6/25/2022 6:46	10.77	6/25/2022 5:34	0.76	6/25/2022 7:16	30.80
6/26/2022 7:00	87.63	6/25/2022 6:17	2.73	6/25/2022 6:47	10.77	6/25/2022 5:35	0.75	6/25/2022 7:17	33.23
6/26/2022 7:01	87.62	6/25/2022 6:18	2.59	6/25/2022 6:48	11.22	6/25/2022 5:36	0.73	6/25/2022 7:18	31.86
6/26/2022 7:02	87.63	6/25/2022 6:19	2.48	6/25/2022 6:49	15.48	6/25/2022 5:37	0.73	6/25/2022 7:19	31.22
6/26/2022 7:03	87.68	6/25/2022 6:20	2.31	6/25/2022 6:50	14.90	6/25/2022 5:38	0.72	6/25/2022 7:20	30.97
6/26/2022 7:04	87.68	6/25/2022 6:21	2.24	6/25/2022 6:51	14.34	6/25/2022 5:39	0.75	6/25/2022 7:21	30.88
6/26/2022 7:05	87.63	6/25/2022 6:22	2.05	6/25/2022 6:52	13.93	6/25/2022 5:40	0.73	6/25/2022 7:22	30.87
6/26/2022 7:06	87.61	6/25/2022 6:23	1.92	6/25/2022 6:53	13.58	6/25/2022 5:41	0.74	6/25/2022 7:23	30.85
6/26/2022 7:07	87.61	6/25/2022 6:24	1.86	6/25/2022 6:54	13.24	6/25/2022 5:42	0.72	6/25/2022 7:24	30.82
6/26/2022 7:08	87.62	6/25/2022 6:25	1.76	6/25/2022 6:55	12.96	6/25/2022 5:43	0.71	6/25/2022 7:25	30.84
6/26/2022 7:09	87.59	6/25/2022 6:26	6.07	6/25/2022 6:56	12.70	6/25/2022 5:44	0.73	6/25/2022 7:26	30.85

6/26/2022 7:10	87.60	6/25/2022 6:27	9.37	6/25/2022 6:57	12.52	6/25/2022 5:45	0.72	6/25/2022 7:27	30.81
6/26/2022 7:11	87.67	6/25/2022 6:28	8.00	6/25/2022 6:58	12.37	6/25/2022 5:46	0.77	6/25/2022 7:28	30.81
6/26/2022 7:12	87.60	6/25/2022 6:29	6.88	6/25/2022 6:59	12.17	6/25/2022 5:47	0.78	6/25/2022 7:29	30.83
6/26/2022 7:13	87.70	6/25/2022 6:30	5.96	6/25/2022 7:00	12.08	6/25/2022 5:48	0.77	6/25/2022 7:30	30.79
6/26/2022 7:14	87.71	6/25/2022 6:31	5.22	6/25/2022 7:01	11.92	6/25/2022 5:49	0.77	6/25/2022 7:31	30.83
6/26/2022 7:15	87.60	6/25/2022 6:32	4.63	6/25/2022 7:02	11.80	6/25/2022 5:50	0.74	6/25/2022 7:32	30.84
6/26/2022 7:16	87.65	6/25/2022 6:33	4.15	6/25/2022 7:03	11.71	6/25/2022 5:51	0.76	6/25/2022 7:33	30.83
6/26/2022 7:17	87.64	6/25/2022 6:34	3.67	6/25/2022 7:04	11.61	6/25/2022 5:52	0.75	6/25/2022 7:34	30.80
6/26/2022 7:18	87.59	6/25/2022 6:35	3.28	6/25/2022 7:05	11.53	6/25/2022 5:53	0.74	6/25/2022 7:35	30.84
6/26/2022 7:19	87.63	6/25/2022 6:36	2.94	6/25/2022 7:06	11.48	6/25/2022 5:54	0.74	6/25/2022 7:36	30.83
6/26/2022 7:20	87.60	6/25/2022 6:37	2.66	6/25/2022 7:07	11.39	6/25/2022 5:55	0.75	6/25/2022 7:37	30.80
6/26/2022 7:21	87.60	6/25/2022 6:38	2.44	6/25/2022 7:08	11.32	6/25/2022 5:56	0.75	6/25/2022 7:38	30.79
6/26/2022 7:22	87.62	6/25/2022 6:39	2.29	6/25/2022 7:09	11.25	6/25/2022 5:57	0.76	6/25/2022 7:39	30.83
6/26/2022 7:23	87.57	6/25/2022 6:40	5.94	6/25/2022 7:10	11.18	6/25/2022 5:58	0.75	6/25/2022 7:40	30.81
6/26/2022 7:24	87.62	6/25/2022 6:41	10.99	6/25/2022 7:11	11.15	6/25/2022 5:59	0.73	6/25/2022 7:41	30.84
6/26/2022 7:25	87.58	6/25/2022 6:42	12.54	6/25/2022 7:12	11.13	6/25/2022 6:00	0.71	6/25/2022 7:42	30.82
6/26/2022 7:26	87.60	6/25/2022 6:43	10.73	6/25/2022 7:13	11.07	6/25/2022 6:01	0.72	6/25/2022 7:43	30.79
6/26/2022 7:27	87.59	6/25/2022 6:44	9.23	6/25/2022 7:14	11.02	6/25/2022 6:02	0.72	6/25/2022 7:44	30.83
6/26/2022 7:28	87.56	6/25/2022 6:45	9.85	6/25/2022 7:15	10.99	6/25/2022 6:03	0.75	6/25/2022 7:45	30.81
6/26/2022 7:29	87.57	6/25/2022 6:46	14.51	6/25/2022 7:16	10.98	6/25/2022 6:04	0.72	6/25/2022 7:46	30.80
6/26/2022 7:30	87.58	6/25/2022 6:47	16.81	6/25/2022 7:17	10.92	6/25/2022 6:05	0.70	6/25/2022 7:47	30.80
6/26/2022 7:31	87.59	6/25/2022 6:48	14.39	6/25/2022 7:18	10.91	6/25/2022 6:06	0.74	6/25/2022 7:48	30.80
6/26/2022 7:32	87.53	6/25/2022 6:49	12.26	6/25/2022 7:19	10.86	6/25/2022 6:07	0.76	6/25/2022 7:49	30.79
6/26/2022 7:33	87.57	6/25/2022 6:50	10.53	6/25/2022 7:20	10.85	6/25/2022 6:08	0.79	6/25/2022 7:50	30.78
6/26/2022 7:34	87.62	6/25/2022 6:51	9.07	6/25/2022 7:21	10.86	6/25/2022 6:09	0.73	6/25/2022 7:51	30.79
6/26/2022 7:35	87.55	6/25/2022 6:52	7.86	6/25/2022 7:22	10.82	6/25/2022 6:10	0.76	6/25/2022 7:52	30.82
6/26/2022 7:36	87.61	6/25/2022 6:53	6.81	6/25/2022 7:23	10.75	6/25/2022 6:11	0.71	6/25/2022 7:53	30.82
6/26/2022 7:37	87.57	6/25/2022 6:54	5.93	6/25/2022 7:24	10.76	6/25/2022 6:12	0.73	6/25/2022 7:54	30.76
6/26/2022 7:38	87.53	6/25/2022 6:55	5.20	6/25/2022 7:25	10.74	6/25/2022 6:13	0.71	6/25/2022 7:55	30.81
6/26/2022 7:39	87.51	6/25/2022 6:56	4.59	6/25/2022 7:26	10.75	6/25/2022 6:14	0.73	6/25/2022 7:56	30.81
6/26/2022 7:40	87.57	6/25/2022 6:57	4.09	6/25/2022 7:27	10.75	6/25/2022 6:15	3.33	6/25/2022 7:57	30.78
6/26/2022 7:41	87.56	6/25/2022 6:58	3.61	6/25/2022 7:28	10.75	6/25/2022 6:16	9.32	6/25/2022 7:58	30.82
6/26/2022 7:42	87.55	6/25/2022 6:59	3.24	6/25/2022 7:29	10.75	6/25/2022 6:17	6.25	6/25/2022 7:59	30.78
6/26/2022 7:43	87.52	6/25/2022 7:00	2.88	6/25/2022 7:30	10.77	6/25/2022 6:18	4.10	6/25/2022 8:00	30.76
6/26/2022 7:44	87.53	6/25/2022 7:01	2.54	6/25/2022 7:31	10.80	6/25/2022 6:19	2.44	6/25/2022 8:01	30.79
6/26/2022 7:45	87.56	6/25/2022 7:02	2.32	6/25/2022 7:32	10.78	6/25/2022 6:20	1.35	6/25/2022 8:02	30.81
6/26/2022 7:46	87.53	6/25/2022 7:03	2.12	6/25/2022 7:33	10.74	6/25/2022 6:21	0.83	6/25/2022 8:03	30.78
6/26/2022 7:47	87.60	6/25/2022 7:04	1.93	6/25/2022 7:34	10.75	6/25/2022 6:22	0.79	6/25/2022 8:04	30.79
6/26/2022 7:48	87.57	6/25/2022 7:05	1.77	6/25/2022 7:35	10.73	6/25/2022 6:23	0.77	6/25/2022 8:05	30.79
6/26/2022 7:49	87.53	6/25/2022 7:06	1.63	6/25/2022 7:36	10.71	6/25/2022 6:24	0.80	6/25/2022 8:06	30.80
6/26/2022 7:50	87.52	6/25/2022 7:07	4.40	6/25/2022 7:37	10.75	6/25/2022 6:25	0.77	6/25/2022 8:07	30.76
6/26/2022 7:51	87.54	6/25/2022 7:08	9.54	6/25/2022 7:38	10.74	6/25/2022 6:26	0.79	6/25/2022 8:08	30.80
6/26/2022 7:52	87.56	6/25/2022 7:09	8.00	6/25/2022 7:39	10.71	6/25/2022 6:27	0.79	6/25/2022 8:09	30.77
6/26/2022 7:53	87.51	6/25/2022 7:10	6.85	6/25/2022 7:40	10.72	6/25/2022 6:28	0.79	6/25/2022 8:10	30.79
6/26/2022 7:54	87.57	6/25/2022 7:11	5.85	6/25/2022 7:41	10.68	6/25/2022 6:29	0.79	6/25/2022 8:11	30.81
6/26/2022 7:55	87.57	6/25/2022 7:12	5.10	6/25/2022 7:42	10.68	6/25/2022 6:30	0.80	6/25/2022 8:12	30.73
6/26/2022 7:56	87.55	6/25/2022 7:13	4.39	6/25/2022 7:43	10.66	6/25/2022 6:31	0.76	6/25/2022 8:13	30.77
6/26/2022 7:57	87.52	6/25/2022 7:14	3.85	6/25/2022 7:44	10.67	6/25/2022 6:32	0.76	6/25/2022 8:14	30.77
6/26/2022 7:58	87.54	6/25/2022 7:15	3.38	6/25/2022 7:45	10.67	6/25/2022 6:33	0.79	6/25/2022 8:15	30.79
6/26/2022 7:59	87.59	6/25/2022 7:16	2.92	6/25/2022 7:46	10.63	6/25/2022 6:34	0.78	6/25/2022 8:16	30.79
6/26/2022 8:00	87.60	6/25/2022 7:17	2.60	6/25/2022 7:47	10.63	6/25/2022 6:35	0.78	6/25/2022 8:17	30.77
6/26/2022 8:01	87.48	6/25/2022 7:18	2.36	6/25/2022 7:48	10.64	6/25/2022 6:36	0.75	6/25/2022 8:18	30.78
6/26/2022 8:02	87.49	6/25/2022 7:19	2.09	6/25/2022 7:49	10.63	6/25/2022 6:37	0.75	6/25/2022 8:19	30.78
6/26/2022 8:03	87.47	6/25/2022 7:20	1.91	6/25/2022 7:50	10.64	6/25/2022 6:38	0.79	6/25/2022 8:20	30.74
6/26/2022 8:04	87.52	6/25/2022 7:21	1.77	6/25/2022 7:51	10.62	6/25/2022 6:39	0.78	6/25/2022 8:21	30.76
6/26/2022 8:05	87.53	6/25/2022 7:22	1.57	6/25/2022 7:52	10.58	6/25/2022 6:40	0.76	6/25/2022 8:22	30.77
6/26/2022 8:06	87.54	6/25/2022 7:23	1.43	6/25/2022 7:53	10.59	6/25/2022 6:41	0.78	6/25/2022 8:23	30.80
6/26/2022 8:07	87.54	6/25/2022 7:24	1.35	6/25/2022 7:54	10.55	6/25/2022 6:42	0.79	6/25/2022 8:24	30.75
6/26/2022 8:08	87.55	6/25/2022 7:25	1.24	6/25/2022 7:55	10.60	6/25/2022 6:43	0.81	6/25/2022 8:25	30.77
6/26/2022 8:09	87.54	6/25/2022 7:26	4.08	6/25/2022 7:56	10.59	6/25/2022 6:44	0.82	6/25/2022 8:26	30.76
6/26/2022 8:10	87.55	6/25/2022 7:27	9.42	6/25/2022 7:57	10.64	6/25/2022 6:45	0.79	6/25/2022 8:27	30.81
6/26/2022 8:11	87.49	6/25/2022 7:28	9.36	6/25/2022 7:58	10.59	6/25/2022 6:46	0.81	6/25/2022 8:28	30.77
6/26/2022 8:12	87.50	6/25/2022 7:29	7.98	6/25/2022 7:59	10.63	6/25/2022 6:47	0.78	6/25/2022 8:29	30.79
6/26/2022 8:13	87.49	6/25/2022 7:30	6.75	6/25/2022 8:00	10.65	6/25/2022 6:48	0.82	6/25/2022 8:30	30.78
6/26/2022 8:14	87.48	6/25/2022 7:31	5.81	6/25/2022 8:01	10.65	6/25/2022 6:49	0.84	6/25/2022 8:31	30.79
6/26/2022 8:15	87.45	6/25/2022 7:32	5.03	6/25/2022 8:02	10.66	6/25/2022 6:50	0.78	6/25/2022 8:32	30.76
6/26/2022 8:16	87.51	6/25/2022 7:33	4.35	6/25/2022 8:03	10.63	6/25/2022 6:51	0.80	6/25/2022 8:33	30.80
6/26/2022 8:17	87.48	6/25/2022 7:34	3.81	6/25/2022 8:04	10.62	6/25/2022 6:52	0.77	6/25/2022 8:34	30.78
6/26/2022 8:18	87.48	6/25/2022 7:35	3.34	6/25/2022 8:05	10.61	6/25/2022 6:53	0.79	6/25/2022 8:35	33.11
6/26/2022 8:19	87.48	6/25/2022 7:36	2.89	6/25/2022 8:06	10.64	6/25/2022 6:54	0.77	6/25/2022 8:36	31.76
6/26/2022 8:20	87.49	6/25/2022 7:37	2.56	6/25/2022 8:07	10.64	6/25/2022 6:55	0.75	6/25/2022 8:37	31.12
6/26/2022 8:21	87.44	6/25/2022 7:38	2.30	6/25/2022 8:08	10.60	6/25/2022 6:56	0.73	6/25/2022 8:38	30.93
6/26/2022 8:22	87.45	6/25/2022 7:39	2.03	6/25/2022 8:09	10.63	6/25/2022 6:57	0.73	6/25/2022 8:39	30.87
6/26/2022 8:23	87.49	6/25/2022 7:40	1.82	6/25/2022 8:10	10.60	6/25/2022 6:58	0.76	6/25/2022 8:40	30.83
6/26/2022 8:24	87.53	6/25/2022 7:41	1.71	6/25/2022 8:11	14.56	6/25/2022 6:59	0.69	6/25/2022 8:41	30.81
6/26/2022 8:25	87.46	6/25/2022 7:42	1.64	6/25/2022 8:12	15.55	6/25/2022 7:00	0.70	6/25/2022 8:42	30.77
6/26/2022 8:26	87.48	6/25/2022 7:43	1.60	6/25/2022 8:13	14.96	6/25/2022 7:01	0.73	6/25/2022 8:43	30.79
6/26/2022 8:27	87.49	6/25/2022 7:44	1.47	6/25/2022 8:14	14.48	6/25/2022 7:02	0.74	6/25/2022 8:44	30.82
6/26/2022 8:28	87.49	6/25/2022 7:45	2.35	6/25/2022 8:15	13.99	6/25/2022 7:03	0.67	6/25/2022 8:45	30.81
6/26/2022 8:29	87.45	6/25/2022 7:46	8.19	6/25/2022 8:16	13.59	6/25/2022 7:04	0.70	6/25/2022 8:46	30.78
6/26/2022 8:30	87.43	6/25/2022 7:47	9.70	6/25/2022 8:17	13.28	6/25/2022 7:05	0.71	6/25/2022 8:47	30.80
6/26/2022 8:31	87.49	6/25/2022 7:48	8.25	6/25/2022 8:18	13.01	6/25/2022 7:06	0.68	6/25/2022 8:48	30.82
6/26/2022 8:32	87.41	6/25/2022 7:49	7.01	6/25/2022 8:19	12.72	6/25/2022 7:07	0.68	6/25/2022 8:49	30.78
6/26/2022 8:33	87.45	6/25/2022 7:50	6.00	6/25/2022 8:20	12.53	6/25/2022 7:08	0.71	6/25/2022 8:50	30.80
6/26/2022 8:34	87.43	6/25/2022 7:51	5.17	6/25/2022 8:21	12.33	6/25/2022 7:09	0.69	6/25/2022 8:51	30.79
6/26/2022 8:35	87.50	6/25/2022 7:52	4.45	6/25/2022 8:22	12.15	6/25/2022 7:10	0.69	6/25/2022 8:52	30.80
6/26/2022 8:36	87.47	6/25/2022 7:53	3.90	6/25/2022 8:23	12.01	6/25/2022 7:11	0.69	6/25/2022 8:53	30.79
6/26/2022 8:37	87.48	6/25/2022 7:54	3.41	6/25/2022 8:24	14.03	6/25/2022 7:12	0.72	6/25/2022 8:54	32.99

6/26/2022 8:38	87.45	6/25/2022 7:55	2.91	6/25/2022 8:25	16.54	6/25/2022 7:13	0.68	6/25/2022 8:55	31.71
6/26/2022 8:39	87.49	6/25/2022 7:56	2.62	6/25/2022 8:26	15.86	6/25/2022 7:14	0.69	6/25/2022 8:56	31.13
6/26/2022 8:40	87.47	6/25/2022 7:57	2.33	6/25/2022 8:27	15.29	6/25/2022 7:15	0.72	6/25/2022 8:57	30.89
6/26/2022 8:41	87.47	6/25/2022 7:58	2.09	6/25/2022 8:28	14.78	6/25/2022 7:16	0.69	6/25/2022 8:58	30.86
6/26/2022 8:42	87.46	6/25/2022 7:59	1.87	6/25/2022 8:29	14.36	6/25/2022 7:17	0.70	6/25/2022 8:59	30.84
6/26/2022 8:43	87.44	6/25/2022 8:00	1.70	6/25/2022 8:30	13.97	6/25/2022 7:18	0.66	6/25/2022 9:00	30.79
6/26/2022 8:44	87.50	6/25/2022 8:01	1.55	6/25/2022 8:31	13.64	6/25/2022 7:19	0.66	6/25/2022 9:01	30.86
6/26/2022 8:45	87.48	6/25/2022 8:02	1.41	6/25/2022 8:32	13.34	6/25/2022 7:20	0.73	6/25/2022 9:02	30.83
6/26/2022 8:46	87.47	6/25/2022 8:03	1.27	6/25/2022 8:33	13.07	6/25/2022 7:21	0.71	6/25/2022 9:03	30.79
6/26/2022 8:47	87.41	6/25/2022 8:04	1.19	6/25/2022 8:34	12.85	6/25/2022 7:22	0.72	6/25/2022 9:04	30.81
6/26/2022 8:48	87.41	6/25/2022 8:05	4.84	6/25/2022 8:35	12.65	6/25/2022 7:23	0.68	6/25/2022 9:05	30.78
6/26/2022 8:49	87.41	6/25/2022 8:06	8.80	6/25/2022 8:36	12.47	6/25/2022 7:24	0.70	6/25/2022 9:06	30.83
6/26/2022 8:50	87.38	6/25/2022 8:07	7.40	6/25/2022 8:37	12.25	6/25/2022 7:25	0.64	6/25/2022 9:07	30.80
6/26/2022 8:51	87.40	6/25/2022 8:08	6.30	6/25/2022 8:38	12.16	6/25/2022 7:26	0.70	6/25/2022 9:08	30.81
6/26/2022 8:52	87.44	6/25/2022 8:09	5.46	6/25/2022 8:39	12.01	6/25/2022 7:27	0.69	6/25/2022 9:09	30.81
6/26/2022 8:53	87.39	6/25/2022 8:10	4.68	6/25/2022 8:40	11.86	6/25/2022 7:28	0.71	6/25/2022 9:10	30.80
6/26/2022 8:54	87.38	6/25/2022 8:11	4.04	6/25/2022 8:41	11.81	6/25/2022 7:29	0.72	6/25/2022 9:11	30.81
6/26/2022 8:55	87.40	6/25/2022 8:12	3.55	6/25/2022 8:42	11.67	6/25/2022 7:30	0.70	6/25/2022 9:12	30.81
6/26/2022 8:56	87.45	6/25/2022 8:13	3.09	6/25/2022 8:43	11.61	6/25/2022 7:31	0.69	6/25/2022 9:13	30.81
6/26/2022 8:57	87.43	6/25/2022 8:14	2.71	6/25/2022 8:44	11.50	6/25/2022 7:32	0.69	6/25/2022 9:14	30.83
6/26/2022 8:58	87.42	6/25/2022 8:15	2.41	6/25/2022 8:45	11.42	6/25/2022 7:33	0.68	6/25/2022 9:15	30.82
6/26/2022 8:59	87.40	6/25/2022 8:16	2.16	6/25/2022 8:46	11.39	6/25/2022 7:34	0.73	6/25/2022 9:16	30.83
6/26/2022 9:00	87.43	6/25/2022 8:17	1.89	6/25/2022 8:47	11.32	6/25/2022 7:35	0.66	6/25/2022 9:17	30.83
6/26/2022 9:01	87.38	6/25/2022 8:18	1.69	6/25/2022 8:48	11.23	6/25/2022 7:36	0.68	6/25/2022 9:18	30.83
6/26/2022 9:02	87.42	6/25/2022 8:19	1.56	6/25/2022 8:49	11.21	6/25/2022 7:37	0.68	6/25/2022 9:19	30.83
6/26/2022 9:03	87.44	6/25/2022 8:20	1.43	6/25/2022 8:50	11.15	6/25/2022 7:38	0.68	6/25/2022 9:20	30.81
6/26/2022 9:04	87.45	6/25/2022 8:21	1.31	6/25/2022 8:51	11.08	6/25/2022 7:39	0.71	6/25/2022 9:21	30.81
6/26/2022 9:05	87.38	6/25/2022 8:22	1.16	6/25/2022 8:52	11.04	6/25/2022 7:40	0.67	6/25/2022 9:22	30.82
6/26/2022 9:06	87.44	6/25/2022 8:23	1.07	6/25/2022 8:53	11.02	6/25/2022 7:41	6.46	6/25/2022 9:23	30.79
6/26/2022 9:07	87.36	6/25/2022 8:24	1.03	6/25/2022 8:54	10.97	6/25/2022 7:42	5.78	6/25/2022 9:24	30.83
6/26/2022 9:08	87.40	6/25/2022 8:25	0.94	6/25/2022 8:55	10.98	6/25/2022 7:43	3.36	6/25/2022 9:25	30.79
6/26/2022 9:09	87.43	6/25/2022 8:26	2.65	6/25/2022 8:56	11.00	6/25/2022 7:44	1.73	6/25/2022 9:26	30.80
6/26/2022 9:10	87.38	6/25/2022 8:27	8.24	6/25/2022 8:57	10.99	6/25/2022 7:45	0.76	6/25/2022 9:27	30.78
6/26/2022 9:11	87.36	6/25/2022 8:28	7.66	6/25/2022 8:58	14.61	6/25/2022 7:46	0.73	6/25/2022 9:28	30.82
6/26/2022 9:12	87.44	6/25/2022 8:29	6.45	6/25/2022 8:59	14.94	6/25/2022 7:47	0.74	6/25/2022 9:29	30.82
6/26/2022 9:13	87.40	6/25/2022 8:30	5.56	6/25/2022 9:00	14.43	6/25/2022 7:48	0.74	6/25/2022 9:30	30.81
6/26/2022 9:14	87.42	6/25/2022 8:31	4.81	6/25/2022 9:01	14.02	6/25/2022 7:49	0.76	6/25/2022 9:31	30.80
6/26/2022 9:15	87.39	6/25/2022 8:32	4.14	6/25/2022 9:02	13.64	6/25/2022 7:50	0.71	6/25/2022 9:32	30.82
6/26/2022 9:16	87.37	6/25/2022 8:33	3.60	6/25/2022 9:03	13.33	6/25/2022 7:51	0.72	6/25/2022 9:33	30.79
6/26/2022 9:17	87.42	6/25/2022 8:34	3.13	6/25/2022 9:04	13.05	6/25/2022 7:52	0.74	6/25/2022 9:34	30.81
6/26/2022 9:18	87.38	6/25/2022 8:35	2.75	6/25/2022 9:05	12.77	6/25/2022 7:53	0.72	6/25/2022 9:35	30.82
6/26/2022 9:19	87.38	6/25/2022 8:36	2.42	6/25/2022 9:06	12.57	6/25/2022 7:54	0.73	6/25/2022 9:36	30.76
6/26/2022 9:20	87.40	6/25/2022 8:37	2.16	6/25/2022 9:07	12.39	6/25/2022 7:55	0.69	6/25/2022 9:37	30.77
6/26/2022 9:21	87.37	6/25/2022 8:38	1.88	6/25/2022 9:08	12.22	6/25/2022 7:56	0.71	6/25/2022 9:38	30.78
6/26/2022 9:22	87.38	6/25/2022 8:39	1.73	6/25/2022 9:09	13.68	6/25/2022 7:57	0.70	6/25/2022 9:39	30.79
6/26/2022 9:23	87.37	6/25/2022 8:40	1.53	6/25/2022 9:10	15.62	6/25/2022 7:58	0.71	6/25/2022 9:40	30.77
6/26/2022 9:24	87.37	6/25/2022 8:41	1.43	6/25/2022 9:11	15.05	6/25/2022 7:59	0.71	6/25/2022 9:41	30.81
6/26/2022 9:25	87.41	6/25/2022 8:42	1.29	6/25/2022 9:12	14.53	6/25/2022 8:00	0.71	6/25/2022 9:42	30.81
6/26/2022 9:26	87.37	6/25/2022 8:43	1.16	6/25/2022 9:13	14.12	6/25/2022 8:01	0.74	6/25/2022 9:43	30.79
6/26/2022 9:27	88.82	6/25/2022 8:44	1.08	6/25/2022 9:14	13.77	6/25/2022 8:02	0.66	6/25/2022 9:44	30.78
6/26/2022 9:28	92.63	6/25/2022 8:45	0.98	6/25/2022 9:15	13.44	6/25/2022 8:03	0.67	6/25/2022 9:45	30.77
6/26/2022 9:29	94.81	6/25/2022 8:46	0.89	6/25/2022 9:16	13.17	6/25/2022 8:04	0.71	6/25/2022 9:46	30.78
6/26/2022 9:30	94.89	6/25/2022 8:47	0.88	6/25/2022 9:17	12.87	6/25/2022 8:05	0.68	6/25/2022 9:47	30.78
6/26/2022 9:31	92.43	6/25/2022 8:48	4.92	6/25/2022 9:18	12.67	6/25/2022 8:06	0.71	6/25/2022 9:48	30.76
6/26/2022 9:32	90.99	6/25/2022 8:49	8.37	6/25/2022 9:19	12.47	6/25/2022 8:07	0.74	6/25/2022 9:49	30.75
6/26/2022 9:33	90.10	6/25/2022 8:50	7.11	6/25/2022 9:20	12.33	6/25/2022 8:08	0.71	6/25/2022 9:50	30.78
6/26/2022 9:34	89.48	6/25/2022 8:51	6.02	6/25/2022 9:21	12.17	6/25/2022 8:09	0.76	6/25/2022 9:51	30.82
6/26/2022 9:35	89.11	6/25/2022 8:52	5.15	6/25/2022 9:22	11.99	6/25/2022 8:10	0.71	6/25/2022 9:52	30.78
6/26/2022 9:36	88.85	6/25/2022 8:53	4.45	6/25/2022 9:23	11.92	6/25/2022 8:11	0.69	6/25/2022 9:53	30.75
6/26/2022 9:37	88.56	6/25/2022 8:54	3.88	6/25/2022 9:24	11.82	6/25/2022 8:12	0.72	6/25/2022 9:54	30.76
6/26/2022 9:38	88.41	6/25/2022 8:55	3.37	6/25/2022 9:25	11.72	6/25/2022 8:13	0.70	6/25/2022 9:55	30.76
6/26/2022 9:39	88.28	6/25/2022 8:56	2.94	6/25/2022 9:26	11.65	6/25/2022 8:14	0.73	6/25/2022 9:56	30.78
6/26/2022 9:40	88.26	6/25/2022 8:57	2.58	6/25/2022 9:27	11.56	6/25/2022 8:15	0.73	6/25/2022 9:57	30.75
6/26/2022 9:41	88.16	6/25/2022 8:58	2.30	6/25/2022 9:28	11.50	6/25/2022 8:16	0.74	6/25/2022 9:58	30.79
6/26/2022 9:42	88.10	6/25/2022 8:59	2.00	6/25/2022 9:29	11.45	6/25/2022 8:17	0.72	6/25/2022 9:59	30.80
6/26/2022 9:43	88.07	6/25/2022 9:00	1.85	6/25/2022 9:30	11.38	6/25/2022 8:18	0.71	6/25/2022 10:00	30.77
6/26/2022 9:44	87.98	6/25/2022 9:01	1.67	6/25/2022 9:31	11.35	6/25/2022 8:19	0.71	6/25/2022 10:01	30.75
6/26/2022 9:45	87.93	6/25/2022 9:02	1.49	6/25/2022 9:32	11.26	6/25/2022 8:20	0.71	6/25/2022 10:02	30.75
6/26/2022 9:46	87.94	6/25/2022 9:03	1.35	6/25/2022 9:33	11.23	6/25/2022 8:21	0.68	6/25/2022 10:03	30.74
6/26/2022 9:47	87.89	6/25/2022 9:04	1.26	6/25/2022 9:34	11.19	6/25/2022 8:22	0.72	6/25/2022 10:04	30.74
6/26/2022 9:48	87.81	6/25/2022 9:05	5.38	6/25/2022 9:35	11.16	6/25/2022 8:23	0.70	6/25/2022 10:05	30.76
6/26/2022 9:49	87.84	6/25/2022 9:06	9.45	6/25/2022 9:36	11.11	6/25/2022 8:24	0.72	6/25/2022 10:06	30.77
6/26/2022 9:50	87.76	6/25/2022 9:07	7.97	6/25/2022 9:37	11.07	6/25/2022 8:25	0.71	6/25/2022 10:07	30.76
6/26/2022 9:51	87.78	6/25/2022 9:08	6.76	6/25/2022 9:38	11.04	6/25/2022 8:26	0.72	6/25/2022 10:08	30.75
6/26/2022 9:52	87.79	6/25/2022 9:09	5.81	6/25/2022 9:39	11.03	6/25/2022 8:27	0.76	6/25/2022 10:09	30.76
6/26/2022 9:53	87.82	6/25/2022 9:10	4.96	6/25/2022 9:40	10.96	6/25/2022 8:28	0.73	6/25/2022 10:10	30.75
6/26/2022 9:54	87.72	6/25/2022 9:11	4.28	6/25/2022 9:41	10.97	6/25/2022 8:29	0.73	6/25/2022 10:11	30.74
6/26/2022 9:55	87.79	6/25/2022 9:12	3.74	6/25/2022 9:42	10.92	6/25/2022 8:30	0.70	6/25/2022 10:12	30.75
6/26/2022 9:56	87.72	6/25/2022 9:13	4.72	6/25/2022 9:43	10.89	6/25/2022 8:31	0.72	6/25/2022 10:13	30.72
6/26/2022 9:57	87.76	6/25/2022 9:14	9.94	6/25/2022 9:44	10.87	6/25/2022 8:32	0.70	6/25/2022 10:14	30.76
6/26/2022 9:58	87.67	6/25/2022 9:15	9.12	6/25/2022 9:45	10.85	6/25/2022 8:33	0.63	6/25/2022 10:15	30.74
6/26/2022 9:59	87.73	6/25/2022 9:16	7.72	6/25/2022 9:46	10.83	6/25/2022 8:34	0.73	6/25/2022 10:16	30.74
6/26/2022 10:00	87.67	6/25/2022 9:17	6.60	6/25/2022 9:47	10.82	6/25/2022 8:35	0.69	6/25/2022 10:17	30.75
6/26/2022 10:01	87.65	6/25/2022 9:18	5.66	6/25/2022 9:48	10.78	6/25/2022 8:36	0.74	6/25/2022 10:18	30.73
6/26/2022 10:02	87.71	6/25/2022 9:19	4.88	6/25/2022 9:49	10.76	6/25/2022 8:37	0.70	6/25/2022 10:19	30.77
6/26/2022 10:03	87.62	6/25/2022 9:20	4.25	6/25/2022 9:50	10.77	6/25/2022 8:38	0.70	6/25/2022 10:20	30.77
6/26/2022 10:04	87.62	6/25/2022 9:21	3.68	6/25/2022 9:51	10.77	6/25/2022 8:39	0.72	6/25/2022 10:21	30.76
6/26/2022 10:05	87.65	6/25/2022 9:22	3.27	6/25/2022 9:52	10.76	6/25/2022 8:40	0.68	6/25/2022 10:22	30.76

6/26/2022 10:06	87.67	6/25/2022 9:23	2.82	6/25/2022 9:53	11.56	6/25/2022 8:41	0.71	6/25/2022 10:23	30.73
6/26/2022 10:07	87.61	6/25/2022 9:24	5.03	6/25/2022 9:54	15.04	6/25/2022 8:42	0.72	6/25/2022 10:24	30.75
6/26/2022 10:08	87.61	6/25/2022 9:25	10.08	6/25/2022 9:55	14.48	6/25/2022 8:43	0.72	6/25/2022 10:25	30.74
6/26/2022 10:09	87.64	6/25/2022 9:26	9.20	6/25/2022 9:56	14.04	6/25/2022 8:44	0.71	6/25/2022 10:26	30.80
6/26/2022 10:10	87.61	6/25/2022 9:27	7.80	6/25/2022 9:57	13.63	6/25/2022 8:45	0.68	6/25/2022 10:27	30.80
6/26/2022 10:11	87.56	6/25/2022 9:28	6.62	6/25/2022 9:58	13.32	6/25/2022 8:46	0.66	6/25/2022 10:28	30.79
6/26/2022 10:12	87.54	6/25/2022 9:29	5.71	6/25/2022 9:59	13.02	6/25/2022 8:47	0.73	6/25/2022 10:29	30.75
6/26/2022 10:13	87.59	6/25/2022 9:30	4.90	6/25/2022 10:00	12.78	6/25/2022 8:48	0.75	6/25/2022 10:30	30.77
6/26/2022 10:14	87.55	6/25/2022 9:31	4.28	6/25/2022 10:01	12.56	6/25/2022 8:49	0.72	6/25/2022 10:31	30.79
6/26/2022 10:15	87.57	6/25/2022 9:32	3.72	6/25/2022 10:02	12.41	6/25/2022 8:50	0.72	6/25/2022 10:32	30.79
6/26/2022 10:16	87.56	6/25/2022 9:33	3.23	6/25/2022 10:03	12.24	6/25/2022 8:51	0.73	6/25/2022 10:33	30.73
6/26/2022 10:17	87.57	6/25/2022 9:34	6.91	6/25/2022 10:04	12.11	6/25/2022 8:52	0.71	6/25/2022 10:34	30.76
6/26/2022 10:18	87.55	6/25/2022 9:35	10.59	6/25/2022 10:05	11.96	6/25/2022 8:53	0.68	6/25/2022 10:35	32.45
6/26/2022 10:19	87.57	6/25/2022 9:36	8.95	6/25/2022 10:06	11.86	6/25/2022 8:54	0.72	6/25/2022 10:36	31.98
6/26/2022 10:20	87.57	6/25/2022 9:37	7.64	6/25/2022 10:07	11.79	6/25/2022 8:55	0.70	6/25/2022 10:37	31.25
6/26/2022 10:21	87.61	6/25/2022 9:38	6.55	6/25/2022 10:08	14.42	6/25/2022 8:56	0.73	6/25/2022 10:38	30.93
6/26/2022 10:22	87.59	6/25/2022 9:39	5.62	6/25/2022 10:09	15.48	6/25/2022 8:57	0.71	6/25/2022 10:39	31.83
6/26/2022 10:23	87.57	6/25/2022 9:40	4.87	6/25/2022 10:10	14.88	6/25/2022 8:58	0.73	6/25/2022 10:40	32.24
6/26/2022 10:24	87.53	6/25/2022 9:41	4.21	6/25/2022 10:11	14.44	6/25/2022 8:59	0.71	6/25/2022 10:41	31.36
6/26/2022 10:25	87.53	6/25/2022 9:42	3.66	6/25/2022 10:12	13.99	6/25/2022 9:00	0.69	6/25/2022 10:42	30.97
6/26/2022 10:26	87.54	6/25/2022 9:43	3.23	6/25/2022 10:13	13.73	6/25/2022 9:01	0.70	6/25/2022 10:43	30.87
6/26/2022 10:27	87.51	6/25/2022 9:44	2.81	6/25/2022 10:14	13.33	6/25/2022 9:02	0.71	6/25/2022 10:44	30.83
6/26/2022 10:28	87.48	6/25/2022 9:45	3.41	6/25/2022 10:15	13.08	6/25/2022 9:03	0.74	6/25/2022 10:45	30.82
6/26/2022 10:29	87.48	6/25/2022 9:46	8.91	6/25/2022 10:16	15.42	6/25/2022 9:04	0.69	6/25/2022 10:46	30.81
6/26/2022 10:30	87.46	6/25/2022 9:47	8.76	6/25/2022 10:17	17.86	6/25/2022 9:05	0.72	6/25/2022 10:47	30.80
6/26/2022 10:31	87.54	6/25/2022 9:48	7.46	6/25/2022 10:18	17.00	6/25/2022 9:06	0.71	6/25/2022 10:48	30.78
6/26/2022 10:32	87.50	6/25/2022 9:49	6.39	6/25/2022 10:19	16.31	6/25/2022 9:07	0.74	6/25/2022 10:49	30.78
6/26/2022 10:33	87.46	6/25/2022 9:50	5.50	6/25/2022 10:20	15.73	6/25/2022 9:08	0.75	6/25/2022 10:50	30.79
6/26/2022 10:34	87.47	6/25/2022 9:51	4.75	6/25/2022 10:21	15.23	6/25/2022 9:09	0.74	6/25/2022 10:51	30.78
6/26/2022 10:35	87.47	6/25/2022 9:52	4.14	6/25/2022 10:22	14.79	6/25/2022 9:10	0.68	6/25/2022 10:52	30.76
6/26/2022 10:36	87.55	6/25/2022 9:53	3.60	6/25/2022 10:23	14.41	6/25/2022 9:11	0.73	6/25/2022 10:53	30.79
6/26/2022 10:37	87.45	6/25/2022 9:54	3.14	6/25/2022 10:24	14.07	6/25/2022 9:12	0.70	6/25/2022 10:54	30.76
6/26/2022 10:38	87.50	6/25/2022 9:55	2.73	6/25/2022 10:25	13.73	6/25/2022 9:13	0.72	6/25/2022 10:55	30.77
6/26/2022 10:39	87.48	6/25/2022 9:56	2.42	6/25/2022 10:26	13.50	6/25/2022 9:14	0.73	6/25/2022 10:56	30.80
6/26/2022 10:40	87.45	6/25/2022 9:57	2.16	6/25/2022 10:27	13.25	6/25/2022 9:15	0.71	6/25/2022 10:57	30.74
6/26/2022 10:41	87.49	6/25/2022 9:58	1.97	6/25/2022 10:28	13.02	6/25/2022 9:16	0.74	6/25/2022 10:58	30.77
6/26/2022 10:42	87.43	6/25/2022 9:59	1.76	6/25/2022 10:29	12.81	6/25/2022 9:17	0.73	6/25/2022 10:59	30.78
6/26/2022 10:43	87.40	6/25/2022 10:00	1.60	6/25/2022 10:30	12.67	6/25/2022 9:18	0.70	6/25/2022 11:00	30.76
6/26/2022 10:44	87.48	6/25/2022 10:01	6.16	6/25/2022 10:31	12.48	6/25/2022 9:19	0.71	6/25/2022 11:01	30.78
6/26/2022 10:45	87.43	6/25/2022 10:02	9.06	6/25/2022 10:32	12.35	6/25/2022 9:20	0.68	6/25/2022 11:02	30.78
6/26/2022 10:46	87.44	6/25/2022 10:03	7.68	6/25/2022 10:33	12.24	6/25/2022 9:21	0.71	6/25/2022 11:03	30.74
6/26/2022 10:47	87.44	6/25/2022 10:04	6.56	6/25/2022 10:34	12.16	6/25/2022 9:22	0.72	6/25/2022 11:04	30.76
6/26/2022 10:48	87.44	6/25/2022 10:05	5.56	6/25/2022 10:35	12.06	6/25/2022 9:23	0.69	6/25/2022 11:05	30.72
6/26/2022 10:49	87.44	6/25/2022 10:06	4.82	6/25/2022 10:36	11.97	6/25/2022 9:24	0.70	6/25/2022 11:06	30.76
6/26/2022 10:50	87.42	6/25/2022 10:07	4.16	6/25/2022 10:37	11.87	6/25/2022 9:25	0.70	6/25/2022 11:07	30.77
6/26/2022 10:51	87.47	6/25/2022 10:08	3.62	6/25/2022 10:38	11.79	6/25/2022 9:26	0.71	6/25/2022 11:08	30.71
6/26/2022 10:52	87.40	6/25/2022 10:09	3.15	6/25/2022 10:39	11.73	6/25/2022 9:27	0.73	6/25/2022 11:09	30.74
6/26/2022 10:53	87.45	6/25/2022 10:10	2.76	6/25/2022 10:40	11.68	6/25/2022 9:28	0.75	6/25/2022 11:10	30.76
6/26/2022 10:54	87.41	6/25/2022 10:11	2.44	6/25/2022 10:41	11.57	6/25/2022 9:29	0.70	6/25/2022 11:11	30.74
6/26/2022 10:55	87.42	6/25/2022 10:12	4.09	6/25/2022 10:42	11.54	6/25/2022 9:30	0.73	6/25/2022 11:12	30.76
6/26/2022 10:56	87.41	6/25/2022 10:13	9.40	6/25/2022 10:43	11.50	6/25/2022 9:31	0.70	6/25/2022 11:13	30.76
6/26/2022 10:57	87.42	6/25/2022 10:14	9.35	6/25/2022 10:44	11.44	6/25/2022 9:32	0.72	6/25/2022 11:14	30.75
6/26/2022 10:58	87.40	6/25/2022 10:15	7.96	6/25/2022 10:45	11.39	6/25/2022 9:33	0.70	6/25/2022 11:15	30.72
6/26/2022 10:59	87.42	6/25/2022 10:16	6.81	6/25/2022 10:46	11.38	6/25/2022 9:34	0.73	6/25/2022 11:16	30.74
6/26/2022 11:00	87.42	6/25/2022 10:17	5.78	6/25/2022 10:47	11.35	6/25/2022 9:35	0.70	6/25/2022 11:17	30.67
6/26/2022 11:01	87.36	6/25/2022 10:18	5.00	6/25/2022 10:48	11.32	6/25/2022 9:36	0.73	6/25/2022 11:18	30.69
6/26/2022 11:02	87.39	6/25/2022 10:19	4.35	6/25/2022 10:49	11.27	6/25/2022 9:37	0.75	6/25/2022 11:19	30.69
6/26/2022 11:03	87.39	6/25/2022 10:20	3.81	6/25/2022 10:50	11.29	6/25/2022 9:38	0.73	6/25/2022 11:20	30.73
6/26/2022 11:04	87.35	6/25/2022 10:21	3.29	6/25/2022 10:51	11.26	6/25/2022 9:39	0.73	6/25/2022 11:21	30.76
6/26/2022 11:05	87.35	6/25/2022 10:22	8.56	6/25/2022 10:52	11.26	6/25/2022 9:40	0.74	6/25/2022 11:22	30.75
6/26/2022 11:06	87.39	6/25/2022 10:23	11.90	6/25/2022 10:53	11.27	6/25/2022 9:41	0.68	6/25/2022 11:23	30.72
6/26/2022 11:07	87.42	6/25/2022 10:24	10.10	6/25/2022 10:54	11.27	6/25/2022 9:42	0.73	6/25/2022 11:24	30.75
6/26/2022 11:08	87.39	6/25/2022 10:25	8.60	6/25/2022 10:55	11.25	6/25/2022 9:43	0.71	6/25/2022 11:25	30.72
6/26/2022 11:09	87.33	6/25/2022 10:26	7.33	6/25/2022 10:56	11.23	6/25/2022 9:44	0.70	6/25/2022 11:26	30.71
6/26/2022 11:10	87.30	6/25/2022 10:27	6.28	6/25/2022 10:57	11.15	6/25/2022 9:45	0.73	6/25/2022 11:27	30.72
6/26/2022 11:11	87.37	6/25/2022 10:28	10.52	6/25/2022 10:58	11.19	6/25/2022 9:46	0.71	6/25/2022 11:28	30.72
6/26/2022 11:12	87.36	6/25/2022 10:29	14.11	6/25/2022 10:59	11.15	6/25/2022 9:47	0.73	6/25/2022 11:29	30.72
6/26/2022 11:13	87.38	6/25/2022 10:30	11.93	6/25/2022 11:00	11.14	6/25/2022 9:48	0.74	6/25/2022 11:30	30.74
6/26/2022 11:14	87.34	6/25/2022 10:31	10.16	6/25/2022 11:01	11.19	6/25/2022 9:49	0.73	6/25/2022 11:31	30.71
6/26/2022 11:15	87.31	6/25/2022 10:32	8.67	6/25/2022 11:02	11.13	6/25/2022 9:50	0.72	6/25/2022 11:32	30.73
6/26/2022 11:16	87.33	6/25/2022 10:33	7.41	6/25/2022 11:03	11.12	6/25/2022 9:51	0.69	6/25/2022 11:33	30.75
6/26/2022 11:17	87.35	6/25/2022 10:34	6.76	6/25/2022 11:04	11.13	6/25/2022 9:52	0.73	6/25/2022 11:34	30.72
6/26/2022 11:18	87.38	6/25/2022 10:35	11.61	6/25/2022 11:05	11.10	6/25/2022 9:53	0.69	6/25/2022 11:35	30.73
6/26/2022 11:19	87.30	6/25/2022 10:36	13.58	6/25/2022 11:06	11.10	6/25/2022 9:54	0.73	6/25/2022 11:36	30.71
6/26/2022 11:20	87.31	6/25/2022 10:37	11.56	6/25/2022 11:07	11.16	6/25/2022 9:55	0.69	6/25/2022 11:37	30.68
6/26/2022 11:21	87.33	6/25/2022 10:38	9.83	6/25/2022 11:08	11.17	6/25/2022 9:56	0.69	6/25/2022 11:38	30.72
6/26/2022 11:22	87.30	6/25/2022 10:39	8.39	6/25/2022 11:09	11.16	6/25/2022 9:57	0.71	6/25/2022 11:39	30.69
6/26/2022 11:23	87.35	6/25/2022 10:40	8.43	6/25/2022 11:10	11.18	6/25/2022 9:58	0.69	6/25/2022 11:40	30.68
6/26/2022 11:24	87.35	6/25/2022 10:41	13.25	6/25/2022 11:11	11.18	6/25/2022 9:59	0.71	6/25/2022 11:41	30.72
6/26/2022 11:25	87.37	6/25/2022 10:42	15.42	6/25/2022 11:12	11.13	6/25/2022 10:00	0.72	6/25/2022 11:42	30.71
6/26/2022 11:26	87.33	6/25/2022 10:43	13.18	6/25/2022 11:13	11.19	6/25/2022 10:01	0.73	6/25/2022 11:43	30.68
6/26/2022 11:27	87.38	6/25/2022 10:44	11.21	6/25/2022 11:14	11.12	6/25/2022 10:02	0.73	6/25/2022 11:44	30.72
6/26/2022 11:28	87.39	6/25/2022 10:45	11.04	6/25/2022 11:15	11.12	6/25/2022 10:03	0.74	6/25/2022 11:45	32.35
6/26/2022 11:29	87.36	6/25/2022 10:46	15.62	6/25/2022 11:16	11.11	6/25/2022 10:04	0.72	6/25/2022 11:46	32.04
6/26/2022 11:30	87.33	6/25/2022 10:47	16.38	6/25/2022 11:17	11.11	6/25/2022 10:05	0.75	6/25/2022 11:47	31.25
6/26/2022 11:31	87.30	6/25/2022 10:48	14.02	6/25/2022 11:18	11.07	6/25/2022 10:06	0.74	6/25/2022 11:48	30.91
6/26/2022 11:32	87.34	6/25/2022 10:49	11.93	6/25/2022 11:19	11.06	6/25/2022 10:07	0.74	6/25/2022 11:49	30.78
6/26/2022 11:33	87.30	6/25/2022 10:50	10.13	6/25/2022 11:20	11.11	6/25/2022 10:08	0.72	6/25/2022 11:50	30.75

6/26/2022 11:34	87.31	6/25/2022 10:51	8.72	6/25/2022 11:21	11.11	6/25/2022 10:09	0.70	6/25/2022 11:51	30.76
6/26/2022 11:35	87.31	6/25/2022 10:52	7.45	6/25/2022 11:22	11.05	6/25/2022 10:10	0.72	6/25/2022 11:52	30.73
6/26/2022 11:36	87.27	6/25/2022 10:53	6.45	6/25/2022 11:23	11.06	6/25/2022 10:11	0.73	6/25/2022 11:53	30.76
6/26/2022 11:37	87.29	6/25/2022 10:54	5.58	6/25/2022 11:24	11.10	6/25/2022 10:12	0.72	6/25/2022 11:54	30.73
6/26/2022 11:38	87.34	6/25/2022 10:55	4.84	6/25/2022 11:25	11.07	6/25/2022 10:13	0.74	6/25/2022 11:55	32.94
6/26/2022 11:39	87.35	6/25/2022 10:56	7.07	6/25/2022 11:26	11.05	6/25/2022 10:14	0.74	6/25/2022 11:56	31.66
6/26/2022 11:40	87.33	6/25/2022 10:57	11.87	6/25/2022 11:27	11.07	6/25/2022 10:15	0.72	6/25/2022 11:57	31.09
6/26/2022 11:41	87.31	6/25/2022 10:58	11.48	6/25/2022 11:28	11.02	6/25/2022 10:16	0.73	6/25/2022 11:58	30.86
6/26/2022 11:42	87.30	6/25/2022 10:59	9.81	6/25/2022 11:29	10.99	6/25/2022 10:17	0.70	6/25/2022 11:59	30.81
6/26/2022 11:43	87.32	6/25/2022 11:00	8.35	6/25/2022 11:30	10.99	6/25/2022 10:18	0.72	6/25/2022 12:00	30.79
6/26/2022 11:44	87.26	6/25/2022 11:01	7.15	6/25/2022 11:31	11.02	6/25/2022 10:19	0.71	6/25/2022 12:01	30.75
6/26/2022 11:45	87.29	6/25/2022 11:02	6.17	6/25/2022 11:32	11.03	6/25/2022 10:20	0.71	6/25/2022 12:02	30.75
6/26/2022 11:46	87.26	6/25/2022 11:03	5.32	6/25/2022 11:33	11.02	6/25/2022 10:21	0.73	6/25/2022 12:03	30.73
6/26/2022 11:47	87.27	6/25/2022 11:04	4.63	6/25/2022 11:34	10.99	6/25/2022 10:22	0.73	6/25/2022 12:04	30.74
6/26/2022 11:48	87.25	6/25/2022 11:05	4.12	6/25/2022 11:35	11.00	6/25/2022 10:23	0.74	6/25/2022 12:05	30.81
6/26/2022 11:49	87.27	6/25/2022 11:06	3.59	6/25/2022 11:36	10.97	6/25/2022 10:24	0.76	6/25/2022 12:06	32.94
6/26/2022 11:50	87.35	6/25/2022 11:07	7.02	6/25/2022 11:37	11.00	6/25/2022 10:25	0.71	6/25/2022 12:07	31.72
6/26/2022 11:51	87.31	6/25/2022 11:08	11.41	6/25/2022 11:38	10.93	6/25/2022 10:26	0.76	6/25/2022 12:08	31.26
6/26/2022 11:52	87.30	6/25/2022 11:09	9.77	6/25/2022 11:39	10.93	6/25/2022 10:27	0.70	6/25/2022 12:09	31.08
6/26/2022 11:53	87.34	6/25/2022 11:10	8.33	6/25/2022 11:40	10.90	6/25/2022 10:28	0.72	6/25/2022 12:10	30.95
6/26/2022 11:54	87.34	6/25/2022 11:11	7.10	6/25/2022 11:41	10.92	6/25/2022 10:29	0.74	6/25/2022 12:11	30.95
6/26/2022 11:55	87.32	6/25/2022 11:12	6.10	6/25/2022 11:42	10.87	6/25/2022 10:30	0.73	6/25/2022 12:12	30.89
6/26/2022 11:56	87.28	6/25/2022 11:13	5.27	6/25/2022 11:43	10.90	6/25/2022 10:31	0.75	6/25/2022 12:13	30.89
6/26/2022 11:57	87.32	6/25/2022 11:14	4.60	6/25/2022 11:44	10.86	6/25/2022 10:32	0.71	6/25/2022 12:14	30.92
6/26/2022 11:58	87.35	6/25/2022 11:15	4.02	6/25/2022 11:45	10.83	6/25/2022 10:33	0.69	6/25/2022 12:15	30.93
6/26/2022 11:59	87.31	6/25/2022 11:16	4.95	6/25/2022 11:46	10.85	6/25/2022 10:34	0.73	6/25/2022 12:16	30.91
6/26/2022 12:00	87.31	6/25/2022 11:17	10.21	6/25/2022 11:47	10.85	6/25/2022 10:35	0.73	6/25/2022 12:17	30.92
6/26/2022 12:01	87.27	6/25/2022 11:18	10.24	6/25/2022 11:48	10.80	6/25/2022 10:36	0.73	6/25/2022 12:18	30.89
6/26/2022 12:02	87.27	6/25/2022 11:19	8.73	6/25/2022 11:49	10.83	6/25/2022 10:37	0.73	6/25/2022 12:19	30.89
6/26/2022 12:03	87.24	6/25/2022 11:20	7.42	6/25/2022 11:50	10.78	6/25/2022 10:38	0.74	6/25/2022 12:20	30.90
6/26/2022 12:04	87.28	6/25/2022 11:21	6.38	6/25/2022 11:51	10.76	6/25/2022 10:39	0.74	6/25/2022 12:21	30.86
6/26/2022 12:05	87.27	6/25/2022 11:22	5.50	6/25/2022 11:52	10.74	6/25/2022 10:40	0.70	6/25/2022 12:22	30.86
6/26/2022 12:06	87.26	6/25/2022 11:23	4.76	6/25/2022 11:53	10.76	6/25/2022 10:41	0.75	6/25/2022 12:23	30.87
6/26/2022 12:07	87.23	6/25/2022 11:24	4.19	6/25/2022 11:54	10.79	6/25/2022 10:42	0.72	6/25/2022 12:24	30.86
6/26/2022 12:08	87.29	6/25/2022 11:25	3.64	6/25/2022 11:55	10.78	6/25/2022 10:43	0.73	6/25/2022 12:25	30.86
6/26/2022 12:09	87.28	6/25/2022 11:26	3.18	6/25/2022 11:56	10.76	6/25/2022 10:44	0.73	6/25/2022 12:26	30.86
6/26/2022 12:10	87.29	6/25/2022 11:27	2.82	6/25/2022 11:57	10.75	6/25/2022 10:45	0.74	6/25/2022 12:27	30.88
6/26/2022 12:11	87.29	6/25/2022 11:28	6.99	6/25/2022 11:58	10.78	6/25/2022 10:46	0.72	6/25/2022 12:28	30.88
6/26/2022 12:12	87.27	6/25/2022 11:29	10.34	6/25/2022 11:59	10.75	6/25/2022 10:47	0.73	6/25/2022 12:29	30.84
6/26/2022 12:13	87.27	6/25/2022 11:30	8.82	6/25/2022 12:00	10.78	6/25/2022 10:48	0.74	6/25/2022 12:30	30.86
6/26/2022 12:14	87.26	6/25/2022 11:31	7.47	6/25/2022 12:01	10.75	6/25/2022 10:49	0.73	6/25/2022 12:31	30.86
6/26/2022 12:15	87.25	6/25/2022 11:32	6.42	6/25/2022 12:02	10.78	6/25/2022 10:50	0.72	6/25/2022 12:32	30.84
6/26/2022 12:16	87.28	6/25/2022 11:33	5.51	6/25/2022 12:03	10.78	6/25/2022 10:51	0.73	6/25/2022 12:33	30.83
6/26/2022 12:17	87.31	6/25/2022 11:34	4.79	6/25/2022 12:04	10.74	6/25/2022 10:52	0.71	6/25/2022 12:34	30.81
6/26/2022 12:18	87.27	6/25/2022 11:35	4.17	6/25/2022 12:05	10.73	6/25/2022 10:53	0.67	6/25/2022 12:35	30.84
6/26/2022 12:19	87.24	6/25/2022 11:36	3.65	6/25/2022 12:06	10.72	6/25/2022 10:54	0.71	6/25/2022 12:36	30.78
6/26/2022 12:20	87.25	6/25/2022 11:37	3.21	6/25/2022 12:07	10.76	6/25/2022 10:55	0.71	6/25/2022 12:37	30.82
6/26/2022 12:21	87.23	6/25/2022 11:38	2.77	6/25/2022 12:08	10.71	6/25/2022 10:56	0.67	6/25/2022 12:38	30.82
6/26/2022 12:22	87.19	6/25/2022 11:39	2.47	6/25/2022 12:09	10.70	6/25/2022 10:57	0.71	6/25/2022 12:39	30.79
6/26/2022 12:23	87.24	6/25/2022 11:40	2.23	6/25/2022 12:10	13.82	6/25/2022 10:58	0.72	6/25/2022 12:40	32.97
6/26/2022 12:24	87.22	6/25/2022 11:41	2.02	6/25/2022 12:11	14.64	6/25/2022 10:59	0.73	6/25/2022 12:41	32.03
6/26/2022 12:25	87.21	6/25/2022 11:42	1.81	6/25/2022 12:12	14.12	6/25/2022 11:00	0.72	6/25/2022 12:42	31.28
6/26/2022 12:26	87.23	6/25/2022 11:43	1.62	6/25/2022 12:13	13.68	6/25/2022 11:01	0.75	6/25/2022 12:43	33.32
6/26/2022 12:27	87.19	6/25/2022 11:44	1.48	6/25/2022 12:14	13.33	6/25/2022 11:02	0.71	6/25/2022 12:44	32.01
6/26/2022 12:28	87.17	6/25/2022 11:45	1.36	6/25/2022 12:15	13.25	6/25/2022 11:03	0.72	6/25/2022 12:45	33.14
6/26/2022 12:29	87.24	6/25/2022 11:46	1.24	6/25/2022 12:16	17.58	6/25/2022 11:04	0.71	6/25/2022 12:46	31.84
6/26/2022 12:30	87.22	6/25/2022 11:47	1.10	6/25/2022 12:17	17.86	6/25/2022 11:05	0.71	6/25/2022 12:47	31.27
6/26/2022 12:31	87.21	6/25/2022 11:48	1.06	6/25/2022 12:18	17.08	6/25/2022 11:06	0.68	6/25/2022 12:48	31.00
6/26/2022 12:32	87.19	6/25/2022 11:49	0.94	6/25/2022 12:19	16.35	6/25/2022 11:07	0.71	6/25/2022 12:49	30.94
6/26/2022 12:33	87.20	6/25/2022 11:50	0.88	6/25/2022 12:20	15.74	6/25/2022 11:08	0.72	6/25/2022 12:50	30.96
6/26/2022 12:34	87.24	6/25/2022 11:51	0.82	6/25/2022 12:21	17.61	6/25/2022 11:09	0.72	6/25/2022 12:51	30.90
6/26/2022 12:35	87.20	6/25/2022 11:52	0.81	6/25/2022 12:22	20.49	6/25/2022 11:10	0.71	6/25/2022 12:52	30.93
6/26/2022 12:36	87.22	6/25/2022 11:53	0.76	6/25/2022 12:23	19.47	6/25/2022 11:11	0.71	6/25/2022 12:53	30.89
6/26/2022 12:37	87.21	6/25/2022 11:54	0.71	6/25/2022 12:24	18.52	6/25/2022 11:12	0.72	6/25/2022 12:54	30.91
6/26/2022 12:38	87.21	6/25/2022 11:55	0.68	6/25/2022 12:25	17.78	6/25/2022 11:13	0.74	6/25/2022 12:55	30.86
6/26/2022 12:39	87.24	6/25/2022 11:56	0.65	6/25/2022 12:26	17.05	6/25/2022 11:14	0.72	6/25/2022 12:56	30.87
6/26/2022 12:40	87.18	6/25/2022 11:57	0.65	6/25/2022 12:27	16.41	6/25/2022 11:15	0.69	6/25/2022 12:57	30.92
6/26/2022 12:41	87.21	6/25/2022 11:58	3.91	6/25/2022 12:28	15.82	6/25/2022 11:16	0.67	6/25/2022 12:58	32.63
6/26/2022 12:42	87.18	6/25/2022 11:59	8.34	6/25/2022 12:29	16.41	6/25/2022 11:17	0.70	6/25/2022 12:59	31.57
6/26/2022 12:43	87.18	6/25/2022 12:00	7.05	6/25/2022 12:30	18.79	6/25/2022 11:18	0.74	6/25/2022 13:00	31.09
6/26/2022 12:44	87.18	6/25/2022 12:01	6.04	6/25/2022 12:31	17.93	6/25/2022 11:19	0.75	6/25/2022 13:01	30.93
6/26/2022 12:45	87.24	6/25/2022 12:02	5.14	6/25/2022 12:32	17.20	6/25/2022 11:20	0.72	6/25/2022 13:02	30.88
6/26/2022 12:46	87.21	6/25/2022 12:03	4.49	6/25/2022 12:33	16.55	6/25/2022 11:21	0.72	6/25/2022 13:03	30.87
6/26/2022 12:47	87.14	6/25/2022 12:04	3.84	6/25/2022 12:34	15.99	6/25/2022 11:22	0.71	6/25/2022 13:04	30.86
6/26/2022 12:48	87.23	6/25/2022 12:05	3.30	6/25/2022 12:35	15.48	6/25/2022 11:23	0.70	6/25/2022 13:05	30.83
6/26/2022 12:49	87.19	6/25/2022 12:06	2.89	6/25/2022 12:36	15.00	6/25/2022 11:24	0.72	6/25/2022 13:06	30.83
6/26/2022 12:50	87.18	6/25/2022 12:07	2.57	6/25/2022 12:37	14.61	6/25/2022 11:25	0.70	6/25/2022 13:07	30.82
6/26/2022 12:51	87.18	6/25/2022 12:08	2.26	6/25/2022 12:38	14.23	6/25/2022 11:26	0.71	6/25/2022 13:08	30.84
6/26/2022 12:52	91.09	6/25/2022 12:09	2.05	6/25/2022 12:39	13.91	6/25/2022 11:27	0.66	6/25/2022 13:09	30.85
6/26/2022 12:53	93.83	6/25/2022 12:10	1.76	6/25/2022 12:40	15.97	6/25/2022 11:28	0.71	6/25/2022 13:10	30.85
6/26/2022 12:54	95.34	6/25/2022 12:11	1.65	6/25/2022 12:41	19.93	6/25/2022 11:29	0.76	6/25/2022 13:11	30.80
6/26/2022 12:55	92.98	6/25/2022 12:12	1.47	6/25/2022 12:42	20.03	6/25/2022 11:30	0.71	6/25/2022 13:12	30.79
6/26/2022 12:56	91.30	6/25/2022 12:13	7.11	6/25/2022 12:43	19.08	6/25/2022 11:31	0.73	6/25/2022 13:13	30.86
6/26/2022 12:57	90.17	6/25/2022 12:14	11.62	6/25/2022 12:44	22.64	6/25/2022 11:32	0.70	6/25/2022 13:14	30.81
6/26/2022 12:58	89.48	6/25/2022 12:15	9.76	6/25/2022 12:45	25.05	6/25/2022 11:33	0.74	6/25/2022 13:15	30.81
6/26/2022 12:59	89.03	6/25/2022 12:16	8.35	6/25/2022 12:46	23.63	6/25/2022 11:34	0.70	6/25/2022 13:16	30.79
6/26/2022 13:00	88.65	6/25/2022 12:17	7.09	6/25/2022 12:47	24.12	6/25/2022 11:35	0.71	6/25/2022 13:17	30.79
6/26/2022 13:01	88.49	6/25/2022 12:18	6.08	6/25/2022 12:48	27.37	6/25/2022 11:36	0.69	6/25/2022 13:18	30.78

6/26/2022 13:02	88.29	6/25/2022 12:19	5.22	6/25/2022 12:49	27.62	6/25/2022 11:37	0.74	6/25/2022 13:19	30.78
6/26/2022 13:03	88.13	6/25/2022 12:20	4.53	6/25/2022 12:50	26.00	6/25/2022 11:38	0.72	6/25/2022 13:20	30.78
6/26/2022 13:04	87.99	6/25/2022 12:21	3.95	6/25/2022 12:51	24.57	6/25/2022 11:39	0.68	6/25/2022 13:21	30.78
6/26/2022 13:05	87.94	6/25/2022 12:22	3.45	6/25/2022 12:52	23.30	6/25/2022 11:40	0.73	6/25/2022 13:22	30.80
6/26/2022 13:06	87.87	6/25/2022 12:23	2.97	6/25/2022 12:53	22.20	6/25/2022 11:41	0.67	6/25/2022 13:23	30.77
6/26/2022 13:07	87.80	6/25/2022 12:24	2.64	6/25/2022 12:54	21.18	6/25/2022 11:42	0.69	6/25/2022 13:24	30.77
6/26/2022 13:08	87.77	6/25/2022 12:25	2.31	6/25/2022 12:55	20.24	6/25/2022 11:43	0.68	6/25/2022 13:25	30.77
6/26/2022 13:09	87.77	6/25/2022 12:26	2.06	6/25/2022 12:56	19.40	6/25/2022 11:44	0.72	6/25/2022 13:26	30.77
6/26/2022 13:10	87.75	6/25/2022 12:27	1.88	6/25/2022 12:57	18.64	6/25/2022 11:45	0.71	6/25/2022 13:27	30.78
6/26/2022 13:11	87.66	6/25/2022 12:28	1.65	6/25/2022 12:58	17.96	6/25/2022 11:46	0.70	6/25/2022 13:28	30.74
6/26/2022 13:12	87.65	6/25/2022 12:29	1.50	6/25/2022 12:59	17.33	6/25/2022 11:47	0.74	6/25/2022 13:29	30.71
6/26/2022 13:13	87.63	6/25/2022 12:30	6.83	6/25/2022 13:00	16.77	6/25/2022 11:48	0.70	6/25/2022 13:30	30.76
6/26/2022 13:14	87.58	6/25/2022 12:31	8.62	6/25/2022 13:01	16.26	6/25/2022 11:49	0.72	6/25/2022 13:31	30.74
6/26/2022 13:15	87.61	6/25/2022 12:32	7.26	6/25/2022 13:02	15.80	6/25/2022 11:50	0.71	6/25/2022 13:32	30.75
6/26/2022 13:16	87.58	6/25/2022 12:33	6.24	6/25/2022 13:03	15.43	6/25/2022 11:51	0.71	6/25/2022 13:33	30.77
6/26/2022 13:17	87.56	6/25/2022 12:34	5.33	6/25/2022 13:04	15.00	6/25/2022 11:52	0.72	6/25/2022 13:34	30.78
6/26/2022 13:18	87.55	6/25/2022 12:35	4.62	6/25/2022 13:05	14.71	6/25/2022 11:53	0.72	6/25/2022 13:35	30.80
6/26/2022 13:19	87.54	6/25/2022 12:36	3.99	6/25/2022 13:06	14.40	6/25/2022 11:54	0.75	6/25/2022 13:36	30.79
6/26/2022 13:20	87.55	6/25/2022 12:37	3.49	6/25/2022 13:07	14.12	6/25/2022 11:55	0.71	6/25/2022 13:37	30.80
6/26/2022 13:21	87.48	6/25/2022 12:38	3.03	6/25/2022 13:08	13.87	6/25/2022 11:56	0.75	6/25/2022 13:38	30.87
6/26/2022 13:22	87.48	6/25/2022 12:39	2.68	6/25/2022 13:09	13.62	6/25/2022 11:57	0.69	6/25/2022 13:39	30.82
6/26/2022 13:23	87.50	6/25/2022 12:40	2.32	6/25/2022 13:10	13.45	6/25/2022 11:58	0.74	6/25/2022 13:40	30.82
6/26/2022 13:24	87.48	6/25/2022 12:41	2.07	6/25/2022 13:11	13.19	6/25/2022 11:59	0.76	6/25/2022 13:41	30.83
6/26/2022 13:25	87.45	6/25/2022 12:42	1.89	6/25/2022 13:12	13.02	6/25/2022 12:00	0.75	6/25/2022 13:42	30.80
6/26/2022 13:26	87.43	6/25/2022 12:43	1.67	6/25/2022 13:13	12.89	6/25/2022 12:01	0.72	6/25/2022 13:43	30.83
6/26/2022 13:27	87.43	6/25/2022 12:44	1.50	6/25/2022 13:14	12.73	6/25/2022 12:02	0.75	6/25/2022 13:44	30.81
6/26/2022 13:28	87.48	6/25/2022 12:45	1.38	6/25/2022 13:15	12.59	6/25/2022 12:03	0.75	6/25/2022 13:45	30.80
6/26/2022 13:29	87.42	6/25/2022 12:46	1.32	6/25/2022 13:16	12.44	6/25/2022 12:04	0.73	6/25/2022 13:46	30.84
6/26/2022 13:30	87.41	6/25/2022 12:47	2.92	6/25/2022 13:17	12.33	6/25/2022 12:05	0.75	6/25/2022 13:47	30.83
6/26/2022 13:31	87.42	6/25/2022 12:48	8.43	6/25/2022 13:18	12.22	6/25/2022 12:06	0.74	6/25/2022 13:48	30.76
6/26/2022 13:32	87.39	6/25/2022 12:49	7.77	6/25/2022 13:19	12.08	6/25/2022 12:07	0.76	6/25/2022 13:49	32.70
6/26/2022 13:33	87.37	6/25/2022 12:50	6.63	6/25/2022 13:20	11.98	6/25/2022 12:08	0.75	6/25/2022 13:50	31.55
6/26/2022 13:34	87.40	6/25/2022 12:51	5.64	6/25/2022 13:21	11.92	6/25/2022 12:09	0.72	6/25/2022 13:51	31.06
6/26/2022 13:35	87.38	6/25/2022 12:52	4.88	6/25/2022 13:22	11.85	6/25/2022 12:10	0.73	6/25/2022 13:52	30.88
6/26/2022 13:36	87.38	6/25/2022 12:53	4.22	6/25/2022 13:23	11.79	6/25/2022 12:11	0.77	6/25/2022 13:53	30.81
6/26/2022 13:37	87.35	6/25/2022 12:54	3.66	6/25/2022 13:24	11.73	6/25/2022 12:12	0.71	6/25/2022 13:54	30.79
6/26/2022 13:38	87.38	6/25/2022 12:55	3.19	6/25/2022 13:25	11.68	6/25/2022 12:13	0.75	6/25/2022 13:55	30.78
6/26/2022 13:39	87.36	6/25/2022 12:56	2.72	6/25/2022 13:26	11.59	6/25/2022 12:14	0.74	6/25/2022 13:56	30.80
6/26/2022 13:40	87.35	6/25/2022 12:57	2.46	6/25/2022 13:27	11.55	6/25/2022 12:15	0.77	6/25/2022 13:57	30.79
6/26/2022 13:41	87.37	6/25/2022 12:58	2.18	6/25/2022 13:28	11.52	6/25/2022 12:16	0.76	6/25/2022 13:58	30.77
6/26/2022 13:42	87.33	6/25/2022 12:59	1.91	6/25/2022 13:29	11.46	6/25/2022 12:17	0.77	6/25/2022 13:59	30.81
6/26/2022 13:43	87.33	6/25/2022 13:00	4.30	6/25/2022 13:30	11.44	6/25/2022 12:18	0.73	6/25/2022 14:00	30.76
6/26/2022 13:44	87.33	6/25/2022 13:01	9.51	6/25/2022 13:31	11.40	6/25/2022 12:19	0.71	6/25/2022 14:01	30.75
6/26/2022 13:45	87.39	6/25/2022 13:02	8.92	6/25/2022 13:32	11.38	6/25/2022 12:20	0.74	6/25/2022 14:02	30.77
6/26/2022 13:46	87.37	6/25/2022 13:03	7.53	6/25/2022 13:33	11.35	6/25/2022 12:21	0.75	6/25/2022 14:03	30.76
6/26/2022 13:47	87.30	6/25/2022 13:04	6.41	6/25/2022 13:34	11.27	6/25/2022 12:22	0.74	6/25/2022 14:04	30.74
6/26/2022 13:48	87.33	6/25/2022 13:05	5.56	6/25/2022 13:35	11.29	6/25/2022 12:23	0.74	6/25/2022 14:05	30.79
6/26/2022 13:49	87.34	6/25/2022 13:06	4.81	6/25/2022 13:36	11.25	6/25/2022 12:24	0.73	6/25/2022 14:06	30.78
6/26/2022 13:50	87.27	6/25/2022 13:07	4.12	6/25/2022 13:37	11.20	6/25/2022 12:25	0.71	6/25/2022 14:07	30.76
6/26/2022 13:51	87.26	6/25/2022 13:08	3.61	6/25/2022 13:38	11.18	6/25/2022 12:26	0.72	6/25/2022 14:08	30.77
6/26/2022 13:52	87.35	6/25/2022 13:09	3.15	6/25/2022 13:39	11.17	6/25/2022 12:27	0.74	6/25/2022 14:09	32.63
6/26/2022 13:53	87.24	6/25/2022 13:10	2.72	6/25/2022 13:40	11.10	6/25/2022 12:28	0.70	6/25/2022 14:10	31.48
6/26/2022 13:54	87.29	6/25/2022 13:11	2.42	6/25/2022 13:41	14.84	6/25/2022 12:29	0.70	6/25/2022 14:11	31.04
6/26/2022 13:55	87.28	6/25/2022 13:12	2.17	6/25/2022 13:42	14.66	6/25/2022 12:30	0.71	6/25/2022 14:12	30.86
6/26/2022 13:56	87.28	6/25/2022 13:13	1.95	6/25/2022 13:43	14.22	6/25/2022 12:31	0.75	6/25/2022 14:13	30.81
6/26/2022 13:57	87.28	6/25/2022 13:14	6.15	6/25/2022 13:44	13.83	6/25/2022 12:32	0.75	6/25/2022 14:14	30.77
6/26/2022 13:58	87.25	6/25/2022 13:15	9.02	6/25/2022 13:45	13.48	6/25/2022 12:33	0.74	6/25/2022 14:15	31.57
6/26/2022 13:59	87.28	6/25/2022 13:16	7.61	6/25/2022 13:46	13.20	6/25/2022 12:34	0.76	6/25/2022 14:16	32.19
6/26/2022 14:00	87.32	6/25/2022 13:17	6.46	6/25/2022 13:47	12.95	6/25/2022 12:35	0.75	6/25/2022 14:17	31.31
6/26/2022 14:01	87.32	6/25/2022 13:18	5.56	6/25/2022 13:48	12.71	6/25/2022 12:36	0.73	6/25/2022 14:18	30.97
6/26/2022 14:02	87.27	6/25/2022 13:19	4.81	6/25/2022 13:49	12.53	6/25/2022 12:37	0.73	6/25/2022 14:19	30.83
6/26/2022 14:03	87.28	6/25/2022 13:20	4.17	6/25/2022 13:50	12.37	6/25/2022 12:38	0.71	6/25/2022 14:20	30.81
6/26/2022 14:04	87.25	6/25/2022 13:21	3.61	6/25/2022 13:51	12.23	6/25/2022 12:39	0.71	6/25/2022 14:21	30.79
6/26/2022 14:05	87.20	6/25/2022 13:22	3.18	6/25/2022 13:52	12.11	6/25/2022 12:40	0.73	6/25/2022 14:22	30.75
6/26/2022 14:06	87.23	6/25/2022 13:23	2.76	6/25/2022 13:53	11.98	6/25/2022 12:41	0.72	6/25/2022 14:23	30.76
6/26/2022 14:07	87.19	6/25/2022 13:24	2.42	6/25/2022 13:54	11.92	6/25/2022 12:42	0.75	6/25/2022 14:24	30.79
6/26/2022 14:08	87.27	6/25/2022 13:25	2.16	6/25/2022 13:55	11.80	6/25/2022 12:43	0.74	6/25/2022 14:25	30.79
6/26/2022 14:09	87.20	6/25/2022 13:26	1.89	6/25/2022 13:56	11.67	6/25/2022 12:44	0.74	6/25/2022 14:26	30.77
6/26/2022 14:10	87.23	6/25/2022 13:27	1.72	6/25/2022 13:57	11.64	6/25/2022 12:45	0.73	6/25/2022 14:27	30.75
6/26/2022 14:11	87.23	6/25/2022 13:28	1.60	6/25/2022 13:58	11.56	6/25/2022 12:46	0.73	6/25/2022 14:28	30.77
6/26/2022 14:12	87.23	6/25/2022 13:29	1.41	6/25/2022 13:59	11.48	6/25/2022 12:47	0.73	6/25/2022 14:29	30.77
6/26/2022 14:13	87.18	6/25/2022 13:30	1.28	6/25/2022 14:00	11.40	6/25/2022 12:48	0.74	6/25/2022 14:30	30.76
6/26/2022 14:14	87.23	6/25/2022 13:31	1.16	6/25/2022 14:01	11.38	6/25/2022 12:49	0.74	6/25/2022 14:31	30.72
6/26/2022 14:15	87.22	6/25/2022 13:32	1.05	6/25/2022 14:02	11.35	6/25/2022 12:50	0.74	6/25/2022 14:32	30.72
6/26/2022 14:16	87.25	6/25/2022 13:33	6.49	6/25/2022 14:03	11.25	6/25/2022 12:51	0.73	6/25/2022 14:33	30.74
6/26/2022 14:17	87.24	6/25/2022 13:34	8.64	6/25/2022 14:04	11.21	6/25/2022 12:52	0.74	6/25/2022 14:34	30.71
6/26/2022 14:18	87.16	6/25/2022 13:35	7.30	6/25/2022 14:05	11.14	6/25/2022 12:53	0.74	6/25/2022 14:35	30.72
6/26/2022 14:19	87.19	6/25/2022 13:36	6.23	6/25/2022 14:06	11.13	6/25/2022 12:54	0.76	6/25/2022 14:36	30.73
6/26/2022 14:20	87.16	6/25/2022 13:37	5.33	6/25/2022 14:07	11.10	6/25/2022 12:55	0.72	6/25/2022 14:37	30.73
6/26/2022 14:21	87.18	6/25/2022 13:38	4.61	6/25/2022 14:08	11.06	6/25/2022 12:56	0.70	6/25/2022 14:38	30.71
6/26/2022 14:22	87.20	6/25/2022 13:39	3.97	6/25/2022 14:09	11.02	6/25/2022 12:57	0.72	6/25/2022 14:39	30.72
6/26/2022 14:23	87.18	6/25/2022 13:40	3.44	6/25/2022 14:10	11.01	6/25/2022 12:58	0.72	6/25/2022 14:40	30.71
6/26/2022 14:24	87.17	6/25/2022 13:41	3.02	6/25/2022 14:11	10.99	6/25/2022 12:59	0.74	6/25/2022 14:41	30.73
6/26/2022 14:25	87.16	6/25/2022 13:42	2.62	6/25/2022 14:12	10.98	6/25/2022 13:00	0.71	6/25/2022 14:42	30.71
6/26/2022 14:26	87.22	6/25/2022 13:43	2.33	6/25/2022 14:13	10.93	6/25/2022 13:01	0.74	6/25/2022 14:43	30.72
6/26/2022 14:27	87.19	6/25/2022 13:44	2.08	6/25/2022 14:14	10.89	6/25/2022 13:02	0.72	6/25/2022 14:44	30.72
6/26/2022 14:28	87.15	6/25/2022 13:45	1.86	6/25/2022 14:15	10.88	6/25/2022 13:03	0.77	6/25/2022 14:45	30.75
6/26/2022 14:29	87.18	6/25/2022 13:46	1.67	6/25/2022 14:16	10.83	6/25/2022 13:04	0.75	6/25/2022 14:46	30.71

6/26/2022 14:30	87.23	6/25/2022 13:47	3.50	6/25/2022 14:17	10.87	6/25/2022 13:05	0.74	6/25/2022 14:47	30.74
6/26/2022 14:31	87.13	6/25/2022 13:48	8.84	6/25/2022 14:18	10.82	6/25/2022 13:06	0.74	6/25/2022 14:48	30.74
6/26/2022 14:32	87.18	6/25/2022 13:49	7.76	6/25/2022 14:19	10.88	6/25/2022 13:07	0.74	6/25/2022 14:49	30.69
6/26/2022 14:33	87.20	6/25/2022 13:50	6.63	6/25/2022 14:20	10.86	6/25/2022 13:08	0.71	6/25/2022 14:50	30.67
6/26/2022 14:34	87.17	6/25/2022 13:51	5.66	6/25/2022 14:21	10.85	6/25/2022 13:09	0.73	6/25/2022 14:51	30.71
6/26/2022 14:35	87.22	6/25/2022 13:52	4.91	6/25/2022 14:22	10.84	6/25/2022 13:10	0.73	6/25/2022 14:52	30.69
6/26/2022 14:36	87.13	6/25/2022 13:53	4.27	6/25/2022 14:23	10.83	6/25/2022 13:11	0.74	6/25/2022 14:53	30.68
6/26/2022 14:37	87.18	6/25/2022 13:54	3.66	6/25/2022 14:24	10.83	6/25/2022 13:12	0.71	6/25/2022 14:54	30.68
6/26/2022 14:38	87.14	6/25/2022 13:55	3.21	6/25/2022 14:25	10.86	6/25/2022 13:13	0.74	6/25/2022 14:55	30.68
6/26/2022 14:39	87.18	6/25/2022 13:56	2.79	6/25/2022 14:26	10.81	6/25/2022 13:14	0.70	6/25/2022 14:56	30.69
6/26/2022 14:40	87.12	6/25/2022 13:57	2.47	6/25/2022 14:27	10.85	6/25/2022 13:15	0.77	6/25/2022 14:57	30.69
6/26/2022 14:41	87.15	6/25/2022 13:58	2.19	6/25/2022 14:28	10.81	6/25/2022 13:16	0.72	6/25/2022 14:58	30.69
6/26/2022 14:42	87.19	6/25/2022 13:59	1.93	6/25/2022 14:29	10.80	6/25/2022 13:17	0.75	6/25/2022 14:59	30.67
6/26/2022 14:43	87.15	6/25/2022 14:00	1.75	6/25/2022 14:30	10.77	6/25/2022 13:18	0.76	6/25/2022 15:00	30.69
6/26/2022 14:44	87.17	6/25/2022 14:01	1.54	6/25/2022 14:31	13.52	6/25/2022 13:19	0.74	6/25/2022 15:01	30.71
6/26/2022 14:45	87.16	6/25/2022 14:02	1.43	6/25/2022 14:32	14.28	6/25/2022 13:20	0.75	6/25/2022 15:02	30.69
6/26/2022 14:46	87.13	6/25/2022 14:03	1.29	6/25/2022 14:33	13.86	6/25/2022 13:21	0.76	6/25/2022 15:03	30.69
6/26/2022 14:47	87.13	6/25/2022 14:04	1.18	6/25/2022 14:34	13.41	6/25/2022 13:22	0.75	6/25/2022 15:04	30.66
6/26/2022 14:48	87.09	6/25/2022 14:05	1.10	6/25/2022 14:35	13.14	6/25/2022 13:23	0.74	6/25/2022 15:05	30.66
6/26/2022 14:49	87.13	6/25/2022 14:06	0.97	6/25/2022 14:36	12.86	6/25/2022 13:24	0.75	6/25/2022 15:06	30.65
6/26/2022 14:50	87.12	6/25/2022 14:07	0.86	6/25/2022 14:37	12.62	6/25/2022 13:25	0.74	6/25/2022 15:07	30.68
6/26/2022 14:51	87.16	6/25/2022 14:08	0.80	6/25/2022 14:38	12.38	6/25/2022 13:26	0.75	6/25/2022 15:08	30.66
6/26/2022 14:52	87.11	6/25/2022 14:09	0.79	6/25/2022 14:39	12.24	6/25/2022 13:27	0.71	6/25/2022 15:09	30.67
6/26/2022 14:53	87.13	6/25/2022 14:10	0.71	6/25/2022 14:40	12.08	6/25/2022 13:28	0.76	6/25/2022 15:10	30.66
6/26/2022 14:54	87.15	6/25/2022 14:11	0.67	6/25/2022 14:41	11.91	6/25/2022 13:29	0.75	6/25/2022 15:11	30.67
6/26/2022 14:55	87.11	6/25/2022 14:12	0.63	6/25/2022 14:42	11.78	6/25/2022 13:30	0.75	6/25/2022 15:12	30.68
6/26/2022 14:56	87.13	6/25/2022 14:13	0.62	6/25/2022 14:43	11.69	6/25/2022 13:31	0.72	6/25/2022 15:13	30.67
6/26/2022 14:57	87.15	6/25/2022 14:14	0.55	6/25/2022 14:44	11.58	6/25/2022 13:32	0.71	6/25/2022 15:14	30.69
6/26/2022 14:58	87.18	6/25/2022 14:15	6.65	6/25/2022 14:45	11.49	6/25/2022 13:33	0.74	6/25/2022 15:15	30.67
6/26/2022 14:59	87.16	6/25/2022 14:16	9.46	6/25/2022 14:46	11.39	6/25/2022 13:34	0.77	6/25/2022 15:16	30.67
6/26/2022 15:00	87.16	6/25/2022 14:17	8.01	6/25/2022 14:47	11.35	6/25/2022 13:35	0.77	6/25/2022 15:17	30.66
6/26/2022 15:01	87.19	6/25/2022 14:18	6.78	6/25/2022 14:48	11.25	6/25/2022 13:36	0.75	6/25/2022 15:18	30.68
6/26/2022 15:02	87.17	6/25/2022 14:19	5.79	6/25/2022 14:49	11.24	6/25/2022 13:37	0.82	6/25/2022 15:19	30.67
6/26/2022 15:03	87.11	6/25/2022 14:20	4.94	6/25/2022 14:50	11.24	6/25/2022 13:38	0.74	6/25/2022 15:20	30.67
6/26/2022 15:04	87.12	6/25/2022 14:21	4.31	6/25/2022 14:51	11.16	6/25/2022 13:39	0.73	6/25/2022 15:21	30.65
6/26/2022 15:05	87.16	6/25/2022 14:22	3.73	6/25/2022 14:52	11.15	6/25/2022 13:40	0.78	6/25/2022 15:22	30.67
6/26/2022 15:06	87.14	6/25/2022 14:23	3.22	6/25/2022 14:53	11.10	6/25/2022 13:41	0.76	6/25/2022 15:23	30.68
6/26/2022 15:07	87.18	6/25/2022 14:24	2.81	6/25/2022 14:54	11.06	6/25/2022 13:42	0.72	6/25/2022 15:24	30.64
6/26/2022 15:08	87.14	6/25/2022 14:25	2.48	6/25/2022 14:55	11.06	6/25/2022 13:43	0.72	6/25/2022 15:25	30.66
6/26/2022 15:09	87.15	6/25/2022 14:26	2.17	6/25/2022 14:56	11.01	6/25/2022 13:44	0.76	6/25/2022 15:26	30.63
6/26/2022 15:10	87.13	6/25/2022 14:27	5.33	6/25/2022 14:57	11.01	6/25/2022 13:45	0.72	6/25/2022 15:27	30.66
6/26/2022 15:11	87.15	6/25/2022 14:28	10.28	6/25/2022 14:58	10.96	6/25/2022 13:46	0.72	6/25/2022 15:28	30.65
6/26/2022 15:12	87.11	6/25/2022 14:29	8.96	6/25/2022 14:59	10.95	6/25/2022 13:47	0.73	6/25/2022 15:29	30.64
6/26/2022 15:13	87.11	6/25/2022 14:30	7.54	6/25/2022 15:00	10.87	6/25/2022 13:48	0.75	6/25/2022 15:30	30.65
6/26/2022 15:14	87.11	6/25/2022 14:31	6.55	6/25/2022 15:01	10.88	6/25/2022 13:49	0.78	6/25/2022 15:31	30.65
6/26/2022 15:15	87.15	6/25/2022 14:32	5.77	6/25/2022 15:02	10.85	6/25/2022 13:50	0.72	6/25/2022 15:32	30.67
6/26/2022 15:16	87.13	6/25/2022 14:33	5.03	6/25/2022 15:03	10.85	6/25/2022 13:51	0.74	6/25/2022 15:33	30.63
6/26/2022 15:17	87.09	6/25/2022 14:34	4.45	6/25/2022 15:04	10.82	6/25/2022 13:52	0.72	6/25/2022 15:34	30.65
6/26/2022 15:18	87.07	6/25/2022 14:35	3.89	6/25/2022 15:05	10.80	6/25/2022 13:53	0.76	6/25/2022 15:35	30.66
6/26/2022 15:19	87.05	6/25/2022 14:36	3.34	6/25/2022 15:06	10.81	6/25/2022 13:54	0.79	6/25/2022 15:36	30.66
6/26/2022 15:20	87.09	6/25/2022 14:37	5.75	6/25/2022 15:07	10.77	6/25/2022 13:55	0.75	6/25/2022 15:37	30.68
6/26/2022 15:21	87.12	6/25/2022 14:38	10.65	6/25/2022 15:08	10.76	6/25/2022 13:56	0.76	6/25/2022 15:38	30.62
6/26/2022 15:22	87.08	6/25/2022 14:39	9.72	6/25/2022 15:09	10.76	6/25/2022 13:57	0.74	6/25/2022 15:39	30.64
6/26/2022 15:23	87.08	6/25/2022 14:40	8.27	6/25/2022 15:10	10.77	6/25/2022 13:58	0.78	6/25/2022 15:40	30.66
6/26/2022 15:24	87.07	6/25/2022 14:41	7.04	6/25/2022 15:11	10.78	6/25/2022 13:59	0.72	6/25/2022 15:41	32.85
6/26/2022 15:25	87.05	6/25/2022 14:42	6.04	6/25/2022 15:12	10.75	6/25/2022 14:00	0.72	6/25/2022 15:42	31.71
6/26/2022 15:26	87.03	6/25/2022 14:43	5.17	6/25/2022 15:13	10.77	6/25/2022 14:01	0.74	6/25/2022 15:43	33.58
6/26/2022 15:27	87.05	6/25/2022 14:44	4.49	6/25/2022 15:14	10.80	6/25/2022 14:02	0.76	6/25/2022 15:44	32.11
6/26/2022 15:28	87.04	6/25/2022 14:45	3.90	6/25/2022 15:15	10.78	6/25/2022 14:03	0.78	6/25/2022 15:45	33.41
6/26/2022 15:29	87.05	6/25/2022 14:46	3.40	6/25/2022 15:16	10.80	6/25/2022 14:04	0.73	6/25/2022 15:46	31.93
6/26/2022 15:30	87.08	6/25/2022 14:47	2.95	6/25/2022 15:17	10.79	6/25/2022 14:05	0.73	6/25/2022 15:47	31.21
6/26/2022 15:31	90.19	6/25/2022 14:48	2.61	6/25/2022 15:18	10.76	6/25/2022 14:06	0.76	6/25/2022 15:48	30.91
6/26/2022 15:32	93.27	6/25/2022 14:49	2.31	6/25/2022 15:19	10.77	6/25/2022 14:07	0.76	6/25/2022 15:49	30.77
6/26/2022 15:33	95.08	6/25/2022 14:50	2.03	6/25/2022 15:20	10.81	6/25/2022 14:08	0.78	6/25/2022 15:50	30.77
6/26/2022 15:34	96.16	6/25/2022 14:51	1.87	6/25/2022 15:21	10.77	6/25/2022 14:09	0.74	6/25/2022 15:51	30.75
6/26/2022 15:35	93.41	6/25/2022 14:52	1.68	6/25/2022 15:22	10.77	6/25/2022 14:10	0.77	6/25/2022 15:52	30.71
6/26/2022 15:36	91.58	6/25/2022 14:53	1.50	6/25/2022 15:23	10.79	6/25/2022 14:11	0.74	6/25/2022 15:53	30.70
6/26/2022 15:37	90.44	6/25/2022 14:54	1.37	6/25/2022 15:24	10.75	6/25/2022 14:12	0.74	6/25/2022 15:54	30.70
6/26/2022 15:38	89.76	6/25/2022 14:55	1.25	6/25/2022 15:25	10.79	6/25/2022 14:13	0.72	6/25/2022 15:55	30.72
6/26/2022 15:39	89.24	6/25/2022 14:56	1.15	6/25/2022 15:26	10.80	6/25/2022 14:14	0.72	6/25/2022 15:56	30.70
6/26/2022 15:40	88.83	6/25/2022 14:57	1.03	6/25/2022 15:27	10.79	6/25/2022 14:15	0.74	6/25/2022 15:57	30.70
6/26/2022 15:41	88.56	6/25/2022 14:58	0.95	6/25/2022 15:28	10.83	6/25/2022 14:16	0.79	6/25/2022 15:58	30.71
6/26/2022 15:42	88.35	6/25/2022 14:59	2.20	6/25/2022 15:29	10.78	6/25/2022 14:17	0.77	6/25/2022 15:59	30.70
6/26/2022 15:43	88.23	6/25/2022 15:00	7.91	6/25/2022 15:30	10.81	6/25/2022 14:18	0.76	6/25/2022 16:00	30.70
6/26/2022 15:44	88.16	6/25/2022 15:01	7.56	6/25/2022 15:31	10.76	6/25/2022 14:19	0.79	6/25/2022 16:01	30.69
6/26/2022 15:45	87.97	6/25/2022 15:02	6.40	6/25/2022 15:32	10.80	6/25/2022 14:20	0.78	6/25/2022 16:02	30.70
6/26/2022 15:46	87.92	6/25/2022 15:03	5.51	6/25/2022 15:33	10.76	6/25/2022 14:21	0.77	6/25/2022 16:03	30.70
6/26/2022 15:47	87.84	6/25/2022 15:04	4.71	6/25/2022 15:34	10.76	6/25/2022 14:22	0.75	6/25/2022 16:04	30.67
6/26/2022 15:48	87.79	6/25/2022 15:05	4.07	6/25/2022 15:35	12.83	6/25/2022 14:23	0.75	6/25/2022 16:05	30.70
6/26/2022 15:49	87.76	6/25/2022 15:06	3.52	6/25/2022 15:36	14.85	6/25/2022 14:24	0.75	6/25/2022 16:06	30.66
6/26/2022 15:50	91.11	6/25/2022 15:07	3.05	6/25/2022 15:37	14.32	6/25/2022 14:25	0.76	6/25/2022 16:07	30.68
6/26/2022 15:51	94.05	6/25/2022 15:08	2.65	6/25/2022 15:38	13.90	6/25/2022 14:26	0.73	6/25/2022 16:08	30.65
6/26/2022 15:52	95.67	6/25/2022 15:09	2.35	6/25/2022 15:39	13.56	6/25/2022 14:27	0.75	6/25/2022 16:09	30.65
6/26/2022 15:53	93.87	6/25/2022 15:10	2.13	6/25/2022 15:40	13.26	6/25/2022 14:28	0.76	6/25/2022 16:10	30.65
6/26/2022 15:54	91.97	6/25/2022 15:11	1.88	6/25/2022 15:41	12.97	6/25/2022 14:29	0.80	6/25/2022 16:11	30.66
6/26/2022 15:55	90.76	6/25/2022 15:12	1.70	6/25/2022 15:42	12.77	6/25/2022 14:30	3.44	6/25/2022 16:12	30.65
6/26/2022 15:56	90.07	6/25/2022 15:13	1.54	6/25/2022 15:43	12.55	6/25/2022 14:31	9.90	6/25/2022 16:13	30.64
6/26/2022 15:57	89.54	6/25/2022 15:14	1.49	6/25/2022 15:44	12.36	6/25/2022 14:32	6.48	6/25/2022 16:14	30.65

6/26/2022 15:58	89.16	6/25/2022 15:15	5.52	6/25/2022 15:45	12.18	6/25/2022 14:33	4.02	6/25/2022 16:15	30.65
6/26/2022 15:59	88.91	6/25/2022 15:16	9.41	6/25/2022 15:46	12.04	6/25/2022 14:34	2.20	6/25/2022 16:16	30.62
6/26/2022 16:00	88.65	6/25/2022 15:17	7.99	6/25/2022 15:47	11.94	6/25/2022 14:35	0.88	6/25/2022 16:17	30.62
6/26/2022 16:01	88.59	6/25/2022 15:18	6.78	6/25/2022 15:48	11.80	6/25/2022 14:36	0.74	6/25/2022 16:18	31.53
6/26/2022 16:02	88.46	6/25/2022 15:19	5.82	6/25/2022 15:49	11.66	6/25/2022 14:37	0.75	6/25/2022 16:19	32.15
6/26/2022 16:03	88.29	6/25/2022 15:20	5.05	6/25/2022 15:50	11.60	6/25/2022 14:38	0.74	6/25/2022 16:20	31.22
6/26/2022 16:04	88.23	6/25/2022 15:21	4.35	6/25/2022 15:51	11.53	6/25/2022 14:39	0.76	6/25/2022 16:21	30.90
6/26/2022 16:05	88.14	6/25/2022 15:22	3.76	6/25/2022 15:52	11.49	6/25/2022 14:40	0.75	6/25/2022 16:22	30.75
6/26/2022 16:06	88.09	6/25/2022 15:23	3.31	6/25/2022 15:53	11.44	6/25/2022 14:41	0.77	6/25/2022 16:23	30.69
6/26/2022 16:07	88.11	6/25/2022 15:24	3.58	6/25/2022 15:54	11.37	6/25/2022 14:42	0.73	6/25/2022 16:24	30.70
6/26/2022 16:08	88.08	6/25/2022 15:25	9.07	6/25/2022 15:55	11.35	6/25/2022 14:43	0.72	6/25/2022 16:25	30.67
6/26/2022 16:09	88.01	6/25/2022 15:26	9.04	6/25/2022 15:56	11.33	6/25/2022 14:44	0.73	6/25/2022 16:26	30.66
6/26/2022 16:10	87.93	6/25/2022 15:27	7.66	6/25/2022 15:57	11.26	6/25/2022 14:45	0.72	6/25/2022 16:27	30.66
6/26/2022 16:11	87.90	6/25/2022 15:28	6.55	6/25/2022 15:58	11.24	6/25/2022 14:46	0.75	6/25/2022 16:28	30.65
6/26/2022 16:12	87.91	6/25/2022 15:29	5.59	6/25/2022 15:59	11.20	6/25/2022 14:47	0.74	6/25/2022 16:29	30.63
6/26/2022 16:13	87.90	6/25/2022 15:30	4.84	6/25/2022 16:00	11.13	6/25/2022 14:48	0.75	6/25/2022 16:30	30.67
6/26/2022 16:14	87.83	6/25/2022 15:31	4.20	6/25/2022 16:01	11.14	6/25/2022 14:49	0.76	6/25/2022 16:31	30.67
6/26/2022 16:15	87.80	6/25/2022 15:32	3.61	6/25/2022 16:02	11.06	6/25/2022 14:50	0.77	6/25/2022 16:32	30.66
6/26/2022 16:16	87.83	6/25/2022 15:33	3.19	6/25/2022 16:03	11.06	6/25/2022 14:51	0.76	6/25/2022 16:33	30.64
6/26/2022 16:17	87.76	6/25/2022 15:34	2.76	6/25/2022 16:04	11.03	6/25/2022 14:52	0.74	6/25/2022 16:34	30.67
6/26/2022 16:18	87.71	6/25/2022 15:35	2.45	6/25/2022 16:05	11.01	6/25/2022 14:53	0.74	6/25/2022 16:35	30.67
6/26/2022 16:19	87.75	6/25/2022 15:36	2.19	6/25/2022 16:06	10.96	6/25/2022 14:54	0.79	6/25/2022 16:36	30.66
6/26/2022 16:20	87.69	6/25/2022 15:37	1.93	6/25/2022 16:07	11.00	6/25/2022 14:55	0.73	6/25/2022 16:37	30.65
6/26/2022 16:21	87.66	6/25/2022 15:38	4.46	6/25/2022 16:08	10.96	6/25/2022 14:56	0.75	6/25/2022 16:38	30.65
6/26/2022 16:22	87.69	6/25/2022 15:39	9.57	6/25/2022 16:09	10.93	6/25/2022 14:57	0.74	6/25/2022 16:39	30.63
6/26/2022 16:23	87.60	6/25/2022 15:40	8.21	6/25/2022 16:10	10.94	6/25/2022 14:58	0.74	6/25/2022 16:40	30.67
6/26/2022 16:24	87.66	6/25/2022 15:41	6.98	6/25/2022 16:11	10.93	6/25/2022 14:59	0.74	6/25/2022 16:41	30.64
6/26/2022 16:25	87.62	6/25/2022 15:42	5.98	6/25/2022 16:12	10.94	6/25/2022 15:00	0.77	6/25/2022 16:42	30.64
6/26/2022 16:26	87.68	6/25/2022 15:43	5.18	6/25/2022 16:13	10.92	6/25/2022 15:01	0.75	6/25/2022 16:43	30.62
6/26/2022 16:27	87.60	6/25/2022 15:44	4.50	6/25/2022 16:14	10.91	6/25/2022 15:02	0.75	6/25/2022 16:44	30.61
6/26/2022 16:28	87.63	6/25/2022 15:45	3.90	6/25/2022 16:15	10.93	6/25/2022 15:03	0.77	6/25/2022 16:45	30.60
6/26/2022 16:29	87.66	6/25/2022 15:46	8.08	6/25/2022 16:16	13.43	6/25/2022 15:04	0.77	6/25/2022 16:46	30.62
6/26/2022 16:30	87.62	6/25/2022 15:47	10.70	6/25/2022 16:17	17.52	6/25/2022 15:05	0.74	6/25/2022 16:47	30.65
6/26/2022 16:31	87.61	6/25/2022 15:48	9.05	6/25/2022 16:18	17.60	6/25/2022 15:06	0.73	6/25/2022 16:48	30.63
6/26/2022 16:32	87.56	6/25/2022 15:49	7.67	6/25/2022 16:19	16.74	6/25/2022 15:07	0.76	6/25/2022 16:49	30.62
6/26/2022 16:33	87.53	6/25/2022 15:50	6.59	6/25/2022 16:20	20.69	6/25/2022 15:08	0.77	6/25/2022 16:50	30.61
6/26/2022 16:34	87.57	6/25/2022 15:51	5.67	6/25/2022 16:21	22.97	6/25/2022 15:09	0.75	6/25/2022 16:51	30.63
6/26/2022 16:35	87.52	6/25/2022 15:52	4.88	6/25/2022 16:22	21.68	6/25/2022 15:10	0.74	6/25/2022 16:52	30.60
6/26/2022 16:36	87.54	6/25/2022 15:53	4.28	6/25/2022 16:23	20.56	6/25/2022 15:11	0.77	6/25/2022 16:53	30.60
6/26/2022 16:37	87.53	6/25/2022 15:54	3.71	6/25/2022 16:24	19.54	6/25/2022 15:12	0.77	6/25/2022 16:54	30.61
6/26/2022 16:38	87.56	6/25/2022 15:55	3.23	6/25/2022 16:25	18.67	6/25/2022 15:13	4.04	6/25/2022 16:55	30.63
6/26/2022 16:39	87.50	6/25/2022 15:56	2.78	6/25/2022 16:26	17.86	6/25/2022 15:14	10.29	6/25/2022 16:56	30.60
6/26/2022 16:40	87.53	6/25/2022 15:57	2.49	6/25/2022 16:27	17.17	6/25/2022 15:15	7.08	6/25/2022 16:57	30.62
6/26/2022 16:41	87.52	6/25/2022 15:58	2.20	6/25/2022 16:28	16.53	6/25/2022 15:16	4.47	6/25/2022 16:58	30.63
6/26/2022 16:42	87.46	6/25/2022 15:59	1.94	6/25/2022 16:29	15.96	6/25/2022 15:17	2.55	6/25/2022 16:59	30.62
6/26/2022 16:43	87.50	6/25/2022 16:00	1.78	6/25/2022 16:30	15.47	6/25/2022 15:18	1.20	6/25/2022 17:00	30.60
6/26/2022 16:44	87.55	6/25/2022 16:01	1.58	6/25/2022 16:31	15.03	6/25/2022 15:19	0.75	6/25/2022 17:01	30.61
6/26/2022 16:45	87.44	6/25/2022 16:02	1.44	6/25/2022 16:32	14.60	6/25/2022 15:20	0.80	6/25/2022 17:02	30.59
6/26/2022 16:46	87.50	6/25/2022 16:03	1.34	6/25/2022 16:33	14.29	6/25/2022 15:21	0.78	6/25/2022 17:03	30.61
6/26/2022 16:47	87.43	6/25/2022 16:04	1.16	6/25/2022 16:34	13.99	6/25/2022 15:22	0.77	6/25/2022 17:04	30.60
6/26/2022 16:48	87.49	6/25/2022 16:05	1.08	6/25/2022 16:35	13.68	6/25/2022 15:23	0.78	6/25/2022 17:05	30.61
6/26/2022 16:49	87.46	6/25/2022 16:06	0.97	6/25/2022 16:36	13.41	6/25/2022 15:24	0.82	6/25/2022 17:06	30.61
6/26/2022 16:50	87.49	6/25/2022 16:07	0.94	6/25/2022 16:37	13.20	6/25/2022 15:25	0.75	6/25/2022 17:07	30.56
6/26/2022 16:51	87.44	6/25/2022 16:08	0.86	6/25/2022 16:38	13.01	6/25/2022 15:26	0.77	6/25/2022 17:08	30.61
6/26/2022 16:52	87.48	6/25/2022 16:09	0.78	6/25/2022 16:39	12.83	6/25/2022 15:27	0.82	6/25/2022 17:09	30.58
6/26/2022 16:53	87.41	6/25/2022 16:10	0.77	6/25/2022 16:40	12.68	6/25/2022 15:28	0.80	6/25/2022 17:10	30.58
6/26/2022 16:54	87.45	6/25/2022 16:11	0.68	6/25/2022 16:41	12.55	6/25/2022 15:29	0.76	6/25/2022 17:11	30.63
6/26/2022 16:55	87.42	6/25/2022 16:12	4.04	6/25/2022 16:42	12.46	6/25/2022 15:30	0.79	6/25/2022 17:12	30.59
6/26/2022 16:56	87.38	6/25/2022 16:13	8.23	6/25/2022 16:43	12.37	6/25/2022 15:31	0.77	6/25/2022 17:13	30.59
6/26/2022 16:57	87.41	6/25/2022 16:14	6.93	6/25/2022 16:44	12.20	6/25/2022 15:32	0.78	6/25/2022 17:14	32.80
6/26/2022 16:58	87.40	6/25/2022 16:15	5.91	6/25/2022 16:45	12.11	6/25/2022 15:33	0.79	6/25/2022 17:15	31.50
6/26/2022 16:59	87.42	6/25/2022 16:16	5.14	6/25/2022 16:46	12.06	6/25/2022 15:34	0.76	6/25/2022 17:16	30.98
6/26/2022 17:00	87.39	6/25/2022 16:17	4.42	6/25/2022 16:47	11.91	6/25/2022 15:35	0.75	6/25/2022 17:17	30.73
6/26/2022 17:01	87.44	6/25/2022 16:18	3.81	6/25/2022 16:48	11.85	6/25/2022 15:36	0.76	6/25/2022 17:18	30.68
6/26/2022 17:02	87.39	6/25/2022 16:19	3.25	6/25/2022 16:49	11.80	6/25/2022 15:37	0.75	6/25/2022 17:19	30.65
6/26/2022 17:03	87.36	6/25/2022 16:20	2.83	6/25/2022 16:50	11.73	6/25/2022 15:38	0.78	6/25/2022 17:20	30.64
6/26/2022 17:04	87.37	6/25/2022 16:21	2.55	6/25/2022 16:51	11.63	6/25/2022 15:39	0.77	6/25/2022 17:21	30.62
6/26/2022 17:05	87.36	6/25/2022 16:22	2.19	6/25/2022 16:52	11.64	6/25/2022 15:40	0.78	6/25/2022 17:22	30.63
6/26/2022 17:06	87.43	6/25/2022 16:23	1.98	6/25/2022 16:53	11.59	6/25/2022 15:41	0.75	6/25/2022 17:23	33.07
6/26/2022 17:07	87.34	6/25/2022 16:24	1.74	6/25/2022 16:54	11.56	6/25/2022 15:42	0.78	6/25/2022 17:24	31.79
6/26/2022 17:08	87.36	6/25/2022 16:25	1.58	6/25/2022 16:55	11.51	6/25/2022 15:43	0.75	6/25/2022 17:25	33.20
6/26/2022 17:09	87.38	6/25/2022 16:26	1.42	6/25/2022 16:56	11.51	6/25/2022 15:44	0.75	6/25/2022 17:26	32.04
6/26/2022 17:10	87.33	6/25/2022 16:27	1.26	6/25/2022 16:57	11.50	6/25/2022 15:45	0.77	6/25/2022 17:27	31.21
6/26/2022 17:11	87.34	6/25/2022 16:28	1.17	6/25/2022 16:58	11.44	6/25/2022 15:46	0.76	6/25/2022 17:28	30.83
6/26/2022 17:12	87.34	6/25/2022 16:29	1.07	6/25/2022 16:59	11.39	6/25/2022 15:47	0.78	6/25/2022 17:29	30.73
6/26/2022 17:13	87.32	6/25/2022 16:30	1.00	6/25/2022 17:00	11.41	6/25/2022 15:48	0.79	6/25/2022 17:30	30.66
6/26/2022 17:14	87.36	6/25/2022 16:31	0.90	6/25/2022 17:01	11.40	6/25/2022 15:49	0.78	6/25/2022 17:31	30.69
6/26/2022 17:15	87.37	6/25/2022 16:32	0.80	6/25/2022 17:02	11.39	6/25/2022 15:50	0.77	6/25/2022 17:32	30.67
6/26/2022 17:16	87.30	6/25/2022 16:33	0.79	6/25/2022 17:03	11.33	6/25/2022 15:51	0.77	6/25/2022 17:33	30.65
6/26/2022 17:17	87.32	6/25/2022 16:34	0.72	6/25/2022 17:04	11.33	6/25/2022 15:52	0.76	6/25/2022 17:34	30.63
6/26/2022 17:18	87.33	6/25/2022 16:35	0.67	6/25/2022 17:05	11.26	6/25/2022 15:53	0.76	6/25/2022 17:35	30.65
6/26/2022 17:19	87.31	6/25/2022 16:36	0.61	6/25/2022 17:06	11.27	6/25/2022 15:54	0.74	6/25/2022 17:36	30.62
6/26/2022 17:20	87.30	6/25/2022 16:37	0.57	6/25/2022 17:07	11.24	6/25/2022 15:55	0.77	6/25/2022 17:37	30.66
6/26/2022 17:21	87.28	6/25/2022 16:38	0.57	6/25/2022 17:08	11.20	6/25/2022 15:56	0.76	6/25/2022 17:38	30.65
6/26/2022 17:22	87.30	6/25/2022 16:39	0.50	6/25/2022 17:09	11.15	6/25/2022 15:57	0.77	6/25/2022 17:39	30.62
6/26/2022 17:23	87.28	6/25/2022 16:40	0.54	6/25/2022 17:10	11.17	6/25/2022 15:58	0.77	6/25/2022 17:40	30.65
6/26/2022 17:24	87.25	6/25/2022 16:41	0.46	6/25/2022 17:11	11.12	6/25/2022 15:59	0.76	6/25/2022 17:41	30.61
6/26/2022 17:25	87.25	6/25/2022 16:42	0.45	6/25/2022 17:12	11.09	6/25/2022 16:00	0.77	6/25/2022 17:42	30.64

6/26/2022 17:26	87.30	6/25/2022 16:43	0.48	6/25/2022 17:13	11.06	6/25/2022 16:01	0.75	6/25/2022 17:43	30.65
6/26/2022 17:27	87.33	6/25/2022 16:44	0.48	6/25/2022 17:14	11.03	6/25/2022 16:02	0.74	6/25/2022 17:44	30.64
6/26/2022 17:28	87.33	6/25/2022 16:45	0.48	6/25/2022 17:15	11.01	6/25/2022 16:03	0.72	6/25/2022 17:45	30.61
6/26/2022 17:29	87.26	6/25/2022 16:46	0.42	6/25/2022 17:16	11.00	6/25/2022 16:04	0.76	6/25/2022 17:46	30.64
6/26/2022 17:30	87.25	6/25/2022 16:47	0.42	6/25/2022 17:17	10.98	6/25/2022 16:05	0.74	6/25/2022 17:47	30.62
6/26/2022 17:31	87.30	6/25/2022 16:48	0.41	6/25/2022 17:18	10.93	6/25/2022 16:06	0.71	6/25/2022 17:48	30.59
6/26/2022 17:32	87.29	6/25/2022 16:49	0.39	6/25/2022 17:19	10.93	6/25/2022 16:07	0.73	6/25/2022 17:49	30.63
6/26/2022 17:33	87.30	6/25/2022 16:50	0.38	6/25/2022 17:20	10.93	6/25/2022 16:08	0.78	6/25/2022 17:50	30.62
6/26/2022 17:34	87.25	6/25/2022 16:51	0.40	6/25/2022 17:21	10.91	6/25/2022 16:09	0.78	6/25/2022 17:51	30.60
6/26/2022 17:35	87.24	6/25/2022 16:52	0.34	6/25/2022 17:22	10.90	6/25/2022 16:10	0.78	6/25/2022 17:52	30.64
6/26/2022 17:36	87.21	6/25/2022 16:53	0.39	6/25/2022 17:23	10.89	6/25/2022 16:11	0.78	6/25/2022 17:53	30.64
6/26/2022 17:37	87.23	6/25/2022 16:54	0.38	6/25/2022 17:24	10.93	6/25/2022 16:12	0.77	6/25/2022 17:54	30.61
6/26/2022 17:38	87.26	6/25/2022 16:55	0.39	6/25/2022 17:25	10.93	6/25/2022 16:13	0.80	6/25/2022 17:55	30.63
6/26/2022 17:39	87.22	6/25/2022 16:56	0.38	6/25/2022 17:26	10.92	6/25/2022 16:14	0.77	6/25/2022 17:56	30.59
6/26/2022 17:40	87.24	6/25/2022 16:57	0.35	6/25/2022 17:27	10.93	6/25/2022 16:15	0.79	6/25/2022 17:57	30.60
6/26/2022 17:41	87.28	6/25/2022 16:58	0.35	6/25/2022 17:28	10.90	6/25/2022 16:16	0.78	6/25/2022 17:58	30.58
6/26/2022 17:42	87.21	6/25/2022 16:59	0.33	6/25/2022 17:29	10.87	6/25/2022 16:17	0.76	6/25/2022 17:59	30.64
6/26/2022 17:43	87.27	6/25/2022 17:00	0.37	6/25/2022 17:30	10.86	6/25/2022 16:18	0.77	6/25/2022 18:00	30.59
6/26/2022 17:44	87.28	6/25/2022 17:01	2.72	6/25/2022 17:31	10.85	6/25/2022 16:19	0.77	6/25/2022 18:01	30.59
6/26/2022 17:45	87.24	6/25/2022 17:02	8.17	6/25/2022 17:32	10.86	6/25/2022 16:20	0.74	6/25/2022 18:02	30.59
6/26/2022 17:46	87.25	6/25/2022 17:03	6.88	6/25/2022 17:33	10.83	6/25/2022 16:21	0.78	6/25/2022 18:03	30.56
6/26/2022 17:47	87.21	6/25/2022 17:04	5.87	6/25/2022 17:34	10.83	6/25/2022 16:22	0.77	6/25/2022 18:04	30.59
6/26/2022 17:48	87.28	6/25/2022 17:05	5.01	6/25/2022 17:35	10.77	6/25/2022 16:23	0.80	6/25/2022 18:05	30.61
6/26/2022 17:49	87.18	6/25/2022 17:06	4.34	6/25/2022 17:36	10.82	6/25/2022 16:24	0.74	6/25/2022 18:06	30.58
6/26/2022 17:50	87.23	6/25/2022 17:07	3.71	6/25/2022 17:37	10.86	6/25/2022 16:25	0.80	6/25/2022 18:07	30.56
6/26/2022 17:51	87.26	6/25/2022 17:08	3.24	6/25/2022 17:38	10.83	6/25/2022 16:26	0.78	6/25/2022 18:08	30.60
6/26/2022 17:52	87.21	6/25/2022 17:09	2.75	6/25/2022 17:39	10.82	6/25/2022 16:27	0.77	6/25/2022 18:09	30.60
6/26/2022 17:53	87.23	6/25/2022 17:10	2.45	6/25/2022 17:40	10.86	6/25/2022 16:28	0.74	6/25/2022 18:10	30.57
6/26/2022 17:54	87.85	6/25/2022 17:11	2.13	6/25/2022 17:41	13.51	6/25/2022 16:29	0.78	6/25/2022 18:11	30.59
6/26/2022 17:55	92.04	6/25/2022 17:12	1.92	6/25/2022 17:42	15.69	6/25/2022 16:30	0.77	6/25/2022 18:12	30.58
6/26/2022 17:56	94.55	6/25/2022 17:13	1.70	6/25/2022 17:43	15.05	6/25/2022 16:31	0.79	6/25/2022 18:13	30.55
6/26/2022 17:57	96.10	6/25/2022 17:14	1.50	6/25/2022 17:44	14.55	6/25/2022 16:32	0.79	6/25/2022 18:14	30.57
6/26/2022 17:58	93.48	6/25/2022 17:15	1.36	6/25/2022 17:45	14.13	6/25/2022 16:33	0.78	6/25/2022 18:15	30.59
6/26/2022 17:59	91.60	6/25/2022 17:16	1.22	6/25/2022 17:46	13.73	6/25/2022 16:34	0.78	6/25/2022 18:16	30.60
6/26/2022 18:00	90.46	6/25/2022 17:17	1.13	6/25/2022 17:47	13.42	6/25/2022 16:35	0.76	6/25/2022 18:17	30.55
6/26/2022 18:01	89.78	6/25/2022 17:18	1.01	6/25/2022 17:48	13.11	6/25/2022 16:36	0.80	6/25/2022 18:18	30.56
6/26/2022 18:02	89.26	6/25/2022 17:19	0.91	6/25/2022 17:49	12.86	6/25/2022 16:37	0.77	6/25/2022 18:19	30.58
6/26/2022 18:03	88.93	6/25/2022 17:20	0.83	6/25/2022 17:50	12.65	6/25/2022 16:38	0.80	6/25/2022 18:20	30.56
6/26/2022 18:04	88.61	6/25/2022 17:21	0.75	6/25/2022 17:51	12.47	6/25/2022 16:39	0.77	6/25/2022 18:21	30.53
6/26/2022 18:05	88.47	6/25/2022 17:22	0.72	6/25/2022 17:52	12.27	6/25/2022 16:40	0.77	6/25/2022 18:22	30.59
6/26/2022 18:06	88.29	6/25/2022 17:23	0.69	6/25/2022 17:53	12.12	6/25/2022 16:41	0.83	6/25/2022 18:23	30.61
6/26/2022 18:07	88.15	6/25/2022 17:24	0.64	6/25/2022 17:54	11.95	6/25/2022 16:42	0.76	6/25/2022 18:24	30.59
6/26/2022 18:08	88.10	6/25/2022 17:25	0.59	6/25/2022 17:55	11.88	6/25/2022 16:43	0.78	6/25/2022 18:25	30.58
6/26/2022 18:09	88.03	6/25/2022 17:26	0.55	6/25/2022 17:56	11.73	6/25/2022 16:44	0.77	6/25/2022 18:26	30.59
6/26/2022 18:10	87.99	6/25/2022 17:27	0.54	6/25/2022 17:57	11.68	6/25/2022 16:45	0.79	6/25/2022 18:27	30.58
6/26/2022 18:11	87.92	6/25/2022 17:28	0.50	6/25/2022 17:58	11.63	6/25/2022 16:46	0.79	6/25/2022 18:28	30.55
6/26/2022 18:12	87.88	6/25/2022 17:29	0.46	6/25/2022 17:59	11.56	6/25/2022 16:47	0.80	6/25/2022 18:29	30.54
6/26/2022 18:13	87.82	6/25/2022 17:30	0.44	6/25/2022 18:00	11.49	6/25/2022 16:48	0.79	6/25/2022 18:30	30.56
6/26/2022 18:14	87.78	6/25/2022 17:31	0.45	6/25/2022 18:01	11.41	6/25/2022 16:49	0.78	6/25/2022 18:31	30.53
6/26/2022 18:15	87.72	6/25/2022 17:32	6.18	6/25/2022 18:02	11.37	6/25/2022 16:50	0.77	6/25/2022 18:32	30.58
6/26/2022 18:16	87.70	6/25/2022 17:33	9.66	6/25/2022 18:03	11.33	6/25/2022 16:51	0.80	6/25/2022 18:33	30.58
6/26/2022 18:17	87.68	6/25/2022 17:34	8.12	6/25/2022 18:04	11.28	6/25/2022 16:52	0.80	6/25/2022 18:34	30.53
6/26/2022 18:18	87.67	6/25/2022 17:35	6.90	6/25/2022 18:05	11.26	6/25/2022 16:53	0.80	6/25/2022 18:35	30.56
6/26/2022 18:19	87.65	6/25/2022 17:36	5.87	6/25/2022 18:06	11.19	6/25/2022 16:54	0.80	6/25/2022 18:36	30.57
6/26/2022 18:20	87.65	6/25/2022 17:37	5.05	6/25/2022 18:07	11.19	6/25/2022 16:55	0.79	6/25/2022 18:37	30.58
6/26/2022 18:21	87.65	6/25/2022 17:38	4.31	6/25/2022 18:08	11.12	6/25/2022 16:56	0.80	6/25/2022 18:38	30.54
6/26/2022 18:22	88.49	6/25/2022 17:39	3.74	6/25/2022 18:09	11.10	6/25/2022 16:57	0.78	6/25/2022 18:39	30.54
6/26/2022 18:23	92.48	6/25/2022 17:40	3.23	6/25/2022 18:10	11.03	6/25/2022 16:58	0.79	6/25/2022 18:40	30.57
6/26/2022 18:24	94.84	6/25/2022 17:41	2.77	6/25/2022 18:11	11.04	6/25/2022 16:59	0.80	6/25/2022 18:41	30.60
6/26/2022 18:25	96.23	6/25/2022 17:42	2.48	6/25/2022 18:12	10.98	6/25/2022 17:00	0.79	6/25/2022 18:42	30.56
6/26/2022 18:26	95.54	6/25/2022 17:43	2.18	6/25/2022 18:13	10.97	6/25/2022 17:01	0.82	6/25/2022 18:43	30.56
6/26/2022 18:27	93.02	6/25/2022 17:44	1.93	6/25/2022 18:14	10.95	6/25/2022 17:02	0.81	6/25/2022 18:44	30.56
6/26/2022 18:28	91.53	6/25/2022 17:45	1.71	6/25/2022 18:15	10.90	6/25/2022 17:03	0.78	6/25/2022 18:45	30.56
6/26/2022 18:29	90.63	6/25/2022 17:46	1.55	6/25/2022 18:16	10.91	6/25/2022 17:04	0.81	6/25/2022 18:46	30.57
6/26/2022 18:30	89.96	6/25/2022 17:47	1.37	6/25/2022 18:17	10.90	6/25/2022 17:05	0.80	6/25/2022 18:47	30.53
6/26/2022 18:31	89.54	6/25/2022 17:48	1.24	6/25/2022 18:18	10.82	6/25/2022 17:06	0.79	6/25/2022 18:48	30.56
6/26/2022 18:32	89.26	6/25/2022 17:49	1.12	6/25/2022 18:19	10.86	6/25/2022 17:07	0.79	6/25/2022 18:49	30.53
6/26/2022 18:33	88.96	6/25/2022 17:50	1.04	6/25/2022 18:20	10.81	6/25/2022 17:08	0.80	6/25/2022 18:50	30.58
6/26/2022 18:34	88.82	6/25/2022 17:51	0.95	6/25/2022 18:21	10.83	6/25/2022 17:09	0.81	6/25/2022 18:51	30.52
6/26/2022 18:35	88.63	6/25/2022 17:52	0.80	6/25/2022 18:22	10.78	6/25/2022 17:10	0.80	6/25/2022 18:52	30.56
6/26/2022 18:36	88.55	6/25/2022 17:53	0.78	6/25/2022 18:23	10.78	6/25/2022 17:11	0.78	6/25/2022 18:53	30.56
6/26/2022 18:37	88.42	6/25/2022 17:54	0.75	6/25/2022 18:24	10.75	6/25/2022 17:12	0.79	6/25/2022 18:54	30.56
6/26/2022 18:38	88.33	6/25/2022 17:55	0.71	6/25/2022 18:25	10.76	6/25/2022 17:13	0.82	6/25/2022 18:55	30.56
6/26/2022 18:39	88.27	6/25/2022 17:56	0.66	6/25/2022 18:26	10.70	6/25/2022 17:14	0.81	6/25/2022 18:56	30.55
6/26/2022 18:40	88.24	6/25/2022 17:57	0.59	6/25/2022 18:27	10.74	6/25/2022 17:15	0.77	6/25/2022 18:57	30.53
6/26/2022 18:41	88.20	6/25/2022 17:58	1.76	6/25/2022 18:28	10.74	6/25/2022 17:16	0.79	6/25/2022 18:58	30.56
6/26/2022 18:42	88.10	6/25/2022 17:59	7.57	6/25/2022 18:29	10.75	6/25/2022 17:17	0.81	6/25/2022 18:59	30.55
6/26/2022 18:43	88.08	6/25/2022 18:00	10.17	6/25/2022 18:30	10.78	6/25/2022 17:18	0.82	6/25/2022 19:00	30.55
6/26/2022 18:44	88.10	6/25/2022 18:01	8.66	6/25/2022 18:31	10.75	6/25/2022 17:19	0.78	6/25/2022 19:01	30.55
6/26/2022 18:45	88.05	6/25/2022 18:02	7.47	6/25/2022 18:32	10.76	6/25/2022 17:20	0.76	6/25/2022 19:02	30.57
6/26/2022 18:46	88.01	6/25/2022 18:03	6.53	6/25/2022 18:33	10.77	6/25/2022 17:21	0.80	6/25/2022 19:03	30.56
6/26/2022 18:47	88.01	6/25/2022 18:04	5.65	6/25/2022 18:34	10.80	6/25/2022 17:22	0.77	6/25/2022 19:04	30.56
6/26/2022 18:48	87.96	6/25/2022 18:05	4.90	6/25/2022 18:35	10.77	6/25/2022 17:23	0.77	6/25/2022 19:05	30.59
6/26/2022 18:49	87.91	6/25/2022 18:06	4.25	6/25/2022 18:36	10.73	6/25/2022 17:24	0.83	6/25/2022 19:06	30.53
6/26/2022 18:50	87.88	6/25/2022 18:07	6.30	6/25/2022 18:37	10.77	6/25/2022 17:25	0.81	6/25/2022 19:07	30.55
6/26/2022 18:51	87.86	6/25/2022 18:08	11.29	6/25/2022 18:38	10.77	6/25/2022 17:26	0.80	6/25/2022 19:08	30.52
6/26/2022 18:52	87.92	6/25/2022 18:09	10.28	6/25/2022 18:39	10.74	6/25/2022 17:27	0.80	6/25/2022 19:09	30.56
6/26/2022 18:53	87.81	6/25/2022 18:10	8.81	6/25/2022 18:40	10.75	6/25/2022 17:28	0.79	6/25/2022 19:10	30.50

6/26/2022 18:54	87.80	6/25/2022 18:11	7.56	6/25/2022 18:41	10.70	6/25/2022 17:29	0.82	6/25/2022 19:11	30.52
6/26/2022 18:55	87.85	6/25/2022 18:12	6.47	6/25/2022 18:42	10.74	6/25/2022 17:30	0.78	6/25/2022 19:12	30.58
6/26/2022 18:56	87.78	6/25/2022 18:13	5.62	6/25/2022 18:43	10.70	6/25/2022 17:31	0.82	6/25/2022 19:13	30.56
6/26/2022 18:57	87.75	6/25/2022 18:14	4.87	6/25/2022 18:44	10.71	6/25/2022 17:32	0.79	6/25/2022 19:14	30.54
6/26/2022 18:58	87.77	6/25/2022 18:15	4.18	6/25/2022 18:45	10.71	6/25/2022 17:33	0.80	6/25/2022 19:15	30.55
6/26/2022 18:59	87.74	6/25/2022 18:16	3.67	6/25/2022 18:46	10.73	6/25/2022 17:34	0.77	6/25/2022 19:16	30.54
6/26/2022 19:00	87.81	6/25/2022 18:17	3.22	6/25/2022 18:47	10.72	6/25/2022 17:35	0.83	6/25/2022 19:17	30.53
6/26/2022 19:01	87.76	6/25/2022 18:18	2.76	6/25/2022 18:48	10.76	6/25/2022 17:36	0.74	6/25/2022 19:18	30.52
6/26/2022 19:02	87.78	6/25/2022 18:19	2.43	6/25/2022 18:49	10.73	6/25/2022 17:37	0.74	6/25/2022 19:19	30.54
6/26/2022 19:03	87.76	6/25/2022 18:20	2.20	6/25/2022 18:50	10.75	6/25/2022 17:38	0.76	6/25/2022 19:20	30.51
6/26/2022 19:04	87.75	6/25/2022 18:21	1.91	6/25/2022 18:51	10.72	6/25/2022 17:39	0.78	6/25/2022 19:21	30.52
6/26/2022 19:05	87.69	6/25/2022 18:22	1.72	6/25/2022 18:52	10.72	6/25/2022 17:40	0.79	6/25/2022 19:22	30.54
6/26/2022 19:06	87.73	6/25/2022 18:23	1.54	6/25/2022 18:53	10.75	6/25/2022 17:41	0.79	6/25/2022 19:23	30.50
6/26/2022 19:07	87.68	6/25/2022 18:24	1.38	6/25/2022 18:54	10.75	6/25/2022 17:42	0.74	6/25/2022 19:24	30.53
6/26/2022 19:08	87.69	6/25/2022 18:25	1.26	6/25/2022 18:55	10.70	6/25/2022 17:43	0.78	6/25/2022 19:25	30.54
6/26/2022 19:09	87.66	6/25/2022 18:26	1.17	6/25/2022 18:56	10.71	6/25/2022 17:44	0.80	6/25/2022 19:26	30.52
6/26/2022 19:10	87.68	6/25/2022 18:27	1.05	6/25/2022 18:57	10.71	6/25/2022 17:45	0.77	6/25/2022 19:27	30.54
6/26/2022 19:11	87.68	6/25/2022 18:28	0.96	6/25/2022 18:58	10.71	6/25/2022 17:46	0.76	6/25/2022 19:28	30.52
6/26/2022 19:12	87.59	6/25/2022 18:29	0.88	6/25/2022 18:59	10.75	6/25/2022 17:47	0.82	6/25/2022 19:29	30.55
6/26/2022 19:13	87.68	6/25/2022 18:30	0.80	6/25/2022 19:00	10.69	6/25/2022 17:48	0.86	6/25/2022 19:30	30.53
6/26/2022 19:14	87.59	6/25/2022 18:31	0.80	6/25/2022 19:01	10.67	6/25/2022 17:49	0.80	6/25/2022 19:31	30.54
6/26/2022 19:15	87.68	6/25/2022 18:32	0.71	6/25/2022 19:02	10.67	6/25/2022 17:50	0.76	6/25/2022 19:32	30.53
6/26/2022 19:16	87.62	6/25/2022 18:33	0.71	6/25/2022 19:03	10.66	6/25/2022 17:51	0.77	6/25/2022 19:33	30.51
6/26/2022 19:17	87.59	6/25/2022 18:34	0.64	6/25/2022 19:04	10.66	6/25/2022 17:52	0.78	6/25/2022 19:34	30.53
6/26/2022 19:18	87.58	6/25/2022 18:35	0.62	6/25/2022 19:05	10.64	6/25/2022 17:53	0.81	6/25/2022 19:35	30.51
6/26/2022 19:19	87.62	6/25/2022 18:36	0.53	6/25/2022 19:06	10.64	6/25/2022 17:54	0.79	6/25/2022 19:36	30.51
6/26/2022 19:20	87.59	6/25/2022 18:37	0.53	6/25/2022 19:07	10.70	6/25/2022 17:55	0.76	6/25/2022 19:37	30.52
6/26/2022 19:21	87.60	6/25/2022 18:38	0.54	6/25/2022 19:08	10.69	6/25/2022 17:56	0.77	6/25/2022 19:38	30.53
6/26/2022 19:22	87.61	6/25/2022 18:39	0.51	6/25/2022 19:09	10.71	6/25/2022 17:57	0.76	6/25/2022 19:39	30.51
6/26/2022 19:23	87.62	6/25/2022 18:40	0.48	6/25/2022 19:10	10.73	6/25/2022 17:58	0.78	6/25/2022 19:40	30.52
6/26/2022 19:24	87.56	6/25/2022 18:41	0.46	6/25/2022 19:11	10.70	6/25/2022 17:59	0.78	6/25/2022 19:41	30.52
6/26/2022 19:25	87.59	6/25/2022 18:42	0.47	6/25/2022 19:12	10.69	6/25/2022 18:00	0.83	6/25/2022 19:42	30.53
6/26/2022 19:26	87.56	6/25/2022 18:43	0.42	6/25/2022 19:13	10.69	6/25/2022 18:01	7.97	6/25/2022 19:43	30.51
6/26/2022 19:27	87.58	6/25/2022 18:44	0.40	6/25/2022 19:14	10.72	6/25/2022 18:02	9.79	6/25/2022 19:44	30.54
6/26/2022 19:28	87.52	6/25/2022 18:45	0.40	6/25/2022 19:15	10.72	6/25/2022 18:03	6.59	6/25/2022 19:45	30.52
6/26/2022 19:29	87.56	6/25/2022 18:46	0.38	6/25/2022 19:16	10.71	6/25/2022 18:04	4.14	6/25/2022 19:46	30.52
6/26/2022 19:30	87.53	6/25/2022 18:47	0.39	6/25/2022 19:17	10.77	6/25/2022 18:05	2.30	6/25/2022 19:47	30.53
6/26/2022 19:31	87.56	6/25/2022 18:48	0.42	6/25/2022 19:18	10.70	6/25/2022 18:06	1.00	6/25/2022 19:48	30.51
6/26/2022 19:32	87.53	6/25/2022 18:49	0.39	6/25/2022 19:19	10.75	6/25/2022 18:07	5.23	6/25/2022 19:49	30.53
6/26/2022 19:33	87.48	6/25/2022 18:50	0.52	6/25/2022 19:20	10.76	6/25/2022 18:08	11.02	6/25/2022 19:50	30.52
6/26/2022 19:34	87.47	6/25/2022 18:51	0.60	6/25/2022 19:21	10.75	6/25/2022 18:09	7.44	6/25/2022 19:51	30.52
6/26/2022 19:35	87.50	6/25/2022 18:52	0.68	6/25/2022 19:22	10.76	6/25/2022 18:10	4.88	6/25/2022 19:52	30.55
6/26/2022 19:36	87.52	6/25/2022 18:53	0.64	6/25/2022 19:23	10.79	6/25/2022 18:11	2.92	6/25/2022 19:53	30.50
6/26/2022 19:37	87.51	6/25/2022 18:54	0.67	6/25/2022 19:24	10.77	6/25/2022 18:12	1.60	6/25/2022 19:54	30.50
6/26/2022 19:38	87.48	6/25/2022 18:55	0.63	6/25/2022 19:25	10.79	6/25/2022 18:13	0.78	6/25/2022 19:55	30.50
6/26/2022 19:39	87.46	6/25/2022 18:56	0.60	6/25/2022 19:26	10.75	6/25/2022 18:14	0.81	6/25/2022 19:56	30.52
6/26/2022 19:40	87.51	6/25/2022 18:57	0.56	6/25/2022 19:27	10.74	6/25/2022 18:15	0.78	6/25/2022 19:57	30.50
6/26/2022 19:41	87.46	6/25/2022 18:58	0.54	6/25/2022 19:28	10.71	6/25/2022 18:16	0.77	6/25/2022 19:58	30.54
6/26/2022 19:42	87.49	6/25/2022 18:59	0.52	6/25/2022 19:29	10.74	6/25/2022 18:17	0.78	6/25/2022 19:59	30.48
6/26/2022 19:43	89.62	6/25/2022 19:00	0.46	6/25/2022 19:30	10.76	6/25/2022 18:18	0.78	6/25/2022 20:00	30.54
6/26/2022 19:44	93.12	6/25/2022 19:01	0.47	6/25/2022 19:31	10.69	6/25/2022 18:19	0.76	6/25/2022 20:01	30.50
6/26/2022 19:45	95.22	6/25/2022 19:02	0.47	6/25/2022 19:32	10.70	6/25/2022 18:20	0.79	6/25/2022 20:02	30.52
6/26/2022 19:46	96.36	6/25/2022 19:03	0.43	6/25/2022 19:33	10.70	6/25/2022 18:21	0.78	6/25/2022 20:03	30.49
6/26/2022 19:47	93.48	6/25/2022 19:04	0.39	6/25/2022 19:34	10.65	6/25/2022 18:22	0.80	6/25/2022 20:04	30.53
6/26/2022 19:48	91.78	6/25/2022 19:05	0.43	6/25/2022 19:35	10.68	6/25/2022 18:23	0.74	6/25/2022 20:05	30.51
6/26/2022 19:49	90.64	6/25/2022 19:06	0.39	6/25/2022 19:36	10.65	6/25/2022 18:24	0.79	6/25/2022 20:06	30.48
6/26/2022 19:50	89.95	6/25/2022 19:07	0.39	6/25/2022 19:37	10.67	6/25/2022 18:25	0.80	6/25/2022 20:07	30.51
6/26/2022 19:51	89.45	6/25/2022 19:08	0.39	6/25/2022 19:38	10.67	6/25/2022 18:26	0.78	6/25/2022 20:08	30.52
6/26/2022 19:52	89.12	6/25/2022 19:09	0.36	6/25/2022 19:39	10.73	6/25/2022 18:27	0.80	6/25/2022 20:09	30.50
6/26/2022 19:53	88.90	6/25/2022 19:10	0.36	6/25/2022 19:40	10.70	6/25/2022 18:28	0.81	6/25/2022 20:10	30.50
6/26/2022 19:54	88.64	6/25/2022 19:11	0.36	6/25/2022 19:41	10.72	6/25/2022 18:29	0.80	6/25/2022 20:11	30.48
6/26/2022 19:55	88.53	6/25/2022 19:12	0.38	6/25/2022 19:42	10.73	6/25/2022 18:30	0.78	6/25/2022 20:12	30.52
6/26/2022 19:56	88.47	6/25/2022 19:13	0.36	6/25/2022 19:43	10.71	6/25/2022 18:31	0.79	6/25/2022 20:13	30.51
6/26/2022 19:57	88.38	6/25/2022 19:14	5.00	6/25/2022 19:44	10.72	6/25/2022 18:32	0.78	6/25/2022 20:14	30.53
6/26/2022 19:58	88.26	6/25/2022 19:15	7.55	6/25/2022 19:45	10.69	6/25/2022 18:33	0.77	6/25/2022 20:15	30.53
6/26/2022 19:59	88.18	6/25/2022 19:16	6.33	6/25/2022 19:46	10.71	6/25/2022 18:34	0.81	6/25/2022 20:16	30.52
6/26/2022 20:00	88.15	6/25/2022 19:17	5.44	6/25/2022 19:47	10.68	6/25/2022 18:35	0.82	6/25/2022 20:17	30.53
6/26/2022 20:01	88.09	6/25/2022 19:18	4.64	6/25/2022 19:48	10.69	6/25/2022 18:36	0.80	6/25/2022 20:18	30.49
6/26/2022 20:02	88.10	6/25/2022 19:19	4.01	6/25/2022 19:49	10.72	6/25/2022 18:37	0.78	6/25/2022 20:19	30.50
6/26/2022 20:03	87.99	6/25/2022 19:20	3.44	6/25/2022 19:50	10.71	6/25/2022 18:38	0.79	6/25/2022 20:20	30.52
6/26/2022 20:04	87.99	6/25/2022 19:21	2.97	6/25/2022 19:51	10.68	6/25/2022 18:39	0.80	6/25/2022 20:21	30.51
6/26/2022 20:05	88.01	6/25/2022 19:22	2.62	6/25/2022 19:52	10.67	6/25/2022 18:40	0.78	6/25/2022 20:22	30.51
6/26/2022 20:06	88.00	6/25/2022 19:23	2.30	6/25/2022 19:53	10.73	6/25/2022 18:41	0.83	6/25/2022 20:23	30.49
6/26/2022 20:07	87.88	6/25/2022 19:24	2.04	6/25/2022 19:54	10.70	6/25/2022 18:42	0.78	6/25/2022 20:24	30.50
6/26/2022 20:08	87.92	6/25/2022 19:25	1.81	6/25/2022 19:55	10.76	6/25/2022 18:43	0.79	6/25/2022 20:25	30.52
6/26/2022 20:09	87.88	6/25/2022 19:26	1.61	6/25/2022 19:56	10.76	6/25/2022 18:44	0.80	6/25/2022 20:26	30.50
6/26/2022 20:10	87.82	6/25/2022 19:27	1.42	6/25/2022 19:57	10.77	6/25/2022 18:45	0.80	6/25/2022 20:27	30.46
6/26/2022 20:11	87.83	6/25/2022 19:28	1.30	6/25/2022 19:58	10.80	6/25/2022 18:46	0.82	6/25/2022 20:28	30.49
6/26/2022 20:12	87.78	6/25/2022 19:29	1.14	6/25/2022 19:59	10.78	6/25/2022 18:47	0.80	6/25/2022 20:29	30.51
6/26/2022 20:13	87.83	6/25/2022 19:30	1.04	6/25/2022 20:00	10.78	6/25/2022 18:48	0.79	6/25/2022 20:30	30.48
6/26/2022 20:14	87.76	6/25/2022 19:31	0.96	6/25/2022 20:01	10.79	6/25/2022 18:49	4.51	6/25/2022 20:31	30.50
6/26/2022 20:15	87.77	6/25/2022 19:32	0.86	6/25/2022 20:02	10.75	6/25/2022 18:50	9.76	6/25/2022 20:32	30.50
6/26/2022 20:16	87.83	6/25/2022 19:33	0.84	6/25/2022 20:03	10.76	6/25/2022 18:51	6.24	6/25/2022 20:33	30.54
6/26/2022 20:17	87.73	6/25/2022 19:34	0.74	6/25/2022 20:04	10.80	6/25/2022 18:52	3.80	6/25/2022 20:34	30.53
6/26/2022 20:18	87.77	6/25/2022 19:35	0.70	6/25/2022 20:05	10.75	6/25/2022 18:53	1.92	6/25/2022 20:35	30.50
6/26/2022 20:19	87.71	6/25/2022 19:36	0.66	6/25/2022 20:06	10.74	6/25/2022 18:54	0.80	6/25/2022 20:36	30.47
6/26/2022 20:20	87.75	6/25/2022 19:37	0.63	6/25/2022 20:07	10.73	6/25/2022 18:55	0.78	6/25/2022 20:37	30.46
6/26/2022 20:21	87.73	6/25/2022 19:38	0.59	6/25/2022 20:08	10.71	6/25/2022 18:56	0.80	6/25/2022 20:38	30.51

6/26/2022 20:22	87.70	6/25/2022 19:39	0.53	6/25/2022 20:09	10.73	6/25/2022 18:57	0.76	6/25/2022 20:39	30.51
6/26/2022 20:23	87.70	6/25/2022 19:40	0.52	6/25/2022 20:10	10.73	6/25/2022 18:58	0.80	6/25/2022 20:40	30.49
6/26/2022 20:24	87.64	6/25/2022 19:41	0.50	6/25/2022 20:11	10.72	6/25/2022 18:59	0.78	6/25/2022 20:41	30.52
6/26/2022 20:25	87.72	6/25/2022 19:42	0.47	6/25/2022 20:12	10.69	6/25/2022 19:00	0.79	6/25/2022 20:42	30.46
6/26/2022 20:26	87.65	6/25/2022 19:43	0.40	6/25/2022 20:13	10.69	6/25/2022 19:01	0.80	6/25/2022 20:43	30.50
6/26/2022 20:27	87.72	6/25/2022 19:44	0.44	6/25/2022 20:14	10.67	6/25/2022 19:02	0.81	6/25/2022 20:44	30.50
6/26/2022 20:28	87.65	6/25/2022 19:45	0.41	6/25/2022 20:15	10.65	6/25/2022 19:03	0.78	6/25/2022 20:45	30.48
6/26/2022 20:29	87.65	6/25/2022 19:46	0.44	6/25/2022 20:16	10.67	6/25/2022 19:04	0.80	6/25/2022 20:46	30.49
6/26/2022 20:30	87.68	6/25/2022 19:47	0.40	6/25/2022 20:17	10.68	6/25/2022 19:05	0.81	6/25/2022 20:47	30.50
6/26/2022 20:31	87.68	6/25/2022 19:48	0.37	6/25/2022 20:18	10.71	6/25/2022 19:06	0.80	6/25/2022 20:48	30.52
6/26/2022 20:32	87.61	6/25/2022 19:49	0.33	6/25/2022 20:19	10.72	6/25/2022 19:07	0.84	6/25/2022 20:49	30.51
6/26/2022 20:33	87.65	6/25/2022 19:50	0.37	6/25/2022 20:20	10.73	6/25/2022 19:08	0.78	6/25/2022 20:50	30.52
6/26/2022 20:34	87.65	6/25/2022 19:51	0.34	6/25/2022 20:21	10.77	6/25/2022 19:09	0.81	6/25/2022 20:51	30.51
6/26/2022 20:35	87.64	6/25/2022 19:52	0.33	6/25/2022 20:22	10.73	6/25/2022 19:10	0.79	6/25/2022 20:52	30.48
6/26/2022 20:36	87.65	6/25/2022 19:53	0.35	6/25/2022 20:23	10.71	6/25/2022 19:11	0.77	6/25/2022 20:53	30.50
6/26/2022 20:37	87.60	6/25/2022 19:54	0.37	6/25/2022 20:24	10.74	6/25/2022 19:12	0.82	6/25/2022 20:54	30.48
6/26/2022 20:38	87.63	6/25/2022 19:55	0.34	6/25/2022 20:25	10.77	6/25/2022 19:13	0.80	6/25/2022 20:55	30.49
6/26/2022 20:39	87.62	6/25/2022 19:56	0.35	6/25/2022 20:26	10.71	6/25/2022 19:14	0.78	6/25/2022 20:56	30.52
6/26/2022 20:40	87.59	6/25/2022 19:57	0.31	6/25/2022 20:27	10.78	6/25/2022 19:15	0.76	6/25/2022 20:57	30.48
6/26/2022 20:41	87.58	6/25/2022 19:58	0.32	6/25/2022 20:28	10.79	6/25/2022 19:16	0.81	6/25/2022 20:58	30.52
6/26/2022 20:42	87.57	6/25/2022 19:59	0.35	6/25/2022 20:29	10.83	6/25/2022 19:17	0.77	6/25/2022 20:59	30.51
6/26/2022 20:43	87.55	6/25/2022 20:00	0.32	6/25/2022 20:30	10.84	6/25/2022 19:18	0.76	6/25/2022 21:00	30.50
6/26/2022 20:44	87.54	6/25/2022 20:01	0.32	6/25/2022 20:31	10.83	6/25/2022 19:19	0.77	6/25/2022 21:01	30.49
6/26/2022 20:45	87.51	6/25/2022 20:02	0.34	6/25/2022 20:32	10.81	6/25/2022 19:20	0.76	6/25/2022 21:02	30.45
6/26/2022 20:46	87.54	6/25/2022 20:03	0.32	6/25/2022 20:33	10.84	6/25/2022 19:21	0.73	6/25/2022 21:03	30.51
6/26/2022 20:47	87.57	6/25/2022 20:04	0.35	6/25/2022 20:34	10.85	6/25/2022 19:22	0.75	6/25/2022 21:04	30.48
6/26/2022 20:48	87.56	6/25/2022 20:05	0.33	6/25/2022 20:35	10.81	6/25/2022 19:23	0.77	6/25/2022 21:05	30.49
6/26/2022 20:49	87.58	6/25/2022 20:06	0.35	6/25/2022 20:36	10.82	6/25/2022 19:24	0.81	6/25/2022 21:06	30.51
6/26/2022 20:50	87.52	6/25/2022 20:07	0.35	6/25/2022 20:37	10.82	6/25/2022 19:25	0.79	6/25/2022 21:07	30.50
6/26/2022 20:51	87.62	6/25/2022 20:08	0.35	6/25/2022 20:38	10.81	6/25/2022 19:26	0.76	6/25/2022 21:08	30.50
6/26/2022 20:52	87.54	6/25/2022 20:09	0.36	6/25/2022 20:39	10.79	6/25/2022 19:27	0.80	6/25/2022 21:09	30.48
6/26/2022 20:53	87.49	6/25/2022 20:10	0.31	6/25/2022 20:40	10.77	6/25/2022 19:28	0.82	6/25/2022 21:10	30.48
6/26/2022 20:54	87.53	6/25/2022 20:11	0.34	6/25/2022 20:41	10.75	6/25/2022 19:29	0.79	6/25/2022 21:11	30.44
6/26/2022 20:55	87.52	6/25/2022 20:12	0.34	6/25/2022 20:42	10.75	6/25/2022 19:30	0.82	6/25/2022 21:12	30.50
6/26/2022 20:56	87.47	6/25/2022 20:13	0.32	6/25/2022 20:43	10.76	6/25/2022 19:31	0.80	6/25/2022 21:13	30.46
6/26/2022 20:57	87.50	6/25/2022 20:14	0.31	6/25/2022 20:44	10.74	6/25/2022 19:32	0.79	6/25/2022 21:14	30.49
6/26/2022 20:58	87.52	6/25/2022 20:15	0.34	6/25/2022 20:45	10.71	6/25/2022 19:33	0.82	6/25/2022 21:15	30.46
6/26/2022 20:59	87.51	6/25/2022 20:16	0.36	6/25/2022 20:46	10.71	6/25/2022 19:34	0.81	6/25/2022 21:16	30.50
6/26/2022 21:00	87.46	6/25/2022 20:17	0.33	6/25/2022 20:47	10.75	6/25/2022 19:35	0.80	6/25/2022 21:17	30.49
6/26/2022 21:01	87.46	6/25/2022 20:18	0.33	6/25/2022 20:48	10.75	6/25/2022 19:36	0.76	6/25/2022 21:18	30.50
6/26/2022 21:02	87.55	6/25/2022 20:19	0.32	6/25/2022 20:49	10.75	6/25/2022 19:37	0.83	6/25/2022 21:19	30.50
6/26/2022 21:03	87.45	6/25/2022 20:20	0.35	6/25/2022 20:50	10.78	6/25/2022 19:38	0.79	6/25/2022 21:20	30.48
6/26/2022 21:04	87.54	6/25/2022 20:21	0.33	6/25/2022 20:51	10.79	6/25/2022 19:39	0.84	6/25/2022 21:21	30.49
6/26/2022 21:05	87.45	6/25/2022 20:22	0.33	6/25/2022 20:52	10.74	6/25/2022 19:40	0.82	6/25/2022 21:22	30.47
6/26/2022 21:06	87.49	6/25/2022 20:23	0.35	6/25/2022 20:53	10.78	6/25/2022 19:41	0.80	6/25/2022 21:23	30.49
6/26/2022 21:07	87.43	6/25/2022 20:24	0.31	6/25/2022 20:54	10.75	6/25/2022 19:42	0.79	6/25/2022 21:24	30.46
6/26/2022 21:08	87.49	6/25/2022 20:25	0.30	6/25/2022 20:55	10.76	6/25/2022 19:43	0.81	6/25/2022 21:25	30.49
6/26/2022 21:09	87.44	6/25/2022 20:26	0.32	6/25/2022 20:56	10.78	6/25/2022 19:44	0.83	6/25/2022 21:26	30.50
6/26/2022 21:10	87.47	6/25/2022 20:27	0.97	6/25/2022 20:57	10.76	6/25/2022 19:45	0.77	6/25/2022 21:27	30.48
6/26/2022 21:11	87.45	6/25/2022 20:28	6.86	6/25/2022 20:58	10.80	6/25/2022 19:46	0.81	6/25/2022 21:28	30.49
6/26/2022 21:12	87.44	6/25/2022 20:29	6.93	6/25/2022 20:59	10.85	6/25/2022 19:47	0.80	6/25/2022 21:29	30.48
6/26/2022 21:13	87.47	6/25/2022 20:30	5.91	6/25/2022 21:00	10.84	6/25/2022 19:48	0.77	6/25/2022 21:30	30.50
6/26/2022 21:14	87.46	6/25/2022 20:31	5.02	6/25/2022 21:01	10.89	6/25/2022 19:49	0.82	6/25/2022 21:31	30.49
6/26/2022 21:15	87.43	6/25/2022 20:32	4.29	6/25/2022 21:02	10.90	6/25/2022 19:50	0.78	6/25/2022 21:32	30.46
6/26/2022 21:16	87.42	6/25/2022 20:33	3.72	6/25/2022 21:03	10.93	6/25/2022 19:51	0.82	6/25/2022 21:33	30.46
6/26/2022 21:17	87.42	6/25/2022 20:34	3.19	6/25/2022 21:04	10.97	6/25/2022 19:52	0.79	6/25/2022 21:34	30.44
6/26/2022 21:18	87.40	6/25/2022 20:35	2.79	6/25/2022 21:05	10.99	6/25/2022 19:53	0.80	6/25/2022 21:35	30.46
6/26/2022 21:19	87.43	6/25/2022 20:36	2.43	6/25/2022 21:06	11.03	6/25/2022 19:54	0.80	6/25/2022 21:36	30.47
6/26/2022 21:20	87.42	6/25/2022 20:37	2.14	6/25/2022 21:07	11.07	6/25/2022 19:55	0.80	6/25/2022 21:37	30.43
6/26/2022 21:21	87.40	6/25/2022 20:38	1.90	6/25/2022 21:08	11.12	6/25/2022 19:56	0.78	6/25/2022 21:38	30.47
6/26/2022 21:22	87.47	6/25/2022 20:39	1.73	6/25/2022 21:09	11.15	6/25/2022 19:57	0.80	6/25/2022 21:39	30.46
6/26/2022 21:23	87.42	6/25/2022 20:40	1.56	6/25/2022 21:10	11.15	6/25/2022 19:58	0.79	6/25/2022 21:40	30.49
6/26/2022 21:24	87.44	6/25/2022 20:41	1.30	6/25/2022 21:11	11.19	6/25/2022 19:59	0.81	6/25/2022 21:41	30.49
6/26/2022 21:25	87.40	6/25/2022 20:42	1.21	6/25/2022 21:12	11.23	6/25/2022 20:00	0.81	6/25/2022 21:42	30.46
6/26/2022 21:26	87.38	6/25/2022 20:43	1.11	6/25/2022 21:13	11.25	6/25/2022 20:01	0.80	6/25/2022 21:43	30.49
6/26/2022 21:27	87.38	6/25/2022 20:44	1.01	6/25/2022 21:14	11.27	6/25/2022 20:02	0.83	6/25/2022 21:44	30.44
6/26/2022 21:28	87.41	6/25/2022 20:45	0.89	6/25/2022 21:15	11.31	6/25/2022 20:03	0.81	6/25/2022 21:45	30.51
6/26/2022 21:29	87.44	6/25/2022 20:46	0.85	6/25/2022 21:16	11.29	6/25/2022 20:04	0.79	6/25/2022 21:46	30.48
6/26/2022 21:30	87.40	6/25/2022 20:47	0.78	6/25/2022 21:17	11.33	6/25/2022 20:05	0.83	6/25/2022 21:47	30.49
6/26/2022 21:31	87.42	6/25/2022 20:48	0.70	6/25/2022 21:18	11.37	6/25/2022 20:06	0.76	6/25/2022 21:48	30.47
6/26/2022 21:32	87.38	6/25/2022 20:49	0.67	6/25/2022 21:19	11.39	6/25/2022 20:07	0.78	6/25/2022 21:49	30.46
6/26/2022 21:33	87.36	6/25/2022 20:50	0.59	6/25/2022 21:20	11.41	6/25/2022 20:08	0.82	6/25/2022 21:50	30.47
6/26/2022 21:34	87.42	6/25/2022 20:51	0.58	6/25/2022 21:21	11.44	6/25/2022 20:09	0.77	6/25/2022 21:51	30.49
6/26/2022 21:35	87.38	6/25/2022 20:52	0.56	6/25/2022 21:22	11.44	6/25/2022 20:10	0.77	6/25/2022 21:52	30.48
6/26/2022 21:36	87.36	6/25/2022 20:53	0.50	6/25/2022 21:23	11.49	6/25/2022 20:11	0.78	6/25/2022 21:53	30.46
6/26/2022 21:37	87.39	6/25/2022 20:54	0.52	6/25/2022 21:24	11.51	6/25/2022 20:12	0.79	6/25/2022 21:54	30.50
6/26/2022 21:38	87.31	6/25/2022 20:55	0.45	6/25/2022 21:25	11.46	6/25/2022 20:13	0.82	6/25/2022 21:55	30.46
6/26/2022 21:39	87.36	6/25/2022 20:56	0.45	6/25/2022 21:26	11.50	6/25/2022 20:14	0.81	6/25/2022 21:56	30.49
6/26/2022 21:40	87.35	6/25/2022 20:57	0.43	6/25/2022 21:27	11.54	6/25/2022 20:15	0.79	6/25/2022 21:57	30.49
6/26/2022 21:41	87.41	6/25/2022 20:58	0.46	6/25/2022 21:28	11.53	6/25/2022 20:16	0.76	6/25/2022 21:58	30.45
6/26/2022 21:42	87.42	6/25/2022 20:59	0.37	6/25/2022 21:29	11.56	6/25/2022 20:17	0.78	6/25/2022 21:59	30.45
6/26/2022 21:43	87.37	6/25/2022 21:00	0.40	6/25/2022 21:30	11.51	6/25/2022 20:18	0.79	6/25/2022 22:00	30.44
6/26/2022 21:44	87.36	6/25/2022 21:01	0.37	6/25/2022 21:31	11.52	6/25/2022 20:19	0.79	6/25/2022 22:01	30.45
6/26/2022 21:45	87.38	6/25/2022 21:02	0.38	6/25/2022 21:32	11.47	6/25/2022 20:20	0.82	6/25/2022 22:02	30.46
6/26/2022 21:46	87.36	6/25/2022 21:03	0.35	6/25/2022 21:33	11.45	6/25/2022 20:21	0.78	6/25/2022 22:03	30.45
6/26/2022 21:47	87.34	6/25/2022 21:04	0.39	6/25/2022 21:34	11.44	6/25/2022 20:22	0.77	6/25/2022 22:04	30.49
6/26/2022 21:48	87.38	6/25/2022 21:05	0.32	6/25/2022 21:35	11.42	6/25/2022 20:23	0.78	6/25/2022 22:05	30.47
6/26/2022 21:49	87.33	6/25/2022 21:06	0.37	6/25/2022 21:36	11.36	6/25/2022 20:24	0.81	6/25/2022 22:06	30.46

6/26/2022 21:50	87.37	6/25/2022 21:07	0.34	6/25/2022 21:37	11.36	6/25/2022 20:25	0.81	6/25/2022 22:07	30.48
6/26/2022 21:51	87.33	6/25/2022 21:08	0.31	6/25/2022 21:38	11.31	6/25/2022 20:26	0.78	6/25/2022 22:08	30.49
6/26/2022 21:52	87.41	6/25/2022 21:09	0.29	6/25/2022 21:39	11.31	6/25/2022 20:27	0.79	6/25/2022 22:09	30.46
6/26/2022 21:53	87.35	6/25/2022 21:10	0.30	6/25/2022 21:40	11.25	6/25/2022 20:28	0.83	6/25/2022 22:10	30.47
6/26/2022 21:54	87.34	6/25/2022 21:11	0.34	6/25/2022 21:41	11.20	6/25/2022 20:29	0.77	6/25/2022 22:11	30.45
6/26/2022 21:55	87.35	6/25/2022 21:12	0.31	6/25/2022 21:42	11.18	6/25/2022 20:30	0.75	6/25/2022 22:12	30.43
6/26/2022 21:56	87.37	6/25/2022 21:13	0.32	6/25/2022 21:43	11.16	6/25/2022 20:31	0.77	6/25/2022 22:13	30.47
6/26/2022 21:57	87.32	6/25/2022 21:14	0.28	6/25/2022 21:44	11.13	6/25/2022 20:32	0.74	6/25/2022 22:14	30.46
6/26/2022 21:58	87.34	6/25/2022 21:15	0.36	6/25/2022 21:45	11.14	6/25/2022 20:33	0.75	6/25/2022 22:15	30.44
6/26/2022 21:59	87.35	6/25/2022 21:16	0.31	6/25/2022 21:46	11.11	6/25/2022 20:34	0.74	6/25/2022 22:16	30.48
6/26/2022 22:00	87.31	6/25/2022 21:17	0.29	6/25/2022 21:47	11.08	6/25/2022 20:35	0.77	6/25/2022 22:17	30.47
6/26/2022 22:01	87.28	6/25/2022 21:18	0.31	6/25/2022 21:48	11.04	6/25/2022 20:36	0.77	6/25/2022 22:18	30.44
6/26/2022 22:02	87.30	6/25/2022 21:19	0.30	6/25/2022 21:49	11.06	6/25/2022 20:37	0.79	6/25/2022 22:19	30.43
6/26/2022 22:03	87.31	6/25/2022 21:20	0.31	6/25/2022 21:50	11.09	6/25/2022 20:38	0.82	6/25/2022 22:20	30.45
6/26/2022 22:04	87.30	6/25/2022 21:21	0.30	6/25/2022 21:51	11.04	6/25/2022 20:39	0.77	6/25/2022 22:21	30.47
6/26/2022 22:05	87.27	6/25/2022 21:22	0.31	6/25/2022 21:52	11.04	6/25/2022 20:40	0.78	6/25/2022 22:22	30.49
6/26/2022 22:06	87.29	6/25/2022 21:23	0.30	6/25/2022 21:53	10.99	6/25/2022 20:41	0.80	6/25/2022 22:23	30.43
6/26/2022 22:07	87.23	6/25/2022 21:24	0.31	6/25/2022 21:54	11.02	6/25/2022 20:42	0.78	6/25/2022 22:24	30.46
6/26/2022 22:08	87.29	6/25/2022 21:25	0.29	6/25/2022 21:55	11.01	6/25/2022 20:43	0.81	6/25/2022 22:25	30.48
6/26/2022 22:09	87.25	6/25/2022 21:26	0.27	6/25/2022 21:56	11.00	6/25/2022 20:44	0.76	6/25/2022 22:26	30.47
6/26/2022 22:10	87.28	6/25/2022 21:27	0.29	6/25/2022 21:57	10.95	6/25/2022 20:45	0.81	6/25/2022 22:27	30.46
6/26/2022 22:11	87.27	6/25/2022 21:28	0.32	6/25/2022 21:58	10.96	6/25/2022 20:46	0.83	6/25/2022 22:28	30.47
6/26/2022 22:12	87.25	6/25/2022 21:29	0.28	6/25/2022 21:59	10.91	6/25/2022 20:47	0.82	6/25/2022 22:29	30.45
6/26/2022 22:13	87.28	6/25/2022 21:30	0.30	6/25/2022 22:00	10.92	6/25/2022 20:48	0.74	6/25/2022 22:30	30.49
6/26/2022 22:14	87.31	6/25/2022 21:31	0.28	6/25/2022 22:01	10.91	6/25/2022 20:49	0.82	6/25/2022 22:31	30.41
6/26/2022 22:15	87.27	6/25/2022 21:32	0.28	6/25/2022 22:02	10.89	6/25/2022 20:50	0.77	6/25/2022 22:32	30.46
6/26/2022 22:16	87.28	6/25/2022 21:33	0.31	6/25/2022 22:03	10.88	6/25/2022 20:51	0.80	6/25/2022 22:33	30.46
6/26/2022 22:17	87.30	6/25/2022 21:34	0.30	6/25/2022 22:04	10.86	6/25/2022 20:52	0.80	6/25/2022 22:34	30.43
6/26/2022 22:18	87.25	6/25/2022 21:35	0.29	6/25/2022 22:05	10.86	6/25/2022 20:53	0.77	6/25/2022 22:35	30.45
6/26/2022 22:19	87.25	6/25/2022 21:36	0.30	6/25/2022 22:06	10.84	6/25/2022 20:54	0.80	6/25/2022 22:36	30.46
6/26/2022 22:20	87.22	6/25/2022 21:37	0.30	6/25/2022 22:07	10.81	6/25/2022 20:55	0.76	6/25/2022 22:37	30.45
6/26/2022 22:21	87.25	6/25/2022 21:38	5.96	6/25/2022 22:08	10.81	6/25/2022 20:56	0.75	6/25/2022 22:38	30.44
6/26/2022 22:22	87.24	6/25/2022 21:39	7.23	6/25/2022 22:09	10.77	6/25/2022 20:57	0.78	6/25/2022 22:39	30.48
6/26/2022 22:23	87.23	6/25/2022 21:40	6.14	6/25/2022 22:10	10.77	6/25/2022 20:58	0.74	6/25/2022 22:40	30.46
6/26/2022 22:24	87.22	6/25/2022 21:41	5.21	6/25/2022 22:11	10.74	6/25/2022 20:59	0.82	6/25/2022 22:41	30.43
6/26/2022 22:25	87.23	6/25/2022 21:42	4.46	6/25/2022 22:12	10.80	6/25/2022 21:00	0.79	6/25/2022 22:42	30.47
6/26/2022 22:26	87.22	6/25/2022 21:43	3.87	6/25/2022 22:13	10.77	6/25/2022 21:01	0.77	6/25/2022 22:43	30.46
6/26/2022 22:27	87.22	6/25/2022 21:44	3.34	6/25/2022 22:14	10.78	6/25/2022 21:02	0.78	6/25/2022 22:44	30.47
6/26/2022 22:28	87.26	6/25/2022 21:45	2.82	6/25/2022 22:15	10.78	6/25/2022 21:03	0.78	6/25/2022 22:45	30.45
6/26/2022 22:29	87.25	6/25/2022 21:46	2.49	6/25/2022 22:16	10.80	6/25/2022 21:04	0.78	6/25/2022 22:46	30.43
6/26/2022 22:30	87.22	6/25/2022 21:47	2.23	6/25/2022 22:17	10.79	6/25/2022 21:05	0.82	6/25/2022 22:47	30.47
6/26/2022 22:31	87.25	6/25/2022 21:48	1.91	6/25/2022 22:18	10.79	6/25/2022 21:06	0.80	6/25/2022 22:48	30.47
6/26/2022 22:32	87.26	6/25/2022 21:49	1.68	6/25/2022 22:19	10.78	6/25/2022 21:07	0.80	6/25/2022 22:49	30.42
6/26/2022 22:33	87.20	6/25/2022 21:50	1.56	6/25/2022 22:20	10.83	6/25/2022 21:08	0.77	6/25/2022 22:50	30.46
6/26/2022 22:34	87.27	6/25/2022 21:51	1.36	6/25/2022 22:21	10.78	6/25/2022 21:09	0.77	6/25/2022 22:51	30.47
6/26/2022 22:35	87.23	6/25/2022 21:52	1.24	6/25/2022 22:22	10.77	6/25/2022 21:10	0.81	6/25/2022 22:52	30.43
6/26/2022 22:36	87.21	6/25/2022 21:53	1.09	6/25/2022 22:23	10.76	6/25/2022 21:11	0.80	6/25/2022 22:53	30.43
6/26/2022 22:37	87.21	6/25/2022 21:54	1.01	6/25/2022 22:24	10.75	6/25/2022 21:12	0.77	6/25/2022 22:54	30.47
6/26/2022 22:38	87.19	6/25/2022 21:55	0.93	6/25/2022 22:25	10.75	6/25/2022 21:13	0.81	6/25/2022 22:55	30.46
6/26/2022 22:39	87.17	6/25/2022 21:56	0.83	6/25/2022 22:26	10.74	6/25/2022 21:14	0.80	6/25/2022 22:56	30.43
6/26/2022 22:40	87.27	6/25/2022 21:57	0.77	6/25/2022 22:27	10.71	6/25/2022 21:15	0.73	6/25/2022 22:57	30.46
6/26/2022 22:41	87.19	6/25/2022 21:58	0.74	6/25/2022 22:28	10.68	6/25/2022 21:16	0.81	6/25/2022 22:58	30.45
6/26/2022 22:42	87.22	6/25/2022 21:59	0.63	6/25/2022 22:29	10.67	6/25/2022 21:17	0.70	6/25/2022 22:59	30.45
6/26/2022 22:43	87.18	6/25/2022 22:00	0.59	6/25/2022 22:30	10.73	6/25/2022 21:18	0.77	6/25/2022 23:00	30.46
6/26/2022 22:44	87.22	6/25/2022 22:01	0.59	6/25/2022 22:31	10.70	6/25/2022 21:19	0.69	6/25/2022 23:01	30.45
6/26/2022 22:45	87.16	6/25/2022 22:02	0.53	6/25/2022 22:32	11.37	6/25/2022 21:20	0.77	6/25/2022 23:02	30.44
6/26/2022 22:46	87.16	6/25/2022 22:03	0.55	6/25/2022 22:33	14.91	6/25/2022 21:21	0.66	6/25/2022 23:03	30.45
6/26/2022 22:47	87.18	6/25/2022 22:04	0.43	6/25/2022 22:34	14.34	6/25/2022 21:22	0.76	6/25/2022 23:04	32.23
6/26/2022 22:48	87.23	6/25/2022 22:05	0.47	6/25/2022 22:35	13.89	6/25/2022 21:23	0.70	6/25/2022 23:05	33.53
6/26/2022 22:49	87.24	6/25/2022 22:06	0.46	6/25/2022 22:36	13.49	6/25/2022 21:24	0.77	6/25/2022 23:06	32.06
6/26/2022 22:50	87.19	6/25/2022 22:07	0.41	6/25/2022 22:37	13.19	6/25/2022 21:25	0.69	6/25/2022 23:07	31.11
6/26/2022 22:51	87.22	6/25/2022 22:08	0.38	6/25/2022 22:38	12.97	6/25/2022 21:26	0.73	6/25/2022 23:08	30.69
6/26/2022 22:52	87.13	6/25/2022 22:09	0.38	6/25/2022 22:39	12.71	6/25/2022 21:27	0.69	6/25/2022 23:09	30.56
6/26/2022 22:53	87.20	6/25/2022 22:10	0.38	6/25/2022 22:40	12.48	6/25/2022 21:28	0.70	6/25/2022 23:10	30.56
6/26/2022 22:54	87.17	6/25/2022 22:11	1.82	6/25/2022 22:41	12.31	6/25/2022 21:29	0.75	6/25/2022 23:11	30.51
6/26/2022 22:55	87.16	6/25/2022 22:12	7.49	6/25/2022 22:42	12.15	6/25/2022 21:30	0.68	6/25/2022 23:12	30.48
6/26/2022 22:56	87.13	6/25/2022 22:13	7.20	6/25/2022 22:43	11.99	6/25/2022 21:31	0.73	6/25/2022 23:13	30.51
6/26/2022 22:57	87.13	6/25/2022 22:14	6.08	6/25/2022 22:44	11.94	6/25/2022 21:32	0.66	6/25/2022 23:14	32.01
6/26/2022 22:58	87.23	6/25/2022 22:15	5.21	6/25/2022 22:45	11.81	6/25/2022 21:33	0.77	6/25/2022 23:15	31.73
6/26/2022 22:59	87.14	6/25/2022 22:16	4.45	6/25/2022 22:46	11.72	6/25/2022 21:34	0.71	6/25/2022 23:16	30.98
6/26/2022 23:00	87.15	6/25/2022 22:17	3.81	6/25/2022 22:47	11.62	6/25/2022 21:35	0.78	6/25/2022 23:17	30.67
6/26/2022 23:01	87.14	6/25/2022 22:18	3.29	6/25/2022 22:48	11.62	6/25/2022 21:36	0.68	6/25/2022 23:18	30.58
6/26/2022 23:02	87.19	6/25/2022 22:19	2.81	6/25/2022 22:49	11.49	6/25/2022 21:37	0.78	6/25/2022 23:19	30.54
6/26/2022 23:03	87.14	6/25/2022 22:20	2.50	6/25/2022 22:50	11.47	6/25/2022 21:38	0.70	6/25/2022 23:20	30.54
6/26/2022 23:04	87.17	6/25/2022 22:21	2.21	6/25/2022 22:51	11.44	6/25/2022 21:39	0.71	6/25/2022 23:21	30.55
6/26/2022 23:05	87.17	6/25/2022 22:22	1.92	6/25/2022 22:52	11.34	6/25/2022 21:40	0.70	6/25/2022 23:22	30.56
6/26/2022 23:06	87.19	6/25/2022 22:23	1.69	6/25/2022 22:53	11.30	6/25/2022 21:41	0.68	6/25/2022 23:23	32.05
6/26/2022 23:07	87.13	6/25/2022 22:24	1.53	6/25/2022 22:54	11.26	6/25/2022 21:42	0.73	6/25/2022 23:24	31.12
6/26/2022 23:08	87.16	6/25/2022 22:25	1.32	6/25/2022 22:55	11.23	6/25/2022 21:43	0.73	6/25/2022 23:25	30.71
6/26/2022 23:09	87.10	6/25/2022 22:26	1.27	6/25/2022 22:56	11.19	6/25/2022 21:44	0.71	6/25/2022 23:26	30.56
6/26/2022 23:10	87.18	6/25/2022 22:27	1.12	6/25/2022 22:57	11.15	6/25/2022 21:45	0.71	6/25/2022 23:27	30.58
6/26/2022 23:11	87.09	6/25/2022 22:28	0.96	6/25/2022 22:58	11.12	6/25/2022 21:46	0.82	6/25/2022 23:28	30.54
6/26/2022 23:12	87.13	6/25/2022 22:29	0.90	6/25/2022 22:59	11.08	6/25/2022 21:47	0.71	6/25/2022 23:29	30.55
6/26/2022 23:13	87.17	6/25/2022 22:30	0.85	6/25/2022 23:00	11.05	6/25/2022 21:48	0.66	6/25/2022 23:30	30.50
6/26/2022 23:14	87.12	6/25/2022 22:31	0.77	6/25/2022 23:01	11.01	6/25/2022 21:49	0.79	6/25/2022 23:31	30.50
6/26/2022 23:15	87.18	6/25/2022 22:32	0.67	6/25/2022 23:02	10.99	6/25/2022 21:50	0.68	6/25/2022 23:32	30.49
6/26/2022 23:16	87.14	6/25/2022 22:33	0.65	6/25/2022 23:03	10.97	6/25/2022 21:51	0.72	6/25/2022 23:33	30.48
6/26/2022 23:17	87.12	6/25/2022 22:34	0.58	6/25/2022 23:04	10.97	6/25/2022 21:52	0.68	6/25/2022 23:34	30.49

6/26/2022 23:18	87.13	6/25/2022 22:35	0.56	6/25/2022 23:05	13.80	6/25/2022 21:53	0.74	6/25/2022 23:35	32.78
6/26/2022 23:19	87.11	6/25/2022 22:36	0.52	6/25/2022 23:06	14.87	6/25/2022 21:54	0.74	6/25/2022 23:36	31.47
6/26/2022 23:20	87.17	6/25/2022 22:37	0.46	6/25/2022 23:07	14.38	6/25/2022 21:55	0.72	6/25/2022 23:37	32.85
6/26/2022 23:21	87.10	6/25/2022 22:38	0.46	6/25/2022 23:08	13.96	6/25/2022 21:56	0.80	6/25/2022 23:38	32.27
6/26/2022 23:22	87.15	6/25/2022 22:39	0.47	6/25/2022 23:09	13.61	6/25/2022 21:57	0.68	6/25/2022 23:39	32.97
6/26/2022 23:23	87.09	6/25/2022 22:40	0.43	6/25/2022 23:10	13.28	6/25/2022 21:58	0.79	6/25/2022 23:40	33.77
6/26/2022 23:24	87.14	6/25/2022 22:41	0.41	6/25/2022 23:11	13.00	6/25/2022 21:59	0.67	6/25/2022 23:41	34.44
6/26/2022 23:25	87.09	6/25/2022 22:42	0.37	6/25/2022 23:12	12.82	6/25/2022 22:00	0.75	6/25/2022 23:42	32.48
6/26/2022 23:26	87.13	6/25/2022 22:43	0.38	6/25/2022 23:13	12.57	6/25/2022 22:01	0.71	6/25/2022 23:43	33.37
6/26/2022 23:27	87.11	6/25/2022 22:44	0.34	6/25/2022 23:14	12.41	6/25/2022 22:02	0.77	6/25/2022 23:44	31.97
6/26/2022 23:28	87.11	6/25/2022 22:45	0.36	6/25/2022 23:15	12.23	6/25/2022 22:03	0.67	6/25/2022 23:45	32.99
6/26/2022 23:29	87.14	6/25/2022 22:46	0.38	6/25/2022 23:16	12.09	6/25/2022 22:04	0.75	6/25/2022 23:46	31.81
6/26/2022 23:30	87.08	6/25/2022 22:47	0.32	6/25/2022 23:17	11.94	6/25/2022 22:05	0.68	6/25/2022 23:47	32.87
6/26/2022 23:31	87.13	6/25/2022 22:48	0.34	6/25/2022 23:18	11.80	6/25/2022 22:06	0.79	6/25/2022 23:48	31.65
6/26/2022 23:32	87.09	6/25/2022 22:49	0.33	6/25/2022 23:19	11.77	6/25/2022 22:07	0.72	6/25/2022 23:49	31.07
6/26/2022 23:33	87.07	6/25/2022 22:50	0.25	6/25/2022 23:20	11.63	6/25/2022 22:08	0.74	6/25/2022 23:50	30.81
6/26/2022 23:34	87.16	6/25/2022 22:51	0.31	6/25/2022 23:21	11.54	6/25/2022 22:09	0.68	6/25/2022 23:51	30.73
6/26/2022 23:35	87.06	6/25/2022 22:52	0.30	6/25/2022 23:22	11.47	6/25/2022 22:10	0.78	6/25/2022 23:52	30.69
6/26/2022 23:36	87.08	6/25/2022 22:53	0.31	6/25/2022 23:23	11.38	6/25/2022 22:11	0.68	6/25/2022 23:53	30.68
6/26/2022 23:37	87.10	6/25/2022 22:54	0.29	6/25/2022 23:24	11.35	6/25/2022 22:12	0.75	6/25/2022 23:54	30.68
6/26/2022 23:38	87.05	6/25/2022 22:55	0.28	6/25/2022 23:25	11.27	6/25/2022 22:13	0.72	6/25/2022 23:55	30.65
6/26/2022 23:39	87.12	6/25/2022 22:56	0.30	6/25/2022 23:26	11.23	6/25/2022 22:14	0.71	6/25/2022 23:56	32.57
6/26/2022 23:40	87.13	6/25/2022 22:57	0.29	6/25/2022 23:27	11.18	6/25/2022 22:15	0.76	6/25/2022 23:57	31.45
6/26/2022 23:41	87.08	6/25/2022 22:58	0.33	6/25/2022 23:28	11.11	6/25/2022 22:16	0.76	6/25/2022 23:58	30.93
6/26/2022 23:42	87.12	6/25/2022 22:59	0.26	6/25/2022 23:29	11.14	6/25/2022 22:17	0.71	6/25/2022 23:59	30.74
6/26/2022 23:43	90.93	6/25/2022 23:00	0.28	6/25/2022 23:30	11.06	6/25/2022 22:18	0.65	6/26/2022 0:00	30.67
6/26/2022 23:44	93.84	6/25/2022 23:01	0.32	6/25/2022 23:31	11.05	6/25/2022 22:19	0.78	6/26/2022 0:01	30.67
6/26/2022 23:45	95.51	6/25/2022 23:02	0.30	6/25/2022 23:32	11.03	6/25/2022 22:20	0.72	6/26/2022 0:02	30.65
6/26/2022 23:46	95.43	6/25/2022 23:03	0.32	6/25/2022 23:33	11.03	6/25/2022 22:21	0.70	6/26/2022 0:03	30.64
6/26/2022 23:47	92.83	6/25/2022 23:04	0.26	6/25/2022 23:34	11.01	6/25/2022 22:22	0.80	6/26/2022 0:04	30.62
6/26/2022 23:48	91.20	6/25/2022 23:05	0.29	6/25/2022 23:35	11.02	6/25/2022 22:23	0.66	6/26/2022 0:05	30.62
6/26/2022 23:49	90.20	6/25/2022 23:06	1.86	6/25/2022 23:36	10.97	6/25/2022 22:24	0.71	6/26/2022 0:06	30.61
6/26/2022 23:50	89.56	6/25/2022 23:07	7.54	6/25/2022 23:37	10.99	6/25/2022 22:25	0.71	6/26/2022 0:07	30.58
6/26/2022 23:51	89.05	6/25/2022 23:08	6.69	6/25/2022 23:38	10.95	6/25/2022 22:26	0.69	6/26/2022 0:08	30.58
6/26/2022 23:52	88.74	6/25/2022 23:09	5.63	6/25/2022 23:39	10.92	6/25/2022 22:27	0.71	6/26/2022 0:09	30.57
6/26/2022 23:53	88.53	6/25/2022 23:10	4.85	6/25/2022 23:40	10.90	6/25/2022 22:28	0.67	6/26/2022 0:10	30.60
6/26/2022 23:54	88.35	6/25/2022 23:11	4.16	6/25/2022 23:41	10.89	6/25/2022 22:29	0.68	6/26/2022 0:11	30.55
6/26/2022 23:55	88.13	6/25/2022 23:12	3.58	6/25/2022 23:42	10.87	6/25/2022 22:30	0.75	6/26/2022 0:12	30.60
6/26/2022 23:56	88.06	6/25/2022 23:13	3.04	6/25/2022 23:43	10.85	6/25/2022 22:31	0.72	6/26/2022 0:13	30.56
6/26/2022 23:57	87.96	6/25/2022 23:14	2.66	6/25/2022 23:44	10.86	6/25/2022 22:32	0.73	6/26/2022 0:14	30.56
6/26/2022 23:58	87.88	6/25/2022 23:15	2.35	6/25/2022 23:45	10.83	6/25/2022 22:33	0.67	6/26/2022 0:15	30.56
6/26/2022 23:59	87.83	6/25/2022 23:16	2.11	6/25/2022 23:46	10.81	6/25/2022 22:34	0.75	6/26/2022 0:16	32.84
6/27/2022 0:00	87.79	6/25/2022 23:17	1.85	6/25/2022 23:47	10.81	6/25/2022 22:35	0.68	6/26/2022 0:17	31.49
6/27/2022 0:01	87.73	6/25/2022 23:18	1.63	6/25/2022 23:48	10.76	6/25/2022 22:36	0.70	6/26/2022 0:18	30.91
6/27/2022 0:02	87.78	6/25/2022 23:19	1.41	6/25/2022 23:49	10.80	6/25/2022 22:37	0.70	6/26/2022 0:19	30.69
6/27/2022 0:03	87.66	6/25/2022 23:20	1.26	6/25/2022 23:50	10.74	6/25/2022 22:38	0.70	6/26/2022 0:20	30.65
6/27/2022 0:04	87.68	6/25/2022 23:21	1.16	6/25/2022 23:51	10.79	6/25/2022 22:39	0.71	6/26/2022 0:21	30.58
6/27/2022 0:05	87.61	6/25/2022 23:22	1.00	6/25/2022 23:52	10.72	6/25/2022 22:40	0.70	6/26/2022 0:22	30.58
6/27/2022 0:06	87.62	6/25/2022 23:23	0.92	6/25/2022 23:53	10.73	6/25/2022 22:41	0.67	6/26/2022 0:23	30.57
6/27/2022 0:07	87.61	6/25/2022 23:24	0.86	6/25/2022 23:54	10.71	6/25/2022 22:42	0.76	6/26/2022 0:24	30.91
6/27/2022 0:08	87.61	6/25/2022 23:25	0.77	6/25/2022 23:55	10.73	6/25/2022 22:43	0.68	6/26/2022 0:25	32.06
6/27/2022 0:09	87.56	6/25/2022 23:26	0.71	6/25/2022 23:56	10.76	6/25/2022 22:44	0.74	6/26/2022 0:26	31.15
6/27/2022 0:10	87.55	6/25/2022 23:27	0.65	6/25/2022 23:57	10.72	6/25/2022 22:45	0.69	6/26/2022 0:27	30.76
6/27/2022 0:11	87.51	6/25/2022 23:28	0.61	6/25/2022 23:58	10.73	6/25/2022 22:46	0.74	6/26/2022 0:28	30.65
6/27/2022 0:12	87.54	6/25/2022 23:29	0.58	6/25/2022 23:59	10.73	6/25/2022 22:47	0.68	6/26/2022 0:29	30.61
6/27/2022 0:13	87.46	6/25/2022 23:30	0.54	6/26/2022 0:00	10.75	6/25/2022 22:48	0.75	6/26/2022 0:30	30.60
6/27/2022 0:14	87.46	6/25/2022 23:31	0.47	6/26/2022 0:01	10.71	6/25/2022 22:49	0.72	6/26/2022 0:31	30.57
6/27/2022 0:15	87.47	6/25/2022 23:32	0.39	6/26/2022 0:02	10.71	6/25/2022 22:50	0.72	6/26/2022 0:32	30.57
6/27/2022 0:16	87.45	6/25/2022 23:33	0.43	6/26/2022 0:03	10.74	6/25/2022 22:51	0.69	6/26/2022 0:33	30.54
6/27/2022 0:17	87.45	6/25/2022 23:34	0.43	6/26/2022 0:04	10.72	6/25/2022 22:52	0.71	6/26/2022 0:34	30.54
6/27/2022 0:18	87.41	6/25/2022 23:35	0.37	6/26/2022 0:05	10.71	6/25/2022 22:53	0.78	6/26/2022 0:35	30.56
6/27/2022 0:19	87.48	6/25/2022 23:36	0.40	6/26/2022 0:06	10.73	6/25/2022 22:54	0.70	6/26/2022 0:36	30.56
6/27/2022 0:20	87.39	6/25/2022 23:37	0.41	6/26/2022 0:07	10.72	6/25/2022 22:55	0.75	6/26/2022 0:37	30.55
6/27/2022 0:21	87.43	6/25/2022 23:38	0.35	6/26/2022 0:08	10.67	6/25/2022 22:56	0.70	6/26/2022 0:38	30.54
6/27/2022 0:22	87.41	6/25/2022 23:39	0.33	6/26/2022 0:09	10.72	6/25/2022 22:57	0.77	6/26/2022 0:39	30.54
6/27/2022 0:23	87.40	6/25/2022 23:40	0.34	6/26/2022 0:10	10.69	6/25/2022 22:58	0.69	6/26/2022 0:40	30.56
6/27/2022 0:24	87.39	6/25/2022 23:41	0.35	6/26/2022 0:11	10.67	6/25/2022 22:59	0.77	6/26/2022 0:41	30.55
6/27/2022 0:25	87.43	6/25/2022 23:42	0.35	6/26/2022 0:12	10.64	6/25/2022 23:00	0.67	6/26/2022 0:42	30.52
6/27/2022 0:26	87.44	6/25/2022 23:43	0.29	6/26/2022 0:13	10.65	6/25/2022 23:01	0.74	6/26/2022 0:43	30.57
6/27/2022 0:27	87.33	6/25/2022 23:44	0.33	6/26/2022 0:14	10.66	6/25/2022 23:02	0.66	6/26/2022 0:44	30.52
6/27/2022 0:28	87.39	6/25/2022 23:45	0.33	6/26/2022 0:15	10.65	6/25/2022 23:03	0.80	6/26/2022 0:45	30.51
6/27/2022 0:29	87.31	6/25/2022 23:46	0.27	6/26/2022 0:16	10.64	6/25/2022 23:04	0.68	6/26/2022 0:46	32.11
6/27/2022 0:30	87.34	6/25/2022 23:47	0.33	6/26/2022 0:17	10.65	6/25/2022 23:05	0.75	6/26/2022 0:47	31.74
6/27/2022 0:31	87.28	6/25/2022 23:48	0.29	6/26/2022 0:18	10.61	6/25/2022 23:06	0.69	6/26/2022 0:48	30.99
6/27/2022 0:32	87.32	6/25/2022 23:49	0.27	6/26/2022 0:19	10.62	6/25/2022 23:07	0.75	6/26/2022 0:49	30.68
6/27/2022 0:33	87.37	6/25/2022 23:50	0.31	6/26/2022 0:20	10.62	6/25/2022 23:08	0.73	6/26/2022 0:50	30.58
6/27/2022 0:34	87.30	6/25/2022 23:51	0.31	6/26/2022 0:21	10.63	6/25/2022 23:09	0.66	6/26/2022 0:51	30.57
6/27/2022 0:35	87.35	6/25/2022 23:52	0.28	6/26/2022 0:22	10.67	6/25/2022 23:10	0.67	6/26/2022 0:52	30.55
6/27/2022 0:36	87.30	6/25/2022 23:53	0.32	6/26/2022 0:23	10.65	6/25/2022 23:11	0.74	6/26/2022 0:53	30.52
6/27/2022 0:37	87.33	6/25/2022 23:54	0.29	6/26/2022 0:24	10.66	6/25/2022 23:12	0.75	6/26/2022 0:54	30.55
6/27/2022 0:38	87.29	6/25/2022 23:55	0.24	6/26/2022 0:25	10.70	6/25/2022 23:13	0.68	6/26/2022 0:55	30.52
6/27/2022 0:39	87.29	6/25/2022 23:56	0.26	6/26/2022 0:26	10.69	6/25/2022 23:14	0.80	6/26/2022 0:56	30.51
6/27/2022 0:40	87.28	6/25/2022 23:57	0.30	6/26/2022 0:27	10.69	6/25/2022 23:15	0.69	6/26/2022 0:57	30.55
6/27/2022 0:41	87.31	6/25/2022 23:58	0.25	6/26/2022 0:28	10.67	6/25/2022 23:16	0.66	6/26/2022 0:58	30.55
6/27/2022 0:42	87.30	6/25/2022 23:59	0.28	6/26/2022 0:29	10.68	6/25/2022 23:17	0.77	6/26/2022 0:59	30.61
6/27/2022 0:43	87.29	6/26/2022 0:00	0.25	6/26/2022 0:30	10.66	6/25/2022 23:18	0.70	6/26/2022 1:00	32.14
6/27/2022 0:44	87.20	6/26/2022 0:01	0.28	6/26/2022 0:31	10.68	6/25/2022 23:19	0.71	6/26/2022 1:01	31.15
6/27/2022 0:45	87.23	6/26/2022 0:02	0.28	6/26/2022 0:32	10.67	6/25/2022 23:20	0.70	6/26/2022 1:02	30.73

6/27/2022 0:46	87.28	6/26/2022 0:03	0.24	6/26/2022 0:33	10.67	6/25/2022 23:21	0.67	6/26/2022 1:03	30.63
6/27/2022 0:47	87.28	6/26/2022 0:04	0.27	6/26/2022 0:34	10.65	6/25/2022 23:22	0.71	6/26/2022 1:04	30.59
6/27/2022 0:48	87.30	6/26/2022 0:05	0.26	6/26/2022 0:35	10.67	6/25/2022 23:23	0.68	6/26/2022 1:05	30.51
6/27/2022 0:49	87.26	6/26/2022 0:06	0.30	6/26/2022 0:36	10.66	6/25/2022 23:24	0.69	6/26/2022 1:06	30.55
6/27/2022 0:50	87.21	6/26/2022 0:07	0.24	6/26/2022 0:37	10.65	6/25/2022 23:25	0.68	6/26/2022 1:07	30.56
6/27/2022 0:51	87.21	6/26/2022 0:08	0.29	6/26/2022 0:38	10.63	6/25/2022 23:26	0.70	6/26/2022 1:08	30.53
6/27/2022 0:52	87.20	6/26/2022 0:09	0.22	6/26/2022 0:39	10.61	6/25/2022 23:27	0.72	6/26/2022 1:09	30.58
6/27/2022 0:53	87.20	6/26/2022 0:10	0.27	6/26/2022 0:40	10.62	6/25/2022 23:28	0.64	6/26/2022 1:10	30.50
6/27/2022 0:54	87.23	6/26/2022 0:11	0.29	6/26/2022 0:41	10.63	6/25/2022 23:29	0.77	6/26/2022 1:11	30.55
6/27/2022 0:55	87.18	6/26/2022 0:12	0.28	6/26/2022 0:42	10.63	6/25/2022 23:30	0.66	6/26/2022 1:12	30.47
6/27/2022 0:56	87.22	6/26/2022 0:13	0.24	6/26/2022 0:43	10.60	6/25/2022 23:31	0.77	6/26/2022 1:13	30.52
6/27/2022 0:57	87.18	6/26/2022 0:14	0.26	6/26/2022 0:44	10.62	6/25/2022 23:32	0.67	6/26/2022 1:14	30.54
6/27/2022 0:58	87.20	6/26/2022 0:15	0.23	6/26/2022 0:45	10.61	6/25/2022 23:33	0.74	6/26/2022 1:15	30.48
6/27/2022 0:59	87.20	6/26/2022 0:16	0.28	6/26/2022 0:46	10.58	6/25/2022 23:34	0.65	6/26/2022 1:16	30.49
6/27/2022 1:00	87.19	6/26/2022 0:17	0.26	6/26/2022 0:47	10.61	6/25/2022 23:35	0.71	6/26/2022 1:17	30.51
6/27/2022 1:01	87.19	6/26/2022 0:18	0.25	6/26/2022 0:48	10.61	6/25/2022 23:36	0.69	6/26/2022 1:18	30.48
6/27/2022 1:02	87.16	6/26/2022 0:19	0.29	6/26/2022 0:49	10.62	6/25/2022 23:37	0.67	6/26/2022 1:19	30.50
6/27/2022 1:03	87.20	6/26/2022 0:20	4.17	6/26/2022 0:50	10.66	6/25/2022 23:38	0.70	6/26/2022 1:20	30.51
6/27/2022 1:04	87.20	6/26/2022 0:21	7.69	6/26/2022 0:51	10.64	6/25/2022 23:39	0.70	6/26/2022 1:21	30.49
6/27/2022 1:05	87.20	6/26/2022 0:22	6.42	6/26/2022 0:52	10.68	6/25/2022 23:40	0.73	6/26/2022 1:22	30.47
6/27/2022 1:06	87.19	6/26/2022 0:23	5.47	6/26/2022 0:53	10.65	6/25/2022 23:41	0.66	6/26/2022 1:23	30.55
6/27/2022 1:07	87.20	6/26/2022 0:24	4.70	6/26/2022 0:54	10.66	6/25/2022 23:42	0.75	6/26/2022 1:24	30.51
6/27/2022 1:08	87.15	6/26/2022 0:25	4.01	6/26/2022 0:55	10.65	6/25/2022 23:43	0.68	6/26/2022 1:25	30.46
6/27/2022 1:09	87.19	6/26/2022 0:26	3.44	6/26/2022 0:56	10.62	6/25/2022 23:44	0.77	6/26/2022 1:26	30.47
6/27/2022 1:10	87.18	6/26/2022 0:27	2.94	6/26/2022 0:57	10.65	6/25/2022 23:45	0.65	6/26/2022 1:27	30.47
6/27/2022 1:11	87.17	6/26/2022 0:28	2.57	6/26/2022 0:58	10.63	6/25/2022 23:46	0.76	6/26/2022 1:28	30.49
6/27/2022 1:12	87.20	6/26/2022 0:29	2.25	6/26/2022 0:59	10.66	6/25/2022 23:47	0.63	6/26/2022 1:29	30.51
6/27/2022 1:13	87.14	6/26/2022 0:30	1.99	6/26/2022 1:00	10.65	6/25/2022 23:48	0.79	6/26/2022 1:30	30.46
6/27/2022 1:14	87.19	6/26/2022 0:31	1.79	6/26/2022 1:01	10.66	6/25/2022 23:49	0.70	6/26/2022 1:31	30.48
6/27/2022 1:15	87.16	6/26/2022 0:32	1.55	6/26/2022 1:02	10.64	6/25/2022 23:50	0.79	6/26/2022 1:32	30.50
6/27/2022 1:16	87.20	6/26/2022 0:33	1.38	6/26/2022 1:03	10.67	6/25/2022 23:51	0.69	6/26/2022 1:33	30.47
6/27/2022 1:17	87.19	6/26/2022 0:34	1.22	6/26/2022 1:04	10.69	6/25/2022 23:52	0.78	6/26/2022 1:34	30.49
6/27/2022 1:18	87.15	6/26/2022 0:35	1.11	6/26/2022 1:05	10.71	6/25/2022 23:53	0.71	6/26/2022 1:35	30.47
6/27/2022 1:19	87.11	6/26/2022 0:36	0.94	6/26/2022 1:06	10.71	6/25/2022 23:54	0.76	6/26/2022 1:36	30.46
6/27/2022 1:20	87.11	6/26/2022 0:37	0.92	6/26/2022 1:07	10.72	6/25/2022 23:55	0.66	6/26/2022 1:37	30.47
6/27/2022 1:21	87.13	6/26/2022 0:38	0.79	6/26/2022 1:08	10.70	6/25/2022 23:56	0.76	6/26/2022 1:38	30.49
6/27/2022 1:22	87.10	6/26/2022 0:39	0.74	6/26/2022 1:09	10.72	6/25/2022 23:57	0.68	6/26/2022 1:39	30.46
6/27/2022 1:23	87.17	6/26/2022 0:40	0.70	6/26/2022 1:10	10.69	6/25/2022 23:58	0.70	6/26/2022 1:40	30.49
6/27/2022 1:24	87.12	6/26/2022 0:41	0.62	6/26/2022 1:11	10.68	6/25/2022 23:59	0.71	6/26/2022 1:41	30.47
6/27/2022 1:25	87.09	6/26/2022 0:42	0.60	6/26/2022 1:12	10.70	6/26/2022 0:00	0.78	6/26/2022 1:42	30.43
6/27/2022 1:26	87.13	6/26/2022 0:43	0.56	6/26/2022 1:13	10.70	6/26/2022 0:01	0.68	6/26/2022 1:43	30.47
6/27/2022 1:27	87.10	6/26/2022 0:44	0.51	6/26/2022 1:14	10.66	6/26/2022 0:02	0.71	6/26/2022 1:44	30.45
6/27/2022 1:28	87.12	6/26/2022 0:45	0.49	6/26/2022 1:15	10.65	6/26/2022 0:03	0.73	6/26/2022 1:45	30.49
6/27/2022 1:29	87.17	6/26/2022 0:46	0.48	6/26/2022 1:16	10.66	6/26/2022 0:04	0.69	6/26/2022 1:46	30.43
6/27/2022 1:30	87.17	6/26/2022 0:47	0.39	6/26/2022 1:17	10.64	6/26/2022 0:05	0.75	6/26/2022 1:47	30.46
6/27/2022 1:31	87.10	6/26/2022 0:48	0.44	6/26/2022 1:18	10.64	6/26/2022 0:06	0.66	6/26/2022 1:48	30.50
6/27/2022 1:32	87.15	6/26/2022 0:49	0.39	6/26/2022 1:19	10.62	6/26/2022 0:07	0.76	6/26/2022 1:49	30.44
6/27/2022 1:33	87.15	6/26/2022 0:50	0.33	6/26/2022 1:20	10.66	6/26/2022 0:08	0.67	6/26/2022 1:50	30.45
6/27/2022 1:34	87.14	6/26/2022 0:51	0.35	6/26/2022 1:21	10.66	6/26/2022 0:09	0.78	6/26/2022 1:51	30.46
6/27/2022 1:35	87.13	6/26/2022 0:52	0.35	6/26/2022 1:22	10.61	6/26/2022 0:10	0.67	6/26/2022 1:52	30.45
6/27/2022 1:36	87.11	6/26/2022 0:53	0.37	6/26/2022 1:23	10.57	6/26/2022 0:11	0.70	6/26/2022 1:53	30.44
6/27/2022 1:37	87.11	6/26/2022 0:54	0.31	6/26/2022 1:24	10.59	6/26/2022 0:12	0.69	6/26/2022 1:54	30.46
6/27/2022 1:38	87.06	6/26/2022 0:55	0.32	6/26/2022 1:25	10.61	6/26/2022 0:13	0.74	6/26/2022 1:55	30.47
6/27/2022 1:39	87.14	6/26/2022 0:56	0.33	6/26/2022 1:26	10.59	6/26/2022 0:14	0.74	6/26/2022 1:56	30.47
6/27/2022 1:40	87.08	6/26/2022 0:57	0.32	6/26/2022 1:27	10.57	6/26/2022 0:15	0.66	6/26/2022 1:57	30.44
6/27/2022 1:41	87.10	6/26/2022 0:58	0.34	6/26/2022 1:28	10.54	6/26/2022 0:16	0.75	6/26/2022 1:58	30.43
6/27/2022 1:42	87.09	6/26/2022 0:59	0.31	6/26/2022 1:29	10.62	6/26/2022 0:17	0.68	6/26/2022 1:59	30.47
6/27/2022 1:43	87.09	6/26/2022 1:00	0.30	6/26/2022 1:30	10.59	6/26/2022 0:18	0.76	6/26/2022 2:00	30.41
6/27/2022 1:44	87.03	6/26/2022 1:01	0.28	6/26/2022 1:31	10.61	6/26/2022 0:19	0.68	6/26/2022 2:01	30.44
6/27/2022 1:45	87.05	6/26/2022 1:02	0.33	6/26/2022 1:32	10.66	6/26/2022 0:20	0.69	6/26/2022 2:02	30.45
6/27/2022 1:46	87.06	6/26/2022 1:03	0.32	6/26/2022 1:33	10.60	6/26/2022 0:21	0.69	6/26/2022 2:03	30.44
6/27/2022 1:47	87.06	6/26/2022 1:04	0.28	6/26/2022 1:34	10.64	6/26/2022 0:22	0.69	6/26/2022 2:04	30.41
6/27/2022 1:48	87.07	6/26/2022 1:05	0.29	6/26/2022 1:35	10.63	6/26/2022 0:23	0.75	6/26/2022 2:05	30.41
6/27/2022 1:49	87.08	6/26/2022 1:06	0.31	6/26/2022 1:36	10.66	6/26/2022 0:24	0.75	6/26/2022 2:06	30.44
6/27/2022 1:50	87.06	6/26/2022 1:07	0.27	6/26/2022 1:37	10.65	6/26/2022 0:25	0.66	6/26/2022 2:07	30.43
6/27/2022 1:51	87.09	6/26/2022 1:08	0.33	6/26/2022 1:38	10.69	6/26/2022 0:26	0.68	6/26/2022 2:08	30.42
6/27/2022 1:52	87.05	6/26/2022 1:09	0.29	6/26/2022 1:39	10.66	6/26/2022 0:27	0.75	6/26/2022 2:09	30.44
6/27/2022 1:53	87.07	6/26/2022 1:10	0.28	6/26/2022 1:40	10.65	6/26/2022 0:28	0.76	6/26/2022 2:10	30.40
6/27/2022 1:54	87.07	6/26/2022 1:11	0.27	6/26/2022 1:41	10.65	6/26/2022 0:29	0.68	6/26/2022 2:11	30.44
6/27/2022 1:55	87.04	6/26/2022 1:12	0.28	6/26/2022 1:42	10.65	6/26/2022 0:30	0.72	6/26/2022 2:12	30.39
6/27/2022 1:56	87.04	6/26/2022 1:13	0.29	6/26/2022 1:43	10.67	6/26/2022 0:31	0.65	6/26/2022 2:13	30.44
6/27/2022 1:57	87.07	6/26/2022 1:14	0.28	6/26/2022 1:44	10.63	6/26/2022 0:32	0.73	6/26/2022 2:14	30.41
6/27/2022 1:58	87.06	6/26/2022 1:15	0.27	6/26/2022 1:45	10.63	6/26/2022 0:33	0.71	6/26/2022 2:15	30.41
6/27/2022 1:59	87.05	6/26/2022 1:16	0.22	6/26/2022 1:46	10.66	6/26/2022 0:34	0.68	6/26/2022 2:16	30.44
6/27/2022 2:00	87.06	6/26/2022 1:17	0.24	6/26/2022 1:47	10.62	6/26/2022 0:35	0.73	6/26/2022 2:17	30.40
6/27/2022 2:01	87.07	6/26/2022 1:18	0.25	6/26/2022 1:48	10.59	6/26/2022 0:36	0.70	6/26/2022 2:18	30.41
6/27/2022 2:02	87.04	6/26/2022 1:19	0.27	6/26/2022 1:49	10.59	6/26/2022 0:37	0.78	6/26/2022 2:19	30.43
6/27/2022 2:03	87.09	6/26/2022 1:20	0.21	6/26/2022 1:50	10.59	6/26/2022 0:38	0.66	6/26/2022 2:20	30.44
6/27/2022 2:04	87.05	6/26/2022 1:21	0.26	6/26/2022 1:51	10.60	6/26/2022 0:39	0.73	6/26/2022 2:21	30.40
6/27/2022 2:05	87.04	6/26/2022 1:22	0.26	6/26/2022 1:52	10.61	6/26/2022 0:40	0.66	6/26/2022 2:22	30.41
6/27/2022 2:06	87.06	6/26/2022 1:23	0.29	6/26/2022 1:53	10.59	6/26/2022 0:41	0.74	6/26/2022 2:23	30.36
6/27/2022 2:07	87.03	6/26/2022 1:24	0.26	6/26/2022 1:54	10.59	6/26/2022 0:42	0.67	6/26/2022 2:24	30.43
6/27/2022 2:08	87.05	6/26/2022 1:25	0.27	6/26/2022 1:55	10.61	6/26/2022 0:43	0.76	6/26/2022 2:25	30.41
6/27/2022 2:09	87.04	6/26/2022 1:26	0.26	6/26/2022 1:56	10.62	6/26/2022 0:44	0.67	6/26/2022 2:26	30.43
6/27/2022 2:10	87.04	6/26/2022 1:27	0.27	6/26/2022 1:57	10.60	6/26/2022 0:45	0.76	6/26/2022 2:27	30.43
6/27/2022 2:11	87.02	6/26/2022 1:28	0.29	6/26/2022 1:58	10.67	6/26/2022 0:46	0.69	6/26/2022 2:28	30.44
6/27/2022 2:12	87.02	6/26/2022 1:29	0.26	6/26/2022 1:59	10.66	6/26/2022 0:47	0.77	6/26/2022 2:29	30.42
6/27/2022 2:13	87.04	6/26/2022 1:30	0.28	6/26/2022 2:00	10.64	6/26/2022 0:48	0.69	6/26/2022 2:30	30.40

6/27/2022 2:14	87.01	6/26/2022 1:31	0.24	6/26/2022 2:01	10.62	6/26/2022 0:49	0.72	6/26/2022 2:31	30.41
6/27/2022 2:15	86.99	6/26/2022 1:32	5.39	6/26/2022 2:02	10.66	6/26/2022 0:50	0.70	6/26/2022 2:32	30.41
6/27/2022 2:16	87.07	6/26/2022 1:33	7.47	6/26/2022 2:03	10.66	6/26/2022 0:51	0.72	6/26/2022 2:33	30.42
6/27/2022 2:17	87.05	6/26/2022 1:34	6.28	6/26/2022 2:04	10.62	6/26/2022 0:52	0.66	6/26/2022 2:34	30.40
6/27/2022 2:18	87.03	6/26/2022 1:35	5.33	6/26/2022 2:05	10.64	6/26/2022 0:53	0.68	6/26/2022 2:35	30.41
6/27/2022 2:19	87.01	6/26/2022 1:36	4.58	6/26/2022 2:06	10.62	6/26/2022 0:54	0.69	6/26/2022 2:36	30.40
6/27/2022 2:20	86.96	6/26/2022 1:37	3.93	6/26/2022 2:07	10.63	6/26/2022 0:55	0.71	6/26/2022 2:37	30.42
6/27/2022 2:21	87.05	6/26/2022 1:38	3.34	6/26/2022 2:08	10.60	6/26/2022 0:56	0.68	6/26/2022 2:38	30.46
6/27/2022 2:22	87.00	6/26/2022 1:39	2.89	6/26/2022 2:09	10.64	6/26/2022 0:57	0.71	6/26/2022 2:39	30.42
6/27/2022 2:23	87.00	6/26/2022 1:40	2.53	6/26/2022 2:10	10.59	6/26/2022 0:58	0.70	6/26/2022 2:40	30.39
6/27/2022 2:24	86.97	6/26/2022 1:41	2.20	6/26/2022 2:11	10.59	6/26/2022 0:59	0.72	6/26/2022 2:41	30.40
6/27/2022 2:25	87.03	6/26/2022 1:42	1.93	6/26/2022 2:12	10.54	6/26/2022 1:00	0.68	6/26/2022 2:42	30.41
6/27/2022 2:26	87.04	6/26/2022 1:43	1.70	6/26/2022 2:13	10.62	6/26/2022 1:01	0.67	6/26/2022 2:43	30.41
6/27/2022 2:27	86.97	6/26/2022 1:44	1.50	6/26/2022 2:14	14.83	6/26/2022 1:02	0.73	6/26/2022 2:44	30.39
6/27/2022 2:28	86.97	6/26/2022 1:45	1.39	6/26/2022 2:15	15.50	6/26/2022 1:03	0.66	6/26/2022 2:45	30.39
6/27/2022 2:29	86.98	6/26/2022 1:46	1.17	6/26/2022 2:16	14.89	6/26/2022 1:04	0.78	6/26/2022 2:46	30.43
6/27/2022 2:30	86.98	6/26/2022 1:47	1.10	6/26/2022 2:17	14.39	6/26/2022 1:05	0.66	6/26/2022 2:47	30.38
6/27/2022 2:31	86.99	6/26/2022 1:48	0.97	6/26/2022 2:18	17.45	6/26/2022 1:06	0.75	6/26/2022 2:48	30.40
6/27/2022 2:32	86.94	6/26/2022 1:49	0.85	6/26/2022 2:19	18.72	6/26/2022 1:07	0.66	6/26/2022 2:49	30.38
6/27/2022 2:33	87.00	6/26/2022 1:50	0.77	6/26/2022 2:20	17.80	6/26/2022 1:08	0.73	6/26/2022 2:50	30.40
6/27/2022 2:34	87.00	6/26/2022 1:51	0.69	6/26/2022 2:21	17.00	6/26/2022 1:09	0.70	6/26/2022 2:51	30.40
6/27/2022 2:35	87.03	6/26/2022 1:52	0.64	6/26/2022 2:22	18.87	6/26/2022 1:10	0.71	6/26/2022 2:52	30.39
6/27/2022 2:36	86.98	6/26/2022 1:53	0.61	6/26/2022 2:23	20.55	6/26/2022 1:11	0.74	6/26/2022 2:53	30.40
6/27/2022 2:37	86.97	6/26/2022 1:54	0.56	6/26/2022 2:24	19.48	6/26/2022 1:12	0.65	6/26/2022 2:54	30.44
6/27/2022 2:38	86.97	6/26/2022 1:55	0.54	6/26/2022 2:25	18.60	6/26/2022 1:13	0.77	6/26/2022 2:55	30.43
6/27/2022 2:39	87.00	6/26/2022 1:56	0.49	6/26/2022 2:26	17.81	6/26/2022 1:14	0.68	6/26/2022 2:56	30.41
6/27/2022 2:40	86.98	6/26/2022 1:57	0.47	6/26/2022 2:27	17.05	6/26/2022 1:15	0.77	6/26/2022 2:57	30.38
6/27/2022 2:41	87.02	6/26/2022 1:58	0.42	6/26/2022 2:28	16.43	6/26/2022 1:16	0.70	6/26/2022 2:58	30.40
6/27/2022 2:42	86.95	6/26/2022 1:59	0.38	6/26/2022 2:29	15.86	6/26/2022 1:17	0.75	6/26/2022 2:59	30.39
6/27/2022 2:43	87.01	6/26/2022 2:00	0.42	6/26/2022 2:30	15.41	6/26/2022 1:18	0.69	6/26/2022 3:00	30.40
6/27/2022 2:44	86.98	6/26/2022 2:01	0.34	6/26/2022 2:31	14.93	6/26/2022 1:19	0.68	6/26/2022 3:01	30.39
6/27/2022 2:45	87.00	6/26/2022 2:02	0.36	6/26/2022 2:32	14.51	6/26/2022 1:20	0.75	6/26/2022 3:02	30.41
6/27/2022 2:46	86.97	6/26/2022 2:03	0.33	6/26/2022 2:33	14.17	6/26/2022 1:21	0.69	6/26/2022 3:03	30.40
6/27/2022 2:47	86.99	6/26/2022 2:04	0.32	6/26/2022 2:34	13.85	6/26/2022 1:22	0.74	6/26/2022 3:04	30.42
6/27/2022 2:48	87.00	6/26/2022 2:05	0.33	6/26/2022 2:35	13.54	6/26/2022 1:23	0.63	6/26/2022 3:05	30.40
6/27/2022 2:49	86.95	6/26/2022 2:06	0.34	6/26/2022 2:36	14.94	6/26/2022 1:24	0.76	6/26/2022 3:06	30.40
6/27/2022 2:50	87.01	6/26/2022 2:07	0.31	6/26/2022 2:37	17.21	6/26/2022 1:25	0.70	6/26/2022 3:07	30.40
6/27/2022 2:51	86.96	6/26/2022 2:08	0.28	6/26/2022 2:38	16.53	6/26/2022 1:26	0.70	6/26/2022 3:08	30.38
6/27/2022 2:52	86.97	6/26/2022 2:09	0.28	6/26/2022 2:39	15.93	6/26/2022 1:27	0.66	6/26/2022 3:09	30.40
6/27/2022 2:53	86.94	6/26/2022 2:10	0.26	6/26/2022 2:40	15.43	6/26/2022 1:28	0.71	6/26/2022 3:10	30.38
6/27/2022 2:54	86.98	6/26/2022 2:11	0.24	6/26/2022 2:41	14.90	6/26/2022 1:29	0.71	6/26/2022 3:11	30.39
6/27/2022 2:55	86.95	6/26/2022 2:12	0.27	6/26/2022 2:42	14.52	6/26/2022 1:30	0.67	6/26/2022 3:12	30.42
6/27/2022 2:56	86.93	6/26/2022 2:13	0.27	6/26/2022 2:43	14.18	6/26/2022 1:31	0.75	6/26/2022 3:13	30.40
6/27/2022 2:57	86.96	6/26/2022 2:14	0.23	6/26/2022 2:44	13.88	6/26/2022 1:32	0.69	6/26/2022 3:14	30.42
6/27/2022 2:58	86.94	6/26/2022 2:15	0.24	6/26/2022 2:45	13.62	6/26/2022 1:33	0.69	6/26/2022 3:15	30.36
6/27/2022 2:59	86.95	6/26/2022 2:16	0.27	6/26/2022 2:46	13.33	6/26/2022 1:34	0.75	6/26/2022 3:16	30.36
6/27/2022 3:00	86.96	6/26/2022 2:17	0.27	6/26/2022 2:47	13.09	6/26/2022 1:35	0.71	6/26/2022 3:17	30.39
6/27/2022 3:01	86.95	6/26/2022 2:18	0.20	6/26/2022 2:48	12.91	6/26/2022 1:36	0.70	6/26/2022 3:18	30.40
6/27/2022 3:02	86.93	6/26/2022 2:19	0.24	6/26/2022 2:49	12.73	6/26/2022 1:37	0.68	6/26/2022 3:19	30.39
6/27/2022 3:03	86.95	6/26/2022 2:20	0.25	6/26/2022 2:50	12.54	6/26/2022 1:38	0.78	6/26/2022 3:20	30.39
6/27/2022 3:04	86.94	6/26/2022 2:21	0.24	6/26/2022 2:51	12.42	6/26/2022 1:39	0.71	6/26/2022 3:21	30.35
6/27/2022 3:05	86.94	6/26/2022 2:22	0.25	6/26/2022 2:52	12.28	6/26/2022 1:40	0.70	6/26/2022 3:22	30.37
6/27/2022 3:06	86.99	6/26/2022 2:23	0.22	6/26/2022 2:53	12.14	6/26/2022 1:41	0.71	6/26/2022 3:23	30.40
6/27/2022 3:07	86.98	6/26/2022 2:24	0.22	6/26/2022 2:54	11.99	6/26/2022 1:42	0.72	6/26/2022 3:24	30.43
6/27/2022 3:08	86.94	6/26/2022 2:25	0.25	6/26/2022 2:55	12.47	6/26/2022 1:43	0.75	6/26/2022 3:25	30.38
6/27/2022 3:09	86.93	6/26/2022 2:26	0.26	6/26/2022 2:56	15.80	6/26/2022 1:44	0.69	6/26/2022 3:26	30.41
6/27/2022 3:10	86.92	6/26/2022 2:27	0.29	6/26/2022 2:57	15.24	6/26/2022 1:45	0.75	6/26/2022 3:27	30.38
6/27/2022 3:11	86.97	6/26/2022 2:28	0.24	6/26/2022 2:58	14.73	6/26/2022 1:46	0.68	6/26/2022 3:28	30.39
6/27/2022 3:12	86.91	6/26/2022 2:29	0.23	6/26/2022 2:59	14.31	6/26/2022 1:47	0.71	6/26/2022 3:29	30.38
6/27/2022 3:13	86.93	6/26/2022 2:30	0.23	6/26/2022 3:00	13.93	6/26/2022 1:48	0.69	6/26/2022 3:30	30.38
6/27/2022 3:14	86.91	6/26/2022 2:31	0.27	6/26/2022 3:01	13.61	6/26/2022 1:49	0.72	6/26/2022 3:31	30.37
6/27/2022 3:15	86.91	6/26/2022 2:32	0.23	6/26/2022 3:02	13.34	6/26/2022 1:50	0.64	6/26/2022 3:32	30.41
6/27/2022 3:16	86.90	6/26/2022 2:33	0.25	6/26/2022 3:03	13.09	6/26/2022 1:51	0.76	6/26/2022 3:33	30.39
6/27/2022 3:17	86.91	6/26/2022 2:34	0.24	6/26/2022 3:04	12.85	6/26/2022 1:52	0.68	6/26/2022 3:34	30.40
6/27/2022 3:18	86.96	6/26/2022 2:35	0.24	6/26/2022 3:05	12.66	6/26/2022 1:53	0.76	6/26/2022 3:35	30.36
6/27/2022 3:19	86.96	6/26/2022 2:36	0.21	6/26/2022 3:06	12.48	6/26/2022 1:54	0.65	6/26/2022 3:36	30.39
6/27/2022 3:20	86.91	6/26/2022 2:37	0.24	6/26/2022 3:07	12.40	6/26/2022 1:55	0.76	6/26/2022 3:37	30.38
6/27/2022 3:21	86.92	6/26/2022 2:38	0.22	6/26/2022 3:08	12.23	6/26/2022 1:56	0.70	6/26/2022 3:38	30.32
6/27/2022 3:22	86.96	6/26/2022 2:39	0.23	6/26/2022 3:09	12.15	6/26/2022 1:57	0.72	6/26/2022 3:39	30.38
6/27/2022 3:23	86.89	6/26/2022 2:40	0.24	6/26/2022 3:10	12.01	6/26/2022 1:58	0.74	6/26/2022 3:40	30.42
6/27/2022 3:24	86.93	6/26/2022 2:41	0.22	6/26/2022 3:11	11.89	6/26/2022 1:59	0.69	6/26/2022 3:41	30.38
6/27/2022 3:25	86.90	6/26/2022 2:42	0.22	6/26/2022 3:12	11.79	6/26/2022 2:00	0.73	6/26/2022 3:42	30.33
6/27/2022 3:26	86.93	6/26/2022 2:43	0.24	6/26/2022 3:13	11.71	6/26/2022 2:01	0.69	6/26/2022 3:43	30.41
6/27/2022 3:27	86.86	6/26/2022 2:44	3.86	6/26/2022 3:14	14.27	6/26/2022 2:02	0.69	6/26/2022 3:44	30.35
6/27/2022 3:28	86.93	6/26/2022 2:45	7.71	6/26/2022 3:15	15.28	6/26/2022 2:03	0.70	6/26/2022 3:45	30.36
6/27/2022 3:29	86.86	6/26/2022 2:46	6.47	6/26/2022 3:16	14.79	6/26/2022 2:04	0.77	6/26/2022 3:46	30.39
6/27/2022 3:30	86.89	6/26/2022 2:47	5.46	6/26/2022 3:17	14.35	6/26/2022 2:05	0.68	6/26/2022 3:47	30.33
6/27/2022 3:31	86.90	6/26/2022 2:48	4.64	6/26/2022 3:18	13.92	6/26/2022 2:06	0.74	6/26/2022 3:48	30.37
6/27/2022 3:32	86.92	6/26/2022 2:49	4.00	6/26/2022 3:19	13.59	6/26/2022 2:07	0.71	6/26/2022 3:49	30.33
6/27/2022 3:33	86.94	6/26/2022 2:50	3.47	6/26/2022 3:20	13.31	6/26/2022 2:08	0.73	6/26/2022 3:50	30.35
6/27/2022 3:34	86.86	6/26/2022 2:51	2.96	6/26/2022 3:21	13.10	6/26/2022 2:09	0.75	6/26/2022 3:51	30.36
6/27/2022 3:35	86.91	6/26/2022 2:52	2.59	6/26/2022 3:22	12.82	6/26/2022 2:10	0.68	6/26/2022 3:52	30.38
6/27/2022 3:36	86.91	6/26/2022 2:53	2.22	6/26/2022 3:23	12.61	6/26/2022 2:11	0.72	6/26/2022 3:53	30.38
6/27/2022 3:37	86.91	6/26/2022 2:54	1.99	6/26/2022 3:24	13.25	6/26/2022 2:12	0.68	6/26/2022 3:54	30.37
6/27/2022 3:38	86.87	6/26/2022 2:55	1.72	6/26/2022 3:25	17.54	6/26/2022 2:13	0.72	6/26/2022 3:55	30.34
6/27/2022 3:39	86.88	6/26/2022 2:56	1.52	6/26/2022 3:26	16.93	6/26/2022 2:14	0.76	6/26/2022 3:56	30.37
6/27/2022 3:40	86.91	6/26/2022 2:57	1.37	6/26/2022 3:27	16.23	6/26/2022 2:15	0.70	6/26/2022 3:57	30.36
6/27/2022 3:41	86.92	6/26/2022 2:58	1.25	6/26/2022 3:28	15.68	6/26/2022 2:16	0.77	6/26/2022 3:58	30.37

6/27/2022 3:42	86.85	6/26/2022 2:59	1.10	6/26/2022 3:29	19.60	6/26/2022 2:17	0.68	6/26/2022 3:59	30.38
6/27/2022 3:43	86.88	6/26/2022 3:00	0.99	6/26/2022 3:30	19.66	6/26/2022 2:18	0.77	6/26/2022 4:00	30.38
6/27/2022 3:44	86.91	6/26/2022 3:01	0.91	6/26/2022 3:31	18.74	6/26/2022 2:19	0.69	6/26/2022 4:01	30.38
6/27/2022 3:45	86.92	6/26/2022 3:02	0.79	6/26/2022 3:32	17.94	6/26/2022 2:20	0.69	6/26/2022 4:02	30.36
6/27/2022 3:46	86.94	6/26/2022 3:03	0.77	6/26/2022 3:33	20.68	6/26/2022 2:21	0.73	6/26/2022 4:03	30.36
6/27/2022 3:47	86.89	6/26/2022 3:04	0.68	6/26/2022 3:34	20.82	6/26/2022 2:22	0.71	6/26/2022 4:04	30.37
6/27/2022 3:48	86.89	6/26/2022 3:05	0.58	6/26/2022 3:35	19.78	6/26/2022 2:23	0.76	6/26/2022 4:05	30.33
6/27/2022 3:49	86.89	6/26/2022 3:06	0.58	6/26/2022 3:36	18.89	6/26/2022 2:24	0.68	6/26/2022 4:06	30.37
6/27/2022 3:50	86.82	6/26/2022 3:07	0.54	6/26/2022 3:37	18.06	6/26/2022 2:25	0.79	6/26/2022 4:07	30.38
6/27/2022 3:51	86.88	6/26/2022 3:08	0.48	6/26/2022 3:38	17.42	6/26/2022 2:26	0.66	6/26/2022 4:08	30.33
6/27/2022 3:52	86.86	6/26/2022 3:09	0.45	6/26/2022 3:39	16.75	6/26/2022 2:27	0.73	6/26/2022 4:09	30.35
6/27/2022 3:53	86.85	6/26/2022 3:10	0.39	6/26/2022 3:40	16.19	6/26/2022 2:28	0.71	6/26/2022 4:10	30.38
6/27/2022 3:54	86.88	6/26/2022 3:11	0.42	6/26/2022 3:41	15.69	6/26/2022 2:29	0.68	6/26/2022 4:11	30.39
6/27/2022 3:55	86.81	6/26/2022 3:12	0.40	6/26/2022 3:42	15.24	6/26/2022 2:30	0.81	6/26/2022 4:12	32.09
6/27/2022 3:56	86.85	6/26/2022 3:13	0.34	6/26/2022 3:43	14.81	6/26/2022 2:31	0.69	6/26/2022 4:13	31.07
6/27/2022 3:57	86.90	6/26/2022 3:14	0.33	6/26/2022 3:44	14.48	6/26/2022 2:32	0.78	6/26/2022 4:14	30.63
6/27/2022 3:58	86.88	6/26/2022 3:15	0.31	6/26/2022 3:45	14.13	6/26/2022 2:33	0.69	6/26/2022 4:15	30.45
6/27/2022 3:59	86.87	6/26/2022 3:16	0.39	6/26/2022 3:46	13.87	6/26/2022 2:34	0.72	6/26/2022 4:16	30.45
6/27/2022 4:00	86.85	6/26/2022 3:17	0.32	6/26/2022 3:47	13.60	6/26/2022 2:35	0.68	6/26/2022 4:17	30.41
6/27/2022 4:01	86.82	6/26/2022 3:18	0.30	6/26/2022 3:48	13.37	6/26/2022 2:36	0.73	6/26/2022 4:18	30.38
6/27/2022 4:02	86.86	6/26/2022 3:19	0.29	6/26/2022 3:49	13.12	6/26/2022 2:37	0.77	6/26/2022 4:19	30.38
6/27/2022 4:03	86.91	6/26/2022 3:20	0.29	6/26/2022 3:50	12.98	6/26/2022 2:38	0.70	6/26/2022 4:20	30.42
6/27/2022 4:04	86.86	6/26/2022 3:21	0.30	6/26/2022 3:51	12.80	6/26/2022 2:39	0.79	6/26/2022 4:21	30.38
6/27/2022 4:05	86.82	6/26/2022 3:22	0.28	6/26/2022 3:52	12.67	6/26/2022 2:40	0.66	6/26/2022 4:22	30.36
6/27/2022 4:06	86.83	6/26/2022 3:23	0.29	6/26/2022 3:53	12.48	6/26/2022 2:41	0.77	6/26/2022 4:23	30.38
6/27/2022 4:07	86.85	6/26/2022 3:24	0.23	6/26/2022 3:54	12.37	6/26/2022 2:42	0.69	6/26/2022 4:24	30.39
6/27/2022 4:08	86.84	6/26/2022 3:25	0.27	6/26/2022 3:55	12.27	6/26/2022 2:43	0.74	6/26/2022 4:25	30.35
6/27/2022 4:09	86.86	6/26/2022 3:26	0.27	6/26/2022 3:56	12.16	6/26/2022 2:44	0.69	6/26/2022 4:26	30.38
6/27/2022 4:10	86.87	6/26/2022 3:27	0.27	6/26/2022 3:57	12.06	6/26/2022 2:45	0.77	6/26/2022 4:27	30.37
6/27/2022 4:11	86.87	6/26/2022 3:28	0.25	6/26/2022 3:58	11.95	6/26/2022 2:46	0.71	6/26/2022 4:28	30.36
6/27/2022 4:12	86.87	6/26/2022 3:29	0.27	6/26/2022 3:59	11.83	6/26/2022 2:47	0.69	6/26/2022 4:29	30.37
6/27/2022 4:13	86.87	6/26/2022 3:30	0.24	6/26/2022 4:00	11.79	6/26/2022 2:48	0.72	6/26/2022 4:30	30.37
6/27/2022 4:14	86.86	6/26/2022 3:31	0.24	6/26/2022 4:01	11.77	6/26/2022 2:49	0.81	6/26/2022 4:31	30.40
6/27/2022 4:15	86.87	6/26/2022 3:32	0.25	6/26/2022 4:02	11.67	6/26/2022 2:50	0.69	6/26/2022 4:32	30.37
6/27/2022 4:16	86.87	6/26/2022 3:33	0.21	6/26/2022 4:03	11.58	6/26/2022 2:51	0.67	6/26/2022 4:33	30.40
6/27/2022 4:17	86.85	6/26/2022 3:34	0.24	6/26/2022 4:04	11.50	6/26/2022 2:52	0.72	6/26/2022 4:34	30.39
6/27/2022 4:18	86.90	6/26/2022 3:35	0.22	6/26/2022 4:05	11.45	6/26/2022 2:53	0.75	6/26/2022 4:35	30.35
6/27/2022 4:19	86.87	6/26/2022 3:36	0.24	6/26/2022 4:06	11.41	6/26/2022 2:54	0.70	6/26/2022 4:36	30.35
6/27/2022 4:20	86.83	6/26/2022 3:37	0.26	6/26/2022 4:07	11.36	6/26/2022 2:55	0.76	6/26/2022 4:37	30.38
6/27/2022 4:21	86.82	6/26/2022 3:38	0.18	6/26/2022 4:08	11.33	6/26/2022 2:56	0.68	6/26/2022 4:38	30.34
6/27/2022 4:22	86.85	6/26/2022 3:39	0.23	6/26/2022 4:09	11.26	6/26/2022 2:57	0.72	6/26/2022 4:39	30.38
6/27/2022 4:23	86.80	6/26/2022 3:40	0.24	6/26/2022 4:10	11.24	6/26/2022 2:58	0.67	6/26/2022 4:40	30.38
6/27/2022 4:24	86.82	6/26/2022 3:41	0.25	6/26/2022 4:11	11.19	6/26/2022 2:59	0.74	6/26/2022 4:41	30.40
6/27/2022 4:25	86.82	6/26/2022 3:42	0.23	6/26/2022 4:12	11.22	6/26/2022 3:00	0.68	6/26/2022 4:42	30.40
6/27/2022 4:26	86.83	6/26/2022 3:43	0.22	6/26/2022 4:13	11.15	6/26/2022 3:01	0.77	6/26/2022 4:43	30.40
6/27/2022 4:27	86.87	6/26/2022 3:44	0.23	6/26/2022 4:14	11.17	6/26/2022 3:02	0.68	6/26/2022 4:44	30.36
6/27/2022 4:28	86.83	6/26/2022 3:45	0.23	6/26/2022 4:15	11.14	6/26/2022 3:03	0.79	6/26/2022 4:45	30.39
6/27/2022 4:29	86.82	6/26/2022 3:46	0.23	6/26/2022 4:16	11.15	6/26/2022 3:04	0.70	6/26/2022 4:46	30.38
6/27/2022 4:30	86.83	6/26/2022 3:47	0.23	6/26/2022 4:17	11.10	6/26/2022 3:05	0.81	6/26/2022 4:47	30.35
6/27/2022 4:31	86.87	6/26/2022 3:48	0.24	6/26/2022 4:18	11.09	6/26/2022 3:06	0.66	6/26/2022 4:48	30.35
6/27/2022 4:32	86.83	6/26/2022 3:49	0.22	6/26/2022 4:19	11.08	6/26/2022 3:07	0.77	6/26/2022 4:49	30.35
6/27/2022 4:33	86.77	6/26/2022 3:50	0.26	6/26/2022 4:20	11.08	6/26/2022 3:08	0.67	6/26/2022 4:50	30.38
6/27/2022 4:34	86.78	6/26/2022 3:51	0.29	6/26/2022 4:21	11.07	6/26/2022 3:09	0.77	6/26/2022 4:51	30.39
6/27/2022 4:35	86.78	6/26/2022 3:52	0.23	6/26/2022 4:22	11.03	6/26/2022 3:10	0.72	6/26/2022 4:52	30.40
6/27/2022 4:36	86.77	6/26/2022 3:53	0.22	6/26/2022 4:23	11.02	6/26/2022 3:11	0.81	6/26/2022 4:53	30.37
6/27/2022 4:37	86.81	6/26/2022 3:54	0.16	6/26/2022 4:24	11.00	6/26/2022 3:12	0.66	6/26/2022 4:54	30.33
6/27/2022 4:38	86.82	6/26/2022 3:55	0.84	6/26/2022 4:25	10.96	6/26/2022 3:13	0.79	6/26/2022 4:55	30.33
6/27/2022 4:39	86.78	6/26/2022 3:56	6.72	6/26/2022 4:26	10.95	6/26/2022 3:14	0.68	6/26/2022 4:56	30.38
6/27/2022 4:40	86.81	6/26/2022 3:57	7.06	6/26/2022 4:27	10.93	6/26/2022 3:15	0.72	6/26/2022 4:57	30.38
6/27/2022 4:41	86.78	6/26/2022 3:58	5.90	6/26/2022 4:28	10.87	6/26/2022 3:16	0.76	6/26/2022 4:58	30.35
6/27/2022 4:42	86.86	6/26/2022 3:59	5.05	6/26/2022 4:29	10.94	6/26/2022 3:17	0.69	6/26/2022 4:59	30.37
6/27/2022 4:43	86.82	6/26/2022 4:00	4.30	6/26/2022 4:30	10.86	6/26/2022 3:18	0.77	6/26/2022 5:00	30.37
6/27/2022 4:44	86.80	6/26/2022 4:01	3.72	6/26/2022 4:31	10.84	6/26/2022 3:19	0.67	6/26/2022 5:01	30.36
6/27/2022 4:45	86.81	6/26/2022 4:02	3.15	6/26/2022 4:32	10.82	6/26/2022 3:20	0.71	6/26/2022 5:02	30.39
6/27/2022 4:46	86.83	6/26/2022 4:03	2.77	6/26/2022 4:33	10.82	6/26/2022 3:21	0.78	6/26/2022 5:03	30.39
6/27/2022 4:47	86.76	6/26/2022 4:04	2.37	6/26/2022 4:34	10.86	6/26/2022 3:22	0.68	6/26/2022 5:04	30.38
6/27/2022 4:48	86.79	6/26/2022 4:05	2.11	6/26/2022 4:35	10.86	6/26/2022 3:23	0.77	6/26/2022 5:05	30.37
6/27/2022 4:49	86.80	6/26/2022 4:06	1.81	6/26/2022 4:36	10.85	6/26/2022 3:24	0.67	6/26/2022 5:06	30.36
6/27/2022 4:50	86.82	6/26/2022 4:07	1.64	6/26/2022 4:37	10.87	6/26/2022 3:25	0.77	6/26/2022 5:07	30.34
6/27/2022 4:51	86.81	6/26/2022 4:08	1.41	6/26/2022 4:38	10.83	6/26/2022 3:26	0.68	6/26/2022 5:08	30.36
6/27/2022 4:52	86.74	6/26/2022 4:09	1.28	6/26/2022 4:39	10.84	6/26/2022 3:27	0.79	6/26/2022 5:09	30.38
6/27/2022 4:53	86.83	6/26/2022 4:10	1.15	6/26/2022 4:40	10.87	6/26/2022 3:28	0.69	6/26/2022 5:10	30.39
6/27/2022 4:54	86.80	6/26/2022 4:11	1.02	6/26/2022 4:41	10.86	6/26/2022 3:29	0.77	6/26/2022 5:11	30.36
6/27/2022 4:55	86.83	6/26/2022 4:12	0.94	6/26/2022 4:42	10.82	6/26/2022 3:30	0.70	6/26/2022 5:12	30.34
6/27/2022 4:56	86.78	6/26/2022 4:13	0.84	6/26/2022 4:43	10.83	6/26/2022 3:31	0.74	6/26/2022 5:13	30.34
6/27/2022 4:57	86.78	6/26/2022 4:14	0.72	6/26/2022 4:44	10.80	6/26/2022 3:32	0.74	6/26/2022 5:14	30.34
6/27/2022 4:58	86.79	6/26/2022 4:15	0.65	6/26/2022 4:45	10.82	6/26/2022 3:33	0.69	6/26/2022 5:15	30.35
6/27/2022 4:59	86.80	6/26/2022 4:16	0.61	6/26/2022 4:46	10.81	6/26/2022 3:34	0.77	6/26/2022 5:16	30.33
6/27/2022 5:00	86.83	6/26/2022 4:17	0.58	6/26/2022 4:47	10.82	6/26/2022 3:35	0.70	6/26/2022 5:17	30.34
6/27/2022 5:01	86.78	6/26/2022 4:18	0.52	6/26/2022 4:48	10.78	6/26/2022 3:36	0.80	6/26/2022 5:18	30.36
6/27/2022 5:02	86.78	6/26/2022 4:19	0.48	6/26/2022 4:49	10.75	6/26/2022 3:37	0.68	6/26/2022 5:19	30.37
6/27/2022 5:03	86.80	6/26/2022 4:20	0.46	6/26/2022 4:50	10.80	6/26/2022 3:38	0.79	6/26/2022 5:20	30.39
6/27/2022 5:04	86.78	6/26/2022 4:21	0.41	6/26/2022 4:51	10.74	6/26/2022 3:39	0.68	6/26/2022 5:21	30.36
6/27/2022 5:05	86.80	6/26/2022 4:22	0.40	6/26/2022 4:52	10.76	6/26/2022 3:40	0.75	6/26/2022 5:22	30.35
6/27/2022 5:06	86.77	6/26/2022 4:23	0.36	6/26/2022 4:53	10.71	6/26/2022 3:41	0.72	6/26/2022 5:23	30.36
6/27/2022 5:07	86.77	6/26/2022 4:24	0.32	6/26/2022 4:54	10.76	6/26/2022 3:42	0.72	6/26/2022 5:24	30.34
6/27/2022 5:08	86.73	6/26/2022 4:25	0.33	6/26/2022 4:55	10.70	6/26/2022 3:43	0.70	6/26/2022 5:25	30.34
6/27/2022 5:09	86.80	6/26/2022 4:26	0.30	6/26/2022 4:56	10.74	6/26/2022 3:44	0.72	6/26/2022 5:26	30.36

6/27/2022 5:10	86.78	6/26/2022 4:27	0.31	6/26/2022 4:57	10.75	6/26/2022 3:45	0.80	6/26/2022 5:27	30.36
6/27/2022 5:11	86.79	6/26/2022 4:28	0.29	6/26/2022 4:58	10.72	6/26/2022 3:46	0.70	6/26/2022 5:28	30.33
6/27/2022 5:12	86.77	6/26/2022 4:29	0.31	6/26/2022 4:59	10.77	6/26/2022 3:47	0.80	6/26/2022 5:29	30.35
6/27/2022 5:13	86.75	6/26/2022 4:30	0.29	6/26/2022 5:00	10.75	6/26/2022 3:48	0.71	6/26/2022 5:30	30.36
6/27/2022 5:14	86.77	6/26/2022 4:31	0.29	6/26/2022 5:01	10.76	6/26/2022 3:49	0.73	6/26/2022 5:31	30.36
6/27/2022 5:15	86.73	6/26/2022 4:32	0.28	6/26/2022 5:02	10.79	6/26/2022 3:50	0.72	6/26/2022 5:32	30.34
6/27/2022 5:16	86.75	6/26/2022 4:33	0.28	6/26/2022 5:03	10.78	6/26/2022 3:51	0.68	6/26/2022 5:33	30.35
6/27/2022 5:17	86.77	6/26/2022 4:34	0.27	6/26/2022 5:04	10.77	6/26/2022 3:52	0.80	6/26/2022 5:34	30.35
6/27/2022 5:18	86.76	6/26/2022 4:35	0.28	6/26/2022 5:05	10.75	6/26/2022 3:53	0.72	6/26/2022 5:35	30.37
6/27/2022 5:19	86.72	6/26/2022 4:36	0.28	6/26/2022 5:06	10.78	6/26/2022 3:54	0.78	6/26/2022 5:36	30.36
6/27/2022 5:20	86.75	6/26/2022 4:37	0.24	6/26/2022 5:07	10.77	6/26/2022 3:55	0.73	6/26/2022 5:37	30.34
6/27/2022 5:21	86.79	6/26/2022 4:38	0.26	6/26/2022 5:08	10.72	6/26/2022 3:56	0.69	6/26/2022 5:38	30.39
6/27/2022 5:22	86.75	6/26/2022 4:39	0.27	6/26/2022 5:09	10.73	6/26/2022 3:57	0.69	6/26/2022 5:39	30.34
6/27/2022 5:23	86.72	6/26/2022 4:40	0.25	6/26/2022 5:10	10.75	6/26/2022 3:58	0.69	6/26/2022 5:40	30.34
6/27/2022 5:24	86.71	6/26/2022 4:41	0.24	6/26/2022 5:11	10.72	6/26/2022 3:59	0.76	6/26/2022 5:41	30.38
6/27/2022 5:25	86.71	6/26/2022 4:42	0.24	6/26/2022 5:12	10.72	6/26/2022 4:00	0.76	6/26/2022 5:42	30.34
6/27/2022 5:26	86.75	6/26/2022 4:43	0.22	6/26/2022 5:13	10.74	6/26/2022 4:01	0.71	6/26/2022 5:43	30.36
6/27/2022 5:27	86.74	6/26/2022 4:44	0.27	6/26/2022 5:14	10.71	6/26/2022 4:02	0.80	6/26/2022 5:44	30.35
6/27/2022 5:28	86.70	6/26/2022 4:45	0.25	6/26/2022 5:15	10.72	6/26/2022 4:03	0.69	6/26/2022 5:45	30.39
6/27/2022 5:29	86.71	6/26/2022 4:46	0.24	6/26/2022 5:16	10.70	6/26/2022 4:04	0.70	6/26/2022 5:46	30.35
6/27/2022 5:30	86.73	6/26/2022 4:47	0.28	6/26/2022 5:17	10.68	6/26/2022 4:05	0.73	6/26/2022 5:47	30.34
6/27/2022 5:31	86.79	6/26/2022 4:48	0.23	6/26/2022 5:18	10.70	6/26/2022 4:06	0.72	6/26/2022 5:48	30.34
6/27/2022 5:32	86.74	6/26/2022 4:49	0.22	6/26/2022 5:19	10.67	6/26/2022 4:07	0.73	6/26/2022 5:49	30.34
6/27/2022 5:33	86.74	6/26/2022 4:50	0.26	6/26/2022 5:20	10.67	6/26/2022 4:08	0.71	6/26/2022 5:50	30.35
6/27/2022 5:34	86.76	6/26/2022 4:51	0.24	6/26/2022 5:21	10.68	6/26/2022 4:09	0.73	6/26/2022 5:51	30.36
6/27/2022 5:35	86.73	6/26/2022 4:52	0.21	6/26/2022 5:22	10.73	6/26/2022 4:10	0.72	6/26/2022 5:52	30.39
6/27/2022 5:36	86.76	6/26/2022 4:53	0.20	6/26/2022 5:23	10.70	6/26/2022 4:11	0.72	6/26/2022 5:53	30.34
6/27/2022 5:37	86.74	6/26/2022 4:54	0.23	6/26/2022 5:24	10.73	6/26/2022 4:12	0.72	6/26/2022 5:54	30.36
6/27/2022 5:38	86.74	6/26/2022 4:55	0.18	6/26/2022 5:25	10.72	6/26/2022 4:13	0.72	6/26/2022 5:55	30.36
6/27/2022 5:39	86.72	6/26/2022 4:56	0.24	6/26/2022 5:26	10.71	6/26/2022 4:14	0.76	6/26/2022 5:56	30.36
6/27/2022 5:40	86.76	6/26/2022 4:57	0.22	6/26/2022 5:27	10.73	6/26/2022 4:15	0.68	6/26/2022 5:57	30.35
6/27/2022 5:41	86.76	6/26/2022 4:58	0.21	6/26/2022 5:28	10.76	6/26/2022 4:16	0.82	6/26/2022 5:58	30.35
6/27/2022 5:42	86.76	6/26/2022 4:59	0.18	6/26/2022 5:29	10.71	6/26/2022 4:17	0.68	6/26/2022 5:59	30.37
6/27/2022 5:43	86.72	6/26/2022 5:00	0.23	6/26/2022 5:30	10.70	6/26/2022 4:18	0.73	6/26/2022 6:00	30.36
6/27/2022 5:44	86.71	6/26/2022 5:01	0.21	6/26/2022 5:31	10.73	6/26/2022 4:19	0.69	6/26/2022 6:01	30.34
6/27/2022 5:45	86.73	6/26/2022 5:02	0.21	6/26/2022 5:32	10.69	6/26/2022 4:20	0.70	6/26/2022 6:02	30.36
6/27/2022 5:46	86.74	6/26/2022 5:03	0.21	6/26/2022 5:33	10.68	6/26/2022 4:21	0.79	6/26/2022 6:03	30.37
6/27/2022 5:47	86.72	6/26/2022 5:04	0.24	6/26/2022 5:34	10.70	6/26/2022 4:22	0.67	6/26/2022 6:04	30.34
6/27/2022 5:48	86.73	6/26/2022 5:05	0.22	6/26/2022 5:35	10.64	6/26/2022 4:23	0.80	6/26/2022 6:05	30.36
6/27/2022 5:49	86.72	6/26/2022 5:06	0.21	6/26/2022 5:36	10.70	6/26/2022 4:24	0.69	6/26/2022 6:06	30.34
6/27/2022 5:50	86.71	6/26/2022 5:07	0.22	6/26/2022 5:37	10.70	6/26/2022 4:25	0.71	6/26/2022 6:07	30.34
6/27/2022 5:51	86.71	6/26/2022 5:08	5.25	6/26/2022 5:38	10.67	6/26/2022 4:26	0.75	6/26/2022 6:08	30.30
6/27/2022 5:52	86.72	6/26/2022 5:09	7.42	6/26/2022 5:39	10.66	6/26/2022 4:27	0.69	6/26/2022 6:09	30.35
6/27/2022 5:53	86.76	6/26/2022 5:10	6.28	6/26/2022 5:40	10.67	6/26/2022 4:28	0.78	6/26/2022 6:10	30.34
6/27/2022 5:54	86.69	6/26/2022 5:11	5.35	6/26/2022 5:41	10.64	6/26/2022 4:29	0.68	6/26/2022 6:11	30.38
6/27/2022 5:55	86.71	6/26/2022 5:12	4.58	6/26/2022 5:42	10.67	6/26/2022 4:30	0.73	6/26/2022 6:12	30.35
6/27/2022 5:56	86.69	6/26/2022 5:13	3.91	6/26/2022 5:43	10.66	6/26/2022 4:31	0.72	6/26/2022 6:13	30.35
6/27/2022 5:57	86.72	6/26/2022 5:14	3.37	6/26/2022 5:44	10.67	6/26/2022 4:32	0.70	6/26/2022 6:14	30.40
6/27/2022 5:58	86.70	6/26/2022 5:15	2.88	6/26/2022 5:45	10.68	6/26/2022 4:33	0.74	6/26/2022 6:15	30.35
6/27/2022 5:59	86.72	6/26/2022 5:16	2.50	6/26/2022 5:46	10.65	6/26/2022 4:34	0.66	6/26/2022 6:16	30.34
6/27/2022 6:00	86.71	6/26/2022 5:17	2.20	6/26/2022 5:47	10.72	6/26/2022 4:35	0.79	6/26/2022 6:17	30.34
6/27/2022 6:01	86.68	6/26/2022 5:18	1.93	6/26/2022 5:48	10.67	6/26/2022 4:36	0.68	6/26/2022 6:18	30.33
6/27/2022 6:02	86.73	6/26/2022 5:19	1.73	6/26/2022 5:49	10.71	6/26/2022 4:37	0.76	6/26/2022 6:19	30.34
6/27/2022 6:03	86.74	6/26/2022 5:20	1.48	6/26/2022 5:50	10.74	6/26/2022 4:38	0.73	6/26/2022 6:20	30.31
6/27/2022 6:04	86.67	6/26/2022 5:21	1.34	6/26/2022 5:51	10.71	6/26/2022 4:39	0.74	6/26/2022 6:21	30.36
6/27/2022 6:05	86.72	6/26/2022 5:22	1.18	6/26/2022 5:52	10.69	6/26/2022 4:40	0.71	6/26/2022 6:22	30.37
6/27/2022 6:06	86.71	6/26/2022 5:23	1.06	6/26/2022 5:53	10.71	6/26/2022 4:41	0.67	6/26/2022 6:23	30.35
6/27/2022 6:07	86.74	6/26/2022 5:24	0.98	6/26/2022 5:54	10.75	6/26/2022 4:42	0.76	6/26/2022 6:24	30.34
6/27/2022 6:08	86.69	6/26/2022 5:25	0.86	6/26/2022 5:55	10.78	6/26/2022 4:43	0.66	6/26/2022 6:25	30.36
6/27/2022 6:09	86.69	6/26/2022 5:26	0.79	6/26/2022 5:56	10.81	6/26/2022 4:44	0.75	6/26/2022 6:26	30.34
6/27/2022 6:10	86.70	6/26/2022 5:27	0.69	6/26/2022 5:57	10.87	6/26/2022 4:45	0.68	6/26/2022 6:27	30.34
6/27/2022 6:11	86.72	6/26/2022 5:28	0.65	6/26/2022 5:58	10.92	6/26/2022 4:46	0.77	6/26/2022 6:28	30.38
6/27/2022 6:12	86.70	6/26/2022 5:29	0.57	6/26/2022 5:59	10.93	6/26/2022 4:47	0.72	6/26/2022 6:29	30.38
6/27/2022 6:13	86.67	6/26/2022 5:30	0.52	6/26/2022 6:00	10.97	6/26/2022 4:48	0.78	6/26/2022 6:30	30.34
6/27/2022 6:14	86.72	6/26/2022 5:31	0.53	6/26/2022 6:01	11.03	6/26/2022 4:49	0.70	6/26/2022 6:31	30.34
6/27/2022 6:15	86.70	6/26/2022 5:32	0.45	6/26/2022 6:02	11.07	6/26/2022 4:50	0.70	6/26/2022 6:32	30.34
6/27/2022 6:16	86.70	6/26/2022 5:33	0.43	6/26/2022 6:03	11.05	6/26/2022 4:51	0.73	6/26/2022 6:33	30.34
6/27/2022 6:17	86.68	6/26/2022 5:34	0.38	6/26/2022 6:04	11.13	6/26/2022 4:52	0.66	6/26/2022 6:34	30.35
6/27/2022 6:18	86.67	6/26/2022 5:35	0.39	6/26/2022 6:05	11.14	6/26/2022 4:53	0.75	6/26/2022 6:35	30.32
6/27/2022 6:19	86.70	6/26/2022 5:36	0.37	6/26/2022 6:06	11.17	6/26/2022 4:54	0.68	6/26/2022 6:36	30.36
6/27/2022 6:20	86.66	6/26/2022 5:37	0.35	6/26/2022 6:07	11.17	6/26/2022 4:55	0.69	6/26/2022 6:37	30.31
6/27/2022 6:21	86.66	6/26/2022 5:38	0.34	6/26/2022 6:08	11.19	6/26/2022 4:56	0.75	6/26/2022 6:38	30.34
6/27/2022 6:22	86.70	6/26/2022 5:39	0.32	6/26/2022 6:09	11.19	6/26/2022 4:57	0.70	6/26/2022 6:39	30.38
6/27/2022 6:23	86.68	6/26/2022 5:40	0.35	6/26/2022 6:10	11.14	6/26/2022 4:58	0.73	6/26/2022 6:40	30.34
6/27/2022 6:24	86.72	6/26/2022 5:41	0.31	6/26/2022 6:11	11.18	6/26/2022 4:59	0.67	6/26/2022 6:41	30.34
6/27/2022 6:25	86.67	6/26/2022 5:42	0.31	6/26/2022 6:12	11.15	6/26/2022 5:00	0.72	6/26/2022 6:42	30.35
6/27/2022 6:26	86.70	6/26/2022 5:43	0.28	6/26/2022 6:13	11.14	6/26/2022 5:01	0.64	6/26/2022 6:43	30.39
6/27/2022 6:27	86.70	6/26/2022 5:44	0.30	6/26/2022 6:14	11.16	6/26/2022 5:02	0.77	6/26/2022 6:44	30.36
6/27/2022 6:28	86.71	6/26/2022 5:45	0.27	6/26/2022 6:15	11.18	6/26/2022 5:03	0.63	6/26/2022 6:45	30.33
6/27/2022 6:29	86.70	6/26/2022 5:46	0.27	6/26/2022 6:16	11.15	6/26/2022 5:04	0.76	6/26/2022 6:46	30.33
6/27/2022 6:30	86.69	6/26/2022 5:47	0.27	6/26/2022 6:17	11.16	6/26/2022 5:05	0.66	6/26/2022 6:47	30.32
6/27/2022 6:31	86.67	6/26/2022 5:48	0.30	6/26/2022 6:18	11.13	6/26/2022 5:06	0.74	6/26/2022 6:48	30.37
6/27/2022 6:32	86.70	6/26/2022 5:49	0.26	6/26/2022 6:19	11.11	6/26/2022 5:07	0.72	6/26/2022 6:49	30.34
6/27/2022 6:33	86.70	6/26/2022 5:50	0.26	6/26/2022 6:20	11.11	6/26/2022 5:08	0.70	6/26/2022 6:50	30.35
6/27/2022 6:34	86.64	6/26/2022 5:51	0.26	6/26/2022 6:21	11.05	6/26/2022 5:09	0.69	6/26/2022 6:51	30.36
6/27/2022 6:35	86.67	6/26/2022 5:52	0.28	6/26/2022 6:22	11.05	6/26/2022 5:10	0.72	6/26/2022 6:52	30.35
6/27/2022 6:36	86.66	6/26/2022 5:53	0.24	6/26/2022 6:23	11.02	6/26/2022 5:11	0.77	6/26/2022 6:53	30.37
6/27/2022 6:37	86.68	6/26/2022 5:54	0.27	6/26/2022 6:24	11.02	6/26/2022 5:12	0.77	6/26/2022 6:54	30.35

6/27/2022 6:38	86.65	6/26/2022 5:55	0.23	6/26/2022 6:25	10.99	6/26/2022 5:13	0.65	6/26/2022 6:55	30.36
6/27/2022 6:39	86.68	6/26/2022 5:56	0.27	6/26/2022 6:26	10.98	6/26/2022 5:14	0.65	6/26/2022 6:56	30.34
6/27/2022 6:40	86.67	6/26/2022 5:57	0.24	6/26/2022 6:27	10.97	6/26/2022 5:15	0.76	6/26/2022 6:57	30.36
6/27/2022 6:41	86.67	6/26/2022 5:58	0.24	6/26/2022 6:28	10.95	6/26/2022 5:16	0.71	6/26/2022 6:58	30.34
6/27/2022 6:42	86.67	6/26/2022 5:59	0.22	6/26/2022 6:29	10.90	6/26/2022 5:17	0.67	6/26/2022 6:59	30.35
6/27/2022 6:43	86.69	6/26/2022 6:00	0.22	6/26/2022 6:30	10.90	6/26/2022 5:18	0.79	6/26/2022 7:00	30.35
6/27/2022 6:44	86.66	6/26/2022 6:01	0.22	6/26/2022 6:31	10.92	6/26/2022 5:19	0.66	6/26/2022 7:01	30.34
6/27/2022 6:45	86.64	6/26/2022 6:02	0.23	6/26/2022 6:32	10.90	6/26/2022 5:20	0.69	6/26/2022 7:02	30.33
6/27/2022 6:46	86.69	6/26/2022 6:03	0.25	6/26/2022 6:33	10.91	6/26/2022 5:21	0.73	6/26/2022 7:03	30.36
6/27/2022 6:47	86.65	6/26/2022 6:04	0.19	6/26/2022 6:34	10.89	6/26/2022 5:22	0.68	6/26/2022 7:04	30.37
6/27/2022 6:48	86.67	6/26/2022 6:05	0.20	6/26/2022 6:35	10.87	6/26/2022 5:23	0.73	6/26/2022 7:05	30.34
6/27/2022 6:49	86.66	6/26/2022 6:06	0.21	6/26/2022 6:36	10.88	6/26/2022 5:24	0.66	6/26/2022 7:06	30.35
6/27/2022 6:50	86.62	6/26/2022 6:07	0.24	6/26/2022 6:37	10.90	6/26/2022 5:25	0.70	6/26/2022 7:07	30.37
6/27/2022 6:51	86.68	6/26/2022 6:08	0.24	6/26/2022 6:38	10.88	6/26/2022 5:26	0.71	6/26/2022 7:08	30.34
6/27/2022 6:52	86.69	6/26/2022 6:09	0.24	6/26/2022 6:39	10.87	6/26/2022 5:27	0.71	6/26/2022 7:09	30.36
6/27/2022 6:53	86.62	6/26/2022 6:10	0.22	6/26/2022 6:40	10.88	6/26/2022 5:28	0.70	6/26/2022 7:10	30.34
6/27/2022 6:54	86.65	6/26/2022 6:11	5.87	6/26/2022 6:41	10.88	6/26/2022 5:29	0.71	6/26/2022 7:11	30.36
6/27/2022 6:55	86.66	6/26/2022 6:12	7.09	6/26/2022 6:42	10.83	6/26/2022 5:30	0.74	6/26/2022 7:12	30.33
6/27/2022 6:56	86.63	6/26/2022 6:13	6.03	6/26/2022 6:43	10.83	6/26/2022 5:31	0.70	6/26/2022 7:13	30.33
6/27/2022 6:57	86.63	6/26/2022 6:14	5.07	6/26/2022 6:44	10.84	6/26/2022 5:32	0.71	6/26/2022 7:14	32.32
6/27/2022 6:58	86.62	6/26/2022 6:15	4.32	6/26/2022 6:45	10.80	6/26/2022 5:33	0.69	6/26/2022 7:15	31.48
6/27/2022 6:59	86.62	6/26/2022 6:16	3.74	6/26/2022 6:46	10.79	6/26/2022 5:34	0.69	6/26/2022 7:16	30.78
6/27/2022 7:00	86.66	6/26/2022 6:17	3.24	6/26/2022 6:47	10.77	6/26/2022 5:35	0.70	6/26/2022 7:17	30.53
6/27/2022 7:01	86.69	6/26/2022 6:18	2.74	6/26/2022 6:48	10.78	6/26/2022 5:36	0.69	6/26/2022 7:18	30.41
6/27/2022 7:02	86.65	6/26/2022 6:19	2.40	6/26/2022 6:49	10.80	6/26/2022 5:37	0.69	6/26/2022 7:19	30.40
6/27/2022 7:03	86.65	6/26/2022 6:20	2.13	6/26/2022 6:50	10.77	6/26/2022 5:38	0.74	6/26/2022 7:20	30.39
6/27/2022 7:04	86.70	6/26/2022 6:21	1.87	6/26/2022 6:51	10.74	6/26/2022 5:39	0.65	6/26/2022 7:21	30.38
6/27/2022 7:05	86.62	6/26/2022 6:22	1.65	6/26/2022 6:52	10.73	6/26/2022 5:40	0.73	6/26/2022 7:22	30.35
6/27/2022 7:06	86.65	6/26/2022 6:23	1.43	6/26/2022 6:53	10.74	6/26/2022 5:41	0.67	6/26/2022 7:23	30.35
6/27/2022 7:07	86.63	6/26/2022 6:24	1.31	6/26/2022 6:54	10.72	6/26/2022 5:42	0.73	6/26/2022 7:24	30.38
6/27/2022 7:08	86.64	6/26/2022 6:25	1.17	6/26/2022 6:55	10.73	6/26/2022 5:43	0.69	6/26/2022 7:25	30.37
6/27/2022 7:09	86.61	6/26/2022 6:26	1.01	6/26/2022 6:56	10.69	6/26/2022 5:44	0.69	6/26/2022 7:26	30.38
6/27/2022 7:10	86.62	6/26/2022 6:27	0.91	6/26/2022 6:57	10.69	6/26/2022 5:45	0.70	6/26/2022 7:27	30.37
6/27/2022 7:11	86.66	6/26/2022 6:28	0.86	6/26/2022 6:58	10.69	6/26/2022 5:46	0.67	6/26/2022 7:28	30.36
6/27/2022 7:12	86.67	6/26/2022 6:29	0.75	6/26/2022 6:59	10.69	6/26/2022 5:47	0.76	6/26/2022 7:29	30.34
6/27/2022 7:13	86.62	6/26/2022 6:30	0.71	6/26/2022 7:00	10.69	6/26/2022 5:48	0.64	6/26/2022 7:30	30.38
6/27/2022 7:14	86.65	6/26/2022 6:31	0.63	6/26/2022 7:01	10.72	6/26/2022 5:49	0.73	6/26/2022 7:31	30.36
6/27/2022 7:15	86.57	6/26/2022 6:32	0.61	6/26/2022 7:02	10.71	6/26/2022 5:50	0.72	6/26/2022 7:32	30.36
6/27/2022 7:16	86.64	6/26/2022 6:33	0.57	6/26/2022 7:03	10.72	6/26/2022 5:51	0.69	6/26/2022 7:33	30.34
6/27/2022 7:17	86.64	6/26/2022 6:34	0.55	6/26/2022 7:04	10.76	6/26/2022 5:52	0.74	6/26/2022 7:34	30.34
6/27/2022 7:18	86.67	6/26/2022 6:35	0.49	6/26/2022 7:05	10.73	6/26/2022 5:53	0.68	6/26/2022 7:35	30.36
6/27/2022 7:19	86.61	6/26/2022 6:36	0.46	6/26/2022 7:06	10.73	6/26/2022 5:54	0.80	6/26/2022 7:36	30.35
6/27/2022 7:20	86.63	6/26/2022 6:37	0.45	6/26/2022 7:07	10.75	6/26/2022 5:55	0.69	6/26/2022 7:37	30.36
6/27/2022 7:21	86.61	6/26/2022 6:38	0.42	6/26/2022 7:08	10.74	6/26/2022 5:56	0.73	6/26/2022 7:38	30.38
6/27/2022 7:22	86.67	6/26/2022 6:39	0.40	6/26/2022 7:09	10.75	6/26/2022 5:57	0.70	6/26/2022 7:39	30.32
6/27/2022 7:23	86.63	6/26/2022 6:40	0.41	6/26/2022 7:10	10.71	6/26/2022 5:58	0.70	6/26/2022 7:40	30.35
6/27/2022 7:24	86.59	6/26/2022 6:41	0.36	6/26/2022 7:11	10.75	6/26/2022 5:59	0.78	6/26/2022 7:41	30.34
6/27/2022 7:25	86.64	6/26/2022 6:42	0.33	6/26/2022 7:12	10.72	6/26/2022 6:00	0.68	6/26/2022 7:42	30.38
6/27/2022 7:26	86.63	6/26/2022 6:43	0.32	6/26/2022 7:13	10.66	6/26/2022 6:01	0.78	6/26/2022 7:43	30.35
6/27/2022 7:27	86.57	6/26/2022 6:44	0.34	6/26/2022 7:14	10.69	6/26/2022 6:02	0.67	6/26/2022 7:44	30.34
6/27/2022 7:28	86.59	6/26/2022 6:45	0.29	6/26/2022 7:15	10.65	6/26/2022 6:03	0.75	6/26/2022 7:45	30.35
6/27/2022 7:29	86.63	6/26/2022 6:46	0.31	6/26/2022 7:16	10.68	6/26/2022 6:04	0.68	6/26/2022 7:46	30.34
6/27/2022 7:30	86.60	6/26/2022 6:47	0.32	6/26/2022 7:17	10.67	6/26/2022 6:05	0.68	6/26/2022 7:47	30.35
6/27/2022 7:31	86.65	6/26/2022 6:48	0.28	6/26/2022 7:18	10.66	6/26/2022 6:06	0.78	6/26/2022 7:48	30.34
6/27/2022 7:32	86.61	6/26/2022 6:49	0.27	6/26/2022 7:19	10.66	6/26/2022 6:07	0.68	6/26/2022 7:49	30.34
6/27/2022 7:33	86.64	6/26/2022 6:50	0.29	6/26/2022 7:20	10.66	6/26/2022 6:08	0.74	6/26/2022 7:50	30.34
6/27/2022 7:34	86.64	6/26/2022 6:51	0.28	6/26/2022 7:21	10.66	6/26/2022 6:09	0.69	6/26/2022 7:51	30.35
6/27/2022 7:35	86.61	6/26/2022 6:52	0.24	6/26/2022 7:22	10.69	6/26/2022 6:10	0.73	6/26/2022 7:52	30.35
6/27/2022 7:36	86.59	6/26/2022 6:53	0.22	6/26/2022 7:23	10.62	6/26/2022 6:11	0.70	6/26/2022 7:53	30.37
6/27/2022 7:37	86.61	6/26/2022 6:54	0.24	6/26/2022 7:24	10.63	6/26/2022 6:12	0.76	6/26/2022 7:54	30.35
6/27/2022 7:38	86.63	6/26/2022 6:55	0.28	6/26/2022 7:25	10.64	6/26/2022 6:13	0.77	6/26/2022 7:55	30.34
6/27/2022 7:39	86.64	6/26/2022 6:56	0.23	6/26/2022 7:26	10.60	6/26/2022 6:14	0.73	6/26/2022 7:56	30.36
6/27/2022 7:40	86.56	6/26/2022 6:57	0.29	6/26/2022 7:27	10.60	6/26/2022 6:15	0.68	6/26/2022 7:57	30.33
6/27/2022 7:41	86.61	6/26/2022 6:58	0.23	6/26/2022 7:28	10.65	6/26/2022 6:16	0.69	6/26/2022 7:58	30.35
6/27/2022 7:42	86.60	6/26/2022 6:59	0.27	6/26/2022 7:29	10.68	6/26/2022 6:17	0.81	6/26/2022 7:59	30.33
6/27/2022 7:43	86.58	6/26/2022 7:00	0.23	6/26/2022 7:30	10.70	6/26/2022 6:18	0.69	6/26/2022 8:00	30.31
6/27/2022 7:44	86.56	6/26/2022 7:01	0.25	6/26/2022 7:31	10.73	6/26/2022 6:19	0.64	6/26/2022 8:01	30.30
6/27/2022 7:45	86.59	6/26/2022 7:02	0.28	6/26/2022 7:32	10.73	6/26/2022 6:20	0.79	6/26/2022 8:02	30.35
6/27/2022 7:46	86.60	6/26/2022 7:03	0.26	6/26/2022 7:33	10.76	6/26/2022 6:21	0.67	6/26/2022 8:03	30.37
6/27/2022 7:47	86.63	6/26/2022 7:04	0.22	6/26/2022 7:34	10.76	6/26/2022 6:22	0.74	6/26/2022 8:04	30.36
6/27/2022 7:48	86.63	6/26/2022 7:05	0.24	6/26/2022 7:35	10.74	6/26/2022 6:23	0.68	6/26/2022 8:05	30.34
6/27/2022 7:49	86.60	6/26/2022 7:06	0.23	6/26/2022 7:36	10.74	6/26/2022 6:24	0.70	6/26/2022 8:06	30.31
6/27/2022 7:50	86.63	6/26/2022 7:07	0.26	6/26/2022 7:37	10.72	6/26/2022 6:25	0.73	6/26/2022 8:07	32.42
6/27/2022 7:51	86.59	6/26/2022 7:08	0.25	6/26/2022 7:38	10.71	6/26/2022 6:26	0.69	6/26/2022 8:08	31.20
6/27/2022 7:52	86.57	6/26/2022 7:09	0.24	6/26/2022 7:39	10.71	6/26/2022 6:27	0.73	6/26/2022 8:09	30.69
6/27/2022 7:53	86.60	6/26/2022 7:10	0.24	6/26/2022 7:40	10.73	6/26/2022 6:28	0.72	6/26/2022 8:10	30.48
6/27/2022 7:54	86.58	6/26/2022 7:11	0.20	6/26/2022 7:41	10.68	6/26/2022 6:29	0.75	6/26/2022 8:11	30.38
6/27/2022 7:55	86.57	6/26/2022 7:12	0.20	6/26/2022 7:42	10.72	6/26/2022 6:30	0.72	6/26/2022 8:12	30.39
6/27/2022 7:56	86.59	6/26/2022 7:13	0.23	6/26/2022 7:43	10.68	6/26/2022 6:31	0.72	6/26/2022 8:13	30.40
6/27/2022 7:57	86.53	6/26/2022 7:14	0.23	6/26/2022 7:44	10.69	6/26/2022 6:32	0.66	6/26/2022 8:14	30.38
6/27/2022 7:58	86.56	6/26/2022 7:15	0.25	6/26/2022 7:45	10.71	6/26/2022 6:33	0.78	6/26/2022 8:15	30.35
6/27/2022 7:59	86.57	6/26/2022 7:16	0.19	6/26/2022 7:46	10.71	6/26/2022 6:34	0.69	6/26/2022 8:16	30.38
6/27/2022 8:00	86.56	6/26/2022 7:17	0.25	6/26/2022 7:47	10.68	6/26/2022 6:35	0.74	6/26/2022 8:17	30.38
6/27/2022 8:01	86.56	6/26/2022 7:18	0.28	6/26/2022 7:48	10.68	6/26/2022 6:36	0.72	6/26/2022 8:18	30.36
6/27/2022 8:02	86.64	6/26/2022 7:19	0.21	6/26/2022 7:49	10.66	6/26/2022 6:37	0.75	6/26/2022 8:19	31.43
6/27/2022 8:03	86.61	6/26/2022 7:20	0.24	6/26/2022 7:50	10.66	6/26/2022 6:38	0.71	6/26/2022 8:20	31.80
6/27/2022 8:04	86.61	6/26/2022 7:21	5.42	6/26/2022 7:51	10.64	6/26/2022 6:39	0.79	6/26/2022 8:21	30.87
6/27/2022 8:05	86.62	6/26/2022 7:22	7.74	6/26/2022 7:52	10.65	6/26/2022 6:40	0.67	6/26/2022 8:22	30.55

6/27/2022 8:06	86.61	6/26/2022 7:23	6.49	6/26/2022 7:53	10.64	6/26/2022 6:41	0.79	6/26/2022 8:23	30.43
6/27/2022 8:07	86.60	6/26/2022 7:24	5.53	6/26/2022 7:54	10.62	6/26/2022 6:42	0.70	6/26/2022 8:24	30.44
6/27/2022 8:08	86.60	6/26/2022 7:25	4.67	6/26/2022 7:55	10.62	6/26/2022 6:43	0.70	6/26/2022 8:25	30.40
6/27/2022 8:09	86.56	6/26/2022 7:26	4.06	6/26/2022 7:56	10.62	6/26/2022 6:44	0.72	6/26/2022 8:26	30.39
6/27/2022 8:10	86.56	6/26/2022 7:27	3.49	6/26/2022 7:57	10.60	6/26/2022 6:45	0.70	6/26/2022 8:27	30.38
6/27/2022 8:11	86.59	6/26/2022 7:28	2.95	6/26/2022 7:58	10.59	6/26/2022 6:46	0.73	6/26/2022 8:28	30.35
6/27/2022 8:12	90.48	6/26/2022 7:29	2.58	6/26/2022 7:59	10.66	6/26/2022 6:47	0.64	6/26/2022 8:29	31.88
6/27/2022 8:13	93.23	6/26/2022 7:30	2.29	6/26/2022 8:00	10.66	6/26/2022 6:48	0.75	6/26/2022 8:30	31.78
6/27/2022 8:14	94.84	6/26/2022 7:31	2.02	6/26/2022 8:01	10.68	6/26/2022 6:49	0.70	6/26/2022 8:31	30.92
6/27/2022 8:15	95.46	6/26/2022 7:32	1.75	6/26/2022 8:02	10.68	6/26/2022 6:50	0.78	6/26/2022 8:32	30.54
6/27/2022 8:16	92.70	6/26/2022 7:33	1.59	6/26/2022 8:03	10.67	6/26/2022 6:51	0.64	6/26/2022 8:33	30.46
6/27/2022 8:17	91.04	6/26/2022 7:34	6.16	6/26/2022 8:04	10.68	6/26/2022 6:52	0.74	6/26/2022 8:34	30.44
6/27/2022 8:18	89.92	6/26/2022 7:35	8.90	6/26/2022 8:05	10.73	6/26/2022 6:53	0.68	6/26/2022 8:35	30.42
6/27/2022 8:19	89.15	6/26/2022 7:36	7.50	6/26/2022 8:06	10.68	6/26/2022 6:54	0.74	6/26/2022 8:36	30.41
6/27/2022 8:20	88.68	6/26/2022 7:37	6.37	6/26/2022 8:07	10.69	6/26/2022 6:55	0.67	6/26/2022 8:37	30.39
6/27/2022 8:21	88.33	6/26/2022 7:38	5.36	6/26/2022 8:08	10.65	6/26/2022 6:56	0.72	6/26/2022 8:38	30.40
6/27/2022 8:22	88.05	6/26/2022 7:39	4.63	6/26/2022 8:09	10.67	6/26/2022 6:57	0.78	6/26/2022 8:39	30.38
6/27/2022 8:23	87.88	6/26/2022 7:40	4.00	6/26/2022 8:10	10.68	6/26/2022 6:58	0.71	6/26/2022 8:40	30.39
6/27/2022 8:24	87.77	6/26/2022 7:41	3.44	6/26/2022 8:11	10.67	6/26/2022 6:59	0.74	6/26/2022 8:41	30.39
6/27/2022 8:25	87.59	6/26/2022 7:42	3.99	6/26/2022 8:12	10.65	6/26/2022 7:00	0.68	6/26/2022 8:42	30.37
6/27/2022 8:26	87.50	6/26/2022 7:43	9.46	6/26/2022 8:13	10.70	6/26/2022 7:01	0.75	6/26/2022 8:43	30.33
6/27/2022 8:27	87.39	6/26/2022 7:44	11.25	6/26/2022 8:14	10.67	6/26/2022 7:02	0.70	6/26/2022 8:44	30.38
6/27/2022 8:28	87.43	6/26/2022 7:45	9.55	6/26/2022 8:15	10.71	6/26/2022 7:03	0.73	6/26/2022 8:45	30.39
6/27/2022 8:29	87.35	6/26/2022 7:46	8.05	6/26/2022 8:16	10.71	6/26/2022 7:04	0.69	6/26/2022 8:46	30.35
6/27/2022 8:30	87.30	6/26/2022 7:47	6.84	6/26/2022 8:17	10.72	6/26/2022 7:05	0.68	6/26/2022 8:47	30.34
6/27/2022 8:31	87.26	6/26/2022 7:48	5.87	6/26/2022 8:18	10.71	6/26/2022 7:06	0.69	6/26/2022 8:48	30.37
6/27/2022 8:32	87.26	6/26/2022 7:49	5.03	6/26/2022 8:19	10.71	6/26/2022 7:07	0.68	6/26/2022 8:49	30.37
6/27/2022 8:33	87.19	6/26/2022 7:50	4.31	6/26/2022 8:20	10.74	6/26/2022 7:08	0.76	6/26/2022 8:50	30.36
6/27/2022 8:34	87.12	6/26/2022 7:51	3.78	6/26/2022 8:21	10.72	6/26/2022 7:09	0.64	6/26/2022 8:51	30.36
6/27/2022 8:35	87.14	6/26/2022 7:52	3.26	6/26/2022 8:22	10.71	6/26/2022 7:10	0.74	6/26/2022 8:52	30.37
6/27/2022 8:36	87.12	6/26/2022 7:53	2.82	6/26/2022 8:23	10.70	6/26/2022 7:11	0.64	6/26/2022 8:53	30.36
6/27/2022 8:37	87.13	6/26/2022 7:54	2.44	6/26/2022 8:24	10.69	6/26/2022 7:12	0.68	6/26/2022 8:54	30.36
6/27/2022 8:38	87.06	6/26/2022 7:55	2.14	6/26/2022 8:25	10.71	6/26/2022 7:13	0.69	6/26/2022 8:55	30.35
6/27/2022 8:39	87.10	6/26/2022 7:56	1.92	6/26/2022 8:26	10.68	6/26/2022 7:14	0.69	6/26/2022 8:56	30.36
6/27/2022 8:40	87.06	6/26/2022 7:57	1.69	6/26/2022 8:27	10.64	6/26/2022 7:15	0.72	6/26/2022 8:57	30.37
6/27/2022 8:41	87.06	6/26/2022 7:58	1.54	6/26/2022 8:28	10.66	6/26/2022 7:16	0.63	6/26/2022 8:58	30.36
6/27/2022 8:42	87.04	6/26/2022 7:59	1.36	6/26/2022 8:29	10.63	6/26/2022 7:17	0.74	6/26/2022 8:59	30.32
6/27/2022 8:43	87.06	6/26/2022 8:00	1.20	6/26/2022 8:30	10.64	6/26/2022 7:18	0.70	6/26/2022 9:00	30.38
6/27/2022 8:44	86.98	6/26/2022 8:01	1.11	6/26/2022 8:31	10.70	6/26/2022 7:19	0.71	6/26/2022 9:01	30.34
6/27/2022 8:45	87.02	6/26/2022 8:02	0.97	6/26/2022 8:32	10.69	6/26/2022 7:20	0.73	6/26/2022 9:02	30.38
6/27/2022 8:46	87.01	6/26/2022 8:03	0.89	6/26/2022 8:33	10.70	6/26/2022 7:21	0.67	6/26/2022 9:03	30.34
6/27/2022 8:47	86.97	6/26/2022 8:04	0.84	6/26/2022 8:34	10.69	6/26/2022 7:22	0.66	6/26/2022 9:04	30.36
6/27/2022 8:48	86.92	6/26/2022 8:05	0.75	6/26/2022 8:35	10.76	6/26/2022 7:23	0.74	6/26/2022 9:05	30.33
6/27/2022 8:49	86.93	6/26/2022 8:06	0.71	6/26/2022 8:36	10.70	6/26/2022 7:24	0.76	6/26/2022 9:06	30.58
6/27/2022 8:50	86.97	6/26/2022 8:07	0.65	6/26/2022 8:37	10.73	6/26/2022 7:25	0.68	6/26/2022 9:07	32.01
6/27/2022 8:51	86.90	6/26/2022 8:08	6.40	6/26/2022 8:38	10.73	6/26/2022 7:26	0.68	6/26/2022 9:08	30.99
6/27/2022 8:52	86.93	6/26/2022 8:09	7.61	6/26/2022 8:39	10.74	6/26/2022 7:27	0.76	6/26/2022 9:09	30.58
6/27/2022 8:53	86.94	6/26/2022 8:10	6.41	6/26/2022 8:40	10.70	6/26/2022 7:28	0.67	6/26/2022 9:10	30.46
6/27/2022 8:54	86.92	6/26/2022 8:11	5.44	6/26/2022 8:41	10.74	6/26/2022 7:29	0.66	6/26/2022 9:11	30.39
6/27/2022 8:55	86.89	6/26/2022 8:12	4.69	6/26/2022 8:42	13.75	6/26/2022 7:30	0.74	6/26/2022 9:12	30.38
6/27/2022 8:56	86.90	6/26/2022 8:13	4.03	6/26/2022 8:43	14.97	6/26/2022 7:31	0.70	6/26/2022 9:13	30.39
6/27/2022 8:57	86.88	6/26/2022 8:14	3.43	6/26/2022 8:44	14.43	6/26/2022 7:32	0.70	6/26/2022 9:14	30.38
6/27/2022 8:58	86.89	6/26/2022 8:15	2.99	6/26/2022 8:45	14.01	6/26/2022 7:33	0.74	6/26/2022 9:15	30.37
6/27/2022 8:59	86.91	6/26/2022 8:16	2.60	6/26/2022 8:46	13.62	6/26/2022 7:34	0.69	6/26/2022 9:16	30.40
6/27/2022 9:00	86.90	6/26/2022 8:17	2.29	6/26/2022 8:47	13.25	6/26/2022 7:35	0.75	6/26/2022 9:17	30.37
6/27/2022 9:01	86.90	6/26/2022 8:18	2.03	6/26/2022 8:48	12.99	6/26/2022 7:36	0.73	6/26/2022 9:18	30.40
6/27/2022 9:02	86.86	6/26/2022 8:19	1.77	6/26/2022 8:49	12.73	6/26/2022 7:37	0.65	6/26/2022 9:19	30.35
6/27/2022 9:03	86.92	6/26/2022 8:20	1.57	6/26/2022 8:50	12.56	6/26/2022 7:38	0.72	6/26/2022 9:20	30.37
6/27/2022 9:04	86.85	6/26/2022 8:21	1.41	6/26/2022 8:51	12.32	6/26/2022 7:39	0.67	6/26/2022 9:21	30.36
6/27/2022 9:05	86.86	6/26/2022 8:22	1.28	6/26/2022 8:52	12.14	6/26/2022 7:40	0.76	6/26/2022 9:22	30.37
6/27/2022 9:06	86.83	6/26/2022 8:23	1.14	6/26/2022 8:53	12.01	6/26/2022 7:41	0.73	6/26/2022 9:23	32.82
6/27/2022 9:07	90.67	6/26/2022 8:24	1.15	6/26/2022 8:54	11.86	6/26/2022 7:42	0.66	6/26/2022 9:24	31.43
6/27/2022 9:08	93.38	6/26/2022 8:25	1.14	6/26/2022 8:55	11.73	6/26/2022 7:43	0.76	6/26/2022 9:25	30.77
6/27/2022 9:09	94.55	6/26/2022 8:26	1.06	6/26/2022 8:56	11.61	6/26/2022 7:44	0.69	6/26/2022 9:26	30.52
6/27/2022 9:10	91.95	6/26/2022 8:27	1.00	6/26/2022 8:57	11.56	6/26/2022 7:45	0.73	6/26/2022 9:27	30.46
6/27/2022 9:11	90.40	6/26/2022 8:28	0.90	6/26/2022 8:58	11.47	6/26/2022 7:46	0.68	6/26/2022 9:28	30.42
6/27/2022 9:12	89.51	6/26/2022 8:29	0.83	6/26/2022 8:59	11.40	6/26/2022 7:47	0.68	6/26/2022 9:29	30.40
6/27/2022 9:13	88.91	6/26/2022 8:30	0.78	6/26/2022 9:00	11.36	6/26/2022 7:48	0.78	6/26/2022 9:30	30.40
6/27/2022 9:14	88.47	6/26/2022 8:31	0.72	6/26/2022 9:01	11.27	6/26/2022 7:49	0.76	6/26/2022 9:31	30.39
6/27/2022 9:15	88.17	6/26/2022 8:32	0.68	6/26/2022 9:02	11.24	6/26/2022 7:50	0.72	6/26/2022 9:32	30.36
6/27/2022 9:16	87.93	6/26/2022 8:33	0.59	6/26/2022 9:03	11.19	6/26/2022 7:51	0.70	6/26/2022 9:33	30.37
6/27/2022 9:17	87.79	6/26/2022 8:34	0.53	6/26/2022 9:04	11.23	6/26/2022 7:52	0.68	6/26/2022 9:34	30.37
6/27/2022 9:18	87.70	6/26/2022 8:35	0.52	6/26/2022 9:05	11.14	6/26/2022 7:53	0.70	6/26/2022 9:35	30.38
6/27/2022 9:19	87.59	6/26/2022 8:36	0.48	6/26/2022 9:06	11.12	6/26/2022 7:54	0.76	6/26/2022 9:36	30.34
6/27/2022 9:20	87.55	6/26/2022 8:37	0.47	6/26/2022 9:07	11.09	6/26/2022 7:55	0.68	6/26/2022 9:37	30.38
6/27/2022 9:21	87.47	6/26/2022 8:38	0.49	6/26/2022 9:08	11.03	6/26/2022 7:56	0.77	6/26/2022 9:38	30.36
6/27/2022 9:22	87.49	6/26/2022 8:39	0.46	6/26/2022 9:09	10.99	6/26/2022 7:57	0.68	6/26/2022 9:39	30.35
6/27/2022 9:23	87.35	6/26/2022 8:40	0.39	6/26/2022 9:10	10.97	6/26/2022 7:58	0.74	6/26/2022 9:40	30.38
6/27/2022 9:24	87.37	6/26/2022 8:41	0.37	6/26/2022 9:11	10.96	6/26/2022 7:59	0.66	6/26/2022 9:41	30.37
6/27/2022 9:25	87.32	6/26/2022 8:42	0.39	6/26/2022 9:12	10.90	6/26/2022 8:00	0.76	6/26/2022 9:42	30.38
6/27/2022 9:26	87.33	6/26/2022 8:43	0.40	6/26/2022 9:13	12.79	6/26/2022 8:01	0.71	6/26/2022 9:43	30.39
6/27/2022 9:27	87.24	6/26/2022 8:44	0.31	6/26/2022 9:14	17.07	6/26/2022 8:02	0.72	6/26/2022 9:44	30.34
6/27/2022 9:28	87.27	6/26/2022 8:45	0.34	6/26/2022 9:15	17.71	6/26/2022 8:03	0.72	6/26/2022 9:45	30.35
6/27/2022 9:29	87.17	6/26/2022 8:46	0.33	6/26/2022 9:16	16.87	6/26/2022 8:04	0.68	6/26/2022 9:46	30.34
6/27/2022 9:30	87.23	6/26/2022 8:47	0.37	6/26/2022 9:17	20.23	6/26/2022 8:05	0.75	6/26/2022 9:47	30.36
6/27/2022 9:31	87.22	6/26/2022 8:48	0.32	6/26/2022 9:18	23.01	6/26/2022 8:06	0.65	6/26/2022 9:48	30.34
6/27/2022 9:32	87.21	6/26/2022 8:49	0.33	6/26/2022 9:19	21.75	6/26/2022 8:07	0.75	6/26/2022 9:49	30.34
6/27/2022 9:33	87.15	6/26/2022 8:50	0.30	6/26/2022 9:20	20.60	6/26/2022 8:08	0.68	6/26/2022 9:50	30.37

6/27/2022 9:34	87.14	6/26/2022 8:51	0.28	6/26/2022 9:21	19.56	6/26/2022 8:09	0.67	6/26/2022 9:51	30.36
6/27/2022 9:35	87.18	6/26/2022 8:52	0.29	6/26/2022 9:22	18.69	6/26/2022 8:10	0.68	6/26/2022 9:52	30.35
6/27/2022 9:36	87.14	6/26/2022 8:53	0.31	6/26/2022 9:23	17.89	6/26/2022 8:11	0.78	6/26/2022 9:53	30.37
6/27/2022 9:37	87.10	6/26/2022 8:54	0.30	6/26/2022 9:24	17.18	6/26/2022 8:12	0.69	6/26/2022 9:54	30.34
6/27/2022 9:38	87.06	6/26/2022 8:55	0.31	6/26/2022 9:25	16.56	6/26/2022 8:13	0.66	6/26/2022 9:55	30.35
6/27/2022 9:39	87.07	6/26/2022 8:56	0.31	6/26/2022 9:26	15.98	6/26/2022 8:14	0.75	6/26/2022 9:56	30.36
6/27/2022 9:40	87.07	6/26/2022 8:57	0.25	6/26/2022 9:27	15.44	6/26/2022 8:15	0.78	6/26/2022 9:57	30.34
6/27/2022 9:41	87.05	6/26/2022 8:58	0.32	6/26/2022 9:28	15.02	6/26/2022 8:16	0.70	6/26/2022 9:58	30.33
6/27/2022 9:42	87.06	6/26/2022 8:59	0.25	6/26/2022 9:29	14.65	6/26/2022 8:17	0.66	6/26/2022 9:59	30.32
6/27/2022 9:43	87.08	6/26/2022 9:00	0.27	6/26/2022 9:30	14.26	6/26/2022 8:18	0.75	6/26/2022 10:00	30.31
6/27/2022 9:44	87.07	6/26/2022 9:01	0.26	6/26/2022 9:31	13.98	6/26/2022 8:19	0.67	6/26/2022 10:01	30.38
6/27/2022 9:45	87.01	6/26/2022 9:02	0.28	6/26/2022 9:32	13.71	6/26/2022 8:20	0.77	6/26/2022 10:02	30.35
6/27/2022 9:46	86.99	6/26/2022 9:03	0.28	6/26/2022 9:33	14.07	6/26/2022 8:21	0.67	6/26/2022 10:03	30.35
6/27/2022 9:47	87.04	6/26/2022 9:04	0.26	6/26/2022 9:34	18.29	6/26/2022 8:22	0.75	6/26/2022 10:04	30.37
6/27/2022 9:48	87.02	6/26/2022 9:05	0.28	6/26/2022 9:35	18.15	6/26/2022 8:23	4.92	6/26/2022 10:05	30.34
6/27/2022 9:49	86.99	6/26/2022 9:06	0.23	6/26/2022 9:36	17.43	6/26/2022 8:24	7.24	6/26/2022 10:06	30.31
6/27/2022 9:50	87.01	6/26/2022 9:07	0.30	6/26/2022 9:37	16.72	6/26/2022 8:25	4.44	6/26/2022 10:07	30.37
6/27/2022 9:51	86.99	6/26/2022 9:08	0.27	6/26/2022 9:38	16.15	6/26/2022 8:26	2.38	6/26/2022 10:08	30.35
6/27/2022 9:52	86.98	6/26/2022 9:09	2.45	6/26/2022 9:39	19.15	6/26/2022 8:27	0.88	6/26/2022 10:09	30.37
6/27/2022 9:53	86.96	6/26/2022 9:10	8.04	6/26/2022 9:40	21.84	6/26/2022 8:28	0.71	6/26/2022 10:10	30.33
6/27/2022 9:54	86.96	6/26/2022 9:11	8.08	6/26/2022 9:41	20.67	6/26/2022 8:29	0.74	6/26/2022 10:11	30.33
6/27/2022 9:55	86.95	6/26/2022 9:12	6.81	6/26/2022 9:42	19.67	6/26/2022 8:30	0.70	6/26/2022 10:12	30.34
6/27/2022 9:56	86.92	6/26/2022 9:13	5.77	6/26/2022 9:43	18.81	6/26/2022 8:31	0.71	6/26/2022 10:13	30.33
6/27/2022 9:57	86.95	6/26/2022 9:14	4.92	6/26/2022 9:44	17.99	6/26/2022 8:32	0.75	6/26/2022 10:14	30.32
6/27/2022 9:58	86.95	6/26/2022 9:15	4.22	6/26/2022 9:45	17.35	6/26/2022 8:33	0.70	6/26/2022 10:15	30.30
6/27/2022 9:59	86.95	6/26/2022 9:16	3.66	6/26/2022 9:46	16.72	6/26/2022 8:34	0.71	6/26/2022 10:16	30.34
6/27/2022 10:00	86.94	6/26/2022 9:17	3.15	6/26/2022 9:47	20.17	6/26/2022 8:35	0.70	6/26/2022 10:17	30.33
6/27/2022 10:01	86.94	6/26/2022 9:18	2.69	6/26/2022 9:48	21.27	6/26/2022 8:36	0.72	6/26/2022 10:18	30.30
6/27/2022 10:02	86.87	6/26/2022 9:19	2.35	6/26/2022 9:49	20.23	6/26/2022 8:37	0.71	6/26/2022 10:19	30.31
6/27/2022 10:03	86.98	6/26/2022 9:20	2.08	6/26/2022 9:50	19.30	6/26/2022 8:38	0.67	6/26/2022 10:20	30.32
6/27/2022 10:04	86.88	6/26/2022 9:21	1.83	6/26/2022 9:51	18.48	6/26/2022 8:39	0.71	6/26/2022 10:21	30.30
6/27/2022 10:05	86.90	6/26/2022 9:22	1.63	6/26/2022 9:52	17.73	6/26/2022 8:40	0.69	6/26/2022 10:22	30.36
6/27/2022 10:06	86.92	6/26/2022 9:23	1.47	6/26/2022 9:53	20.54	6/26/2022 8:41	0.71	6/26/2022 10:23	30.32
6/27/2022 10:07	86.90	6/26/2022 9:24	1.29	6/26/2022 9:54	20.39	6/26/2022 8:42	0.73	6/26/2022 10:24	30.35
6/27/2022 10:08	86.88	6/26/2022 9:25	1.16	6/26/2022 9:55	19.39	6/26/2022 8:43	0.69	6/26/2022 10:25	30.33
6/27/2022 10:09	86.92	6/26/2022 9:26	1.02	6/26/2022 9:56	18.61	6/26/2022 8:44	0.74	6/26/2022 10:26	30.35
6/27/2022 10:10	86.89	6/26/2022 9:27	0.91	6/26/2022 9:57	17.90	6/26/2022 8:45	0.70	6/26/2022 10:27	30.32
6/27/2022 10:11	86.89	6/26/2022 9:28	0.86	6/26/2022 9:58	17.21	6/26/2022 8:46	0.76	6/26/2022 10:28	30.32
6/27/2022 10:12	86.89	6/26/2022 9:29	0.80	6/26/2022 9:59	16.67	6/26/2022 8:47	0.64	6/26/2022 10:29	30.31
6/27/2022 10:13	86.94	6/26/2022 9:30	0.71	6/26/2022 10:00	16.13	6/26/2022 8:48	0.75	6/26/2022 10:30	30.32
6/27/2022 10:14	86.91	6/26/2022 9:31	0.65	6/26/2022 10:01	15.64	6/26/2022 8:49	0.65	6/26/2022 10:31	30.33
6/27/2022 10:15	86.85	6/26/2022 9:32	0.64	6/26/2022 10:02	15.21	6/26/2022 8:50	0.75	6/26/2022 10:32	30.35
6/27/2022 10:16	86.88	6/26/2022 9:33	0.52	6/26/2022 10:03	14.87	6/26/2022 8:51	0.69	6/26/2022 10:33	30.32
6/27/2022 10:17	86.89	6/26/2022 9:34	0.54	6/26/2022 10:04	14.53	6/26/2022 8:52	0.73	6/26/2022 10:34	30.33
6/27/2022 10:18	86.89	6/26/2022 9:35	0.46	6/26/2022 10:05	14.21	6/26/2022 8:53	0.67	6/26/2022 10:35	30.31
6/27/2022 10:19	86.89	6/26/2022 9:36	0.43	6/26/2022 10:06	13.92	6/26/2022 8:54	0.73	6/26/2022 10:36	30.36
6/27/2022 10:20	86.84	6/26/2022 9:37	0.43	6/26/2022 10:07	13.68	6/26/2022 8:55	0.70	6/26/2022 10:37	32.31
6/27/2022 10:21	86.83	6/26/2022 9:38	0.39	6/26/2022 10:08	13.43	6/26/2022 8:56	0.72	6/26/2022 10:38	31.15
6/27/2022 10:22	86.84	6/26/2022 9:39	0.41	6/26/2022 10:09	13.19	6/26/2022 8:57	0.75	6/26/2022 10:39	30.64
6/27/2022 10:23	86.87	6/26/2022 9:40	0.37	6/26/2022 10:10	13.00	6/26/2022 8:58	0.68	6/26/2022 10:40	30.45
6/27/2022 10:24	86.84	6/26/2022 9:41	0.38	6/26/2022 10:11	12.84	6/26/2022 8:59	0.75	6/26/2022 10:41	30.39
6/27/2022 10:25	86.80	6/26/2022 9:42	0.33	6/26/2022 10:12	12.72	6/26/2022 9:00	0.64	6/26/2022 10:42	30.39
6/27/2022 10:26	86.88	6/26/2022 9:43	0.31	6/26/2022 10:13	12.59	6/26/2022 9:01	0.72	6/26/2022 10:43	30.35
6/27/2022 10:27	86.84	6/26/2022 9:44	0.36	6/26/2022 10:14	12.49	6/26/2022 9:02	0.65	6/26/2022 10:44	30.36
6/27/2022 10:28	86.86	6/26/2022 9:45	0.30	6/26/2022 10:15	12.39	6/26/2022 9:03	0.71	6/26/2022 10:45	30.33
6/27/2022 10:29	86.85	6/26/2022 9:46	0.29	6/26/2022 10:16	12.29	6/26/2022 9:04	0.72	6/26/2022 10:46	30.34
6/27/2022 10:30	86.81	6/26/2022 9:47	0.28	6/26/2022 10:17	12.15	6/26/2022 9:05	0.65	6/26/2022 10:47	30.31
6/27/2022 10:31	86.81	6/26/2022 9:48	0.31	6/26/2022 10:18	12.12	6/26/2022 9:06	0.80	6/26/2022 10:48	30.32
6/27/2022 10:32	86.86	6/26/2022 9:49	0.26	6/26/2022 10:19	12.11	6/26/2022 9:07	0.65	6/26/2022 10:49	30.34
6/27/2022 10:33	86.86	6/26/2022 9:50	0.26	6/26/2022 10:20	12.03	6/26/2022 9:08	0.73	6/26/2022 10:50	30.36
6/27/2022 10:34	86.84	6/26/2022 9:51	0.28	6/26/2022 10:21	11.97	6/26/2022 9:09	0.68	6/26/2022 10:51	30.33
6/27/2022 10:35	86.88	6/26/2022 9:52	0.26	6/26/2022 10:22	11.91	6/26/2022 9:10	0.71	6/26/2022 10:52	30.34
6/27/2022 10:36	86.82	6/26/2022 9:53	0.25	6/26/2022 10:23	13.79	6/26/2022 9:11	0.70	6/26/2022 10:53	30.34
6/27/2022 10:37	86.80	6/26/2022 9:54	0.28	6/26/2022 10:24	15.47	6/26/2022 9:12	0.75	6/26/2022 10:54	30.29
6/27/2022 10:38	86.79	6/26/2022 9:55	0.28	6/26/2022 10:25	14.94	6/26/2022 9:13	0.76	6/26/2022 10:55	30.34
6/27/2022 10:39	86.81	6/26/2022 9:56	0.25	6/26/2022 10:26	14.52	6/26/2022 9:14	0.77	6/26/2022 10:56	30.31
6/27/2022 10:40	86.89	6/26/2022 9:57	0.22	6/26/2022 10:27	14.14	6/26/2022 9:15	0.68	6/26/2022 10:57	30.30
6/27/2022 10:41	86.84	6/26/2022 9:58	1.39	6/26/2022 10:28	13.83	6/26/2022 9:16	0.66	6/26/2022 10:58	30.35
6/27/2022 10:42	86.85	6/26/2022 9:59	7.17	6/26/2022 10:29	13.56	6/26/2022 9:17	0.72	6/26/2022 10:59	30.33
6/27/2022 10:43	86.81	6/26/2022 10:00	6.95	6/26/2022 10:30	13.35	6/26/2022 9:18	0.77	6/26/2022 11:00	30.29
6/27/2022 10:44	86.84	6/26/2022 10:01	5.91	6/26/2022 10:31	15.90	6/26/2022 9:19	0.68	6/26/2022 11:01	30.32
6/27/2022 10:45	86.84	6/26/2022 10:02	5.02	6/26/2022 10:32	19.88	6/26/2022 9:20	0.70	6/26/2022 11:02	30.30
6/27/2022 10:46	86.81	6/26/2022 10:03	4.33	6/26/2022 10:33	20.36	6/26/2022 9:21	0.70	6/26/2022 11:03	30.30
6/27/2022 10:47	86.86	6/26/2022 10:04	3.68	6/26/2022 10:34	19.33	6/26/2022 9:22	0.72	6/26/2022 11:04	30.34
6/27/2022 10:48	86.79	6/26/2022 10:05	3.20	6/26/2022 10:35	22.65	6/26/2022 9:23	0.74	6/26/2022 11:05	30.33
6/27/2022 10:49	86.76	6/26/2022 10:06	2.75	6/26/2022 10:36	25.55	6/26/2022 9:24	0.68	6/26/2022 11:06	30.31
6/27/2022 10:50	86.79	6/26/2022 10:07	2.37	6/26/2022 10:37	24.02	6/26/2022 9:25	0.77	6/26/2022 11:07	30.29
6/27/2022 10:51	86.79	6/26/2022 10:08	2.06	6/26/2022 10:38	24.29	6/26/2022 9:26	0.67	6/26/2022 11:08	30.31
6/27/2022 10:52	86.81	6/26/2022 10:09	1.84	6/26/2022 10:39	25.97	6/26/2022 9:27	0.78	6/26/2022 11:09	30.31
6/27/2022 10:53	86.77	6/26/2022 10:10	1.65	6/26/2022 10:40	24.53	6/26/2022 9:28	0.67	6/26/2022 11:10	30.32
6/27/2022 10:54	86.77	6/26/2022 10:11	1.46	6/26/2022 10:41	23.22	6/26/2022 9:29	0.75	6/26/2022 11:11	30.30
6/27/2022 10:55	86.80	6/26/2022 10:12	1.30	6/26/2022 10:42	22.08	6/26/2022 9:30	0.68	6/26/2022 11:12	30.32
6/27/2022 10:56	86.86	6/26/2022 10:13	1.13	6/26/2022 10:43	21.07	6/26/2022 9:31	0.68	6/26/2022 11:13	30.32
6/27/2022 10:57	86.77	6/26/2022 10:14	0.99	6/26/2022 10:44	20.14	6/26/2022 9:32	0.70	6/26/2022 11:14	30.31
6/27/2022 10:58	86.76	6/26/2022 10:15	0.91	6/26/2022 10:45	19.30	6/26/2022 9:33	0.69	6/26/2022 11:15	30.28
6/27/2022 10:59	86.77	6/26/2022 10:16	5.41	6/26/2022 10:46	18.51	6/26/2022 9:34	0.71	6/26/2022 11:16	30.33
6/27/2022 11:00	86.80	6/26/2022 10:17	10.30	6/26/2022 10:47	17.83	6/26/2022 9:35	0.72	6/26/2022 11:17	30.28
6/27/2022 11:01	86.79	6/26/2022 10:18	9.03	6/26/2022 10:48	17.19	6/26/2022 9:36	0.67	6/26/2022 11:18	30.29

6/27/2022 11:02	86.77	6/26/2022 10:19	7.66	6/26/2022 10:49	16.66	6/26/2022 9:37	0.68	6/26/2022 11:19	30.29
6/27/2022 11:03	86.77	6/26/2022 10:20	6.50	6/26/2022 10:50	19.40	6/26/2022 9:38	0.71	6/26/2022 11:20	30.32
6/27/2022 11:04	86.82	6/26/2022 10:21	5.51	6/26/2022 10:51	19.89	6/26/2022 9:39	0.68	6/26/2022 11:21	30.29
6/27/2022 11:05	86.73	6/26/2022 10:22	4.73	6/26/2022 10:52	19.00	6/26/2022 9:40	0.74	6/26/2022 11:22	30.31
6/27/2022 11:06	86.80	6/26/2022 10:23	4.09	6/26/2022 10:53	18.24	6/26/2022 9:41	0.69	6/26/2022 11:23	30.30
6/27/2022 11:07	86.73	6/26/2022 10:24	3.52	6/26/2022 10:54	17.52	6/26/2022 9:42	0.79	6/26/2022 11:24	30.29
6/27/2022 11:08	86.76	6/26/2022 10:25	3.04	6/26/2022 10:55	16.92	6/26/2022 9:43	0.71	6/26/2022 11:25	30.29
6/27/2022 11:09	86.72	6/26/2022 10:26	2.65	6/26/2022 10:56	16.39	6/26/2022 9:44	0.77	6/26/2022 11:26	30.28
6/27/2022 11:10	91.14	6/26/2022 10:27	2.31	6/26/2022 10:57	15.89	6/26/2022 9:45	0.66	6/26/2022 11:27	30.30
6/27/2022 11:11	93.73	6/26/2022 10:28	2.06	6/26/2022 10:58	15.46	6/26/2022 9:46	0.79	6/26/2022 11:28	30.34
6/27/2022 11:12	95.33	6/26/2022 10:29	1.79	6/26/2022 10:59	15.04	6/26/2022 9:47	0.68	6/26/2022 11:29	30.30
6/27/2022 11:13	92.32	6/26/2022 10:30	1.59	6/26/2022 11:00	14.73	6/26/2022 9:48	0.75	6/26/2022 11:30	30.29
6/27/2022 11:14	90.68	6/26/2022 10:31	1.46	6/26/2022 11:01	15.13	6/26/2022 9:49	0.70	6/26/2022 11:31	30.31
6/27/2022 11:15	89.62	6/26/2022 10:32	1.28	6/26/2022 11:02	18.48	6/26/2022 9:50	0.69	6/26/2022 11:32	30.30
6/27/2022 11:16	89.01	6/26/2022 10:33	1.15	6/26/2022 11:03	17.69	6/26/2022 9:51	0.76	6/26/2022 11:33	30.28
6/27/2022 11:17	88.56	6/26/2022 10:34	1.04	6/26/2022 11:04	17.03	6/26/2022 9:52	0.66	6/26/2022 11:34	30.28
6/27/2022 11:18	88.19	6/26/2022 10:35	0.92	6/26/2022 11:05	16.43	6/26/2022 9:53	0.77	6/26/2022 11:35	30.31
6/27/2022 11:19	88.00	6/26/2022 10:36	0.86	6/26/2022 11:06	15.95	6/26/2022 9:54	0.66	6/26/2022 11:36	30.32
6/27/2022 11:20	87.81	6/26/2022 10:37	0.72	6/26/2022 11:07	15.42	6/26/2022 9:55	0.74	6/26/2022 11:37	30.29
6/27/2022 11:21	87.67	6/26/2022 10:38	0.71	6/26/2022 11:08	15.06	6/26/2022 9:56	0.68	6/26/2022 11:38	30.28
6/27/2022 11:22	87.65	6/26/2022 10:39	0.65	6/26/2022 11:09	14.67	6/26/2022 9:57	0.70	6/26/2022 11:39	30.31
6/27/2022 11:23	87.52	6/26/2022 10:40	0.60	6/26/2022 11:10	14.32	6/26/2022 9:58	0.74	6/26/2022 11:40	30.29
6/27/2022 11:24	87.42	6/26/2022 10:41	0.56	6/26/2022 11:11	14.02	6/26/2022 9:59	0.66	6/26/2022 11:41	30.29
6/27/2022 11:25	87.38	6/26/2022 10:42	0.52	6/26/2022 11:12	13.73	6/26/2022 10:00	0.69	6/26/2022 11:42	30.30
6/27/2022 11:26	87.33	6/26/2022 10:43	0.48	6/26/2022 11:13	13.57	6/26/2022 10:01	0.73	6/26/2022 11:43	30.26
6/27/2022 11:27	87.34	6/26/2022 10:44	3.05	6/26/2022 11:14	13.29	6/26/2022 10:02	0.78	6/26/2022 11:44	30.30
6/27/2022 11:28	87.32	6/26/2022 10:45	8.14	6/26/2022 11:15	13.11	6/26/2022 10:03	0.73	6/26/2022 11:45	30.28
6/27/2022 11:29	87.23	6/26/2022 10:46	6.82	6/26/2022 11:16	12.93	6/26/2022 10:04	0.67	6/26/2022 11:46	30.30
6/27/2022 11:30	87.27	6/26/2022 10:47	5.80	6/26/2022 11:17	12.75	6/26/2022 10:05	0.69	6/26/2022 11:47	30.30
6/27/2022 11:31	87.18	6/26/2022 10:48	4.94	6/26/2022 11:18	12.61	6/26/2022 10:06	0.75	6/26/2022 11:48	30.30
6/27/2022 11:32	87.20	6/26/2022 10:49	4.23	6/26/2022 11:19	12.46	6/26/2022 10:07	0.68	6/26/2022 11:49	30.31
6/27/2022 11:33	87.18	6/26/2022 10:50	3.63	6/26/2022 11:20	12.37	6/26/2022 10:08	0.75	6/26/2022 11:50	30.28
6/27/2022 11:34	87.13	6/26/2022 10:51	3.16	6/26/2022 11:21	12.24	6/26/2022 10:09	0.68	6/26/2022 11:51	30.33
6/27/2022 11:35	87.20	6/26/2022 10:52	2.70	6/26/2022 11:22	12.14	6/26/2022 10:10	0.79	6/26/2022 11:52	30.30
6/27/2022 11:36	87.13	6/26/2022 10:53	2.36	6/26/2022 11:23	12.05	6/26/2022 10:11	0.70	6/26/2022 11:53	30.28
6/27/2022 11:37	87.09	6/26/2022 10:54	2.07	6/26/2022 11:24	11.95	6/26/2022 10:12	0.73	6/26/2022 11:54	30.29
6/27/2022 11:38	87.18	6/26/2022 10:55	1.83	6/26/2022 11:25	11.85	6/26/2022 10:13	0.69	6/26/2022 11:55	30.28
6/27/2022 11:39	87.08	6/26/2022 10:56	1.67	6/26/2022 11:26	11.82	6/26/2022 10:14	0.69	6/26/2022 11:56	30.28
6/27/2022 11:40	87.10	6/26/2022 10:57	1.58	6/26/2022 11:27	11.74	6/26/2022 10:15	0.75	6/26/2022 11:57	30.27
6/27/2022 11:41	87.05	6/26/2022 10:58	1.51	6/26/2022 11:28	11.75	6/26/2022 10:16	0.69	6/26/2022 11:58	30.28
6/27/2022 11:42	87.07	6/26/2022 10:59	1.38	6/26/2022 11:29	11.63	6/26/2022 10:17	0.76	6/26/2022 11:59	30.28
6/27/2022 11:43	87.04	6/26/2022 11:00	1.28	6/26/2022 11:30	11.61	6/26/2022 10:18	0.74	6/26/2022 12:00	30.28
6/27/2022 11:44	87.05	6/26/2022 11:01	1.12	6/26/2022 11:31	11.56	6/26/2022 10:19	0.68	6/26/2022 12:01	30.30
6/27/2022 11:45	87.00	6/26/2022 11:02	1.05	6/26/2022 11:32	11.52	6/26/2022 10:20	0.71	6/26/2022 12:02	30.26
6/27/2022 11:46	87.03	6/26/2022 11:03	1.32	6/26/2022 11:33	11.47	6/26/2022 10:21	0.72	6/26/2022 12:03	30.29
6/27/2022 11:47	87.02	6/26/2022 11:04	7.16	6/26/2022 11:34	11.45	6/26/2022 10:22	0.77	6/26/2022 12:04	30.27
6/27/2022 11:48	87.03	6/26/2022 11:05	7.73	6/26/2022 11:35	11.41	6/26/2022 10:23	0.70	6/26/2022 12:05	30.26
6/27/2022 11:49	87.05	6/26/2022 11:06	6.52	6/26/2022 11:36	11.36	6/26/2022 10:24	0.77	6/26/2022 12:06	30.26
6/27/2022 11:50	87.01	6/26/2022 11:07	5.51	6/26/2022 11:37	11.36	6/26/2022 10:25	0.71	6/26/2022 12:07	30.28
6/27/2022 11:51	86.99	6/26/2022 11:08	4.77	6/26/2022 11:38	11.29	6/26/2022 10:26	0.72	6/26/2022 12:08	31.99
6/27/2022 11:52	86.97	6/26/2022 11:09	4.03	6/26/2022 11:39	11.24	6/26/2022 10:27	0.73	6/26/2022 12:09	31.38
6/27/2022 11:53	86.99	6/26/2022 11:10	3.54	6/26/2022 11:40	11.22	6/26/2022 10:28	0.68	6/26/2022 12:10	30.70
6/27/2022 11:54	87.00	6/26/2022 11:11	3.05	6/26/2022 11:41	11.20	6/26/2022 10:29	0.77	6/26/2022 12:11	30.46
		6/26/2022 11:12	2.62	6/26/2022 11:42	11.15	6/26/2022 10:30	0.70	6/26/2022 12:12	30.31
		6/26/2022 11:13	2.31	6/26/2022 11:43	11.20	6/26/2022 10:31	0.76	6/26/2022 12:13	30.33
		6/26/2022 11:14	2.05	6/26/2022 11:44	11.10	6/26/2022 10:32	0.68	6/26/2022 12:14	30.34
		6/26/2022 11:15	1.79	6/26/2022 11:45	11.08	6/26/2022 10:33	0.69	6/26/2022 12:15	30.30
		6/26/2022 11:16	1.62	6/26/2022 11:46	11.11	6/26/2022 10:34	0.69	6/26/2022 12:16	30.32
		6/26/2022 11:17	1.41	6/26/2022 11:47	11.05	6/26/2022 10:35	0.71	6/26/2022 12:17	30.30
		6/26/2022 11:18	1.23	6/26/2022 11:48	11.04	6/26/2022 10:36	0.70	6/26/2022 12:18	30.32
		6/26/2022 11:19	1.10	6/26/2022 11:49	11.02	6/26/2022 10:37	0.78	6/26/2022 12:19	30.28
		6/26/2022 11:20	1.04	6/26/2022 11:50	10.98	6/26/2022 10:38	0.68	6/26/2022 12:20	30.25
		6/26/2022 11:21	0.96	6/26/2022 11:51	10.98	6/26/2022 10:39	0.76	6/26/2022 12:21	30.29
		6/26/2022 11:22	0.88	6/26/2022 11:52	10.94	6/26/2022 10:40	0.73	6/26/2022 12:22	30.28
		6/26/2022 11:23	0.77	6/26/2022 11:53	10.93	6/26/2022 10:41	0.72	6/26/2022 12:23	30.28
		6/26/2022 11:24	0.73	6/26/2022 11:54	10.90	6/26/2022 10:42	0.70	6/26/2022 12:24	30.29
		6/26/2022 11:25	0.65	6/26/2022 11:55	10.92	6/26/2022 10:43	0.72	6/26/2022 12:25	30.31
		6/26/2022 11:26	0.62	6/26/2022 11:56	10.94	6/26/2022 10:44	0.76	6/26/2022 12:26	30.31
		6/26/2022 11:27	0.54	6/26/2022 11:57	10.94	6/26/2022 10:45	0.67	6/26/2022 12:27	30.30
		6/26/2022 11:28	0.53	6/26/2022 11:58	10.89	6/26/2022 10:46	0.68	6/26/2022 12:28	30.30
		6/26/2022 11:29	0.51	6/26/2022 11:59	10.94	6/26/2022 10:47	0.71	6/26/2022 12:29	30.29
		6/26/2022 11:30	0.52	6/26/2022 12:00	10.96	6/26/2022 10:48	0.71	6/26/2022 12:30	30.28
		6/26/2022 11:31	0.51	6/26/2022 12:01	10.92	6/26/2022 10:49	0.73	6/26/2022 12:31	30.29
		6/26/2022 11:32	0.45	6/26/2022 12:02	10.94	6/26/2022 10:50	0.78	6/26/2022 12:32	30.30
		6/26/2022 11:33	0.45	6/26/2022 12:03	10.91	6/26/2022 10:51	0.70	6/26/2022 12:33	30.28
		6/26/2022 11:34	0.50	6/26/2022 12:04	10.93	6/26/2022 10:52	0.70	6/26/2022 12:34	30.28
		6/26/2022 11:35	0.49	6/26/2022 12:05	10.92	6/26/2022 10:53	0.76	6/26/2022 12:35	30.29
		6/26/2022 11:36	0.47	6/26/2022 12:06	10.93	6/26/2022 10:54	0.68	6/26/2022 12:36	30.22
		6/26/2022 11:37	0.48	6/26/2022 12:07	10.87	6/26/2022 10:55	0.80	6/26/2022 12:37	30.28
		6/26/2022 11:38	0.46	6/26/2022 12:08	10.87	6/26/2022 10:56	5.82	6/26/2022 12:38	30.24
		6/26/2022 11:39	0.46	6/26/2022 12:09	10.90	6/26/2022 10:57	6.62	6/26/2022 12:39	30.25
		6/26/2022 11:40	0.41	6/26/2022 12:10	10.84	6/26/2022 10:58	4.00	6/26/2022 12:40	30.30
		6/26/2022 11:41	0.42	6/26/2022 12:11	10.84	6/26/2022 10:59	2.10	6/26/2022 12:41	30.31
		6/26/2022 11:42	0.38	6/26/2022 12:12	10.83	6/26/2022 11:00	0.81	6/26/2022 12:42	30.30
		6/26/2022 11:43	0.39	6/26/2022 12:13	10.78	6/26/2022 11:01	0.80	6/26/2022 12:43	30.28
		6/26/2022 11:44	0.41	6/26/2022 12:14	10.82	6/26/2022 11:02	0.82	6/26/2022 12:44	30.27
		6/26/2022 11:45	0.37	6/26/2022 12:15	10.78	6/26/2022 11:03	0.70	6/26/2022 12:45	30.25
		6/26/2022 11:46	0.35	6/26/2022 12:16	10.78	6/26/2022 11:04	0.76	6/26/2022 12:46	30.24

6/26/2022 11:47	0.36	6/26/2022 12:17	10.79	6/26/2022 11:05	0.73	6/26/2022 12:47	30.27
6/26/2022 11:48	0.37	6/26/2022 12:18	10.77	6/26/2022 11:06	0.79	6/26/2022 12:48	30.25
6/26/2022 11:49	0.36	6/26/2022 12:19	10.78	6/26/2022 11:07	0.74	6/26/2022 12:49	32.25
6/26/2022 11:50	0.34	6/26/2022 12:20	10.74	6/26/2022 11:08	0.75	6/26/2022 12:50	31.08
6/26/2022 11:51	0.33	6/26/2022 12:21	10.75	6/26/2022 11:09	0.72	6/26/2022 12:51	30.55
6/26/2022 11:52	0.33	6/26/2022 12:22	10.73	6/26/2022 11:10	0.75	6/26/2022 12:52	30.40
6/26/2022 11:53	0.31	6/26/2022 12:23	10.75	6/26/2022 11:11	0.71	6/26/2022 12:53	30.32
6/26/2022 11:54	0.33	6/26/2022 12:24	10.71	6/26/2022 11:12	0.78	6/26/2022 12:54	30.31
6/26/2022 11:55	0.32	6/26/2022 12:25	10.72	6/26/2022 11:13	0.71	6/26/2022 12:55	30.31
6/26/2022 11:56	0.32	6/26/2022 12:26	10.76	6/26/2022 11:14	0.80	6/26/2022 12:56	30.29
6/26/2022 11:57	0.26	6/26/2022 12:27	10.73	6/26/2022 11:15	0.71	6/26/2022 12:57	30.30
6/26/2022 11:58	0.31	6/26/2022 12:28	10.76	6/26/2022 11:16	0.73	6/26/2022 12:58	30.32
6/26/2022 11:59	0.26	6/26/2022 12:29	10.76	6/26/2022 11:17	0.75	6/26/2022 12:59	30.31
6/26/2022 12:00	0.29	6/26/2022 12:30	10.76	6/26/2022 11:18	0.77	6/26/2022 13:00	30.28
6/26/2022 12:01	0.28	6/26/2022 12:31	10.76	6/26/2022 11:19	0.72	6/26/2022 13:01	30.28
6/26/2022 12:02	0.33	6/26/2022 12:32	10.79	6/26/2022 11:20	0.80	6/26/2022 13:02	30.25
6/26/2022 12:03	0.27	6/26/2022 12:33	10.77	6/26/2022 11:21	0.73	6/26/2022 13:03	30.28
6/26/2022 12:04	0.26	6/26/2022 12:34	10.78	6/26/2022 11:22	0.77	6/26/2022 13:04	30.27
6/26/2022 12:05	0.29	6/26/2022 12:35	10.77	6/26/2022 11:23	0.73	6/26/2022 13:05	30.31
6/26/2022 12:06	1.99	6/26/2022 12:36	10.80	6/26/2022 11:24	0.79	6/26/2022 13:06	30.29
6/26/2022 12:07	7.62	6/26/2022 12:37	10.74	6/26/2022 11:25	0.74	6/26/2022 13:07	30.28
6/26/2022 12:08	7.03	6/26/2022 12:38	10.75	6/26/2022 11:26	0.78	6/26/2022 13:08	30.26
6/26/2022 12:09	5.90	6/26/2022 12:39	10.73	6/26/2022 11:27	0.73	6/26/2022 13:09	30.27
6/26/2022 12:10	4.99	6/26/2022 12:40	10.70	6/26/2022 11:28	0.78	6/26/2022 13:10	30.29
6/26/2022 12:11	4.33	6/26/2022 12:41	10.69	6/26/2022 11:29	0.78	6/26/2022 13:11	30.26
6/26/2022 12:12	3.72	6/26/2022 12:42	10.72	6/26/2022 11:30	0.71	6/26/2022 13:12	30.24
6/26/2022 12:13	3.18	6/26/2022 12:43	10.71	6/26/2022 11:31	0.81	6/26/2022 13:13	30.27
6/26/2022 12:14	2.72	6/26/2022 12:44	10.70	6/26/2022 11:32	0.72	6/26/2022 13:14	30.27
6/26/2022 12:15	2.38	6/26/2022 12:45	10.71	6/26/2022 11:33	0.73	6/26/2022 13:15	30.23
6/26/2022 12:16	2.10	6/26/2022 12:46	10.67	6/26/2022 11:34	0.74	6/26/2022 13:16	30.25
6/26/2022 12:17	1.86	6/26/2022 12:47	10.69	6/26/2022 11:35	0.77	6/26/2022 13:17	30.25
6/26/2022 12:18	1.63	6/26/2022 12:48	10.68	6/26/2022 11:36	0.74	6/26/2022 13:18	30.26
6/26/2022 12:19	1.51	6/26/2022 12:49	10.67	6/26/2022 11:37	0.81	6/26/2022 13:19	30.25
6/26/2022 12:20	1.29	6/26/2022 12:50	10.66	6/26/2022 11:38	0.71	6/26/2022 13:20	30.23
6/26/2022 12:21	1.18	6/26/2022 12:51	10.65	6/26/2022 11:39	0.79	6/26/2022 13:21	30.25
6/26/2022 12:22	1.05	6/26/2022 12:52	10.65	6/26/2022 11:40	0.70	6/26/2022 13:22	30.26
6/26/2022 12:23	0.95	6/26/2022 12:53	10.63	6/26/2022 11:41	0.73	6/26/2022 13:23	30.27
6/26/2022 12:24	0.90	6/26/2022 12:54	10.65	6/26/2022 11:42	0.72	6/26/2022 13:24	30.27
6/26/2022 12:25	0.79	6/26/2022 12:55	10.65	6/26/2022 11:43	0.77	6/26/2022 13:25	30.27
6/26/2022 12:26	0.69	6/26/2022 12:56	10.69	6/26/2022 11:44	0.69	6/26/2022 13:26	30.25
6/26/2022 12:27	0.70	6/26/2022 12:57	10.73	6/26/2022 11:45	0.80	6/26/2022 13:27	30.23
6/26/2022 12:28	0.61	6/26/2022 12:58	10.68	6/26/2022 11:46	0.69	6/26/2022 13:28	30.25
6/26/2022 12:29	0.58	6/26/2022 12:59	10.72	6/26/2022 11:47	0.76	6/26/2022 13:29	30.26
6/26/2022 12:30	0.54	6/26/2022 13:00	10.70	6/26/2022 11:48	0.72	6/26/2022 13:30	30.22
6/26/2022 12:31	0.48	6/26/2022 13:01	10.72	6/26/2022 11:49	0.74	6/26/2022 13:31	30.26
6/26/2022 12:32	0.47	6/26/2022 13:02	10.73	6/26/2022 11:50	0.73	6/26/2022 13:32	30.25
6/26/2022 12:33	0.44	6/26/2022 13:03	10.72	6/26/2022 11:51	0.79	6/26/2022 13:33	30.25
6/26/2022 12:34	0.40	6/26/2022 13:04	10.70	6/26/2022 11:52	0.75	6/26/2022 13:34	30.28
6/26/2022 12:35	0.41	6/26/2022 13:05	10.72	6/26/2022 11:53	0.78	6/26/2022 13:35	30.22
6/26/2022 12:36	0.39	6/26/2022 13:06	10.68	6/26/2022 11:54	0.73	6/26/2022 13:36	30.24
6/26/2022 12:37	0.33	6/26/2022 13:07	10.68	6/26/2022 11:55	0.81	6/26/2022 13:37	30.22
6/26/2022 12:38	0.35	6/26/2022 13:08	10.69	6/26/2022 11:56	0.70	6/26/2022 13:38	30.22
6/26/2022 12:39	0.34	6/26/2022 13:09	10.71	6/26/2022 11:57	0.80	6/26/2022 13:39	30.23
6/26/2022 12:40	0.32	6/26/2022 13:10	10.66	6/26/2022 11:58	0.72	6/26/2022 13:40	30.24
6/26/2022 12:41	0.34	6/26/2022 13:11	10.70	6/26/2022 11:59	0.73	6/26/2022 13:41	30.24
6/26/2022 12:42	0.30	6/26/2022 13:12	10.67	6/26/2022 12:00	0.73	6/26/2022 13:42	30.23
6/26/2022 12:43	0.30	6/26/2022 13:13	10.67	6/26/2022 12:01	0.71	6/26/2022 13:43	30.21
6/26/2022 12:44	0.30	6/26/2022 13:14	10.64	6/26/2022 12:02	0.75	6/26/2022 13:44	30.25
6/26/2022 12:45	0.30	6/26/2022 13:15	10.65	6/26/2022 12:03	0.67	6/26/2022 13:45	30.23
6/26/2022 12:46	0.29	6/26/2022 13:16	10.63	6/26/2022 12:04	0.77	6/26/2022 13:46	30.22
6/26/2022 12:47	2.80	6/26/2022 13:17	10.61	6/26/2022 12:05	0.71	6/26/2022 13:47	30.24
6/26/2022 12:48	8.21	6/26/2022 13:18	10.63	6/26/2022 12:06	0.80	6/26/2022 13:48	30.26
6/26/2022 12:49	6.81	6/26/2022 13:19	10.63	6/26/2022 12:07	0.69	6/26/2022 13:49	30.24
6/26/2022 12:50	5.76	6/26/2022 13:20	10.64	6/26/2022 12:08	0.73	6/26/2022 13:50	30.21
6/26/2022 12:51	4.89	6/26/2022 13:21	10.61	6/26/2022 12:09	0.71	6/26/2022 13:51	30.21
6/26/2022 12:52	4.20	6/26/2022 13:22	10.65	6/26/2022 12:10	0.73	6/26/2022 13:52	30.26
6/26/2022 12:53	3.64	6/26/2022 13:23	10.64	6/26/2022 12:11	0.73	6/26/2022 13:53	30.19
6/26/2022 12:54	3.11	6/26/2022 13:24	10.70	6/26/2022 12:12	0.72	6/26/2022 13:54	30.25
6/26/2022 12:55	2.67	6/26/2022 13:25	10.69	6/26/2022 12:13	0.79	6/26/2022 13:55	30.21
6/26/2022 12:56	2.37	6/26/2022 13:26	10.70	6/26/2022 12:14	0.73	6/26/2022 13:56	30.17
6/26/2022 12:57	2.08	6/26/2022 13:27	10.71	6/26/2022 12:15	0.73	6/26/2022 13:57	30.20
6/26/2022 12:58	1.82	6/26/2022 13:28	10.67	6/26/2022 12:16	0.78	6/26/2022 13:58	30.25
6/26/2022 12:59	1.58	6/26/2022 13:29	10.68	6/26/2022 12:17	0.70	6/26/2022 13:59	30.20
6/26/2022 13:00	1.42	6/26/2022 13:30	10.69	6/26/2022 12:18	0.76	6/26/2022 14:00	30.23
6/26/2022 13:01	1.31	6/26/2022 13:31	10.70	6/26/2022 12:19	0.73	6/26/2022 14:01	30.24
6/26/2022 13:02	1.15	6/26/2022 13:32	10.72	6/26/2022 12:20	0.78	6/26/2022 14:02	30.21
6/26/2022 13:03	1.05	6/26/2022 13:33	10.70	6/26/2022 12:21	0.73	6/26/2022 14:03	30.22
6/26/2022 13:04	0.91	6/26/2022 13:34	10.73	6/26/2022 12:22	0.79	6/26/2022 14:04	30.21
6/26/2022 13:05	0.85	6/26/2022 13:35	10.75	6/26/2022 12:23	0.75	6/26/2022 14:05	30.23
6/26/2022 13:06	0.75	6/26/2022 13:36	10.73	6/26/2022 12:24	0.77	6/26/2022 14:06	30.19
6/26/2022 13:07	0.75	6/26/2022 13:37	10.74	6/26/2022 12:25	0.73	6/26/2022 14:07	30.24
6/26/2022 13:08	0.64	6/26/2022 13:38	10.73	6/26/2022 12:26	0.71	6/26/2022 14:08	30.21
6/26/2022 13:09	0.59	6/26/2022 13:39	10.78	6/26/2022 12:27	0.75	6/26/2022 14:09	30.25
6/26/2022 13:10	0.56	6/26/2022 13:40	10.74	6/26/2022 12:28	0.73	6/26/2022 14:10	30.21
6/26/2022 13:11	0.49	6/26/2022 13:41	10.75	6/26/2022 12:29	0.76	6/26/2022 14:11	30.27
6/26/2022 13:12	0.49	6/26/2022 13:42	10.73	6/26/2022 12:30	0.72	6/26/2022 14:12	30.21
6/26/2022 13:13	0.49	6/26/2022 13:43	10.71	6/26/2022 12:31	0.69	6/26/2022 14:13	30.21
6/26/2022 13:14	0.44	6/26/2022 13:44	10.76	6/26/2022 12:32	0.76	6/26/2022 14:14	30.22

6/26/2022 13:15	0.43	6/26/2022 13:45	10.73	6/26/2022 12:33	0.71	6/26/2022 14:15	30.23
6/26/2022 13:16	0.41	6/26/2022 13:46	10.68	6/26/2022 12:34	0.82	6/26/2022 14:16	30.22
6/26/2022 13:17	0.42	6/26/2022 13:47	10.72	6/26/2022 12:35	0.71	6/26/2022 14:17	30.23
6/26/2022 13:18	0.39	6/26/2022 13:48	10.68	6/26/2022 12:36	0.81	6/26/2022 14:18	30.22
6/26/2022 13:19	0.37	6/26/2022 13:49	10.73	6/26/2022 12:37	0.72	6/26/2022 14:19	30.20
6/26/2022 13:20	0.34	6/26/2022 13:50	10.72	6/26/2022 12:38	0.84	6/26/2022 14:20	30.24
6/26/2022 13:21	0.36	6/26/2022 13:51	10.75	6/26/2022 12:39	0.75	6/26/2022 14:21	30.19
6/26/2022 13:22	0.34	6/26/2022 13:52	10.73	6/26/2022 12:40	0.75	6/26/2022 14:22	30.22
6/26/2022 13:23	0.33	6/26/2022 13:53	10.78	6/26/2022 12:41	0.74	6/26/2022 14:23	30.22
6/26/2022 13:24	0.30	6/26/2022 13:54	10.75	6/26/2022 12:42	0.77	6/26/2022 14:24	30.22
6/26/2022 13:25	0.33	6/26/2022 13:55	10.74	6/26/2022 12:43	0.75	6/26/2022 14:25	30.22
6/26/2022 13:26	0.30	6/26/2022 13:56	10.75	6/26/2022 12:44	0.75	6/26/2022 14:26	30.23
6/26/2022 13:27	0.29	6/26/2022 13:57	10.75	6/26/2022 12:45	0.76	6/26/2022 14:27	30.21
6/26/2022 13:28	0.26	6/26/2022 13:58	10.74	6/26/2022 12:46	0.75	6/26/2022 14:28	30.18
6/26/2022 13:29	0.28	6/26/2022 13:59	10.75	6/26/2022 12:47	0.81	6/26/2022 14:29	30.21
6/26/2022 13:30	0.32	6/26/2022 14:00	10.72	6/26/2022 12:48	0.74	6/26/2022 14:30	30.20
6/26/2022 13:31	0.30	6/26/2022 14:01	10.74	6/26/2022 12:49	0.72	6/26/2022 14:31	30.21
6/26/2022 13:32	0.28	6/26/2022 14:02	10.71	6/26/2022 12:50	0.75	6/26/2022 14:32	30.22
6/26/2022 13:33	0.29	6/26/2022 14:03	10.69	6/26/2022 12:51	0.72	6/26/2022 14:33	30.18
6/26/2022 13:34	0.27	6/26/2022 14:04	10.70	6/26/2022 12:52	0.75	6/26/2022 14:34	30.23
6/26/2022 13:35	0.25	6/26/2022 14:05	10.72	6/26/2022 12:53	0.84	6/26/2022 14:35	30.23
6/26/2022 13:36	0.30	6/26/2022 14:06	10.67	6/26/2022 12:54	0.78	6/26/2022 14:36	30.22
6/26/2022 13:37	0.24	6/26/2022 14:07	10.64	6/26/2022 12:55	0.69	6/26/2022 14:37	30.21
6/26/2022 13:38	0.25	6/26/2022 14:08	10.66	6/26/2022 12:56	0.79	6/26/2022 14:38	30.20
6/26/2022 13:39	0.24	6/26/2022 14:09	10.64	6/26/2022 12:57	0.72	6/26/2022 14:39	30.21
6/26/2022 13:40	0.26	6/26/2022 14:10	10.62	6/26/2022 12:58	0.73	6/26/2022 14:40	30.18
6/26/2022 13:41	0.26	6/26/2022 14:11	10.62	6/26/2022 12:59	0.86	6/26/2022 14:41	30.19
6/26/2022 13:42	0.26	6/26/2022 14:12	10.63	6/26/2022 13:00	0.72	6/26/2022 14:42	30.20
6/26/2022 13:43	0.24	6/26/2022 14:13	10.64	6/26/2022 13:01	0.82	6/26/2022 14:43	30.19
6/26/2022 13:44	0.25	6/26/2022 14:14	10.68	6/26/2022 13:02	0.71	6/26/2022 14:44	30.21
6/26/2022 13:45	0.25	6/26/2022 14:15	10.68	6/26/2022 13:03	0.73	6/26/2022 14:45	30.21
6/26/2022 13:46	0.23	6/26/2022 14:16	10.64	6/26/2022 13:04	0.81	6/26/2022 14:46	30.20
6/26/2022 13:47	0.25	6/26/2022 14:17	10.70	6/26/2022 13:05	0.72	6/26/2022 14:47	30.18
6/26/2022 13:48	0.22	6/26/2022 14:18	10.71	6/26/2022 13:06	0.80	6/26/2022 14:48	30.19
6/26/2022 13:49	0.21	6/26/2022 14:19	10.70	6/26/2022 13:07	0.74	6/26/2022 14:49	30.18
6/26/2022 13:50	0.21	6/26/2022 14:20	10.65	6/26/2022 13:08	0.83	6/26/2022 14:50	30.20
6/26/2022 13:51	0.29	6/26/2022 14:21	10.69	6/26/2022 13:09	0.75	6/26/2022 14:51	30.23
6/26/2022 13:52	0.26	6/26/2022 14:22	10.70	6/26/2022 13:10	0.81	6/26/2022 14:52	30.17
6/26/2022 13:53	0.24	6/26/2022 14:23	10.67	6/26/2022 13:11	0.72	6/26/2022 14:53	30.18
6/26/2022 13:54	0.25	6/26/2022 14:24	10.64	6/26/2022 13:12	0.77	6/26/2022 14:54	30.23
6/26/2022 13:55	0.22	6/26/2022 14:25	10.69	6/26/2022 13:13	0.71	6/26/2022 14:55	30.16
6/26/2022 13:56	0.23	6/26/2022 14:26	10.66	6/26/2022 13:14	0.80	6/26/2022 14:56	30.19
6/26/2022 13:57	0.25	6/26/2022 14:27	10.67	6/26/2022 13:15	0.72	6/26/2022 14:57	30.18
6/26/2022 13:58	0.26	6/26/2022 14:28	10.64	6/26/2022 13:16	0.77	6/26/2022 14:58	30.14
6/26/2022 13:59	3.14	6/26/2022 14:29	10.62	6/26/2022 13:17	0.77	6/26/2022 14:59	30.19
6/26/2022 14:00	8.49	6/26/2022 14:30	10.64	6/26/2022 13:18	0.85	6/26/2022 15:00	30.19
6/26/2022 14:01	7.60	6/26/2022 14:31	10.63	6/26/2022 13:19	0.72	6/26/2022 15:01	30.20
6/26/2022 14:02	6.35	6/26/2022 14:32	10.63	6/26/2022 13:20	0.80	6/26/2022 15:02	30.17
6/26/2022 14:03	5.41	6/26/2022 14:33	10.59	6/26/2022 13:21	0.74	6/26/2022 15:03	30.15
6/26/2022 14:04	4.63	6/26/2022 14:34	10.62	6/26/2022 13:22	0.77	6/26/2022 15:04	30.18
6/26/2022 14:05	3.96	6/26/2022 14:35	10.60	6/26/2022 13:23	0.76	6/26/2022 15:05	30.18
6/26/2022 14:06	3.40	6/26/2022 14:36	10.61	6/26/2022 13:24	0.74	6/26/2022 15:06	30.22
6/26/2022 14:07	2.93	6/26/2022 14:37	10.64	6/26/2022 13:25	0.87	6/26/2022 15:07	30.19
6/26/2022 14:08	2.54	6/26/2022 14:38	10.63	6/26/2022 13:26	0.69	6/26/2022 15:08	30.22
6/26/2022 14:09	2.23	6/26/2022 14:39	10.67	6/26/2022 13:27	0.84	6/26/2022 15:09	30.17
6/26/2022 14:10	1.95	6/26/2022 14:40	10.66	6/26/2022 13:28	0.71	6/26/2022 15:10	30.17
6/26/2022 14:11	1.73	6/26/2022 14:41	10.67	6/26/2022 13:29	0.79	6/26/2022 15:11	30.19
6/26/2022 14:12	1.57	6/26/2022 14:42	10.62	6/26/2022 13:30	0.74	6/26/2022 15:12	30.21
6/26/2022 14:13	1.35	6/26/2022 14:43	10.67	6/26/2022 13:31	0.77	6/26/2022 15:13	30.15
6/26/2022 14:14	1.23	6/26/2022 14:44	10.70	6/26/2022 13:32	0.79	6/26/2022 15:14	30.23
6/26/2022 14:15	1.10	6/26/2022 14:45	10.70	6/26/2022 13:33	0.76	6/26/2022 15:15	30.17
6/26/2022 14:16	0.96	6/26/2022 14:46	10.69	6/26/2022 13:34	0.83	6/26/2022 15:16	30.15
6/26/2022 14:17	0.85	6/26/2022 14:47	10.66	6/26/2022 13:35	0.74	6/26/2022 15:17	30.20
6/26/2022 14:18	0.79	6/26/2022 14:48	10.67	6/26/2022 13:36	0.82	6/26/2022 15:18	30.17
6/26/2022 14:19	0.75	6/26/2022 14:49	10.62	6/26/2022 13:37	0.73	6/26/2022 15:19	30.14
6/26/2022 14:20	0.62	6/26/2022 14:50	10.66	6/26/2022 13:38	0.83	6/26/2022 15:20	30.20
6/26/2022 14:21	0.62	6/26/2022 14:51	10.65	6/26/2022 13:39	0.75	6/26/2022 15:21	30.19
6/26/2022 14:22	0.60	6/26/2022 14:52	10.65	6/26/2022 13:40	0.78	6/26/2022 15:22	30.17
6/26/2022 14:23	0.50	6/26/2022 14:53	10.64	6/26/2022 13:41	0.74	6/26/2022 15:23	30.18
6/26/2022 14:24	0.45	6/26/2022 14:54	10.61	6/26/2022 13:42	0.78	6/26/2022 15:24	30.19
6/26/2022 14:25	0.45	6/26/2022 14:55	10.64	6/26/2022 13:43	0.78	6/26/2022 15:25	30.19
6/26/2022 14:26	0.39	6/26/2022 14:56	10.58	6/26/2022 13:44	0.75	6/26/2022 15:26	30.18
6/26/2022 14:27	0.38	6/26/2022 14:57	10.63	6/26/2022 13:45	0.85	6/26/2022 15:27	30.18
6/26/2022 14:28	0.41	6/26/2022 14:58	10.60	6/26/2022 13:46	0.75	6/26/2022 15:28	30.18
6/26/2022 14:29	0.35	6/26/2022 14:59	10.62	6/26/2022 13:47	0.85	6/26/2022 15:29	30.20
6/26/2022 14:30	0.37	6/26/2022 15:00	10.59	6/26/2022 13:48	0.72	6/26/2022 15:30	30.21
6/26/2022 14:31	0.33	6/26/2022 15:01	10.60	6/26/2022 13:49	0.77	6/26/2022 15:31	30.16
6/26/2022 14:32	0.29	6/26/2022 15:02	10.62	6/26/2022 13:50	0.87	6/26/2022 15:32	30.20
6/26/2022 14:33	0.30	6/26/2022 15:03	10.64	6/26/2022 13:51	0.75	6/26/2022 15:33	30.20
6/26/2022 14:34	0.29	6/26/2022 15:04	10.67	6/26/2022 13:52	0.84	6/26/2022 15:34	30.18
6/26/2022 14:35	0.28	6/26/2022 15:05	10.68	6/26/2022 13:53	0.74	6/26/2022 15:35	30.15
6/26/2022 14:36	0.24	6/26/2022 15:06	10.66	6/26/2022 13:54	0.80	6/26/2022 15:36	30.17
6/26/2022 14:37	0.29	6/26/2022 15:07	10.65	6/26/2022 13:55	0.77	6/26/2022 15:37	32.35
6/26/2022 14:38	0.26	6/26/2022 15:08	10.67	6/26/2022 13:56	0.74	6/26/2022 15:38	31.38
6/26/2022 14:39	0.27	6/26/2022 15:09	10.65	6/26/2022 13:57	0.84	6/26/2022 15:39	30.64
6/26/2022 14:40	0.26	6/26/2022 15:10	10.67	6/26/2022 13:58	0.74	6/26/2022 15:40	30.32
6/26/2022 14:41	0.24	6/26/2022 15:11	10.66	6/26/2022 13:59	0.84	6/26/2022 15:41	30.25
6/26/2022 14:42	0.22	6/26/2022 15:12	10.66	6/26/2022 14:00	0.74	6/26/2022 15:42	30.25

6/26/2022 14:43	0.26	6/26/2022 15:13	10.62	6/26/2022 14:01	0.80	6/26/2022 15:43	30.25
6/26/2022 14:44	0.24	6/26/2022 15:14	10.63	6/26/2022 14:02	0.76	6/26/2022 15:44	30.24
6/26/2022 14:45	0.25	6/26/2022 15:15	10.65	6/26/2022 14:03	0.78	6/26/2022 15:45	30.21
6/26/2022 14:46	0.25	6/26/2022 15:16	10.62	6/26/2022 14:04	0.81	6/26/2022 15:46	30.22
6/26/2022 14:47	0.26	6/26/2022 15:17	10.65	6/26/2022 14:05	0.86	6/26/2022 15:47	30.21
6/26/2022 14:48	0.24	6/26/2022 15:18	10.62	6/26/2022 14:06	0.77	6/26/2022 15:48	30.18
6/26/2022 14:49	0.26	6/26/2022 15:19	10.62	6/26/2022 14:07	0.78	6/26/2022 15:49	30.16
6/26/2022 14:50	0.26	6/26/2022 15:20	10.61	6/26/2022 14:08	0.82	6/26/2022 15:50	30.21
6/26/2022 14:51	0.21	6/26/2022 15:21	10.66	6/26/2022 14:09	0.75	6/26/2022 15:51	30.19
6/26/2022 14:52	0.23	6/26/2022 15:22	10.66	6/26/2022 14:10	0.85	6/26/2022 15:52	30.18
6/26/2022 14:53	0.22	6/26/2022 15:23	10.69	6/26/2022 14:11	0.78	6/26/2022 15:53	30.20
6/26/2022 14:54	0.24	6/26/2022 15:24	10.72	6/26/2022 14:12	0.83	6/26/2022 15:54	30.20
6/26/2022 14:55	0.26	6/26/2022 15:25	10.68	6/26/2022 14:13	0.80	6/26/2022 15:55	30.20
6/26/2022 14:56	0.24	6/26/2022 15:26	10.67	6/26/2022 14:14	0.89	6/26/2022 15:56	30.21
6/26/2022 14:57	0.22	6/26/2022 15:27	10.68	6/26/2022 14:15	0.76	6/26/2022 15:57	30.20
6/26/2022 14:58	0.24	6/26/2022 15:28	10.70	6/26/2022 14:16	0.89	6/26/2022 15:58	30.18
6/26/2022 14:59	0.24	6/26/2022 15:29	10.66	6/26/2022 14:17	0.77	6/26/2022 15:59	30.22
6/26/2022 15:00	0.22	6/26/2022 15:30	10.69	6/26/2022 14:18	0.85	6/26/2022 16:00	30.18
6/26/2022 15:01	0.22	6/26/2022 15:31	10.69	6/26/2022 14:19	0.77	6/26/2022 16:01	30.19
6/26/2022 15:02	0.23	6/26/2022 15:32	10.69	6/26/2022 14:20	0.87	6/26/2022 16:02	30.21
6/26/2022 15:03	0.17	6/26/2022 15:33	10.68	6/26/2022 14:21	0.77	6/26/2022 16:03	30.17
6/26/2022 15:04	0.24	6/26/2022 15:34	10.64	6/26/2022 14:22	0.89	6/26/2022 16:04	30.20
6/26/2022 15:05	1.10	6/26/2022 15:35	10.63	6/26/2022 14:23	0.76	6/26/2022 16:05	30.16
6/26/2022 15:06	6.92	6/26/2022 15:36	10.64	6/26/2022 14:24	0.87	6/26/2022 16:06	30.18
6/26/2022 15:07	7.01	6/26/2022 15:37	10.65	6/26/2022 14:25	0.79	6/26/2022 16:07	30.17
6/26/2022 15:08	5.96	6/26/2022 15:38	10.63	6/26/2022 14:26	0.84	6/26/2022 16:08	30.17
6/26/2022 15:09	5.08	6/26/2022 15:39	10.61	6/26/2022 14:27	0.76	6/26/2022 16:09	30.19
6/26/2022 15:10	4.34	6/26/2022 15:40	10.63	6/26/2022 14:28	0.84	6/26/2022 16:10	30.24
6/26/2022 15:11	3.70	6/26/2022 15:41	10.60	6/26/2022 14:29	0.83	6/26/2022 16:11	30.15
6/26/2022 15:12	3.21	6/26/2022 15:42	10.61	6/26/2022 14:30	0.78	6/26/2022 16:12	30.18
6/26/2022 15:13	2.73	6/26/2022 15:43	10.61	6/26/2022 14:31	0.88	6/26/2022 16:13	30.18
6/26/2022 15:14	2.41	6/26/2022 15:44	10.63	6/26/2022 14:32	0.78	6/26/2022 16:14	30.15
6/26/2022 15:15	2.14	6/26/2022 15:45	10.67	6/26/2022 14:33	0.88	6/26/2022 16:15	30.14
6/26/2022 15:16	1.85	6/26/2022 15:46	10.63	6/26/2022 14:34	0.73	6/26/2022 16:16	30.16
6/26/2022 15:17	1.60	6/26/2022 15:47	10.67	6/26/2022 14:35	0.85	6/26/2022 16:17	30.18
6/26/2022 15:18	1.47	6/26/2022 15:48	10.69	6/26/2022 14:36	0.81	6/26/2022 16:18	30.16
6/26/2022 15:19	1.30	6/26/2022 15:49	10.67	6/26/2022 14:37	0.80	6/26/2022 16:19	30.19
6/26/2022 15:20	6.80	6/26/2022 15:50	10.68	6/26/2022 14:38	0.85	6/26/2022 16:20	30.19
6/26/2022 15:21	9.36	6/26/2022 15:51	10.71	6/26/2022 14:39	0.78	6/26/2022 16:21	30.17
6/26/2022 15:22	7.89	6/26/2022 15:52	10.69	6/26/2022 14:40	0.89	6/26/2022 16:22	30.17
6/26/2022 15:23	6.66	6/26/2022 15:53	10.65	6/26/2022 14:41	0.78	6/26/2022 16:23	30.15
6/26/2022 15:24	5.68	6/26/2022 15:54	10.65	6/26/2022 14:42	0.82	6/26/2022 16:24	30.20
6/26/2022 15:25	4.86	6/26/2022 15:55	10.69	6/26/2022 14:43	0.78	6/26/2022 16:25	30.18
6/26/2022 15:26	4.18	6/26/2022 15:56	10.66	6/26/2022 14:44	0.80	6/26/2022 16:26	30.13
6/26/2022 15:27	3.58	6/26/2022 15:57	10.65	6/26/2022 14:45	0.82	6/26/2022 16:27	30.14
6/26/2022 15:28	5.22	6/26/2022 15:58	10.65	6/26/2022 14:46	0.77	6/26/2022 16:28	30.16
6/26/2022 15:29	10.25	6/26/2022 15:59	10.64	6/26/2022 14:47	0.88	6/26/2022 16:29	30.16
6/26/2022 15:30	9.95	6/26/2022 16:00	10.64	6/26/2022 14:48	0.76	6/26/2022 16:30	30.15
6/26/2022 15:31	8.42	6/26/2022 16:01	10.62	6/26/2022 14:49	0.88	6/26/2022 16:31	30.18
6/26/2022 15:32	7.13	6/26/2022 16:02	10.60	6/26/2022 14:50	0.80	6/26/2022 16:32	30.14
6/26/2022 15:33	6.08	6/26/2022 16:03	10.61	6/26/2022 14:51	0.75	6/26/2022 16:33	30.18
6/26/2022 15:34	5.20	6/26/2022 16:04	10.60	6/26/2022 14:52	0.86	6/26/2022 16:34	30.18
6/26/2022 15:35	4.51	6/26/2022 16:05	10.61	6/26/2022 14:53	0.76	6/26/2022 16:35	30.17
6/26/2022 15:36	3.87	6/26/2022 16:06	10.60	6/26/2022 14:54	0.88	6/26/2022 16:36	30.16
6/26/2022 15:37	3.37	6/26/2022 16:07	10.61	6/26/2022 14:55	0.78	6/26/2022 16:37	30.19
6/26/2022 15:38	2.89	6/26/2022 16:08	10.63	6/26/2022 14:56	0.79	6/26/2022 16:38	30.16
6/26/2022 15:39	3.84	6/26/2022 16:09	10.64	6/26/2022 14:57	0.79	6/26/2022 16:39	30.15
6/26/2022 15:40	9.17	6/26/2022 16:10	10.66	6/26/2022 14:58	0.78	6/26/2022 16:40	30.17
6/26/2022 15:41	8.90	6/26/2022 16:11	10.65	6/26/2022 14:59	0.84	6/26/2022 16:41	30.16
6/26/2022 15:42	7.61	6/26/2022 16:12	10.65	6/26/2022 15:00	0.77	6/26/2022 16:42	30.16
6/26/2022 15:43	6.45	6/26/2022 16:13	10.62	6/26/2022 15:01	0.89	6/26/2022 16:43	30.18
6/26/2022 15:44	5.52	6/26/2022 16:14	10.67	6/26/2022 15:02	0.79	6/26/2022 16:44	30.16
6/26/2022 15:45	4.74	6/26/2022 16:15	10.66	6/26/2022 15:03	0.81	6/26/2022 16:45	30.18
6/26/2022 15:46	4.12	6/26/2022 16:16	10.66	6/26/2022 15:04	0.84	6/26/2022 16:46	30.14
6/26/2022 15:47	3.57	6/26/2022 16:17	10.67	6/26/2022 15:05	0.78	6/26/2022 16:47	30.14
6/26/2022 15:48	3.07	6/26/2022 16:18	10.66	6/26/2022 15:06	0.88	6/26/2022 16:48	30.19
6/26/2022 15:49	2.67	6/26/2022 16:19	10.63	6/26/2022 15:07	0.82	6/26/2022 16:49	30.18
6/26/2022 15:50	2.32	6/26/2022 16:20	10.64	6/26/2022 15:08	0.82	6/26/2022 16:50	30.17
6/26/2022 15:51	2.07	6/26/2022 16:21	10.62	6/26/2022 15:09	0.82	6/26/2022 16:51	30.16
6/26/2022 15:52	1.85	6/26/2022 16:22	10.63	6/26/2022 15:10	0.80	6/26/2022 16:52	30.16
6/26/2022 15:53	1.67	6/26/2022 16:23	10.61	6/26/2022 15:11	0.85	6/26/2022 16:53	30.18
6/26/2022 15:54	1.66	6/26/2022 16:24	10.61	6/26/2022 15:12	0.84	6/26/2022 16:54	30.16
6/26/2022 15:55	1.59	6/26/2022 16:25	10.62	6/26/2022 15:13	0.78	6/26/2022 16:55	30.14
6/26/2022 15:56	1.51	6/26/2022 16:26	10.59	6/26/2022 15:14	0.89	6/26/2022 16:56	30.16
6/26/2022 15:57	1.38	6/26/2022 16:27	10.59	6/26/2022 15:15	0.80	6/26/2022 16:57	30.16
6/26/2022 15:58	1.27	6/26/2022 16:28	10.59	6/26/2022 15:16	0.78	6/26/2022 16:58	30.16
6/26/2022 15:59	1.22	6/26/2022 16:29	10.61	6/26/2022 15:17	0.81	6/26/2022 16:59	30.19
6/26/2022 16:00	1.26	6/26/2022 16:30	10.58	6/26/2022 15:18	0.79	6/26/2022 17:00	30.15
6/26/2022 16:01	1.24	6/26/2022 16:31	10.58	6/26/2022 15:19	0.86	6/26/2022 17:01	30.15
6/26/2022 16:02	1.19	6/26/2022 16:32	10.65	6/26/2022 15:20	0.78	6/26/2022 17:02	30.11
6/26/2022 16:03	1.09	6/26/2022 16:33	10.67	6/26/2022 15:21	0.90	6/26/2022 17:03	30.18
6/26/2022 16:04	1.02	6/26/2022 16:34	10.67	6/26/2022 15:22	0.76	6/26/2022 17:04	30.12
6/26/2022 16:05	0.97	6/26/2022 16:35	10.64	6/26/2022 15:23	0.80	6/26/2022 17:05	30.13
6/26/2022 16:06	0.89	6/26/2022 16:36	10.65	6/26/2022 15:24	0.83	6/26/2022 17:06	30.14
6/26/2022 16:07	0.87	6/26/2022 16:37	10.64	6/26/2022 15:25	0.77	6/26/2022 17:07	30.14
6/26/2022 16:08	0.94	6/26/2022 16:38	10.65	6/26/2022 15:26	0.86	6/26/2022 17:08	30.18
6/26/2022 16:09	0.92	6/26/2022 16:39	10.65	6/26/2022 15:27	0.89	6/26/2022 17:09	30.15
6/26/2022 16:10	0.88	6/26/2022 16:40	10.67	6/26/2022 15:28	0.83	6/26/2022 17:10	30.14

6/26/2022 16:11	0.84	6/26/2022 16:41	10.65	6/26/2022 15:29	0.81	6/26/2022 17:11	30.16
6/26/2022 16:12	0.78	6/26/2022 16:42	10.61	6/26/2022 15:30	0.82	6/26/2022 17:12	30.13
6/26/2022 16:13	0.70	6/26/2022 16:43	10.61	6/26/2022 15:31	0.82	6/26/2022 17:13	30.12
6/26/2022 16:14	0.67	6/26/2022 16:44	10.62	6/26/2022 15:32	0.82	6/26/2022 17:14	30.16
6/26/2022 16:15	0.66	6/26/2022 16:45	10.66	6/26/2022 15:33	0.89	6/26/2022 17:15	30.18
6/26/2022 16:16	0.60	6/26/2022 16:46	10.62	6/26/2022 15:34	0.84	6/26/2022 17:16	30.18
6/26/2022 16:17	0.57	6/26/2022 16:47	10.62	6/26/2022 15:35	0.87	6/26/2022 17:17	30.14
6/26/2022 16:18	0.47	6/26/2022 16:48	10.58	6/26/2022 15:36	0.76	6/26/2022 17:18	30.13
6/26/2022 16:19	0.46	6/26/2022 16:49	10.61	6/26/2022 15:37	0.80	6/26/2022 17:19	30.17
6/26/2022 16:20	0.46	6/26/2022 16:50	10.59	6/26/2022 15:38	0.90	6/26/2022 17:20	30.12
6/26/2022 16:21	0.42	6/26/2022 16:51	10.59	6/26/2022 15:39	0.82	6/26/2022 17:21	30.13
6/26/2022 16:22	0.43	6/26/2022 16:52	10.59	6/26/2022 15:40	0.80	6/26/2022 17:22	30.14
6/26/2022 16:23	0.39	6/26/2022 16:53	10.62	6/26/2022 15:41	0.78	6/26/2022 17:23	30.16
6/26/2022 16:24	0.38	6/26/2022 16:54	10.62	6/26/2022 15:42	0.80	6/26/2022 17:24	30.14
6/26/2022 16:25	0.40	6/26/2022 16:55	10.63	6/26/2022 15:43	0.81	6/26/2022 17:25	30.13
6/26/2022 16:26	0.39	6/26/2022 16:56	10.65	6/26/2022 15:44	0.81	6/26/2022 17:26	30.16
6/26/2022 16:27	0.37	6/26/2022 16:57	10.66	6/26/2022 15:45	0.78	6/26/2022 17:27	30.13
6/26/2022 16:28	0.33	6/26/2022 16:58	10.66	6/26/2022 15:46	0.81	6/26/2022 17:28	30.11
6/26/2022 16:29	0.32	6/26/2022 16:59	10.70	6/26/2022 15:47	0.78	6/26/2022 17:29	30.14
6/26/2022 16:30	0.32	6/26/2022 17:00	10.69	6/26/2022 15:48	0.80	6/26/2022 17:30	30.16
6/26/2022 16:31	0.32	6/26/2022 17:01	10.64	6/26/2022 15:49	0.88	6/26/2022 17:31	30.12
6/26/2022 16:32	0.35	6/26/2022 17:02	10.63	6/26/2022 15:50	0.79	6/26/2022 17:32	30.14
6/26/2022 16:33	0.32	6/26/2022 17:03	10.66	6/26/2022 15:51	0.88	6/26/2022 17:33	30.15
6/26/2022 16:34	0.32	6/26/2022 17:04	10.67	6/26/2022 15:52	0.80	6/26/2022 17:34	30.14
6/26/2022 16:35	0.26	6/26/2022 17:05	10.67	6/26/2022 15:53	7.69	6/26/2022 17:35	30.16
6/26/2022 16:36	0.30	6/26/2022 17:06	10.65	6/26/2022 15:54	9.29	6/26/2022 17:36	30.17
6/26/2022 16:37	0.31	6/26/2022 17:07	10.63	6/26/2022 15:55	6.07	6/26/2022 17:37	30.09
6/26/2022 16:38	2.05	6/26/2022 17:08	12.07	6/26/2022 15:56	3.67	6/26/2022 17:38	30.18
6/26/2022 16:39	7.65	6/26/2022 17:09	14.30	6/26/2022 15:57	1.94	6/26/2022 17:39	30.11
6/26/2022 16:40	6.98	6/26/2022 17:10	13.78	6/26/2022 15:58	0.89	6/26/2022 17:40	30.12
6/26/2022 16:41	5.92	6/26/2022 17:11	13.42	6/26/2022 15:59	7.08	6/26/2022 17:41	30.14
6/26/2022 16:42	5.04	6/26/2022 17:12	13.06	6/26/2022 16:00	9.00	6/26/2022 17:42	30.12
6/26/2022 16:43	4.36	6/26/2022 17:13	17.35	6/26/2022 16:01	5.90	6/26/2022 17:43	30.14
6/26/2022 16:44	3.71	6/26/2022 17:14	20.15	6/26/2022 16:02	3.49	6/26/2022 17:44	30.14
6/26/2022 16:45	3.26	6/26/2022 17:15	19.10	6/26/2022 16:03	1.85	6/26/2022 17:45	30.13
6/26/2022 16:46	2.78	6/26/2022 17:16	18.14	6/26/2022 16:04	0.90	6/26/2022 17:46	30.14
6/26/2022 16:47	2.42	6/26/2022 17:17	17.34	6/26/2022 16:05	0.85	6/26/2022 17:47	30.09
6/26/2022 16:48	2.15	6/26/2022 17:18	16.71	6/26/2022 16:06	1.00	6/26/2022 17:48	30.14
6/26/2022 16:49	1.87	6/26/2022 17:19	16.05	6/26/2022 16:07	8.15	6/26/2022 17:49	30.13
6/26/2022 16:50	1.69	6/26/2022 17:20	15.55	6/26/2022 16:08	6.49	6/26/2022 17:50	30.10
6/26/2022 16:51	1.51	6/26/2022 17:21	15.07	6/26/2022 16:09	3.97	6/26/2022 17:51	30.12
6/26/2022 16:52	1.30	6/26/2022 17:22	14.63	6/26/2022 16:10	2.10	6/26/2022 17:52	30.14
6/26/2022 16:53	1.18	6/26/2022 17:23	14.25	6/26/2022 16:11	0.91	6/26/2022 17:53	30.13
6/26/2022 16:54	1.05	6/26/2022 17:24	13.91	6/26/2022 16:12	0.86	6/26/2022 17:54	30.09
6/26/2022 16:55	0.95	6/26/2022 17:25	13.58	6/26/2022 16:13	0.84	6/26/2022 17:55	30.13
6/26/2022 16:56	0.88	6/26/2022 17:26	13.30	6/26/2022 16:14	0.82	6/26/2022 17:56	30.15
6/26/2022 16:57	0.77	6/26/2022 17:27	13.07	6/26/2022 16:15	0.89	6/26/2022 17:57	30.14
6/26/2022 16:58	0.75	6/26/2022 17:28	12.87	6/26/2022 16:16	0.80	6/26/2022 17:58	30.10
6/26/2022 16:59	0.66	6/26/2022 17:29	12.68	6/26/2022 16:17	0.82	6/26/2022 17:59	30.13
6/26/2022 17:00	0.63	6/26/2022 17:30	16.84	6/26/2022 16:18	0.82	6/26/2022 18:00	30.14
6/26/2022 17:01	0.54	6/26/2022 17:31	16.97	6/26/2022 16:19	0.79	6/26/2022 18:01	30.12
6/26/2022 17:02	0.54	6/26/2022 17:32	16.30	6/26/2022 16:20	0.86	6/26/2022 18:02	30.14
6/26/2022 17:03	0.50	6/26/2022 17:33	15.72	6/26/2022 16:21	0.80	6/26/2022 18:03	30.12
6/26/2022 17:04	0.48	6/26/2022 17:34	15.19	6/26/2022 16:22	0.87	6/26/2022 18:04	30.11
6/26/2022 17:05	0.43	6/26/2022 17:35	14.73	6/26/2022 16:23	0.81	6/26/2022 18:05	30.15
6/26/2022 17:06	0.42	6/26/2022 17:36	14.38	6/26/2022 16:24	0.89	6/26/2022 18:06	30.12
6/26/2022 17:07	0.40	6/26/2022 17:37	13.99	6/26/2022 16:25	0.78	6/26/2022 18:07	30.11
6/26/2022 17:08	0.36	6/26/2022 17:38	13.73	6/26/2022 16:26	0.86	6/26/2022 18:08	30.13
6/26/2022 17:09	0.38	6/26/2022 17:39	13.47	6/26/2022 16:27	0.79	6/26/2022 18:09	30.12
6/26/2022 17:10	0.34	6/26/2022 17:40	13.21	6/26/2022 16:28	0.82	6/26/2022 18:10	30.62
6/26/2022 17:11	0.38	6/26/2022 17:41	13.01	6/26/2022 16:29	0.78	6/26/2022 18:11	31.74
6/26/2022 17:12	0.34	6/26/2022 17:42	12.82	6/26/2022 16:30	0.87	6/26/2022 18:12	30.73
6/26/2022 17:13	0.32	6/26/2022 17:43	12.62	6/26/2022 16:31	0.78	6/26/2022 18:13	30.34
6/26/2022 17:14	0.31	6/26/2022 17:44	12.49	6/26/2022 16:32	0.82	6/26/2022 18:14	30.22
6/26/2022 17:15	0.30	6/26/2022 17:45	12.31	6/26/2022 16:33	0.83	6/26/2022 18:15	30.17
6/26/2022 17:16	0.27	6/26/2022 17:46	12.14	6/26/2022 16:34	0.80	6/26/2022 18:16	30.19
6/26/2022 17:17	0.29	6/26/2022 17:47	12.04	6/26/2022 16:35	0.85	6/26/2022 18:17	30.16
6/26/2022 17:18	0.26	6/26/2022 17:48	11.96	6/26/2022 16:36	0.84	6/26/2022 18:18	30.15
6/26/2022 17:19	0.30	6/26/2022 17:49	11.87	6/26/2022 16:37	0.90	6/26/2022 18:19	30.16
6/26/2022 17:20	0.30	6/26/2022 17:50	11.80	6/26/2022 16:38	0.82	6/26/2022 18:20	30.17
6/26/2022 17:21	0.26	6/26/2022 17:51	11.70	6/26/2022 16:39	0.88	6/26/2022 18:21	30.16
6/26/2022 17:22	0.23	6/26/2022 17:52	11.61	6/26/2022 16:40	0.81	6/26/2022 18:22	30.12
6/26/2022 17:23	0.25	6/26/2022 17:53	11.56	6/26/2022 16:41	0.89	6/26/2022 18:23	30.14
6/26/2022 17:24	0.31	6/26/2022 17:54	11.47	6/26/2022 16:42	0.83	6/26/2022 18:24	30.13
6/26/2022 17:25	0.26	6/26/2022 17:55	11.38	6/26/2022 16:43	0.85	6/26/2022 18:25	30.16
6/26/2022 17:26	0.24	6/26/2022 17:56	11.36	6/26/2022 16:44	0.88	6/26/2022 18:26	30.16
6/26/2022 17:27	0.26	6/26/2022 17:57	11.33	6/26/2022 16:45	0.81	6/26/2022 18:27	30.14
6/26/2022 17:28	0.26	6/26/2022 17:58	11.28	6/26/2022 16:46	0.80	6/26/2022 18:28	30.18
6/26/2022 17:29	0.27	6/26/2022 17:59	11.25	6/26/2022 16:47	0.91	6/26/2022 18:29	30.14
6/26/2022 17:30	0.23	6/26/2022 18:00	11.27	6/26/2022 16:48	0.82	6/26/2022 18:30	30.14
6/26/2022 17:31	0.30	6/26/2022 18:01	11.18	6/26/2022 16:49	0.85	6/26/2022 18:31	30.14
6/26/2022 17:32	0.26	6/26/2022 18:02	11.16	6/26/2022 16:50	0.87	6/26/2022 18:32	30.11
6/26/2022 17:33	0.29	6/26/2022 18:03	11.16	6/26/2022 16:51	0.81	6/26/2022 18:33	30.14
6/26/2022 17:34	3.13	6/26/2022 18:04	11.14	6/26/2022 16:52	0.82	6/26/2022 18:34	30.15
6/26/2022 17:35	7.96	6/26/2022 18:05	11.12	6/26/2022 16:53	0.81	6/26/2022 18:35	30.14
6/26/2022 17:36	6.64	6/26/2022 18:06	11.09	6/26/2022 16:54	0.85	6/26/2022 18:36	30.12
6/26/2022 17:37	5.67	6/26/2022 18:07	11.02	6/26/2022 16:55	0.81	6/26/2022 18:37	30.15
6/26/2022 17:38	4.81	6/26/2022 18:08	10.98	6/26/2022 16:56	0.88	6/26/2022 18:38	30.12

6/26/2022 17:39	4.14	6/26/2022 18:09	10.96	6/26/2022 16:57	0.77	6/26/2022 18:39	30.12
6/26/2022 17:40	3.54	6/26/2022 18:10	11.01	6/26/2022 16:58	0.88	6/26/2022 18:40	30.10
6/26/2022 17:41	3.08	6/26/2022 18:11	10.95	6/26/2022 16:59	0.84	6/26/2022 18:41	30.13
6/26/2022 17:42	2.64	6/26/2022 18:12	10.95	6/26/2022 17:00	0.87	6/26/2022 18:42	30.12
6/26/2022 17:43	2.27	6/26/2022 18:13	10.94	6/26/2022 17:01	0.81	6/26/2022 18:43	30.15
6/26/2022 17:44	2.02	6/26/2022 18:14	10.92	6/26/2022 17:02	0.85	6/26/2022 18:44	30.15
6/26/2022 17:45	1.77	6/26/2022 18:15	10.88	6/26/2022 17:03	0.79	6/26/2022 18:45	30.14
6/26/2022 17:46	1.52	6/26/2022 18:16	10.87	6/26/2022 17:04	0.83	6/26/2022 18:46	30.12
6/26/2022 17:47	1.38	6/26/2022 18:17	10.84	6/26/2022 17:05	0.83	6/26/2022 18:47	30.14
6/26/2022 17:48	1.25	6/26/2022 18:18	10.82	6/26/2022 17:06	0.85	6/26/2022 18:48	30.14
6/26/2022 17:49	1.13	6/26/2022 18:19	10.81	6/26/2022 17:07	0.85	6/26/2022 18:49	30.15
6/26/2022 17:50	1.01	6/26/2022 18:20	10.84	6/26/2022 17:08	0.82	6/26/2022 18:50	30.11
6/26/2022 17:51	0.92	6/26/2022 18:21	10.78	6/26/2022 17:09	0.88	6/26/2022 18:51	30.10
6/26/2022 17:52	0.81	6/26/2022 18:22	10.83	6/26/2022 17:10	0.83	6/26/2022 18:52	30.12
6/26/2022 17:53	0.76	6/26/2022 18:23	10.83	6/26/2022 17:11	0.86	6/26/2022 18:53	30.10
6/26/2022 17:54	0.67	6/26/2022 18:24	10.84	6/26/2022 17:12	0.77	6/26/2022 18:54	30.11
6/26/2022 17:55	0.61	6/26/2022 18:25	10.83	6/26/2022 17:13	0.85	6/26/2022 18:55	30.13
6/26/2022 17:56	0.55	6/26/2022 18:26	10.83	6/26/2022 17:14	0.82	6/26/2022 18:56	30.17
6/26/2022 17:57	0.57	6/26/2022 18:27	10.82	6/26/2022 17:15	0.82	6/26/2022 18:57	30.14
6/26/2022 17:58	0.51	6/26/2022 18:28	10.85	6/26/2022 17:16	0.87	6/26/2022 18:58	30.13
6/26/2022 17:59	0.51	6/26/2022 18:29	10.81	6/26/2022 17:17	0.81	6/26/2022 18:59	30.09
6/26/2022 18:00	0.44	6/26/2022 18:30	10.78	6/26/2022 17:18	0.91	6/26/2022 19:00	30.10
6/26/2022 18:01	0.45	6/26/2022 18:31	10.80	6/26/2022 17:19	0.79	6/26/2022 19:01	30.14
6/26/2022 18:02	0.43	6/26/2022 18:32	10.75	6/26/2022 17:20	0.83	6/26/2022 19:02	30.13
6/26/2022 18:03	0.37	6/26/2022 18:33	10.75	6/26/2022 17:21	0.79	6/26/2022 19:03	30.14
6/26/2022 18:04	0.38	6/26/2022 18:34	10.75	6/26/2022 17:22	0.81	6/26/2022 19:04	30.13
6/26/2022 18:05	0.41	6/26/2022 18:35	10.77	6/26/2022 17:23	0.90	6/26/2022 19:05	30.12
6/26/2022 18:06	0.34	6/26/2022 18:36	10.73	6/26/2022 17:24	0.81	6/26/2022 19:06	30.14
6/26/2022 18:07	2.60	6/26/2022 18:37	10.73	6/26/2022 17:25	0.91	6/26/2022 19:07	30.14
6/26/2022 18:08	8.14	6/26/2022 18:38	10.74	6/26/2022 17:26	0.80	6/26/2022 19:08	30.10
6/26/2022 18:09	8.31	6/26/2022 18:39	10.75	6/26/2022 17:27	0.89	6/26/2022 19:09	30.10
6/26/2022 18:10	7.00	6/26/2022 18:40	10.78	6/26/2022 17:28	0.78	6/26/2022 19:10	30.11
6/26/2022 18:11	5.92	6/26/2022 18:41	10.75	6/26/2022 17:29	0.83	6/26/2022 19:11	30.09
6/26/2022 18:12	5.08	6/26/2022 18:42	10.75	6/26/2022 17:30	0.78	6/26/2022 19:12	30.11
6/26/2022 18:13	4.37	6/26/2022 18:43	10.77	6/26/2022 17:31	0.81	6/26/2022 19:13	30.14
6/26/2022 18:14	3.79	6/26/2022 18:44	10.74	6/26/2022 17:32	0.82	6/26/2022 19:14	30.13
6/26/2022 18:15	3.22	6/26/2022 18:45	10.77	6/26/2022 17:33	0.83	6/26/2022 19:15	30.09
6/26/2022 18:16	2.78	6/26/2022 18:46	10.78	6/26/2022 17:34	0.84	6/26/2022 19:16	30.09
6/26/2022 18:17	2.45	6/26/2022 18:47	10.78	6/26/2022 17:35	0.83	6/26/2022 19:17	30.09
6/26/2022 18:18	2.17	6/26/2022 18:48	10.76	6/26/2022 17:36	0.85	6/26/2022 19:18	30.15
6/26/2022 18:19	6.11	6/26/2022 18:49	10.77	6/26/2022 17:37	0.84	6/26/2022 19:19	30.14
6/26/2022 18:20	9.57	6/26/2022 18:50	10.78	6/26/2022 17:38	0.80	6/26/2022 19:20	30.12
6/26/2022 18:21	8.06	6/26/2022 18:51	12.84	6/26/2022 17:39	0.89	6/26/2022 19:21	30.12
6/26/2022 18:22	6.86	6/26/2022 18:52	15.95	6/26/2022 17:40	0.86	6/26/2022 19:22	30.12
6/26/2022 18:23	5.83	6/26/2022 18:53	15.26	6/26/2022 17:41	0.77	6/26/2022 19:23	30.10
6/26/2022 18:24	4.99	6/26/2022 18:54	14.76	6/26/2022 17:42	0.92	6/26/2022 19:24	30.11
6/26/2022 18:25	4.32	6/26/2022 18:55	14.28	6/26/2022 17:43	0.80	6/26/2022 19:25	30.15
6/26/2022 18:26	3.71	6/26/2022 18:56	13.90	6/26/2022 17:44	0.90	6/26/2022 19:26	30.12
6/26/2022 18:27	3.21	6/26/2022 18:57	13.58	6/26/2022 17:45	0.79	6/26/2022 19:27	30.12
6/26/2022 18:28	2.74	6/26/2022 18:58	13.24	6/26/2022 17:46	0.91	6/26/2022 19:28	30.13
6/26/2022 18:29	2.42	6/26/2022 18:59	13.00	6/26/2022 17:47	0.81	6/26/2022 19:29	30.12
6/26/2022 18:30	2.14	6/26/2022 19:00	12.78	6/26/2022 17:48	0.88	6/26/2022 19:30	30.12
6/26/2022 18:31	1.89	6/26/2022 19:01	12.65	6/26/2022 17:49	0.80	6/26/2022 19:31	30.17
6/26/2022 18:32	1.68	6/26/2022 19:02	12.44	6/26/2022 17:50	0.88	6/26/2022 19:32	30.14
6/26/2022 18:33	1.52	6/26/2022 19:03	12.28	6/26/2022 17:51	0.81	6/26/2022 19:33	30.11
6/26/2022 18:34	1.31	6/26/2022 19:04	12.11	6/26/2022 17:52	0.89	6/26/2022 19:34	30.11
6/26/2022 18:35	1.23	6/26/2022 19:05	12.03	6/26/2022 17:53	0.84	6/26/2022 19:35	30.13
6/26/2022 18:36	1.12	6/26/2022 19:06	11.91	6/26/2022 17:54	0.87	6/26/2022 19:36	30.14
6/26/2022 18:37	0.94	6/26/2022 19:07	11.83	6/26/2022 17:55	0.82	6/26/2022 19:37	30.09
6/26/2022 18:38	0.89	6/26/2022 19:08	11.69	6/26/2022 17:56	0.91	6/26/2022 19:38	30.12
6/26/2022 18:39	0.83	6/26/2022 19:09	11.67	6/26/2022 17:57	0.77	6/26/2022 19:39	30.13
6/26/2022 18:40	0.74	6/26/2022 19:10	11.55	6/26/2022 17:58	0.87	6/26/2022 19:40	30.14
6/26/2022 18:41	0.68	6/26/2022 19:11	11.49	6/26/2022 17:59	0.82	6/26/2022 19:41	32.23
6/26/2022 18:42	0.61	6/26/2022 19:12	11.43	6/26/2022 18:00	0.84	6/26/2022 19:42	31.01
6/26/2022 18:43	0.58	6/26/2022 19:13	11.39	6/26/2022 18:01	0.85	6/26/2022 19:43	30.46
6/26/2022 18:44	0.57	6/26/2022 19:14	11.35	6/26/2022 18:02	0.85	6/26/2022 19:44	30.25
6/26/2022 18:45	0.56	6/26/2022 19:15	11.26	6/26/2022 18:03	0.85	6/26/2022 19:45	30.18
6/26/2022 18:46	0.56	6/26/2022 19:16	11.24	6/26/2022 18:04	0.81	6/26/2022 19:46	30.18
6/26/2022 18:47	0.66	6/26/2022 19:17	11.20	6/26/2022 18:05	0.85	6/26/2022 19:47	30.20
6/26/2022 18:48	0.67	6/26/2022 19:18	11.14	6/26/2022 18:06	0.81	6/26/2022 19:48	30.13
6/26/2022 18:49	0.65	6/26/2022 19:19	11.13	6/26/2022 18:07	0.86	6/26/2022 19:49	30.13
6/26/2022 18:50	0.59	6/26/2022 19:20	11.18	6/26/2022 18:08	0.85	6/26/2022 19:50	30.12
6/26/2022 18:51	0.58	6/26/2022 19:21	14.94	6/26/2022 18:09	0.82	6/26/2022 19:51	30.14
6/26/2022 18:52	0.56	6/26/2022 19:22	14.39	6/26/2022 18:10	0.79	6/26/2022 19:52	32.60
6/26/2022 18:53	0.50	6/26/2022 19:23	13.94	6/26/2022 18:11	0.90	6/26/2022 19:53	31.32
6/26/2022 18:54	0.48	6/26/2022 19:24	13.56	6/26/2022 18:12	0.84	6/26/2022 19:54	30.59
6/26/2022 18:55	0.44	6/26/2022 19:25	13.32	6/26/2022 18:13	0.79	6/26/2022 19:55	30.76
6/26/2022 18:56	0.74	6/26/2022 19:26	13.00	6/26/2022 18:14	0.79	6/26/2022 19:56	31.79
6/26/2022 18:57	6.70	6/26/2022 19:27	12.80	6/26/2022 18:15	0.80	6/26/2022 19:57	30.84
6/26/2022 18:58	7.33	6/26/2022 19:28	12.58	6/26/2022 18:16	0.91	6/26/2022 19:58	30.43
6/26/2022 18:59	6.19	6/26/2022 19:29	12.40	6/26/2022 18:17	0.83	6/26/2022 19:59	30.28
6/26/2022 19:00	5.24	6/26/2022 19:30	12.23	6/26/2022 18:18	0.80	6/26/2022 20:00	30.25
6/26/2022 19:01	4.46	6/26/2022 19:31	12.10	6/26/2022 18:19	0.88	6/26/2022 20:01	30.23
6/26/2022 19:02	3.87	6/26/2022 19:32	11.96	6/26/2022 18:20	0.80	6/26/2022 20:02	30.18
6/26/2022 19:03	3.30	6/26/2022 19:33	11.89	6/26/2022 18:21	0.82	6/26/2022 20:03	30.21
6/26/2022 19:04	2.85	6/26/2022 19:34	11.76	6/26/2022 18:22	0.80	6/26/2022 20:04	30.19
6/26/2022 19:05	2.53	6/26/2022 19:35	11.69	6/26/2022 18:23	0.89	6/26/2022 20:05	30.18
6/26/2022 19:06	2.18	6/26/2022 19:36	11.55	6/26/2022 18:24	0.88	6/26/2022 20:06	30.15

6/26/2022 19:07	1.96	6/26/2022 19:37	11.53	6/26/2022 18:25	0.82	6/26/2022 20:07	30.17
6/26/2022 19:08	1.69	6/26/2022 19:38	11.43	6/26/2022 18:26	0.82	6/26/2022 20:08	30.19
6/26/2022 19:09	1.54	6/26/2022 19:39	11.36	6/26/2022 18:27	0.82	6/26/2022 20:09	30.15
6/26/2022 19:10	1.39	6/26/2022 19:40	11.34	6/26/2022 18:28	0.93	6/26/2022 20:10	31.98
6/26/2022 19:11	1.22	6/26/2022 19:41	11.23	6/26/2022 18:29	0.77	6/26/2022 20:11	31.38
6/26/2022 19:12	1.12	6/26/2022 19:42	11.23	6/26/2022 18:30	0.86	6/26/2022 20:12	30.61
6/26/2022 19:13	1.00	6/26/2022 19:43	11.21	6/26/2022 18:31	0.85	6/26/2022 20:13	30.34
6/26/2022 19:14	0.86	6/26/2022 19:44	11.20	6/26/2022 18:32	0.78	6/26/2022 20:14	30.24
6/26/2022 19:15	0.78	6/26/2022 19:45	11.18	6/26/2022 18:33	0.90	6/26/2022 20:15	30.24
6/26/2022 19:16	0.75	6/26/2022 19:46	11.13	6/26/2022 18:34	0.82	6/26/2022 20:16	30.18
6/26/2022 19:17	0.73	6/26/2022 19:47	11.13	6/26/2022 18:35	0.89	6/26/2022 20:17	30.18
6/26/2022 19:18	0.63	6/26/2022 19:48	11.07	6/26/2022 18:36	0.81	6/26/2022 20:18	30.20
6/26/2022 19:19	0.57	6/26/2022 19:49	11.04	6/26/2022 18:37	0.90	6/26/2022 20:19	30.19
6/26/2022 19:20	0.59	6/26/2022 19:50	11.04	6/26/2022 18:38	0.82	6/26/2022 20:20	30.16
6/26/2022 19:21	0.52	6/26/2022 19:51	11.03	6/26/2022 18:39	0.84	6/26/2022 20:21	30.21
6/26/2022 19:22	0.49	6/26/2022 19:52	11.00	6/26/2022 18:40	0.83	6/26/2022 20:22	30.21
6/26/2022 19:23	0.45	6/26/2022 19:53	10.98	6/26/2022 18:41	0.82	6/26/2022 20:23	30.16
6/26/2022 19:24	0.42	6/26/2022 19:54	11.00	6/26/2022 18:42	0.87	6/26/2022 20:24	30.19
6/26/2022 19:25	5.28	6/26/2022 19:55	10.99	6/26/2022 18:43	0.78	6/26/2022 20:25	30.18
6/26/2022 19:26	7.85	6/26/2022 19:56	10.96	6/26/2022 18:44	0.89	6/26/2022 20:26	30.15
6/26/2022 19:27	6.54	6/26/2022 19:57	10.97	6/26/2022 18:45	3.00	6/26/2022 20:27	30.13
6/26/2022 19:28	5.58	6/26/2022 19:58	10.97	6/26/2022 18:46	8.01	6/26/2022 20:28	30.17
6/26/2022 19:29	4.75	6/26/2022 19:59	10.97	6/26/2022 18:47	5.00	6/26/2022 20:29	30.15
6/26/2022 19:30	4.09	6/26/2022 20:00	10.94	6/26/2022 18:48	2.78	6/26/2022 20:30	30.17
6/26/2022 19:31	3.54	6/26/2022 20:01	10.93	6/26/2022 18:49	1.21	6/26/2022 20:31	30.17
6/26/2022 19:32	3.03	6/26/2022 20:02	10.93	6/26/2022 18:50	0.85	6/26/2022 20:32	30.14
6/26/2022 19:33	2.63	6/26/2022 20:03	10.90	6/26/2022 18:51	0.90	6/26/2022 20:33	30.12
6/26/2022 19:34	2.31	6/26/2022 20:04	10.89	6/26/2022 18:52	0.87	6/26/2022 20:34	30.12
6/26/2022 19:35	2.01	6/26/2022 20:05	10.86	6/26/2022 18:53	0.80	6/26/2022 20:35	30.12
6/26/2022 19:36	1.75	6/26/2022 20:06	10.89	6/26/2022 18:54	0.91	6/26/2022 20:36	30.14
6/26/2022 19:37	1.60	6/26/2022 20:07	10.88	6/26/2022 18:55	0.81	6/26/2022 20:37	30.18
6/26/2022 19:38	3.36	6/26/2022 20:08	13.35	6/26/2022 18:56	0.86	6/26/2022 20:38	30.15
6/26/2022 19:39	8.82	6/26/2022 20:09	16.11	6/26/2022 18:57	0.78	6/26/2022 20:39	30.15
6/26/2022 19:40	10.02	6/26/2022 20:10	15.39	6/26/2022 18:58	0.83	6/26/2022 20:40	30.14
6/26/2022 19:41	8.48	6/26/2022 20:11	14.83	6/26/2022 18:59	0.90	6/26/2022 20:41	30.15
6/26/2022 19:42	7.20	6/26/2022 20:12	14.36	6/26/2022 19:00	0.83	6/26/2022 20:42	30.16
6/26/2022 19:43	6.12	6/26/2022 20:13	13.96	6/26/2022 19:01	0.87	6/26/2022 20:43	30.16
6/26/2022 19:44	5.26	6/26/2022 20:14	13.58	6/26/2022 19:02	0.93	6/26/2022 20:44	30.18
6/26/2022 19:45	4.54	6/26/2022 20:15	13.29	6/26/2022 19:03	0.87	6/26/2022 20:45	30.16
6/26/2022 19:46	3.91	6/26/2022 20:16	13.01	6/26/2022 19:04	0.83	6/26/2022 20:46	30.16
6/26/2022 19:47	3.36	6/26/2022 20:17	12.74	6/26/2022 19:05	0.93	6/26/2022 20:47	30.16
6/26/2022 19:48	2.91	6/26/2022 20:18	12.56	6/26/2022 19:06	0.82	6/26/2022 20:48	30.14
6/26/2022 19:49	2.54	6/26/2022 20:19	12.39	6/26/2022 19:07	0.82	6/26/2022 20:49	30.13
6/26/2022 19:50	2.27	6/26/2022 20:20	12.30	6/26/2022 19:08	0.88	6/26/2022 20:50	30.13
6/26/2022 19:51	1.96	6/26/2022 20:21	12.10	6/26/2022 19:09	0.83	6/26/2022 20:51	30.13
6/26/2022 19:52	1.79	6/26/2022 20:22	12.00	6/26/2022 19:10	0.90	6/26/2022 20:52	30.15
6/26/2022 19:53	1.60	6/26/2022 20:23	11.91	6/26/2022 19:11	0.81	6/26/2022 20:53	30.12
6/26/2022 19:54	1.44	6/26/2022 20:24	11.78	6/26/2022 19:12	0.88	6/26/2022 20:54	30.14
6/26/2022 19:55	1.25	6/26/2022 20:25	11.69	6/26/2022 19:13	0.81	6/26/2022 20:55	30.15
6/26/2022 19:56	1.15	6/26/2022 20:26	11.64	6/26/2022 19:14	0.85	6/26/2022 20:56	30.13
6/26/2022 19:57	1.05	6/26/2022 20:27	11.56	6/26/2022 19:15	0.82	6/26/2022 20:57	30.14
6/26/2022 19:58	0.94	6/26/2022 20:28	11.48	6/26/2022 19:16	0.83	6/26/2022 20:58	30.13
6/26/2022 19:59	0.84	6/26/2022 20:29	11.39	6/26/2022 19:17	0.85	6/26/2022 20:59	30.17
6/26/2022 20:00	0.77	6/26/2022 20:30	11.39	6/26/2022 19:18	0.87	6/26/2022 21:00	30.12
6/26/2022 20:01	0.74	6/26/2022 20:31	11.33	6/26/2022 19:19	0.80	6/26/2022 21:01	30.17
6/26/2022 20:02	0.65	6/26/2022 20:32	11.35	6/26/2022 19:20	0.93	6/26/2022 21:02	30.14
6/26/2022 20:03	0.63	6/26/2022 20:33	11.28	6/26/2022 19:21	0.77	6/26/2022 21:03	30.12
6/26/2022 20:04	0.61	6/26/2022 20:34	11.26	6/26/2022 19:22	0.90	6/26/2022 21:04	30.16
6/26/2022 20:05	0.56	6/26/2022 20:35	11.25	6/26/2022 19:23	0.78	6/26/2022 21:05	30.15
6/26/2022 20:06	0.54	6/26/2022 20:36	11.21	6/26/2022 19:24	0.91	6/26/2022 21:06	30.13
6/26/2022 20:07	0.52	6/26/2022 20:37	11.18	6/26/2022 19:25	0.80	6/26/2022 21:07	30.15
6/26/2022 20:08	0.46	6/26/2022 20:38	11.18	6/26/2022 19:26	0.90	6/26/2022 21:08	30.13
6/26/2022 20:09	0.48	6/26/2022 20:39	11.12	6/26/2022 19:27	0.88	6/26/2022 21:09	30.14
6/26/2022 20:10	0.42	6/26/2022 20:40	11.10	6/26/2022 19:28	0.81	6/26/2022 21:10	30.14
6/26/2022 20:11	0.44	6/26/2022 20:41	11.10	6/26/2022 19:29	0.83	6/26/2022 21:11	30.11
6/26/2022 20:12	0.40	6/26/2022 20:42	11.03	6/26/2022 19:30	0.85	6/26/2022 21:12	30.13
6/26/2022 20:13	0.38	6/26/2022 20:43	11.04	6/26/2022 19:31	0.91	6/26/2022 21:13	30.13
6/26/2022 20:14	0.41	6/26/2022 20:44	11.01	6/26/2022 19:32	0.82	6/26/2022 21:14	30.15
6/26/2022 20:15	0.36	6/26/2022 20:45	10.99	6/26/2022 19:33	0.85	6/26/2022 21:15	30.11
6/26/2022 20:16	0.34	6/26/2022 20:46	10.95	6/26/2022 19:34	0.88	6/26/2022 21:16	30.13
6/26/2022 20:17	0.34	6/26/2022 20:47	10.93	6/26/2022 19:35	0.84	6/26/2022 21:17	30.12
6/26/2022 20:18	5.36	6/26/2022 20:48	10.94	6/26/2022 19:36	0.93	6/26/2022 21:18	30.12
6/26/2022 20:19	7.54	6/26/2022 20:49	10.86	6/26/2022 19:37	0.81	6/26/2022 21:19	30.14
6/26/2022 20:20	6.34	6/26/2022 20:50	10.87	6/26/2022 19:38	0.90	6/26/2022 21:20	30.12
6/26/2022 20:21	5.43	6/26/2022 20:51	10.86	6/26/2022 19:39	0.81	6/26/2022 21:21	30.12
6/26/2022 20:22	4.65	6/26/2022 20:52	10.86	6/26/2022 19:40	0.80	6/26/2022 21:22	30.11
6/26/2022 20:23	3.98	6/26/2022 20:53	10.80	6/26/2022 19:41	0.83	6/26/2022 21:23	30.12
6/26/2022 20:24	3.44	6/26/2022 20:54	10.81	6/26/2022 19:42	0.82	6/26/2022 21:24	30.15
6/26/2022 20:25	2.93	6/26/2022 20:55	10.82	6/26/2022 19:43	0.80	6/26/2022 21:25	30.15
6/26/2022 20:26	2.56	6/26/2022 20:56	10.76	6/26/2022 19:44	0.86	6/26/2022 21:26	30.12
6/26/2022 20:27	2.24	6/26/2022 20:57	10.75	6/26/2022 19:45	0.83	6/26/2022 21:27	30.09
6/26/2022 20:28	1.99	6/26/2022 20:58	10.75	6/26/2022 19:46	0.83	6/26/2022 21:28	30.12
6/26/2022 20:29	1.73	6/26/2022 20:59	10.77	6/26/2022 19:47	0.84	6/26/2022 21:29	30.10
6/26/2022 20:30	1.56	6/26/2022 21:00	10.79	6/26/2022 19:48	0.86	6/26/2022 21:30	30.12
6/26/2022 20:31	1.38	6/26/2022 21:01	10.81	6/26/2022 19:49	0.84	6/26/2022 21:31	30.14
6/26/2022 20:32	1.27	6/26/2022 21:02	10.83	6/26/2022 19:50	0.82	6/26/2022 21:32	30.14
6/26/2022 20:33	1.14	6/26/2022 21:03	10.87	6/26/2022 19:51	0.85	6/26/2022 21:33	30.12
6/26/2022 20:34	1.03	6/26/2022 21:04	10.85	6/26/2022 19:52	0.81	6/26/2022 21:34	30.11

6/26/2022 20:35	0.92	6/26/2022 21:05	10.85	6/26/2022 19:53	0.85	6/26/2022 21:35	30.14
6/26/2022 20:36	0.83	6/26/2022 21:06	10.85	6/26/2022 19:54	0.82	6/26/2022 21:36	30.14
6/26/2022 20:37	0.78	6/26/2022 21:07	14.34	6/26/2022 19:55	0.86	6/26/2022 21:37	30.17
6/26/2022 20:38	0.70	6/26/2022 21:08	14.46	6/26/2022 19:56	0.83	6/26/2022 21:38	30.12
6/26/2022 20:39	0.64	6/26/2022 21:09	13.99	6/26/2022 19:57	0.85	6/26/2022 21:39	30.12
6/26/2022 20:40	0.62	6/26/2022 21:10	13.59	6/26/2022 19:58	0.83	6/26/2022 21:40	30.12
6/26/2022 20:41	0.54	6/26/2022 21:11	13.23	6/26/2022 19:59	0.87	6/26/2022 21:41	30.11
6/26/2022 20:42	0.53	6/26/2022 21:12	12.95	6/26/2022 20:00	0.79	6/26/2022 21:42	30.14
6/26/2022 20:43	0.52	6/26/2022 21:13	12.73	6/26/2022 20:01	0.84	6/26/2022 21:43	30.09
6/26/2022 20:44	0.50	6/26/2022 21:14	12.50	6/26/2022 20:02	0.82	6/26/2022 21:44	30.13
6/26/2022 20:45	0.43	6/26/2022 21:15	12.34	6/26/2022 20:03	0.81	6/26/2022 21:45	30.11
6/26/2022 20:46	0.45	6/26/2022 21:16	12.19	6/26/2022 20:04	0.88	6/26/2022 21:46	30.11
6/26/2022 20:47	0.38	6/26/2022 21:17	12.04	6/26/2022 20:05	0.79	6/26/2022 21:47	30.12
6/26/2022 20:48	0.37	6/26/2022 21:18	11.88	6/26/2022 20:06	0.86	6/26/2022 21:48	30.12
6/26/2022 20:49	0.41	6/26/2022 21:19	11.76	6/26/2022 20:07	0.83	6/26/2022 21:49	30.10
6/26/2022 20:50	0.41	6/26/2022 21:20	11.69	6/26/2022 20:08	0.85	6/26/2022 21:50	30.12
6/26/2022 20:51	0.35	6/26/2022 21:21	11.57	6/26/2022 20:09	0.81	6/26/2022 21:51	30.13
6/26/2022 20:52	0.34	6/26/2022 21:22	11.49	6/26/2022 20:10	0.82	6/26/2022 21:52	30.12
6/26/2022 20:53	0.33	6/26/2022 21:23	11.41	6/26/2022 20:11	0.80	6/26/2022 21:53	30.10
6/26/2022 20:54	0.35	6/26/2022 21:24	11.36	6/26/2022 20:12	0.81	6/26/2022 21:54	30.11
6/26/2022 20:55	0.33	6/26/2022 21:25	11.30	6/26/2022 20:13	0.84	6/26/2022 21:55	30.12
6/26/2022 20:56	0.34	6/26/2022 21:26	11.22	6/26/2022 20:14	0.82	6/26/2022 21:56	30.11
6/26/2022 20:57	0.32	6/26/2022 21:27	11.20	6/26/2022 20:15	0.91	6/26/2022 21:57	30.09
6/26/2022 20:58	0.32	6/26/2022 21:28	11.19	6/26/2022 20:16	0.83	6/26/2022 21:58	30.12
6/26/2022 20:59	0.28	6/26/2022 21:29	11.10	6/26/2022 20:17	0.87	6/26/2022 21:59	30.09
6/26/2022 21:00	0.31	6/26/2022 21:30	11.14	6/26/2022 20:18	0.82	6/26/2022 22:00	30.09
6/26/2022 21:01	0.39	6/26/2022 21:31	11.13	6/26/2022 20:19	0.91	6/26/2022 22:01	30.14
6/26/2022 21:02	0.50	6/26/2022 21:32	11.08	6/26/2022 20:20	0.91	6/26/2022 22:02	30.11
6/26/2022 21:03	0.53	6/26/2022 21:33	11.06	6/26/2022 20:21	0.87	6/26/2022 22:03	30.12
6/26/2022 21:04	0.51	6/26/2022 21:34	11.01	6/26/2022 20:22	0.86	6/26/2022 22:04	30.09
6/26/2022 21:05	0.48	6/26/2022 21:35	11.00	6/26/2022 20:23	0.80	6/26/2022 22:05	30.10
6/26/2022 21:06	0.47	6/26/2022 21:36	10.99	6/26/2022 20:24	0.82	6/26/2022 22:06	30.13
6/26/2022 21:07	2.18	6/26/2022 21:37	10.97	6/26/2022 20:25	0.86	6/26/2022 22:07	30.13
6/26/2022 21:08	7.82	6/26/2022 21:38	10.95	6/26/2022 20:26	0.85	6/26/2022 22:08	30.12
6/26/2022 21:09	7.06	6/26/2022 21:39	10.91	6/26/2022 20:27	0.84	6/26/2022 22:09	30.15
6/26/2022 21:10	5.97	6/26/2022 21:40	10.89	6/26/2022 20:28	0.82	6/26/2022 22:10	30.13
6/26/2022 21:11	5.09	6/26/2022 21:41	10.90	6/26/2022 20:29	0.87	6/26/2022 22:11	30.09
6/26/2022 21:12	4.42	6/26/2022 21:42	10.87	6/26/2022 20:30	0.82	6/26/2022 22:12	32.05
6/26/2022 21:13	3.75	6/26/2022 21:43	10.86	6/26/2022 20:31	0.81	6/26/2022 22:13	30.94
6/26/2022 21:14	3.29	6/26/2022 21:44	10.84	6/26/2022 20:32	0.81	6/26/2022 22:14	30.41
6/26/2022 21:15	2.77	6/26/2022 21:45	10.81	6/26/2022 20:33	0.83	6/26/2022 22:15	30.22
6/26/2022 21:16	2.42	6/26/2022 21:46	10.78	6/26/2022 20:34	0.83	6/26/2022 22:16	30.17
6/26/2022 21:17	2.14	6/26/2022 21:47	10.79	6/26/2022 20:35	0.81	6/26/2022 22:17	30.14
6/26/2022 21:18	1.90	6/26/2022 21:48	10.78	6/26/2022 20:36	0.83	6/26/2022 22:18	30.12
6/26/2022 21:19	1.67	6/26/2022 21:49	10.74	6/26/2022 20:37	0.81	6/26/2022 22:19	30.16
6/26/2022 21:20	1.48	6/26/2022 21:50	10.73	6/26/2022 20:38	0.88	6/26/2022 22:20	30.15
6/26/2022 21:21	1.33	6/26/2022 21:51	10.74	6/26/2022 20:39	0.81	6/26/2022 22:21	30.16
6/26/2022 21:22	1.18	6/26/2022 21:52	10.71	6/26/2022 20:40	0.87	6/26/2022 22:22	30.13
6/26/2022 21:23	1.07	6/26/2022 21:53	10.74	6/26/2022 20:41	0.81	6/26/2022 22:23	30.13
6/26/2022 21:24	0.95	6/26/2022 21:54	10.71	6/26/2022 20:42	0.80	6/26/2022 22:24	30.17
6/26/2022 21:25	0.86	6/26/2022 21:55	10.72	6/26/2022 20:43	0.87	6/26/2022 22:25	30.16
6/26/2022 21:26	0.81	6/26/2022 21:56	10.73	6/26/2022 20:44	0.85	6/26/2022 22:26	30.13
6/26/2022 21:27	0.71	6/26/2022 21:57	10.70	6/26/2022 20:45	0.87	6/26/2022 22:27	30.14
6/26/2022 21:28	0.65	6/26/2022 21:58	10.70	6/26/2022 20:46	0.84	6/26/2022 22:28	30.12
6/26/2022 21:29	0.64	6/26/2022 21:59	10.73	6/26/2022 20:47	0.90	6/26/2022 22:29	30.13
6/26/2022 21:30	0.57	6/26/2022 22:00	10.72	6/26/2022 20:48	0.79	6/26/2022 22:30	30.13
6/26/2022 21:31	0.54	6/26/2022 22:01	10.75	6/26/2022 20:49	0.84	6/26/2022 22:31	30.11
6/26/2022 21:32	0.44	6/26/2022 22:02	10.75	6/26/2022 20:50	0.85	6/26/2022 22:32	30.13
6/26/2022 21:33	0.47	6/26/2022 22:03	10.76	6/26/2022 20:51	0.83	6/26/2022 22:33	30.12
6/26/2022 21:34	0.47	6/26/2022 22:04	10.74	6/26/2022 20:52	0.83	6/26/2022 22:34	30.13
6/26/2022 21:35	0.41	6/26/2022 22:05	10.74	6/26/2022 20:53	0.84	6/26/2022 22:35	30.13
6/26/2022 21:36	0.39	6/26/2022 22:06	10.72	6/26/2022 20:54	0.89	6/26/2022 22:36	30.13
6/26/2022 21:37	0.43	6/26/2022 22:07	10.75	6/26/2022 20:55	0.80	6/26/2022 22:37	30.13
6/26/2022 21:38	0.41	6/26/2022 22:08	10.74	6/26/2022 20:56	0.88	6/26/2022 22:38	30.15
6/26/2022 21:39	0.36	6/26/2022 22:09	10.75	6/26/2022 20:57	0.84	6/26/2022 22:39	30.11
6/26/2022 21:40	0.35	6/26/2022 22:10	10.76	6/26/2022 20:58	0.88	6/26/2022 22:40	30.11
6/26/2022 21:41	0.36	6/26/2022 22:11	10.74	6/26/2022 20:59	0.79	6/26/2022 22:41	30.12
6/26/2022 21:42	0.33	6/26/2022 22:12	10.69	6/26/2022 21:00	0.81	6/26/2022 22:42	30.16
6/26/2022 21:43	0.33	6/26/2022 22:13	10.75	6/26/2022 21:01	7.15	6/26/2022 22:43	30.15
6/26/2022 21:44	0.30	6/26/2022 22:14	10.70	6/26/2022 21:02	6.17	6/26/2022 22:44	30.12
6/26/2022 21:45	0.29	6/26/2022 22:15	10.71	6/26/2022 21:03	3.70	6/26/2022 22:45	30.14
6/26/2022 21:46	0.29	6/26/2022 22:16	10.69	6/26/2022 21:04	1.81	6/26/2022 22:46	30.10
6/26/2022 21:47	0.28	6/26/2022 22:17	10.68	6/26/2022 21:05	0.90	6/26/2022 22:47	30.11
6/26/2022 21:48	0.33	6/26/2022 22:18	10.69	6/26/2022 21:06	0.90	6/26/2022 22:48	30.11
6/26/2022 21:49	0.26	6/26/2022 22:19	10.66	6/26/2022 21:07	0.82	6/26/2022 22:49	30.13
6/26/2022 21:50	0.31	6/26/2022 22:20	10.65	6/26/2022 21:08	0.81	6/26/2022 22:50	30.13
6/26/2022 21:51	0.32	6/26/2022 22:21	10.68	6/26/2022 21:09	0.84	6/26/2022 22:51	30.15
6/26/2022 21:52	0.30	6/26/2022 22:22	10.67	6/26/2022 21:10	0.83	6/26/2022 22:52	30.06
6/26/2022 21:53	0.27	6/26/2022 22:23	10.64	6/26/2022 21:11	0.85	6/26/2022 22:53	30.93
6/26/2022 21:54	0.26	6/26/2022 22:24	10.65	6/26/2022 21:12	0.83	6/26/2022 22:54	31.37
6/26/2022 21:55	0.28	6/26/2022 22:25	10.65	6/26/2022 21:13	0.90	6/26/2022 22:55	30.62
6/26/2022 21:56	5.75	6/26/2022 22:26	10.60	6/26/2022 21:14	0.83	6/26/2022 22:56	30.30
6/26/2022 21:57	7.38	6/26/2022 22:27	10.62	6/26/2022 21:15	0.82	6/26/2022 22:57	30.20
6/26/2022 21:58	6.25	6/26/2022 22:28	10.62	6/26/2022 21:16	0.85	6/26/2022 22:58	30.14
6/26/2022 21:59	5.28	6/26/2022 22:29	10.68	6/26/2022 21:17	0.84	6/26/2022 22:59	30.17
6/26/2022 22:00	4.55	6/26/2022 22:30	10.67	6/26/2022 21:18	0.74	6/26/2022 23:00	30.14
6/26/2022 22:01	3.89	6/26/2022 22:31	10.70	6/26/2022 21:19	0.92	6/26/2022 23:01	30.12
6/26/2022 22:02	3.34	6/26/2022 22:32	10.68	6/26/2022 21:20	0.81	6/26/2022 23:02	30.16

6/26/2022 22:03	2.87	6/26/2022 22:33	10.70	6/26/2022 21:21	0.89	6/26/2022 23:03	30.14
6/26/2022 22:04	2.54	6/26/2022 22:34	10.70	6/26/2022 21:22	0.79	6/26/2022 23:04	30.12
6/26/2022 22:05	2.19	6/26/2022 22:35	10.71	6/26/2022 21:23	0.89	6/26/2022 23:05	30.14
6/26/2022 22:06	1.94	6/26/2022 22:36	10.67	6/26/2022 21:24	0.80	6/26/2022 23:06	30.14
6/26/2022 22:07	1.72	6/26/2022 22:37	10.69	6/26/2022 21:25	0.84	6/26/2022 23:07	30.09
6/26/2022 22:08	1.55	6/26/2022 22:38	10.68	6/26/2022 21:26	0.80	6/26/2022 23:08	30.11
6/26/2022 22:09	1.33	6/26/2022 22:39	10.70	6/26/2022 21:27	0.83	6/26/2022 23:09	30.12
6/26/2022 22:10	1.22	6/26/2022 22:40	10.70	6/26/2022 21:28	0.79	6/26/2022 23:10	30.12
6/26/2022 22:11	1.10	6/26/2022 22:41	10.71	6/26/2022 21:29	0.86	6/26/2022 23:11	30.15
6/26/2022 22:12	0.98	6/26/2022 22:42	10.69	6/26/2022 21:30	0.78	6/26/2022 23:12	30.16
6/26/2022 22:13	0.90	6/26/2022 22:43	10.67	6/26/2022 21:31	0.89	6/26/2022 23:13	30.15
6/26/2022 22:14	0.83	6/26/2022 22:44	10.67	6/26/2022 21:32	0.81	6/26/2022 23:14	30.13
6/26/2022 22:15	0.70	6/26/2022 22:45	10.68	6/26/2022 21:33	0.89	6/26/2022 23:15	30.64
6/26/2022 22:16	0.68	6/26/2022 22:46	10.67	6/26/2022 21:34	0.77	6/26/2022 23:16	31.72
6/26/2022 22:17	0.63	6/26/2022 22:47	10.64	6/26/2022 21:35	0.87	6/26/2022 23:17	30.77
6/26/2022 22:18	0.57	6/26/2022 22:48	10.65	6/26/2022 21:36	0.79	6/26/2022 23:18	30.38
6/26/2022 22:19	0.53	6/26/2022 22:49	10.64	6/26/2022 21:37	0.88	6/26/2022 23:19	30.24
6/26/2022 22:20	0.45	6/26/2022 22:50	10.65	6/26/2022 21:38	0.81	6/26/2022 23:20	30.20
6/26/2022 22:21	0.49	6/26/2022 22:51	10.65	6/26/2022 21:39	0.82	6/26/2022 23:21	30.17
6/26/2022 22:22	0.44	6/26/2022 22:52	10.60	6/26/2022 21:40	0.88	6/26/2022 23:22	30.18
6/26/2022 22:23	0.46	6/26/2022 22:53	10.64	6/26/2022 21:41	0.80	6/26/2022 23:23	30.14
6/26/2022 22:24	0.35	6/26/2022 22:54	10.60	6/26/2022 21:42	0.88	6/26/2022 23:24	30.13
6/26/2022 22:25	0.41	6/26/2022 22:55	10.59	6/26/2022 21:43	0.78	6/26/2022 23:25	30.13
6/26/2022 22:26	0.40	6/26/2022 22:56	10.60	6/26/2022 21:44	0.90	6/26/2022 23:26	30.15
6/26/2022 22:27	0.37	6/26/2022 22:57	10.66	6/26/2022 21:45	0.79	6/26/2022 23:27	30.13
6/26/2022 22:28	0.35	6/26/2022 22:58	10.62	6/26/2022 21:46	0.84	6/26/2022 23:28	30.14
6/26/2022 22:29	0.36	6/26/2022 22:59	10.62	6/26/2022 21:47	0.82	6/26/2022 23:29	30.15
6/26/2022 22:30	0.33	6/26/2022 23:00	10.64	6/26/2022 21:48	0.82	6/26/2022 23:30	30.13
6/26/2022 22:31	0.32	6/26/2022 23:01	10.66	6/26/2022 21:49	0.82	6/26/2022 23:31	30.11
6/26/2022 22:32	0.28	6/26/2022 23:02	10.69	6/26/2022 21:50	0.80	6/26/2022 23:32	30.14
6/26/2022 22:33	0.32	6/26/2022 23:03	10.68	6/26/2022 21:51	0.90	6/26/2022 23:33	30.12
6/26/2022 22:34	0.30	6/26/2022 23:04	10.68	6/26/2022 21:52	0.81	6/26/2022 23:34	30.12
6/26/2022 22:35	0.30	6/26/2022 23:05	10.68	6/26/2022 21:53	0.87	6/26/2022 23:35	30.14
6/26/2022 22:36	0.35	6/26/2022 23:06	10.69	6/26/2022 21:54	0.76	6/26/2022 23:36	30.13
6/26/2022 22:37	0.29	6/26/2022 23:07	10.68	6/26/2022 21:55	0.85	6/26/2022 23:37	30.11
6/26/2022 22:38	0.27	6/26/2022 23:08	10.66	6/26/2022 21:56	0.80	6/26/2022 23:38	30.10
6/26/2022 22:39	0.27	6/26/2022 23:09	10.68	6/26/2022 21:57	0.89	6/26/2022 23:39	30.13
6/26/2022 22:40	0.24	6/26/2022 23:10	10.66	6/26/2022 21:58	0.84	6/26/2022 23:40	30.13
6/26/2022 22:41	0.26	6/26/2022 23:11	10.64	6/26/2022 21:59	0.83	6/26/2022 23:41	30.12
6/26/2022 22:42	0.28	6/26/2022 23:12	10.65	6/26/2022 22:00	0.81	6/26/2022 23:42	30.15
6/26/2022 22:43	0.27	6/26/2022 23:13	10.66	6/26/2022 22:01	0.86	6/26/2022 23:43	30.13
6/26/2022 22:44	0.27	6/26/2022 23:14	10.65	6/26/2022 22:02	0.84	6/26/2022 23:44	30.13
6/26/2022 22:45	0.29	6/26/2022 23:15	10.65	6/26/2022 22:03	0.82	6/26/2022 23:45	30.15
6/26/2022 22:46	0.28	6/26/2022 23:16	10.63	6/26/2022 22:04	0.91	6/26/2022 23:46	30.10
6/26/2022 22:47	0.26	6/26/2022 23:17	10.63	6/26/2022 22:05	0.81	6/26/2022 23:47	30.08
6/26/2022 22:48	0.25	6/26/2022 23:18	10.62	6/26/2022 22:06	0.82	6/26/2022 23:48	30.12
6/26/2022 22:49	0.25	6/26/2022 23:19	10.63	6/26/2022 22:07	0.85	6/26/2022 23:49	30.12
6/26/2022 22:50	0.26	6/26/2022 23:20	10.63	6/26/2022 22:08	0.78	6/26/2022 23:50	30.14
6/26/2022 22:51	0.25	6/26/2022 23:21	10.65	6/26/2022 22:09	0.83	6/26/2022 23:51	30.12
6/26/2022 22:52	0.59	6/26/2022 23:22	10.59	6/26/2022 22:10	0.81	6/26/2022 23:52	30.13
6/26/2022 22:53	6.58	6/26/2022 23:23	10.66	6/26/2022 22:11	0.82	6/26/2022 23:53	30.11
6/26/2022 22:54	7.18	6/26/2022 23:24	10.69	6/26/2022 22:12	0.80	6/26/2022 23:54	30.12
6/26/2022 22:55	6.13	6/26/2022 23:25	10.69	6/26/2022 22:13	0.86	6/26/2022 23:55	30.12
6/26/2022 22:56	5.16	6/26/2022 23:26	10.65	6/26/2022 22:14	0.78	6/26/2022 23:56	30.13
6/26/2022 22:57	4.47	6/26/2022 23:27	10.70	6/26/2022 22:15	0.84	6/26/2022 23:57	30.11
6/26/2022 22:58	3.85	6/26/2022 23:28	10.66	6/26/2022 22:16	0.85	6/26/2022 23:58	30.09
6/26/2022 22:59	3.26	6/26/2022 23:29	10.69	6/26/2022 22:17	0.83	6/26/2022 23:59	30.12
6/26/2022 23:00	2.80	6/26/2022 23:30	10.69	6/26/2022 22:18	0.78	6/27/2022 0:00	30.10
6/26/2022 23:01	2.42	6/26/2022 23:31	10.68	6/26/2022 22:19	0.82	6/27/2022 0:01	30.11
6/26/2022 23:02	2.17	6/26/2022 23:32	10.68	6/26/2022 22:20	0.84	6/27/2022 0:02	30.10
6/26/2022 23:03	1.86	6/26/2022 23:33	10.70	6/26/2022 22:21	0.77	6/27/2022 0:03	30.09
6/26/2022 23:04	1.66	6/26/2022 23:34	10.70	6/26/2022 22:22	0.88	6/27/2022 0:04	30.10
6/26/2022 23:05	1.45	6/26/2022 23:35	10.69	6/26/2022 22:23	0.77	6/27/2022 0:05	30.11
6/26/2022 23:06	1.32	6/26/2022 23:36	10.68	6/26/2022 22:24	0.87	6/27/2022 0:06	30.08
6/26/2022 23:07	1.20	6/26/2022 23:37	10.65	6/26/2022 22:25	0.81	6/27/2022 0:07	30.08
6/26/2022 23:08	1.05	6/26/2022 23:38	10.66	6/26/2022 22:26	0.87	6/27/2022 0:08	30.11
6/26/2022 23:09	0.96	6/26/2022 23:39	10.65	6/26/2022 22:27	0.81	6/27/2022 0:09	30.14
6/26/2022 23:10	0.85	6/26/2022 23:40	10.67	6/26/2022 22:28	0.86	6/27/2022 0:10	30.11
6/26/2022 23:11	0.77	6/26/2022 23:41	10.63	6/26/2022 22:29	0.80	6/27/2022 0:11	30.13
6/26/2022 23:12	0.72	6/26/2022 23:42	10.64	6/26/2022 22:30	0.84	6/27/2022 0:12	30.13
6/26/2022 23:13	0.65	6/26/2022 23:43	10.61	6/26/2022 22:31	0.88	6/27/2022 0:13	30.11
6/26/2022 23:14	0.59	6/26/2022 23:44	10.65	6/26/2022 22:32	0.79	6/27/2022 0:14	30.13
6/26/2022 23:15	0.57	6/26/2022 23:45	10.66	6/26/2022 22:33	0.93	6/27/2022 0:15	30.11
6/26/2022 23:16	0.48	6/26/2022 23:46	10.64	6/26/2022 22:34	0.78	6/27/2022 0:16	30.10
6/26/2022 23:17	0.48	6/26/2022 23:47	10.66	6/26/2022 22:35	0.85	6/27/2022 0:17	30.09
6/26/2022 23:18	0.45	6/26/2022 23:48	10.65	6/26/2022 22:36	0.82	6/27/2022 0:18	30.11
6/26/2022 23:19	0.42	6/26/2022 23:49	10.72	6/26/2022 22:37	0.81	6/27/2022 0:19	30.13
6/26/2022 23:20	0.42	6/26/2022 23:50	10.67	6/26/2022 22:38	0.90	6/27/2022 0:20	30.09
6/26/2022 23:21	0.41	6/26/2022 23:51	10.69	6/26/2022 22:39	0.79	6/27/2022 0:21	30.07
6/26/2022 23:22	0.36	6/26/2022 23:52	10.66	6/26/2022 22:40	0.90	6/27/2022 0:22	30.13
6/26/2022 23:23	0.36	6/26/2022 23:53	10.69	6/26/2022 22:41	0.81	6/27/2022 0:23	30.11
6/26/2022 23:24	0.34	6/26/2022 23:54	10.68	6/26/2022 22:42	0.83	6/27/2022 0:24	30.10
6/26/2022 23:25	0.37	6/26/2022 23:55	10.69	6/26/2022 22:43	0.84	6/27/2022 0:25	30.10
6/26/2022 23:26	0.33	6/26/2022 23:56	10.71	6/26/2022 22:44	0.81	6/27/2022 0:26	30.10
6/26/2022 23:27	0.31	6/26/2022 23:57	10.66	6/26/2022 22:45	0.85	6/27/2022 0:27	30.11
6/26/2022 23:28	0.28	6/26/2022 23:58	10.65	6/26/2022 22:46	0.83	6/27/2022 0:28	30.09
6/26/2022 23:29	0.34	6/26/2022 23:59	10.62	6/26/2022 22:47	0.89	6/27/2022 0:29	30.12
6/26/2022 23:30	0.26	6/27/2022 0:00	10.67	6/26/2022 22:48	0.79	6/27/2022 0:30	30.10

6/26/2022 23:31	0.28	6/27/2022 0:01	10.67	6/26/2022 22:49	0.84	6/27/2022 0:31	30.09
6/26/2022 23:32	0.26	6/27/2022 0:02	10.65	6/26/2022 22:50	0.80	6/27/2022 0:32	30.08
6/26/2022 23:33	0.31	6/27/2022 0:03	10.66	6/26/2022 22:51	0.85	6/27/2022 0:33	30.07
6/26/2022 23:34	0.27	6/27/2022 0:04	10.61	6/26/2022 22:52	0.83	6/27/2022 0:34	30.10
6/26/2022 23:35	0.31	6/27/2022 0:05	10.62	6/26/2022 22:53	0.82	6/27/2022 0:35	30.10
6/26/2022 23:36	0.28	6/27/2022 0:06	10.60	6/26/2022 22:54	0.82	6/27/2022 0:36	30.07
6/26/2022 23:37	0.27	6/27/2022 0:07	10.62	6/26/2022 22:55	0.80	6/27/2022 0:37	30.12
6/26/2022 23:38	0.25	6/27/2022 0:08	10.60	6/26/2022 22:56	0.83	6/27/2022 0:38	30.08
6/26/2022 23:39	0.24	6/27/2022 0:09	10.60	6/26/2022 22:57	0.92	6/27/2022 0:39	30.10
6/26/2022 23:40	0.24	6/27/2022 0:10	10.64	6/26/2022 22:58	0.78	6/27/2022 0:40	30.10
6/26/2022 23:41	0.24	6/27/2022 0:11	10.67	6/26/2022 22:59	0.80	6/27/2022 0:41	32.45
6/26/2022 23:42	0.25	6/27/2022 0:12	10.68	6/26/2022 23:00	0.88	6/27/2022 0:42	31.08
6/26/2022 23:43	0.26	6/27/2022 0:13	10.70	6/26/2022 23:01	0.83	6/27/2022 0:43	32.61
6/26/2022 23:44	0.25	6/27/2022 0:14	10.67	6/26/2022 23:02	0.84	6/27/2022 0:44	31.20
6/26/2022 23:45	0.24	6/27/2022 0:15	10.68	6/26/2022 23:03	0.86	6/27/2022 0:45	32.50
6/26/2022 23:46	0.23	6/27/2022 0:16	10.68	6/26/2022 23:04	0.79	6/27/2022 0:46	31.18
6/26/2022 23:47	0.19	6/27/2022 0:17	10.70	6/26/2022 23:05	0.89	6/27/2022 0:47	30.55
6/26/2022 23:48	4.66	6/27/2022 0:18	10.68	6/26/2022 23:06	0.81	6/27/2022 0:48	30.31
6/26/2022 23:49	7.58	6/27/2022 0:19	10.68	6/26/2022 23:07	0.89	6/27/2022 0:49	30.19
6/26/2022 23:50	6.35	6/27/2022 0:20	10.68	6/26/2022 23:08	0.80	6/27/2022 0:50	32.01
6/26/2022 23:51	5.40	6/27/2022 0:21	10.68	6/26/2022 23:09	0.90	6/27/2022 0:51	31.61
6/26/2022 23:52	4.60	6/27/2022 0:22	10.68	6/26/2022 23:10	0.81	6/27/2022 0:52	32.11
6/26/2022 23:53	3.94	6/27/2022 0:23	10.70	6/26/2022 23:11	0.89	6/27/2022 0:53	32.77
6/26/2022 23:54	3.41	6/27/2022 0:24	10.68	6/26/2022 23:12	0.81	6/27/2022 0:54	31.99
6/26/2022 23:55	2.91	6/27/2022 0:25	10.65	6/26/2022 23:13	0.89	6/27/2022 0:55	33.46
6/26/2022 23:56	2.56	6/27/2022 0:26	10.62	6/26/2022 23:14	0.80	6/27/2022 0:56	31.74
6/26/2022 23:57	2.21	6/27/2022 0:27	10.66	6/26/2022 23:15	0.83	6/27/2022 0:57	33.02
6/26/2022 23:58	1.93	6/27/2022 0:28	10.63	6/26/2022 23:16	0.85	6/27/2022 0:58	31.60
6/26/2022 23:59	1.71	6/27/2022 0:29	10.63	6/26/2022 23:17	0.83	6/27/2022 0:59	32.62
6/27/2022 0:00	1.50	6/27/2022 0:30	10.66	6/26/2022 23:18	0.85	6/27/2022 1:00	31.31
6/27/2022 0:01	1.40	6/27/2022 0:31	10.63	6/26/2022 23:19	0.79	6/27/2022 1:01	30.71
6/27/2022 0:02	1.24	6/27/2022 0:32	10.66	6/26/2022 23:20	0.88	6/27/2022 1:02	30.45
6/27/2022 0:03	1.06	6/27/2022 0:33	10.63	6/26/2022 23:21	0.81	6/27/2022 1:03	30.42
6/27/2022 0:04	0.93	6/27/2022 0:34	10.68	6/26/2022 23:22	0.85	6/27/2022 1:04	30.30
6/27/2022 0:05	0.88	6/27/2022 0:35	10.63	6/26/2022 23:23	0.85	6/27/2022 1:05	30.30
6/27/2022 0:06	0.81	6/27/2022 0:36	10.64	6/26/2022 23:24	0.80	6/27/2022 1:06	30.29
6/27/2022 0:07	0.73	6/27/2022 0:37	10.64	6/26/2022 23:25	0.85	6/27/2022 1:07	30.28
6/27/2022 0:08	0.70	6/27/2022 0:38	10.69	6/26/2022 23:26	0.82	6/27/2022 1:08	30.28
6/27/2022 0:09	0.61	6/27/2022 0:39	10.68	6/26/2022 23:27	0.90	6/27/2022 1:09	31.38
6/27/2022 0:10	0.61	6/27/2022 0:40	10.68	6/26/2022 23:28	0.78	6/27/2022 1:10	31.55
6/27/2022 0:11	0.51	6/27/2022 0:41	10.67	6/26/2022 23:29	0.85	6/27/2022 1:11	30.73
6/27/2022 0:12	0.50	6/27/2022 0:42	10.68	6/26/2022 23:30	0.81	6/27/2022 1:12	30.42
6/27/2022 0:13	0.44	6/27/2022 0:43	10.66	6/26/2022 23:31	0.80	6/27/2022 1:13	30.31
6/27/2022 0:14	0.43	6/27/2022 0:44	10.71	6/26/2022 23:32	0.88	6/27/2022 1:14	30.28
6/27/2022 0:15	0.38	6/27/2022 0:45	10.70	6/26/2022 23:33	0.79	6/27/2022 1:15	30.25
6/27/2022 0:16	0.37	6/27/2022 0:46	10.66	6/26/2022 23:34	0.89	6/27/2022 1:16	30.27
6/27/2022 0:17	0.37	6/27/2022 0:47	10.66	6/26/2022 23:35	0.80	6/27/2022 1:17	30.54
6/27/2022 0:18	0.36	6/27/2022 0:48	10.67	6/26/2022 23:36	0.85	6/27/2022 1:18	31.68
6/27/2022 0:19	0.36	6/27/2022 0:49	10.68	6/26/2022 23:37	0.84	6/27/2022 1:19	30.79
6/27/2022 0:20	0.35	6/27/2022 0:50	10.69	6/26/2022 23:38	0.83	6/27/2022 1:20	30.40
6/27/2022 0:21	0.31	6/27/2022 0:51	10.67	6/26/2022 23:39	0.88	6/27/2022 1:21	30.35
6/27/2022 0:22	0.33	6/27/2022 0:52	10.66	6/26/2022 23:40	0.80	6/27/2022 1:22	30.26
6/27/2022 0:23	0.28	6/27/2022 0:53	10.68	6/26/2022 23:41	0.91	6/27/2022 1:23	30.28
6/27/2022 0:24	0.29	6/27/2022 0:54	10.73	6/26/2022 23:42	0.80	6/27/2022 1:24	30.27
6/27/2022 0:25	0.30	6/27/2022 0:55	10.70	6/26/2022 23:43	0.89	6/27/2022 1:25	30.26
6/27/2022 0:26	0.29	6/27/2022 0:56	10.71	6/26/2022 23:44	0.85	6/27/2022 1:26	32.31
6/27/2022 0:27	0.25	6/27/2022 0:57	10.71	6/26/2022 23:45	0.84	6/27/2022 1:27	31.10
6/27/2022 0:28	0.28	6/27/2022 0:58	10.70	6/26/2022 23:46	0.85	6/27/2022 1:28	30.55
6/27/2022 0:29	0.27	6/27/2022 0:59	10.74	6/26/2022 23:47	0.80	6/27/2022 1:29	30.35
6/27/2022 0:30	0.30	6/27/2022 1:00	10.72	6/26/2022 23:48	0.89	6/27/2022 1:30	30.28
6/27/2022 0:31	0.29	6/27/2022 1:01	10.73	6/26/2022 23:49	0.83	6/27/2022 1:31	30.26
6/27/2022 0:32	0.25	6/27/2022 1:02	10.76	6/26/2022 23:50	0.79	6/27/2022 1:32	30.25
6/27/2022 0:33	0.26	6/27/2022 1:03	10.71	6/26/2022 23:51	0.83	6/27/2022 1:33	30.25
6/27/2022 0:34	0.27	6/27/2022 1:04	10.74	6/26/2022 23:52	0.86	6/27/2022 1:34	30.86
6/27/2022 0:35	0.29	6/27/2022 1:05	10.70	6/26/2022 23:53	0.87	6/27/2022 1:35	31.59
6/27/2022 0:36	0.23	6/27/2022 1:06	10.67	6/26/2022 23:54	0.85	6/27/2022 1:36	30.78
6/27/2022 0:37	0.23	6/27/2022 1:07	10.71	6/26/2022 23:55	0.84	6/27/2022 1:37	30.41
6/27/2022 0:38	0.30	6/27/2022 1:08	10.67	6/26/2022 23:56	0.92	6/27/2022 1:38	30.30
6/27/2022 0:39	0.22	6/27/2022 1:09	10.68	6/26/2022 23:57	0.86	6/27/2022 1:39	30.27
6/27/2022 0:40	0.24	6/27/2022 1:10	10.65	6/26/2022 23:58	0.86	6/27/2022 1:40	30.26
6/27/2022 0:41	0.25	6/27/2022 1:11	10.67	6/26/2022 23:59	0.82	6/27/2022 1:41	30.26
6/27/2022 0:42	0.25	6/27/2022 1:12	10.65	6/27/2022 0:00	0.90	6/27/2022 1:42	30.24
6/27/2022 0:43	4.95	6/27/2022 1:13	10.61	6/27/2022 0:01	0.84	6/27/2022 1:43	32.44
6/27/2022 0:44	7.57	6/27/2022 1:14	10.60	6/27/2022 0:02	0.85	6/27/2022 1:44	31.14
6/27/2022 0:45	6.35	6/27/2022 1:15	10.62	6/27/2022 0:03	0.80	6/27/2022 1:45	30.54
6/27/2022 0:46	5.41	6/27/2022 1:16	10.63	6/27/2022 0:04	0.89	6/27/2022 1:46	30.36
6/27/2022 0:47	4.57	6/27/2022 1:17	10.60	6/27/2022 0:05	0.82	6/27/2022 1:47	30.25
6/27/2022 0:48	3.97	6/27/2022 1:18	10.63	6/27/2022 0:06	0.89	6/27/2022 1:48	30.25
6/27/2022 0:49	3.40	6/27/2022 1:19	10.61	6/27/2022 0:07	0.80	6/27/2022 1:49	30.24
6/27/2022 0:50	2.89	6/27/2022 1:20	10.63	6/27/2022 0:08	0.90	6/27/2022 1:50	30.20
6/27/2022 0:51	2.52	6/27/2022 1:21	10.60	6/27/2022 0:09	0.85	6/27/2022 1:51	30.77
6/27/2022 0:52	2.24	6/27/2022 1:22	10.58	6/27/2022 0:10	0.95	6/27/2022 1:52	31.63
6/27/2022 0:53	1.95	6/27/2022 1:23	10.65	6/27/2022 0:11	0.83	6/27/2022 1:53	30.74
6/27/2022 0:54	1.74	6/27/2022 1:24	10.61	6/27/2022 0:12	0.91	6/27/2022 1:54	30.42
6/27/2022 0:55	1.57	6/27/2022 1:25	10.65	6/27/2022 0:13	0.82	6/27/2022 1:55	30.31
6/27/2022 0:56	1.37	6/27/2022 1:26	10.65	6/27/2022 0:14	0.84	6/27/2022 1:56	30.28
6/27/2022 0:57	1.22	6/27/2022 1:27	10.66	6/27/2022 0:15	0.79	6/27/2022 1:57	30.28
6/27/2022 0:58	1.09	6/27/2022 1:28	10.66	6/27/2022 0:16	0.84	6/27/2022 1:58	30.23

6/27/2022 0:59	1.00	6/27/2022 1:29	14.29	6/27/2022 0:17	0.84	6/27/2022 1:59	30.22
6/27/2022 1:00	0.89	6/27/2022 1:30	14.53	6/27/2022 0:18	0.81	6/27/2022 2:00	30.21
6/27/2022 1:01	0.81	6/27/2022 1:31	14.06	6/27/2022 0:19	0.93	6/27/2022 2:01	30.19
6/27/2022 1:02	0.71	6/27/2022 1:32	13.66	6/27/2022 0:20	0.80	6/27/2022 2:02	30.21
6/27/2022 1:03	0.70	6/27/2022 1:33	13.30	6/27/2022 0:21	0.89	6/27/2022 2:03	30.21
6/27/2022 1:04	0.61	6/27/2022 1:34	13.03	6/27/2022 0:22	0.81	6/27/2022 2:04	31.18
6/27/2022 1:05	0.58	6/27/2022 1:35	12.76	6/27/2022 0:23	0.89	6/27/2022 2:05	31.61
6/27/2022 1:06	0.54	6/27/2022 1:36	12.49	6/27/2022 0:24	0.78	6/27/2022 2:06	30.74
6/27/2022 1:07	0.49	6/27/2022 1:37	12.30	6/27/2022 0:25	0.85	6/27/2022 2:07	32.57
6/27/2022 1:08	0.49	6/27/2022 1:38	12.17	6/27/2022 0:26	0.90	6/27/2022 2:08	31.38
6/27/2022 1:09	0.42	6/27/2022 1:39	11.98	6/27/2022 0:27	0.80	6/27/2022 2:09	30.65
6/27/2022 1:10	0.42	6/27/2022 1:40	11.84	6/27/2022 0:28	0.95	6/27/2022 2:10	32.15
6/27/2022 1:11	0.41	6/27/2022 1:41	11.73	6/27/2022 0:29	0.80	6/27/2022 2:11	31.01
6/27/2022 1:12	0.40	6/27/2022 1:42	11.60	6/27/2022 0:30	0.85	6/27/2022 2:12	32.84
6/27/2022 1:13	0.32	6/27/2022 1:43	11.54	6/27/2022 0:31	0.79	6/27/2022 2:13	31.41
6/27/2022 1:14	0.36	6/27/2022 1:44	11.43	6/27/2022 0:32	0.84	6/27/2022 2:14	32.29
6/27/2022 1:15	0.34	6/27/2022 1:45	11.37	6/27/2022 0:33	0.87	6/27/2022 2:15	31.84
6/27/2022 1:16	0.33	6/27/2022 1:46	11.29	6/27/2022 0:34	0.87	6/27/2022 2:16	31.93
6/27/2022 1:17	0.35	6/27/2022 1:47	11.20	6/27/2022 0:35	0.88	6/27/2022 2:17	32.08
6/27/2022 1:18	0.30	6/27/2022 1:48	11.19	6/27/2022 0:36	0.82	6/27/2022 2:18	31.08
6/27/2022 1:19	0.33	6/27/2022 1:49	11.10	6/27/2022 0:37	0.90	6/27/2022 2:19	30.58
6/27/2022 1:20	0.28	6/27/2022 1:50	11.15	6/27/2022 0:38	0.85	6/27/2022 2:20	30.44
6/27/2022 1:21	0.29	6/27/2022 1:51	11.01	6/27/2022 0:39	0.88	6/27/2022 2:21	32.08
6/27/2022 1:22	0.29	6/27/2022 1:52	11.04	6/27/2022 0:40	0.82	6/27/2022 2:22	32.02
6/27/2022 1:23	0.27	6/27/2022 1:53	11.01	6/27/2022 0:41	0.90	6/27/2022 2:23	32.19
6/27/2022 1:24	0.26	6/27/2022 1:54	11.00	6/27/2022 0:42	0.83	6/27/2022 2:24	32.99
6/27/2022 1:25	0.26	6/27/2022 1:55	10.95	6/27/2022 0:43	0.81	6/27/2022 2:25	32.01
6/27/2022 1:26	0.29	6/27/2022 1:56	10.97	6/27/2022 0:44	0.82	6/27/2022 2:26	31.02
6/27/2022 1:27	0.27	6/27/2022 1:57	10.93	6/27/2022 0:45	0.85	6/27/2022 2:27	30.59
6/27/2022 1:28	0.32	6/27/2022 1:58	10.91	6/27/2022 0:46	0.93	6/27/2022 2:28	30.43
6/27/2022 1:29	0.26	6/27/2022 1:59	10.88	6/27/2022 0:47	0.86	6/27/2022 2:29	30.38
6/27/2022 1:30	0.26	6/27/2022 2:00	10.90	6/27/2022 0:48	0.78	6/27/2022 2:30	30.34
6/27/2022 1:31	0.28	6/27/2022 2:01	10.91	6/27/2022 0:49	0.91	6/27/2022 2:31	30.35
6/27/2022 1:32	0.27	6/27/2022 2:02	10.87	6/27/2022 0:50	0.85	6/27/2022 2:32	30.32
6/27/2022 1:33	0.23	6/27/2022 2:03	10.84	6/27/2022 0:51	0.81	6/27/2022 2:33	30.31
6/27/2022 1:34	0.25	6/27/2022 2:04	10.85	6/27/2022 0:52	0.90	6/27/2022 2:34	30.33
6/27/2022 1:35	0.24	6/27/2022 2:05	10.83	6/27/2022 0:53	0.81	6/27/2022 2:35	30.36
6/27/2022 1:36	0.26	6/27/2022 2:06	10.77	6/27/2022 0:54	0.89	6/27/2022 2:36	30.30
6/27/2022 1:37	0.20	6/27/2022 2:07	10.82	6/27/2022 0:55	0.82	6/27/2022 2:37	30.31
6/27/2022 1:38	3.43	6/27/2022 2:08	10.80	6/27/2022 0:56	0.89	6/27/2022 2:38	30.29
6/27/2022 1:39	7.68	6/27/2022 2:09	10.77	6/27/2022 0:57	0.86	6/27/2022 2:39	30.27
6/27/2022 1:40	6.47	6/27/2022 2:10	10.71	6/27/2022 0:58	0.94	6/27/2022 2:40	30.27
6/27/2022 1:41	5.44	6/27/2022 2:11	10.75	6/27/2022 0:59	0.85	6/27/2022 2:41	30.27
6/27/2022 1:42	4.70	6/27/2022 2:12	10.71	6/27/2022 1:00	0.90	6/27/2022 2:42	30.24
6/27/2022 1:43	4.03	6/27/2022 2:13	10.74	6/27/2022 1:01	0.81	6/27/2022 2:43	30.28
6/27/2022 1:44	3.44	6/27/2022 2:14	10.71	6/27/2022 1:02	0.91	6/27/2022 2:44	30.25
6/27/2022 1:45	2.95	6/27/2022 2:15	10.67	6/27/2022 1:03	0.80	6/27/2022 2:45	30.23
6/27/2022 1:46	2.58	6/27/2022 2:16	10.68	6/27/2022 1:04	0.87	6/27/2022 2:46	30.27
6/27/2022 1:47	2.24	6/27/2022 2:17	10.65	6/27/2022 1:05	0.80	6/27/2022 2:47	30.24
6/27/2022 1:48	1.97	6/27/2022 2:18	10.68	6/27/2022 1:06	0.83	6/27/2022 2:48	30.28
6/27/2022 1:49	1.76	6/27/2022 2:19	10.65	6/27/2022 1:07	0.89	6/27/2022 2:49	30.22
6/27/2022 1:50	1.55	6/27/2022 2:20	10.64	6/27/2022 1:08	0.81	6/27/2022 2:50	30.22
6/27/2022 1:51	1.35	6/27/2022 2:21	10.68	6/27/2022 1:09	0.89	6/27/2022 2:51	30.22
6/27/2022 1:52	1.23	6/27/2022 2:22	10.70	6/27/2022 1:10	0.83	6/27/2022 2:52	30.21
6/27/2022 1:53	1.09	6/27/2022 2:23	10.70	6/27/2022 1:11	0.88	6/27/2022 2:53	30.22
6/27/2022 1:54	0.94	6/27/2022 2:24	10.71	6/27/2022 1:12	0.85	6/27/2022 2:54	30.23
6/27/2022 1:55	0.88	6/27/2022 2:25	10.71	6/27/2022 1:13	0.93	6/27/2022 2:55	30.23
6/27/2022 1:56	0.81	6/27/2022 2:26	10.75	6/27/2022 1:14	0.80	6/27/2022 2:56	30.21
6/27/2022 1:57	0.74	6/27/2022 2:27	10.71	6/27/2022 1:15	0.92	6/27/2022 2:57	30.18
6/27/2022 1:58	0.65	6/27/2022 2:28	10.74	6/27/2022 1:16	0.82	6/27/2022 2:58	30.21
6/27/2022 1:59	0.62	6/27/2022 2:29	10.71	6/27/2022 1:17	0.86	6/27/2022 2:59	30.21
6/27/2022 2:00	0.57	6/27/2022 2:30	10.71	6/27/2022 1:18	0.80	6/27/2022 3:00	30.20
6/27/2022 2:01	0.52	6/27/2022 2:31	10.69	6/27/2022 1:19	0.89	6/27/2022 3:01	30.20
6/27/2022 2:02	0.49	6/27/2022 2:32	10.70	6/27/2022 1:20	0.81	6/27/2022 3:02	30.20
6/27/2022 2:03	0.48	6/27/2022 2:33	10.69	6/27/2022 1:21	0.88	6/27/2022 3:03	30.21
6/27/2022 2:04	0.44	6/27/2022 2:34	10.67	6/27/2022 1:22	0.84	6/27/2022 3:04	30.18
6/27/2022 2:05	0.39	6/27/2022 2:35	10.68	6/27/2022 1:23	0.82	6/27/2022 3:05	30.19
6/27/2022 2:06	0.38	6/27/2022 2:36	10.66	6/27/2022 1:24	0.91	6/27/2022 3:06	30.16
6/27/2022 2:07	0.38	6/27/2022 2:37	10.67	6/27/2022 1:25	0.78	6/27/2022 3:07	30.20
6/27/2022 2:08	0.36	6/27/2022 2:38	10.66	6/27/2022 1:26	0.92	6/27/2022 3:08	30.19
6/27/2022 2:09	0.33	6/27/2022 2:39	10.66	6/27/2022 1:27	0.82	6/27/2022 3:09	30.16
6/27/2022 2:10	0.31	6/27/2022 2:40	10.67	6/27/2022 1:28	0.91	6/27/2022 3:10	30.17
6/27/2022 2:11	0.33	6/27/2022 2:41	10.71	6/27/2022 1:29	0.84	6/27/2022 3:11	30.17
6/27/2022 2:12	0.31	6/27/2022 2:42	10.68	6/27/2022 1:30	0.87	6/27/2022 3:12	30.21
6/27/2022 2:13	0.33	6/27/2022 2:43	10.72	6/27/2022 1:31	0.89	6/27/2022 3:13	30.18
6/27/2022 2:14	0.31	6/27/2022 2:44	10.73	6/27/2022 1:32	0.81	6/27/2022 3:14	30.20
6/27/2022 2:15	0.31	6/27/2022 2:45	10.74	6/27/2022 1:33	0.90	6/27/2022 3:15	30.17
6/27/2022 2:16	0.32	6/27/2022 2:46	10.72	6/27/2022 1:34	0.79	6/27/2022 3:16	30.15
6/27/2022 2:17	0.28	6/27/2022 2:47	10.72	6/27/2022 1:35	0.92	6/27/2022 3:17	30.18
6/27/2022 2:18	0.27	6/27/2022 2:48	10.72	6/27/2022 1:36	0.81	6/27/2022 3:18	30.14
6/27/2022 2:19	0.26	6/27/2022 2:49	10.72	6/27/2022 1:37	0.84	6/27/2022 3:19	30.16
6/27/2022 2:20	0.25	6/27/2022 2:50	10.70	6/27/2022 1:38	0.92	6/27/2022 3:20	30.13
6/27/2022 2:21	0.24	6/27/2022 2:51	10.70	6/27/2022 1:39	0.84	6/27/2022 3:21	30.18
6/27/2022 2:22	0.26	6/27/2022 2:52	10.71	6/27/2022 1:40	0.82	6/27/2022 3:22	30.13
6/27/2022 2:23	0.27	6/27/2022 2:53	10.69	6/27/2022 1:41	0.83	6/27/2022 3:23	30.14
6/27/2022 2:24	0.28	6/27/2022 2:54	10.71	6/27/2022 1:42	0.91	6/27/2022 3:24	30.14
6/27/2022 2:25	0.28	6/27/2022 2:55	10.66	6/27/2022 1:43	0.86	6/27/2022 3:25	30.18
6/27/2022 2:26	0.26	6/27/2022 2:56	10.66	6/27/2022 1:44	0.82	6/27/2022 3:26	30.14

6/27/2022 2:27	0.22	6/27/2022 2:57	10.65	6/27/2022 1:45	0.90	6/27/2022 3:27	30.17
6/27/2022 2:28	0.25	6/27/2022 2:58	10.68	6/27/2022 1:46	0.81	6/27/2022 3:28	30.14
6/27/2022 2:29	0.22	6/27/2022 2:59	10.65	6/27/2022 1:47	0.94	6/27/2022 3:29	30.16
6/27/2022 2:30	0.25	6/27/2022 3:00	10.68	6/27/2022 1:48	0.83	6/27/2022 3:30	30.16
6/27/2022 2:31	0.26	6/27/2022 3:01	10.64	6/27/2022 1:49	0.83	6/27/2022 3:31	30.16
6/27/2022 2:32	0.22	6/27/2022 3:02	10.63	6/27/2022 1:50	0.90	6/27/2022 3:32	30.14
6/27/2022 2:33	6.28	6/27/2022 3:03	10.64	6/27/2022 1:51	0.82	6/27/2022 3:33	30.17
6/27/2022 2:34	7.23	6/27/2022 3:04	10.63	6/27/2022 1:52	0.85	6/27/2022 3:34	30.15
6/27/2022 2:35	6.07	6/27/2022 3:05	10.60	6/27/2022 1:53	0.86	6/27/2022 3:35	30.11
6/27/2022 2:36	5.18	6/27/2022 3:06	10.63	6/27/2022 1:54	0.87	6/27/2022 3:36	30.15
6/27/2022 2:37	4.40	6/27/2022 3:07	10.58	6/27/2022 1:55	0.83	6/27/2022 3:37	30.14
6/27/2022 2:38	3.82	6/27/2022 3:08	10.62	6/27/2022 1:56	0.81	6/27/2022 3:38	30.14
6/27/2022 2:39	3.30	6/27/2022 3:09	10.58	6/27/2022 1:57	0.91	6/27/2022 3:39	30.13
6/27/2022 2:40	2.77	6/27/2022 3:10	10.59	6/27/2022 1:58	0.83	6/27/2022 3:40	30.15
6/27/2022 2:41	2.44	6/27/2022 3:11	10.59	6/27/2022 1:59	0.93	6/27/2022 3:41	30.10
6/27/2022 2:42	2.12	6/27/2022 3:12	10.62	6/27/2022 2:00	0.76	6/27/2022 3:42	30.15
6/27/2022 2:43	1.90	6/27/2022 3:13	10.66	6/27/2022 2:01	0.94	6/27/2022 3:43	30.15
6/27/2022 2:44	1.71	6/27/2022 3:14	10.67	6/27/2022 2:02	0.81	6/27/2022 3:44	30.14
6/27/2022 2:45	1.47	6/27/2022 3:15	10.67	6/27/2022 2:03	0.92	6/27/2022 3:45	30.10
6/27/2022 2:46	1.30	6/27/2022 3:16	10.69	6/27/2022 2:04	0.82	6/27/2022 3:46	30.12
6/27/2022 2:47	1.17	6/27/2022 3:17	10.67	6/27/2022 2:05	0.92	6/27/2022 3:47	30.13
6/27/2022 2:48	1.07	6/27/2022 3:18	10.68	6/27/2022 2:06	0.83	6/27/2022 3:48	30.11
6/27/2022 2:49	0.95	6/27/2022 3:19	10.65	6/27/2022 2:07	0.84	6/27/2022 3:49	30.09
6/27/2022 2:50	0.85	6/27/2022 3:20	10.66	6/27/2022 2:08	0.83	6/27/2022 3:50	30.10
6/27/2022 2:51	0.75	6/27/2022 3:21	10.68	6/27/2022 2:09	0.82	6/27/2022 3:51	30.12
6/27/2022 2:52	0.69	6/27/2022 3:22	10.68	6/27/2022 2:10	0.91	6/27/2022 3:52	30.15
6/27/2022 2:53	0.69	6/27/2022 3:23	10.65	6/27/2022 2:11	0.82	6/27/2022 3:53	30.13
6/27/2022 2:54	0.60	6/27/2022 3:24	10.65	6/27/2022 2:12	0.90	6/27/2022 3:54	30.14
6/27/2022 2:55	0.53	6/27/2022 3:25	10.67	6/27/2022 2:13	0.81	6/27/2022 3:55	30.12
6/27/2022 2:56	0.49	6/27/2022 3:26	10.64	6/27/2022 2:14	0.88	6/27/2022 3:56	30.11
6/27/2022 2:57	0.45	6/27/2022 3:27	10.66	6/27/2022 2:15	0.84	6/27/2022 3:57	30.10
6/27/2022 2:58	0.45	6/27/2022 3:28	10.58	6/27/2022 2:16	0.85	6/27/2022 3:58	30.11
6/27/2022 2:59	0.38	6/27/2022 3:29	10.64	6/27/2022 2:17	0.88	6/27/2022 3:59	30.09
6/27/2022 3:00	0.38	6/27/2022 3:30	10.62	6/27/2022 2:18	0.81	6/27/2022 4:00	30.12
6/27/2022 3:01	0.38	6/27/2022 3:31	10.59	6/27/2022 2:19	0.89	6/27/2022 4:01	30.09
6/27/2022 3:02	0.36	6/27/2022 3:32	10.58	6/27/2022 2:20	0.82	6/27/2022 4:02	30.12
6/27/2022 3:03	0.32	6/27/2022 3:33	10.59	6/27/2022 2:21	0.87	6/27/2022 4:03	30.11
6/27/2022 3:04	0.27	6/27/2022 3:34	10.61	6/27/2022 2:22	0.87	6/27/2022 4:04	30.11
6/27/2022 3:05	0.31	6/27/2022 3:35	10.59	6/27/2022 2:23	0.85	6/27/2022 4:05	30.09
6/27/2022 3:06	0.28	6/27/2022 3:36	10.56	6/27/2022 2:24	0.93	6/27/2022 4:06	30.11
6/27/2022 3:07	0.29	6/27/2022 3:37	10.59	6/27/2022 2:25	0.85	6/27/2022 4:07	30.07
6/27/2022 3:08	0.29	6/27/2022 3:38	10.53	6/27/2022 2:26	0.90	6/27/2022 4:08	30.12
6/27/2022 3:09	0.26	6/27/2022 3:39	10.58	6/27/2022 2:27	0.87	6/27/2022 4:09	30.10
6/27/2022 3:10	0.29	6/27/2022 3:40	10.58	6/27/2022 2:28	0.84	6/27/2022 4:10	30.11
6/27/2022 3:11	0.25	6/27/2022 3:41	10.57	6/27/2022 2:29	0.94	6/27/2022 4:11	30.07
6/27/2022 3:12	0.25	6/27/2022 3:42	10.59	6/27/2022 2:30	0.82	6/27/2022 4:12	30.08
6/27/2022 3:13	0.22	6/27/2022 3:43	10.62	6/27/2022 2:31	0.92	6/27/2022 4:13	30.10
6/27/2022 3:14	0.28	6/27/2022 3:44	10.64	6/27/2022 2:32	0.82	6/27/2022 4:14	30.11
6/27/2022 3:15	0.25	6/27/2022 3:45	10.66	6/27/2022 2:33	0.87	6/27/2022 4:15	30.12
6/27/2022 3:16	0.25	6/27/2022 3:46	10.63	6/27/2022 2:34	0.84	6/27/2022 4:16	30.12
6/27/2022 3:17	0.25	6/27/2022 3:47	10.63	6/27/2022 2:35	0.83	6/27/2022 4:17	30.07
6/27/2022 3:18	0.26	6/27/2022 3:48	10.63	6/27/2022 2:36	0.86	6/27/2022 4:18	30.09
6/27/2022 3:19	0.24	6/27/2022 3:49	10.66	6/27/2022 2:37	0.81	6/27/2022 4:19	30.08
6/27/2022 3:20	0.26	6/27/2022 3:50	10.62	6/27/2022 2:38	0.86	6/27/2022 4:20	30.09
6/27/2022 3:21	0.24	6/27/2022 3:51	10.65	6/27/2022 2:39	0.93	6/27/2022 4:21	30.11
6/27/2022 3:22	0.26	6/27/2022 3:52	10.66	6/27/2022 2:40	0.83	6/27/2022 4:22	30.07
6/27/2022 3:23	0.21	6/27/2022 3:53	10.65	6/27/2022 2:41	0.94	6/27/2022 4:23	30.07
6/27/2022 3:24	0.21	6/27/2022 3:54	10.65	6/27/2022 2:42	0.85	6/27/2022 4:24	30.11
6/27/2022 3:25	0.23	6/27/2022 3:55	10.64	6/27/2022 2:43	0.88	6/27/2022 4:25	30.14
6/27/2022 3:26	0.25	6/27/2022 3:56	10.62	6/27/2022 2:44	0.83	6/27/2022 4:26	30.09
6/27/2022 3:27	0.24	6/27/2022 3:57	10.62	6/27/2022 2:45	0.86	6/27/2022 4:27	30.10
6/27/2022 3:28	3.50	6/27/2022 3:58	10.61	6/27/2022 2:46	0.82	6/27/2022 4:28	30.10
6/27/2022 3:29	7.87	6/27/2022 3:59	10.61	6/27/2022 2:47	0.92	6/27/2022 4:29	30.09
6/27/2022 3:30	6.61	6/27/2022 4:00	10.61	6/27/2022 2:48	0.84	6/27/2022 4:30	30.06
6/27/2022 3:31	5.55	6/27/2022 4:01	10.59	6/27/2022 2:49	0.88	6/27/2022 4:31	30.08
6/27/2022 3:32	4.72	6/27/2022 4:02	10.61	6/27/2022 2:50	0.84	6/27/2022 4:32	30.07
6/27/2022 3:33	4.05	6/27/2022 4:03	10.56	6/27/2022 2:51	0.85	6/27/2022 4:33	30.08
6/27/2022 3:34	3.51	6/27/2022 4:04	10.61	6/27/2022 2:52	0.86	6/27/2022 4:34	30.12
6/27/2022 3:35	3.01	6/27/2022 4:05	10.58	6/27/2022 2:53	0.86	6/27/2022 4:35	30.06
6/27/2022 3:36	2.61	6/27/2022 4:06	10.59	6/27/2022 2:54	0.91	6/27/2022 4:36	30.08
6/27/2022 3:37	2.28	6/27/2022 4:07	10.61	6/27/2022 2:55	0.85	6/27/2022 4:37	30.06
6/27/2022 3:38	2.02	6/27/2022 4:08	10.56	6/27/2022 2:56	0.88	6/27/2022 4:38	30.03
6/27/2022 3:39	1.80	6/27/2022 4:09	10.59	6/27/2022 2:57	0.85	6/27/2022 4:39	30.10
6/27/2022 3:40	1.58	6/27/2022 4:10	10.56	6/27/2022 2:58	0.86	6/27/2022 4:40	30.09
6/27/2022 3:41	1.37	6/27/2022 4:11	10.57	6/27/2022 2:59	0.93	6/27/2022 4:41	30.07
6/27/2022 3:42	1.21	6/27/2022 4:12	10.55	6/27/2022 3:00	0.87	6/27/2022 4:42	30.07
6/27/2022 3:43	1.04	6/27/2022 4:13	10.59	6/27/2022 3:01	0.94	6/27/2022 4:43	30.09
6/27/2022 3:44	0.97	6/27/2022 4:14	10.60	6/27/2022 3:02	0.84	6/27/2022 4:44	30.10
6/27/2022 3:45	0.86	6/27/2022 4:15	10.58	6/27/2022 3:03	0.93	6/27/2022 4:45	30.07
6/27/2022 3:46	0.76	6/27/2022 4:16	10.62	6/27/2022 3:04	0.89	6/27/2022 4:46	30.07
6/27/2022 3:47	0.70	6/27/2022 4:17	10.62	6/27/2022 3:05	0.87	6/27/2022 4:47	30.09
6/27/2022 3:48	0.64	6/27/2022 4:18	10.63	6/27/2022 3:06	0.89	6/27/2022 4:48	30.05
6/27/2022 3:49	0.59	6/27/2022 4:19	10.63	6/27/2022 3:07	0.87	6/27/2022 4:49	30.05
6/27/2022 3:50	0.55	6/27/2022 4:20	10.60	6/27/2022 3:08	0.84	6/27/2022 4:50	30.08
6/27/2022 3:51	0.49	6/27/2022 4:21	10.64	6/27/2022 3:09	0.89	6/27/2022 4:51	30.09
6/27/2022 3:52	0.46	6/27/2022 4:22	10.65	6/27/2022 3:10	0.85	6/27/2022 4:52	30.08
6/27/2022 3:53	0.44	6/27/2022 4:23	10.67	6/27/2022 3:11	0.94	6/27/2022 4:53	30.06
6/27/2022 3:54	0.42	6/27/2022 4:24	10.62	6/27/2022 3:12	0.82	6/27/2022 4:54	30.09

6/27/2022 3:55	0.39	6/27/2022 4:25	10.62	6/27/2022 3:13	0.96	6/27/2022 4:55	30.08
6/27/2022 3:56	0.37	6/27/2022 4:26	10.62	6/27/2022 3:14	0.84	6/27/2022 4:56	30.05
6/27/2022 3:57	0.31	6/27/2022 4:27	10.63	6/27/2022 3:15	0.90	6/27/2022 4:57	30.06
6/27/2022 3:58	0.32	6/27/2022 4:28	10.62	6/27/2022 3:16	0.90	6/27/2022 4:58	30.08
6/27/2022 3:59	0.33	6/27/2022 4:29	10.61	6/27/2022 3:17	0.86	6/27/2022 4:59	30.11
6/27/2022 4:00	0.35	6/27/2022 4:30	10.62	6/27/2022 3:18	0.94	6/27/2022 5:00	30.05
6/27/2022 4:01	0.29	6/27/2022 4:31	10.59	6/27/2022 3:19	0.89	6/27/2022 5:01	30.10
6/27/2022 4:02	0.29	6/27/2022 4:32	10.63	6/27/2022 3:20	0.92	6/27/2022 5:02	30.09
6/27/2022 4:03	0.38	6/27/2022 4:33	10.59	6/27/2022 3:21	0.86	6/27/2022 5:03	30.09
6/27/2022 4:04	0.37	6/27/2022 4:34	10.60	6/27/2022 3:22	0.90	6/27/2022 5:04	30.06
6/27/2022 4:05	0.38	6/27/2022 4:35	10.57	6/27/2022 3:23	0.83	6/27/2022 5:05	30.07
6/27/2022 4:06	0.41	6/27/2022 4:36	10.56	6/27/2022 3:24	0.83	6/27/2022 5:06	30.07
6/27/2022 4:07	0.43	6/27/2022 4:37	10.57	6/27/2022 3:25	0.95	6/27/2022 5:07	30.06
6/27/2022 4:08	0.48	6/27/2022 4:38	10.56	6/27/2022 3:26	0.85	6/27/2022 5:08	30.04
6/27/2022 4:09	0.47	6/27/2022 4:39	10.56	6/27/2022 3:27	0.90	6/27/2022 5:09	30.05
6/27/2022 4:10	0.45	6/27/2022 4:40	10.55	6/27/2022 3:28	0.86	6/27/2022 5:10	30.07
6/27/2022 4:11	0.46	6/27/2022 4:41	10.56	6/27/2022 3:29	0.93	6/27/2022 5:11	30.09
6/27/2022 4:12	0.47	6/27/2022 4:42	10.58	6/27/2022 3:30	0.86	6/27/2022 5:12	30.08
6/27/2022 4:13	0.48	6/27/2022 4:43	10.53	6/27/2022 3:31	0.85	6/27/2022 5:13	30.07
6/27/2022 4:14	0.48	6/27/2022 4:44	10.57	6/27/2022 3:32	0.85	6/27/2022 5:14	30.05
6/27/2022 4:15	0.51	6/27/2022 4:45	10.59	6/27/2022 3:33	0.97	6/27/2022 5:15	30.05
6/27/2022 4:16	0.53	6/27/2022 4:46	10.58	6/27/2022 3:34	0.88	6/27/2022 5:16	30.05
6/27/2022 4:17	0.52	6/27/2022 4:47	10.60	6/27/2022 3:35	0.85	6/27/2022 5:17	30.05
6/27/2022 4:18	0.54	6/27/2022 4:48	10.61	6/27/2022 3:36	0.96	6/27/2022 5:18	30.06
6/27/2022 4:19	0.59	6/27/2022 4:49	10.62	6/27/2022 3:37	0.83	6/27/2022 5:19	30.06
6/27/2022 4:20	0.63	6/27/2022 4:50	10.63	6/27/2022 3:38	0.97	6/27/2022 5:20	30.07
6/27/2022 4:21	0.61	6/27/2022 4:51	10.63	6/27/2022 3:39	0.85	6/27/2022 5:21	30.02
6/27/2022 4:22	0.59	6/27/2022 4:52	10.62	6/27/2022 3:40	0.95	6/27/2022 5:22	30.07
6/27/2022 4:23	0.89	6/27/2022 4:53	10.62	6/27/2022 3:41	0.86	6/27/2022 5:23	30.06
6/27/2022 4:24	6.70	6/27/2022 4:54	10.60	6/27/2022 3:42	0.95	6/27/2022 5:24	30.05
6/27/2022 4:25	7.57	6/27/2022 4:55	10.63	6/27/2022 3:43	0.85	6/27/2022 5:25	30.09
6/27/2022 4:26	6.44	6/27/2022 4:56	10.64	6/27/2022 3:44	0.96	6/27/2022 5:26	30.03
6/27/2022 4:27	5.53	6/27/2022 4:57	10.63	6/27/2022 3:45	0.82	6/27/2022 5:27	30.01
6/27/2022 4:28	4.74	6/27/2022 4:58	10.61	6/27/2022 3:46	0.96	6/27/2022 5:28	30.06
6/27/2022 4:29	4.21	6/27/2022 4:59	10.64	6/27/2022 3:47	0.89	6/27/2022 5:29	30.07
6/27/2022 4:30	3.69	6/27/2022 5:00	10.60	6/27/2022 3:48	0.95	6/27/2022 5:30	30.08
6/27/2022 4:31	3.24	6/27/2022 5:01	10.57	6/27/2022 3:49	0.88	6/27/2022 5:31	30.06
6/27/2022 4:32	2.85	6/27/2022 5:02	10.56	6/27/2022 3:50	0.94	6/27/2022 5:32	30.09
6/27/2022 4:33	2.53	6/27/2022 5:03	10.56	6/27/2022 3:51	0.90	6/27/2022 5:33	30.07
6/27/2022 4:34	2.31	6/27/2022 5:04	10.60	6/27/2022 3:52	0.85	6/27/2022 5:34	30.04
6/27/2022 4:35	2.12	6/27/2022 5:05	10.65	6/27/2022 3:53	0.94	6/27/2022 5:35	30.05
6/27/2022 4:36	1.92	6/27/2022 5:06	10.64	6/27/2022 3:54	0.90	6/27/2022 5:36	30.06
6/27/2022 4:37	1.73	6/27/2022 5:07	10.68	6/27/2022 3:55	0.98	6/27/2022 5:37	30.05
6/27/2022 4:38	1.62	6/27/2022 5:08	10.71	6/27/2022 3:56	0.85	6/27/2022 5:38	30.04
6/27/2022 4:39	1.55	6/27/2022 5:09	10.74	6/27/2022 3:57	0.96	6/27/2022 5:39	30.00
6/27/2022 4:40	1.44	6/27/2022 5:10	10.81	6/27/2022 3:58	0.86	6/27/2022 5:40	30.06
6/27/2022 4:41	1.34	6/27/2022 5:11	10.85	6/27/2022 3:59	0.90	6/27/2022 5:41	30.06
6/27/2022 4:42	1.28	6/27/2022 5:12	10.86	6/27/2022 4:00	0.92	6/27/2022 5:42	30.04
6/27/2022 4:43	1.26	6/27/2022 5:13	10.93	6/27/2022 4:01	0.91	6/27/2022 5:43	30.03
6/27/2022 4:44	1.24	6/27/2022 5:14	10.97	6/27/2022 4:02	0.88	6/27/2022 5:44	30.08
6/27/2022 4:45	1.16	6/27/2022 5:15	10.99	6/27/2022 4:03	0.92	6/27/2022 5:45	30.05
6/27/2022 4:46	1.12	6/27/2022 5:16	11.00	6/27/2022 4:04	0.90	6/27/2022 5:46	30.03
6/27/2022 4:47	1.10	6/27/2022 5:17	11.05	6/27/2022 4:05	0.88	6/27/2022 5:47	30.06
6/27/2022 4:48	1.06	6/27/2022 5:18	11.07	6/27/2022 4:06	0.92	6/27/2022 5:48	30.03
6/27/2022 4:49	1.05	6/27/2022 5:19	11.09	6/27/2022 4:07	0.86	6/27/2022 5:49	30.07
6/27/2022 4:50	1.06	6/27/2022 5:20	11.14	6/27/2022 4:08	0.98	6/27/2022 5:50	30.07
6/27/2022 4:51	1.05	6/27/2022 5:21	11.17	6/27/2022 4:09	0.88	6/27/2022 5:51	30.05
6/27/2022 4:52	1.07	6/27/2022 5:22	11.22	6/27/2022 4:10	0.92	6/27/2022 5:52	30.04
6/27/2022 4:53	0.99	6/27/2022 5:23	11.25	6/27/2022 4:11	0.83	6/27/2022 5:53	30.06
6/27/2022 4:54	0.99	6/27/2022 5:24	11.25	6/27/2022 4:12	0.90	6/27/2022 5:54	30.01
6/27/2022 4:55	0.99	6/27/2022 5:25	11.25	6/27/2022 4:13	0.88	6/27/2022 5:55	30.03
6/27/2022 4:56	1.00	6/27/2022 5:26	11.30	6/27/2022 4:14	0.91	6/27/2022 5:56	30.08
6/27/2022 4:57	1.02	6/27/2022 5:27	11.32	6/27/2022 4:15	0.89	6/27/2022 5:57	30.04
6/27/2022 4:58	1.00	6/27/2022 5:28	11.30	6/27/2022 4:16	0.96	6/27/2022 5:58	30.03
6/27/2022 4:59	1.04	6/27/2022 5:29	11.30	6/27/2022 4:17	0.89	6/27/2022 5:59	30.04
6/27/2022 5:00	0.96	6/27/2022 5:30	11.28	6/27/2022 4:18	0.89	6/27/2022 6:00	30.01
6/27/2022 5:01	0.97	6/27/2022 5:31	11.26	6/27/2022 4:19	0.91	6/27/2022 6:01	30.03
6/27/2022 5:02	0.97	6/27/2022 5:32	11.24	6/27/2022 4:20	0.92	6/27/2022 6:02	30.03
6/27/2022 5:03	0.97	6/27/2022 5:33	11.23	6/27/2022 4:21	0.92	6/27/2022 6:03	30.05
6/27/2022 5:04	0.96	6/27/2022 5:34	11.18	6/27/2022 4:22	0.91	6/27/2022 6:04	30.05
6/27/2022 5:05	0.94	6/27/2022 5:35	11.18	6/27/2022 4:23	0.88	6/27/2022 6:05	30.04
6/27/2022 5:06	0.93	6/27/2022 5:36	11.15	6/27/2022 4:24	0.89	6/27/2022 6:06	30.09
6/27/2022 5:07	0.94	6/27/2022 5:37	11.12	6/27/2022 4:25	0.92	6/27/2022 6:07	30.08
6/27/2022 5:08	0.92	6/27/2022 5:38	11.10	6/27/2022 4:26	0.93	6/27/2022 6:08	30.06
6/27/2022 5:09	0.94	6/27/2022 5:39	11.09	6/27/2022 4:27	0.94	6/27/2022 6:09	30.09
6/27/2022 5:10	0.91	6/27/2022 5:40	11.09	6/27/2022 4:28	0.92	6/27/2022 6:10	30.02
6/27/2022 5:11	0.92	6/27/2022 5:41	11.06	6/27/2022 4:29	0.94	6/27/2022 6:11	30.03
6/27/2022 5:12	0.92	6/27/2022 5:42	11.07	6/27/2022 4:30	0.95	6/27/2022 6:12	30.02
6/27/2022 5:13	0.87	6/27/2022 5:43	11.07	6/27/2022 4:31	0.91	6/27/2022 6:13	30.06
6/27/2022 5:14	0.89	6/27/2022 5:44	11.04	6/27/2022 4:32	0.95	6/27/2022 6:14	30.07
6/27/2022 5:15	0.95	6/27/2022 5:45	11.04	6/27/2022 4:33	0.91	6/27/2022 6:15	30.01
6/27/2022 5:16	0.92	6/27/2022 5:46	11.03	6/27/2022 4:34	0.91	6/27/2022 6:16	30.02
6/27/2022 5:17	0.91	6/27/2022 5:47	11.01	6/27/2022 4:35	0.94	6/27/2022 6:17	30.03
6/27/2022 5:18	0.93	6/27/2022 5:48	11.00	6/27/2022 4:36	0.95	6/27/2022 6:18	30.07
6/27/2022 5:19	5.90	6/27/2022 5:49	10.99	6/27/2022 4:37	0.93	6/27/2022 6:19	30.07
6/27/2022 5:20	8.06	6/27/2022 5:50	10.96	6/27/2022 4:38	0.94	6/27/2022 6:20	30.05
6/27/2022 5:21	6.82	6/27/2022 5:51	10.94	6/27/2022 4:39	0.93	6/27/2022 6:21	30.02
6/27/2022 5:22	5.86	6/27/2022 5:52	10.92	6/27/2022 4:40	0.93	6/27/2022 6:22	30.03

6/27/2022 5:23	5.08	6/27/2022 5:53	10.94	6/27/2022 4:41	0.95	6/27/2022 6:23	30.03
6/27/2022 5:24	4.42	6/27/2022 5:54	10.89	6/27/2022 4:42	0.95	6/27/2022 6:24	30.06
6/27/2022 5:25	3.89	6/27/2022 5:55	10.85	6/27/2022 4:43	0.91	6/27/2022 6:25	30.09
6/27/2022 5:26	3.43	6/27/2022 5:56	10.87	6/27/2022 4:44	0.95	6/27/2022 6:26	30.08
6/27/2022 5:27	3.03	6/27/2022 5:57	10.86	6/27/2022 4:45	0.94	6/27/2022 6:27	30.05
6/27/2022 5:28	2.72	6/27/2022 5:58	10.83	6/27/2022 4:46	0.96	6/27/2022 6:28	30.04
6/27/2022 5:29	2.42	6/27/2022 5:59	10.83	6/27/2022 4:47	0.94	6/27/2022 6:29	30.02
6/27/2022 5:30	2.24	6/27/2022 6:00	10.81	6/27/2022 4:48	0.96	6/27/2022 6:30	30.05
6/27/2022 5:31	2.02	6/27/2022 6:01	10.83	6/27/2022 4:49	0.99	6/27/2022 6:31	30.03
6/27/2022 5:32	1.89	6/27/2022 6:02	10.77	6/27/2022 4:50	0.96	6/27/2022 6:32	30.01
6/27/2022 5:33	1.77	6/27/2022 6:03	10.77	6/27/2022 4:51	0.95	6/27/2022 6:33	30.03
6/27/2022 5:34	1.64	6/27/2022 6:04	10.76	6/27/2022 4:52	0.97	6/27/2022 6:34	30.05
6/27/2022 5:35	1.57	6/27/2022 6:05	10.77	6/27/2022 4:53	0.98	6/27/2022 6:35	30.02
6/27/2022 5:36	1.43	6/27/2022 6:06	10.77	6/27/2022 4:54	0.97	6/27/2022 6:36	30.01
6/27/2022 5:37	1.37	6/27/2022 6:07	10.80	6/27/2022 4:55	0.97	6/27/2022 6:37	30.06
6/27/2022 5:38	1.31	6/27/2022 6:08	10.78	6/27/2022 4:56	0.99	6/27/2022 6:38	30.05
6/27/2022 5:39	1.23	6/27/2022 6:09	10.78	6/27/2022 4:57	0.96	6/27/2022 6:39	30.04
6/27/2022 5:40	1.22	6/27/2022 6:10	10.77	6/27/2022 4:58	0.94	6/27/2022 6:40	30.06
6/27/2022 5:41	1.20	6/27/2022 6:11	10.77	6/27/2022 4:59	0.93	6/27/2022 6:41	30.04
6/27/2022 5:42	1.17	6/27/2022 6:12	10.79	6/27/2022 5:00	0.96	6/27/2022 6:42	30.01
6/27/2022 5:43	1.16	6/27/2022 6:13	10.78	6/27/2022 5:01	0.91	6/27/2022 6:43	30.01
6/27/2022 5:44	1.11	6/27/2022 6:14	10.77	6/27/2022 5:02	0.90	6/27/2022 6:44	30.05
6/27/2022 5:45	1.08	6/27/2022 6:15	10.77	6/27/2022 5:03	0.93	6/27/2022 6:45	30.03
6/27/2022 5:46	1.05	6/27/2022 6:16	10.73	6/27/2022 5:04	0.92	6/27/2022 6:46	30.03
6/27/2022 5:47	1.05	6/27/2022 6:17	10.72	6/27/2022 5:05	0.96	6/27/2022 6:47	30.03
6/27/2022 5:48	1.02	6/27/2022 6:18	10.74	6/27/2022 5:06	0.97	6/27/2022 6:48	30.05
6/27/2022 5:49	1.04	6/27/2022 6:19	10.75	6/27/2022 5:07	0.97	6/27/2022 6:49	30.02
6/27/2022 5:50	1.04	6/27/2022 6:20	10.71	6/27/2022 5:08	0.92	6/27/2022 6:50	30.05
6/27/2022 5:51	1.00	6/27/2022 6:21	10.74	6/27/2022 5:09	0.94	6/27/2022 6:51	30.03
6/27/2022 5:52	0.98	6/27/2022 6:22	10.75	6/27/2022 5:10	0.94	6/27/2022 6:52	30.02
6/27/2022 5:53	0.94	6/27/2022 6:23	10.77	6/27/2022 5:11	0.97	6/27/2022 6:53	30.05
6/27/2022 5:54	0.96	6/27/2022 6:24	10.73	6/27/2022 5:12	0.95	6/27/2022 6:54	30.06
6/27/2022 5:55	0.97	6/27/2022 6:25	10.76	6/27/2022 5:13	0.94	6/27/2022 6:55	30.03
6/27/2022 5:56	0.98	6/27/2022 6:26	10.74	6/27/2022 5:14	0.95	6/27/2022 6:56	30.01
6/27/2022 5:57	0.96	6/27/2022 6:27	10.80	6/27/2022 5:15	0.94	6/27/2022 6:57	30.03
6/27/2022 5:58	1.02	6/27/2022 6:28	10.75	6/27/2022 5:16	0.96	6/27/2022 6:58	30.06
6/27/2022 5:59	1.01	6/27/2022 6:29	10.76	6/27/2022 5:17	0.95	6/27/2022 6:59	30.05
6/27/2022 6:00	0.99	6/27/2022 6:30	10.72	6/27/2022 5:18	0.93	6/27/2022 7:00	30.03
6/27/2022 6:01	1.00	6/27/2022 6:31	10.77	6/27/2022 5:19	0.95	6/27/2022 7:01	30.04
6/27/2022 6:02	0.99	6/27/2022 6:32	10.75	6/27/2022 5:20	0.97	6/27/2022 7:02	32.02
6/27/2022 6:03	1.01	6/27/2022 6:33	10.73	6/27/2022 5:21	0.95	6/27/2022 7:03	32.70
6/27/2022 6:04	1.01	6/27/2022 6:34	10.74	6/27/2022 5:22	1.00	6/27/2022 7:04	31.83
6/27/2022 6:05	1.11	6/27/2022 6:35	10.68	6/27/2022 5:23	0.98	6/27/2022 7:05	32.98
6/27/2022 6:06	1.23	6/27/2022 6:36	10.73	6/27/2022 5:24	0.96	6/27/2022 7:06	33.40
6/27/2022 6:07	1.30	6/27/2022 6:37	10.71	6/27/2022 5:25	0.98	6/27/2022 7:07	32.15
6/27/2022 6:08	1.30	6/27/2022 6:38	10.66	6/27/2022 5:26	0.90	6/27/2022 7:08	33.15
6/27/2022 6:09	1.32	6/27/2022 6:39	10.69	6/27/2022 5:27	0.97	6/27/2022 7:09	33.66
6/27/2022 6:10	1.29	6/27/2022 6:40	10.70	6/27/2022 5:28	0.94	6/27/2022 7:10	32.28
6/27/2022 6:11	1.25	6/27/2022 6:41	10.70	6/27/2022 5:29	0.97	6/27/2022 7:11	33.21
6/27/2022 6:12	1.28	6/27/2022 6:42	10.66	6/27/2022 5:30	0.95	6/27/2022 7:12	33.78
6/27/2022 6:13	1.99	6/27/2022 6:43	10.65	6/27/2022 5:31	0.96	6/27/2022 7:13	32.31
6/27/2022 6:14	7.82	6/27/2022 6:44	10.64	6/27/2022 5:32	0.96	6/27/2022 7:14	33.22
6/27/2022 6:15	7.94	6/27/2022 6:45	10.64	6/27/2022 5:33	0.93	6/27/2022 7:15	33.89
6/27/2022 6:16	6.76	6/27/2022 6:46	10.63	6/27/2022 5:34	0.95	6/27/2022 7:16	32.35
6/27/2022 6:17	5.89	6/27/2022 6:47	10.63	6/27/2022 5:35	0.95	6/27/2022 7:17	33.22
6/27/2022 6:18	5.10	6/27/2022 6:48	10.59	6/27/2022 5:36	0.94	6/27/2022 7:18	34.03
6/27/2022 6:19	4.47	6/27/2022 6:49	10.62	6/27/2022 5:37	0.91	6/27/2022 7:19	32.40
6/27/2022 6:20	3.95	6/27/2022 6:50	10.59	6/27/2022 5:38	0.94	6/27/2022 7:20	33.24
6/27/2022 6:21	3.53	6/27/2022 6:51	10.61	6/27/2022 5:39	0.95	6/27/2022 7:21	34.15
6/27/2022 6:22	3.22	6/27/2022 6:52	10.58	6/27/2022 5:40	0.96	6/27/2022 7:22	32.32
6/27/2022 6:23	2.83	6/27/2022 6:53	10.63	6/27/2022 5:41	0.91	6/27/2022 7:23	33.25
6/27/2022 6:24	2.59	6/27/2022 6:54	10.65	6/27/2022 5:42	0.96	6/27/2022 7:24	33.43
6/27/2022 6:25	2.41	6/27/2022 6:55	10.68	6/27/2022 5:43	0.94	6/27/2022 7:25	32.51
6/27/2022 6:26	2.26	6/27/2022 6:56	10.69	6/27/2022 5:44	0.97	6/27/2022 7:26	33.64
6/27/2022 6:27	2.08	6/27/2022 6:57	10.68	6/27/2022 5:45	0.95	6/27/2022 7:27	32.36
6/27/2022 6:28	1.96	6/27/2022 6:58	10.66	6/27/2022 5:46	0.98	6/27/2022 7:28	32.92
6/27/2022 6:29	1.83	6/27/2022 6:59	10.71	6/27/2022 5:47	0.93	6/27/2022 7:29	33.76
6/27/2022 6:30	1.74	6/27/2022 7:00	10.69	6/27/2022 5:48	0.92	6/27/2022 7:30	32.34
6/27/2022 6:31	1.66	6/27/2022 7:01	10.69	6/27/2022 5:49	0.95	6/27/2022 7:31	33.40
6/27/2022 6:32	1.61	6/27/2022 7:02	10.70	6/27/2022 5:50	0.99	6/27/2022 7:32	32.89
6/27/2022 6:33	1.52	6/27/2022 7:03	10.69	6/27/2022 5:51	0.96	6/27/2022 7:33	32.76
6/27/2022 6:34	1.42	6/27/2022 7:04	10.64	6/27/2022 5:52	0.95	6/27/2022 7:34	34.03
6/27/2022 6:35	1.39	6/27/2022 7:05	10.69	6/27/2022 5:53	0.90	6/27/2022 7:35	32.15
6/27/2022 6:36	1.39	6/27/2022 7:06	10.63	6/27/2022 5:54	0.90	6/27/2022 7:36	33.20
6/27/2022 6:37	1.29	6/27/2022 7:07	10.67	6/27/2022 5:55	0.95	6/27/2022 7:37	33.37
6/27/2022 6:38	1.30	6/27/2022 7:08	10.69	6/27/2022 5:56	0.95	6/27/2022 7:38	32.54
6/27/2022 6:39	1.27	6/27/2022 7:09	10.66	6/27/2022 5:57	0.95	6/27/2022 7:39	33.74
6/27/2022 6:40	1.24	6/27/2022 7:10	10.71	6/27/2022 5:58	0.96	6/27/2022 7:40	32.44
6/27/2022 6:41	1.22	6/27/2022 7:11	10.70	6/27/2022 5:59	0.94	6/27/2022 7:41	33.12
6/27/2022 6:42	6.17	6/27/2022 7:12	10.72	6/27/2022 6:00	0.93	6/27/2022 7:42	35.08
6/27/2022 6:43	10.66	6/27/2022 7:13	10.75	6/27/2022 6:01	0.98	6/27/2022 7:43	36.46
6/27/2022 6:44	9.04	6/27/2022 7:14	10.70	6/27/2022 6:02	0.95	6/27/2022 7:44	37.40
6/27/2022 6:45	7.71	6/27/2022 7:15	10.75	6/27/2022 6:03	0.93	6/27/2022 7:45	38.15
6/27/2022 6:46	6.64	6/27/2022 7:16	10.71	6/27/2022 6:04	1.76	6/27/2022 7:46	38.73
6/27/2022 6:47	5.74	6/27/2022 7:17	10.69	6/27/2022 6:05	8.90	6/27/2022 7:47	39.16
6/27/2022 6:48	4.97	6/27/2022 7:18	10.68	6/27/2022 6:06	6.93	6/27/2022 7:48	39.47
6/27/2022 6:49	9.26	6/27/2022 7:19	10.71	6/27/2022 6:07	4.58	6/27/2022 7:49	39.73
6/27/2022 6:50	10.97	6/27/2022 7:20	10.73	6/27/2022 6:08	2.80	6/27/2022 7:50	39.95

6/27/2022 6:51	9.41	6/27/2022 7:21	10.70	6/27/2022 6:09	1.61	6/27/2022 7:51	40.12
6/27/2022 6:52	8.05	6/27/2022 7:22	10.67	6/27/2022 6:10	1.00	6/27/2022 7:52	39.92
6/27/2022 6:53	6.88	6/27/2022 7:23	10.67	6/27/2022 6:11	0.96	6/27/2022 7:53	39.75
6/27/2022 6:54	5.94	6/27/2022 7:24	10.69	6/27/2022 6:12	0.99	6/27/2022 7:54	39.65
6/27/2022 6:55	5.28	6/27/2022 7:25	10.67	6/27/2022 6:13	0.98	6/27/2022 7:55	39.78
6/27/2022 6:56	4.57	6/27/2022 7:26	10.62	6/27/2022 6:14	1.01	6/27/2022 7:56	39.90
6/27/2022 6:57	3.99	6/27/2022 7:27	10.67	6/27/2022 6:15	0.99	6/27/2022 7:57	40.03
6/27/2022 6:58	3.55	6/27/2022 7:28	10.64	6/27/2022 6:16	1.00	6/27/2022 7:58	40.09
6/27/2022 6:59	3.15	6/27/2022 7:29	10.68	6/27/2022 6:17	0.99	6/27/2022 7:59	40.18
6/27/2022 7:00	2.76	6/27/2022 7:30	10.66	6/27/2022 6:18	0.97	6/27/2022 8:00	40.22
6/27/2022 7:01	2.52	6/27/2022 7:31	10.66	6/27/2022 6:19	0.99	6/27/2022 8:01	40.31
6/27/2022 7:02	2.22	6/27/2022 7:32	10.68	6/27/2022 6:20	0.96	6/27/2022 8:02	38.23
6/27/2022 7:03	2.02	6/27/2022 7:33	10.69	6/27/2022 6:21	1.00	6/27/2022 8:03	37.66
6/27/2022 7:04	1.86	6/27/2022 7:34	10.71	6/27/2022 6:22	1.00	6/27/2022 8:04	34.87
6/27/2022 7:05	1.67	6/27/2022 7:35	10.73	6/27/2022 6:23	0.99	6/27/2022 8:05	34.96
6/27/2022 7:06	1.52	6/27/2022 7:36	10.71	6/27/2022 6:24	0.96	6/27/2022 8:06	34.96
6/27/2022 7:07	1.43	6/27/2022 7:37	10.73	6/27/2022 6:25	0.95	6/27/2022 8:07	33.53
6/27/2022 7:08	1.35	6/27/2022 7:38	10.72	6/27/2022 6:26	0.99	6/27/2022 8:08	34.47
6/27/2022 7:09	1.21	6/27/2022 7:39	10.76	6/27/2022 6:27	0.98	6/27/2022 8:09	33.21
6/27/2022 7:10	1.14	6/27/2022 7:40	10.75	6/27/2022 6:28	0.97	6/27/2022 8:10	33.56
6/27/2022 7:11	1.07	6/27/2022 7:41	10.73	6/27/2022 6:29	0.95	6/27/2022 8:11	34.33
6/27/2022 7:12	0.95	6/27/2022 7:42	10.75	6/27/2022 6:30	0.93	6/27/2022 8:12	32.92
6/27/2022 7:13	0.89	6/27/2022 7:43	10.71	6/27/2022 6:31	0.96	6/27/2022 8:13	34.03
6/27/2022 7:14	0.85	6/27/2022 7:44	10.69	6/27/2022 6:32	0.95	6/27/2022 8:14	33.05
6/27/2022 7:15	0.83	6/27/2022 7:45	10.69	6/27/2022 6:33	0.96	6/27/2022 8:15	33.38
6/27/2022 7:16	0.78	6/27/2022 7:46	10.74	6/27/2022 6:34	0.95	6/27/2022 8:16	34.48
6/27/2022 7:17	0.75	6/27/2022 7:47	10.68	6/27/2022 6:35	0.97	6/27/2022 8:17	34.20
6/27/2022 7:18	0.70	6/27/2022 7:48	10.70	6/27/2022 6:36	0.94	6/27/2022 8:18	34.63
6/27/2022 7:19	0.72	6/27/2022 7:49	10.76	6/27/2022 6:37	0.96	6/27/2022 8:19	34.47
6/27/2022 7:20	0.66	6/27/2022 7:50	10.69	6/27/2022 6:38	0.95	6/27/2022 8:20	35.04
6/27/2022 7:21	0.62	6/27/2022 7:51	10.76	6/27/2022 6:39	0.96	6/27/2022 8:21	34.69
6/27/2022 7:22	0.63	6/27/2022 7:52	10.75	6/27/2022 6:40	0.97	6/27/2022 8:22	33.53
6/27/2022 7:23	0.60	6/27/2022 7:53	10.79	6/27/2022 6:41	0.95	6/27/2022 8:23	32.12
6/27/2022 7:24	0.53	6/27/2022 7:54	10.78	6/27/2022 6:42	0.93	6/27/2022 8:24	31.45
6/27/2022 7:25	0.57	6/27/2022 7:55	10.74	6/27/2022 6:43	0.97	6/27/2022 8:25	31.15
6/27/2022 7:26	0.53	6/27/2022 7:56	10.78	6/27/2022 6:44	0.97	6/27/2022 8:26	31.06
6/27/2022 7:27	0.56	6/27/2022 7:57	10.79	6/27/2022 6:45	0.97	6/27/2022 8:27	31.00
6/27/2022 7:28	0.52	6/27/2022 7:58	10.76	6/27/2022 6:46	0.95	6/27/2022 8:28	30.93
6/27/2022 7:29	0.51	6/27/2022 7:59	10.80	6/27/2022 6:47	0.96	6/27/2022 8:29	30.89
6/27/2022 7:30	6.02	6/27/2022 8:00	10.83	6/27/2022 6:48	0.96	6/27/2022 8:30	30.86
6/27/2022 7:31	7.49	6/27/2022 8:01	10.81	6/27/2022 6:49	0.99	6/27/2022 8:31	30.84
6/27/2022 7:32	6.34	6/27/2022 8:02	10.83	6/27/2022 6:50	0.97	6/27/2022 8:32	30.89
6/27/2022 7:33	5.39	6/27/2022 8:03	10.87	6/27/2022 6:51	0.97	6/27/2022 8:33	30.79
6/27/2022 7:34	4.66	6/27/2022 8:04	10.87	6/27/2022 6:52	0.99	6/27/2022 8:34	30.82
6/27/2022 7:35	4.00	6/27/2022 8:05	10.88	6/27/2022 6:53	0.92	6/27/2022 8:35	30.81
6/27/2022 7:36	3.46	6/27/2022 8:06	10.83	6/27/2022 6:54	0.95	6/27/2022 8:36	30.76
6/27/2022 7:37	2.98	6/27/2022 8:07	10.90	6/27/2022 6:55	0.96	6/27/2022 8:37	30.81
6/27/2022 7:38	2.63	6/27/2022 8:08	10.86	6/27/2022 6:56	0.93	6/27/2022 8:38	30.76
6/27/2022 7:39	2.34	6/27/2022 8:09	10.87	6/27/2022 6:57	0.93	6/27/2022 8:39	30.73
6/27/2022 7:40	2.08	6/27/2022 8:10	10.85	6/27/2022 6:58	0.94	6/27/2022 8:40	30.68
6/27/2022 7:41	1.85	6/27/2022 8:11	10.82	6/27/2022 6:59	0.92	6/27/2022 8:41	30.70
6/27/2022 7:42	1.64	6/27/2022 8:12	10.83	6/27/2022 7:00	0.91	6/27/2022 8:42	30.72
6/27/2022 7:43	1.51	6/27/2022 8:13	10.82	6/27/2022 7:01	0.89	6/27/2022 8:43	30.66
6/27/2022 7:44	6.58	6/27/2022 8:14	10.79	6/27/2022 7:02	0.91	6/27/2022 8:44	30.69
6/27/2022 7:45	10.83	6/27/2022 8:15	10.84	6/27/2022 7:03	0.87	6/27/2022 8:45	30.65
6/27/2022 7:46	9.19	6/27/2022 8:16	10.81	6/27/2022 7:04	0.93	6/27/2022 8:46	30.67
6/27/2022 7:47	7.76	6/27/2022 8:17	10.77	6/27/2022 7:05	0.92	6/27/2022 8:47	30.64
6/27/2022 7:48	6.60	6/27/2022 8:18	10.76	6/27/2022 7:06	0.91	6/27/2022 8:48	30.65
6/27/2022 7:49	5.68	6/27/2022 8:19	10.78	6/27/2022 7:07	0.89	6/27/2022 8:49	30.62
6/27/2022 7:50	4.88	6/27/2022 8:20	10.77	6/27/2022 7:08	0.90	6/27/2022 8:50	30.67
6/27/2022 7:51	4.24	6/27/2022 8:21	10.73	6/27/2022 7:09	0.87	6/27/2022 8:51	30.61
6/27/2022 7:52	3.69	6/27/2022 8:22	10.75	6/27/2022 7:10	0.90	6/27/2022 8:52	30.63
6/27/2022 7:53	3.22	6/27/2022 8:23	10.72	6/27/2022 7:11	0.89	6/27/2022 8:53	30.65
6/27/2022 7:54	2.80	6/27/2022 8:24	10.72	6/27/2022 7:12	0.90	6/27/2022 8:54	30.59
6/27/2022 7:55	2.46	6/27/2022 8:25	10.75	6/27/2022 7:13	0.90	6/27/2022 8:55	30.58
6/27/2022 7:56	2.16	6/27/2022 8:26	10.67	6/27/2022 7:14	0.91	6/27/2022 8:56	30.58
6/27/2022 7:57	1.96	6/27/2022 8:27	10.67	6/27/2022 7:15	0.87	6/27/2022 8:57	30.61
6/27/2022 7:58	3.66	6/27/2022 8:28	10.70	6/27/2022 7:16	0.91	6/27/2022 8:58	30.56
6/27/2022 7:59	9.06	6/27/2022 8:29	10.70	6/27/2022 7:17	0.83	6/27/2022 8:59	30.53
6/27/2022 8:00	9.56	6/27/2022 8:30	10.73	6/27/2022 7:18	0.88	6/27/2022 9:00	30.55
6/27/2022 8:01	8.10	6/27/2022 8:31	10.73	6/27/2022 7:19	0.91	6/27/2022 9:01	30.52
6/27/2022 8:02	6.93	6/27/2022 8:32	10.72	6/27/2022 7:20	0.88	6/27/2022 9:02	30.54
6/27/2022 8:03	5.90	6/27/2022 8:33	10.74	6/27/2022 7:21	0.90	6/27/2022 9:03	30.51
6/27/2022 8:04	5.06	6/27/2022 8:34	10.76	6/27/2022 7:22	0.91	6/27/2022 9:04	30.49
6/27/2022 8:05	4.45	6/27/2022 8:35	10.74	6/27/2022 7:23	0.90	6/27/2022 9:05	30.49
6/27/2022 8:06	3.81	6/27/2022 8:36	10.76	6/27/2022 7:24	0.93	6/27/2022 9:06	30.53
6/27/2022 8:07	3.31	6/27/2022 8:37	10.74	6/27/2022 7:25	0.93	6/27/2022 9:07	30.50
6/27/2022 8:08	2.91	6/27/2022 8:38	10.75	6/27/2022 7:26	0.87	6/27/2022 9:08	30.50
6/27/2022 8:09	2.54	6/27/2022 8:39	10.74	6/27/2022 7:27	0.88	6/27/2022 9:09	30.45
6/27/2022 8:10	2.26	6/27/2022 8:40	10.73	6/27/2022 7:28	0.93	6/27/2022 9:10	30.49
6/27/2022 8:11	2.04	6/27/2022 8:41	10.72	6/27/2022 7:29	0.88	6/27/2022 9:11	30.50
6/27/2022 8:12	1.85	6/27/2022 8:42	10.74	6/27/2022 7:30	0.90	6/27/2022 9:12	30.49
6/27/2022 8:13	1.63	6/27/2022 8:43	10.72	6/27/2022 7:31	0.91	6/27/2022 9:13	30.47
6/27/2022 8:14	1.51	6/27/2022 8:44	10.76	6/27/2022 7:32	0.90	6/27/2022 9:14	30.49
6/27/2022 8:15	1.32	6/27/2022 8:45	10.73	6/27/2022 7:33	0.90	6/27/2022 9:15	30.47
6/27/2022 8:16	1.25	6/27/2022 8:46	10.76	6/27/2022 7:34	0.91	6/27/2022 9:16	30.47
6/27/2022 8:17	2.05	6/27/2022 8:47	10.76	6/27/2022 7:35	0.91	6/27/2022 9:17	30.43
6/27/2022 8:18	7.82	6/27/2022 8:48	10.73	6/27/2022 7:36	0.87	6/27/2022 9:18	30.44

6/27/2022 8:19	7.66	6/27/2022 8:49	10.78	6/27/2022 7:37	0.91	6/27/2022 9:19	30.44
6/27/2022 8:20	6.53	6/27/2022 8:50	10.78	6/27/2022 7:38	0.92	6/27/2022 9:20	30.44
6/27/2022 8:21	5.55	6/27/2022 8:51	10.77	6/27/2022 7:39	0.87	6/27/2022 9:21	30.48
6/27/2022 8:22	4.79	6/27/2022 8:52	10.77	6/27/2022 7:40	0.89	6/27/2022 9:22	30.43
6/27/2022 8:23	4.15	6/27/2022 8:53	10.82	6/27/2022 7:41	0.86	6/27/2022 9:23	30.41
6/27/2022 8:24	3.64	6/27/2022 8:54	10.79	6/27/2022 7:42	0.91	6/27/2022 9:24	30.44
6/27/2022 8:25	3.15	6/27/2022 8:55	10.73	6/27/2022 7:43	0.90	6/27/2022 9:25	30.41
6/27/2022 8:26	2.77	6/27/2022 8:56	10.75	6/27/2022 7:44	0.88	6/27/2022 9:26	30.41
6/27/2022 8:27	2.40	6/27/2022 8:57	10.75	6/27/2022 7:45	0.89	6/27/2022 9:27	30.45
6/27/2022 8:28	2.12	6/27/2022 8:58	10.72	6/27/2022 7:46	0.87	6/27/2022 9:28	30.42
6/27/2022 8:29	1.91	6/27/2022 8:59	10.69	6/27/2022 7:47	0.89	6/27/2022 9:29	30.42
6/27/2022 8:30	1.76	6/27/2022 9:00	10.70	6/27/2022 7:48	0.89	6/27/2022 9:30	30.41
6/27/2022 8:31	1.52	6/27/2022 9:01	10.71	6/27/2022 7:49	0.89	6/27/2022 9:31	30.42
6/27/2022 8:32	1.42	6/27/2022 9:02	10.72	6/27/2022 7:50	0.91	6/27/2022 9:32	30.40
6/27/2022 8:33	1.26	6/27/2022 9:03	10.66	6/27/2022 7:51	0.89	6/27/2022 9:33	30.42
6/27/2022 8:34	1.14	6/27/2022 9:04	10.70	6/27/2022 7:52	0.93	6/27/2022 9:34	30.38
6/27/2022 8:35	1.05	6/27/2022 9:05	10.69	6/27/2022 7:53	0.90	6/27/2022 9:35	30.39
6/27/2022 8:36	0.98	6/27/2022 9:06	10.73	6/27/2022 7:54	0.91	6/27/2022 9:36	30.40
6/27/2022 8:37	0.90	6/27/2022 9:07	10.72	6/27/2022 7:55	0.91	6/27/2022 9:37	30.38
6/27/2022 8:38	0.85	6/27/2022 9:08	10.75	6/27/2022 7:56	0.93	6/27/2022 9:38	30.41
6/27/2022 8:39	0.78	6/27/2022 9:09	10.78	6/27/2022 7:57	0.90	6/27/2022 9:39	30.37
6/27/2022 8:40	0.74	6/27/2022 9:10	10.80	6/27/2022 7:58	0.87	6/27/2022 9:40	30.37
6/27/2022 8:41	0.68	6/27/2022 9:11	10.78	6/27/2022 7:59	0.90	6/27/2022 9:41	31.92
6/27/2022 8:42	0.73	6/27/2022 9:12	10.77	6/27/2022 8:00	0.88	6/27/2022 9:42	31.69
6/27/2022 8:43	0.67	6/27/2022 9:13	10.76	6/27/2022 8:01	0.89	6/27/2022 9:43	30.86
6/27/2022 8:44	0.62	6/27/2022 9:14	10.73	6/27/2022 8:02	0.89	6/27/2022 9:44	30.60
6/27/2022 8:45	0.59	6/27/2022 9:15	10.76	6/27/2022 8:03	0.91	6/27/2022 9:45	30.46
6/27/2022 8:46	0.58	6/27/2022 9:16	10.73	6/27/2022 8:04	0.89	6/27/2022 9:46	30.42
6/27/2022 8:47	0.55	6/27/2022 9:17	10.75	6/27/2022 8:05	0.88	6/27/2022 9:47	30.42
6/27/2022 8:48	0.50	6/27/2022 9:18	10.73	6/27/2022 8:06	0.91	6/27/2022 9:48	30.40
6/27/2022 8:49	2.45	6/27/2022 9:19	10.74	6/27/2022 8:07	0.90	6/27/2022 9:49	30.40
6/27/2022 8:50	8.01	6/27/2022 9:20	10.70	6/27/2022 8:08	0.89	6/27/2022 9:50	30.37
6/27/2022 8:51	7.14	6/27/2022 9:21	10.70	6/27/2022 8:09	0.89	6/27/2022 9:51	30.40
6/27/2022 8:52	6.02	6/27/2022 9:22	14.25	6/27/2022 8:10	0.90	6/27/2022 9:52	30.39
6/27/2022 8:53	5.18	6/27/2022 9:23	14.15	6/27/2022 8:11	0.92	6/27/2022 9:53	30.38
6/27/2022 8:54	4.50	6/27/2022 9:24	13.71	6/27/2022 8:12	0.95	6/27/2022 9:54	32.09
6/27/2022 8:55	3.87	6/27/2022 9:25	13.34	6/27/2022 8:13	0.87	6/27/2022 9:55	31.04
6/27/2022 8:56	3.33	6/27/2022 9:26	13.05	6/27/2022 8:14	0.87	6/27/2022 9:56	30.59
6/27/2022 8:57	2.86	6/27/2022 9:27	12.76	6/27/2022 8:15	0.89	6/27/2022 9:57	30.44
6/27/2022 8:58	2.54	6/27/2022 9:28	12.51	6/27/2022 8:16	0.88	6/27/2022 9:58	30.44
6/27/2022 8:59	2.22	6/27/2022 9:29	12.30	6/27/2022 8:17	0.90	6/27/2022 9:59	30.42
6/27/2022 9:00	2.02	6/27/2022 9:30	12.14	6/27/2022 8:18	0.89	6/27/2022 10:00	30.36
6/27/2022 9:01	1.76	6/27/2022 9:31	12.00	6/27/2022 8:19	0.87	6/27/2022 10:01	30.39
6/27/2022 9:02	1.60	6/27/2022 9:32	15.34	6/27/2022 8:20	0.91	6/27/2022 10:02	30.41
6/27/2022 9:03	1.43	6/27/2022 9:33	15.86	6/27/2022 8:21	0.88	6/27/2022 10:03	30.38
6/27/2022 9:04	1.30	6/27/2022 9:34	15.28	6/27/2022 8:22	0.89	6/27/2022 10:04	30.34
6/27/2022 9:05	1.16	6/27/2022 9:35	14.77	6/27/2022 8:23	0.90	6/27/2022 10:05	30.34
6/27/2022 9:06	1.10	6/27/2022 9:36	14.35	6/27/2022 8:24	0.93	6/27/2022 10:06	30.38
6/27/2022 9:07	0.99	6/27/2022 9:37	14.02	6/27/2022 8:25	0.91	6/27/2022 10:07	30.35
6/27/2022 9:08	0.90	6/27/2022 9:38	13.71	6/27/2022 8:26	0.92	6/27/2022 10:08	30.34
6/27/2022 9:09	0.86	6/27/2022 9:39	13.46	6/27/2022 8:27	0.91	6/27/2022 10:09	30.32
6/27/2022 9:10	0.78	6/27/2022 9:40	13.22	6/27/2022 8:28	0.89	6/27/2022 10:10	32.19
6/27/2022 9:11	0.73	6/27/2022 9:41	13.03	6/27/2022 8:29	0.89	6/27/2022 10:11	31.59
6/27/2022 9:12	0.67	6/27/2022 9:42	12.89	6/27/2022 8:30	0.90		
6/27/2022 9:13	0.63	6/27/2022 9:43	12.73	6/27/2022 8:31	0.92		
6/27/2022 9:14	0.59	6/27/2022 9:44	12.62	6/27/2022 8:32	0.90		
6/27/2022 9:15	0.64	6/27/2022 9:45	12.51	6/27/2022 8:33	0.89		
6/27/2022 9:16	0.56	6/27/2022 9:46	12.42	6/27/2022 8:34	0.91		
6/27/2022 9:17	0.53	6/27/2022 9:47	12.39	6/27/2022 8:35	0.89		
6/27/2022 9:18	0.54	6/27/2022 9:48	12.25	6/27/2022 8:36	0.88		
6/27/2022 9:19	0.54	6/27/2022 9:49	12.20	6/27/2022 8:37	0.90		
6/27/2022 9:20	0.52	6/27/2022 9:50	12.83	6/27/2022 8:38	0.93		
6/27/2022 9:21	0.49	6/27/2022 9:51	16.57	6/27/2022 8:39	0.86		
6/27/2022 9:22	0.47	6/27/2022 9:52	15.96	6/27/2022 8:40	0.87		
6/27/2022 9:23	0.48	6/27/2022 9:53	15.39	6/27/2022 8:41	0.91		
6/27/2022 9:24	0.43	6/27/2022 9:54	14.97	6/27/2022 8:42	0.90		
6/27/2022 9:25	0.41	6/27/2022 9:55	16.36	6/27/2022 8:43	0.91		
6/27/2022 9:26	0.45	6/27/2022 9:56	19.18	6/27/2022 8:44	0.88		
6/27/2022 9:27	0.40	6/27/2022 9:57	18.26	6/27/2022 8:45	0.88		
6/27/2022 9:28	0.41	6/27/2022 9:58	17.53	6/27/2022 8:46	0.91		
6/27/2022 9:29	4.57	6/27/2022 9:59	16.88	6/27/2022 8:47	0.92		
6/27/2022 9:30	7.93	6/27/2022 10:00	16.28	6/27/2022 8:48	0.92		
6/27/2022 9:31	6.66	6/27/2022 10:01	15.80	6/27/2022 8:49	0.91		
6/27/2022 9:32	5.66	6/27/2022 10:02	15.33	6/27/2022 8:50	0.93		
6/27/2022 9:33	4.84	6/27/2022 10:03	14.98	6/27/2022 8:51	0.95		
6/27/2022 9:34	4.19	6/27/2022 10:04	14.56	6/27/2022 8:52	0.93		
6/27/2022 9:35	3.58	6/27/2022 10:05	14.27	6/27/2022 8:53	0.93		
6/27/2022 9:36	3.11	6/27/2022 10:06	13.94	6/27/2022 8:54	0.90		
6/27/2022 9:37	2.71	6/27/2022 10:07	13.68	6/27/2022 8:55	0.90		
6/27/2022 9:38	2.38	6/27/2022 10:08	13.45	6/27/2022 8:56	0.89		
6/27/2022 9:39	2.13	6/27/2022 10:09	13.22	6/27/2022 8:57	0.92		
6/27/2022 9:40	1.86	6/27/2022 10:10	13.00	6/27/2022 8:58	0.93		
6/27/2022 9:41	1.68	6/27/2022 10:11	12.88	6/27/2022 8:59	0.90		
6/27/2022 9:42	1.53	6/27/2022 10:12	12.68	6/27/2022 9:00	0.90		
6/27/2022 9:43	1.38	6/27/2022 10:13	12.54	6/27/2022 9:01	0.90		
6/27/2022 9:44	1.25	6/27/2022 10:14	12.39	6/27/2022 9:02	0.95		
6/27/2022 9:45	1.15	6/27/2022 10:15	12.25	6/27/2022 9:03	0.89		
6/27/2022 9:46	1.03	6/27/2022 10:16	12.16	6/27/2022 9:04	0.89		

6/27/2022 9:47	0.94
6/27/2022 9:48	0.88
6/27/2022 9:49	0.77
6/27/2022 9:50	0.77
6/27/2022 9:51	0.70
6/27/2022 9:52	0.67
6/27/2022 9:53	0.63
6/27/2022 9:54	0.60
6/27/2022 9:55	0.59
6/27/2022 9:56	0.53
6/27/2022 9:57	0.48
6/27/2022 9:58	0.47
6/27/2022 9:59	0.48
6/27/2022 10:00	0.46
6/27/2022 10:01	0.43
6/27/2022 10:02	0.46
6/27/2022 10:03	0.42
6/27/2022 10:04	0.41
6/27/2022 10:05	0.40
6/27/2022 10:06	1.67
6/27/2022 10:07	7.39
6/27/2022 10:08	7.18
6/27/2022 10:09	6.02
6/27/2022 10:10	5.25
6/27/2022 10:11	4.46
6/27/2022 10:12	3.88
6/27/2022 10:13	3.35
6/27/2022 10:14	2.88
6/27/2022 10:15	2.54
6/27/2022 10:16	2.24
6/27/2022 10:17	1.95
6/27/2022 10:18	1.77
6/27/2022 10:19	1.58
6/27/2022 10:20	1.41
6/27/2022 10:21	1.26
6/27/2022 10:22	1.11
6/27/2022 10:23	1.08
6/27/2022 10:24	0.95
6/27/2022 10:25	0.86
6/27/2022 10:26	0.79
6/27/2022 10:27	0.74
6/27/2022 10:28	0.71
6/27/2022 10:29	0.67
6/27/2022 10:30	0.61
6/27/2022 10:31	0.59
6/27/2022 10:32	0.53
6/27/2022 10:33	0.50
6/27/2022 10:34	0.51
6/27/2022 10:35	0.50
6/27/2022 10:36	0.46
6/27/2022 10:37	0.45
6/27/2022 10:38	0.45
6/27/2022 10:39	0.50
6/27/2022 10:40	0.47
6/27/2022 10:41	0.46
6/27/2022 10:42	0.46
6/27/2022 10:43	0.45
6/27/2022 10:44	0.44
6/27/2022 10:45	0.40
6/27/2022 10:46	0.44
6/27/2022 10:47	0.42
6/27/2022 10:48	0.40
6/27/2022 10:49	0.35
6/27/2022 10:50	0.38
6/27/2022 10:51	0.40
6/27/2022 10:52	0.38
6/27/2022 10:53	1.74
6/27/2022 10:54	7.42
6/27/2022 10:55	7.17
6/27/2022 10:56	6.11
6/27/2022 10:17	12.05
6/27/2022 10:18	11.96
6/27/2022 10:19	11.82
6/27/2022 10:20	11.81
6/27/2022 10:21	11.71
6/27/2022 10:22	11.61
6/27/2022 10:23	11.55
6/27/2022 10:24	11.55
6/27/2022 10:25	11.48
6/27/2022 10:26	11.46
6/27/2022 10:27	11.40
6/27/2022 10:28	11.38
6/27/2022 10:29	11.35
6/27/2022 10:30	11.34
6/27/2022 10:31	11.29
6/27/2022 10:32	11.27
6/27/2022 10:33	11.22
6/27/2022 9:05	0.92
6/27/2022 9:06	0.92
6/27/2022 9:07	0.91
6/27/2022 9:08	0.91
6/27/2022 9:09	0.92
6/27/2022 9:10	0.91
6/27/2022 9:11	0.93
6/27/2022 9:12	0.89
6/27/2022 9:13	0.90
6/27/2022 9:14	0.95
6/27/2022 9:15	0.92
6/27/2022 9:16	0.91
6/27/2022 9:17	0.90
6/27/2022 9:18	0.91
6/27/2022 9:19	0.91
6/27/2022 9:20	0.90
6/27/2022 9:21	0.94
6/27/2022 9:22	0.91
6/27/2022 9:23	0.91
6/27/2022 9:24	0.92
6/27/2022 9:25	0.93
6/27/2022 9:26	0.91
6/27/2022 9:27	0.91
6/27/2022 9:28	0.91
6/27/2022 9:29	0.93
6/27/2022 9:30	0.90
6/27/2022 9:31	0.93
6/27/2022 9:32	0.92
6/27/2022 9:33	0.92
6/27/2022 9:34	0.93
6/27/2022 9:35	0.92
6/27/2022 9:36	0.93
6/27/2022 9:37	0.92
6/27/2022 9:38	0.89
6/27/2022 9:39	0.92
6/27/2022 9:40	0.95
6/27/2022 9:41	0.93
6/27/2022 9:42	0.89
6/27/2022 9:43	0.91
6/27/2022 9:44	0.89
6/27/2022 9:45	0.94
6/27/2022 9:46	0.93
6/27/2022 9:47	0.91
6/27/2022 9:48	0.92
6/27/2022 9:49	0.92
6/27/2022 9:50	0.92
6/27/2022 9:51	0.91
6/27/2022 9:52	0.92
6/27/2022 9:53	0.95
6/27/2022 9:54	0.91
6/27/2022 9:55	0.91
6/27/2022 9:56	0.89
6/27/2022 9:57	0.92
6/27/2022 9:58	0.95
6/27/2022 9:59	0.93
6/27/2022 10:00	0.92
6/27/2022 10:01	0.91
6/27/2022 10:02	0.97
6/27/2022 10:03	0.91
6/27/2022 10:04	0.92
6/27/2022 10:05	0.93
6/27/2022 10:06	0.90
6/27/2022 10:07	0.94
6/27/2022 10:08	0.93
6/27/2022 10:09	0.93
6/27/2022 10:10	0.94
6/27/2022 10:11	0.92
6/27/2022 10:12	0.95
6/27/2022 10:13	0.95
6/27/2022 10:14	0.94
6/27/2022 10:15	0.94
6/27/2022 10:16	0.93
6/27/2022 10:17	0.93
6/27/2022 10:18	0.93
6/27/2022 10:19	0.90
6/27/2022 10:20	0.93
6/27/2022 10:21	0.95
6/27/2022 10:22	0.98
6/27/2022 10:23	0.91
6/27/2022 10:24	0.95
6/27/2022 10:25	0.89
6/27/2022 10:26	0.92
6/27/2022 10:27	0.96
6/27/2022 10:28	0.93
6/27/2022 10:29	0.95
6/27/2022 10:30	0.91
6/27/2022 10:31	0.92
6/27/2022 10:32	0.93

6/27/2022 10:33	0.93
6/27/2022 10:34	0.93
6/27/2022 10:35	0.96
6/27/2022 10:36	0.98
6/27/2022 10:37	0.90
6/27/2022 10:38	0.91
6/27/2022 10:39	0.95
6/27/2022 10:40	0.94
6/27/2022 10:41	0.94
6/27/2022 10:42	0.92
6/27/2022 10:43	0.95
6/27/2022 10:44	0.95
6/27/2022 10:45	0.96
6/27/2022 10:46	0.92
6/27/2022 10:47	0.95

34 Blair Road		70 Old Byram Lake Road		198 Byram Lake Road	
Date/Time	Level Depth to Water (ft)	Date/Time	Level Depth to Water (ft)	Date/Time	Level Depth to Water (ft)
6/15/2022 11:13	32.60	6/15/2022 12:00	19.04	6/14/2022 14:33	5.90
6/15/2022 11:14	32.63	6/15/2022 12:01	19.12	6/14/2022 14:34	5.90
6/15/2022 11:15	32.64	6/15/2022 12:02	19.07	6/14/2022 14:35	5.92
6/15/2022 11:16	32.62	6/15/2022 12:03	19.05	6/14/2022 14:36	5.93
6/15/2022 11:17	32.65	6/15/2022 12:04	19.04	6/14/2022 14:37	5.95
6/15/2022 11:18	32.61	6/15/2022 12:05	19.07	6/14/2022 14:38	5.93
6/15/2022 11:19	32.63	6/15/2022 12:06	19.07	6/14/2022 14:39	5.90
6/15/2022 11:20	32.64	6/15/2022 12:07	19.05	6/14/2022 14:40	5.95
6/15/2022 11:21	32.62	6/15/2022 12:08	19.07	6/14/2022 14:41	5.94
6/15/2022 11:22	32.62	6/15/2022 12:09	19.05	6/14/2022 14:42	5.90
6/15/2022 11:23	32.63	6/15/2022 12:10	19.06	6/14/2022 14:43	5.94
6/15/2022 11:24	32.64	6/15/2022 12:11	19.05	6/14/2022 14:44	5.93
6/15/2022 11:25	32.63	6/15/2022 12:12	19.05	6/14/2022 14:45	5.91
6/15/2022 11:26	32.67	6/15/2022 12:13	19.07	6/14/2022 14:46	5.91
6/15/2022 11:27	32.71	6/15/2022 12:14	19.05	6/14/2022 14:47	5.90
6/15/2022 11:28	32.64	6/15/2022 12:15	19.02	6/14/2022 14:48	5.90
6/15/2022 11:29	32.66	6/15/2022 12:16	19.07	6/14/2022 14:49	5.90
6/15/2022 11:30	32.66	6/15/2022 12:17	19.05	6/14/2022 14:50	5.92
6/15/2022 11:31	32.65	6/15/2022 12:18	19.04	6/14/2022 14:51	5.93
6/15/2022 11:32	32.64	6/15/2022 12:19	19.04	6/14/2022 14:52	5.94
6/15/2022 11:33	32.64	6/15/2022 12:20	19.60	6/14/2022 14:53	5.92
6/15/2022 11:34	32.65	6/15/2022 12:21	19.73	6/14/2022 14:54	5.90
6/15/2022 11:35	32.64	6/15/2022 12:22	19.80	6/14/2022 14:55	5.90
6/15/2022 11:36	32.65	6/15/2022 12:23	19.82	6/14/2022 14:56	5.93
6/15/2022 11:37	32.61	6/15/2022 12:24	19.85	6/14/2022 14:57	5.90
6/15/2022 11:38	32.66	6/15/2022 12:25	19.31	6/14/2022 14:58	5.91
6/15/2022 11:39	32.64	6/15/2022 12:26	19.23	6/14/2022 14:59	5.88
6/15/2022 11:40	32.60	6/15/2022 12:27	19.19	6/14/2022 15:00	5.89
6/15/2022 11:41	32.60	6/15/2022 12:28	19.18	6/14/2022 15:01	5.91
6/15/2022 11:42	32.63	6/15/2022 12:29	19.17	6/14/2022 15:02	5.91
6/15/2022 11:43	32.63	6/15/2022 12:30	19.14	6/14/2022 15:03	5.87
6/15/2022 11:44	32.64	6/15/2022 12:31	19.15	6/14/2022 15:04	5.92
6/15/2022 11:45	32.63	6/15/2022 12:32	19.15	6/14/2022 15:05	5.92
6/15/2022 11:46	32.65	6/15/2022 12:33	19.11	6/14/2022 15:06	5.90
6/15/2022 11:47	32.64	6/15/2022 12:34	19.14	6/14/2022 15:07	5.92
6/15/2022 11:48	32.67	6/15/2022 12:35	19.12	6/14/2022 15:08	5.90
6/15/2022 11:49	32.67	6/15/2022 12:36	19.11	6/14/2022 15:09	5.91
6/15/2022 11:50	32.68	6/15/2022 12:37	19.13	6/14/2022 15:10	5.88
6/15/2022 11:51	32.66	6/15/2022 12:38	19.12	6/14/2022 15:11	5.89
6/15/2022 11:52	32.63	6/15/2022 12:39	19.13	6/14/2022 15:12	5.92
6/15/2022 11:53	32.67	6/15/2022 12:40	19.11	6/14/2022 15:13	5.91
6/15/2022 11:54	32.65	6/15/2022 12:41	19.13	6/14/2022 15:14	5.92
6/15/2022 11:55	32.65	6/15/2022 12:42	19.11	6/14/2022 15:15	5.92
6/15/2022 11:56	32.67	6/15/2022 12:43	19.09	6/14/2022 15:16	5.90
6/15/2022 11:57	32.64	6/15/2022 12:44	19.10	6/14/2022 15:17	5.89
6/15/2022 11:58	32.65	6/15/2022 12:45	19.14	6/14/2022 15:18	8.24
6/15/2022 11:59	32.66	6/15/2022 12:46	19.08	6/14/2022 15:19	8.61
6/15/2022 12:00	32.65	6/15/2022 12:47	19.11	6/14/2022 15:20	6.09
6/15/2022 12:01	32.64	6/15/2022 12:48	19.07	6/14/2022 15:21	5.95
6/15/2022 12:02	32.67	6/15/2022 12:49	19.08	6/14/2022 15:22	5.92
6/15/2022 12:03	32.65	6/15/2022 12:50	19.09	6/14/2022 15:23	5.89
6/15/2022 12:04	32.65	6/15/2022 12:51	19.08	6/14/2022 15:24	5.91
6/15/2022 12:05	32.62	6/15/2022 12:52	19.08	6/14/2022 15:25	5.89
6/15/2022 12:06	32.63	6/15/2022 12:53	19.08	6/14/2022 15:26	5.89
6/15/2022 12:07	32.63	6/15/2022 12:54	19.08	6/14/2022 15:27	5.91
6/15/2022 12:08	32.66	6/15/2022 12:55	19.08	6/14/2022 15:28	5.91
6/15/2022 12:09	32.65	6/15/2022 12:56	19.12	6/14/2022 15:29	5.88
6/15/2022 12:10	32.63	6/15/2022 12:57	19.08	6/14/2022 15:30	5.91
6/15/2022 12:11	32.60	6/15/2022 12:58	19.10	6/14/2022 15:31	5.91
6/15/2022 12:12	32.66	6/15/2022 12:59	19.11	6/14/2022 15:32	5.90
6/15/2022 12:13	32.61	6/15/2022 13:00	19.09	6/14/2022 15:33	5.90
6/15/2022 12:14	32.66	6/15/2022 13:01	19.09	6/14/2022 15:34	5.89
6/15/2022 12:15	32.66	6/15/2022 13:02	19.07	6/14/2022 15:35	5.92
6/15/2022 12:16	32.60	6/15/2022 13:03	19.06	6/14/2022 15:36	5.88
6/15/2022 12:17	32.62	6/15/2022 13:04	19.08	6/14/2022 15:37	5.90
6/15/2022 12:18	32.64	6/15/2022 13:05	19.10	6/14/2022 15:38	5.88
6/15/2022 12:19	32.61	6/15/2022 13:06	19.06	6/14/2022 15:39	5.92
6/15/2022 12:20	32.62	6/15/2022 13:07	19.09	6/14/2022 15:40	5.90
6/15/2022 12:21	32.61	6/15/2022 13:08	19.06	6/14/2022 15:41	5.91
6/15/2022 12:22	32.66	6/15/2022 13:09	19.09	6/14/2022 15:42	5.88
6/15/2022 12:23	32.62	6/15/2022 13:10	19.07	6/14/2022 15:43	5.90
6/15/2022 12:24	32.62	6/15/2022 13:11	19.08	6/14/2022 15:44	5.87
6/15/2022 12:25	32.62	6/15/2022 13:12	19.08	6/14/2022 15:45	5.88
6/15/2022 12:26	32.62	6/15/2022 13:13	19.09	6/14/2022 15:46	5.89
6/15/2022 12:27	32.60	6/15/2022 13:14	19.06	6/14/2022 15:47	5.91
6/15/2022 12:28	32.63	6/15/2022 13:15	19.09	6/14/2022 15:48	5.88
6/15/2022 12:29	32.65	6/15/2022 13:16	19.08	6/14/2022 15:49	5.92
6/15/2022 12:30	32.64	6/15/2022 13:17	19.06	6/14/2022 15:50	5.89
6/15/2022 12:31	32.62	6/15/2022 13:18	19.09	6/14/2022 15:51	5.91
6/15/2022 12:32	32.61	6/15/2022 13:19	19.07	6/14/2022 15:52	5.88
6/15/2022 12:33	32.66	6/15/2022 13:20	19.05	6/14/2022 15:53	5.90
6/15/2022 12:34	32.62	6/15/2022 13:21	19.06	6/14/2022 15:54	5.87

6/15/2022 12:35	32.61	6/15/2022 13:22	19.07	6/14/2022 15:55	5.90
6/15/2022 12:36	32.61	6/15/2022 13:23	19.07	6/14/2022 15:56	5.90
6/15/2022 12:37	32.64	6/15/2022 13:24	19.06	6/14/2022 15:57	5.90
6/15/2022 12:38	32.65	6/15/2022 13:25	19.06	6/14/2022 15:58	5.91
6/15/2022 12:39	32.68	6/15/2022 13:26	19.09	6/14/2022 15:59	5.87
6/15/2022 12:40	32.65	6/15/2022 13:27	19.06	6/14/2022 16:00	5.89
6/15/2022 12:41	32.64	6/15/2022 13:28	19.07	6/14/2022 16:01	5.91
6/15/2022 12:42	32.66	6/15/2022 13:29	19.05	6/14/2022 16:02	5.86
6/15/2022 12:43	32.67	6/15/2022 13:30	19.06	6/14/2022 16:03	5.89
6/15/2022 12:44	32.65	6/15/2022 13:31	19.05	6/14/2022 16:04	5.87
6/15/2022 12:45	32.67	6/15/2022 13:32	19.04	6/14/2022 16:05	5.90
6/15/2022 12:46	32.65	6/15/2022 13:33	19.06	6/14/2022 16:06	5.91
6/15/2022 12:47	32.66	6/15/2022 13:34	19.06	6/14/2022 16:07	5.91
6/15/2022 12:48	32.63	6/15/2022 13:35	19.03	6/14/2022 16:08	5.90
6/15/2022 12:49	32.63	6/15/2022 13:36	19.06	6/14/2022 16:09	5.93
6/15/2022 12:50	32.63	6/15/2022 13:37	19.05	6/14/2022 16:10	5.85
6/15/2022 12:51	32.65	6/15/2022 13:38	19.04	6/14/2022 16:11	5.91
6/15/2022 12:52	32.67	6/15/2022 13:39	19.04	6/14/2022 16:12	5.86
6/15/2022 12:53	32.64	6/15/2022 13:40	19.06	6/14/2022 16:13	5.87
6/15/2022 12:54	32.62	6/15/2022 13:41	19.07	6/14/2022 16:14	5.89
6/15/2022 12:55	32.65	6/15/2022 13:42	19.05	6/14/2022 16:15	5.91
6/15/2022 12:56	32.65	6/15/2022 13:43	19.07	6/14/2022 16:16	5.88
6/15/2022 12:57	32.61	6/15/2022 13:44	19.06	6/14/2022 16:17	5.91
6/15/2022 12:58	32.63	6/15/2022 13:45	19.06	6/14/2022 16:18	5.89
6/15/2022 12:59	32.63	6/15/2022 13:46	19.05	6/14/2022 16:19	5.89
6/15/2022 13:00	32.66	6/15/2022 13:47	19.04	6/14/2022 16:20	5.89
6/15/2022 13:01	32.65	6/15/2022 13:48	19.07	6/14/2022 16:21	7.52
6/15/2022 13:02	32.67	6/15/2022 13:49	19.06	6/14/2022 16:22	8.75
6/15/2022 13:03	32.67	6/15/2022 13:50	19.04	6/14/2022 16:23	8.90
6/15/2022 13:04	32.67	6/15/2022 13:51	19.09	6/14/2022 16:24	8.88
6/15/2022 13:05	32.71	6/15/2022 13:52	19.04	6/14/2022 16:25	8.81
6/15/2022 13:06	32.64	6/15/2022 13:53	19.04	6/14/2022 16:26	8.13
6/15/2022 13:07	32.67	6/15/2022 13:54	19.06	6/14/2022 16:27	6.08
6/15/2022 13:08	32.65	6/15/2022 13:55	19.06	6/14/2022 16:28	6.02
6/15/2022 13:09	32.64	6/15/2022 13:56	19.02	6/14/2022 16:29	5.95
6/15/2022 13:10	32.65	6/15/2022 13:57	19.01	6/14/2022 16:30	5.94
6/15/2022 13:11	32.67	6/15/2022 13:58	19.04	6/14/2022 16:31	5.92
6/15/2022 13:12	32.65	6/15/2022 13:59	19.03	6/14/2022 16:32	5.95
6/15/2022 13:13	32.64	6/15/2022 14:00	19.03	6/14/2022 16:33	5.94
6/15/2022 13:14	32.65	6/15/2022 14:01	19.05	6/14/2022 16:34	5.91
6/15/2022 13:15	32.67	6/15/2022 14:02	19.05	6/14/2022 16:35	5.92
6/15/2022 13:16	32.65	6/15/2022 14:03	19.07	6/14/2022 16:36	5.93
6/15/2022 13:17	32.65	6/15/2022 14:04	19.04	6/14/2022 16:37	5.90
6/15/2022 13:18	32.65	6/15/2022 14:05	19.06	6/14/2022 16:38	5.92
6/15/2022 13:19	32.68	6/15/2022 14:06	19.05	6/14/2022 16:39	5.90
6/15/2022 13:20	32.68	6/15/2022 14:07	19.03	6/14/2022 16:40	5.87
6/15/2022 13:21	32.68	6/15/2022 14:08	19.04	6/14/2022 16:41	5.95
6/15/2022 13:22	32.68	6/15/2022 14:09	19.02	6/14/2022 16:42	5.90
6/15/2022 13:23	32.66	6/15/2022 14:10	19.04	6/14/2022 16:43	5.86
6/15/2022 13:24	32.66	6/15/2022 14:11	19.05	6/14/2022 16:44	5.91
6/15/2022 13:25	32.68	6/15/2022 14:12	19.03	6/14/2022 16:45	5.88
6/15/2022 13:26	32.67	6/15/2022 14:13	19.05	6/14/2022 16:46	5.90
6/15/2022 13:27	32.66	6/15/2022 14:14	19.02	6/14/2022 16:47	5.89
6/15/2022 13:28	32.67	6/15/2022 14:15	19.06	6/14/2022 16:48	8.06
6/15/2022 13:29	32.65	6/15/2022 14:16	19.05	6/14/2022 16:49	8.63
6/15/2022 13:30	32.67	6/15/2022 14:17	19.05	6/14/2022 16:50	6.12
6/15/2022 13:31	32.65	6/15/2022 14:18	19.06	6/14/2022 16:51	5.97
6/15/2022 13:32	32.64	6/15/2022 14:19	19.03	6/14/2022 16:52	5.90
6/15/2022 13:33	32.62	6/15/2022 14:20	19.03	6/14/2022 16:53	5.93
6/15/2022 13:34	32.64	6/15/2022 14:21	19.04	6/14/2022 16:54	5.91
6/15/2022 13:35	32.67	6/15/2022 14:22	19.02	6/14/2022 16:55	5.93
6/15/2022 13:36	32.65	6/15/2022 14:23	19.05	6/14/2022 16:56	5.90
6/15/2022 13:37	32.62	6/15/2022 14:24	19.04	6/14/2022 16:57	5.90
6/15/2022 13:38	32.63	6/15/2022 14:25	19.04	6/14/2022 16:58	5.90
6/15/2022 13:39	32.66	6/15/2022 14:26	19.02	6/14/2022 16:59	5.90
6/15/2022 13:40	34.25	6/15/2022 14:27	19.04	6/14/2022 17:00	5.90
6/15/2022 13:41	33.17	6/15/2022 14:28	19.05	6/14/2022 17:01	5.88
6/15/2022 13:42	33.90	6/15/2022 14:29	19.04	6/14/2022 17:02	5.88
6/15/2022 13:43	33.98	6/15/2022 14:30	19.02	6/14/2022 17:03	5.91
6/15/2022 13:44	33.11	6/15/2022 14:31	19.04	6/14/2022 17:04	5.91
6/15/2022 13:45	34.63	6/15/2022 14:32	19.03	6/14/2022 17:05	5.89
6/15/2022 13:46	33.31	6/15/2022 14:33	19.03	6/14/2022 17:06	5.87
6/15/2022 13:47	34.37	6/15/2022 14:34	19.02	6/14/2022 17:07	5.89
6/15/2022 13:48	33.73	6/15/2022 14:35	19.05	6/14/2022 17:08	5.87
6/15/2022 13:49	33.23	6/15/2022 14:36	19.03	6/14/2022 17:09	5.92
6/15/2022 13:50	34.11	6/15/2022 14:37	19.03	6/14/2022 17:10	5.91
6/15/2022 13:51	33.30	6/15/2022 14:38	19.04	6/14/2022 17:11	5.91
6/15/2022 13:52	33.36	6/15/2022 14:39	19.03	6/14/2022 17:12	5.87
6/15/2022 13:53	34.81	6/15/2022 14:40	19.02	6/14/2022 17:13	5.89
6/15/2022 13:54	33.37	6/15/2022 14:41	19.04	6/14/2022 17:14	5.92
6/15/2022 13:55	33.22	6/15/2022 14:42	19.04	6/14/2022 17:15	5.85
6/15/2022 13:56	33.12	6/15/2022 14:43	19.02	6/14/2022 17:16	5.89
6/15/2022 13:57	33.08	6/15/2022 14:44	19.03	6/14/2022 17:17	5.89
6/15/2022 13:58	33.05	6/15/2022 14:45	19.05	6/14/2022 17:18	5.90
6/15/2022 13:59	33.04	6/15/2022 14:46	19.02	6/14/2022 17:19	5.91
6/15/2022 14:00	33.01	6/15/2022 14:47	19.03	6/14/2022 17:20	5.88
6/15/2022 14:01	32.98	6/15/2022 14:48	19.03	6/14/2022 17:21	5.90
6/15/2022 14:02	32.95	6/15/2022 14:49	19.05	6/14/2022 17:22	5.91

6/15/2022 14:03	32.99	6/15/2022 14:50	19.05	6/14/2022 17:23	5.91
6/15/2022 14:04	32.97	6/15/2022 14:51	19.04	6/14/2022 17:24	5.90
6/15/2022 14:05	32.96	6/15/2022 14:52	19.04	6/14/2022 17:25	5.89
6/15/2022 14:06	32.95	6/15/2022 14:53	19.07	6/14/2022 17:26	5.88
6/15/2022 14:07	32.95	6/15/2022 14:54	19.02	6/14/2022 17:27	5.91
6/15/2022 14:08	32.95	6/15/2022 14:55	19.00	6/14/2022 17:28	5.90
6/15/2022 14:09	32.91	6/15/2022 14:56	19.04	6/14/2022 17:29	5.88
6/15/2022 14:10	32.86	6/15/2022 14:57	19.03	6/14/2022 17:30	5.90
6/15/2022 14:11	32.88	6/15/2022 14:58	19.02	6/14/2022 17:31	5.89
6/15/2022 14:12	32.88	6/15/2022 14:59	19.03	6/14/2022 17:32	5.86
6/15/2022 14:13	32.90	6/15/2022 15:00	19.02	6/14/2022 17:33	5.90
6/15/2022 14:14	32.87	6/15/2022 15:01	19.04	6/14/2022 17:34	5.87
6/15/2022 14:15	32.89	6/15/2022 15:02	19.01	6/14/2022 17:35	5.86
6/15/2022 14:16	32.88	6/15/2022 15:03	19.02	6/14/2022 17:36	5.90
6/15/2022 14:17	32.88	6/15/2022 15:04	19.05	6/14/2022 17:37	5.90
6/15/2022 14:18	32.89	6/15/2022 15:05	19.02	6/14/2022 17:38	5.85
6/15/2022 14:19	32.86	6/15/2022 15:06	19.04	6/14/2022 17:39	5.90
6/15/2022 14:20	34.36	6/15/2022 15:07	19.02	6/14/2022 17:40	5.89
6/15/2022 14:21	33.12	6/15/2022 15:08	19.04	6/14/2022 17:41	5.89
6/15/2022 14:22	33.00	6/15/2022 15:09	19.03	6/14/2022 17:42	5.88
6/15/2022 14:23	32.92	6/15/2022 15:10	19.02	6/14/2022 17:43	5.92
6/15/2022 14:24	32.93	6/15/2022 15:11	19.04	6/14/2022 17:44	5.90
6/15/2022 14:25	32.88	6/15/2022 15:12	19.03	6/14/2022 17:45	5.86
6/15/2022 14:26	32.90	6/15/2022 15:13	19.03	6/14/2022 17:46	5.93
6/15/2022 14:27	32.87	6/15/2022 15:14	19.01	6/14/2022 17:47	5.93
6/15/2022 14:28	32.86	6/15/2022 15:15	19.02	6/14/2022 17:48	5.89
6/15/2022 14:29	32.85	6/15/2022 15:16	19.00	6/14/2022 17:49	5.89
6/15/2022 14:30	32.88	6/15/2022 15:17	19.03	6/14/2022 17:50	5.87
6/15/2022 14:31	32.86	6/15/2022 15:18	19.05	6/14/2022 17:51	5.87
6/15/2022 14:32	32.85	6/15/2022 15:19	19.00	6/14/2022 17:52	5.88
6/15/2022 14:33	32.84	6/15/2022 15:20	19.04	6/14/2022 17:53	5.88
6/15/2022 14:34	32.83	6/15/2022 15:21	19.03	6/14/2022 17:54	5.88
6/15/2022 14:35	32.81	6/15/2022 15:22	19.02	6/14/2022 17:55	5.90
6/15/2022 14:36	32.82	6/15/2022 15:23	18.99	6/14/2022 17:56	5.88
6/15/2022 14:37	32.80	6/15/2022 15:24	19.04	6/14/2022 17:57	5.88
6/15/2022 14:38	32.79	6/15/2022 15:25	19.01	6/14/2022 17:58	5.91
6/15/2022 14:39	32.85	6/15/2022 15:26	19.00	6/14/2022 17:59	5.87
6/15/2022 14:40	32.82	6/15/2022 15:27	19.60	6/14/2022 18:00	5.90
6/15/2022 14:41	32.80	6/15/2022 15:28	19.71	6/14/2022 18:01	5.89
6/15/2022 14:42	32.84	6/15/2022 15:29	19.77	6/14/2022 18:02	5.88
6/15/2022 14:43	32.85	6/15/2022 15:30	19.80	6/14/2022 18:03	5.89
6/15/2022 14:44	32.83	6/15/2022 15:31	19.52	6/14/2022 18:04	5.89
6/15/2022 14:45	32.85	6/15/2022 15:32	19.23	6/14/2022 18:05	5.90
6/15/2022 14:46	32.85	6/15/2022 15:33	19.22	6/14/2022 18:06	5.86
6/15/2022 14:47	32.85	6/15/2022 15:34	19.17	6/14/2022 18:07	5.88
6/15/2022 14:48	32.82	6/15/2022 15:35	19.13	6/14/2022 18:08	5.88
6/15/2022 14:49	32.83	6/15/2022 15:36	19.15	6/14/2022 18:09	5.87
6/15/2022 14:50	32.86	6/15/2022 15:37	19.12	6/14/2022 18:10	5.87
6/15/2022 14:51	32.81	6/15/2022 15:38	19.11	6/14/2022 18:11	5.88
6/15/2022 14:52	32.83	6/15/2022 15:39	19.13	6/14/2022 18:12	5.87
6/15/2022 14:53	32.81	6/15/2022 15:40	19.11	6/14/2022 18:13	5.89
6/15/2022 14:54	32.83	6/15/2022 15:41	19.12	6/14/2022 18:14	5.89
6/15/2022 14:55	32.79	6/15/2022 15:42	19.11	6/14/2022 18:15	5.88
6/15/2022 14:56	32.79	6/15/2022 15:43	19.11	6/14/2022 18:16	5.88
6/15/2022 14:57	32.78	6/15/2022 15:44	19.10	6/14/2022 18:17	5.87
6/15/2022 14:58	32.83	6/15/2022 15:45	19.09	6/14/2022 18:18	5.92
6/15/2022 14:59	32.83	6/15/2022 15:46	19.09	6/14/2022 18:19	5.90
6/15/2022 15:00	32.83	6/15/2022 15:47	19.08	6/14/2022 18:20	5.89
6/15/2022 15:01	32.84	6/15/2022 15:48	19.11	6/14/2022 18:21	5.90
6/15/2022 15:02	32.85	6/15/2022 15:49	19.07	6/14/2022 18:22	5.89
6/15/2022 15:03	32.85	6/15/2022 15:50	19.07	6/14/2022 18:23	5.88
6/15/2022 15:04	32.80	6/15/2022 15:51	19.07	6/14/2022 18:24	5.86
6/15/2022 15:05	32.82	6/15/2022 15:52	19.08	6/14/2022 18:25	5.90
6/15/2022 15:06	32.84	6/15/2022 15:53	19.08	6/14/2022 18:26	5.91
6/15/2022 15:07	32.84	6/15/2022 15:54	19.09	6/14/2022 18:27	5.88
6/15/2022 15:08	32.77	6/15/2022 15:55	19.07	6/14/2022 18:28	5.89
6/15/2022 15:09	32.85	6/15/2022 15:56	19.08	6/14/2022 18:29	5.90
6/15/2022 15:10	32.84	6/15/2022 15:57	19.05	6/14/2022 18:30	5.89
6/15/2022 15:11	32.85	6/15/2022 15:58	19.06	6/14/2022 18:31	5.89
6/15/2022 15:12	32.85	6/15/2022 15:59	19.06	6/14/2022 18:32	5.90
6/15/2022 15:13	32.83	6/15/2022 16:00	19.08	6/14/2022 18:33	5.89
6/15/2022 15:14	32.83	6/15/2022 16:01	19.05	6/14/2022 18:34	5.87
6/15/2022 15:15	32.82	6/15/2022 16:02	19.08	6/14/2022 18:35	5.90
6/15/2022 15:16	32.80	6/15/2022 16:03	19.05	6/14/2022 18:36	5.88
6/15/2022 15:17	32.82	6/15/2022 16:04	19.04	6/14/2022 18:37	5.91
6/15/2022 15:18	32.77	6/15/2022 16:05	19.05	6/14/2022 18:38	5.87
6/15/2022 15:19	32.77	6/15/2022 16:06	19.05	6/14/2022 18:39	5.91
6/15/2022 15:20	32.78	6/15/2022 16:07	19.05	6/14/2022 18:40	5.88
6/15/2022 15:21	32.78	6/15/2022 16:08	19.06	6/14/2022 18:41	5.88
6/15/2022 15:22	32.76	6/15/2022 16:09	19.06	6/14/2022 18:42	5.88
6/15/2022 15:23	32.78	6/15/2022 16:10	19.03	6/14/2022 18:43	5.93
6/15/2022 15:24	32.76	6/15/2022 16:11	19.05	6/14/2022 18:44	5.88
6/15/2022 15:25	32.78	6/15/2022 16:12	19.07	6/14/2022 18:45	5.88
6/15/2022 15:26	32.78	6/15/2022 16:13	19.06	6/14/2022 18:46	5.88
6/15/2022 15:27	32.75	6/15/2022 16:14	19.03	6/14/2022 18:47	5.89
6/15/2022 15:28	32.74	6/15/2022 16:15	19.05	6/14/2022 18:48	5.90
6/15/2022 15:29	32.74	6/15/2022 16:16	19.06	6/14/2022 18:49	5.89
6/15/2022 15:30	32.76	6/15/2022 16:17	19.05	6/14/2022 18:50	5.90

6/15/2022 15:31	32.76	6/15/2022 16:18	19.02	6/14/2022 18:51	5.89
6/15/2022 15:32	32.74	6/15/2022 16:19	19.07	6/14/2022 18:52	5.90
6/15/2022 15:33	32.73	6/15/2022 16:20	19.06	6/14/2022 18:53	5.88
6/15/2022 15:34	32.72	6/15/2022 16:21	19.04	6/14/2022 18:54	5.90
6/15/2022 15:35	32.73	6/15/2022 16:22	19.03	6/14/2022 18:55	5.89
6/15/2022 15:36	32.71	6/15/2022 16:23	19.04	6/14/2022 18:56	5.88
6/15/2022 15:37	32.71	6/15/2022 16:24	19.03	6/14/2022 18:57	5.91
6/15/2022 15:38	32.71	6/15/2022 16:25	19.04	6/14/2022 18:58	5.87
6/15/2022 15:39	32.72	6/15/2022 16:26	19.05	6/14/2022 18:59	5.87
6/15/2022 15:40	32.73	6/15/2022 16:27	19.03	6/14/2022 19:00	5.91
6/15/2022 15:41	32.71	6/15/2022 16:28	19.03	6/14/2022 19:01	5.91
6/15/2022 15:42	32.71	6/15/2022 16:29	19.02	6/14/2022 19:02	5.92
6/15/2022 15:43	32.72	6/15/2022 16:30	19.03	6/14/2022 19:03	5.88
6/15/2022 15:44	32.71	6/15/2022 16:31	19.03	6/14/2022 19:04	5.91
6/15/2022 15:45	32.72	6/15/2022 16:32	19.03	6/14/2022 19:05	5.87
6/15/2022 15:46	32.70	6/15/2022 16:33	19.04	6/14/2022 19:06	5.87
6/15/2022 15:47	32.72	6/15/2022 16:34	19.04	6/14/2022 19:07	5.90
6/15/2022 15:48	32.72	6/15/2022 16:35	19.02	6/14/2022 19:08	5.88
6/15/2022 15:49	32.70	6/15/2022 16:36	19.04	6/14/2022 19:09	5.92
6/15/2022 15:50	32.71	6/15/2022 16:37	19.03	6/14/2022 19:10	5.87
6/15/2022 15:51	32.73	6/15/2022 16:38	19.06	6/14/2022 19:11	5.84
6/15/2022 15:52	32.71	6/15/2022 16:39	19.04	6/14/2022 19:12	5.89
6/15/2022 15:53	32.69	6/15/2022 16:40	19.02	6/14/2022 19:13	5.89
6/15/2022 15:54	32.74	6/15/2022 16:41	19.05	6/14/2022 19:14	5.91
6/15/2022 15:55	32.71	6/15/2022 16:42	19.02	6/14/2022 19:15	5.90
6/15/2022 15:56	32.77	6/15/2022 16:43	19.04	6/14/2022 19:16	5.89
6/15/2022 15:57	32.74	6/15/2022 16:44	19.03	6/14/2022 19:17	5.92
6/15/2022 15:58	32.72	6/15/2022 16:45	19.04	6/14/2022 19:18	5.86
6/15/2022 15:59	32.75	6/15/2022 16:46	19.04	6/14/2022 19:19	5.87
6/15/2022 16:00	32.80	6/15/2022 16:47	19.02	6/14/2022 19:20	5.87
6/15/2022 16:01	32.74	6/15/2022 16:48	19.03	6/14/2022 19:21	5.88
6/15/2022 16:02	32.77	6/15/2022 16:49	19.03	6/14/2022 19:22	5.88
6/15/2022 16:03	32.74	6/15/2022 16:50	19.03	6/14/2022 19:23	5.90
6/15/2022 16:04	32.74	6/15/2022 16:51	19.03	6/14/2022 19:24	5.90
6/15/2022 16:05	32.74	6/15/2022 16:52	19.02	6/14/2022 19:25	5.88
6/15/2022 16:06	32.71	6/15/2022 16:53	19.05	6/14/2022 19:26	5.90
6/15/2022 16:07	32.75	6/15/2022 16:54	19.05	6/14/2022 19:27	5.91
6/15/2022 16:08	32.73	6/15/2022 16:55	19.03	6/14/2022 19:28	5.90
6/15/2022 16:09	32.73	6/15/2022 16:56	19.01	6/14/2022 19:29	5.92
6/15/2022 16:10	32.70	6/15/2022 16:57	19.02	6/14/2022 19:30	5.92
6/15/2022 16:11	32.74	6/15/2022 16:58	19.05	6/14/2022 19:31	5.90
6/15/2022 16:12	32.71	6/15/2022 16:59	19.02	6/14/2022 19:32	5.92
6/15/2022 16:13	32.71	6/15/2022 17:00	19.04	6/14/2022 19:33	5.89
6/15/2022 16:14	32.73	6/15/2022 17:01	19.05	6/14/2022 19:34	5.90
6/15/2022 16:15	32.70	6/15/2022 17:02	19.01	6/14/2022 19:35	5.88
6/15/2022 16:16	32.69	6/15/2022 17:03	19.03	6/14/2022 19:36	5.87
6/15/2022 16:17	32.71	6/15/2022 17:04	19.03	6/14/2022 19:37	5.90
6/15/2022 16:18	32.72	6/15/2022 17:05	19.03	6/14/2022 19:38	5.91
6/15/2022 16:19	32.71	6/15/2022 17:06	19.00	6/14/2022 19:39	5.89
6/15/2022 16:20	32.68	6/15/2022 17:07	19.03	6/14/2022 19:40	5.89
6/15/2022 16:21	32.70	6/15/2022 17:08	19.05	6/14/2022 19:41	5.90
6/15/2022 16:22	32.68	6/15/2022 17:09	19.03	6/14/2022 19:42	5.89
6/15/2022 16:23	32.69	6/15/2022 17:10	19.04	6/14/2022 19:43	5.89
6/15/2022 16:24	32.68	6/15/2022 17:11	19.05	6/14/2022 19:44	5.86
6/15/2022 16:25	32.70	6/15/2022 17:12	19.03	6/14/2022 19:45	5.88
6/15/2022 16:26	34.00	6/15/2022 17:13	19.02	6/14/2022 19:46	5.89
6/15/2022 16:27	32.91	6/15/2022 17:14	19.03	6/14/2022 19:47	5.91
6/15/2022 16:28	32.79	6/15/2022 17:15	19.02	6/14/2022 19:48	5.89
6/15/2022 16:29	32.76	6/15/2022 17:16	19.05	6/14/2022 19:49	5.89
6/15/2022 16:30	32.76	6/15/2022 17:17	19.02	6/14/2022 19:50	5.88
6/15/2022 16:31	32.75	6/15/2022 17:18	19.02	6/14/2022 19:51	5.87
6/15/2022 16:32	32.75	6/15/2022 17:19	19.04	6/14/2022 19:52	5.89
6/15/2022 16:33	32.73	6/15/2022 17:20	19.05	6/14/2022 19:53	5.88
6/15/2022 16:34	32.71	6/15/2022 17:21	19.03	6/14/2022 19:54	5.86
6/15/2022 16:35	32.71	6/15/2022 17:22	19.03	6/14/2022 19:55	5.87
6/15/2022 16:36	32.70	6/15/2022 17:23	19.02	6/14/2022 19:56	5.87
6/15/2022 16:37	32.73	6/15/2022 17:24	19.02	6/14/2022 19:57	5.89
6/15/2022 16:38	32.73	6/15/2022 17:25	19.03	6/14/2022 19:58	5.90
6/15/2022 16:39	32.71	6/15/2022 17:26	19.01	6/14/2022 19:59	5.88
6/15/2022 16:40	32.70	6/15/2022 17:27	19.05	6/14/2022 20:00	5.92
6/15/2022 16:41	32.70	6/15/2022 17:28	19.01	6/14/2022 20:01	5.92
6/15/2022 16:42	32.70	6/15/2022 17:29	19.07	6/14/2022 20:02	5.87
6/15/2022 16:43	32.72	6/15/2022 17:30	19.07	6/14/2022 20:03	5.90
6/15/2022 16:44	32.72	6/15/2022 17:31	19.02	6/14/2022 20:04	5.93
6/15/2022 16:45	32.69	6/15/2022 17:32	19.04	6/14/2022 20:05	5.90
6/15/2022 16:46	32.71	6/15/2022 17:33	19.05	6/14/2022 20:06	5.89
6/15/2022 16:47	32.68	6/15/2022 17:34	19.04	6/14/2022 20:07	5.88
6/15/2022 16:48	32.69	6/15/2022 17:35	19.03	6/14/2022 20:08	5.85
6/15/2022 16:49	32.66	6/15/2022 17:36	19.05	6/14/2022 20:09	5.91
6/15/2022 16:50	32.68	6/15/2022 17:37	19.04	6/14/2022 20:10	5.89
6/15/2022 16:51	32.67	6/15/2022 17:38	19.04	6/14/2022 20:11	5.88
6/15/2022 16:52	32.69	6/15/2022 17:39	19.04	6/14/2022 20:12	5.89
6/15/2022 16:53	32.66	6/15/2022 17:40	19.06	6/14/2022 20:13	5.90
6/15/2022 16:54	32.73	6/15/2022 17:41	19.03	6/14/2022 20:14	5.87
6/15/2022 16:55	32.69	6/15/2022 17:42	19.04	6/14/2022 20:15	5.91
6/15/2022 16:56	32.67	6/15/2022 17:43	19.05	6/14/2022 20:16	5.93
6/15/2022 16:57	32.69	6/15/2022 17:44	19.02	6/14/2022 20:17	5.90
6/15/2022 16:58	32.72	6/15/2022 17:45	19.03	6/14/2022 20:18	5.89

6/15/2022 16:59	32.71	6/15/2022 17:46	19.05	6/14/2022 20:19	5.89
6/15/2022 17:00	32.73	6/15/2022 17:47	19.02	6/14/2022 20:20	5.91
6/15/2022 17:01	32.69	6/15/2022 17:48	19.02	6/14/2022 20:21	5.89
6/15/2022 17:02	32.67	6/15/2022 17:49	19.05	6/14/2022 20:22	5.88
6/15/2022 17:03	32.69	6/15/2022 17:50	19.03	6/14/2022 20:23	5.89
6/15/2022 17:04	32.69	6/15/2022 17:51	19.05	6/14/2022 20:24	5.88
6/15/2022 17:05	32.69	6/15/2022 17:52	19.02	6/14/2022 20:25	5.88
6/15/2022 17:06	32.68	6/15/2022 17:53	19.01	6/14/2022 20:26	5.88
6/15/2022 17:07	32.67	6/15/2022 17:54	19.03	6/14/2022 20:27	5.90
6/15/2022 17:08	32.69	6/15/2022 17:55	19.05	6/14/2022 20:28	5.88
6/15/2022 17:09	32.72	6/15/2022 17:56	19.05	6/14/2022 20:29	5.90
6/15/2022 17:10	32.69	6/15/2022 17:57	19.03	6/14/2022 20:30	5.92
6/15/2022 17:11	32.66	6/15/2022 17:58	19.06	6/14/2022 20:31	5.91
6/15/2022 17:12	32.68	6/15/2022 17:59	19.03	6/14/2022 20:32	5.89
6/15/2022 17:13	32.66	6/15/2022 18:00	19.03	6/14/2022 20:33	5.91
6/15/2022 17:14	32.70	6/15/2022 18:01	19.02	6/14/2022 20:34	5.88
6/15/2022 17:15	32.67	6/15/2022 18:02	19.02	6/14/2022 20:35	5.90
6/15/2022 17:16	32.65	6/15/2022 18:03	19.03	6/14/2022 20:36	5.90
6/15/2022 17:17	32.70	6/15/2022 18:04	19.03	6/14/2022 20:37	5.89
6/15/2022 17:18	32.69	6/15/2022 18:05	19.04	6/14/2022 20:38	5.89
6/15/2022 17:19	32.70	6/15/2022 18:06	19.03	6/14/2022 20:39	5.87
6/15/2022 17:20	32.68	6/15/2022 18:07	19.04	6/14/2022 20:40	5.91
6/15/2022 17:21	32.71	6/15/2022 18:08	19.06	6/14/2022 20:41	5.91
6/15/2022 17:22	32.70	6/15/2022 18:09	19.07	6/14/2022 20:42	5.90
6/15/2022 17:23	32.69	6/15/2022 18:10	19.05	6/14/2022 20:43	5.91
6/15/2022 17:24	32.68	6/15/2022 18:11	19.06	6/14/2022 20:44	5.88
6/15/2022 17:25	32.68	6/15/2022 18:12	19.04	6/14/2022 20:45	5.91
6/15/2022 17:26	32.72	6/15/2022 18:13	19.04	6/14/2022 20:46	5.86
6/15/2022 17:27	32.73	6/15/2022 18:14	19.04	6/14/2022 20:47	5.91
6/15/2022 17:28	32.72	6/15/2022 18:15	19.03	6/14/2022 20:48	5.88
6/15/2022 17:29	32.72	6/15/2022 18:16	19.03	6/14/2022 20:49	5.89
6/15/2022 17:30	32.72	6/15/2022 18:17	19.03	6/14/2022 20:50	5.87
6/15/2022 17:31	32.72	6/15/2022 18:18	19.05	6/14/2022 20:51	5.90
6/15/2022 17:32	32.70	6/15/2022 18:19	19.04	6/14/2022 20:52	5.90
6/15/2022 17:33	32.73	6/15/2022 18:20	19.04	6/14/2022 20:53	5.89
6/15/2022 17:34	32.73	6/15/2022 18:21	19.06	6/14/2022 20:54	5.89
6/15/2022 17:35	32.77	6/15/2022 18:22	19.02	6/14/2022 20:55	5.90
6/15/2022 17:36	32.77	6/15/2022 18:23	19.04	6/14/2022 20:56	5.89
6/15/2022 17:37	32.78	6/15/2022 18:24	19.05	6/14/2022 20:57	5.89
6/15/2022 17:38	32.73	6/15/2022 18:25	19.03	6/14/2022 20:58	5.88
6/15/2022 17:39	32.74	6/15/2022 18:26	19.02	6/14/2022 20:59	5.87
6/15/2022 17:40	32.76	6/15/2022 18:27	19.07	6/14/2022 21:00	5.87
6/15/2022 17:41	32.73	6/15/2022 18:28	19.04	6/14/2022 21:01	5.89
6/15/2022 17:42	32.72	6/15/2022 18:29	19.04	6/14/2022 21:02	5.90
6/15/2022 17:43	32.74	6/15/2022 18:30	19.05	6/14/2022 21:03	5.91
6/15/2022 17:44	32.72	6/15/2022 18:31	19.05	6/14/2022 21:04	5.90
6/15/2022 17:45	32.70	6/15/2022 18:32	19.07	6/14/2022 21:05	5.88
6/15/2022 17:46	32.70	6/15/2022 18:33	19.02	6/14/2022 21:06	5.89
6/15/2022 17:47	32.71	6/15/2022 18:34	19.04	6/14/2022 21:07	5.93
6/15/2022 17:48	32.71	6/15/2022 18:35	19.04	6/14/2022 21:08	5.91
6/15/2022 17:49	32.72	6/15/2022 18:36	19.03	6/14/2022 21:09	5.90
6/15/2022 17:50	32.72	6/15/2022 18:37	19.03	6/14/2022 21:10	5.86
6/15/2022 17:51	32.70	6/15/2022 18:38	19.03	6/14/2022 21:11	5.93
6/15/2022 17:52	32.70	6/15/2022 18:39	19.04	6/14/2022 21:12	5.91
6/15/2022 17:53	32.70	6/15/2022 18:40	19.04	6/14/2022 21:13	5.90
6/15/2022 17:54	32.69	6/15/2022 18:41	19.04	6/14/2022 21:14	5.92
6/15/2022 17:55	32.68	6/15/2022 18:42	19.01	6/14/2022 21:15	5.91
6/15/2022 17:56	32.67	6/15/2022 18:43	19.06	6/14/2022 21:16	5.90
6/15/2022 17:57	32.69	6/15/2022 18:44	19.04	6/14/2022 21:17	5.90
6/15/2022 17:58	32.67	6/15/2022 18:45	19.04	6/14/2022 21:18	5.91
6/15/2022 17:59	32.70	6/15/2022 18:46	19.04	6/14/2022 21:19	5.89
6/15/2022 18:00	32.68	6/15/2022 18:47	19.06	6/14/2022 21:20	5.91
6/15/2022 18:01	32.68	6/15/2022 18:48	19.06	6/14/2022 21:21	5.91
6/15/2022 18:02	32.64	6/15/2022 18:49	19.06	6/14/2022 21:22	5.92
6/15/2022 18:03	32.70	6/15/2022 18:50	19.04	6/14/2022 21:23	5.93
6/15/2022 18:04	32.69	6/15/2022 18:51	19.04	6/14/2022 21:24	5.87
6/15/2022 18:05	32.73	6/15/2022 18:52	19.03	6/14/2022 21:25	5.89
6/15/2022 18:06	32.69	6/15/2022 18:53	19.05	6/14/2022 21:26	5.87
6/15/2022 18:07	32.66	6/15/2022 18:54	19.05	6/14/2022 21:27	5.89
6/15/2022 18:08	32.69	6/15/2022 18:55	19.04	6/14/2022 21:28	5.91
6/15/2022 18:09	32.72	6/15/2022 18:56	19.08	6/14/2022 21:29	5.92
6/15/2022 18:10	32.74	6/15/2022 18:57	19.06	6/14/2022 21:30	5.89
6/15/2022 18:11	32.71	6/15/2022 18:58	19.05	6/14/2022 21:31	5.91
6/15/2022 18:12	32.75	6/15/2022 18:59	19.03	6/14/2022 21:32	5.90
6/15/2022 18:13	32.80	6/15/2022 19:00	19.05	6/14/2022 21:33	5.91
6/15/2022 18:14	32.88	6/15/2022 19:01	19.05	6/14/2022 21:34	5.89
6/15/2022 18:15	34.02	6/15/2022 19:02	19.04	6/14/2022 21:35	5.88
6/15/2022 18:16	33.02	6/15/2022 19:03	19.04	6/14/2022 21:36	5.89
6/15/2022 18:17	32.87	6/15/2022 19:04	19.05	6/14/2022 21:37	5.89
6/15/2022 18:18	32.88	6/15/2022 19:05	19.03	6/14/2022 21:38	5.91
6/15/2022 18:19	32.84	6/15/2022 19:06	19.03	6/14/2022 21:39	5.88
6/15/2022 18:20	32.80	6/15/2022 19:07	19.04	6/14/2022 21:40	5.90
6/15/2022 18:21	32.78	6/15/2022 19:08	19.04	6/14/2022 21:41	5.88
6/15/2022 18:22	32.77	6/15/2022 19:09	19.10	6/14/2022 21:42	5.90
6/15/2022 18:23	32.78	6/15/2022 19:10	19.03	6/14/2022 21:43	5.89
6/15/2022 18:24	32.80	6/15/2022 19:11	19.05	6/14/2022 21:44	5.89
6/15/2022 18:25	32.77	6/15/2022 19:12	19.05	6/14/2022 21:45	5.89
6/15/2022 18:26	32.77	6/15/2022 19:13	19.04	6/14/2022 21:46	5.89

6/15/2022 18:27	32.76	6/15/2022 19:14	19.04	6/14/2022 21:47	5.86
6/15/2022 18:28	32.76	6/15/2022 19:15	19.05	6/14/2022 21:48	5.91
6/15/2022 18:29	32.74	6/15/2022 19:16	19.05	6/14/2022 21:49	5.88
6/15/2022 18:30	34.07	6/15/2022 19:17	19.06	6/14/2022 21:50	5.90
6/15/2022 18:31	33.03	6/15/2022 19:18	19.06	6/14/2022 21:51	5.89
6/15/2022 18:32	32.89	6/15/2022 19:19	19.05	6/14/2022 21:52	5.89
6/15/2022 18:33	32.82	6/15/2022 19:20	19.04	6/14/2022 21:53	5.88
6/15/2022 18:34	32.86	6/15/2022 19:21	19.06	6/14/2022 21:54	5.89
6/15/2022 18:35	32.79	6/15/2022 19:22	19.05	6/14/2022 21:55	5.92
6/15/2022 18:36	32.80	6/15/2022 19:23	19.07	6/14/2022 21:56	5.92
6/15/2022 18:37	32.77	6/15/2022 19:24	19.05	6/14/2022 21:57	5.88
6/15/2022 18:38	32.79	6/15/2022 19:25	19.06	6/14/2022 21:58	5.93
6/15/2022 18:39	32.76	6/15/2022 19:26	19.06	6/14/2022 21:59	5.88
6/15/2022 18:40	32.76	6/15/2022 19:27	19.06	6/14/2022 22:00	5.88
6/15/2022 18:41	32.75	6/15/2022 19:28	19.05	6/14/2022 22:01	5.92
6/15/2022 18:42	32.74	6/15/2022 19:29	19.06	6/14/2022 22:02	5.90
6/15/2022 18:43	32.76	6/15/2022 19:30	19.05	6/14/2022 22:03	5.92
6/15/2022 18:44	32.71	6/15/2022 19:31	19.05	6/14/2022 22:04	5.88
6/15/2022 18:45	32.73	6/15/2022 19:32	19.05	6/14/2022 22:05	5.87
6/15/2022 18:46	32.73	6/15/2022 19:33	19.04	6/14/2022 22:06	5.93
6/15/2022 18:47	32.73	6/15/2022 19:34	19.03	6/14/2022 22:07	5.87
6/15/2022 18:48	32.71	6/15/2022 19:35	19.04	6/14/2022 22:08	5.89
6/15/2022 18:49	32.71	6/15/2022 19:36	19.07	6/14/2022 22:09	5.88
6/15/2022 18:50	32.74	6/15/2022 19:37	19.04	6/14/2022 22:10	5.88
6/15/2022 18:51	32.70	6/15/2022 19:38	19.03	6/14/2022 22:11	5.90
6/15/2022 18:52	32.69	6/15/2022 19:39	19.03	6/14/2022 22:12	5.87
6/15/2022 18:53	32.74	6/15/2022 19:40	19.04	6/14/2022 22:13	5.91
6/15/2022 18:54	32.71	6/15/2022 19:41	19.05	6/14/2022 22:14	5.91
6/15/2022 18:55	32.68	6/15/2022 19:42	19.04	6/14/2022 22:15	5.89
6/15/2022 18:56	32.68	6/15/2022 19:43	19.08	6/14/2022 22:16	5.87
6/15/2022 18:57	32.71	6/15/2022 19:44	19.06	6/14/2022 22:17	5.87
6/15/2022 18:58	32.69	6/15/2022 19:45	19.05	6/14/2022 22:18	5.87
6/15/2022 18:59	32.70	6/15/2022 19:46	19.05	6/14/2022 22:19	5.90
6/15/2022 19:00	32.71	6/15/2022 19:47	19.05	6/14/2022 22:20	5.88
6/15/2022 19:01	32.67	6/15/2022 19:48	19.05	6/14/2022 22:21	5.86
6/15/2022 19:02	32.70	6/15/2022 19:49	19.05	6/14/2022 22:22	5.91
6/15/2022 19:03	32.71	6/15/2022 19:50	19.05	6/14/2022 22:23	5.88
6/15/2022 19:04	32.70	6/15/2022 19:51	19.04	6/14/2022 22:24	5.91
6/15/2022 19:05	32.72	6/15/2022 19:52	19.06	6/14/2022 22:25	5.91
6/15/2022 19:06	32.70	6/15/2022 19:53	19.04	6/14/2022 22:26	5.87
6/15/2022 19:07	32.71	6/15/2022 19:54	19.04	6/14/2022 22:27	5.92
6/15/2022 19:08	32.68	6/15/2022 19:55	19.04	6/14/2022 22:28	5.88
6/15/2022 19:09	32.67	6/15/2022 19:56	19.04	6/14/2022 22:29	5.89
6/15/2022 19:10	32.68	6/15/2022 19:57	19.04	6/14/2022 22:30	5.91
6/15/2022 19:11	32.69	6/15/2022 19:58	19.07	6/14/2022 22:31	5.94
6/15/2022 19:12	32.74	6/15/2022 19:59	19.05	6/14/2022 22:32	5.87
6/15/2022 19:13	32.72	6/15/2022 20:00	19.03	6/14/2022 22:33	8.49
6/15/2022 19:14	32.74	6/15/2022 20:01	19.03	6/14/2022 22:34	7.21
6/15/2022 19:15	32.72	6/15/2022 20:02	19.08	6/14/2022 22:35	6.00
6/15/2022 19:16	32.72	6/15/2022 20:03	19.05	6/14/2022 22:36	5.92
6/15/2022 19:17	32.71	6/15/2022 20:04	19.04	6/14/2022 22:37	5.90
6/15/2022 19:18	32.72	6/15/2022 20:05	19.03	6/14/2022 22:38	5.93
6/15/2022 19:19	32.69	6/15/2022 20:06	19.06	6/14/2022 22:39	5.90
6/15/2022 19:20	32.69	6/15/2022 20:07	19.04	6/14/2022 22:40	5.88
6/15/2022 19:21	32.72	6/15/2022 20:08	19.05	6/14/2022 22:41	5.88
6/15/2022 19:22	32.67	6/15/2022 20:09	19.04	6/14/2022 22:42	5.90
6/15/2022 19:23	32.68	6/15/2022 20:10	19.06	6/14/2022 22:43	5.91
6/15/2022 19:24	32.69	6/15/2022 20:11	19.05	6/14/2022 22:44	5.90
6/15/2022 19:25	32.68	6/15/2022 20:12	19.03	6/14/2022 22:45	5.90
6/15/2022 19:26	32.68	6/15/2022 20:13	19.03	6/14/2022 22:46	5.91
6/15/2022 19:27	32.71	6/15/2022 20:14	19.05	6/14/2022 22:47	5.88
6/15/2022 19:28	32.69	6/15/2022 20:15	19.05	6/14/2022 22:48	5.89
6/15/2022 19:29	32.68	6/15/2022 20:16	19.05	6/14/2022 22:49	5.92
6/15/2022 19:30	32.68	6/15/2022 20:17	19.06	6/14/2022 22:50	5.91
6/15/2022 19:31	32.68	6/15/2022 20:18	19.04	6/14/2022 22:51	5.89
6/15/2022 19:32	32.68	6/15/2022 20:19	19.04	6/14/2022 22:52	5.88
6/15/2022 19:33	32.68	6/15/2022 20:20	19.03	6/14/2022 22:53	5.88
6/15/2022 19:34	32.68	6/15/2022 20:21	19.06	6/14/2022 22:54	5.87
6/15/2022 19:35	32.70	6/15/2022 20:22	19.06	6/14/2022 22:55	5.89
6/15/2022 19:36	32.69	6/15/2022 20:23	19.04	6/14/2022 22:56	5.91
6/15/2022 19:37	32.65	6/15/2022 20:24	19.06	6/14/2022 22:57	5.89
6/15/2022 19:38	32.69	6/15/2022 20:25	19.04	6/14/2022 22:58	5.87
6/15/2022 19:39	32.66	6/15/2022 20:26	19.05	6/14/2022 22:59	5.89
6/15/2022 19:40	32.66	6/15/2022 20:27	19.06	6/14/2022 23:00	5.87
6/15/2022 19:41	32.67	6/15/2022 20:28	19.05	6/14/2022 23:01	5.88
6/15/2022 19:42	32.66	6/15/2022 20:29	19.05	6/14/2022 23:02	5.91
6/15/2022 19:43	32.67	6/15/2022 20:30	19.06	6/14/2022 23:03	5.88
6/15/2022 19:44	32.67	6/15/2022 20:31	19.05	6/14/2022 23:04	5.89
6/15/2022 19:45	32.66	6/15/2022 20:32	19.05	6/14/2022 23:05	5.89
6/15/2022 19:46	32.64	6/15/2022 20:33	19.06	6/14/2022 23:06	5.90
6/15/2022 19:47	32.67	6/15/2022 20:34	19.07	6/14/2022 23:07	5.88
6/15/2022 19:48	32.66	6/15/2022 20:35	19.04	6/14/2022 23:08	5.84
6/15/2022 19:49	32.65	6/15/2022 20:36	19.04	6/14/2022 23:09	5.89
6/15/2022 19:50	32.66	6/15/2022 20:37	19.03	6/14/2022 23:10	5.89
6/15/2022 19:51	32.68	6/15/2022 20:38	19.03	6/14/2022 23:11	5.90
6/15/2022 19:52	32.66	6/15/2022 20:39	19.04	6/14/2022 23:12	5.89
6/15/2022 19:53	32.66	6/15/2022 20:40	19.07	6/14/2022 23:13	5.88
6/15/2022 19:54	32.69	6/15/2022 20:41	19.04	6/14/2022 23:14	5.88

6/15/2022 19:55	32.65	6/15/2022 20:42	19.04	6/14/2022 23:15	5.88
6/15/2022 19:56	32.66	6/15/2022 20:43	19.06	6/14/2022 23:16	5.87
6/15/2022 19:57	32.67	6/15/2022 20:44	19.08	6/14/2022 23:17	5.90
6/15/2022 19:58	32.72	6/15/2022 20:45	19.05	6/14/2022 23:18	5.89
6/15/2022 19:59	32.69	6/15/2022 20:46	19.02	6/14/2022 23:19	5.89
6/15/2022 20:00	32.69	6/15/2022 20:47	19.05	6/14/2022 23:20	5.91
6/15/2022 20:01	32.67	6/15/2022 20:48	19.06	6/14/2022 23:21	5.89
6/15/2022 20:02	32.70	6/15/2022 20:49	19.06	6/14/2022 23:22	5.87
6/15/2022 20:03	32.67	6/15/2022 20:50	19.06	6/14/2022 23:23	5.85
6/15/2022 20:04	32.69	6/15/2022 20:51	19.03	6/14/2022 23:24	5.89
6/15/2022 20:05	32.68	6/15/2022 20:52	19.04	6/14/2022 23:25	5.89
6/15/2022 20:06	32.69	6/15/2022 20:53	19.04	6/14/2022 23:26	5.90
6/15/2022 20:07	32.69	6/15/2022 20:54	19.03	6/14/2022 23:27	5.90
6/15/2022 20:08	32.69	6/15/2022 20:55	19.06	6/14/2022 23:28	5.88
6/15/2022 20:09	32.65	6/15/2022 20:56	19.03	6/14/2022 23:29	5.87
6/15/2022 20:10	32.67	6/15/2022 20:57	19.04	6/14/2022 23:30	5.89
6/15/2022 20:11	32.69	6/15/2022 20:58	19.05	6/14/2022 23:31	5.85
6/15/2022 20:12	32.66	6/15/2022 20:59	19.03	6/14/2022 23:32	5.89
6/15/2022 20:13	32.64	6/15/2022 21:00	19.05	6/14/2022 23:33	5.89
6/15/2022 20:14	32.68	6/15/2022 21:01	19.05	6/14/2022 23:34	5.89
6/15/2022 20:15	32.70	6/15/2022 21:02	19.05	6/14/2022 23:35	5.89
6/15/2022 20:16	32.67	6/15/2022 21:03	19.05	6/14/2022 23:36	5.86
6/15/2022 20:17	32.66	6/15/2022 21:04	19.03	6/14/2022 23:37	5.87
6/15/2022 20:18	32.63	6/15/2022 21:05	19.04	6/14/2022 23:38	5.88
6/15/2022 20:19	32.64	6/15/2022 21:06	19.03	6/14/2022 23:39	5.89
6/15/2022 20:20	32.67	6/15/2022 21:07	19.03	6/14/2022 23:40	5.89
6/15/2022 20:21	32.65	6/15/2022 21:08	19.05	6/14/2022 23:41	5.89
6/15/2022 20:22	32.66	6/15/2022 21:09	19.05	6/14/2022 23:42	5.87
6/15/2022 20:23	32.63	6/15/2022 21:10	19.04	6/14/2022 23:43	5.89
6/15/2022 20:24	34.00	6/15/2022 21:11	19.06	6/14/2022 23:44	5.85
6/15/2022 20:25	32.97	6/15/2022 21:12	19.05	6/14/2022 23:45	5.86
6/15/2022 20:26	32.82	6/15/2022 21:13	19.04	6/14/2022 23:46	5.88
6/15/2022 20:27	32.77	6/15/2022 21:14	19.03	6/14/2022 23:47	5.87
6/15/2022 20:28	32.74	6/15/2022 21:15	19.07	6/14/2022 23:48	5.88
6/15/2022 20:29	32.76	6/15/2022 21:16	19.03	6/14/2022 23:49	5.87
6/15/2022 20:30	32.72	6/15/2022 21:17	19.07	6/14/2022 23:50	5.88
6/15/2022 20:31	32.69	6/15/2022 21:18	19.04	6/14/2022 23:51	5.90
6/15/2022 20:32	32.73	6/15/2022 21:19	19.04	6/14/2022 23:52	5.88
6/15/2022 20:33	32.72	6/15/2022 21:20	19.05	6/14/2022 23:53	5.88
6/15/2022 20:34	32.70	6/15/2022 21:21	19.05	6/14/2022 23:54	5.90
6/15/2022 20:35	32.72	6/15/2022 21:22	19.05	6/14/2022 23:55	5.87
6/15/2022 20:36	32.72	6/15/2022 21:23	19.03	6/14/2022 23:56	5.88
6/15/2022 20:37	32.71	6/15/2022 21:24	19.05	6/14/2022 23:57	5.87
6/15/2022 20:38	32.68	6/15/2022 21:25	19.05	6/14/2022 23:58	5.88
6/15/2022 20:39	32.69	6/15/2022 21:26	19.05	6/14/2022 23:59	5.89
6/15/2022 20:40	32.70	6/15/2022 21:27	19.07	6/15/2022 0:00	5.89
6/15/2022 20:41	32.66	6/15/2022 21:28	19.05	6/15/2022 0:01	5.87
6/15/2022 20:42	32.68	6/15/2022 21:29	19.07	6/15/2022 0:02	5.88
6/15/2022 20:43	32.67	6/15/2022 21:30	19.04	6/15/2022 0:03	5.89
6/15/2022 20:44	32.67	6/15/2022 21:31	19.04	6/15/2022 0:04	5.86
6/15/2022 20:45	32.70	6/15/2022 21:32	19.07	6/15/2022 0:05	5.89
6/15/2022 20:46	32.68	6/15/2022 21:33	19.06	6/15/2022 0:06	5.90
6/15/2022 20:47	32.67	6/15/2022 21:34	19.05	6/15/2022 0:07	5.86
6/15/2022 20:48	32.67	6/15/2022 21:35	19.05	6/15/2022 0:08	5.87
6/15/2022 20:49	32.69	6/15/2022 21:36	19.06	6/15/2022 0:09	5.88
6/15/2022 20:50	32.66	6/15/2022 21:37	19.05	6/15/2022 0:10	5.85
6/15/2022 20:51	32.63	6/15/2022 21:38	19.07	6/15/2022 0:11	5.86
6/15/2022 20:52	32.66	6/15/2022 21:39	19.06	6/15/2022 0:12	5.90
6/15/2022 20:53	32.66	6/15/2022 21:40	19.05	6/15/2022 0:13	5.87
6/15/2022 20:54	32.63	6/15/2022 21:41	19.07	6/15/2022 0:14	5.89
6/15/2022 20:55	32.68	6/15/2022 21:42	19.04	6/15/2022 0:15	5.86
6/15/2022 20:56	32.65	6/15/2022 21:43	19.05	6/15/2022 0:16	5.87
6/15/2022 20:57	32.66	6/15/2022 21:44	19.05	6/15/2022 0:17	5.89
6/15/2022 20:58	32.67	6/15/2022 21:45	19.04	6/15/2022 0:18	5.88
6/15/2022 20:59	32.64	6/15/2022 21:46	19.08	6/15/2022 0:19	5.90
6/15/2022 21:00	32.66	6/15/2022 21:47	19.04	6/15/2022 0:20	5.87
6/15/2022 21:01	32.65	6/15/2022 21:48	19.03	6/15/2022 0:21	5.89
6/15/2022 21:02	32.67	6/15/2022 21:49	19.06	6/15/2022 0:22	5.88
6/15/2022 21:03	32.67	6/15/2022 21:50	19.02	6/15/2022 0:23	5.88
6/15/2022 21:04	32.66	6/15/2022 21:51	19.05	6/15/2022 0:24	5.87
6/15/2022 21:05	32.68	6/15/2022 21:52	19.07	6/15/2022 0:25	5.85
6/15/2022 21:06	32.66	6/15/2022 21:53	19.07	6/15/2022 0:26	5.89
6/15/2022 21:07	32.63	6/15/2022 21:54	19.07	6/15/2022 0:27	5.87
6/15/2022 21:08	32.64	6/15/2022 21:55	19.07	6/15/2022 0:28	5.85
6/15/2022 21:09	32.62	6/15/2022 21:56	19.05	6/15/2022 0:29	5.88
6/15/2022 21:10	32.67	6/15/2022 21:57	19.03	6/15/2022 0:30	5.87
6/15/2022 21:11	32.64	6/15/2022 21:58	19.06	6/15/2022 0:31	5.88
6/15/2022 21:12	32.62	6/15/2022 21:59	19.08	6/15/2022 0:32	5.89
6/15/2022 21:13	32.62	6/15/2022 22:00	19.06	6/15/2022 0:33	7.21
6/15/2022 21:14	32.65	6/15/2022 22:01	19.05	6/15/2022 0:34	8.62
6/15/2022 21:15	32.65	6/15/2022 22:02	19.05	6/15/2022 0:35	7.39
6/15/2022 21:16	32.66	6/15/2022 22:03	19.06	6/15/2022 0:36	6.01
6/15/2022 21:17	32.67	6/15/2022 22:04	19.07	6/15/2022 0:37	5.95
6/15/2022 21:18	32.64	6/15/2022 22:05	19.04	6/15/2022 0:38	5.92
6/15/2022 21:19	32.63	6/15/2022 22:06	19.05	6/15/2022 0:39	5.90
6/15/2022 21:20	32.66	6/15/2022 22:07	19.07	6/15/2022 0:40	5.92
6/15/2022 21:21	32.64	6/15/2022 22:08	19.04	6/15/2022 0:41	5.88
6/15/2022 21:22	32.66	6/15/2022 22:09	19.04	6/15/2022 0:42	5.91

6/15/2022 21:23	32.64	6/15/2022 22:10	19.06	6/15/2022 0:43	5.90
6/15/2022 21:24	32.66	6/15/2022 22:11	19.05	6/15/2022 0:44	5.88
6/15/2022 21:25	32.65	6/15/2022 22:12	19.06	6/15/2022 0:45	5.90
6/15/2022 21:26	32.64	6/15/2022 22:13	19.05	6/15/2022 0:46	5.90
6/15/2022 21:27	32.64	6/15/2022 22:14	19.05	6/15/2022 0:47	5.86
6/15/2022 21:28	32.62	6/15/2022 22:15	19.06	6/15/2022 0:48	5.88
6/15/2022 21:29	32.63	6/15/2022 22:16	19.06	6/15/2022 0:49	5.91
6/15/2022 21:30	32.62	6/15/2022 22:17	19.03	6/15/2022 0:50	5.90
6/15/2022 21:31	32.63	6/15/2022 22:18	19.04	6/15/2022 0:51	5.88
6/15/2022 21:32	32.63	6/15/2022 22:19	19.06	6/15/2022 0:52	5.86
6/15/2022 21:33	32.62	6/15/2022 22:20	19.07	6/15/2022 0:53	5.91
6/15/2022 21:34	32.63	6/15/2022 22:21	19.07	6/15/2022 0:54	5.90
6/15/2022 21:35	32.64	6/15/2022 22:22	19.04	6/15/2022 0:55	5.87
6/15/2022 21:36	32.65	6/15/2022 22:23	19.05	6/15/2022 0:56	5.88
6/15/2022 21:37	32.64	6/15/2022 22:24	19.04	6/15/2022 0:57	5.89
6/15/2022 21:38	32.66	6/15/2022 22:25	19.03	6/15/2022 0:58	5.88
6/15/2022 21:39	32.69	6/15/2022 22:26	19.09	6/15/2022 0:59	5.93
6/15/2022 21:40	32.64	6/15/2022 22:27	19.08	6/15/2022 1:00	5.87
6/15/2022 21:41	32.65	6/15/2022 22:28	19.06	6/15/2022 1:01	5.90
6/15/2022 21:42	32.64	6/15/2022 22:29	19.05	6/15/2022 1:02	5.89
6/15/2022 21:43	32.61	6/15/2022 22:30	19.04	6/15/2022 1:03	5.87
6/15/2022 21:44	32.68	6/15/2022 22:31	19.07	6/15/2022 1:04	5.90
6/15/2022 21:45	32.66	6/15/2022 22:32	19.66	6/15/2022 1:05	5.88
6/15/2022 21:46	32.65	6/15/2022 22:33	19.76	6/15/2022 1:06	5.88
6/15/2022 21:47	32.62	6/15/2022 22:34	19.81	6/15/2022 1:07	5.89
6/15/2022 21:48	32.64	6/15/2022 22:35	19.85	6/15/2022 1:08	5.88
6/15/2022 21:49	32.63	6/15/2022 22:36	19.74	6/15/2022 1:09	5.89
6/15/2022 21:50	32.64	6/15/2022 22:37	19.29	6/15/2022 1:10	5.91
6/15/2022 21:51	32.63	6/15/2022 22:38	19.25	6/15/2022 1:11	5.86
6/15/2022 21:52	32.63	6/15/2022 22:39	19.19	6/15/2022 1:12	5.88
6/15/2022 21:53	32.60	6/15/2022 22:40	19.19	6/15/2022 1:13	5.88
6/15/2022 21:54	32.62	6/15/2022 22:41	19.19	6/15/2022 1:14	5.91
6/15/2022 21:55	32.64	6/15/2022 22:42	19.17	6/15/2022 1:15	5.90
6/15/2022 21:56	32.61	6/15/2022 22:43	19.16	6/15/2022 1:16	5.91
6/15/2022 21:57	32.63	6/15/2022 22:44	19.16	6/15/2022 1:17	5.89
6/15/2022 21:58	32.66	6/15/2022 22:45	19.15	6/15/2022 1:18	5.87
6/15/2022 21:59	32.62	6/15/2022 22:46	19.13	6/15/2022 1:19	5.90
6/15/2022 22:00	32.64	6/15/2022 22:47	19.13	6/15/2022 1:20	5.89
6/15/2022 22:01	32.68	6/15/2022 22:48	19.14	6/15/2022 1:21	5.90
6/15/2022 22:02	32.66	6/15/2022 22:49	19.16	6/15/2022 1:22	5.87
6/15/2022 22:03	32.67	6/15/2022 22:50	19.12	6/15/2022 1:23	5.88
6/15/2022 22:04	32.69	6/15/2022 22:51	19.12	6/15/2022 1:24	5.87
6/15/2022 22:05	32.65	6/15/2022 22:52	19.13	6/15/2022 1:25	5.89
6/15/2022 22:06	32.63	6/15/2022 22:53	19.14	6/15/2022 1:26	5.89
6/15/2022 22:07	32.65	6/15/2022 22:54	19.12	6/15/2022 1:27	5.89
6/15/2022 22:08	32.65	6/15/2022 22:55	19.14	6/15/2022 1:28	5.90
6/15/2022 22:09	32.65	6/15/2022 22:56	19.14	6/15/2022 1:29	5.88
6/15/2022 22:10	32.65	6/15/2022 22:57	19.11	6/15/2022 1:30	5.88
6/15/2022 22:11	32.67	6/15/2022 22:58	19.12	6/15/2022 1:31	5.89
6/15/2022 22:12	32.68	6/15/2022 22:59	19.10	6/15/2022 1:32	5.89
6/15/2022 22:13	32.68	6/15/2022 23:00	19.11	6/15/2022 1:33	5.88
6/15/2022 22:14	32.71	6/15/2022 23:01	19.09	6/15/2022 1:34	5.90
6/15/2022 22:15	32.70	6/15/2022 23:02	19.13	6/15/2022 1:35	5.87
6/15/2022 22:16	32.65	6/15/2022 23:03	19.12	6/15/2022 1:36	5.91
6/15/2022 22:17	32.68	6/15/2022 23:04	19.12	6/15/2022 1:37	5.87
6/15/2022 22:18	32.69	6/15/2022 23:05	19.13	6/15/2022 1:38	5.89
6/15/2022 22:19	32.69	6/15/2022 23:06	19.12	6/15/2022 1:39	5.89
6/15/2022 22:20	32.67	6/15/2022 23:07	19.09	6/15/2022 1:40	5.88
6/15/2022 22:21	32.64	6/15/2022 23:08	19.11	6/15/2022 1:41	5.89
6/15/2022 22:22	32.67	6/15/2022 23:09	19.09	6/15/2022 1:42	5.89
6/15/2022 22:23	32.66	6/15/2022 23:10	19.10	6/15/2022 1:43	5.88
6/15/2022 22:24	32.68	6/15/2022 23:11	19.11	6/15/2022 1:44	5.87
6/15/2022 22:25	32.66	6/15/2022 23:12	19.12	6/15/2022 1:45	5.87
6/15/2022 22:26	32.67	6/15/2022 23:13	19.10	6/15/2022 1:46	5.89
6/15/2022 22:27	32.67	6/15/2022 23:14	19.11	6/15/2022 1:47	5.88
6/15/2022 22:28	32.65	6/15/2022 23:15	19.11	6/15/2022 1:48	5.88
6/15/2022 22:29	32.68	6/15/2022 23:16	19.09	6/15/2022 1:49	5.88
6/15/2022 22:30	32.68	6/15/2022 23:17	19.10	6/15/2022 1:50	5.86
6/15/2022 22:31	32.65	6/15/2022 23:18	19.09	6/15/2022 1:51	5.90
6/15/2022 22:32	32.67	6/15/2022 23:19	19.10	6/15/2022 1:52	5.83
6/15/2022 22:33	32.67	6/15/2022 23:20	19.09	6/15/2022 1:53	5.89
6/15/2022 22:34	32.65	6/15/2022 23:21	19.09	6/15/2022 1:54	5.88
6/15/2022 22:35	32.65	6/15/2022 23:22	19.11	6/15/2022 1:55	5.88
6/15/2022 22:36	32.66	6/15/2022 23:23	19.10	6/15/2022 1:56	5.89
6/15/2022 22:37	32.65	6/15/2022 23:24	19.10	6/15/2022 1:57	5.84
6/15/2022 22:38	32.62	6/15/2022 23:25	19.07	6/15/2022 1:58	5.87
6/15/2022 22:39	32.68	6/15/2022 23:26	19.08	6/15/2022 1:59	5.87
6/15/2022 22:40	32.68	6/15/2022 23:27	19.06	6/15/2022 2:00	5.88
6/15/2022 22:41	32.70	6/15/2022 23:28	19.09	6/15/2022 2:01	5.88
6/15/2022 22:42	32.69	6/15/2022 23:29	19.10	6/15/2022 2:02	5.88
6/15/2022 22:43	32.72	6/15/2022 23:30	19.10	6/15/2022 2:03	5.91
6/15/2022 22:44	32.68	6/15/2022 23:31	19.07	6/15/2022 2:04	5.89
6/15/2022 22:45	32.68	6/15/2022 23:32	19.10	6/15/2022 2:05	5.88
6/15/2022 22:46	32.69	6/15/2022 23:33	19.08	6/15/2022 2:06	5.88
6/15/2022 22:47	32.69	6/15/2022 23:34	19.07	6/15/2022 2:07	5.86
6/15/2022 22:48	32.69	6/15/2022 23:35	19.07	6/15/2022 2:08	5.85
6/15/2022 22:49	32.68	6/15/2022 23:36	19.08	6/15/2022 2:09	5.85
6/15/2022 22:50	32.66	6/15/2022 23:37	19.09	6/15/2022 2:10	5.90

6/15/2022 22:51	32.68	6/15/2022 23:38	19.09	6/15/2022 2:11	5.88
6/15/2022 22:52	32.66	6/15/2022 23:39	19.05	6/15/2022 2:12	5.87
6/15/2022 22:53	32.64	6/15/2022 23:40	19.09	6/15/2022 2:13	5.87
6/15/2022 22:54	32.65	6/15/2022 23:41	19.09	6/15/2022 2:14	5.88
6/15/2022 22:55	32.67	6/15/2022 23:42	19.09	6/15/2022 2:15	5.87
6/15/2022 22:56	32.65	6/15/2022 23:43	19.08	6/15/2022 2:16	5.87
6/15/2022 22:57	32.68	6/15/2022 23:44	19.08	6/15/2022 2:17	5.87
6/15/2022 22:58	32.67	6/15/2022 23:45	19.08	6/15/2022 2:18	5.86
6/15/2022 22:59	32.64	6/15/2022 23:46	19.09	6/15/2022 2:19	5.86
6/15/2022 23:00	32.68	6/15/2022 23:47	19.08	6/15/2022 2:20	5.87
6/15/2022 23:01	32.64	6/15/2022 23:48	19.10	6/15/2022 2:21	5.87
6/15/2022 23:02	32.69	6/15/2022 23:49	19.07	6/15/2022 2:22	5.89
6/15/2022 23:03	32.68	6/15/2022 23:50	19.06	6/15/2022 2:23	5.87
6/15/2022 23:04	32.67	6/15/2022 23:51	19.08	6/15/2022 2:24	5.88
6/15/2022 23:05	32.63	6/15/2022 23:52	19.07	6/15/2022 2:25	5.88
6/15/2022 23:06	32.65	6/15/2022 23:53	19.06	6/15/2022 2:26	5.85
6/15/2022 23:07	32.69	6/15/2022 23:54	19.07	6/15/2022 2:27	5.89
6/15/2022 23:08	32.72	6/15/2022 23:55	19.07	6/15/2022 2:28	5.89
6/15/2022 23:09	32.70	6/15/2022 23:56	19.08	6/15/2022 2:29	5.88
6/15/2022 23:10	32.70	6/15/2022 23:57	19.08	6/15/2022 2:30	5.90
6/15/2022 23:11	32.69	6/15/2022 23:58	19.08	6/15/2022 2:31	5.88
6/15/2022 23:12	32.67	6/15/2022 23:59	19.04	6/15/2022 2:32	5.88
6/15/2022 23:13	32.68	6/16/2022 0:00	19.06	6/15/2022 2:33	5.87
6/15/2022 23:14	32.66	6/16/2022 0:01	19.07	6/15/2022 2:34	5.86
6/15/2022 23:15	32.66	6/16/2022 0:02	19.07	6/15/2022 2:35	5.84
6/15/2022 23:16	32.66	6/16/2022 0:03	19.05	6/15/2022 2:36	5.86
6/15/2022 23:17	32.66	6/16/2022 0:04	19.05	6/15/2022 2:37	5.88
6/15/2022 23:18	32.65	6/16/2022 0:05	19.07	6/15/2022 2:38	5.89
6/15/2022 23:19	32.65	6/16/2022 0:06	19.09	6/15/2022 2:39	5.88
6/15/2022 23:20	32.65	6/16/2022 0:07	19.08	6/15/2022 2:40	5.89
6/15/2022 23:21	32.65	6/16/2022 0:08	19.06	6/15/2022 2:41	5.85
6/15/2022 23:22	32.67	6/16/2022 0:09	19.07	6/15/2022 2:42	5.89
6/15/2022 23:23	32.64	6/16/2022 0:10	19.08	6/15/2022 2:43	5.89
6/15/2022 23:24	32.67	6/16/2022 0:11	19.06	6/15/2022 2:44	5.89
6/15/2022 23:25	32.68	6/16/2022 0:12	19.08	6/15/2022 2:45	5.89
6/15/2022 23:26	32.67	6/16/2022 0:13	19.04	6/15/2022 2:46	5.88
6/15/2022 23:27	32.66	6/16/2022 0:14	19.07	6/15/2022 2:47	5.86
6/15/2022 23:28	32.64	6/16/2022 0:15	19.06	6/15/2022 2:48	5.87
6/15/2022 23:29	32.66	6/16/2022 0:16	19.07	6/15/2022 2:49	5.89
6/15/2022 23:30	32.66	6/16/2022 0:17	19.05	6/15/2022 2:50	5.87
6/15/2022 23:31	32.66	6/16/2022 0:18	19.05	6/15/2022 2:51	5.87
6/15/2022 23:32	32.65	6/16/2022 0:19	19.04	6/15/2022 2:52	5.89
6/15/2022 23:33	32.67	6/16/2022 0:20	19.07	6/15/2022 2:53	5.89
6/15/2022 23:34	32.68	6/16/2022 0:21	19.06	6/15/2022 2:54	5.88
6/15/2022 23:35	32.68	6/16/2022 0:22	19.06	6/15/2022 2:55	5.88
6/15/2022 23:36	32.65	6/16/2022 0:23	19.05	6/15/2022 2:56	5.89
6/15/2022 23:37	32.64	6/16/2022 0:24	19.05	6/15/2022 2:57	5.87
6/15/2022 23:38	32.64	6/16/2022 0:25	19.06	6/15/2022 2:58	5.88
6/15/2022 23:39	32.62	6/16/2022 0:26	19.05	6/15/2022 2:59	5.85
6/15/2022 23:40	32.63	6/16/2022 0:27	19.07	6/15/2022 3:00	5.87
6/15/2022 23:41	32.64	6/16/2022 0:28	19.04	6/15/2022 3:01	5.89
6/15/2022 23:42	32.69	6/16/2022 0:29	19.07	6/15/2022 3:02	5.89
6/15/2022 23:43	32.63	6/16/2022 0:30	19.07	6/15/2022 3:03	5.88
6/15/2022 23:44	32.65	6/16/2022 0:31	19.06	6/15/2022 3:04	5.85
6/15/2022 23:45	32.71	6/16/2022 0:32	19.07	6/15/2022 3:05	5.89
6/15/2022 23:46	32.71	6/16/2022 0:33	19.05	6/15/2022 3:06	5.92
6/15/2022 23:47	32.70	6/16/2022 0:34	19.07	6/15/2022 3:07	5.89
6/15/2022 23:48	32.68	6/16/2022 0:35	19.05	6/15/2022 3:08	5.89
6/15/2022 23:49	32.70	6/16/2022 0:36	19.08	6/15/2022 3:09	5.88
6/15/2022 23:50	32.69	6/16/2022 0:37	19.07	6/15/2022 3:10	5.89
6/15/2022 23:51	32.67	6/16/2022 0:38	19.05	6/15/2022 3:11	5.90
6/15/2022 23:52	32.67	6/16/2022 0:39	19.06	6/15/2022 3:12	5.89
6/15/2022 23:53	32.65	6/16/2022 0:40	19.05	6/15/2022 3:13	5.84
6/15/2022 23:54	32.68	6/16/2022 0:41	19.06	6/15/2022 3:14	5.86
6/15/2022 23:55	32.65	6/16/2022 0:42	19.06	6/15/2022 3:15	5.87
6/15/2022 23:56	32.66	6/16/2022 0:43	19.06	6/15/2022 3:16	5.91
6/15/2022 23:57	32.64	6/16/2022 0:44	19.04	6/15/2022 3:17	5.90
6/15/2022 23:58	32.65	6/16/2022 0:45	19.05	6/15/2022 3:18	5.88
6/15/2022 23:59	32.65	6/16/2022 0:46	19.07	6/15/2022 3:19	5.90
6/16/2022 0:00	32.65	6/16/2022 0:47	19.07	6/15/2022 3:20	5.87
6/16/2022 0:01	32.67	6/16/2022 0:48	19.06	6/15/2022 3:21	5.83
6/16/2022 0:02	32.65	6/16/2022 0:49	19.04	6/15/2022 3:22	5.85
6/16/2022 0:03	32.68	6/16/2022 0:50	19.05	6/15/2022 3:23	5.87
6/16/2022 0:04	32.63	6/16/2022 0:51	19.05	6/15/2022 3:24	5.87
6/16/2022 0:05	32.67	6/16/2022 0:52	19.02	6/15/2022 3:25	7.37
6/16/2022 0:06	32.64	6/16/2022 0:53	19.04	6/15/2022 3:26	8.63
6/16/2022 0:07	32.67	6/16/2022 0:54	19.05	6/15/2022 3:27	6.34
6/16/2022 0:08	32.63	6/16/2022 0:55	19.04	6/15/2022 3:28	5.91
6/16/2022 0:09	32.64	6/16/2022 0:56	19.06	6/15/2022 3:29	5.90
6/16/2022 0:10	32.65	6/16/2022 0:57	19.07	6/15/2022 3:30	5.93
6/16/2022 0:11	32.64	6/16/2022 0:58	19.05	6/15/2022 3:31	5.90
6/16/2022 0:12	32.65	6/16/2022 0:59	19.07	6/15/2022 3:32	5.91
6/16/2022 0:13	32.67	6/16/2022 1:00	19.08	6/15/2022 3:33	5.87
6/16/2022 0:14	32.65	6/16/2022 1:01	19.05	6/15/2022 3:34	5.86
6/16/2022 0:15	32.65	6/16/2022 1:02	19.04	6/15/2022 3:35	5.89
6/16/2022 0:16	32.64	6/16/2022 1:03	19.06	6/15/2022 3:36	5.88
6/16/2022 0:17	32.66	6/16/2022 1:04	19.07	6/15/2022 3:37	5.90
6/16/2022 0:18	32.61	6/16/2022 1:05	19.03	6/15/2022 3:38	5.89

6/16/2022 0:19	32.62	6/16/2022 1:06	19.03	6/15/2022 3:39	5.88
6/16/2022 0:20	32.65	6/16/2022 1:07	19.07	6/15/2022 3:40	5.89
6/16/2022 0:21	32.63	6/16/2022 1:08	19.06	6/15/2022 3:41	5.90
6/16/2022 0:22	32.64	6/16/2022 1:09	19.06	6/15/2022 3:42	5.88
6/16/2022 0:23	32.66	6/16/2022 1:10	19.07	6/15/2022 3:43	5.88
6/16/2022 0:24	32.63	6/16/2022 1:11	19.04	6/15/2022 3:44	5.90
6/16/2022 0:25	32.65	6/16/2022 1:12	19.06	6/15/2022 3:45	5.86
6/16/2022 0:26	32.65	6/16/2022 1:13	19.07	6/15/2022 3:46	5.88
6/16/2022 0:27	32.64	6/16/2022 1:14	19.09	6/15/2022 3:47	5.88
6/16/2022 0:28	32.62	6/16/2022 1:15	19.07	6/15/2022 3:48	5.86
6/16/2022 0:29	32.64	6/16/2022 1:16	19.04	6/15/2022 3:49	5.89
6/16/2022 0:30	32.66	6/16/2022 1:17	19.06	6/15/2022 3:50	5.85
6/16/2022 0:31	32.65	6/16/2022 1:18	19.05	6/15/2022 3:51	5.90
6/16/2022 0:32	32.65	6/16/2022 1:19	19.05	6/15/2022 3:52	5.91
6/16/2022 0:33	32.67	6/16/2022 1:20	19.05	6/15/2022 3:53	5.87
6/16/2022 0:34	32.64	6/16/2022 1:21	19.04	6/15/2022 3:54	5.85
6/16/2022 0:35	32.63	6/16/2022 1:22	19.05	6/15/2022 3:55	5.87
6/16/2022 0:36	32.64	6/16/2022 1:23	19.04	6/15/2022 3:56	5.87
6/16/2022 0:37	32.64	6/16/2022 1:24	19.06	6/15/2022 3:57	5.87
6/16/2022 0:38	32.61	6/16/2022 1:25	19.06	6/15/2022 3:58	5.85
6/16/2022 0:39	32.66	6/16/2022 1:26	19.06	6/15/2022 3:59	5.85
6/16/2022 0:40	32.62	6/16/2022 1:27	19.06	6/15/2022 4:00	5.88
6/16/2022 0:41	32.64	6/16/2022 1:28	19.04	6/15/2022 4:01	5.87
6/16/2022 0:42	32.65	6/16/2022 1:29	19.07	6/15/2022 4:02	5.87
6/16/2022 0:43	32.63	6/16/2022 1:30	19.01	6/15/2022 4:03	5.90
6/16/2022 0:44	32.63	6/16/2022 1:31	19.05	6/15/2022 4:04	5.90
6/16/2022 0:45	32.61	6/16/2022 1:32	19.04	6/15/2022 4:05	5.89
6/16/2022 0:46	32.64	6/16/2022 1:33	19.04	6/15/2022 4:06	5.91
6/16/2022 0:47	32.62	6/16/2022 1:34	19.05	6/15/2022 4:07	5.88
6/16/2022 0:48	32.63	6/16/2022 1:35	19.05	6/15/2022 4:08	5.92
6/16/2022 0:49	32.63	6/16/2022 1:36	19.04	6/15/2022 4:09	5.88
6/16/2022 0:50	32.63	6/16/2022 1:37	19.06	6/15/2022 4:10	5.89
6/16/2022 0:51	32.66	6/16/2022 1:38	19.05	6/15/2022 4:11	5.90
6/16/2022 0:52	32.62	6/16/2022 1:39	19.05	6/15/2022 4:12	5.90
6/16/2022 0:53	32.61	6/16/2022 1:40	19.05	6/15/2022 4:13	5.86
6/16/2022 0:54	32.62	6/16/2022 1:41	19.04	6/15/2022 4:14	5.89
6/16/2022 0:55	32.62	6/16/2022 1:42	19.04	6/15/2022 4:15	5.90
6/16/2022 0:56	32.65	6/16/2022 1:43	19.04	6/15/2022 4:16	5.89
6/16/2022 0:57	32.62	6/16/2022 1:44	19.04	6/15/2022 4:17	5.88
6/16/2022 0:58	32.65	6/16/2022 1:45	19.05	6/15/2022 4:18	5.89
6/16/2022 0:59	32.64	6/16/2022 1:46	19.03	6/15/2022 4:19	5.84
6/16/2022 1:00	32.62	6/16/2022 1:47	19.04	6/15/2022 4:20	5.87
6/16/2022 1:01	32.63	6/16/2022 1:48	19.05	6/15/2022 4:21	5.88
6/16/2022 1:02	32.63	6/16/2022 1:49	19.06	6/15/2022 4:22	5.90
6/16/2022 1:03	32.62	6/16/2022 1:50	19.05	6/15/2022 4:23	5.88
6/16/2022 1:04	32.62	6/16/2022 1:51	19.04	6/15/2022 4:24	5.86
6/16/2022 1:05	32.60	6/16/2022 1:52	19.06	6/15/2022 4:25	5.90
6/16/2022 1:06	32.63	6/16/2022 1:53	19.05	6/15/2022 4:26	5.84
6/16/2022 1:07	32.64	6/16/2022 1:54	19.06	6/15/2022 4:27	5.85
6/16/2022 1:08	32.65	6/16/2022 1:55	19.05	6/15/2022 4:28	5.87
6/16/2022 1:09	32.60	6/16/2022 1:56	19.05	6/15/2022 4:29	5.89
6/16/2022 1:10	32.62	6/16/2022 1:57	19.04	6/15/2022 4:30	5.86
6/16/2022 1:11	32.64	6/16/2022 1:58	19.06	6/15/2022 4:31	5.87
6/16/2022 1:12	32.63	6/16/2022 1:59	19.05	6/15/2022 4:32	5.87
6/16/2022 1:13	32.61	6/16/2022 2:00	19.06	6/15/2022 4:33	5.88
6/16/2022 1:14	32.61	6/16/2022 2:01	19.07	6/15/2022 4:34	5.87
6/16/2022 1:15	32.63	6/16/2022 2:02	19.03	6/15/2022 4:35	5.87
6/16/2022 1:16	32.62	6/16/2022 2:03	19.05	6/15/2022 4:36	5.87
6/16/2022 1:17	32.65	6/16/2022 2:04	19.05	6/15/2022 4:37	5.88
6/16/2022 1:18	32.60	6/16/2022 2:05	19.04	6/15/2022 4:38	5.86
6/16/2022 1:19	32.61	6/16/2022 2:06	19.04	6/15/2022 4:39	5.88
6/16/2022 1:20	32.64	6/16/2022 2:07	19.04	6/15/2022 4:40	5.89
6/16/2022 1:21	32.62	6/16/2022 2:08	19.04	6/15/2022 4:41	5.87
6/16/2022 1:22	32.63	6/16/2022 2:09	19.05	6/15/2022 4:42	5.89
6/16/2022 1:23	32.61	6/16/2022 2:10	19.05	6/15/2022 4:43	5.85
6/16/2022 1:24	32.62	6/16/2022 2:11	19.05	6/15/2022 4:44	5.85
6/16/2022 1:25	32.63	6/16/2022 2:12	19.05	6/15/2022 4:45	5.87
6/16/2022 1:26	32.61	6/16/2022 2:13	19.07	6/15/2022 4:46	5.88
6/16/2022 1:27	32.57	6/16/2022 2:14	19.06	6/15/2022 4:47	5.87
6/16/2022 1:28	32.66	6/16/2022 2:15	19.03	6/15/2022 4:48	5.88
6/16/2022 1:29	32.62	6/16/2022 2:16	19.06	6/15/2022 4:49	5.88
6/16/2022 1:30	32.63	6/16/2022 2:17	19.04	6/15/2022 4:50	5.90
6/16/2022 1:31	32.64	6/16/2022 2:18	19.04	6/15/2022 4:51	5.86
6/16/2022 1:32	32.61	6/16/2022 2:19	19.05	6/15/2022 4:52	5.89
6/16/2022 1:33	32.61	6/16/2022 2:20	19.03	6/15/2022 4:53	5.86
6/16/2022 1:34	32.64	6/16/2022 2:21	19.05	6/15/2022 4:54	5.87
6/16/2022 1:35	32.63	6/16/2022 2:22	19.03	6/15/2022 4:55	5.88
6/16/2022 1:36	32.62	6/16/2022 2:23	19.06	6/15/2022 4:56	5.85
6/16/2022 1:37	32.64	6/16/2022 2:24	19.03	6/15/2022 4:57	5.90
6/16/2022 1:38	32.64	6/16/2022 2:25	19.05	6/15/2022 4:58	5.88
6/16/2022 1:39	32.59	6/16/2022 2:26	19.05	6/15/2022 4:59	5.87
6/16/2022 1:40	32.63	6/16/2022 2:27	19.05	6/15/2022 5:00	5.89
6/16/2022 1:41	32.65	6/16/2022 2:28	19.05	6/15/2022 5:01	5.86
6/16/2022 1:42	32.64	6/16/2022 2:29	19.07	6/15/2022 5:02	5.88
6/16/2022 1:43	32.65	6/16/2022 2:30	19.08	6/15/2022 5:03	5.88
6/16/2022 1:44	32.62	6/16/2022 2:31	19.05	6/15/2022 5:04	5.89
6/16/2022 1:45	32.62	6/16/2022 2:32	19.07	6/15/2022 5:05	5.89
6/16/2022 1:46	32.64	6/16/2022 2:33	19.05	6/15/2022 5:06	5.88

6/16/2022 1:47	32.64	6/16/2022 2:34	19.04	6/15/2022 5:07	5.87
6/16/2022 1:48	32.66	6/16/2022 2:35	19.03	6/15/2022 5:08	5.85
6/16/2022 1:49	32.65	6/16/2022 2:36	19.05	6/15/2022 5:09	5.86
6/16/2022 1:50	32.63	6/16/2022 2:37	19.06	6/15/2022 5:10	5.90
6/16/2022 1:51	32.63	6/16/2022 2:38	19.06	6/15/2022 5:11	5.85
6/16/2022 1:52	32.62	6/16/2022 2:39	19.04	6/15/2022 5:12	5.89
6/16/2022 1:53	32.61	6/16/2022 2:40	19.04	6/15/2022 5:13	5.88
6/16/2022 1:54	32.61	6/16/2022 2:41	19.04	6/15/2022 5:14	5.89
6/16/2022 1:55	32.64	6/16/2022 2:42	19.06	6/15/2022 5:15	5.89
6/16/2022 1:56	32.63	6/16/2022 2:43	19.07	6/15/2022 5:16	5.87
6/16/2022 1:57	32.62	6/16/2022 2:44	19.03	6/15/2022 5:17	5.85
6/16/2022 1:58	32.61	6/16/2022 2:45	19.05	6/15/2022 5:18	5.85
6/16/2022 1:59	32.63	6/16/2022 2:46	19.04	6/15/2022 5:19	5.88
6/16/2022 2:00	32.62	6/16/2022 2:47	19.07	6/15/2022 5:20	5.88
6/16/2022 2:01	32.62	6/16/2022 2:48	19.05	6/15/2022 5:21	5.87
6/16/2022 2:02	32.61	6/16/2022 2:49	19.03	6/15/2022 5:22	5.86
6/16/2022 2:03	32.60	6/16/2022 2:50	19.07	6/15/2022 5:23	5.86
6/16/2022 2:04	32.60	6/16/2022 2:51	19.04	6/15/2022 5:24	5.86
6/16/2022 2:05	32.61	6/16/2022 2:52	19.04	6/15/2022 5:25	5.88
6/16/2022 2:06	32.60	6/16/2022 2:53	19.07	6/15/2022 5:26	5.87
6/16/2022 2:07	32.62	6/16/2022 2:54	19.05	6/15/2022 5:27	5.86
6/16/2022 2:08	32.62	6/16/2022 2:55	19.07	6/15/2022 5:28	5.87
6/16/2022 2:09	32.63	6/16/2022 2:56	19.02	6/15/2022 5:29	5.87
6/16/2022 2:10	32.60	6/16/2022 2:57	19.05	6/15/2022 5:30	5.87
6/16/2022 2:11	32.63	6/16/2022 2:58	19.05	6/15/2022 5:31	5.87
6/16/2022 2:12	32.63	6/16/2022 2:59	19.04	6/15/2022 5:32	5.90
6/16/2022 2:13	32.64	6/16/2022 3:00	19.05	6/15/2022 5:33	5.85
6/16/2022 2:14	32.62	6/16/2022 3:01	19.05	6/15/2022 5:34	5.89
6/16/2022 2:15	32.61	6/16/2022 3:02	19.04	6/15/2022 5:35	5.88
6/16/2022 2:16	32.65	6/16/2022 3:03	19.06	6/15/2022 5:36	5.90
6/16/2022 2:17	32.61	6/16/2022 3:04	19.05	6/15/2022 5:37	5.85
6/16/2022 2:18	32.62	6/16/2022 3:05	19.04	6/15/2022 5:38	5.87
6/16/2022 2:19	32.59	6/16/2022 3:06	19.04	6/15/2022 5:39	5.91
6/16/2022 2:20	32.65	6/16/2022 3:07	19.04	6/15/2022 5:40	5.88
6/16/2022 2:21	32.64	6/16/2022 3:08	19.05	6/15/2022 5:41	5.86
6/16/2022 2:22	32.63	6/16/2022 3:09	19.06	6/15/2022 5:42	5.90
6/16/2022 2:23	32.63	6/16/2022 3:10	19.04	6/15/2022 5:43	5.88
6/16/2022 2:24	32.60	6/16/2022 3:11	19.02	6/15/2022 5:44	5.88
6/16/2022 2:25	32.64	6/16/2022 3:12	19.05	6/15/2022 5:45	5.87
6/16/2022 2:26	32.59	6/16/2022 3:13	19.04	6/15/2022 5:46	5.86
6/16/2022 2:27	32.61	6/16/2022 3:14	19.06	6/15/2022 5:47	5.87
6/16/2022 2:28	32.61	6/16/2022 3:15	19.04	6/15/2022 5:48	5.90
6/16/2022 2:29	32.63	6/16/2022 3:16	19.04	6/15/2022 5:49	5.86
6/16/2022 2:30	32.62	6/16/2022 3:17	19.05	6/15/2022 5:50	5.89
6/16/2022 2:31	32.61	6/16/2022 3:18	19.04	6/15/2022 5:51	5.86
6/16/2022 2:32	32.60	6/16/2022 3:19	19.04	6/15/2022 5:52	5.85
6/16/2022 2:33	32.60	6/16/2022 3:20	19.07	6/15/2022 5:53	5.89
6/16/2022 2:34	32.64	6/16/2022 3:21	19.05	6/15/2022 5:54	5.88
6/16/2022 2:35	32.60	6/16/2022 3:22	19.05	6/15/2022 5:55	5.88
6/16/2022 2:36	32.59	6/16/2022 3:23	19.05	6/15/2022 5:56	5.87
6/16/2022 2:37	32.60	6/16/2022 3:24	19.04	6/15/2022 5:57	5.85
6/16/2022 2:38	32.59	6/16/2022 3:25	19.05	6/15/2022 5:58	5.87
6/16/2022 2:39	32.63	6/16/2022 3:26	19.07	6/15/2022 5:59	5.89
6/16/2022 2:40	32.59	6/16/2022 3:27	19.07	6/15/2022 6:00	5.91
6/16/2022 2:41	32.65	6/16/2022 3:28	19.07	6/15/2022 6:01	5.88
6/16/2022 2:42	32.61	6/16/2022 3:29	19.07	6/15/2022 6:02	5.88
6/16/2022 2:43	32.61	6/16/2022 3:30	19.06	6/15/2022 6:03	5.87
6/16/2022 2:44	32.63	6/16/2022 3:31	19.04	6/15/2022 6:04	5.87
6/16/2022 2:45	32.61	6/16/2022 3:32	19.05	6/15/2022 6:05	5.90
6/16/2022 2:46	32.59	6/16/2022 3:33	19.05	6/15/2022 6:06	5.89
6/16/2022 2:47	32.63	6/16/2022 3:34	19.05	6/15/2022 6:07	5.87
6/16/2022 2:48	32.62	6/16/2022 3:35	19.06	6/15/2022 6:08	5.89
6/16/2022 2:49	32.59	6/16/2022 3:36	19.04	6/15/2022 6:09	5.88
6/16/2022 2:50	32.63	6/16/2022 3:37	19.04	6/15/2022 6:10	5.86
6/16/2022 2:51	32.62	6/16/2022 3:38	19.06	6/15/2022 6:11	5.89
6/16/2022 2:52	32.60	6/16/2022 3:39	19.04	6/15/2022 6:12	5.84
6/16/2022 2:53	32.64	6/16/2022 3:40	19.07	6/15/2022 6:13	5.91
6/16/2022 2:54	32.59	6/16/2022 3:41	19.06	6/15/2022 6:14	5.87
6/16/2022 2:55	32.62	6/16/2022 3:42	19.03	6/15/2022 6:15	5.87
6/16/2022 2:56	32.59	6/16/2022 3:43	19.07	6/15/2022 6:16	5.89
6/16/2022 2:57	32.64	6/16/2022 3:44	19.04	6/15/2022 6:17	5.87
6/16/2022 2:58	32.62	6/16/2022 3:45	19.08	6/15/2022 6:18	5.88
6/16/2022 2:59	32.64	6/16/2022 3:46	19.07	6/15/2022 6:19	5.88
6/16/2022 3:00	32.57	6/16/2022 3:47	19.04	6/15/2022 6:20	5.85
6/16/2022 3:01	32.60	6/16/2022 3:48	19.06	6/15/2022 6:21	5.86
6/16/2022 3:02	32.60	6/16/2022 3:49	19.06	6/15/2022 6:22	5.87
6/16/2022 3:03	32.59	6/16/2022 3:50	19.07	6/15/2022 6:23	5.90
6/16/2022 3:04	32.61	6/16/2022 3:51	19.05	6/15/2022 6:24	5.88
6/16/2022 3:05	32.62	6/16/2022 3:52	19.07	6/15/2022 6:25	5.87
6/16/2022 3:06	32.59	6/16/2022 3:53	19.05	6/15/2022 6:26	5.88
6/16/2022 3:07	32.60	6/16/2022 3:54	19.03	6/15/2022 6:27	5.88
6/16/2022 3:08	32.58	6/16/2022 3:55	19.07	6/15/2022 6:28	5.89
6/16/2022 3:09	32.61	6/16/2022 3:56	19.05	6/15/2022 6:29	5.89
6/16/2022 3:10	32.60	6/16/2022 3:57	19.05	6/15/2022 6:30	5.87
6/16/2022 3:11	32.61	6/16/2022 3:58	19.07	6/15/2022 6:31	5.88
6/16/2022 3:12	32.61	6/16/2022 3:59	19.08	6/15/2022 6:32	5.87
6/16/2022 3:13	32.61	6/16/2022 4:00	19.06	6/15/2022 6:33	5.88
6/16/2022 3:14	32.57	6/16/2022 4:01	19.06	6/15/2022 6:34	5.87

6/16/2022 3:15	32.58	6/16/2022 4:02	19.07	6/15/2022 6:35	5.88
6/16/2022 3:16	32.62	6/16/2022 4:03	19.05	6/15/2022 6:36	5.89
6/16/2022 3:17	32.61	6/16/2022 4:04	19.06	6/15/2022 6:37	5.88
6/16/2022 3:18	32.61	6/16/2022 4:05	19.06	6/15/2022 6:38	5.87
6/16/2022 3:19	32.62	6/16/2022 4:06	19.05	6/15/2022 6:39	5.87
6/16/2022 3:20	32.61	6/16/2022 4:07	19.05	6/15/2022 6:40	5.88
6/16/2022 3:21	32.59	6/16/2022 4:08	19.04	6/15/2022 6:41	5.90
6/16/2022 3:22	32.60	6/16/2022 4:09	19.06	6/15/2022 6:42	5.87
6/16/2022 3:23	32.62	6/16/2022 4:10	19.05	6/15/2022 6:43	5.85
6/16/2022 3:24	32.63	6/16/2022 4:11	19.06	6/15/2022 6:44	5.89
6/16/2022 3:25	32.59	6/16/2022 4:12	19.06	6/15/2022 6:45	5.90
6/16/2022 3:26	32.60	6/16/2022 4:13	19.03	6/15/2022 6:46	5.89
6/16/2022 3:27	32.62	6/16/2022 4:14	19.04	6/15/2022 6:47	5.87
6/16/2022 3:28	32.62	6/16/2022 4:15	19.06	6/15/2022 6:48	5.87
6/16/2022 3:29	32.60	6/16/2022 4:16	19.07	6/15/2022 6:49	5.87
6/16/2022 3:30	32.63	6/16/2022 4:17	19.06	6/15/2022 6:50	5.90
6/16/2022 3:31	32.60	6/16/2022 4:18	19.07	6/15/2022 6:51	5.91
6/16/2022 3:32	32.59	6/16/2022 4:19	19.07	6/15/2022 6:52	5.86
6/16/2022 3:33	32.62	6/16/2022 4:20	19.04	6/15/2022 6:53	5.86
6/16/2022 3:34	32.58	6/16/2022 4:21	19.06	6/15/2022 6:54	5.89
6/16/2022 3:35	32.61	6/16/2022 4:22	19.08	6/15/2022 6:55	5.88
6/16/2022 3:36	32.58	6/16/2022 4:23	19.05	6/15/2022 6:56	5.86
6/16/2022 3:37	32.61	6/16/2022 4:24	19.05	6/15/2022 6:57	5.87
6/16/2022 3:38	32.55	6/16/2022 4:25	19.07	6/15/2022 6:58	5.87
6/16/2022 3:39	32.62	6/16/2022 4:26	19.06	6/15/2022 6:59	5.85
6/16/2022 3:40	32.63	6/16/2022 4:27	19.04	6/15/2022 7:00	5.89
6/16/2022 3:41	32.62	6/16/2022 4:28	19.05	6/15/2022 7:01	5.89
6/16/2022 3:42	32.61	6/16/2022 4:29	19.04	6/15/2022 7:02	5.90
6/16/2022 3:43	32.61	6/16/2022 4:30	19.07	6/15/2022 7:03	5.85
6/16/2022 3:44	32.62	6/16/2022 4:31	19.06	6/15/2022 7:04	5.87
6/16/2022 3:45	32.63	6/16/2022 4:32	19.05	6/15/2022 7:05	5.84
6/16/2022 3:46	32.61	6/16/2022 4:33	19.06	6/15/2022 7:06	5.91
6/16/2022 3:47	32.59	6/16/2022 4:34	19.05	6/15/2022 7:07	5.90
6/16/2022 3:48	32.58	6/16/2022 4:35	19.06	6/15/2022 7:08	5.88
6/16/2022 3:49	32.60	6/16/2022 4:36	19.06	6/15/2022 7:09	5.87
6/16/2022 3:50	32.62	6/16/2022 4:37	19.06	6/15/2022 7:10	5.89
6/16/2022 3:51	32.62	6/16/2022 4:38	19.06	6/15/2022 7:11	5.89
6/16/2022 3:52	32.62	6/16/2022 4:39	19.04	6/15/2022 7:12	5.87
6/16/2022 3:53	32.59	6/16/2022 4:40	19.05	6/15/2022 7:13	5.86
6/16/2022 3:54	32.58	6/16/2022 4:41	19.08	6/15/2022 7:14	5.86
6/16/2022 3:55	32.59	6/16/2022 4:42	19.06	6/15/2022 7:15	5.87
6/16/2022 3:56	32.59	6/16/2022 4:43	19.03	6/15/2022 7:16	5.89
6/16/2022 3:57	32.63	6/16/2022 4:44	19.06	6/15/2022 7:17	5.91
6/16/2022 3:58	32.60	6/16/2022 4:45	19.07	6/15/2022 7:18	5.86
6/16/2022 3:59	32.58	6/16/2022 4:46	19.06	6/15/2022 7:19	5.90
6/16/2022 4:00	32.61	6/16/2022 4:47	19.04	6/15/2022 7:20	5.86
6/16/2022 4:01	32.59	6/16/2022 4:48	19.06	6/15/2022 7:21	5.88
6/16/2022 4:02	32.63	6/16/2022 4:49	19.04	6/15/2022 7:22	5.90
6/16/2022 4:03	32.62	6/16/2022 4:50	19.08	6/15/2022 7:23	5.84
6/16/2022 4:04	32.61	6/16/2022 4:51	19.08	6/15/2022 7:24	5.87
6/16/2022 4:05	32.60	6/16/2022 4:52	19.03	6/15/2022 7:25	5.88
6/16/2022 4:06	32.59	6/16/2022 4:53	19.06	6/15/2022 7:26	5.87
6/16/2022 4:07	32.59	6/16/2022 4:54	19.07	6/15/2022 7:27	5.90
6/16/2022 4:08	32.57	6/16/2022 4:55	19.05	6/15/2022 7:28	5.88
6/16/2022 4:09	32.60	6/16/2022 4:56	19.06	6/15/2022 7:29	5.91
6/16/2022 4:10	32.63	6/16/2022 4:57	19.06	6/15/2022 7:30	5.88
6/16/2022 4:11	32.59	6/16/2022 4:58	19.04	6/15/2022 7:31	5.88
6/16/2022 4:12	32.60	6/16/2022 4:59	19.05	6/15/2022 7:32	5.87
6/16/2022 4:13	32.58	6/16/2022 5:00	19.05	6/15/2022 7:33	5.89
6/16/2022 4:14	32.59	6/16/2022 5:01	19.06	6/15/2022 7:34	5.87
6/16/2022 4:15	32.59	6/16/2022 5:02	19.09	6/15/2022 7:35	5.90
6/16/2022 4:16	32.64	6/16/2022 5:03	19.04	6/15/2022 7:36	5.87
6/16/2022 4:17	32.64	6/16/2022 5:04	19.06	6/15/2022 7:37	5.86
6/16/2022 4:18	32.61	6/16/2022 5:05	19.07	6/15/2022 7:38	5.85
6/16/2022 4:19	32.59	6/16/2022 5:06	19.06	6/15/2022 7:39	5.88
6/16/2022 4:20	32.59	6/16/2022 5:07	19.06	6/15/2022 7:40	5.87
6/16/2022 4:21	32.61	6/16/2022 5:08	19.05	6/15/2022 7:41	5.86
6/16/2022 4:22	32.57	6/16/2022 5:09	19.06	6/15/2022 7:42	5.91
6/16/2022 4:23	32.62	6/16/2022 5:10	19.06	6/15/2022 7:43	5.87
6/16/2022 4:24	32.59	6/16/2022 5:11	19.06	6/15/2022 7:44	5.87
6/16/2022 4:25	32.60	6/16/2022 5:12	19.08	6/15/2022 7:45	5.87
6/16/2022 4:26	32.60	6/16/2022 5:13	19.07	6/15/2022 7:46	5.86
6/16/2022 4:27	32.59	6/16/2022 5:14	19.07	6/15/2022 7:47	5.87
6/16/2022 4:28	32.59	6/16/2022 5:15	19.07	6/15/2022 7:48	5.89
6/16/2022 4:29	32.58	6/16/2022 5:16	19.05	6/15/2022 7:49	5.89
6/16/2022 4:30	32.61	6/16/2022 5:17	19.04	6/15/2022 7:50	5.86
6/16/2022 4:31	32.56	6/16/2022 5:18	19.04	6/15/2022 7:51	5.87
6/16/2022 4:32	32.57	6/16/2022 5:19	19.09	6/15/2022 7:52	5.89
6/16/2022 4:33	32.59	6/16/2022 5:20	19.08	6/15/2022 7:53	5.89
6/16/2022 4:34	32.61	6/16/2022 5:21	19.06	6/15/2022 7:54	5.90
6/16/2022 4:35	32.58	6/16/2022 5:22	19.07	6/15/2022 7:55	5.86
6/16/2022 4:36	32.62	6/16/2022 5:23	19.04	6/15/2022 7:56	5.88
6/16/2022 4:37	32.60	6/16/2022 5:24	19.05	6/15/2022 7:57	5.90
6/16/2022 4:38	32.61	6/16/2022 5:25	19.07	6/15/2022 7:58	5.91
6/16/2022 4:39	32.59	6/16/2022 5:26	19.05	6/15/2022 7:59	5.91
6/16/2022 4:40	32.60	6/16/2022 5:27	19.07	6/15/2022 8:00	5.88
6/16/2022 4:41	32.58	6/16/2022 5:28	19.08	6/15/2022 8:01	5.88
6/16/2022 4:42	32.60	6/16/2022 5:29	19.07	6/15/2022 8:02	5.86

6/16/2022 4:43	32.56	6/16/2022 5:30	19.09	6/15/2022 8:03	5.88
6/16/2022 4:44	32.60	6/16/2022 5:31	19.10	6/15/2022 8:04	5.90
6/16/2022 4:45	32.57	6/16/2022 5:32	19.05	6/15/2022 8:05	5.87
6/16/2022 4:46	32.57	6/16/2022 5:33	19.05	6/15/2022 8:06	5.89
6/16/2022 4:47	32.61	6/16/2022 5:34	19.09	6/15/2022 8:07	5.90
6/16/2022 4:48	32.58	6/16/2022 5:35	19.06	6/15/2022 8:08	5.91
6/16/2022 4:49	32.60	6/16/2022 5:36	19.07	6/15/2022 8:09	5.90
6/16/2022 4:50	32.59	6/16/2022 5:37	19.06	6/15/2022 8:10	5.87
6/16/2022 4:51	32.59	6/16/2022 5:38	19.06	6/15/2022 8:11	5.87
6/16/2022 4:52	32.62	6/16/2022 5:39	19.06	6/15/2022 8:12	5.87
6/16/2022 4:53	32.59	6/16/2022 5:40	19.07	6/15/2022 8:13	5.88
6/16/2022 4:54	32.60	6/16/2022 5:41	19.09	6/15/2022 8:14	5.85
6/16/2022 4:55	32.57	6/16/2022 5:42	19.10	6/15/2022 8:15	5.89
6/16/2022 4:56	32.57	6/16/2022 5:43	19.07	6/15/2022 8:16	5.88
6/16/2022 4:57	32.59	6/16/2022 5:44	19.04	6/15/2022 8:17	5.88
6/16/2022 4:58	32.57	6/16/2022 5:45	19.08	6/15/2022 8:18	5.87
6/16/2022 4:59	32.57	6/16/2022 5:46	19.07	6/15/2022 8:19	5.86
6/16/2022 5:00	32.58	6/16/2022 5:47	19.04	6/15/2022 8:20	5.91
6/16/2022 5:01	32.61	6/16/2022 5:48	19.05	6/15/2022 8:21	5.89
6/16/2022 5:02	32.60	6/16/2022 5:49	19.09	6/15/2022 8:22	5.86
6/16/2022 5:03	32.61	6/16/2022 5:50	19.06	6/15/2022 8:23	5.86
6/16/2022 5:04	32.59	6/16/2022 5:51	19.06	6/15/2022 8:24	5.88
6/16/2022 5:05	32.60	6/16/2022 5:52	19.08	6/15/2022 8:25	5.88
6/16/2022 5:06	32.61	6/16/2022 5:53	19.06	6/15/2022 8:26	5.88
6/16/2022 5:07	32.59	6/16/2022 5:54	19.06	6/15/2022 8:27	5.86
6/16/2022 5:08	32.58	6/16/2022 5:55	19.07	6/15/2022 8:28	5.88
6/16/2022 5:09	32.59	6/16/2022 5:56	19.07	6/15/2022 8:29	5.88
6/16/2022 5:10	32.60	6/16/2022 5:57	19.07	6/15/2022 8:30	5.89
6/16/2022 5:11	32.61	6/16/2022 5:58	19.07	6/15/2022 8:31	5.89
6/16/2022 5:12	32.60	6/16/2022 5:59	19.07	6/15/2022 8:32	5.89
6/16/2022 5:13	32.60	6/16/2022 6:00	19.07	6/15/2022 8:33	5.87
6/16/2022 5:14	32.62	6/16/2022 6:01	19.05	6/15/2022 8:34	5.89
6/16/2022 5:15	32.62	6/16/2022 6:02	19.08	6/15/2022 8:35	5.91
6/16/2022 5:16	32.57	6/16/2022 6:03	19.07	6/15/2022 8:36	5.87
6/16/2022 5:17	32.61	6/16/2022 6:04	19.09	6/15/2022 8:37	5.90
6/16/2022 5:18	32.59	6/16/2022 6:05	19.06	6/15/2022 8:38	5.88
6/16/2022 5:19	32.60	6/16/2022 6:06	19.09	6/15/2022 8:39	5.88
6/16/2022 5:20	32.57	6/16/2022 6:07	19.07	6/15/2022 8:40	5.91
6/16/2022 5:21	32.61	6/16/2022 6:08	19.07	6/15/2022 8:41	5.88
6/16/2022 5:22	32.59	6/16/2022 6:09	19.09	6/15/2022 8:42	5.91
6/16/2022 5:23	32.61	6/16/2022 6:10	19.06	6/15/2022 8:43	5.89
6/16/2022 5:24	32.58	6/16/2022 6:11	19.05	6/15/2022 8:44	5.91
6/16/2022 5:25	32.60	6/16/2022 6:12	19.07	6/15/2022 8:45	5.88
6/16/2022 5:26	32.60	6/16/2022 6:13	19.08	6/15/2022 8:46	5.87
6/16/2022 5:27	32.59	6/16/2022 6:14	19.08	6/15/2022 8:47	5.86
6/16/2022 5:28	32.61	6/16/2022 6:15	19.09	6/15/2022 8:48	5.85
6/16/2022 5:29	32.57	6/16/2022 6:16	19.07	6/15/2022 8:49	5.88
6/16/2022 5:30	32.59	6/16/2022 6:17	19.07	6/15/2022 8:50	5.87
6/16/2022 5:31	32.61	6/16/2022 6:18	19.08	6/15/2022 8:51	5.87
6/16/2022 5:32	32.60	6/16/2022 6:19	19.10	6/15/2022 8:52	5.89
6/16/2022 5:33	32.59	6/16/2022 6:20	19.10	6/15/2022 8:53	5.88
6/16/2022 5:34	32.60	6/16/2022 6:21	19.10	6/15/2022 8:54	5.87
6/16/2022 5:35	32.60	6/16/2022 6:22	19.10	6/15/2022 8:55	5.88
6/16/2022 5:36	32.62	6/16/2022 6:23	19.11	6/15/2022 8:56	5.91
6/16/2022 5:37	32.59	6/16/2022 6:24	19.11	6/15/2022 8:57	5.91
6/16/2022 5:38	32.60	6/16/2022 6:25	19.12	6/15/2022 8:58	5.90
6/16/2022 5:39	32.61	6/16/2022 6:26	19.10	6/15/2022 8:59	5.90
6/16/2022 5:40	32.58	6/16/2022 6:27	19.11	6/15/2022 9:00	5.89
6/16/2022 5:41	32.61	6/16/2022 6:28	19.13	6/15/2022 9:01	5.87
6/16/2022 5:42	32.60	6/16/2022 6:29	19.11	6/15/2022 9:02	5.90
6/16/2022 5:43	32.61	6/16/2022 6:30	19.11	6/15/2022 9:03	5.90
6/16/2022 5:44	32.61	6/16/2022 6:31	19.12	6/15/2022 9:04	5.89
6/16/2022 5:45	32.57	6/16/2022 6:32	19.12	6/15/2022 9:05	5.87
6/16/2022 5:46	32.59	6/16/2022 6:33	19.74	6/15/2022 9:06	5.90
6/16/2022 5:47	32.60	6/16/2022 6:34	19.82	6/15/2022 9:07	5.87
6/16/2022 5:48	32.59	6/16/2022 6:35	19.88	6/15/2022 9:08	5.93
6/16/2022 5:49	32.61	6/16/2022 6:36	19.88	6/15/2022 9:09	5.91
6/16/2022 5:50	32.59	6/16/2022 6:37	19.94	6/15/2022 9:10	5.88
6/16/2022 5:51	32.62	6/16/2022 6:38	19.36	6/15/2022 9:11	5.89
6/16/2022 5:52	32.57	6/16/2022 6:39	19.31	6/15/2022 9:12	5.91
6/16/2022 5:53	32.58	6/16/2022 6:40	19.26	6/15/2022 9:13	5.92
6/16/2022 5:54	32.59	6/16/2022 6:41	19.24	6/15/2022 9:14	5.90
6/16/2022 5:55	32.59	6/16/2022 6:42	19.23	6/15/2022 9:15	5.87
6/16/2022 5:56	32.60	6/16/2022 6:43	19.23	6/15/2022 9:16	5.89
6/16/2022 5:57	32.59	6/16/2022 6:44	19.20	6/15/2022 9:17	5.90
6/16/2022 5:58	32.61	6/16/2022 6:45	19.22	6/15/2022 9:18	5.89
6/16/2022 5:59	32.59	6/16/2022 6:46	19.20	6/15/2022 9:19	5.89
6/16/2022 6:00	32.58	6/16/2022 6:47	19.19	6/15/2022 9:20	5.91
6/16/2022 6:01	32.60	6/16/2022 6:48	19.18	6/15/2022 9:21	5.89
6/16/2022 6:02	32.63	6/16/2022 6:49	19.19	6/15/2022 9:22	5.90
6/16/2022 6:03	32.60	6/16/2022 6:50	19.19	6/15/2022 9:23	5.87
6/16/2022 6:04	32.58	6/16/2022 6:51	19.18	6/15/2022 9:24	5.91
6/16/2022 6:05	32.59	6/16/2022 6:52	19.18	6/15/2022 9:25	5.90
6/16/2022 6:06	32.56	6/16/2022 6:53	19.19	6/15/2022 9:26	5.89
6/16/2022 6:07	32.61	6/16/2022 6:54	19.18	6/15/2022 9:27	5.89
6/16/2022 6:08	32.62	6/16/2022 6:55	19.17	6/15/2022 9:28	5.87
6/16/2022 6:09	32.59	6/16/2022 6:56	19.16	6/15/2022 9:29	5.88
6/16/2022 6:10	32.62	6/16/2022 6:57	19.15	6/15/2022 9:30	5.87

6/16/2022 6:11	32.59	6/16/2022 6:58	19.15	6/15/2022 9:31	5.92
6/16/2022 6:12	32.60	6/16/2022 6:59	19.16	6/15/2022 9:32	5.90
6/16/2022 6:13	32.60	6/16/2022 7:00	19.14	6/15/2022 9:33	5.89
6/16/2022 6:14	32.57	6/16/2022 7:01	19.16	6/15/2022 9:34	5.88
6/16/2022 6:15	32.60	6/16/2022 7:02	19.15	6/15/2022 9:35	5.89
6/16/2022 6:16	32.60	6/16/2022 7:03	19.15	6/15/2022 9:36	5.88
6/16/2022 6:17	32.61	6/16/2022 7:04	19.15	6/15/2022 9:37	5.89
6/16/2022 6:18	32.60	6/16/2022 7:05	19.12	6/15/2022 9:38	5.90
6/16/2022 6:19	32.60	6/16/2022 7:06	19.17	6/15/2022 9:39	5.89
6/16/2022 6:20	32.60	6/16/2022 7:07	19.17	6/15/2022 9:40	5.87
6/16/2022 6:21	32.60	6/16/2022 7:08	19.14	6/15/2022 9:41	5.90
6/16/2022 6:22	32.57	6/16/2022 7:09	19.14	6/15/2022 9:42	5.90
6/16/2022 6:23	32.61	6/16/2022 7:10	19.15	6/15/2022 9:43	8.16
6/16/2022 6:24	32.62	6/16/2022 7:11	19.14	6/15/2022 9:44	8.63
6/16/2022 6:25	32.57	6/16/2022 7:12	19.14	6/15/2022 9:45	6.07
6/16/2022 6:26	32.62	6/16/2022 7:13	19.15	6/15/2022 9:46	5.90
6/16/2022 6:27	32.59	6/16/2022 7:14	19.13	6/15/2022 9:47	5.94
6/16/2022 6:28	32.61	6/16/2022 7:15	19.13	6/15/2022 9:48	5.93
6/16/2022 6:29	32.61	6/16/2022 7:16	19.15	6/15/2022 9:49	5.92
6/16/2022 6:30	32.61	6/16/2022 7:17	19.13	6/15/2022 9:50	5.90
6/16/2022 6:31	32.61	6/16/2022 7:18	19.14	6/15/2022 9:51	5.88
6/16/2022 6:32	32.64	6/16/2022 7:19	19.14	6/15/2022 9:52	5.85
6/16/2022 6:33	32.62	6/16/2022 7:20	19.13	6/15/2022 9:53	5.91
6/16/2022 6:34	32.59	6/16/2022 7:21	19.14	6/15/2022 9:54	5.91
6/16/2022 6:35	32.63	6/16/2022 7:22	19.10	6/15/2022 9:55	5.88
6/16/2022 6:36	32.61	6/16/2022 7:23	19.13	6/15/2022 9:56	5.88
6/16/2022 6:37	32.61	6/16/2022 7:24	19.12	6/15/2022 9:57	5.88
6/16/2022 6:38	32.56	6/16/2022 7:25	19.11	6/15/2022 9:58	5.89
6/16/2022 6:39	32.60	6/16/2022 7:26	19.11	6/15/2022 9:59	5.91
6/16/2022 6:40	32.61	6/16/2022 7:27	19.13	6/15/2022 10:00	5.89
6/16/2022 6:41	32.60	6/16/2022 7:28	19.11	6/15/2022 10:01	5.84
6/16/2022 6:42	32.62	6/16/2022 7:29	19.10	6/15/2022 10:02	5.87
6/16/2022 6:43	32.59	6/16/2022 7:30	19.13	6/15/2022 10:03	5.87
6/16/2022 6:44	32.61	6/16/2022 7:31	19.09	6/15/2022 10:04	5.87
6/16/2022 6:45	32.62	6/16/2022 7:32	19.12	6/15/2022 10:05	5.88
6/16/2022 6:46	32.64	6/16/2022 7:33	19.10	6/15/2022 10:06	5.90
6/16/2022 6:47	32.66	6/16/2022 7:34	19.11	6/15/2022 10:07	5.90
6/16/2022 6:48	32.66	6/16/2022 7:35	19.11	6/15/2022 10:08	5.90
6/16/2022 6:49	32.67	6/16/2022 7:36	19.13	6/15/2022 10:09	5.91
6/16/2022 6:50	32.65	6/16/2022 7:37	19.08	6/15/2022 10:10	5.90
6/16/2022 6:51	32.63	6/16/2022 7:38	19.11	6/15/2022 10:11	5.91
6/16/2022 6:52	32.65	6/16/2022 7:39	19.12	6/15/2022 10:12	5.87
6/16/2022 6:53	32.66	6/16/2022 7:40	19.08	6/15/2022 10:13	5.90
6/16/2022 6:54	32.63	6/16/2022 7:41	19.09	6/15/2022 10:14	5.91
6/16/2022 6:55	32.63	6/16/2022 7:42	19.11	6/15/2022 10:15	5.90
6/16/2022 6:56	32.63	6/16/2022 7:43	19.11	6/15/2022 10:16	5.87
6/16/2022 6:57	32.61	6/16/2022 7:44	19.09	6/15/2022 10:17	5.86
6/16/2022 6:58	32.65	6/16/2022 7:45	19.10	6/15/2022 10:18	5.89
6/16/2022 6:59	32.63	6/16/2022 7:46	19.12	6/15/2022 10:19	5.91
6/16/2022 7:00	32.64	6/16/2022 7:47	19.12	6/15/2022 10:20	5.90
6/16/2022 7:01	32.63	6/16/2022 7:48	19.11	6/15/2022 10:21	5.87
6/16/2022 7:02	32.65	6/16/2022 7:49	19.08	6/15/2022 10:22	5.89
6/16/2022 7:03	32.67	6/16/2022 7:50	19.09	6/15/2022 10:23	5.92
6/16/2022 7:04	32.71	6/16/2022 7:51	19.06	6/15/2022 10:24	5.88
6/16/2022 7:05	32.72	6/16/2022 7:52	19.10	6/15/2022 10:25	5.86
6/16/2022 7:06	32.77	6/16/2022 7:53	19.11	6/15/2022 10:26	5.91
6/16/2022 7:07	32.78	6/16/2022 7:54	19.10	6/15/2022 10:27	5.89
6/16/2022 7:08	32.79	6/16/2022 7:55	19.08	6/15/2022 10:28	5.89
6/16/2022 7:09	32.81	6/16/2022 7:56	19.10	6/15/2022 10:29	5.89
6/16/2022 7:10	32.83	6/16/2022 7:57	19.10	6/15/2022 10:30	5.90
6/16/2022 7:11	32.86	6/16/2022 7:58	19.09	6/15/2022 10:31	5.88
6/16/2022 7:12	32.88	6/16/2022 7:59	19.10	6/15/2022 10:32	5.89
6/16/2022 7:13	32.90	6/16/2022 8:00	19.09	6/15/2022 10:33	5.88
6/16/2022 7:14	32.90	6/16/2022 8:01	19.10	6/15/2022 10:34	5.89
6/16/2022 7:15	32.92	6/16/2022 8:02	19.10	6/15/2022 10:35	5.91
6/16/2022 7:16	32.92	6/16/2022 8:03	19.10	6/15/2022 10:36	5.92
6/16/2022 7:17	32.98	6/16/2022 8:04	19.09	6/15/2022 10:37	5.87
6/16/2022 7:18	32.98	6/16/2022 8:05	19.09	6/15/2022 10:38	5.91
6/16/2022 7:19	32.94	6/16/2022 8:06	19.09	6/15/2022 10:39	5.88
6/16/2022 7:20	32.96	6/16/2022 8:07	19.08	6/15/2022 10:40	5.86
6/16/2022 7:21	33.01	6/16/2022 8:08	19.09	6/15/2022 10:41	5.88
6/16/2022 7:22	33.01	6/16/2022 8:09	19.10	6/15/2022 10:42	5.86
6/16/2022 7:23	33.02	6/16/2022 8:10	19.07	6/15/2022 10:43	5.88
6/16/2022 7:24	33.02	6/16/2022 8:11	19.10	6/15/2022 10:44	5.88
6/16/2022 7:25	33.04	6/16/2022 8:12	19.09	6/15/2022 10:45	5.88
6/16/2022 7:26	33.06	6/16/2022 8:13	19.10	6/15/2022 10:46	5.89
6/16/2022 7:27	33.07	6/16/2022 8:14	19.10	6/15/2022 10:47	5.89
6/16/2022 7:28	33.04	6/16/2022 8:15	19.12	6/15/2022 10:48	5.90
6/16/2022 7:29	33.08	6/16/2022 8:16	19.12	6/15/2022 10:49	5.88
6/16/2022 7:30	33.08	6/16/2022 8:17	19.10	6/15/2022 10:50	5.91
6/16/2022 7:31	33.11	6/16/2022 8:18	19.09	6/15/2022 10:51	5.89
6/16/2022 7:32	33.10	6/16/2022 8:19	19.09	6/15/2022 10:52	8.06
6/16/2022 7:33	33.08	6/16/2022 8:20	19.08	6/15/2022 10:53	8.74
6/16/2022 7:34	33.10	6/16/2022 8:21	19.10	6/15/2022 10:54	6.41
6/16/2022 7:35	33.12	6/16/2022 8:22	19.11	6/15/2022 10:55	5.95
6/16/2022 7:36	33.10	6/16/2022 8:23	19.09	6/15/2022 10:56	5.93
6/16/2022 7:37	33.11	6/16/2022 8:24	19.10	6/15/2022 10:57	5.92
6/16/2022 7:38	33.15	6/16/2022 8:25	19.12	6/15/2022 10:58	5.93

6/16/2022 7:39	33.12	6/16/2022 8:26	19.14	6/15/2022 10:59	5.91
6/16/2022 7:40	33.14	6/16/2022 8:27	19.10	6/15/2022 11:00	5.89
6/16/2022 7:41	33.16	6/16/2022 8:28	19.10	6/15/2022 11:01	5.91
6/16/2022 7:42	33.17	6/16/2022 8:29	19.11	6/15/2022 11:02	5.92
6/16/2022 7:43	33.17	6/16/2022 8:30	19.08	6/15/2022 11:03	5.91
6/16/2022 7:44	33.23	6/16/2022 8:31	19.09	6/15/2022 11:04	5.88
6/16/2022 7:45	33.22	6/16/2022 8:32	19.08	6/15/2022 11:05	5.88
6/16/2022 7:46	33.28	6/16/2022 8:33	19.06	6/15/2022 11:06	5.90
6/16/2022 7:47	33.35	6/16/2022 8:34	19.09	6/15/2022 11:07	5.91
6/16/2022 7:48	33.33	6/16/2022 8:35	19.08	6/15/2022 11:08	5.89
6/16/2022 7:49	33.39	6/16/2022 8:36	19.08	6/15/2022 11:09	5.88
6/16/2022 7:50	33.44	6/16/2022 8:37	19.10	6/15/2022 11:10	5.90
6/16/2022 7:51	33.44	6/16/2022 8:38	19.10	6/15/2022 11:11	5.92
6/16/2022 7:52	33.50	6/16/2022 8:39	19.09	6/15/2022 11:12	5.89
6/16/2022 7:53	33.51	6/16/2022 8:40	19.10	6/15/2022 11:13	5.92
6/16/2022 7:54	33.55	6/16/2022 8:41	19.12	6/15/2022 11:14	5.91
6/16/2022 7:55	33.59	6/16/2022 8:42	19.08	6/15/2022 11:15	5.91
6/16/2022 7:56	33.59	6/16/2022 8:43	19.08	6/15/2022 11:16	5.89
6/16/2022 7:57	33.63	6/16/2022 8:44	19.11	6/15/2022 11:17	5.88
6/16/2022 7:58	33.63	6/16/2022 8:45	19.11	6/15/2022 11:18	5.88
6/16/2022 7:59	33.67	6/16/2022 8:46	19.11	6/15/2022 11:19	5.91
6/16/2022 8:00	33.68	6/16/2022 8:47	19.10	6/15/2022 11:20	5.91
6/16/2022 8:01	33.69	6/16/2022 8:48	19.09	6/15/2022 11:21	5.86
6/16/2022 8:02	33.72	6/16/2022 8:49	19.08	6/15/2022 11:22	5.91
6/16/2022 8:03	33.73	6/16/2022 8:50	19.11	6/15/2022 11:23	5.90
6/16/2022 8:04	33.76	6/16/2022 8:51	19.10	6/15/2022 11:24	5.90
6/16/2022 8:05	33.73	6/16/2022 8:52	19.09	6/15/2022 11:25	5.88
6/16/2022 8:06	33.74	6/16/2022 8:53	19.09	6/15/2022 11:26	5.91
6/16/2022 8:07	33.72	6/16/2022 8:54	19.08	6/15/2022 11:27	5.88
6/16/2022 8:08	33.71	6/16/2022 8:55	19.11	6/15/2022 11:28	5.92
6/16/2022 8:09	33.70	6/16/2022 8:56	19.10	6/15/2022 11:29	5.87
6/16/2022 8:10	33.66	6/16/2022 8:57	19.11	6/15/2022 11:30	5.92
6/16/2022 8:11	33.69	6/16/2022 8:58	19.10	6/15/2022 11:31	5.91
6/16/2022 8:12	33.63	6/16/2022 8:59	19.10	6/15/2022 11:32	5.89
6/16/2022 8:13	33.64	6/16/2022 9:00	19.09	6/15/2022 11:33	5.89
6/16/2022 8:14	33.64	6/16/2022 9:01	19.11	6/15/2022 11:34	5.89
6/16/2022 8:15	33.64	6/16/2022 9:02	19.09	6/15/2022 11:35	5.91
6/16/2022 8:16	33.65	6/16/2022 9:03	19.10	6/15/2022 11:36	5.91
6/16/2022 8:17	33.63	6/16/2022 9:04	19.08	6/15/2022 11:37	5.89
6/16/2022 8:18	33.64	6/16/2022 9:05	19.08	6/15/2022 11:38	5.92
6/16/2022 8:19	33.62	6/16/2022 9:06	19.08	6/15/2022 11:39	5.91
6/16/2022 8:20	33.62	6/16/2022 9:07	19.09	6/15/2022 11:40	5.91
6/16/2022 8:21	34.97	6/16/2022 9:08	19.09	6/15/2022 11:41	5.90
6/16/2022 8:22	34.02	6/16/2022 9:09	19.07	6/15/2022 11:42	5.91
6/16/2022 8:23	33.81	6/16/2022 9:10	19.09	6/15/2022 11:43	5.92
6/16/2022 8:24	33.70	6/16/2022 9:11	19.06	6/15/2022 11:44	5.91
6/16/2022 8:25	33.64	6/16/2022 9:12	19.11	6/15/2022 11:45	5.92
6/16/2022 8:26	33.62	6/16/2022 9:13	19.06	6/15/2022 11:46	5.87
6/16/2022 8:27	33.55	6/16/2022 9:14	19.10	6/15/2022 11:47	5.89
6/16/2022 8:28	33.51	6/16/2022 9:15	19.08	6/15/2022 11:48	5.89
6/16/2022 8:29	33.52	6/16/2022 9:16	19.09	6/15/2022 11:49	5.93
6/16/2022 8:30	33.50	6/16/2022 9:17	19.07	6/15/2022 11:50	5.89
6/16/2022 8:31	33.45	6/16/2022 9:18	19.11	6/15/2022 11:51	5.91
6/16/2022 8:32	33.44	6/16/2022 9:19	19.08	6/15/2022 11:52	5.88
6/16/2022 8:33	33.42	6/16/2022 9:20	19.07	6/15/2022 11:53	5.89
6/16/2022 8:34	33.39	6/16/2022 9:21	19.08	6/15/2022 11:54	5.93
6/16/2022 8:35	33.39	6/16/2022 9:22	19.07	6/15/2022 11:55	5.90
6/16/2022 8:36	33.36	6/16/2022 9:23	19.09	6/15/2022 11:56	5.89
6/16/2022 8:37	33.34	6/16/2022 9:24	19.08	6/15/2022 11:57	5.90
6/16/2022 8:38	33.34	6/16/2022 9:25	19.06	6/15/2022 11:58	5.89
6/16/2022 8:39	33.30	6/16/2022 9:26	19.06	6/15/2022 11:59	5.92
6/16/2022 8:40	33.30	6/16/2022 9:27	19.09	6/15/2022 12:00	5.89
6/16/2022 8:41	33.28	6/16/2022 9:28	19.07	6/15/2022 12:01	5.88
6/16/2022 8:42	33.28	6/16/2022 9:29	19.08	6/15/2022 12:02	5.93
6/16/2022 8:43	33.29	6/16/2022 9:30	19.08	6/15/2022 12:03	5.91
6/16/2022 8:44	33.26	6/16/2022 9:31	19.09	6/15/2022 12:04	5.91
6/16/2022 8:45	33.24	6/16/2022 9:32	19.07	6/15/2022 12:05	5.90
6/16/2022 8:46	33.24	6/16/2022 9:33	19.08	6/15/2022 12:06	5.92
6/16/2022 8:47	33.26	6/16/2022 9:34	19.06	6/15/2022 12:07	5.90
6/16/2022 8:48	33.23	6/16/2022 9:35	19.07	6/15/2022 12:08	5.91
6/16/2022 8:49	33.25	6/16/2022 9:36	19.10	6/15/2022 12:09	5.88
6/16/2022 8:50	33.19	6/16/2022 9:37	19.67	6/15/2022 12:10	5.93
6/16/2022 8:51	33.19	6/16/2022 9:38	19.79	6/15/2022 12:11	5.88
6/16/2022 8:52	33.18	6/16/2022 9:39	19.84	6/15/2022 12:12	5.93
6/16/2022 8:53	33.18	6/16/2022 9:40	19.87	6/15/2022 12:13	5.91
6/16/2022 8:54	33.16	6/16/2022 9:41	19.86	6/15/2022 12:14	5.91
6/16/2022 8:55	33.15	6/16/2022 9:42	19.31	6/15/2022 12:15	5.89
6/16/2022 8:56	33.17	6/16/2022 9:43	19.29	6/15/2022 12:16	5.89
6/16/2022 8:57	33.15	6/16/2022 9:44	19.26	6/15/2022 12:17	5.92
6/16/2022 8:58	33.16	6/16/2022 9:45	19.21	6/15/2022 12:18	5.89
6/16/2022 8:59	33.13	6/16/2022 9:46	19.23	6/15/2022 12:19	5.90
6/16/2022 9:00	33.14	6/16/2022 9:47	19.21	6/15/2022 12:20	5.90
6/16/2022 9:01	33.12	6/16/2022 9:48	19.22	6/15/2022 12:21	5.93
6/16/2022 9:02	33.12	6/16/2022 9:49	19.18	6/15/2022 12:22	5.93
6/16/2022 9:03	33.10	6/16/2022 9:50	19.17	6/15/2022 12:23	5.88
6/16/2022 9:04	33.11	6/16/2022 9:51	19.18	6/15/2022 12:24	5.91
6/16/2022 9:05	33.08	6/16/2022 9:52	19.15	6/15/2022 12:25	5.91
6/16/2022 9:06	33.08	6/16/2022 9:53	19.17	6/15/2022 12:26	5.89

6/16/2022 9:07	33.10	6/16/2022 9:54	19.14	6/15/2022 12:27	5.92
6/16/2022 9:08	33.11	6/16/2022 9:55	19.14	6/15/2022 12:28	5.91
6/16/2022 9:09	33.09	6/16/2022 9:56	19.14	6/15/2022 12:29	5.89
6/16/2022 9:10	33.07	6/16/2022 9:57	19.15	6/15/2022 12:30	5.90
6/16/2022 9:11	33.08	6/16/2022 9:58	19.14	6/15/2022 12:31	5.92
6/16/2022 9:12	33.07	6/16/2022 9:59	19.16	6/15/2022 12:32	5.91
6/16/2022 9:13	33.08	6/16/2022 10:00	19.14	6/15/2022 12:33	5.94
6/16/2022 9:14	33.11	6/16/2022 10:01	19.17	6/15/2022 12:34	5.91
6/16/2022 9:15	33.97	6/16/2022 10:02	19.12	6/15/2022 12:35	5.90
6/16/2022 9:16	33.66	6/16/2022 10:03	19.13	6/15/2022 12:36	8.47
6/16/2022 9:17	33.26	6/16/2022 10:04	19.14	6/15/2022 12:37	7.24
6/16/2022 9:18	33.20	6/16/2022 10:05	19.15	6/15/2022 12:38	6.02
6/16/2022 9:19	33.17	6/16/2022 10:06	19.10	6/15/2022 12:39	5.95
6/16/2022 9:20	33.14	6/16/2022 10:07	19.12	6/15/2022 12:40	5.94
6/16/2022 9:21	33.15	6/16/2022 10:08	19.15	6/15/2022 12:41	5.91
6/16/2022 9:22	33.12	6/16/2022 10:09	19.13	6/15/2022 12:42	5.94
6/16/2022 9:23	33.12	6/16/2022 10:10	19.13	6/15/2022 12:43	5.93
6/16/2022 9:24	33.09	6/16/2022 10:11	19.15	6/15/2022 12:44	5.92
6/16/2022 9:25	33.11	6/16/2022 10:12	19.13	6/15/2022 12:45	5.90
6/16/2022 9:26	33.11	6/16/2022 10:13	19.11	6/15/2022 12:46	5.91
6/16/2022 9:27	33.07	6/16/2022 10:14	19.13	6/15/2022 12:47	5.89
6/16/2022 9:28	33.07	6/16/2022 10:15	19.12	6/15/2022 12:48	5.91
6/16/2022 9:29	33.07	6/16/2022 10:16	19.12	6/15/2022 12:49	5.89
6/16/2022 9:30	33.04	6/16/2022 10:17	19.11	6/15/2022 12:50	5.89
6/16/2022 9:31	33.06	6/16/2022 10:18	19.13	6/15/2022 12:51	5.96
6/16/2022 9:32	33.03	6/16/2022 10:19	19.11	6/15/2022 12:52	5.94
6/16/2022 9:33	33.04	6/16/2022 10:20	19.11	6/15/2022 12:53	5.91
6/16/2022 9:34	33.02	6/16/2022 10:21	19.14	6/15/2022 12:54	5.91
6/16/2022 9:35	33.03	6/16/2022 10:22	19.11	6/15/2022 12:55	5.90
6/16/2022 9:36	33.03	6/16/2022 10:23	19.12	6/15/2022 12:56	5.90
6/16/2022 9:37	33.02	6/16/2022 10:24	19.13	6/15/2022 12:57	5.91
6/16/2022 9:38	33.02	6/16/2022 10:25	19.08	6/15/2022 12:58	5.90
6/16/2022 9:39	32.99	6/16/2022 10:26	19.10	6/15/2022 12:59	5.93
6/16/2022 9:40	33.03	6/16/2022 10:27	19.12	6/15/2022 13:00	5.89
6/16/2022 9:41	32.99	6/16/2022 10:28	19.10	6/15/2022 13:01	5.90
6/16/2022 9:42	32.97	6/16/2022 10:29	19.10	6/15/2022 13:02	5.88
6/16/2022 9:43	33.02	6/16/2022 10:30	19.10	6/15/2022 13:03	5.89
6/16/2022 9:44	33.01	6/16/2022 10:31	19.13	6/15/2022 13:04	5.91
6/16/2022 9:45	33.00	6/16/2022 10:32	19.11	6/15/2022 13:05	5.89
6/16/2022 9:46	32.97	6/16/2022 10:33	19.10	6/15/2022 13:06	5.90
6/16/2022 9:47	32.99	6/16/2022 10:34	19.09	6/15/2022 13:07	5.91
6/16/2022 9:48	32.99	6/16/2022 10:35	19.12	6/15/2022 13:08	5.92
6/16/2022 9:49	32.99	6/16/2022 10:36	19.13	6/15/2022 13:09	5.88
6/16/2022 9:50	32.94	6/16/2022 10:37	19.14	6/15/2022 13:10	5.91
6/16/2022 9:51	33.00	6/16/2022 10:38	19.11	6/15/2022 13:11	5.92
6/16/2022 9:52	32.98	6/16/2022 10:39	19.12	6/15/2022 13:12	5.89
6/16/2022 9:53	32.92	6/16/2022 10:40	19.12	6/15/2022 13:13	5.92
6/16/2022 9:54	32.97	6/16/2022 10:41	19.11	6/15/2022 13:14	5.92
6/16/2022 9:55	32.98	6/16/2022 10:42	19.12	6/15/2022 13:15	5.92
6/16/2022 9:56	32.96	6/16/2022 10:43	19.11	6/15/2022 13:16	5.93
6/16/2022 9:57	32.96	6/16/2022 10:44	19.13	6/15/2022 13:17	5.91
6/16/2022 9:58	32.96	6/16/2022 10:45	19.13	6/15/2022 13:18	5.94
6/16/2022 9:59	32.98	6/16/2022 10:46	19.12	6/15/2022 13:19	5.91
6/16/2022 10:00	32.98	6/16/2022 10:47	19.13	6/15/2022 13:20	5.91
6/16/2022 10:01	32.96	6/16/2022 10:48	19.11	6/15/2022 13:21	5.92
6/16/2022 10:02	32.99	6/16/2022 10:49	19.11	6/15/2022 13:22	5.92
6/16/2022 10:03	32.96	6/16/2022 10:50	19.11	6/15/2022 13:23	5.93
6/16/2022 10:04	32.98	6/16/2022 10:51	19.13	6/15/2022 13:24	5.89
6/16/2022 10:05	32.96	6/16/2022 10:52	19.10	6/15/2022 13:25	5.90
6/16/2022 10:06	32.94	6/16/2022 10:53	19.08	6/15/2022 13:26	5.94
6/16/2022 10:07	32.94	6/16/2022 10:54	19.11	6/15/2022 13:27	5.90
6/16/2022 10:08	32.97	6/16/2022 10:55	19.12	6/15/2022 13:28	5.89
6/16/2022 10:09	32.97	6/16/2022 10:56	19.11	6/15/2022 13:29	5.90
6/16/2022 10:10	32.95	6/16/2022 10:57	19.09	6/15/2022 13:30	5.94
6/16/2022 10:11	32.96	6/16/2022 10:58	19.12	6/15/2022 13:31	5.90
6/16/2022 10:12	32.92	6/16/2022 10:59	19.07	6/15/2022 13:32	5.92
6/16/2022 10:13	32.92	6/16/2022 11:00	19.09	6/15/2022 13:33	5.91
6/16/2022 10:14	32.93	6/16/2022 11:01	19.10	6/15/2022 13:34	5.92
6/16/2022 10:15	32.91	6/16/2022 11:02	19.09	6/15/2022 13:35	5.92
6/16/2022 10:16	32.95	6/16/2022 11:03	19.10	6/15/2022 13:36	5.92
6/16/2022 10:17	32.92	6/16/2022 11:04	19.07	6/15/2022 13:37	5.87
6/16/2022 10:18	32.90	6/16/2022 11:05	19.12	6/15/2022 13:38	5.91
6/16/2022 10:19	32.89	6/16/2022 11:06	19.10	6/15/2022 13:39	5.92
6/16/2022 10:20	32.94	6/16/2022 11:07	19.12	6/15/2022 13:40	5.93
6/16/2022 10:21	32.90	6/16/2022 11:08	19.09	6/15/2022 13:41	5.92
6/16/2022 10:22	32.94	6/16/2022 11:09	19.10	6/15/2022 13:42	5.91
6/16/2022 10:23	32.91	6/16/2022 11:10	19.09	6/15/2022 13:43	5.89
6/16/2022 10:24	32.92	6/16/2022 11:11	19.09	6/15/2022 13:44	5.93
6/16/2022 10:25	32.87	6/16/2022 11:12	19.09	6/15/2022 13:45	5.92
6/16/2022 10:26	32.91	6/16/2022 11:13	19.11	6/15/2022 13:46	5.91
6/16/2022 10:27	32.91	6/16/2022 11:14	19.11	6/15/2022 13:47	5.90
6/16/2022 10:28	32.90	6/16/2022 11:15	19.10	6/15/2022 13:48	5.91
6/16/2022 10:29	32.93	6/16/2022 11:16	19.11	6/15/2022 13:49	5.91
6/16/2022 10:30	32.90	6/16/2022 11:17	19.06	6/15/2022 13:50	5.90
6/16/2022 10:31	32.89	6/16/2022 11:18	19.11	6/15/2022 13:51	5.92
6/16/2022 10:32	32.91	6/16/2022 11:19	19.11	6/15/2022 13:52	5.93
6/16/2022 10:33	32.88	6/16/2022 11:20	19.06	6/15/2022 13:53	5.88
6/16/2022 10:34	32.84	6/16/2022 11:21	19.10	6/15/2022 13:54	5.88

6/16/2022 10:35	32.91	6/16/2022 11:22	19.09	6/15/2022 13:55	5.90
6/16/2022 10:36	32.90	6/16/2022 11:23	19.11	6/15/2022 13:56	5.95
6/16/2022 10:37	32.88	6/16/2022 11:24	19.10	6/15/2022 13:57	5.91
6/16/2022 10:38	32.89	6/16/2022 11:25	19.09	6/15/2022 13:58	5.93
6/16/2022 10:39	32.93	6/16/2022 11:26	19.13	6/15/2022 13:59	5.92
6/16/2022 10:40	32.94	6/16/2022 11:27	19.10	6/15/2022 14:00	5.90
6/16/2022 10:41	34.35	6/16/2022 11:28	19.11	6/15/2022 14:01	5.92
6/16/2022 10:42	33.41	6/16/2022 11:29	19.10	6/15/2022 14:02	5.90
6/16/2022 10:43	33.15	6/16/2022 11:30	19.11	6/15/2022 14:03	5.89
6/16/2022 10:44	33.07	6/16/2022 11:31	19.11	6/15/2022 14:04	5.90
6/16/2022 10:45	34.62	6/16/2022 11:32	19.12	6/15/2022 14:05	5.91
6/16/2022 10:46	33.51	6/16/2022 11:33	19.10	6/15/2022 14:06	5.90
6/16/2022 10:47	34.50	6/16/2022 11:34	19.09	6/15/2022 14:07	5.90
6/16/2022 10:48	34.45	6/16/2022 11:35	19.12	6/15/2022 14:08	5.90
6/16/2022 10:49	34.66	6/16/2022 11:36	19.09	6/15/2022 14:09	5.90
6/16/2022 10:50	34.65	6/16/2022 11:37	19.10	6/15/2022 14:10	5.90
6/16/2022 10:51	33.55	6/16/2022 11:38	19.11	6/15/2022 14:11	5.90
6/16/2022 10:52	35.04	6/16/2022 11:39	19.11	6/15/2022 14:12	5.90
6/16/2022 10:53	34.15	6/16/2022 11:40	19.11	6/15/2022 14:13	5.91
6/16/2022 10:54	34.38	6/16/2022 11:41	19.11	6/15/2022 14:14	5.92
6/16/2022 10:55	35.18	6/16/2022 11:42	19.10	6/15/2022 14:15	5.95
6/16/2022 10:56	33.80	6/16/2022 11:43	19.11	6/15/2022 14:16	5.91
6/16/2022 10:57	35.09	6/16/2022 11:44	19.09	6/15/2022 14:17	5.95
6/16/2022 10:58	34.19	6/16/2022 11:45	19.10	6/15/2022 14:18	7.90
6/16/2022 10:59	34.62	6/16/2022 11:46	19.10	6/15/2022 14:19	8.67
6/16/2022 11:00	35.27	6/16/2022 11:47	19.11	6/15/2022 14:20	6.22
6/16/2022 11:01	33.87	6/16/2022 11:48	19.09	6/15/2022 14:21	5.96
6/16/2022 11:02	35.24	6/16/2022 11:49	19.10	6/15/2022 14:22	5.97
6/16/2022 11:03	34.20	6/16/2022 11:50	19.10	6/15/2022 14:23	5.94
6/16/2022 11:04	34.84	6/16/2022 11:51	19.09	6/15/2022 14:24	5.91
6/16/2022 11:05	35.38	6/16/2022 11:52	19.11	6/15/2022 14:25	5.94
6/16/2022 11:06	33.94	6/16/2022 11:53	19.10	6/15/2022 14:26	5.92
6/16/2022 11:07	35.36	6/16/2022 11:54	19.12	6/15/2022 14:27	5.93
6/16/2022 11:08	34.21	6/16/2022 11:55	19.10	6/15/2022 14:28	5.94
6/16/2022 11:09	35.03	6/16/2022 11:56	19.08	6/15/2022 14:29	5.91
6/16/2022 11:10	35.26	6/16/2022 11:57	19.10	6/15/2022 14:30	5.92
6/16/2022 11:11	34.01	6/16/2022 11:58	19.09	6/15/2022 14:31	5.91
6/16/2022 11:12	35.42	6/16/2022 11:59	19.10	6/15/2022 14:32	5.92
6/16/2022 11:13	34.24	6/16/2022 12:00	19.08	6/15/2022 14:33	5.93
6/16/2022 11:14	35.18	6/16/2022 12:01	19.11	6/15/2022 14:34	5.92
6/16/2022 11:15	35.00	6/16/2022 12:02	19.10	6/15/2022 14:35	5.93
6/16/2022 11:16	34.19	6/16/2022 12:03	19.10	6/15/2022 14:36	5.91
6/16/2022 11:17	35.52	6/16/2022 12:04	19.10	6/15/2022 14:37	5.94
6/16/2022 11:18	34.25	6/16/2022 12:05	19.09	6/15/2022 14:38	5.88
6/16/2022 11:19	35.37	6/16/2022 12:06	19.08	6/15/2022 14:39	5.92
6/16/2022 11:20	34.73	6/16/2022 12:07	19.10	6/15/2022 14:40	5.93
6/16/2022 11:21	34.74	6/16/2022 12:08	19.09	6/15/2022 14:41	5.95
6/16/2022 11:22	35.61	6/16/2022 12:09	19.09	6/15/2022 14:42	5.90
6/16/2022 11:23	34.23	6/16/2022 12:10	19.11	6/15/2022 14:43	5.92
6/16/2022 11:24	35.60	6/16/2022 12:11	19.08	6/15/2022 14:44	5.93
6/16/2022 11:25	35.81	6/16/2022 12:12	19.08	6/15/2022 14:45	5.91
6/16/2022 11:26	35.89	6/16/2022 12:13	19.05	6/15/2022 14:46	5.95
6/16/2022 11:27	35.95	6/16/2022 12:14	19.07	6/15/2022 14:47	5.95
6/16/2022 11:28	35.98	6/16/2022 12:15	19.06	6/15/2022 14:48	5.92
6/16/2022 11:29	36.00	6/16/2022 12:16	19.09	6/15/2022 14:49	5.89
6/16/2022 11:30	36.14	6/16/2022 12:17	19.08	6/15/2022 14:50	5.93
6/16/2022 11:31	36.17	6/16/2022 12:18	19.11	6/15/2022 14:51	5.94
6/16/2022 11:32	34.74	6/16/2022 12:19	19.07	6/15/2022 14:52	5.96
6/16/2022 11:33	35.72	6/16/2022 12:20	19.10	6/15/2022 14:53	5.91
6/16/2022 11:34	35.44	6/16/2022 12:21	19.07	6/15/2022 14:54	5.93
6/16/2022 11:35	34.72	6/16/2022 12:22	19.08	6/15/2022 14:55	5.94
6/16/2022 11:36	35.96	6/16/2022 12:23	19.11	6/15/2022 14:56	5.94
6/16/2022 11:37	34.64	6/16/2022 12:24	19.07	6/15/2022 14:57	5.90
6/16/2022 11:38	35.74	6/16/2022 12:25	19.07	6/15/2022 14:58	5.93
6/16/2022 11:39	35.29	6/16/2022 12:26	19.10	6/15/2022 14:59	5.91
6/16/2022 11:40	34.89	6/16/2022 12:27	19.09	6/15/2022 15:00	5.91
6/16/2022 11:41	35.99	6/16/2022 12:28	19.07	6/15/2022 15:01	5.90
6/16/2022 11:42	34.63	6/16/2022 12:29	19.09	6/15/2022 15:02	5.90
6/16/2022 11:43	35.75	6/16/2022 12:30	19.11	6/15/2022 15:03	5.95
6/16/2022 11:44	35.16	6/16/2022 12:31	19.09	6/15/2022 15:04	5.92
6/16/2022 11:45	35.08	6/16/2022 12:32	19.08	6/15/2022 15:05	5.93
6/16/2022 11:46	35.99	6/16/2022 12:33	19.08	6/15/2022 15:06	5.91
6/16/2022 11:47	34.59	6/16/2022 12:34	19.09	6/15/2022 15:07	5.91
6/16/2022 11:48	35.85	6/16/2022 12:35	19.07	6/15/2022 15:08	5.91
6/16/2022 11:49	34.98	6/16/2022 12:36	19.09	6/15/2022 15:09	5.93
6/16/2022 11:50	35.37	6/16/2022 12:37	19.10	6/15/2022 15:10	5.92
6/16/2022 11:51	36.01	6/16/2022 12:38	19.10	6/15/2022 15:11	5.91
6/16/2022 11:52	34.57	6/16/2022 12:39	19.08	6/15/2022 15:12	5.93
6/16/2022 11:53	35.92	6/16/2022 12:40	19.09	6/15/2022 15:13	5.90
6/16/2022 11:54	34.83	6/16/2022 12:41	19.07	6/15/2022 15:14	5.93
6/16/2022 11:55	35.57	6/16/2022 12:42	19.07	6/15/2022 15:15	5.86
6/16/2022 11:56	35.85	6/16/2022 12:43	19.08	6/15/2022 15:16	5.90
6/16/2022 11:57	34.57	6/16/2022 12:44	19.06	6/15/2022 15:17	5.92
6/16/2022 11:58	35.99	6/16/2022 12:45	19.08	6/15/2022 15:18	5.92
6/16/2022 11:59	34.76	6/16/2022 12:46	19.08	6/15/2022 15:19	5.92
6/16/2022 12:00	35.75	6/16/2022 12:47	19.08	6/15/2022 15:20	5.94
6/16/2022 12:01	35.46	6/16/2022 12:48	19.07	6/15/2022 15:21	5.91
6/16/2022 12:02	34.79	6/16/2022 12:49	19.08	6/15/2022 15:22	5.91

6/16/2022 12:03	36.05	6/16/2022 12:50	19.06	6/15/2022 15:23	5.94
6/16/2022 12:04	35.16	6/16/2022 12:51	19.09	6/15/2022 15:24	5.94
6/16/2022 12:05	35.32	6/16/2022 12:52	19.09	6/15/2022 15:25	5.94
6/16/2022 12:06	36.08	6/16/2022 12:53	19.07	6/15/2022 15:26	5.91
6/16/2022 12:07	34.67	6/16/2022 12:54	19.09	6/15/2022 15:27	5.89
6/16/2022 12:08	35.98	6/16/2022 12:55	19.11	6/15/2022 15:28	5.91
6/16/2022 12:09	35.01	6/16/2022 12:56	19.06	6/15/2022 15:29	5.92
6/16/2022 12:10	35.54	6/16/2022 12:57	19.07	6/15/2022 15:30	5.94
6/16/2022 12:11	36.11	6/16/2022 12:58	19.09	6/15/2022 15:31	5.89
6/16/2022 12:12	34.65	6/16/2022 12:59	19.07	6/15/2022 15:32	5.92
6/16/2022 12:13	36.08	6/16/2022 13:00	19.09	6/15/2022 15:33	5.93
6/16/2022 12:14	34.91	6/16/2022 13:01	19.09	6/15/2022 15:34	5.91
6/16/2022 12:15	35.76	6/16/2022 13:02	19.08	6/15/2022 15:35	5.91
6/16/2022 12:16	35.62	6/16/2022 13:03	19.04	6/15/2022 15:36	5.92
6/16/2022 12:17	34.81	6/16/2022 13:04	19.07	6/15/2022 15:37	5.91
6/16/2022 12:18	36.13	6/16/2022 13:05	19.08	6/15/2022 15:38	5.90
6/16/2022 12:19	34.82	6/16/2022 13:06	19.07	6/15/2022 15:39	5.91
6/16/2022 12:20	35.94	6/16/2022 13:07	19.08	6/15/2022 15:40	5.89
6/16/2022 12:21	35.26	6/16/2022 13:08	19.06	6/15/2022 15:41	5.91
6/16/2022 12:22	35.37	6/16/2022 13:09	19.07	6/15/2022 15:42	5.91
6/16/2022 12:23	36.13	6/16/2022 13:10	19.09	6/15/2022 15:43	5.91
6/16/2022 12:24	35.32	6/16/2022 13:11	19.07	6/15/2022 15:44	5.90
6/16/2022 12:25	36.31	6/16/2022 13:12	19.08	6/15/2022 15:45	5.90
6/16/2022 12:26	36.50	6/16/2022 13:13	19.06	6/15/2022 15:46	5.90
6/16/2022 12:27	36.55	6/16/2022 13:14	19.08	6/15/2022 15:47	5.93
6/16/2022 12:28	36.60	6/16/2022 13:15	19.07	6/15/2022 15:48	5.93
6/16/2022 12:29	36.64	6/16/2022 13:16	19.09	6/15/2022 15:49	5.90
6/16/2022 12:30	36.63	6/16/2022 13:17	19.09	6/15/2022 15:50	5.92
6/16/2022 12:31	35.42	6/16/2022 13:18	19.10	6/15/2022 15:51	5.91
6/16/2022 12:32	36.00	6/16/2022 13:19	19.08	6/15/2022 15:52	5.93
6/16/2022 12:33	36.44	6/16/2022 13:20	19.09	6/15/2022 15:53	5.91
6/16/2022 12:34	35.07	6/16/2022 13:21	19.09	6/15/2022 15:54	5.91
6/16/2022 12:35	36.39	6/16/2022 13:22	19.08	6/15/2022 15:55	5.92
6/16/2022 12:36	35.13	6/16/2022 13:23	19.05	6/15/2022 15:56	5.94
6/16/2022 12:37	36.19	6/16/2022 13:24	19.08	6/15/2022 15:57	5.91
6/16/2022 12:38	36.59	6/16/2022 13:25	19.10	6/15/2022 15:58	5.90
6/16/2022 12:39	36.15	6/16/2022 13:26	19.10	6/15/2022 15:59	5.92
6/16/2022 12:40	35.04	6/16/2022 13:27	19.09	6/15/2022 16:00	5.90
6/16/2022 12:41	36.40	6/16/2022 13:28	19.06	6/15/2022 16:01	5.92
6/16/2022 12:42	35.13	6/16/2022 13:29	19.08	6/15/2022 16:02	5.94
6/16/2022 12:43	36.19	6/16/2022 13:30	19.07	6/15/2022 16:03	5.90
6/16/2022 12:44	35.66	6/16/2022 13:31	19.07	6/15/2022 16:04	5.90
6/16/2022 12:45	36.36	6/16/2022 13:32	19.09	6/15/2022 16:05	5.93
6/16/2022 12:46	36.61	6/16/2022 13:33	19.07	6/15/2022 16:06	5.91
6/16/2022 12:47	35.35	6/16/2022 13:34	19.08	6/15/2022 16:07	8.46
6/16/2022 12:48	36.38	6/16/2022 13:35	19.09	6/15/2022 16:08	8.88
6/16/2022 12:49	36.63	6/16/2022 13:36	19.05	6/15/2022 16:09	8.91
6/16/2022 12:50	35.12	6/16/2022 13:37	19.07	6/15/2022 16:10	8.83
6/16/2022 12:51	36.43	6/16/2022 13:38	19.09	6/15/2022 16:11	7.17
6/16/2022 12:52	35.35	6/16/2022 13:39	19.08	6/15/2022 16:12	6.05
6/16/2022 12:53	36.10	6/16/2022 13:40	19.05	6/15/2022 16:13	6.01
6/16/2022 12:54	36.28	6/16/2022 13:41	19.05	6/15/2022 16:14	5.96
6/16/2022 12:55	35.01	6/16/2022 13:42	19.08	6/15/2022 16:15	5.99
6/16/2022 12:56	36.45	6/16/2022 13:43	19.08	6/15/2022 16:16	5.97
6/16/2022 12:57	35.19	6/16/2022 13:44	19.07	6/15/2022 16:17	5.92
6/16/2022 12:58	36.24	6/16/2022 13:45	19.06	6/15/2022 16:18	5.95
6/16/2022 12:59	35.83	6/16/2022 13:46	19.08	6/15/2022 16:19	5.92
6/16/2022 13:00	35.41	6/16/2022 13:47	19.08	6/15/2022 16:20	5.95
6/16/2022 13:01	36.47	6/16/2022 13:48	19.09	6/15/2022 16:21	5.94
6/16/2022 13:02	35.12	6/16/2022 13:49	19.07	6/15/2022 16:22	5.94
6/16/2022 13:03	36.29	6/16/2022 13:50	19.06	6/15/2022 16:23	5.96
6/16/2022 13:04	35.58	6/16/2022 13:51	19.06	6/15/2022 16:24	5.90
6/16/2022 13:05	35.81	6/16/2022 13:52	19.05	6/15/2022 16:25	5.94
6/16/2022 13:06	36.48	6/16/2022 13:53	19.07	6/15/2022 16:26	5.93
6/16/2022 13:07	35.09	6/16/2022 13:54	19.06	6/15/2022 16:27	5.91
6/16/2022 13:08	36.41	6/16/2022 13:55	19.07	6/15/2022 16:28	5.95
6/16/2022 13:09	35.43	6/16/2022 13:56	19.06	6/15/2022 16:29	5.94
6/16/2022 13:10	35.95	6/16/2022 13:57	19.06	6/15/2022 16:30	5.89
6/16/2022 13:11	36.52	6/16/2022 13:58	19.05	6/15/2022 16:31	5.94
6/16/2022 13:12	35.66	6/16/2022 13:59	19.07	6/15/2022 16:32	5.90
6/16/2022 13:13	36.61	6/16/2022 14:00	19.07	6/15/2022 16:33	5.92
6/16/2022 13:14	35.78	6/16/2022 14:01	19.08	6/15/2022 16:34	5.89
6/16/2022 13:15	36.17	6/16/2022 14:02	19.06	6/15/2022 16:35	5.92
6/16/2022 13:16	36.66	6/16/2022 14:03	19.08	6/15/2022 16:36	5.91
6/16/2022 13:17	35.23	6/16/2022 14:04	19.08	6/15/2022 16:37	5.94
6/16/2022 13:18	36.46	6/16/2022 14:05	19.08	6/15/2022 16:38	5.92
6/16/2022 13:19	35.63	6/16/2022 14:06	19.07	6/15/2022 16:39	5.93
6/16/2022 13:20	35.90	6/16/2022 14:07	19.07	6/15/2022 16:40	5.92
6/16/2022 13:21	36.60	6/16/2022 14:08	19.08	6/15/2022 16:41	5.93
6/16/2022 13:22	35.14	6/16/2022 14:09	19.08	6/15/2022 16:42	5.89
6/16/2022 13:23	36.48	6/16/2022 14:10	19.08	6/15/2022 16:43	5.91
6/16/2022 13:24	35.48	6/16/2022 14:11	19.07	6/15/2022 16:44	5.97
6/16/2022 13:25	36.05	6/16/2022 14:12	19.05	6/15/2022 16:45	5.92
6/16/2022 13:26	36.62	6/16/2022 14:13	19.05	6/15/2022 16:46	5.94
6/16/2022 13:27	35.12	6/16/2022 14:14	19.06	6/15/2022 16:47	5.94
6/16/2022 13:28	36.54	6/16/2022 14:15	19.07	6/15/2022 16:48	5.89
6/16/2022 13:29	35.35	6/16/2022 14:16	19.06	6/15/2022 16:49	5.94
6/16/2022 13:30	36.23	6/16/2022 14:17	19.08	6/15/2022 16:50	5.90

6/16/2022 13:31	36.25	6/16/2022 14:18	19.09	6/15/2022 16:51	5.97
6/16/2022 13:32	35.08	6/16/2022 14:19	19.05	6/15/2022 16:52	5.95
6/16/2022 13:33	36.54	6/16/2022 14:20	19.06	6/15/2022 16:53	5.92
6/16/2022 13:34	35.25	6/16/2022 14:21	19.06	6/15/2022 16:54	5.94
6/16/2022 13:35	36.33	6/16/2022 14:22	19.07	6/15/2022 16:55	5.92
6/16/2022 13:36	35.89	6/16/2022 14:23	19.10	6/15/2022 16:56	5.90
6/16/2022 13:37	35.57	6/16/2022 14:24	19.08	6/15/2022 16:57	5.93
6/16/2022 13:38	36.58	6/16/2022 14:25	19.08	6/15/2022 16:58	5.94
6/16/2022 13:39	35.22	6/16/2022 14:26	19.06	6/15/2022 16:59	5.92
6/16/2022 13:40	36.42	6/16/2022 14:27	19.06	6/15/2022 17:00	5.95
6/16/2022 13:41	35.66	6/16/2022 14:28	19.06	6/15/2022 17:01	5.93
6/16/2022 13:42	35.83	6/16/2022 14:29	19.04	6/15/2022 17:02	5.92
6/16/2022 13:43	36.56	6/16/2022 14:30	19.06	6/15/2022 17:03	5.96
6/16/2022 13:44	35.19	6/16/2022 14:31	19.05	6/15/2022 17:04	5.90
6/16/2022 13:45	36.48	6/16/2022 14:32	19.07	6/15/2022 17:05	5.89
6/16/2022 13:46	35.49	6/16/2022 14:33	19.06	6/15/2022 17:06	5.91
6/16/2022 13:47	36.05	6/16/2022 14:34	19.06	6/15/2022 17:07	5.94
6/16/2022 13:48	36.61	6/16/2022 14:35	19.08	6/15/2022 17:08	5.91
6/16/2022 13:49	35.15	6/16/2022 14:36	19.05	6/15/2022 17:09	5.92
6/16/2022 13:50	36.53	6/16/2022 14:37	19.09	6/15/2022 17:10	5.94
6/16/2022 13:51	35.42	6/16/2022 14:38	19.04	6/15/2022 17:11	5.92
6/16/2022 13:52	36.30	6/16/2022 14:39	19.05	6/15/2022 17:12	5.94
6/16/2022 13:53	36.74	6/16/2022 14:40	19.07	6/15/2022 17:13	5.92
6/16/2022 13:54	35.90	6/16/2022 14:41	19.05	6/15/2022 17:14	5.92
6/16/2022 13:55	35.78	6/16/2022 14:42	19.05	6/15/2022 17:15	5.93
6/16/2022 13:56	36.67	6/16/2022 14:43	19.06	6/15/2022 17:16	5.89
6/16/2022 13:57	35.28	6/16/2022 14:44	19.08	6/15/2022 17:17	5.93
6/16/2022 13:58	36.56	6/16/2022 14:45	19.06	6/15/2022 17:18	5.93
6/16/2022 13:59	35.67	6/16/2022 14:46	19.05	6/15/2022 17:19	5.89
6/16/2022 14:00	36.05	6/16/2022 14:47	19.06	6/15/2022 17:20	5.89
6/16/2022 14:01	36.65	6/16/2022 14:48	19.03	6/15/2022 17:21	5.95
6/16/2022 14:02	35.23	6/16/2022 14:49	19.06	6/15/2022 17:22	5.93
6/16/2022 14:03	36.56	6/16/2022 14:50	19.06	6/15/2022 17:23	5.91
6/16/2022 14:04	35.50	6/16/2022 14:51	19.05	6/15/2022 17:24	5.93
6/16/2022 14:05	36.21	6/16/2022 14:52	19.07	6/15/2022 17:25	5.92
6/16/2022 14:06	36.58	6/16/2022 14:53	19.06	6/15/2022 17:26	5.90
6/16/2022 14:07	35.17	6/16/2022 14:54	19.05	6/15/2022 17:27	5.90
6/16/2022 14:08	36.62	6/16/2022 14:55	19.05	6/15/2022 17:28	5.92
6/16/2022 14:09	35.39	6/16/2022 14:56	19.06	6/15/2022 17:29	5.92
6/16/2022 14:10	36.37	6/16/2022 14:57	19.08	6/15/2022 17:30	5.92
6/16/2022 14:11	36.14	6/16/2022 14:58	19.06	6/15/2022 17:31	5.94
6/16/2022 14:12	35.46	6/16/2022 14:59	19.05	6/15/2022 17:32	5.89
6/16/2022 14:13	36.66	6/16/2022 15:00	19.04	6/15/2022 17:33	5.95
6/16/2022 14:14	35.35	6/16/2022 15:01	19.07	6/15/2022 17:34	5.96
6/16/2022 14:15	36.45	6/16/2022 15:02	19.07	6/15/2022 17:35	5.92
6/16/2022 14:16	35.83	6/16/2022 15:03	19.05	6/15/2022 17:36	5.92
6/16/2022 14:17	35.85	6/16/2022 15:04	19.06	6/15/2022 17:37	5.91
6/16/2022 14:18	36.67	6/16/2022 15:05	19.06	6/15/2022 17:38	5.92
6/16/2022 14:19	35.31	6/16/2022 15:06	19.05	6/15/2022 17:39	5.91
6/16/2022 14:20	36.58	6/16/2022 15:07	19.04	6/15/2022 17:40	5.91
6/16/2022 14:21	35.62	6/16/2022 15:08	19.07	6/15/2022 17:41	5.93
6/16/2022 14:22	36.15	6/16/2022 15:09	19.05	6/15/2022 17:42	5.94
6/16/2022 14:23	36.71	6/16/2022 15:10	19.06	6/15/2022 17:43	5.91
6/16/2022 14:24	35.25	6/16/2022 15:11	19.06	6/15/2022 17:44	5.96
6/16/2022 14:25	35.07	6/16/2022 15:12	19.06	6/15/2022 17:45	5.93
6/16/2022 14:26	34.98	6/16/2022 15:13	19.04	6/15/2022 17:46	5.94
6/16/2022 14:27	34.85	6/16/2022 15:14	19.07	6/15/2022 17:47	5.93
6/16/2022 14:28	34.81	6/16/2022 15:15	19.06	6/15/2022 17:48	5.94
6/16/2022 14:29	34.72	6/16/2022 15:16	19.02	6/15/2022 17:49	5.94
6/16/2022 14:30	34.70	6/16/2022 15:17	19.05	6/15/2022 17:50	5.91
6/16/2022 14:31	34.69	6/16/2022 15:18	19.05	6/15/2022 17:51	5.94
6/16/2022 14:32	36.02	6/16/2022 15:19	19.06	6/15/2022 17:52	5.93
6/16/2022 14:33	35.01	6/16/2022 15:20	19.05	6/15/2022 17:53	5.91
6/16/2022 14:34	34.79	6/16/2022 15:21	19.05	6/15/2022 17:54	5.92
6/16/2022 14:35	34.70	6/16/2022 15:22	19.07	6/15/2022 17:55	5.93
6/16/2022 14:36	34.65	6/16/2022 15:23	19.05	6/15/2022 17:56	5.92
6/16/2022 14:37	34.54	6/16/2022 15:24	19.03	6/15/2022 17:57	5.95
6/16/2022 14:38	34.51	6/16/2022 15:25	19.04	6/15/2022 17:58	5.92
6/16/2022 14:39	34.48	6/16/2022 15:26	19.07	6/15/2022 17:59	5.95
6/16/2022 14:40	34.44	6/16/2022 15:27	19.05	6/15/2022 18:00	5.92
6/16/2022 14:41	34.44	6/16/2022 15:28	19.06	6/15/2022 18:01	5.93
6/16/2022 14:42	34.39	6/16/2022 15:29	19.06	6/15/2022 18:02	5.94
6/16/2022 14:43	34.38	6/16/2022 15:30	19.04	6/15/2022 18:03	5.95
6/16/2022 14:44	34.35	6/16/2022 15:31	19.03	6/15/2022 18:04	5.94
6/16/2022 14:45	34.31	6/16/2022 15:32	19.03	6/15/2022 18:05	5.94
6/16/2022 14:46	34.26	6/16/2022 15:33	19.05	6/15/2022 18:06	5.96
6/16/2022 14:47	34.27	6/16/2022 15:34	19.07	6/15/2022 18:07	5.96
6/16/2022 14:48	34.24	6/16/2022 15:35	19.05	6/15/2022 18:08	5.97
6/16/2022 14:49	34.24	6/16/2022 15:36	19.06	6/15/2022 18:09	5.93
6/16/2022 14:50	34.22	6/16/2022 15:37	19.05	6/15/2022 18:10	5.91
6/16/2022 14:51	34.21	6/16/2022 15:38	19.05	6/15/2022 18:11	5.91
6/16/2022 14:52	34.18	6/16/2022 15:39	19.06	6/15/2022 18:12	5.95
6/16/2022 14:53	34.14	6/16/2022 15:40	19.06	6/15/2022 18:13	5.94
6/16/2022 14:54	34.15	6/16/2022 15:41	19.04	6/15/2022 18:14	5.93
6/16/2022 14:55	34.13	6/16/2022 15:42	19.05	6/15/2022 18:15	5.93
6/16/2022 14:56	34.09	6/16/2022 15:43	19.07	6/15/2022 18:16	5.94
6/16/2022 14:57	34.10	6/16/2022 15:44	19.04	6/15/2022 18:17	5.92
6/16/2022 14:58	34.10	6/16/2022 15:45	19.04	6/15/2022 18:18	5.92

6/16/2022 14:59	34.10	6/16/2022 15:46	19.05	6/15/2022 18:19	5.94
6/16/2022 15:00	34.11	6/16/2022 15:47	19.06	6/15/2022 18:20	5.88
6/16/2022 15:01	34.10	6/16/2022 15:48	19.04	6/15/2022 18:21	5.93
6/16/2022 15:02	34.06	6/16/2022 15:49	19.04	6/15/2022 18:22	5.97
6/16/2022 15:03	34.08	6/16/2022 15:50	19.08	6/15/2022 18:23	5.94
6/16/2022 15:04	34.02	6/16/2022 15:51	19.04	6/15/2022 18:24	5.98
6/16/2022 15:05	34.03	6/16/2022 15:52	19.05	6/15/2022 18:25	5.93
6/16/2022 15:06	34.02	6/16/2022 15:53	19.05	6/15/2022 18:26	5.94
6/16/2022 15:07	34.01	6/16/2022 15:54	19.05	6/15/2022 18:27	5.94
6/16/2022 15:08	34.00	6/16/2022 15:55	19.07	6/15/2022 18:28	5.92
6/16/2022 15:09	33.97	6/16/2022 15:56	19.04	6/15/2022 18:29	5.91
6/16/2022 15:10	33.95	6/16/2022 15:57	19.04	6/15/2022 18:30	5.91
6/16/2022 15:11	33.93	6/16/2022 15:58	19.07	6/15/2022 18:31	5.93
6/16/2022 15:12	33.92	6/16/2022 15:59	19.02	6/15/2022 18:32	5.93
6/16/2022 15:13	33.94	6/16/2022 16:00	19.04	6/15/2022 18:33	5.94
6/16/2022 15:14	33.92	6/16/2022 16:01	19.04	6/15/2022 18:34	5.94
6/16/2022 15:15	33.95	6/16/2022 16:02	19.07	6/15/2022 18:35	5.91
6/16/2022 15:16	33.95	6/16/2022 16:03	19.04	6/15/2022 18:36	5.95
6/16/2022 15:17	33.92	6/16/2022 16:04	19.06	6/15/2022 18:37	5.90
6/16/2022 15:18	33.92	6/16/2022 16:05	19.06	6/15/2022 18:38	5.91
6/16/2022 15:19	33.92	6/16/2022 16:06	19.03	6/15/2022 18:39	5.92
6/16/2022 15:20	33.91	6/16/2022 16:07	19.05	6/15/2022 18:40	5.95
6/16/2022 15:21	33.95	6/16/2022 16:08	19.05	6/15/2022 18:41	5.93
6/16/2022 15:22	33.90	6/16/2022 16:09	19.02	6/15/2022 18:42	5.92
6/16/2022 15:23	33.90	6/16/2022 16:10	19.05	6/15/2022 18:43	5.91
6/16/2022 15:24	33.88	6/16/2022 16:11	19.07	6/15/2022 18:44	5.92
6/16/2022 15:25	33.88	6/16/2022 16:12	19.04	6/15/2022 18:45	5.94
6/16/2022 15:26	33.87	6/16/2022 16:13	19.05	6/15/2022 18:46	5.92
6/16/2022 15:27	33.81	6/16/2022 16:14	19.06	6/15/2022 18:47	5.92
6/16/2022 15:28	33.85	6/16/2022 16:15	19.04	6/15/2022 18:48	5.93
6/16/2022 15:29	33.85	6/16/2022 16:16	19.03	6/15/2022 18:49	5.95
6/16/2022 15:30	33.81	6/16/2022 16:17	19.07	6/15/2022 18:50	5.94
6/16/2022 15:31	33.81	6/16/2022 16:18	19.03	6/15/2022 18:51	5.91
6/16/2022 15:32	33.82	6/16/2022 16:19	19.02	6/15/2022 18:52	5.93
6/16/2022 15:33	33.78	6/16/2022 16:20	19.04	6/15/2022 18:53	5.97
6/16/2022 15:34	33.77	6/16/2022 16:21	19.02	6/15/2022 18:54	5.91
6/16/2022 15:35	33.77	6/16/2022 16:22	19.05	6/15/2022 18:55	5.91
6/16/2022 15:36	33.75	6/16/2022 16:23	19.03	6/15/2022 18:56	5.93
6/16/2022 15:37	33.74	6/16/2022 16:24	19.04	6/15/2022 18:57	5.94
6/16/2022 15:38	33.76	6/16/2022 16:25	19.04	6/15/2022 18:58	5.91
6/16/2022 15:39	33.74	6/16/2022 16:26	19.04	6/15/2022 18:59	5.91
6/16/2022 15:40	33.74	6/16/2022 16:27	19.06	6/15/2022 19:00	5.93
6/16/2022 15:41	33.71	6/16/2022 16:28	19.08	6/15/2022 19:01	5.96
6/16/2022 15:42	33.71	6/16/2022 16:29	19.03	6/15/2022 19:02	5.96
6/16/2022 15:43	33.73	6/16/2022 16:30	19.02	6/15/2022 19:03	5.95
6/16/2022 15:44	33.71	6/16/2022 16:31	19.03	6/15/2022 19:04	5.95
6/16/2022 15:45	33.68	6/16/2022 16:32	19.06	6/15/2022 19:05	5.94
6/16/2022 15:46	33.69	6/16/2022 16:33	19.04	6/15/2022 19:06	5.93
6/16/2022 15:47	33.69	6/16/2022 16:34	19.06	6/15/2022 19:07	5.94
6/16/2022 15:48	33.68	6/16/2022 16:35	19.03	6/15/2022 19:08	5.92
6/16/2022 15:49	33.69	6/16/2022 16:36	19.04	6/15/2022 19:09	5.95
6/16/2022 15:50	33.72	6/16/2022 16:37	19.03	6/15/2022 19:10	5.91
6/16/2022 15:51	33.69	6/16/2022 16:38	19.04	6/15/2022 19:11	5.94
6/16/2022 15:52	33.68	6/16/2022 16:39	19.04	6/15/2022 19:12	5.93
6/16/2022 15:53	33.70	6/16/2022 16:40	19.06	6/15/2022 19:13	5.92
6/16/2022 15:54	33.68	6/16/2022 16:41	19.04	6/15/2022 19:14	5.96
6/16/2022 15:55	33.71	6/16/2022 16:42	19.04	6/15/2022 19:15	5.95
6/16/2022 15:56	33.71	6/16/2022 16:43	19.06	6/15/2022 19:16	5.93
6/16/2022 15:57	33.71	6/16/2022 16:44	19.05	6/15/2022 19:17	5.91
6/16/2022 15:58	33.71	6/16/2022 16:45	19.04	6/15/2022 19:18	5.92
6/16/2022 15:59	33.65	6/16/2022 16:46	19.04	6/15/2022 19:19	5.94
6/16/2022 16:00	33.67	6/16/2022 16:47	19.03	6/15/2022 19:20	5.93
6/16/2022 16:01	35.32	6/16/2022 16:48	19.04	6/15/2022 19:21	5.92
6/16/2022 16:02	35.61	6/16/2022 16:49	19.02	6/15/2022 19:22	5.95
6/16/2022 16:03	35.71	6/16/2022 16:50	19.05	6/15/2022 19:23	5.96
6/16/2022 16:04	34.44	6/16/2022 16:51	19.03	6/15/2022 19:24	5.94
6/16/2022 16:05	35.72	6/16/2022 16:52	19.03	6/15/2022 19:25	5.93
6/16/2022 16:06	35.91	6/16/2022 16:53	19.04	6/15/2022 19:26	5.94
6/16/2022 16:07	35.96	6/16/2022 16:54	19.05	6/15/2022 19:27	5.96
6/16/2022 16:08	34.64	6/16/2022 16:55	19.03	6/15/2022 19:28	5.93
6/16/2022 16:09	35.94	6/16/2022 16:56	19.04	6/15/2022 19:29	5.93
6/16/2022 16:10	36.15	6/16/2022 16:57	19.02	6/15/2022 19:30	5.91
6/16/2022 16:11	36.20	6/16/2022 16:58	19.05	6/15/2022 19:31	5.95
6/16/2022 16:12	34.98	6/16/2022 16:59	19.05	6/15/2022 19:32	5.95
6/16/2022 16:13	36.01	6/16/2022 17:00	19.05	6/15/2022 19:33	5.93
6/16/2022 16:14	34.81	6/16/2022 17:01	19.02	6/15/2022 19:34	5.96
6/16/2022 16:15	35.17	6/16/2022 17:02	19.01	6/15/2022 19:35	5.91
6/16/2022 16:16	36.00	6/16/2022 17:03	19.03	6/15/2022 19:36	5.92
6/16/2022 16:17	34.62	6/16/2022 17:04	19.02	6/15/2022 19:37	5.94
6/16/2022 16:18	34.44	6/16/2022 17:05	19.03	6/15/2022 19:38	5.94
6/16/2022 16:19	34.34	6/16/2022 17:06	19.05	6/15/2022 19:39	5.93
6/16/2022 16:20	34.25	6/16/2022 17:07	19.03	6/15/2022 19:40	5.92
6/16/2022 16:21	34.25	6/16/2022 17:08	19.05	6/15/2022 19:41	5.94
6/16/2022 16:22	34.19	6/16/2022 17:09	19.01	6/15/2022 19:42	5.92
6/16/2022 16:23	34.14	6/16/2022 17:10	19.05	6/15/2022 19:43	5.92
6/16/2022 16:24	34.12	6/16/2022 17:11	19.07	6/15/2022 19:44	5.92
6/16/2022 16:25	34.09	6/16/2022 17:12	19.03	6/15/2022 19:45	5.92
6/16/2022 16:26	34.02	6/16/2022 17:13	19.06	6/15/2022 19:46	5.94

6/16/2022 16:27	34.02	6/16/2022 17:14	19.03	6/15/2022 19:47	5.93
6/16/2022 16:28	34.00	6/16/2022 17:15	19.03	6/15/2022 19:48	5.94
6/16/2022 16:29	33.99	6/16/2022 17:16	19.04	6/15/2022 19:49	5.95
6/16/2022 16:30	33.96	6/16/2022 17:17	19.04	6/15/2022 19:50	5.95
6/16/2022 16:31	33.94	6/16/2022 17:18	19.07	6/15/2022 19:51	5.92
6/16/2022 16:32	33.93	6/16/2022 17:19	19.03	6/15/2022 19:52	5.95
6/16/2022 16:33	33.91	6/16/2022 17:20	19.04	6/15/2022 19:53	5.92
6/16/2022 16:34	33.88	6/16/2022 17:21	19.02	6/15/2022 19:54	5.95
6/16/2022 16:35	33.86	6/16/2022 17:22	19.05	6/15/2022 19:55	5.92
6/16/2022 16:36	33.83	6/16/2022 17:23	19.03	6/15/2022 19:56	5.92
6/16/2022 16:37	33.85	6/16/2022 17:24	19.18	6/15/2022 19:57	5.92
6/16/2022 16:38	33.82	6/16/2022 17:25	19.69	6/15/2022 19:58	5.95
6/16/2022 16:39	33.79	6/16/2022 17:26	19.74	6/15/2022 19:59	5.90
6/16/2022 16:40	33.79	6/16/2022 17:27	19.82	6/15/2022 20:00	5.93
6/16/2022 16:41	33.77	6/16/2022 17:28	19.83	6/15/2022 20:01	5.92
6/16/2022 16:42	33.75	6/16/2022 17:29	19.45	6/15/2022 20:02	5.94
6/16/2022 16:43	33.75	6/16/2022 17:30	19.26	6/15/2022 20:03	5.95
6/16/2022 16:44	33.73	6/16/2022 17:31	19.21	6/15/2022 20:04	5.95
6/16/2022 16:45	33.72	6/16/2022 17:32	19.17	6/15/2022 20:05	5.92
6/16/2022 16:46	33.71	6/16/2022 17:33	19.18	6/15/2022 20:06	5.95
6/16/2022 16:47	33.69	6/16/2022 17:34	19.16	6/15/2022 20:07	5.92
6/16/2022 16:48	33.73	6/16/2022 17:35	19.15	6/15/2022 20:08	5.93
6/16/2022 16:49	33.71	6/16/2022 17:36	19.14	6/15/2022 20:09	5.96
6/16/2022 16:50	33.72	6/16/2022 17:37	19.15	6/15/2022 20:10	5.93
6/16/2022 16:51	33.76	6/16/2022 17:38	19.13	6/15/2022 20:11	5.95
6/16/2022 16:52	33.77	6/16/2022 17:39	19.14	6/15/2022 20:12	5.93
6/16/2022 16:53	33.80	6/16/2022 17:40	19.13	6/15/2022 20:13	5.91
6/16/2022 16:54	33.85	6/16/2022 17:41	19.13	6/15/2022 20:14	5.95
6/16/2022 16:55	33.85	6/16/2022 17:42	19.12	6/15/2022 20:15	5.93
6/16/2022 16:56	33.89	6/16/2022 17:43	19.14	6/15/2022 20:16	5.94
6/16/2022 16:57	33.91	6/16/2022 17:44	19.11	6/15/2022 20:17	5.91
6/16/2022 16:58	33.92	6/16/2022 17:45	19.10	6/15/2022 20:18	5.90
6/16/2022 16:59	33.97	6/16/2022 17:46	19.11	6/15/2022 20:19	5.90
6/16/2022 17:00	33.91	6/16/2022 17:47	19.11	6/15/2022 20:20	5.93
6/16/2022 17:01	33.93	6/16/2022 17:48	19.10	6/15/2022 20:21	5.91
6/16/2022 17:02	33.91	6/16/2022 17:49	19.11	6/15/2022 20:22	5.95
6/16/2022 17:03	33.91	6/16/2022 17:50	19.13	6/15/2022 20:23	5.93
6/16/2022 17:04	33.88	6/16/2022 17:51	19.10	6/15/2022 20:24	5.93
6/16/2022 17:05	33.84	6/16/2022 17:52	19.11	6/15/2022 20:25	5.95
6/16/2022 17:06	33.83	6/16/2022 17:53	19.10	6/15/2022 20:26	5.93
6/16/2022 17:07	33.79	6/16/2022 17:54	19.12	6/15/2022 20:27	5.96
6/16/2022 17:08	33.82	6/16/2022 17:55	19.10	6/15/2022 20:28	5.92
6/16/2022 17:09	33.86	6/16/2022 17:56	19.11	6/15/2022 20:29	5.96
6/16/2022 17:10	33.85	6/16/2022 17:57	19.10	6/15/2022 20:30	5.92
6/16/2022 17:11	33.90	6/16/2022 17:58	19.10	6/15/2022 20:31	5.93
6/16/2022 17:12	33.92	6/16/2022 17:59	19.08	6/15/2022 20:32	5.93
6/16/2022 17:13	33.92	6/16/2022 18:00	19.08	6/15/2022 20:33	5.96
6/16/2022 17:14	33.96	6/16/2022 18:01	19.10	6/15/2022 20:34	5.96
6/16/2022 17:15	33.94	6/16/2022 18:02	19.10	6/15/2022 20:35	5.93
6/16/2022 17:16	33.97	6/16/2022 18:03	19.10	6/15/2022 20:36	5.93
6/16/2022 17:17	33.91	6/16/2022 18:04	19.08	6/15/2022 20:37	5.95
6/16/2022 17:18	33.91	6/16/2022 18:05	19.07	6/15/2022 20:38	5.95
6/16/2022 17:19	33.90	6/16/2022 18:06	19.07	6/15/2022 20:39	5.92
6/16/2022 17:20	33.86	6/16/2022 18:07	19.08	6/15/2022 20:40	5.96
6/16/2022 17:21	33.91	6/16/2022 18:08	19.10	6/15/2022 20:41	5.94
6/16/2022 17:22	33.85	6/16/2022 18:09	19.08	6/15/2022 20:42	5.94
6/16/2022 17:23	33.87	6/16/2022 18:10	19.11	6/15/2022 20:43	5.96
6/16/2022 17:24	33.91	6/16/2022 18:11	19.09	6/15/2022 20:44	5.92
6/16/2022 17:25	33.88	6/16/2022 18:12	19.11	6/15/2022 20:45	5.92
6/16/2022 17:26	33.87	6/16/2022 18:13	19.09	6/15/2022 20:46	5.93
6/16/2022 17:27	33.85	6/16/2022 18:14	19.08	6/15/2022 20:47	5.90
6/16/2022 17:28	33.85	6/16/2022 18:15	19.11	6/15/2022 20:48	5.93
6/16/2022 17:29	33.87	6/16/2022 18:16	19.09	6/15/2022 20:49	5.93
6/16/2022 17:30	33.82	6/16/2022 18:17	19.08	6/15/2022 20:50	5.93
6/16/2022 17:31	33.80	6/16/2022 18:18	19.10	6/15/2022 20:51	5.95
6/16/2022 17:32	33.79	6/16/2022 18:19	19.09	6/15/2022 20:52	5.93
6/16/2022 17:33	33.79	6/16/2022 18:20	19.10	6/15/2022 20:53	5.94
6/16/2022 17:34	33.79	6/16/2022 18:21	19.07	6/15/2022 20:54	5.95
6/16/2022 17:35	33.78	6/16/2022 18:22	19.10	6/15/2022 20:55	5.94
6/16/2022 17:36	33.76	6/16/2022 18:23	19.04	6/15/2022 20:56	5.95
6/16/2022 17:37	33.75	6/16/2022 18:24	19.08	6/15/2022 20:57	5.95
6/16/2022 17:38	33.74	6/16/2022 18:25	19.09	6/15/2022 20:58	5.93
6/16/2022 17:39	33.73	6/16/2022 18:26	19.09	6/15/2022 20:59	5.92
6/16/2022 17:40	33.70	6/16/2022 18:27	19.09	6/15/2022 21:00	5.92
6/16/2022 17:41	33.71	6/16/2022 18:28	19.09	6/15/2022 21:01	5.91
6/16/2022 17:42	33.66	6/16/2022 18:29	19.07	6/15/2022 21:02	5.94
6/16/2022 17:43	33.66	6/16/2022 18:30	19.07	6/15/2022 21:03	5.94
6/16/2022 17:44	33.67	6/16/2022 18:31	19.12	6/15/2022 21:04	5.97
6/16/2022 17:45	33.64	6/16/2022 18:32	19.09	6/15/2022 21:05	5.95
6/16/2022 17:46	33.64	6/16/2022 18:33	19.09	6/15/2022 21:06	5.94
6/16/2022 17:47	33.59	6/16/2022 18:34	19.11	6/15/2022 21:07	5.92
6/16/2022 17:48	33.62	6/16/2022 18:35	19.08	6/15/2022 21:08	5.92
6/16/2022 17:49	33.62	6/16/2022 18:36	19.09	6/15/2022 21:09	5.93
6/16/2022 17:50	33.63	6/16/2022 18:37	19.06	6/15/2022 21:10	5.93
6/16/2022 17:51	33.61	6/16/2022 18:38	19.08	6/15/2022 21:11	5.94
6/16/2022 17:52	33.63	6/16/2022 18:39	19.07	6/15/2022 21:12	5.92
6/16/2022 17:53	33.61	6/16/2022 18:40	19.09	6/15/2022 21:13	5.95
6/16/2022 17:54	33.63	6/16/2022 18:41	19.08	6/15/2022 21:14	5.92

6/16/2022 17:55	33.60	6/16/2022 18:42	19.08	6/15/2022 21:15	5.96
6/16/2022 17:56	33.57	6/16/2022 18:43	19.09	6/15/2022 21:16	5.93
6/16/2022 17:57	33.58	6/16/2022 18:44	19.09	6/15/2022 21:17	5.94
6/16/2022 17:58	33.54	6/16/2022 18:45	19.07	6/15/2022 21:18	5.92
6/16/2022 17:59	33.55	6/16/2022 18:46	19.07	6/15/2022 21:19	5.93
6/16/2022 18:00	33.57	6/16/2022 18:47	19.09	6/15/2022 21:20	5.90
6/16/2022 18:01	33.56	6/16/2022 18:48	19.08	6/15/2022 21:21	5.92
6/16/2022 18:02	33.52	6/16/2022 18:49	19.10	6/15/2022 21:22	5.95
6/16/2022 18:03	33.56	6/16/2022 18:50	19.10	6/15/2022 21:23	5.95
6/16/2022 18:04	33.53	6/16/2022 18:51	19.08	6/15/2022 21:24	5.95
6/16/2022 18:05	33.51	6/16/2022 18:52	19.08	6/15/2022 21:25	5.95
6/16/2022 18:06	33.52	6/16/2022 18:53	19.11	6/15/2022 21:26	5.95
6/16/2022 18:07	33.51	6/16/2022 18:54	19.06	6/15/2022 21:27	5.92
6/16/2022 18:08	33.49	6/16/2022 18:55	19.08	6/15/2022 21:28	5.95
6/16/2022 18:09	33.49	6/16/2022 18:56	19.07	6/15/2022 21:29	5.93
6/16/2022 18:10	33.48	6/16/2022 18:57	19.07	6/15/2022 21:30	5.97
6/16/2022 18:11	33.47	6/16/2022 18:58	19.10	6/15/2022 21:31	5.95
6/16/2022 18:12	33.49	6/16/2022 18:59	19.08	6/15/2022 21:32	5.93
6/16/2022 18:13	33.45	6/16/2022 19:00	19.09	6/15/2022 21:33	5.95
6/16/2022 18:14	33.48	6/16/2022 19:01	19.12	6/15/2022 21:34	5.94
6/16/2022 18:15	33.44	6/16/2022 19:02	19.09	6/15/2022 21:35	5.93
6/16/2022 18:16	33.47	6/16/2022 19:03	19.08	6/15/2022 21:36	5.95
6/16/2022 18:17	33.42	6/16/2022 19:04	19.09	6/15/2022 21:37	5.93
6/16/2022 18:18	33.45	6/16/2022 19:05	19.08	6/15/2022 21:38	5.92
6/16/2022 18:19	33.43	6/16/2022 19:06	19.12	6/15/2022 21:39	5.93
6/16/2022 18:20	34.35	6/16/2022 19:07	19.11	6/15/2022 21:40	5.94
6/16/2022 18:21	33.64	6/16/2022 19:08	19.11	6/15/2022 21:41	5.95
6/16/2022 18:22	33.56	6/16/2022 19:09	19.09	6/15/2022 21:42	5.93
6/16/2022 18:23	33.54	6/16/2022 19:10	19.08	6/15/2022 21:43	5.92
6/16/2022 18:24	33.49	6/16/2022 19:11	19.12	6/15/2022 21:44	5.94
6/16/2022 18:25	33.47	6/16/2022 19:12	19.09	6/15/2022 21:45	5.92
6/16/2022 18:26	33.44	6/16/2022 19:13	19.10	6/15/2022 21:46	5.93
6/16/2022 18:27	33.47	6/16/2022 19:14	19.10	6/15/2022 21:47	5.96
6/16/2022 18:28	33.46	6/16/2022 19:15	19.10	6/15/2022 21:48	5.97
6/16/2022 18:29	33.44	6/16/2022 19:16	19.08	6/15/2022 21:49	5.94
6/16/2022 18:30	33.41	6/16/2022 19:17	19.10	6/15/2022 21:50	5.93
6/16/2022 18:31	33.42	6/16/2022 19:18	19.09	6/15/2022 21:51	5.95
6/16/2022 18:32	33.41	6/16/2022 19:19	19.10	6/15/2022 21:52	5.93
6/16/2022 18:33	33.40	6/16/2022 19:20	19.09	6/15/2022 21:53	5.92
6/16/2022 18:34	33.40	6/16/2022 19:21	19.10	6/15/2022 21:54	5.93
6/16/2022 18:35	33.39	6/16/2022 19:22	19.08	6/15/2022 21:55	5.93
6/16/2022 18:36	33.41	6/16/2022 19:23	19.08	6/15/2022 21:56	5.90
6/16/2022 18:37	33.37	6/16/2022 19:24	19.10	6/15/2022 21:57	5.92
6/16/2022 18:38	33.39	6/16/2022 19:25	19.11	6/15/2022 21:58	5.94
6/16/2022 18:39	33.37	6/16/2022 19:26	19.10	6/15/2022 21:59	5.93
6/16/2022 18:40	33.34	6/16/2022 19:27	19.11	6/15/2022 22:00	5.93
6/16/2022 18:41	33.37	6/16/2022 19:28	19.09	6/15/2022 22:01	5.94
6/16/2022 18:42	33.33	6/16/2022 19:29	19.09	6/15/2022 22:02	5.93
6/16/2022 18:43	33.36	6/16/2022 19:30	19.10	6/15/2022 22:03	5.92
6/16/2022 18:44	33.34	6/16/2022 19:31	19.10	6/15/2022 22:04	5.93
6/16/2022 18:45	33.33	6/16/2022 19:32	19.08	6/15/2022 22:05	5.92
6/16/2022 18:46	33.36	6/16/2022 19:33	19.09	6/15/2022 22:06	5.92
6/16/2022 18:47	33.31	6/16/2022 19:34	19.10	6/15/2022 22:07	5.91
6/16/2022 18:48	33.34	6/16/2022 19:35	19.09	6/15/2022 22:08	5.94
6/16/2022 18:49	33.35	6/16/2022 19:36	19.08	6/15/2022 22:09	5.92
6/16/2022 18:50	33.32	6/16/2022 19:37	19.10	6/15/2022 22:10	5.91
6/16/2022 18:51	33.32	6/16/2022 19:38	19.09	6/15/2022 22:11	5.93
6/16/2022 18:52	33.32	6/16/2022 19:39	19.11	6/15/2022 22:12	5.94
6/16/2022 18:53	33.33	6/16/2022 19:40	19.11	6/15/2022 22:13	5.94
6/16/2022 18:54	33.32	6/16/2022 19:41	19.10	6/15/2022 22:14	5.95
6/16/2022 18:55	33.28	6/16/2022 19:42	19.10	6/15/2022 22:15	5.95
6/16/2022 18:56	33.32	6/16/2022 19:43	19.09	6/15/2022 22:16	5.90
6/16/2022 18:57	33.31	6/16/2022 19:44	19.07	6/15/2022 22:17	5.96
6/16/2022 18:58	33.32	6/16/2022 19:45	19.07	6/15/2022 22:18	5.95
6/16/2022 18:59	33.28	6/16/2022 19:46	19.08	6/15/2022 22:19	5.92
6/16/2022 19:00	33.27	6/16/2022 19:47	19.08	6/15/2022 22:20	5.94
6/16/2022 19:01	33.30	6/16/2022 19:48	19.08	6/15/2022 22:21	5.91
6/16/2022 19:02	33.29	6/16/2022 19:49	19.08	6/15/2022 22:22	5.92
6/16/2022 19:03	33.26	6/16/2022 19:50	19.09	6/15/2022 22:23	5.93
6/16/2022 19:04	33.27	6/16/2022 19:51	19.09	6/15/2022 22:24	5.93
6/16/2022 19:05	33.28	6/16/2022 19:52	19.13	6/15/2022 22:25	5.93
6/16/2022 19:06	33.28	6/16/2022 19:53	19.09	6/15/2022 22:26	5.91
6/16/2022 19:07	33.25	6/16/2022 19:54	19.08	6/15/2022 22:27	5.95
6/16/2022 19:08	33.24	6/16/2022 19:55	19.09	6/15/2022 22:28	5.93
6/16/2022 19:09	33.28	6/16/2022 19:56	19.10	6/15/2022 22:29	5.94
6/16/2022 19:10	33.26	6/16/2022 19:57	19.06	6/15/2022 22:30	5.92
6/16/2022 19:11	33.25	6/16/2022 19:58	19.06	6/15/2022 22:31	5.96
6/16/2022 19:12	33.23	6/16/2022 19:59	19.08	6/15/2022 22:32	5.93
6/16/2022 19:13	33.24	6/16/2022 20:00	19.06	6/15/2022 22:33	5.94
6/16/2022 19:14	33.25	6/16/2022 20:01	19.08	6/15/2022 22:34	5.95
6/16/2022 19:15	33.24	6/16/2022 20:02	19.09	6/15/2022 22:35	5.94
6/16/2022 19:16	33.25	6/16/2022 20:03	19.08	6/15/2022 22:36	5.92
6/16/2022 19:17	33.23	6/16/2022 20:04	19.09	6/15/2022 22:37	5.92
6/16/2022 19:18	33.23	6/16/2022 20:05	19.07	6/15/2022 22:38	5.94
6/16/2022 19:19	33.22	6/16/2022 20:06	19.08	6/15/2022 22:39	5.94
6/16/2022 19:20	33.25	6/16/2022 20:07	19.08	6/15/2022 22:40	5.92
6/16/2022 19:21	33.22	6/16/2022 20:08	19.07	6/15/2022 22:41	5.95
6/16/2022 19:22	33.20	6/16/2022 20:09	19.06	6/15/2022 22:42	5.90

6/16/2022 19:23	33.22	6/16/2022 20:10	19.06	6/15/2022 22:43	5.93
6/16/2022 19:24	33.21	6/16/2022 20:11	19.09	6/15/2022 22:44	5.92
6/16/2022 19:25	33.23	6/16/2022 20:12	19.07	6/15/2022 22:45	5.92
6/16/2022 19:26	33.18	6/16/2022 20:13	19.06	6/15/2022 22:46	5.90
6/16/2022 19:27	33.18	6/16/2022 20:14	19.10	6/15/2022 22:47	5.93
6/16/2022 19:28	33.20	6/16/2022 20:15	19.09	6/15/2022 22:48	5.92
6/16/2022 19:29	33.17	6/16/2022 20:16	19.08	6/15/2022 22:49	5.94
6/16/2022 19:30	33.21	6/16/2022 20:17	19.07	6/15/2022 22:50	5.97
6/16/2022 19:31	33.23	6/16/2022 20:18	19.07	6/15/2022 22:51	5.94
6/16/2022 19:32	34.08	6/16/2022 20:19	19.07	6/15/2022 22:52	5.95
6/16/2022 19:33	33.65	6/16/2022 20:20	19.06	6/15/2022 22:53	5.92
6/16/2022 19:34	33.38	6/16/2022 20:21	19.10	6/15/2022 22:54	5.88
6/16/2022 19:35	33.31	6/16/2022 20:22	19.06	6/15/2022 22:55	5.95
6/16/2022 19:36	33.29	6/16/2022 20:23	19.05	6/15/2022 22:56	5.94
6/16/2022 19:37	33.27	6/16/2022 20:24	19.08	6/15/2022 22:57	5.95
6/16/2022 19:38	33.25	6/16/2022 20:25	19.06	6/15/2022 22:58	5.94
6/16/2022 19:39	33.24	6/16/2022 20:26	19.06	6/15/2022 22:59	5.94
6/16/2022 19:40	33.23	6/16/2022 20:27	19.09	6/15/2022 23:00	5.96
6/16/2022 19:41	33.22	6/16/2022 20:28	19.07	6/15/2022 23:01	5.92
6/16/2022 19:42	33.25	6/16/2022 20:29	19.11	6/15/2022 23:02	5.93
6/16/2022 19:43	33.20	6/16/2022 20:30	19.07	6/15/2022 23:03	5.92
6/16/2022 19:44	33.23	6/16/2022 20:31	19.10	6/15/2022 23:04	5.95
6/16/2022 19:45	33.22	6/16/2022 20:32	19.08	6/15/2022 23:05	5.95
6/16/2022 19:46	33.26	6/16/2022 20:33	19.06	6/15/2022 23:06	5.95
6/16/2022 19:47	33.20	6/16/2022 20:34	19.09	6/15/2022 23:07	5.92
6/16/2022 19:48	33.21	6/16/2022 20:35	19.06	6/15/2022 23:08	5.91
6/16/2022 19:49	33.18	6/16/2022 20:36	19.07	6/15/2022 23:09	5.95
6/16/2022 19:50	33.22	6/16/2022 20:37	19.10	6/15/2022 23:10	5.91
6/16/2022 19:51	33.21	6/16/2022 20:38	19.08	6/15/2022 23:11	5.97
6/16/2022 19:52	33.18	6/16/2022 20:39	19.07	6/15/2022 23:12	5.90
6/16/2022 19:53	33.15	6/16/2022 20:40	19.10	6/15/2022 23:13	5.93
6/16/2022 19:54	33.16	6/16/2022 20:41	19.10	6/15/2022 23:14	5.91
6/16/2022 19:55	33.16	6/16/2022 20:42	19.09	6/15/2022 23:15	5.93
6/16/2022 19:56	33.17	6/16/2022 20:43	19.07	6/15/2022 23:16	5.93
6/16/2022 19:57	33.17	6/16/2022 20:44	19.08	6/15/2022 23:17	5.93
6/16/2022 19:58	33.18	6/16/2022 20:45	19.08	6/15/2022 23:18	5.95
6/16/2022 19:59	33.16	6/16/2022 20:46	19.08	6/15/2022 23:19	5.93
6/16/2022 20:00	33.16	6/16/2022 20:47	19.10	6/15/2022 23:20	5.92
6/16/2022 20:01	33.14	6/16/2022 20:48	19.08	6/15/2022 23:21	5.96
6/16/2022 20:02	33.15	6/16/2022 20:49	19.07	6/15/2022 23:22	5.93
6/16/2022 20:03	33.16	6/16/2022 20:50	19.09	6/15/2022 23:23	5.94
6/16/2022 20:04	33.16	6/16/2022 20:51	19.08	6/15/2022 23:24	5.94
6/16/2022 20:05	33.16	6/16/2022 20:52	19.11	6/15/2022 23:25	5.90
6/16/2022 20:06	33.13	6/16/2022 20:53	19.08	6/15/2022 23:26	5.94
6/16/2022 20:07	33.12	6/16/2022 20:54	19.09	6/15/2022 23:27	5.94
6/16/2022 20:08	33.22	6/16/2022 20:55	19.08	6/15/2022 23:28	5.95
6/16/2022 20:09	33.19	6/16/2022 20:56	19.07	6/15/2022 23:29	5.94
6/16/2022 20:10	33.17	6/16/2022 20:57	19.08	6/15/2022 23:30	5.94
6/16/2022 20:11	33.17	6/16/2022 20:58	19.08	6/15/2022 23:31	5.92
6/16/2022 20:12	33.16	6/16/2022 20:59	19.08	6/15/2022 23:32	5.93
6/16/2022 20:13	33.15	6/16/2022 21:00	19.08	6/15/2022 23:33	5.91
6/16/2022 20:14	33.17	6/16/2022 21:01	19.07	6/15/2022 23:34	5.92
6/16/2022 20:15	33.15	6/16/2022 21:02	19.06	6/15/2022 23:35	5.93
6/16/2022 20:16	33.12	6/16/2022 21:03	19.10	6/15/2022 23:36	5.91
6/16/2022 20:17	33.15	6/16/2022 21:04	19.09	6/15/2022 23:37	5.94
6/16/2022 20:18	33.18	6/16/2022 21:05	19.10	6/15/2022 23:38	5.92
6/16/2022 20:19	33.13	6/16/2022 21:06	19.08	6/15/2022 23:39	5.92
6/16/2022 20:20	33.13	6/16/2022 21:07	19.07	6/15/2022 23:40	5.93
6/16/2022 20:21	33.13	6/16/2022 21:08	19.07	6/15/2022 23:41	5.93
6/16/2022 20:22	33.11	6/16/2022 21:09	19.08	6/15/2022 23:42	5.93
6/16/2022 20:23	33.15	6/16/2022 21:10	19.07	6/15/2022 23:43	5.93
6/16/2022 20:24	33.12	6/16/2022 21:11	19.06	6/15/2022 23:44	5.94
6/16/2022 20:25	33.12	6/16/2022 21:12	19.06	6/15/2022 23:45	5.91
6/16/2022 20:26	33.14	6/16/2022 21:13	19.06	6/15/2022 23:46	5.90
6/16/2022 20:27	33.13	6/16/2022 21:14	19.08	6/15/2022 23:47	5.94
6/16/2022 20:28	33.12	6/16/2022 21:15	19.04	6/15/2022 23:48	5.95
6/16/2022 20:29	33.12	6/16/2022 21:16	19.07	6/15/2022 23:49	5.91
6/16/2022 20:30	33.08	6/16/2022 21:17	19.07	6/15/2022 23:50	5.91
6/16/2022 20:31	33.13	6/16/2022 21:18	19.09	6/15/2022 23:51	5.92
6/16/2022 20:32	33.12	6/16/2022 21:19	19.08	6/15/2022 23:52	7.33
6/16/2022 20:33	33.10	6/16/2022 21:20	19.07	6/15/2022 23:53	8.69
6/16/2022 20:34	33.08	6/16/2022 21:21	19.09	6/15/2022 23:54	6.72
6/16/2022 20:35	33.07	6/16/2022 21:22	19.04	6/15/2022 23:55	5.98
6/16/2022 20:36	33.06	6/16/2022 21:23	19.07	6/15/2022 23:56	5.96
6/16/2022 20:37	33.10	6/16/2022 21:24	19.08	6/15/2022 23:57	5.96
6/16/2022 20:38	33.07	6/16/2022 21:25	19.09	6/15/2022 23:58	5.95
6/16/2022 20:39	33.09	6/16/2022 21:26	19.07	6/15/2022 23:59	5.93
6/16/2022 20:40	33.09	6/16/2022 21:27	19.08	6/16/2022 0:00	5.90
6/16/2022 20:41	33.09	6/16/2022 21:28	19.05	6/16/2022 0:01	5.95
6/16/2022 20:42	33.07	6/16/2022 21:29	19.05	6/16/2022 0:02	5.94
6/16/2022 20:43	33.07	6/16/2022 21:30	19.07	6/16/2022 0:03	5.94
6/16/2022 20:44	33.06	6/16/2022 21:31	19.09	6/16/2022 0:04	5.93
6/16/2022 20:45	33.06	6/16/2022 21:32	19.08	6/16/2022 0:05	5.95
6/16/2022 20:46	33.06	6/16/2022 21:33	19.08	6/16/2022 0:06	5.94
6/16/2022 20:47	33.08	6/16/2022 21:34	19.08	6/16/2022 0:07	5.94
6/16/2022 20:48	33.08	6/16/2022 21:35	19.07	6/16/2022 0:08	5.92
6/16/2022 20:49	33.07	6/16/2022 21:36	19.07	6/16/2022 0:09	5.92
6/16/2022 20:50	33.06	6/16/2022 21:37	19.07	6/16/2022 0:10	5.91

6/16/2022 20:51	33.07	6/16/2022 21:38	19.06	6/16/2022 0:11	5.94
6/16/2022 20:52	33.03	6/16/2022 21:39	19.07	6/16/2022 0:12	5.92
6/16/2022 20:53	33.06	6/16/2022 21:40	19.06	6/16/2022 0:13	5.91
6/16/2022 20:54	33.06	6/16/2022 21:41	19.07	6/16/2022 0:14	5.92
6/16/2022 20:55	33.05	6/16/2022 21:42	19.05	6/16/2022 0:15	5.90
6/16/2022 20:56	33.06	6/16/2022 21:43	19.06	6/16/2022 0:16	5.93
6/16/2022 20:57	33.08	6/16/2022 21:44	19.03	6/16/2022 0:17	5.95
6/16/2022 20:58	33.04	6/16/2022 21:45	19.05	6/16/2022 0:18	5.93
6/16/2022 20:59	33.06	6/16/2022 21:46	19.05	6/16/2022 0:19	5.93
6/16/2022 21:00	33.04	6/16/2022 21:47	19.05	6/16/2022 0:20	5.94
6/16/2022 21:01	33.03	6/16/2022 21:48	19.05	6/16/2022 0:21	5.89
6/16/2022 21:02	33.01	6/16/2022 21:49	19.07	6/16/2022 0:22	5.91
6/16/2022 21:03	33.07	6/16/2022 21:50	19.03	6/16/2022 0:23	5.94
6/16/2022 21:04	33.07	6/16/2022 21:51	19.04	6/16/2022 0:24	5.92
6/16/2022 21:05	33.01	6/16/2022 21:52	19.07	6/16/2022 0:25	5.93
6/16/2022 21:06	33.08	6/16/2022 21:53	19.06	6/16/2022 0:26	5.93
6/16/2022 21:07	33.01	6/16/2022 21:54	19.08	6/16/2022 0:27	5.92
6/16/2022 21:08	33.02	6/16/2022 21:55	19.06	6/16/2022 0:28	5.93
6/16/2022 21:09	33.02	6/16/2022 21:56	19.07	6/16/2022 0:29	5.91
6/16/2022 21:10	33.03	6/16/2022 21:57	19.03	6/16/2022 0:30	5.92
6/16/2022 21:11	33.04	6/16/2022 21:58	19.06	6/16/2022 0:31	5.91
6/16/2022 21:12	33.01	6/16/2022 21:59	19.05	6/16/2022 0:32	5.91
6/16/2022 21:13	33.03	6/16/2022 22:00	19.06	6/16/2022 0:33	5.93
6/16/2022 21:14	33.01	6/16/2022 22:01	19.07	6/16/2022 0:34	5.92
6/16/2022 21:15	33.02	6/16/2022 22:02	19.07	6/16/2022 0:35	5.91
6/16/2022 21:16	33.02	6/16/2022 22:03	19.07	6/16/2022 0:36	5.93
6/16/2022 21:17	33.03	6/16/2022 22:04	19.08	6/16/2022 0:37	5.92
6/16/2022 21:18	33.04	6/16/2022 22:05	19.04	6/16/2022 0:38	5.91
6/16/2022 21:19	33.01	6/16/2022 22:06	19.09	6/16/2022 0:39	5.95
6/16/2022 21:20	33.02	6/16/2022 22:07	19.08	6/16/2022 0:40	5.93
6/16/2022 21:21	32.98	6/16/2022 22:08	19.08	6/16/2022 0:41	5.94
6/16/2022 21:22	32.99	6/16/2022 22:09	19.09	6/16/2022 0:42	5.91
6/16/2022 21:23	33.00	6/16/2022 22:10	19.09	6/16/2022 0:43	5.90
6/16/2022 21:24	32.99	6/16/2022 22:11	19.07	6/16/2022 0:44	5.92
6/16/2022 21:25	33.01	6/16/2022 22:12	19.08	6/16/2022 0:45	5.90
6/16/2022 21:26	33.01	6/16/2022 22:13	19.09	6/16/2022 0:46	5.90
6/16/2022 21:27	32.99	6/16/2022 22:14	19.05	6/16/2022 0:47	5.90
6/16/2022 21:28	33.01	6/16/2022 22:15	19.08	6/16/2022 0:48	5.91
6/16/2022 21:29	33.00	6/16/2022 22:16	19.09	6/16/2022 0:49	5.93
6/16/2022 21:30	32.97	6/16/2022 22:17	19.09	6/16/2022 0:50	5.91
6/16/2022 21:31	32.98	6/16/2022 22:18	19.08	6/16/2022 0:51	5.92
6/16/2022 21:32	33.00	6/16/2022 22:19	19.12	6/16/2022 0:52	5.92
6/16/2022 21:33	33.02	6/16/2022 22:20	19.10	6/16/2022 0:53	5.95
6/16/2022 21:34	32.97	6/16/2022 22:21	19.12	6/16/2022 0:54	5.91
6/16/2022 21:35	32.95	6/16/2022 22:22	19.09	6/16/2022 0:55	5.93
6/16/2022 21:36	33.00	6/16/2022 22:23	19.08	6/16/2022 0:56	5.91
6/16/2022 21:37	33.00	6/16/2022 22:24	19.09	6/16/2022 0:57	5.91
6/16/2022 21:38	33.00	6/16/2022 22:25	19.11	6/16/2022 0:58	5.92
6/16/2022 21:39	32.98	6/16/2022 22:26	19.07	6/16/2022 0:59	5.91
6/16/2022 21:40	32.97	6/16/2022 22:27	19.09	6/16/2022 1:00	5.94
6/16/2022 21:41	32.98	6/16/2022 22:28	19.08	6/16/2022 1:01	5.96
6/16/2022 21:42	32.97	6/16/2022 22:29	19.09	6/16/2022 1:02	5.91
6/16/2022 21:43	32.95	6/16/2022 22:30	19.07	6/16/2022 1:03	5.93
6/16/2022 21:44	32.97	6/16/2022 22:31	19.09	6/16/2022 1:04	5.90
6/16/2022 21:45	32.98	6/16/2022 22:32	19.08	6/16/2022 1:05	5.94
6/16/2022 21:46	32.96	6/16/2022 22:33	19.06	6/16/2022 1:06	5.95
6/16/2022 21:47	32.95	6/16/2022 22:34	19.09	6/16/2022 1:07	5.93
6/16/2022 21:48	32.98	6/16/2022 22:35	19.07	6/16/2022 1:08	5.92
6/16/2022 21:49	32.96	6/16/2022 22:36	19.07	6/16/2022 1:09	5.91
6/16/2022 21:50	33.63	6/16/2022 22:37	19.06	6/16/2022 1:10	5.92
6/16/2022 21:51	33.36	6/16/2022 22:38	19.07	6/16/2022 1:11	5.92
6/16/2022 21:52	33.10	6/16/2022 22:39	19.07	6/16/2022 1:12	5.91
6/16/2022 21:53	33.08	6/16/2022 22:40	19.05	6/16/2022 1:13	5.95
6/16/2022 21:54	33.06	6/16/2022 22:41	19.07	6/16/2022 1:14	5.93
6/16/2022 21:55	33.02	6/16/2022 22:42	19.07	6/16/2022 1:15	5.91
6/16/2022 21:56	32.99	6/16/2022 22:43	19.07	6/16/2022 1:16	5.92
6/16/2022 21:57	32.99	6/16/2022 22:44	19.11	6/16/2022 1:17	5.91
6/16/2022 21:58	33.00	6/16/2022 22:45	19.11	6/16/2022 1:18	5.94
6/16/2022 21:59	33.03	6/16/2022 22:46	19.09	6/16/2022 1:19	5.93
6/16/2022 22:00	33.00	6/16/2022 22:47	19.06	6/16/2022 1:20	5.93
6/16/2022 22:01	32.99	6/16/2022 22:48	19.07	6/16/2022 1:21	5.90
6/16/2022 22:02	33.02	6/16/2022 22:49	19.10	6/16/2022 1:22	5.91
6/16/2022 22:03	32.98	6/16/2022 22:50	19.08	6/16/2022 1:23	5.94
6/16/2022 22:04	32.97	6/16/2022 22:51	19.06	6/16/2022 1:24	5.92
6/16/2022 22:05	32.96	6/16/2022 22:52	19.41	6/16/2022 1:25	5.91
6/16/2022 22:06	32.98	6/16/2022 22:53	19.75	6/16/2022 1:26	5.94
6/16/2022 22:07	32.96	6/16/2022 22:54	19.82	6/16/2022 1:27	5.93
6/16/2022 22:08	32.97	6/16/2022 22:55	19.87	6/16/2022 1:28	5.94
6/16/2022 22:09	32.96	6/16/2022 22:56	19.89	6/16/2022 1:29	5.89
6/16/2022 22:10	32.98	6/16/2022 22:57	19.93	6/16/2022 1:30	5.91
6/16/2022 22:11	32.99	6/16/2022 22:58	19.48	6/16/2022 1:31	5.92
6/16/2022 22:12	32.97	6/16/2022 22:59	19.31	6/16/2022 1:32	5.95
6/16/2022 22:13	32.97	6/16/2022 23:00	19.28	6/16/2022 1:33	5.91
6/16/2022 22:14	32.99	6/16/2022 23:01	19.27	6/16/2022 1:34	5.94
6/16/2022 22:15	32.95	6/16/2022 23:02	19.23	6/16/2022 1:35	5.89
6/16/2022 22:16	32.96	6/16/2022 23:03	19.25	6/16/2022 1:36	8.39
6/16/2022 22:17	32.95	6/16/2022 23:04	19.21	6/16/2022 1:37	8.67
6/16/2022 22:18	32.94	6/16/2022 23:05	19.21	6/16/2022 1:38	6.11

6/16/2022 22:19	32.93	6/16/2022 23:06	19.20	6/16/2022 1:39	5.98
6/16/2022 22:20	32.94	6/16/2022 23:07	19.20	6/16/2022 1:40	5.96
6/16/2022 22:21	32.97	6/16/2022 23:08	19.19	6/16/2022 1:41	5.94
6/16/2022 22:22	32.96	6/16/2022 23:09	19.21	6/16/2022 1:42	5.93
6/16/2022 22:23	32.97	6/16/2022 23:10	19.17	6/16/2022 1:43	5.95
6/16/2022 22:24	32.97	6/16/2022 23:11	19.18	6/16/2022 1:44	5.93
6/16/2022 22:25	32.96	6/16/2022 23:12	19.18	6/16/2022 1:45	5.94
6/16/2022 22:26	32.98	6/16/2022 23:13	19.15	6/16/2022 1:46	5.93
6/16/2022 22:27	32.98	6/16/2022 23:14	19.15	6/16/2022 1:47	5.91
6/16/2022 22:28	32.98	6/16/2022 23:15	19.17	6/16/2022 1:48	5.95
6/16/2022 22:29	32.97	6/16/2022 23:16	19.14	6/16/2022 1:49	5.90
6/16/2022 22:30	32.97	6/16/2022 23:17	19.17	6/16/2022 1:50	5.96
6/16/2022 22:31	32.97	6/16/2022 23:18	19.16	6/16/2022 1:51	5.91
6/16/2022 22:32	32.95	6/16/2022 23:19	19.15	6/16/2022 1:52	5.95
6/16/2022 22:33	33.00	6/16/2022 23:20	19.17	6/16/2022 1:53	5.91
6/16/2022 22:34	32.95	6/16/2022 23:21	19.14	6/16/2022 1:54	5.92
6/16/2022 22:35	32.93	6/16/2022 23:22	19.15	6/16/2022 1:55	5.92
6/16/2022 22:36	32.96	6/16/2022 23:23	19.17	6/16/2022 1:56	5.94
6/16/2022 22:37	32.98	6/16/2022 23:24	19.17	6/16/2022 1:57	5.88
6/16/2022 22:38	32.99	6/16/2022 23:25	19.14	6/16/2022 1:58	5.93
6/16/2022 22:39	32.92	6/16/2022 23:26	19.14	6/16/2022 1:59	5.91
6/16/2022 22:40	32.94	6/16/2022 23:27	19.14	6/16/2022 2:00	5.88
6/16/2022 22:41	32.94	6/16/2022 23:28	19.16	6/16/2022 2:01	5.95
6/16/2022 22:42	32.96	6/16/2022 23:29	19.15	6/16/2022 2:02	5.90
6/16/2022 22:43	32.96	6/16/2022 23:30	19.15	6/16/2022 2:03	5.92
6/16/2022 22:44	32.99	6/16/2022 23:31	19.13	6/16/2022 2:04	5.92
6/16/2022 22:45	32.99	6/16/2022 23:32	19.15	6/16/2022 2:05	5.92
6/16/2022 22:46	33.03	6/16/2022 23:33	19.13	6/16/2022 2:06	5.94
6/16/2022 22:47	32.96	6/16/2022 23:34	19.13	6/16/2022 2:07	5.91
6/16/2022 22:48	32.97	6/16/2022 23:35	19.14	6/16/2022 2:08	5.92
6/16/2022 22:49	32.99	6/16/2022 23:36	19.14	6/16/2022 2:09	5.95
6/16/2022 22:50	32.94	6/16/2022 23:37	19.12	6/16/2022 2:10	5.93
6/16/2022 22:51	32.97	6/16/2022 23:38	19.11	6/16/2022 2:11	5.92
6/16/2022 22:52	32.97	6/16/2022 23:39	19.12	6/16/2022 2:12	5.94
6/16/2022 22:53	32.96	6/16/2022 23:40	19.13	6/16/2022 2:13	5.93
6/16/2022 22:54	32.94	6/16/2022 23:41	19.13	6/16/2022 2:14	5.90
6/16/2022 22:55	32.93	6/16/2022 23:42	19.14	6/16/2022 2:15	5.92
6/16/2022 22:56	32.96	6/16/2022 23:43	19.14	6/16/2022 2:16	5.93
6/16/2022 22:57	32.94	6/16/2022 23:44	19.11	6/16/2022 2:17	5.93
6/16/2022 22:58	32.97	6/16/2022 23:45	19.12	6/16/2022 2:18	5.94
6/16/2022 22:59	32.92	6/16/2022 23:46	19.15	6/16/2022 2:19	5.94
6/16/2022 23:00	32.95	6/16/2022 23:47	19.10	6/16/2022 2:20	5.92
6/16/2022 23:01	32.92	6/16/2022 23:48	19.12	6/16/2022 2:21	5.95
6/16/2022 23:02	32.95	6/16/2022 23:49	19.12	6/16/2022 2:22	5.90
6/16/2022 23:03	32.95	6/16/2022 23:50	19.11	6/16/2022 2:23	5.93
6/16/2022 23:04	32.93	6/16/2022 23:51	19.15	6/16/2022 2:24	5.94
6/16/2022 23:05	32.93	6/16/2022 23:52	19.13	6/16/2022 2:25	5.91
6/16/2022 23:06	32.91	6/16/2022 23:53	19.11	6/16/2022 2:26	5.89
6/16/2022 23:07	32.90	6/16/2022 23:54	19.12	6/16/2022 2:27	5.90
6/16/2022 23:08	32.92	6/16/2022 23:55	19.11	6/16/2022 2:28	5.94
6/16/2022 23:09	32.95	6/16/2022 23:56	19.11	6/16/2022 2:29	5.97
6/16/2022 23:10	32.94	6/16/2022 23:57	19.10	6/16/2022 2:30	5.91
6/16/2022 23:11	32.96	6/16/2022 23:58	19.11	6/16/2022 2:31	5.94
6/16/2022 23:12	32.92	6/16/2022 23:59	19.09	6/16/2022 2:32	5.92
6/16/2022 23:13	32.90	6/17/2022 0:00	19.10	6/16/2022 2:33	5.94
6/16/2022 23:14	32.91	6/17/2022 0:01	19.11	6/16/2022 2:34	5.93
6/16/2022 23:15	32.91	6/17/2022 0:02	19.11	6/16/2022 2:35	5.94
6/16/2022 23:16	32.93	6/17/2022 0:03	19.12	6/16/2022 2:36	5.95
6/16/2022 23:17	32.98	6/17/2022 0:04	19.10	6/16/2022 2:37	5.92
6/16/2022 23:18	32.96	6/17/2022 0:05	19.12	6/16/2022 2:38	5.94
6/16/2022 23:19	32.95	6/17/2022 0:06	19.10	6/16/2022 2:39	5.89
6/16/2022 23:20	32.95	6/17/2022 0:07	19.10	6/16/2022 2:40	5.92
6/16/2022 23:21	32.92	6/17/2022 0:08	19.13	6/16/2022 2:41	5.93
6/16/2022 23:22	32.97	6/17/2022 0:09	19.11	6/16/2022 2:42	5.93
6/16/2022 23:23	32.92	6/17/2022 0:10	19.13	6/16/2022 2:43	5.93
6/16/2022 23:24	32.95	6/17/2022 0:11	19.10	6/16/2022 2:44	5.92
6/16/2022 23:25	32.94	6/17/2022 0:12	19.12	6/16/2022 2:45	5.94
6/16/2022 23:26	32.91	6/17/2022 0:13	19.10	6/16/2022 2:46	5.92
6/16/2022 23:27	32.94	6/17/2022 0:14	19.12	6/16/2022 2:47	5.90
6/16/2022 23:28	32.96	6/17/2022 0:15	19.09	6/16/2022 2:48	5.90
6/16/2022 23:29	32.92	6/17/2022 0:16	19.11	6/16/2022 2:49	5.92
6/16/2022 23:30	32.93	6/17/2022 0:17	19.13	6/16/2022 2:50	5.94
6/16/2022 23:31	32.93	6/17/2022 0:18	19.11	6/16/2022 2:51	5.90
6/16/2022 23:32	32.92	6/17/2022 0:19	19.12	6/16/2022 2:52	5.93
6/16/2022 23:33	32.88	6/17/2022 0:20	19.11	6/16/2022 2:53	5.93
6/16/2022 23:34	32.96	6/17/2022 0:21	19.12	6/16/2022 2:54	5.90
6/16/2022 23:35	32.92	6/17/2022 0:22	19.13	6/16/2022 2:55	5.90
6/16/2022 23:36	32.92	6/17/2022 0:23	19.12	6/16/2022 2:56	5.92
6/16/2022 23:37	32.88	6/17/2022 0:24	19.12	6/16/2022 2:57	5.92
6/16/2022 23:38	32.87	6/17/2022 0:25	19.12	6/16/2022 2:58	5.89
6/16/2022 23:39	32.90	6/17/2022 0:26	19.10	6/16/2022 2:59	5.93
6/16/2022 23:40	32.94	6/17/2022 0:27	19.13	6/16/2022 3:00	5.89
6/16/2022 23:41	32.92	6/17/2022 0:28	19.12	6/16/2022 3:01	5.90
6/16/2022 23:42	32.92	6/17/2022 0:29	19.09	6/16/2022 3:02	5.92
6/16/2022 23:43	32.89	6/17/2022 0:30	19.13	6/16/2022 3:03	5.90
6/16/2022 23:44	32.93	6/17/2022 0:31	19.10	6/16/2022 3:04	5.89
6/16/2022 23:45	32.89	6/17/2022 0:32	19.11	6/16/2022 3:05	5.91
6/16/2022 23:46	32.91	6/17/2022 0:33	19.10	6/16/2022 3:06	5.90

6/16/2022 23:47	32.89	6/17/2022 0:34	19.13	6/16/2022 3:07	5.88
6/16/2022 23:48	32.88	6/17/2022 0:35	19.13	6/16/2022 3:08	5.94
6/16/2022 23:49	32.87	6/17/2022 0:36	19.13	6/16/2022 3:09	5.89
6/16/2022 23:50	32.88	6/17/2022 0:37	19.08	6/16/2022 3:10	5.87
6/16/2022 23:51	32.88	6/17/2022 0:38	19.12	6/16/2022 3:11	5.91
6/16/2022 23:52	32.85	6/17/2022 0:39	19.11	6/16/2022 3:12	5.94
6/16/2022 23:53	32.86	6/17/2022 0:40	19.12	6/16/2022 3:13	5.95
6/16/2022 23:54	32.87	6/17/2022 0:41	19.13	6/16/2022 3:14	5.89
6/16/2022 23:55	32.85	6/17/2022 0:42	19.08	6/16/2022 3:15	5.93
6/16/2022 23:56	32.91	6/17/2022 0:43	19.10	6/16/2022 3:16	5.91
6/16/2022 23:57	32.88	6/17/2022 0:44	19.08	6/16/2022 3:17	5.92
6/16/2022 23:58	32.88	6/17/2022 0:45	19.11	6/16/2022 3:18	5.89
6/16/2022 23:59	32.86	6/17/2022 0:46	19.11	6/16/2022 3:19	5.90
6/17/2022 0:00	32.90	6/17/2022 0:47	19.10	6/16/2022 3:20	5.89
6/17/2022 0:01	32.87	6/17/2022 0:48	19.08	6/16/2022 3:21	5.94
6/17/2022 0:02	32.87	6/17/2022 0:49	19.09	6/16/2022 3:22	5.93
6/17/2022 0:03	32.88	6/17/2022 0:50	19.10	6/16/2022 3:23	5.92
6/17/2022 0:04	32.90	6/17/2022 0:51	19.11	6/16/2022 3:24	5.90
6/17/2022 0:05	32.87	6/17/2022 0:52	19.10	6/16/2022 3:25	5.93
6/17/2022 0:06	32.86	6/17/2022 0:53	19.13	6/16/2022 3:26	5.94
6/17/2022 0:07	32.90	6/17/2022 0:54	19.06	6/16/2022 3:27	5.92
6/17/2022 0:08	32.89	6/17/2022 0:55	19.12	6/16/2022 3:28	5.96
6/17/2022 0:09	32.88	6/17/2022 0:56	19.11	6/16/2022 3:29	5.95
6/17/2022 0:10	32.86	6/17/2022 0:57	19.09	6/16/2022 3:30	5.94
6/17/2022 0:11	32.86	6/17/2022 0:58	19.10	6/16/2022 3:31	5.91
6/17/2022 0:12	32.85	6/17/2022 0:59	19.08	6/16/2022 3:32	5.89
6/17/2022 0:13	32.85	6/17/2022 1:00	19.08	6/16/2022 3:33	5.90
6/17/2022 0:14	32.89	6/17/2022 1:01	19.07	6/16/2022 3:34	5.91
6/17/2022 0:15	32.83	6/17/2022 1:02	19.09	6/16/2022 3:35	5.92
6/17/2022 0:16	32.87	6/17/2022 1:03	19.09	6/16/2022 3:36	5.89
6/17/2022 0:17	32.89	6/17/2022 1:04	19.09	6/16/2022 3:37	5.90
6/17/2022 0:18	32.86	6/17/2022 1:05	19.09	6/16/2022 3:38	5.94
6/17/2022 0:19	32.87	6/17/2022 1:06	19.07	6/16/2022 3:39	5.89
6/17/2022 0:20	32.83	6/17/2022 1:07	19.08	6/16/2022 3:40	5.94
6/17/2022 0:21	32.85	6/17/2022 1:08	19.09	6/16/2022 3:41	5.94
6/17/2022 0:22	32.86	6/17/2022 1:09	19.11	6/16/2022 3:42	5.90
6/17/2022 0:23	32.87	6/17/2022 1:10	19.09	6/16/2022 3:43	5.92
6/17/2022 0:24	32.85	6/17/2022 1:11	19.11	6/16/2022 3:44	5.91
6/17/2022 0:25	32.86	6/17/2022 1:12	19.11	6/16/2022 3:45	5.92
6/17/2022 0:26	32.83	6/17/2022 1:13	19.11	6/16/2022 3:46	5.90
6/17/2022 0:27	32.87	6/17/2022 1:14	19.09	6/16/2022 3:47	5.94
6/17/2022 0:28	32.82	6/17/2022 1:15	19.09	6/16/2022 3:48	5.93
6/17/2022 0:29	32.84	6/17/2022 1:16	19.10	6/16/2022 3:49	5.91
6/17/2022 0:30	32.86	6/17/2022 1:17	19.10	6/16/2022 3:50	5.92
6/17/2022 0:31	32.86	6/17/2022 1:18	19.09	6/16/2022 3:51	5.92
6/17/2022 0:32	32.84	6/17/2022 1:19	19.10	6/16/2022 3:52	5.92
6/17/2022 0:33	32.85	6/17/2022 1:20	19.08	6/16/2022 3:53	5.92
6/17/2022 0:34	32.85	6/17/2022 1:21	19.08	6/16/2022 3:54	5.90
6/17/2022 0:35	32.84	6/17/2022 1:22	19.10	6/16/2022 3:55	5.92
6/17/2022 0:36	32.85	6/17/2022 1:23	19.09	6/16/2022 3:56	5.91
6/17/2022 0:37	32.81	6/17/2022 1:24	19.07	6/16/2022 3:57	5.93
6/17/2022 0:38	32.82	6/17/2022 1:25	19.09	6/16/2022 3:58	5.90
6/17/2022 0:39	32.87	6/17/2022 1:26	19.09	6/16/2022 3:59	5.91
6/17/2022 0:40	32.83	6/17/2022 1:27	19.11	6/16/2022 4:00	5.89
6/17/2022 0:41	32.83	6/17/2022 1:28	19.16	6/16/2022 4:01	5.92
6/17/2022 0:42	32.83	6/17/2022 1:29	19.08	6/16/2022 4:02	5.92
6/17/2022 0:43	32.84	6/17/2022 1:30	19.57	6/16/2022 4:03	5.88
6/17/2022 0:44	32.84	6/17/2022 1:31	19.77	6/16/2022 4:04	5.92
6/17/2022 0:45	32.84	6/17/2022 1:32	19.84	6/16/2022 4:05	5.93
6/17/2022 0:46	32.84	6/17/2022 1:33	19.88	6/16/2022 4:06	5.92
6/17/2022 0:47	32.85	6/17/2022 1:34	19.88	6/16/2022 4:07	5.91
6/17/2022 0:48	32.83	6/17/2022 1:35	19.37	6/16/2022 4:08	5.90
6/17/2022 0:49	34.16	6/17/2022 1:36	19.28	6/16/2022 4:09	5.92
6/17/2022 0:50	33.04	6/17/2022 1:37	19.27	6/16/2022 4:10	5.87
6/17/2022 0:51	32.96	6/17/2022 1:38	19.22	6/16/2022 4:11	5.89
6/17/2022 0:52	32.91	6/17/2022 1:39	19.21	6/16/2022 4:12	5.92
6/17/2022 0:53	32.94	6/17/2022 1:40	19.21	6/16/2022 4:13	5.91
6/17/2022 0:54	32.93	6/17/2022 1:41	19.19	6/16/2022 4:14	5.91
6/17/2022 0:55	32.94	6/17/2022 1:42	19.20	6/16/2022 4:15	5.91
6/17/2022 0:56	32.96	6/17/2022 1:43	19.18	6/16/2022 4:16	5.91
6/17/2022 0:57	32.91	6/17/2022 1:44	19.16	6/16/2022 4:17	5.92
6/17/2022 0:58	32.90	6/17/2022 1:45	19.15	6/16/2022 4:18	5.88
6/17/2022 0:59	32.89	6/17/2022 1:46	19.18	6/16/2022 4:19	5.92
6/17/2022 1:00	32.88	6/17/2022 1:47	19.17	6/16/2022 4:20	5.91
6/17/2022 1:01	32.89	6/17/2022 1:48	19.17	6/16/2022 4:21	5.92
6/17/2022 1:02	32.91	6/17/2022 1:49	19.19	6/16/2022 4:22	5.94
6/17/2022 1:03	32.89	6/17/2022 1:50	19.16	6/16/2022 4:23	5.92
6/17/2022 1:04	32.87	6/17/2022 1:51	19.16	6/16/2022 4:24	5.92
6/17/2022 1:05	32.89	6/17/2022 1:52	19.16	6/16/2022 4:25	5.91
6/17/2022 1:06	32.86	6/17/2022 1:53	19.14	6/16/2022 4:26	5.93
6/17/2022 1:07	32.88	6/17/2022 1:54	19.13	6/16/2022 4:27	5.90
6/17/2022 1:08	32.85	6/17/2022 1:55	19.15	6/16/2022 4:28	5.90
6/17/2022 1:09	32.88	6/17/2022 1:56	19.14	6/16/2022 4:29	5.89
6/17/2022 1:10	32.85	6/17/2022 1:57	19.17	6/16/2022 4:30	5.89
6/17/2022 1:11	32.87	6/17/2022 1:58	19.18	6/16/2022 4:31	5.90
6/17/2022 1:12	32.84	6/17/2022 1:59	19.14	6/16/2022 4:32	5.92
6/17/2022 1:13	32.84	6/17/2022 2:00	19.16	6/16/2022 4:33	5.90
6/17/2022 1:14	32.85	6/17/2022 2:01	19.14	6/16/2022 4:34	5.92

6/17/2022 1:15	32.85	6/17/2022 2:02	19.13	6/16/2022 4:35	5.92
6/17/2022 1:16	32.86	6/17/2022 2:03	19.15	6/16/2022 4:36	5.91
6/17/2022 1:17	32.83	6/17/2022 2:04	19.15	6/16/2022 4:37	5.90
6/17/2022 1:18	32.87	6/17/2022 2:05	19.13	6/16/2022 4:38	5.91
6/17/2022 1:19	32.87	6/17/2022 2:06	19.12	6/16/2022 4:39	5.92
6/17/2022 1:20	32.82	6/17/2022 2:07	19.14	6/16/2022 4:40	5.89
6/17/2022 1:21	32.81	6/17/2022 2:08	19.13	6/16/2022 4:41	5.90
6/17/2022 1:22	32.84	6/17/2022 2:09	19.17	6/16/2022 4:42	5.91
6/17/2022 1:23	32.87	6/17/2022 2:10	19.15	6/16/2022 4:43	5.91
6/17/2022 1:24	32.87	6/17/2022 2:11	19.14	6/16/2022 4:44	5.91
6/17/2022 1:25	32.83	6/17/2022 2:12	19.16	6/16/2022 4:45	5.90
6/17/2022 1:26	32.82	6/17/2022 2:13	19.14	6/16/2022 4:46	5.90
6/17/2022 1:27	32.85	6/17/2022 2:14	19.10	6/16/2022 4:47	5.88
6/17/2022 1:28	32.81	6/17/2022 2:15	19.14	6/16/2022 4:48	5.94
6/17/2022 1:29	32.84	6/17/2022 2:16	19.13	6/16/2022 4:49	5.90
6/17/2022 1:30	32.83	6/17/2022 2:17	19.12	6/16/2022 4:50	5.90
6/17/2022 1:31	32.83	6/17/2022 2:18	19.14	6/16/2022 4:51	5.91
6/17/2022 1:32	32.83	6/17/2022 2:19	19.14	6/16/2022 4:52	5.90
6/17/2022 1:33	32.80	6/17/2022 2:20	19.14	6/16/2022 4:53	5.90
6/17/2022 1:34	32.85	6/17/2022 2:21	19.10	6/16/2022 4:54	5.91
6/17/2022 1:35	32.83	6/17/2022 2:22	19.12	6/16/2022 4:55	5.93
6/17/2022 1:36	32.82	6/17/2022 2:23	19.12	6/16/2022 4:56	5.92
6/17/2022 1:37	32.79	6/17/2022 2:24	19.11	6/16/2022 4:57	5.90
6/17/2022 1:38	32.83	6/17/2022 2:25	19.12	6/16/2022 4:58	5.90
6/17/2022 1:39	32.83	6/17/2022 2:26	19.12	6/16/2022 4:59	5.89
6/17/2022 1:40	32.79	6/17/2022 2:27	19.10	6/16/2022 5:00	5.93
6/17/2022 1:41	32.80	6/17/2022 2:28	19.11	6/16/2022 5:01	5.88
6/17/2022 1:42	32.84	6/17/2022 2:29	19.13	6/16/2022 5:02	5.93
6/17/2022 1:43	32.79	6/17/2022 2:30	19.14	6/16/2022 5:03	5.90
6/17/2022 1:44	32.81	6/17/2022 2:31	19.13	6/16/2022 5:04	5.91
6/17/2022 1:45	32.79	6/17/2022 2:32	19.13	6/16/2022 5:05	5.90
6/17/2022 1:46	32.77	6/17/2022 2:33	19.12	6/16/2022 5:06	5.92
6/17/2022 1:47	32.81	6/17/2022 2:34	19.10	6/16/2022 5:07	5.92
6/17/2022 1:48	32.79	6/17/2022 2:35	19.12	6/16/2022 5:08	5.92
6/17/2022 1:49	32.79	6/17/2022 2:36	19.13	6/16/2022 5:09	5.94
6/17/2022 1:50	32.78	6/17/2022 2:37	19.12	6/16/2022 5:10	5.92
6/17/2022 1:51	32.79	6/17/2022 2:38	19.10	6/16/2022 5:11	5.92
6/17/2022 1:52	32.81	6/17/2022 2:39	19.10	6/16/2022 5:12	5.91
6/17/2022 1:53	32.76	6/17/2022 2:40	19.14	6/16/2022 5:13	5.91
6/17/2022 1:54	32.80	6/17/2022 2:41	19.10	6/16/2022 5:14	5.90
6/17/2022 1:55	32.80	6/17/2022 2:42	19.11	6/16/2022 5:15	5.94
6/17/2022 1:56	32.80	6/17/2022 2:43	19.11	6/16/2022 5:16	5.91
6/17/2022 1:57	32.78	6/17/2022 2:44	19.11	6/16/2022 5:17	5.90
6/17/2022 1:58	32.79	6/17/2022 2:45	19.11	6/16/2022 5:18	5.95
6/17/2022 1:59	32.81	6/17/2022 2:46	19.14	6/16/2022 5:19	5.92
6/17/2022 2:00	32.77	6/17/2022 2:47	19.11	6/16/2022 5:20	5.93
6/17/2022 2:01	32.77	6/17/2022 2:48	19.12	6/16/2022 5:21	5.91
6/17/2022 2:02	32.79	6/17/2022 2:49	19.11	6/16/2022 5:22	5.91
6/17/2022 2:03	32.77	6/17/2022 2:50	19.11	6/16/2022 5:23	5.95
6/17/2022 2:04	32.79	6/17/2022 2:51	19.12	6/16/2022 5:24	5.92
6/17/2022 2:05	32.80	6/17/2022 2:52	19.10	6/16/2022 5:25	5.93
6/17/2022 2:06	32.79	6/17/2022 2:53	19.11	6/16/2022 5:26	5.88
6/17/2022 2:07	32.77	6/17/2022 2:54	19.11	6/16/2022 5:27	5.89
6/17/2022 2:08	32.76	6/17/2022 2:55	19.10	6/16/2022 5:28	5.92
6/17/2022 2:09	32.78	6/17/2022 2:56	19.08	6/16/2022 5:29	5.90
6/17/2022 2:10	32.77	6/17/2022 2:57	19.12	6/16/2022 5:30	5.88
6/17/2022 2:11	32.77	6/17/2022 2:58	19.14	6/16/2022 5:31	5.93
6/17/2022 2:12	32.77	6/17/2022 2:59	19.09	6/16/2022 5:32	5.92
6/17/2022 2:13	32.79	6/17/2022 3:00	19.10	6/16/2022 5:33	5.96
6/17/2022 2:14	32.77	6/17/2022 3:01	19.12	6/16/2022 5:34	5.92
6/17/2022 2:15	32.78	6/17/2022 3:02	19.11	6/16/2022 5:35	5.90
6/17/2022 2:16	32.80	6/17/2022 3:03	19.13	6/16/2022 5:36	5.93
6/17/2022 2:17	32.78	6/17/2022 3:04	19.15	6/16/2022 5:37	5.94
6/17/2022 2:18	32.77	6/17/2022 3:05	19.11	6/16/2022 5:38	5.91
6/17/2022 2:19	32.76	6/17/2022 3:06	19.11	6/16/2022 5:39	5.93
6/17/2022 2:20	32.77	6/17/2022 3:07	19.11	6/16/2022 5:40	5.94
6/17/2022 2:21	32.77	6/17/2022 3:08	19.12	6/16/2022 5:41	5.90
6/17/2022 2:22	32.81	6/17/2022 3:09	19.12	6/16/2022 5:42	5.91
6/17/2022 2:23	32.76	6/17/2022 3:10	19.13	6/16/2022 5:43	5.93
6/17/2022 2:24	32.76	6/17/2022 3:11	19.11	6/16/2022 5:44	5.90
6/17/2022 2:25	32.77	6/17/2022 3:12	19.12	6/16/2022 5:45	5.92
6/17/2022 2:26	32.78	6/17/2022 3:13	19.12	6/16/2022 5:46	5.95
6/17/2022 2:27	32.78	6/17/2022 3:14	19.13	6/16/2022 5:47	5.93
6/17/2022 2:28	32.75	6/17/2022 3:15	19.07	6/16/2022 5:48	5.92
6/17/2022 2:29	32.76	6/17/2022 3:16	19.13	6/16/2022 5:49	5.87
6/17/2022 2:30	32.76	6/17/2022 3:17	19.12	6/16/2022 5:50	5.92
6/17/2022 2:31	32.78	6/17/2022 3:18	19.09	6/16/2022 5:51	5.87
6/17/2022 2:32	32.79	6/17/2022 3:19	19.11	6/16/2022 5:52	5.90
6/17/2022 2:33	32.75	6/17/2022 3:20	19.11	6/16/2022 5:53	5.91
6/17/2022 2:34	32.74	6/17/2022 3:21	19.12	6/16/2022 5:54	5.92
6/17/2022 2:35	32.76	6/17/2022 3:22	19.12	6/16/2022 5:55	5.90
6/17/2022 2:36	32.78	6/17/2022 3:23	19.12	6/16/2022 5:56	5.90
6/17/2022 2:37	32.75	6/17/2022 3:24	19.12	6/16/2022 5:57	5.93
6/17/2022 2:38	32.74	6/17/2022 3:25	19.10	6/16/2022 5:58	5.92
6/17/2022 2:39	32.77	6/17/2022 3:26	19.11	6/16/2022 5:59	5.94
6/17/2022 2:40	32.79	6/17/2022 3:27	19.12	6/16/2022 6:00	5.92
6/17/2022 2:41	32.76	6/17/2022 3:28	19.10	6/16/2022 6:01	5.94
6/17/2022 2:42	32.77	6/17/2022 3:29	19.11	6/16/2022 6:02	5.93

6/17/2022 2:43	32.75	6/17/2022 3:30	19.10	6/16/2022 6:03	5.91
6/17/2022 2:44	32.74	6/17/2022 3:31	19.12	6/16/2022 6:04	5.95
6/17/2022 2:45	32.76	6/17/2022 3:32	19.12	6/16/2022 6:05	5.91
6/17/2022 2:46	32.77	6/17/2022 3:33	19.13	6/16/2022 6:06	5.90
6/17/2022 2:47	32.76	6/17/2022 3:34	19.10	6/16/2022 6:07	5.93
6/17/2022 2:48	32.76	6/17/2022 3:35	19.10	6/16/2022 6:08	5.89
6/17/2022 2:49	32.77	6/17/2022 3:36	19.09	6/16/2022 6:09	5.95
6/17/2022 2:50	32.76	6/17/2022 3:37	19.13	6/16/2022 6:10	5.91
6/17/2022 2:51	32.76	6/17/2022 3:38	19.12	6/16/2022 6:11	5.93
6/17/2022 2:52	32.76	6/17/2022 3:39	19.11	6/16/2022 6:12	5.94
6/17/2022 2:53	32.75	6/17/2022 3:40	19.10	6/16/2022 6:13	5.91
6/17/2022 2:54	32.76	6/17/2022 3:41	19.11	6/16/2022 6:14	5.92
6/17/2022 2:55	32.74	6/17/2022 3:42	19.11	6/16/2022 6:15	5.91
6/17/2022 2:56	32.72	6/17/2022 3:43	19.07	6/16/2022 6:16	5.93
6/17/2022 2:57	32.72	6/17/2022 3:44	19.12	6/16/2022 6:17	5.91
6/17/2022 2:58	32.74	6/17/2022 3:45	19.13	6/16/2022 6:18	5.90
6/17/2022 2:59	32.77	6/17/2022 3:46	19.12	6/16/2022 6:19	5.93
6/17/2022 3:00	32.76	6/17/2022 3:47	19.10	6/16/2022 6:20	5.94
6/17/2022 3:01	32.75	6/17/2022 3:48	19.10	6/16/2022 6:21	5.92
6/17/2022 3:02	32.70	6/17/2022 3:49	19.09	6/16/2022 6:22	5.93
6/17/2022 3:03	32.76	6/17/2022 3:50	19.11	6/16/2022 6:23	5.94
6/17/2022 3:04	32.75	6/17/2022 3:51	19.09	6/16/2022 6:24	5.94
6/17/2022 3:05	32.73	6/17/2022 3:52	19.08	6/16/2022 6:25	5.92
6/17/2022 3:06	32.71	6/17/2022 3:53	19.09	6/16/2022 6:26	5.97
6/17/2022 3:07	32.72	6/17/2022 3:54	19.11	6/16/2022 6:27	5.94
6/17/2022 3:08	32.73	6/17/2022 3:55	19.12	6/16/2022 6:28	5.93
6/17/2022 3:09	32.75	6/17/2022 3:56	19.11	6/16/2022 6:29	5.91
6/17/2022 3:10	32.73	6/17/2022 3:57	19.11	6/16/2022 6:30	5.93
6/17/2022 3:11	32.75	6/17/2022 3:58	19.09	6/16/2022 6:31	5.93
6/17/2022 3:12	32.73	6/17/2022 3:59	19.09	6/16/2022 6:32	5.93
6/17/2022 3:13	32.71	6/17/2022 4:00	19.14	6/16/2022 6:33	5.96
6/17/2022 3:14	32.71	6/17/2022 4:01	19.08	6/16/2022 6:34	5.93
6/17/2022 3:15	32.74	6/17/2022 4:02	19.11	6/16/2022 6:35	5.92
6/17/2022 3:16	32.73	6/17/2022 4:03	19.10	6/16/2022 6:36	5.94
6/17/2022 3:17	32.72	6/17/2022 4:04	19.12	6/16/2022 6:37	5.92
6/17/2022 3:18	32.70	6/17/2022 4:05	19.10	6/16/2022 6:38	5.92
6/17/2022 3:19	32.71	6/17/2022 4:06	19.09	6/16/2022 6:39	5.91
6/17/2022 3:20	32.73	6/17/2022 4:07	19.09	6/16/2022 6:40	5.94
6/17/2022 3:21	32.73	6/17/2022 4:08	19.10	6/16/2022 6:41	5.95
6/17/2022 3:22	32.73	6/17/2022 4:09	19.09	6/16/2022 6:42	5.92
6/17/2022 3:23	32.74	6/17/2022 4:10	19.10	6/16/2022 6:43	5.95
6/17/2022 3:24	32.72	6/17/2022 4:11	19.10	6/16/2022 6:44	5.93
6/17/2022 3:25	32.72	6/17/2022 4:12	19.10	6/16/2022 6:45	5.92
6/17/2022 3:26	32.72	6/17/2022 4:13	19.10	6/16/2022 6:46	5.92
6/17/2022 3:27	32.70	6/17/2022 4:14	19.11	6/16/2022 6:47	5.89
6/17/2022 3:28	32.73	6/17/2022 4:15	19.09	6/16/2022 6:48	5.90
6/17/2022 3:29	32.71	6/17/2022 4:16	19.13	6/16/2022 6:49	5.92
6/17/2022 3:30	32.71	6/17/2022 4:17	19.09	6/16/2022 6:50	5.91
6/17/2022 3:31	32.71	6/17/2022 4:18	19.09	6/16/2022 6:51	5.92
6/17/2022 3:32	32.69	6/17/2022 4:19	19.10	6/16/2022 6:52	5.92
6/17/2022 3:33	32.73	6/17/2022 4:20	19.11	6/16/2022 6:53	5.94
6/17/2022 3:34	32.71	6/17/2022 4:21	19.14	6/16/2022 6:54	5.91
6/17/2022 3:35	32.72	6/17/2022 4:22	19.11	6/16/2022 6:55	5.91
6/17/2022 3:36	32.72	6/17/2022 4:23	19.10	6/16/2022 6:56	5.91
6/17/2022 3:37	32.71	6/17/2022 4:24	19.09	6/16/2022 6:57	5.92
6/17/2022 3:38	32.71	6/17/2022 4:25	19.11	6/16/2022 6:58	5.93
6/17/2022 3:39	32.70	6/17/2022 4:26	19.08	6/16/2022 6:59	5.90
6/17/2022 3:40	32.70	6/17/2022 4:27	19.08	6/16/2022 7:00	5.93
6/17/2022 3:41	32.70	6/17/2022 4:28	19.11	6/16/2022 7:01	5.95
6/17/2022 3:42	32.70	6/17/2022 4:29	19.12	6/16/2022 7:02	5.92
6/17/2022 3:43	32.71	6/17/2022 4:30	19.10	6/16/2022 7:03	5.91
6/17/2022 3:44	32.72	6/17/2022 4:31	19.10	6/16/2022 7:04	5.91
6/17/2022 3:45	32.70	6/17/2022 4:32	19.08	6/16/2022 7:05	5.91
6/17/2022 3:46	32.73	6/17/2022 4:33	19.09	6/16/2022 7:06	5.93
6/17/2022 3:47	32.70	6/17/2022 4:34	19.09	6/16/2022 7:07	5.92
6/17/2022 3:48	32.72	6/17/2022 4:35	19.10	6/16/2022 7:08	5.88
6/17/2022 3:49	32.69	6/17/2022 4:36	19.07	6/16/2022 7:09	5.95
6/17/2022 3:50	32.69	6/17/2022 4:37	19.09	6/16/2022 7:10	5.91
6/17/2022 3:51	32.70	6/17/2022 4:38	19.10	6/16/2022 7:11	5.90
6/17/2022 3:52	32.69	6/17/2022 4:39	19.11	6/16/2022 7:12	5.93
6/17/2022 3:53	32.71	6/17/2022 4:40	19.10	6/16/2022 7:13	5.90
6/17/2022 3:54	32.68	6/17/2022 4:41	19.07	6/16/2022 7:14	5.91
6/17/2022 3:55	32.69	6/17/2022 4:42	19.11	6/16/2022 7:15	5.92
6/17/2022 3:56	32.66	6/17/2022 4:43	19.08	6/16/2022 7:16	5.95
6/17/2022 3:57	32.68	6/17/2022 4:44	19.08	6/16/2022 7:17	5.94
6/17/2022 3:58	32.68	6/17/2022 4:45	19.10	6/16/2022 7:18	5.91
6/17/2022 3:59	32.68	6/17/2022 4:46	19.10	6/16/2022 7:19	5.91
6/17/2022 4:00	32.70	6/17/2022 4:47	19.11	6/16/2022 7:20	5.92
6/17/2022 4:01	32.68	6/17/2022 4:48	19.09	6/16/2022 7:21	5.96
6/17/2022 4:02	32.71	6/17/2022 4:49	19.11	6/16/2022 7:22	5.91
6/17/2022 4:03	32.69	6/17/2022 4:50	19.12	6/16/2022 7:23	5.94
6/17/2022 4:04	32.69	6/17/2022 4:51	19.05	6/16/2022 7:24	5.93
6/17/2022 4:05	32.66	6/17/2022 4:52	19.09	6/16/2022 7:25	5.90
6/17/2022 4:06	32.67	6/17/2022 4:53	19.12	6/16/2022 7:26	5.93
6/17/2022 4:07	32.69	6/17/2022 4:54	19.08	6/16/2022 7:27	5.94
6/17/2022 4:08	32.71	6/17/2022 4:55	19.09	6/16/2022 7:28	5.91
6/17/2022 4:09	32.67	6/17/2022 4:56	19.09	6/16/2022 7:29	5.91
6/17/2022 4:10	32.67	6/17/2022 4:57	19.10	6/16/2022 7:30	5.92

6/17/2022 4:11	32.69	6/17/2022 4:58	19.12	6/16/2022 7:31	5.90
6/17/2022 4:12	32.70	6/17/2022 4:59	19.10	6/16/2022 7:32	5.91
6/17/2022 4:13	32.70	6/17/2022 5:00	19.09	6/16/2022 7:33	5.92
6/17/2022 4:14	32.68	6/17/2022 5:01	19.08	6/16/2022 7:34	5.92
6/17/2022 4:15	32.70	6/17/2022 5:02	19.08	6/16/2022 7:35	5.92
6/17/2022 4:16	32.66	6/17/2022 5:03	19.09	6/16/2022 7:36	5.92
6/17/2022 4:17	32.69	6/17/2022 5:04	19.12	6/16/2022 7:37	5.92
6/17/2022 4:18	32.65	6/17/2022 5:05	19.11	6/16/2022 7:38	5.93
6/17/2022 4:19	32.70	6/17/2022 5:06	19.10	6/16/2022 7:39	5.91
6/17/2022 4:20	32.66	6/17/2022 5:07	19.10	6/16/2022 7:40	5.90
6/17/2022 4:21	32.70	6/17/2022 5:08	19.09	6/16/2022 7:41	5.92
6/17/2022 4:22	32.65	6/17/2022 5:09	19.10	6/16/2022 7:42	5.94
6/17/2022 4:23	32.71	6/17/2022 5:10	19.09	6/16/2022 7:43	5.89
6/17/2022 4:24	32.70	6/17/2022 5:11	19.06	6/16/2022 7:44	5.91
6/17/2022 4:25	32.68	6/17/2022 5:12	19.09	6/16/2022 7:45	5.89
6/17/2022 4:26	32.71	6/17/2022 5:13	19.12	6/16/2022 7:46	5.92
6/17/2022 4:27	32.68	6/17/2022 5:14	19.09	6/16/2022 7:47	5.89
6/17/2022 4:28	32.68	6/17/2022 5:15	19.08	6/16/2022 7:48	5.91
6/17/2022 4:29	32.64	6/17/2022 5:16	19.10	6/16/2022 7:49	5.92
6/17/2022 4:30	32.66	6/17/2022 5:17	19.11	6/16/2022 7:50	5.90
6/17/2022 4:31	32.69	6/17/2022 5:18	19.12	6/16/2022 7:51	5.88
6/17/2022 4:32	32.66	6/17/2022 5:19	19.07	6/16/2022 7:52	5.91
6/17/2022 4:33	32.71	6/17/2022 5:20	19.11	6/16/2022 7:53	5.94
6/17/2022 4:34	32.67	6/17/2022 5:21	19.07	6/16/2022 7:54	5.92
6/17/2022 4:35	32.67	6/17/2022 5:22	19.10	6/16/2022 7:55	5.92
6/17/2022 4:36	32.68	6/17/2022 5:23	19.07	6/16/2022 7:56	5.88
6/17/2022 4:37	32.68	6/17/2022 5:24	19.08	6/16/2022 7:57	5.89
6/17/2022 4:38	32.64	6/17/2022 5:25	19.10	6/16/2022 7:58	5.89
6/17/2022 4:39	32.66	6/17/2022 5:26	19.11	6/16/2022 7:59	5.89
6/17/2022 4:40	32.65	6/17/2022 5:27	19.09	6/16/2022 8:00	5.92
6/17/2022 4:41	32.69	6/17/2022 5:28	19.10	6/16/2022 8:01	5.92
6/17/2022 4:42	32.69	6/17/2022 5:29	19.09	6/16/2022 8:02	5.89
6/17/2022 4:43	32.67	6/17/2022 5:30	19.06	6/16/2022 8:03	5.91
6/17/2022 4:44	32.67	6/17/2022 5:31	19.07	6/16/2022 8:04	5.88
6/17/2022 4:45	32.67	6/17/2022 5:32	19.08	6/16/2022 8:05	5.89
6/17/2022 4:46	32.65	6/17/2022 5:33	19.11	6/16/2022 8:06	5.89
6/17/2022 4:47	32.66	6/17/2022 5:34	19.09	6/16/2022 8:07	5.89
6/17/2022 4:48	32.67	6/17/2022 5:35	19.07	6/16/2022 8:08	5.89
6/17/2022 4:49	32.69	6/17/2022 5:36	19.09	6/16/2022 8:09	5.91
6/17/2022 4:50	32.67	6/17/2022 5:37	19.11	6/16/2022 8:10	5.90
6/17/2022 4:51	32.63	6/17/2022 5:38	19.08	6/16/2022 8:11	5.89
6/17/2022 4:52	32.71	6/17/2022 5:39	19.09	6/16/2022 8:12	5.88
6/17/2022 4:53	32.66	6/17/2022 5:40	19.07	6/16/2022 8:13	5.88
6/17/2022 4:54	32.66	6/17/2022 5:41	19.11	6/16/2022 8:14	5.89
6/17/2022 4:55	32.62	6/17/2022 5:42	19.10	6/16/2022 8:15	5.94
6/17/2022 4:56	32.68	6/17/2022 5:43	19.12	6/16/2022 8:16	5.90
6/17/2022 4:57	32.65	6/17/2022 5:44	19.10	6/16/2022 8:17	5.91
6/17/2022 4:58	32.63	6/17/2022 5:45	19.11	6/16/2022 8:18	5.88
6/17/2022 4:59	32.65	6/17/2022 5:46	19.08	6/16/2022 8:19	5.89
6/17/2022 5:00	32.66	6/17/2022 5:47	19.13	6/16/2022 8:20	5.93
6/17/2022 5:01	32.67	6/17/2022 5:48	19.10	6/16/2022 8:21	5.89
6/17/2022 5:02	32.65	6/17/2022 5:49	19.09	6/16/2022 8:22	8.17
6/17/2022 5:03	32.65	6/17/2022 5:50	19.09	6/16/2022 8:23	8.62
6/17/2022 5:04	32.62	6/17/2022 5:51	19.10	6/16/2022 8:24	6.07
6/17/2022 5:05	32.63	6/17/2022 5:52	19.10	6/16/2022 8:25	5.95
6/17/2022 5:06	32.63	6/17/2022 5:53	19.11	6/16/2022 8:26	5.94
6/17/2022 5:07	32.66	6/17/2022 5:54	19.11	6/16/2022 8:27	5.93
6/17/2022 5:08	32.65	6/17/2022 5:55	19.09	6/16/2022 8:28	5.91
6/17/2022 5:09	32.64	6/17/2022 5:56	19.08	6/16/2022 8:29	5.91
6/17/2022 5:10	32.63	6/17/2022 5:57	19.09	6/16/2022 8:30	5.95
6/17/2022 5:11	32.67	6/17/2022 5:58	19.09	6/16/2022 8:31	5.92
6/17/2022 5:12	32.65	6/17/2022 5:59	19.12	6/16/2022 8:32	5.88
6/17/2022 5:13	32.64	6/17/2022 6:00	19.11	6/16/2022 8:33	5.88
6/17/2022 5:14	32.65	6/17/2022 6:01	19.09	6/16/2022 8:34	5.87
6/17/2022 5:15	32.66	6/17/2022 6:02	19.10	6/16/2022 8:35	5.90
6/17/2022 5:16	32.65	6/17/2022 6:03	19.09	6/16/2022 8:36	5.88
6/17/2022 5:17	32.65	6/17/2022 6:04	19.08	6/16/2022 8:37	5.88
6/17/2022 5:18	32.66	6/17/2022 6:05	19.08	6/16/2022 8:38	5.91
6/17/2022 5:19	32.65	6/17/2022 6:06	19.08	6/16/2022 8:39	5.90
6/17/2022 5:20	32.63	6/17/2022 6:07	19.11	6/16/2022 8:40	5.90
6/17/2022 5:21	32.64	6/17/2022 6:08	19.12	6/16/2022 8:41	5.92
6/17/2022 5:22	32.63	6/17/2022 6:09	19.09	6/16/2022 8:42	5.90
6/17/2022 5:23	32.62	6/17/2022 6:10	19.09	6/16/2022 8:43	5.90
6/17/2022 5:24	32.65	6/17/2022 6:11	19.12	6/16/2022 8:44	5.91
6/17/2022 5:25	32.64	6/17/2022 6:12	19.10	6/16/2022 8:45	5.91
6/17/2022 5:26	32.65	6/17/2022 6:13	19.10	6/16/2022 8:46	5.89
6/17/2022 5:27	32.65	6/17/2022 6:14	19.07	6/16/2022 8:47	5.88
6/17/2022 5:28	32.60	6/17/2022 6:15	19.10	6/16/2022 8:48	5.88
6/17/2022 5:29	32.68	6/17/2022 6:16	19.10	6/16/2022 8:49	5.88
6/17/2022 5:30	32.65	6/17/2022 6:17	19.07	6/16/2022 8:50	5.93
6/17/2022 5:31	32.64	6/17/2022 6:18	19.09	6/16/2022 8:51	5.88
6/17/2022 5:32	32.67	6/17/2022 6:19	19.10	6/16/2022 8:52	5.89
6/17/2022 5:33	32.62	6/17/2022 6:20	19.09	6/16/2022 8:53	5.88
6/17/2022 5:34	32.63	6/17/2022 6:21	19.06	6/16/2022 8:54	5.90
6/17/2022 5:35	32.64	6/17/2022 6:22	19.11	6/16/2022 8:55	5.88
6/17/2022 5:36	32.64	6/17/2022 6:23	19.08	6/16/2022 8:56	5.89
6/17/2022 5:37	32.59	6/17/2022 6:24	19.09	6/16/2022 8:57	5.88
6/17/2022 5:38	32.62	6/17/2022 6:25	19.11	6/16/2022 8:58	5.85

6/17/2022 5:39	32.63	6/17/2022 6:26	19.09	6/16/2022 8:59	5.87
6/17/2022 5:40	32.61	6/17/2022 6:27	19.10	6/16/2022 9:00	5.88
6/17/2022 5:41	32.65	6/17/2022 6:28	19.09	6/16/2022 9:01	5.87
6/17/2022 5:42	32.62	6/17/2022 6:29	19.10	6/16/2022 9:02	5.89
6/17/2022 5:43	32.64	6/17/2022 6:30	19.07	6/16/2022 9:03	5.88
6/17/2022 5:44	32.60	6/17/2022 6:31	19.07	6/16/2022 9:04	5.88
6/17/2022 5:45	32.62	6/17/2022 6:32	19.10	6/16/2022 9:05	5.86
6/17/2022 5:46	32.62	6/17/2022 6:33	19.11	6/16/2022 9:06	5.88
6/17/2022 5:47	32.62	6/17/2022 6:34	19.10	6/16/2022 9:07	5.89
6/17/2022 5:48	32.64	6/17/2022 6:35	19.05	6/16/2022 9:08	5.88
6/17/2022 5:49	32.64	6/17/2022 6:36	19.10	6/16/2022 9:09	5.86
6/17/2022 5:50	32.62	6/17/2022 6:37	19.10	6/16/2022 9:10	5.88
6/17/2022 5:51	32.61	6/17/2022 6:38	19.11	6/16/2022 9:11	5.85
6/17/2022 5:52	32.62	6/17/2022 6:39	19.10	6/16/2022 9:12	5.88
6/17/2022 5:53	32.60	6/17/2022 6:40	19.09	6/16/2022 9:13	5.87
6/17/2022 5:54	32.60	6/17/2022 6:41	19.08	6/16/2022 9:14	5.91
6/17/2022 5:55	32.64	6/17/2022 6:42	19.09	6/16/2022 9:15	5.90
6/17/2022 5:56	32.61	6/17/2022 6:43	19.10	6/16/2022 9:16	5.88
6/17/2022 5:57	32.60	6/17/2022 6:44	19.11	6/16/2022 9:17	5.87
6/17/2022 5:58	32.61	6/17/2022 6:45	19.10	6/16/2022 9:18	5.87
6/17/2022 5:59	32.63	6/17/2022 6:46	19.12	6/16/2022 9:19	5.89
6/17/2022 6:00	32.63	6/17/2022 6:47	19.12	6/16/2022 9:20	5.91
6/17/2022 6:01	32.61	6/17/2022 6:48	19.11	6/16/2022 9:21	5.87
6/17/2022 6:02	32.64	6/17/2022 6:49	19.11	6/16/2022 9:22	5.88
6/17/2022 6:03	32.61	6/17/2022 6:50	19.10	6/16/2022 9:23	5.89
6/17/2022 6:04	32.63	6/17/2022 6:51	19.10	6/16/2022 9:24	5.87
6/17/2022 6:05	32.65	6/17/2022 6:52	19.11	6/16/2022 9:25	5.89
6/17/2022 6:06	32.64	6/17/2022 6:53	19.09	6/16/2022 9:26	5.89
6/17/2022 6:07	32.62	6/17/2022 6:54	19.08	6/16/2022 9:27	5.86
6/17/2022 6:08	32.63	6/17/2022 6:55	19.08	6/16/2022 9:28	5.88
6/17/2022 6:09	32.64	6/17/2022 6:56	19.09	6/16/2022 9:29	5.86
6/17/2022 6:10	32.60	6/17/2022 6:57	19.10	6/16/2022 9:30	5.86
6/17/2022 6:11	32.63	6/17/2022 6:58	19.09	6/16/2022 9:31	5.87
6/17/2022 6:12	32.60	6/17/2022 6:59	19.07	6/16/2022 9:32	5.88
6/17/2022 6:13	32.61	6/17/2022 7:00	19.10	6/16/2022 9:33	5.84
6/17/2022 6:14	32.62	6/17/2022 7:01	19.09	6/16/2022 9:34	5.87
6/17/2022 6:15	32.58	6/17/2022 7:02	19.08	6/16/2022 9:35	5.86
6/17/2022 6:16	32.62	6/17/2022 7:03	19.08	6/16/2022 9:36	5.90
6/17/2022 6:17	32.59	6/17/2022 7:04	19.07	6/16/2022 9:37	5.85
6/17/2022 6:18	32.60	6/17/2022 7:05	19.09	6/16/2022 9:38	5.87
6/17/2022 6:19	32.60	6/17/2022 7:06	19.41	6/16/2022 9:39	5.86
6/17/2022 6:20	32.63	6/17/2022 7:07	19.73	6/16/2022 9:40	5.88
6/17/2022 6:21	32.61	6/17/2022 7:08	19.81	6/16/2022 9:41	5.86
6/17/2022 6:22	32.62	6/17/2022 7:09	19.85	6/16/2022 9:42	5.87
6/17/2022 6:23	32.60	6/17/2022 7:10	19.90	6/16/2022 9:43	5.85
6/17/2022 6:24	32.60	6/17/2022 7:11	19.48	6/16/2022 9:44	5.87
6/17/2022 6:25	32.58	6/17/2022 7:12	19.33	6/16/2022 9:45	5.88
6/17/2022 6:26	32.59	6/17/2022 7:13	19.27	6/16/2022 9:46	5.89
6/17/2022 6:27	32.61	6/17/2022 7:14	19.25	6/16/2022 9:47	5.90
6/17/2022 6:28	32.60	6/17/2022 7:15	19.22	6/16/2022 9:48	5.90
6/17/2022 6:29	32.59	6/17/2022 7:16	19.22	6/16/2022 9:49	5.86
6/17/2022 6:30	32.63	6/17/2022 7:17	19.20	6/16/2022 9:50	5.85
6/17/2022 6:31	32.62	6/17/2022 7:18	19.21	6/16/2022 9:51	5.88
6/17/2022 6:32	32.58	6/17/2022 7:19	19.22	6/16/2022 9:52	5.88
6/17/2022 6:33	32.61	6/17/2022 7:20	19.20	6/16/2022 9:53	5.86
6/17/2022 6:34	32.62	6/17/2022 7:21	19.15	6/16/2022 9:54	5.88
6/17/2022 6:35	32.60	6/17/2022 7:22	19.16	6/16/2022 9:55	5.88
6/17/2022 6:36	32.60	6/17/2022 7:23	19.17	6/16/2022 9:56	5.86
6/17/2022 6:37	32.60	6/17/2022 7:24	19.20	6/16/2022 9:57	5.86
6/17/2022 6:38	32.63	6/17/2022 7:25	19.17	6/16/2022 9:58	5.88
6/17/2022 6:39	32.58	6/17/2022 7:26	19.16	6/16/2022 9:59	5.85
6/17/2022 6:40	32.60	6/17/2022 7:27	19.17	6/16/2022 10:00	5.88
6/17/2022 6:41	32.61	6/17/2022 7:28	19.16	6/16/2022 10:01	5.86
6/17/2022 6:42	32.63	6/17/2022 7:29	19.16	6/16/2022 10:02	5.88
6/17/2022 6:43	32.61	6/17/2022 7:30	19.15	6/16/2022 10:03	5.86
6/17/2022 6:44	32.61	6/17/2022 7:31	19.16	6/16/2022 10:04	5.86
6/17/2022 6:45	32.59	6/17/2022 7:32	19.15	6/16/2022 10:05	5.88
6/17/2022 6:46	32.61	6/17/2022 7:33	19.14	6/16/2022 10:06	5.86
6/17/2022 6:47	32.62	6/17/2022 7:34	19.17	6/16/2022 10:07	5.89
6/17/2022 6:48	32.59	6/17/2022 7:35	19.17	6/16/2022 10:08	5.84
6/17/2022 6:49	32.61	6/17/2022 7:36	19.17	6/16/2022 10:09	5.85
6/17/2022 6:50	32.59	6/17/2022 7:37	19.16	6/16/2022 10:10	5.84
6/17/2022 6:51	32.59	6/17/2022 7:38	19.15	6/16/2022 10:11	5.83
6/17/2022 6:52	32.61	6/17/2022 7:39	19.14	6/16/2022 10:12	5.88
6/17/2022 6:53	32.63	6/17/2022 7:40	19.15	6/16/2022 10:13	5.86
6/17/2022 6:54	32.61	6/17/2022 7:41	19.12	6/16/2022 10:14	5.89
6/17/2022 6:55	32.60	6/17/2022 7:42	19.17	6/16/2022 10:15	5.84
6/17/2022 6:56	32.57	6/17/2022 7:43	19.13	6/16/2022 10:16	5.88
6/17/2022 6:57	32.59	6/17/2022 7:44	19.15	6/16/2022 10:17	5.87
6/17/2022 6:58	32.57	6/17/2022 7:45	19.14	6/16/2022 10:18	5.84
6/17/2022 6:59	32.59	6/17/2022 7:46	19.14	6/16/2022 10:19	5.87
6/17/2022 7:00	32.59	6/17/2022 7:47	19.15	6/16/2022 10:20	5.86
6/17/2022 7:01	32.57	6/17/2022 7:48	19.13	6/16/2022 10:21	5.84
6/17/2022 7:02	32.58	6/17/2022 7:49	19.14	6/16/2022 10:22	5.88
6/17/2022 7:03	32.59	6/17/2022 7:50	19.12	6/16/2022 10:23	5.83
6/17/2022 7:04	32.59	6/17/2022 7:51	19.12	6/16/2022 10:24	5.87
6/17/2022 7:05	32.56	6/17/2022 7:52	19.14	6/16/2022 10:25	5.90
6/17/2022 7:06	32.57	6/17/2022 7:53	19.11	6/16/2022 10:26	5.89

6/17/2022 7:07	32.58	6/17/2022 7:54	19.11	6/16/2022 10:27	5.83
6/17/2022 7:08	32.59	6/17/2022 7:55	19.16	6/16/2022 10:28	5.87
6/17/2022 7:09	32.60	6/17/2022 7:56	19.14	6/16/2022 10:29	5.84
6/17/2022 7:10	32.60	6/17/2022 7:57	19.13	6/16/2022 10:30	5.87
6/17/2022 7:11	32.61	6/17/2022 7:58	19.15	6/16/2022 10:31	5.85
6/17/2022 7:12	32.60	6/17/2022 7:59	19.11	6/16/2022 10:32	5.87
6/17/2022 7:13	32.59	6/17/2022 8:00	19.14	6/16/2022 10:33	5.86
6/17/2022 7:14	32.60	6/17/2022 8:01	19.14	6/16/2022 10:34	5.88
6/17/2022 7:15	32.61	6/17/2022 8:02	19.13	6/16/2022 10:35	5.88
6/17/2022 7:16	32.59	6/17/2022 8:03	19.12	6/16/2022 10:36	5.89
6/17/2022 7:17	32.59	6/17/2022 8:04	19.11	6/16/2022 10:37	5.89
6/17/2022 7:18	32.59	6/17/2022 8:05	19.12	6/16/2022 10:38	5.88
6/17/2022 7:19	32.56	6/17/2022 8:06	19.12	6/16/2022 10:39	5.89
6/17/2022 7:20	32.59	6/17/2022 8:07	19.14	6/16/2022 10:40	5.88
6/17/2022 7:21	32.57	6/17/2022 8:08	19.12	6/16/2022 10:41	5.89
6/17/2022 7:22	32.56	6/17/2022 8:09	19.15	6/16/2022 10:42	5.86
6/17/2022 7:23	32.58	6/17/2022 8:10	19.11	6/16/2022 10:43	5.89
6/17/2022 7:24	32.58	6/17/2022 8:11	19.74	6/16/2022 10:44	5.86
6/17/2022 7:25	32.60	6/17/2022 8:12	19.81	6/16/2022 10:45	5.88
6/17/2022 7:26	32.58	6/17/2022 8:13	19.89	6/16/2022 10:46	5.87
6/17/2022 7:27	32.59	6/17/2022 8:14	19.92	6/16/2022 10:47	5.83
6/17/2022 7:28	32.59	6/17/2022 8:15	19.94	6/16/2022 10:48	5.85
6/17/2022 7:29	32.57	6/17/2022 8:16	19.96	6/16/2022 10:49	5.90
6/17/2022 7:30	32.58	6/17/2022 8:17	19.49	6/16/2022 10:50	5.85
6/17/2022 7:31	32.60	6/17/2022 8:18	19.38	6/16/2022 10:51	5.86
6/17/2022 7:32	32.61	6/17/2022 8:19	19.34	6/16/2022 10:52	5.90
6/17/2022 7:33	32.61	6/17/2022 8:20	19.31	6/16/2022 10:53	5.87
6/17/2022 7:34	32.63	6/17/2022 8:21	19.28	6/16/2022 10:54	5.85
6/17/2022 7:35	32.62	6/17/2022 8:22	19.27	6/16/2022 10:55	5.86
6/17/2022 7:36	32.62	6/17/2022 8:23	19.27	6/16/2022 10:56	5.89
6/17/2022 7:37	32.64	6/17/2022 8:24	19.27	6/16/2022 10:57	5.87
6/17/2022 7:38	32.58	6/17/2022 8:25	19.23	6/16/2022 10:58	5.88
6/17/2022 7:39	32.63	6/17/2022 8:26	19.24	6/16/2022 10:59	5.88
6/17/2022 7:40	32.58	6/17/2022 8:27	19.24	6/16/2022 11:00	5.85
6/17/2022 7:41	32.61	6/17/2022 8:28	19.26	6/16/2022 11:01	5.89
6/17/2022 7:42	32.58	6/17/2022 8:29	19.22	6/16/2022 11:02	8.36
6/17/2022 7:43	32.59	6/17/2022 8:30	19.21	6/16/2022 11:03	8.62
6/17/2022 7:44	32.58	6/17/2022 8:31	19.21	6/16/2022 11:04	6.05
6/17/2022 7:45	32.62	6/17/2022 8:32	19.22	6/16/2022 11:05	5.96
6/17/2022 7:46	32.57	6/17/2022 8:33	19.20	6/16/2022 11:06	5.90
6/17/2022 7:47	32.58	6/17/2022 8:34	19.20	6/16/2022 11:07	5.85
6/17/2022 7:48	32.58	6/17/2022 8:35	19.19	6/16/2022 11:08	5.88
6/17/2022 7:49	32.60	6/17/2022 8:36	19.19	6/16/2022 11:09	5.87
6/17/2022 7:50	32.60	6/17/2022 8:37	19.19	6/16/2022 11:10	5.88
6/17/2022 7:51	32.61	6/17/2022 8:38	19.20	6/16/2022 11:11	5.88
6/17/2022 7:52	32.63	6/17/2022 8:39	19.19	6/16/2022 11:12	5.90
6/17/2022 7:53	32.56	6/17/2022 8:40	19.19	6/16/2022 11:13	5.90
6/17/2022 7:54	32.59	6/17/2022 8:41	19.17	6/16/2022 11:14	5.88
6/17/2022 7:55	32.60	6/17/2022 8:42	19.20	6/16/2022 11:15	5.87
6/17/2022 7:56	32.61	6/17/2022 8:43	19.21	6/16/2022 11:16	5.92
6/17/2022 7:57	32.59	6/17/2022 8:44	19.18	6/16/2022 11:17	5.86
6/17/2022 7:58	32.60	6/17/2022 8:45	19.19	6/16/2022 11:18	5.85
6/17/2022 7:59	32.57	6/17/2022 8:46	19.18	6/16/2022 11:19	5.86
6/17/2022 8:00	32.59	6/17/2022 8:47	19.19	6/16/2022 11:20	5.89
6/17/2022 8:01	32.59	6/17/2022 8:48	19.17	6/16/2022 11:21	5.90
6/17/2022 8:02	32.58	6/17/2022 8:49	19.18	6/16/2022 11:22	5.89
6/17/2022 8:03	32.55	6/17/2022 8:50	19.19	6/16/2022 11:23	5.89
6/17/2022 8:04	32.59	6/17/2022 8:51	19.18	6/16/2022 11:24	5.87
6/17/2022 8:05	32.59	6/17/2022 8:52	19.14	6/16/2022 11:25	5.89
6/17/2022 8:06	32.59	6/17/2022 8:53	19.16	6/16/2022 11:26	5.89
6/17/2022 8:07	32.59	6/17/2022 8:54	19.17	6/16/2022 11:27	5.90
6/17/2022 8:08	32.57	6/17/2022 8:55	19.14	6/16/2022 11:28	5.86
6/17/2022 8:09	32.57	6/17/2022 8:56	19.18	6/16/2022 11:29	5.89
6/17/2022 8:10	32.60	6/17/2022 8:57	19.17	6/16/2022 11:30	5.89
6/17/2022 8:11	32.59	6/17/2022 8:58	19.20	6/16/2022 11:31	5.87
6/17/2022 8:12	32.55	6/17/2022 8:59	19.15	6/16/2022 11:32	5.90
6/17/2022 8:13	32.57	6/17/2022 9:00	19.18	6/16/2022 11:33	5.86
6/17/2022 8:14	32.55	6/17/2022 9:01	19.15	6/16/2022 11:34	5.85
6/17/2022 8:15	32.57	6/17/2022 9:02	19.16	6/16/2022 11:35	5.87
6/17/2022 8:16	32.57	6/17/2022 9:03	19.16	6/16/2022 11:36	5.89
6/17/2022 8:17	32.57	6/17/2022 9:04	19.15	6/16/2022 11:37	5.87
6/17/2022 8:18	32.55	6/17/2022 9:05	19.15	6/16/2022 11:38	5.85
6/17/2022 8:19	32.57	6/17/2022 9:06	19.14	6/16/2022 11:39	5.88
6/17/2022 8:20	32.59	6/17/2022 9:07	19.15	6/16/2022 11:40	5.86
6/17/2022 8:21	32.53	6/17/2022 9:08	19.14	6/16/2022 11:41	5.90
6/17/2022 8:22	32.54	6/17/2022 9:09	19.15	6/16/2022 11:42	5.90
6/17/2022 8:23	32.57	6/17/2022 9:10	19.17	6/16/2022 11:43	5.87
6/17/2022 8:24	32.60	6/17/2022 9:11	19.14	6/16/2022 11:44	5.88
6/17/2022 8:25	32.55	6/17/2022 9:12	19.15	6/16/2022 11:45	5.86
6/17/2022 8:26	32.54	6/17/2022 9:13	19.16	6/16/2022 11:46	5.88
6/17/2022 8:27	32.57	6/17/2022 9:14	19.12	6/16/2022 11:47	5.89
6/17/2022 8:28	32.56	6/17/2022 9:15	19.14	6/16/2022 11:48	5.88
6/17/2022 8:29	32.56	6/17/2022 9:16	19.13	6/16/2022 11:49	5.86
6/17/2022 8:30	32.53	6/17/2022 9:17	19.14	6/16/2022 11:50	5.87
6/17/2022 8:31	32.56	6/17/2022 9:18	19.14	6/16/2022 11:51	5.88
6/17/2022 8:32	32.58	6/17/2022 9:19	19.13	6/16/2022 11:52	5.88
6/17/2022 8:33	32.57	6/17/2022 9:20	19.16	6/16/2022 11:53	5.85
6/17/2022 8:34	32.57	6/17/2022 9:21	19.13	6/16/2022 11:54	5.87

6/17/2022 8:35	32.56	6/17/2022 9:22	19.15	6/16/2022 11:55	5.85
6/17/2022 8:36	32.55	6/17/2022 9:23	19.14	6/16/2022 11:56	5.85
6/17/2022 8:37	32.54	6/17/2022 9:24	19.13	6/16/2022 11:57	5.85
6/17/2022 8:38	32.56	6/17/2022 9:25	19.11	6/16/2022 11:58	5.86
6/17/2022 8:39	32.58	6/17/2022 9:26	19.17	6/16/2022 11:59	5.85
6/17/2022 8:40	32.61	6/17/2022 9:27	19.12	6/16/2022 12:00	5.87
6/17/2022 8:41	32.61	6/17/2022 9:28	19.12	6/16/2022 12:01	5.90
6/17/2022 8:42	32.61	6/17/2022 9:29	19.13	6/16/2022 12:02	5.86
6/17/2022 8:43	32.59	6/17/2022 9:30	19.14	6/16/2022 12:03	5.88
6/17/2022 8:44	32.60	6/17/2022 9:31	19.13	6/16/2022 12:04	5.87
6/17/2022 8:45	32.58	6/17/2022 9:32	19.17	6/16/2022 12:05	5.88
6/17/2022 8:46	32.59	6/17/2022 9:33	19.12	6/16/2022 12:06	5.83
6/17/2022 8:47	32.58	6/17/2022 9:34	19.39	6/16/2022 12:07	5.86
6/17/2022 8:48	32.59	6/17/2022 9:35	19.79	6/16/2022 12:08	5.84
6/17/2022 8:49	32.58	6/17/2022 9:36	19.87	6/16/2022 12:09	5.84
6/17/2022 8:50	32.59	6/17/2022 9:37	19.92	6/16/2022 12:10	5.89
6/17/2022 8:51	32.59	6/17/2022 9:38	19.96	6/16/2022 12:11	5.88
6/17/2022 8:52	32.59	6/17/2022 9:39	19.97	6/16/2022 12:12	5.86
6/17/2022 8:53	32.60	6/17/2022 9:40	19.97	6/16/2022 12:13	5.86
6/17/2022 8:54	32.57	6/17/2022 9:41	19.57	6/16/2022 12:14	5.85
6/17/2022 8:55	32.59	6/17/2022 9:42	19.41	6/16/2022 12:15	5.86
6/17/2022 8:56	32.57	6/17/2022 9:43	19.35	6/16/2022 12:16	5.85
6/17/2022 8:57	32.56	6/17/2022 9:44	19.32	6/16/2022 12:17	5.85
6/17/2022 8:58	33.38	6/17/2022 9:45	19.31	6/16/2022 12:18	5.88
6/17/2022 8:59	32.73	6/17/2022 9:46	19.28	6/16/2022 12:19	5.86
6/17/2022 9:00	32.66	6/17/2022 9:47	19.29	6/16/2022 12:20	5.86
6/17/2022 9:01	32.65	6/17/2022 9:48	19.27	6/16/2022 12:21	5.85
6/17/2022 9:02	32.63	6/17/2022 9:49	19.27	6/16/2022 12:22	5.84
6/17/2022 9:03	32.65	6/17/2022 9:50	19.25	6/16/2022 12:23	5.86
6/17/2022 9:04	32.61	6/17/2022 9:51	19.23	6/16/2022 12:24	5.88
6/17/2022 9:05	32.64	6/17/2022 9:52	19.28	6/16/2022 12:25	8.29
6/17/2022 9:06	32.60	6/17/2022 9:53	19.25	6/16/2022 12:26	8.64
6/17/2022 9:07	32.62	6/17/2022 9:54	19.22	6/16/2022 12:27	6.08
6/17/2022 9:08	32.64	6/17/2022 9:55	19.23	6/16/2022 12:28	5.96
6/17/2022 9:09	32.61	6/17/2022 9:56	19.22	6/16/2022 12:29	5.90
6/17/2022 9:10	32.62	6/17/2022 9:57	19.22	6/16/2022 12:30	5.89
6/17/2022 9:11	32.58	6/17/2022 9:58	19.22	6/16/2022 12:31	5.88
6/17/2022 9:12	32.60	6/17/2022 9:59	19.20	6/16/2022 12:32	5.87
6/17/2022 9:13	32.59	6/17/2022 10:00	19.22	6/16/2022 12:33	5.88
6/17/2022 9:14	32.61	6/17/2022 10:01	19.18	6/16/2022 12:34	5.89
6/17/2022 9:15	32.59	6/17/2022 10:02	19.23	6/16/2022 12:35	5.88
6/17/2022 9:16	32.61	6/17/2022 10:03	19.20	6/16/2022 12:36	5.88
6/17/2022 9:17	32.64	6/17/2022 10:04	19.24	6/16/2022 12:37	5.89
6/17/2022 9:18	32.68	6/17/2022 10:05	19.22	6/16/2022 12:38	5.88
6/17/2022 9:19	32.62	6/17/2022 10:06	19.21	6/16/2022 12:39	5.89
6/17/2022 9:20	32.60	6/17/2022 10:07	19.19	6/16/2022 12:40	5.88
6/17/2022 9:21	32.66	6/17/2022 10:08	19.20	6/16/2022 12:41	5.90
6/17/2022 9:22	32.61	6/17/2022 10:09	19.18	6/16/2022 12:42	5.86
6/17/2022 9:23	32.62	6/17/2022 10:10	19.19	6/16/2022 12:43	5.89
6/17/2022 9:24	32.60	6/17/2022 10:11	19.16	6/16/2022 12:44	5.86
6/17/2022 9:25	32.61	6/17/2022 10:12	19.17	6/16/2022 12:45	5.87
6/17/2022 9:26	32.60	6/17/2022 10:13	19.18	6/16/2022 12:46	5.88
6/17/2022 9:27	32.61	6/17/2022 10:14	19.19	6/16/2022 12:47	5.84
6/17/2022 9:28	32.59	6/17/2022 10:15	19.16	6/16/2022 12:48	5.87
6/17/2022 9:29	32.60	6/17/2022 10:16	19.17	6/16/2022 12:49	5.84
6/17/2022 9:30	32.61	6/17/2022 10:17	19.15	6/16/2022 12:50	5.87
6/17/2022 9:31	32.56	6/17/2022 10:18	19.16	6/16/2022 12:51	5.91
6/17/2022 9:32	32.59	6/17/2022 10:19	19.16	6/16/2022 12:52	5.87
6/17/2022 9:33	32.59	6/17/2022 10:20	19.17	6/16/2022 12:53	5.89
6/17/2022 9:34	32.60	6/17/2022 10:21	19.18	6/16/2022 12:54	5.85
6/17/2022 9:35	32.59	6/17/2022 10:22	19.15	6/16/2022 12:55	5.89
6/17/2022 9:36	32.58	6/17/2022 10:23	19.15	6/16/2022 12:56	5.86
6/17/2022 9:37	32.61	6/17/2022 10:24	19.12	6/16/2022 12:57	5.86
6/17/2022 9:38	32.60	6/17/2022 10:25	19.15	6/16/2022 12:58	5.85
6/17/2022 9:39	32.60	6/17/2022 10:26	19.13	6/16/2022 12:59	5.86
6/17/2022 9:40	32.60	6/17/2022 10:27	19.16	6/16/2022 13:00	5.86
6/17/2022 9:41	32.62	6/17/2022 10:28	19.14	6/16/2022 13:01	5.88
6/17/2022 9:42	32.59	6/17/2022 10:29	19.17	6/16/2022 13:02	5.88
6/17/2022 9:43	32.60	6/17/2022 10:30	19.16	6/16/2022 13:03	5.84
6/17/2022 9:44	32.60	6/17/2022 10:31	19.14	6/16/2022 13:04	5.89
6/17/2022 9:45	32.56	6/17/2022 10:32	19.14	6/16/2022 13:05	5.87
6/17/2022 9:46	33.95	6/17/2022 10:33	19.13	6/16/2022 13:06	5.84
6/17/2022 9:47	32.85	6/17/2022 10:34	19.17	6/16/2022 13:07	5.85
6/17/2022 9:48	32.70	6/17/2022 10:35	19.16	6/16/2022 13:08	5.88
6/17/2022 9:49	32.69	6/17/2022 10:36	19.14	6/16/2022 13:09	5.86
6/17/2022 9:50	32.69	6/17/2022 10:37	19.16	6/16/2022 13:10	5.84
6/17/2022 9:51	32.64	6/17/2022 10:38	19.14	6/16/2022 13:11	5.88
6/17/2022 9:52	32.66	6/17/2022 10:39	19.16	6/16/2022 13:12	5.86
6/17/2022 9:53	32.63	6/17/2022 10:40	19.13	6/16/2022 13:13	5.88
6/17/2022 9:54	32.63	6/17/2022 10:41	19.15	6/16/2022 13:14	5.86
6/17/2022 9:55	32.63	6/17/2022 10:42	19.16	6/16/2022 13:15	5.84
6/17/2022 9:56	32.64	6/17/2022 10:43	19.12	6/16/2022 13:16	5.84
6/17/2022 9:57	32.62	6/17/2022 10:44	19.14	6/16/2022 13:17	5.88
6/17/2022 9:58	32.63	6/17/2022 10:45	19.17	6/16/2022 13:18	5.89
6/17/2022 9:59	32.60	6/17/2022 10:46	19.13	6/16/2022 13:19	5.85
6/17/2022 10:00	32.62	6/17/2022 10:47	19.15	6/16/2022 13:20	5.86
6/17/2022 10:01	32.61	6/17/2022 10:48	19.13	6/16/2022 13:21	5.87
6/17/2022 10:02	32.60	6/17/2022 10:49	19.15	6/16/2022 13:22	5.87

6/17/2022 10:03	33.78	6/17/2022 10:50	19.12	6/16/2022 13:23	5.85
6/17/2022 10:04	33.30	6/17/2022 10:51	19.12	6/16/2022 13:24	5.87
6/17/2022 10:05	32.92	6/17/2022 10:52	19.14	6/16/2022 13:25	5.85
6/17/2022 10:06	34.04	6/17/2022 10:53	19.16	6/16/2022 13:26	5.89
6/17/2022 10:07	32.97	6/17/2022 10:54	19.16	6/16/2022 13:27	5.85
6/17/2022 10:08	32.89	6/17/2022 10:55	19.14	6/16/2022 13:28	5.85
6/17/2022 10:09	32.84	6/17/2022 10:56	19.13	6/16/2022 13:29	5.88
6/17/2022 10:10	32.79	6/17/2022 10:57	19.13	6/16/2022 13:30	5.83
6/17/2022 10:11	32.77	6/17/2022 10:58	19.11	6/16/2022 13:31	5.85
6/17/2022 10:12	32.76	6/17/2022 10:59	19.13	6/16/2022 13:32	5.87
6/17/2022 10:13	32.75	6/17/2022 11:00	19.12	6/16/2022 13:33	5.86
6/17/2022 10:14	32.72	6/17/2022 11:01	19.13	6/16/2022 13:34	5.87
6/17/2022 10:15	32.70	6/17/2022 11:02	19.14	6/16/2022 13:35	5.84
6/17/2022 10:16	32.70	6/17/2022 11:03	19.14	6/16/2022 13:36	5.84
6/17/2022 10:17	32.70	6/17/2022 11:04	19.13	6/16/2022 13:37	5.83
6/17/2022 10:18	32.72	6/17/2022 11:05	19.13	6/16/2022 13:38	5.85
6/17/2022 10:19	34.13	6/17/2022 11:06	19.14	6/16/2022 13:39	5.85
6/17/2022 10:20	32.92	6/17/2022 11:07	19.12	6/16/2022 13:40	5.86
6/17/2022 10:21	32.82	6/17/2022 11:08	19.14	6/16/2022 13:41	5.87
6/17/2022 10:22	32.75	6/17/2022 11:09	19.13	6/16/2022 13:42	5.86
6/17/2022 10:23	32.74	6/17/2022 11:10	19.12	6/16/2022 13:43	5.86
6/17/2022 10:24	32.75	6/17/2022 11:11	19.13	6/16/2022 13:44	5.87
6/17/2022 10:25	32.74	6/17/2022 11:12	19.12	6/16/2022 13:45	5.86
6/17/2022 10:26	32.70	6/17/2022 11:13	19.12	6/16/2022 13:46	5.85
6/17/2022 10:27	32.69	6/17/2022 11:14	19.15	6/16/2022 13:47	5.84
6/17/2022 10:28	32.70	6/17/2022 11:15	19.10	6/16/2022 13:48	5.85
6/17/2022 10:29	32.72	6/17/2022 11:16	19.15	6/16/2022 13:49	5.88
6/17/2022 10:30	32.72	6/17/2022 11:17	19.12	6/16/2022 13:50	5.88
6/17/2022 10:31	32.73	6/17/2022 11:18	19.11	6/16/2022 13:51	5.89
6/17/2022 10:32	32.72	6/17/2022 11:19	19.10	6/16/2022 13:52	5.87
6/17/2022 10:33	32.70	6/17/2022 11:20	19.11	6/16/2022 13:53	5.85
6/17/2022 10:34	33.35	6/17/2022 11:21	19.12	6/16/2022 13:54	5.87
6/17/2022 10:35	33.35	6/17/2022 11:22	19.11	6/16/2022 13:55	5.84
6/17/2022 10:36	32.91	6/17/2022 11:23	19.13	6/16/2022 13:56	5.88
6/17/2022 10:37	32.81	6/17/2022 11:24	19.11	6/16/2022 13:57	5.84
6/17/2022 10:38	32.80	6/17/2022 11:25	19.14	6/16/2022 13:58	5.88
6/17/2022 10:39	32.78	6/17/2022 11:26	19.12	6/16/2022 13:59	5.89
6/17/2022 10:40	32.77	6/17/2022 11:27	19.13	6/16/2022 14:00	5.86
6/17/2022 10:41	32.73	6/17/2022 11:28	19.13	6/16/2022 14:01	5.86
6/17/2022 10:42	32.71	6/17/2022 11:29	19.11	6/16/2022 14:02	5.88
6/17/2022 10:43	32.74	6/17/2022 11:30	19.12	6/16/2022 14:03	5.85
6/17/2022 10:44	32.73	6/17/2022 11:31	19.11	6/16/2022 14:04	5.88
6/17/2022 10:45	32.71	6/17/2022 11:32	19.12	6/16/2022 14:05	5.86
6/17/2022 10:46	32.73	6/17/2022 11:33	19.12	6/16/2022 14:06	5.88
6/17/2022 10:47	32.72	6/17/2022 11:34	19.12	6/16/2022 14:07	5.85
6/17/2022 10:48	32.69	6/17/2022 11:35	19.09	6/16/2022 14:08	5.86
6/17/2022 10:49	32.72	6/17/2022 11:36	19.11	6/16/2022 14:09	5.86
6/17/2022 10:50	32.73	6/17/2022 11:37	19.11	6/16/2022 14:10	5.87
6/17/2022 10:51	32.75	6/17/2022 11:38	19.14	6/16/2022 14:11	5.86
6/17/2022 10:52	32.74	6/17/2022 11:39	19.11	6/16/2022 14:12	5.87
6/17/2022 10:53	32.73	6/17/2022 11:40	19.11	6/16/2022 14:13	5.90
6/17/2022 10:54	32.72	6/17/2022 11:41	19.11	6/16/2022 14:14	5.86
6/17/2022 10:55	32.70	6/17/2022 11:42	19.14	6/16/2022 14:15	5.88
6/17/2022 10:56	32.73	6/17/2022 11:43	19.13	6/16/2022 14:16	5.87
6/17/2022 10:57	32.71	6/17/2022 11:44	19.13	6/16/2022 14:17	5.85
6/17/2022 10:58	32.71	6/17/2022 11:45	19.11	6/16/2022 14:18	5.87
6/17/2022 10:59	32.74	6/17/2022 11:46	19.11	6/16/2022 14:19	5.88
6/17/2022 11:00	32.74	6/17/2022 11:47	19.11	6/16/2022 14:20	5.85
6/17/2022 11:01	32.72	6/17/2022 11:48	19.14	6/16/2022 14:21	5.86
6/17/2022 11:02	32.71	6/17/2022 11:49	19.13	6/16/2022 14:22	5.84
6/17/2022 11:03	32.73	6/17/2022 11:50	19.10	6/16/2022 14:23	5.87
6/17/2022 11:04	32.74	6/17/2022 11:51	19.12	6/16/2022 14:24	5.86
6/17/2022 11:05	32.77	6/17/2022 11:52	19.13	6/16/2022 14:25	5.82
6/17/2022 11:06	32.77	6/17/2022 11:53	19.10	6/16/2022 14:26	5.85
6/17/2022 11:07	32.74	6/17/2022 11:54	19.09	6/16/2022 14:27	5.82
6/17/2022 11:08	32.71	6/17/2022 11:55	19.10	6/16/2022 14:28	7.54
6/17/2022 11:09	32.71	6/17/2022 11:56	19.10	6/16/2022 14:29	8.67
6/17/2022 11:10	32.72	6/17/2022 11:57	19.09	6/16/2022 14:30	6.77
6/17/2022 11:11	32.71	6/17/2022 11:58	19.11	6/16/2022 14:31	5.93
6/17/2022 11:12	32.73	6/17/2022 11:59	19.12	6/16/2022 14:32	5.88
6/17/2022 11:13	34.07	6/17/2022 12:00	19.11	6/16/2022 14:33	5.90
6/17/2022 11:14	32.90	6/17/2022 12:01	19.08	6/16/2022 14:34	5.89
6/17/2022 11:15	32.81	6/17/2022 12:02	19.08	6/16/2022 14:35	5.89
6/17/2022 11:16	32.77	6/17/2022 12:03	19.09	6/16/2022 14:36	5.90
6/17/2022 11:17	32.76	6/17/2022 12:04	19.08	6/16/2022 14:37	5.87
6/17/2022 11:18	32.77	6/17/2022 12:05	19.12	6/16/2022 14:38	5.88
6/17/2022 11:19	32.75	6/17/2022 12:06	19.11	6/16/2022 14:39	5.86
6/17/2022 11:20	32.74	6/17/2022 12:07	19.10	6/16/2022 14:40	5.90
6/17/2022 11:21	32.75	6/17/2022 12:08	19.12	6/16/2022 14:41	5.87
6/17/2022 11:22	32.73	6/17/2022 12:09	19.13	6/16/2022 14:42	5.88
6/17/2022 11:23	32.70	6/17/2022 12:10	19.12	6/16/2022 14:43	5.87
6/17/2022 11:24	32.71	6/17/2022 12:11	19.11	6/16/2022 14:44	5.85
6/17/2022 11:25	32.71	6/17/2022 12:12	19.10	6/16/2022 14:45	5.87
6/17/2022 11:26	32.70	6/17/2022 12:13	19.11	6/16/2022 14:46	5.89
6/17/2022 11:27	32.70	6/17/2022 12:14	19.11	6/16/2022 14:47	5.87
6/17/2022 11:28	32.70	6/17/2022 12:15	19.08	6/16/2022 14:48	5.89
6/17/2022 11:29	32.73	6/17/2022 12:16	19.10	6/16/2022 14:49	5.86
6/17/2022 11:30	32.69	6/17/2022 12:17	19.11	6/16/2022 14:50	5.88

6/17/2022 11:31	32.71	6/17/2022 12:18	19.11	6/16/2022 14:51	5.86
6/17/2022 11:32	32.71	6/17/2022 12:19	19.12	6/16/2022 14:52	5.89
6/17/2022 11:33	32.70	6/17/2022 12:20	19.13	6/16/2022 14:53	5.85
6/17/2022 11:34	32.72	6/17/2022 12:21	19.10	6/16/2022 14:54	5.90
6/17/2022 11:35	32.67	6/17/2022 12:22	19.10	6/16/2022 14:55	5.86
6/17/2022 11:36	32.71	6/17/2022 12:23	19.09	6/16/2022 14:56	5.89
6/17/2022 11:37	32.69	6/17/2022 12:24	19.10	6/16/2022 14:57	5.86
6/17/2022 11:38	32.71	6/17/2022 12:25	19.11	6/16/2022 14:58	5.87
6/17/2022 11:39	32.66	6/17/2022 12:26	19.11	6/16/2022 14:59	5.88
6/17/2022 11:40	32.68	6/17/2022 12:27	19.11	6/16/2022 15:00	5.87
6/17/2022 11:41	32.69	6/17/2022 12:28	19.13	6/16/2022 15:01	5.87
6/17/2022 11:42	32.69	6/17/2022 12:29	19.12	6/16/2022 15:02	5.88
6/17/2022 11:43	32.64	6/17/2022 12:30	19.13	6/16/2022 15:03	5.87
6/17/2022 11:44	32.68	6/17/2022 12:31	19.10	6/16/2022 15:04	5.90
6/17/2022 11:45	32.69	6/17/2022 12:32	19.09	6/16/2022 15:05	5.85
6/17/2022 11:46	32.68	6/17/2022 12:33	19.11	6/16/2022 15:06	5.87
6/17/2022 11:47	32.69	6/17/2022 12:34	19.08	6/16/2022 15:07	5.87
6/17/2022 11:48	32.66	6/17/2022 12:35	19.10	6/16/2022 15:08	5.86
6/17/2022 11:49	32.67	6/17/2022 12:36	19.10	6/16/2022 15:09	5.87
6/17/2022 11:50	32.63	6/17/2022 12:37	19.10	6/16/2022 15:10	5.86
6/17/2022 11:51	32.65	6/17/2022 12:38	19.09	6/16/2022 15:11	5.88
6/17/2022 11:52	32.68	6/17/2022 12:39	19.10	6/16/2022 15:12	5.89
6/17/2022 11:53	32.66	6/17/2022 12:40	19.10	6/16/2022 15:13	5.85
6/17/2022 11:54	32.71	6/17/2022 12:41	19.10	6/16/2022 15:14	5.86
6/17/2022 11:55	32.69	6/17/2022 12:42	19.10	6/16/2022 15:15	5.87
6/17/2022 11:56	32.69	6/17/2022 12:43	19.10	6/16/2022 15:16	5.87
6/17/2022 11:57	32.68	6/17/2022 12:44	19.09	6/16/2022 15:17	5.88
6/17/2022 11:58	32.70	6/17/2022 12:45	19.08	6/16/2022 15:18	5.87
6/17/2022 11:59	32.67	6/17/2022 12:46	19.06	6/16/2022 15:19	5.88
6/17/2022 12:00	32.64	6/17/2022 12:47	19.07	6/16/2022 15:20	5.86
6/17/2022 12:01	32.71	6/17/2022 12:48	19.10	6/16/2022 15:21	5.84
6/17/2022 12:02	32.69	6/17/2022 12:49	19.10	6/16/2022 15:22	5.86
6/17/2022 12:03	32.69	6/17/2022 12:50	19.11	6/16/2022 15:23	5.87
6/17/2022 12:04	32.69	6/17/2022 12:51	19.08	6/16/2022 15:24	5.87
6/17/2022 12:05	32.66	6/17/2022 12:52	19.11	6/16/2022 15:25	5.88
6/17/2022 12:06	32.67	6/17/2022 12:53	19.08	6/16/2022 15:26	5.86
6/17/2022 12:07	32.66	6/17/2022 12:54	19.10	6/16/2022 15:27	5.87
6/17/2022 12:08	32.70	6/17/2022 12:55	19.10	6/16/2022 15:28	5.85
6/17/2022 12:09	32.70	6/17/2022 12:56	19.11	6/16/2022 15:29	5.86
6/17/2022 12:10	32.67	6/17/2022 12:57	19.11	6/16/2022 15:30	5.86
6/17/2022 12:11	32.67	6/17/2022 12:58	19.09	6/16/2022 15:31	5.84
6/17/2022 12:12	32.65	6/17/2022 12:59	19.11	6/16/2022 15:32	5.88
6/17/2022 12:13	32.66	6/17/2022 13:00	19.11	6/16/2022 15:33	5.85
6/17/2022 12:14	32.65	6/17/2022 13:01	19.08	6/16/2022 15:34	5.86
6/17/2022 12:15	32.65	6/17/2022 13:02	19.10	6/16/2022 15:35	5.89
6/17/2022 12:16	32.67	6/17/2022 13:03	19.10	6/16/2022 15:36	5.87
6/17/2022 12:17	32.62	6/17/2022 13:04	19.10	6/16/2022 15:37	5.87
6/17/2022 12:18	32.66	6/17/2022 13:05	19.06	6/16/2022 15:38	5.87
6/17/2022 12:19	32.65	6/17/2022 13:06	19.08	6/16/2022 15:39	6.89
6/17/2022 12:20	32.67	6/17/2022 13:07	19.10	6/16/2022 15:40	8.58
6/17/2022 12:21	32.62	6/17/2022 13:08	19.08	6/16/2022 15:41	6.55
6/17/2022 12:22	32.66	6/17/2022 13:09	19.07	6/16/2022 15:42	5.91
6/17/2022 12:23	32.64	6/17/2022 13:10	19.07	6/16/2022 15:43	5.90
6/17/2022 12:24	32.65	6/17/2022 13:11	19.10	6/16/2022 15:44	5.92
6/17/2022 12:25	32.65	6/17/2022 13:12	19.09	6/16/2022 15:45	5.92
6/17/2022 12:26	32.64	6/17/2022 13:13	19.09	6/16/2022 15:46	5.88
6/17/2022 12:27	32.67	6/17/2022 13:14	19.07	6/16/2022 15:47	5.89
6/17/2022 12:28	32.65	6/17/2022 13:15	19.07	6/16/2022 15:48	5.90
6/17/2022 12:29	32.66	6/17/2022 13:16	19.07	6/16/2022 15:49	5.88
6/17/2022 12:30	32.62	6/17/2022 13:17	19.10	6/16/2022 15:50	5.84
6/17/2022 12:31	32.68	6/17/2022 13:18	19.07	6/16/2022 15:51	5.88
6/17/2022 12:32	32.63	6/17/2022 13:19	19.11	6/16/2022 15:52	5.90
6/17/2022 12:33	32.62	6/17/2022 13:20	19.09	6/16/2022 15:53	5.89
6/17/2022 12:34	32.64	6/17/2022 13:21	19.07	6/16/2022 15:54	5.89
6/17/2022 12:35	32.62	6/17/2022 13:22	19.10	6/16/2022 15:55	5.90
6/17/2022 12:36	32.64	6/17/2022 13:23	19.08	6/16/2022 15:56	5.85
6/17/2022 12:37	32.63	6/17/2022 13:24	19.08	6/16/2022 15:57	5.89
6/17/2022 12:38	32.63	6/17/2022 13:25	19.08	6/16/2022 15:58	5.87
6/17/2022 12:39	32.63	6/17/2022 13:26	19.09	6/16/2022 15:59	5.87
6/17/2022 12:40	32.65	6/17/2022 13:27	19.10	6/16/2022 16:00	5.88
6/17/2022 12:41	32.63	6/17/2022 13:28	19.10	6/16/2022 16:01	5.85
6/17/2022 12:42	32.64	6/17/2022 13:29	19.09	6/16/2022 16:02	5.88
6/17/2022 12:43	32.59	6/17/2022 13:30	19.08	6/16/2022 16:03	5.89
6/17/2022 12:44	32.63	6/17/2022 13:31	19.11	6/16/2022 16:04	5.87
6/17/2022 12:45	32.58	6/17/2022 13:32	19.06	6/16/2022 16:05	5.89
6/17/2022 12:46	32.62	6/17/2022 13:33	19.08	6/16/2022 16:06	5.87
6/17/2022 12:47	32.63	6/17/2022 13:34	19.10	6/16/2022 16:07	5.85
6/17/2022 12:48	32.62	6/17/2022 13:35	19.06	6/16/2022 16:08	5.85
6/17/2022 12:49	32.62	6/17/2022 13:36	19.07	6/16/2022 16:09	5.89
6/17/2022 12:50	32.63	6/17/2022 13:37	19.09	6/16/2022 16:10	5.88
6/17/2022 12:51	32.64	6/17/2022 13:38	19.08	6/16/2022 16:11	5.87
6/17/2022 12:52	32.63	6/17/2022 13:39	19.08	6/16/2022 16:12	5.87
6/17/2022 12:53	32.60	6/17/2022 13:40	19.06	6/16/2022 16:13	5.88
6/17/2022 12:54	32.60	6/17/2022 13:41	19.08	6/16/2022 16:14	5.85
6/17/2022 12:55	32.65	6/17/2022 13:42	19.07	6/16/2022 16:15	5.84
6/17/2022 12:56	32.59	6/17/2022 13:43	19.07	6/16/2022 16:16	5.88
6/17/2022 12:57	32.61	6/17/2022 13:44	19.10	6/16/2022 16:17	5.86
6/17/2022 12:58	32.62	6/17/2022 13:45	19.06	6/16/2022 16:18	5.90

6/17/2022 12:59	32.65	6/17/2022 13:46	19.07	6/16/2022 16:19	5.89
6/17/2022 13:00	32.64	6/17/2022 13:47	19.07	6/16/2022 16:20	5.85
6/17/2022 13:01	32.63	6/17/2022 13:48	19.07	6/16/2022 16:21	5.89
6/17/2022 13:02	32.60	6/17/2022 13:49	19.06	6/16/2022 16:22	5.90
6/17/2022 13:03	32.61	6/17/2022 13:50	19.08	6/16/2022 16:23	5.86
6/17/2022 13:04	32.62	6/17/2022 13:51	19.08	6/16/2022 16:24	5.86
6/17/2022 13:05	32.61	6/17/2022 13:52	19.07	6/16/2022 16:25	5.88
6/17/2022 13:06	32.63	6/17/2022 13:53	19.08	6/16/2022 16:26	5.82
6/17/2022 13:07	32.63	6/17/2022 13:54	19.09	6/16/2022 16:27	5.89
6/17/2022 13:08	32.63	6/17/2022 13:55	19.06	6/16/2022 16:28	5.89
6/17/2022 13:09	32.62	6/17/2022 13:56	19.09	6/16/2022 16:29	5.86
6/17/2022 13:10	32.62	6/17/2022 13:57	19.07	6/16/2022 16:30	5.87
6/17/2022 13:11	32.63	6/17/2022 13:58	19.07	6/16/2022 16:31	5.90
6/17/2022 13:12	32.60	6/17/2022 13:59	19.08	6/16/2022 16:32	5.91
6/17/2022 13:13	32.58	6/17/2022 14:00	19.07	6/16/2022 16:33	5.88
6/17/2022 13:14	32.61	6/17/2022 14:01	19.07	6/16/2022 16:34	5.85
6/17/2022 13:15	32.63	6/17/2022 14:02	19.07	6/16/2022 16:35	5.85
6/17/2022 13:16	32.62	6/17/2022 14:03	19.07	6/16/2022 16:36	5.88
6/17/2022 13:17	32.61	6/17/2022 14:04	19.09	6/16/2022 16:37	5.87
6/17/2022 13:18	32.59	6/17/2022 14:05	19.07	6/16/2022 16:38	5.85
6/17/2022 13:19	32.61	6/17/2022 14:06	19.08	6/16/2022 16:39	5.89
6/17/2022 13:20	32.60	6/17/2022 14:07	19.08	6/16/2022 16:40	5.88
6/17/2022 13:21	32.60	6/17/2022 14:08	19.07	6/16/2022 16:41	5.85
6/17/2022 13:22	32.61	6/17/2022 14:09	19.08	6/16/2022 16:42	5.86
6/17/2022 13:23	32.61	6/17/2022 14:10	19.10	6/16/2022 16:43	5.88
6/17/2022 13:24	32.59	6/17/2022 14:11	19.07	6/16/2022 16:44	5.86
6/17/2022 13:25	32.62	6/17/2022 14:12	19.08	6/16/2022 16:45	5.87
6/17/2022 13:26	32.59	6/17/2022 14:13	19.09	6/16/2022 16:46	5.88
6/17/2022 13:27	32.59	6/17/2022 14:14	19.06	6/16/2022 16:47	5.88
6/17/2022 13:28	32.59	6/17/2022 14:15	19.08	6/16/2022 16:48	5.86
6/17/2022 13:29	32.60	6/17/2022 14:16	19.07	6/16/2022 16:49	5.85
6/17/2022 13:30	32.60	6/17/2022 14:17	19.08	6/16/2022 16:50	5.85
6/17/2022 13:31	32.57	6/17/2022 14:18	19.08	6/16/2022 16:51	5.87
6/17/2022 13:32	32.62	6/17/2022 14:19	19.07	6/16/2022 16:52	5.86
6/17/2022 13:33	32.70	6/17/2022 14:20	19.07	6/16/2022 16:53	5.87
6/17/2022 13:34	33.07	6/17/2022 14:21	19.09	6/16/2022 16:54	5.86
6/17/2022 13:35	32.77	6/17/2022 14:22	19.05	6/16/2022 16:55	5.86
6/17/2022 13:36	32.68	6/17/2022 14:23	19.07	6/16/2022 16:56	5.85
6/17/2022 13:37	32.68	6/17/2022 14:24	19.06	6/16/2022 16:57	5.86
6/17/2022 13:38	32.68	6/17/2022 14:25	19.12	6/16/2022 16:58	5.87
6/17/2022 13:39	32.64	6/17/2022 14:26	19.06	6/16/2022 16:59	5.87
6/17/2022 13:40	32.68	6/17/2022 14:27	19.07	6/16/2022 17:00	5.90
6/17/2022 13:41	32.66	6/17/2022 14:28	19.06	6/16/2022 17:01	5.88
6/17/2022 13:42	32.64	6/17/2022 14:29	19.09	6/16/2022 17:02	5.87
6/17/2022 13:43	32.66	6/17/2022 14:30	19.07	6/16/2022 17:03	5.88
6/17/2022 13:44	32.65	6/17/2022 14:31	19.06	6/16/2022 17:04	5.87
6/17/2022 13:45	32.69	6/17/2022 14:32	19.08	6/16/2022 17:05	5.84
6/17/2022 13:46	32.68	6/17/2022 14:33	19.07	6/16/2022 17:06	5.86
6/17/2022 13:47	32.69	6/17/2022 14:34	19.06	6/16/2022 17:07	5.87
6/17/2022 13:48	32.66	6/17/2022 14:35	19.04	6/16/2022 17:08	5.88
6/17/2022 13:49	32.65	6/17/2022 14:36	19.08	6/16/2022 17:09	5.87
6/17/2022 13:50	32.65	6/17/2022 14:37	19.08	6/16/2022 17:10	5.86
6/17/2022 13:51	32.66	6/17/2022 14:38	19.08	6/16/2022 17:11	5.87
6/17/2022 13:52	32.64	6/17/2022 14:39	19.09	6/16/2022 17:12	5.87
6/17/2022 13:53	32.60	6/17/2022 14:40	19.09	6/16/2022 17:13	5.85
6/17/2022 13:54	32.65	6/17/2022 14:41	19.09	6/16/2022 17:14	5.89
6/17/2022 13:55	32.65	6/17/2022 14:42	19.11	6/16/2022 17:15	5.89
6/17/2022 13:56	32.65	6/17/2022 14:43	19.07	6/16/2022 17:16	5.86
6/17/2022 13:57	32.63	6/17/2022 14:44	19.06	6/16/2022 17:17	5.87
6/17/2022 13:58	32.64	6/17/2022 14:45	19.07	6/16/2022 17:18	5.86
6/17/2022 13:59	32.63	6/17/2022 14:46	19.05	6/16/2022 17:19	5.82
6/17/2022 14:00	32.63	6/17/2022 14:47	19.05	6/16/2022 17:20	5.88
6/17/2022 14:01	32.65	6/17/2022 14:48	19.07	6/16/2022 17:21	5.88
6/17/2022 14:02	32.63	6/17/2022 14:49	19.27	6/16/2022 17:22	5.87
6/17/2022 14:03	32.60	6/17/2022 14:50	19.74	6/16/2022 17:23	5.88
6/17/2022 14:04	32.63	6/17/2022 14:51	19.81	6/16/2022 17:24	5.87
6/17/2022 14:05	32.63	6/17/2022 14:52	19.86	6/16/2022 17:25	5.88
6/17/2022 14:06	32.64	6/17/2022 14:53	19.87	6/16/2022 17:26	5.88
6/17/2022 14:07	32.62	6/17/2022 14:54	19.89	6/16/2022 17:27	5.87
6/17/2022 14:08	32.61	6/17/2022 14:55	19.38	6/16/2022 17:28	5.86
6/17/2022 14:09	32.58	6/17/2022 14:56	19.29	6/16/2022 17:29	5.86
6/17/2022 14:10	32.64	6/17/2022 14:57	19.24	6/16/2022 17:30	5.86
6/17/2022 14:11	32.62	6/17/2022 14:58	19.21	6/16/2022 17:31	5.89
6/17/2022 14:12	32.63	6/17/2022 14:59	19.21	6/16/2022 17:32	5.90
6/17/2022 14:13	32.65	6/17/2022 15:00	19.19	6/16/2022 17:33	5.84
6/17/2022 14:14	32.62	6/17/2022 15:01	19.19	6/16/2022 17:34	5.87
6/17/2022 14:15	32.64	6/17/2022 15:02	19.21	6/16/2022 17:35	5.87
6/17/2022 14:16	32.62	6/17/2022 15:03	19.20	6/16/2022 17:36	5.85
6/17/2022 14:17	32.60	6/17/2022 15:04	19.16	6/16/2022 17:37	5.82
6/17/2022 14:18	32.63	6/17/2022 15:05	19.19	6/16/2022 17:38	5.88
6/17/2022 14:19	32.61	6/17/2022 15:06	19.18	6/16/2022 17:39	5.85
6/17/2022 14:20	32.57	6/17/2022 15:07	19.16	6/16/2022 17:40	5.87
6/17/2022 14:21	32.60	6/17/2022 15:08	19.17	6/16/2022 17:41	5.85
6/17/2022 14:22	32.62	6/17/2022 15:09	19.16	6/16/2022 17:42	5.86
6/17/2022 14:23	32.61	6/17/2022 15:10	19.16	6/16/2022 17:43	5.84
6/17/2022 14:24	32.61	6/17/2022 15:11	19.16	6/16/2022 17:44	5.86
6/17/2022 14:25	32.60	6/17/2022 15:12	19.14	6/16/2022 17:45	5.85
6/17/2022 14:26	32.59	6/17/2022 15:13	19.16	6/16/2022 17:46	5.86

6/17/2022 14:27	32.59	6/17/2022 15:14	19.15	6/16/2022 17:47	5.88
6/17/2022 14:28	32.61	6/17/2022 15:15	19.13	6/16/2022 17:48	5.87
6/17/2022 14:29	32.58	6/17/2022 15:16	19.17	6/16/2022 17:49	5.87
6/17/2022 14:30	32.57	6/17/2022 15:17	19.14	6/16/2022 17:50	5.89
6/17/2022 14:31	32.58	6/17/2022 15:18	19.17	6/16/2022 17:51	5.86
6/17/2022 14:32	32.60	6/17/2022 15:19	19.14	6/16/2022 17:52	5.84
6/17/2022 14:33	32.57	6/17/2022 15:20	19.14	6/16/2022 17:53	5.87
6/17/2022 14:34	32.60	6/17/2022 15:21	19.14	6/16/2022 17:54	5.85
6/17/2022 14:35	32.58	6/17/2022 15:22	19.15	6/16/2022 17:55	5.91
6/17/2022 14:36	32.60	6/17/2022 15:23	19.13	6/16/2022 17:56	5.85
6/17/2022 14:37	32.63	6/17/2022 15:24	19.13	6/16/2022 17:57	5.84
6/17/2022 14:38	32.62	6/17/2022 15:25	19.14	6/16/2022 17:58	5.84
6/17/2022 14:39	32.58	6/17/2022 15:26	19.11	6/16/2022 17:59	5.84
6/17/2022 14:40	32.59	6/17/2022 15:27	19.15	6/16/2022 18:00	5.88
6/17/2022 14:41	32.60	6/17/2022 15:28	19.11	6/16/2022 18:01	5.86
6/17/2022 14:42	32.61	6/17/2022 15:29	19.12	6/16/2022 18:02	5.87
6/17/2022 14:43	32.58	6/17/2022 15:30	19.11	6/16/2022 18:03	5.87
6/17/2022 14:44	32.60	6/17/2022 15:31	19.14	6/16/2022 18:04	5.86
6/17/2022 14:45	32.61	6/17/2022 15:32	19.12	6/16/2022 18:05	5.87
6/17/2022 14:46	32.59	6/17/2022 15:33	19.11	6/16/2022 18:06	5.86
6/17/2022 14:47	32.57	6/17/2022 15:34	19.14	6/16/2022 18:07	5.86
6/17/2022 14:48	32.57	6/17/2022 15:35	19.14	6/16/2022 18:08	5.88
6/17/2022 14:49	32.57	6/17/2022 15:36	19.14	6/16/2022 18:09	5.87
6/17/2022 14:50	32.58	6/17/2022 15:37	19.09	6/16/2022 18:10	5.85
6/17/2022 14:51	32.61	6/17/2022 15:38	19.12	6/16/2022 18:11	5.88
6/17/2022 14:52	32.58	6/17/2022 15:39	19.13	6/16/2022 18:12	5.84
6/17/2022 14:53	32.58	6/17/2022 15:40	19.12	6/16/2022 18:13	5.86
6/17/2022 14:54	32.64	6/17/2022 15:41	19.11	6/16/2022 18:14	5.88
6/17/2022 14:55	32.56	6/17/2022 15:42	19.11	6/16/2022 18:15	5.89
6/17/2022 14:56	32.56	6/17/2022 15:43	19.11	6/16/2022 18:16	5.81
6/17/2022 14:57	32.58	6/17/2022 15:44	19.12	6/16/2022 18:17	5.86
6/17/2022 14:58	32.64	6/17/2022 15:45	19.11	6/16/2022 18:18	5.88
6/17/2022 14:59	32.56	6/17/2022 15:46	19.11	6/16/2022 18:19	5.85
6/17/2022 15:00	32.58	6/17/2022 15:47	19.11	6/16/2022 18:20	5.85
6/17/2022 15:01	32.57	6/17/2022 15:48	19.09	6/16/2022 18:21	5.86
6/17/2022 15:02	32.56	6/17/2022 15:49	19.10	6/16/2022 18:22	5.83
6/17/2022 15:03	32.56	6/17/2022 15:50	19.12	6/16/2022 18:23	5.85
6/17/2022 15:04	32.58	6/17/2022 15:51	19.10	6/16/2022 18:24	5.89
6/17/2022 15:05	32.59	6/17/2022 15:52	19.11	6/16/2022 18:25	5.84
6/17/2022 15:06	32.57	6/17/2022 15:53	19.09	6/16/2022 18:26	5.87
6/17/2022 15:07	32.59	6/17/2022 15:54	19.13	6/16/2022 18:27	5.84
6/17/2022 15:08	32.55	6/17/2022 15:55	19.11	6/16/2022 18:28	5.84
6/17/2022 15:09	32.56	6/17/2022 15:56	19.14	6/16/2022 18:29	5.86
6/17/2022 15:10	32.54	6/17/2022 15:57	19.13	6/16/2022 18:30	5.87
6/17/2022 15:11	32.61	6/17/2022 15:58	19.10	6/16/2022 18:31	5.85
6/17/2022 15:12	32.59	6/17/2022 15:59	19.11	6/16/2022 18:32	5.86
6/17/2022 15:13	32.57	6/17/2022 16:00	19.13	6/16/2022 18:33	5.86
6/17/2022 15:14	32.53	6/17/2022 16:01	19.12	6/16/2022 18:34	5.88
6/17/2022 15:15	32.55	6/17/2022 16:02	19.09	6/16/2022 18:35	5.86
6/17/2022 15:16	32.54	6/17/2022 16:03	19.10	6/16/2022 18:36	5.88
6/17/2022 15:17	32.56	6/17/2022 16:04	19.11	6/16/2022 18:37	5.87
6/17/2022 15:18	32.58	6/17/2022 16:05	19.11	6/16/2022 18:38	5.88
6/17/2022 15:19	32.57	6/17/2022 16:06	19.10	6/16/2022 18:39	5.86
6/17/2022 15:20	32.57	6/17/2022 16:07	19.10	6/16/2022 18:40	5.88
6/17/2022 15:21	32.55	6/17/2022 16:08	19.13	6/16/2022 18:41	5.86
6/17/2022 15:22	32.59	6/17/2022 16:09	19.08	6/16/2022 18:42	5.89
6/17/2022 15:23	32.56	6/17/2022 16:10	19.09	6/16/2022 18:43	5.86
6/17/2022 15:24	32.57	6/17/2022 16:11	19.09	6/16/2022 18:44	5.86
6/17/2022 15:25	32.55	6/17/2022 16:12	19.13	6/16/2022 18:45	5.89
6/17/2022 15:26	32.54	6/17/2022 16:13	19.10	6/16/2022 18:46	5.89
6/17/2022 15:27	32.55	6/17/2022 16:14	19.09	6/16/2022 18:47	5.87
6/17/2022 15:28	32.55	6/17/2022 16:15	19.09	6/16/2022 18:48	5.88
6/17/2022 15:29	32.57	6/17/2022 16:16	19.07	6/16/2022 18:49	5.88
6/17/2022 15:30	32.55	6/17/2022 16:17	19.07	6/16/2022 18:50	5.87
6/17/2022 15:31	32.57	6/17/2022 16:18	19.08	6/16/2022 18:51	5.87
6/17/2022 15:32	32.54	6/17/2022 16:19	19.09	6/16/2022 18:52	5.85
6/17/2022 15:33	32.55	6/17/2022 16:20	19.11	6/16/2022 18:53	5.86
6/17/2022 15:34	32.56	6/17/2022 16:21	19.08	6/16/2022 18:54	5.88
6/17/2022 15:35	32.55	6/17/2022 16:22	19.12	6/16/2022 18:55	5.87
6/17/2022 15:36	32.54	6/17/2022 16:23	19.10	6/16/2022 18:56	5.88
6/17/2022 15:37	32.55	6/17/2022 16:24	19.11	6/16/2022 18:57	5.85
6/17/2022 15:38	32.56	6/17/2022 16:25	19.11	6/16/2022 18:58	5.92
6/17/2022 15:39	32.55	6/17/2022 16:26	19.10	6/16/2022 18:59	5.90
6/17/2022 15:40	32.56	6/17/2022 16:27	19.10	6/16/2022 19:00	5.90
6/17/2022 15:41	32.53	6/17/2022 16:28	19.06	6/16/2022 19:01	5.87
6/17/2022 15:42	32.58	6/17/2022 16:29	19.11	6/16/2022 19:02	5.84
6/17/2022 15:43	32.56	6/17/2022 16:30	19.09	6/16/2022 19:03	5.87
6/17/2022 15:44	32.53	6/17/2022 16:31	19.10	6/16/2022 19:04	5.89
6/17/2022 15:45	32.55	6/17/2022 16:32	19.10	6/16/2022 19:05	5.85
6/17/2022 15:46	32.56	6/17/2022 16:33	19.12	6/16/2022 19:06	5.89
6/17/2022 15:47	32.53	6/17/2022 16:34	19.12	6/16/2022 19:07	5.89
6/17/2022 15:48	32.55	6/17/2022 16:35	19.11	6/16/2022 19:08	5.87
6/17/2022 15:49	32.53	6/17/2022 16:36	19.10	6/16/2022 19:09	5.87
6/17/2022 15:50	32.54	6/17/2022 16:37	19.09	6/16/2022 19:10	5.89
6/17/2022 15:51	32.54	6/17/2022 16:38	19.10	6/16/2022 19:11	5.89
6/17/2022 15:52	32.54	6/17/2022 16:39	19.10	6/16/2022 19:12	5.89
6/17/2022 15:53	32.53	6/17/2022 16:40	19.10	6/16/2022 19:13	5.91
6/17/2022 15:54	32.53	6/17/2022 16:41	19.08	6/16/2022 19:14	5.87

6/17/2022 15:55	32.54	6/17/2022 16:42	19.10	6/16/2022 19:15	5.87
6/17/2022 15:56	32.56	6/17/2022 16:43	19.11	6/16/2022 19:16	5.90
6/17/2022 15:57	32.56	6/17/2022 16:44	19.07	6/16/2022 19:17	5.92
6/17/2022 15:58	32.54	6/17/2022 16:45	19.06	6/16/2022 19:18	5.90
6/17/2022 15:59	32.53	6/17/2022 16:46	19.10	6/16/2022 19:19	5.89
6/17/2022 16:00	32.53	6/17/2022 16:47	19.09	6/16/2022 19:20	5.87
6/17/2022 16:01	32.52	6/17/2022 16:48	19.09	6/16/2022 19:21	5.87
6/17/2022 16:02	32.55	6/17/2022 16:49	19.10	6/16/2022 19:22	5.89
6/17/2022 16:03	32.53	6/17/2022 16:50	19.11	6/16/2022 19:23	5.91
6/17/2022 16:04	32.54	6/17/2022 16:51	19.10	6/16/2022 19:24	5.87
6/17/2022 16:05	32.56	6/17/2022 16:52	19.10	6/16/2022 19:25	5.89
6/17/2022 16:06	32.52	6/17/2022 16:53	19.06	6/16/2022 19:26	5.89
6/17/2022 16:07	32.55	6/17/2022 16:54	19.08	6/16/2022 19:27	5.88
6/17/2022 16:08	32.56	6/17/2022 16:55	19.09	6/16/2022 19:28	5.89
6/17/2022 16:09	32.55	6/17/2022 16:56	19.09	6/16/2022 19:29	5.85
6/17/2022 16:10	32.52	6/17/2022 16:57	19.10	6/16/2022 19:30	5.89
6/17/2022 16:11	32.53	6/17/2022 16:58	19.11	6/16/2022 19:31	5.87
6/17/2022 16:12	32.54	6/17/2022 16:59	19.06	6/16/2022 19:32	5.85
6/17/2022 16:13	32.52	6/17/2022 17:00	19.08	6/16/2022 19:33	5.88
6/17/2022 16:14	32.50	6/17/2022 17:01	19.10	6/16/2022 19:34	5.88
6/17/2022 16:15	32.55	6/17/2022 17:02	19.08	6/16/2022 19:35	5.87
6/17/2022 16:16	32.52	6/17/2022 17:03	19.09	6/16/2022 19:36	5.86
6/17/2022 16:17	32.49	6/17/2022 17:04	19.08	6/16/2022 19:37	5.86
6/17/2022 16:18	32.55	6/17/2022 17:05	19.10	6/16/2022 19:38	5.90
6/17/2022 16:19	32.52	6/17/2022 17:06	19.08	6/16/2022 19:39	5.87
6/17/2022 16:20	32.54	6/17/2022 17:07	19.08	6/16/2022 19:40	5.88
6/17/2022 16:21	32.60	6/17/2022 17:08	19.09	6/16/2022 19:41	5.89
6/17/2022 16:22	32.57	6/17/2022 17:09	19.09	6/16/2022 19:42	5.88
6/17/2022 16:23	32.59	6/17/2022 17:10	19.08	6/16/2022 19:43	5.89
6/17/2022 16:24	32.59	6/17/2022 17:11	19.08	6/16/2022 19:44	5.86
6/17/2022 16:25	32.61	6/17/2022 17:12	19.07	6/16/2022 19:45	5.88
6/17/2022 16:26	32.59	6/17/2022 17:13	19.09	6/16/2022 19:46	5.90
6/17/2022 16:27	32.60	6/17/2022 17:14	19.10	6/16/2022 19:47	5.85
6/17/2022 16:28	32.59	6/17/2022 17:15	19.10	6/16/2022 19:48	5.86
6/17/2022 16:29	32.58	6/17/2022 17:16	19.09	6/16/2022 19:49	5.84
6/17/2022 16:30	32.59	6/17/2022 17:17	19.07	6/16/2022 19:50	5.84
6/17/2022 16:31	32.56	6/17/2022 17:18	19.08	6/16/2022 19:51	5.84
6/17/2022 16:32	32.57	6/17/2022 17:19	19.08	6/16/2022 19:52	5.89
6/17/2022 16:33	32.60	6/17/2022 17:20	19.07	6/16/2022 19:53	5.88
6/17/2022 16:34	32.59	6/17/2022 17:21	19.09	6/16/2022 19:54	5.86
6/17/2022 16:35	32.56	6/17/2022 17:22	19.08	6/16/2022 19:55	5.90
6/17/2022 16:36	32.55	6/17/2022 17:23	19.06	6/16/2022 19:56	5.87
6/17/2022 16:37	32.55	6/17/2022 17:24	19.09	6/16/2022 19:57	5.82
6/17/2022 16:38	32.55	6/17/2022 17:25	19.09	6/16/2022 19:58	5.86
6/17/2022 16:39	32.59	6/17/2022 17:26	19.07	6/16/2022 19:59	5.88
6/17/2022 16:40	32.63	6/17/2022 17:27	19.09	6/16/2022 20:00	5.87
6/17/2022 16:41	32.60	6/17/2022 17:28	19.10	6/16/2022 20:01	5.86
6/17/2022 16:42	32.60	6/17/2022 17:29	19.10	6/16/2022 20:02	5.85
6/17/2022 16:43	32.58	6/17/2022 17:30	19.11	6/16/2022 20:03	5.86
6/17/2022 16:44	32.57	6/17/2022 17:31	19.10	6/16/2022 20:04	5.89
6/17/2022 16:45	32.58	6/17/2022 17:32	19.08	6/16/2022 20:05	5.89
6/17/2022 16:46	32.57	6/17/2022 17:33	19.11	6/16/2022 20:06	5.88
6/17/2022 16:47	32.57	6/17/2022 17:34	19.07	6/16/2022 20:07	5.90
6/17/2022 16:48	32.57	6/17/2022 17:35	19.10	6/16/2022 20:08	5.87
6/17/2022 16:49	32.57	6/17/2022 17:36	19.08	6/16/2022 20:09	5.89
6/17/2022 16:50	32.57	6/17/2022 17:37	19.08	6/16/2022 20:10	5.88
6/17/2022 16:51	32.59	6/17/2022 17:38	19.11	6/16/2022 20:11	5.86
6/17/2022 16:52	32.56	6/17/2022 17:39	19.10	6/16/2022 20:12	7.82
6/17/2022 16:53	32.54	6/17/2022 17:40	19.09	6/16/2022 20:13	8.69
6/17/2022 16:54	32.57	6/17/2022 17:41	19.10	6/16/2022 20:14	6.26
6/17/2022 16:55	32.59	6/17/2022 17:42	19.09	6/16/2022 20:15	5.94
6/17/2022 16:56	32.63	6/17/2022 17:43	19.10	6/16/2022 20:16	5.91
6/17/2022 16:57	32.62	6/17/2022 17:44	19.10	6/16/2022 20:17	5.90
6/17/2022 16:58	32.59	6/17/2022 17:45	19.08	6/16/2022 20:18	5.90
6/17/2022 16:59	32.56	6/17/2022 17:46	19.10	6/16/2022 20:19	5.89
6/17/2022 17:00	32.57	6/17/2022 17:47	19.09	6/16/2022 20:20	5.87
6/17/2022 17:01	32.59	6/17/2022 17:48	19.08	6/16/2022 20:21	5.85
6/17/2022 17:02	32.58	6/17/2022 17:49	19.11	6/16/2022 20:22	5.90
6/17/2022 17:03	32.59	6/17/2022 17:50	19.09	6/16/2022 20:23	5.88
6/17/2022 17:04	32.59	6/17/2022 17:51	19.10	6/16/2022 20:24	5.88
6/17/2022 17:05	32.56	6/17/2022 17:52	19.06	6/16/2022 20:25	5.91
6/17/2022 17:06	32.59	6/17/2022 17:53	19.08	6/16/2022 20:26	5.91
6/17/2022 17:07	32.54	6/17/2022 17:54	19.12	6/16/2022 20:27	5.89
6/17/2022 17:08	32.55	6/17/2022 17:55	19.10	6/16/2022 20:28	5.87
6/17/2022 17:09	32.58	6/17/2022 17:56	19.11	6/16/2022 20:29	5.89
6/17/2022 17:10	32.54	6/17/2022 17:57	19.09	6/16/2022 20:30	5.83
6/17/2022 17:11	32.58	6/17/2022 17:58	19.08	6/16/2022 20:31	5.91
6/17/2022 17:12	32.58	6/17/2022 17:59	19.08	6/16/2022 20:32	5.91
6/17/2022 17:13	32.60	6/17/2022 18:00	19.10	6/16/2022 20:33	5.89
6/17/2022 17:14	32.60	6/17/2022 18:01	19.11	6/16/2022 20:34	5.86
6/17/2022 17:15	32.56	6/17/2022 18:02	19.08	6/16/2022 20:35	5.88
6/17/2022 17:16	32.58	6/17/2022 18:03	19.10	6/16/2022 20:36	5.91
6/17/2022 17:17	32.61	6/17/2022 18:04	19.10	6/16/2022 20:37	5.85
6/17/2022 17:18	32.58	6/17/2022 18:05	19.10	6/16/2022 20:38	5.90
6/17/2022 17:19	32.58	6/17/2022 18:06	19.11	6/16/2022 20:39	5.89
6/17/2022 17:20	32.59	6/17/2022 18:07	19.10	6/16/2022 20:40	5.86
6/17/2022 17:21	32.62	6/17/2022 18:08	19.12	6/16/2022 20:41	5.89
6/17/2022 17:22	32.64	6/17/2022 18:09	19.07	6/16/2022 20:42	5.88

6/17/2022 17:23	32.64	6/17/2022 18:10	19.08	6/16/2022 20:43	5.89
6/17/2022 17:24	32.62	6/17/2022 18:11	19.09	6/16/2022 20:44	5.89
6/17/2022 17:25	32.60	6/17/2022 18:12	19.10	6/16/2022 20:45	5.85
6/17/2022 17:26	32.62	6/17/2022 18:13	19.10	6/16/2022 20:46	5.86
6/17/2022 17:27	32.62	6/17/2022 18:14	19.11	6/16/2022 20:47	5.85
6/17/2022 17:28	32.63	6/17/2022 18:15	19.09	6/16/2022 20:48	5.85
6/17/2022 17:29	32.61	6/17/2022 18:16	19.09	6/16/2022 20:49	5.90
6/17/2022 17:30	32.63	6/17/2022 18:17	19.08	6/16/2022 20:50	5.88
6/17/2022 17:31	32.60	6/17/2022 18:18	19.09	6/16/2022 20:51	5.89
6/17/2022 17:32	32.58	6/17/2022 18:19	19.09	6/16/2022 20:52	5.88
6/17/2022 17:33	32.59	6/17/2022 18:20	19.12	6/16/2022 20:53	5.90
6/17/2022 17:34	32.59	6/17/2022 18:21	19.11	6/16/2022 20:54	5.86
6/17/2022 17:35	32.58	6/17/2022 18:22	19.10	6/16/2022 20:55	5.89
6/17/2022 17:36	32.56	6/17/2022 18:23	19.11	6/16/2022 20:56	5.88
6/17/2022 17:37	32.59	6/17/2022 18:24	19.07	6/16/2022 20:57	5.84
6/17/2022 17:38	32.56	6/17/2022 18:25	19.10	6/16/2022 20:58	5.89
6/17/2022 17:39	32.58	6/17/2022 18:26	19.07	6/16/2022 20:59	5.85
6/17/2022 17:40	32.59	6/17/2022 18:27	19.08	6/16/2022 21:00	5.87
6/17/2022 17:41	32.56	6/17/2022 18:28	19.10	6/16/2022 21:01	5.89
6/17/2022 17:42	32.54	6/17/2022 18:29	19.09	6/16/2022 21:02	5.89
6/17/2022 17:43	32.56	6/17/2022 18:30	19.12	6/16/2022 21:03	5.85
6/17/2022 17:44	32.60	6/17/2022 18:31	19.12	6/16/2022 21:04	5.87
6/17/2022 17:45	32.61	6/17/2022 18:32	19.09	6/16/2022 21:05	5.85
6/17/2022 17:46	32.58	6/17/2022 18:33	19.08	6/16/2022 21:06	5.87
6/17/2022 17:47	32.61	6/17/2022 18:34	19.09	6/16/2022 21:07	5.89
6/17/2022 17:48	32.58	6/17/2022 18:35	19.09	6/16/2022 21:08	5.86
6/17/2022 17:49	32.60	6/17/2022 18:36	19.10	6/16/2022 21:09	5.86
6/17/2022 17:50	32.57	6/17/2022 18:37	19.10	6/16/2022 21:10	5.87
6/17/2022 17:51	32.60	6/17/2022 18:38	19.09	6/16/2022 21:11	5.89
6/17/2022 17:52	32.59	6/17/2022 18:39	19.10	6/16/2022 21:12	5.85
6/17/2022 17:53	32.59	6/17/2022 18:40	19.09	6/16/2022 21:13	5.89
6/17/2022 17:54	32.57	6/17/2022 18:41	19.10	6/16/2022 21:14	5.86
6/17/2022 17:55	32.59	6/17/2022 18:42	19.10	6/16/2022 21:15	5.90
6/17/2022 17:56	32.60	6/17/2022 18:43	19.11	6/16/2022 21:16	5.87
6/17/2022 17:57	32.65	6/17/2022 18:44	19.13	6/16/2022 21:17	5.88
6/17/2022 17:58	32.64	6/17/2022 18:45	19.07	6/16/2022 21:18	5.85
6/17/2022 17:59	32.65	6/17/2022 18:46	19.10	6/16/2022 21:19	5.88
6/17/2022 18:00	32.65	6/17/2022 18:47	19.09	6/16/2022 21:20	5.87
6/17/2022 18:01	32.62	6/17/2022 18:48	19.12	6/16/2022 21:21	5.86
6/17/2022 18:02	32.63	6/17/2022 18:49	19.09	6/16/2022 21:22	5.88
6/17/2022 18:03	32.62	6/17/2022 18:50	19.09	6/16/2022 21:23	5.89
6/17/2022 18:04	32.63	6/17/2022 18:51	19.10	6/16/2022 21:24	5.86
6/17/2022 18:05	32.64	6/17/2022 18:52	19.10	6/16/2022 21:25	5.86
6/17/2022 18:06	32.60	6/17/2022 18:53	19.10	6/16/2022 21:26	5.87
6/17/2022 18:07	32.59	6/17/2022 18:54	19.08	6/16/2022 21:27	5.86
6/17/2022 18:08	32.58	6/17/2022 18:55	19.10	6/16/2022 21:28	5.88
6/17/2022 18:09	32.59	6/17/2022 18:56	19.10	6/16/2022 21:29	5.84
6/17/2022 18:10	32.60	6/17/2022 18:57	19.11	6/16/2022 21:30	5.86
6/17/2022 18:11	32.60	6/17/2022 18:58	19.11	6/16/2022 21:31	5.89
6/17/2022 18:12	32.59	6/17/2022 18:59	19.10	6/16/2022 21:32	5.89
6/17/2022 18:13	32.60	6/17/2022 19:00	19.11	6/16/2022 21:33	5.88
6/17/2022 18:14	32.56	6/17/2022 19:01	19.11	6/16/2022 21:34	5.86
6/17/2022 18:15	32.57	6/17/2022 19:02	19.09	6/16/2022 21:35	5.88
6/17/2022 18:16	32.56	6/17/2022 19:03	19.11	6/16/2022 21:36	5.83
6/17/2022 18:17	32.58	6/17/2022 19:04	19.10	6/16/2022 21:37	5.87
6/17/2022 18:18	32.62	6/17/2022 19:05	19.12	6/16/2022 21:38	5.86
6/17/2022 18:19	32.62	6/17/2022 19:06	19.11	6/16/2022 21:39	5.87
6/17/2022 18:20	32.65	6/17/2022 19:07	19.09	6/16/2022 21:40	5.88
6/17/2022 18:21	32.66	6/17/2022 19:08	19.11	6/16/2022 21:41	5.88
6/17/2022 18:22	32.63	6/17/2022 19:09	19.08	6/16/2022 21:42	5.85
6/17/2022 18:23	32.63	6/17/2022 19:10	19.12	6/16/2022 21:43	5.83
6/17/2022 18:24	32.65	6/17/2022 19:11	19.09	6/16/2022 21:44	5.87
6/17/2022 18:25	32.63	6/17/2022 19:12	19.09	6/16/2022 21:45	5.87
6/17/2022 18:26	32.62	6/17/2022 19:13	19.10	6/16/2022 21:46	5.87
6/17/2022 18:27	32.62	6/17/2022 19:14	19.08	6/16/2022 21:47	5.86
6/17/2022 18:28	32.61	6/17/2022 19:15	19.09	6/16/2022 21:48	5.85
6/17/2022 18:29	32.60	6/17/2022 19:16	19.11	6/16/2022 21:49	5.87
6/17/2022 18:30	32.58	6/17/2022 19:17	19.10	6/16/2022 21:50	5.84
6/17/2022 18:31	32.58	6/17/2022 19:18	19.10	6/16/2022 21:51	5.86
6/17/2022 18:32	32.64	6/17/2022 19:19	19.11	6/16/2022 21:52	5.86
6/17/2022 18:33	32.59	6/17/2022 19:20	19.11	6/16/2022 21:53	5.87
6/17/2022 18:34	32.57	6/17/2022 19:21	19.08	6/16/2022 21:54	5.86
6/17/2022 18:35	32.59	6/17/2022 19:22	19.10	6/16/2022 21:55	5.86
6/17/2022 18:36	32.60	6/17/2022 19:23	19.13	6/16/2022 21:56	5.87
6/17/2022 18:37	32.58	6/17/2022 19:24	19.11	6/16/2022 21:57	5.85
6/17/2022 18:38	32.58	6/17/2022 19:25	19.10	6/16/2022 21:58	5.89
6/17/2022 18:39	32.57	6/17/2022 19:26	19.10	6/16/2022 21:59	5.88
6/17/2022 18:40	32.59	6/17/2022 19:27	19.11	6/16/2022 22:00	5.85
6/17/2022 18:41	32.59	6/17/2022 19:28	19.08	6/16/2022 22:01	5.85
6/17/2022 18:42	32.55	6/17/2022 19:29	19.10	6/16/2022 22:02	5.85
6/17/2022 18:43	32.59	6/17/2022 19:30	19.11	6/16/2022 22:03	5.86
6/17/2022 18:44	32.61	6/17/2022 19:31	19.75	6/16/2022 22:04	5.89
6/17/2022 18:45	32.61	6/17/2022 19:32	19.85	6/16/2022 22:05	5.87
6/17/2022 18:46	32.60	6/17/2022 19:33	19.88	6/16/2022 22:06	5.87
6/17/2022 18:47	32.61	6/17/2022 19:34	19.92	6/16/2022 22:07	5.86
6/17/2022 18:48	32.62	6/17/2022 19:35	19.92	6/16/2022 22:08	5.87
6/17/2022 18:49	33.41	6/17/2022 19:36	19.41	6/16/2022 22:09	5.85
6/17/2022 18:50	33.06	6/17/2022 19:37	19.31	6/16/2022 22:10	5.88

6/17/2022 18:51	32.78	6/17/2022 19:38	19.30	6/16/2022 22:11	5.87
6/17/2022 18:52	32.69	6/17/2022 19:39	19.25	6/16/2022 22:12	5.87
6/17/2022 18:53	32.71	6/17/2022 19:40	19.25	6/16/2022 22:13	5.90
6/17/2022 18:54	32.67	6/17/2022 19:41	19.25	6/16/2022 22:14	5.90
6/17/2022 18:55	32.63	6/17/2022 19:42	19.25	6/16/2022 22:15	5.86
6/17/2022 18:56	32.68	6/17/2022 19:43	19.22	6/16/2022 22:16	5.87
6/17/2022 18:57	32.64	6/17/2022 19:44	19.24	6/16/2022 22:17	5.88
6/17/2022 18:58	32.64	6/17/2022 19:45	19.21	6/16/2022 22:18	5.89
6/17/2022 18:59	32.59	6/17/2022 19:46	19.23	6/16/2022 22:19	5.91
6/17/2022 19:00	32.62	6/17/2022 19:47	19.21	6/16/2022 22:20	5.87
6/17/2022 19:01	32.62	6/17/2022 19:48	19.17	6/16/2022 22:21	5.87
6/17/2022 19:02	32.60	6/17/2022 19:49	19.22	6/16/2022 22:22	5.90
6/17/2022 19:03	32.59	6/17/2022 19:50	19.21	6/16/2022 22:23	5.90
6/17/2022 19:04	32.59	6/17/2022 19:51	19.21	6/16/2022 22:24	5.89
6/17/2022 19:05	32.59	6/17/2022 19:52	19.20	6/16/2022 22:25	5.90
6/17/2022 19:06	32.60	6/17/2022 19:53	19.19	6/16/2022 22:26	5.88
6/17/2022 19:07	32.60	6/17/2022 19:54	19.18	6/16/2022 22:27	5.88
6/17/2022 19:08	32.57	6/17/2022 19:55	19.18	6/16/2022 22:28	5.87
6/17/2022 19:09	32.59	6/17/2022 19:56	19.19	6/16/2022 22:29	5.86
6/17/2022 19:10	32.59	6/17/2022 19:57	19.16	6/16/2022 22:30	5.87
6/17/2022 19:11	32.58	6/17/2022 19:58	19.17	6/16/2022 22:31	5.86
6/17/2022 19:12	32.57	6/17/2022 19:59	19.17	6/16/2022 22:32	5.85
6/17/2022 19:13	32.54	6/17/2022 20:00	19.18	6/16/2022 22:33	5.87
6/17/2022 19:14	32.57	6/17/2022 20:01	19.14	6/16/2022 22:34	5.85
6/17/2022 19:15	32.57	6/17/2022 20:02	19.16	6/16/2022 22:35	5.87
6/17/2022 19:16	32.57	6/17/2022 20:03	19.17	6/16/2022 22:36	5.86
6/17/2022 19:17	32.53	6/17/2022 20:04	19.17	6/16/2022 22:37	5.84
6/17/2022 19:18	32.57	6/17/2022 20:05	19.18	6/16/2022 22:38	5.88
6/17/2022 19:19	32.58	6/17/2022 20:06	19.15	6/16/2022 22:39	5.87
6/17/2022 19:20	32.56	6/17/2022 20:07	19.18	6/16/2022 22:40	5.87
6/17/2022 19:21	32.56	6/17/2022 20:08	19.18	6/16/2022 22:41	5.86
6/17/2022 19:22	32.56	6/17/2022 20:09	19.18	6/16/2022 22:42	5.82
6/17/2022 19:23	32.58	6/17/2022 20:10	19.16	6/16/2022 22:43	5.85
6/17/2022 19:24	32.53	6/17/2022 20:11	19.16	6/16/2022 22:44	5.87
6/17/2022 19:25	32.55	6/17/2022 20:12	19.17	6/16/2022 22:45	5.87
6/17/2022 19:26	32.55	6/17/2022 20:13	19.15	6/16/2022 22:46	5.88
6/17/2022 19:27	32.54	6/17/2022 20:14	19.18	6/16/2022 22:47	5.89
6/17/2022 19:28	32.56	6/17/2022 20:15	19.15	6/16/2022 22:48	5.90
6/17/2022 19:29	32.56	6/17/2022 20:16	19.16	6/16/2022 22:49	5.84
6/17/2022 19:30	32.53	6/17/2022 20:17	19.16	6/16/2022 22:50	5.86
6/17/2022 19:31	32.57	6/17/2022 20:18	19.15	6/16/2022 22:51	5.89
6/17/2022 19:32	32.55	6/17/2022 20:19	19.17	6/16/2022 22:52	5.89
6/17/2022 19:33	32.55	6/17/2022 20:20	19.17	6/16/2022 22:53	5.89
6/17/2022 19:34	32.53	6/17/2022 20:21	19.15	6/16/2022 22:54	5.85
6/17/2022 19:35	32.58	6/17/2022 20:22	19.18	6/16/2022 22:55	5.88
6/17/2022 19:36	32.53	6/17/2022 20:23	19.16	6/16/2022 22:56	5.86
6/17/2022 19:37	32.55	6/17/2022 20:24	19.16	6/16/2022 22:57	5.88
6/17/2022 19:38	32.58	6/17/2022 20:25	19.14	6/16/2022 22:58	5.87
6/17/2022 19:39	32.54	6/17/2022 20:26	19.15	6/16/2022 22:59	5.87
6/17/2022 19:40	32.53	6/17/2022 20:27	19.15	6/16/2022 23:00	5.85
6/17/2022 19:41	32.52	6/17/2022 20:28	19.13	6/16/2022 23:01	5.87
6/17/2022 19:42	32.56	6/17/2022 20:29	19.15	6/16/2022 23:02	5.84
6/17/2022 19:43	32.54	6/17/2022 20:30	19.15	6/16/2022 23:03	5.87
6/17/2022 19:44	32.55	6/17/2022 20:31	19.17	6/16/2022 23:04	5.88
6/17/2022 19:45	32.52	6/17/2022 20:32	19.16	6/16/2022 23:05	5.87
6/17/2022 19:46	32.54	6/17/2022 20:33	19.17	6/16/2022 23:06	5.87
6/17/2022 19:47	32.55	6/17/2022 20:34	19.15	6/16/2022 23:07	5.89
6/17/2022 19:48	32.52	6/17/2022 20:35	19.15	6/16/2022 23:08	5.90
6/17/2022 19:49	32.54	6/17/2022 20:36	19.15	6/16/2022 23:09	5.89
6/17/2022 19:50	32.53	6/17/2022 20:37	19.14	6/16/2022 23:10	5.87
6/17/2022 19:51	32.51	6/17/2022 20:38	19.14	6/16/2022 23:11	5.86
6/17/2022 19:52	32.51	6/17/2022 20:39	19.18	6/16/2022 23:12	5.87
6/17/2022 19:53	32.56	6/17/2022 20:40	19.17	6/16/2022 23:13	5.84
6/17/2022 19:54	32.56	6/17/2022 20:41	19.15	6/16/2022 23:14	5.86
6/17/2022 19:55	32.53	6/17/2022 20:42	19.15	6/16/2022 23:15	5.87
6/17/2022 19:56	32.54	6/17/2022 20:43	19.14	6/16/2022 23:16	5.87
6/17/2022 19:57	32.51	6/17/2022 20:44	19.16	6/16/2022 23:17	5.88
6/17/2022 19:58	32.54	6/17/2022 20:45	19.14	6/16/2022 23:18	5.85
6/17/2022 19:59	32.54	6/17/2022 20:46	19.14	6/16/2022 23:19	5.89
6/17/2022 20:00	32.53	6/17/2022 20:47	19.11	6/16/2022 23:20	5.87
6/17/2022 20:01	32.51	6/17/2022 20:48	19.15	6/16/2022 23:21	5.87
6/17/2022 20:02	32.53	6/17/2022 20:49	19.16	6/16/2022 23:22	5.84
6/17/2022 20:03	32.51	6/17/2022 20:50	19.12	6/16/2022 23:23	5.89
6/17/2022 20:04	32.51	6/17/2022 20:51	19.13	6/16/2022 23:24	5.89
6/17/2022 20:05	32.48	6/17/2022 20:52	19.14	6/16/2022 23:25	5.87
6/17/2022 20:06	32.50	6/17/2022 20:53	19.15	6/16/2022 23:26	5.87
6/17/2022 20:07	32.51	6/17/2022 20:54	19.16	6/16/2022 23:27	5.85
6/17/2022 20:08	32.52	6/17/2022 20:55	19.18	6/16/2022 23:28	5.88
6/17/2022 20:09	32.52	6/17/2022 20:56	19.15	6/16/2022 23:29	5.88
6/17/2022 20:10	32.51	6/17/2022 20:57	19.14	6/16/2022 23:30	5.87
6/17/2022 20:11	32.52	6/17/2022 20:58	19.14	6/16/2022 23:31	5.85
6/17/2022 20:12	32.52	6/17/2022 20:59	19.14	6/16/2022 23:32	5.85
6/17/2022 20:13	32.52	6/17/2022 21:00	19.17	6/16/2022 23:33	5.86
6/17/2022 20:14	32.52	6/17/2022 21:01	19.13	6/16/2022 23:34	5.87
6/17/2022 20:15	32.51	6/17/2022 21:02	19.15	6/16/2022 23:35	5.88
6/17/2022 20:16	32.53	6/17/2022 21:03	19.13	6/16/2022 23:36	5.84
6/17/2022 20:17	32.51	6/17/2022 21:04	19.14	6/16/2022 23:37	5.86
6/17/2022 20:18	32.51	6/17/2022 21:05	19.15	6/16/2022 23:38	5.84

6/17/2022 20:19	32.49	6/17/2022 21:06	19.14	6/16/2022 23:39	5.87
6/17/2022 20:20	32.52	6/17/2022 21:07	19.18	6/16/2022 23:40	5.87
6/17/2022 20:21	32.47	6/17/2022 21:08	19.17	6/16/2022 23:41	5.86
6/17/2022 20:22	32.52	6/17/2022 21:09	19.14	6/16/2022 23:42	5.88
6/17/2022 20:23	32.53	6/17/2022 21:10	19.16	6/16/2022 23:43	5.86
6/17/2022 20:24	32.49	6/17/2022 21:11	19.13	6/16/2022 23:44	5.87
6/17/2022 20:25	32.52	6/17/2022 21:12	19.15	6/16/2022 23:45	5.87
6/17/2022 20:26	32.51	6/17/2022 21:13	19.12	6/16/2022 23:46	5.86
6/17/2022 20:27	32.51	6/17/2022 21:14	19.14	6/16/2022 23:47	5.87
6/17/2022 20:28	32.51	6/17/2022 21:15	19.16	6/16/2022 23:48	5.86
6/17/2022 20:29	32.49	6/17/2022 21:16	19.14	6/16/2022 23:49	5.86
6/17/2022 20:30	32.49	6/17/2022 21:17	19.16	6/16/2022 23:50	5.88
6/17/2022 20:31	32.49	6/17/2022 21:18	19.15	6/16/2022 23:51	5.87
6/17/2022 20:32	32.48	6/17/2022 21:19	19.17	6/16/2022 23:52	5.87
6/17/2022 20:33	32.52	6/17/2022 21:20	19.14	6/16/2022 23:53	5.87
6/17/2022 20:34	32.53	6/17/2022 21:21	19.15	6/16/2022 23:54	5.87
6/17/2022 20:35	32.50	6/17/2022 21:22	19.15	6/16/2022 23:55	5.87
6/17/2022 20:36	32.51	6/17/2022 21:23	19.16	6/16/2022 23:56	5.83
6/17/2022 20:37	32.49	6/17/2022 21:24	19.14	6/16/2022 23:57	5.83
6/17/2022 20:38	32.47	6/17/2022 21:25	19.13	6/16/2022 23:58	5.86
6/17/2022 20:39	32.47	6/17/2022 21:26	19.14	6/16/2022 23:59	5.88
6/17/2022 20:40	32.53	6/17/2022 21:27	19.17	6/17/2022 0:00	5.84
6/17/2022 20:41	32.49	6/17/2022 21:28	19.15	6/17/2022 0:01	5.85
6/17/2022 20:42	32.47	6/17/2022 21:29	19.15	6/17/2022 0:02	5.84
6/17/2022 20:43	32.49	6/17/2022 21:30	19.13	6/17/2022 0:03	5.89
6/17/2022 20:44	32.50	6/17/2022 21:31	19.13	6/17/2022 0:04	5.85
6/17/2022 20:45	32.47	6/17/2022 21:32	19.16	6/17/2022 0:05	5.90
6/17/2022 20:46	32.47	6/17/2022 21:33	19.14	6/17/2022 0:06	5.87
6/17/2022 20:47	32.49	6/17/2022 21:34	19.14	6/17/2022 0:07	5.89
6/17/2022 20:48	32.47	6/17/2022 21:35	19.14	6/17/2022 0:08	5.87
6/17/2022 20:49	32.49	6/17/2022 21:36	19.13	6/17/2022 0:09	5.90
6/17/2022 20:50	32.51	6/17/2022 21:37	19.16	6/17/2022 0:10	5.85
6/17/2022 20:51	32.48	6/17/2022 21:38	19.15	6/17/2022 0:11	5.86
6/17/2022 20:52	32.48	6/17/2022 21:39	19.14	6/17/2022 0:12	5.87
6/17/2022 20:53	32.52	6/17/2022 21:40	19.14	6/17/2022 0:13	5.88
6/17/2022 20:54	32.48	6/17/2022 21:41	19.12	6/17/2022 0:14	5.85
6/17/2022 20:55	32.49	6/17/2022 21:42	19.13	6/17/2022 0:15	5.86
6/17/2022 20:56	32.51	6/17/2022 21:43	19.13	6/17/2022 0:16	5.88
6/17/2022 20:57	32.52	6/17/2022 21:44	19.12	6/17/2022 0:17	5.91
6/17/2022 20:58	32.51	6/17/2022 21:45	19.14	6/17/2022 0:18	5.89
6/17/2022 20:59	32.48	6/17/2022 21:46	19.15	6/17/2022 0:19	5.87
6/17/2022 21:00	32.51	6/17/2022 21:47	19.13	6/17/2022 0:20	5.91
6/17/2022 21:01	32.46	6/17/2022 21:48	19.13	6/17/2022 0:21	5.84
6/17/2022 21:02	32.49	6/17/2022 21:49	19.15	6/17/2022 0:22	5.87
6/17/2022 21:03	32.48	6/17/2022 21:50	19.14	6/17/2022 0:23	5.88
6/17/2022 21:04	32.50	6/17/2022 21:51	19.13	6/17/2022 0:24	5.87
6/17/2022 21:05	32.48	6/17/2022 21:52	19.13	6/17/2022 0:25	5.86
6/17/2022 21:06	32.50	6/17/2022 21:53	19.12	6/17/2022 0:26	5.88
6/17/2022 21:07	32.53	6/17/2022 21:54	19.14	6/17/2022 0:27	5.86
6/17/2022 21:08	32.46	6/17/2022 21:55	19.13	6/17/2022 0:28	5.85
6/17/2022 21:09	32.49	6/17/2022 21:56	19.13	6/17/2022 0:29	5.87
6/17/2022 21:10	32.49	6/17/2022 21:57	19.12	6/17/2022 0:30	8.21
6/17/2022 21:11	32.49	6/17/2022 21:58	19.17	6/17/2022 0:31	8.70
6/17/2022 21:12	32.49	6/17/2022 21:59	19.15	6/17/2022 0:32	6.36
6/17/2022 21:13	32.49	6/17/2022 22:00	19.13	6/17/2022 0:33	5.94
6/17/2022 21:14	32.47	6/17/2022 22:01	19.14	6/17/2022 0:34	5.91
6/17/2022 21:15	32.47	6/17/2022 22:02	19.12	6/17/2022 0:35	5.92
6/17/2022 21:16	32.46	6/17/2022 22:03	19.16	6/17/2022 0:36	5.88
6/17/2022 21:17	32.46	6/17/2022 22:04	19.13	6/17/2022 0:37	5.86
6/17/2022 21:18	32.49	6/17/2022 22:05	19.15	6/17/2022 0:38	5.91
6/17/2022 21:19	32.50	6/17/2022 22:06	19.16	6/17/2022 0:39	5.88
6/17/2022 21:20	32.49	6/17/2022 22:07	19.14	6/17/2022 0:40	5.88
6/17/2022 21:21	32.49	6/17/2022 22:08	19.15	6/17/2022 0:41	5.90
6/17/2022 21:22	32.47	6/17/2022 22:09	19.14	6/17/2022 0:42	5.88
6/17/2022 21:23	32.47	6/17/2022 22:10	19.12	6/17/2022 0:43	5.90
6/17/2022 21:24	32.49	6/17/2022 22:11	19.12	6/17/2022 0:44	5.90
6/17/2022 21:25	32.48	6/17/2022 22:12	19.13	6/17/2022 0:45	5.85
6/17/2022 21:26	32.46	6/17/2022 22:13	19.14	6/17/2022 0:46	5.86
6/17/2022 21:27	32.47	6/17/2022 22:14	19.14	6/17/2022 0:47	5.86
6/17/2022 21:28	32.48	6/17/2022 22:15	19.14	6/17/2022 0:48	5.89
6/17/2022 21:29	32.48	6/17/2022 22:16	19.14	6/17/2022 0:49	5.86
6/17/2022 21:30	32.49	6/17/2022 22:17	19.13	6/17/2022 0:50	5.91
6/17/2022 21:31	32.46	6/17/2022 22:18	19.12	6/17/2022 0:51	5.86
6/17/2022 21:32	32.47	6/17/2022 22:19	19.14	6/17/2022 0:52	5.89
6/17/2022 21:33	32.50	6/17/2022 22:20	19.15	6/17/2022 0:53	5.88
6/17/2022 21:34	32.45	6/17/2022 22:21	19.13	6/17/2022 0:54	5.90
6/17/2022 21:35	32.47	6/17/2022 22:22	19.10	6/17/2022 0:55	5.86
6/17/2022 21:36	32.49	6/17/2022 22:23	19.13	6/17/2022 0:56	5.83
6/17/2022 21:37	32.44	6/17/2022 22:24	19.14	6/17/2022 0:57	5.87
6/17/2022 21:38	32.46	6/17/2022 22:25	19.13	6/17/2022 0:58	5.83
6/17/2022 21:39	32.49	6/17/2022 22:26	19.16	6/17/2022 0:59	5.86
6/17/2022 21:40	32.49	6/17/2022 22:27	19.12	6/17/2022 1:00	5.87
6/17/2022 21:41	32.49	6/17/2022 22:28	19.15	6/17/2022 1:01	5.88
6/17/2022 21:42	32.47	6/17/2022 22:29	19.15	6/17/2022 1:02	5.88
6/17/2022 21:43	32.47	6/17/2022 22:30	19.12	6/17/2022 1:03	5.88
6/17/2022 21:44	32.48	6/17/2022 22:31	19.14	6/17/2022 1:04	5.87
6/17/2022 21:45	32.46	6/17/2022 22:32	19.10	6/17/2022 1:05	5.89
6/17/2022 21:46	32.48	6/17/2022 22:33	19.13	6/17/2022 1:06	5.87

6/17/2022 21:47	32.46	6/17/2022 22:34	19.13	6/17/2022 1:07	5.88
6/17/2022 21:48	32.48	6/17/2022 22:35	19.13	6/17/2022 1:08	5.90
6/17/2022 21:49	32.47	6/17/2022 22:36	19.14	6/17/2022 1:09	5.86
6/17/2022 21:50	32.45	6/17/2022 22:37	19.13	6/17/2022 1:10	5.87
6/17/2022 21:51	32.50	6/17/2022 22:38	19.11	6/17/2022 1:11	5.85
6/17/2022 21:52	32.47	6/17/2022 22:39	19.14	6/17/2022 1:12	5.88
6/17/2022 21:53	32.50	6/17/2022 22:40	19.13	6/17/2022 1:13	5.88
6/17/2022 21:54	32.46	6/17/2022 22:41	19.15	6/17/2022 1:14	5.85
6/17/2022 21:55	32.48	6/17/2022 22:42	19.13	6/17/2022 1:15	5.86
6/17/2022 21:56	32.45	6/17/2022 22:43	19.15	6/17/2022 1:16	5.88
6/17/2022 21:57	32.48	6/17/2022 22:44	19.15	6/17/2022 1:17	5.91
6/17/2022 21:58	32.52	6/17/2022 22:45	19.14	6/17/2022 1:18	5.86
6/17/2022 21:59	32.51	6/17/2022 22:46	19.12	6/17/2022 1:19	5.88
6/17/2022 22:00	32.52	6/17/2022 22:47	19.13	6/17/2022 1:20	5.89
6/17/2022 22:01	32.52	6/17/2022 22:48	19.14	6/17/2022 1:21	5.90
6/17/2022 22:02	32.55	6/17/2022 22:49	19.12	6/17/2022 1:22	5.87
6/17/2022 22:03	32.53	6/17/2022 22:50	19.14	6/17/2022 1:23	5.91
6/17/2022 22:04	32.53	6/17/2022 22:51	19.14	6/17/2022 1:24	5.87
6/17/2022 22:05	32.54	6/17/2022 22:52	19.14	6/17/2022 1:25	5.88
6/17/2022 22:06	32.57	6/17/2022 22:53	19.14	6/17/2022 1:26	5.85
6/17/2022 22:07	32.57	6/17/2022 22:54	19.11	6/17/2022 1:27	5.87
6/17/2022 22:08	32.50	6/17/2022 22:55	19.12	6/17/2022 1:28	5.86
6/17/2022 22:09	32.55	6/17/2022 22:56	19.11	6/17/2022 1:29	5.89
6/17/2022 22:10	32.52	6/17/2022 22:57	19.13	6/17/2022 1:30	5.87
6/17/2022 22:11	32.54	6/17/2022 22:58	19.12	6/17/2022 1:31	5.91
6/17/2022 22:12	32.52	6/17/2022 22:59	19.14	6/17/2022 1:32	5.83
6/17/2022 22:13	32.52	6/17/2022 23:00	19.12	6/17/2022 1:33	5.85
6/17/2022 22:14	32.50	6/17/2022 23:01	19.13	6/17/2022 1:34	5.90
6/17/2022 22:15	32.52	6/17/2022 23:02	19.12	6/17/2022 1:35	5.86
6/17/2022 22:16	32.52	6/17/2022 23:03	19.11	6/17/2022 1:36	5.86
6/17/2022 22:17	32.53	6/17/2022 23:04	19.13	6/17/2022 1:37	5.87
6/17/2022 22:18	32.51	6/17/2022 23:05	19.15	6/17/2022 1:38	5.87
6/17/2022 22:19	32.48	6/17/2022 23:06	19.14	6/17/2022 1:39	5.85
6/17/2022 22:20	32.49	6/17/2022 23:07	19.12	6/17/2022 1:40	5.87
6/17/2022 22:21	32.48	6/17/2022 23:08	19.13	6/17/2022 1:41	5.89
6/17/2022 22:22	32.52	6/17/2022 23:09	19.15	6/17/2022 1:42	5.88
6/17/2022 22:23	32.51	6/17/2022 23:10	19.14	6/17/2022 1:43	5.86
6/17/2022 22:24	32.51	6/17/2022 23:11	19.16	6/17/2022 1:44	5.86
6/17/2022 22:25	32.50	6/17/2022 23:12	19.12	6/17/2022 1:45	5.88
6/17/2022 22:26	32.49	6/17/2022 23:13	19.15	6/17/2022 1:46	5.89
6/17/2022 22:27	32.48	6/17/2022 23:14	19.13	6/17/2022 1:47	5.87
6/17/2022 22:28	32.49	6/17/2022 23:15	19.14	6/17/2022 1:48	5.88
6/17/2022 22:29	32.50	6/17/2022 23:16	19.10	6/17/2022 1:49	5.86
6/17/2022 22:30	32.51	6/17/2022 23:17	19.14	6/17/2022 1:50	5.87
6/17/2022 22:31	32.48	6/17/2022 23:18	19.14	6/17/2022 1:51	5.87
6/17/2022 22:32	32.47	6/17/2022 23:19	19.12	6/17/2022 1:52	5.87
6/17/2022 22:33	32.52	6/17/2022 23:20	19.13	6/17/2022 1:53	5.87
6/17/2022 22:34	32.48	6/17/2022 23:21	19.12	6/17/2022 1:54	5.87
6/17/2022 22:35	32.49	6/17/2022 23:22	19.12	6/17/2022 1:55	5.86
6/17/2022 22:36	32.50	6/17/2022 23:23	19.15	6/17/2022 1:56	5.87
6/17/2022 22:37	32.50	6/17/2022 23:24	19.10	6/17/2022 1:57	5.87
6/17/2022 22:38	32.50	6/17/2022 23:25	19.13	6/17/2022 1:58	5.87
6/17/2022 22:39	32.49	6/17/2022 23:26	19.14	6/17/2022 1:59	5.90
6/17/2022 22:40	32.48	6/17/2022 23:27	19.15	6/17/2022 2:00	5.89
6/17/2022 22:41	32.47	6/17/2022 23:28	19.13	6/17/2022 2:01	5.84
6/17/2022 22:42	32.46	6/17/2022 23:29	19.14	6/17/2022 2:02	5.87
6/17/2022 22:43	32.49	6/17/2022 23:30	19.14	6/17/2022 2:03	5.87
6/17/2022 22:44	32.46	6/17/2022 23:31	19.12	6/17/2022 2:04	5.86
6/17/2022 22:45	32.51	6/17/2022 23:32	19.14	6/17/2022 2:05	5.87
6/17/2022 22:46	32.52	6/17/2022 23:33	19.13	6/17/2022 2:06	5.85
6/17/2022 22:47	32.52	6/17/2022 23:34	19.15	6/17/2022 2:07	5.86
6/17/2022 22:48	32.48	6/17/2022 23:35	19.16	6/17/2022 2:08	5.86
6/17/2022 22:49	32.50	6/17/2022 23:36	19.13	6/17/2022 2:09	5.87
6/17/2022 22:50	32.46	6/17/2022 23:37	19.13	6/17/2022 2:10	5.86
6/17/2022 22:51	32.51	6/17/2022 23:38	19.14	6/17/2022 2:11	5.85
6/17/2022 22:52	32.49	6/17/2022 23:39	19.15	6/17/2022 2:12	5.84
6/17/2022 22:53	32.50	6/17/2022 23:40	19.12	6/17/2022 2:13	5.86
6/17/2022 22:54	32.46	6/17/2022 23:41	19.15	6/17/2022 2:14	5.87
6/17/2022 22:55	32.48	6/17/2022 23:42	19.13	6/17/2022 2:15	5.86
6/17/2022 22:56	32.46	6/17/2022 23:43	19.15	6/17/2022 2:16	5.87
6/17/2022 22:57	32.48	6/17/2022 23:44	19.17	6/17/2022 2:17	5.87
6/17/2022 22:58	32.50	6/17/2022 23:45	19.12	6/17/2022 2:18	5.86
6/17/2022 22:59	32.49	6/17/2022 23:46	19.12	6/17/2022 2:19	5.85
6/17/2022 23:00	32.49	6/17/2022 23:47	19.14	6/17/2022 2:20	5.88
6/17/2022 23:01	32.47	6/17/2022 23:48	19.14	6/17/2022 2:21	5.91
6/17/2022 23:02	32.45	6/17/2022 23:49	19.13	6/17/2022 2:22	5.86
6/17/2022 23:03	32.47	6/17/2022 23:50	19.14	6/17/2022 2:23	5.85
6/17/2022 23:04	32.48	6/17/2022 23:51	19.09	6/17/2022 2:24	5.87
6/17/2022 23:05	32.46	6/17/2022 23:52	19.13	6/17/2022 2:25	5.86
6/17/2022 23:06	32.48	6/17/2022 23:53	19.15	6/17/2022 2:26	5.85
6/17/2022 23:07	32.47	6/17/2022 23:54	19.13	6/17/2022 2:27	5.89
6/17/2022 23:08	32.50	6/17/2022 23:55	19.12	6/17/2022 2:28	5.84
6/17/2022 23:09	32.49	6/17/2022 23:56	19.17	6/17/2022 2:29	5.87
6/17/2022 23:10	32.49	6/17/2022 23:57	19.12	6/17/2022 2:30	5.82
6/17/2022 23:11	32.51	6/17/2022 23:58	19.13	6/17/2022 2:31	5.85
6/17/2022 23:12	32.52	6/17/2022 23:59	19.12	6/17/2022 2:32	5.85
6/17/2022 23:13	32.52	6/18/2022 0:00	19.14	6/17/2022 2:33	5.86
6/17/2022 23:14	32.50	6/18/2022 0:01	19.14	6/17/2022 2:34	5.82

6/17/2022 23:15	32.52	6/18/2022 0:02	19.14	6/17/2022 2:35	5.87
6/17/2022 23:16	32.49	6/18/2022 0:03	19.15	6/17/2022 2:36	5.88
6/17/2022 23:17	32.48	6/18/2022 0:04	19.14	6/17/2022 2:37	5.85
6/17/2022 23:18	32.50	6/18/2022 0:05	19.13	6/17/2022 2:38	5.87
6/17/2022 23:19	32.49	6/18/2022 0:06	19.13	6/17/2022 2:39	5.84
6/17/2022 23:20	32.50	6/18/2022 0:07	19.15	6/17/2022 2:40	5.89
6/17/2022 23:21	32.49	6/18/2022 0:08	19.13	6/17/2022 2:41	5.87
6/17/2022 23:22	32.49	6/18/2022 0:09	19.11	6/17/2022 2:42	5.84
6/17/2022 23:23	32.50	6/18/2022 0:10	19.16	6/17/2022 2:43	5.87
6/17/2022 23:24	32.46	6/18/2022 0:11	19.12	6/17/2022 2:44	5.88
6/17/2022 23:25	32.49	6/18/2022 0:12	19.14	6/17/2022 2:45	5.86
6/17/2022 23:26	32.49	6/18/2022 0:13	19.14	6/17/2022 2:46	5.87
6/17/2022 23:27	32.48	6/18/2022 0:14	19.15	6/17/2022 2:47	5.89
6/17/2022 23:28	33.81	6/18/2022 0:15	19.13	6/17/2022 2:48	5.85
6/17/2022 23:29	32.74	6/18/2022 0:16	19.12	6/17/2022 2:49	5.86
6/17/2022 23:30	32.63	6/18/2022 0:17	19.14	6/17/2022 2:50	5.87
6/17/2022 23:31	32.61	6/18/2022 0:18	19.14	6/17/2022 2:51	5.88
6/17/2022 23:32	32.57	6/18/2022 0:19	19.13	6/17/2022 2:52	5.86
6/17/2022 23:33	32.55	6/18/2022 0:20	19.13	6/17/2022 2:53	5.86
6/17/2022 23:34	32.54	6/18/2022 0:21	19.14	6/17/2022 2:54	5.87
6/17/2022 23:35	32.53	6/18/2022 0:22	19.11	6/17/2022 2:55	5.86
6/17/2022 23:36	32.55	6/18/2022 0:23	19.14	6/17/2022 2:56	5.87
6/17/2022 23:37	32.52	6/18/2022 0:24	19.13	6/17/2022 2:57	5.85
6/17/2022 23:38	32.54	6/18/2022 0:25	19.13	6/17/2022 2:58	5.85
6/17/2022 23:39	32.50	6/18/2022 0:26	19.13	6/17/2022 2:59	5.85
6/17/2022 23:40	32.52	6/18/2022 0:27	19.14	6/17/2022 3:00	5.88
6/17/2022 23:41	32.50	6/18/2022 0:28	19.15	6/17/2022 3:01	5.89
6/17/2022 23:42	32.51	6/18/2022 0:29	19.15	6/17/2022 3:02	5.90
6/17/2022 23:43	32.52	6/18/2022 0:30	19.12	6/17/2022 3:03	5.87
6/17/2022 23:44	32.51	6/18/2022 0:31	19.12	6/17/2022 3:04	5.88
6/17/2022 23:45	32.51	6/18/2022 0:32	19.13	6/17/2022 3:05	5.86
6/17/2022 23:46	32.51	6/18/2022 0:33	19.13	6/17/2022 3:06	5.87
6/17/2022 23:47	32.52	6/18/2022 0:34	19.10	6/17/2022 3:07	5.83
6/17/2022 23:48	32.53	6/18/2022 0:35	19.15	6/17/2022 3:08	5.88
6/17/2022 23:49	32.46	6/18/2022 0:36	19.15	6/17/2022 3:09	5.90
6/17/2022 23:50	32.50	6/18/2022 0:37	19.13	6/17/2022 3:10	5.87
6/17/2022 23:51	32.47	6/18/2022 0:38	19.13	6/17/2022 3:11	5.87
6/17/2022 23:52	32.48	6/18/2022 0:39	19.14	6/17/2022 3:12	5.85
6/17/2022 23:53	32.52	6/18/2022 0:40	19.15	6/17/2022 3:13	5.87
6/17/2022 23:54	32.52	6/18/2022 0:41	19.13	6/17/2022 3:14	5.86
6/17/2022 23:55	32.50	6/18/2022 0:42	19.12	6/17/2022 3:15	5.89
6/17/2022 23:56	32.49	6/18/2022 0:43	19.14	6/17/2022 3:16	5.86
6/17/2022 23:57	32.49	6/18/2022 0:44	19.14	6/17/2022 3:17	5.88
6/17/2022 23:58	32.49	6/18/2022 0:45	19.13	6/17/2022 3:18	5.85
6/17/2022 23:59	32.50	6/18/2022 0:46	19.13	6/17/2022 3:19	5.86
6/18/2022 0:00	32.52	6/18/2022 0:47	19.15	6/17/2022 3:20	5.88
6/18/2022 0:01	32.49	6/18/2022 0:48	19.14	6/17/2022 3:21	5.88
6/18/2022 0:02	32.48	6/18/2022 0:49	19.14	6/17/2022 3:22	5.86
6/18/2022 0:03	32.48	6/18/2022 0:50	19.12	6/17/2022 3:23	5.86
6/18/2022 0:04	32.50	6/18/2022 0:51	19.16	6/17/2022 3:24	5.89
6/18/2022 0:05	32.54	6/18/2022 0:52	19.15	6/17/2022 3:25	5.85
6/18/2022 0:06	32.48	6/18/2022 0:53	19.14	6/17/2022 3:26	5.88
6/18/2022 0:07	32.50	6/18/2022 0:54	19.14	6/17/2022 3:27	5.87
6/18/2022 0:08	32.50	6/18/2022 0:55	19.11	6/17/2022 3:28	5.86
6/18/2022 0:09	32.50	6/18/2022 0:56	19.12	6/17/2022 3:29	5.83
6/18/2022 0:10	32.48	6/18/2022 0:57	19.14	6/17/2022 3:30	5.82
6/18/2022 0:11	32.52	6/18/2022 0:58	19.12	6/17/2022 3:31	5.86
6/18/2022 0:12	32.49	6/18/2022 0:59	19.13	6/17/2022 3:32	5.85
6/18/2022 0:13	32.49	6/18/2022 1:00	19.12	6/17/2022 3:33	5.85
6/18/2022 0:14	32.50	6/18/2022 1:01	19.14	6/17/2022 3:34	5.86
6/18/2022 0:15	32.49	6/18/2022 1:02	19.11	6/17/2022 3:35	5.87
6/18/2022 0:16	32.49	6/18/2022 1:03	19.14	6/17/2022 3:36	5.87
6/18/2022 0:17	32.51	6/18/2022 1:04	19.15	6/17/2022 3:37	5.90
6/18/2022 0:18	32.52	6/18/2022 1:05	19.13	6/17/2022 3:38	5.89
6/18/2022 0:19	32.52	6/18/2022 1:06	19.12	6/17/2022 3:39	5.87
6/18/2022 0:20	32.47	6/18/2022 1:07	19.14	6/17/2022 3:40	5.85
6/18/2022 0:21	32.47	6/18/2022 1:08	19.15	6/17/2022 3:41	5.87
6/18/2022 0:22	32.48	6/18/2022 1:09	19.13	6/17/2022 3:42	5.89
6/18/2022 0:23	32.50	6/18/2022 1:10	19.12	6/17/2022 3:43	5.82
6/18/2022 0:24	32.48	6/18/2022 1:11	19.15	6/17/2022 3:44	5.85
6/18/2022 0:25	32.47	6/18/2022 1:12	19.13	6/17/2022 3:45	5.88
6/18/2022 0:26	32.49	6/18/2022 1:13	19.15	6/17/2022 3:46	5.85
6/18/2022 0:27	32.49	6/18/2022 1:14	19.11	6/17/2022 3:47	5.87
6/18/2022 0:28	32.47	6/18/2022 1:15	19.14	6/17/2022 3:48	5.87
6/18/2022 0:29	32.47	6/18/2022 1:16	19.12	6/17/2022 3:49	5.85
6/18/2022 0:30	32.46	6/18/2022 1:17	19.16	6/17/2022 3:50	5.87
6/18/2022 0:31	32.48	6/18/2022 1:18	19.15	6/17/2022 3:51	5.84
6/18/2022 0:32	32.48	6/18/2022 1:19	19.12	6/17/2022 3:52	5.87
6/18/2022 0:33	32.48	6/18/2022 1:20	19.13	6/17/2022 3:53	5.85
6/18/2022 0:34	32.49	6/18/2022 1:21	19.13	6/17/2022 3:54	5.83
6/18/2022 0:35	32.47	6/18/2022 1:22	19.13	6/17/2022 3:55	5.86
6/18/2022 0:36	32.50	6/18/2022 1:23	19.12	6/17/2022 3:56	5.85
6/18/2022 0:37	32.47	6/18/2022 1:24	19.13	6/17/2022 3:57	5.87
6/18/2022 0:38	32.51	6/18/2022 1:25	19.14	6/17/2022 3:58	5.87
6/18/2022 0:39	32.47	6/18/2022 1:26	19.12	6/17/2022 3:59	5.85
6/18/2022 0:40	32.49	6/18/2022 1:27	19.12	6/17/2022 4:00	5.86
6/18/2022 0:41	32.46	6/18/2022 1:28	19.12	6/17/2022 4:01	5.89
6/18/2022 0:42	32.49	6/18/2022 1:29	19.14	6/17/2022 4:02	5.89

6/18/2022 0:43	32.48	6/18/2022 1:30	19.14	6/17/2022 4:03	5.87
6/18/2022 0:44	32.45	6/18/2022 1:31	19.14	6/17/2022 4:04	5.85
6/18/2022 0:45	32.49	6/18/2022 1:32	19.10	6/17/2022 4:05	5.88
6/18/2022 0:46	32.48	6/18/2022 1:33	19.14	6/17/2022 4:06	5.88
6/18/2022 0:47	32.50	6/18/2022 1:34	19.14	6/17/2022 4:07	5.87
6/18/2022 0:48	32.47	6/18/2022 1:35	19.13	6/17/2022 4:08	5.88
6/18/2022 0:49	32.46	6/18/2022 1:36	19.14	6/17/2022 4:09	5.87
6/18/2022 0:50	32.45	6/18/2022 1:37	19.15	6/17/2022 4:10	5.84
6/18/2022 0:51	32.50	6/18/2022 1:38	19.14	6/17/2022 4:11	5.88
6/18/2022 0:52	32.48	6/18/2022 1:39	19.15	6/17/2022 4:12	5.87
6/18/2022 0:53	32.46	6/18/2022 1:40	19.15	6/17/2022 4:13	5.86
6/18/2022 0:54	32.47	6/18/2022 1:41	19.15	6/17/2022 4:14	5.86
6/18/2022 0:55	32.48	6/18/2022 1:42	19.12	6/17/2022 4:15	5.87
6/18/2022 0:56	32.47	6/18/2022 1:43	19.13	6/17/2022 4:16	5.86
6/18/2022 0:57	32.50	6/18/2022 1:44	19.14	6/17/2022 4:17	5.84
6/18/2022 0:58	32.48	6/18/2022 1:45	19.12	6/17/2022 4:18	5.86
6/18/2022 0:59	32.46	6/18/2022 1:46	19.14	6/17/2022 4:19	5.84
6/18/2022 1:00	32.46	6/18/2022 1:47	19.13	6/17/2022 4:20	5.85
6/18/2022 1:01	32.46	6/18/2022 1:48	19.12	6/17/2022 4:21	5.84
6/18/2022 1:02	32.47	6/18/2022 1:49	19.12	6/17/2022 4:22	5.87
6/18/2022 1:03	32.47	6/18/2022 1:50	19.14	6/17/2022 4:23	5.87
6/18/2022 1:04	32.48	6/18/2022 1:51	19.15	6/17/2022 4:24	5.85
6/18/2022 1:05	32.46	6/18/2022 1:52	19.15	6/17/2022 4:25	5.84
6/18/2022 1:06	32.47	6/18/2022 1:53	19.14	6/17/2022 4:26	6.60
6/18/2022 1:07	32.47	6/18/2022 1:54	19.16	6/17/2022 4:27	8.52
6/18/2022 1:08	32.47	6/18/2022 1:55	19.15	6/17/2022 4:28	6.65
6/18/2022 1:09	32.46	6/18/2022 1:56	19.13	6/17/2022 4:29	5.97
6/18/2022 1:10	32.47	6/18/2022 1:57	19.13	6/17/2022 4:30	5.90
6/18/2022 1:11	32.47	6/18/2022 1:58	19.13	6/17/2022 4:31	5.89
6/18/2022 1:12	32.45	6/18/2022 1:59	19.10	6/17/2022 4:32	5.87
6/18/2022 1:13	32.49	6/18/2022 2:00	19.16	6/17/2022 4:33	5.90
6/18/2022 1:14	32.46	6/18/2022 2:01	19.13	6/17/2022 4:34	5.83
6/18/2022 1:15	32.48	6/18/2022 2:02	19.15	6/17/2022 4:35	5.87
6/18/2022 1:16	32.47	6/18/2022 2:03	19.15	6/17/2022 4:36	5.89
6/18/2022 1:17	32.48	6/18/2022 2:04	19.14	6/17/2022 4:37	5.86
6/18/2022 1:18	32.46	6/18/2022 2:05	19.15	6/17/2022 4:38	5.88
6/18/2022 1:19	32.46	6/18/2022 2:06	19.15	6/17/2022 4:39	5.91
6/18/2022 1:20	32.46	6/18/2022 2:07	19.13	6/17/2022 4:40	5.88
6/18/2022 1:21	32.45	6/18/2022 2:08	19.14	6/17/2022 4:41	5.87
6/18/2022 1:22	32.49	6/18/2022 2:09	19.13	6/17/2022 4:42	5.87
6/18/2022 1:23	32.48	6/18/2022 2:10	19.15	6/17/2022 4:43	5.83
6/18/2022 1:24	32.50	6/18/2022 2:11	19.11	6/17/2022 4:44	5.88
6/18/2022 1:25	32.49	6/18/2022 2:12	19.14	6/17/2022 4:45	5.90
6/18/2022 1:26	32.47	6/18/2022 2:13	19.14	6/17/2022 4:46	5.89
6/18/2022 1:27	32.49	6/18/2022 2:14	19.14	6/17/2022 4:47	5.83
6/18/2022 1:28	32.45	6/18/2022 2:15	19.13	6/17/2022 4:48	5.84
6/18/2022 1:29	32.46	6/18/2022 2:16	19.14	6/17/2022 4:49	5.85
6/18/2022 1:30	32.47	6/18/2022 2:17	19.15	6/17/2022 4:50	5.86
6/18/2022 1:31	32.45	6/18/2022 2:18	19.12	6/17/2022 4:51	5.85
6/18/2022 1:32	32.47	6/18/2022 2:19	19.11	6/17/2022 4:52	5.88
6/18/2022 1:33	32.46	6/18/2022 2:20	19.14	6/17/2022 4:53	5.84
6/18/2022 1:34	32.48	6/18/2022 2:21	19.13	6/17/2022 4:54	5.87
6/18/2022 1:35	32.48	6/18/2022 2:22	19.13	6/17/2022 4:55	5.89
6/18/2022 1:36	32.48	6/18/2022 2:23	19.14	6/17/2022 4:56	5.87
6/18/2022 1:37	32.46	6/18/2022 2:24	19.12	6/17/2022 4:57	5.86
6/18/2022 1:38	32.47	6/18/2022 2:25	19.16	6/17/2022 4:58	5.85
6/18/2022 1:39	32.47	6/18/2022 2:26	19.13	6/17/2022 4:59	5.88
6/18/2022 1:40	32.44	6/18/2022 2:27	19.13	6/17/2022 5:00	5.87
6/18/2022 1:41	32.47	6/18/2022 2:28	19.12	6/17/2022 5:01	5.85
6/18/2022 1:42	32.47	6/18/2022 2:29	19.12	6/17/2022 5:02	5.85
6/18/2022 1:43	32.45	6/18/2022 2:30	19.13	6/17/2022 5:03	5.86
6/18/2022 1:44	32.45	6/18/2022 2:31	19.11	6/17/2022 5:04	5.85
6/18/2022 1:45	32.48	6/18/2022 2:32	19.13	6/17/2022 5:05	5.86
6/18/2022 1:46	32.44	6/18/2022 2:33	19.15	6/17/2022 5:06	5.87
6/18/2022 1:47	32.48	6/18/2022 2:34	19.14	6/17/2022 5:07	5.85
6/18/2022 1:48	32.49	6/18/2022 2:35	19.15	6/17/2022 5:08	5.86
6/18/2022 1:49	32.45	6/18/2022 2:36	19.12	6/17/2022 5:09	5.83
6/18/2022 1:50	32.46	6/18/2022 2:37	19.13	6/17/2022 5:10	5.84
6/18/2022 1:51	32.47	6/18/2022 2:38	19.11	6/17/2022 5:11	5.83
6/18/2022 1:52	32.46	6/18/2022 2:39	19.15	6/17/2022 5:12	5.86
6/18/2022 1:53	32.47	6/18/2022 2:40	19.15	6/17/2022 5:13	5.85
6/18/2022 1:54	32.45	6/18/2022 2:41	19.14	6/17/2022 5:14	5.85
6/18/2022 1:55	32.44	6/18/2022 2:42	19.13	6/17/2022 5:15	5.86
6/18/2022 1:56	32.44	6/18/2022 2:43	19.14	6/17/2022 5:16	5.87
6/18/2022 1:57	32.49	6/18/2022 2:44	19.13	6/17/2022 5:17	5.88
6/18/2022 1:58	32.51	6/18/2022 2:45	19.14	6/17/2022 5:18	5.87
6/18/2022 1:59	32.51	6/18/2022 2:46	19.14	6/17/2022 5:19	5.87
6/18/2022 2:00	32.53	6/18/2022 2:47	19.15	6/17/2022 5:20	5.86
6/18/2022 2:01	32.55	6/18/2022 2:48	19.14	6/17/2022 5:21	5.82
6/18/2022 2:02	32.57	6/18/2022 2:49	19.14	6/17/2022 5:22	5.87
6/18/2022 2:03	32.54	6/18/2022 2:50	19.14	6/17/2022 5:23	5.88
6/18/2022 2:04	32.54	6/18/2022 2:51	19.15	6/17/2022 5:24	5.88
6/18/2022 2:05	32.55	6/18/2022 2:52	19.10	6/17/2022 5:25	5.84
6/18/2022 2:06	32.60	6/18/2022 2:53	19.16	6/17/2022 5:26	5.86
6/18/2022 2:07	32.61	6/18/2022 2:54	19.15	6/17/2022 5:27	5.87
6/18/2022 2:08	32.64	6/18/2022 2:55	19.13	6/17/2022 5:28	5.86
6/18/2022 2:09	32.64	6/18/2022 2:56	19.12	6/17/2022 5:29	5.83
6/18/2022 2:10	32.67	6/18/2022 2:57	19.12	6/17/2022 5:30	5.84

6/18/2022 2:11	32.68	6/18/2022 2:58	19.13	6/17/2022 5:31	5.86
6/18/2022 2:12	32.68	6/18/2022 2:59	19.16	6/17/2022 5:32	5.85
6/18/2022 2:13	32.73	6/18/2022 3:00	19.15	6/17/2022 5:33	5.84
6/18/2022 2:14	32.71	6/18/2022 3:01	19.16	6/17/2022 5:34	5.86
6/18/2022 2:15	32.73	6/18/2022 3:02	19.17	6/17/2022 5:35	5.87
6/18/2022 2:16	32.72	6/18/2022 3:03	19.14	6/17/2022 5:36	5.86
6/18/2022 2:17	32.70	6/18/2022 3:04	19.12	6/17/2022 5:37	5.84
6/18/2022 2:18	32.71	6/18/2022 3:05	19.13	6/17/2022 5:38	5.87
6/18/2022 2:19	32.70	6/18/2022 3:06	19.16	6/17/2022 5:39	5.85
6/18/2022 2:20	32.68	6/18/2022 3:07	19.13	6/17/2022 5:40	5.86
6/18/2022 2:21	32.67	6/18/2022 3:08	19.13	6/17/2022 5:41	5.87
6/18/2022 2:22	32.65	6/18/2022 3:09	19.15	6/17/2022 5:42	5.84
6/18/2022 2:23	32.68	6/18/2022 3:10	19.15	6/17/2022 5:43	5.86
6/18/2022 2:24	32.66	6/18/2022 3:11	19.13	6/17/2022 5:44	5.85
6/18/2022 2:25	32.65	6/18/2022 3:12	19.15	6/17/2022 5:45	5.86
6/18/2022 2:26	32.62	6/18/2022 3:13	19.14	6/17/2022 5:46	5.83
6/18/2022 2:27	32.63	6/18/2022 3:14	19.15	6/17/2022 5:47	5.84
6/18/2022 2:28	32.65	6/18/2022 3:15	19.15	6/17/2022 5:48	5.82
6/18/2022 2:29	32.67	6/18/2022 3:16	19.13	6/17/2022 5:49	5.84
6/18/2022 2:30	32.66	6/18/2022 3:17	19.15	6/17/2022 5:50	5.87
6/18/2022 2:31	32.61	6/18/2022 3:18	19.13	6/17/2022 5:51	5.87
6/18/2022 2:32	32.65	6/18/2022 3:19	19.13	6/17/2022 5:52	5.85
6/18/2022 2:33	32.65	6/18/2022 3:20	19.13	6/17/2022 5:53	5.85
6/18/2022 2:34	32.63	6/18/2022 3:21	19.11	6/17/2022 5:54	5.87
6/18/2022 2:35	32.61	6/18/2022 3:22	19.16	6/17/2022 5:55	5.84
6/18/2022 2:36	32.62	6/18/2022 3:23	19.14	6/17/2022 5:56	5.84
6/18/2022 2:37	32.63	6/18/2022 3:24	19.15	6/17/2022 5:57	5.86
6/18/2022 2:38	32.63	6/18/2022 3:25	19.14	6/17/2022 5:58	5.86
6/18/2022 2:39	32.64	6/18/2022 3:26	19.15	6/17/2022 5:59	5.84
6/18/2022 2:40	32.64	6/18/2022 3:27	19.14	6/17/2022 6:00	5.88
6/18/2022 2:41	32.61	6/18/2022 3:28	19.14	6/17/2022 6:01	5.86
6/18/2022 2:42	32.64	6/18/2022 3:29	19.13	6/17/2022 6:02	5.86
6/18/2022 2:43	32.62	6/18/2022 3:30	19.13	6/17/2022 6:03	5.86
6/18/2022 2:44	32.61	6/18/2022 3:31	19.16	6/17/2022 6:04	5.87
6/18/2022 2:45	32.62	6/18/2022 3:32	19.15	6/17/2022 6:05	5.86
6/18/2022 2:46	32.65	6/18/2022 3:33	19.14	6/17/2022 6:06	5.83
6/18/2022 2:47	32.64	6/18/2022 3:34	19.15	6/17/2022 6:07	5.86
6/18/2022 2:48	32.64	6/18/2022 3:35	19.15	6/17/2022 6:08	5.86
6/18/2022 2:49	32.65	6/18/2022 3:36	19.16	6/17/2022 6:09	5.85
6/18/2022 2:50	32.62	6/18/2022 3:37	19.13	6/17/2022 6:10	5.87
6/18/2022 2:51	32.61	6/18/2022 3:38	19.16	6/17/2022 6:11	5.84
6/18/2022 2:52	32.63	6/18/2022 3:39	19.13	6/17/2022 6:12	5.87
6/18/2022 2:53	32.67	6/18/2022 3:40	19.12	6/17/2022 6:13	5.84
6/18/2022 2:54	32.64	6/18/2022 3:41	19.14	6/17/2022 6:14	5.83
6/18/2022 2:55	32.65	6/18/2022 3:42	19.16	6/17/2022 6:15	5.88
6/18/2022 2:56	32.63	6/18/2022 3:43	19.15	6/17/2022 6:16	5.87
6/18/2022 2:57	32.63	6/18/2022 3:44	19.12	6/17/2022 6:17	5.86
6/18/2022 2:58	32.62	6/18/2022 3:45	19.15	6/17/2022 6:18	5.87
6/18/2022 2:59	32.63	6/18/2022 3:46	19.16	6/17/2022 6:19	5.85
6/18/2022 3:00	32.62	6/18/2022 3:47	19.18	6/17/2022 6:20	5.83
6/18/2022 3:01	32.67	6/18/2022 3:48	19.36	6/17/2022 6:21	5.85
6/18/2022 3:02	32.68	6/18/2022 3:49	19.78	6/17/2022 6:22	5.86
6/18/2022 3:03	32.66	6/18/2022 3:50	19.86	6/17/2022 6:23	5.86
6/18/2022 3:04	32.60	6/18/2022 3:51	19.92	6/17/2022 6:24	5.84
6/18/2022 3:05	32.61	6/18/2022 3:52	19.93	6/17/2022 6:25	5.87
6/18/2022 3:06	32.61	6/18/2022 3:53	19.47	6/17/2022 6:26	5.82
6/18/2022 3:07	32.60	6/18/2022 3:54	19.35	6/17/2022 6:27	5.86
6/18/2022 3:08	32.66	6/18/2022 3:55	19.30	6/17/2022 6:28	5.83
6/18/2022 3:09	32.64	6/18/2022 3:56	19.28	6/17/2022 6:29	5.87
6/18/2022 3:10	32.61	6/18/2022 3:57	19.27	6/17/2022 6:30	5.81
6/18/2022 3:11	32.61	6/18/2022 3:58	19.29	6/17/2022 6:31	5.88
6/18/2022 3:12	32.61	6/18/2022 3:59	19.28	6/17/2022 6:32	5.88
6/18/2022 3:13	32.61	6/18/2022 4:00	19.26	6/17/2022 6:33	5.86
6/18/2022 3:14	32.64	6/18/2022 4:01	19.26	6/17/2022 6:34	5.83
6/18/2022 3:15	32.59	6/18/2022 4:02	19.21	6/17/2022 6:35	5.89
6/18/2022 3:16	32.63	6/18/2022 4:03	19.25	6/17/2022 6:36	5.86
6/18/2022 3:17	32.60	6/18/2022 4:04	19.24	6/17/2022 6:37	5.86
6/18/2022 3:18	32.62	6/18/2022 4:05	19.22	6/17/2022 6:38	5.86
6/18/2022 3:19	32.59	6/18/2022 4:06	19.22	6/17/2022 6:39	5.86
6/18/2022 3:20	32.63	6/18/2022 4:07	19.22	6/17/2022 6:40	5.84
6/18/2022 3:21	32.63	6/18/2022 4:08	19.23	6/17/2022 6:41	5.87
6/18/2022 3:22	32.66	6/18/2022 4:09	19.20	6/17/2022 6:42	5.86
6/18/2022 3:23	32.68	6/18/2022 4:10	19.23	6/17/2022 6:43	5.84
6/18/2022 3:24	32.67	6/18/2022 4:11	19.21	6/17/2022 6:44	5.87
6/18/2022 3:25	32.69	6/18/2022 4:12	19.20	6/17/2022 6:45	5.87
6/18/2022 3:26	32.71	6/18/2022 4:13	19.21	6/17/2022 6:46	5.81
6/18/2022 3:27	32.73	6/18/2022 4:14	19.22	6/17/2022 6:47	5.84
6/18/2022 3:28	32.75	6/18/2022 4:15	19.22	6/17/2022 6:48	5.84
6/18/2022 3:29	32.71	6/18/2022 4:16	19.20	6/17/2022 6:49	5.86
6/18/2022 3:30	32.78	6/18/2022 4:17	19.18	6/17/2022 6:50	5.86
6/18/2022 3:31	32.79	6/18/2022 4:18	19.20	6/17/2022 6:51	5.87
6/18/2022 3:32	32.82	6/18/2022 4:19	19.20	6/17/2022 6:52	5.87
6/18/2022 3:33	32.82	6/18/2022 4:20	19.21	6/17/2022 6:53	5.87
6/18/2022 3:34	32.80	6/18/2022 4:21	19.22	6/17/2022 6:54	5.86
6/18/2022 3:35	32.75	6/18/2022 4:22	19.21	6/17/2022 6:55	5.85
6/18/2022 3:36	32.78	6/18/2022 4:23	19.19	6/17/2022 6:56	5.85
6/18/2022 3:37	32.79	6/18/2022 4:24	19.18	6/17/2022 6:57	5.83
6/18/2022 3:38	32.83	6/18/2022 4:25	19.21	6/17/2022 6:58	5.84

6/18/2022 3:39	32.79	6/18/2022 4:26	19.18	6/17/2022 6:59	5.82
6/18/2022 3:40	32.80	6/18/2022 4:27	19.20	6/17/2022 7:00	5.85
6/18/2022 3:41	32.84	6/18/2022 4:28	19.17	6/17/2022 7:01	5.89
6/18/2022 3:42	32.83	6/18/2022 4:29	19.18	6/17/2022 7:02	5.85
6/18/2022 3:43	32.83	6/18/2022 4:30	19.21	6/17/2022 7:03	5.85
6/18/2022 3:44	32.78	6/18/2022 4:31	19.20	6/17/2022 7:04	5.86
6/18/2022 3:45	32.79	6/18/2022 4:32	19.21	6/17/2022 7:05	5.86
6/18/2022 3:46	32.77	6/18/2022 4:33	19.20	6/17/2022 7:06	5.84
6/18/2022 3:47	32.76	6/18/2022 4:34	19.22	6/17/2022 7:07	5.84
6/18/2022 3:48	32.76	6/18/2022 4:35	19.17	6/17/2022 7:08	5.83
6/18/2022 3:49	32.76	6/18/2022 4:36	19.19	6/17/2022 7:09	5.84
6/18/2022 3:50	32.72	6/18/2022 4:37	19.20	6/17/2022 7:10	5.84
6/18/2022 3:51	32.71	6/18/2022 4:38	19.20	6/17/2022 7:11	5.86
6/18/2022 3:52	32.71	6/18/2022 4:39	19.20	6/17/2022 7:12	5.87
6/18/2022 3:53	32.70	6/18/2022 4:40	19.20	6/17/2022 7:13	5.87
6/18/2022 3:54	32.72	6/18/2022 4:41	19.17	6/17/2022 7:14	5.86
6/18/2022 3:55	32.73	6/18/2022 4:42	19.22	6/17/2022 7:15	5.83
6/18/2022 3:56	32.70	6/18/2022 4:43	19.19	6/17/2022 7:16	5.87
6/18/2022 3:57	32.69	6/18/2022 4:44	19.19	6/17/2022 7:17	5.87
6/18/2022 3:58	32.71	6/18/2022 4:45	19.20	6/17/2022 7:18	5.88
6/18/2022 3:59	32.67	6/18/2022 4:46	19.17	6/17/2022 7:19	5.86
6/18/2022 4:00	32.68	6/18/2022 4:47	19.20	6/17/2022 7:20	5.85
6/18/2022 4:01	32.69	6/18/2022 4:48	19.17	6/17/2022 7:21	5.85
6/18/2022 4:02	32.69	6/18/2022 4:49	19.19	6/17/2022 7:22	5.85
6/18/2022 4:03	32.68	6/18/2022 4:50	19.19	6/17/2022 7:23	5.84
6/18/2022 4:04	32.64	6/18/2022 4:51	19.18	6/17/2022 7:24	5.86
6/18/2022 4:05	32.65	6/18/2022 4:52	19.18	6/17/2022 7:25	5.86
6/18/2022 4:06	32.66	6/18/2022 4:53	19.18	6/17/2022 7:26	5.85
6/18/2022 4:07	32.62	6/18/2022 4:54	19.21	6/17/2022 7:27	5.84
6/18/2022 4:08	32.65	6/18/2022 4:55	19.21	6/17/2022 7:28	5.84
6/18/2022 4:09	32.67	6/18/2022 4:56	19.19	6/17/2022 7:29	5.88
6/18/2022 4:10	32.64	6/18/2022 4:57	19.17	6/17/2022 7:30	5.86
6/18/2022 4:11	32.68	6/18/2022 4:58	19.19	6/17/2022 7:31	5.87
6/18/2022 4:12	32.63	6/18/2022 4:59	19.17	6/17/2022 7:32	5.84
6/18/2022 4:13	32.64	6/18/2022 5:00	19.18	6/17/2022 7:33	5.86
6/18/2022 4:14	32.61	6/18/2022 5:01	19.17	6/17/2022 7:34	5.86
6/18/2022 4:15	32.64	6/18/2022 5:02	19.17	6/17/2022 7:35	5.86
6/18/2022 4:16	32.63	6/18/2022 5:03	19.20	6/17/2022 7:36	5.85
6/18/2022 4:17	32.63	6/18/2022 5:04	19.19	6/17/2022 7:37	5.87
6/18/2022 4:18	32.61	6/18/2022 5:05	19.18	6/17/2022 7:38	5.86
6/18/2022 4:19	32.62	6/18/2022 5:06	19.16	6/17/2022 7:39	5.84
6/18/2022 4:20	32.61	6/18/2022 5:07	19.21	6/17/2022 7:40	5.84
6/18/2022 4:21	32.61	6/18/2022 5:08	19.16	6/17/2022 7:41	5.84
6/18/2022 4:22	32.62	6/18/2022 5:09	19.17	6/17/2022 7:42	5.87
6/18/2022 4:23	32.62	6/18/2022 5:10	19.18	6/17/2022 7:43	5.84
6/18/2022 4:24	32.61	6/18/2022 5:11	19.18	6/17/2022 7:44	5.87
6/18/2022 4:25	32.60	6/18/2022 5:12	19.19	6/17/2022 7:45	5.85
6/18/2022 4:26	32.59	6/18/2022 5:13	19.19	6/17/2022 7:46	5.85
6/18/2022 4:27	32.61	6/18/2022 5:14	19.16	6/17/2022 7:47	5.84
6/18/2022 4:28	32.59	6/18/2022 5:15	19.18	6/17/2022 7:48	5.88
6/18/2022 4:29	32.60	6/18/2022 5:16	19.19	6/17/2022 7:49	5.86
6/18/2022 4:30	32.55	6/18/2022 5:17	19.20	6/17/2022 7:50	5.86
6/18/2022 4:31	32.57	6/18/2022 5:18	19.17	6/17/2022 7:51	5.85
6/18/2022 4:32	32.58	6/18/2022 5:19	19.18	6/17/2022 7:52	5.86
6/18/2022 4:33	32.58	6/18/2022 5:20	19.19	6/17/2022 7:53	5.84
6/18/2022 4:34	32.57	6/18/2022 5:21	19.19	6/17/2022 7:54	5.87
6/18/2022 4:35	32.59	6/18/2022 5:22	19.17	6/17/2022 7:55	5.86
6/18/2022 4:36	32.57	6/18/2022 5:23	19.18	6/17/2022 7:56	5.86
6/18/2022 4:37	32.60	6/18/2022 5:24	19.19	6/17/2022 7:57	5.87
6/18/2022 4:38	32.61	6/18/2022 5:25	19.17	6/17/2022 7:58	5.86
6/18/2022 4:39	32.57	6/18/2022 5:26	19.18	6/17/2022 7:59	5.86
6/18/2022 4:40	32.60	6/18/2022 5:27	19.16	6/17/2022 8:00	5.83
6/18/2022 4:41	32.59	6/18/2022 5:28	19.20	6/17/2022 8:01	5.87
6/18/2022 4:42	32.57	6/18/2022 5:29	19.19	6/17/2022 8:02	5.84
6/18/2022 4:43	32.60	6/18/2022 5:30	19.16	6/17/2022 8:03	5.85
6/18/2022 4:44	32.58	6/18/2022 5:31	19.18	6/17/2022 8:04	5.84
6/18/2022 4:45	32.59	6/18/2022 5:32	19.20	6/17/2022 8:05	5.85
6/18/2022 4:46	32.60	6/18/2022 5:33	19.18	6/17/2022 8:06	5.85
6/18/2022 4:47	32.57	6/18/2022 5:34	19.19	6/17/2022 8:07	5.84
6/18/2022 4:48	32.54	6/18/2022 5:35	19.19	6/17/2022 8:08	5.83
6/18/2022 4:49	32.58	6/18/2022 5:36	19.19	6/17/2022 8:09	5.84
6/18/2022 4:50	32.58	6/18/2022 5:37	19.19	6/17/2022 8:10	5.87
6/18/2022 4:51	32.57	6/18/2022 5:38	19.19	6/17/2022 8:11	5.85
6/18/2022 4:52	32.60	6/18/2022 5:39	19.18	6/17/2022 8:12	5.85
6/18/2022 4:53	32.58	6/18/2022 5:40	19.16	6/17/2022 8:13	5.86
6/18/2022 4:54	32.56	6/18/2022 5:41	19.18	6/17/2022 8:14	5.86
6/18/2022 4:55	32.55	6/18/2022 5:42	19.18	6/17/2022 8:15	5.84
6/18/2022 4:56	32.55	6/18/2022 5:43	19.18	6/17/2022 8:16	5.85
6/18/2022 4:57	32.56	6/18/2022 5:44	19.19	6/17/2022 8:17	5.86
6/18/2022 4:58	32.58	6/18/2022 5:45	19.18	6/17/2022 8:18	5.83
6/18/2022 4:59	32.53	6/18/2022 5:46	19.16	6/17/2022 8:19	5.86
6/18/2022 5:00	32.57	6/18/2022 5:47	19.20	6/17/2022 8:20	5.85
6/18/2022 5:01	32.54	6/18/2022 5:48	19.19	6/17/2022 8:21	5.84
6/18/2022 5:02	32.58	6/18/2022 5:49	19.18	6/17/2022 8:22	5.83
6/18/2022 5:03	32.57	6/18/2022 5:50	19.16	6/17/2022 8:23	5.87
6/18/2022 5:04	32.57	6/18/2022 5:51	19.18	6/17/2022 8:24	5.84
6/18/2022 5:05	32.53	6/18/2022 5:52	19.18	6/17/2022 8:25	5.83
6/18/2022 5:06	32.58	6/18/2022 5:53	19.19	6/17/2022 8:26	5.85

6/18/2022 5:07	32.53	6/18/2022 5:54	19.19	6/17/2022 8:27	5.85
6/18/2022 5:08	32.55	6/18/2022 5:55	19.21	6/17/2022 8:28	5.84
6/18/2022 5:09	32.57	6/18/2022 5:56	19.19	6/17/2022 8:29	5.84
6/18/2022 5:10	32.55	6/18/2022 5:57	19.18	6/17/2022 8:30	5.86
6/18/2022 5:11	32.53	6/18/2022 5:58	19.20	6/17/2022 8:31	5.86
6/18/2022 5:12	32.53	6/18/2022 5:59	19.18	6/17/2022 8:32	5.86
6/18/2022 5:13	32.55	6/18/2022 6:00	19.18	6/17/2022 8:33	5.87
6/18/2022 5:14	32.55	6/18/2022 6:01	19.20	6/17/2022 8:34	5.87
6/18/2022 5:15	32.53	6/18/2022 6:02	19.20	6/17/2022 8:35	5.87
6/18/2022 5:16	32.54	6/18/2022 6:03	19.18	6/17/2022 8:36	5.86
6/18/2022 5:17	32.54	6/18/2022 6:04	19.20	6/17/2022 8:37	5.84
6/18/2022 5:18	32.57	6/18/2022 6:05	19.16	6/17/2022 8:38	5.85
6/18/2022 5:19	32.54	6/18/2022 6:06	19.21	6/17/2022 8:39	5.86
6/18/2022 5:20	32.51	6/18/2022 6:07	19.16	6/17/2022 8:40	5.84
6/18/2022 5:21	32.54	6/18/2022 6:08	19.19	6/17/2022 8:41	5.87
6/18/2022 5:22	32.56	6/18/2022 6:09	19.18	6/17/2022 8:42	5.85
6/18/2022 5:23	32.52	6/18/2022 6:10	19.19	6/17/2022 8:43	5.86
6/18/2022 5:24	32.55	6/18/2022 6:11	19.18	6/17/2022 8:44	5.87
6/18/2022 5:25	32.54	6/18/2022 6:12	19.20	6/17/2022 8:45	5.85
6/18/2022 5:26	32.55	6/18/2022 6:13	19.16	6/17/2022 8:46	5.87
6/18/2022 5:27	32.54	6/18/2022 6:14	19.19	6/17/2022 8:47	5.85
6/18/2022 5:28	32.55	6/18/2022 6:15	19.20	6/17/2022 8:48	5.85
6/18/2022 5:29	32.54	6/18/2022 6:16	19.18	6/17/2022 8:49	5.87
6/18/2022 5:30	32.52	6/18/2022 6:17	19.17	6/17/2022 8:50	5.87
6/18/2022 5:31	32.51	6/18/2022 6:18	19.16	6/17/2022 8:51	5.84
6/18/2022 5:32	32.52	6/18/2022 6:19	19.20	6/17/2022 8:52	5.82
6/18/2022 5:33	32.52	6/18/2022 6:20	19.21	6/17/2022 8:53	5.87
6/18/2022 5:34	32.54	6/18/2022 6:21	19.17	6/17/2022 8:54	5.88
6/18/2022 5:35	32.55	6/18/2022 6:22	19.17	6/17/2022 8:55	5.86
6/18/2022 5:36	32.51	6/18/2022 6:23	19.20	6/17/2022 8:56	5.85
6/18/2022 5:37	32.52	6/18/2022 6:24	19.19	6/17/2022 8:57	5.85
6/18/2022 5:38	32.51	6/18/2022 6:25	19.20	6/17/2022 8:58	5.86
6/18/2022 5:39	32.56	6/18/2022 6:26	19.20	6/17/2022 8:59	5.83
6/18/2022 5:40	32.52	6/18/2022 6:27	19.19	6/17/2022 9:00	5.86
6/18/2022 5:41	32.54	6/18/2022 6:28	19.19	6/17/2022 9:01	5.87
6/18/2022 5:42	32.51	6/18/2022 6:29	19.19	6/17/2022 9:02	5.86
6/18/2022 5:43	32.52	6/18/2022 6:30	19.19	6/17/2022 9:03	5.83
6/18/2022 5:44	32.54	6/18/2022 6:31	19.18	6/17/2022 9:04	5.85
6/18/2022 5:45	32.56	6/18/2022 6:32	19.19	6/17/2022 9:05	5.86
6/18/2022 5:46	32.52	6/18/2022 6:33	19.20	6/17/2022 9:06	5.87
6/18/2022 5:47	32.52	6/18/2022 6:34	19.19	6/17/2022 9:07	5.85
6/18/2022 5:48	32.54	6/18/2022 6:35	19.17	6/17/2022 9:08	5.83
6/18/2022 5:49	32.52	6/18/2022 6:36	19.23	6/17/2022 9:09	5.84
6/18/2022 5:50	32.50	6/18/2022 6:37	19.20	6/17/2022 9:10	5.87
6/18/2022 5:51	32.52	6/18/2022 6:38	19.19	6/17/2022 9:11	5.86
6/18/2022 5:52	32.51	6/18/2022 6:39	19.20	6/17/2022 9:12	5.83
6/18/2022 5:53	32.52	6/18/2022 6:40	19.21	6/17/2022 9:13	5.86
6/18/2022 5:54	32.51	6/18/2022 6:41	19.19	6/17/2022 9:14	5.83
6/18/2022 5:55	32.52	6/18/2022 6:42	19.17	6/17/2022 9:15	5.86
6/18/2022 5:56	32.53	6/18/2022 6:43	19.19	6/17/2022 9:16	5.86
6/18/2022 5:57	32.53	6/18/2022 6:44	19.19	6/17/2022 9:17	5.85
6/18/2022 5:58	32.52	6/18/2022 6:45	19.22	6/17/2022 9:18	5.85
6/18/2022 5:59	32.52	6/18/2022 6:46	19.22	6/17/2022 9:19	5.87
6/18/2022 6:00	32.52	6/18/2022 6:47	19.19	6/17/2022 9:20	5.82
6/18/2022 6:01	32.52	6/18/2022 6:48	19.21	6/17/2022 9:21	5.86
6/18/2022 6:02	32.52	6/18/2022 6:49	19.21	6/17/2022 9:22	5.87
6/18/2022 6:03	32.57	6/18/2022 6:50	19.19	6/17/2022 9:23	5.87
6/18/2022 6:04	32.53	6/18/2022 6:51	19.20	6/17/2022 9:24	5.85
6/18/2022 6:05	32.49	6/18/2022 6:52	19.17	6/17/2022 9:25	5.86
6/18/2022 6:06	32.53	6/18/2022 6:53	19.19	6/17/2022 9:26	5.86
6/18/2022 6:07	32.51	6/18/2022 6:54	19.19	6/17/2022 9:27	5.85
6/18/2022 6:08	32.53	6/18/2022 6:55	19.17	6/17/2022 9:28	5.87
6/18/2022 6:09	32.50	6/18/2022 6:56	19.21	6/17/2022 9:29	5.87
6/18/2022 6:10	32.52	6/18/2022 6:57	19.19	6/17/2022 9:30	5.87
6/18/2022 6:11	32.54	6/18/2022 6:58	19.18	6/17/2022 9:31	5.87
6/18/2022 6:12	32.54	6/18/2022 6:59	19.20	6/17/2022 9:32	5.86
6/18/2022 6:13	32.54	6/18/2022 7:00	19.19	6/17/2022 9:33	5.86
6/18/2022 6:14	32.51	6/18/2022 7:01	19.18	6/17/2022 9:34	5.87
6/18/2022 6:15	32.52	6/18/2022 7:02	19.16	6/17/2022 9:35	5.86
6/18/2022 6:16	32.52	6/18/2022 7:03	19.18	6/17/2022 9:36	5.86
6/18/2022 6:17	32.50	6/18/2022 7:04	19.16	6/17/2022 9:37	5.84
6/18/2022 6:18	32.49	6/18/2022 7:05	19.20	6/17/2022 9:38	5.87
6/18/2022 6:19	32.50	6/18/2022 7:06	19.18	6/17/2022 9:39	5.88
6/18/2022 6:20	32.49	6/18/2022 7:07	19.20	6/17/2022 9:40	5.85
6/18/2022 6:21	32.49	6/18/2022 7:08	19.20	6/17/2022 9:41	5.86
6/18/2022 6:22	32.50	6/18/2022 7:09	19.21	6/17/2022 9:42	5.81
6/18/2022 6:23	32.50	6/18/2022 7:10	19.20	6/17/2022 9:43	5.85
6/18/2022 6:24	32.51	6/18/2022 7:11	19.16	6/17/2022 9:44	5.85
6/18/2022 6:25	32.52	6/18/2022 7:12	19.18	6/17/2022 9:45	5.88
6/18/2022 6:26	32.50	6/18/2022 7:13	19.19	6/17/2022 9:46	5.83
6/18/2022 6:27	32.54	6/18/2022 7:14	19.19	6/17/2022 9:47	5.87
6/18/2022 6:28	32.48	6/18/2022 7:15	19.20	6/17/2022 9:48	5.89
6/18/2022 6:29	32.53	6/18/2022 7:16	19.20	6/17/2022 9:49	5.86
6/18/2022 6:30	32.49	6/18/2022 7:17	19.20	6/17/2022 9:50	5.82
6/18/2022 6:31	32.50	6/18/2022 7:18	19.19	6/17/2022 9:51	5.85
6/18/2022 6:32	32.52	6/18/2022 7:19	19.20	6/17/2022 9:52	5.86
6/18/2022 6:33	32.52	6/18/2022 7:20	19.20	6/17/2022 9:53	5.84
6/18/2022 6:34	32.50	6/18/2022 7:21	19.16	6/17/2022 9:54	5.83

6/18/2022 6:35	32.53	6/18/2022 7:22	19.19	6/17/2022 9:55	5.85
6/18/2022 6:36	32.49	6/18/2022 7:23	19.20	6/17/2022 9:56	5.82
6/18/2022 6:37	32.51	6/18/2022 7:24	19.22	6/17/2022 9:57	5.85
6/18/2022 6:38	32.52	6/18/2022 7:25	19.23	6/17/2022 9:58	5.85
6/18/2022 6:39	32.51	6/18/2022 7:26	19.20	6/17/2022 9:59	5.85
6/18/2022 6:40	32.51	6/18/2022 7:27	19.21	6/17/2022 10:00	5.87
6/18/2022 6:41	32.51	6/18/2022 7:28	19.17	6/17/2022 10:01	5.88
6/18/2022 6:42	32.51	6/18/2022 7:29	19.18	6/17/2022 10:02	5.88
6/18/2022 6:43	32.52	6/18/2022 7:30	19.19	6/17/2022 10:03	5.87
6/18/2022 6:44	32.51	6/18/2022 7:31	19.20	6/17/2022 10:04	5.86
6/18/2022 6:45	32.50	6/18/2022 7:32	19.20	6/17/2022 10:05	5.86
6/18/2022 6:46	32.51	6/18/2022 7:33	19.19	6/17/2022 10:06	5.85
6/18/2022 6:47	32.49	6/18/2022 7:34	19.16	6/17/2022 10:07	5.86
6/18/2022 6:48	32.51	6/18/2022 7:35	19.20	6/17/2022 10:08	5.86
6/18/2022 6:49	32.49	6/18/2022 7:36	19.21	6/17/2022 10:09	5.86
6/18/2022 6:50	32.50	6/18/2022 7:37	19.20	6/17/2022 10:10	5.82
6/18/2022 6:51	32.50	6/18/2022 7:38	19.19	6/17/2022 10:11	5.85
6/18/2022 6:52	32.50	6/18/2022 7:39	19.20	6/17/2022 10:12	5.85
6/18/2022 6:53	32.51	6/18/2022 7:40	19.21	6/17/2022 10:13	5.87
6/18/2022 6:54	32.51	6/18/2022 7:41	19.19	6/17/2022 10:14	5.86
6/18/2022 6:55	32.47	6/18/2022 7:42	19.22	6/17/2022 10:15	5.83
6/18/2022 6:56	32.51	6/18/2022 7:43	19.21	6/17/2022 10:16	5.87
6/18/2022 6:57	32.49	6/18/2022 7:44	19.18	6/17/2022 10:17	5.84
6/18/2022 6:58	32.50	6/18/2022 7:45	19.23	6/17/2022 10:18	5.88
6/18/2022 6:59	32.53	6/18/2022 7:46	19.17	6/17/2022 10:19	7.13
6/18/2022 7:00	32.51	6/18/2022 7:47	19.19	6/17/2022 10:20	8.60
6/18/2022 7:01	32.49	6/18/2022 7:48	19.20	6/17/2022 10:21	7.17
6/18/2022 7:02	32.49	6/18/2022 7:49	19.20	6/17/2022 10:22	5.97
6/18/2022 7:03	32.49	6/18/2022 7:50	19.21	6/17/2022 10:23	5.89
6/18/2022 7:04	32.50	6/18/2022 7:51	19.22	6/17/2022 10:24	5.87
6/18/2022 7:05	32.53	6/18/2022 7:52	19.18	6/17/2022 10:25	5.89
6/18/2022 7:06	32.51	6/18/2022 7:53	19.19	6/17/2022 10:26	5.89
6/18/2022 7:07	32.51	6/18/2022 7:54	19.21	6/17/2022 10:27	5.86
6/18/2022 7:08	32.52	6/18/2022 7:55	19.19	6/17/2022 10:28	5.86
6/18/2022 7:09	32.52	6/18/2022 7:56	19.21	6/17/2022 10:29	5.88
6/18/2022 7:10	32.50	6/18/2022 7:57	19.20	6/17/2022 10:30	5.89
6/18/2022 7:11	32.49	6/18/2022 7:58	19.21	6/17/2022 10:31	5.87
6/18/2022 7:12	32.47	6/18/2022 7:59	19.19	6/17/2022 10:32	5.87
6/18/2022 7:13	32.53	6/18/2022 8:00	19.22	6/17/2022 10:33	5.85
6/18/2022 7:14	32.49	6/18/2022 8:01	19.18	6/17/2022 10:34	5.89
6/18/2022 7:15	32.51	6/18/2022 8:02	19.19	6/17/2022 10:35	5.89
6/18/2022 7:16	32.53	6/18/2022 8:03	19.19	6/17/2022 10:36	5.87
6/18/2022 7:17	32.50	6/18/2022 8:04	19.18	6/17/2022 10:37	5.83
6/18/2022 7:18	32.51	6/18/2022 8:05	19.19	6/17/2022 10:38	5.87
6/18/2022 7:19	32.51	6/18/2022 8:06	19.22	6/17/2022 10:39	5.85
6/18/2022 7:20	32.47	6/18/2022 8:07	19.21	6/17/2022 10:40	5.85
6/18/2022 7:21	32.51	6/18/2022 8:08	19.21	6/17/2022 10:41	5.85
6/18/2022 7:22	32.50	6/18/2022 8:09	19.19	6/17/2022 10:42	5.84
6/18/2022 7:23	32.50	6/18/2022 8:10	19.22	6/17/2022 10:43	5.87
6/18/2022 7:24	32.45	6/18/2022 8:11	19.20	6/17/2022 10:44	5.89
6/18/2022 7:25	32.49	6/18/2022 8:12	19.19	6/17/2022 10:45	5.81
6/18/2022 7:26	32.52	6/18/2022 8:13	19.19	6/17/2022 10:46	5.87
6/18/2022 7:27	32.49	6/18/2022 8:14	19.52	6/17/2022 10:47	5.87
6/18/2022 7:28	32.47	6/18/2022 8:15	19.87	6/17/2022 10:48	5.88
6/18/2022 7:29	32.49	6/18/2022 8:16	19.93	6/17/2022 10:49	5.86
6/18/2022 7:30	32.50	6/18/2022 8:17	20.00	6/17/2022 10:50	5.85
6/18/2022 7:31	32.51	6/18/2022 8:18	20.02	6/17/2022 10:51	5.85
6/18/2022 7:32	32.49	6/18/2022 8:19	19.53	6/17/2022 10:52	5.87
6/18/2022 7:33	32.47	6/18/2022 8:20	19.43	6/17/2022 10:53	5.86
6/18/2022 7:34	32.49	6/18/2022 8:21	19.37	6/17/2022 10:54	5.85
6/18/2022 7:35	32.49	6/18/2022 8:22	19.35	6/17/2022 10:55	5.86
6/18/2022 7:36	32.48	6/18/2022 8:23	19.35	6/17/2022 10:56	5.84
6/18/2022 7:37	32.52	6/18/2022 8:24	19.34	6/17/2022 10:57	5.87
6/18/2022 7:38	32.49	6/18/2022 8:25	19.31	6/17/2022 10:58	5.86
6/18/2022 7:39	32.49	6/18/2022 8:26	19.29	6/17/2022 10:59	5.89
6/18/2022 7:40	32.50	6/18/2022 8:27	19.29	6/17/2022 11:00	5.84
6/18/2022 7:41	32.49	6/18/2022 8:28	19.29	6/17/2022 11:01	5.85
6/18/2022 7:42	32.49	6/18/2022 8:29	19.32	6/17/2022 11:02	5.88
6/18/2022 7:43	32.51	6/18/2022 8:30	19.30	6/17/2022 11:03	5.86
6/18/2022 7:44	32.48	6/18/2022 8:31	19.29	6/17/2022 11:04	5.83
6/18/2022 7:45	32.47	6/18/2022 8:32	19.29	6/17/2022 11:05	5.86
6/18/2022 7:46	32.48	6/18/2022 8:33	19.29	6/17/2022 11:06	5.85
6/18/2022 7:47	32.45	6/18/2022 8:34	19.28	6/17/2022 11:07	5.90
6/18/2022 7:48	32.49	6/18/2022 8:35	19.27	6/17/2022 11:08	5.86
6/18/2022 7:49	32.48	6/18/2022 8:36	19.28	6/17/2022 11:09	5.86
6/18/2022 7:50	32.48	6/18/2022 8:37	19.29	6/17/2022 11:10	5.85
6/18/2022 7:51	32.51	6/18/2022 8:38	19.26	6/17/2022 11:11	5.87
6/18/2022 7:52	32.52	6/18/2022 8:39	19.25	6/17/2022 11:12	5.87
6/18/2022 7:53	32.51	6/18/2022 8:40	19.25	6/17/2022 11:13	5.83
6/18/2022 7:54	32.48	6/18/2022 8:41	19.23	6/17/2022 11:14	5.85
6/18/2022 7:55	32.50	6/18/2022 8:42	19.26	6/17/2022 11:15	5.85
6/18/2022 7:56	32.48	6/18/2022 8:43	19.24	6/17/2022 11:16	5.85
6/18/2022 7:57	32.49	6/18/2022 8:44	19.27	6/17/2022 11:17	5.85
6/18/2022 7:58	32.48	6/18/2022 8:45	19.28	6/17/2022 11:18	5.86
6/18/2022 7:59	32.52	6/18/2022 8:46	19.22	6/17/2022 11:19	5.89
6/18/2022 8:00	32.50	6/18/2022 8:47	19.27	6/17/2022 11:20	5.87
6/18/2022 8:01	32.47	6/18/2022 8:48	19.22	6/17/2022 11:21	5.86
6/18/2022 8:02	32.49	6/18/2022 8:49	19.27	6/17/2022 11:22	5.87

6/18/2022 8:03	32.48	6/18/2022 8:50	19.25	6/17/2022 11:23	5.86
6/18/2022 8:04	32.50	6/18/2022 8:51	19.27	6/17/2022 11:24	5.89
6/18/2022 8:05	32.49	6/18/2022 8:52	19.25	6/17/2022 11:25	5.86
6/18/2022 8:06	32.48	6/18/2022 8:53	19.25	6/17/2022 11:26	5.85
6/18/2022 8:07	32.45	6/18/2022 8:54	19.27	6/17/2022 11:27	5.86
6/18/2022 8:08	32.49	6/18/2022 8:55	19.23	6/17/2022 11:28	5.86
6/18/2022 8:09	32.48	6/18/2022 8:56	19.26	6/17/2022 11:29	5.88
6/18/2022 8:10	32.48	6/18/2022 8:57	19.25	6/17/2022 11:30	5.88
6/18/2022 8:11	32.52	6/18/2022 8:58	19.26	6/17/2022 11:31	5.89
6/18/2022 8:12	32.51	6/18/2022 8:59	19.23	6/17/2022 11:32	5.83
6/18/2022 8:13	32.51	6/18/2022 9:00	19.23	6/17/2022 11:33	5.89
6/18/2022 8:14	32.54	6/18/2022 9:01	19.24	6/17/2022 11:34	5.85
6/18/2022 8:15	32.55	6/18/2022 9:02	19.23	6/17/2022 11:35	5.86
6/18/2022 8:16	32.53	6/18/2022 9:03	19.24	6/17/2022 11:36	5.87
6/18/2022 8:17	32.54	6/18/2022 9:04	19.23	6/17/2022 11:37	5.85
6/18/2022 8:18	32.57	6/18/2022 9:05	19.25	6/17/2022 11:38	5.84
6/18/2022 8:19	32.54	6/18/2022 9:06	19.24	6/17/2022 11:39	5.86
6/18/2022 8:20	32.56	6/18/2022 9:07	19.26	6/17/2022 11:40	5.88
6/18/2022 8:21	32.54	6/18/2022 9:08	19.23	6/17/2022 11:41	5.88
6/18/2022 8:22	32.55	6/18/2022 9:09	19.24	6/17/2022 11:42	5.87
6/18/2022 8:23	32.54	6/18/2022 9:10	19.24	6/17/2022 11:43	5.89
6/18/2022 8:24	32.57	6/18/2022 9:11	19.24	6/17/2022 11:44	5.89
6/18/2022 8:25	32.51	6/18/2022 9:12	19.24	6/17/2022 11:45	5.87
6/18/2022 8:26	32.52	6/18/2022 9:13	19.24	6/17/2022 11:46	5.84
6/18/2022 8:27	32.54	6/18/2022 9:14	19.23	6/17/2022 11:47	5.87
6/18/2022 8:28	32.52	6/18/2022 9:15	19.24	6/17/2022 11:48	5.89
6/18/2022 8:29	32.51	6/18/2022 9:16	19.23	6/17/2022 11:49	5.85
6/18/2022 8:30	32.50	6/18/2022 9:17	19.24	6/17/2022 11:50	5.86
6/18/2022 8:31	32.51	6/18/2022 9:18	19.23	6/17/2022 11:51	5.87
6/18/2022 8:32	32.51	6/18/2022 9:19	19.23	6/17/2022 11:52	5.88
6/18/2022 8:33	32.51	6/18/2022 9:20	19.25	6/17/2022 11:53	5.87
6/18/2022 8:34	32.52	6/18/2022 9:21	19.22	6/17/2022 11:54	5.87
6/18/2022 8:35	32.55	6/18/2022 9:22	19.23	6/17/2022 11:55	5.86
6/18/2022 8:36	32.52	6/18/2022 9:23	19.24	6/17/2022 11:56	5.84
6/18/2022 8:37	32.53	6/18/2022 9:24	19.24	6/17/2022 11:57	5.86
6/18/2022 8:38	32.73	6/18/2022 9:25	19.23	6/17/2022 11:58	5.86
6/18/2022 8:39	33.32	6/18/2022 9:26	19.24	6/17/2022 11:59	5.85
6/18/2022 8:40	32.73	6/18/2022 9:27	19.22	6/17/2022 12:00	5.85
6/18/2022 8:41	32.65	6/18/2022 9:28	19.22	6/17/2022 12:01	5.89
6/18/2022 8:42	32.61	6/18/2022 9:29	19.22	6/17/2022 12:02	7.10
6/18/2022 8:43	32.61	6/18/2022 9:30	19.22	6/17/2022 12:03	8.56
6/18/2022 8:44	32.59	6/18/2022 9:31	19.25	6/17/2022 12:04	6.63
6/18/2022 8:45	32.56	6/18/2022 9:32	19.25	6/17/2022 12:05	5.94
6/18/2022 8:46	32.63	6/18/2022 9:33	19.22	6/17/2022 12:06	5.89
6/18/2022 8:47	32.59	6/18/2022 9:34	19.22	6/17/2022 12:07	5.89
6/18/2022 8:48	32.56	6/18/2022 9:35	19.22	6/17/2022 12:08	5.89
6/18/2022 8:49	32.65	6/18/2022 9:36	19.23	6/17/2022 12:09	5.89
6/18/2022 8:50	33.30	6/18/2022 9:37	19.21	6/17/2022 12:10	5.88
6/18/2022 8:51	32.76	6/18/2022 9:38	19.24	6/17/2022 12:11	5.89
6/18/2022 8:52	32.66	6/18/2022 9:39	19.23	6/17/2022 12:12	5.85
6/18/2022 8:53	32.67	6/18/2022 9:40	19.24	6/17/2022 12:13	5.84
6/18/2022 8:54	32.66	6/18/2022 9:41	19.23	6/17/2022 12:14	5.85
6/18/2022 8:55	32.62	6/18/2022 9:42	19.24	6/17/2022 12:15	5.87
6/18/2022 8:56	32.62	6/18/2022 9:43	19.23	6/17/2022 12:16	5.87
6/18/2022 8:57	32.58	6/18/2022 9:44	19.26	6/17/2022 12:17	5.87
6/18/2022 8:58	32.62	6/18/2022 9:45	19.23	6/17/2022 12:18	5.87
6/18/2022 8:59	32.59	6/18/2022 9:46	19.23	6/17/2022 12:19	5.86
6/18/2022 9:00	32.58	6/18/2022 9:47	19.25	6/17/2022 12:20	5.90
6/18/2022 9:01	32.58	6/18/2022 9:48	19.24	6/17/2022 12:21	5.87
6/18/2022 9:02	32.58	6/18/2022 9:49	19.24	6/17/2022 12:22	5.88
6/18/2022 9:03	32.59	6/18/2022 9:50	19.25	6/17/2022 12:23	5.89
6/18/2022 9:04	32.55	6/18/2022 9:51	19.24	6/17/2022 12:24	5.83
6/18/2022 9:05	32.57	6/18/2022 9:52	19.25	6/17/2022 12:25	5.87
6/18/2022 9:06	32.57	6/18/2022 9:53	19.22	6/17/2022 12:26	5.89
6/18/2022 9:07	32.58	6/18/2022 9:54	19.21	6/17/2022 12:27	5.83
6/18/2022 9:08	32.56	6/18/2022 9:55	19.25	6/17/2022 12:28	5.86
6/18/2022 9:09	32.58	6/18/2022 9:56	19.22	6/17/2022 12:29	5.86
6/18/2022 9:10	32.54	6/18/2022 9:57	19.24	6/17/2022 12:30	5.85
6/18/2022 9:11	32.55	6/18/2022 9:58	19.23	6/17/2022 12:31	5.85
6/18/2022 9:12	33.41	6/18/2022 9:59	19.22	6/17/2022 12:32	5.89
6/18/2022 9:13	32.74	6/18/2022 10:00	19.23	6/17/2022 12:33	5.85
6/18/2022 9:14	32.67	6/18/2022 10:01	19.22	6/17/2022 12:34	5.87
6/18/2022 9:15	32.66	6/18/2022 10:02	19.25	6/17/2022 12:35	5.85
6/18/2022 9:16	32.64	6/18/2022 10:03	19.24	6/17/2022 12:36	5.90
6/18/2022 9:17	32.63	6/18/2022 10:04	19.22	6/17/2022 12:37	5.87
6/18/2022 9:18	32.61	6/18/2022 10:05	19.26	6/17/2022 12:38	5.87
6/18/2022 9:19	32.64	6/18/2022 10:06	19.25	6/17/2022 12:39	5.85
6/18/2022 9:20	32.63	6/18/2022 10:07	19.20	6/17/2022 12:40	5.84
6/18/2022 9:21	32.63	6/18/2022 10:08	19.21	6/17/2022 12:41	5.85
6/18/2022 9:22	32.62	6/18/2022 10:09	19.23	6/17/2022 12:42	5.90
6/18/2022 9:23	32.61	6/18/2022 10:10	19.26	6/17/2022 12:43	5.87
6/18/2022 9:24	32.60	6/18/2022 10:11	19.26	6/17/2022 12:44	5.86
6/18/2022 9:25	32.60	6/18/2022 10:12	19.24	6/17/2022 12:45	5.83
6/18/2022 9:26	32.60	6/18/2022 10:13	19.24	6/17/2022 12:46	5.82
6/18/2022 9:27	32.58	6/18/2022 10:14	19.22	6/17/2022 12:47	5.89
6/18/2022 9:28	32.57	6/18/2022 10:15	19.23	6/17/2022 12:48	5.88
6/18/2022 9:29	32.57	6/18/2022 10:16	19.24	6/17/2022 12:49	5.87
6/18/2022 9:30	32.57	6/18/2022 10:17	19.23	6/17/2022 12:50	5.88

6/18/2022 9:31	32.60	6/18/2022 10:18	19.24	6/17/2022 12:51	5.84
6/18/2022 9:32	32.60	6/18/2022 10:19	19.24	6/17/2022 12:52	5.88
6/18/2022 9:33	32.59	6/18/2022 10:20	19.26	6/17/2022 12:53	5.86
6/18/2022 9:34	32.55	6/18/2022 10:21	19.24	6/17/2022 12:54	5.86
6/18/2022 9:35	32.57	6/18/2022 10:22	19.23	6/17/2022 12:55	5.86
6/18/2022 9:36	32.58	6/18/2022 10:23	19.24	6/17/2022 12:56	5.89
6/18/2022 9:37	32.59	6/18/2022 10:24	19.24	6/17/2022 12:57	5.83
6/18/2022 9:38	32.58	6/18/2022 10:25	19.22	6/17/2022 12:58	5.89
6/18/2022 9:39	32.56	6/18/2022 10:26	19.25	6/17/2022 12:59	5.85
6/18/2022 9:40	32.56	6/18/2022 10:27	19.27	6/17/2022 13:00	5.88
6/18/2022 9:41	32.57	6/18/2022 10:28	19.24	6/17/2022 13:01	5.90
6/18/2022 9:42	32.55	6/18/2022 10:29	19.22	6/17/2022 13:02	5.91
6/18/2022 9:43	32.55	6/18/2022 10:30	19.23	6/17/2022 13:03	5.87
6/18/2022 9:44	32.54	6/18/2022 10:31	19.24	6/17/2022 13:04	5.85
6/18/2022 9:45	32.56	6/18/2022 10:32	19.22	6/17/2022 13:05	5.87
6/18/2022 9:46	32.53	6/18/2022 10:33	19.23	6/17/2022 13:06	5.86
6/18/2022 9:47	32.55	6/18/2022 10:34	19.26	6/17/2022 13:07	5.85
6/18/2022 9:48	32.56	6/18/2022 10:35	19.22	6/17/2022 13:08	5.87
6/18/2022 9:49	32.58	6/18/2022 10:36	19.25	6/17/2022 13:09	5.85
6/18/2022 9:50	32.54	6/18/2022 10:37	19.24	6/17/2022 13:10	5.86
6/18/2022 9:51	32.55	6/18/2022 10:38	19.23	6/17/2022 13:11	5.84
6/18/2022 9:52	32.56	6/18/2022 10:39	19.24	6/17/2022 13:12	5.85
6/18/2022 9:53	32.55	6/18/2022 10:40	19.24	6/17/2022 13:13	5.84
6/18/2022 9:54	32.54	6/18/2022 10:41	19.22	6/17/2022 13:14	5.87
6/18/2022 9:55	32.56	6/18/2022 10:42	19.24	6/17/2022 13:15	5.84
6/18/2022 9:56	32.57	6/18/2022 10:43	19.25	6/17/2022 13:16	5.88
6/18/2022 9:57	32.56	6/18/2022 10:44	19.20	6/17/2022 13:17	5.87
6/18/2022 9:58	32.56	6/18/2022 10:45	19.23	6/17/2022 13:18	5.86
6/18/2022 9:59	32.54	6/18/2022 10:46	19.23	6/17/2022 13:19	5.89
6/18/2022 10:00	32.55	6/18/2022 10:47	19.25	6/17/2022 13:20	5.88
6/18/2022 10:01	32.55	6/18/2022 10:48	19.22	6/17/2022 13:21	5.85
6/18/2022 10:02	32.55	6/18/2022 10:49	19.21	6/17/2022 13:22	5.87
6/18/2022 10:03	32.52	6/18/2022 10:50	19.23	6/17/2022 13:23	5.90
6/18/2022 10:04	32.56	6/18/2022 10:51	19.21	6/17/2022 13:24	5.89
6/18/2022 10:05	32.52	6/18/2022 10:52	19.24	6/17/2022 13:25	5.87
6/18/2022 10:06	32.53	6/18/2022 10:53	19.21	6/17/2022 13:26	5.86
6/18/2022 10:07	32.51	6/18/2022 10:54	19.27	6/17/2022 13:27	5.86
6/18/2022 10:08	32.53	6/18/2022 10:55	19.22	6/17/2022 13:28	5.87
6/18/2022 10:09	32.58	6/18/2022 10:56	19.24	6/17/2022 13:29	5.88
6/18/2022 10:10	32.56	6/18/2022 10:57	19.20	6/17/2022 13:30	5.89
6/18/2022 10:11	32.53	6/18/2022 10:58	19.23	6/17/2022 13:31	5.87
6/18/2022 10:12	32.56	6/18/2022 10:59	19.25	6/17/2022 13:32	5.88
6/18/2022 10:13	32.56	6/18/2022 11:00	19.23	6/17/2022 13:33	5.87
6/18/2022 10:14	32.53	6/18/2022 11:01	19.21	6/17/2022 13:34	5.88
6/18/2022 10:15	32.55	6/18/2022 11:02	19.20	6/17/2022 13:35	5.88
6/18/2022 10:16	32.54	6/18/2022 11:03	19.23	6/17/2022 13:36	5.91
6/18/2022 10:17	32.55	6/18/2022 11:04	19.23	6/17/2022 13:37	5.88
6/18/2022 10:18	32.52	6/18/2022 11:05	19.23	6/17/2022 13:38	5.89
6/18/2022 10:19	32.56	6/18/2022 11:06	19.25	6/17/2022 13:39	5.87
6/18/2022 10:20	32.53	6/18/2022 11:07	19.21	6/17/2022 13:40	5.84
6/18/2022 10:21	32.51	6/18/2022 11:08	19.22	6/17/2022 13:41	5.87
6/18/2022 10:22	32.52	6/18/2022 11:09	19.22	6/17/2022 13:42	5.86
6/18/2022 10:23	32.52	6/18/2022 11:10	19.22	6/17/2022 13:43	5.88
6/18/2022 10:24	32.53	6/18/2022 11:11	19.24	6/17/2022 13:44	5.85
6/18/2022 10:25	32.55	6/18/2022 11:12	19.25	6/17/2022 13:45	5.87
6/18/2022 10:26	32.56	6/18/2022 11:13	19.24	6/17/2022 13:46	5.86
6/18/2022 10:27	32.54	6/18/2022 11:14	19.23	6/17/2022 13:47	5.88
6/18/2022 10:28	32.53	6/18/2022 11:15	19.25	6/17/2022 13:48	5.91
6/18/2022 10:29	33.99	6/18/2022 11:16	19.23	6/17/2022 13:49	5.87
6/18/2022 10:30	32.98	6/18/2022 11:17	19.25	6/17/2022 13:50	5.89
6/18/2022 10:31	33.85	6/18/2022 11:18	19.24	6/17/2022 13:51	5.84
6/18/2022 10:32	33.24	6/18/2022 11:19	19.23	6/17/2022 13:52	5.86
6/18/2022 10:33	32.89	6/18/2022 11:20	19.24	6/17/2022 13:53	5.88
6/18/2022 10:34	32.78	6/18/2022 11:21	19.22	6/17/2022 13:54	5.89
6/18/2022 10:35	32.73	6/18/2022 11:22	19.27	6/17/2022 13:55	5.87
6/18/2022 10:36	32.76	6/18/2022 11:23	19.22	6/17/2022 13:56	5.89
6/18/2022 10:37	32.71	6/18/2022 11:24	19.24	6/17/2022 13:57	5.86
6/18/2022 10:38	32.66	6/18/2022 11:25	19.25	6/17/2022 13:58	5.87
6/18/2022 10:39	32.67	6/18/2022 11:26	19.24	6/17/2022 13:59	8.49
6/18/2022 10:40	32.66	6/18/2022 11:27	19.25	6/17/2022 14:00	7.30
6/18/2022 10:41	32.69	6/18/2022 11:28	19.19	6/17/2022 14:01	5.99
6/18/2022 10:42	32.69	6/18/2022 11:29	19.23	6/17/2022 14:02	5.93
6/18/2022 10:43	32.71	6/18/2022 11:30	19.22	6/17/2022 14:03	5.92
6/18/2022 10:44	32.71	6/18/2022 11:31	19.23	6/17/2022 14:04	5.90
6/18/2022 10:45	32.67	6/18/2022 11:32	19.22	6/17/2022 14:05	5.92
6/18/2022 10:46	32.70	6/18/2022 11:33	19.23	6/17/2022 14:06	5.89
6/18/2022 10:47	32.66	6/18/2022 11:34	19.24	6/17/2022 14:07	5.92
6/18/2022 10:48	33.37	6/18/2022 11:35	19.23	6/17/2022 14:08	5.91
6/18/2022 10:49	32.81	6/18/2022 11:36	19.24	6/17/2022 14:09	5.89
6/18/2022 10:50	32.75	6/18/2022 11:37	19.24	6/17/2022 14:10	5.88
6/18/2022 10:51	32.71	6/18/2022 11:38	19.25	6/17/2022 14:11	5.88
6/18/2022 10:52	32.72	6/18/2022 11:39	19.24	6/17/2022 14:12	5.90
6/18/2022 10:53	32.70	6/18/2022 11:40	19.23	6/17/2022 14:13	5.91
6/18/2022 10:54	32.68	6/18/2022 11:41	19.88	6/17/2022 14:14	5.87
6/18/2022 10:55	32.69	6/18/2022 11:42	19.97	6/17/2022 14:15	5.88
6/18/2022 10:56	32.66	6/18/2022 11:43	20.02	6/17/2022 14:16	5.87
6/18/2022 10:57	32.65	6/18/2022 11:44	20.01	6/17/2022 14:17	5.91
6/18/2022 10:58	32.68	6/18/2022 11:45	19.99	6/17/2022 14:18	5.88

6/18/2022 10:59	32.65	6/18/2022 11:46	19.54	6/17/2022 14:19	5.89
6/18/2022 11:00	32.66	6/18/2022 11:47	19.43	6/17/2022 14:20	5.91
6/18/2022 11:01	32.64	6/18/2022 11:48	19.42	6/17/2022 14:21	5.89
6/18/2022 11:02	32.65	6/18/2022 11:49	19.39	6/17/2022 14:22	5.89
6/18/2022 11:03	32.63	6/18/2022 11:50	19.41	6/17/2022 14:23	5.91
6/18/2022 11:04	32.63	6/18/2022 11:51	19.35	6/17/2022 14:24	5.89
6/18/2022 11:05	32.64	6/18/2022 11:52	19.35	6/17/2022 14:25	5.88
6/18/2022 11:06	32.65	6/18/2022 11:53	19.35	6/17/2022 14:26	5.87
6/18/2022 11:07	32.63	6/18/2022 11:54	19.34	6/17/2022 14:27	5.87
6/18/2022 11:08	32.63	6/18/2022 11:55	19.34	6/17/2022 14:28	5.89
6/18/2022 11:09	32.62	6/18/2022 11:56	19.34	6/17/2022 14:29	5.88
6/18/2022 11:10	32.63	6/18/2022 11:57	19.32	6/17/2022 14:30	5.89
6/18/2022 11:11	32.63	6/18/2022 11:58	19.33	6/17/2022 14:31	5.91
6/18/2022 11:12	32.63	6/18/2022 11:59	19.33	6/17/2022 14:32	5.87
6/18/2022 11:13	32.61	6/18/2022 12:00	19.32	6/17/2022 14:33	5.89
6/18/2022 11:14	32.59	6/18/2022 12:01	19.31	6/17/2022 14:34	5.86
6/18/2022 11:15	32.60	6/18/2022 12:02	19.32	6/17/2022 14:35	5.87
6/18/2022 11:16	32.62	6/18/2022 12:03	19.29	6/17/2022 14:36	5.90
6/18/2022 11:17	32.60	6/18/2022 12:04	19.30	6/17/2022 14:37	5.89
6/18/2022 11:18	32.60	6/18/2022 12:05	19.32	6/17/2022 14:38	5.90
6/18/2022 11:19	32.62	6/18/2022 12:06	19.32	6/17/2022 14:39	5.89
6/18/2022 11:20	32.58	6/18/2022 12:07	19.31	6/17/2022 14:40	5.90
6/18/2022 11:21	32.60	6/18/2022 12:08	19.31	6/17/2022 14:41	5.88
6/18/2022 11:22	32.60	6/18/2022 12:09	19.31	6/17/2022 14:42	5.90
6/18/2022 11:23	32.60	6/18/2022 12:10	19.31	6/17/2022 14:43	5.88
6/18/2022 11:24	32.59	6/18/2022 12:11	19.30	6/17/2022 14:44	5.88
6/18/2022 11:25	32.60	6/18/2022 12:12	19.31	6/17/2022 14:45	5.86
6/18/2022 11:26	32.60	6/18/2022 12:13	19.28	6/17/2022 14:46	5.88
6/18/2022 11:27	32.57	6/18/2022 12:14	19.31	6/17/2022 14:47	5.89
6/18/2022 11:28	32.58	6/18/2022 12:15	19.31	6/17/2022 14:48	5.89
6/18/2022 11:29	32.57	6/18/2022 12:16	19.29	6/17/2022 14:49	5.87
6/18/2022 11:30	32.57	6/18/2022 12:17	19.28	6/17/2022 14:50	5.88
6/18/2022 11:31	32.60	6/18/2022 12:18	19.29	6/17/2022 14:51	5.90
6/18/2022 11:32	32.60	6/18/2022 12:19	19.29	6/17/2022 14:52	5.90
6/18/2022 11:33	32.63	6/18/2022 12:20	19.29	6/17/2022 14:53	5.87
6/18/2022 11:34	32.63	6/18/2022 12:21	19.28	6/17/2022 14:54	5.90
6/18/2022 11:35	32.62	6/18/2022 12:22	19.27	6/17/2022 14:55	5.86
6/18/2022 11:36	32.63	6/18/2022 12:23	19.31	6/17/2022 14:56	5.87
6/18/2022 11:37	32.62	6/18/2022 12:24	19.28	6/17/2022 14:57	5.87
6/18/2022 11:38	32.61	6/18/2022 12:25	19.25	6/17/2022 14:58	5.89
6/18/2022 11:39	32.64	6/18/2022 12:26	19.29	6/17/2022 14:59	5.90
6/18/2022 11:40	32.64	6/18/2022 12:27	19.26	6/17/2022 15:00	5.90
6/18/2022 11:41	32.64	6/18/2022 12:28	19.28	6/17/2022 15:01	5.91
6/18/2022 11:42	32.59	6/18/2022 12:29	19.27	6/17/2022 15:02	5.86
6/18/2022 11:43	32.62	6/18/2022 12:30	19.29	6/17/2022 15:03	5.89
6/18/2022 11:44	32.61	6/18/2022 12:31	19.30	6/17/2022 15:04	5.89
6/18/2022 11:45	32.63	6/18/2022 12:32	19.24	6/17/2022 15:05	5.93
6/18/2022 11:46	32.62	6/18/2022 12:33	19.28	6/17/2022 15:06	5.86
6/18/2022 11:47	32.58	6/18/2022 12:34	19.27	6/17/2022 15:07	5.92
6/18/2022 11:48	32.61	6/18/2022 12:35	19.25	6/17/2022 15:08	5.90
6/18/2022 11:49	32.59	6/18/2022 12:36	19.28	6/17/2022 15:09	5.90
6/18/2022 11:50	32.60	6/18/2022 12:37	19.27	6/17/2022 15:10	5.88
6/18/2022 11:51	32.60	6/18/2022 12:38	19.28	6/17/2022 15:11	5.87
6/18/2022 11:52	32.62	6/18/2022 12:39	19.27	6/17/2022 15:12	5.90
6/18/2022 11:53	32.62	6/18/2022 12:40	19.27	6/17/2022 15:13	5.87
6/18/2022 11:54	32.60	6/18/2022 12:41	19.26	6/17/2022 15:14	5.87
6/18/2022 11:55	32.60	6/18/2022 12:42	19.27	6/17/2022 15:15	5.90
6/18/2022 11:56	32.58	6/18/2022 12:43	19.28	6/17/2022 15:16	6.50
6/18/2022 11:57	32.58	6/18/2022 12:44	19.25	6/17/2022 15:17	8.59
6/18/2022 11:58	32.58	6/18/2022 12:45	19.26	6/17/2022 15:18	8.69
6/18/2022 11:59	32.59	6/18/2022 12:46	19.26	6/17/2022 15:19	6.14
6/18/2022 12:00	32.61	6/18/2022 12:47	19.29	6/17/2022 15:20	5.96
6/18/2022 12:01	32.60	6/18/2022 12:48	19.24	6/17/2022 15:21	5.94
6/18/2022 12:02	32.58	6/18/2022 12:49	19.24	6/17/2022 15:22	5.95
6/18/2022 12:03	32.58	6/18/2022 12:50	19.27	6/17/2022 15:23	5.95
6/18/2022 12:04	32.59	6/18/2022 12:51	19.27	6/17/2022 15:24	5.92
6/18/2022 12:05	32.60	6/18/2022 12:52	19.27	6/17/2022 15:25	5.92
6/18/2022 12:06	32.56	6/18/2022 12:53	19.26	6/17/2022 15:26	5.88
6/18/2022 12:07	32.59	6/18/2022 12:54	19.28	6/17/2022 15:27	5.94
6/18/2022 12:08	32.59	6/18/2022 12:55	19.25	6/17/2022 15:28	5.89
6/18/2022 12:09	32.57	6/18/2022 12:56	19.27	6/17/2022 15:29	5.91
6/18/2022 12:10	32.61	6/18/2022 12:57	19.27	6/17/2022 15:30	5.92
6/18/2022 12:11	32.60	6/18/2022 12:58	19.29	6/17/2022 15:31	5.89
6/18/2022 12:12	32.56	6/18/2022 12:59	19.24	6/17/2022 15:32	5.88
6/18/2022 12:13	32.58	6/18/2022 13:00	19.25	6/17/2022 15:33	5.91
6/18/2022 12:14	32.59	6/18/2022 13:01	19.28	6/17/2022 15:34	5.89
6/18/2022 12:15	32.59	6/18/2022 13:02	19.28	6/17/2022 15:35	5.93
6/18/2022 12:16	32.57	6/18/2022 13:03	19.27	6/17/2022 15:36	5.93
6/18/2022 12:17	32.60	6/18/2022 13:04	19.27	6/17/2022 15:37	5.91
6/18/2022 12:18	32.54	6/18/2022 13:05	19.27	6/17/2022 15:38	5.90
6/18/2022 12:19	32.60	6/18/2022 13:06	19.26	6/17/2022 15:39	5.91
6/18/2022 12:20	32.59	6/18/2022 13:07	19.26	6/17/2022 15:40	5.92
6/18/2022 12:21	32.59	6/18/2022 13:08	19.28	6/17/2022 15:41	5.92
6/18/2022 12:22	32.59	6/18/2022 13:09	19.26	6/17/2022 15:42	5.91
6/18/2022 12:23	32.59	6/18/2022 13:10	19.27	6/17/2022 15:43	5.93
6/18/2022 12:24	32.60	6/18/2022 13:11	19.26	6/17/2022 15:44	5.92
6/18/2022 12:25	32.60	6/18/2022 13:12	19.26	6/17/2022 15:45	5.90
6/18/2022 12:26	32.57	6/18/2022 13:13	19.27	6/17/2022 15:46	5.91

6/18/2022 12:27	32.58	6/18/2022 13:14	19.25	6/17/2022 15:47	5.91
6/18/2022 12:28	32.56	6/18/2022 13:15	19.26	6/17/2022 15:48	5.89
6/18/2022 12:29	32.58	6/18/2022 13:16	19.26	6/17/2022 15:49	5.91
6/18/2022 12:30	32.58	6/18/2022 13:17	19.27	6/17/2022 15:50	5.91
6/18/2022 12:31	32.56	6/18/2022 13:18	19.27	6/17/2022 15:51	5.92
6/18/2022 12:32	32.57	6/18/2022 13:19	19.21	6/17/2022 15:52	5.91
6/18/2022 12:33	32.57	6/18/2022 13:20	19.26	6/17/2022 15:53	5.93
6/18/2022 12:34	32.59	6/18/2022 13:21	19.26	6/17/2022 15:54	5.91
6/18/2022 12:35	32.60	6/18/2022 13:22	19.27	6/17/2022 15:55	5.90
6/18/2022 12:36	32.55	6/18/2022 13:23	19.28	6/17/2022 15:56	5.90
6/18/2022 12:37	32.59	6/18/2022 13:24	19.27	6/17/2022 15:57	5.95
6/18/2022 12:38	32.57	6/18/2022 13:25	19.26	6/17/2022 15:58	5.92
6/18/2022 12:39	32.57	6/18/2022 13:26	19.26	6/17/2022 15:59	5.91
6/18/2022 12:40	32.56	6/18/2022 13:27	19.27	6/17/2022 16:00	5.89
6/18/2022 12:41	32.54	6/18/2022 13:28	19.25	6/17/2022 16:01	5.94
6/18/2022 12:42	32.59	6/18/2022 13:29	19.23	6/17/2022 16:02	5.93
6/18/2022 12:43	32.55	6/18/2022 13:30	19.26	6/17/2022 16:03	5.91
6/18/2022 12:44	32.57	6/18/2022 13:31	19.26	6/17/2022 16:04	5.92
6/18/2022 12:45	32.58	6/18/2022 13:32	19.25	6/17/2022 16:05	5.90
6/18/2022 12:46	32.58	6/18/2022 13:33	19.27	6/17/2022 16:06	5.89
6/18/2022 12:47	32.55	6/18/2022 13:34	19.24	6/17/2022 16:07	5.91
6/18/2022 12:48	32.60	6/18/2022 13:35	19.28	6/17/2022 16:08	5.90
6/18/2022 12:49	32.58	6/18/2022 13:36	19.25	6/17/2022 16:09	5.91
6/18/2022 12:50	32.57	6/18/2022 13:37	19.26	6/17/2022 16:10	5.90
6/18/2022 12:51	32.59	6/18/2022 13:38	19.28	6/17/2022 16:11	5.92
6/18/2022 12:52	32.61	6/18/2022 13:39	19.28	6/17/2022 16:12	5.92
6/18/2022 12:53	32.62	6/18/2022 13:40	19.24	6/17/2022 16:13	5.92
6/18/2022 12:54	32.63	6/18/2022 13:41	19.24	6/17/2022 16:14	5.89
6/18/2022 12:55	32.64	6/18/2022 13:42	19.25	6/17/2022 16:15	5.93
6/18/2022 12:56	32.63	6/18/2022 13:43	19.24	6/17/2022 16:16	5.91
6/18/2022 12:57	32.60	6/18/2022 13:44	19.26	6/17/2022 16:17	5.91
6/18/2022 12:58	32.60	6/18/2022 13:45	19.23	6/17/2022 16:18	5.90
6/18/2022 12:59	32.61	6/18/2022 13:46	19.26	6/17/2022 16:19	5.88
6/18/2022 13:00	32.59	6/18/2022 13:47	19.27	6/17/2022 16:20	5.93
6/18/2022 13:01	32.61	6/18/2022 13:48	19.27	6/17/2022 16:21	5.91
6/18/2022 13:02	32.64	6/18/2022 13:49	19.24	6/17/2022 16:22	5.92
6/18/2022 13:03	32.59	6/18/2022 13:50	19.28	6/17/2022 16:23	5.91
6/18/2022 13:04	32.60	6/18/2022 13:51	19.27	6/17/2022 16:24	5.90
6/18/2022 13:05	32.61	6/18/2022 13:52	19.22	6/17/2022 16:25	5.92
6/18/2022 13:06	32.60	6/18/2022 13:53	19.24	6/17/2022 16:26	5.90
6/18/2022 13:07	32.58	6/18/2022 13:54	19.24	6/17/2022 16:27	5.89
6/18/2022 13:08	32.61	6/18/2022 13:55	19.27	6/17/2022 16:28	5.90
6/18/2022 13:09	32.61	6/18/2022 13:56	19.27	6/17/2022 16:29	5.90
6/18/2022 13:10	32.57	6/18/2022 13:57	19.25	6/17/2022 16:30	5.91
6/18/2022 13:11	32.59	6/18/2022 13:58	19.24	6/17/2022 16:31	5.93
6/18/2022 13:12	32.61	6/18/2022 13:59	19.27	6/17/2022 16:32	5.91
6/18/2022 13:13	32.59	6/18/2022 14:00	19.25	6/17/2022 16:33	5.92
6/18/2022 13:14	32.63	6/18/2022 14:01	19.27	6/17/2022 16:34	5.90
6/18/2022 13:15	32.59	6/18/2022 14:02	19.26	6/17/2022 16:35	5.90
6/18/2022 13:16	32.59	6/18/2022 14:03	19.26	6/17/2022 16:36	5.90
6/18/2022 13:17	32.58	6/18/2022 14:04	19.22	6/17/2022 16:37	5.90
6/18/2022 13:18	34.14	6/18/2022 14:05	19.24	6/17/2022 16:38	5.92
6/18/2022 13:19	32.88	6/18/2022 14:06	19.23	6/17/2022 16:39	5.90
6/18/2022 13:20	32.74	6/18/2022 14:07	19.26	6/17/2022 16:40	5.91
6/18/2022 13:21	32.73	6/18/2022 14:08	19.22	6/17/2022 16:41	5.91
6/18/2022 13:22	32.67	6/18/2022 14:09	19.24	6/17/2022 16:42	5.93
6/18/2022 13:23	32.67	6/18/2022 14:10	19.27	6/17/2022 16:43	5.91
6/18/2022 13:24	32.69	6/18/2022 14:11	19.25	6/17/2022 16:44	5.91
6/18/2022 13:25	32.66	6/18/2022 14:12	19.29	6/17/2022 16:45	5.91
6/18/2022 13:26	32.64	6/18/2022 14:13	19.25	6/17/2022 16:46	5.95
6/18/2022 13:27	32.64	6/18/2022 14:14	19.27	6/17/2022 16:47	5.90
6/18/2022 13:28	32.63	6/18/2022 14:15	19.25	6/17/2022 16:48	5.91
6/18/2022 13:29	32.64	6/18/2022 14:16	19.27	6/17/2022 16:49	5.90
6/18/2022 13:30	32.66	6/18/2022 14:17	19.23	6/17/2022 16:50	5.90
6/18/2022 13:31	32.67	6/18/2022 14:18	19.25	6/17/2022 16:51	5.94
6/18/2022 13:32	32.69	6/18/2022 14:19	19.24	6/17/2022 16:52	5.94
6/18/2022 13:33	32.67	6/18/2022 14:20	19.24	6/17/2022 16:53	5.91
6/18/2022 13:34	32.66	6/18/2022 14:21	19.27	6/17/2022 16:54	5.92
6/18/2022 13:35	32.65	6/18/2022 14:22	19.25	6/17/2022 16:55	5.92
6/18/2022 13:36	32.67	6/18/2022 14:23	19.27	6/17/2022 16:56	5.93
6/18/2022 13:37	32.65	6/18/2022 14:24	19.26	6/17/2022 16:57	5.89
6/18/2022 13:38	32.64	6/18/2022 14:25	19.27	6/17/2022 16:58	5.88
6/18/2022 13:39	32.65	6/18/2022 14:26	19.23	6/17/2022 16:59	5.91
6/18/2022 13:40	32.64	6/18/2022 14:27	19.25	6/17/2022 17:00	5.91
6/18/2022 13:41	32.63	6/18/2022 14:28	19.25	6/17/2022 17:01	5.90
6/18/2022 13:42	32.67	6/18/2022 14:29	19.27	6/17/2022 17:02	5.90
6/18/2022 13:43	32.65	6/18/2022 14:30	19.25	6/17/2022 17:03	5.90
6/18/2022 13:44	32.64	6/18/2022 14:31	19.23	6/17/2022 17:04	5.94
6/18/2022 13:45	32.63	6/18/2022 14:32	19.26	6/17/2022 17:05	5.90
6/18/2022 13:46	32.61	6/18/2022 14:33	19.25	6/17/2022 17:06	5.90
6/18/2022 13:47	32.63	6/18/2022 14:34	19.24	6/17/2022 17:07	5.92
6/18/2022 13:48	32.64	6/18/2022 14:35	19.26	6/17/2022 17:08	5.92
6/18/2022 13:49	32.61	6/18/2022 14:36	19.24	6/17/2022 17:09	5.90
6/18/2022 13:50	32.60	6/18/2022 14:37	19.25	6/17/2022 17:10	5.89
6/18/2022 13:51	32.61	6/18/2022 14:38	19.26	6/17/2022 17:11	5.90
6/18/2022 13:52	32.63	6/18/2022 14:39	19.23	6/17/2022 17:12	5.89
6/18/2022 13:53	32.62	6/18/2022 14:40	19.26	6/17/2022 17:13	5.95
6/18/2022 13:54	32.62	6/18/2022 14:41	19.28	6/17/2022 17:14	5.91

6/18/2022 13:55	32.61	6/18/2022 14:42	19.24	6/17/2022 17:15	5.92
6/18/2022 13:56	32.64	6/18/2022 14:43	19.26	6/17/2022 17:16	5.90
6/18/2022 13:57	32.61	6/18/2022 14:44	19.26	6/17/2022 17:17	5.91
6/18/2022 13:58	32.63	6/18/2022 14:45	19.26	6/17/2022 17:18	5.94
6/18/2022 13:59	32.61	6/18/2022 14:46	19.27	6/17/2022 17:19	5.89
6/18/2022 14:00	32.61	6/18/2022 14:47	19.26	6/17/2022 17:20	5.94
6/18/2022 14:01	32.63	6/18/2022 14:48	19.27	6/17/2022 17:21	5.93
6/18/2022 14:02	32.60	6/18/2022 14:49	19.24	6/17/2022 17:22	5.92
6/18/2022 14:03	32.64	6/18/2022 14:50	19.25	6/17/2022 17:23	5.92
6/18/2022 14:04	32.65	6/18/2022 14:51	19.25	6/17/2022 17:24	5.94
6/18/2022 14:05	32.63	6/18/2022 14:52	19.26	6/17/2022 17:25	5.90
6/18/2022 14:06	32.61	6/18/2022 14:53	19.23	6/17/2022 17:26	5.87
6/18/2022 14:07	32.65	6/18/2022 14:54	19.28	6/17/2022 17:27	5.92
6/18/2022 14:08	32.58	6/18/2022 14:55	19.24	6/17/2022 17:28	5.89
6/18/2022 14:09	32.62	6/18/2022 14:56	19.27	6/17/2022 17:29	5.87
6/18/2022 14:10	32.58	6/18/2022 14:57	19.24	6/17/2022 17:30	5.92
6/18/2022 14:11	32.61	6/18/2022 14:58	19.26	6/17/2022 17:31	5.93
6/18/2022 14:12	32.61	6/18/2022 14:59	19.26	6/17/2022 17:32	5.90
6/18/2022 14:13	32.61	6/18/2022 15:00	19.28	6/17/2022 17:33	5.90
6/18/2022 14:14	32.61	6/18/2022 15:01	19.26	6/17/2022 17:34	5.93
6/18/2022 14:15	32.60	6/18/2022 15:02	19.28	6/17/2022 17:35	5.92
6/18/2022 14:16	32.60	6/18/2022 15:03	19.25	6/17/2022 17:36	5.94
6/18/2022 14:17	32.59	6/18/2022 15:04	19.25	6/17/2022 17:37	5.93
6/18/2022 14:18	32.62	6/18/2022 15:05	19.27	6/17/2022 17:38	5.91
6/18/2022 14:19	32.60	6/18/2022 15:06	19.25	6/17/2022 17:39	5.91
6/18/2022 14:20	32.60	6/18/2022 15:07	19.27	6/17/2022 17:40	5.92
6/18/2022 14:21	32.59	6/18/2022 15:08	19.26	6/17/2022 17:41	5.92
6/18/2022 14:22	32.61	6/18/2022 15:09	19.26	6/17/2022 17:42	5.94
6/18/2022 14:23	32.61	6/18/2022 15:10	19.25	6/17/2022 17:43	5.93
6/18/2022 14:24	32.54	6/18/2022 15:11	19.29	6/17/2022 17:44	5.92
6/18/2022 14:25	32.60	6/18/2022 15:12	19.28	6/17/2022 17:45	5.91
6/18/2022 14:26	32.63	6/18/2022 15:13	19.26	6/17/2022 17:46	5.95
6/18/2022 14:27	32.60	6/18/2022 15:14	19.25	6/17/2022 17:47	5.95
6/18/2022 14:28	32.61	6/18/2022 15:15	19.27	6/17/2022 17:48	5.90
6/18/2022 14:29	32.59	6/18/2022 15:16	19.26	6/17/2022 17:49	5.90
6/18/2022 14:30	32.61	6/18/2022 15:17	19.27	6/17/2022 17:50	5.93
6/18/2022 14:31	32.59	6/18/2022 15:18	19.27	6/17/2022 17:51	5.92
6/18/2022 14:32	32.60	6/18/2022 15:19	19.25	6/17/2022 17:52	5.91
6/18/2022 14:33	32.60	6/18/2022 15:20	19.28	6/17/2022 17:53	5.93
6/18/2022 14:34	32.61	6/18/2022 15:21	19.25	6/17/2022 17:54	5.95
6/18/2022 14:35	32.61	6/18/2022 15:22	19.25	6/17/2022 17:55	5.88
6/18/2022 14:36	32.57	6/18/2022 15:23	19.26	6/17/2022 17:56	5.91
6/18/2022 14:37	32.55	6/18/2022 15:24	19.25	6/17/2022 17:57	5.93
6/18/2022 14:38	32.58	6/18/2022 15:25	19.22	6/17/2022 17:58	5.93
6/18/2022 14:39	32.58	6/18/2022 15:26	19.27	6/17/2022 17:59	5.88
6/18/2022 14:40	32.61	6/18/2022 15:27	19.25	6/17/2022 18:00	5.93
6/18/2022 14:41	32.58	6/18/2022 15:28	19.28	6/17/2022 18:01	5.90
6/18/2022 14:42	32.61	6/18/2022 15:29	19.27	6/17/2022 18:02	5.92
6/18/2022 14:43	32.61	6/18/2022 15:30	19.28	6/17/2022 18:03	5.96
6/18/2022 14:44	32.56	6/18/2022 15:31	19.26	6/17/2022 18:04	5.93
6/18/2022 14:45	32.60	6/18/2022 15:32	19.26	6/17/2022 18:05	5.92
6/18/2022 14:46	32.61	6/18/2022 15:33	19.27	6/17/2022 18:06	5.93
6/18/2022 14:47	32.58	6/18/2022 15:34	19.28	6/17/2022 18:07	5.91
6/18/2022 14:48	32.59	6/18/2022 15:35	19.26	6/17/2022 18:08	5.93
6/18/2022 14:49	32.61	6/18/2022 15:36	19.27	6/17/2022 18:09	5.90
6/18/2022 14:50	32.60	6/18/2022 15:37	19.25	6/17/2022 18:10	5.91
6/18/2022 14:51	32.59	6/18/2022 15:38	19.25	6/17/2022 18:11	5.91
6/18/2022 14:52	32.58	6/18/2022 15:39	19.24	6/17/2022 18:12	5.91
6/18/2022 14:53	32.59	6/18/2022 15:40	19.24	6/17/2022 18:13	5.91
6/18/2022 14:54	32.59	6/18/2022 15:41	19.28	6/17/2022 18:14	5.93
6/18/2022 14:55	32.60	6/18/2022 15:42	19.25	6/17/2022 18:15	5.92
6/18/2022 14:56	32.61	6/18/2022 15:43	19.24	6/17/2022 18:16	5.92
6/18/2022 14:57	32.61	6/18/2022 15:44	19.25	6/17/2022 18:17	5.92
6/18/2022 14:58	32.56	6/18/2022 15:45	19.26	6/17/2022 18:18	5.91
6/18/2022 14:59	32.59	6/18/2022 15:46	19.25	6/17/2022 18:19	5.89
6/18/2022 15:00	32.63	6/18/2022 15:47	19.24	6/17/2022 18:20	5.90
6/18/2022 15:01	32.63	6/18/2022 15:48	19.27	6/17/2022 18:21	5.93
6/18/2022 15:02	32.62	6/18/2022 15:49	19.27	6/17/2022 18:22	5.93
6/18/2022 15:03	32.64	6/18/2022 15:50	19.24	6/17/2022 18:23	5.94
6/18/2022 15:04	32.63	6/18/2022 15:51	19.23	6/17/2022 18:24	5.90
6/18/2022 15:05	32.63	6/18/2022 15:52	19.25	6/17/2022 18:25	5.93
6/18/2022 15:06	32.61	6/18/2022 15:53	19.26	6/17/2022 18:26	5.92
6/18/2022 15:07	32.61	6/18/2022 15:54	19.28	6/17/2022 18:27	5.93
6/18/2022 15:08	32.63	6/18/2022 15:55	19.28	6/17/2022 18:28	5.90
6/18/2022 15:09	32.59	6/18/2022 15:56	19.21	6/17/2022 18:29	5.92
6/18/2022 15:10	32.59	6/18/2022 15:57	19.25	6/17/2022 18:30	5.96
6/18/2022 15:11	32.61	6/18/2022 15:58	19.26	6/17/2022 18:31	5.89
6/18/2022 15:12	32.60	6/18/2022 15:59	19.25	6/17/2022 18:32	5.90
6/18/2022 15:13	32.59	6/18/2022 16:00	19.26	6/17/2022 18:33	5.91
6/18/2022 15:14	32.64	6/18/2022 16:01	19.27	6/17/2022 18:34	5.93
6/18/2022 15:15	32.59	6/18/2022 16:02	19.26	6/17/2022 18:35	5.90
6/18/2022 15:16	32.60	6/18/2022 16:03	19.26	6/17/2022 18:36	5.92
6/18/2022 15:17	32.57	6/18/2022 16:04	19.25	6/17/2022 18:37	5.95
6/18/2022 15:18	32.60	6/18/2022 16:05	19.24	6/17/2022 18:38	5.95
6/18/2022 15:19	32.61	6/18/2022 16:06	19.26	6/17/2022 18:39	5.91
6/18/2022 15:20	32.63	6/18/2022 16:07	19.22	6/17/2022 18:40	5.94
6/18/2022 15:21	32.62	6/18/2022 16:08	19.27	6/17/2022 18:41	5.91
6/18/2022 15:22	32.59	6/18/2022 16:09	19.26	6/17/2022 18:42	5.93

6/18/2022 15:23	32.57	6/18/2022 16:10	19.25	6/17/2022 18:43	5.94
6/18/2022 15:24	32.60	6/18/2022 16:11	19.26	6/17/2022 18:44	5.92
6/18/2022 15:25	32.57	6/18/2022 16:12	19.22	6/17/2022 18:45	5.94
6/18/2022 15:26	32.60	6/18/2022 16:13	19.28	6/17/2022 18:46	5.93
6/18/2022 15:27	32.60	6/18/2022 16:14	19.25	6/17/2022 18:47	5.93
6/18/2022 15:28	32.61	6/18/2022 16:15	19.27	6/17/2022 18:48	5.92
6/18/2022 15:29	32.59	6/18/2022 16:16	19.27	6/17/2022 18:49	5.91
6/18/2022 15:30	32.63	6/18/2022 16:17	19.26	6/17/2022 18:50	5.88
6/18/2022 15:31	32.60	6/18/2022 16:18	19.27	6/17/2022 18:51	5.92
6/18/2022 15:32	32.60	6/18/2022 16:19	19.23	6/17/2022 18:52	5.94
6/18/2022 15:33	32.62	6/18/2022 16:20	19.26	6/17/2022 18:53	5.92
6/18/2022 15:34	32.62	6/18/2022 16:21	19.22	6/17/2022 18:54	5.90
6/18/2022 15:35	32.58	6/18/2022 16:22	19.25	6/17/2022 18:55	5.87
6/18/2022 15:36	32.61	6/18/2022 16:23	19.25	6/17/2022 18:56	5.93
6/18/2022 15:37	32.61	6/18/2022 16:24	19.26	6/17/2022 18:57	5.94
6/18/2022 15:38	32.61	6/18/2022 16:25	19.28	6/17/2022 18:58	5.93
6/18/2022 15:39	32.58	6/18/2022 16:26	19.27	6/17/2022 18:59	5.93
6/18/2022 15:40	32.60	6/18/2022 16:27	19.25	6/17/2022 19:00	5.91
6/18/2022 15:41	32.58	6/18/2022 16:28	19.25	6/17/2022 19:01	5.92
6/18/2022 15:42	32.60	6/18/2022 16:29	19.24	6/17/2022 19:02	5.88
6/18/2022 15:43	32.59	6/18/2022 16:30	19.22	6/17/2022 19:03	5.93
6/18/2022 15:44	32.59	6/18/2022 16:31	19.26	6/17/2022 19:04	5.94
6/18/2022 15:45	32.62	6/18/2022 16:32	19.27	6/17/2022 19:05	5.94
6/18/2022 15:46	32.59	6/18/2022 16:33	19.26	6/17/2022 19:06	5.92
6/18/2022 15:47	32.59	6/18/2022 16:34	19.27	6/17/2022 19:07	5.92
6/18/2022 15:48	32.62	6/18/2022 16:35	19.23	6/17/2022 19:08	5.89
6/18/2022 15:49	32.58	6/18/2022 16:36	19.24	6/17/2022 19:09	5.94
6/18/2022 15:50	32.58	6/18/2022 16:37	19.26	6/17/2022 19:10	5.91
6/18/2022 15:51	32.60	6/18/2022 16:38	19.24	6/17/2022 19:11	5.93
6/18/2022 15:52	32.58	6/18/2022 16:39	19.25	6/17/2022 19:12	5.90
6/18/2022 15:53	32.59	6/18/2022 16:40	19.27	6/17/2022 19:13	5.91
6/18/2022 15:54	32.56	6/18/2022 16:41	19.24	6/17/2022 19:14	5.88
6/18/2022 15:55	32.57	6/18/2022 16:42	19.24	6/17/2022 19:15	5.96
6/18/2022 15:56	32.59	6/18/2022 16:43	19.26	6/17/2022 19:16	5.90
6/18/2022 15:57	32.58	6/18/2022 16:44	19.27	6/17/2022 19:17	5.91
6/18/2022 15:58	32.57	6/18/2022 16:45	19.26	6/17/2022 19:18	5.92
6/18/2022 15:59	32.61	6/18/2022 16:46	19.28	6/17/2022 19:19	5.93
6/18/2022 16:00	32.58	6/18/2022 16:47	19.27	6/17/2022 19:20	5.95
6/18/2022 16:01	32.57	6/18/2022 16:48	19.26	6/17/2022 19:21	5.93
6/18/2022 16:02	32.57	6/18/2022 16:49	19.23	6/17/2022 19:22	5.92
6/18/2022 16:03	32.58	6/18/2022 16:50	19.25	6/17/2022 19:23	5.91
6/18/2022 16:04	32.59	6/18/2022 16:51	19.27	6/17/2022 19:24	5.93
6/18/2022 16:05	32.60	6/18/2022 16:52	19.26	6/17/2022 19:25	5.91
6/18/2022 16:06	32.59	6/18/2022 16:53	19.29	6/17/2022 19:26	5.95
6/18/2022 16:07	32.58	6/18/2022 16:54	19.26	6/17/2022 19:27	5.93
6/18/2022 16:08	32.57	6/18/2022 16:55	19.26	6/17/2022 19:28	5.90
6/18/2022 16:09	32.57	6/18/2022 16:56	19.28	6/17/2022 19:29	5.91
6/18/2022 16:10	32.59	6/18/2022 16:57	19.25	6/17/2022 19:30	5.92
6/18/2022 16:11	32.58	6/18/2022 16:58	19.27	6/17/2022 19:31	5.94
6/18/2022 16:12	32.57	6/18/2022 16:59	19.26	6/17/2022 19:32	5.90
6/18/2022 16:13	32.58	6/18/2022 17:00	19.23	6/17/2022 19:33	5.93
6/18/2022 16:14	32.58	6/18/2022 17:01	19.25	6/17/2022 19:34	5.91
6/18/2022 16:15	32.61	6/18/2022 17:02	19.26	6/17/2022 19:35	5.93
6/18/2022 16:16	32.56	6/18/2022 17:03	19.26	6/17/2022 19:36	5.92
6/18/2022 16:17	32.60	6/18/2022 17:04	19.29	6/17/2022 19:37	5.92
6/18/2022 16:18	32.57	6/18/2022 17:05	19.25	6/17/2022 19:38	5.93
6/18/2022 16:19	32.59	6/18/2022 17:06	19.27	6/17/2022 19:39	5.91
6/18/2022 16:20	32.56	6/18/2022 17:07	19.27	6/17/2022 19:40	5.90
6/18/2022 16:21	32.59	6/18/2022 17:08	19.27	6/17/2022 19:41	5.87
6/18/2022 16:22	32.59	6/18/2022 17:09	19.27	6/17/2022 19:42	5.91
6/18/2022 16:23	32.59	6/18/2022 17:10	19.26	6/17/2022 19:43	5.92
6/18/2022 16:24	32.61	6/18/2022 17:11	19.26	6/17/2022 19:44	5.90
6/18/2022 16:25	32.56	6/18/2022 17:12	19.24	6/17/2022 19:45	5.93
6/18/2022 16:26	32.60	6/18/2022 17:13	19.24	6/17/2022 19:46	5.93
6/18/2022 16:27	32.57	6/18/2022 17:14	19.26	6/17/2022 19:47	5.94
6/18/2022 16:28	32.57	6/18/2022 17:15	19.26	6/17/2022 19:48	5.91
6/18/2022 16:29	32.59	6/18/2022 17:16	19.26	6/17/2022 19:49	5.94
6/18/2022 16:30	32.58	6/18/2022 17:17	19.85	6/17/2022 19:50	5.93
6/18/2022 16:31	32.58	6/18/2022 17:18	19.98	6/17/2022 19:51	5.92
6/18/2022 16:32	32.60	6/18/2022 17:19	20.02	6/17/2022 19:52	5.92
6/18/2022 16:33	32.60	6/18/2022 17:20	20.04	6/17/2022 19:53	5.94
6/18/2022 16:34	32.60	6/18/2022 17:21	20.06	6/17/2022 19:54	5.95
6/18/2022 16:35	32.62	6/18/2022 17:22	19.56	6/17/2022 19:55	5.91
6/18/2022 16:36	32.62	6/18/2022 17:23	19.50	6/17/2022 19:56	5.95
6/18/2022 16:37	32.62	6/18/2022 17:24	19.44	6/17/2022 19:57	5.93
6/18/2022 16:38	32.63	6/18/2022 17:25	19.43	6/17/2022 19:58	5.92
6/18/2022 16:39	32.61	6/18/2022 17:26	19.41	6/17/2022 19:59	5.95
6/18/2022 16:40	32.60	6/18/2022 17:27	19.38	6/17/2022 20:00	5.93
6/18/2022 16:41	32.60	6/18/2022 17:28	19.39	6/17/2022 20:01	5.93
6/18/2022 16:42	32.63	6/18/2022 17:29	19.37	6/17/2022 20:02	5.98
6/18/2022 16:43	32.59	6/18/2022 17:30	19.38	6/17/2022 20:03	5.91
6/18/2022 16:44	32.64	6/18/2022 17:31	19.38	6/17/2022 20:04	5.90
6/18/2022 16:45	32.61	6/18/2022 17:32	19.37	6/17/2022 20:05	5.90
6/18/2022 16:46	32.63	6/18/2022 17:33	19.35	6/17/2022 20:06	5.93
6/18/2022 16:47	32.60	6/18/2022 17:34	19.34	6/17/2022 20:07	5.92
6/18/2022 16:48	32.59	6/18/2022 17:35	19.37	6/17/2022 20:08	5.91
6/18/2022 16:49	32.61	6/18/2022 17:36	19.33	6/17/2022 20:09	5.91
6/18/2022 16:50	32.60	6/18/2022 17:37	19.37	6/17/2022 20:10	5.91

6/18/2022 16:51	32.61	6/18/2022 17:38	19.34	6/17/2022 20:11	5.89
6/18/2022 16:52	32.58	6/18/2022 17:39	19.33	6/17/2022 20:12	5.96
6/18/2022 16:53	32.57	6/18/2022 17:40	19.35	6/17/2022 20:13	5.94
6/18/2022 16:54	32.62	6/18/2022 17:41	19.35	6/17/2022 20:14	5.96
6/18/2022 16:55	32.60	6/18/2022 17:42	19.31	6/17/2022 20:15	5.94
6/18/2022 16:56	32.58	6/18/2022 17:43	19.30	6/17/2022 20:16	5.93
6/18/2022 16:57	32.60	6/18/2022 17:44	19.30	6/17/2022 20:17	5.89
6/18/2022 16:58	32.60	6/18/2022 17:45	19.34	6/17/2022 20:18	5.91
6/18/2022 16:59	32.62	6/18/2022 17:46	19.34	6/17/2022 20:19	5.89
6/18/2022 17:00	32.61	6/18/2022 17:47	19.32	6/17/2022 20:20	5.89
6/18/2022 17:01	32.59	6/18/2022 17:48	19.33	6/17/2022 20:21	5.93
6/18/2022 17:02	32.61	6/18/2022 17:49	19.32	6/17/2022 20:22	5.93
6/18/2022 17:03	32.59	6/18/2022 17:50	19.31	6/17/2022 20:23	5.94
6/18/2022 17:04	32.60	6/18/2022 17:51	19.31	6/17/2022 20:24	5.92
6/18/2022 17:05	32.61	6/18/2022 17:52	19.28	6/17/2022 20:25	5.93
6/18/2022 17:06	32.60	6/18/2022 17:53	19.30	6/17/2022 20:26	5.93
6/18/2022 17:07	32.60	6/18/2022 17:54	19.29	6/17/2022 20:27	5.88
6/18/2022 17:08	32.62	6/18/2022 17:55	19.29	6/17/2022 20:28	5.95
6/18/2022 17:09	32.57	6/18/2022 17:56	19.31	6/17/2022 20:29	5.91
6/18/2022 17:10	32.59	6/18/2022 17:57	19.31	6/17/2022 20:30	5.94
6/18/2022 17:11	32.56	6/18/2022 17:58	19.33	6/17/2022 20:31	5.90
6/18/2022 17:12	32.59	6/18/2022 17:59	19.32	6/17/2022 20:32	5.90
6/18/2022 17:13	32.62	6/18/2022 18:00	19.29	6/17/2022 20:33	5.94
6/18/2022 17:14	32.59	6/18/2022 18:01	19.33	6/17/2022 20:34	5.94
6/18/2022 17:15	32.61	6/18/2022 18:02	19.32	6/17/2022 20:35	5.92
6/18/2022 17:16	32.60	6/18/2022 18:03	19.29	6/17/2022 20:36	5.93
6/18/2022 17:17	32.61	6/18/2022 18:04	19.32	6/17/2022 20:37	5.92
6/18/2022 17:18	32.61	6/18/2022 18:05	19.29	6/17/2022 20:38	5.93
6/18/2022 17:19	32.57	6/18/2022 18:06	19.30	6/17/2022 20:39	5.92
6/18/2022 17:20	32.57	6/18/2022 18:07	19.29	6/17/2022 20:40	5.94
6/18/2022 17:21	32.58	6/18/2022 18:08	19.32	6/17/2022 20:41	5.92
6/18/2022 17:22	32.60	6/18/2022 18:09	19.30	6/17/2022 20:42	5.92
6/18/2022 17:23	32.57	6/18/2022 18:10	19.29	6/17/2022 20:43	5.92
6/18/2022 17:24	32.60	6/18/2022 18:11	19.31	6/17/2022 20:44	5.92
6/18/2022 17:25	32.56	6/18/2022 18:12	19.33	6/17/2022 20:45	5.93
6/18/2022 17:26	32.59	6/18/2022 18:13	19.29	6/17/2022 20:46	5.92
6/18/2022 17:27	32.57	6/18/2022 18:14	19.31	6/17/2022 20:47	5.87
6/18/2022 17:28	32.58	6/18/2022 18:15	19.32	6/17/2022 20:48	5.90
6/18/2022 17:29	32.59	6/18/2022 18:16	19.30	6/17/2022 20:49	5.94
6/18/2022 17:30	32.58	6/18/2022 18:17	19.29	6/17/2022 20:50	5.94
6/18/2022 17:31	32.58	6/18/2022 18:18	19.31	6/17/2022 20:51	5.93
6/18/2022 17:32	32.59	6/18/2022 18:19	19.29	6/17/2022 20:52	5.94
6/18/2022 17:33	32.60	6/18/2022 18:20	19.31	6/17/2022 20:53	5.92
6/18/2022 17:34	32.59	6/18/2022 18:21	19.29	6/17/2022 20:54	5.97
6/18/2022 17:35	32.61	6/18/2022 18:22	19.33	6/17/2022 20:55	5.93
6/18/2022 17:36	32.58	6/18/2022 18:23	19.29	6/17/2022 20:56	5.93
6/18/2022 17:37	32.61	6/18/2022 18:24	19.32	6/17/2022 20:57	5.92
6/18/2022 17:38	33.99	6/18/2022 18:25	19.30	6/17/2022 20:58	5.91
6/18/2022 17:39	32.80	6/18/2022 18:26	19.29	6/17/2022 20:59	5.92
6/18/2022 17:40	32.74	6/18/2022 18:27	19.32	6/17/2022 21:00	5.91
6/18/2022 17:41	32.68	6/18/2022 18:28	19.28	6/17/2022 21:01	5.89
6/18/2022 17:42	32.67	6/18/2022 18:29	19.32	6/17/2022 21:02	5.90
6/18/2022 17:43	32.66	6/18/2022 18:30	19.30	6/17/2022 21:03	5.92
6/18/2022 17:44	32.68	6/18/2022 18:31	19.31	6/17/2022 21:04	5.91
6/18/2022 17:45	32.65	6/18/2022 18:32	19.32	6/17/2022 21:05	5.91
6/18/2022 17:46	32.66	6/18/2022 18:33	19.26	6/17/2022 21:06	5.94
6/18/2022 17:47	32.63	6/18/2022 18:34	19.28	6/17/2022 21:07	5.93
6/18/2022 17:48	32.63	6/18/2022 18:35	19.92	6/17/2022 21:08	5.91
6/18/2022 17:49	32.61	6/18/2022 18:36	20.00	6/17/2022 21:09	5.91
6/18/2022 17:50	32.65	6/18/2022 18:37	20.07	6/17/2022 21:10	5.89
6/18/2022 17:51	32.61	6/18/2022 18:38	20.08	6/17/2022 21:11	5.93
6/18/2022 17:52	32.60	6/18/2022 18:39	20.08	6/17/2022 21:12	5.91
6/18/2022 17:53	32.61	6/18/2022 18:40	19.59	6/17/2022 21:13	5.94
6/18/2022 17:54	32.61	6/18/2022 18:41	19.51	6/17/2022 21:14	5.90
6/18/2022 17:55	32.62	6/18/2022 18:42	19.48	6/17/2022 21:15	5.95
6/18/2022 17:56	32.62	6/18/2022 18:43	19.43	6/17/2022 21:16	5.92
6/18/2022 17:57	32.64	6/18/2022 18:44	19.43	6/17/2022 21:17	5.94
6/18/2022 17:58	32.63	6/18/2022 18:45	19.41	6/17/2022 21:18	5.92
6/18/2022 17:59	32.62	6/18/2022 18:46	19.42	6/17/2022 21:19	5.95
6/18/2022 18:00	32.59	6/18/2022 18:47	19.41	6/17/2022 21:20	5.93
6/18/2022 18:01	32.62	6/18/2022 18:48	19.40	6/17/2022 21:21	5.91
6/18/2022 18:02	32.65	6/18/2022 18:49	19.39	6/17/2022 21:22	5.92
6/18/2022 18:03	32.68	6/18/2022 18:50	19.41	6/17/2022 21:23	5.92
6/18/2022 18:04	32.68	6/18/2022 18:51	19.38	6/17/2022 21:24	5.91
6/18/2022 18:05	32.69	6/18/2022 18:52	19.40	6/17/2022 21:25	5.92
6/18/2022 18:06	32.70	6/18/2022 18:53	19.38	6/17/2022 21:26	5.92
6/18/2022 18:07	32.69	6/18/2022 18:54	19.36	6/17/2022 21:27	5.95
6/18/2022 18:08	32.67	6/18/2022 18:55	19.39	6/17/2022 21:28	5.92
6/18/2022 18:09	32.68	6/18/2022 18:56	19.39	6/17/2022 21:29	5.94
6/18/2022 18:10	32.68	6/18/2022 18:57	19.36	6/17/2022 21:30	5.93
6/18/2022 18:11	32.71	6/18/2022 18:58	19.36	6/17/2022 21:31	5.95
6/18/2022 18:12	32.73	6/18/2022 18:59	19.36	6/17/2022 21:32	5.94
6/18/2022 18:13	32.72	6/18/2022 19:00	19.36	6/17/2022 21:33	5.94
6/18/2022 18:14	32.69	6/18/2022 19:01	19.36	6/17/2022 21:34	5.90
6/18/2022 18:15	32.68	6/18/2022 19:02	19.34	6/17/2022 21:35	5.92
6/18/2022 18:16	32.68	6/18/2022 19:03	19.34	6/17/2022 21:36	5.91
6/18/2022 18:17	32.69	6/18/2022 19:04	19.36	6/17/2022 21:37	5.91
6/18/2022 18:18	32.72	6/18/2022 19:05	19.34	6/17/2022 21:38	5.91

6/18/2022 18:19	32.74	6/18/2022 19:06	19.36	6/17/2022 21:39	5.91
6/18/2022 18:20	32.74	6/18/2022 19:07	19.32	6/17/2022 21:40	5.94
6/18/2022 18:21	32.78	6/18/2022 19:08	19.37	6/17/2022 21:41	5.92
6/18/2022 18:22	32.73	6/18/2022 19:09	19.36	6/17/2022 21:42	5.91
6/18/2022 18:23	32.69	6/18/2022 19:10	19.34	6/17/2022 21:43	5.92
6/18/2022 18:24	32.74	6/18/2022 19:11	19.32	6/17/2022 21:44	5.93
6/18/2022 18:25	32.72	6/18/2022 19:12	19.34	6/17/2022 21:45	5.94
6/18/2022 18:26	32.71	6/18/2022 19:13	19.32	6/17/2022 21:46	5.90
6/18/2022 18:27	32.69	6/18/2022 19:14	19.34	6/17/2022 21:47	5.93
6/18/2022 18:28	32.70	6/18/2022 19:15	19.33	6/17/2022 21:48	5.95
6/18/2022 18:29	32.69	6/18/2022 19:16	19.31	6/17/2022 21:49	5.94
6/18/2022 18:30	32.71	6/18/2022 19:17	19.33	6/17/2022 21:50	5.95
6/18/2022 18:31	32.70	6/18/2022 19:18	19.33	6/17/2022 21:51	5.92
6/18/2022 18:32	32.70	6/18/2022 19:19	19.33	6/17/2022 21:52	5.93
6/18/2022 18:33	32.68	6/18/2022 19:20	19.33	6/17/2022 21:53	5.92
6/18/2022 18:34	32.68	6/18/2022 19:21	19.33	6/17/2022 21:54	5.92
6/18/2022 18:35	32.67	6/18/2022 19:22	19.33	6/17/2022 21:55	5.94
6/18/2022 18:36	32.70	6/18/2022 19:23	19.32	6/17/2022 21:56	5.92
6/18/2022 18:37	32.66	6/18/2022 19:24	19.32	6/17/2022 21:57	5.90
6/18/2022 18:38	32.68	6/18/2022 19:25	19.32	6/17/2022 21:58	5.91
6/18/2022 18:39	32.65	6/18/2022 19:26	19.33	6/17/2022 21:59	5.90
6/18/2022 18:40	32.65	6/18/2022 19:27	19.31	6/17/2022 22:00	5.92
6/18/2022 18:41	32.66	6/18/2022 19:28	19.31	6/17/2022 22:01	5.90
6/18/2022 18:42	32.66	6/18/2022 19:29	19.31	6/17/2022 22:02	5.90
6/18/2022 18:43	32.69	6/18/2022 19:30	19.33	6/17/2022 22:03	5.93
6/18/2022 18:44	32.66	6/18/2022 19:31	19.32	6/17/2022 22:04	5.93
6/18/2022 18:45	32.66	6/18/2022 19:32	19.34	6/17/2022 22:05	5.92
6/18/2022 18:46	32.66	6/18/2022 19:33	19.32	6/17/2022 22:06	5.89
6/18/2022 18:47	32.67	6/18/2022 19:34	19.31	6/17/2022 22:07	5.93
6/18/2022 18:48	32.64	6/18/2022 19:35	19.31	6/17/2022 22:08	5.93
6/18/2022 18:49	32.65	6/18/2022 19:36	19.33	6/17/2022 22:09	5.94
6/18/2022 18:50	32.67	6/18/2022 19:37	19.31	6/17/2022 22:10	5.91
6/18/2022 18:51	32.67	6/18/2022 19:38	19.32	6/17/2022 22:11	5.91
6/18/2022 18:52	32.66	6/18/2022 19:39	19.33	6/17/2022 22:12	5.93
6/18/2022 18:53	32.66	6/18/2022 19:40	19.31	6/17/2022 22:13	5.89
6/18/2022 18:54	32.63	6/18/2022 19:41	19.31	6/17/2022 22:14	5.92
6/18/2022 18:55	32.63	6/18/2022 19:42	19.32	6/17/2022 22:15	5.96
6/18/2022 18:56	32.62	6/18/2022 19:43	19.33	6/17/2022 22:16	5.92
6/18/2022 18:57	32.64	6/18/2022 19:44	19.32	6/17/2022 22:17	5.91
6/18/2022 18:58	32.65	6/18/2022 19:45	19.29	6/17/2022 22:18	5.92
6/18/2022 18:59	32.64	6/18/2022 19:46	19.31	6/17/2022 22:19	5.90
6/18/2022 19:00	32.64	6/18/2022 19:47	19.32	6/17/2022 22:20	5.92
6/18/2022 19:01	32.66	6/18/2022 19:48	19.31	6/17/2022 22:21	5.92
6/18/2022 19:02	32.61	6/18/2022 19:49	19.32	6/17/2022 22:22	5.90
6/18/2022 19:03	32.61	6/18/2022 19:50	19.31	6/17/2022 22:23	5.92
6/18/2022 19:04	32.62	6/18/2022 19:51	19.30	6/17/2022 22:24	5.92
6/18/2022 19:05	32.62	6/18/2022 19:52	19.29	6/17/2022 22:25	5.92
6/18/2022 19:06	32.65	6/18/2022 19:53	19.31	6/17/2022 22:26	5.90
6/18/2022 19:07	32.64	6/18/2022 19:54	19.33	6/17/2022 22:27	5.93
6/18/2022 19:08	32.64	6/18/2022 19:55	19.32	6/17/2022 22:28	5.90
6/18/2022 19:09	32.62	6/18/2022 19:56	19.30	6/17/2022 22:29	5.93
6/18/2022 19:10	32.63	6/18/2022 19:57	19.31	6/17/2022 22:30	5.93
6/18/2022 19:11	32.64	6/18/2022 19:58	19.30	6/17/2022 22:31	5.92
6/18/2022 19:12	32.63	6/18/2022 19:59	19.33	6/17/2022 22:32	5.91
6/18/2022 19:13	34.09	6/18/2022 20:00	19.30	6/17/2022 22:33	5.94
6/18/2022 19:14	32.85	6/18/2022 20:01	19.32	6/17/2022 22:34	5.94
6/18/2022 19:15	32.75	6/18/2022 20:02	19.32	6/17/2022 22:35	5.90
6/18/2022 19:16	32.72	6/18/2022 20:03	19.32	6/17/2022 22:36	5.92
6/18/2022 19:17	32.70	6/18/2022 20:04	19.31	6/17/2022 22:37	5.93
6/18/2022 19:18	32.72	6/18/2022 20:05	19.32	6/17/2022 22:38	5.92
6/18/2022 19:19	32.70	6/18/2022 20:06	19.33	6/17/2022 22:39	5.93
6/18/2022 19:20	32.71	6/18/2022 20:07	19.30	6/17/2022 22:40	5.92
6/18/2022 19:21	32.67	6/18/2022 20:08	19.30	6/17/2022 22:41	5.92
6/18/2022 19:22	32.66	6/18/2022 20:09	19.31	6/17/2022 22:42	5.94
6/18/2022 19:23	32.64	6/18/2022 20:10	19.30	6/17/2022 22:43	5.93
6/18/2022 19:24	32.64	6/18/2022 20:11	19.29	6/17/2022 22:44	5.91
6/18/2022 19:25	32.67	6/18/2022 20:12	19.32	6/17/2022 22:45	5.92
6/18/2022 19:26	32.66	6/18/2022 20:13	19.34	6/17/2022 22:46	5.93
6/18/2022 19:27	32.65	6/18/2022 20:14	19.33	6/17/2022 22:47	5.92
6/18/2022 19:28	32.66	6/18/2022 20:15	19.30	6/17/2022 22:48	5.90
6/18/2022 19:29	32.64	6/18/2022 20:16	19.32	6/17/2022 22:49	5.94
6/18/2022 19:30	32.65	6/18/2022 20:17	19.32	6/17/2022 22:50	5.89
6/18/2022 19:31	32.64	6/18/2022 20:18	19.30	6/17/2022 22:51	5.88
6/18/2022 19:32	32.65	6/18/2022 20:19	19.32	6/17/2022 22:52	5.90
6/18/2022 19:33	32.62	6/18/2022 20:20	19.29	6/17/2022 22:53	5.91
6/18/2022 19:34	32.64	6/18/2022 20:21	19.33	6/17/2022 22:54	5.90
6/18/2022 19:35	32.63	6/18/2022 20:22	19.31	6/17/2022 22:55	5.94
6/18/2022 19:36	32.61	6/18/2022 20:23	19.32	6/17/2022 22:56	5.95
6/18/2022 19:37	32.61	6/18/2022 20:24	19.32	6/17/2022 22:57	8.52
6/18/2022 19:38	32.65	6/18/2022 20:25	19.30	6/17/2022 22:58	7.66
6/18/2022 19:39	32.65	6/18/2022 20:26	19.31	6/17/2022 22:59	6.04
6/18/2022 19:40	32.64	6/18/2022 20:27	19.27	6/17/2022 23:00	5.97
6/18/2022 19:41	32.67	6/18/2022 20:28	19.29	6/17/2022 23:01	5.89
6/18/2022 19:42	32.62	6/18/2022 20:29	19.29	6/17/2022 23:02	5.94
6/18/2022 19:43	32.62	6/18/2022 20:30	19.31	6/17/2022 23:03	5.93
6/18/2022 19:44	32.66	6/18/2022 20:31	19.30	6/17/2022 23:04	5.92
6/18/2022 19:45	32.62	6/18/2022 20:32	19.30	6/17/2022 23:05	5.92
6/18/2022 19:46	32.59	6/18/2022 20:33	19.30	6/17/2022 23:06	5.94

6/18/2022 19:47	32.62	6/18/2022 20:34	19.31	6/17/2022 23:07	5.90
6/18/2022 19:48	32.62	6/18/2022 20:35	19.31	6/17/2022 23:08	5.94
6/18/2022 19:49	32.63	6/18/2022 20:36	19.31	6/17/2022 23:09	5.92
6/18/2022 19:50	32.64	6/18/2022 20:37	19.31	6/17/2022 23:10	5.91
6/18/2022 19:51	32.62	6/18/2022 20:38	19.29	6/17/2022 23:11	5.93
6/18/2022 19:52	32.62	6/18/2022 20:39	19.32	6/17/2022 23:12	5.94
6/18/2022 19:53	32.61	6/18/2022 20:40	19.31	6/17/2022 23:13	5.91
6/18/2022 19:54	32.63	6/18/2022 20:41	19.33	6/17/2022 23:14	5.90
6/18/2022 19:55	32.64	6/18/2022 20:42	19.32	6/17/2022 23:15	5.92
6/18/2022 19:56	32.62	6/18/2022 20:43	19.34	6/17/2022 23:16	5.88
6/18/2022 19:57	32.64	6/18/2022 20:44	19.30	6/17/2022 23:17	5.95
6/18/2022 19:58	32.62	6/18/2022 20:45	19.32	6/17/2022 23:18	5.93
6/18/2022 19:59	32.60	6/18/2022 20:46	19.27	6/17/2022 23:19	5.94
6/18/2022 20:00	32.65	6/18/2022 20:47	19.34	6/17/2022 23:20	5.94
6/18/2022 20:01	32.61	6/18/2022 20:48	19.29	6/17/2022 23:21	5.94
6/18/2022 20:02	32.60	6/18/2022 20:49	19.33	6/17/2022 23:22	5.92
6/18/2022 20:03	32.63	6/18/2022 20:50	19.31	6/17/2022 23:23	5.92
6/18/2022 20:04	32.65	6/18/2022 20:51	19.29	6/17/2022 23:24	5.95
6/18/2022 20:05	32.63	6/18/2022 20:52	19.31	6/17/2022 23:25	5.91
6/18/2022 20:06	32.63	6/18/2022 20:53	19.31	6/17/2022 23:26	5.95
6/18/2022 20:07	32.63	6/18/2022 20:54	19.31	6/17/2022 23:27	5.94
6/18/2022 20:08	32.61	6/18/2022 20:55	19.28	6/17/2022 23:28	5.91
6/18/2022 20:09	32.60	6/18/2022 20:56	19.29	6/17/2022 23:29	5.93
6/18/2022 20:10	32.63	6/18/2022 20:57	19.31	6/17/2022 23:30	5.92
6/18/2022 20:11	32.61	6/18/2022 20:58	19.30	6/17/2022 23:31	5.96
6/18/2022 20:12	32.61	6/18/2022 20:59	19.31	6/17/2022 23:32	5.91
6/18/2022 20:13	32.60	6/18/2022 21:00	19.29	6/17/2022 23:33	5.94
6/18/2022 20:14	32.60	6/18/2022 21:01	19.31	6/17/2022 23:34	5.89
6/18/2022 20:15	32.61	6/18/2022 21:02	19.32	6/17/2022 23:35	5.89
6/18/2022 20:16	32.60	6/18/2022 21:03	19.28	6/17/2022 23:36	5.92
6/18/2022 20:17	32.60	6/18/2022 21:04	19.32	6/17/2022 23:37	5.94
6/18/2022 20:18	32.61	6/18/2022 21:05	19.32	6/17/2022 23:38	5.93
6/18/2022 20:19	32.61	6/18/2022 21:06	19.30	6/17/2022 23:39	5.92
6/18/2022 20:20	32.59	6/18/2022 21:07	19.32	6/17/2022 23:40	5.90
6/18/2022 20:21	32.63	6/18/2022 21:08	19.27	6/17/2022 23:41	5.91
6/18/2022 20:22	32.62	6/18/2022 21:09	19.29	6/17/2022 23:42	5.94
6/18/2022 20:23	32.64	6/18/2022 21:10	19.31	6/17/2022 23:43	5.95
6/18/2022 20:24	32.60	6/18/2022 21:11	19.32	6/17/2022 23:44	5.90
6/18/2022 20:25	32.62	6/18/2022 21:12	19.29	6/17/2022 23:45	5.89
6/18/2022 20:26	32.58	6/18/2022 21:13	19.32	6/17/2022 23:46	5.95
6/18/2022 20:27	32.61	6/18/2022 21:14	19.30	6/17/2022 23:47	5.93
6/18/2022 20:28	32.61	6/18/2022 21:15	19.31	6/17/2022 23:48	5.94
6/18/2022 20:29	32.60	6/18/2022 21:16	19.30	6/17/2022 23:49	5.95
6/18/2022 20:30	32.61	6/18/2022 21:17	19.31	6/17/2022 23:50	5.93
6/18/2022 20:31	32.64	6/18/2022 21:18	19.30	6/17/2022 23:51	5.91
6/18/2022 20:32	32.58	6/18/2022 21:19	19.31	6/17/2022 23:52	5.90
6/18/2022 20:33	32.61	6/18/2022 21:20	19.32	6/17/2022 23:53	5.91
6/18/2022 20:34	32.61	6/18/2022 21:21	19.32	6/17/2022 23:54	5.91
6/18/2022 20:35	32.62	6/18/2022 21:22	19.30	6/17/2022 23:55	5.91
6/18/2022 20:36	32.59	6/18/2022 21:23	19.31	6/17/2022 23:56	5.90
6/18/2022 20:37	32.61	6/18/2022 21:24	19.30	6/17/2022 23:57	5.93
6/18/2022 20:38	32.62	6/18/2022 21:25	19.30	6/17/2022 23:58	5.89
6/18/2022 20:39	32.60	6/18/2022 21:26	19.32	6/17/2022 23:59	5.90
6/18/2022 20:40	32.61	6/18/2022 21:27	19.31	6/18/2022 0:00	5.91
6/18/2022 20:41	32.59	6/18/2022 21:28	19.31	6/18/2022 0:01	5.91
6/18/2022 20:42	32.60	6/18/2022 21:29	19.32	6/18/2022 0:02	5.89
6/18/2022 20:43	32.60	6/18/2022 21:30	19.30	6/18/2022 0:03	5.92
6/18/2022 20:44	32.61	6/18/2022 21:31	19.28	6/18/2022 0:04	5.92
6/18/2022 20:45	32.59	6/18/2022 21:32	19.31	6/18/2022 0:05	5.91
6/18/2022 20:46	32.63	6/18/2022 21:33	19.30	6/18/2022 0:06	5.93
6/18/2022 20:47	32.60	6/18/2022 21:34	19.30	6/18/2022 0:07	5.90
6/18/2022 20:48	32.61	6/18/2022 21:35	19.29	6/18/2022 0:08	5.93
6/18/2022 20:49	32.58	6/18/2022 21:36	19.26	6/18/2022 0:09	5.92
6/18/2022 20:50	32.59	6/18/2022 21:37	19.31	6/18/2022 0:10	5.92
6/18/2022 20:51	32.60	6/18/2022 21:38	19.31	6/18/2022 0:11	5.94
6/18/2022 20:52	32.56	6/18/2022 21:39	19.31	6/18/2022 0:12	5.90
6/18/2022 20:53	32.58	6/18/2022 21:40	19.29	6/18/2022 0:13	5.91
6/18/2022 20:54	32.57	6/18/2022 21:41	19.30	6/18/2022 0:14	5.92
6/18/2022 20:55	32.59	6/18/2022 21:42	19.30	6/18/2022 0:15	5.89
6/18/2022 20:56	32.60	6/18/2022 21:43	19.31	6/18/2022 0:16	5.93
6/18/2022 20:57	32.59	6/18/2022 21:44	19.31	6/18/2022 0:17	5.94
6/18/2022 20:58	32.61	6/18/2022 21:45	19.31	6/18/2022 0:18	5.93
6/18/2022 20:59	32.63	6/18/2022 21:46	19.33	6/18/2022 0:19	5.90
6/18/2022 21:00	32.99	6/18/2022 21:47	19.30	6/18/2022 0:20	5.93
6/18/2022 21:01	33.01	6/18/2022 21:48	19.28	6/18/2022 0:21	5.93
6/18/2022 21:02	32.77	6/18/2022 21:49	19.28	6/18/2022 0:22	5.93
6/18/2022 21:03	32.68	6/18/2022 21:50	19.29	6/18/2022 0:23	5.91
6/18/2022 21:04	32.67	6/18/2022 21:51	19.33	6/18/2022 0:24	5.89
6/18/2022 21:05	32.66	6/18/2022 21:52	19.32	6/18/2022 0:25	5.94
6/18/2022 21:06	32.66	6/18/2022 21:53	19.28	6/18/2022 0:26	5.89
6/18/2022 21:07	32.64	6/18/2022 21:54	19.31	6/18/2022 0:27	5.92
6/18/2022 21:08	32.65	6/18/2022 21:55	19.31	6/18/2022 0:28	5.92
6/18/2022 21:09	32.62	6/18/2022 21:56	19.33	6/18/2022 0:29	5.91
6/18/2022 21:10	32.63	6/18/2022 21:57	19.29	6/18/2022 0:30	5.94
6/18/2022 21:11	32.65	6/18/2022 21:58	19.27	6/18/2022 0:31	5.92
6/18/2022 21:12	32.62	6/18/2022 21:59	19.94	6/18/2022 0:32	5.93
6/18/2022 21:13	32.64	6/18/2022 22:00	20.04	6/18/2022 0:33	5.93
6/18/2022 21:14	32.62	6/18/2022 22:01	20.07	6/18/2022 0:34	5.90

6/18/2022 21:15	32.61	6/18/2022 22:02	20.09	6/18/2022 0:35	5.91
6/18/2022 21:16	32.64	6/18/2022 22:03	19.66	6/18/2022 0:36	5.92
6/18/2022 21:17	32.60	6/18/2022 22:04	19.54	6/18/2022 0:37	5.89
6/18/2022 21:18	32.62	6/18/2022 22:05	19.49	6/18/2022 0:38	5.93
6/18/2022 21:19	32.62	6/18/2022 22:06	19.46	6/18/2022 0:39	5.93
6/18/2022 21:20	32.64	6/18/2022 22:07	19.46	6/18/2022 0:40	5.93
6/18/2022 21:21	32.62	6/18/2022 22:08	19.43	6/18/2022 0:41	5.88
6/18/2022 21:22	32.62	6/18/2022 22:09	19.44	6/18/2022 0:42	5.91
6/18/2022 21:23	32.60	6/18/2022 22:10	19.42	6/18/2022 0:43	5.90
6/18/2022 21:24	32.64	6/18/2022 22:11	19.44	6/18/2022 0:44	5.90
6/18/2022 21:25	32.59	6/18/2022 22:12	19.41	6/18/2022 0:45	5.91
6/18/2022 21:26	32.62	6/18/2022 22:13	19.40	6/18/2022 0:46	5.93
6/18/2022 21:27	32.61	6/18/2022 22:14	19.39	6/18/2022 0:47	5.94
6/18/2022 21:28	32.60	6/18/2022 22:15	19.38	6/18/2022 0:48	5.95
6/18/2022 21:29	32.60	6/18/2022 22:16	19.38	6/18/2022 0:49	5.90
6/18/2022 21:30	32.65	6/18/2022 22:17	19.39	6/18/2022 0:50	5.93
6/18/2022 21:31	32.60	6/18/2022 22:18	19.39	6/18/2022 0:51	5.93
6/18/2022 21:32	32.60	6/18/2022 22:19	19.39	6/18/2022 0:52	7.20
6/18/2022 21:33	32.63	6/18/2022 22:20	19.37	6/18/2022 0:53	8.69
6/18/2022 21:34	32.58	6/18/2022 22:21	19.34	6/18/2022 0:54	7.03
6/18/2022 21:35	32.61	6/18/2022 22:22	19.38	6/18/2022 0:55	6.03
6/18/2022 21:36	32.58	6/18/2022 22:23	19.36	6/18/2022 0:56	5.96
6/18/2022 21:37	32.62	6/18/2022 22:24	19.37	6/18/2022 0:57	5.92
6/18/2022 21:38	32.61	6/18/2022 22:25	19.38	6/18/2022 0:58	5.92
6/18/2022 21:39	32.63	6/18/2022 22:26	19.38	6/18/2022 0:59	5.92
6/18/2022 21:40	32.61	6/18/2022 22:27	19.37	6/18/2022 1:00	5.92
6/18/2022 21:41	32.64	6/18/2022 22:28	19.37	6/18/2022 1:01	5.96
6/18/2022 21:42	32.58	6/18/2022 22:29	19.34	6/18/2022 1:02	5.94
6/18/2022 21:43	32.59	6/18/2022 22:30	19.39	6/18/2022 1:03	5.94
6/18/2022 21:44	32.61	6/18/2022 22:31	19.36	6/18/2022 1:04	5.92
6/18/2022 21:45	32.61	6/18/2022 22:32	19.35	6/18/2022 1:05	5.92
6/18/2022 21:46	32.59	6/18/2022 22:33	19.37	6/18/2022 1:06	5.92
6/18/2022 21:47	32.60	6/18/2022 22:34	19.35	6/18/2022 1:07	5.93
6/18/2022 21:48	32.62	6/18/2022 22:35	19.36	6/18/2022 1:08	5.92
6/18/2022 21:49	32.58	6/18/2022 22:36	19.37	6/18/2022 1:09	5.89
6/18/2022 21:50	32.61	6/18/2022 22:37	19.36	6/18/2022 1:10	5.92
6/18/2022 21:51	32.64	6/18/2022 22:38	19.37	6/18/2022 1:11	5.94
6/18/2022 21:52	32.59	6/18/2022 22:39	19.35	6/18/2022 1:12	5.91
6/18/2022 21:53	32.59	6/18/2022 22:40	19.35	6/18/2022 1:13	5.94
6/18/2022 21:54	32.61	6/18/2022 22:41	19.35	6/18/2022 1:14	5.92
6/18/2022 21:55	32.60	6/18/2022 22:42	19.36	6/18/2022 1:15	5.92
6/18/2022 21:56	32.60	6/18/2022 22:43	19.35	6/18/2022 1:16	5.94
6/18/2022 21:57	32.60	6/18/2022 22:44	19.37	6/18/2022 1:17	5.92
6/18/2022 21:58	32.60	6/18/2022 22:45	19.37	6/18/2022 1:18	5.91
6/18/2022 21:59	32.58	6/18/2022 22:46	19.33	6/18/2022 1:19	5.95
6/18/2022 22:00	32.59	6/18/2022 22:47	19.32	6/18/2022 1:20	5.92
6/18/2022 22:01	32.62	6/18/2022 22:48	19.35	6/18/2022 1:21	5.92
6/18/2022 22:02	32.61	6/18/2022 22:49	19.34	6/18/2022 1:22	5.95
6/18/2022 22:03	32.62	6/18/2022 22:50	19.36	6/18/2022 1:23	5.94
6/18/2022 22:04	32.60	6/18/2022 22:51	19.32	6/18/2022 1:24	5.94
6/18/2022 22:05	32.62	6/18/2022 22:52	19.31	6/18/2022 1:25	5.92
6/18/2022 22:06	32.63	6/18/2022 22:53	19.33	6/18/2022 1:26	5.92
6/18/2022 22:07	32.62	6/18/2022 22:54	19.33	6/18/2022 1:27	5.93
6/18/2022 22:08	32.59	6/18/2022 22:55	19.36	6/18/2022 1:28	5.90
6/18/2022 22:09	32.61	6/18/2022 22:56	19.33	6/18/2022 1:29	5.93
6/18/2022 22:10	32.60	6/18/2022 22:57	19.34	6/18/2022 1:30	5.93
6/18/2022 22:11	32.60	6/18/2022 22:58	19.34	6/18/2022 1:31	5.88
6/18/2022 22:12	32.58	6/18/2022 22:59	19.34	6/18/2022 1:32	5.92
6/18/2022 22:13	32.58	6/18/2022 23:00	19.33	6/18/2022 1:33	5.91
6/18/2022 22:14	32.60	6/18/2022 23:01	19.35	6/18/2022 1:34	5.93
6/18/2022 22:15	32.61	6/18/2022 23:02	19.33	6/18/2022 1:35	5.92
6/18/2022 22:16	32.58	6/18/2022 23:03	19.34	6/18/2022 1:36	5.93
6/18/2022 22:17	32.62	6/18/2022 23:04	19.36	6/18/2022 1:37	5.92
6/18/2022 22:18	32.62	6/18/2022 23:05	19.36	6/18/2022 1:38	5.93
6/18/2022 22:19	32.58	6/18/2022 23:06	19.36	6/18/2022 1:39	5.93
6/18/2022 22:20	32.59	6/18/2022 23:07	19.33	6/18/2022 1:40	5.91
6/18/2022 22:21	32.62	6/18/2022 23:08	19.32	6/18/2022 1:41	5.91
6/18/2022 22:22	32.59	6/18/2022 23:09	19.33	6/18/2022 1:42	5.93
6/18/2022 22:23	32.60	6/18/2022 23:10	19.33	6/18/2022 1:43	5.91
6/18/2022 22:24	32.62	6/18/2022 23:11	19.34	6/18/2022 1:44	5.93
6/18/2022 22:25	32.61	6/18/2022 23:12	19.36	6/18/2022 1:45	5.91
6/18/2022 22:26	32.60	6/18/2022 23:13	19.36	6/18/2022 1:46	5.92
6/18/2022 22:27	32.59	6/18/2022 23:14	19.28	6/18/2022 1:47	5.92
6/18/2022 22:28	32.59	6/18/2022 23:15	19.32	6/18/2022 1:48	5.92
6/18/2022 22:29	32.60	6/18/2022 23:16	19.32	6/18/2022 1:49	5.92
6/18/2022 22:30	32.62	6/18/2022 23:17	19.30	6/18/2022 1:50	5.89
6/18/2022 22:31	32.57	6/18/2022 23:18	19.32	6/18/2022 1:51	5.93
6/18/2022 22:32	32.64	6/18/2022 23:19	19.33	6/18/2022 1:52	5.89
6/18/2022 22:33	32.61	6/18/2022 23:20	19.33	6/18/2022 1:53	5.92
6/18/2022 22:34	32.60	6/18/2022 23:21	19.33	6/18/2022 1:54	5.91
6/18/2022 22:35	32.61	6/18/2022 23:22	19.33	6/18/2022 1:55	5.93
6/18/2022 22:36	32.57	6/18/2022 23:23	19.34	6/18/2022 1:56	5.93
6/18/2022 22:37	32.58	6/18/2022 23:24	19.31	6/18/2022 1:57	5.89
6/18/2022 22:38	32.63	6/18/2022 23:25	19.36	6/18/2022 1:58	5.92
6/18/2022 22:39	32.57	6/18/2022 23:26	19.31	6/18/2022 1:59	5.91
6/18/2022 22:40	32.57	6/18/2022 23:27	19.34	6/18/2022 2:00	5.92
6/18/2022 22:41	32.61	6/18/2022 23:28	19.33	6/18/2022 2:01	5.89
6/18/2022 22:42	32.59	6/18/2022 23:29	19.35	6/18/2022 2:02	5.90

6/18/2022 22:43	32.62	6/18/2022 23:30	19.32	6/18/2022 2:03	5.93
6/18/2022 22:44	32.60	6/18/2022 23:31	19.35	6/18/2022 2:04	5.94
6/18/2022 22:45	32.62	6/18/2022 23:32	19.34	6/18/2022 2:05	5.91
6/18/2022 22:46	32.63	6/18/2022 23:33	19.31	6/18/2022 2:06	5.93
6/18/2022 22:47	32.59	6/18/2022 23:34	19.33	6/18/2022 2:07	5.92
6/18/2022 22:48	32.61	6/18/2022 23:35	19.32	6/18/2022 2:08	5.88
6/18/2022 22:49	32.63	6/18/2022 23:36	19.36	6/18/2022 2:09	5.92
6/18/2022 22:50	32.65	6/18/2022 23:37	19.31	6/18/2022 2:10	5.91
6/18/2022 22:51	32.67	6/18/2022 23:38	19.30	6/18/2022 2:11	5.90
6/18/2022 22:52	32.68	6/18/2022 23:39	19.31	6/18/2022 2:12	5.91
6/18/2022 22:53	32.68	6/18/2022 23:40	19.33	6/18/2022 2:13	5.90
6/18/2022 22:54	32.66	6/18/2022 23:41	19.33	6/18/2022 2:14	5.89
6/18/2022 22:55	32.66	6/18/2022 23:42	19.32	6/18/2022 2:15	5.91
6/18/2022 22:56	32.67	6/18/2022 23:43	19.32	6/18/2022 2:16	5.92
6/18/2022 22:57	32.71	6/18/2022 23:44	19.31	6/18/2022 2:17	5.94
6/18/2022 22:58	32.72	6/18/2022 23:45	19.30	6/18/2022 2:18	5.91
6/18/2022 22:59	32.69	6/18/2022 23:46	19.29	6/18/2022 2:19	5.92
6/18/2022 23:00	32.70	6/18/2022 23:47	19.34	6/18/2022 2:20	5.93
6/18/2022 23:01	32.66	6/18/2022 23:48	19.30	6/18/2022 2:21	5.93
6/18/2022 23:02	32.68	6/18/2022 23:49	19.31	6/18/2022 2:22	5.90
6/18/2022 23:03	32.70	6/18/2022 23:50	19.33	6/18/2022 2:23	5.89
6/18/2022 23:04	32.68	6/18/2022 23:51	19.32	6/18/2022 2:24	5.89
6/18/2022 23:05	32.70	6/18/2022 23:52	19.32	6/18/2022 2:25	5.93
6/18/2022 23:06	32.65	6/18/2022 23:53	19.30	6/18/2022 2:26	5.91
6/18/2022 23:07	32.66	6/18/2022 23:54	19.35	6/18/2022 2:27	5.91
6/18/2022 23:08	32.68	6/18/2022 23:55	19.32	6/18/2022 2:28	5.91
6/18/2022 23:09	32.68	6/18/2022 23:56	19.33	6/18/2022 2:29	5.93
6/18/2022 23:10	32.65	6/18/2022 23:57	19.32	6/18/2022 2:30	5.92
6/18/2022 23:11	32.65	6/18/2022 23:58	19.32	6/18/2022 2:31	5.95
6/18/2022 23:12	32.66	6/18/2022 23:59	19.31	6/18/2022 2:32	5.92
6/18/2022 23:13	32.67	6/19/2022 0:00	19.31	6/18/2022 2:33	5.92
6/18/2022 23:14	32.63	6/19/2022 0:01	19.32	6/18/2022 2:34	5.89
6/18/2022 23:15	32.64	6/19/2022 0:02	19.32	6/18/2022 2:35	5.92
6/18/2022 23:16	32.64	6/19/2022 0:03	19.33	6/18/2022 2:36	5.90
6/18/2022 23:17	32.65	6/19/2022 0:04	19.30	6/18/2022 2:37	5.93
6/18/2022 23:18	32.67	6/19/2022 0:05	19.30	6/18/2022 2:38	5.93
6/18/2022 23:19	32.62	6/19/2022 0:06	19.31	6/18/2022 2:39	5.90
6/18/2022 23:20	32.67	6/19/2022 0:07	19.31	6/18/2022 2:40	5.93
6/18/2022 23:21	33.50	6/19/2022 0:08	19.33	6/18/2022 2:41	5.93
6/18/2022 23:22	33.05	6/19/2022 0:09	19.33	6/18/2022 2:42	5.90
6/18/2022 23:23	32.79	6/19/2022 0:10	19.31	6/18/2022 2:43	5.90
6/18/2022 23:24	32.75	6/19/2022 0:11	19.33	6/18/2022 2:44	5.89
6/18/2022 23:25	32.70	6/19/2022 0:12	19.32	6/18/2022 2:45	5.92
6/18/2022 23:26	32.71	6/19/2022 0:13	19.31	6/18/2022 2:46	5.93
6/18/2022 23:27	32.69	6/19/2022 0:14	19.32	6/18/2022 2:47	5.93
6/18/2022 23:28	32.70	6/19/2022 0:15	19.29	6/18/2022 2:48	5.93
6/18/2022 23:29	32.68	6/19/2022 0:16	19.33	6/18/2022 2:49	5.91
6/18/2022 23:30	32.70	6/19/2022 0:17	19.32	6/18/2022 2:50	5.92
6/18/2022 23:31	32.66	6/19/2022 0:18	19.36	6/18/2022 2:51	5.93
6/18/2022 23:32	32.67	6/19/2022 0:19	19.31	6/18/2022 2:52	5.91
6/18/2022 23:33	32.66	6/19/2022 0:20	19.30	6/18/2022 2:53	5.93
6/18/2022 23:34	32.67	6/19/2022 0:21	19.33	6/18/2022 2:54	5.92
6/18/2022 23:35	32.67	6/19/2022 0:22	19.29	6/18/2022 2:55	5.90
6/18/2022 23:36	32.67	6/19/2022 0:23	19.35	6/18/2022 2:56	5.92
6/18/2022 23:37	32.67	6/19/2022 0:24	19.31	6/18/2022 2:57	5.92
6/18/2022 23:38	32.67	6/19/2022 0:25	19.32	6/18/2022 2:58	5.91
6/18/2022 23:39	32.67	6/19/2022 0:26	19.32	6/18/2022 2:59	5.94
6/18/2022 23:40	32.65	6/19/2022 0:27	19.33	6/18/2022 3:00	5.94
6/18/2022 23:41	32.68	6/19/2022 0:28	19.32	6/18/2022 3:01	5.92
6/18/2022 23:42	32.67	6/19/2022 0:29	19.32	6/18/2022 3:02	5.92
6/18/2022 23:43	32.68	6/19/2022 0:30	19.32	6/18/2022 3:03	5.95
6/18/2022 23:44	32.66	6/19/2022 0:31	19.34	6/18/2022 3:04	5.91
6/18/2022 23:45	32.64	6/19/2022 0:32	19.32	6/18/2022 3:05	5.90
6/18/2022 23:46	32.65	6/19/2022 0:33	19.33	6/18/2022 3:06	5.90
6/18/2022 23:47	32.65	6/19/2022 0:34	19.34	6/18/2022 3:07	5.91
6/18/2022 23:48	33.75	6/19/2022 0:35	19.31	6/18/2022 3:08	5.89
6/18/2022 23:49	32.89	6/19/2022 0:36	19.32	6/18/2022 3:09	5.91
6/18/2022 23:50	32.80	6/19/2022 0:37	19.30	6/18/2022 3:10	5.91
6/18/2022 23:51	32.75	6/19/2022 0:38	19.32	6/18/2022 3:11	5.91
6/18/2022 23:52	32.74	6/19/2022 0:39	19.33	6/18/2022 3:12	5.90
6/18/2022 23:53	32.73	6/19/2022 0:40	19.32	6/18/2022 3:13	5.91
6/18/2022 23:54	32.70	6/19/2022 0:41	19.30	6/18/2022 3:14	5.92
6/18/2022 23:55	32.71	6/19/2022 0:42	19.33	6/18/2022 3:15	5.94
6/18/2022 23:56	32.72	6/19/2022 0:43	19.33	6/18/2022 3:16	5.91
6/18/2022 23:57	32.72	6/19/2022 0:44	19.31	6/18/2022 3:17	5.94
6/18/2022 23:58	32.68	6/19/2022 0:45	19.32	6/18/2022 3:18	5.94
6/18/2022 23:59	32.72	6/19/2022 0:46	19.32	6/18/2022 3:19	5.92
6/19/2022 0:00	32.68	6/19/2022 0:47	19.32	6/18/2022 3:20	5.89
6/19/2022 0:01	32.70	6/19/2022 0:48	19.31	6/18/2022 3:21	5.90
6/19/2022 0:02	32.65	6/19/2022 0:49	19.34	6/18/2022 3:22	5.93
6/19/2022 0:03	32.68	6/19/2022 0:50	19.32	6/18/2022 3:23	5.91
6/19/2022 0:04	32.68	6/19/2022 0:51	19.32	6/18/2022 3:24	5.92
6/19/2022 0:05	32.66	6/19/2022 0:52	19.31	6/18/2022 3:25	5.93
6/19/2022 0:06	32.66	6/19/2022 0:53	19.31	6/18/2022 3:26	5.90
6/19/2022 0:07	32.67	6/19/2022 0:54	19.30	6/18/2022 3:27	5.91
6/19/2022 0:08	32.66	6/19/2022 0:55	19.32	6/18/2022 3:28	5.92
6/19/2022 0:09	32.64	6/19/2022 0:56	19.32	6/18/2022 3:29	5.91
6/19/2022 0:10	32.65	6/19/2022 0:57	19.34	6/18/2022 3:30	5.91

6/19/2022 0:11	32.67	6/19/2022 0:58	19.30	6/18/2022 3:31	5.90
6/19/2022 0:12	32.69	6/19/2022 0:59	19.33	6/18/2022 3:32	5.92
6/19/2022 0:13	32.65	6/19/2022 1:00	19.31	6/18/2022 3:33	5.96
6/19/2022 0:14	32.66	6/19/2022 1:01	19.33	6/18/2022 3:34	5.90
6/19/2022 0:15	32.67	6/19/2022 1:02	19.29	6/18/2022 3:35	5.90
6/19/2022 0:16	32.67	6/19/2022 1:03	19.30	6/18/2022 3:36	5.93
6/19/2022 0:17	32.66	6/19/2022 1:04	19.33	6/18/2022 3:37	5.92
6/19/2022 0:18	32.66	6/19/2022 1:05	19.31	6/18/2022 3:38	5.90
6/19/2022 0:19	32.66	6/19/2022 1:06	19.31	6/18/2022 3:39	5.92
6/19/2022 0:20	32.65	6/19/2022 1:07	19.32	6/18/2022 3:40	5.91
6/19/2022 0:21	32.68	6/19/2022 1:08	19.30	6/18/2022 3:41	5.93
6/19/2022 0:22	32.67	6/19/2022 1:09	19.32	6/18/2022 3:42	5.91
6/19/2022 0:23	32.69	6/19/2022 1:10	19.32	6/18/2022 3:43	5.93
6/19/2022 0:24	32.64	6/19/2022 1:11	19.32	6/18/2022 3:44	5.90
6/19/2022 0:25	32.64	6/19/2022 1:12	19.29	6/18/2022 3:45	5.92
6/19/2022 0:26	32.66	6/19/2022 1:13	19.31	6/18/2022 3:46	5.91
6/19/2022 0:27	32.63	6/19/2022 1:14	19.31	6/18/2022 3:47	5.92
6/19/2022 0:28	32.63	6/19/2022 1:15	19.32	6/18/2022 3:48	5.90
6/19/2022 0:29	32.66	6/19/2022 1:16	19.32	6/18/2022 3:49	5.94
6/19/2022 0:30	32.64	6/19/2022 1:17	19.31	6/18/2022 3:50	5.92
6/19/2022 0:31	32.64	6/19/2022 1:18	19.28	6/18/2022 3:51	5.92
6/19/2022 0:32	32.66	6/19/2022 1:19	19.30	6/18/2022 3:52	5.91
6/19/2022 0:33	32.64	6/19/2022 1:20	19.32	6/18/2022 3:53	5.91
6/19/2022 0:34	32.65	6/19/2022 1:21	19.31	6/18/2022 3:54	5.90
6/19/2022 0:35	32.63	6/19/2022 1:22	19.31	6/18/2022 3:55	5.92
6/19/2022 0:36	32.65	6/19/2022 1:23	19.31	6/18/2022 3:56	5.89
6/19/2022 0:37	32.66	6/19/2022 1:24	19.29	6/18/2022 3:57	5.91
6/19/2022 0:38	32.64	6/19/2022 1:25	19.30	6/18/2022 3:58	5.93
6/19/2022 0:39	32.63	6/19/2022 1:26	19.33	6/18/2022 3:59	5.91
6/19/2022 0:40	32.67	6/19/2022 1:27	19.30	6/18/2022 4:00	5.90
6/19/2022 0:41	32.63	6/19/2022 1:28	19.31	6/18/2022 4:01	5.90
6/19/2022 0:42	32.66	6/19/2022 1:29	19.32	6/18/2022 4:02	5.94
6/19/2022 0:43	32.61	6/19/2022 1:30	19.34	6/18/2022 4:03	5.92
6/19/2022 0:44	32.63	6/19/2022 1:31	19.30	6/18/2022 4:04	5.88
6/19/2022 0:45	32.63	6/19/2022 1:32	19.32	6/18/2022 4:05	5.93
6/19/2022 0:46	32.65	6/19/2022 1:33	19.32	6/18/2022 4:06	5.89
6/19/2022 0:47	32.62	6/19/2022 1:34	19.30	6/18/2022 4:07	5.94
6/19/2022 0:48	32.66	6/19/2022 1:35	19.32	6/18/2022 4:08	5.93
6/19/2022 0:49	32.65	6/19/2022 1:36	19.29	6/18/2022 4:09	5.93
6/19/2022 0:50	32.64	6/19/2022 1:37	19.33	6/18/2022 4:10	5.91
6/19/2022 0:51	32.67	6/19/2022 1:38	19.29	6/18/2022 4:11	5.89
6/19/2022 0:52	32.66	6/19/2022 1:39	19.31	6/18/2022 4:12	5.93
6/19/2022 0:53	32.65	6/19/2022 1:40	19.30	6/18/2022 4:13	5.91
6/19/2022 0:54	32.65	6/19/2022 1:41	19.30	6/18/2022 4:14	5.94
6/19/2022 0:55	32.60	6/19/2022 1:42	19.31	6/18/2022 4:15	5.89
6/19/2022 0:56	32.67	6/19/2022 1:43	19.30	6/18/2022 4:16	5.94
6/19/2022 0:57	32.65	6/19/2022 1:44	19.33	6/18/2022 4:17	5.92
6/19/2022 0:58	32.66	6/19/2022 1:45	19.32	6/18/2022 4:18	5.90
6/19/2022 0:59	32.67	6/19/2022 1:46	19.31	6/18/2022 4:19	5.94
6/19/2022 1:00	32.65	6/19/2022 1:47	19.31	6/18/2022 4:20	5.92
6/19/2022 1:01	32.66	6/19/2022 1:48	19.30	6/18/2022 4:21	5.89
6/19/2022 1:02	32.65	6/19/2022 1:49	19.31	6/18/2022 4:22	5.93
6/19/2022 1:03	32.63	6/19/2022 1:50	19.29	6/18/2022 4:23	5.91
6/19/2022 1:04	32.63	6/19/2022 1:51	19.33	6/18/2022 4:24	5.92
6/19/2022 1:05	32.64	6/19/2022 1:52	19.32	6/18/2022 4:25	5.90
6/19/2022 1:06	32.63	6/19/2022 1:53	19.30	6/18/2022 4:26	5.90
6/19/2022 1:07	32.70	6/19/2022 1:54	19.30	6/18/2022 4:27	5.91
6/19/2022 1:08	32.65	6/19/2022 1:55	19.29	6/18/2022 4:28	5.94
6/19/2022 1:09	32.62	6/19/2022 1:56	19.31	6/18/2022 4:29	5.94
6/19/2022 1:10	32.64	6/19/2022 1:57	19.30	6/18/2022 4:30	5.92
6/19/2022 1:11	32.64	6/19/2022 1:58	19.31	6/18/2022 4:31	5.88
6/19/2022 1:12	32.65	6/19/2022 1:59	19.30	6/18/2022 4:32	5.90
6/19/2022 1:13	32.65	6/19/2022 2:00	19.31	6/18/2022 4:33	5.93
6/19/2022 1:14	32.64	6/19/2022 2:01	19.28	6/18/2022 4:34	5.92
6/19/2022 1:15	32.67	6/19/2022 2:02	19.30	6/18/2022 4:35	5.89
6/19/2022 1:16	32.63	6/19/2022 2:03	19.28	6/18/2022 4:36	5.92
6/19/2022 1:17	32.67	6/19/2022 2:04	19.29	6/18/2022 4:37	5.89
6/19/2022 1:18	32.65	6/19/2022 2:05	19.31	6/18/2022 4:38	5.92
6/19/2022 1:19	32.65	6/19/2022 2:06	19.33	6/18/2022 4:39	5.93
6/19/2022 1:20	32.65	6/19/2022 2:07	19.31	6/18/2022 4:40	5.93
6/19/2022 1:21	32.66	6/19/2022 2:08	19.31	6/18/2022 4:41	5.91
6/19/2022 1:22	32.65	6/19/2022 2:09	19.29	6/18/2022 4:42	5.93
6/19/2022 1:23	32.62	6/19/2022 2:10	19.31	6/18/2022 4:43	5.93
6/19/2022 1:24	32.63	6/19/2022 2:11	19.31	6/18/2022 4:44	5.94
6/19/2022 1:25	32.66	6/19/2022 2:12	19.33	6/18/2022 4:45	5.91
6/19/2022 1:26	32.63	6/19/2022 2:13	19.27	6/18/2022 4:46	5.90
6/19/2022 1:27	32.63	6/19/2022 2:14	19.32	6/18/2022 4:47	5.93
6/19/2022 1:28	32.65	6/19/2022 2:15	19.31	6/18/2022 4:48	5.90
6/19/2022 1:29	32.63	6/19/2022 2:16	19.30	6/18/2022 4:49	5.92
6/19/2022 1:30	32.67	6/19/2022 2:17	19.31	6/18/2022 4:50	5.96
6/19/2022 1:31	32.65	6/19/2022 2:18	19.30	6/18/2022 4:51	5.91
6/19/2022 1:32	32.64	6/19/2022 2:19	19.29	6/18/2022 4:52	5.92
6/19/2022 1:33	32.64	6/19/2022 2:20	19.29	6/18/2022 4:53	5.93
6/19/2022 1:34	32.66	6/19/2022 2:21	19.32	6/18/2022 4:54	5.93
6/19/2022 1:35	32.64	6/19/2022 2:22	19.32	6/18/2022 4:55	5.94
6/19/2022 1:36	32.67	6/19/2022 2:23	19.27	6/18/2022 4:56	5.90
6/19/2022 1:37	32.62	6/19/2022 2:24	19.30	6/18/2022 4:57	5.95
6/19/2022 1:38	32.63	6/19/2022 2:25	19.29	6/18/2022 4:58	5.92

6/19/2022 1:39	32.66	6/19/2022 2:26	19.30	6/18/2022 4:59	5.91
6/19/2022 1:40	32.63	6/19/2022 2:27	19.30	6/18/2022 5:00	5.92
6/19/2022 1:41	32.62	6/19/2022 2:28	19.31	6/18/2022 5:01	5.90
6/19/2022 1:42	32.63	6/19/2022 2:29	19.31	6/18/2022 5:02	5.91
6/19/2022 1:43	32.62	6/19/2022 2:30	19.30	6/18/2022 5:03	5.93
6/19/2022 1:44	32.60	6/19/2022 2:31	19.30	6/18/2022 5:04	5.91
6/19/2022 1:45	32.65	6/19/2022 2:32	19.32	6/18/2022 5:05	5.92
6/19/2022 1:46	32.66	6/19/2022 2:33	19.30	6/18/2022 5:06	5.91
6/19/2022 1:47	32.62	6/19/2022 2:34	19.30	6/18/2022 5:07	5.89
6/19/2022 1:48	32.64	6/19/2022 2:35	19.32	6/18/2022 5:08	5.91
6/19/2022 1:49	32.66	6/19/2022 2:36	19.29	6/18/2022 5:09	5.89
6/19/2022 1:50	32.65	6/19/2022 2:37	19.30	6/18/2022 5:10	5.92
6/19/2022 1:51	32.63	6/19/2022 2:38	19.30	6/18/2022 5:11	5.95
6/19/2022 1:52	32.61	6/19/2022 2:39	19.29	6/18/2022 5:12	5.91
6/19/2022 1:53	32.62	6/19/2022 2:40	19.29	6/18/2022 5:13	5.92
6/19/2022 1:54	32.66	6/19/2022 2:41	19.29	6/18/2022 5:14	5.92
6/19/2022 1:55	32.63	6/19/2022 2:42	19.29	6/18/2022 5:15	5.93
6/19/2022 1:56	32.63	6/19/2022 2:43	19.30	6/18/2022 5:16	5.94
6/19/2022 1:57	32.64	6/19/2022 2:44	19.30	6/18/2022 5:17	5.88
6/19/2022 1:58	32.63	6/19/2022 2:45	19.28	6/18/2022 5:18	5.95
6/19/2022 1:59	32.62	6/19/2022 2:46	19.29	6/18/2022 5:19	5.92
6/19/2022 2:00	32.61	6/19/2022 2:47	19.30	6/18/2022 5:20	5.91
6/19/2022 2:01	32.61	6/19/2022 2:48	19.29	6/18/2022 5:21	5.90
6/19/2022 2:02	32.64	6/19/2022 2:49	19.32	6/18/2022 5:22	5.91
6/19/2022 2:03	32.63	6/19/2022 2:50	19.30	6/18/2022 5:23	5.91
6/19/2022 2:04	32.64	6/19/2022 2:51	19.31	6/18/2022 5:24	5.91
6/19/2022 2:05	32.64	6/19/2022 2:52	19.31	6/18/2022 5:25	5.91
6/19/2022 2:06	32.64	6/19/2022 2:53	19.31	6/18/2022 5:26	5.92
6/19/2022 2:07	32.63	6/19/2022 2:54	19.31	6/18/2022 5:27	5.91
6/19/2022 2:08	32.63	6/19/2022 2:55	19.31	6/18/2022 5:28	5.94
6/19/2022 2:09	32.63	6/19/2022 2:56	19.31	6/18/2022 5:29	5.92
6/19/2022 2:10	32.63	6/19/2022 2:57	19.27	6/18/2022 5:30	5.92
6/19/2022 2:11	32.62	6/19/2022 2:58	19.30	6/18/2022 5:31	5.91
6/19/2022 2:12	32.62	6/19/2022 2:59	19.33	6/18/2022 5:32	5.91
6/19/2022 2:13	32.63	6/19/2022 3:00	19.31	6/18/2022 5:33	5.91
6/19/2022 2:14	32.62	6/19/2022 3:01	19.32	6/18/2022 5:34	5.92
6/19/2022 2:15	32.63	6/19/2022 3:02	19.29	6/18/2022 5:35	5.89
6/19/2022 2:16	32.64	6/19/2022 3:03	19.30	6/18/2022 5:36	5.92
6/19/2022 2:17	32.63	6/19/2022 3:04	19.32	6/18/2022 5:37	5.94
6/19/2022 2:18	32.63	6/19/2022 3:05	19.31	6/18/2022 5:38	5.92
6/19/2022 2:19	32.65	6/19/2022 3:06	19.27	6/18/2022 5:39	5.93
6/19/2022 2:20	32.64	6/19/2022 3:07	19.30	6/18/2022 5:40	5.91
6/19/2022 2:21	32.66	6/19/2022 3:08	19.31	6/18/2022 5:41	5.90
6/19/2022 2:22	32.61	6/19/2022 3:09	19.29	6/18/2022 5:42	5.94
6/19/2022 2:23	32.64	6/19/2022 3:10	19.32	6/18/2022 5:43	5.92
6/19/2022 2:24	32.64	6/19/2022 3:11	19.31	6/18/2022 5:44	5.93
6/19/2022 2:25	32.63	6/19/2022 3:12	19.30	6/18/2022 5:45	5.90
6/19/2022 2:26	32.64	6/19/2022 3:13	19.31	6/18/2022 5:46	5.92
6/19/2022 2:27	32.61	6/19/2022 3:14	19.33	6/18/2022 5:47	5.87
6/19/2022 2:28	32.64	6/19/2022 3:15	19.31	6/18/2022 5:48	5.89
6/19/2022 2:29	32.65	6/19/2022 3:16	19.31	6/18/2022 5:49	5.90
6/19/2022 2:30	32.65	6/19/2022 3:17	19.30	6/18/2022 5:50	5.95
6/19/2022 2:31	32.64	6/19/2022 3:18	19.29	6/18/2022 5:51	5.91
6/19/2022 2:32	32.66	6/19/2022 3:19	19.31	6/18/2022 5:52	5.91
6/19/2022 2:33	32.62	6/19/2022 3:20	19.30	6/18/2022 5:53	5.91
6/19/2022 2:34	32.62	6/19/2022 3:21	19.28	6/18/2022 5:54	5.93
6/19/2022 2:35	32.63	6/19/2022 3:22	19.30	6/18/2022 5:55	5.93
6/19/2022 2:36	32.65	6/19/2022 3:23	19.32	6/18/2022 5:56	5.92
6/19/2022 2:37	32.63	6/19/2022 3:24	19.32	6/18/2022 5:57	5.89
6/19/2022 2:38	32.63	6/19/2022 3:25	19.32	6/18/2022 5:58	5.90
6/19/2022 2:39	32.63	6/19/2022 3:26	19.28	6/18/2022 5:59	5.92
6/19/2022 2:40	32.65	6/19/2022 3:27	19.29	6/18/2022 6:00	5.96
6/19/2022 2:41	32.62	6/19/2022 3:28	19.31	6/18/2022 6:01	5.94
6/19/2022 2:42	32.66	6/19/2022 3:29	19.25	6/18/2022 6:02	5.92
6/19/2022 2:43	32.63	6/19/2022 3:30	19.29	6/18/2022 6:03	5.92
6/19/2022 2:44	32.64	6/19/2022 3:31	19.32	6/18/2022 6:04	5.92
6/19/2022 2:45	32.63	6/19/2022 3:32	19.31	6/18/2022 6:05	5.93
6/19/2022 2:46	32.61	6/19/2022 3:33	19.33	6/18/2022 6:06	5.90
6/19/2022 2:47	32.64	6/19/2022 3:34	19.32	6/18/2022 6:07	5.94
6/19/2022 2:48	32.66	6/19/2022 3:35	19.31	6/18/2022 6:08	5.91
6/19/2022 2:49	32.62	6/19/2022 3:36	19.32	6/18/2022 6:09	5.91
6/19/2022 2:50	32.64	6/19/2022 3:37	19.29	6/18/2022 6:10	5.91
6/19/2022 2:51	32.62	6/19/2022 3:38	19.26	6/18/2022 6:11	5.92
6/19/2022 2:52	32.65	6/19/2022 3:39	19.29	6/18/2022 6:12	5.95
6/19/2022 2:53	32.62	6/19/2022 3:40	19.31	6/18/2022 6:13	5.90
6/19/2022 2:54	32.62	6/19/2022 3:41	19.30	6/18/2022 6:14	5.92
6/19/2022 2:55	32.62	6/19/2022 3:42	19.30	6/18/2022 6:15	5.89
6/19/2022 2:56	32.64	6/19/2022 3:43	19.30	6/18/2022 6:16	5.91
6/19/2022 2:57	32.63	6/19/2022 3:44	19.31	6/18/2022 6:17	5.92
6/19/2022 2:58	32.62	6/19/2022 3:45	19.32	6/18/2022 6:18	5.95
6/19/2022 2:59	32.64	6/19/2022 3:46	19.29	6/18/2022 6:19	5.95
6/19/2022 3:00	32.63	6/19/2022 3:47	19.30	6/18/2022 6:20	5.89
6/19/2022 3:01	32.64	6/19/2022 3:48	19.30	6/18/2022 6:21	5.93
6/19/2022 3:02	32.64	6/19/2022 3:49	19.31	6/18/2022 6:22	5.88
6/19/2022 3:03	32.62	6/19/2022 3:50	19.28	6/18/2022 6:23	5.89
6/19/2022 3:04	32.62	6/19/2022 3:51	19.28	6/18/2022 6:24	5.92
6/19/2022 3:05	32.63	6/19/2022 3:52	19.33	6/18/2022 6:25	5.93
6/19/2022 3:06	32.63	6/19/2022 3:53	19.29	6/18/2022 6:26	5.92

6/19/2022 3:07	32.64	6/19/2022 3:54	19.28	6/18/2022 6:27	5.93
6/19/2022 3:08	32.66	6/19/2022 3:55	19.27	6/18/2022 6:28	5.87
6/19/2022 3:09	32.62	6/19/2022 3:56	19.32	6/18/2022 6:29	5.91
6/19/2022 3:10	32.65	6/19/2022 3:57	19.28	6/18/2022 6:30	5.92
6/19/2022 3:11	32.64	6/19/2022 3:58	19.31	6/18/2022 6:31	5.90
6/19/2022 3:12	32.65	6/19/2022 3:59	19.30	6/18/2022 6:32	5.95
6/19/2022 3:13	32.62	6/19/2022 4:00	19.31	6/18/2022 6:33	5.90
6/19/2022 3:14	32.62	6/19/2022 4:01	19.31	6/18/2022 6:34	5.92
6/19/2022 3:15	32.65	6/19/2022 4:02	19.31	6/18/2022 6:35	5.92
6/19/2022 3:16	32.63	6/19/2022 4:03	19.29	6/18/2022 6:36	5.93
6/19/2022 3:17	32.64	6/19/2022 4:04	19.28	6/18/2022 6:37	5.94
6/19/2022 3:18	32.64	6/19/2022 4:05	19.31	6/18/2022 6:38	5.93
6/19/2022 3:19	32.63	6/19/2022 4:06	19.27	6/18/2022 6:39	5.94
6/19/2022 3:20	32.63	6/19/2022 4:07	19.31	6/18/2022 6:40	5.93
6/19/2022 3:21	32.62	6/19/2022 4:08	19.28	6/18/2022 6:41	5.90
6/19/2022 3:22	32.64	6/19/2022 4:09	19.29	6/18/2022 6:42	5.91
6/19/2022 3:23	32.64	6/19/2022 4:10	19.30	6/18/2022 6:43	5.92
6/19/2022 3:24	32.67	6/19/2022 4:11	19.31	6/18/2022 6:44	5.89
6/19/2022 3:25	32.65	6/19/2022 4:12	19.32	6/18/2022 6:45	5.93
6/19/2022 3:26	32.65	6/19/2022 4:13	19.30	6/18/2022 6:46	5.91
6/19/2022 3:27	32.64	6/19/2022 4:14	19.29	6/18/2022 6:47	5.90
6/19/2022 3:28	32.65	6/19/2022 4:15	19.28	6/18/2022 6:48	5.90
6/19/2022 3:29	32.64	6/19/2022 4:16	19.29	6/18/2022 6:49	5.93
6/19/2022 3:30	32.64	6/19/2022 4:17	19.28	6/18/2022 6:50	5.92
6/19/2022 3:31	32.65	6/19/2022 4:18	19.31	6/18/2022 6:51	5.95
6/19/2022 3:32	32.65	6/19/2022 4:19	19.31	6/18/2022 6:52	5.92
6/19/2022 3:33	32.64	6/19/2022 4:20	19.31	6/18/2022 6:53	5.93
6/19/2022 3:34	32.66	6/19/2022 4:21	19.31	6/18/2022 6:54	5.91
6/19/2022 3:35	32.61	6/19/2022 4:22	19.31	6/18/2022 6:55	5.95
6/19/2022 3:36	32.61	6/19/2022 4:23	19.30	6/18/2022 6:56	5.93
6/19/2022 3:37	32.64	6/19/2022 4:24	19.29	6/18/2022 6:57	5.95
6/19/2022 3:38	32.67	6/19/2022 4:25	19.33	6/18/2022 6:58	5.93
6/19/2022 3:39	32.65	6/19/2022 4:26	19.30	6/18/2022 6:59	5.92
6/19/2022 3:40	32.67	6/19/2022 4:27	19.29	6/18/2022 7:00	5.93
6/19/2022 3:41	32.64	6/19/2022 4:28	19.28	6/18/2022 7:01	5.89
6/19/2022 3:42	32.63	6/19/2022 4:29	19.29	6/18/2022 7:02	5.91
6/19/2022 3:43	32.63	6/19/2022 4:30	19.29	6/18/2022 7:03	5.92
6/19/2022 3:44	32.63	6/19/2022 4:31	19.29	6/18/2022 7:04	5.94
6/19/2022 3:45	32.64	6/19/2022 4:32	19.31	6/18/2022 7:05	5.95
6/19/2022 3:46	32.64	6/19/2022 4:33	19.30	6/18/2022 7:06	5.89
6/19/2022 3:47	32.63	6/19/2022 4:34	19.29	6/18/2022 7:07	5.94
6/19/2022 3:48	32.65	6/19/2022 4:35	19.29	6/18/2022 7:08	5.92
6/19/2022 3:49	32.67	6/19/2022 4:36	19.32	6/18/2022 7:09	5.94
6/19/2022 3:50	32.63	6/19/2022 4:37	19.31	6/18/2022 7:10	5.90
6/19/2022 3:51	32.62	6/19/2022 4:38	19.29	6/18/2022 7:11	5.97
6/19/2022 3:52	32.62	6/19/2022 4:39	19.32	6/18/2022 7:12	5.92
6/19/2022 3:53	32.65	6/19/2022 4:40	19.31	6/18/2022 7:13	5.93
6/19/2022 3:54	32.59	6/19/2022 4:41	19.29	6/18/2022 7:14	5.93
6/19/2022 3:55	32.64	6/19/2022 4:42	19.29	6/18/2022 7:15	5.93
6/19/2022 3:56	32.64	6/19/2022 4:43	19.29	6/18/2022 7:16	5.95
6/19/2022 3:57	32.62	6/19/2022 4:44	19.32	6/18/2022 7:17	5.94
6/19/2022 3:58	32.61	6/19/2022 4:45	19.30	6/18/2022 7:18	5.93
6/19/2022 3:59	32.63	6/19/2022 4:46	19.30	6/18/2022 7:19	5.90
6/19/2022 4:00	32.61	6/19/2022 4:47	19.29	6/18/2022 7:20	5.93
6/19/2022 4:01	32.64	6/19/2022 4:48	19.32	6/18/2022 7:21	5.91
6/19/2022 4:02	32.67	6/19/2022 4:49	19.30	6/18/2022 7:22	5.92
6/19/2022 4:03	32.65	6/19/2022 4:50	19.30	6/18/2022 7:23	5.92
6/19/2022 4:04	32.61	6/19/2022 4:51	19.30	6/18/2022 7:24	5.93
6/19/2022 4:05	32.63	6/19/2022 4:52	19.30	6/18/2022 7:25	5.90
6/19/2022 4:06	32.61	6/19/2022 4:53	19.29	6/18/2022 7:26	5.94
6/19/2022 4:07	32.64	6/19/2022 4:54	19.29	6/18/2022 7:27	5.95
6/19/2022 4:08	32.64	6/19/2022 4:55	19.29	6/18/2022 7:28	5.91
6/19/2022 4:09	32.62	6/19/2022 4:56	19.30	6/18/2022 7:29	5.95
6/19/2022 4:10	32.65	6/19/2022 4:57	19.29	6/18/2022 7:30	5.96
6/19/2022 4:11	32.63	6/19/2022 4:58	19.30	6/18/2022 7:31	5.95
6/19/2022 4:12	32.62	6/19/2022 4:59	19.28	6/18/2022 7:32	5.94
6/19/2022 4:13	32.65	6/19/2022 5:00	19.30	6/18/2022 7:33	5.92
6/19/2022 4:14	32.63	6/19/2022 5:01	19.31	6/18/2022 7:34	5.91
6/19/2022 4:15	32.65	6/19/2022 5:02	19.31	6/18/2022 7:35	5.94
6/19/2022 4:16	32.64	6/19/2022 5:03	19.30	6/18/2022 7:36	5.93
6/19/2022 4:17	32.64	6/19/2022 5:04	19.31	6/18/2022 7:37	5.87
6/19/2022 4:18	32.65	6/19/2022 5:05	19.30	6/18/2022 7:38	5.93
6/19/2022 4:19	32.64	6/19/2022 5:06	19.30	6/18/2022 7:39	5.91
6/19/2022 4:20	32.63	6/19/2022 5:07	19.31	6/18/2022 7:40	5.92
6/19/2022 4:21	32.65	6/19/2022 5:08	19.29	6/18/2022 7:41	5.92
6/19/2022 4:22	32.64	6/19/2022 5:09	19.31	6/18/2022 7:42	5.93
6/19/2022 4:23	32.65	6/19/2022 5:10	19.29	6/18/2022 7:43	5.92
6/19/2022 4:24	32.65	6/19/2022 5:11	19.31	6/18/2022 7:44	5.95
6/19/2022 4:25	32.65	6/19/2022 5:12	19.31	6/18/2022 7:45	5.95
6/19/2022 4:26	32.65	6/19/2022 5:13	19.29	6/18/2022 7:46	5.89
6/19/2022 4:27	32.63	6/19/2022 5:14	19.31	6/18/2022 7:47	5.91
6/19/2022 4:28	32.62	6/19/2022 5:15	19.28	6/18/2022 7:48	5.95
6/19/2022 4:29	32.61	6/19/2022 5:16	19.29	6/18/2022 7:49	5.93
6/19/2022 4:30	32.63	6/19/2022 5:17	19.31	6/18/2022 7:50	5.90
6/19/2022 4:31	32.62	6/19/2022 5:18	19.29	6/18/2022 7:51	5.95
6/19/2022 4:32	32.65	6/19/2022 5:19	19.32	6/18/2022 7:52	5.93
6/19/2022 4:33	32.64	6/19/2022 5:20	19.29	6/18/2022 7:53	5.92
6/19/2022 4:34	32.65	6/19/2022 5:21	19.27	6/18/2022 7:54	5.95

6/19/2022 4:35	32.67	6/19/2022 5:22	19.30	6/18/2022 7:55	5.93
6/19/2022 4:36	32.63	6/19/2022 5:23	19.31	6/18/2022 7:56	5.92
6/19/2022 4:37	32.64	6/19/2022 5:24	19.29	6/18/2022 7:57	5.93
6/19/2022 4:38	32.63	6/19/2022 5:25	19.31	6/18/2022 7:58	5.93
6/19/2022 4:39	32.63	6/19/2022 5:26	19.33	6/18/2022 7:59	5.91
6/19/2022 4:40	32.66	6/19/2022 5:27	19.32	6/18/2022 8:00	5.90
6/19/2022 4:41	32.67	6/19/2022 5:28	19.29	6/18/2022 8:01	5.90
6/19/2022 4:42	32.66	6/19/2022 5:29	19.31	6/18/2022 8:02	5.93
6/19/2022 4:43	32.62	6/19/2022 5:30	19.30	6/18/2022 8:03	5.91
6/19/2022 4:44	32.66	6/19/2022 5:31	19.30	6/18/2022 8:04	5.95
6/19/2022 4:45	32.60	6/19/2022 5:32	19.27	6/18/2022 8:05	5.90
6/19/2022 4:46	32.64	6/19/2022 5:33	19.31	6/18/2022 8:06	5.91
6/19/2022 4:47	32.66	6/19/2022 5:34	19.31	6/18/2022 8:07	5.93
6/19/2022 4:48	32.60	6/19/2022 5:35	19.27	6/18/2022 8:08	5.91
6/19/2022 4:49	32.61	6/19/2022 5:36	19.30	6/18/2022 8:09	5.93
6/19/2022 4:50	32.65	6/19/2022 5:37	19.29	6/18/2022 8:10	5.93
6/19/2022 4:51	32.64	6/19/2022 5:38	19.30	6/18/2022 8:11	5.93
6/19/2022 4:52	32.67	6/19/2022 5:39	19.31	6/18/2022 8:12	5.93
6/19/2022 4:53	32.62	6/19/2022 5:40	19.32	6/18/2022 8:13	5.93
6/19/2022 4:54	32.64	6/19/2022 5:41	19.28	6/18/2022 8:14	5.94
6/19/2022 4:55	32.63	6/19/2022 5:42	19.28	6/18/2022 8:15	5.94
6/19/2022 4:56	32.64	6/19/2022 5:43	19.29	6/18/2022 8:16	5.90
6/19/2022 4:57	32.65	6/19/2022 5:44	19.31	6/18/2022 8:17	5.93
6/19/2022 4:58	32.64	6/19/2022 5:45	19.30	6/18/2022 8:18	5.94
6/19/2022 4:59	32.64	6/19/2022 5:46	19.30	6/18/2022 8:19	5.94
6/19/2022 5:00	32.64	6/19/2022 5:47	19.28	6/18/2022 8:20	5.93
6/19/2022 5:01	32.64	6/19/2022 5:48	19.29	6/18/2022 8:21	5.95
6/19/2022 5:02	32.65	6/19/2022 5:49	19.27	6/18/2022 8:22	5.92
6/19/2022 5:03	32.65	6/19/2022 5:50	19.28	6/18/2022 8:23	5.96
6/19/2022 5:04	32.63	6/19/2022 5:51	19.31	6/18/2022 8:24	5.94
6/19/2022 5:05	32.65	6/19/2022 5:52	19.28	6/18/2022 8:25	5.95
6/19/2022 5:06	32.65	6/19/2022 5:53	19.31	6/18/2022 8:26	5.92
6/19/2022 5:07	32.62	6/19/2022 5:54	19.29	6/18/2022 8:27	5.92
6/19/2022 5:08	32.65	6/19/2022 5:55	19.30	6/18/2022 8:28	5.92
6/19/2022 5:09	32.63	6/19/2022 5:56	19.30	6/18/2022 8:29	7.14
6/19/2022 5:10	32.63	6/19/2022 5:57	19.28	6/18/2022 8:30	8.71
6/19/2022 5:11	32.63	6/19/2022 5:58	19.32	6/18/2022 8:31	7.31
6/19/2022 5:12	32.65	6/19/2022 5:59	19.28	6/18/2022 8:32	6.06
6/19/2022 5:13	32.65	6/19/2022 6:00	19.30	6/18/2022 8:33	5.98
6/19/2022 5:14	32.64	6/19/2022 6:01	19.28	6/18/2022 8:34	5.96
6/19/2022 5:15	32.69	6/19/2022 6:02	19.27	6/18/2022 8:35	5.97
6/19/2022 5:16	32.64	6/19/2022 6:03	19.30	6/18/2022 8:36	5.96
6/19/2022 5:17	32.65	6/19/2022 6:04	19.29	6/18/2022 8:37	5.96
6/19/2022 5:18	32.64	6/19/2022 6:05	19.29	6/18/2022 8:38	5.92
6/19/2022 5:19	32.68	6/19/2022 6:06	19.28	6/18/2022 8:39	5.95
6/19/2022 5:20	32.70	6/19/2022 6:07	19.27	6/18/2022 8:40	5.96
6/19/2022 5:21	32.66	6/19/2022 6:08	19.29	6/18/2022 8:41	5.95
6/19/2022 5:22	32.66	6/19/2022 6:09	19.30	6/18/2022 8:42	5.92
6/19/2022 5:23	32.63	6/19/2022 6:10	19.31	6/18/2022 8:43	5.94
6/19/2022 5:24	32.68	6/19/2022 6:11	19.30	6/18/2022 8:44	5.92
6/19/2022 5:25	32.67	6/19/2022 6:12	19.30	6/18/2022 8:45	5.94
6/19/2022 5:26	32.67	6/19/2022 6:13	19.29	6/18/2022 8:46	5.93
6/19/2022 5:27	32.66	6/19/2022 6:14	19.30	6/18/2022 8:47	5.94
6/19/2022 5:28	32.68	6/19/2022 6:15	19.29	6/18/2022 8:48	5.92
6/19/2022 5:29	32.64	6/19/2022 6:16	19.27	6/18/2022 8:49	5.95
6/19/2022 5:30	32.66	6/19/2022 6:17	19.31	6/18/2022 8:50	5.94
6/19/2022 5:31	32.64	6/19/2022 6:18	19.31	6/18/2022 8:51	5.94
6/19/2022 5:32	32.64	6/19/2022 6:19	19.28	6/18/2022 8:52	5.92
6/19/2022 5:33	32.67	6/19/2022 6:20	19.28	6/18/2022 8:53	5.93
6/19/2022 5:34	32.66	6/19/2022 6:21	19.28	6/18/2022 8:54	5.94
6/19/2022 5:35	32.63	6/19/2022 6:22	19.30	6/18/2022 8:55	5.93
6/19/2022 5:36	32.64	6/19/2022 6:23	19.30	6/18/2022 8:56	5.91
6/19/2022 5:37	32.64	6/19/2022 6:24	19.31	6/18/2022 8:57	5.95
6/19/2022 5:38	32.63	6/19/2022 6:25	19.29	6/18/2022 8:58	5.94
6/19/2022 5:39	32.66	6/19/2022 6:26	19.27	6/18/2022 8:59	5.93
6/19/2022 5:40	32.65	6/19/2022 6:27	19.29	6/18/2022 9:00	5.96
6/19/2022 5:41	32.63	6/19/2022 6:28	19.29	6/18/2022 9:01	5.95
6/19/2022 5:42	32.67	6/19/2022 6:29	19.28	6/18/2022 9:02	5.94
6/19/2022 5:43	32.64	6/19/2022 6:30	19.55	6/18/2022 9:03	5.93
6/19/2022 5:44	32.66	6/19/2022 6:31	19.96	6/18/2022 9:04	5.94
6/19/2022 5:45	32.64	6/19/2022 6:32	20.02	6/18/2022 9:05	5.93
6/19/2022 5:46	32.61	6/19/2022 6:33	20.08	6/18/2022 9:06	5.95
6/19/2022 5:47	32.65	6/19/2022 6:34	20.11	6/18/2022 9:07	5.92
6/19/2022 5:48	32.63	6/19/2022 6:35	19.61	6/18/2022 9:08	5.90
6/19/2022 5:49	32.67	6/19/2022 6:36	19.56	6/18/2022 9:09	5.93
6/19/2022 5:50	32.63	6/19/2022 6:37	19.47	6/18/2022 9:10	5.93
6/19/2022 5:51	32.66	6/19/2022 6:38	19.45	6/18/2022 9:11	5.94
6/19/2022 5:52	32.65	6/19/2022 6:39	19.44	6/18/2022 9:12	5.96
6/19/2022 5:53	32.64	6/19/2022 6:40	19.44	6/18/2022 9:13	5.93
6/19/2022 5:54	32.65	6/19/2022 6:41	19.41	6/18/2022 9:14	5.94
6/19/2022 5:55	32.63	6/19/2022 6:42	19.42	6/18/2022 9:15	5.89
6/19/2022 5:56	32.64	6/19/2022 6:43	19.38	6/18/2022 9:16	5.92
6/19/2022 5:57	32.67	6/19/2022 6:44	19.42	6/18/2022 9:17	5.93
6/19/2022 5:58	32.63	6/19/2022 6:45	19.38	6/18/2022 9:18	6.69
6/19/2022 5:59	32.62	6/19/2022 6:46	19.37	6/18/2022 9:19	8.66
6/19/2022 6:00	32.67	6/19/2022 6:47	19.41	6/18/2022 9:20	7.07
6/19/2022 6:01	32.66	6/19/2022 6:48	19.38	6/18/2022 9:21	6.01
6/19/2022 6:02	32.64	6/19/2022 6:49	19.40	6/18/2022 9:22	5.99

6/19/2022 6:03	32.65	6/19/2022 6:50	19.37	6/18/2022 9:23	5.99
6/19/2022 6:04	32.65	6/19/2022 6:51	19.38	6/18/2022 9:24	5.95
6/19/2022 6:05	32.66	6/19/2022 6:52	19.36	6/18/2022 9:25	5.92
6/19/2022 6:06	32.62	6/19/2022 6:53	19.37	6/18/2022 9:26	5.97
6/19/2022 6:07	32.63	6/19/2022 6:54	19.37	6/18/2022 9:27	5.97
6/19/2022 6:08	32.65	6/19/2022 6:55	19.34	6/18/2022 9:28	5.92
6/19/2022 6:09	32.63	6/19/2022 6:56	19.36	6/18/2022 9:29	6.40
6/19/2022 6:10	32.65	6/19/2022 6:57	19.35	6/18/2022 9:30	8.65
6/19/2022 6:11	32.62	6/19/2022 6:58	19.36	6/18/2022 9:31	8.73
6/19/2022 6:12	32.63	6/19/2022 6:59	19.35	6/18/2022 9:32	6.13
6/19/2022 6:13	32.65	6/19/2022 7:00	19.36	6/18/2022 9:33	6.00
6/19/2022 6:14	32.66	6/19/2022 7:01	19.33	6/18/2022 9:34	5.99
6/19/2022 6:15	32.65	6/19/2022 7:02	19.35	6/18/2022 9:35	5.95
6/19/2022 6:16	32.63	6/19/2022 7:03	19.36	6/18/2022 9:36	5.96
6/19/2022 6:17	32.65	6/19/2022 7:04	19.37	6/18/2022 9:37	5.93
6/19/2022 6:18	32.65	6/19/2022 7:05	19.36	6/18/2022 9:38	5.98
6/19/2022 6:19	32.64	6/19/2022 7:06	19.36	6/18/2022 9:39	5.96
6/19/2022 6:20	32.64	6/19/2022 7:07	19.38	6/18/2022 9:40	5.93
6/19/2022 6:21	32.65	6/19/2022 7:08	19.35	6/18/2022 9:41	5.97
6/19/2022 6:22	32.64	6/19/2022 7:09	19.35	6/18/2022 9:42	5.92
6/19/2022 6:23	32.65	6/19/2022 7:10	19.34	6/18/2022 9:43	5.93
6/19/2022 6:24	32.64	6/19/2022 7:11	19.35	6/18/2022 9:44	5.98
6/19/2022 6:25	32.61	6/19/2022 7:12	19.33	6/18/2022 9:45	5.94
6/19/2022 6:26	32.63	6/19/2022 7:13	19.34	6/18/2022 9:46	5.95
6/19/2022 6:27	32.64	6/19/2022 7:14	19.32	6/18/2022 9:47	5.95
6/19/2022 6:28	32.67	6/19/2022 7:15	19.35	6/18/2022 9:48	5.98
6/19/2022 6:29	32.66	6/19/2022 7:16	19.36	6/18/2022 9:49	5.96
6/19/2022 6:30	32.66	6/19/2022 7:17	19.36	6/18/2022 9:50	5.94
6/19/2022 6:31	32.65	6/19/2022 7:18	19.31	6/18/2022 9:51	5.94
6/19/2022 6:32	32.62	6/19/2022 7:19	19.33	6/18/2022 9:52	5.92
6/19/2022 6:33	32.63	6/19/2022 7:20	19.33	6/18/2022 9:53	5.93
6/19/2022 6:34	32.64	6/19/2022 7:21	19.35	6/18/2022 9:54	5.98
6/19/2022 6:35	32.64	6/19/2022 7:22	19.35	6/18/2022 9:55	5.94
6/19/2022 6:36	32.64	6/19/2022 7:23	19.33	6/18/2022 9:56	5.94
6/19/2022 6:37	32.64	6/19/2022 7:24	19.34	6/18/2022 9:57	5.93
6/19/2022 6:38	32.65	6/19/2022 7:25	19.34	6/18/2022 9:58	5.95
6/19/2022 6:39	32.63	6/19/2022 7:26	19.36	6/18/2022 9:59	5.94
6/19/2022 6:40	32.66	6/19/2022 7:27	19.31	6/18/2022 10:00	5.94
6/19/2022 6:41	32.64	6/19/2022 7:28	19.34	6/18/2022 10:01	5.95
6/19/2022 6:42	32.66	6/19/2022 7:29	19.32	6/18/2022 10:02	8.38
6/19/2022 6:43	32.64	6/19/2022 7:30	19.36	6/18/2022 10:03	8.74
6/19/2022 6:44	32.65	6/19/2022 7:31	19.33	6/18/2022 10:04	6.20
6/19/2022 6:45	32.61	6/19/2022 7:32	19.33	6/18/2022 10:05	5.97
6/19/2022 6:46	32.61	6/19/2022 7:33	19.34	6/18/2022 10:06	6.01
6/19/2022 6:47	32.64	6/19/2022 7:34	19.34	6/18/2022 10:07	5.97
6/19/2022 6:48	32.65	6/19/2022 7:35	19.31	6/18/2022 10:08	5.94
6/19/2022 6:49	32.63	6/19/2022 7:36	19.31	6/18/2022 10:09	5.99
6/19/2022 6:50	32.64	6/19/2022 7:37	19.36	6/18/2022 10:10	5.98
6/19/2022 6:51	32.63	6/19/2022 7:38	19.34	6/18/2022 10:11	5.98
6/19/2022 6:52	32.62	6/19/2022 7:39	19.34	6/18/2022 10:12	5.95
6/19/2022 6:53	32.63	6/19/2022 7:40	19.35	6/18/2022 10:13	5.92
6/19/2022 6:54	32.67	6/19/2022 7:41	19.34	6/18/2022 10:14	5.95
6/19/2022 6:55	32.62	6/19/2022 7:42	19.34	6/18/2022 10:15	5.97
6/19/2022 6:56	32.65	6/19/2022 7:43	19.35	6/18/2022 10:16	5.95
6/19/2022 6:57	32.62	6/19/2022 7:44	19.33	6/18/2022 10:17	5.96
6/19/2022 6:58	32.64	6/19/2022 7:45	19.33	6/18/2022 10:18	5.96
6/19/2022 6:59	32.64	6/19/2022 7:46	19.36	6/18/2022 10:19	5.96
6/19/2022 7:00	32.62	6/19/2022 7:47	19.36	6/18/2022 10:20	5.94
6/19/2022 7:01	32.63	6/19/2022 7:48	19.34	6/18/2022 10:21	5.95
6/19/2022 7:02	32.63	6/19/2022 7:49	19.34	6/18/2022 10:22	5.95
6/19/2022 7:03	32.66	6/19/2022 7:50	19.33	6/18/2022 10:23	5.95
6/19/2022 7:04	32.64	6/19/2022 7:51	19.32	6/18/2022 10:24	5.93
6/19/2022 7:05	32.63	6/19/2022 7:52	19.30	6/18/2022 10:25	5.97
6/19/2022 7:06	32.64	6/19/2022 7:53	19.33	6/18/2022 10:26	5.94
6/19/2022 7:07	32.59	6/19/2022 7:54	19.33	6/18/2022 10:27	5.98
6/19/2022 7:08	32.65	6/19/2022 7:55	19.33	6/18/2022 10:28	5.96
6/19/2022 7:09	32.63	6/19/2022 7:56	19.30	6/18/2022 10:29	5.98
6/19/2022 7:10	32.63	6/19/2022 7:57	19.33	6/18/2022 10:30	5.95
6/19/2022 7:11	32.64	6/19/2022 7:58	19.31	6/18/2022 10:31	5.94
6/19/2022 7:12	32.65	6/19/2022 7:59	19.31	6/18/2022 10:32	5.93
6/19/2022 7:13	32.63	6/19/2022 8:00	19.32	6/18/2022 10:33	5.94
6/19/2022 7:14	32.66	6/19/2022 8:01	19.31	6/18/2022 10:34	5.92
6/19/2022 7:15	32.64	6/19/2022 8:02	19.31	6/18/2022 10:35	5.95
6/19/2022 7:16	32.66	6/19/2022 8:03	19.32	6/18/2022 10:36	5.96
6/19/2022 7:17	32.62	6/19/2022 8:04	19.31	6/18/2022 10:37	5.94
6/19/2022 7:18	32.63	6/19/2022 8:05	19.32	6/18/2022 10:38	5.97
6/19/2022 7:19	32.65	6/19/2022 8:06	19.35	6/18/2022 10:39	5.95
6/19/2022 7:20	32.66	6/19/2022 8:07	19.34	6/18/2022 10:40	5.95
6/19/2022 7:21	32.64	6/19/2022 8:08	19.32	6/18/2022 10:41	5.92
6/19/2022 7:22	32.64	6/19/2022 8:09	19.33	6/18/2022 10:42	5.94
6/19/2022 7:23	32.63	6/19/2022 8:10	19.32	6/18/2022 10:43	5.96
6/19/2022 7:24	32.63	6/19/2022 8:11	19.31	6/18/2022 10:44	5.97
6/19/2022 7:25	32.59	6/19/2022 8:12	19.33	6/18/2022 10:45	5.94
6/19/2022 7:26	32.64	6/19/2022 8:13	19.32	6/18/2022 10:46	5.95
6/19/2022 7:27	32.65	6/19/2022 8:14	19.33	6/18/2022 10:47	5.95
6/19/2022 7:28	32.65	6/19/2022 8:15	19.34	6/18/2022 10:48	5.96
6/19/2022 7:29	32.62	6/19/2022 8:16	19.34	6/18/2022 10:49	5.93
6/19/2022 7:30	32.65	6/19/2022 8:17	19.34	6/18/2022 10:50	5.97

6/19/2022 7:31	32.65	6/19/2022 8:18	19.31	6/18/2022 10:51	5.95
6/19/2022 7:32	32.66	6/19/2022 8:19	19.31	6/18/2022 10:52	5.92
6/19/2022 7:33	32.66	6/19/2022 8:20	19.29	6/18/2022 10:53	5.94
6/19/2022 7:34	32.62	6/19/2022 8:21	19.30	6/18/2022 10:54	5.92
6/19/2022 7:35	32.63	6/19/2022 8:22	19.31	6/18/2022 10:55	5.95
6/19/2022 7:36	32.64	6/19/2022 8:23	19.35	6/18/2022 10:56	5.92
6/19/2022 7:37	32.63	6/19/2022 8:24	19.31	6/18/2022 10:57	5.93
6/19/2022 7:38	32.61	6/19/2022 8:25	19.31	6/18/2022 10:58	5.94
6/19/2022 7:39	32.60	6/19/2022 8:26	19.33	6/18/2022 10:59	5.92
6/19/2022 7:40	32.61	6/19/2022 8:27	19.29	6/18/2022 11:00	5.97
6/19/2022 7:41	32.65	6/19/2022 8:28	19.32	6/18/2022 11:01	5.96
6/19/2022 7:42	32.64	6/19/2022 8:29	19.33	6/18/2022 11:02	5.96
6/19/2022 7:43	32.63	6/19/2022 8:30	19.34	6/18/2022 11:03	5.95
6/19/2022 7:44	32.62	6/19/2022 8:31	19.32	6/18/2022 11:04	5.95
6/19/2022 7:45	32.65	6/19/2022 8:32	19.32	6/18/2022 11:05	5.95
6/19/2022 7:46	32.64	6/19/2022 8:33	19.30	6/18/2022 11:06	5.95
6/19/2022 7:47	32.64	6/19/2022 8:34	19.31	6/18/2022 11:07	5.94
6/19/2022 7:48	32.63	6/19/2022 8:35	19.30	6/18/2022 11:08	5.95
6/19/2022 7:49	32.60	6/19/2022 8:36	19.36	6/18/2022 11:09	5.93
6/19/2022 7:50	32.62	6/19/2022 8:37	19.31	6/18/2022 11:10	5.93
6/19/2022 7:51	32.66	6/19/2022 8:38	19.32	6/18/2022 11:11	5.94
6/19/2022 7:52	32.63	6/19/2022 8:39	19.34	6/18/2022 11:12	5.96
6/19/2022 7:53	32.67	6/19/2022 8:40	19.29	6/18/2022 11:13	5.93
6/19/2022 7:54	32.62	6/19/2022 8:41	19.34	6/18/2022 11:14	5.97
6/19/2022 7:55	32.63	6/19/2022 8:42	19.32	6/18/2022 11:15	5.97
6/19/2022 7:56	32.64	6/19/2022 8:43	19.30	6/18/2022 11:16	5.97
6/19/2022 7:57	32.64	6/19/2022 8:44	19.31	6/18/2022 11:17	5.95
6/19/2022 7:58	32.63	6/19/2022 8:45	19.30	6/18/2022 11:18	5.96
6/19/2022 7:59	32.62	6/19/2022 8:46	19.33	6/18/2022 11:19	5.98
6/19/2022 8:00	32.63	6/19/2022 8:47	19.29	6/18/2022 11:20	5.97
6/19/2022 8:01	32.61	6/19/2022 8:48	19.32	6/18/2022 11:21	5.92
6/19/2022 8:02	32.63	6/19/2022 8:49	19.31	6/18/2022 11:22	5.98
6/19/2022 8:03	32.64	6/19/2022 8:50	19.32	6/18/2022 11:23	5.93
6/19/2022 8:04	32.63	6/19/2022 8:51	19.34	6/18/2022 11:24	5.91
6/19/2022 8:05	32.61	6/19/2022 8:52	19.31	6/18/2022 11:25	5.97
6/19/2022 8:06	32.67	6/19/2022 8:53	19.30	6/18/2022 11:26	5.96
6/19/2022 8:07	32.59	6/19/2022 8:54	19.30	6/18/2022 11:27	7.12
6/19/2022 8:08	32.63	6/19/2022 8:55	19.32	6/18/2022 11:28	8.75
6/19/2022 8:09	32.66	6/19/2022 8:56	19.32	6/18/2022 11:29	8.91
6/19/2022 8:10	32.61	6/19/2022 8:57	19.31	6/18/2022 11:30	8.78
6/19/2022 8:11	32.63	6/19/2022 8:58	19.31	6/18/2022 11:31	6.26
6/19/2022 8:12	32.63	6/19/2022 8:59	19.30	6/18/2022 11:32	6.01
6/19/2022 8:13	32.63	6/19/2022 9:00	19.33	6/18/2022 11:33	5.97
6/19/2022 8:14	32.63	6/19/2022 9:01	19.33	6/18/2022 11:34	6.01
6/19/2022 8:15	32.62	6/19/2022 9:02	19.30	6/18/2022 11:35	8.63
6/19/2022 8:16	32.63	6/19/2022 9:03	19.29	6/18/2022 11:36	8.93
6/19/2022 8:17	32.66	6/19/2022 9:04	19.34	6/18/2022 11:37	8.89
6/19/2022 8:18	32.66	6/19/2022 9:05	19.28	6/18/2022 11:38	6.68
6/19/2022 8:19	32.63	6/19/2022 9:06	19.31	6/18/2022 11:39	6.12
6/19/2022 8:20	32.64	6/19/2022 9:07	19.32	6/18/2022 11:40	5.99
6/19/2022 8:21	32.64	6/19/2022 9:08	19.31	6/18/2022 11:41	6.02
6/19/2022 8:22	32.64	6/19/2022 9:09	19.28	6/18/2022 11:42	8.25
6/19/2022 8:23	32.64	6/19/2022 9:10	19.30	6/18/2022 11:43	8.88
6/19/2022 8:24	32.65	6/19/2022 9:11	19.29	6/18/2022 11:44	8.92
6/19/2022 8:25	32.63	6/19/2022 9:12	19.30	6/18/2022 11:45	7.96
6/19/2022 8:26	32.64	6/19/2022 9:13	19.29	6/18/2022 11:46	6.14
6/19/2022 8:27	32.65	6/19/2022 9:14	19.29	6/18/2022 11:47	6.04
6/19/2022 8:28	32.69	6/19/2022 9:15	19.30	6/18/2022 11:48	6.01
6/19/2022 8:29	32.68	6/19/2022 9:16	19.29	6/18/2022 11:49	7.40
6/19/2022 8:30	32.68	6/19/2022 9:17	19.30	6/18/2022 11:50	8.85
6/19/2022 8:31	32.69	6/19/2022 9:18	19.28	6/18/2022 11:51	8.94
6/19/2022 8:32	32.69	6/19/2022 9:19	19.29	6/18/2022 11:52	6.77
6/19/2022 8:33	32.66	6/19/2022 9:20	19.32	6/18/2022 11:53	6.09
6/19/2022 8:34	32.70	6/19/2022 9:21	19.32	6/18/2022 11:54	6.04
6/19/2022 8:35	32.71	6/19/2022 9:22	19.28	6/18/2022 11:55	6.03
6/19/2022 8:36	32.70	6/19/2022 9:23	19.31	6/18/2022 11:56	6.01
6/19/2022 8:37	32.72	6/19/2022 9:24	19.29	6/18/2022 11:57	6.01
6/19/2022 8:38	32.69	6/19/2022 9:25	19.32	6/18/2022 11:58	6.01
6/19/2022 8:39	32.73	6/19/2022 9:26	19.55	6/18/2022 11:59	5.99
6/19/2022 8:40	32.68	6/19/2022 9:27	19.96	6/18/2022 12:00	5.98
6/19/2022 8:41	32.66	6/19/2022 9:28	20.04	6/18/2022 12:01	5.98
6/19/2022 8:42	32.69	6/19/2022 9:29	20.09	6/18/2022 12:02	6.01
6/19/2022 8:43	32.67	6/19/2022 9:30	20.10	6/18/2022 12:03	5.98
6/19/2022 8:44	32.67	6/19/2022 9:31	20.13	6/18/2022 12:04	5.99
6/19/2022 8:45	32.66	6/19/2022 9:32	19.60	6/18/2022 12:05	5.99
6/19/2022 8:46	32.67	6/19/2022 9:33	19.51	6/18/2022 12:06	5.97
6/19/2022 8:47	32.68	6/19/2022 9:34	19.48	6/18/2022 12:07	5.96
6/19/2022 8:48	32.68	6/19/2022 9:35	19.47	6/18/2022 12:08	5.99
6/19/2022 8:49	32.66	6/19/2022 9:36	19.47	6/18/2022 12:09	6.00
6/19/2022 8:50	32.68	6/19/2022 9:37	19.46	6/18/2022 12:10	5.98
6/19/2022 8:51	32.66	6/19/2022 9:38	19.42	6/18/2022 12:11	6.00
6/19/2022 8:52	33.24	6/19/2022 9:39	19.41	6/18/2022 12:12	6.00
6/19/2022 8:53	33.19	6/19/2022 9:40	19.42	6/18/2022 12:13	6.01
6/19/2022 8:54	32.86	6/19/2022 9:41	19.40	6/18/2022 12:14	6.01
6/19/2022 8:55	32.81	6/19/2022 9:42	19.41	6/18/2022 12:15	5.97
6/19/2022 8:56	32.78	6/19/2022 9:43	19.40	6/18/2022 12:16	5.99
6/19/2022 8:57	32.73	6/19/2022 9:44	19.39	6/18/2022 12:17	5.95
6/19/2022 8:58	32.73	6/19/2022 9:45	19.39	6/18/2022 12:18	5.98

6/19/2022 8:59	32.74	6/19/2022 9:46	19.40	6/18/2022 12:19	5.97
6/19/2022 9:00	32.71	6/19/2022 9:47	19.40	6/18/2022 12:20	5.99
6/19/2022 9:01	32.69	6/19/2022 9:48	19.38	6/18/2022 12:21	5.99
6/19/2022 9:02	32.73	6/19/2022 9:49	19.39	6/18/2022 12:22	5.99
6/19/2022 9:03	32.70	6/19/2022 9:50	19.38	6/18/2022 12:23	6.00
6/19/2022 9:04	32.71	6/19/2022 9:51	19.39	6/18/2022 12:24	5.99
6/19/2022 9:05	32.70	6/19/2022 9:52	19.37	6/18/2022 12:25	5.98
6/19/2022 9:06	32.70	6/19/2022 9:53	19.36	6/18/2022 12:26	5.97
6/19/2022 9:07	32.68	6/19/2022 9:54	19.36	6/18/2022 12:27	5.94
6/19/2022 9:08	32.70	6/19/2022 9:55	19.40	6/18/2022 12:28	6.02
6/19/2022 9:09	32.68	6/19/2022 9:56	19.37	6/18/2022 12:29	5.99
6/19/2022 9:10	32.69	6/19/2022 9:57	19.38	6/18/2022 12:30	5.98
6/19/2022 9:11	32.69	6/19/2022 9:58	19.37	6/18/2022 12:31	5.96
6/19/2022 9:12	32.66	6/19/2022 9:59	19.35	6/18/2022 12:32	5.99
6/19/2022 9:13	32.67	6/19/2022 10:00	19.38	6/18/2022 12:33	5.96
6/19/2022 9:14	32.70	6/19/2022 10:01	19.37	6/18/2022 12:34	5.97
6/19/2022 9:15	32.68	6/19/2022 10:02	19.36	6/18/2022 12:35	5.99
6/19/2022 9:16	32.68	6/19/2022 10:03	19.36	6/18/2022 12:36	5.99
6/19/2022 9:17	32.69	6/19/2022 10:04	19.38	6/18/2022 12:37	5.96
6/19/2022 9:18	32.69	6/19/2022 10:05	19.36	6/18/2022 12:38	5.95
6/19/2022 9:19	32.66	6/19/2022 10:06	19.34	6/18/2022 12:39	5.98
6/19/2022 9:20	32.66	6/19/2022 10:07	19.38	6/18/2022 12:40	5.97
6/19/2022 9:21	32.66	6/19/2022 10:08	19.33	6/18/2022 12:41	5.97
6/19/2022 9:22	32.66	6/19/2022 10:09	19.34	6/18/2022 12:42	5.94
6/19/2022 9:23	32.65	6/19/2022 10:10	19.34	6/18/2022 12:43	5.98
6/19/2022 9:24	32.71	6/19/2022 10:11	19.35	6/18/2022 12:44	5.98
6/19/2022 9:25	32.67	6/19/2022 10:12	19.35	6/18/2022 12:45	5.97
6/19/2022 9:26	32.66	6/19/2022 10:13	19.34	6/18/2022 12:46	5.99
6/19/2022 9:27	32.67	6/19/2022 10:14	19.34	6/18/2022 12:47	5.99
6/19/2022 9:28	32.70	6/19/2022 10:15	19.35	6/18/2022 12:48	5.97
6/19/2022 9:29	32.71	6/19/2022 10:16	19.33	6/18/2022 12:49	5.98
6/19/2022 9:30	32.70	6/19/2022 10:17	19.35	6/18/2022 12:50	5.96
6/19/2022 9:31	32.66	6/19/2022 10:18	19.33	6/18/2022 12:51	5.97
6/19/2022 9:32	32.75	6/19/2022 10:19	19.35	6/18/2022 12:52	5.94
6/19/2022 9:33	32.69	6/19/2022 10:20	19.36	6/18/2022 12:53	6.00
6/19/2022 9:34	32.72	6/19/2022 10:21	19.36	6/18/2022 12:54	5.96
6/19/2022 9:35	32.72	6/19/2022 10:22	19.35	6/18/2022 12:55	5.99
6/19/2022 9:36	32.72	6/19/2022 10:23	19.35	6/18/2022 12:56	5.95
6/19/2022 9:37	32.67	6/19/2022 10:24	19.36	6/18/2022 12:57	5.95
6/19/2022 9:38	32.73	6/19/2022 10:25	19.36	6/18/2022 12:58	5.99
6/19/2022 9:39	32.69	6/19/2022 10:26	19.36	6/18/2022 12:59	6.00
6/19/2022 9:40	32.71	6/19/2022 10:27	19.37	6/18/2022 13:00	5.96
6/19/2022 9:41	32.70	6/19/2022 10:28	19.34	6/18/2022 13:01	6.00
6/19/2022 9:42	32.69	6/19/2022 10:29	19.35	6/18/2022 13:02	5.97
6/19/2022 9:43	32.70	6/19/2022 10:30	19.34	6/18/2022 13:03	6.00
6/19/2022 9:44	32.70	6/19/2022 10:31	19.33	6/18/2022 13:04	5.98
6/19/2022 9:45	32.70	6/19/2022 10:32	19.35	6/18/2022 13:05	5.99
6/19/2022 9:46	32.65	6/19/2022 10:33	19.33	6/18/2022 13:06	5.97
6/19/2022 9:47	32.68	6/19/2022 10:34	19.36	6/18/2022 13:07	5.97
6/19/2022 9:48	32.66	6/19/2022 10:35	19.33	6/18/2022 13:08	5.96
6/19/2022 9:49	32.69	6/19/2022 10:36	19.33	6/18/2022 13:09	5.95
6/19/2022 9:50	32.68	6/19/2022 10:37	19.32	6/18/2022 13:10	5.94
6/19/2022 9:51	32.68	6/19/2022 10:38	19.33	6/18/2022 13:11	5.94
6/19/2022 9:52	32.68	6/19/2022 10:39	19.33	6/18/2022 13:12	5.97
6/19/2022 9:53	32.66	6/19/2022 10:40	19.35	6/18/2022 13:13	5.95
6/19/2022 9:54	32.69	6/19/2022 10:41	19.33	6/18/2022 13:14	5.97
6/19/2022 9:55	32.68	6/19/2022 10:42	19.32	6/18/2022 13:15	5.97
6/19/2022 9:56	32.66	6/19/2022 10:43	19.34	6/18/2022 13:16	5.97
6/19/2022 9:57	32.70	6/19/2022 10:44	19.34	6/18/2022 13:17	5.97
6/19/2022 9:58	32.66	6/19/2022 10:45	19.34	6/18/2022 13:18	5.98
6/19/2022 9:59	32.65	6/19/2022 10:46	19.35	6/18/2022 13:19	5.97
6/19/2022 10:00	32.68	6/19/2022 10:47	19.33	6/18/2022 13:20	5.98
6/19/2022 10:01	32.67	6/19/2022 10:48	19.33	6/18/2022 13:21	5.95
6/19/2022 10:02	32.68	6/19/2022 10:49	19.32	6/18/2022 13:22	6.00
6/19/2022 10:03	32.65	6/19/2022 10:50	19.33	6/18/2022 13:23	5.96
6/19/2022 10:04	32.65	6/19/2022 10:51	19.35	6/18/2022 13:24	5.96
6/19/2022 10:05	32.66	6/19/2022 10:52	19.32	6/18/2022 13:25	5.98
6/19/2022 10:06	32.65	6/19/2022 10:53	19.32	6/18/2022 13:26	5.98
6/19/2022 10:07	32.70	6/19/2022 10:54	19.33	6/18/2022 13:27	5.99
6/19/2022 10:08	32.66	6/19/2022 10:55	19.35	6/18/2022 13:28	5.99
6/19/2022 10:09	32.66	6/19/2022 10:56	19.32	6/18/2022 13:29	5.97
6/19/2022 10:10	32.64	6/19/2022 10:57	19.35	6/18/2022 13:30	5.99
6/19/2022 10:11	32.69	6/19/2022 10:58	19.31	6/18/2022 13:31	5.98
6/19/2022 10:12	32.66	6/19/2022 10:59	19.33	6/18/2022 13:32	5.97
6/19/2022 10:13	32.69	6/19/2022 11:00	19.32	6/18/2022 13:33	5.99
6/19/2022 10:14	34.04	6/19/2022 11:01	19.36	6/18/2022 13:34	5.96
6/19/2022 10:15	32.88	6/19/2022 11:02	19.35	6/18/2022 13:35	6.00
6/19/2022 10:16	32.78	6/19/2022 11:03	19.33	6/18/2022 13:36	5.95
6/19/2022 10:17	32.73	6/19/2022 11:04	19.35	6/18/2022 13:37	5.98
6/19/2022 10:18	32.75	6/19/2022 11:05	19.32	6/18/2022 13:38	5.97
6/19/2022 10:19	32.73	6/19/2022 11:06	19.32	6/18/2022 13:39	5.98
6/19/2022 10:20	32.69	6/19/2022 11:07	19.32	6/18/2022 13:40	5.94
6/19/2022 10:21	32.71	6/19/2022 11:08	19.32	6/18/2022 13:41	5.95
6/19/2022 10:22	32.72	6/19/2022 11:09	19.32	6/18/2022 13:42	5.96
6/19/2022 10:23	32.71	6/19/2022 11:10	19.33	6/18/2022 13:43	5.98
6/19/2022 10:24	32.70	6/19/2022 11:11	19.31	6/18/2022 13:44	5.97
6/19/2022 10:25	32.71	6/19/2022 11:12	19.31	6/18/2022 13:45	5.95
6/19/2022 10:26	32.70	6/19/2022 11:13	19.33	6/18/2022 13:46	5.97

6/19/2022 10:27	32.70	6/19/2022 11:14	19.32	6/18/2022 13:47	5.97
6/19/2022 10:28	32.72	6/19/2022 11:15	19.33	6/18/2022 13:48	5.96
6/19/2022 10:29	32.67	6/19/2022 11:16	19.30	6/18/2022 13:49	5.96
6/19/2022 10:30	32.69	6/19/2022 11:17	19.32	6/18/2022 13:50	5.98
6/19/2022 10:31	32.69	6/19/2022 11:18	19.32	6/18/2022 13:51	5.95
6/19/2022 10:32	32.70	6/19/2022 11:19	19.34	6/18/2022 13:52	5.94
6/19/2022 10:33	32.70	6/19/2022 11:20	19.32	6/18/2022 13:53	5.97
6/19/2022 10:34	32.68	6/19/2022 11:21	19.33	6/18/2022 13:54	5.93
6/19/2022 10:35	32.67	6/19/2022 11:22	19.34	6/18/2022 13:55	6.00
6/19/2022 10:36	32.72	6/19/2022 11:23	19.31	6/18/2022 13:56	5.95
6/19/2022 10:37	32.74	6/19/2022 11:24	19.33	6/18/2022 13:57	5.98
6/19/2022 10:38	32.76	6/19/2022 11:25	19.32	6/18/2022 13:58	5.99
6/19/2022 10:39	32.75	6/19/2022 11:26	19.31	6/18/2022 13:59	5.97
6/19/2022 10:40	32.78	6/19/2022 11:27	19.33	6/18/2022 14:00	5.99
6/19/2022 10:41	32.75	6/19/2022 11:28	19.31	6/18/2022 14:01	5.95
6/19/2022 10:42	32.75	6/19/2022 11:29	19.32	6/18/2022 14:02	5.98
6/19/2022 10:43	32.73	6/19/2022 11:30	19.29	6/18/2022 14:03	5.99
6/19/2022 10:44	32.73	6/19/2022 11:31	19.30	6/18/2022 14:04	5.99
6/19/2022 10:45	32.74	6/19/2022 11:32	19.32	6/18/2022 14:05	5.96
6/19/2022 10:46	32.74	6/19/2022 11:33	19.33	6/18/2022 14:06	5.99
6/19/2022 10:47	32.72	6/19/2022 11:34	19.35	6/18/2022 14:07	5.98
6/19/2022 10:48	32.72	6/19/2022 11:35	19.31	6/18/2022 14:08	5.99
6/19/2022 10:49	32.70	6/19/2022 11:36	19.32	6/18/2022 14:09	5.97
6/19/2022 10:50	32.70	6/19/2022 11:37	19.32	6/18/2022 14:10	5.99
6/19/2022 10:51	32.72	6/19/2022 11:38	19.34	6/18/2022 14:11	6.00
6/19/2022 10:52	32.72	6/19/2022 11:39	19.34	6/18/2022 14:12	5.98
6/19/2022 10:53	32.73	6/19/2022 11:40	19.31	6/18/2022 14:13	5.99
6/19/2022 10:54	32.69	6/19/2022 11:41	19.30	6/18/2022 14:14	5.98
6/19/2022 10:55	32.71	6/19/2022 11:42	19.32	6/18/2022 14:15	5.95
6/19/2022 10:56	32.72	6/19/2022 11:43	19.30	6/18/2022 14:16	6.01
6/19/2022 10:57	32.70	6/19/2022 11:44	19.32	6/18/2022 14:17	5.93
6/19/2022 10:58	32.70	6/19/2022 11:45	19.30	6/18/2022 14:18	5.95
6/19/2022 10:59	32.72	6/19/2022 11:46	19.35	6/18/2022 14:19	6.01
6/19/2022 11:00	32.70	6/19/2022 11:47	19.30	6/18/2022 14:20	5.97
6/19/2022 11:01	32.70	6/19/2022 11:48	19.29	6/18/2022 14:21	5.96
6/19/2022 11:02	32.68	6/19/2022 11:49	19.32	6/18/2022 14:22	5.99
6/19/2022 11:03	32.68	6/19/2022 11:50	19.32	6/18/2022 14:23	5.95
6/19/2022 11:04	32.73	6/19/2022 11:51	19.31	6/18/2022 14:24	5.99
6/19/2022 11:05	32.66	6/19/2022 11:52	19.30	6/18/2022 14:25	6.00
6/19/2022 11:06	32.71	6/19/2022 11:53	19.33	6/18/2022 14:26	5.97
6/19/2022 11:07	32.69	6/19/2022 11:54	19.30	6/18/2022 14:27	5.97
6/19/2022 11:08	32.72	6/19/2022 11:55	19.32	6/18/2022 14:28	5.98
6/19/2022 11:09	32.69	6/19/2022 11:56	19.29	6/18/2022 14:29	5.97
6/19/2022 11:10	32.69	6/19/2022 11:57	19.31	6/18/2022 14:30	5.97
6/19/2022 11:11	32.70	6/19/2022 11:58	19.32	6/18/2022 14:31	5.94
6/19/2022 11:12	32.69	6/19/2022 11:59	19.31	6/18/2022 14:32	5.97
6/19/2022 11:13	32.69	6/19/2022 12:00	19.28	6/18/2022 14:33	6.00
6/19/2022 11:14	32.70	6/19/2022 12:01	19.32	6/18/2022 14:34	5.97
6/19/2022 11:15	32.70	6/19/2022 12:02	19.30	6/18/2022 14:35	5.96
6/19/2022 11:16	32.72	6/19/2022 12:03	19.31	6/18/2022 14:36	5.97
6/19/2022 11:17	32.69	6/19/2022 12:04	19.29	6/18/2022 14:37	5.99
6/19/2022 11:18	32.65	6/19/2022 12:05	19.29	6/18/2022 14:38	5.96
6/19/2022 11:19	32.67	6/19/2022 12:06	19.33	6/18/2022 14:39	5.93
6/19/2022 11:20	32.69	6/19/2022 12:07	19.31	6/18/2022 14:40	5.99
6/19/2022 11:21	32.71	6/19/2022 12:08	19.32	6/18/2022 14:41	5.99
6/19/2022 11:22	32.70	6/19/2022 12:09	19.31	6/18/2022 14:42	6.01
6/19/2022 11:23	32.67	6/19/2022 12:10	19.31	6/18/2022 14:43	5.94
6/19/2022 11:24	32.66	6/19/2022 12:11	19.30	6/18/2022 14:44	5.97
6/19/2022 11:25	32.69	6/19/2022 12:12	19.31	6/18/2022 14:45	5.99
6/19/2022 11:26	32.69	6/19/2022 12:13	19.31	6/18/2022 14:46	5.98
6/19/2022 11:27	32.70	6/19/2022 12:14	19.30	6/18/2022 14:47	6.00
6/19/2022 11:28	32.70	6/19/2022 12:15	19.31	6/18/2022 14:48	6.00
6/19/2022 11:29	32.67	6/19/2022 12:16	19.32	6/18/2022 14:49	5.98
6/19/2022 11:30	32.69	6/19/2022 12:17	19.31	6/18/2022 14:50	5.98
6/19/2022 11:31	32.69	6/19/2022 12:18	19.30	6/18/2022 14:51	5.98
6/19/2022 11:32	32.68	6/19/2022 12:19	19.33	6/18/2022 14:52	5.96
6/19/2022 11:33	32.74	6/19/2022 12:20	19.33	6/18/2022 14:53	5.95
6/19/2022 11:34	32.76	6/19/2022 12:21	19.30	6/18/2022 14:54	5.94
6/19/2022 11:35	32.73	6/19/2022 12:22	19.31	6/18/2022 14:55	5.98
6/19/2022 11:36	33.43	6/19/2022 12:23	19.32	6/18/2022 14:56	5.97
6/19/2022 11:37	33.06	6/19/2022 12:24	19.29	6/18/2022 14:57	5.96
6/19/2022 11:38	33.47	6/19/2022 12:25	19.31	6/18/2022 14:58	5.99
6/19/2022 11:39	34.50	6/19/2022 12:26	19.30	6/18/2022 14:59	5.99
6/19/2022 11:40	33.14	6/19/2022 12:27	19.30	6/18/2022 15:00	5.98
6/19/2022 11:41	34.51	6/19/2022 12:28	19.32	6/18/2022 15:01	6.30
6/19/2022 11:42	33.49	6/19/2022 12:29	19.32	6/18/2022 15:02	8.61
6/19/2022 11:43	34.05	6/19/2022 12:30	19.29	6/18/2022 15:03	7.05
6/19/2022 11:44	34.64	6/19/2022 12:31	19.32	6/18/2022 15:04	6.08
6/19/2022 11:45	33.32	6/19/2022 12:32	19.29	6/18/2022 15:05	6.01
6/19/2022 11:46	34.68	6/19/2022 12:33	19.32	6/18/2022 15:06	5.97
6/19/2022 11:47	33.39	6/19/2022 12:34	19.31	6/18/2022 15:07	5.98
6/19/2022 11:48	33.23	6/19/2022 12:35	19.30	6/18/2022 15:08	5.99
6/19/2022 11:49	34.60	6/19/2022 12:36	19.33	6/18/2022 15:09	6.02
6/19/2022 11:50	33.78	6/19/2022 12:37	19.33	6/18/2022 15:10	5.98
6/19/2022 11:51	33.32	6/19/2022 12:38	19.31	6/18/2022 15:11	5.99
6/19/2022 11:52	33.23	6/19/2022 12:39	19.31	6/18/2022 15:12	5.99
6/19/2022 11:53	33.17	6/19/2022 12:40	19.30	6/18/2022 15:13	5.98
6/19/2022 11:54	33.11	6/19/2022 12:41	19.29	6/18/2022 15:14	5.97

6/19/2022 11:55	33.07	6/19/2022 12:42	19.30	6/18/2022 15:15	5.98
6/19/2022 11:56	33.05	6/19/2022 12:43	19.30	6/18/2022 15:16	6.00
6/19/2022 11:57	33.05	6/19/2022 12:44	19.29	6/18/2022 15:17	5.97
6/19/2022 11:58	33.04	6/19/2022 12:45	19.32	6/18/2022 15:18	5.95
6/19/2022 11:59	33.01	6/19/2022 12:46	19.31	6/18/2022 15:19	5.98
6/19/2022 12:00	33.01	6/19/2022 12:47	19.29	6/18/2022 15:20	5.97
6/19/2022 12:01	32.97	6/19/2022 12:48	19.28	6/18/2022 15:21	5.99
6/19/2022 12:02	34.04	6/19/2022 12:49	19.31	6/18/2022 15:22	5.98
6/19/2022 12:03	33.17	6/19/2022 12:50	19.29	6/18/2022 15:23	5.99
6/19/2022 12:04	33.07	6/19/2022 12:51	19.31	6/18/2022 15:24	5.96
6/19/2022 12:05	33.04	6/19/2022 12:52	19.30	6/18/2022 15:25	5.98
6/19/2022 12:06	33.00	6/19/2022 12:53	19.33	6/18/2022 15:26	5.95
6/19/2022 12:07	32.97	6/19/2022 12:54	19.30	6/18/2022 15:27	5.98
6/19/2022 12:08	33.00	6/19/2022 12:55	19.33	6/18/2022 15:28	5.97
6/19/2022 12:09	32.96	6/19/2022 12:56	19.31	6/18/2022 15:29	5.99
6/19/2022 12:10	32.94	6/19/2022 12:57	19.28	6/18/2022 15:30	5.97
6/19/2022 12:11	32.94	6/19/2022 12:58	19.32	6/18/2022 15:31	5.97
6/19/2022 12:12	32.94	6/19/2022 12:59	19.28	6/18/2022 15:32	5.98
6/19/2022 12:13	32.94	6/19/2022 13:00	19.29	6/18/2022 15:33	5.98
6/19/2022 12:14	32.92	6/19/2022 13:01	19.31	6/18/2022 15:34	5.98
6/19/2022 12:15	32.92	6/19/2022 13:02	19.28	6/18/2022 15:35	5.96
6/19/2022 12:16	32.90	6/19/2022 13:03	19.31	6/18/2022 15:36	5.99
6/19/2022 12:17	32.87	6/19/2022 13:04	19.32	6/18/2022 15:37	6.01
6/19/2022 12:18	32.92	6/19/2022 13:05	19.30	6/18/2022 15:38	5.99
6/19/2022 12:19	32.89	6/19/2022 13:06	19.30	6/18/2022 15:39	5.97
6/19/2022 12:20	32.93	6/19/2022 13:07	19.90	6/18/2022 15:40	6.00
6/19/2022 12:21	32.87	6/19/2022 13:08	20.02	6/18/2022 15:41	5.98
6/19/2022 12:22	32.87	6/19/2022 13:09	20.09	6/18/2022 15:42	6.02
6/19/2022 12:23	32.86	6/19/2022 13:10	20.13	6/18/2022 15:43	5.98
6/19/2022 12:24	32.86	6/19/2022 13:11	20.11	6/18/2022 15:44	5.97
6/19/2022 12:25	32.84	6/19/2022 13:12	19.59	6/18/2022 15:45	5.98
6/19/2022 12:26	32.86	6/19/2022 13:13	19.53	6/18/2022 15:46	5.97
6/19/2022 12:27	32.87	6/19/2022 13:14	19.49	6/18/2022 15:47	5.97
6/19/2022 12:28	32.85	6/19/2022 13:15	19.47	6/18/2022 15:48	5.98
6/19/2022 12:29	32.87	6/19/2022 13:16	19.45	6/18/2022 15:49	5.99
6/19/2022 12:30	32.83	6/19/2022 13:17	19.47	6/18/2022 15:50	6.02
6/19/2022 12:31	32.84	6/19/2022 13:18	19.44	6/18/2022 15:51	5.95
6/19/2022 12:32	32.82	6/19/2022 13:19	19.44	6/18/2022 15:52	5.96
6/19/2022 12:33	32.82	6/19/2022 13:20	19.43	6/18/2022 15:53	5.98
6/19/2022 12:34	32.84	6/19/2022 13:21	19.41	6/18/2022 15:54	5.97
6/19/2022 12:35	32.81	6/19/2022 13:22	19.43	6/18/2022 15:55	5.98
6/19/2022 12:36	32.86	6/19/2022 13:23	19.43	6/18/2022 15:56	5.96
6/19/2022 12:37	32.82	6/19/2022 13:24	19.40	6/18/2022 15:57	5.96
6/19/2022 12:38	32.82	6/19/2022 13:25	19.40	6/18/2022 15:58	5.98
6/19/2022 12:39	32.82	6/19/2022 13:26	19.40	6/18/2022 15:59	5.97
6/19/2022 12:40	32.81	6/19/2022 13:27	19.41	6/18/2022 16:00	5.98
6/19/2022 12:41	32.81	6/19/2022 13:28	19.40	6/18/2022 16:01	5.97
6/19/2022 12:42	32.81	6/19/2022 13:29	19.41	6/18/2022 16:02	5.99
6/19/2022 12:43	32.82	6/19/2022 13:30	19.38	6/18/2022 16:03	5.98
6/19/2022 12:44	32.83	6/19/2022 13:31	19.39	6/18/2022 16:04	6.01
6/19/2022 12:45	32.82	6/19/2022 13:32	19.37	6/18/2022 16:05	6.00
6/19/2022 12:46	32.79	6/19/2022 13:33	19.36	6/18/2022 16:06	6.00
6/19/2022 12:47	32.79	6/19/2022 13:34	19.37	6/18/2022 16:07	5.99
6/19/2022 12:48	32.79	6/19/2022 13:35	19.36	6/18/2022 16:08	5.94
6/19/2022 12:49	32.81	6/19/2022 13:36	19.38	6/18/2022 16:09	6.00
6/19/2022 12:50	32.79	6/19/2022 13:37	19.37	6/18/2022 16:10	6.00
6/19/2022 12:51	32.83	6/19/2022 13:38	19.38	6/18/2022 16:11	5.96
6/19/2022 12:52	32.75	6/19/2022 13:39	19.37	6/18/2022 16:12	6.02
6/19/2022 12:53	32.80	6/19/2022 13:40	19.39	6/18/2022 16:13	5.98
6/19/2022 12:54	32.79	6/19/2022 13:41	19.38	6/18/2022 16:14	5.96
6/19/2022 12:55	32.80	6/19/2022 13:42	19.36	6/18/2022 16:15	6.01
6/19/2022 12:56	32.78	6/19/2022 13:43	19.36	6/18/2022 16:16	5.96
6/19/2022 12:57	32.79	6/19/2022 13:44	19.36	6/18/2022 16:17	5.98
6/19/2022 12:58	32.80	6/19/2022 13:45	19.37	6/18/2022 16:18	5.98
6/19/2022 12:59	32.79	6/19/2022 13:46	19.38	6/18/2022 16:19	5.96
6/19/2022 13:00	32.77	6/19/2022 13:47	19.38	6/18/2022 16:20	6.00
6/19/2022 13:01	32.81	6/19/2022 13:48	19.35	6/18/2022 16:21	6.01
6/19/2022 13:02	32.79	6/19/2022 13:49	19.36	6/18/2022 16:22	5.98
6/19/2022 13:03	32.76	6/19/2022 13:50	19.38	6/18/2022 16:23	5.94
6/19/2022 13:04	32.80	6/19/2022 13:51	19.36	6/18/2022 16:24	5.99
6/19/2022 13:05	32.79	6/19/2022 13:52	19.35	6/18/2022 16:25	5.94
6/19/2022 13:06	32.79	6/19/2022 13:53	19.35	6/18/2022 16:26	6.01
6/19/2022 13:07	32.78	6/19/2022 13:54	19.36	6/18/2022 16:27	5.98
6/19/2022 13:08	32.75	6/19/2022 13:55	19.35	6/18/2022 16:28	5.97
6/19/2022 13:09	32.75	6/19/2022 13:56	19.34	6/18/2022 16:29	6.00
6/19/2022 13:10	32.76	6/19/2022 13:57	19.35	6/18/2022 16:30	5.96
6/19/2022 13:11	32.77	6/19/2022 13:58	19.35	6/18/2022 16:31	5.96
6/19/2022 13:12	32.75	6/19/2022 13:59	19.33	6/18/2022 16:32	8.56
6/19/2022 13:13	32.75	6/19/2022 14:00	19.35	6/18/2022 16:33	8.88
6/19/2022 13:14	32.77	6/19/2022 14:01	19.33	6/18/2022 16:34	6.50
6/19/2022 13:15	32.78	6/19/2022 14:02	19.35	6/18/2022 16:35	6.08
6/19/2022 13:16	32.80	6/19/2022 14:03	19.36	6/18/2022 16:36	6.04
6/19/2022 13:17	32.75	6/19/2022 14:04	19.35	6/18/2022 16:37	6.01
6/19/2022 13:18	32.77	6/19/2022 14:05	19.33	6/18/2022 16:38	6.02
6/19/2022 13:19	32.76	6/19/2022 14:06	19.35	6/18/2022 16:39	6.00
6/19/2022 13:20	32.78	6/19/2022 14:07	19.34	6/18/2022 16:40	6.01
6/19/2022 13:21	32.76	6/19/2022 14:08	19.36	6/18/2022 16:41	5.98
6/19/2022 13:22	32.75	6/19/2022 14:09	19.33	6/18/2022 16:42	6.00

6/19/2022 13:23	32.75	6/19/2022 14:10	19.34	6/18/2022 16:43	5.99
6/19/2022 13:24	32.76	6/19/2022 14:11	19.35	6/18/2022 16:44	5.99
6/19/2022 13:25	32.75	6/19/2022 14:12	19.35	6/18/2022 16:45	5.99
6/19/2022 13:26	32.78	6/19/2022 14:13	19.33	6/18/2022 16:46	6.01
6/19/2022 13:27	32.77	6/19/2022 14:14	19.34	6/18/2022 16:47	6.00
6/19/2022 13:28	32.78	6/19/2022 14:15	19.36	6/18/2022 16:48	5.95
6/19/2022 13:29	32.76	6/19/2022 14:16	19.34	6/18/2022 16:49	5.99
6/19/2022 13:30	32.76	6/19/2022 14:17	19.35	6/18/2022 16:50	6.00
6/19/2022 13:31	33.51	6/19/2022 14:18	19.36	6/18/2022 16:51	6.02
6/19/2022 13:32	32.94	6/19/2022 14:19	19.35	6/18/2022 16:52	6.02
6/19/2022 13:33	32.91	6/19/2022 14:20	19.34	6/18/2022 16:53	5.99
6/19/2022 13:34	32.81	6/19/2022 14:21	19.35	6/18/2022 16:54	5.99
6/19/2022 13:35	32.82	6/19/2022 14:22	19.31	6/18/2022 16:55	5.98
6/19/2022 13:36	32.79	6/19/2022 14:23	19.36	6/18/2022 16:56	5.99
6/19/2022 13:37	32.79	6/19/2022 14:24	19.34	6/18/2022 16:57	5.98
6/19/2022 13:38	32.81	6/19/2022 14:25	19.34	6/18/2022 16:58	6.01
6/19/2022 13:39	32.79	6/19/2022 14:26	19.36	6/18/2022 16:59	5.98
6/19/2022 13:40	32.79	6/19/2022 14:27	19.32	6/18/2022 17:00	5.99
6/19/2022 13:41	32.76	6/19/2022 14:28	19.33	6/18/2022 17:01	5.99
6/19/2022 13:42	32.78	6/19/2022 14:29	19.33	6/18/2022 17:02	5.99
6/19/2022 13:43	33.98	6/19/2022 14:30	19.32	6/18/2022 17:03	6.01
6/19/2022 13:44	33.10	6/19/2022 14:31	19.32	6/18/2022 17:04	6.00
6/19/2022 13:45	32.92	6/19/2022 14:32	19.32	6/18/2022 17:05	5.98
6/19/2022 13:46	32.89	6/19/2022 14:33	19.32	6/18/2022 17:06	5.97
6/19/2022 13:47	32.87	6/19/2022 14:34	19.34	6/18/2022 17:07	5.98
6/19/2022 13:48	32.85	6/19/2022 14:35	19.34	6/18/2022 17:08	5.98
6/19/2022 13:49	32.82	6/19/2022 14:36	19.35	6/18/2022 17:09	6.00
6/19/2022 13:50	32.85	6/19/2022 14:37	19.34	6/18/2022 17:10	5.96
6/19/2022 13:51	32.82	6/19/2022 14:38	19.33	6/18/2022 17:11	5.96
6/19/2022 13:52	32.82	6/19/2022 14:39	19.33	6/18/2022 17:12	5.98
6/19/2022 13:53	32.81	6/19/2022 14:40	19.35	6/18/2022 17:13	5.99
6/19/2022 13:54	32.77	6/19/2022 14:41	19.34	6/18/2022 17:14	6.01
6/19/2022 13:55	32.79	6/19/2022 14:42	19.31	6/18/2022 17:15	5.98
6/19/2022 13:56	32.78	6/19/2022 14:43	19.34	6/18/2022 17:16	5.99
6/19/2022 13:57	32.80	6/19/2022 14:44	19.33	6/18/2022 17:17	5.96
6/19/2022 13:58	32.79	6/19/2022 14:45	19.32	6/18/2022 17:18	6.00
6/19/2022 13:59	32.79	6/19/2022 14:46	19.33	6/18/2022 17:19	6.03
6/19/2022 14:00	32.79	6/19/2022 14:47	19.33	6/18/2022 17:20	5.99
6/19/2022 14:01	32.76	6/19/2022 14:48	19.33	6/18/2022 17:21	6.01
6/19/2022 14:02	32.77	6/19/2022 14:49	19.32	6/18/2022 17:22	6.01
6/19/2022 14:03	32.77	6/19/2022 14:50	19.32	6/18/2022 17:23	5.97
6/19/2022 14:04	32.79	6/19/2022 14:51	19.33	6/18/2022 17:24	5.99
6/19/2022 14:05	32.79	6/19/2022 14:52	19.34	6/18/2022 17:25	6.02
6/19/2022 14:06	32.78	6/19/2022 14:53	19.32	6/18/2022 17:26	6.00
6/19/2022 14:07	32.77	6/19/2022 14:54	19.30	6/18/2022 17:27	5.97
6/19/2022 14:08	32.80	6/19/2022 14:55	19.33	6/18/2022 17:28	5.97
6/19/2022 14:09	32.76	6/19/2022 14:56	19.33	6/18/2022 17:29	5.99
6/19/2022 14:10	32.78	6/19/2022 14:57	19.34	6/18/2022 17:30	6.01
6/19/2022 14:11	32.74	6/19/2022 14:58	19.32	6/18/2022 17:31	6.00
6/19/2022 14:12	32.78	6/19/2022 14:59	19.30	6/18/2022 17:32	5.97
6/19/2022 14:13	32.77	6/19/2022 15:00	19.29	6/18/2022 17:33	6.02
6/19/2022 14:14	32.78	6/19/2022 15:01	19.31	6/18/2022 17:34	5.97
6/19/2022 14:15	32.80	6/19/2022 15:02	19.32	6/18/2022 17:35	6.00
6/19/2022 14:16	33.69	6/19/2022 15:03	19.31	6/18/2022 17:36	6.02
6/19/2022 14:17	33.06	6/19/2022 15:04	19.30	6/18/2022 17:37	6.02
6/19/2022 14:18	32.92	6/19/2022 15:05	19.34	6/18/2022 17:38	5.97
6/19/2022 14:19	32.86	6/19/2022 15:06	19.35	6/18/2022 17:39	6.00
6/19/2022 14:20	32.83	6/19/2022 15:07	19.32	6/18/2022 17:40	6.00
6/19/2022 14:21	32.83	6/19/2022 15:08	19.32	6/18/2022 17:41	6.02
6/19/2022 14:22	32.79	6/19/2022 15:09	19.33	6/18/2022 17:42	6.01
6/19/2022 14:23	32.78	6/19/2022 15:10	19.31	6/18/2022 17:43	6.00
6/19/2022 14:24	32.80	6/19/2022 15:11	19.32	6/18/2022 17:44	5.97
6/19/2022 14:25	32.79	6/19/2022 15:12	19.33	6/18/2022 17:45	6.00
6/19/2022 14:26	32.80	6/19/2022 15:13	19.33	6/18/2022 17:46	5.97
6/19/2022 14:27	32.80	6/19/2022 15:14	19.30	6/18/2022 17:47	5.99
6/19/2022 14:28	32.79	6/19/2022 15:15	19.30	6/18/2022 17:48	5.99
6/19/2022 14:29	32.82	6/19/2022 15:16	19.32	6/18/2022 17:49	6.02
6/19/2022 14:30	32.80	6/19/2022 15:17	19.34	6/18/2022 17:50	5.99
6/19/2022 14:31	32.78	6/19/2022 15:18	19.36	6/18/2022 17:51	5.99
6/19/2022 14:32	32.81	6/19/2022 15:19	19.32	6/18/2022 17:52	6.00
6/19/2022 14:33	32.78	6/19/2022 15:20	19.31	6/18/2022 17:53	5.97
6/19/2022 14:34	32.78	6/19/2022 15:21	19.33	6/18/2022 17:54	6.01
6/19/2022 14:35	32.77	6/19/2022 15:22	19.32	6/18/2022 17:55	6.01
6/19/2022 14:36	32.79	6/19/2022 15:23	19.32	6/18/2022 17:56	5.99
6/19/2022 14:37	32.76	6/19/2022 15:24	19.34	6/18/2022 17:57	6.01
6/19/2022 14:38	32.77	6/19/2022 15:25	19.32	6/18/2022 17:58	5.98
6/19/2022 14:39	32.75	6/19/2022 15:26	19.33	6/18/2022 17:59	5.96
6/19/2022 14:40	32.78	6/19/2022 15:27	19.32	6/18/2022 18:00	5.99
6/19/2022 14:41	32.78	6/19/2022 15:28	19.31	6/18/2022 18:01	5.99
6/19/2022 14:42	32.80	6/19/2022 15:29	19.32	6/18/2022 18:02	5.99
6/19/2022 14:43	32.76	6/19/2022 15:30	19.34	6/18/2022 18:03	5.97
6/19/2022 14:44	32.75	6/19/2022 15:31	19.32	6/18/2022 18:04	6.01
6/19/2022 14:45	32.78	6/19/2022 15:32	19.31	6/18/2022 18:05	5.99
6/19/2022 14:46	32.77	6/19/2022 15:33	19.33	6/18/2022 18:06	5.98
6/19/2022 14:47	32.76	6/19/2022 15:34	19.32	6/18/2022 18:07	5.96
6/19/2022 14:48	32.75	6/19/2022 15:35	19.32	6/18/2022 18:08	5.95
6/19/2022 14:49	32.78	6/19/2022 15:36	19.32	6/18/2022 18:09	5.98
6/19/2022 14:50	32.73	6/19/2022 15:37	19.33	6/18/2022 18:10	5.99

6/19/2022 14:51	34.14	6/19/2022 15:38	19.33	6/18/2022 18:11	6.00
6/19/2022 14:52	33.00	6/19/2022 15:39	19.30	6/18/2022 18:12	5.97
6/19/2022 14:53	32.87	6/19/2022 15:40	19.34	6/18/2022 18:13	6.01
6/19/2022 14:54	32.88	6/19/2022 15:41	19.35	6/18/2022 18:14	5.98
6/19/2022 14:55	32.83	6/19/2022 15:42	19.34	6/18/2022 18:15	5.98
6/19/2022 14:56	32.81	6/19/2022 15:43	19.34	6/18/2022 18:16	5.98
6/19/2022 14:57	32.80	6/19/2022 15:44	19.32	6/18/2022 18:17	5.96
6/19/2022 14:58	32.78	6/19/2022 15:45	19.32	6/18/2022 18:18	6.01
6/19/2022 14:59	32.84	6/19/2022 15:46	19.30	6/18/2022 18:19	5.99
6/19/2022 15:00	32.80	6/19/2022 15:47	19.33	6/18/2022 18:20	5.99
6/19/2022 15:01	32.82	6/19/2022 15:48	19.34	6/18/2022 18:21	5.99
6/19/2022 15:02	32.79	6/19/2022 15:49	19.36	6/18/2022 18:22	6.00
6/19/2022 15:03	32.81	6/19/2022 15:50	19.33	6/18/2022 18:23	6.01
6/19/2022 15:04	32.79	6/19/2022 15:51	19.32	6/18/2022 18:24	5.98
6/19/2022 15:05	32.77	6/19/2022 15:52	19.29	6/18/2022 18:25	5.99
6/19/2022 15:06	32.79	6/19/2022 15:53	19.31	6/18/2022 18:26	5.96
6/19/2022 15:07	32.75	6/19/2022 15:54	19.34	6/18/2022 18:27	6.00
6/19/2022 15:08	32.76	6/19/2022 15:55	19.31	6/18/2022 18:28	6.00
6/19/2022 15:09	32.77	6/19/2022 15:56	19.32	6/18/2022 18:29	5.95
6/19/2022 15:10	32.76	6/19/2022 15:57	19.31	6/18/2022 18:30	5.97
6/19/2022 15:11	32.75	6/19/2022 15:58	19.31	6/18/2022 18:31	5.97
6/19/2022 15:12	32.78	6/19/2022 15:59	19.33	6/18/2022 18:32	5.98
6/19/2022 15:13	32.74	6/19/2022 16:00	19.33	6/18/2022 18:33	6.00
6/19/2022 15:14	32.77	6/19/2022 16:01	19.31	6/18/2022 18:34	5.96
6/19/2022 15:15	32.78	6/19/2022 16:02	19.32	6/18/2022 18:35	5.96
6/19/2022 15:16	32.76	6/19/2022 16:03	19.32	6/18/2022 18:36	6.00
6/19/2022 15:17	32.77	6/19/2022 16:04	19.32	6/18/2022 18:37	5.99
6/19/2022 15:18	32.80	6/19/2022 16:05	19.34	6/18/2022 18:38	5.98
6/19/2022 15:19	32.79	6/19/2022 16:06	19.33	6/18/2022 18:39	6.03
6/19/2022 15:20	32.82	6/19/2022 16:07	19.32	6/18/2022 18:40	5.98
6/19/2022 15:21	32.72	6/19/2022 16:08	19.31	6/18/2022 18:41	5.99
6/19/2022 15:22	32.74	6/19/2022 16:09	19.31	6/18/2022 18:42	5.98
6/19/2022 15:23	32.76	6/19/2022 16:10	19.32	6/18/2022 18:43	6.01
6/19/2022 15:24	32.74	6/19/2022 16:11	19.32	6/18/2022 18:44	6.01
6/19/2022 15:25	32.78	6/19/2022 16:12	19.34	6/18/2022 18:45	5.99
6/19/2022 15:26	32.77	6/19/2022 16:13	19.33	6/18/2022 18:46	5.97
6/19/2022 15:27	32.74	6/19/2022 16:14	19.33	6/18/2022 18:47	5.99
6/19/2022 15:28	32.76	6/19/2022 16:15	19.32	6/18/2022 18:48	6.01
6/19/2022 15:29	32.78	6/19/2022 16:16	19.32	6/18/2022 18:49	5.98
6/19/2022 15:30	32.75	6/19/2022 16:17	19.31	6/18/2022 18:50	5.97
6/19/2022 15:31	32.72	6/19/2022 16:18	19.33	6/18/2022 18:51	6.01
6/19/2022 15:32	32.75	6/19/2022 16:19	19.34	6/18/2022 18:52	5.97
6/19/2022 15:33	32.76	6/19/2022 16:20	19.34	6/18/2022 18:53	5.98
6/19/2022 15:34	32.74	6/19/2022 16:21	19.33	6/18/2022 18:54	6.01
6/19/2022 15:35	32.77	6/19/2022 16:22	19.31	6/18/2022 18:55	5.99
6/19/2022 15:36	32.77	6/19/2022 16:23	19.34	6/18/2022 18:56	5.99
6/19/2022 15:37	32.74	6/19/2022 16:24	19.31	6/18/2022 18:57	6.00
6/19/2022 15:38	32.74	6/19/2022 16:25	19.33	6/18/2022 18:58	5.98
6/19/2022 15:39	32.74	6/19/2022 16:26	19.32	6/18/2022 18:59	5.99
6/19/2022 15:40	32.72	6/19/2022 16:27	19.31	6/18/2022 19:00	5.99
6/19/2022 15:41	32.76	6/19/2022 16:28	19.30	6/18/2022 19:01	5.98
6/19/2022 15:42	32.74	6/19/2022 16:29	19.32	6/18/2022 19:02	5.98
6/19/2022 15:43	32.75	6/19/2022 16:30	19.31	6/18/2022 19:03	6.03
6/19/2022 15:44	32.74	6/19/2022 16:31	19.34	6/18/2022 19:04	5.95
6/19/2022 15:45	32.78	6/19/2022 16:32	19.30	6/18/2022 19:05	5.99
6/19/2022 15:46	32.79	6/19/2022 16:33	19.34	6/18/2022 19:06	5.99
6/19/2022 15:47	32.77	6/19/2022 16:34	19.34	6/18/2022 19:07	6.00
6/19/2022 15:48	32.76	6/19/2022 16:35	19.30	6/18/2022 19:08	5.99
6/19/2022 15:49	32.74	6/19/2022 16:36	19.32	6/18/2022 19:09	6.00
6/19/2022 15:50	32.75	6/19/2022 16:37	19.32	6/18/2022 19:10	5.99
6/19/2022 15:51	32.76	6/19/2022 16:38	19.32	6/18/2022 19:11	5.98
6/19/2022 15:52	32.77	6/19/2022 16:39	19.32	6/18/2022 19:12	5.96
6/19/2022 15:53	32.75	6/19/2022 16:40	19.29	6/18/2022 19:13	5.95
6/19/2022 15:54	32.74	6/19/2022 16:41	19.35	6/18/2022 19:14	5.98
6/19/2022 15:55	32.74	6/19/2022 16:42	19.35	6/18/2022 19:15	5.97
6/19/2022 15:56	32.73	6/19/2022 16:43	19.32	6/18/2022 19:16	6.00
6/19/2022 15:57	32.76	6/19/2022 16:44	19.32	6/18/2022 19:17	5.97
6/19/2022 15:58	32.76	6/19/2022 16:45	19.33	6/18/2022 19:18	5.99
6/19/2022 15:59	32.72	6/19/2022 16:46	19.34	6/18/2022 19:19	6.00
6/19/2022 16:00	32.77	6/19/2022 16:47	19.33	6/18/2022 19:20	5.97
6/19/2022 16:01	32.74	6/19/2022 16:48	19.33	6/18/2022 19:21	5.98
6/19/2022 16:02	32.75	6/19/2022 16:49	19.32	6/18/2022 19:22	5.99
6/19/2022 16:03	32.73	6/19/2022 16:50	19.33	6/18/2022 19:23	5.98
6/19/2022 16:04	32.75	6/19/2022 16:51	19.34	6/18/2022 19:24	5.97
6/19/2022 16:05	32.75	6/19/2022 16:52	19.33	6/18/2022 19:25	6.01
6/19/2022 16:06	32.73	6/19/2022 16:53	19.31	6/18/2022 19:26	6.01
6/19/2022 16:07	32.71	6/19/2022 16:54	19.33	6/18/2022 19:27	6.00
6/19/2022 16:08	32.73	6/19/2022 16:55	19.31	6/18/2022 19:28	5.97
6/19/2022 16:09	32.76	6/19/2022 16:56	19.32	6/18/2022 19:29	5.97
6/19/2022 16:10	32.72	6/19/2022 16:57	19.32	6/18/2022 19:30	5.98
6/19/2022 16:11	32.74	6/19/2022 16:58	19.33	6/18/2022 19:31	6.01
6/19/2022 16:12	32.73	6/19/2022 16:59	19.33	6/18/2022 19:32	5.99
6/19/2022 16:13	32.74	6/19/2022 17:00	19.92	6/18/2022 19:33	5.96
6/19/2022 16:14	32.73	6/19/2022 17:01	20.02	6/18/2022 19:34	5.98
6/19/2022 16:15	32.72	6/19/2022 17:02	20.10	6/18/2022 19:35	5.99
6/19/2022 16:16	32.77	6/19/2022 17:03	20.12	6/18/2022 19:36	5.99
6/19/2022 16:17	32.74	6/19/2022 17:04	20.18	6/18/2022 19:37	6.02
6/19/2022 16:18	32.74	6/19/2022 17:05	20.16	6/18/2022 19:38	5.99

6/19/2022 16:19	33.41	6/19/2022 17:06	19.62	6/18/2022 19:39	5.96
6/19/2022 16:20	33.15	6/19/2022 17:07	19.56	6/18/2022 19:40	5.97
6/19/2022 16:21	32.89	6/19/2022 17:08	19.52	6/18/2022 19:41	6.00
6/19/2022 16:22	32.86	6/19/2022 17:09	19.49	6/18/2022 19:42	5.99
6/19/2022 16:23	32.85	6/19/2022 17:10	19.50	6/18/2022 19:43	6.02
6/19/2022 16:24	32.81	6/19/2022 17:11	19.47	6/18/2022 19:44	5.97
6/19/2022 16:25	32.82	6/19/2022 17:12	19.45	6/18/2022 19:45	5.95
6/19/2022 16:26	32.80	6/19/2022 17:13	19.44	6/18/2022 19:46	5.99
6/19/2022 16:27	32.79	6/19/2022 17:14	19.45	6/18/2022 19:47	5.96
6/19/2022 16:28	32.84	6/19/2022 17:15	19.41	6/18/2022 19:48	5.98
6/19/2022 16:29	32.77	6/19/2022 17:16	19.43	6/18/2022 19:49	5.96
6/19/2022 16:30	32.78	6/19/2022 17:17	19.39	6/18/2022 19:50	6.00
6/19/2022 16:31	32.77	6/19/2022 17:18	19.42	6/18/2022 19:51	5.99
6/19/2022 16:32	32.76	6/19/2022 17:19	19.46	6/18/2022 19:52	8.37
6/19/2022 16:33	32.78	6/19/2022 17:20	19.42	6/18/2022 19:53	8.69
6/19/2022 16:34	32.77	6/19/2022 17:21	19.41	6/18/2022 19:54	6.14
6/19/2022 16:35	33.98	6/19/2022 17:22	19.42	6/18/2022 19:55	6.05
6/19/2022 16:36	33.00	6/19/2022 17:23	19.43	6/18/2022 19:56	6.01
6/19/2022 16:37	32.90	6/19/2022 17:24	19.41	6/18/2022 19:57	6.02
6/19/2022 16:38	32.86	6/19/2022 17:25	19.40	6/18/2022 19:58	6.02
6/19/2022 16:39	32.82	6/19/2022 17:26	19.43	6/18/2022 19:59	6.02
6/19/2022 16:40	32.83	6/19/2022 17:27	19.40	6/18/2022 20:00	6.02
6/19/2022 16:41	32.80	6/19/2022 17:28	19.40	6/18/2022 20:01	6.02
6/19/2022 16:42	32.78	6/19/2022 17:29	19.41	6/18/2022 20:02	6.02
6/19/2022 16:43	32.80	6/19/2022 17:30	19.40	6/18/2022 20:03	5.99
6/19/2022 16:44	32.80	6/19/2022 17:31	19.38	6/18/2022 20:04	6.01
6/19/2022 16:45	32.83	6/19/2022 17:32	19.39	6/18/2022 20:05	6.03
6/19/2022 16:46	32.78	6/19/2022 17:33	19.38	6/18/2022 20:06	6.01
6/19/2022 16:47	32.79	6/19/2022 17:34	19.41	6/18/2022 20:07	6.00
6/19/2022 16:48	32.78	6/19/2022 17:35	19.42	6/18/2022 20:08	6.00
6/19/2022 16:49	32.80	6/19/2022 17:36	19.39	6/18/2022 20:09	6.02
6/19/2022 16:50	32.77	6/19/2022 17:37	19.38	6/18/2022 20:10	5.97
6/19/2022 16:51	32.75	6/19/2022 17:38	19.38	6/18/2022 20:11	5.97
6/19/2022 16:52	32.76	6/19/2022 17:39	19.38	6/18/2022 20:12	5.99
6/19/2022 16:53	32.77	6/19/2022 17:40	19.41	6/18/2022 20:13	6.02
6/19/2022 16:54	32.78	6/19/2022 17:41	19.38	6/18/2022 20:14	5.97
6/19/2022 16:55	32.78	6/19/2022 17:42	19.38	6/18/2022 20:15	6.01
6/19/2022 16:56	32.75	6/19/2022 17:43	19.38	6/18/2022 20:16	5.98
6/19/2022 16:57	32.74	6/19/2022 17:44	19.38	6/18/2022 20:17	6.00
6/19/2022 16:58	32.74	6/19/2022 17:45	19.38	6/18/2022 20:18	5.97
6/19/2022 16:59	32.77	6/19/2022 17:46	19.39	6/18/2022 20:19	5.98
6/19/2022 17:00	32.76	6/19/2022 17:47	19.37	6/18/2022 20:20	5.99
6/19/2022 17:01	32.76	6/19/2022 17:48	19.36	6/18/2022 20:21	5.97
6/19/2022 17:02	32.75	6/19/2022 17:49	19.39	6/18/2022 20:22	5.98
6/19/2022 17:03	32.76	6/19/2022 17:50	19.35	6/18/2022 20:23	6.00
6/19/2022 17:04	32.73	6/19/2022 17:51	19.37	6/18/2022 20:24	6.00
6/19/2022 17:05	32.76	6/19/2022 17:52	19.38	6/18/2022 20:25	5.98
6/19/2022 17:06	32.78	6/19/2022 17:53	19.37	6/18/2022 20:26	5.99
6/19/2022 17:07	32.76	6/19/2022 17:54	19.39	6/18/2022 20:27	6.01
6/19/2022 17:08	32.75	6/19/2022 17:55	19.34	6/18/2022 20:28	6.00
6/19/2022 17:09	32.77	6/19/2022 17:56	19.36	6/18/2022 20:29	5.95
6/19/2022 17:10	32.74	6/19/2022 17:57	19.40	6/18/2022 20:30	6.00
6/19/2022 17:11	32.74	6/19/2022 17:58	19.38	6/18/2022 20:31	5.97
6/19/2022 17:12	32.76	6/19/2022 17:59	19.39	6/18/2022 20:32	6.01
6/19/2022 17:13	32.75	6/19/2022 18:00	19.37	6/18/2022 20:33	5.97
6/19/2022 17:14	32.75	6/19/2022 18:01	19.36	6/18/2022 20:34	5.99
6/19/2022 17:15	32.76	6/19/2022 18:02	19.37	6/18/2022 20:35	5.96
6/19/2022 17:16	32.73	6/19/2022 18:03	19.37	6/18/2022 20:36	6.01
6/19/2022 17:17	32.76	6/19/2022 18:04	19.36	6/18/2022 20:37	6.00
6/19/2022 17:18	32.75	6/19/2022 18:05	19.36	6/18/2022 20:38	5.99
6/19/2022 17:19	32.74	6/19/2022 18:06	19.38	6/18/2022 20:39	6.01
6/19/2022 17:20	32.75	6/19/2022 18:07	19.37	6/18/2022 20:40	5.97
6/19/2022 17:21	32.74	6/19/2022 18:08	19.36	6/18/2022 20:41	6.00
6/19/2022 17:22	32.74	6/19/2022 18:09	19.36	6/18/2022 20:42	6.00
6/19/2022 17:23	32.72	6/19/2022 18:10	19.37	6/18/2022 20:43	5.98
6/19/2022 17:24	32.76	6/19/2022 18:11	19.36	6/18/2022 20:44	5.97
6/19/2022 17:25	32.72	6/19/2022 18:12	19.37	6/18/2022 20:45	5.97
6/19/2022 17:26	32.75	6/19/2022 18:13	19.35	6/18/2022 20:46	6.02
6/19/2022 17:27	32.77	6/19/2022 18:14	19.36	6/18/2022 20:47	5.98
6/19/2022 17:28	32.71	6/19/2022 18:15	19.37	6/18/2022 20:48	6.00
6/19/2022 17:29	32.70	6/19/2022 18:16	19.38	6/18/2022 20:49	5.99
6/19/2022 17:30	32.75	6/19/2022 18:17	19.38	6/18/2022 20:50	6.00
6/19/2022 17:31	32.74	6/19/2022 18:18	19.37	6/18/2022 20:51	5.96
6/19/2022 17:32	32.71	6/19/2022 18:19	19.34	6/18/2022 20:52	6.00
6/19/2022 17:33	32.76	6/19/2022 18:20	19.38	6/18/2022 20:53	5.98
6/19/2022 17:34	32.74	6/19/2022 18:21	19.36	6/18/2022 20:54	5.96
6/19/2022 17:35	32.73	6/19/2022 18:22	19.36	6/18/2022 20:55	6.01
6/19/2022 17:36	32.72	6/19/2022 18:23	19.36	6/18/2022 20:56	5.97
6/19/2022 17:37	32.72	6/19/2022 18:24	19.38	6/18/2022 20:57	6.01
6/19/2022 17:38	32.77	6/19/2022 18:25	19.35	6/18/2022 20:58	5.98
6/19/2022 17:39	32.75	6/19/2022 18:26	19.36	6/18/2022 20:59	5.98
6/19/2022 17:40	32.74	6/19/2022 18:27	19.35	6/18/2022 21:00	5.98
6/19/2022 17:41	32.71	6/19/2022 18:28	19.35	6/18/2022 21:01	5.99
6/19/2022 17:42	32.75	6/19/2022 18:29	19.36	6/18/2022 21:02	5.96
6/19/2022 17:43	32.73	6/19/2022 18:30	19.35	6/18/2022 21:03	6.00
6/19/2022 17:44	32.75	6/19/2022 18:31	19.38	6/18/2022 21:04	6.00
6/19/2022 17:45	32.75	6/19/2022 18:32	19.37	6/18/2022 21:05	6.01
6/19/2022 17:46	32.73	6/19/2022 18:33	19.35	6/18/2022 21:06	5.97

6/19/2022 17:47	32.74	6/19/2022 18:34	19.35	6/18/2022 21:07	5.96
6/19/2022 17:48	32.72	6/19/2022 18:35	19.33	6/18/2022 21:08	5.98
6/19/2022 17:49	32.75	6/19/2022 18:36	19.34	6/18/2022 21:09	6.02
6/19/2022 17:50	32.73	6/19/2022 18:37	19.36	6/18/2022 21:10	6.01
6/19/2022 17:51	32.74	6/19/2022 18:38	19.35	6/18/2022 21:11	6.00
6/19/2022 17:52	32.71	6/19/2022 18:39	19.33	6/18/2022 21:12	6.01
6/19/2022 17:53	32.75	6/19/2022 18:40	19.36	6/18/2022 21:13	5.96
6/19/2022 17:54	32.74	6/19/2022 18:41	19.34	6/18/2022 21:14	5.97
6/19/2022 17:55	32.73	6/19/2022 18:42	19.37	6/18/2022 21:15	5.99
6/19/2022 17:56	32.75	6/19/2022 18:43	19.32	6/18/2022 21:16	6.01
6/19/2022 17:57	32.72	6/19/2022 18:44	19.36	6/18/2022 21:17	6.00
6/19/2022 17:58	32.73	6/19/2022 18:45	19.35	6/18/2022 21:18	6.01
6/19/2022 17:59	32.73	6/19/2022 18:46	19.34	6/18/2022 21:19	5.99
6/19/2022 18:00	32.74	6/19/2022 18:47	19.35	6/18/2022 21:20	6.01
6/19/2022 18:01	32.74	6/19/2022 18:48	19.35	6/18/2022 21:21	5.95
6/19/2022 18:02	32.73	6/19/2022 18:49	19.36	6/18/2022 21:22	6.00
6/19/2022 18:03	32.76	6/19/2022 18:50	19.34	6/18/2022 21:23	5.98
6/19/2022 18:04	32.76	6/19/2022 18:51	19.36	6/18/2022 21:24	6.01
6/19/2022 18:05	32.73	6/19/2022 18:52	19.33	6/18/2022 21:25	5.98
6/19/2022 18:06	32.71	6/19/2022 18:53	19.34	6/18/2022 21:26	5.99
6/19/2022 18:07	32.72	6/19/2022 18:54	19.35	6/18/2022 21:27	6.00
6/19/2022 18:08	32.70	6/19/2022 18:55	19.34	6/18/2022 21:28	5.96
6/19/2022 18:09	32.74	6/19/2022 18:56	19.35	6/18/2022 21:29	6.00
6/19/2022 18:10	32.68	6/19/2022 18:57	19.34	6/18/2022 21:30	6.01
6/19/2022 18:11	32.74	6/19/2022 18:58	19.35	6/18/2022 21:31	5.99
6/19/2022 18:12	32.70	6/19/2022 18:59	19.35	6/18/2022 21:32	5.98
6/19/2022 18:13	32.72	6/19/2022 19:00	19.36	6/18/2022 21:33	6.02
6/19/2022 18:14	32.74	6/19/2022 19:01	19.37	6/18/2022 21:34	5.98
6/19/2022 18:15	32.75	6/19/2022 19:02	19.33	6/18/2022 21:35	5.99
6/19/2022 18:16	32.74	6/19/2022 19:03	19.35	6/18/2022 21:36	5.97
6/19/2022 18:17	32.71	6/19/2022 19:04	19.32	6/18/2022 21:37	6.00
6/19/2022 18:18	32.74	6/19/2022 19:05	19.35	6/18/2022 21:38	6.00
6/19/2022 18:19	32.72	6/19/2022 19:06	19.38	6/18/2022 21:39	6.04
6/19/2022 18:20	32.76	6/19/2022 19:07	19.35	6/18/2022 21:40	6.01
6/19/2022 18:21	32.72	6/19/2022 19:08	19.34	6/18/2022 21:41	5.98
6/19/2022 18:22	32.72	6/19/2022 19:09	19.35	6/18/2022 21:42	5.99
6/19/2022 18:23	32.76	6/19/2022 19:10	19.35	6/18/2022 21:43	6.00
6/19/2022 18:24	32.72	6/19/2022 19:11	19.37	6/18/2022 21:44	5.98
6/19/2022 18:25	32.70	6/19/2022 19:12	19.33	6/18/2022 21:45	5.99
6/19/2022 18:26	32.73	6/19/2022 19:13	19.34	6/18/2022 21:46	6.00
6/19/2022 18:27	32.72	6/19/2022 19:14	19.34	6/18/2022 21:47	5.97
6/19/2022 18:28	32.72	6/19/2022 19:15	19.33	6/18/2022 21:48	5.99
6/19/2022 18:29	33.74	6/19/2022 19:16	19.37	6/18/2022 21:49	6.00
6/19/2022 18:30	33.74	6/19/2022 19:17	19.33	6/18/2022 21:50	5.97
6/19/2022 18:31	33.02	6/19/2022 19:18	19.35	6/18/2022 21:51	5.98
6/19/2022 18:32	32.91	6/19/2022 19:19	19.34	6/18/2022 21:52	5.96
6/19/2022 18:33	32.87	6/19/2022 19:20	19.35	6/18/2022 21:53	5.98
6/19/2022 18:34	32.86	6/19/2022 19:21	19.37	6/18/2022 21:54	5.97
6/19/2022 18:35	32.82	6/19/2022 19:22	19.36	6/18/2022 21:55	5.99
6/19/2022 18:36	32.83	6/19/2022 19:23	19.35	6/18/2022 21:56	5.99
6/19/2022 18:37	32.81	6/19/2022 19:24	19.35	6/18/2022 21:57	6.01
6/19/2022 18:38	32.82	6/19/2022 19:25	19.35	6/18/2022 21:58	5.97
6/19/2022 18:39	32.85	6/19/2022 19:26	19.35	6/18/2022 21:59	5.99
6/19/2022 18:40	32.89	6/19/2022 19:27	19.37	6/18/2022 22:00	6.01
6/19/2022 18:41	32.82	6/19/2022 19:28	19.34	6/18/2022 22:01	6.01
6/19/2022 18:42	32.83	6/19/2022 19:29	19.34	6/18/2022 22:02	5.97
6/19/2022 18:43	32.84	6/19/2022 19:30	19.37	6/18/2022 22:03	5.98
6/19/2022 18:44	33.17	6/19/2022 19:31	19.35	6/18/2022 22:04	6.00
6/19/2022 18:45	33.26	6/19/2022 19:32	19.34	6/18/2022 22:05	6.00
6/19/2022 18:46	32.98	6/19/2022 19:33	19.36	6/18/2022 22:06	6.04
6/19/2022 18:47	32.88	6/19/2022 19:34	19.36	6/18/2022 22:07	5.99
6/19/2022 18:48	32.91	6/19/2022 19:35	19.34	6/18/2022 22:08	6.00
6/19/2022 18:49	32.91	6/19/2022 19:36	19.37	6/18/2022 22:09	5.99
6/19/2022 18:50	32.84	6/19/2022 19:37	19.36	6/18/2022 22:10	5.98
6/19/2022 18:51	32.85	6/19/2022 19:38	19.36	6/18/2022 22:11	5.98
6/19/2022 18:52	32.84	6/19/2022 19:39	19.34	6/18/2022 22:12	5.98
6/19/2022 18:53	32.84	6/19/2022 19:40	19.33	6/18/2022 22:13	6.01
6/19/2022 18:54	32.81	6/19/2022 19:41	19.35	6/18/2022 22:14	6.01
6/19/2022 18:55	32.81	6/19/2022 19:42	19.34	6/18/2022 22:15	5.97
6/19/2022 18:56	32.81	6/19/2022 19:43	19.36	6/18/2022 22:16	6.00
6/19/2022 18:57	32.82	6/19/2022 19:44	19.34	6/18/2022 22:17	6.02
6/19/2022 18:58	32.82	6/19/2022 19:45	19.38	6/18/2022 22:18	5.98
6/19/2022 18:59	32.82	6/19/2022 19:46	19.34	6/18/2022 22:19	5.98
6/19/2022 19:00	32.78	6/19/2022 19:47	19.36	6/18/2022 22:20	6.01
6/19/2022 19:01	32.78	6/19/2022 19:48	19.35	6/18/2022 22:21	5.99
6/19/2022 19:02	32.78	6/19/2022 19:49	19.36	6/18/2022 22:22	6.00
6/19/2022 19:03	32.79	6/19/2022 19:50	19.36	6/18/2022 22:23	5.98
6/19/2022 19:04	32.77	6/19/2022 19:51	19.34	6/18/2022 22:24	6.00
6/19/2022 19:05	32.78	6/19/2022 19:52	19.37	6/18/2022 22:25	6.00
6/19/2022 19:06	32.78	6/19/2022 19:53	19.35	6/18/2022 22:26	6.00
6/19/2022 19:07	32.80	6/19/2022 19:54	19.35	6/18/2022 22:27	5.99
6/19/2022 19:08	32.78	6/19/2022 19:55	19.34	6/18/2022 22:28	6.01
6/19/2022 19:09	32.78	6/19/2022 19:56	19.37	6/18/2022 22:29	5.98
6/19/2022 19:10	32.77	6/19/2022 19:57	19.35	6/18/2022 22:30	5.98
6/19/2022 19:11	32.80	6/19/2022 19:58	19.35	6/18/2022 22:31	5.99
6/19/2022 19:12	32.77	6/19/2022 19:59	19.32	6/18/2022 22:32	5.96
6/19/2022 19:13	32.76	6/19/2022 20:00	19.36	6/18/2022 22:33	5.98
6/19/2022 19:14	32.77	6/19/2022 20:01	19.35	6/18/2022 22:34	5.95

6/19/2022 19:15	32.77	6/19/2022 20:02	19.34	6/18/2022 22:35	5.97
6/19/2022 19:16	32.80	6/19/2022 20:03	19.35	6/18/2022 22:36	5.98
6/19/2022 19:17	32.77	6/19/2022 20:04	19.34	6/18/2022 22:37	5.96
6/19/2022 19:18	32.75	6/19/2022 20:05	19.34	6/18/2022 22:38	6.00
6/19/2022 19:19	32.78	6/19/2022 20:06	19.35	6/18/2022 22:39	5.97
6/19/2022 19:20	32.79	6/19/2022 20:07	19.33	6/18/2022 22:40	5.97
6/19/2022 19:21	32.77	6/19/2022 20:08	19.34	6/18/2022 22:41	5.98
6/19/2022 19:22	32.76	6/19/2022 20:09	19.34	6/18/2022 22:42	6.01
6/19/2022 19:23	32.79	6/19/2022 20:10	19.35	6/18/2022 22:43	5.98
6/19/2022 19:24	32.78	6/19/2022 20:11	19.35	6/18/2022 22:44	6.00
6/19/2022 19:25	32.78	6/19/2022 20:12	19.36	6/18/2022 22:45	6.02
6/19/2022 19:26	32.78	6/19/2022 20:13	19.33	6/18/2022 22:46	5.97
6/19/2022 19:27	32.75	6/19/2022 20:14	19.34	6/18/2022 22:47	5.96
6/19/2022 19:28	32.74	6/19/2022 20:15	19.33	6/18/2022 22:48	5.97
6/19/2022 19:29	32.74	6/19/2022 20:16	19.35	6/18/2022 22:49	6.00
6/19/2022 19:30	32.77	6/19/2022 20:17	19.37	6/18/2022 22:50	6.04
6/19/2022 19:31	32.74	6/19/2022 20:18	19.34	6/18/2022 22:51	8.08
6/19/2022 19:32	32.76	6/19/2022 20:19	19.34	6/18/2022 22:52	8.79
6/19/2022 19:33	32.76	6/19/2022 20:20	19.38	6/18/2022 22:53	6.37
6/19/2022 19:34	32.77	6/19/2022 20:21	19.35	6/18/2022 22:54	6.07
6/19/2022 19:35	32.74	6/19/2022 20:22	19.36	6/18/2022 22:55	6.01
6/19/2022 19:36	32.76	6/19/2022 20:23	19.35	6/18/2022 22:56	6.03
6/19/2022 19:37	32.73	6/19/2022 20:24	19.36	6/18/2022 22:57	5.99
6/19/2022 19:38	32.76	6/19/2022 20:25	19.36	6/18/2022 22:58	5.99
6/19/2022 19:39	32.75	6/19/2022 20:26	19.34	6/18/2022 22:59	6.01
6/19/2022 19:40	32.74	6/19/2022 20:27	19.34	6/18/2022 23:00	6.00
6/19/2022 19:41	32.71	6/19/2022 20:28	19.33	6/18/2022 23:01	6.02
6/19/2022 19:42	32.76	6/19/2022 20:29	19.37	6/18/2022 23:02	5.99
6/19/2022 19:43	32.77	6/19/2022 20:30	19.37	6/18/2022 23:03	6.02
6/19/2022 19:44	32.73	6/19/2022 20:31	19.33	6/18/2022 23:04	5.99
6/19/2022 19:45	32.75	6/19/2022 20:32	19.35	6/18/2022 23:05	5.99
6/19/2022 19:46	32.76	6/19/2022 20:33	19.35	6/18/2022 23:06	5.98
6/19/2022 19:47	32.77	6/19/2022 20:34	19.35	6/18/2022 23:07	6.03
6/19/2022 19:48	32.76	6/19/2022 20:35	19.36	6/18/2022 23:08	5.97
6/19/2022 19:49	32.73	6/19/2022 20:36	19.35	6/18/2022 23:09	5.98
6/19/2022 19:50	32.76	6/19/2022 20:37	19.36	6/18/2022 23:10	6.01
6/19/2022 19:51	32.70	6/19/2022 20:38	19.35	6/18/2022 23:11	6.00
6/19/2022 19:52	32.72	6/19/2022 20:39	19.35	6/18/2022 23:12	6.00
6/19/2022 19:53	32.73	6/19/2022 20:40	19.33	6/18/2022 23:13	5.96
6/19/2022 19:54	32.74	6/19/2022 20:41	19.35	6/18/2022 23:14	5.99
6/19/2022 19:55	32.76	6/19/2022 20:42	19.35	6/18/2022 23:15	6.01
6/19/2022 19:56	32.78	6/19/2022 20:43	19.36	6/18/2022 23:16	6.01
6/19/2022 19:57	32.76	6/19/2022 20:44	19.34	6/18/2022 23:17	6.01
6/19/2022 19:58	32.74	6/19/2022 20:45	19.35	6/18/2022 23:18	5.99
6/19/2022 19:59	32.71	6/19/2022 20:46	19.35	6/18/2022 23:19	5.97
6/19/2022 20:00	32.74	6/19/2022 20:47	19.33	6/18/2022 23:20	5.99
6/19/2022 20:01	32.75	6/19/2022 20:48	19.37	6/18/2022 23:21	5.99
6/19/2022 20:02	32.75	6/19/2022 20:49	19.34	6/18/2022 23:22	5.98
6/19/2022 20:03	32.74	6/19/2022 20:50	19.35	6/18/2022 23:23	5.97
6/19/2022 20:04	32.73	6/19/2022 20:51	19.33	6/18/2022 23:24	6.01
6/19/2022 20:05	32.73	6/19/2022 20:52	19.34	6/18/2022 23:25	6.00
6/19/2022 20:06	32.74	6/19/2022 20:53	19.36	6/18/2022 23:26	6.02
6/19/2022 20:07	32.73	6/19/2022 20:54	19.35	6/18/2022 23:27	5.98
6/19/2022 20:08	32.74	6/19/2022 20:55	19.36	6/18/2022 23:28	5.99
6/19/2022 20:09	32.73	6/19/2022 20:56	19.34	6/18/2022 23:29	6.00
6/19/2022 20:10	32.73	6/19/2022 20:57	19.36	6/18/2022 23:30	6.00
6/19/2022 20:11	32.73	6/19/2022 20:58	19.35	6/18/2022 23:31	5.95
6/19/2022 20:12	32.72	6/19/2022 20:59	19.35	6/18/2022 23:32	5.99
6/19/2022 20:13	32.73	6/19/2022 21:00	19.36	6/18/2022 23:33	5.98
6/19/2022 20:14	32.73	6/19/2022 21:01	19.36	6/18/2022 23:34	5.99
6/19/2022 20:15	32.75	6/19/2022 21:02	19.34	6/18/2022 23:35	6.00
6/19/2022 20:16	32.76	6/19/2022 21:03	19.38	6/18/2022 23:36	6.00
6/19/2022 20:17	32.71	6/19/2022 21:04	19.36	6/18/2022 23:37	6.01
6/19/2022 20:18	32.75	6/19/2022 21:05	19.35	6/18/2022 23:38	5.98
6/19/2022 20:19	32.72	6/19/2022 21:06	19.35	6/18/2022 23:39	6.00
6/19/2022 20:20	32.75	6/19/2022 21:07	19.33	6/18/2022 23:40	6.01
6/19/2022 20:21	32.73	6/19/2022 21:08	19.35	6/18/2022 23:41	5.99
6/19/2022 20:22	32.74	6/19/2022 21:09	19.35	6/18/2022 23:42	5.99
6/19/2022 20:23	32.72	6/19/2022 21:10	19.33	6/18/2022 23:43	6.05
6/19/2022 20:24	32.74	6/19/2022 21:11	19.34	6/18/2022 23:44	6.00
6/19/2022 20:25	32.76	6/19/2022 21:12	19.36	6/18/2022 23:45	5.99
6/19/2022 20:26	32.76	6/19/2022 21:13	19.36	6/18/2022 23:46	5.98
6/19/2022 20:27	32.74	6/19/2022 21:14	19.35	6/18/2022 23:47	6.01
6/19/2022 20:28	32.75	6/19/2022 21:15	19.36	6/18/2022 23:48	5.98
6/19/2022 20:29	32.75	6/19/2022 21:16	19.35	6/18/2022 23:49	5.98
6/19/2022 20:30	32.73	6/19/2022 21:17	19.34	6/18/2022 23:50	5.99
6/19/2022 20:31	32.75	6/19/2022 21:18	19.34	6/18/2022 23:51	5.99
6/19/2022 20:32	32.74	6/19/2022 21:19	19.34	6/18/2022 23:52	5.97
6/19/2022 20:33	32.78	6/19/2022 21:20	19.36	6/18/2022 23:53	5.99
6/19/2022 20:34	32.73	6/19/2022 21:21	19.36	6/18/2022 23:54	5.98
6/19/2022 20:35	32.70	6/19/2022 21:22	19.33	6/18/2022 23:55	6.02
6/19/2022 20:36	32.71	6/19/2022 21:23	19.35	6/18/2022 23:56	5.98
6/19/2022 20:37	32.74	6/19/2022 21:24	19.34	6/18/2022 23:57	5.98
6/19/2022 20:38	32.75	6/19/2022 21:25	19.36	6/18/2022 23:58	5.99
6/19/2022 20:39	32.75	6/19/2022 21:26	19.36	6/18/2022 23:59	6.00
6/19/2022 20:40	32.73	6/19/2022 21:27	19.35	6/19/2022 0:00	6.00
6/19/2022 20:41	32.76	6/19/2022 21:28	19.35	6/19/2022 0:01	5.97
6/19/2022 20:42	32.71	6/19/2022 21:29	19.38	6/19/2022 0:02	5.97

6/19/2022 20:43	32.75	6/19/2022 21:30	19.32	6/19/2022 0:03	5.99
6/19/2022 20:44	32.74	6/19/2022 21:31	19.36	6/19/2022 0:04	5.99
6/19/2022 20:45	32.73	6/19/2022 21:32	19.36	6/19/2022 0:05	6.00
6/19/2022 20:46	32.74	6/19/2022 21:33	19.37	6/19/2022 0:06	6.01
6/19/2022 20:47	32.72	6/19/2022 21:34	19.35	6/19/2022 0:07	5.97
6/19/2022 20:48	32.72	6/19/2022 21:35	19.36	6/19/2022 0:08	5.97
6/19/2022 20:49	32.69	6/19/2022 21:36	19.36	6/19/2022 0:09	6.01
6/19/2022 20:50	32.74	6/19/2022 21:37	19.37	6/19/2022 0:10	5.98
6/19/2022 20:51	32.77	6/19/2022 21:38	19.35	6/19/2022 0:11	5.99
6/19/2022 20:52	32.78	6/19/2022 21:39	19.35	6/19/2022 0:12	5.99
6/19/2022 20:53	32.79	6/19/2022 21:40	19.37	6/19/2022 0:13	5.99
6/19/2022 20:54	32.77	6/19/2022 21:41	19.38	6/19/2022 0:14	5.98
6/19/2022 20:55	32.78	6/19/2022 21:42	19.36	6/19/2022 0:15	6.00
6/19/2022 20:56	32.76	6/19/2022 21:43	19.35	6/19/2022 0:16	5.99
6/19/2022 20:57	32.75	6/19/2022 21:44	19.35	6/19/2022 0:17	6.00
6/19/2022 20:58	32.78	6/19/2022 21:45	19.38	6/19/2022 0:18	5.98
6/19/2022 20:59	32.75	6/19/2022 21:46	19.34	6/19/2022 0:19	5.98
6/19/2022 21:00	32.77	6/19/2022 21:47	19.34	6/19/2022 0:20	5.98
6/19/2022 21:01	32.74	6/19/2022 21:48	19.33	6/19/2022 0:21	5.97
6/19/2022 21:02	32.74	6/19/2022 21:49	19.36	6/19/2022 0:22	5.99
6/19/2022 21:03	32.75	6/19/2022 21:50	19.37	6/19/2022 0:23	6.00
6/19/2022 21:04	32.74	6/19/2022 21:51	19.36	6/19/2022 0:24	5.99
6/19/2022 21:05	32.77	6/19/2022 21:52	19.35	6/19/2022 0:25	5.98
6/19/2022 21:06	32.74	6/19/2022 21:53	19.34	6/19/2022 0:26	6.00
6/19/2022 21:07	32.73	6/19/2022 21:54	19.37	6/19/2022 0:27	6.00
6/19/2022 21:08	32.77	6/19/2022 21:55	19.36	6/19/2022 0:28	6.00
6/19/2022 21:09	32.75	6/19/2022 21:56	19.34	6/19/2022 0:29	5.99
6/19/2022 21:10	32.75	6/19/2022 21:57	19.35	6/19/2022 0:30	6.01
6/19/2022 21:11	32.74	6/19/2022 21:58	19.33	6/19/2022 0:31	6.01
6/19/2022 21:12	32.75	6/19/2022 21:59	19.36	6/19/2022 0:32	6.00
6/19/2022 21:13	32.73	6/19/2022 22:00	19.33	6/19/2022 0:33	5.99
6/19/2022 21:14	32.74	6/19/2022 22:01	19.33	6/19/2022 0:34	5.98
6/19/2022 21:15	32.72	6/19/2022 22:02	19.35	6/19/2022 0:35	6.02
6/19/2022 21:16	32.77	6/19/2022 22:03	19.35	6/19/2022 0:36	6.00
6/19/2022 21:17	32.75	6/19/2022 22:04	19.38	6/19/2022 0:37	5.95
6/19/2022 21:18	32.72	6/19/2022 22:05	19.38	6/19/2022 0:38	5.96
6/19/2022 21:19	32.75	6/19/2022 22:06	19.36	6/19/2022 0:39	6.00
6/19/2022 21:20	32.74	6/19/2022 22:07	19.36	6/19/2022 0:40	6.00
6/19/2022 21:21	32.74	6/19/2022 22:08	19.35	6/19/2022 0:41	5.98
6/19/2022 21:22	32.75	6/19/2022 22:09	19.37	6/19/2022 0:42	7.83
6/19/2022 21:23	32.73	6/19/2022 22:10	19.36	6/19/2022 0:43	8.77
6/19/2022 21:24	32.73	6/19/2022 22:11	19.35	6/19/2022 0:44	6.35
6/19/2022 21:25	32.73	6/19/2022 22:12	19.35	6/19/2022 0:45	6.05
6/19/2022 21:26	32.72	6/19/2022 22:13	19.34	6/19/2022 0:46	6.05
6/19/2022 21:27	32.73	6/19/2022 22:14	19.33	6/19/2022 0:47	5.99
6/19/2022 21:28	32.72	6/19/2022 22:15	19.35	6/19/2022 0:48	6.00
6/19/2022 21:29	32.74	6/19/2022 22:16	19.36	6/19/2022 0:49	5.98
6/19/2022 21:30	32.75	6/19/2022 22:17	19.36	6/19/2022 0:50	5.96
6/19/2022 21:31	32.73	6/19/2022 22:18	19.37	6/19/2022 0:51	6.00
6/19/2022 21:32	32.74	6/19/2022 22:19	19.34	6/19/2022 0:52	5.97
6/19/2022 21:33	32.75	6/19/2022 22:20	19.36	6/19/2022 0:53	6.02
6/19/2022 21:34	32.74	6/19/2022 22:21	19.34	6/19/2022 0:54	5.99
6/19/2022 21:35	32.72	6/19/2022 22:22	19.34	6/19/2022 0:55	6.01
6/19/2022 21:36	32.71	6/19/2022 22:23	19.37	6/19/2022 0:56	5.98
6/19/2022 21:37	32.71	6/19/2022 22:24	19.36	6/19/2022 0:57	6.00
6/19/2022 21:38	32.71	6/19/2022 22:25	19.36	6/19/2022 0:58	5.99
6/19/2022 21:39	32.73	6/19/2022 22:26	19.34	6/19/2022 0:59	5.96
6/19/2022 21:40	32.73	6/19/2022 22:27	19.38	6/19/2022 1:00	6.02
6/19/2022 21:41	32.72	6/19/2022 22:28	19.35	6/19/2022 1:01	6.00
6/19/2022 21:42	32.75	6/19/2022 22:29	19.34	6/19/2022 1:02	5.97
6/19/2022 21:43	32.72	6/19/2022 22:30	19.33	6/19/2022 1:03	5.99
6/19/2022 21:44	32.73	6/19/2022 22:31	19.35	6/19/2022 1:04	5.99
6/19/2022 21:45	32.75	6/19/2022 22:32	19.34	6/19/2022 1:05	5.99
6/19/2022 21:46	32.73	6/19/2022 22:33	19.36	6/19/2022 1:06	6.00
6/19/2022 21:47	32.73	6/19/2022 22:34	19.36	6/19/2022 1:07	5.99
6/19/2022 21:48	32.73	6/19/2022 22:35	19.35	6/19/2022 1:08	6.01
6/19/2022 21:49	32.73	6/19/2022 22:36	19.34	6/19/2022 1:09	5.99
6/19/2022 21:50	32.71	6/19/2022 22:37	19.34	6/19/2022 1:10	5.98
6/19/2022 21:51	32.71	6/19/2022 22:38	19.37	6/19/2022 1:11	6.01
6/19/2022 21:52	32.73	6/19/2022 22:39	19.34	6/19/2022 1:12	6.01
6/19/2022 21:53	32.74	6/19/2022 22:40	19.36	6/19/2022 1:13	5.96
6/19/2022 21:54	32.73	6/19/2022 22:41	19.34	6/19/2022 1:14	5.98
6/19/2022 21:55	32.74	6/19/2022 22:42	19.33	6/19/2022 1:15	6.00
6/19/2022 21:56	32.71	6/19/2022 22:43	19.32	6/19/2022 1:16	6.00
6/19/2022 21:57	32.73	6/19/2022 22:44	19.44	6/19/2022 1:17	5.98
6/19/2022 21:58	32.72	6/19/2022 22:45	19.99	6/19/2022 1:18	5.98
6/19/2022 21:59	32.72	6/19/2022 22:46	20.11	6/19/2022 1:19	6.02
6/19/2022 22:00	32.71	6/19/2022 22:47	20.14	6/19/2022 1:20	5.98
6/19/2022 22:01	32.74	6/19/2022 22:48	20.19	6/19/2022 1:21	5.98
6/19/2022 22:02	32.71	6/19/2022 22:49	20.17	6/19/2022 1:22	5.98
6/19/2022 22:03	32.72	6/19/2022 22:50	19.60	6/19/2022 1:23	6.00
6/19/2022 22:04	32.70	6/19/2022 22:51	19.54	6/19/2022 1:24	5.99
6/19/2022 22:05	32.71	6/19/2022 22:52	19.55	6/19/2022 1:25	5.99
6/19/2022 22:06	32.73	6/19/2022 22:53	19.53	6/19/2022 1:26	5.99
6/19/2022 22:07	32.75	6/19/2022 22:54	19.48	6/19/2022 1:27	6.03
6/19/2022 22:08	32.73	6/19/2022 22:55	19.51	6/19/2022 1:28	5.95
6/19/2022 22:09	32.73	6/19/2022 22:56	19.48	6/19/2022 1:29	6.00
6/19/2022 22:10	32.73	6/19/2022 22:57	19.47	6/19/2022 1:30	5.99

6/19/2022 22:11	32.74	6/19/2022 22:58	19.48	6/19/2022 1:31	5.94
6/19/2022 22:12	32.70	6/19/2022 22:59	19.46	6/19/2022 1:32	5.98
6/19/2022 22:13	32.74	6/19/2022 23:00	19.45	6/19/2022 1:33	6.00
6/19/2022 22:14	32.76	6/19/2022 23:01	19.46	6/19/2022 1:34	5.99
6/19/2022 22:15	32.75	6/19/2022 23:02	19.45	6/19/2022 1:35	5.97
6/19/2022 22:16	32.70	6/19/2022 23:03	19.45	6/19/2022 1:36	5.97
6/19/2022 22:17	32.74	6/19/2022 23:04	19.44	6/19/2022 1:37	5.99
6/19/2022 22:18	32.75	6/19/2022 23:05	19.40	6/19/2022 1:38	6.00
6/19/2022 22:19	32.72	6/19/2022 23:06	19.46	6/19/2022 1:39	5.99
6/19/2022 22:20	32.72	6/19/2022 23:07	19.45	6/19/2022 1:40	5.99
6/19/2022 22:21	32.73	6/19/2022 23:08	19.43	6/19/2022 1:41	5.96
6/19/2022 22:22	32.72	6/19/2022 23:09	19.43	6/19/2022 1:42	5.96
6/19/2022 22:23	32.71	6/19/2022 23:10	19.43	6/19/2022 1:43	5.99
6/19/2022 22:24	32.74	6/19/2022 23:11	19.43	6/19/2022 1:44	5.99
6/19/2022 22:25	32.71	6/19/2022 23:12	19.41	6/19/2022 1:45	5.97
6/19/2022 22:26	32.71	6/19/2022 23:13	19.42	6/19/2022 1:46	6.01
6/19/2022 22:27	32.74	6/19/2022 23:14	19.42	6/19/2022 1:47	6.01
6/19/2022 22:28	32.71	6/19/2022 23:15	19.41	6/19/2022 1:48	6.00
6/19/2022 22:29	32.74	6/19/2022 23:16	19.41	6/19/2022 1:49	6.02
6/19/2022 22:30	32.73	6/19/2022 23:17	19.40	6/19/2022 1:50	6.00
6/19/2022 22:31	32.70	6/19/2022 23:18	19.43	6/19/2022 1:51	5.98
6/19/2022 22:32	32.70	6/19/2022 23:19	19.41	6/19/2022 1:52	5.99
6/19/2022 22:33	32.73	6/19/2022 23:20	19.38	6/19/2022 1:53	6.00
6/19/2022 22:34	32.70	6/19/2022 23:21	19.38	6/19/2022 1:54	5.95
6/19/2022 22:35	32.73	6/19/2022 23:22	19.39	6/19/2022 1:55	6.00
6/19/2022 22:36	32.72	6/19/2022 23:23	19.40	6/19/2022 1:56	5.99
6/19/2022 22:37	32.70	6/19/2022 23:24	19.40	6/19/2022 1:57	5.99
6/19/2022 22:38	32.72	6/19/2022 23:25	19.41	6/19/2022 1:58	5.96
6/19/2022 22:39	32.71	6/19/2022 23:26	19.40	6/19/2022 1:59	5.99
6/19/2022 22:40	32.74	6/19/2022 23:27	19.41	6/19/2022 2:00	6.00
6/19/2022 22:41	32.74	6/19/2022 23:28	19.39	6/19/2022 2:01	5.97
6/19/2022 22:42	32.73	6/19/2022 23:29	19.41	6/19/2022 2:02	5.97
6/19/2022 22:43	32.73	6/19/2022 23:30	19.39	6/19/2022 2:03	5.99
6/19/2022 22:44	32.71	6/19/2022 23:31	19.40	6/19/2022 2:04	5.99
6/19/2022 22:45	32.73	6/19/2022 23:32	19.44	6/19/2022 2:05	5.98
6/19/2022 22:46	32.74	6/19/2022 23:33	19.39	6/19/2022 2:06	5.99
6/19/2022 22:47	32.71	6/19/2022 23:34	19.40	6/19/2022 2:07	5.96
6/19/2022 22:48	32.69	6/19/2022 23:35	19.43	6/19/2022 2:08	5.97
6/19/2022 22:49	32.75	6/19/2022 23:36	19.40	6/19/2022 2:09	5.97
6/19/2022 22:50	32.74	6/19/2022 23:37	19.38	6/19/2022 2:10	6.01
6/19/2022 22:51	32.71	6/19/2022 23:38	19.40	6/19/2022 2:11	5.99
6/19/2022 22:52	32.76	6/19/2022 23:39	19.40	6/19/2022 2:12	5.97
6/19/2022 22:53	32.73	6/19/2022 23:40	19.41	6/19/2022 2:13	5.96
6/19/2022 22:54	32.75	6/19/2022 23:41	19.39	6/19/2022 2:14	6.00
6/19/2022 22:55	32.72	6/19/2022 23:42	19.40	6/19/2022 2:15	6.00
6/19/2022 22:56	32.72	6/19/2022 23:43	19.38	6/19/2022 2:16	6.00
6/19/2022 22:57	32.73	6/19/2022 23:44	19.38	6/19/2022 2:17	6.00
6/19/2022 22:58	32.73	6/19/2022 23:45	19.39	6/19/2022 2:18	5.98
6/19/2022 22:59	32.73	6/19/2022 23:46	19.39	6/19/2022 2:19	5.97
6/19/2022 23:00	32.70	6/19/2022 23:47	19.41	6/19/2022 2:20	5.97
6/19/2022 23:01	32.72	6/19/2022 23:48	19.37	6/19/2022 2:21	5.98
6/19/2022 23:02	32.74	6/19/2022 23:49	19.40	6/19/2022 2:22	5.99
6/19/2022 23:03	32.72	6/19/2022 23:50	19.38	6/19/2022 2:23	5.99
6/19/2022 23:04	32.72	6/19/2022 23:51	19.41	6/19/2022 2:24	6.01
6/19/2022 23:05	32.74	6/19/2022 23:52	19.39	6/19/2022 2:25	6.01
6/19/2022 23:06	32.71	6/19/2022 23:53	19.40	6/19/2022 2:26	6.02
6/19/2022 23:07	33.92	6/19/2022 23:54	19.38	6/19/2022 2:27	5.96
6/19/2022 23:08	32.98	6/19/2022 23:55	19.39	6/19/2022 2:28	5.97
6/19/2022 23:09	32.85	6/19/2022 23:56	19.39	6/19/2022 2:29	6.00
6/19/2022 23:10	32.80	6/19/2022 23:57	19.39	6/19/2022 2:30	5.99
6/19/2022 23:11	32.80	6/19/2022 23:58	19.39	6/19/2022 2:31	5.98
6/19/2022 23:12	32.78	6/19/2022 23:59	19.35	6/19/2022 2:32	5.99
6/19/2022 23:13	32.80	6/20/2022 0:00	19.40	6/19/2022 2:33	6.00
6/19/2022 23:14	32.83	6/20/2022 0:01	19.37	6/19/2022 2:34	5.98
6/19/2022 23:15	32.82	6/20/2022 0:02	19.37	6/19/2022 2:35	5.98
6/19/2022 23:16	33.74	6/20/2022 0:03	19.39	6/19/2022 2:36	6.01
6/19/2022 23:17	33.04	6/20/2022 0:04	19.41	6/19/2022 2:37	5.95
6/19/2022 23:18	32.95	6/20/2022 0:05	19.38	6/19/2022 2:38	5.97
6/19/2022 23:19	32.87	6/20/2022 0:06	19.40	6/19/2022 2:39	7.72
6/19/2022 23:20	32.87	6/20/2022 0:07	19.38	6/19/2022 2:40	8.71
6/19/2022 23:21	32.85	6/20/2022 0:08	19.36	6/19/2022 2:41	6.34
6/19/2022 23:22	32.86	6/20/2022 0:09	19.39	6/19/2022 2:42	6.07
6/19/2022 23:23	32.87	6/20/2022 0:10	19.39	6/19/2022 2:43	6.04
6/19/2022 23:24	32.83	6/20/2022 0:11	19.40	6/19/2022 2:44	6.02
6/19/2022 23:25	32.84	6/20/2022 0:12	19.39	6/19/2022 2:45	6.01
6/19/2022 23:26	32.82	6/20/2022 0:13	19.40	6/19/2022 2:46	6.00
6/19/2022 23:27	32.81	6/20/2022 0:14	19.40	6/19/2022 2:47	6.01
6/19/2022 23:28	32.81	6/20/2022 0:15	19.37	6/19/2022 2:48	6.00
6/19/2022 23:29	32.78	6/20/2022 0:16	19.39	6/19/2022 2:49	6.03
6/19/2022 23:30	32.79	6/20/2022 0:17	19.40	6/19/2022 2:50	5.99
6/19/2022 23:31	32.79	6/20/2022 0:18	19.39	6/19/2022 2:51	5.99
6/19/2022 23:32	32.78	6/20/2022 0:19	19.38	6/19/2022 2:52	6.01
6/19/2022 23:33	32.80	6/20/2022 0:20	19.38	6/19/2022 2:53	6.00
6/19/2022 23:34	32.79	6/20/2022 0:21	19.38	6/19/2022 2:54	6.02
6/19/2022 23:35	32.79	6/20/2022 0:22	19.37	6/19/2022 2:55	6.01
6/19/2022 23:36	32.83	6/20/2022 0:23	19.37	6/19/2022 2:56	6.00
6/19/2022 23:37	32.82	6/20/2022 0:24	19.38	6/19/2022 2:57	5.98
6/19/2022 23:38	32.81	6/20/2022 0:25	19.39	6/19/2022 2:58	6.01

6/19/2022 23:39	32.85	6/20/2022 0:26	19.37	6/19/2022 2:59	6.00
6/19/2022 23:40	32.86	6/20/2022 0:27	19.37	6/19/2022 3:00	5.98
6/19/2022 23:41	32.86	6/20/2022 0:28	19.39	6/19/2022 3:01	6.01
6/19/2022 23:42	32.84	6/20/2022 0:29	19.38	6/19/2022 3:02	6.01
6/19/2022 23:43	32.83	6/20/2022 0:30	19.38	6/19/2022 3:03	6.01
6/19/2022 23:44	32.81	6/20/2022 0:31	19.38	6/19/2022 3:04	6.02
6/19/2022 23:45	32.83	6/20/2022 0:32	19.38	6/19/2022 3:05	5.99
6/19/2022 23:46	32.83	6/20/2022 0:33	19.37	6/19/2022 3:06	6.00
6/19/2022 23:47	32.83	6/20/2022 0:34	19.39	6/19/2022 3:07	5.95
6/19/2022 23:48	32.79	6/20/2022 0:35	19.36	6/19/2022 3:08	6.04
6/19/2022 23:49	32.81	6/20/2022 0:36	19.38	6/19/2022 3:09	6.00
6/19/2022 23:50	32.79	6/20/2022 0:37	19.38	6/19/2022 3:10	5.99
6/19/2022 23:51	32.83	6/20/2022 0:38	19.37	6/19/2022 3:11	5.99
6/19/2022 23:52	32.81	6/20/2022 0:39	19.37	6/19/2022 3:12	5.98
6/19/2022 23:53	32.80	6/20/2022 0:40	19.37	6/19/2022 3:13	5.98
6/19/2022 23:54	32.79	6/20/2022 0:41	19.37	6/19/2022 3:14	5.99
6/19/2022 23:55	32.82	6/20/2022 0:42	19.35	6/19/2022 3:15	6.00
6/19/2022 23:56	32.79	6/20/2022 0:43	19.37	6/19/2022 3:16	6.01
6/19/2022 23:57	32.78	6/20/2022 0:44	19.37	6/19/2022 3:17	6.02
6/19/2022 23:58	32.81	6/20/2022 0:45	19.39	6/19/2022 3:18	6.00
6/19/2022 23:59	32.81	6/20/2022 0:46	19.35	6/19/2022 3:19	5.97
6/20/2022 0:00	32.80	6/20/2022 0:47	19.37	6/19/2022 3:20	6.00
6/20/2022 0:01	32.80	6/20/2022 0:48	19.37	6/19/2022 3:21	5.97
6/20/2022 0:02	32.78	6/20/2022 0:49	19.36	6/19/2022 3:22	6.01
6/20/2022 0:03	32.79	6/20/2022 0:50	19.38	6/19/2022 3:23	5.96
6/20/2022 0:04	32.81	6/20/2022 0:51	19.38	6/19/2022 3:24	5.98
6/20/2022 0:05	32.76	6/20/2022 0:52	19.37	6/19/2022 3:25	5.99
6/20/2022 0:06	32.78	6/20/2022 0:53	19.39	6/19/2022 3:26	5.98
6/20/2022 0:07	32.78	6/20/2022 0:54	19.37	6/19/2022 3:27	5.99
6/20/2022 0:08	32.79	6/20/2022 0:55	19.37	6/19/2022 3:28	5.98
6/20/2022 0:09	32.79	6/20/2022 0:56	19.37	6/19/2022 3:29	5.97
6/20/2022 0:10	32.80	6/20/2022 0:57	19.35	6/19/2022 3:30	6.00
6/20/2022 0:11	32.80	6/20/2022 0:58	19.38	6/19/2022 3:31	6.00
6/20/2022 0:12	32.78	6/20/2022 0:59	19.36	6/19/2022 3:32	5.98
6/20/2022 0:13	32.75	6/20/2022 1:00	19.37	6/19/2022 3:33	5.99
6/20/2022 0:14	32.81	6/20/2022 1:01	19.37	6/19/2022 3:34	5.97
6/20/2022 0:15	32.79	6/20/2022 1:02	19.38	6/19/2022 3:35	5.99
6/20/2022 0:16	32.79	6/20/2022 1:03	19.39	6/19/2022 3:36	6.00
6/20/2022 0:17	32.80	6/20/2022 1:04	19.36	6/19/2022 3:37	5.99
6/20/2022 0:18	32.76	6/20/2022 1:05	19.38	6/19/2022 3:38	5.99
6/20/2022 0:19	32.77	6/20/2022 1:06	19.36	6/19/2022 3:39	6.00
6/20/2022 0:20	32.78	6/20/2022 1:07	19.36	6/19/2022 3:40	5.99
6/20/2022 0:21	32.78	6/20/2022 1:08	19.37	6/19/2022 3:41	5.96
6/20/2022 0:22	32.79	6/20/2022 1:09	19.38	6/19/2022 3:42	5.99
6/20/2022 0:23	32.77	6/20/2022 1:10	19.38	6/19/2022 3:43	5.98
6/20/2022 0:24	32.80	6/20/2022 1:11	19.34	6/19/2022 3:44	6.00
6/20/2022 0:25	32.77	6/20/2022 1:12	19.37	6/19/2022 3:45	6.02
6/20/2022 0:26	32.80	6/20/2022 1:13	19.35	6/19/2022 3:46	6.00
6/20/2022 0:27	32.78	6/20/2022 1:14	19.36	6/19/2022 3:47	6.00
6/20/2022 0:28	32.79	6/20/2022 1:15	19.34	6/19/2022 3:48	5.99
6/20/2022 0:29	32.79	6/20/2022 1:16	19.35	6/19/2022 3:49	5.98
6/20/2022 0:30	32.79	6/20/2022 1:17	19.36	6/19/2022 3:50	5.99
6/20/2022 0:31	32.77	6/20/2022 1:18	19.37	6/19/2022 3:51	5.98
6/20/2022 0:32	32.77	6/20/2022 1:19	19.37	6/19/2022 3:52	6.00
6/20/2022 0:33	32.77	6/20/2022 1:20	19.35	6/19/2022 3:53	6.00
6/20/2022 0:34	32.78	6/20/2022 1:21	19.38	6/19/2022 3:54	6.01
6/20/2022 0:35	32.78	6/20/2022 1:22	19.37	6/19/2022 3:55	5.96
6/20/2022 0:36	32.77	6/20/2022 1:23	19.38	6/19/2022 3:56	5.98
6/20/2022 0:37	32.76	6/20/2022 1:24	19.36	6/19/2022 3:57	6.01
6/20/2022 0:38	32.83	6/20/2022 1:25	19.33	6/19/2022 3:58	5.97
6/20/2022 0:39	32.76	6/20/2022 1:26	19.38	6/19/2022 3:59	5.99
6/20/2022 0:40	32.76	6/20/2022 1:27	19.38	6/19/2022 4:00	5.98
6/20/2022 0:41	32.75	6/20/2022 1:28	19.38	6/19/2022 4:01	5.99
6/20/2022 0:42	32.77	6/20/2022 1:29	19.37	6/19/2022 4:02	5.98
6/20/2022 0:43	32.75	6/20/2022 1:30	19.39	6/19/2022 4:03	5.97
6/20/2022 0:44	32.74	6/20/2022 1:31	19.36	6/19/2022 4:04	5.98
6/20/2022 0:45	32.79	6/20/2022 1:32	19.38	6/19/2022 4:05	5.99
6/20/2022 0:46	32.78	6/20/2022 1:33	19.36	6/19/2022 4:06	5.98
6/20/2022 0:47	32.79	6/20/2022 1:34	19.37	6/19/2022 4:07	5.99
6/20/2022 0:48	32.79	6/20/2022 1:35	19.35	6/19/2022 4:08	6.00
6/20/2022 0:49	32.77	6/20/2022 1:36	19.35	6/19/2022 4:09	5.97
6/20/2022 0:50	32.76	6/20/2022 1:37	19.34	6/19/2022 4:10	5.96
6/20/2022 0:51	32.75	6/20/2022 1:38	19.37	6/19/2022 4:11	6.00
6/20/2022 0:52	32.78	6/20/2022 1:39	19.36	6/19/2022 4:12	5.98
6/20/2022 0:53	32.77	6/20/2022 1:40	19.36	6/19/2022 4:13	6.04
6/20/2022 0:54	32.75	6/20/2022 1:41	19.36	6/19/2022 4:14	5.99
6/20/2022 0:55	32.78	6/20/2022 1:42	19.35	6/19/2022 4:15	5.99
6/20/2022 0:56	32.76	6/20/2022 1:43	19.35	6/19/2022 4:16	5.97
6/20/2022 0:57	32.75	6/20/2022 1:44	19.37	6/19/2022 4:17	5.98
6/20/2022 0:58	32.76	6/20/2022 1:45	19.35	6/19/2022 4:18	6.00
6/20/2022 0:59	32.77	6/20/2022 1:46	19.36	6/19/2022 4:19	6.03
6/20/2022 1:00	32.79	6/20/2022 1:47	19.39	6/19/2022 4:20	5.98
6/20/2022 1:01	32.79	6/20/2022 1:48	19.36	6/19/2022 4:21	5.99
6/20/2022 1:02	32.79	6/20/2022 1:49	19.38	6/19/2022 4:22	5.99
6/20/2022 1:03	32.76	6/20/2022 1:50	19.37	6/19/2022 4:23	5.98
6/20/2022 1:04	32.77	6/20/2022 1:51	19.36	6/19/2022 4:24	6.00
6/20/2022 1:05	32.74	6/20/2022 1:52	19.36	6/19/2022 4:25	5.97
6/20/2022 1:06	32.74	6/20/2022 1:53	19.36	6/19/2022 4:26	6.00

6/20/2022 1:07	32.78	6/20/2022 1:54	19.37	6/19/2022 4:27	5.97
6/20/2022 1:08	32.74	6/20/2022 1:55	19.35	6/19/2022 4:28	6.00
6/20/2022 1:09	32.76	6/20/2022 1:56	19.37	6/19/2022 4:29	5.99
6/20/2022 1:10	32.78	6/20/2022 1:57	19.37	6/19/2022 4:30	5.95
6/20/2022 1:11	32.77	6/20/2022 1:58	19.38	6/19/2022 4:31	6.00
6/20/2022 1:12	32.77	6/20/2022 1:59	19.36	6/19/2022 4:32	5.98
6/20/2022 1:13	32.77	6/20/2022 2:00	19.35	6/19/2022 4:33	5.98
6/20/2022 1:14	32.76	6/20/2022 2:01	19.37	6/19/2022 4:34	5.97
6/20/2022 1:15	32.78	6/20/2022 2:02	19.36	6/19/2022 4:35	5.99
6/20/2022 1:16	32.78	6/20/2022 2:03	19.37	6/19/2022 4:36	5.98
6/20/2022 1:17	32.77	6/20/2022 2:04	19.38	6/19/2022 4:37	6.00
6/20/2022 1:18	32.75	6/20/2022 2:05	19.39	6/19/2022 4:38	6.00
6/20/2022 1:19	32.75	6/20/2022 2:06	19.38	6/19/2022 4:39	5.97
6/20/2022 1:20	32.76	6/20/2022 2:07	19.37	6/19/2022 4:40	5.97
6/20/2022 1:21	32.73	6/20/2022 2:08	19.35	6/19/2022 4:41	5.97
6/20/2022 1:22	32.78	6/20/2022 2:09	19.39	6/19/2022 4:42	6.00
6/20/2022 1:23	32.74	6/20/2022 2:10	19.34	6/19/2022 4:43	5.99
6/20/2022 1:24	32.76	6/20/2022 2:11	19.38	6/19/2022 4:44	6.00
6/20/2022 1:25	32.75	6/20/2022 2:12	19.38	6/19/2022 4:45	5.99
6/20/2022 1:26	32.79	6/20/2022 2:13	19.36	6/19/2022 4:46	6.01
6/20/2022 1:27	32.78	6/20/2022 2:14	19.38	6/19/2022 4:47	5.96
6/20/2022 1:28	32.74	6/20/2022 2:15	19.37	6/19/2022 4:48	5.98
6/20/2022 1:29	32.75	6/20/2022 2:16	19.39	6/19/2022 4:49	5.98
6/20/2022 1:30	32.77	6/20/2022 2:17	19.40	6/19/2022 4:50	6.02
6/20/2022 1:31	32.76	6/20/2022 2:18	19.37	6/19/2022 4:51	5.98
6/20/2022 1:32	32.77	6/20/2022 2:19	19.37	6/19/2022 4:52	6.01
6/20/2022 1:33	32.73	6/20/2022 2:20	19.36	6/19/2022 4:53	5.98
6/20/2022 1:34	32.79	6/20/2022 2:21	19.37	6/19/2022 4:54	6.00
6/20/2022 1:35	32.73	6/20/2022 2:22	19.37	6/19/2022 4:55	5.99
6/20/2022 1:36	32.76	6/20/2022 2:23	19.39	6/19/2022 4:56	5.97
6/20/2022 1:37	32.75	6/20/2022 2:24	19.37	6/19/2022 4:57	6.00
6/20/2022 1:38	32.79	6/20/2022 2:25	19.38	6/19/2022 4:58	6.00
6/20/2022 1:39	32.76	6/20/2022 2:26	19.38	6/19/2022 4:59	6.01
6/20/2022 1:40	32.77	6/20/2022 2:27	19.36	6/19/2022 5:00	5.98
6/20/2022 1:41	32.72	6/20/2022 2:28	19.37	6/19/2022 5:01	5.97
6/20/2022 1:42	32.77	6/20/2022 2:29	19.39	6/19/2022 5:02	5.98
6/20/2022 1:43	32.73	6/20/2022 2:30	19.35	6/19/2022 5:03	5.98
6/20/2022 1:44	32.76	6/20/2022 2:31	19.38	6/19/2022 5:04	6.00
6/20/2022 1:45	32.77	6/20/2022 2:32	19.36	6/19/2022 5:05	6.00
6/20/2022 1:46	32.77	6/20/2022 2:33	19.36	6/19/2022 5:06	5.96
6/20/2022 1:47	32.73	6/20/2022 2:34	19.38	6/19/2022 5:07	5.99
6/20/2022 1:48	32.76	6/20/2022 2:35	19.38	6/19/2022 5:08	6.00
6/20/2022 1:49	32.76	6/20/2022 2:36	19.34	6/19/2022 5:09	6.00
6/20/2022 1:50	32.73	6/20/2022 2:37	19.36	6/19/2022 5:10	5.96
6/20/2022 1:51	32.78	6/20/2022 2:38	19.38	6/19/2022 5:11	6.00
6/20/2022 1:52	32.76	6/20/2022 2:39	19.36	6/19/2022 5:12	6.01
6/20/2022 1:53	32.76	6/20/2022 2:40	19.38	6/19/2022 5:13	5.98
6/20/2022 1:54	32.78	6/20/2022 2:41	19.34	6/19/2022 5:14	5.98
6/20/2022 1:55	32.76	6/20/2022 2:42	19.37	6/19/2022 5:15	5.98
6/20/2022 1:56	32.74	6/20/2022 2:43	19.34	6/19/2022 5:16	5.98
6/20/2022 1:57	32.77	6/20/2022 2:44	19.36	6/19/2022 5:17	5.98
6/20/2022 1:58	32.77	6/20/2022 2:45	19.38	6/19/2022 5:18	5.99
6/20/2022 1:59	32.78	6/20/2022 2:46	19.34	6/19/2022 5:19	5.97
6/20/2022 2:00	32.75	6/20/2022 2:47	19.37	6/19/2022 5:20	6.01
6/20/2022 2:01	32.78	6/20/2022 2:48	19.36	6/19/2022 5:21	6.00
6/20/2022 2:02	32.79	6/20/2022 2:49	19.38	6/19/2022 5:22	5.99
6/20/2022 2:03	32.78	6/20/2022 2:50	19.37	6/19/2022 5:23	5.98
6/20/2022 2:04	32.74	6/20/2022 2:51	19.39	6/19/2022 5:24	6.03
6/20/2022 2:05	32.79	6/20/2022 2:52	19.36	6/19/2022 5:25	5.98
6/20/2022 2:06	32.76	6/20/2022 2:53	19.37	6/19/2022 5:26	5.95
6/20/2022 2:07	32.78	6/20/2022 2:54	19.37	6/19/2022 5:27	5.99
6/20/2022 2:08	32.76	6/20/2022 2:55	19.39	6/19/2022 5:28	5.99
6/20/2022 2:09	32.74	6/20/2022 2:56	19.37	6/19/2022 5:29	5.95
6/20/2022 2:10	32.75	6/20/2022 2:57	19.38	6/19/2022 5:30	6.01
6/20/2022 2:11	32.77	6/20/2022 2:58	19.38	6/19/2022 5:31	6.00
6/20/2022 2:12	32.78	6/20/2022 2:59	19.37	6/19/2022 5:32	5.98
6/20/2022 2:13	32.76	6/20/2022 3:00	19.36	6/19/2022 5:33	5.96
6/20/2022 2:14	32.79	6/20/2022 3:01	19.35	6/19/2022 5:34	5.97
6/20/2022 2:15	32.74	6/20/2022 3:02	19.39	6/19/2022 5:35	5.99
6/20/2022 2:16	32.74	6/20/2022 3:03	19.36	6/19/2022 5:36	5.99
6/20/2022 2:17	32.79	6/20/2022 3:04	19.37	6/19/2022 5:37	5.98
6/20/2022 2:18	32.76	6/20/2022 3:05	19.40	6/19/2022 5:38	5.99
6/20/2022 2:19	32.74	6/20/2022 3:06	19.38	6/19/2022 5:39	5.99
6/20/2022 2:20	32.78	6/20/2022 3:07	19.40	6/19/2022 5:40	5.98
6/20/2022 2:21	32.73	6/20/2022 3:08	19.39	6/19/2022 5:41	6.01
6/20/2022 2:22	32.78	6/20/2022 3:09	19.38	6/19/2022 5:42	5.96
6/20/2022 2:23	32.79	6/20/2022 3:10	19.38	6/19/2022 5:43	5.98
6/20/2022 2:24	32.75	6/20/2022 3:11	19.38	6/19/2022 5:44	6.00
6/20/2022 2:25	32.75	6/20/2022 3:12	19.38	6/19/2022 5:45	5.99
6/20/2022 2:26	32.79	6/20/2022 3:13	19.37	6/19/2022 5:46	5.98
6/20/2022 2:27	32.76	6/20/2022 3:14	19.38	6/19/2022 5:47	5.98
6/20/2022 2:28	32.75	6/20/2022 3:15	19.39	6/19/2022 5:48	6.00
6/20/2022 2:29	32.77	6/20/2022 3:16	19.36	6/19/2022 5:49	6.00
6/20/2022 2:30	32.77	6/20/2022 3:17	19.39	6/19/2022 5:50	6.00
6/20/2022 2:31	32.73	6/20/2022 3:18	19.40	6/19/2022 5:51	5.98
6/20/2022 2:32	32.79	6/20/2022 3:19	19.37	6/19/2022 5:52	5.97
6/20/2022 2:33	32.78	6/20/2022 3:20	19.35	6/19/2022 5:53	5.99
6/20/2022 2:34	32.78	6/20/2022 3:21	19.37	6/19/2022 5:54	6.00

6/20/2022 2:35	32.77	6/20/2022 3:22	19.39	6/19/2022 5:55	5.99
6/20/2022 2:36	32.76	6/20/2022 3:23	19.39	6/19/2022 5:56	5.97
6/20/2022 2:37	32.74	6/20/2022 3:24	19.37	6/19/2022 5:57	5.99
6/20/2022 2:38	32.77	6/20/2022 3:25	19.39	6/19/2022 5:58	5.97
6/20/2022 2:39	32.75	6/20/2022 3:26	19.37	6/19/2022 5:59	5.97
6/20/2022 2:40	32.76	6/20/2022 3:27	19.39	6/19/2022 6:00	5.97
6/20/2022 2:41	32.77	6/20/2022 3:28	19.36	6/19/2022 6:01	5.98
6/20/2022 2:42	32.75	6/20/2022 3:29	19.37	6/19/2022 6:02	5.98
6/20/2022 2:43	32.75	6/20/2022 3:30	19.38	6/19/2022 6:03	5.98
6/20/2022 2:44	32.75	6/20/2022 3:31	19.38	6/19/2022 6:04	5.99
6/20/2022 2:45	32.75	6/20/2022 3:32	19.38	6/19/2022 6:05	5.94
6/20/2022 2:46	32.77	6/20/2022 3:33	19.40	6/19/2022 6:06	5.98
6/20/2022 2:47	32.75	6/20/2022 3:34	19.36	6/19/2022 6:07	5.96
6/20/2022 2:48	32.75	6/20/2022 3:35	19.40	6/19/2022 6:08	5.99
6/20/2022 2:49	32.74	6/20/2022 3:36	19.39	6/19/2022 6:09	6.01
6/20/2022 2:50	32.74	6/20/2022 3:37	19.37	6/19/2022 6:10	6.00
6/20/2022 2:51	32.78	6/20/2022 3:38	19.36	6/19/2022 6:11	6.01
6/20/2022 2:52	32.74	6/20/2022 3:39	19.38	6/19/2022 6:12	5.95
6/20/2022 2:53	32.78	6/20/2022 3:40	19.38	6/19/2022 6:13	6.01
6/20/2022 2:54	32.75	6/20/2022 3:41	19.38	6/19/2022 6:14	5.95
6/20/2022 2:55	32.78	6/20/2022 3:42	19.39	6/19/2022 6:15	5.97
6/20/2022 2:56	32.76	6/20/2022 3:43	19.36	6/19/2022 6:16	5.96
6/20/2022 2:57	32.74	6/20/2022 3:44	19.37	6/19/2022 6:17	6.01
6/20/2022 2:58	32.74	6/20/2022 3:45	19.37	6/19/2022 6:18	6.00
6/20/2022 2:59	32.78	6/20/2022 3:46	19.39	6/19/2022 6:19	5.97
6/20/2022 3:00	32.75	6/20/2022 3:47	19.40	6/19/2022 6:20	5.96
6/20/2022 3:01	32.74	6/20/2022 3:48	19.37	6/19/2022 6:21	6.01
6/20/2022 3:02	32.74	6/20/2022 3:49	19.38	6/19/2022 6:22	5.99
6/20/2022 3:03	32.79	6/20/2022 3:50	19.38	6/19/2022 6:23	5.98
6/20/2022 3:04	32.74	6/20/2022 3:51	19.36	6/19/2022 6:24	6.00
6/20/2022 3:05	32.76	6/20/2022 3:52	19.38	6/19/2022 6:25	5.99
6/20/2022 3:06	32.75	6/20/2022 3:53	19.37	6/19/2022 6:26	5.98
6/20/2022 3:07	32.76	6/20/2022 3:54	19.39	6/19/2022 6:27	5.99
6/20/2022 3:08	32.77	6/20/2022 3:55	19.36	6/19/2022 6:28	6.01
6/20/2022 3:09	32.74	6/20/2022 3:56	19.38	6/19/2022 6:29	5.98
6/20/2022 3:10	32.74	6/20/2022 3:57	19.38	6/19/2022 6:30	5.98
6/20/2022 3:11	32.74	6/20/2022 3:58	19.37	6/19/2022 6:31	5.98
6/20/2022 3:12	32.75	6/20/2022 3:59	19.38	6/19/2022 6:32	5.97
6/20/2022 3:13	32.77	6/20/2022 4:00	19.38	6/19/2022 6:33	6.01
6/20/2022 3:14	32.75	6/20/2022 4:01	19.38	6/19/2022 6:34	5.98
6/20/2022 3:15	32.76	6/20/2022 4:02	19.37	6/19/2022 6:35	5.95
6/20/2022 3:16	32.77	6/20/2022 4:03	19.39	6/19/2022 6:36	5.99
6/20/2022 3:17	32.75	6/20/2022 4:04	19.39	6/19/2022 6:37	6.01
6/20/2022 3:18	32.76	6/20/2022 4:05	19.38	6/19/2022 6:38	6.01
6/20/2022 3:19	32.76	6/20/2022 4:06	19.38	6/19/2022 6:39	5.98
6/20/2022 3:20	32.76	6/20/2022 4:07	19.39	6/19/2022 6:40	6.00
6/20/2022 3:21	32.77	6/20/2022 4:08	19.40	6/19/2022 6:41	6.00
6/20/2022 3:22	32.73	6/20/2022 4:09	19.38	6/19/2022 6:42	5.99
6/20/2022 3:23	32.74	6/20/2022 4:10	19.39	6/19/2022 6:43	5.95
6/20/2022 3:24	32.77	6/20/2022 4:11	19.40	6/19/2022 6:44	6.00
6/20/2022 3:25	32.76	6/20/2022 4:12	19.39	6/19/2022 6:45	6.02
6/20/2022 3:26	32.76	6/20/2022 4:13	19.37	6/19/2022 6:46	5.99
6/20/2022 3:27	32.75	6/20/2022 4:14	19.37	6/19/2022 6:47	5.99
6/20/2022 3:28	32.78	6/20/2022 4:15	19.36	6/19/2022 6:48	5.97
6/20/2022 3:29	32.76	6/20/2022 4:16	19.40	6/19/2022 6:49	5.97
6/20/2022 3:30	32.77	6/20/2022 4:17	19.36	6/19/2022 6:50	5.99
6/20/2022 3:31	32.79	6/20/2022 4:18	19.40	6/19/2022 6:51	5.97
6/20/2022 3:32	32.75	6/20/2022 4:19	19.41	6/19/2022 6:52	6.01
6/20/2022 3:33	32.75	6/20/2022 4:20	19.40	6/19/2022 6:53	5.97
6/20/2022 3:34	32.76	6/20/2022 4:21	19.37	6/19/2022 6:54	5.99
6/20/2022 3:35	32.74	6/20/2022 4:22	19.39	6/19/2022 6:55	5.97
6/20/2022 3:36	32.73	6/20/2022 4:23	19.39	6/19/2022 6:56	6.00
6/20/2022 3:37	32.75	6/20/2022 4:24	19.38	6/19/2022 6:57	5.95
6/20/2022 3:38	32.75	6/20/2022 4:25	19.39	6/19/2022 6:58	5.97
6/20/2022 3:39	32.78	6/20/2022 4:26	19.39	6/19/2022 6:59	5.98
6/20/2022 3:40	32.75	6/20/2022 4:27	19.39	6/19/2022 7:00	5.96
6/20/2022 3:41	32.74	6/20/2022 4:28	19.40	6/19/2022 7:01	6.00
6/20/2022 3:42	32.81	6/20/2022 4:29	19.40	6/19/2022 7:02	5.97
6/20/2022 3:43	32.77	6/20/2022 4:30	19.40	6/19/2022 7:03	6.00
6/20/2022 3:44	32.77	6/20/2022 4:31	19.40	6/19/2022 7:04	5.99
6/20/2022 3:45	32.76	6/20/2022 4:32	19.37	6/19/2022 7:05	5.97
6/20/2022 3:46	32.75	6/20/2022 4:33	19.38	6/19/2022 7:06	5.98
6/20/2022 3:47	32.75	6/20/2022 4:34	19.39	6/19/2022 7:07	6.00
6/20/2022 3:48	32.78	6/20/2022 4:35	19.35	6/19/2022 7:08	6.01
6/20/2022 3:49	32.75	6/20/2022 4:36	19.36	6/19/2022 7:09	5.99
6/20/2022 3:50	32.78	6/20/2022 4:37	19.41	6/19/2022 7:10	5.98
6/20/2022 3:51	32.76	6/20/2022 4:38	19.39	6/19/2022 7:11	5.99
6/20/2022 3:52	32.74	6/20/2022 4:39	19.40	6/19/2022 7:12	5.99
6/20/2022 3:53	32.74	6/20/2022 4:40	19.39	6/19/2022 7:13	6.00
6/20/2022 3:54	32.78	6/20/2022 4:41	19.38	6/19/2022 7:14	5.99
6/20/2022 3:55	32.76	6/20/2022 4:42	19.38	6/19/2022 7:15	6.00
6/20/2022 3:56	32.77	6/20/2022 4:43	19.40	6/19/2022 7:16	5.96
6/20/2022 3:57	32.77	6/20/2022 4:44	19.39	6/19/2022 7:17	6.01
6/20/2022 3:58	32.78	6/20/2022 4:45	19.39	6/19/2022 7:18	6.00
6/20/2022 3:59	32.77	6/20/2022 4:46	19.37	6/19/2022 7:19	5.98
6/20/2022 4:00	32.76	6/20/2022 4:47	19.40	6/19/2022 7:20	5.97
6/20/2022 4:01	32.73	6/20/2022 4:48	19.41	6/19/2022 7:21	5.99
6/20/2022 4:02	32.75	6/20/2022 4:49	19.36	6/19/2022 7:22	5.99

6/20/2022 4:03	32.76	6/20/2022 4:50	19.38	6/19/2022 7:23	5.98
6/20/2022 4:04	32.75	6/20/2022 4:51	19.40	6/19/2022 7:24	5.98
6/20/2022 4:05	32.73	6/20/2022 4:52	19.39	6/19/2022 7:25	5.98
6/20/2022 4:06	32.75	6/20/2022 4:53	19.38	6/19/2022 7:26	5.99
6/20/2022 4:07	32.73	6/20/2022 4:54	19.39	6/19/2022 7:27	5.99
6/20/2022 4:08	32.77	6/20/2022 4:55	19.39	6/19/2022 7:28	6.01
6/20/2022 4:09	32.76	6/20/2022 4:56	19.36	6/19/2022 7:29	6.03
6/20/2022 4:10	32.79	6/20/2022 4:57	19.39	6/19/2022 7:30	6.01
6/20/2022 4:11	32.77	6/20/2022 4:58	19.37	6/19/2022 7:31	5.96
6/20/2022 4:12	32.76	6/20/2022 4:59	19.39	6/19/2022 7:32	6.02
6/20/2022 4:13	32.75	6/20/2022 5:00	19.37	6/19/2022 7:33	5.99
6/20/2022 4:14	32.75	6/20/2022 5:01	19.41	6/19/2022 7:34	5.97
6/20/2022 4:15	32.76	6/20/2022 5:02	19.39	6/19/2022 7:35	5.97
6/20/2022 4:16	32.80	6/20/2022 5:03	19.38	6/19/2022 7:36	5.99
6/20/2022 4:17	32.75	6/20/2022 5:04	19.39	6/19/2022 7:37	6.02
6/20/2022 4:18	32.78	6/20/2022 5:05	19.40	6/19/2022 7:38	5.99
6/20/2022 4:19	32.76	6/20/2022 5:06	19.38	6/19/2022 7:39	5.96
6/20/2022 4:20	32.77	6/20/2022 5:07	19.39	6/19/2022 7:40	6.01
6/20/2022 4:21	32.74	6/20/2022 5:08	19.41	6/19/2022 7:41	5.97
6/20/2022 4:22	32.75	6/20/2022 5:09	19.41	6/19/2022 7:42	6.00
6/20/2022 4:23	32.77	6/20/2022 5:10	19.40	6/19/2022 7:43	5.97
6/20/2022 4:24	32.76	6/20/2022 5:11	19.40	6/19/2022 7:44	5.98
6/20/2022 4:25	32.76	6/20/2022 5:12	19.39	6/19/2022 7:45	5.99
6/20/2022 4:26	32.74	6/20/2022 5:13	19.40	6/19/2022 7:46	5.96
6/20/2022 4:27	32.77	6/20/2022 5:14	19.36	6/19/2022 7:47	5.99
6/20/2022 4:28	32.77	6/20/2022 5:15	19.40	6/19/2022 7:48	6.00
6/20/2022 4:29	32.77	6/20/2022 5:16	19.40	6/19/2022 7:49	5.93
6/20/2022 4:30	32.76	6/20/2022 5:17	19.39	6/19/2022 7:50	5.97
6/20/2022 4:31	32.76	6/20/2022 5:18	19.38	6/19/2022 7:51	6.00
6/20/2022 4:32	32.76	6/20/2022 5:19	19.38	6/19/2022 7:52	5.97
6/20/2022 4:33	32.74	6/20/2022 5:20	19.40	6/19/2022 7:53	6.00
6/20/2022 4:34	32.75	6/20/2022 5:21	19.39	6/19/2022 7:54	6.01
6/20/2022 4:35	32.75	6/20/2022 5:22	19.39	6/19/2022 7:55	6.00
6/20/2022 4:36	32.75	6/20/2022 5:23	19.39	6/19/2022 7:56	5.97
6/20/2022 4:37	32.73	6/20/2022 5:24	19.36	6/19/2022 7:57	5.99
6/20/2022 4:38	32.78	6/20/2022 5:25	19.40	6/19/2022 7:58	6.01
6/20/2022 4:39	32.75	6/20/2022 5:26	19.40	6/19/2022 7:59	5.99
6/20/2022 4:40	32.76	6/20/2022 5:27	19.39	6/19/2022 8:00	5.95
6/20/2022 4:41	32.77	6/20/2022 5:28	19.39	6/19/2022 8:01	5.98
6/20/2022 4:42	32.78	6/20/2022 5:29	19.38	6/19/2022 8:02	5.97
6/20/2022 4:43	32.76	6/20/2022 5:30	19.37	6/19/2022 8:03	5.99
6/20/2022 4:44	32.77	6/20/2022 5:31	19.39	6/19/2022 8:04	5.98
6/20/2022 4:45	32.77	6/20/2022 5:32	19.38	6/19/2022 8:05	5.99
6/20/2022 4:46	32.76	6/20/2022 5:33	19.39	6/19/2022 8:06	5.99
6/20/2022 4:47	32.79	6/20/2022 5:34	19.40	6/19/2022 8:07	6.01
6/20/2022 4:48	32.79	6/20/2022 5:35	19.39	6/19/2022 8:08	5.97
6/20/2022 4:49	32.77	6/20/2022 5:36	19.40	6/19/2022 8:09	6.00
6/20/2022 4:50	32.75	6/20/2022 5:37	19.39	6/19/2022 8:10	5.96
6/20/2022 4:51	32.76	6/20/2022 5:38	19.40	6/19/2022 8:11	6.01
6/20/2022 4:52	32.76	6/20/2022 5:39	19.41	6/19/2022 8:12	6.01
6/20/2022 4:53	32.77	6/20/2022 5:40	19.38	6/19/2022 8:13	5.98
6/20/2022 4:54	32.81	6/20/2022 5:41	19.39	6/19/2022 8:14	6.03
6/20/2022 4:55	32.79	6/20/2022 5:42	19.41	6/19/2022 8:15	6.03
6/20/2022 4:56	32.75	6/20/2022 5:43	19.38	6/19/2022 8:16	6.01
6/20/2022 4:57	32.73	6/20/2022 5:44	19.41	6/19/2022 8:17	8.41
6/20/2022 4:58	32.75	6/20/2022 5:45	19.40	6/19/2022 8:18	8.65
6/20/2022 4:59	32.75	6/20/2022 5:46	19.41	6/19/2022 8:19	6.13
6/20/2022 5:00	32.76	6/20/2022 5:47	19.39	6/19/2022 8:20	6.05
6/20/2022 5:01	32.78	6/20/2022 5:48	19.41	6/19/2022 8:21	6.01
6/20/2022 5:02	32.75	6/20/2022 5:49	19.41	6/19/2022 8:22	6.02
6/20/2022 5:03	32.73	6/20/2022 5:50	19.41	6/19/2022 8:23	6.01
6/20/2022 5:04	32.76	6/20/2022 5:51	19.40	6/19/2022 8:24	6.02
6/20/2022 5:05	32.75	6/20/2022 5:52	19.39	6/19/2022 8:25	6.02
6/20/2022 5:06	32.77	6/20/2022 5:53	19.40	6/19/2022 8:26	5.99
6/20/2022 5:07	32.77	6/20/2022 5:54	19.41	6/19/2022 8:27	6.01
6/20/2022 5:08	32.75	6/20/2022 5:55	19.43	6/19/2022 8:28	5.99
6/20/2022 5:09	32.78	6/20/2022 5:56	19.38	6/19/2022 8:29	6.00
6/20/2022 5:10	32.76	6/20/2022 5:57	19.38	6/19/2022 8:30	5.99
6/20/2022 5:11	32.79	6/20/2022 5:58	19.42	6/19/2022 8:31	6.03
6/20/2022 5:12	32.76	6/20/2022 5:59	19.43	6/19/2022 8:32	6.00
6/20/2022 5:13	32.75	6/20/2022 6:00	19.41	6/19/2022 8:33	6.01
6/20/2022 5:14	32.79	6/20/2022 6:01	19.40	6/19/2022 8:34	6.02
6/20/2022 5:15	32.78	6/20/2022 6:02	19.40	6/19/2022 8:35	5.99
6/20/2022 5:16	32.77	6/20/2022 6:03	19.41	6/19/2022 8:36	6.01
6/20/2022 5:17	32.78	6/20/2022 6:04	19.42	6/19/2022 8:37	5.96
6/20/2022 5:18	32.77	6/20/2022 6:05	19.39	6/19/2022 8:38	6.00
6/20/2022 5:19	32.77	6/20/2022 6:06	19.42	6/19/2022 8:39	6.00
6/20/2022 5:20	32.76	6/20/2022 6:07	19.40	6/19/2022 8:40	5.99
6/20/2022 5:21	32.77	6/20/2022 6:08	19.41	6/19/2022 8:41	6.00
6/20/2022 5:22	32.72	6/20/2022 6:09	19.43	6/19/2022 8:42	5.97
6/20/2022 5:23	32.75	6/20/2022 6:10	19.40	6/19/2022 8:43	6.00
6/20/2022 5:24	32.77	6/20/2022 6:11	19.39	6/19/2022 8:44	5.98
6/20/2022 5:25	32.76	6/20/2022 6:12	19.39	6/19/2022 8:45	5.97
6/20/2022 5:26	32.77	6/20/2022 6:13	19.41	6/19/2022 8:46	5.99
6/20/2022 5:27	32.75	6/20/2022 6:14	19.41	6/19/2022 8:47	6.00
6/20/2022 5:28	32.77	6/20/2022 6:15	19.40	6/19/2022 8:48	6.00
6/20/2022 5:29	32.77	6/20/2022 6:16	19.41	6/19/2022 8:49	6.02
6/20/2022 5:30	32.76	6/20/2022 6:17	19.42	6/19/2022 8:50	6.00

6/20/2022 5:31	32.75	6/20/2022 6:18	19.41	6/19/2022 8:51	5.97
6/20/2022 5:32	32.76	6/20/2022 6:19	19.41	6/19/2022 8:52	6.03
6/20/2022 5:33	32.79	6/20/2022 6:20	19.39	6/19/2022 8:53	5.98
6/20/2022 5:34	32.76	6/20/2022 6:21	19.39	6/19/2022 8:54	6.00
6/20/2022 5:35	32.78	6/20/2022 6:22	19.39	6/19/2022 8:55	5.98
6/20/2022 5:36	32.75	6/20/2022 6:23	19.39	6/19/2022 8:56	5.97
6/20/2022 5:37	32.78	6/20/2022 6:24	19.40	6/19/2022 8:57	6.01
6/20/2022 5:38	32.78	6/20/2022 6:25	19.40	6/19/2022 8:58	5.97
6/20/2022 5:39	32.77	6/20/2022 6:26	19.39	6/19/2022 8:59	6.00
6/20/2022 5:40	32.76	6/20/2022 6:27	19.39	6/19/2022 9:00	5.99
6/20/2022 5:41	32.75	6/20/2022 6:28	19.40	6/19/2022 9:01	5.98
6/20/2022 5:42	32.80	6/20/2022 6:29	19.42	6/19/2022 9:02	6.00
6/20/2022 5:43	32.78	6/20/2022 6:30	19.41	6/19/2022 9:03	6.00
6/20/2022 5:44	32.77	6/20/2022 6:31	19.41	6/19/2022 9:04	6.01
6/20/2022 5:45	32.76	6/20/2022 6:32	19.39	6/19/2022 9:05	5.98
6/20/2022 5:46	32.74	6/20/2022 6:33	19.41	6/19/2022 9:06	5.99
6/20/2022 5:47	32.77	6/20/2022 6:34	19.39	6/19/2022 9:07	5.99
6/20/2022 5:48	32.76	6/20/2022 6:35	19.40	6/19/2022 9:08	5.97
6/20/2022 5:49	32.80	6/20/2022 6:36	19.41	6/19/2022 9:09	6.01
6/20/2022 5:50	32.77	6/20/2022 6:37	19.40	6/19/2022 9:10	5.99
6/20/2022 5:51	32.76	6/20/2022 6:38	19.40	6/19/2022 9:11	6.01
6/20/2022 5:52	32.77	6/20/2022 6:39	19.40	6/19/2022 9:12	6.01
6/20/2022 5:53	32.79	6/20/2022 6:40	19.42	6/19/2022 9:13	5.97
6/20/2022 5:54	32.78	6/20/2022 6:41	19.39	6/19/2022 9:14	5.99
6/20/2022 5:55	32.80	6/20/2022 6:42	19.43	6/19/2022 9:15	6.00
6/20/2022 5:56	32.74	6/20/2022 6:43	19.41	6/19/2022 9:16	6.00
6/20/2022 5:57	32.77	6/20/2022 6:44	19.41	6/19/2022 9:17	5.99
6/20/2022 5:58	32.79	6/20/2022 6:45	19.41	6/19/2022 9:18	6.01
6/20/2022 5:59	32.75	6/20/2022 6:46	19.40	6/19/2022 9:19	5.98
6/20/2022 6:00	32.80	6/20/2022 6:47	19.39	6/19/2022 9:20	5.97
6/20/2022 6:01	32.73	6/20/2022 6:48	19.40	6/19/2022 9:21	6.00
6/20/2022 6:02	32.79	6/20/2022 6:49	19.40	6/19/2022 9:22	5.99
6/20/2022 6:03	32.77	6/20/2022 6:50	19.40	6/19/2022 9:23	5.98
6/20/2022 6:04	32.77	6/20/2022 6:51	19.43	6/19/2022 9:24	5.98
6/20/2022 6:05	32.78	6/20/2022 6:52	19.41	6/19/2022 9:25	6.00
6/20/2022 6:06	32.77	6/20/2022 6:53	19.42	6/19/2022 9:26	5.98
6/20/2022 6:07	32.75	6/20/2022 6:54	19.40	6/19/2022 9:27	6.03
6/20/2022 6:08	32.78	6/20/2022 6:55	19.41	6/19/2022 9:28	5.99
6/20/2022 6:09	32.78	6/20/2022 6:56	19.41	6/19/2022 9:29	6.02
6/20/2022 6:10	32.79	6/20/2022 6:57	19.42	6/19/2022 9:30	6.00
6/20/2022 6:11	32.79	6/20/2022 6:58	19.39	6/19/2022 9:31	6.01
6/20/2022 6:12	32.77	6/20/2022 6:59	19.39	6/19/2022 9:32	5.99
6/20/2022 6:13	32.80	6/20/2022 7:00	19.41	6/19/2022 9:33	5.99
6/20/2022 6:14	32.80	6/20/2022 7:01	19.40	6/19/2022 9:34	6.00
6/20/2022 6:15	32.76	6/20/2022 7:02	19.41	6/19/2022 9:35	5.98
6/20/2022 6:16	32.78	6/20/2022 7:03	19.41	6/19/2022 9:36	5.97
6/20/2022 6:17	32.78	6/20/2022 7:04	19.41	6/19/2022 9:37	5.99
6/20/2022 6:18	32.78	6/20/2022 7:05	19.41	6/19/2022 9:38	5.98
6/20/2022 6:19	32.77	6/20/2022 7:06	19.42	6/19/2022 9:39	5.99
6/20/2022 6:20	32.77	6/20/2022 7:07	19.40	6/19/2022 9:40	6.00
6/20/2022 6:21	32.79	6/20/2022 7:08	19.40	6/19/2022 9:41	6.01
6/20/2022 6:22	32.77	6/20/2022 7:09	19.43	6/19/2022 9:42	5.98
6/20/2022 6:23	32.76	6/20/2022 7:10	19.41	6/19/2022 9:43	5.98
6/20/2022 6:24	32.76	6/20/2022 7:11	19.39	6/19/2022 9:44	6.01
6/20/2022 6:25	32.78	6/20/2022 7:12	19.38	6/19/2022 9:45	6.00
6/20/2022 6:26	32.76	6/20/2022 7:13	19.44	6/19/2022 9:46	5.99
6/20/2022 6:27	32.76	6/20/2022 7:14	19.40	6/19/2022 9:47	6.00
6/20/2022 6:28	32.76	6/20/2022 7:15	19.41	6/19/2022 9:48	8.51
6/20/2022 6:29	32.76	6/20/2022 7:16	19.40	6/19/2022 9:49	8.03
6/20/2022 6:30	32.76	6/20/2022 7:17	19.40	6/19/2022 9:50	6.16
6/20/2022 6:31	32.77	6/20/2022 7:18	19.42	6/19/2022 9:51	6.05
6/20/2022 6:32	32.76	6/20/2022 7:19	19.39	6/19/2022 9:52	6.02
6/20/2022 6:33	32.76	6/20/2022 7:20	19.42	6/19/2022 9:53	6.04
6/20/2022 6:34	32.78	6/20/2022 7:21	19.41	6/19/2022 9:54	6.00
6/20/2022 6:35	32.76	6/20/2022 7:22	19.39	6/19/2022 9:55	5.98
6/20/2022 6:36	32.77	6/20/2022 7:23	19.42	6/19/2022 9:56	6.03
6/20/2022 6:37	32.78	6/20/2022 7:24	19.42	6/19/2022 9:57	5.99
6/20/2022 6:38	32.76	6/20/2022 7:25	19.40	6/19/2022 9:58	6.00
6/20/2022 6:39	32.75	6/20/2022 7:26	19.43	6/19/2022 9:59	6.04
6/20/2022 6:40	32.77	6/20/2022 7:27	19.41	6/19/2022 10:00	6.01
6/20/2022 6:41	32.78	6/20/2022 7:28	19.40	6/19/2022 10:01	6.01
6/20/2022 6:42	32.74	6/20/2022 7:29	19.42	6/19/2022 10:02	6.00
6/20/2022 6:43	32.77	6/20/2022 7:30	19.41	6/19/2022 10:03	5.99
6/20/2022 6:44	32.74	6/20/2022 7:31	19.41	6/19/2022 10:04	6.01
6/20/2022 6:45	32.76	6/20/2022 7:32	19.41	6/19/2022 10:05	5.99
6/20/2022 6:46	32.79	6/20/2022 7:33	19.40	6/19/2022 10:06	6.03
6/20/2022 6:47	32.79	6/20/2022 7:34	19.37	6/19/2022 10:07	6.01
6/20/2022 6:48	32.76	6/20/2022 7:35	19.40	6/19/2022 10:08	6.02
6/20/2022 6:49	32.76	6/20/2022 7:36	19.41	6/19/2022 10:09	6.02
6/20/2022 6:50	32.77	6/20/2022 7:37	19.41	6/19/2022 10:10	6.02
6/20/2022 6:51	32.76	6/20/2022 7:38	19.42	6/19/2022 10:11	6.01
6/20/2022 6:52	32.74	6/20/2022 7:39	19.40	6/19/2022 10:12	5.99
6/20/2022 6:53	32.75	6/20/2022 7:40	19.41	6/19/2022 10:13	6.00
6/20/2022 6:54	32.77	6/20/2022 7:41	19.43	6/19/2022 10:14	6.01
6/20/2022 6:55	32.77	6/20/2022 7:42	19.40	6/19/2022 10:15	5.99
6/20/2022 6:56	32.74	6/20/2022 7:43	19.49	6/19/2022 10:16	5.97
6/20/2022 6:57	32.77	6/20/2022 7:44	20.05	6/19/2022 10:17	5.97
6/20/2022 6:58	32.79	6/20/2022 7:45	20.14	6/19/2022 10:18	6.01

6/20/2022 6:59	32.78	6/20/2022 7:46	20.21	6/19/2022 10:19	5.98
6/20/2022 7:00	32.73	6/20/2022 7:47	20.25	6/19/2022 10:20	5.98
6/20/2022 7:01	32.77	6/20/2022 7:48	20.25	6/19/2022 10:21	6.01
6/20/2022 7:02	32.77	6/20/2022 7:49	20.26	6/19/2022 10:22	6.00
6/20/2022 7:03	32.83	6/20/2022 7:50	19.70	6/19/2022 10:23	6.02
6/20/2022 7:04	32.84	6/20/2022 7:51	19.64	6/19/2022 10:24	6.01
6/20/2022 7:05	32.88	6/20/2022 7:52	19.61	6/19/2022 10:25	6.01
6/20/2022 7:06	32.87	6/20/2022 7:53	19.61	6/19/2022 10:26	5.98
6/20/2022 7:07	32.92	6/20/2022 7:54	19.54	6/19/2022 10:27	6.01
6/20/2022 7:08	32.92	6/20/2022 7:55	19.58	6/19/2022 10:28	6.01
6/20/2022 7:09	32.98	6/20/2022 7:56	19.58	6/19/2022 10:29	6.04
6/20/2022 7:10	33.01	6/20/2022 7:57	19.54	6/19/2022 10:30	6.01
6/20/2022 7:11	32.99	6/20/2022 7:58	19.54	6/19/2022 10:31	6.00
6/20/2022 7:12	33.01	6/20/2022 7:59	19.52	6/19/2022 10:32	6.03
6/20/2022 7:13	33.02	6/20/2022 8:00	19.52	6/19/2022 10:33	6.01
6/20/2022 7:14	33.06	6/20/2022 8:01	19.52	6/19/2022 10:34	5.98
6/20/2022 7:15	33.08	6/20/2022 8:02	19.52	6/19/2022 10:35	6.00
6/20/2022 7:16	33.11	6/20/2022 8:03	19.49	6/19/2022 10:36	5.96
6/20/2022 7:17	33.12	6/20/2022 8:04	19.50	6/19/2022 10:37	6.00
6/20/2022 7:18	33.11	6/20/2022 8:05	19.48	6/19/2022 10:38	6.00
6/20/2022 7:19	33.12	6/20/2022 8:06	19.50	6/19/2022 10:39	5.98
6/20/2022 7:20	33.12	6/20/2022 8:07	19.50	6/19/2022 10:40	6.00
6/20/2022 7:21	33.15	6/20/2022 8:08	19.49	6/19/2022 10:41	5.98
6/20/2022 7:22	33.19	6/20/2022 8:09	19.48	6/19/2022 10:42	5.94
6/20/2022 7:23	33.19	6/20/2022 8:10	19.50	6/19/2022 10:43	5.99
6/20/2022 7:24	33.17	6/20/2022 8:11	19.49	6/19/2022 10:44	5.99
6/20/2022 7:25	33.22	6/20/2022 8:12	19.48	6/19/2022 10:45	6.01
6/20/2022 7:26	33.21	6/20/2022 8:13	19.46	6/19/2022 10:46	6.01
6/20/2022 7:27	33.19	6/20/2022 8:14	19.48	6/19/2022 10:47	6.02
6/20/2022 7:28	33.22	6/20/2022 8:15	19.48	6/19/2022 10:48	6.02
6/20/2022 7:29	33.22	6/20/2022 8:16	19.47	6/19/2022 10:49	5.97
6/20/2022 7:30	33.21	6/20/2022 8:17	19.47	6/19/2022 10:50	5.99
6/20/2022 7:31	33.24	6/20/2022 8:18	19.47	6/19/2022 10:51	6.01
6/20/2022 7:32	33.22	6/20/2022 8:19	19.46	6/19/2022 10:52	6.00
6/20/2022 7:33	33.27	6/20/2022 8:20	19.48	6/19/2022 10:53	5.99
6/20/2022 7:34	33.26	6/20/2022 8:21	19.48	6/19/2022 10:54	5.98
6/20/2022 7:35	33.27	6/20/2022 8:22	19.46	6/19/2022 10:55	6.00
6/20/2022 7:36	33.26	6/20/2022 8:23	19.47	6/19/2022 10:56	5.98
6/20/2022 7:37	33.27	6/20/2022 8:24	19.48	6/19/2022 10:57	5.99
6/20/2022 7:38	33.29	6/20/2022 8:25	19.47	6/19/2022 10:58	6.00
6/20/2022 7:39	33.30	6/20/2022 8:26	19.44	6/19/2022 10:59	5.99
6/20/2022 7:40	33.30	6/20/2022 8:27	19.45	6/19/2022 11:00	6.00
6/20/2022 7:41	33.28	6/20/2022 8:28	19.44	6/19/2022 11:01	5.98
6/20/2022 7:42	33.35	6/20/2022 8:29	19.46	6/19/2022 11:02	6.00
6/20/2022 7:43	33.31	6/20/2022 8:30	19.48	6/19/2022 11:03	6.00
6/20/2022 7:44	33.34	6/20/2022 8:31	19.47	6/19/2022 11:04	5.98
6/20/2022 7:45	33.41	6/20/2022 8:32	19.48	6/19/2022 11:05	5.97
6/20/2022 7:46	33.47	6/20/2022 8:33	19.45	6/19/2022 11:06	6.00
6/20/2022 7:47	33.46	6/20/2022 8:34	19.46	6/19/2022 11:07	5.96
6/20/2022 7:48	33.51	6/20/2022 8:35	19.46	6/19/2022 11:08	5.99
6/20/2022 7:49	33.54	6/20/2022 8:36	19.44	6/19/2022 11:09	5.98
6/20/2022 7:50	33.57	6/20/2022 8:37	19.46	6/19/2022 11:10	6.01
6/20/2022 7:51	33.63	6/20/2022 8:38	19.45	6/19/2022 11:11	6.02
6/20/2022 7:52	33.63	6/20/2022 8:39	19.43	6/19/2022 11:12	6.01
6/20/2022 7:53	33.68	6/20/2022 8:40	19.46	6/19/2022 11:13	5.98
6/20/2022 7:54	33.71	6/20/2022 8:41	19.44	6/19/2022 11:14	5.97
6/20/2022 7:55	33.74	6/20/2022 8:42	19.45	6/19/2022 11:15	5.97
6/20/2022 7:56	33.78	6/20/2022 8:43	19.45	6/19/2022 11:16	5.97
6/20/2022 7:57	33.80	6/20/2022 8:44	19.47	6/19/2022 11:17	6.02
6/20/2022 7:58	33.84	6/20/2022 8:45	19.46	6/19/2022 11:18	6.01
6/20/2022 7:59	33.81	6/20/2022 8:46	19.46	6/19/2022 11:19	6.02
6/20/2022 8:00	33.88	6/20/2022 8:47	19.46	6/19/2022 11:20	6.00
6/20/2022 8:01	33.89	6/20/2022 8:48	19.45	6/19/2022 11:21	6.03
6/20/2022 8:02	33.89	6/20/2022 8:49	19.45	6/19/2022 11:22	5.97
6/20/2022 8:03	33.91	6/20/2022 8:50	19.44	6/19/2022 11:23	6.01
6/20/2022 8:04	33.95	6/20/2022 8:51	19.45	6/19/2022 11:24	5.97
6/20/2022 8:05	33.90	6/20/2022 8:52	19.44	6/19/2022 11:25	6.02
6/20/2022 8:06	33.93	6/20/2022 8:53	19.46	6/19/2022 11:26	6.01
6/20/2022 8:07	33.94	6/20/2022 8:54	19.44	6/19/2022 11:27	6.01
6/20/2022 8:08	33.95	6/20/2022 8:55	19.43	6/19/2022 11:28	5.99
6/20/2022 8:09	33.88	6/20/2022 8:56	19.45	6/19/2022 11:29	6.00
6/20/2022 8:10	33.87	6/20/2022 8:57	19.46	6/19/2022 11:30	6.00
6/20/2022 8:11	33.88	6/20/2022 8:58	19.44	6/19/2022 11:31	6.01
6/20/2022 8:12	33.89	6/20/2022 8:59	19.45	6/19/2022 11:32	6.00
6/20/2022 8:13	33.87	6/20/2022 9:00	19.44	6/19/2022 11:33	6.00
6/20/2022 8:14	33.85	6/20/2022 9:01	19.45	6/19/2022 11:34	5.99
6/20/2022 8:15	33.84	6/20/2022 9:02	19.45	6/19/2022 11:35	5.99
6/20/2022 8:16	33.86	6/20/2022 9:03	19.42	6/19/2022 11:36	5.99
6/20/2022 8:17	33.84	6/20/2022 9:04	19.44	6/19/2022 11:37	6.00
6/20/2022 8:18	33.83	6/20/2022 9:05	19.44	6/19/2022 11:38	6.00
6/20/2022 8:19	33.81	6/20/2022 9:06	19.43	6/19/2022 11:39	5.99
6/20/2022 8:20	33.81	6/20/2022 9:07	19.44	6/19/2022 11:40	5.98
6/20/2022 8:21	33.81	6/20/2022 9:08	19.42	6/19/2022 11:41	6.00
6/20/2022 8:22	33.79	6/20/2022 9:09	19.44	6/19/2022 11:42	6.02
6/20/2022 8:23	33.81	6/20/2022 9:10	20.05	6/19/2022 11:43	6.01
6/20/2022 8:24	33.74	6/20/2022 9:11	20.14	6/19/2022 11:44	5.96
6/20/2022 8:25	33.72	6/20/2022 9:12	20.17	6/19/2022 11:45	5.99
6/20/2022 8:26	33.71	6/20/2022 9:13	20.20	6/19/2022 11:46	6.02

6/20/2022 8:27	33.70	6/20/2022 9:14	19.95	6/19/2022 11:47	5.98
6/20/2022 8:28	33.66	6/20/2022 9:15	19.70	6/19/2022 11:48	5.99
6/20/2022 8:29	33.65	6/20/2022 9:16	19.58	6/19/2022 11:49	5.98
6/20/2022 8:30	33.62	6/20/2022 9:17	19.59	6/19/2022 11:50	6.04
6/20/2022 8:31	33.60	6/20/2022 9:18	19.59	6/19/2022 11:51	6.02
6/20/2022 8:32	33.57	6/20/2022 9:19	19.56	6/19/2022 11:52	6.00
6/20/2022 8:33	33.59	6/20/2022 9:20	19.56	6/19/2022 11:53	6.01
6/20/2022 8:34	33.56	6/20/2022 9:21	19.56	6/19/2022 11:54	6.01
6/20/2022 8:35	33.52	6/20/2022 9:22	19.56	6/19/2022 11:55	5.98
6/20/2022 8:36	33.50	6/20/2022 9:23	19.52	6/19/2022 11:56	6.03
6/20/2022 8:37	33.51	6/20/2022 9:24	19.54	6/19/2022 11:57	6.02
6/20/2022 8:38	33.48	6/20/2022 9:25	19.57	6/19/2022 11:58	5.98
6/20/2022 8:39	33.47	6/20/2022 9:26	19.52	6/19/2022 11:59	5.99
6/20/2022 8:40	33.48	6/20/2022 9:27	19.51	6/19/2022 12:00	6.01
6/20/2022 8:41	33.47	6/20/2022 9:28	19.54	6/19/2022 12:01	6.00
6/20/2022 8:42	33.47	6/20/2022 9:29	19.51	6/19/2022 12:02	6.02
6/20/2022 8:43	33.43	6/20/2022 9:30	19.51	6/19/2022 12:03	5.97
6/20/2022 8:44	33.41	6/20/2022 9:31	19.52	6/19/2022 12:04	6.00
6/20/2022 8:45	33.42	6/20/2022 9:32	19.50	6/19/2022 12:05	5.99
6/20/2022 8:46	33.40	6/20/2022 9:33	19.50	6/19/2022 12:06	6.02
6/20/2022 8:47	33.40	6/20/2022 9:34	19.51	6/19/2022 12:07	5.99
6/20/2022 8:48	33.36	6/20/2022 9:35	19.52	6/19/2022 12:08	6.01
6/20/2022 8:49	33.40	6/20/2022 9:36	19.46	6/19/2022 12:09	6.01
6/20/2022 8:50	33.42	6/20/2022 9:37	19.47	6/19/2022 12:10	5.99
6/20/2022 8:51	33.42	6/20/2022 9:38	19.52	6/19/2022 12:11	5.99
6/20/2022 8:52	33.39	6/20/2022 9:39	19.50	6/19/2022 12:12	6.00
6/20/2022 8:53	33.39	6/20/2022 9:40	19.47	6/19/2022 12:13	6.01
6/20/2022 8:54	33.39	6/20/2022 9:41	19.51	6/19/2022 12:14	5.99
6/20/2022 8:55	33.36	6/20/2022 9:42	19.49	6/19/2022 12:15	6.02
6/20/2022 8:56	33.34	6/20/2022 9:43	19.49	6/19/2022 12:16	6.00
6/20/2022 8:57	33.34	6/20/2022 9:44	19.46	6/19/2022 12:17	6.00
6/20/2022 8:58	33.33	6/20/2022 9:45	19.50	6/19/2022 12:18	6.00
6/20/2022 8:59	33.32	6/20/2022 9:46	19.48	6/19/2022 12:19	6.01
6/20/2022 9:00	33.32	6/20/2022 9:47	19.49	6/19/2022 12:20	6.00
6/20/2022 9:01	33.30	6/20/2022 9:48	19.47	6/19/2022 12:21	6.03
6/20/2022 9:02	33.32	6/20/2022 9:49	19.52	6/19/2022 12:22	5.99
6/20/2022 9:03	33.28	6/20/2022 9:50	19.48	6/19/2022 12:23	6.02
6/20/2022 9:04	33.32	6/20/2022 9:51	19.48	6/19/2022 12:24	5.99
6/20/2022 9:05	33.96	6/20/2022 9:52	19.45	6/19/2022 12:25	6.00
6/20/2022 9:06	33.67	6/20/2022 9:53	19.46	6/19/2022 12:26	5.98
6/20/2022 9:07	33.42	6/20/2022 9:54	19.45	6/19/2022 12:27	5.99
6/20/2022 9:08	33.38	6/20/2022 9:55	19.48	6/19/2022 12:28	5.99
6/20/2022 9:09	33.36	6/20/2022 9:56	19.47	6/19/2022 12:29	6.00
6/20/2022 9:10	33.36	6/20/2022 9:57	19.47	6/19/2022 12:30	6.00
6/20/2022 9:11	33.31	6/20/2022 9:58	19.48	6/19/2022 12:31	6.03
6/20/2022 9:12	33.32	6/20/2022 9:59	19.47	6/19/2022 12:32	6.03
6/20/2022 9:13	33.30	6/20/2022 10:00	19.47	6/19/2022 12:33	6.00
6/20/2022 9:14	33.28	6/20/2022 10:01	19.46	6/19/2022 12:34	6.00
6/20/2022 9:15	33.28	6/20/2022 10:02	19.48	6/19/2022 12:35	5.99
6/20/2022 9:16	33.27	6/20/2022 10:03	19.45	6/19/2022 12:36	6.00
6/20/2022 9:17	33.27	6/20/2022 10:04	19.44	6/19/2022 12:37	6.02
6/20/2022 9:18	33.25	6/20/2022 10:05	19.45	6/19/2022 12:38	5.97
6/20/2022 9:19	33.22	6/20/2022 10:06	19.47	6/19/2022 12:39	6.01
6/20/2022 9:20	33.24	6/20/2022 10:07	19.44	6/19/2022 12:40	6.04
6/20/2022 9:21	33.24	6/20/2022 10:08	19.45	6/19/2022 12:41	6.01
6/20/2022 9:22	33.25	6/20/2022 10:09	19.46	6/19/2022 12:42	6.02
6/20/2022 9:23	33.21	6/20/2022 10:10	19.46	6/19/2022 12:43	6.00
6/20/2022 9:24	33.26	6/20/2022 10:11	19.47	6/19/2022 12:44	6.02
6/20/2022 9:25	33.20	6/20/2022 10:12	19.48	6/19/2022 12:45	6.01
6/20/2022 9:26	33.23	6/20/2022 10:13	19.48	6/19/2022 12:46	5.98
6/20/2022 9:27	33.25	6/20/2022 10:14	19.46	6/19/2022 12:47	5.99
6/20/2022 9:28	33.23	6/20/2022 10:15	20.08	6/19/2022 12:48	6.01
6/20/2022 9:29	33.25	6/20/2022 10:16	20.20	6/19/2022 12:49	6.02
6/20/2022 9:30	33.20	6/20/2022 10:17	20.25	6/19/2022 12:50	6.03
6/20/2022 9:31	33.23	6/20/2022 10:18	20.28	6/19/2022 12:51	6.00
6/20/2022 9:32	33.23	6/20/2022 10:19	20.28	6/19/2022 12:52	6.00
6/20/2022 9:33	33.24	6/20/2022 10:20	20.31	6/19/2022 12:53	6.00
6/20/2022 9:34	33.21	6/20/2022 10:21	20.28	6/19/2022 12:54	6.01
6/20/2022 9:35	33.20	6/20/2022 10:22	19.79	6/19/2022 12:55	6.01
6/20/2022 9:36	33.19	6/20/2022 10:23	19.71	6/19/2022 12:56	5.99
6/20/2022 9:37	33.19	6/20/2022 10:24	19.68	6/19/2022 12:57	6.04
6/20/2022 9:38	33.19	6/20/2022 10:25	19.65	6/19/2022 12:58	6.01
6/20/2022 9:39	33.20	6/20/2022 10:26	19.64	6/19/2022 12:59	5.99
6/20/2022 9:40	33.19	6/20/2022 10:27	19.62	6/19/2022 13:00	6.00
6/20/2022 9:41	33.17	6/20/2022 10:28	19.61	6/19/2022 13:01	6.00
6/20/2022 9:42	33.19	6/20/2022 10:29	19.61	6/19/2022 13:02	5.98
6/20/2022 9:43	33.17	6/20/2022 10:30	19.60	6/19/2022 13:03	5.94
6/20/2022 9:44	33.15	6/20/2022 10:31	19.58	6/19/2022 13:04	6.00
6/20/2022 9:45	33.15	6/20/2022 10:32	19.60	6/19/2022 13:05	5.99
6/20/2022 9:46	33.16	6/20/2022 10:33	19.57	6/19/2022 13:06	6.00
6/20/2022 9:47	33.11	6/20/2022 10:34	19.58	6/19/2022 13:07	6.00
6/20/2022 9:48	33.14	6/20/2022 10:35	19.54	6/19/2022 13:08	5.98
6/20/2022 9:49	33.15	6/20/2022 10:36	19.57	6/19/2022 13:09	5.99
6/20/2022 9:50	33.14	6/20/2022 10:37	19.57	6/19/2022 13:10	5.98
6/20/2022 9:51	33.12	6/20/2022 10:38	19.55	6/19/2022 13:11	6.01
6/20/2022 9:52	33.16	6/20/2022 10:39	19.56	6/19/2022 13:12	6.01
6/20/2022 9:53	33.12	6/20/2022 10:40	19.56	6/19/2022 13:13	6.01
6/20/2022 9:54	33.15	6/20/2022 10:41	19.55	6/19/2022 13:14	5.99

6/20/2022 9:55	33.10	6/20/2022 10:42	19.53	6/19/2022 13:15	6.01
6/20/2022 9:56	33.11	6/20/2022 10:43	19.55	6/19/2022 13:16	6.00
6/20/2022 9:57	33.10	6/20/2022 10:44	20.04	6/19/2022 13:17	6.04
6/20/2022 9:58	33.12	6/20/2022 10:45	20.20	6/19/2022 13:18	7.37
6/20/2022 9:59	33.12	6/20/2022 10:46	20.27	6/19/2022 13:19	8.77
6/20/2022 10:00	33.10	6/20/2022 10:47	20.31	6/19/2022 13:20	6.80
6/20/2022 10:01	33.11	6/20/2022 10:48	20.34	6/19/2022 13:21	6.07
6/20/2022 10:02	33.11	6/20/2022 10:49	20.35	6/19/2022 13:22	6.04
6/20/2022 10:03	33.12	6/20/2022 10:50	19.82	6/19/2022 13:23	6.03
6/20/2022 10:04	33.14	6/20/2022 10:51	19.74	6/19/2022 13:24	6.03
6/20/2022 10:05	33.10	6/20/2022 10:52	19.70	6/19/2022 13:25	6.02
6/20/2022 10:06	33.12	6/20/2022 10:53	19.68	6/19/2022 13:26	6.04
6/20/2022 10:07	33.06	6/20/2022 10:54	19.66	6/19/2022 13:27	6.01
6/20/2022 10:08	33.10	6/20/2022 10:55	19.68	6/19/2022 13:28	6.02
6/20/2022 10:09	33.11	6/20/2022 10:56	19.64	6/19/2022 13:29	6.01
6/20/2022 10:10	33.09	6/20/2022 10:57	19.64	6/19/2022 13:30	6.02
6/20/2022 10:11	33.09	6/20/2022 10:58	19.65	6/19/2022 13:31	6.03
6/20/2022 10:12	33.09	6/20/2022 10:59	19.63	6/19/2022 13:32	6.02
6/20/2022 10:13	33.10	6/20/2022 11:00	19.60	6/19/2022 13:33	6.01
6/20/2022 10:14	33.09	6/20/2022 11:01	19.60	6/19/2022 13:34	6.05
6/20/2022 10:15	33.07	6/20/2022 11:02	19.58	6/19/2022 13:35	6.04
6/20/2022 10:16	33.06	6/20/2022 11:03	19.60	6/19/2022 13:36	6.04
6/20/2022 10:17	33.76	6/20/2022 11:04	19.59	6/19/2022 13:37	5.99
6/20/2022 10:18	33.58	6/20/2022 11:05	19.60	6/19/2022 13:38	6.03
6/20/2022 10:19	33.25	6/20/2022 11:06	19.59	6/19/2022 13:39	6.02
6/20/2022 10:20	33.21	6/20/2022 11:07	19.59	6/19/2022 13:40	6.02
6/20/2022 10:21	33.14	6/20/2022 11:08	19.57	6/19/2022 13:41	6.03
6/20/2022 10:22	33.16	6/20/2022 11:09	19.56	6/19/2022 13:42	6.01
6/20/2022 10:23	33.14	6/20/2022 11:10	19.58	6/19/2022 13:43	6.03
6/20/2022 10:24	33.15	6/20/2022 11:11	19.56	6/19/2022 13:44	6.03
6/20/2022 10:25	33.11	6/20/2022 11:12	19.56	6/19/2022 13:45	6.02
6/20/2022 10:26	33.11	6/20/2022 11:13	19.58	6/19/2022 13:46	6.02
6/20/2022 10:27	33.07	6/20/2022 11:14	19.54	6/19/2022 13:47	6.00
6/20/2022 10:28	33.11	6/20/2022 11:15	19.54	6/19/2022 13:48	6.06
6/20/2022 10:29	33.11	6/20/2022 11:16	19.56	6/19/2022 13:49	6.00
6/20/2022 10:30	33.09	6/20/2022 11:17	19.56	6/19/2022 13:50	6.04
6/20/2022 10:31	33.09	6/20/2022 11:18	19.53	6/19/2022 13:51	6.02
6/20/2022 10:32	33.11	6/20/2022 11:19	19.57	6/19/2022 13:52	6.02
6/20/2022 10:33	33.09	6/20/2022 11:20	19.55	6/19/2022 13:53	6.01
6/20/2022 10:34	33.09	6/20/2022 11:21	19.54	6/19/2022 13:54	6.01
6/20/2022 10:35	33.07	6/20/2022 11:22	19.57	6/19/2022 13:55	5.98
6/20/2022 10:36	33.10	6/20/2022 11:23	19.51	6/19/2022 13:56	6.02
6/20/2022 10:37	33.07	6/20/2022 11:24	19.54	6/19/2022 13:57	6.01
6/20/2022 10:38	33.07	6/20/2022 11:25	19.52	6/19/2022 13:58	6.00
6/20/2022 10:39	33.06	6/20/2022 11:26	19.51	6/19/2022 13:59	6.02
6/20/2022 10:40	33.06	6/20/2022 11:27	19.51	6/19/2022 14:00	6.01
6/20/2022 10:41	33.09	6/20/2022 11:28	19.54	6/19/2022 14:01	6.06
6/20/2022 10:42	33.04	6/20/2022 11:29	19.52	6/19/2022 14:02	6.03
6/20/2022 10:43	33.08	6/20/2022 11:30	19.52	6/19/2022 14:03	6.01
6/20/2022 10:44	33.05	6/20/2022 11:31	19.53	6/19/2022 14:04	6.03
6/20/2022 10:45	33.09	6/20/2022 11:32	19.52	6/19/2022 14:05	6.02
6/20/2022 10:46	33.05	6/20/2022 11:33	19.51	6/19/2022 14:06	6.02
6/20/2022 10:47	33.06	6/20/2022 11:34	19.50	6/19/2022 14:07	5.99
6/20/2022 10:48	33.06	6/20/2022 11:35	19.51	6/19/2022 14:08	6.01
6/20/2022 10:49	33.06	6/20/2022 11:36	19.51	6/19/2022 14:09	6.01
6/20/2022 10:50	33.05	6/20/2022 11:37	19.53	6/19/2022 14:10	6.01
6/20/2022 10:51	33.08	6/20/2022 11:38	19.50	6/19/2022 14:11	6.02
6/20/2022 10:52	33.10	6/20/2022 11:39	19.52	6/19/2022 14:12	6.04
6/20/2022 10:53	33.09	6/20/2022 11:40	19.50	6/19/2022 14:13	6.03
6/20/2022 10:54	33.07	6/20/2022 11:41	19.52	6/19/2022 14:14	6.01
6/20/2022 10:55	33.06	6/20/2022 11:42	19.52	6/19/2022 14:15	5.98
6/20/2022 10:56	33.08	6/20/2022 11:43	19.51	6/19/2022 14:16	5.99
6/20/2022 10:57	33.06	6/20/2022 11:44	19.53	6/19/2022 14:17	6.04
6/20/2022 10:58	33.06	6/20/2022 11:45	19.53	6/19/2022 14:18	6.01
6/20/2022 10:59	33.03	6/20/2022 11:46	19.52	6/19/2022 14:19	6.03
6/20/2022 11:00	33.05	6/20/2022 11:47	19.49	6/19/2022 14:20	6.01
6/20/2022 11:01	33.06	6/20/2022 11:48	19.51	6/19/2022 14:21	6.01
6/20/2022 11:02	33.04	6/20/2022 11:49	19.50	6/19/2022 14:22	6.02
6/20/2022 11:03	33.06	6/20/2022 11:50	19.50	6/19/2022 14:23	6.00
6/20/2022 11:04	33.03	6/20/2022 11:51	19.49	6/19/2022 14:24	6.03
6/20/2022 11:05	33.06	6/20/2022 11:52	19.53	6/19/2022 14:25	6.02
6/20/2022 11:06	33.07	6/20/2022 11:53	19.51	6/19/2022 14:26	6.00
6/20/2022 11:07	33.02	6/20/2022 11:54	19.48	6/19/2022 14:27	5.99
6/20/2022 11:08	33.05	6/20/2022 11:55	19.52	6/19/2022 14:28	6.02
6/20/2022 11:09	33.05	6/20/2022 11:56	19.51	6/19/2022 14:29	6.03
6/20/2022 11:10	33.00	6/20/2022 11:57	19.52	6/19/2022 14:30	6.01
6/20/2022 11:11	33.03	6/20/2022 11:58	19.50	6/19/2022 14:31	6.01
6/20/2022 11:12	33.01	6/20/2022 11:59	19.46	6/19/2022 14:32	6.02
6/20/2022 11:13	33.01	6/20/2022 12:00	19.50	6/19/2022 14:33	6.00
6/20/2022 11:14	33.04	6/20/2022 12:01	19.48	6/19/2022 14:34	6.01
6/20/2022 11:15	33.03	6/20/2022 12:02	19.49	6/19/2022 14:35	6.00
6/20/2022 11:16	33.03	6/20/2022 12:03	19.51	6/19/2022 14:36	6.00
6/20/2022 11:17	33.04	6/20/2022 12:04	19.48	6/19/2022 14:37	6.01
6/20/2022 11:18	33.02	6/20/2022 12:05	19.48	6/19/2022 14:38	6.02
6/20/2022 11:19	33.01	6/20/2022 12:06	19.47	6/19/2022 14:39	6.02
6/20/2022 11:20	33.04	6/20/2022 12:07	19.52	6/19/2022 14:40	6.02
6/20/2022 11:21	33.04	6/20/2022 12:08	19.52	6/19/2022 14:41	5.97
6/20/2022 11:22	33.02	6/20/2022 12:09	19.47	6/19/2022 14:42	6.01

6/20/2022 11:23	33.06	6/20/2022 12:10	19.47	6/19/2022 14:43	6.03
6/20/2022 11:24	33.04	6/20/2022 12:11	19.46	6/19/2022 14:44	6.00
6/20/2022 11:25	33.07	6/20/2022 12:12	19.51	6/19/2022 14:45	6.02
6/20/2022 11:26	33.07	6/20/2022 12:13	19.51	6/19/2022 14:46	6.00
6/20/2022 11:27	33.09	6/20/2022 12:14	19.49	6/19/2022 14:47	6.00
6/20/2022 11:28	33.03	6/20/2022 12:15	19.48	6/19/2022 14:48	6.01
6/20/2022 11:29	33.07	6/20/2022 12:16	19.49	6/19/2022 14:49	6.02
6/20/2022 11:30	33.07	6/20/2022 12:17	19.49	6/19/2022 14:50	6.02
6/20/2022 11:31	33.08	6/20/2022 12:18	19.49	6/19/2022 14:51	6.04
6/20/2022 11:32	33.06	6/20/2022 12:19	19.50	6/19/2022 14:52	6.03
6/20/2022 11:33	33.03	6/20/2022 12:20	19.47	6/19/2022 14:53	6.03
6/20/2022 11:34	33.04	6/20/2022 12:21	19.49	6/19/2022 14:54	6.01
6/20/2022 11:35	33.03	6/20/2022 12:22	19.48	6/19/2022 14:55	5.99
6/20/2022 11:36	33.04	6/20/2022 12:23	19.46	6/19/2022 14:56	6.01
6/20/2022 11:37	33.01	6/20/2022 12:24	19.47	6/19/2022 14:57	6.01
6/20/2022 11:38	33.02	6/20/2022 12:25	19.46	6/19/2022 14:58	6.02
6/20/2022 11:39	33.04	6/20/2022 12:26	19.49	6/19/2022 14:59	6.03
6/20/2022 11:40	33.04	6/20/2022 12:27	19.47	6/19/2022 15:00	6.02
6/20/2022 11:41	33.05	6/20/2022 12:28	19.50	6/19/2022 15:01	5.98
6/20/2022 11:42	33.00	6/20/2022 12:29	19.47	6/19/2022 15:02	6.02
6/20/2022 11:43	33.63	6/20/2022 12:30	19.47	6/19/2022 15:03	6.03
6/20/2022 11:44	33.63	6/20/2022 12:31	19.47	6/19/2022 15:04	6.00
6/20/2022 11:45	33.24	6/20/2022 12:32	19.46	6/19/2022 15:05	6.01
6/20/2022 11:46	34.78	6/20/2022 12:33	19.48	6/19/2022 15:06	6.01
6/20/2022 11:47	33.56	6/20/2022 12:34	19.47	6/19/2022 15:07	6.00
6/20/2022 11:48	34.66	6/20/2022 12:35	19.47	6/19/2022 15:08	6.02
6/20/2022 11:49	33.86	6/20/2022 12:36	19.47	6/19/2022 15:09	6.00
6/20/2022 11:50	33.45	6/20/2022 12:37	19.47	6/19/2022 15:10	6.01
6/20/2022 11:51	34.73	6/20/2022 12:38	19.48	6/19/2022 15:11	6.02
6/20/2022 11:52	33.57	6/20/2022 12:39	19.46	6/19/2022 15:12	6.03
6/20/2022 11:53	33.47	6/20/2022 12:40	19.47	6/19/2022 15:13	6.02
6/20/2022 11:54	33.40	6/20/2022 12:41	19.49	6/19/2022 15:14	6.02
6/20/2022 11:55	33.32	6/20/2022 12:42	19.46	6/19/2022 15:15	6.02
6/20/2022 11:56	33.32	6/20/2022 12:43	19.44	6/19/2022 15:16	6.01
6/20/2022 11:57	33.30	6/20/2022 12:44	19.48	6/19/2022 15:17	6.02
6/20/2022 11:58	33.25	6/20/2022 12:45	19.48	6/19/2022 15:18	6.03
6/20/2022 11:59	33.24	6/20/2022 12:46	19.47	6/19/2022 15:19	6.04
6/20/2022 12:00	33.27	6/20/2022 12:47	19.48	6/19/2022 15:20	6.00
6/20/2022 12:01	33.23	6/20/2022 12:48	19.46	6/19/2022 15:21	6.01
6/20/2022 12:02	33.23	6/20/2022 12:49	19.45	6/19/2022 15:22	6.02
6/20/2022 12:03	33.21	6/20/2022 12:50	19.45	6/19/2022 15:23	6.02
6/20/2022 12:04	33.19	6/20/2022 12:51	19.45	6/19/2022 15:24	6.05
6/20/2022 12:05	33.18	6/20/2022 12:52	19.47	6/19/2022 15:25	6.05
6/20/2022 12:06	33.16	6/20/2022 12:53	19.47	6/19/2022 15:26	6.00
6/20/2022 12:07	33.18	6/20/2022 12:54	19.47	6/19/2022 15:27	6.04
6/20/2022 12:08	33.16	6/20/2022 12:55	19.48	6/19/2022 15:28	6.00
6/20/2022 12:09	33.16	6/20/2022 12:56	19.47	6/19/2022 15:29	6.01
6/20/2022 12:10	33.15	6/20/2022 12:57	19.45	6/19/2022 15:30	6.02
6/20/2022 12:11	33.16	6/20/2022 12:58	19.47	6/19/2022 15:31	6.03
6/20/2022 12:12	33.17	6/20/2022 12:59	19.46	6/19/2022 15:32	6.06
6/20/2022 12:13	33.14	6/20/2022 13:00	19.48	6/19/2022 15:33	5.99
6/20/2022 12:14	33.12	6/20/2022 13:01	19.44	6/19/2022 15:34	6.01
6/20/2022 12:15	33.13	6/20/2022 13:02	19.47	6/19/2022 15:35	6.02
6/20/2022 12:16	33.13	6/20/2022 13:03	19.46	6/19/2022 15:36	6.02
6/20/2022 12:17	33.12	6/20/2022 13:04	19.46	6/19/2022 15:37	6.03
6/20/2022 12:18	33.11	6/20/2022 13:05	19.45	6/19/2022 15:38	6.03
6/20/2022 12:19	34.42	6/20/2022 13:06	19.45	6/19/2022 15:39	6.02
6/20/2022 12:20	33.42	6/20/2022 13:07	19.46	6/19/2022 15:40	6.00
6/20/2022 12:21	33.23	6/20/2022 13:08	19.46	6/19/2022 15:41	6.04
6/20/2022 12:22	33.22	6/20/2022 13:09	19.46	6/19/2022 15:42	6.02
6/20/2022 12:23	33.19	6/20/2022 13:10	19.45	6/19/2022 15:43	6.05
6/20/2022 12:24	33.21	6/20/2022 13:11	19.47	6/19/2022 15:44	6.02
6/20/2022 12:25	33.18	6/20/2022 13:12	19.47	6/19/2022 15:45	6.02
6/20/2022 12:26	33.16	6/20/2022 13:13	19.46	6/19/2022 15:46	6.01
6/20/2022 12:27	33.14	6/20/2022 13:14	19.44	6/19/2022 15:47	6.02
6/20/2022 12:28	33.13	6/20/2022 13:15	19.47	6/19/2022 15:48	6.02
6/20/2022 12:29	33.13	6/20/2022 13:16	19.44	6/19/2022 15:49	6.01
6/20/2022 12:30	33.15	6/20/2022 13:17	19.47	6/19/2022 15:50	6.06
6/20/2022 12:31	33.11	6/20/2022 13:18	19.46	6/19/2022 15:51	6.01
6/20/2022 12:32	33.11	6/20/2022 13:19	20.04	6/19/2022 15:52	6.00
6/20/2022 12:33	33.10	6/20/2022 13:20	20.15	6/19/2022 15:53	6.03
6/20/2022 12:34	33.11	6/20/2022 13:21	20.20	6/19/2022 15:54	6.05
6/20/2022 12:35	33.13	6/20/2022 13:22	20.24	6/19/2022 15:55	6.02
6/20/2022 12:36	33.11	6/20/2022 13:23	20.24	6/19/2022 15:56	6.04
6/20/2022 12:37	33.09	6/20/2022 13:24	19.72	6/19/2022 15:57	6.05
6/20/2022 12:38	33.12	6/20/2022 13:25	19.66	6/19/2022 15:58	6.03
6/20/2022 12:39	33.08	6/20/2022 13:26	19.61	6/19/2022 15:59	5.99
6/20/2022 12:40	33.08	6/20/2022 13:27	19.58	6/19/2022 16:00	6.03
6/20/2022 12:41	33.07	6/20/2022 13:28	19.58	6/19/2022 16:01	6.02
6/20/2022 12:42	33.10	6/20/2022 13:29	19.56	6/19/2022 16:02	6.03
6/20/2022 12:43	33.07	6/20/2022 13:30	19.57	6/19/2022 16:03	6.05
6/20/2022 12:44	33.09	6/20/2022 13:31	19.59	6/19/2022 16:04	6.02
6/20/2022 12:45	33.08	6/20/2022 13:32	19.57	6/19/2022 16:05	6.00
6/20/2022 12:46	33.09	6/20/2022 13:33	19.57	6/19/2022 16:06	6.00
6/20/2022 12:47	33.09	6/20/2022 13:34	19.53	6/19/2022 16:07	6.03
6/20/2022 12:48	33.05	6/20/2022 13:35	19.54	6/19/2022 16:08	6.03
6/20/2022 12:49	33.09	6/20/2022 13:36	19.54	6/19/2022 16:09	6.03
6/20/2022 12:50	33.07	6/20/2022 13:37	19.55	6/19/2022 16:10	6.03

6/20/2022 12:51	33.06	6/20/2022 13:38	19.53	6/19/2022 16:11	6.04
6/20/2022 12:52	33.06	6/20/2022 13:39	19.54	6/19/2022 16:12	6.03
6/20/2022 12:53	33.14	6/20/2022 13:40	19.54	6/19/2022 16:13	6.02
6/20/2022 12:54	33.12	6/20/2022 13:41	19.53	6/19/2022 16:14	6.00
6/20/2022 12:55	33.15	6/20/2022 13:42	19.51	6/19/2022 16:15	6.01
6/20/2022 12:56	33.13	6/20/2022 13:43	19.52	6/19/2022 16:16	6.05
6/20/2022 12:57	33.16	6/20/2022 13:44	19.53	6/19/2022 16:17	6.02
6/20/2022 12:58	33.13	6/20/2022 13:45	19.53	6/19/2022 16:18	6.04
6/20/2022 12:59	33.14	6/20/2022 13:46	19.52	6/19/2022 16:19	6.00
6/20/2022 13:00	33.14	6/20/2022 13:47	19.50	6/19/2022 16:20	6.00
6/20/2022 13:01	33.12	6/20/2022 13:48	19.51	6/19/2022 16:21	6.02
6/20/2022 13:02	33.12	6/20/2022 13:49	19.49	6/19/2022 16:22	6.04
6/20/2022 13:03	33.16	6/20/2022 13:50	19.54	6/19/2022 16:23	6.04
6/20/2022 13:04	33.13	6/20/2022 13:51	19.50	6/19/2022 16:24	6.04
6/20/2022 13:05	33.14	6/20/2022 13:52	19.53	6/19/2022 16:25	6.03
6/20/2022 13:06	33.13	6/20/2022 13:53	19.51	6/19/2022 16:26	5.99
6/20/2022 13:07	33.11	6/20/2022 13:54	19.51	6/19/2022 16:27	6.05
6/20/2022 13:08	33.15	6/20/2022 13:55	19.50	6/19/2022 16:28	6.02
6/20/2022 13:09	33.13	6/20/2022 13:56	19.49	6/19/2022 16:29	5.99
6/20/2022 13:10	33.10	6/20/2022 13:57	19.51	6/19/2022 16:30	6.01
6/20/2022 13:11	33.14	6/20/2022 13:58	19.50	6/19/2022 16:31	6.04
6/20/2022 13:12	33.14	6/20/2022 13:59	19.50	6/19/2022 16:32	6.01
6/20/2022 13:13	33.10	6/20/2022 14:00	19.49	6/19/2022 16:33	6.01
6/20/2022 13:14	33.16	6/20/2022 14:01	19.50	6/19/2022 16:34	6.01
6/20/2022 13:15	33.15	6/20/2022 14:02	19.51	6/19/2022 16:35	6.04
6/20/2022 13:16	33.19	6/20/2022 14:03	19.49	6/19/2022 16:36	6.03
6/20/2022 13:17	33.22	6/20/2022 14:04	19.50	6/19/2022 16:37	6.03
6/20/2022 13:18	33.22	6/20/2022 14:05	19.50	6/19/2022 16:38	6.03
6/20/2022 13:19	33.21	6/20/2022 14:06	19.50	6/19/2022 16:39	6.02
6/20/2022 13:20	33.21	6/20/2022 14:07	19.48	6/19/2022 16:40	6.04
6/20/2022 13:21	33.22	6/20/2022 14:08	19.48	6/19/2022 16:41	6.02
6/20/2022 13:22	33.18	6/20/2022 14:09	19.50	6/19/2022 16:42	6.04
6/20/2022 13:23	33.21	6/20/2022 14:10	19.51	6/19/2022 16:43	6.06
6/20/2022 13:24	33.24	6/20/2022 14:11	19.49	6/19/2022 16:44	6.02
6/20/2022 13:25	33.26	6/20/2022 14:12	19.47	6/19/2022 16:45	6.02
6/20/2022 13:26	33.26	6/20/2022 14:13	19.50	6/19/2022 16:46	6.02
6/20/2022 13:27	33.27	6/20/2022 14:14	19.46	6/19/2022 16:47	6.04
6/20/2022 13:28	33.27	6/20/2022 14:15	19.48	6/19/2022 16:48	6.02
6/20/2022 13:29	33.30	6/20/2022 14:16	19.49	6/19/2022 16:49	6.03
6/20/2022 13:30	33.29	6/20/2022 14:17	19.49	6/19/2022 16:50	6.02
6/20/2022 13:31	33.27	6/20/2022 14:18	19.46	6/19/2022 16:51	6.04
6/20/2022 13:32	33.30	6/20/2022 14:19	19.49	6/19/2022 16:52	6.00
6/20/2022 13:33	33.27	6/20/2022 14:20	19.47	6/19/2022 16:53	6.01
6/20/2022 13:34	33.25	6/20/2022 14:21	19.47	6/19/2022 16:54	6.01
6/20/2022 13:35	33.26	6/20/2022 14:22	19.48	6/19/2022 16:55	6.04
6/20/2022 13:36	33.25	6/20/2022 14:23	19.46	6/19/2022 16:56	6.02
6/20/2022 13:37	33.27	6/20/2022 14:24	19.49	6/19/2022 16:57	6.03
6/20/2022 13:38	33.22	6/20/2022 14:25	19.48	6/19/2022 16:58	6.00
6/20/2022 13:39	33.27	6/20/2022 14:26	19.48	6/19/2022 16:59	6.03
6/20/2022 13:40	33.25	6/20/2022 14:27	19.44	6/19/2022 17:00	6.04
6/20/2022 13:41	33.29	6/20/2022 14:28	19.46	6/19/2022 17:01	6.03
6/20/2022 13:42	33.29	6/20/2022 14:29	19.47	6/19/2022 17:02	6.01
6/20/2022 13:43	33.25	6/20/2022 14:30	19.50	6/19/2022 17:03	6.04
6/20/2022 13:44	33.26	6/20/2022 14:31	19.47	6/19/2022 17:04	6.03
6/20/2022 13:45	33.30	6/20/2022 14:32	19.45	6/19/2022 17:05	6.05
6/20/2022 13:46	33.27	6/20/2022 14:33	19.47	6/19/2022 17:06	6.04
6/20/2022 13:47	33.30	6/20/2022 14:34	19.46	6/19/2022 17:07	6.06
6/20/2022 13:48	33.29	6/20/2022 14:35	19.46	6/19/2022 17:08	6.02
6/20/2022 13:49	33.28	6/20/2022 14:36	19.47	6/19/2022 17:09	6.04
6/20/2022 13:50	33.28	6/20/2022 14:37	19.47	6/19/2022 17:10	6.04
6/20/2022 13:51	33.28	6/20/2022 14:38	19.46	6/19/2022 17:11	6.04
6/20/2022 13:52	33.28	6/20/2022 14:39	19.48	6/19/2022 17:12	6.05
6/20/2022 13:53	33.29	6/20/2022 14:40	19.49	6/19/2022 17:13	6.03
6/20/2022 13:54	33.29	6/20/2022 14:41	19.46	6/19/2022 17:14	6.00
6/20/2022 13:55	33.34	6/20/2022 14:42	19.47	6/19/2022 17:15	6.00
6/20/2022 13:56	33.30	6/20/2022 14:43	19.48	6/19/2022 17:16	6.03
6/20/2022 13:57	33.30	6/20/2022 14:44	19.49	6/19/2022 17:17	6.02
6/20/2022 13:58	33.29	6/20/2022 14:45	19.46	6/19/2022 17:18	6.05
6/20/2022 13:59	33.31	6/20/2022 14:46	19.49	6/19/2022 17:19	6.03
6/20/2022 14:00	33.32	6/20/2022 14:47	19.47	6/19/2022 17:20	6.01
6/20/2022 14:01	33.31	6/20/2022 14:48	19.44	6/19/2022 17:21	6.01
6/20/2022 14:02	33.34	6/20/2022 14:49	19.47	6/19/2022 17:22	6.02
6/20/2022 14:03	33.36	6/20/2022 14:50	19.46	6/19/2022 17:23	6.02
6/20/2022 14:04	33.34	6/20/2022 14:51	19.49	6/19/2022 17:24	6.03
6/20/2022 14:05	33.34	6/20/2022 14:52	19.46	6/19/2022 17:25	6.05
6/20/2022 14:06	33.33	6/20/2022 14:53	19.50	6/19/2022 17:26	6.05
6/20/2022 14:07	33.33	6/20/2022 14:54	19.46	6/19/2022 17:27	6.07
6/20/2022 14:08	33.32	6/20/2022 14:55	19.47	6/19/2022 17:28	6.01
6/20/2022 14:09	33.34	6/20/2022 14:56	19.47	6/19/2022 17:29	6.01
6/20/2022 14:10	33.34	6/20/2022 14:57	19.48	6/19/2022 17:30	6.02
6/20/2022 14:11	33.34	6/20/2022 14:58	19.46	6/19/2022 17:31	6.04
6/20/2022 14:12	33.35	6/20/2022 14:59	19.47	6/19/2022 17:32	5.99
6/20/2022 14:13	33.36	6/20/2022 15:00	19.48	6/19/2022 17:33	6.01
6/20/2022 14:14	33.38	6/20/2022 15:01	19.46	6/19/2022 17:34	6.05
6/20/2022 14:15	33.38	6/20/2022 15:02	19.46	6/19/2022 17:35	6.05
6/20/2022 14:16	33.37	6/20/2022 15:03	19.45	6/19/2022 17:36	6.02
6/20/2022 14:17	33.39	6/20/2022 15:04	19.45	6/19/2022 17:37	6.02
6/20/2022 14:18	33.34	6/20/2022 15:05	19.46	6/19/2022 17:38	6.03

6/20/2022 14:19	33.37	6/20/2022 15:06	19.44	6/19/2022 17:39	6.03
6/20/2022 14:20	33.38	6/20/2022 15:07	19.48	6/19/2022 17:40	6.04
6/20/2022 14:21	33.38	6/20/2022 15:08	19.48	6/19/2022 17:41	6.03
6/20/2022 14:22	33.40	6/20/2022 15:09	19.46	6/19/2022 17:42	6.07
6/20/2022 14:23	33.41	6/20/2022 15:10	19.44	6/19/2022 17:43	6.07
6/20/2022 14:24	33.40	6/20/2022 15:11	19.46	6/19/2022 17:44	6.01
6/20/2022 14:25	33.42	6/20/2022 15:12	19.45	6/19/2022 17:45	6.07
6/20/2022 14:26	33.41	6/20/2022 15:13	19.47	6/19/2022 17:46	6.01
6/20/2022 14:27	33.41	6/20/2022 15:14	19.43	6/19/2022 17:47	6.00
6/20/2022 14:28	33.44	6/20/2022 15:15	19.47	6/19/2022 17:48	6.06
6/20/2022 14:29	33.42	6/20/2022 15:16	19.47	6/19/2022 17:49	6.00
6/20/2022 14:30	33.43	6/20/2022 15:17	19.46	6/19/2022 17:50	6.03
6/20/2022 14:31	33.44	6/20/2022 15:18	19.45	6/19/2022 17:51	6.06
6/20/2022 14:32	33.43	6/20/2022 15:19	19.47	6/19/2022 17:52	6.05
6/20/2022 14:33	33.44	6/20/2022 15:20	19.45	6/19/2022 17:53	6.01
6/20/2022 14:34	33.45	6/20/2022 15:21	19.47	6/19/2022 17:54	6.02
6/20/2022 14:35	33.45	6/20/2022 15:22	19.46	6/19/2022 17:55	6.03
6/20/2022 14:36	33.48	6/20/2022 15:23	19.43	6/19/2022 17:56	6.06
6/20/2022 14:37	33.48	6/20/2022 15:24	19.46	6/19/2022 17:57	6.04
6/20/2022 14:38	33.44	6/20/2022 15:25	19.48	6/19/2022 17:58	6.02
6/20/2022 14:39	33.46	6/20/2022 15:26	19.45	6/19/2022 17:59	6.04
6/20/2022 14:40	33.45	6/20/2022 15:27	19.45	6/19/2022 18:00	6.01
6/20/2022 14:41	33.48	6/20/2022 15:28	19.48	6/19/2022 18:01	6.02
6/20/2022 14:42	33.49	6/20/2022 15:29	19.45	6/19/2022 18:02	6.03
6/20/2022 14:43	33.47	6/20/2022 15:30	19.42	6/19/2022 18:03	6.02
6/20/2022 14:44	33.46	6/20/2022 15:31	19.46	6/19/2022 18:04	6.07
6/20/2022 14:45	33.49	6/20/2022 15:32	19.46	6/19/2022 18:05	6.06
6/20/2022 14:46	33.51	6/20/2022 15:33	19.45	6/19/2022 18:06	6.04
6/20/2022 14:47	33.49	6/20/2022 15:34	19.48	6/19/2022 18:07	6.03
6/20/2022 14:48	33.51	6/20/2022 15:35	19.46	6/19/2022 18:08	6.02
6/20/2022 14:49	33.51	6/20/2022 15:36	19.47	6/19/2022 18:09	6.04
6/20/2022 14:50	33.49	6/20/2022 15:37	19.45	6/19/2022 18:10	6.06
6/20/2022 14:51	33.49	6/20/2022 15:38	19.46	6/19/2022 18:11	6.02
6/20/2022 14:52	33.50	6/20/2022 15:39	19.45	6/19/2022 18:12	6.02
6/20/2022 14:53	33.53	6/20/2022 15:40	19.46	6/19/2022 18:13	6.02
6/20/2022 14:54	33.55	6/20/2022 15:41	19.46	6/19/2022 18:14	6.02
6/20/2022 14:55	33.54	6/20/2022 15:42	19.45	6/19/2022 18:15	6.05
6/20/2022 14:56	33.54	6/20/2022 15:43	19.44	6/19/2022 18:16	6.04
6/20/2022 14:57	33.57	6/20/2022 15:44	19.45	6/19/2022 18:17	6.05
6/20/2022 14:58	33.55	6/20/2022 15:45	19.47	6/19/2022 18:18	6.07
6/20/2022 14:59	33.56	6/20/2022 15:46	19.47	6/19/2022 18:19	6.01
6/20/2022 15:00	33.53	6/20/2022 15:47	19.49	6/19/2022 18:20	6.02
6/20/2022 15:01	33.56	6/20/2022 15:48	19.44	6/19/2022 18:21	6.04
6/20/2022 15:02	33.57	6/20/2022 15:49	19.46	6/19/2022 18:22	6.05
6/20/2022 15:03	33.55	6/20/2022 15:50	19.44	6/19/2022 18:23	6.05
6/20/2022 15:04	33.59	6/20/2022 15:51	19.43	6/19/2022 18:24	6.06
6/20/2022 15:05	33.57	6/20/2022 15:52	19.44	6/19/2022 18:25	6.06
6/20/2022 15:06	33.57	6/20/2022 15:53	19.45	6/19/2022 18:26	6.08
6/20/2022 15:07	33.58	6/20/2022 15:54	19.46	6/19/2022 18:27	6.04
6/20/2022 15:08	33.58	6/20/2022 15:55	19.45	6/19/2022 18:28	6.03
6/20/2022 15:09	33.60	6/20/2022 15:56	19.45	6/19/2022 18:29	6.02
6/20/2022 15:10	33.62	6/20/2022 15:57	19.44	6/19/2022 18:30	6.07
6/20/2022 15:11	33.57	6/20/2022 15:58	19.46	6/19/2022 18:31	6.04
6/20/2022 15:12	33.60	6/20/2022 15:59	19.44	6/19/2022 18:32	6.04
6/20/2022 15:13	33.61	6/20/2022 16:00	19.48	6/19/2022 18:33	6.04
6/20/2022 15:14	33.61	6/20/2022 16:01	19.43	6/19/2022 18:34	6.04
6/20/2022 15:15	33.65	6/20/2022 16:02	19.44	6/19/2022 18:35	6.03
6/20/2022 15:16	33.64	6/20/2022 16:03	19.45	6/19/2022 18:36	6.04
6/20/2022 15:17	33.63	6/20/2022 16:04	19.46	6/19/2022 18:37	6.04
6/20/2022 15:18	33.62	6/20/2022 16:05	19.45	6/19/2022 18:38	6.01
6/20/2022 15:19	33.63	6/20/2022 16:06	19.45	6/19/2022 18:39	6.05
6/20/2022 15:20	33.64	6/20/2022 16:07	19.46	6/19/2022 18:40	6.03
6/20/2022 15:21	33.63	6/20/2022 16:08	19.46	6/19/2022 18:41	6.03
6/20/2022 15:22	34.39	6/20/2022 16:09	19.40	6/19/2022 18:42	6.05
6/20/2022 15:23	34.02	6/20/2022 16:10	19.45	6/19/2022 18:43	6.04
6/20/2022 15:24	33.82	6/20/2022 16:11	19.44	6/19/2022 18:44	6.03
6/20/2022 15:25	33.76	6/20/2022 16:12	19.43	6/19/2022 18:45	6.04
6/20/2022 15:26	34.97	6/20/2022 16:13	19.44	6/19/2022 18:46	6.04
6/20/2022 15:27	34.00	6/20/2022 16:14	19.43	6/19/2022 18:47	6.05
6/20/2022 15:28	33.84	6/20/2022 16:15	19.44	6/19/2022 18:48	6.07
6/20/2022 15:29	33.86	6/20/2022 16:16	19.44	6/19/2022 18:49	6.04
6/20/2022 15:30	33.80	6/20/2022 16:17	19.43	6/19/2022 18:50	6.05
6/20/2022 15:31	33.82	6/20/2022 16:18	19.44	6/19/2022 18:51	6.05
6/20/2022 15:32	33.78	6/20/2022 16:19	19.46	6/19/2022 18:52	6.03
6/20/2022 15:33	33.79	6/20/2022 16:20	19.45	6/19/2022 18:53	6.05
6/20/2022 15:34	33.78	6/20/2022 16:21	19.45	6/19/2022 18:54	6.05
6/20/2022 15:35	33.78	6/20/2022 16:22	19.43	6/19/2022 18:55	6.02
6/20/2022 15:36	33.78	6/20/2022 16:23	19.44	6/19/2022 18:56	6.02
6/20/2022 15:37	33.82	6/20/2022 16:24	19.44	6/19/2022 18:57	6.01
6/20/2022 15:38	33.78	6/20/2022 16:25	19.76	6/19/2022 18:58	6.05
6/20/2022 15:39	33.77	6/20/2022 16:26	20.12	6/19/2022 18:59	6.09
6/20/2022 15:40	33.78	6/20/2022 16:27	20.19	6/19/2022 19:00	6.04
6/20/2022 15:41	33.79	6/20/2022 16:28	20.21	6/19/2022 19:01	6.04
6/20/2022 15:42	33.76	6/20/2022 16:29	20.23	6/19/2022 19:02	6.02
6/20/2022 15:43	33.79	6/20/2022 16:30	19.75	6/19/2022 19:03	6.06
6/20/2022 15:44	33.78	6/20/2022 16:31	19.68	6/19/2022 19:04	6.03
6/20/2022 15:45	33.77	6/20/2022 16:32	19.65	6/19/2022 19:05	6.01
6/20/2022 15:46	33.82	6/20/2022 16:33	19.59	6/19/2022 19:06	6.05

6/20/2022 15:47	33.81	6/20/2022 16:34	19.57	6/19/2022 19:07	6.03
6/20/2022 15:48	33.79	6/20/2022 16:35	19.56	6/19/2022 19:08	6.02
6/20/2022 15:49	33.79	6/20/2022 16:36	19.56	6/19/2022 19:09	6.02
6/20/2022 15:50	33.81	6/20/2022 16:37	19.54	6/19/2022 19:10	6.05
6/20/2022 15:51	33.80	6/20/2022 16:38	19.55	6/19/2022 19:11	6.03
6/20/2022 15:52	33.82	6/20/2022 16:39	19.54	6/19/2022 19:12	6.02
6/20/2022 15:53	33.81	6/20/2022 16:40	19.57	6/19/2022 19:13	6.04
6/20/2022 15:54	33.82	6/20/2022 16:41	19.53	6/19/2022 19:14	6.06
6/20/2022 15:55	33.83	6/20/2022 16:42	19.52	6/19/2022 19:15	6.04
6/20/2022 15:56	33.81	6/20/2022 16:43	19.54	6/19/2022 19:16	6.02
6/20/2022 15:57	33.79	6/20/2022 16:44	19.53	6/19/2022 19:17	6.04
6/20/2022 15:58	33.84	6/20/2022 16:45	19.50	6/19/2022 19:18	6.04
6/20/2022 15:59	33.83	6/20/2022 16:46	19.53	6/19/2022 19:19	6.04
6/20/2022 16:00	33.83	6/20/2022 16:47	19.50	6/19/2022 19:20	6.05
6/20/2022 16:01	33.85	6/20/2022 16:48	19.50	6/19/2022 19:21	6.03
6/20/2022 16:02	33.84	6/20/2022 16:49	19.53	6/19/2022 19:22	6.04
6/20/2022 16:03	33.83	6/20/2022 16:50	19.52	6/19/2022 19:23	6.06
6/20/2022 16:04	33.87	6/20/2022 16:51	19.50	6/19/2022 19:24	6.01
6/20/2022 16:05	33.88	6/20/2022 16:52	19.52	6/19/2022 19:25	6.02
6/20/2022 16:06	33.86	6/20/2022 16:53	19.52	6/19/2022 19:26	6.03
6/20/2022 16:07	33.86	6/20/2022 16:54	19.50	6/19/2022 19:27	6.01
6/20/2022 16:08	33.89	6/20/2022 16:55	19.47	6/19/2022 19:28	6.01
6/20/2022 16:09	33.85	6/20/2022 16:56	19.52	6/19/2022 19:29	8.61
6/20/2022 16:10	33.90	6/20/2022 16:57	19.51	6/19/2022 19:30	7.87
6/20/2022 16:11	33.87	6/20/2022 16:58	19.51	6/19/2022 19:31	6.15
6/20/2022 16:12	33.89	6/20/2022 16:59	19.50	6/19/2022 19:32	6.09
6/20/2022 16:13	33.88	6/20/2022 17:00	19.48	6/19/2022 19:33	6.04
6/20/2022 16:14	33.91	6/20/2022 17:01	19.49	6/19/2022 19:34	6.05
6/20/2022 16:15	33.92	6/20/2022 17:02	19.47	6/19/2022 19:35	6.07
6/20/2022 16:16	33.89	6/20/2022 17:03	19.49	6/19/2022 19:36	6.06
6/20/2022 16:17	33.89	6/20/2022 17:04	19.48	6/19/2022 19:37	6.05
6/20/2022 16:18	33.91	6/20/2022 17:05	19.51	6/19/2022 19:38	6.04
6/20/2022 16:19	33.90	6/20/2022 17:06	19.48	6/19/2022 19:39	6.02
6/20/2022 16:20	33.90	6/20/2022 17:07	19.50	6/19/2022 19:40	6.06
6/20/2022 16:21	33.91	6/20/2022 17:08	19.48	6/19/2022 19:41	6.07
6/20/2022 16:22	33.91	6/20/2022 17:09	19.49	6/19/2022 19:42	6.04
6/20/2022 16:23	33.92	6/20/2022 17:10	19.51	6/19/2022 19:43	6.02
6/20/2022 16:24	33.93	6/20/2022 17:11	19.51	6/19/2022 19:44	6.04
6/20/2022 16:25	33.93	6/20/2022 17:12	19.49	6/19/2022 19:45	6.03
6/20/2022 16:26	33.95	6/20/2022 17:13	19.47	6/19/2022 19:46	6.02
6/20/2022 16:27	33.95	6/20/2022 17:14	19.48	6/19/2022 19:47	6.06
6/20/2022 16:28	33.93	6/20/2022 17:15	19.49	6/19/2022 19:48	6.05
6/20/2022 16:29	33.96	6/20/2022 17:16	19.48	6/19/2022 19:49	6.04
6/20/2022 16:30	33.91	6/20/2022 17:17	19.47	6/19/2022 19:50	6.04
6/20/2022 16:31	33.92	6/20/2022 17:18	19.46	6/19/2022 19:51	6.06
6/20/2022 16:32	33.95	6/20/2022 17:19	19.48	6/19/2022 19:52	6.04
6/20/2022 16:33	33.93	6/20/2022 17:20	19.47	6/19/2022 19:53	6.04
6/20/2022 16:34	33.94	6/20/2022 17:21	19.45	6/19/2022 19:54	6.05
6/20/2022 16:35	33.95	6/20/2022 17:22	19.47	6/19/2022 19:55	6.06
6/20/2022 16:36	33.95	6/20/2022 17:23	19.49	6/19/2022 19:56	6.03
6/20/2022 16:37	33.98	6/20/2022 17:24	19.48	6/19/2022 19:57	6.03
6/20/2022 16:38	33.97	6/20/2022 17:25	19.50	6/19/2022 19:58	6.03
6/20/2022 16:39	33.98	6/20/2022 17:26	19.45	6/19/2022 19:59	6.06
6/20/2022 16:40	33.96	6/20/2022 17:27	19.50	6/19/2022 20:00	6.04
6/20/2022 16:41	33.97	6/20/2022 17:28	19.46	6/19/2022 20:01	6.06
6/20/2022 16:42	33.99	6/20/2022 17:29	19.47	6/19/2022 20:02	6.05
6/20/2022 16:43	34.00	6/20/2022 17:30	19.47	6/19/2022 20:03	6.05
6/20/2022 16:44	33.97	6/20/2022 17:31	19.49	6/19/2022 20:04	6.05
6/20/2022 16:45	33.98	6/20/2022 17:32	19.47	6/19/2022 20:05	6.03
6/20/2022 16:46	34.01	6/20/2022 17:33	19.46	6/19/2022 20:06	6.07
6/20/2022 16:47	33.99	6/20/2022 17:34	19.45	6/19/2022 20:07	6.04
6/20/2022 16:48	34.01	6/20/2022 17:35	19.46	6/19/2022 20:08	6.04
6/20/2022 16:49	34.02	6/20/2022 17:36	19.45	6/19/2022 20:09	6.05
6/20/2022 16:50	34.01	6/20/2022 17:37	19.48	6/19/2022 20:10	6.02
6/20/2022 16:51	34.01	6/20/2022 17:38	19.46	6/19/2022 20:11	6.05
6/20/2022 16:52	34.02	6/20/2022 17:39	19.46	6/19/2022 20:12	6.04
6/20/2022 16:53	34.03	6/20/2022 17:40	19.47	6/19/2022 20:13	6.05
6/20/2022 16:54	34.08	6/20/2022 17:41	19.45	6/19/2022 20:14	6.05
6/20/2022 16:55	34.05	6/20/2022 17:42	19.48	6/19/2022 20:15	6.00
6/20/2022 16:56	34.05	6/20/2022 17:43	19.45	6/19/2022 20:16	6.06
6/20/2022 16:57	34.09	6/20/2022 17:44	19.47	6/19/2022 20:17	6.02
6/20/2022 16:58	34.08	6/20/2022 17:45	19.47	6/19/2022 20:18	6.06
6/20/2022 16:59	34.10	6/20/2022 17:46	19.46	6/19/2022 20:19	6.03
6/20/2022 17:00	34.08	6/20/2022 17:47	19.46	6/19/2022 20:20	6.04
6/20/2022 17:01	34.08	6/20/2022 17:48	19.46	6/19/2022 20:21	6.07
6/20/2022 17:02	34.09	6/20/2022 17:49	19.44	6/19/2022 20:22	6.03
6/20/2022 17:03	34.09	6/20/2022 17:50	19.46	6/19/2022 20:23	6.04
6/20/2022 17:04	34.06	6/20/2022 17:51	19.46	6/19/2022 20:24	6.03
6/20/2022 17:05	34.08	6/20/2022 17:52	19.45	6/19/2022 20:25	6.05
6/20/2022 17:06	34.07	6/20/2022 17:53	19.45	6/19/2022 20:26	6.02
6/20/2022 17:07	34.11	6/20/2022 17:54	19.47	6/19/2022 20:27	6.03
6/20/2022 17:08	34.07	6/20/2022 17:55	19.47	6/19/2022 20:28	6.05
6/20/2022 17:09	34.09	6/20/2022 17:56	19.47	6/19/2022 20:29	6.01
6/20/2022 17:10	34.07	6/20/2022 17:57	19.46	6/19/2022 20:30	6.04
6/20/2022 17:11	34.10	6/20/2022 17:58	19.46	6/19/2022 20:31	6.03
6/20/2022 17:12	34.12	6/20/2022 17:59	19.48	6/19/2022 20:32	6.00
6/20/2022 17:13	34.11	6/20/2022 18:00	19.45	6/19/2022 20:33	6.03
6/20/2022 17:14	34.09	6/20/2022 18:01	19.46	6/19/2022 20:34	6.05

6/20/2022 17:15	34.11	6/20/2022 18:02	19.49	6/19/2022 20:35	6.04
6/20/2022 17:16	34.14	6/20/2022 18:03	19.48	6/19/2022 20:36	6.03
6/20/2022 17:17	34.12	6/20/2022 18:04	19.46	6/19/2022 20:37	6.03
6/20/2022 17:18	34.10	6/20/2022 18:05	19.45	6/19/2022 20:38	6.05
6/20/2022 17:19	34.11	6/20/2022 18:06	19.45	6/19/2022 20:39	6.05
6/20/2022 17:20	34.15	6/20/2022 18:07	19.44	6/19/2022 20:40	6.03
6/20/2022 17:21	34.14	6/20/2022 18:08	19.47	6/19/2022 20:41	6.04
6/20/2022 17:22	34.12	6/20/2022 18:09	19.45	6/19/2022 20:42	6.07
6/20/2022 17:23	34.15	6/20/2022 18:10	19.45	6/19/2022 20:43	6.05
6/20/2022 17:24	34.13	6/20/2022 18:11	19.47	6/19/2022 20:44	6.06
6/20/2022 17:25	34.12	6/20/2022 18:12	19.45	6/19/2022 20:45	6.05
6/20/2022 17:26	34.12	6/20/2022 18:13	19.46	6/19/2022 20:46	6.03
6/20/2022 17:27	34.13	6/20/2022 18:14	19.47	6/19/2022 20:47	6.03
6/20/2022 17:28	34.15	6/20/2022 18:15	19.45	6/19/2022 20:48	6.06
6/20/2022 17:29	34.14	6/20/2022 18:16	19.44	6/19/2022 20:49	6.04
6/20/2022 17:30	34.15	6/20/2022 18:17	19.45	6/19/2022 20:50	6.04
6/20/2022 17:31	34.16	6/20/2022 18:18	19.46	6/19/2022 20:51	6.04
6/20/2022 17:32	34.18	6/20/2022 18:19	19.44	6/19/2022 20:52	6.04
6/20/2022 17:33	34.16	6/20/2022 18:20	19.45	6/19/2022 20:53	6.07
6/20/2022 17:34	34.16	6/20/2022 18:21	19.46	6/19/2022 20:54	6.03
6/20/2022 17:35	34.17	6/20/2022 18:22	19.47	6/19/2022 20:55	6.03
6/20/2022 17:36	34.19	6/20/2022 18:23	19.46	6/19/2022 20:56	6.05
6/20/2022 17:37	34.17	6/20/2022 18:24	19.45	6/19/2022 20:57	6.05
6/20/2022 17:38	34.17	6/20/2022 18:25	19.46	6/19/2022 20:58	6.04
6/20/2022 17:39	34.18	6/20/2022 18:26	19.46	6/19/2022 20:59	6.04
6/20/2022 17:40	34.17	6/20/2022 18:27	19.49	6/19/2022 21:00	6.03
6/20/2022 17:41	34.20	6/20/2022 18:28	19.46	6/19/2022 21:01	6.03
6/20/2022 17:42	34.19	6/20/2022 18:29	19.45	6/19/2022 21:02	6.06
6/20/2022 17:43	34.19	6/20/2022 18:30	19.44	6/19/2022 21:03	6.05
6/20/2022 17:44	34.20	6/20/2022 18:31	19.46	6/19/2022 21:04	6.04
6/20/2022 17:45	34.18	6/20/2022 18:32	19.46	6/19/2022 21:05	6.04
6/20/2022 17:46	34.17	6/20/2022 18:33	19.47	6/19/2022 21:06	6.03
6/20/2022 17:47	34.21	6/20/2022 18:34	19.44	6/19/2022 21:07	6.04
6/20/2022 17:48	34.22	6/20/2022 18:35	19.45	6/19/2022 21:08	6.03
6/20/2022 17:49	34.22	6/20/2022 18:36	19.45	6/19/2022 21:09	6.04
6/20/2022 17:50	34.18	6/20/2022 18:37	19.47	6/19/2022 21:10	6.07
6/20/2022 17:51	34.20	6/20/2022 18:38	19.47	6/19/2022 21:11	6.06
6/20/2022 17:52	34.21	6/20/2022 18:39	19.45	6/19/2022 21:12	6.03
6/20/2022 17:53	34.20	6/20/2022 18:40	19.47	6/19/2022 21:13	6.05
6/20/2022 17:54	34.23	6/20/2022 18:41	19.45	6/19/2022 21:14	6.05
6/20/2022 17:55	34.23	6/20/2022 18:42	19.48	6/19/2022 21:15	6.05
6/20/2022 17:56	34.21	6/20/2022 18:43	19.45	6/19/2022 21:16	6.05
6/20/2022 17:57	34.23	6/20/2022 18:44	19.44	6/19/2022 21:17	6.06
6/20/2022 17:58	34.26	6/20/2022 18:45	19.45	6/19/2022 21:18	6.02
6/20/2022 17:59	34.30	6/20/2022 18:46	19.43	6/19/2022 21:19	6.05
6/20/2022 18:00	34.33	6/20/2022 18:47	19.48	6/19/2022 21:20	6.06
6/20/2022 18:01	34.38	6/20/2022 18:48	19.47	6/19/2022 21:21	6.04
6/20/2022 18:02	34.40	6/20/2022 18:49	19.46	6/19/2022 21:22	6.04
6/20/2022 18:03	34.43	6/20/2022 18:50	19.46	6/19/2022 21:23	6.08
6/20/2022 18:04	34.49	6/20/2022 18:51	19.44	6/19/2022 21:24	6.04
6/20/2022 18:05	34.52	6/20/2022 18:52	19.46	6/19/2022 21:25	6.07
6/20/2022 18:06	34.53	6/20/2022 18:53	19.47	6/19/2022 21:26	6.04
6/20/2022 18:07	34.58	6/20/2022 18:54	19.47	6/19/2022 21:27	6.02
6/20/2022 18:08	34.61	6/20/2022 18:55	19.47	6/19/2022 21:28	6.03
6/20/2022 18:09	34.60	6/20/2022 18:56	19.48	6/19/2022 21:29	6.07
6/20/2022 18:10	34.58	6/20/2022 18:57	19.45	6/19/2022 21:30	6.05
6/20/2022 18:11	34.60	6/20/2022 18:58	19.44	6/19/2022 21:31	6.01
6/20/2022 18:12	34.53	6/20/2022 18:59	19.48	6/19/2022 21:32	6.05
6/20/2022 18:13	34.54	6/20/2022 19:00	19.46	6/19/2022 21:33	8.50
6/20/2022 18:14	34.56	6/20/2022 19:01	19.46	6/19/2022 21:34	8.83
6/20/2022 18:15	34.52	6/20/2022 19:02	19.46	6/19/2022 21:35	6.28
6/20/2022 18:16	34.51	6/20/2022 19:03	19.45	6/19/2022 21:36	6.11
6/20/2022 18:17	34.54	6/20/2022 19:04	19.47	6/19/2022 21:37	6.06
6/20/2022 18:18	34.51	6/20/2022 19:05	19.48	6/19/2022 21:38	6.05
6/20/2022 18:19	34.51	6/20/2022 19:06	19.46	6/19/2022 21:39	6.04
6/20/2022 18:20	34.49	6/20/2022 19:07	19.46	6/19/2022 21:40	6.08
6/20/2022 18:21	34.44	6/20/2022 19:08	19.45	6/19/2022 21:41	6.07
6/20/2022 18:22	34.50	6/20/2022 19:09	19.47	6/19/2022 21:42	6.05
6/20/2022 18:23	34.47	6/20/2022 19:10	19.46	6/19/2022 21:43	6.04
6/20/2022 18:24	34.49	6/20/2022 19:11	19.46	6/19/2022 21:44	6.05
6/20/2022 18:25	34.47	6/20/2022 19:12	19.46	6/19/2022 21:45	6.04
6/20/2022 18:26	34.48	6/20/2022 19:13	19.48	6/19/2022 21:46	6.02
6/20/2022 18:27	34.47	6/20/2022 19:14	19.47	6/19/2022 21:47	6.86
6/20/2022 18:28	34.46	6/20/2022 19:15	19.47	6/19/2022 21:48	8.74
6/20/2022 18:29	34.45	6/20/2022 19:16	19.47	6/19/2022 21:49	8.59
6/20/2022 18:30	34.47	6/20/2022 19:17	19.45	6/19/2022 21:50	6.22
6/20/2022 18:31	34.48	6/20/2022 19:18	19.44	6/19/2022 21:51	6.07
6/20/2022 18:32	34.45	6/20/2022 19:19	19.46	6/19/2022 21:52	6.08
6/20/2022 18:33	34.47	6/20/2022 19:20	19.45	6/19/2022 21:53	6.05
6/20/2022 18:34	34.47	6/20/2022 19:21	19.46	6/19/2022 21:54	6.07
6/20/2022 18:35	34.45	6/20/2022 19:22	19.47	6/19/2022 21:55	6.07
6/20/2022 18:36	34.47	6/20/2022 19:23	19.48	6/19/2022 21:56	6.05
6/20/2022 18:37	34.46	6/20/2022 19:24	19.46	6/19/2022 21:57	6.06
6/20/2022 18:38	34.45	6/20/2022 19:25	19.46	6/19/2022 21:58	6.06
6/20/2022 18:39	34.47	6/20/2022 19:26	19.46	6/19/2022 21:59	6.06
6/20/2022 18:40	34.49	6/20/2022 19:27	19.45	6/19/2022 22:00	6.04
6/20/2022 18:41	34.50	6/20/2022 19:28	19.46	6/19/2022 22:01	6.06
6/20/2022 18:42	34.53	6/20/2022 19:29	19.48	6/19/2022 22:02	6.07

6/20/2022 18:43	34.50	6/20/2022 19:30	19.50	6/19/2022 22:03	6.05
6/20/2022 18:44	34.52	6/20/2022 19:31	19.47	6/19/2022 22:04	6.06
6/20/2022 18:45	34.51	6/20/2022 19:32	19.44	6/19/2022 22:05	6.05
6/20/2022 18:46	34.52	6/20/2022 19:33	19.45	6/19/2022 22:06	6.08
6/20/2022 18:47	34.53	6/20/2022 19:34	19.47	6/19/2022 22:07	6.07
6/20/2022 18:48	34.49	6/20/2022 19:35	19.48	6/19/2022 22:08	6.04
6/20/2022 18:49	34.51	6/20/2022 19:36	19.46	6/19/2022 22:09	6.09
6/20/2022 18:50	34.54	6/20/2022 19:37	19.44	6/19/2022 22:10	6.04
6/20/2022 18:51	34.48	6/20/2022 19:38	19.45	6/19/2022 22:11	6.06
6/20/2022 18:52	34.52	6/20/2022 19:39	19.48	6/19/2022 22:12	6.06
6/20/2022 18:53	34.51	6/20/2022 19:40	19.46	6/19/2022 22:13	6.06
6/20/2022 18:54	34.53	6/20/2022 19:41	19.49	6/19/2022 22:14	6.06
6/20/2022 18:55	34.52	6/20/2022 19:42	19.47	6/19/2022 22:15	6.05
6/20/2022 18:56	34.53	6/20/2022 19:43	19.45	6/19/2022 22:16	6.05
6/20/2022 18:57	34.49	6/20/2022 19:44	19.43	6/19/2022 22:17	6.07
6/20/2022 18:58	34.54	6/20/2022 19:45	19.43	6/19/2022 22:18	6.02
6/20/2022 18:59	34.48	6/20/2022 19:46	19.46	6/19/2022 22:19	6.04
6/20/2022 19:00	34.53	6/20/2022 19:47	19.47	6/19/2022 22:20	6.06
6/20/2022 19:01	34.51	6/20/2022 19:48	19.45	6/19/2022 22:21	6.86
6/20/2022 19:02	34.50	6/20/2022 19:49	19.45	6/19/2022 22:22	8.76
6/20/2022 19:03	34.50	6/20/2022 19:50	19.44	6/19/2022 22:23	6.99
6/20/2022 19:04	34.53	6/20/2022 19:51	19.47	6/19/2022 22:24	6.13
6/20/2022 19:05	34.50	6/20/2022 19:52	19.46	6/19/2022 22:25	6.05
6/20/2022 19:06	34.49	6/20/2022 19:53	19.45	6/19/2022 22:26	6.04
6/20/2022 19:07	35.19	6/20/2022 19:54	19.49	6/19/2022 22:27	6.05
6/20/2022 19:08	34.87	6/20/2022 19:55	19.47	6/19/2022 22:28	6.06
6/20/2022 19:09	34.64	6/20/2022 19:56	19.44	6/19/2022 22:29	6.07
6/20/2022 19:10	34.64	6/20/2022 19:57	19.46	6/19/2022 22:30	6.08
6/20/2022 19:11	34.62	6/20/2022 19:58	19.46	6/19/2022 22:31	6.05
6/20/2022 19:12	34.61	6/20/2022 19:59	19.46	6/19/2022 22:32	6.05
6/20/2022 19:13	34.60	6/20/2022 20:00	19.46	6/19/2022 22:33	6.06
6/20/2022 19:14	34.58	6/20/2022 20:01	19.48	6/19/2022 22:34	6.08
6/20/2022 19:15	34.61	6/20/2022 20:02	19.47	6/19/2022 22:35	6.04
6/20/2022 19:16	34.58	6/20/2022 20:03	19.45	6/19/2022 22:36	6.06
6/20/2022 19:17	34.59	6/20/2022 20:04	19.49	6/19/2022 22:37	6.05
6/20/2022 19:18	34.61	6/20/2022 20:05	19.47	6/19/2022 22:38	6.02
6/20/2022 19:19	34.56	6/20/2022 20:06	19.45	6/19/2022 22:39	6.08
6/20/2022 19:20	34.60	6/20/2022 20:07	19.49	6/19/2022 22:40	6.05
6/20/2022 19:21	34.60	6/20/2022 20:08	19.46	6/19/2022 22:41	6.06
6/20/2022 19:22	34.58	6/20/2022 20:09	19.46	6/19/2022 22:42	6.05
6/20/2022 19:23	34.61	6/20/2022 20:10	19.45	6/19/2022 22:43	6.03
6/20/2022 19:24	34.58	6/20/2022 20:11	19.45	6/19/2022 22:44	6.04
6/20/2022 19:25	34.55	6/20/2022 20:12	19.48	6/19/2022 22:45	6.04
6/20/2022 19:26	34.60	6/20/2022 20:13	19.46	6/19/2022 22:46	6.03
6/20/2022 19:27	34.57	6/20/2022 20:14	19.46	6/19/2022 22:47	6.06
6/20/2022 19:28	34.61	6/20/2022 20:15	19.47	6/19/2022 22:48	6.05
6/20/2022 19:29	34.60	6/20/2022 20:16	19.46	6/19/2022 22:49	6.01
6/20/2022 19:30	34.61	6/20/2022 20:17	19.44	6/19/2022 22:50	6.05
6/20/2022 19:31	34.60	6/20/2022 20:18	19.47	6/19/2022 22:51	6.07
6/20/2022 19:32	34.63	6/20/2022 20:19	19.44	6/19/2022 22:52	6.02
6/20/2022 19:33	34.63	6/20/2022 20:20	19.46	6/19/2022 22:53	6.08
6/20/2022 19:34	34.61	6/20/2022 20:21	19.45	6/19/2022 22:54	6.06
6/20/2022 19:35	34.65	6/20/2022 20:22	19.46	6/19/2022 22:55	6.07
6/20/2022 19:36	34.69	6/20/2022 20:23	19.47	6/19/2022 22:56	6.06
6/20/2022 19:37	34.67	6/20/2022 20:24	19.44	6/19/2022 22:57	6.04
6/20/2022 19:38	34.69	6/20/2022 20:25	19.46	6/19/2022 22:58	6.03
6/20/2022 19:39	34.68	6/20/2022 20:26	19.47	6/19/2022 22:59	6.05
6/20/2022 19:40	34.65	6/20/2022 20:27	19.45	6/19/2022 23:00	6.08
6/20/2022 19:41	34.68	6/20/2022 20:28	19.44	6/19/2022 23:01	6.04
6/20/2022 19:42	34.67	6/20/2022 20:29	19.47	6/19/2022 23:02	6.04
6/20/2022 19:43	34.63	6/20/2022 20:30	19.46	6/19/2022 23:03	6.04
6/20/2022 19:44	34.65	6/20/2022 20:31	19.47	6/19/2022 23:04	6.04
6/20/2022 19:45	34.63	6/20/2022 20:32	19.47	6/19/2022 23:05	6.05
6/20/2022 19:46	34.64	6/20/2022 20:33	19.46	6/19/2022 23:06	6.07
6/20/2022 19:47	34.63	6/20/2022 20:34	19.48	6/19/2022 23:07	6.06
6/20/2022 19:48	34.66	6/20/2022 20:35	19.45	6/19/2022 23:08	6.05
6/20/2022 19:49	34.64	6/20/2022 20:36	19.47	6/19/2022 23:09	6.08
6/20/2022 19:50	34.64	6/20/2022 20:37	19.46	6/19/2022 23:10	6.08
6/20/2022 19:51	34.64	6/20/2022 20:38	19.48	6/19/2022 23:11	6.05
6/20/2022 19:52	34.65	6/20/2022 20:39	19.47	6/19/2022 23:12	6.07
6/20/2022 19:53	34.66	6/20/2022 20:40	19.48	6/19/2022 23:13	6.04
6/20/2022 19:54	34.65	6/20/2022 20:41	19.45	6/19/2022 23:14	6.05
6/20/2022 19:55	34.64	6/20/2022 20:42	19.50	6/19/2022 23:15	6.04
6/20/2022 19:56	34.66	6/20/2022 20:43	19.46	6/19/2022 23:16	6.05
6/20/2022 19:57	34.64	6/20/2022 20:44	19.44	6/19/2022 23:17	6.05
6/20/2022 19:58	34.67	6/20/2022 20:45	19.45	6/19/2022 23:18	6.05
6/20/2022 19:59	34.66	6/20/2022 20:46	19.45	6/19/2022 23:19	6.05
6/20/2022 20:00	34.67	6/20/2022 20:47	19.44	6/19/2022 23:20	6.05
6/20/2022 20:01	34.67	6/20/2022 20:48	19.46	6/19/2022 23:21	6.05
6/20/2022 20:02	34.66	6/20/2022 20:49	19.46	6/19/2022 23:22	6.06
6/20/2022 20:03	34.68	6/20/2022 20:50	19.44	6/19/2022 23:23	6.06
6/20/2022 20:04	34.66	6/20/2022 20:51	19.46	6/19/2022 23:24	6.03
6/20/2022 20:05	34.68	6/20/2022 20:52	19.46	6/19/2022 23:25	6.04
6/20/2022 20:06	34.67	6/20/2022 20:53	19.45	6/19/2022 23:26	6.02
6/20/2022 20:07	34.69	6/20/2022 20:54	19.46	6/19/2022 23:27	6.04
6/20/2022 20:08	34.72	6/20/2022 20:55	19.45	6/19/2022 23:28	6.04
6/20/2022 20:09	34.71	6/20/2022 20:56	19.45	6/19/2022 23:29	6.03
6/20/2022 20:10	34.69	6/20/2022 20:57	19.47	6/19/2022 23:30	6.08

6/20/2022 20:11	34.70	6/20/2022 20:58	19.45	6/19/2022 23:31	6.05
6/20/2022 20:12	34.69	6/20/2022 20:59	19.46	6/19/2022 23:32	6.04
6/20/2022 20:13	34.70	6/20/2022 21:00	19.46	6/19/2022 23:33	6.04
6/20/2022 20:14	34.69	6/20/2022 21:01	19.48	6/19/2022 23:34	6.06
6/20/2022 20:15	34.67	6/20/2022 21:02	19.47	6/19/2022 23:35	6.05
6/20/2022 20:16	34.70	6/20/2022 21:03	19.45	6/19/2022 23:36	6.06
6/20/2022 20:17	34.70	6/20/2022 21:04	19.44	6/19/2022 23:37	6.08
6/20/2022 20:18	34.72	6/20/2022 21:05	19.50	6/19/2022 23:38	6.06
6/20/2022 20:19	34.72	6/20/2022 21:06	19.46	6/19/2022 23:39	6.06
6/20/2022 20:20	34.71	6/20/2022 21:07	19.44	6/19/2022 23:40	6.04
6/20/2022 20:21	34.70	6/20/2022 21:08	19.47	6/19/2022 23:41	6.02
6/20/2022 20:22	34.70	6/20/2022 21:09	19.46	6/19/2022 23:42	6.05
6/20/2022 20:23	34.73	6/20/2022 21:10	19.49	6/19/2022 23:43	6.03
6/20/2022 20:24	34.72	6/20/2022 21:11	19.48	6/19/2022 23:44	6.04
6/20/2022 20:25	34.68	6/20/2022 21:12	19.47	6/19/2022 23:45	6.06
6/20/2022 20:26	34.68	6/20/2022 21:13	19.48	6/19/2022 23:46	6.04
6/20/2022 20:27	34.74	6/20/2022 21:14	19.47	6/19/2022 23:47	6.04
6/20/2022 20:28	34.72	6/20/2022 21:15	19.46	6/19/2022 23:48	6.03
6/20/2022 20:29	34.73	6/20/2022 21:16	19.47	6/19/2022 23:49	6.03
6/20/2022 20:30	34.69	6/20/2022 21:17	19.46	6/19/2022 23:50	6.05
6/20/2022 20:31	34.69	6/20/2022 21:18	19.48	6/19/2022 23:51	6.05
6/20/2022 20:32	34.76	6/20/2022 21:19	19.45	6/19/2022 23:52	6.05
6/20/2022 20:33	34.74	6/20/2022 21:20	19.47	6/19/2022 23:53	6.06
6/20/2022 20:34	34.74	6/20/2022 21:21	19.48	6/19/2022 23:54	6.04
6/20/2022 20:35	34.73	6/20/2022 21:22	19.48	6/19/2022 23:55	6.04
6/20/2022 20:36	34.73	6/20/2022 21:23	19.48	6/19/2022 23:56	6.05
6/20/2022 20:37	34.76	6/20/2022 21:24	19.47	6/19/2022 23:57	6.02
6/20/2022 20:38	34.77	6/20/2022 21:25	19.48	6/19/2022 23:58	6.07
6/20/2022 20:39	34.76	6/20/2022 21:26	19.49	6/19/2022 23:59	6.03
6/20/2022 20:40	34.75	6/20/2022 21:27	19.45	6/20/2022 0:00	6.03
6/20/2022 20:41	34.74	6/20/2022 21:28	19.45	6/20/2022 0:01	6.04
6/20/2022 20:42	34.75	6/20/2022 21:29	19.46	6/20/2022 0:02	6.01
6/20/2022 20:43	34.74	6/20/2022 21:30	19.46	6/20/2022 0:03	6.05
6/20/2022 20:44	34.75	6/20/2022 21:31	19.44	6/20/2022 0:04	6.07
6/20/2022 20:45	34.76	6/20/2022 21:32	19.48	6/20/2022 0:05	7.64
6/20/2022 20:46	34.76	6/20/2022 21:33	19.45	6/20/2022 0:06	8.76
6/20/2022 20:47	34.76	6/20/2022 21:34	19.48	6/20/2022 0:07	6.55
6/20/2022 20:48	34.78	6/20/2022 21:35	19.47	6/20/2022 0:08	6.13
6/20/2022 20:49	34.74	6/20/2022 21:36	19.49	6/20/2022 0:09	6.09
6/20/2022 20:50	34.75	6/20/2022 21:37	19.48	6/20/2022 0:10	6.05
6/20/2022 20:51	34.78	6/20/2022 21:38	19.47	6/20/2022 0:11	6.08
6/20/2022 20:52	34.74	6/20/2022 21:39	19.47	6/20/2022 0:12	6.08
6/20/2022 20:53	34.75	6/20/2022 21:40	19.46	6/20/2022 0:13	6.08
6/20/2022 20:54	34.78	6/20/2022 21:41	19.46	6/20/2022 0:14	6.04
6/20/2022 20:55	34.77	6/20/2022 21:42	19.46	6/20/2022 0:15	6.08
6/20/2022 20:56	34.76	6/20/2022 21:43	19.48	6/20/2022 0:16	6.07
6/20/2022 20:57	34.77	6/20/2022 21:44	19.47	6/20/2022 0:17	6.06
6/20/2022 20:58	34.78	6/20/2022 21:45	19.46	6/20/2022 0:18	6.07
6/20/2022 20:59	34.77	6/20/2022 21:46	19.49	6/20/2022 0:19	6.06
6/20/2022 21:00	34.78	6/20/2022 21:47	19.46	6/20/2022 0:20	6.06
6/20/2022 21:01	34.78	6/20/2022 21:48	19.49	6/20/2022 0:21	6.04
6/20/2022 21:02	34.78	6/20/2022 21:49	19.44	6/20/2022 0:22	6.07
6/20/2022 21:03	34.80	6/20/2022 21:50	19.49	6/20/2022 0:23	6.05
6/20/2022 21:04	34.78	6/20/2022 21:51	19.46	6/20/2022 0:24	6.03
6/20/2022 21:05	34.81	6/20/2022 21:52	19.47	6/20/2022 0:25	6.02
6/20/2022 21:06	34.77	6/20/2022 21:53	19.48	6/20/2022 0:26	6.05
6/20/2022 21:07	34.79	6/20/2022 21:54	19.48	6/20/2022 0:27	6.05
6/20/2022 21:08	34.82	6/20/2022 21:55	19.47	6/20/2022 0:28	6.08
6/20/2022 21:09	34.83	6/20/2022 21:56	19.47	6/20/2022 0:29	6.06
6/20/2022 21:10	34.81	6/20/2022 21:57	19.49	6/20/2022 0:30	6.03
6/20/2022 21:11	34.81	6/20/2022 21:58	19.43	6/20/2022 0:31	6.06
6/20/2022 21:12	34.83	6/20/2022 21:59	19.48	6/20/2022 0:32	6.05
6/20/2022 21:13	34.81	6/20/2022 22:00	20.05	6/20/2022 0:33	6.04
6/20/2022 21:14	34.81	6/20/2022 22:01	20.16	6/20/2022 0:34	6.04
6/20/2022 21:15	34.82	6/20/2022 22:02	20.22	6/20/2022 0:35	6.06
6/20/2022 21:16	34.80	6/20/2022 22:03	20.23	6/20/2022 0:36	6.04
6/20/2022 21:17	34.79	6/20/2022 22:04	20.25	6/20/2022 0:37	6.04
6/20/2022 21:18	34.80	6/20/2022 22:05	19.75	6/20/2022 0:38	6.04
6/20/2022 21:19	34.80	6/20/2022 22:06	19.70	6/20/2022 0:39	6.04
6/20/2022 21:20	34.83	6/20/2022 22:07	19.65	6/20/2022 0:40	6.05
6/20/2022 21:21	34.85	6/20/2022 22:08	19.62	6/20/2022 0:41	6.06
6/20/2022 21:22	34.84	6/20/2022 22:09	19.59	6/20/2022 0:42	6.04
6/20/2022 21:23	34.83	6/20/2022 22:10	19.59	6/20/2022 0:43	6.02
6/20/2022 21:24	34.85	6/20/2022 22:11	19.58	6/20/2022 0:44	6.05
6/20/2022 21:25	34.80	6/20/2022 22:12	19.60	6/20/2022 0:45	6.06
6/20/2022 21:26	34.82	6/20/2022 22:13	19.59	6/20/2022 0:46	6.08
6/20/2022 21:27	34.85	6/20/2022 22:14	19.58	6/20/2022 0:47	6.02
6/20/2022 21:28	34.84	6/20/2022 22:15	19.55	6/20/2022 0:48	6.06
6/20/2022 21:29	34.85	6/20/2022 22:16	19.58	6/20/2022 0:49	6.06
6/20/2022 21:30	34.83	6/20/2022 22:17	19.57	6/20/2022 0:50	6.04
6/20/2022 21:31	34.85	6/20/2022 22:18	19.55	6/20/2022 0:51	6.04
6/20/2022 21:32	34.82	6/20/2022 22:19	19.56	6/20/2022 0:52	6.03
6/20/2022 21:33	34.85	6/20/2022 22:20	19.55	6/20/2022 0:53	6.04
6/20/2022 21:34	34.85	6/20/2022 22:21	19.55	6/20/2022 0:54	6.03
6/20/2022 21:35	34.88	6/20/2022 22:22	19.54	6/20/2022 0:55	6.05
6/20/2022 21:36	34.84	6/20/2022 22:23	19.52	6/20/2022 0:56	6.06
6/20/2022 21:37	34.87	6/20/2022 22:24	19.54	6/20/2022 0:57	6.04
6/20/2022 21:38	34.87	6/20/2022 22:25	19.54	6/20/2022 0:58	6.05

6/20/2022 21:39	34.87	6/20/2022 22:26	19.55	6/20/2022 0:59	6.05
6/20/2022 21:40	34.88	6/20/2022 22:27	19.56	6/20/2022 1:00	6.06
6/20/2022 21:41	34.88	6/20/2022 22:28	19.53	6/20/2022 1:01	6.05
6/20/2022 21:42	34.91	6/20/2022 22:29	19.52	6/20/2022 1:02	6.07
6/20/2022 21:43	34.88	6/20/2022 22:30	19.54	6/20/2022 1:03	6.05
6/20/2022 21:44	34.91	6/20/2022 22:31	19.53	6/20/2022 1:04	6.05
6/20/2022 21:45	34.94	6/20/2022 22:32	19.55	6/20/2022 1:05	6.02
6/20/2022 21:46	34.92	6/20/2022 22:33	19.50	6/20/2022 1:06	6.05
6/20/2022 21:47	34.93	6/20/2022 22:34	19.52	6/20/2022 1:07	6.03
6/20/2022 21:48	34.90	6/20/2022 22:35	19.51	6/20/2022 1:08	6.03
6/20/2022 21:49	34.91	6/20/2022 22:36	19.52	6/20/2022 1:09	6.04
6/20/2022 21:50	34.89	6/20/2022 22:37	19.53	6/20/2022 1:10	6.05
6/20/2022 21:51	34.88	6/20/2022 22:38	19.52	6/20/2022 1:11	6.07
6/20/2022 21:52	34.93	6/20/2022 22:39	19.52	6/20/2022 1:12	6.05
6/20/2022 21:53	34.89	6/20/2022 22:40	19.51	6/20/2022 1:13	6.05
6/20/2022 21:54	34.90	6/20/2022 22:41	19.54	6/20/2022 1:14	6.06
6/20/2022 21:55	34.94	6/20/2022 22:42	19.49	6/20/2022 1:15	6.04
6/20/2022 21:56	34.96	6/20/2022 22:43	19.54	6/20/2022 1:16	6.02
6/20/2022 21:57	34.94	6/20/2022 22:44	19.51	6/20/2022 1:17	6.04
6/20/2022 21:58	34.97	6/20/2022 22:45	19.53	6/20/2022 1:18	6.03
6/20/2022 21:59	34.95	6/20/2022 22:46	19.53	6/20/2022 1:19	6.05
6/20/2022 22:00	34.95	6/20/2022 22:47	19.52	6/20/2022 1:20	6.03
6/20/2022 22:01	34.93	6/20/2022 22:48	19.52	6/20/2022 1:21	6.04
6/20/2022 22:02	34.98	6/20/2022 22:49	19.53	6/20/2022 1:22	6.05
6/20/2022 22:03	34.93	6/20/2022 22:50	19.51	6/20/2022 1:23	6.04
6/20/2022 22:04	34.93	6/20/2022 22:51	19.51	6/20/2022 1:24	6.04
6/20/2022 22:05	34.94	6/20/2022 22:52	19.54	6/20/2022 1:25	6.04
6/20/2022 22:06	34.96	6/20/2022 22:53	19.53	6/20/2022 1:26	6.07
6/20/2022 22:07	34.91	6/20/2022 22:54	19.54	6/20/2022 1:27	6.03
6/20/2022 22:08	34.96	6/20/2022 22:55	19.52	6/20/2022 1:28	6.04
6/20/2022 22:09	34.93	6/20/2022 22:56	19.50	6/20/2022 1:29	6.05
6/20/2022 22:10	34.92	6/20/2022 22:57	19.52	6/20/2022 1:30	6.05
6/20/2022 22:11	34.95	6/20/2022 22:58	19.53	6/20/2022 1:31	6.07
6/20/2022 22:12	34.98	6/20/2022 22:59	19.50	6/20/2022 1:32	6.04
6/20/2022 22:13	34.94	6/20/2022 23:00	19.51	6/20/2022 1:33	6.05
6/20/2022 22:14	34.95	6/20/2022 23:01	19.51	6/20/2022 1:34	6.05
6/20/2022 22:15	34.93	6/20/2022 23:02	19.52	6/20/2022 1:35	6.07
6/20/2022 22:16	34.96	6/20/2022 23:03	19.51	6/20/2022 1:36	6.01
6/20/2022 22:17	34.97	6/20/2022 23:04	19.50	6/20/2022 1:37	6.05
6/20/2022 22:18	34.97	6/20/2022 23:05	19.50	6/20/2022 1:38	6.04
6/20/2022 22:19	34.97	6/20/2022 23:06	19.49	6/20/2022 1:39	6.01
6/20/2022 22:20	34.97	6/20/2022 23:07	19.52	6/20/2022 1:40	6.03
6/20/2022 22:21	34.95	6/20/2022 23:08	19.54	6/20/2022 1:41	6.04
6/20/2022 22:22	34.97	6/20/2022 23:09	19.51	6/20/2022 1:42	6.01
6/20/2022 22:23	34.99	6/20/2022 23:10	19.52	6/20/2022 1:43	6.02
6/20/2022 22:24	35.00	6/20/2022 23:11	19.50	6/20/2022 1:44	6.05
6/20/2022 22:25	34.99	6/20/2022 23:12	19.52	6/20/2022 1:45	6.05
6/20/2022 22:26	34.97	6/20/2022 23:13	19.53	6/20/2022 1:46	6.04
6/20/2022 22:27	34.99	6/20/2022 23:14	19.50	6/20/2022 1:47	6.03
6/20/2022 22:28	34.97	6/20/2022 23:15	19.52	6/20/2022 1:48	6.05
6/20/2022 22:29	34.97	6/20/2022 23:16	19.50	6/20/2022 1:49	6.03
6/20/2022 22:30	34.96	6/20/2022 23:17	19.54	6/20/2022 1:50	6.07
6/20/2022 22:31	35.00	6/20/2022 23:18	19.52	6/20/2022 1:51	6.02
6/20/2022 22:32	34.99	6/20/2022 23:19	19.50	6/20/2022 1:52	6.03
6/20/2022 22:33	35.01	6/20/2022 23:20	19.52	6/20/2022 1:53	6.03
6/20/2022 22:34	34.99	6/20/2022 23:21	19.50	6/20/2022 1:54	6.03
6/20/2022 22:35	34.99	6/20/2022 23:22	19.49	6/20/2022 1:55	6.02
6/20/2022 22:36	34.97	6/20/2022 23:23	19.50	6/20/2022 1:56	6.04
6/20/2022 22:37	35.00	6/20/2022 23:24	19.49	6/20/2022 1:57	6.07
6/20/2022 22:38	35.02	6/20/2022 23:25	19.51	6/20/2022 1:58	6.04
6/20/2022 22:39	35.01	6/20/2022 23:26	19.49	6/20/2022 1:59	6.07
6/20/2022 22:40	35.00	6/20/2022 23:27	19.50	6/20/2022 2:00	6.06
6/20/2022 22:41	34.99	6/20/2022 23:28	19.50	6/20/2022 2:01	6.03
6/20/2022 22:42	35.02	6/20/2022 23:29	19.51	6/20/2022 2:02	6.02
6/20/2022 22:43	35.00	6/20/2022 23:30	19.52	6/20/2022 2:03	6.06
6/20/2022 22:44	35.04	6/20/2022 23:31	19.51	6/20/2022 2:04	6.02
6/20/2022 22:45	35.00	6/20/2022 23:32	19.51	6/20/2022 2:05	6.04
6/20/2022 22:46	35.02	6/20/2022 23:33	19.51	6/20/2022 2:06	6.03
6/20/2022 22:47	35.02	6/20/2022 23:34	19.53	6/20/2022 2:07	6.06
6/20/2022 22:48	35.03	6/20/2022 23:35	19.50	6/20/2022 2:08	6.06
6/20/2022 22:49	35.04	6/20/2022 23:36	19.50	6/20/2022 2:09	6.05
6/20/2022 22:50	35.03	6/20/2022 23:37	19.50	6/20/2022 2:10	6.06
6/20/2022 22:51	34.98	6/20/2022 23:38	19.50	6/20/2022 2:11	6.05
6/20/2022 22:52	35.04	6/20/2022 23:39	19.50	6/20/2022 2:12	6.03
6/20/2022 22:53	35.06	6/20/2022 23:40	19.50	6/20/2022 2:13	6.06
6/20/2022 22:54	35.03	6/20/2022 23:41	19.49	6/20/2022 2:14	6.03
6/20/2022 22:55	35.02	6/20/2022 23:42	19.51	6/20/2022 2:15	6.05
6/20/2022 22:56	35.04	6/20/2022 23:43	19.50	6/20/2022 2:16	6.04
6/20/2022 22:57	35.08	6/20/2022 23:44	19.50	6/20/2022 2:17	6.06
6/20/2022 22:58	35.03	6/20/2022 23:45	19.48	6/20/2022 2:18	6.04
6/20/2022 22:59	35.03	6/20/2022 23:46	19.51	6/20/2022 2:19	6.05
6/20/2022 23:00	35.05	6/20/2022 23:47	19.49	6/20/2022 2:20	6.02
6/20/2022 23:01	35.04	6/20/2022 23:48	19.51	6/20/2022 2:21	6.05
6/20/2022 23:02	35.03	6/20/2022 23:49	19.50	6/20/2022 2:22	6.04
6/20/2022 23:03	35.03	6/20/2022 23:50	19.53	6/20/2022 2:23	6.06
6/20/2022 23:04	35.06	6/20/2022 23:51	19.48	6/20/2022 2:24	6.04
6/20/2022 23:05	35.04	6/20/2022 23:52	19.50	6/20/2022 2:25	6.03
6/20/2022 23:06	35.03	6/20/2022 23:53	19.52	6/20/2022 2:26	6.01

6/20/2022 23:07	36.14	6/20/2022 23:54	19.49	6/20/2022 2:27	6.06
6/20/2022 23:08	35.29	6/20/2022 23:55	19.48	6/20/2022 2:28	6.02
6/20/2022 23:09	35.17	6/20/2022 23:56	19.52	6/20/2022 2:29	6.08
6/20/2022 23:10	35.17	6/20/2022 23:57	19.51	6/20/2022 2:30	6.06
6/20/2022 23:11	35.15	6/20/2022 23:58	19.50	6/20/2022 2:31	6.04
6/20/2022 23:12	35.15	6/20/2022 23:59	19.50	6/20/2022 2:32	6.06
6/20/2022 23:13	35.13	6/21/2022 0:00	19.50	6/20/2022 2:33	6.07
6/20/2022 23:14	35.13	6/21/2022 0:01	19.50	6/20/2022 2:34	6.04
6/20/2022 23:15	35.13	6/21/2022 0:02	19.52	6/20/2022 2:35	6.04
6/20/2022 23:16	35.12	6/21/2022 0:03	19.50	6/20/2022 2:36	6.02
6/20/2022 23:17	35.10	6/21/2022 0:04	19.47	6/20/2022 2:37	6.05
6/20/2022 23:18	35.13	6/21/2022 0:05	19.50	6/20/2022 2:38	6.01
6/20/2022 23:19	35.13	6/21/2022 0:06	19.49	6/20/2022 2:39	6.04
6/20/2022 23:20	35.14	6/21/2022 0:07	19.50	6/20/2022 2:40	6.04
6/20/2022 23:21	35.11	6/21/2022 0:08	19.49	6/20/2022 2:41	6.05
6/20/2022 23:22	35.12	6/21/2022 0:09	19.50	6/20/2022 2:42	6.04
6/20/2022 23:23	35.15	6/21/2022 0:10	19.52	6/20/2022 2:43	6.07
6/20/2022 23:24	35.16	6/21/2022 0:11	19.52	6/20/2022 2:44	6.02
6/20/2022 23:25	35.14	6/21/2022 0:12	19.50	6/20/2022 2:45	6.00
6/20/2022 23:26	35.18	6/21/2022 0:13	19.50	6/20/2022 2:46	6.03
6/20/2022 23:27	35.17	6/21/2022 0:14	19.49	6/20/2022 2:47	6.02
6/20/2022 23:28	35.17	6/21/2022 0:15	19.49	6/20/2022 2:48	6.03
6/20/2022 23:29	35.16	6/21/2022 0:16	19.50	6/20/2022 2:49	6.01
6/20/2022 23:30	35.15	6/21/2022 0:17	19.51	6/20/2022 2:50	6.05
6/20/2022 23:31	35.18	6/21/2022 0:18	19.50	6/20/2022 2:51	6.04
6/20/2022 23:32	35.16	6/21/2022 0:19	19.49	6/20/2022 2:52	6.02
6/20/2022 23:33	35.17	6/21/2022 0:20	19.48	6/20/2022 2:53	6.04
6/20/2022 23:34	35.15	6/21/2022 0:21	19.48	6/20/2022 2:54	6.06
6/20/2022 23:35	35.14	6/21/2022 0:22	19.50	6/20/2022 2:55	6.07
6/20/2022 23:36	35.15	6/21/2022 0:23	19.49	6/20/2022 2:56	6.01
6/20/2022 23:37	35.16	6/21/2022 0:24	19.50	6/20/2022 2:57	6.06
6/20/2022 23:38	35.16	6/21/2022 0:25	19.53	6/20/2022 2:58	6.02
6/20/2022 23:39	35.19	6/21/2022 0:26	19.49	6/20/2022 2:59	6.05
6/20/2022 23:40	35.18	6/21/2022 0:27	19.52	6/20/2022 3:00	6.04
6/20/2022 23:41	35.18	6/21/2022 0:28	19.50	6/20/2022 3:01	6.04
6/20/2022 23:42	35.17	6/21/2022 0:29	19.52	6/20/2022 3:02	6.06
6/20/2022 23:43	35.17	6/21/2022 0:30	19.51	6/20/2022 3:03	6.05
6/20/2022 23:44	35.15	6/21/2022 0:31	19.49	6/20/2022 3:04	6.05
6/20/2022 23:45	35.17	6/21/2022 0:32	19.53	6/20/2022 3:05	6.02
6/20/2022 23:46	35.18	6/21/2022 0:33	19.50	6/20/2022 3:06	6.04
6/20/2022 23:47	35.14	6/21/2022 0:34	19.48	6/20/2022 3:07	6.02
6/20/2022 23:48	35.18	6/21/2022 0:35	19.50	6/20/2022 3:08	6.04
6/20/2022 23:49	35.15	6/21/2022 0:36	19.50	6/20/2022 3:09	5.99
6/20/2022 23:50	35.20	6/21/2022 0:37	19.50	6/20/2022 3:10	6.05
6/20/2022 23:51	35.15	6/21/2022 0:38	19.50	6/20/2022 3:11	6.06
6/20/2022 23:52	35.19	6/21/2022 0:39	19.50	6/20/2022 3:12	6.02
6/20/2022 23:53	35.16	6/21/2022 0:40	19.49	6/20/2022 3:13	6.04
6/20/2022 23:54	35.16	6/21/2022 0:41	19.47	6/20/2022 3:14	6.04
6/20/2022 23:55	35.15	6/21/2022 0:42	19.49	6/20/2022 3:15	6.05
6/20/2022 23:56	35.20	6/21/2022 0:43	19.50	6/20/2022 3:16	6.03
6/20/2022 23:57	35.14	6/21/2022 0:44	19.47	6/20/2022 3:17	6.03
6/20/2022 23:58	35.20	6/21/2022 0:45	19.49	6/20/2022 3:18	6.02
6/20/2022 23:59	35.20	6/21/2022 0:46	19.49	6/20/2022 3:19	6.03
6/21/2022 0:00	35.17	6/21/2022 0:47	19.49	6/20/2022 3:20	6.06
6/21/2022 0:01	35.18	6/21/2022 0:48	19.50	6/20/2022 3:21	6.03
6/21/2022 0:02	35.20	6/21/2022 0:49	19.50	6/20/2022 3:22	6.04
6/21/2022 0:03	35.18	6/21/2022 0:50	19.53	6/20/2022 3:23	6.02
6/21/2022 0:04	35.18	6/21/2022 0:51	19.50	6/20/2022 3:24	6.03
6/21/2022 0:05	35.20	6/21/2022 0:52	19.50	6/20/2022 3:25	6.05
6/21/2022 0:06	35.17	6/21/2022 0:53	19.48	6/20/2022 3:26	6.03
6/21/2022 0:07	35.19	6/21/2022 0:54	19.50	6/20/2022 3:27	6.03
6/21/2022 0:08	35.19	6/21/2022 0:55	19.50	6/20/2022 3:28	6.03
6/21/2022 0:09	35.20	6/21/2022 0:56	19.50	6/20/2022 3:29	6.04
6/21/2022 0:10	35.20	6/21/2022 0:57	19.50	6/20/2022 3:30	6.06
6/21/2022 0:11	35.23	6/21/2022 0:58	19.49	6/20/2022 3:31	6.02
6/21/2022 0:12	35.21	6/21/2022 0:59	19.49	6/20/2022 3:32	6.05
6/21/2022 0:13	35.23	6/21/2022 1:00	19.48	6/20/2022 3:33	6.02
6/21/2022 0:14	35.21	6/21/2022 1:01	19.49	6/20/2022 3:34	7.58
6/21/2022 0:15	35.20	6/21/2022 1:02	19.52	6/20/2022 3:35	8.75
6/21/2022 0:16	35.21	6/21/2022 1:03	19.48	6/20/2022 3:36	6.48
6/21/2022 0:17	35.21	6/21/2022 1:04	19.49	6/20/2022 3:37	6.09
6/21/2022 0:18	35.18	6/21/2022 1:05	19.48	6/20/2022 3:38	6.07
6/21/2022 0:19	35.20	6/21/2022 1:06	19.50	6/20/2022 3:39	6.10
6/21/2022 0:20	35.19	6/21/2022 1:07	19.48	6/20/2022 3:40	6.10
6/21/2022 0:21	35.22	6/21/2022 1:08	19.51	6/20/2022 3:41	6.07
6/21/2022 0:22	35.21	6/21/2022 1:09	19.46	6/20/2022 3:42	6.05
6/21/2022 0:23	35.22	6/21/2022 1:10	19.50	6/20/2022 3:43	6.08
6/21/2022 0:24	35.23	6/21/2022 1:11	19.49	6/20/2022 3:44	6.08
6/21/2022 0:25	35.23	6/21/2022 1:12	19.50	6/20/2022 3:45	6.06
6/21/2022 0:26	35.24	6/21/2022 1:13	19.48	6/20/2022 3:46	6.06
6/21/2022 0:27	35.19	6/21/2022 1:14	19.48	6/20/2022 3:47	6.06
6/21/2022 0:28	35.25	6/21/2022 1:15	19.47	6/20/2022 3:48	6.06
6/21/2022 0:29	35.22	6/21/2022 1:16	19.50	6/20/2022 3:49	6.06
6/21/2022 0:30	35.24	6/21/2022 1:17	19.47	6/20/2022 3:50	6.07
6/21/2022 0:31	35.22	6/21/2022 1:18	19.47	6/20/2022 3:51	6.05
6/21/2022 0:32	35.23	6/21/2022 1:19	19.49	6/20/2022 3:52	6.04
6/21/2022 0:33	35.25	6/21/2022 1:20	19.51	6/20/2022 3:53	6.03
6/21/2022 0:34	35.22	6/21/2022 1:21	19.48	6/20/2022 3:54	6.06

6/21/2022 0:35	35.28	6/21/2022 1:22	19.49	6/20/2022 3:55	6.06
6/21/2022 0:36	35.28	6/21/2022 1:23	19.48	6/20/2022 3:56	6.05
6/21/2022 0:37	35.26	6/21/2022 1:24	19.49	6/20/2022 3:57	6.06
6/21/2022 0:38	35.22	6/21/2022 1:25	19.48	6/20/2022 3:58	6.03
6/21/2022 0:39	35.28	6/21/2022 1:26	19.50	6/20/2022 3:59	6.03
6/21/2022 0:40	35.28	6/21/2022 1:27	19.46	6/20/2022 4:00	6.03
6/21/2022 0:41	35.25	6/21/2022 1:28	19.49	6/20/2022 4:01	6.05
6/21/2022 0:42	35.25	6/21/2022 1:29	19.47	6/20/2022 4:02	6.07
6/21/2022 0:43	35.27	6/21/2022 1:30	19.48	6/20/2022 4:03	6.05
6/21/2022 0:44	35.31	6/21/2022 1:31	19.48	6/20/2022 4:04	6.06
6/21/2022 0:45	35.33	6/21/2022 1:32	19.49	6/20/2022 4:05	6.04
6/21/2022 0:46	35.35	6/21/2022 1:33	19.49	6/20/2022 4:06	6.03
6/21/2022 0:47	35.34	6/21/2022 1:34	19.48	6/20/2022 4:07	6.02
6/21/2022 0:48	35.33	6/21/2022 1:35	19.49	6/20/2022 4:08	6.04
6/21/2022 0:49	35.32	6/21/2022 1:36	19.47	6/20/2022 4:09	6.04
6/21/2022 0:50	35.30	6/21/2022 1:37	19.47	6/20/2022 4:10	6.03
6/21/2022 0:51	35.39	6/21/2022 1:38	19.49	6/20/2022 4:11	6.04
6/21/2022 0:52	35.38	6/21/2022 1:39	19.50	6/20/2022 4:12	6.06
6/21/2022 0:53	35.42	6/21/2022 1:40	19.49	6/20/2022 4:13	6.07
6/21/2022 0:54	35.45	6/21/2022 1:41	19.47	6/20/2022 4:14	6.04
6/21/2022 0:55	35.44	6/21/2022 1:42	19.47	6/20/2022 4:15	6.04
6/21/2022 0:56	35.46	6/21/2022 1:43	19.47	6/20/2022 4:16	6.03
6/21/2022 0:57	35.47	6/21/2022 1:44	19.47	6/20/2022 4:17	6.05
6/21/2022 0:58	35.52	6/21/2022 1:45	19.50	6/20/2022 4:18	6.04
6/21/2022 0:59	35.51	6/21/2022 1:46	19.46	6/20/2022 4:19	6.05
6/21/2022 1:00	35.53	6/21/2022 1:47	19.50	6/20/2022 4:20	6.04
6/21/2022 1:01	35.55	6/21/2022 1:48	19.47	6/20/2022 4:21	6.02
6/21/2022 1:02	35.52	6/21/2022 1:49	19.48	6/20/2022 4:22	6.06
6/21/2022 1:03	35.55	6/21/2022 1:50	19.47	6/20/2022 4:23	6.06
6/21/2022 1:04	35.54	6/21/2022 1:51	19.50	6/20/2022 4:24	6.05
6/21/2022 1:05	35.51	6/21/2022 1:52	19.47	6/20/2022 4:25	6.06
6/21/2022 1:06	35.53	6/21/2022 1:53	19.49	6/20/2022 4:26	6.04
6/21/2022 1:07	35.50	6/21/2022 1:54	19.48	6/20/2022 4:27	6.05
6/21/2022 1:08	35.50	6/21/2022 1:55	19.49	6/20/2022 4:28	6.03
6/21/2022 1:09	35.52	6/21/2022 1:56	19.47	6/20/2022 4:29	6.03
6/21/2022 1:10	35.50	6/21/2022 1:57	19.49	6/20/2022 4:30	6.06
6/21/2022 1:11	35.50	6/21/2022 1:58	19.48	6/20/2022 4:31	6.04
6/21/2022 1:12	35.45	6/21/2022 1:59	19.48	6/20/2022 4:32	6.06
6/21/2022 1:13	35.49	6/21/2022 2:00	19.49	6/20/2022 4:33	6.03
6/21/2022 1:14	35.52	6/21/2022 2:01	19.50	6/20/2022 4:34	6.08
6/21/2022 1:15	35.49	6/21/2022 2:02	19.47	6/20/2022 4:35	6.03
6/21/2022 1:16	35.51	6/21/2022 2:03	19.49	6/20/2022 4:36	6.05
6/21/2022 1:17	35.50	6/21/2022 2:04	19.49	6/20/2022 4:37	6.05
6/21/2022 1:18	35.52	6/21/2022 2:05	19.47	6/20/2022 4:38	6.02
6/21/2022 1:19	35.47	6/21/2022 2:06	19.50	6/20/2022 4:39	6.05
6/21/2022 1:20	35.49	6/21/2022 2:07	19.51	6/20/2022 4:40	6.02
6/21/2022 1:21	35.50	6/21/2022 2:08	19.47	6/20/2022 4:41	6.04
6/21/2022 1:22	35.50	6/21/2022 2:09	19.48	6/20/2022 4:42	6.03
6/21/2022 1:23	35.50	6/21/2022 2:10	19.51	6/20/2022 4:43	6.05
6/21/2022 1:24	35.50	6/21/2022 2:11	19.49	6/20/2022 4:44	6.07
6/21/2022 1:25	35.51	6/21/2022 2:12	19.48	6/20/2022 4:45	6.07
6/21/2022 1:26	35.49	6/21/2022 2:13	19.48	6/20/2022 4:46	6.02
6/21/2022 1:27	35.51	6/21/2022 2:14	19.49	6/20/2022 4:47	6.04
6/21/2022 1:28	35.49	6/21/2022 2:15	19.49	6/20/2022 4:48	6.06
6/21/2022 1:29	35.53	6/21/2022 2:16	19.48	6/20/2022 4:49	6.04
6/21/2022 1:30	35.52	6/21/2022 2:17	19.47	6/20/2022 4:50	6.03
6/21/2022 1:31	35.53	6/21/2022 2:18	19.49	6/20/2022 4:51	6.00
6/21/2022 1:32	35.50	6/21/2022 2:19	19.47	6/20/2022 4:52	6.06
6/21/2022 1:33	35.50	6/21/2022 2:20	19.49	6/20/2022 4:53	6.03
6/21/2022 1:34	35.51	6/21/2022 2:21	19.46	6/20/2022 4:54	6.06
6/21/2022 1:35	35.47	6/21/2022 2:22	19.48	6/20/2022 4:55	6.04
6/21/2022 1:36	35.53	6/21/2022 2:23	19.48	6/20/2022 4:56	6.04
6/21/2022 1:37	35.50	6/21/2022 2:24	19.48	6/20/2022 4:57	6.06
6/21/2022 1:38	35.49	6/21/2022 2:25	19.46	6/20/2022 4:58	6.08
6/21/2022 1:39	35.54	6/21/2022 2:26	19.50	6/20/2022 4:59	6.03
6/21/2022 1:40	35.52	6/21/2022 2:27	19.47	6/20/2022 5:00	6.04
6/21/2022 1:41	35.51	6/21/2022 2:28	19.47	6/20/2022 5:01	6.04
6/21/2022 1:42	35.53	6/21/2022 2:29	19.46	6/20/2022 5:02	6.00
6/21/2022 1:43	35.54	6/21/2022 2:30	19.51	6/20/2022 5:03	6.06
6/21/2022 1:44	35.54	6/21/2022 2:31	19.47	6/20/2022 5:04	6.05
6/21/2022 1:45	35.52	6/21/2022 2:32	19.45	6/20/2022 5:05	6.03
6/21/2022 1:46	35.51	6/21/2022 2:33	19.48	6/20/2022 5:06	6.01
6/21/2022 1:47	35.57	6/21/2022 2:34	19.48	6/20/2022 5:07	6.05
6/21/2022 1:48	35.59	6/21/2022 2:35	19.48	6/20/2022 5:08	6.06
6/21/2022 1:49	35.58	6/21/2022 2:36	19.46	6/20/2022 5:09	6.06
6/21/2022 1:50	35.54	6/21/2022 2:37	19.49	6/20/2022 5:10	6.03
6/21/2022 1:51	35.53	6/21/2022 2:38	19.45	6/20/2022 5:11	6.07
6/21/2022 1:52	35.53	6/21/2022 2:39	19.46	6/20/2022 5:12	6.04
6/21/2022 1:53	35.55	6/21/2022 2:40	19.47	6/20/2022 5:13	6.06
6/21/2022 1:54	35.55	6/21/2022 2:41	19.49	6/20/2022 5:14	6.05
6/21/2022 1:55	35.55	6/21/2022 2:42	19.48	6/20/2022 5:15	6.02
6/21/2022 1:56	35.59	6/21/2022 2:43	19.48	6/20/2022 5:16	6.05
6/21/2022 1:57	35.58	6/21/2022 2:44	19.48	6/20/2022 5:17	6.04
6/21/2022 1:58	35.57	6/21/2022 2:45	19.48	6/20/2022 5:18	6.06
6/21/2022 1:59	35.57	6/21/2022 2:46	19.49	6/20/2022 5:19	6.01
6/21/2022 2:00	35.54	6/21/2022 2:47	19.48	6/20/2022 5:20	6.07
6/21/2022 2:01	35.56	6/21/2022 2:48	19.49	6/20/2022 5:21	6.05
6/21/2022 2:02	35.54	6/21/2022 2:49	19.46	6/20/2022 5:22	6.04

6/21/2022 2:03	35.54	6/21/2022 2:50	19.47	6/20/2022 5:23	6.07
6/21/2022 2:04	35.58	6/21/2022 2:51	19.47	6/20/2022 5:24	6.02
6/21/2022 2:05	35.55	6/21/2022 2:52	19.46	6/20/2022 5:25	6.04
6/21/2022 2:06	35.57	6/21/2022 2:53	19.48	6/20/2022 5:26	6.07
6/21/2022 2:07	35.60	6/21/2022 2:54	19.49	6/20/2022 5:27	6.03
6/21/2022 2:08	35.59	6/21/2022 2:55	19.47	6/20/2022 5:28	6.05
6/21/2022 2:09	35.57	6/21/2022 2:56	19.48	6/20/2022 5:29	6.04
6/21/2022 2:10	35.64	6/21/2022 2:57	19.44	6/20/2022 5:30	6.06
6/21/2022 2:11	35.63	6/21/2022 2:58	19.48	6/20/2022 5:31	6.04
6/21/2022 2:12	35.67	6/21/2022 2:59	19.46	6/20/2022 5:32	6.06
6/21/2022 2:13	35.70	6/21/2022 3:00	19.48	6/20/2022 5:33	6.05
6/21/2022 2:14	35.67	6/21/2022 3:01	19.46	6/20/2022 5:34	6.05
6/21/2022 2:15	35.69	6/21/2022 3:02	19.46	6/20/2022 5:35	6.01
6/21/2022 2:16	35.73	6/21/2022 3:03	19.47	6/20/2022 5:36	6.06
6/21/2022 2:17	35.74	6/21/2022 3:04	19.50	6/20/2022 5:37	6.06
6/21/2022 2:18	35.75	6/21/2022 3:05	19.47	6/20/2022 5:38	6.02
6/21/2022 2:19	35.78	6/21/2022 3:06	19.49	6/20/2022 5:39	6.02
6/21/2022 2:20	35.75	6/21/2022 3:07	19.48	6/20/2022 5:40	6.06
6/21/2022 2:21	35.77	6/21/2022 3:08	19.48	6/20/2022 5:41	6.07
6/21/2022 2:22	35.74	6/21/2022 3:09	19.46	6/20/2022 5:42	6.05
6/21/2022 2:23	35.75	6/21/2022 3:10	19.47	6/20/2022 5:43	6.04
6/21/2022 2:24	35.74	6/21/2022 3:11	19.48	6/20/2022 5:44	6.05
6/21/2022 2:25	35.79	6/21/2022 3:12	19.47	6/20/2022 5:45	6.06
6/21/2022 2:26	35.79	6/21/2022 3:13	19.46	6/20/2022 5:46	6.05
6/21/2022 2:27	35.79	6/21/2022 3:14	19.48	6/20/2022 5:47	6.02
6/21/2022 2:28	35.80	6/21/2022 3:15	19.48	6/20/2022 5:48	6.03
6/21/2022 2:29	35.77	6/21/2022 3:16	19.45	6/20/2022 5:49	6.04
6/21/2022 2:30	35.77	6/21/2022 3:17	19.45	6/20/2022 5:50	6.03
6/21/2022 2:31	35.80	6/21/2022 3:18	19.47	6/20/2022 5:51	6.04
6/21/2022 2:32	35.80	6/21/2022 3:19	19.51	6/20/2022 5:52	6.06
6/21/2022 2:33	35.76	6/21/2022 3:20	19.47	6/20/2022 5:53	6.06
6/21/2022 2:34	35.73	6/21/2022 3:21	19.49	6/20/2022 5:54	6.04
6/21/2022 2:35	35.73	6/21/2022 3:22	19.47	6/20/2022 5:55	6.02
6/21/2022 2:36	35.73	6/21/2022 3:23	19.47	6/20/2022 5:56	6.05
6/21/2022 2:37	35.72	6/21/2022 3:24	19.46	6/20/2022 5:57	6.04
6/21/2022 2:38	35.73	6/21/2022 3:25	19.47	6/20/2022 5:58	6.03
6/21/2022 2:39	35.72	6/21/2022 3:26	19.51	6/20/2022 5:59	6.01
6/21/2022 2:40	35.67	6/21/2022 3:27	19.48	6/20/2022 6:00	6.06
6/21/2022 2:41	35.68	6/21/2022 3:28	19.46	6/20/2022 6:01	6.03
6/21/2022 2:42	35.72	6/21/2022 3:29	19.49	6/20/2022 6:02	6.03
6/21/2022 2:43	35.69	6/21/2022 3:30	19.47	6/20/2022 6:03	6.03
6/21/2022 2:44	35.68	6/21/2022 3:31	19.50	6/20/2022 6:04	6.02
6/21/2022 2:45	35.69	6/21/2022 3:32	19.50	6/20/2022 6:05	6.03
6/21/2022 2:46	35.70	6/21/2022 3:33	19.49	6/20/2022 6:06	6.07
6/21/2022 2:47	35.72	6/21/2022 3:34	19.49	6/20/2022 6:07	6.03
6/21/2022 2:48	35.67	6/21/2022 3:35	19.47	6/20/2022 6:08	6.05
6/21/2022 2:49	35.70	6/21/2022 3:36	19.48	6/20/2022 6:09	6.04
6/21/2022 2:50	35.69	6/21/2022 3:37	19.48	6/20/2022 6:10	6.04
6/21/2022 2:51	35.70	6/21/2022 3:38	19.50	6/20/2022 6:11	6.06
6/21/2022 2:52	35.68	6/21/2022 3:39	19.47	6/20/2022 6:12	6.05
6/21/2022 2:53	35.69	6/21/2022 3:40	19.47	6/20/2022 6:13	6.06
6/21/2022 2:54	35.71	6/21/2022 3:41	19.48	6/20/2022 6:14	6.05
6/21/2022 2:55	35.69	6/21/2022 3:42	19.49	6/20/2022 6:15	6.04
6/21/2022 2:56	35.70	6/21/2022 3:43	19.46	6/20/2022 6:16	6.00
6/21/2022 2:57	35.70	6/21/2022 3:44	19.47	6/20/2022 6:17	6.05
6/21/2022 2:58	35.67	6/21/2022 3:45	19.48	6/20/2022 6:18	6.06
6/21/2022 2:59	35.67	6/21/2022 3:46	19.48	6/20/2022 6:19	6.05
6/21/2022 3:00	35.67	6/21/2022 3:47	19.49	6/20/2022 6:20	6.04
6/21/2022 3:01	35.68	6/21/2022 3:48	19.47	6/20/2022 6:21	6.06
6/21/2022 3:02	35.67	6/21/2022 3:49	19.49	6/20/2022 6:22	6.04
6/21/2022 3:03	35.67	6/21/2022 3:50	19.48	6/20/2022 6:23	6.04
6/21/2022 3:04	35.67	6/21/2022 3:51	19.46	6/20/2022 6:24	6.07
6/21/2022 3:05	35.66	6/21/2022 3:52	19.48	6/20/2022 6:25	6.05
6/21/2022 3:06	35.70	6/21/2022 3:53	19.46	6/20/2022 6:26	6.05
6/21/2022 3:07	35.69	6/21/2022 3:54	19.47	6/20/2022 6:27	6.06
6/21/2022 3:08	35.66	6/21/2022 3:55	19.48	6/20/2022 6:28	6.06
6/21/2022 3:09	35.69	6/21/2022 3:56	19.50	6/20/2022 6:29	6.05
6/21/2022 3:10	35.68	6/21/2022 3:57	19.46	6/20/2022 6:30	6.05
6/21/2022 3:11	35.68	6/21/2022 3:58	19.48	6/20/2022 6:31	6.02
6/21/2022 3:12	35.67	6/21/2022 3:59	19.48	6/20/2022 6:32	6.05
6/21/2022 3:13	35.67	6/21/2022 4:00	19.47	6/20/2022 6:33	6.06
6/21/2022 3:14	35.68	6/21/2022 4:01	19.48	6/20/2022 6:34	6.06
6/21/2022 3:15	35.65	6/21/2022 4:02	19.49	6/20/2022 6:35	6.04
6/21/2022 3:16	35.66	6/21/2022 4:03	19.46	6/20/2022 6:36	6.03
6/21/2022 3:17	35.71	6/21/2022 4:04	19.48	6/20/2022 6:37	6.05
6/21/2022 3:18	35.68	6/21/2022 4:05	19.46	6/20/2022 6:38	6.06
6/21/2022 3:19	35.66	6/21/2022 4:06	19.49	6/20/2022 6:39	6.02
6/21/2022 3:20	35.67	6/21/2022 4:07	19.47	6/20/2022 6:40	6.05
6/21/2022 3:21	35.72	6/21/2022 4:08	19.49	6/20/2022 6:41	6.04
6/21/2022 3:22	35.66	6/21/2022 4:09	19.46	6/20/2022 6:42	6.05
6/21/2022 3:23	35.69	6/21/2022 4:10	19.48	6/20/2022 6:43	6.02
6/21/2022 3:24	35.65	6/21/2022 4:11	19.51	6/20/2022 6:44	6.08
6/21/2022 3:25	35.68	6/21/2022 4:12	19.50	6/20/2022 6:45	6.06
6/21/2022 3:26	35.69	6/21/2022 4:13	19.49	6/20/2022 6:46	6.03
6/21/2022 3:27	35.69	6/21/2022 4:14	19.46	6/20/2022 6:47	6.05
6/21/2022 3:28	35.66	6/21/2022 4:15	19.47	6/20/2022 6:48	6.06
6/21/2022 3:29	35.67	6/21/2022 4:16	19.48	6/20/2022 6:49	6.06
6/21/2022 3:30	35.70	6/21/2022 4:17	19.48	6/20/2022 6:50	6.07

6/21/2022 3:31	35.68	6/21/2022 4:18	19.47	6/20/2022 6:51	6.05
6/21/2022 3:32	35.67	6/21/2022 4:19	19.47	6/20/2022 6:52	6.07
6/21/2022 3:33	35.69	6/21/2022 4:20	19.48	6/20/2022 6:53	6.04
6/21/2022 3:34	35.69	6/21/2022 4:21	19.50	6/20/2022 6:54	6.04
6/21/2022 3:35	35.71	6/21/2022 4:22	19.48	6/20/2022 6:55	6.05
6/21/2022 3:36	35.68	6/21/2022 4:23	19.48	6/20/2022 6:56	8.67
6/21/2022 3:37	35.71	6/21/2022 4:24	19.48	6/20/2022 6:57	7.29
6/21/2022 3:38	35.71	6/21/2022 4:25	19.48	6/20/2022 6:58	6.13
6/21/2022 3:39	35.69	6/21/2022 4:26	19.49	6/20/2022 6:59	6.08
6/21/2022 3:40	35.69	6/21/2022 4:27	19.44	6/20/2022 7:00	6.09
6/21/2022 3:41	35.73	6/21/2022 4:28	19.48	6/20/2022 7:01	6.07
6/21/2022 3:42	35.71	6/21/2022 4:29	19.47	6/20/2022 7:02	6.07
6/21/2022 3:43	35.70	6/21/2022 4:30	19.49	6/20/2022 7:03	6.04
6/21/2022 3:44	35.72	6/21/2022 4:31	19.49	6/20/2022 7:04	6.04
6/21/2022 3:45	35.71	6/21/2022 4:32	19.47	6/20/2022 7:05	6.06
6/21/2022 3:46	35.72	6/21/2022 4:33	19.48	6/20/2022 7:06	6.03
6/21/2022 3:47	35.68	6/21/2022 4:34	19.50	6/20/2022 7:07	6.03
6/21/2022 3:48	35.69	6/21/2022 4:35	19.45	6/20/2022 7:08	6.05
6/21/2022 3:49	35.71	6/21/2022 4:36	19.46	6/20/2022 7:09	6.08
6/21/2022 3:50	35.71	6/21/2022 4:37	19.49	6/20/2022 7:10	6.06
6/21/2022 3:51	35.71	6/21/2022 4:38	19.48	6/20/2022 7:11	6.08
6/21/2022 3:52	35.73	6/21/2022 4:39	19.48	6/20/2022 7:12	6.05
6/21/2022 3:53	35.73	6/21/2022 4:40	19.51	6/20/2022 7:13	6.08
6/21/2022 3:54	35.70	6/21/2022 4:41	19.49	6/20/2022 7:14	6.05
6/21/2022 3:55	35.72	6/21/2022 4:42	19.47	6/20/2022 7:15	6.05
6/21/2022 3:56	35.70	6/21/2022 4:43	19.48	6/20/2022 7:16	6.07
6/21/2022 3:57	35.70	6/21/2022 4:44	19.47	6/20/2022 7:17	6.03
6/21/2022 3:58	35.71	6/21/2022 4:45	19.48	6/20/2022 7:18	6.06
6/21/2022 3:59	35.71	6/21/2022 4:46	19.51	6/20/2022 7:19	6.07
6/21/2022 4:00	35.72	6/21/2022 4:47	19.47	6/20/2022 7:20	6.03
6/21/2022 4:01	35.72	6/21/2022 4:48	19.49	6/20/2022 7:21	6.03
6/21/2022 4:02	35.72	6/21/2022 4:49	19.48	6/20/2022 7:22	6.05
6/21/2022 4:03	35.74	6/21/2022 4:50	19.47	6/20/2022 7:23	6.06
6/21/2022 4:04	35.75	6/21/2022 4:51	19.49	6/20/2022 7:24	6.04
6/21/2022 4:05	35.74	6/21/2022 4:52	19.46	6/20/2022 7:25	6.08
6/21/2022 4:06	35.74	6/21/2022 4:53	19.48	6/20/2022 7:26	6.06
6/21/2022 4:07	35.72	6/21/2022 4:54	19.48	6/20/2022 7:27	6.09
6/21/2022 4:08	35.72	6/21/2022 4:55	19.48	6/20/2022 7:28	6.07
6/21/2022 4:09	35.73	6/21/2022 4:56	19.48	6/20/2022 7:29	6.04
6/21/2022 4:10	35.74	6/21/2022 4:57	19.47	6/20/2022 7:30	6.03
6/21/2022 4:11	35.72	6/21/2022 4:58	19.46	6/20/2022 7:31	6.06
6/21/2022 4:12	35.74	6/21/2022 4:59	19.47	6/20/2022 7:32	6.04
6/21/2022 4:13	35.75	6/21/2022 5:00	19.46	6/20/2022 7:33	6.06
6/21/2022 4:14	35.75	6/21/2022 5:01	19.46	6/20/2022 7:34	6.08
6/21/2022 4:15	35.74	6/21/2022 5:02	19.49	6/20/2022 7:35	6.06
6/21/2022 4:16	35.73	6/21/2022 5:03	19.47	6/20/2022 7:36	6.02
6/21/2022 4:17	35.74	6/21/2022 5:04	19.48	6/20/2022 7:37	6.07
6/21/2022 4:18	35.77	6/21/2022 5:05	19.50	6/20/2022 7:38	6.06
6/21/2022 4:19	35.76	6/21/2022 5:06	19.49	6/20/2022 7:39	6.04
6/21/2022 4:20	35.74	6/21/2022 5:07	19.47	6/20/2022 7:40	6.04
6/21/2022 4:21	35.73	6/21/2022 5:08	19.46	6/20/2022 7:41	6.09
6/21/2022 4:22	35.74	6/21/2022 5:09	19.48	6/20/2022 7:42	6.08
6/21/2022 4:23	35.73	6/21/2022 5:10	19.47	6/20/2022 7:43	6.08
6/21/2022 4:24	35.74	6/21/2022 5:11	19.46	6/20/2022 7:44	6.04
6/21/2022 4:25	35.75	6/21/2022 5:12	19.48	6/20/2022 7:45	6.05
6/21/2022 4:26	35.75	6/21/2022 5:13	19.48	6/20/2022 7:46	6.02
6/21/2022 4:27	35.74	6/21/2022 5:14	19.48	6/20/2022 7:47	6.04
6/21/2022 4:28	35.75	6/21/2022 5:15	19.46	6/20/2022 7:48	6.04
6/21/2022 4:29	35.77	6/21/2022 5:16	19.46	6/20/2022 7:49	6.06
6/21/2022 4:30	35.75	6/21/2022 5:17	19.48	6/20/2022 7:50	6.03
6/21/2022 4:31	35.76	6/21/2022 5:18	19.48	6/20/2022 7:51	6.06
6/21/2022 4:32	35.76	6/21/2022 5:19	19.48	6/20/2022 7:52	6.06
6/21/2022 4:33	35.78	6/21/2022 5:20	19.49	6/20/2022 7:53	6.05
6/21/2022 4:34	35.75	6/21/2022 5:21	19.48	6/20/2022 7:54	6.04
6/21/2022 4:35	35.79	6/21/2022 5:22	19.48	6/20/2022 7:55	6.03
6/21/2022 4:36	35.76	6/21/2022 5:23	19.49	6/20/2022 7:56	6.07
6/21/2022 4:37	35.76	6/21/2022 5:24	19.48	6/20/2022 7:57	6.06
6/21/2022 4:38	35.75	6/21/2022 5:25	19.47	6/20/2022 7:58	6.06
6/21/2022 4:39	35.79	6/21/2022 5:26	19.47	6/20/2022 7:59	6.05
6/21/2022 4:40	35.78	6/21/2022 5:27	19.49	6/20/2022 8:00	6.06
6/21/2022 4:41	35.79	6/21/2022 5:28	19.49	6/20/2022 8:01	6.01
6/21/2022 4:42	35.77	6/21/2022 5:29	19.47	6/20/2022 8:02	6.03
6/21/2022 4:43	35.78	6/21/2022 5:30	19.49	6/20/2022 8:03	6.05
6/21/2022 4:44	35.78	6/21/2022 5:31	19.49	6/20/2022 8:04	6.02
6/21/2022 4:45	35.77	6/21/2022 5:32	19.48	6/20/2022 8:05	6.05
6/21/2022 4:46	35.76	6/21/2022 5:33	19.49	6/20/2022 8:06	6.03
6/21/2022 4:47	35.79	6/21/2022 5:34	19.47	6/20/2022 8:07	6.07
6/21/2022 4:48	35.81	6/21/2022 5:35	19.47	6/20/2022 8:08	6.02
6/21/2022 4:49	35.79	6/21/2022 5:36	19.47	6/20/2022 8:09	6.04
6/21/2022 4:50	35.80	6/21/2022 5:37	19.46	6/20/2022 8:10	6.05
6/21/2022 4:51	35.80	6/21/2022 5:38	19.47	6/20/2022 8:11	6.04
6/21/2022 4:52	35.84	6/21/2022 5:39	19.49	6/20/2022 8:12	6.05
6/21/2022 4:53	35.80	6/21/2022 5:40	19.47	6/20/2022 8:13	6.03
6/21/2022 4:54	35.78	6/21/2022 5:41	19.47	6/20/2022 8:14	6.02
6/21/2022 4:55	35.81	6/21/2022 5:42	19.45	6/20/2022 8:15	6.05
6/21/2022 4:56	35.80	6/21/2022 5:43	19.50	6/20/2022 8:16	6.05
6/21/2022 4:57	35.83	6/21/2022 5:44	19.48	6/20/2022 8:17	6.06
6/21/2022 4:58	35.83	6/21/2022 5:45	19.49	6/20/2022 8:18	6.06

6/21/2022 4:59	35.79	6/21/2022 5:46	19.49	6/20/2022 8:19	6.05
6/21/2022 5:00	35.80	6/21/2022 5:47	19.50	6/20/2022 8:20	6.05
6/21/2022 5:01	35.83	6/21/2022 5:48	19.50	6/20/2022 8:21	6.05
6/21/2022 5:02	35.78	6/21/2022 5:49	19.46	6/20/2022 8:22	6.03
6/21/2022 5:03	35.84	6/21/2022 5:50	19.49	6/20/2022 8:23	6.03
6/21/2022 5:04	35.80	6/21/2022 5:51	19.49	6/20/2022 8:24	6.04
6/21/2022 5:05	35.80	6/21/2022 5:52	19.51	6/20/2022 8:25	6.04
6/21/2022 5:06	35.80	6/21/2022 5:53	19.50	6/20/2022 8:26	6.03
6/21/2022 5:07	35.81	6/21/2022 5:54	19.47	6/20/2022 8:27	6.05
6/21/2022 5:08	35.81	6/21/2022 5:55	19.50	6/20/2022 8:28	6.03
6/21/2022 5:09	35.80	6/21/2022 5:56	19.49	6/20/2022 8:29	6.06
6/21/2022 5:10	35.83	6/21/2022 5:57	19.50	6/20/2022 8:30	6.05
6/21/2022 5:11	35.83	6/21/2022 5:58	19.49	6/20/2022 8:31	6.05
6/21/2022 5:12	35.81	6/21/2022 5:59	19.50	6/20/2022 8:32	6.02
6/21/2022 5:13	35.81	6/21/2022 6:00	19.91	6/20/2022 8:33	6.03
6/21/2022 5:14	35.85	6/21/2022 6:01	20.15	6/20/2022 8:34	6.04
6/21/2022 5:15	35.84	6/21/2022 6:02	20.21	6/20/2022 8:35	6.06
6/21/2022 5:16	35.81	6/21/2022 6:03	20.26	6/20/2022 8:36	6.05
6/21/2022 5:17	35.83	6/21/2022 6:04	20.29	6/20/2022 8:37	6.02
6/21/2022 5:18	35.85	6/21/2022 6:05	19.79	6/20/2022 8:38	6.06
6/21/2022 5:19	35.83	6/21/2022 6:06	19.71	6/20/2022 8:39	6.07
6/21/2022 5:20	35.84	6/21/2022 6:07	19.66	6/20/2022 8:40	6.05
6/21/2022 5:21	35.83	6/21/2022 6:08	19.64	6/20/2022 8:41	6.05
6/21/2022 5:22	35.85	6/21/2022 6:09	19.62	6/20/2022 8:42	6.03
6/21/2022 5:23	35.86	6/21/2022 6:10	19.66	6/20/2022 8:43	6.06
6/21/2022 5:24	35.86	6/21/2022 6:11	19.60	6/20/2022 8:44	6.04
6/21/2022 5:25	35.84	6/21/2022 6:12	19.61	6/20/2022 8:45	6.03
6/21/2022 5:26	35.86	6/21/2022 6:13	19.61	6/20/2022 8:46	6.05
6/21/2022 5:27	35.84	6/21/2022 6:14	19.57	6/20/2022 8:47	6.04
6/21/2022 5:28	35.84	6/21/2022 6:15	19.59	6/20/2022 8:48	6.04
6/21/2022 5:29	35.82	6/21/2022 6:16	19.56	6/20/2022 8:49	6.05
6/21/2022 5:30	35.85	6/21/2022 6:17	19.56	6/20/2022 8:50	6.03
6/21/2022 5:31	35.85	6/21/2022 6:18	19.57	6/20/2022 8:51	6.02
6/21/2022 5:32	35.87	6/21/2022 6:19	19.57	6/20/2022 8:52	6.03
6/21/2022 5:33	35.87	6/21/2022 6:20	19.57	6/20/2022 8:53	6.06
6/21/2022 5:34	35.83	6/21/2022 6:21	19.56	6/20/2022 8:54	6.02
6/21/2022 5:35	35.88	6/21/2022 6:22	19.54	6/20/2022 8:55	6.06
6/21/2022 5:36	35.87	6/21/2022 6:23	19.56	6/20/2022 8:56	6.03
6/21/2022 5:37	35.86	6/21/2022 6:24	19.55	6/20/2022 8:57	6.03
6/21/2022 5:38	35.84	6/21/2022 6:25	19.58	6/20/2022 8:58	6.04
6/21/2022 5:39	35.86	6/21/2022 6:26	19.55	6/20/2022 8:59	6.04
6/21/2022 5:40	35.84	6/21/2022 6:27	19.56	6/20/2022 9:00	6.04
6/21/2022 5:41	35.88	6/21/2022 6:28	19.57	6/20/2022 9:01	6.06
6/21/2022 5:42	35.88	6/21/2022 6:29	19.55	6/20/2022 9:02	6.04
6/21/2022 5:43	35.85	6/21/2022 6:30	19.55	6/20/2022 9:03	6.05
6/21/2022 5:44	35.89	6/21/2022 6:31	19.56	6/20/2022 9:04	6.05
6/21/2022 5:45	35.89	6/21/2022 6:32	19.53	6/20/2022 9:05	6.05
6/21/2022 5:46	35.87	6/21/2022 6:33	19.54	6/20/2022 9:06	6.04
6/21/2022 5:47	35.90	6/21/2022 6:34	19.54	6/20/2022 9:07	6.05
6/21/2022 5:48	35.87	6/21/2022 6:35	19.55	6/20/2022 9:08	6.05
6/21/2022 5:49	35.85	6/21/2022 6:36	19.54	6/20/2022 9:09	6.04
6/21/2022 5:50	35.87	6/21/2022 6:37	19.56	6/20/2022 9:10	6.05
6/21/2022 5:51	35.88	6/21/2022 6:38	19.55	6/20/2022 9:11	6.06
6/21/2022 5:52	35.91	6/21/2022 6:39	19.54	6/20/2022 9:12	6.03
6/21/2022 5:53	35.87	6/21/2022 6:40	19.52	6/20/2022 9:13	6.05
6/21/2022 5:54	35.89	6/21/2022 6:41	19.53	6/20/2022 9:14	6.05
6/21/2022 5:55	35.87	6/21/2022 6:42	19.55	6/20/2022 9:15	6.04
6/21/2022 5:56	35.89	6/21/2022 6:43	19.53	6/20/2022 9:16	6.04
6/21/2022 5:57	35.87	6/21/2022 6:44	19.54	6/20/2022 9:17	6.07
6/21/2022 5:58	35.91	6/21/2022 6:45	19.51	6/20/2022 9:18	6.07
6/21/2022 5:59	35.87	6/21/2022 6:46	19.51	6/20/2022 9:19	6.05
6/21/2022 6:00	35.91	6/21/2022 6:47	19.53	6/20/2022 9:20	6.06
6/21/2022 6:01	35.88	6/21/2022 6:48	19.52	6/20/2022 9:21	6.06
6/21/2022 6:02	35.87	6/21/2022 6:49	19.53	6/20/2022 9:22	6.04
6/21/2022 6:03	35.91	6/21/2022 6:50	20.15	6/20/2022 9:23	6.02
6/21/2022 6:04	35.87	6/21/2022 6:51	20.25	6/20/2022 9:24	6.08
6/21/2022 6:05	35.90	6/21/2022 6:52	20.29	6/20/2022 9:25	6.04
6/21/2022 6:06	35.93	6/21/2022 6:53	20.33	6/20/2022 9:26	6.03
6/21/2022 6:07	35.92	6/21/2022 6:54	20.30	6/20/2022 9:27	6.04
6/21/2022 6:08	35.91	6/21/2022 6:55	19.86	6/20/2022 9:28	6.05
6/21/2022 6:09	35.92	6/21/2022 6:56	19.75	6/20/2022 9:29	6.05
6/21/2022 6:10	35.91	6/21/2022 6:57	19.71	6/20/2022 9:30	6.07
6/21/2022 6:11	35.92	6/21/2022 6:58	19.71	6/20/2022 9:31	6.03
6/21/2022 6:12	35.91	6/21/2022 6:59	19.68	6/20/2022 9:32	6.05
6/21/2022 6:13	35.92	6/21/2022 7:00	19.65	6/20/2022 9:33	6.03
6/21/2022 6:14	35.92	6/21/2022 7:01	19.66	6/20/2022 9:34	6.05
6/21/2022 6:15	35.95	6/21/2022 7:02	19.65	6/20/2022 9:35	6.10
6/21/2022 6:16	35.93	6/21/2022 7:03	19.63	6/20/2022 9:36	6.02
6/21/2022 6:17	35.91	6/21/2022 7:04	19.62	6/20/2022 9:37	6.04
6/21/2022 6:18	35.91	6/21/2022 7:05	19.63	6/20/2022 9:38	6.05
6/21/2022 6:19	35.90	6/21/2022 7:06	19.60	6/20/2022 9:39	6.04
6/21/2022 6:20	35.95	6/21/2022 7:07	19.63	6/20/2022 9:40	6.05
6/21/2022 6:21	35.92	6/21/2022 7:08	19.60	6/20/2022 9:41	6.03
6/21/2022 6:22	35.95	6/21/2022 7:09	19.60	6/20/2022 9:42	6.06
6/21/2022 6:23	35.91	6/21/2022 7:10	19.62	6/20/2022 9:43	6.06
6/21/2022 6:24	35.95	6/21/2022 7:11	19.61	6/20/2022 9:44	6.04
6/21/2022 6:25	35.94	6/21/2022 7:12	19.58	6/20/2022 9:45	6.08
6/21/2022 6:26	35.93	6/21/2022 7:13	19.60	6/20/2022 9:46	6.05

6/21/2022 6:27	35.90	6/21/2022 7:14	19.58	6/20/2022 9:47	6.02
6/21/2022 6:28	35.94	6/21/2022 7:15	19.58	6/20/2022 9:48	6.06
6/21/2022 6:29	35.97	6/21/2022 7:16	19.57	6/20/2022 9:49	6.05
6/21/2022 6:30	35.93	6/21/2022 7:17	19.56	6/20/2022 9:50	6.05
6/21/2022 6:31	35.91	6/21/2022 7:18	19.59	6/20/2022 9:51	6.07
6/21/2022 6:32	35.94	6/21/2022 7:19	19.59	6/20/2022 9:52	6.05
6/21/2022 6:33	35.96	6/21/2022 7:20	19.57	6/20/2022 9:53	6.08
6/21/2022 6:34	35.94	6/21/2022 7:21	19.59	6/20/2022 9:54	6.03
6/21/2022 6:35	35.92	6/21/2022 7:22	19.57	6/20/2022 9:55	6.08
6/21/2022 6:36	35.95	6/21/2022 7:23	19.57	6/20/2022 9:56	6.06
6/21/2022 6:37	35.95	6/21/2022 7:24	19.57	6/20/2022 9:57	6.05
6/21/2022 6:38	35.95	6/21/2022 7:25	19.56	6/20/2022 9:58	6.06
6/21/2022 6:39	35.99	6/21/2022 7:26	19.57	6/20/2022 9:59	6.06
6/21/2022 6:40	35.98	6/21/2022 7:27	19.58	6/20/2022 10:00	6.05
6/21/2022 6:41	35.97	6/21/2022 7:28	19.58	6/20/2022 10:01	6.06
6/21/2022 6:42	35.98	6/21/2022 7:29	19.56	6/20/2022 10:02	6.07
6/21/2022 6:43	35.94	6/21/2022 7:30	19.57	6/20/2022 10:03	6.04
6/21/2022 6:44	36.98	6/21/2022 7:31	19.58	6/20/2022 10:04	6.03
6/21/2022 6:45	36.14	6/21/2022 7:32	19.55	6/20/2022 10:05	6.07
6/21/2022 6:46	36.06	6/21/2022 7:33	19.57	6/20/2022 10:06	6.05
6/21/2022 6:47	36.02	6/21/2022 7:34	19.55	6/20/2022 10:07	6.03
6/21/2022 6:48	36.03	6/21/2022 7:35	19.55	6/20/2022 10:08	6.04
6/21/2022 6:49	36.03	6/21/2022 7:36	19.53	6/20/2022 10:09	6.05
6/21/2022 6:50	36.03	6/21/2022 7:37	19.57	6/20/2022 10:10	6.06
6/21/2022 6:51	36.01	6/21/2022 7:38	19.55	6/20/2022 10:11	6.07
6/21/2022 6:52	36.03	6/21/2022 7:39	19.56	6/20/2022 10:12	6.06
6/21/2022 6:53	35.96	6/21/2022 7:40	19.55	6/20/2022 10:13	6.07
6/21/2022 6:54	36.00	6/21/2022 7:41	19.59	6/20/2022 10:14	6.07
6/21/2022 6:55	36.02	6/21/2022 7:42	19.55	6/20/2022 10:15	6.03
6/21/2022 6:56	36.01	6/21/2022 7:43	19.55	6/20/2022 10:16	6.04
6/21/2022 6:57	36.00	6/21/2022 7:44	19.56	6/20/2022 10:17	6.08
6/21/2022 6:58	35.99	6/21/2022 7:45	19.54	6/20/2022 10:18	6.06
6/21/2022 6:59	36.00	6/21/2022 7:46	19.56	6/20/2022 10:19	6.03
6/21/2022 7:00	36.01	6/21/2022 7:47	19.55	6/20/2022 10:20	6.05
6/21/2022 7:01	35.98	6/21/2022 7:48	19.54	6/20/2022 10:21	6.08
6/21/2022 7:02	36.01	6/21/2022 7:49	19.53	6/20/2022 10:22	6.72
6/21/2022 7:03	36.00	6/21/2022 7:50	19.50	6/20/2022 10:23	8.84
6/21/2022 7:04	35.99	6/21/2022 7:51	19.55	6/20/2022 10:24	8.93
6/21/2022 7:05	36.02	6/21/2022 7:52	19.52	6/20/2022 10:25	6.31
6/21/2022 7:06	35.99	6/21/2022 7:53	19.53	6/20/2022 10:26	6.12
6/21/2022 7:07	35.98	6/21/2022 7:54	19.55	6/20/2022 10:27	6.10
6/21/2022 7:08	35.98	6/21/2022 7:55	19.53	6/20/2022 10:28	6.06
6/21/2022 7:09	35.97	6/21/2022 7:56	19.54	6/20/2022 10:29	6.07
6/21/2022 7:10	35.99	6/21/2022 7:57	19.56	6/20/2022 10:30	6.09
6/21/2022 7:11	35.98	6/21/2022 7:58	19.55	6/20/2022 10:31	6.09
6/21/2022 7:12	36.04	6/21/2022 7:59	19.53	6/20/2022 10:32	6.06
6/21/2022 7:13	36.01	6/21/2022 8:00	19.53	6/20/2022 10:33	6.09
6/21/2022 7:14	35.99	6/21/2022 8:01	19.55	6/20/2022 10:34	6.08
6/21/2022 7:15	36.00	6/21/2022 8:02	19.54	6/20/2022 10:35	6.05
6/21/2022 7:16	35.99	6/21/2022 8:03	19.52	6/20/2022 10:36	6.12
6/21/2022 7:17	35.99	6/21/2022 8:04	19.54	6/20/2022 10:37	6.05
6/21/2022 7:18	36.01	6/21/2022 8:05	19.53	6/20/2022 10:38	6.07
6/21/2022 7:19	36.00	6/21/2022 8:06	19.53	6/20/2022 10:39	6.03
6/21/2022 7:20	36.02	6/21/2022 8:07	19.52	6/20/2022 10:40	6.08
6/21/2022 7:21	36.01	6/21/2022 8:08	19.54	6/20/2022 10:41	6.09
6/21/2022 7:22	36.03	6/21/2022 8:09	19.55	6/20/2022 10:42	6.04
6/21/2022 7:23	36.00	6/21/2022 8:10	19.55	6/20/2022 10:43	6.06
6/21/2022 7:24	36.01	6/21/2022 8:11	19.52	6/20/2022 10:44	6.08
6/21/2022 7:25	36.03	6/21/2022 8:12	19.51	6/20/2022 10:45	6.08
6/21/2022 7:26	36.07	6/21/2022 8:13	19.53	6/20/2022 10:46	6.05
6/21/2022 7:27	36.03	6/21/2022 8:14	19.53	6/20/2022 10:47	6.05
6/21/2022 7:28	36.01	6/21/2022 8:15	19.53	6/20/2022 10:48	6.07
6/21/2022 7:29	36.02	6/21/2022 8:16	19.52	6/20/2022 10:49	6.07
6/21/2022 7:30	36.04	6/21/2022 8:17	19.51	6/20/2022 10:50	6.08
6/21/2022 7:31	36.04	6/21/2022 8:18	19.49	6/20/2022 10:51	6.06
6/21/2022 7:32	36.05	6/21/2022 8:19	19.51	6/20/2022 10:52	6.07
6/21/2022 7:33	36.04	6/21/2022 8:20	19.50	6/20/2022 10:53	6.05
6/21/2022 7:34	36.06	6/21/2022 8:21	19.51	6/20/2022 10:54	6.04
6/21/2022 7:35	36.05	6/21/2022 8:22	19.53	6/20/2022 10:55	6.07
6/21/2022 7:36	36.02	6/21/2022 8:23	19.52	6/20/2022 10:56	6.09
6/21/2022 7:37	36.03	6/21/2022 8:24	19.51	6/20/2022 10:57	6.05
6/21/2022 7:38	36.69	6/21/2022 8:25	19.53	6/20/2022 10:58	6.07
6/21/2022 7:39	36.43	6/21/2022 8:26	19.51	6/20/2022 10:59	6.09
6/21/2022 7:40	36.23	6/21/2022 8:27	19.52	6/20/2022 11:00	6.04
6/21/2022 7:41	36.15	6/21/2022 8:28	19.50	6/20/2022 11:01	6.06
6/21/2022 7:42	36.14	6/21/2022 8:29	19.53	6/20/2022 11:02	6.04
6/21/2022 7:43	36.10	6/21/2022 8:30	19.54	6/20/2022 11:03	6.07
6/21/2022 7:44	36.14	6/21/2022 8:31	19.50	6/20/2022 11:04	6.07
6/21/2022 7:45	36.09	6/21/2022 8:32	19.53	6/20/2022 11:05	6.05
6/21/2022 7:46	36.14	6/21/2022 8:33	19.50	6/20/2022 11:06	6.04
6/21/2022 7:47	36.13	6/21/2022 8:34	19.52	6/20/2022 11:07	6.05
6/21/2022 7:48	36.12	6/21/2022 8:35	19.52	6/20/2022 11:08	6.06
6/21/2022 7:49	36.12	6/21/2022 8:36	19.50	6/20/2022 11:09	6.07
6/21/2022 7:50	36.11	6/21/2022 8:37	19.53	6/20/2022 11:10	6.07
6/21/2022 7:51	36.10	6/21/2022 8:38	19.54	6/20/2022 11:11	6.05
6/21/2022 7:52	36.13	6/21/2022 8:39	19.52	6/20/2022 11:12	6.03
6/21/2022 7:53	36.09	6/21/2022 8:40	19.51	6/20/2022 11:13	6.05
6/21/2022 7:54	36.09	6/21/2022 8:41	19.49	6/20/2022 11:14	6.04

6/21/2022 7:55	36.08	6/21/2022 8:42	19.52	6/20/2022 11:15	6.03
6/21/2022 7:56	36.10	6/21/2022 8:43	19.52	6/20/2022 11:16	6.06
6/21/2022 7:57	36.11	6/21/2022 8:44	19.53	6/20/2022 11:17	6.07
6/21/2022 7:58	36.11	6/21/2022 8:45	19.53	6/20/2022 11:18	6.06
6/21/2022 7:59	36.11	6/21/2022 8:46	19.50	6/20/2022 11:19	6.07
6/21/2022 8:00	36.09	6/21/2022 8:47	19.51	6/20/2022 11:20	6.05
6/21/2022 8:01	36.08	6/21/2022 8:48	19.49	6/20/2022 11:21	6.05
6/21/2022 8:02	36.10	6/21/2022 8:49	19.53	6/20/2022 11:22	6.09
6/21/2022 8:03	36.11	6/21/2022 8:50	19.50	6/20/2022 11:23	6.05
6/21/2022 8:04	36.10	6/21/2022 8:51	19.53	6/20/2022 11:24	6.05
6/21/2022 8:05	36.10	6/21/2022 8:52	19.51	6/20/2022 11:25	6.05
6/21/2022 8:06	36.06	6/21/2022 8:53	19.51	6/20/2022 11:26	6.06
6/21/2022 8:07	36.14	6/21/2022 8:54	19.54	6/20/2022 11:27	6.08
6/21/2022 8:08	36.13	6/21/2022 8:55	19.52	6/20/2022 11:28	6.06
6/21/2022 8:09	36.13	6/21/2022 8:56	19.52	6/20/2022 11:29	6.06
6/21/2022 8:10	36.14	6/21/2022 8:57	19.50	6/20/2022 11:30	6.04
6/21/2022 8:11	36.15	6/21/2022 8:58	19.51	6/20/2022 11:31	6.03
6/21/2022 8:12	36.11	6/21/2022 8:59	19.51	6/20/2022 11:32	6.05
6/21/2022 8:13	36.11	6/21/2022 9:00	19.52	6/20/2022 11:33	6.08
6/21/2022 8:14	36.15	6/21/2022 9:01	19.51	6/20/2022 11:34	6.08
6/21/2022 8:15	36.13	6/21/2022 9:02	19.52	6/20/2022 11:35	6.08
6/21/2022 8:16	36.13	6/21/2022 9:03	19.54	6/20/2022 11:36	6.07
6/21/2022 8:17	36.14	6/21/2022 9:04	19.51	6/20/2022 11:37	6.07
6/21/2022 8:18	36.10	6/21/2022 9:05	19.50	6/20/2022 11:38	6.05
6/21/2022 8:19	36.13	6/21/2022 9:06	19.50	6/20/2022 11:39	6.06
6/21/2022 8:20	36.15	6/21/2022 9:07	19.53	6/20/2022 11:40	6.10
6/21/2022 8:21	36.14	6/21/2022 9:08	19.52	6/20/2022 11:41	6.03
6/21/2022 8:22	36.14	6/21/2022 9:09	19.51	6/20/2022 11:42	6.07
6/21/2022 8:23	36.11	6/21/2022 9:10	19.50	6/20/2022 11:43	6.04
6/21/2022 8:24	36.12	6/21/2022 9:11	19.50	6/20/2022 11:44	6.03
6/21/2022 8:25	36.10	6/21/2022 9:12	19.50	6/20/2022 11:45	6.05
6/21/2022 8:26	36.10	6/21/2022 9:13	19.49	6/20/2022 11:46	6.05
6/21/2022 8:27	36.14	6/21/2022 9:14	19.52	6/20/2022 11:47	6.05
6/21/2022 8:28	36.14	6/21/2022 9:15	19.48	6/20/2022 11:48	6.07
6/21/2022 8:29	36.15	6/21/2022 9:16	19.49	6/20/2022 11:49	6.05
6/21/2022 8:30	36.10	6/21/2022 9:17	19.53	6/20/2022 11:50	6.07
6/21/2022 8:31	36.12	6/21/2022 9:18	19.51	6/20/2022 11:51	6.08
6/21/2022 8:32	36.13	6/21/2022 9:19	19.51	6/20/2022 11:52	6.05
6/21/2022 8:33	36.12	6/21/2022 9:20	19.49	6/20/2022 11:53	6.09
6/21/2022 8:34	36.14	6/21/2022 9:21	19.50	6/20/2022 11:54	6.10
6/21/2022 8:35	36.15	6/21/2022 9:22	19.49	6/20/2022 11:55	6.08
6/21/2022 8:36	36.14	6/21/2022 9:23	19.50	6/20/2022 11:56	6.07
6/21/2022 8:37	36.12	6/21/2022 9:24	19.51	6/20/2022 11:57	6.05
6/21/2022 8:38	36.12	6/21/2022 9:25	19.50	6/20/2022 11:58	6.07
6/21/2022 8:39	36.16	6/21/2022 9:26	19.50	6/20/2022 11:59	6.07
6/21/2022 8:40	36.15	6/21/2022 9:27	19.49	6/20/2022 12:00	6.05
6/21/2022 8:41	36.13	6/21/2022 9:28	19.49	6/20/2022 12:01	6.10
6/21/2022 8:42	36.13	6/21/2022 9:29	19.50	6/20/2022 12:02	6.05
6/21/2022 8:43	36.15	6/21/2022 9:30	19.51	6/20/2022 12:03	6.09
6/21/2022 8:44	36.11	6/21/2022 9:31	19.50	6/20/2022 12:04	6.07
6/21/2022 8:45	36.14	6/21/2022 9:32	19.48	6/20/2022 12:05	6.08
6/21/2022 8:46	36.14	6/21/2022 9:33	19.49	6/20/2022 12:06	6.04
6/21/2022 8:47	36.14	6/21/2022 9:34	19.49	6/20/2022 12:07	6.08
6/21/2022 8:48	36.16	6/21/2022 9:35	19.49	6/20/2022 12:08	7.73
6/21/2022 8:49	36.16	6/21/2022 9:36	19.51	6/20/2022 12:09	8.85
6/21/2022 8:50	36.17	6/21/2022 9:37	19.49	6/20/2022 12:10	6.60
6/21/2022 8:51	36.21	6/21/2022 9:38	19.49	6/20/2022 12:11	6.16
6/21/2022 8:52	36.18	6/21/2022 9:39	20.10	6/20/2022 12:12	6.12
6/21/2022 8:53	36.17	6/21/2022 9:40	20.20	6/20/2022 12:13	6.03
6/21/2022 8:54	36.16	6/21/2022 9:41	20.23	6/20/2022 12:14	6.05
6/21/2022 8:55	36.19	6/21/2022 9:42	20.27	6/20/2022 12:15	6.05
6/21/2022 8:56	36.18	6/21/2022 9:43	19.87	6/20/2022 12:16	6.09
6/21/2022 8:57	36.21	6/21/2022 9:44	19.74	6/20/2022 12:17	6.05
6/21/2022 8:58	36.16	6/21/2022 9:45	19.69	6/20/2022 12:18	6.07
6/21/2022 8:59	36.20	6/21/2022 9:46	19.66	6/20/2022 12:19	6.07
6/21/2022 9:00	36.21	6/21/2022 9:47	19.65	6/20/2022 12:20	6.10
6/21/2022 9:01	36.19	6/21/2022 9:48	19.63	6/20/2022 12:21	6.10
6/21/2022 9:02	36.17	6/21/2022 9:49	19.62	6/20/2022 12:22	6.08
6/21/2022 9:03	36.17	6/21/2022 9:50	19.64	6/20/2022 12:23	6.08
6/21/2022 9:04	36.18	6/21/2022 9:51	19.62	6/20/2022 12:24	6.07
6/21/2022 9:05	36.16	6/21/2022 9:52	19.61	6/20/2022 12:25	6.10
6/21/2022 9:06	36.19	6/21/2022 9:53	19.59	6/20/2022 12:26	6.08
6/21/2022 9:07	36.20	6/21/2022 9:54	19.58	6/20/2022 12:27	6.07
6/21/2022 9:08	36.18	6/21/2022 9:55	19.59	6/20/2022 12:28	6.09
6/21/2022 9:09	36.17	6/21/2022 9:56	19.59	6/20/2022 12:29	6.05
6/21/2022 9:10	36.15	6/21/2022 9:57	19.59	6/20/2022 12:30	6.05
6/21/2022 9:11	36.16	6/21/2022 9:58	19.58	6/20/2022 12:31	6.09
6/21/2022 9:12	36.17	6/21/2022 9:59	19.57	6/20/2022 12:32	6.06
6/21/2022 9:13	36.20	6/21/2022 10:00	19.58	6/20/2022 12:33	6.10
6/21/2022 9:14	37.26	6/21/2022 10:01	19.56	6/20/2022 12:34	6.07
6/21/2022 9:15	36.68	6/21/2022 10:02	19.56	6/20/2022 12:35	6.08
6/21/2022 9:16	36.37	6/21/2022 10:03	19.56	6/20/2022 12:36	6.07
6/21/2022 9:17	37.75	6/21/2022 10:04	19.56	6/20/2022 12:37	6.04
6/21/2022 9:18	36.89	6/21/2022 10:05	19.55	6/20/2022 12:38	6.10
6/21/2022 9:19	37.41	6/21/2022 10:06	19.56	6/20/2022 12:39	6.10
6/21/2022 9:20	37.10	6/21/2022 10:07	19.56	6/20/2022 12:40	6.09
6/21/2022 9:21	36.63	6/21/2022 10:08	19.56	6/20/2022 12:41	6.05
6/21/2022 9:22	37.84	6/21/2022 10:09	19.53	6/20/2022 12:42	6.05

6/21/2022 9:23	36.70	6/21/2022 10:10	19.56	6/20/2022 12:43	6.06
6/21/2022 9:24	36.58	6/21/2022 10:11	19.55	6/20/2022 12:44	6.08
6/21/2022 9:25	36.54	6/21/2022 10:12	19.55	6/20/2022 12:45	6.07
6/21/2022 9:26	36.54	6/21/2022 10:13	19.56	6/20/2022 12:46	6.08
6/21/2022 9:27	36.52	6/21/2022 10:14	19.55	6/20/2022 12:47	6.08
6/21/2022 9:28	36.48	6/21/2022 10:15	19.55	6/20/2022 12:48	6.07
6/21/2022 9:29	36.46	6/21/2022 10:16	19.56	6/20/2022 12:49	6.06
6/21/2022 9:30	36.42	6/21/2022 10:17	19.54	6/20/2022 12:50	6.03
6/21/2022 9:31	36.44	6/21/2022 10:18	19.54	6/20/2022 12:51	6.01
6/21/2022 9:32	36.42	6/21/2022 10:19	19.54	6/20/2022 12:52	6.09
6/21/2022 9:33	36.40	6/21/2022 10:20	19.54	6/20/2022 12:53	6.08
6/21/2022 9:34	36.38	6/21/2022 10:21	19.55	6/20/2022 12:54	6.04
6/21/2022 9:35	36.40	6/21/2022 10:22	19.54	6/20/2022 12:55	6.09
6/21/2022 9:36	36.38	6/21/2022 10:23	19.53	6/20/2022 12:56	6.07
6/21/2022 9:37	36.39	6/21/2022 10:24	19.54	6/20/2022 12:57	6.06
6/21/2022 9:38	36.37	6/21/2022 10:25	19.54	6/20/2022 12:58	6.05
6/21/2022 9:39	36.33	6/21/2022 10:26	19.55	6/20/2022 12:59	6.09
6/21/2022 9:40	36.33	6/21/2022 10:27	19.53	6/20/2022 13:00	6.05
6/21/2022 9:41	36.35	6/21/2022 10:28	19.56	6/20/2022 13:01	6.05
6/21/2022 9:42	37.75	6/21/2022 10:29	19.55	6/20/2022 13:02	6.05
6/21/2022 9:43	36.57	6/21/2022 10:30	19.52	6/20/2022 13:03	6.08
6/21/2022 9:44	36.46	6/21/2022 10:31	19.54	6/20/2022 13:04	8.26
6/21/2022 9:45	36.44	6/21/2022 10:32	19.52	6/20/2022 13:05	8.91
6/21/2022 9:46	36.44	6/21/2022 10:33	19.55	6/20/2022 13:06	6.47
6/21/2022 9:47	36.41	6/21/2022 10:34	19.52	6/20/2022 13:07	6.13
6/21/2022 9:48	36.41	6/21/2022 10:35	19.51	6/20/2022 13:08	6.08
6/21/2022 9:49	36.35	6/21/2022 10:36	19.54	6/20/2022 13:09	6.09
6/21/2022 9:50	36.40	6/21/2022 10:37	19.53	6/20/2022 13:10	6.07
6/21/2022 9:51	36.38	6/21/2022 10:38	19.52	6/20/2022 13:11	6.08
6/21/2022 9:52	36.39	6/21/2022 10:39	19.53	6/20/2022 13:12	6.09
6/21/2022 9:53	36.36	6/21/2022 10:40	19.54	6/20/2022 13:13	6.08
6/21/2022 9:54	36.36	6/21/2022 10:41	19.53	6/20/2022 13:14	6.11
6/21/2022 9:55	36.36	6/21/2022 10:42	19.53	6/20/2022 13:15	6.07
6/21/2022 9:56	36.33	6/21/2022 10:43	19.53	6/20/2022 13:16	6.11
6/21/2022 9:57	36.36	6/21/2022 10:44	19.54	6/20/2022 13:17	6.11
6/21/2022 9:58	36.34	6/21/2022 10:45	19.53	6/20/2022 13:18	6.08
6/21/2022 9:59	36.33	6/21/2022 10:46	19.52	6/20/2022 13:19	6.10
6/21/2022 10:00	36.36	6/21/2022 10:47	19.52	6/20/2022 13:20	6.07
6/21/2022 10:01	36.32	6/21/2022 10:48	19.51	6/20/2022 13:21	6.08
6/21/2022 10:02	36.35	6/21/2022 10:49	19.55	6/20/2022 13:22	6.10
6/21/2022 10:03	36.32	6/21/2022 10:50	19.53	6/20/2022 13:23	6.07
6/21/2022 10:04	36.35	6/21/2022 10:51	19.51	6/20/2022 13:24	6.09
6/21/2022 10:05	36.32	6/21/2022 10:52	19.54	6/20/2022 13:25	6.08
6/21/2022 10:06	36.32	6/21/2022 10:53	19.51	6/20/2022 13:26	6.06
6/21/2022 10:07	36.34	6/21/2022 10:54	19.51	6/20/2022 13:27	6.07
6/21/2022 10:08	36.32	6/21/2022 10:55	19.53	6/20/2022 13:28	6.10
6/21/2022 10:09	36.33	6/21/2022 10:56	19.49	6/20/2022 13:29	6.08
6/21/2022 10:10	36.32	6/21/2022 10:57	19.50	6/20/2022 13:30	6.07
6/21/2022 10:11	36.30	6/21/2022 10:58	19.52	6/20/2022 13:31	6.09
6/21/2022 10:12	36.32	6/21/2022 10:59	19.52	6/20/2022 13:32	6.10
6/21/2022 10:13	36.33	6/21/2022 11:00	19.51	6/20/2022 13:33	6.06
6/21/2022 10:14	36.32	6/21/2022 11:01	19.50	6/20/2022 13:34	6.08
6/21/2022 10:15	36.32	6/21/2022 11:02	19.51	6/20/2022 13:35	6.06
6/21/2022 10:16	36.33	6/21/2022 11:03	19.53	6/20/2022 13:36	6.07
6/21/2022 10:17	36.31	6/21/2022 11:04	19.51	6/20/2022 13:37	6.11
6/21/2022 10:18	36.32	6/21/2022 11:05	19.51	6/20/2022 13:38	6.09
6/21/2022 10:19	36.29	6/21/2022 11:06	19.51	6/20/2022 13:39	6.07
6/21/2022 10:20	36.31	6/21/2022 11:07	19.52	6/20/2022 13:40	6.08
6/21/2022 10:21	36.34	6/21/2022 11:08	19.50	6/20/2022 13:41	6.09
6/21/2022 10:22	36.35	6/21/2022 11:09	19.53	6/20/2022 13:42	6.07
6/21/2022 10:23	36.33	6/21/2022 11:10	19.48	6/20/2022 13:43	6.07
6/21/2022 10:24	36.33	6/21/2022 11:11	19.53	6/20/2022 13:44	6.06
6/21/2022 10:25	36.33	6/21/2022 11:12	19.52	6/20/2022 13:45	6.07
6/21/2022 10:26	36.33	6/21/2022 11:13	19.53	6/20/2022 13:46	6.07
6/21/2022 10:27	36.36	6/21/2022 11:14	19.53	6/20/2022 13:47	6.09
6/21/2022 10:28	36.35	6/21/2022 11:15	19.51	6/20/2022 13:48	6.08
6/21/2022 10:29	36.35	6/21/2022 11:16	19.50	6/20/2022 13:49	6.09
6/21/2022 10:30	36.34	6/21/2022 11:17	19.52	6/20/2022 13:50	6.07
6/21/2022 10:31	36.36	6/21/2022 11:18	19.51	6/20/2022 13:51	6.05
6/21/2022 10:32	36.35	6/21/2022 11:19	19.48	6/20/2022 13:52	6.09
6/21/2022 10:33	36.36	6/21/2022 11:20	19.50	6/20/2022 13:53	6.10
6/21/2022 10:34	36.34	6/21/2022 11:21	19.51	6/20/2022 13:54	6.08
6/21/2022 10:35	36.34	6/21/2022 11:22	19.49	6/20/2022 13:55	6.07
6/21/2022 10:36	36.37	6/21/2022 11:23	19.52	6/20/2022 13:56	6.09
6/21/2022 10:37	36.37	6/21/2022 11:24	19.50	6/20/2022 13:57	6.08
6/21/2022 10:38	36.34	6/21/2022 11:25	19.50	6/20/2022 13:58	6.05
6/21/2022 10:39	36.38	6/21/2022 11:26	19.52	6/20/2022 13:59	6.07
6/21/2022 10:40	36.40	6/21/2022 11:27	19.50	6/20/2022 14:00	6.07
6/21/2022 10:41	36.40	6/21/2022 11:28	19.52	6/20/2022 14:01	6.09
6/21/2022 10:42	36.42	6/21/2022 11:29	19.52	6/20/2022 14:02	6.09
6/21/2022 10:43	36.45	6/21/2022 11:30	19.50	6/20/2022 14:03	6.08
6/21/2022 10:44	36.48	6/21/2022 11:31	19.50	6/20/2022 14:04	6.10
6/21/2022 10:45	36.48	6/21/2022 11:32	19.51	6/20/2022 14:05	6.04
6/21/2022 10:46	36.55	6/21/2022 11:33	19.51	6/20/2022 14:06	6.07
6/21/2022 10:47	36.57	6/21/2022 11:34	19.52	6/20/2022 14:07	6.09
6/21/2022 10:48	36.54	6/21/2022 11:35	19.52	6/20/2022 14:08	6.07
6/21/2022 10:49	36.60	6/21/2022 11:36	19.52	6/20/2022 14:09	6.11
6/21/2022 10:50	36.59	6/21/2022 11:37	19.49	6/20/2022 14:10	6.10

6/21/2022 10:51	36.60	6/21/2022 11:38	19.51	6/20/2022 14:11	6.07
6/21/2022 10:52	36.61	6/21/2022 11:39	19.50	6/20/2022 14:12	6.11
6/21/2022 10:53	36.61	6/21/2022 11:40	19.53	6/20/2022 14:13	6.05
6/21/2022 10:54	36.66	6/21/2022 11:41	19.51	6/20/2022 14:14	6.06
6/21/2022 10:55	36.64	6/21/2022 11:42	19.52	6/20/2022 14:15	6.02
6/21/2022 10:56	36.61	6/21/2022 11:43	19.52	6/20/2022 14:16	6.05
6/21/2022 10:57	36.61	6/21/2022 11:44	19.51	6/20/2022 14:17	6.07
6/21/2022 10:58	36.63	6/21/2022 11:45	19.52	6/20/2022 14:18	6.07
6/21/2022 10:59	36.62	6/21/2022 11:46	19.50	6/20/2022 14:19	6.10
6/21/2022 11:00	36.64	6/21/2022 11:47	19.50	6/20/2022 14:20	6.12
6/21/2022 11:01	36.67	6/21/2022 11:48	19.51	6/20/2022 14:21	6.07
6/21/2022 11:02	36.68	6/21/2022 11:49	19.51	6/20/2022 14:22	6.10
6/21/2022 11:03	36.70	6/21/2022 11:50	19.52	6/20/2022 14:23	6.07
6/21/2022 11:04	36.74	6/21/2022 11:51	19.49	6/20/2022 14:24	6.07
6/21/2022 11:05	36.74	6/21/2022 11:52	19.53	6/20/2022 14:25	6.06
6/21/2022 11:06	36.75	6/21/2022 11:53	19.49	6/20/2022 14:26	6.10
6/21/2022 11:07	36.76	6/21/2022 11:54	19.51	6/20/2022 14:27	6.09
6/21/2022 11:08	36.76	6/21/2022 11:55	20.06	6/20/2022 14:28	6.11
6/21/2022 11:09	36.80	6/21/2022 11:56	20.22	6/20/2022 14:29	6.06
6/21/2022 11:10	36.75	6/21/2022 11:57	20.27	6/20/2022 14:30	6.09
6/21/2022 11:11	36.74	6/21/2022 11:58	20.29	6/20/2022 14:31	6.06
6/21/2022 11:12	36.71	6/21/2022 11:59	20.34	6/20/2022 14:32	6.05
6/21/2022 11:13	36.71	6/21/2022 12:00	19.87	6/20/2022 14:33	6.07
6/21/2022 11:14	36.69	6/21/2022 12:01	19.73	6/20/2022 14:34	6.08
6/21/2022 11:15	36.69	6/21/2022 12:02	19.70	6/20/2022 14:35	6.06
6/21/2022 11:16	36.67	6/21/2022 12:03	19.66	6/20/2022 14:36	6.07
6/21/2022 11:17	36.68	6/21/2022 12:04	19.67	6/20/2022 14:37	6.08
6/21/2022 11:18	36.65	6/21/2022 12:05	19.67	6/20/2022 14:38	6.06
6/21/2022 11:19	36.67	6/21/2022 12:06	19.63	6/20/2022 14:39	6.09
6/21/2022 11:20	36.66	6/21/2022 12:07	19.65	6/20/2022 14:40	6.06
6/21/2022 11:21	36.62	6/21/2022 12:08	19.64	6/20/2022 14:41	6.10
6/21/2022 11:22	36.65	6/21/2022 12:09	19.62	6/20/2022 14:42	6.09
6/21/2022 11:23	36.63	6/21/2022 12:10	19.62	6/20/2022 14:43	6.07
6/21/2022 11:24	36.62	6/21/2022 12:11	19.63	6/20/2022 14:44	6.05
6/21/2022 11:25	36.58	6/21/2022 12:12	19.62	6/20/2022 14:45	6.09
6/21/2022 11:26	36.64	6/21/2022 12:13	19.63	6/20/2022 14:46	6.09
6/21/2022 11:27	36.59	6/21/2022 12:14	19.61	6/20/2022 14:47	6.07
6/21/2022 11:28	36.59	6/21/2022 12:15	19.60	6/20/2022 14:48	6.09
6/21/2022 11:29	36.58	6/21/2022 12:16	19.60	6/20/2022 14:49	6.06
6/21/2022 11:30	36.62	6/21/2022 12:17	19.60	6/20/2022 14:50	6.07
6/21/2022 11:31	36.57	6/21/2022 12:18	19.61	6/20/2022 14:51	6.08
6/21/2022 11:32	36.55	6/21/2022 12:19	19.59	6/20/2022 14:52	6.09
6/21/2022 11:33	36.58	6/21/2022 12:20	19.59	6/20/2022 14:53	6.07
6/21/2022 11:34	36.55	6/21/2022 12:21	19.56	6/20/2022 14:54	6.10
6/21/2022 11:35	36.55	6/21/2022 12:22	19.60	6/20/2022 14:55	6.09
6/21/2022 11:36	36.56	6/21/2022 12:23	19.59	6/20/2022 14:56	6.42
6/21/2022 11:37	36.55	6/21/2022 12:24	19.58	6/20/2022 14:57	8.77
6/21/2022 11:38	36.55	6/21/2022 12:25	19.59	6/20/2022 14:58	7.24
6/21/2022 11:39	36.56	6/21/2022 12:26	19.58	6/20/2022 14:59	6.17
6/21/2022 11:40	36.54	6/21/2022 12:27	19.58	6/20/2022 15:00	6.11
6/21/2022 11:41	36.54	6/21/2022 12:28	19.52	6/20/2022 15:01	6.11
6/21/2022 11:42	36.55	6/21/2022 12:29	19.56	6/20/2022 15:02	6.08
6/21/2022 11:43	36.51	6/21/2022 12:30	19.58	6/20/2022 15:03	6.12
6/21/2022 11:44	36.54	6/21/2022 12:31	19.57	6/20/2022 15:04	6.09
6/21/2022 11:45	36.54	6/21/2022 12:32	19.58	6/20/2022 15:05	6.09
6/21/2022 11:46	36.55	6/21/2022 12:33	19.56	6/20/2022 15:06	6.09
6/21/2022 11:47	36.52	6/21/2022 12:34	19.56	6/20/2022 15:07	6.09
6/21/2022 11:48	36.51	6/21/2022 12:35	19.57	6/20/2022 15:08	6.09
6/21/2022 11:49	36.52	6/21/2022 12:36	19.56	6/20/2022 15:09	6.09
6/21/2022 11:50	36.53	6/21/2022 12:37	19.57	6/20/2022 15:10	6.05
6/21/2022 11:51	36.52	6/21/2022 12:38	19.56	6/20/2022 15:11	6.08
6/21/2022 11:52	36.52	6/21/2022 12:39	19.54	6/20/2022 15:12	6.11
6/21/2022 11:53	36.52	6/21/2022 12:40	19.58	6/20/2022 15:13	6.08
6/21/2022 11:54	36.52	6/21/2022 12:41	19.54	6/20/2022 15:14	6.08
6/21/2022 11:55	36.53	6/21/2022 12:42	19.55	6/20/2022 15:15	6.06
6/21/2022 11:56	36.54	6/21/2022 12:43	19.53	6/20/2022 15:16	6.09
6/21/2022 11:57	36.54	6/21/2022 12:44	19.55	6/20/2022 15:17	6.06
6/21/2022 11:58	36.52	6/21/2022 12:45	19.55	6/20/2022 15:18	6.09
6/21/2022 11:59	36.49	6/21/2022 12:46	19.52	6/20/2022 15:19	6.08
6/21/2022 12:00	36.54	6/21/2022 12:47	19.56	6/20/2022 15:20	6.09
6/21/2022 12:01	36.53	6/21/2022 12:48	19.55	6/20/2022 15:21	6.06
6/21/2022 12:02	36.52	6/21/2022 12:49	19.55	6/20/2022 15:22	6.07
6/21/2022 12:03	36.53	6/21/2022 12:50	19.53	6/20/2022 15:23	6.10
6/21/2022 12:04	36.51	6/21/2022 12:51	19.55	6/20/2022 15:24	6.06
6/21/2022 12:05	36.56	6/21/2022 12:52	19.56	6/20/2022 15:25	6.08
6/21/2022 12:06	36.54	6/21/2022 12:53	19.56	6/20/2022 15:26	6.08
6/21/2022 12:07	36.55	6/21/2022 12:54	19.55	6/20/2022 15:27	6.08
6/21/2022 12:08	36.58	6/21/2022 12:55	19.56	6/20/2022 15:28	6.11
6/21/2022 12:09	36.55	6/21/2022 12:56	19.55	6/20/2022 15:29	6.06
6/21/2022 12:10	36.54	6/21/2022 12:57	19.53	6/20/2022 15:30	6.08
6/21/2022 12:11	36.55	6/21/2022 12:58	19.54	6/20/2022 15:31	6.10
6/21/2022 12:12	36.56	6/21/2022 12:59	19.54	6/20/2022 15:32	6.10
6/21/2022 12:13	36.54	6/21/2022 13:00	19.52	6/20/2022 15:33	6.08
6/21/2022 12:14	36.51	6/21/2022 13:01	19.55	6/20/2022 15:34	6.05
6/21/2022 12:15	36.52	6/21/2022 13:02	19.51	6/20/2022 15:35	6.10
6/21/2022 12:16	36.53	6/21/2022 13:03	19.54	6/20/2022 15:36	6.09
6/21/2022 12:17	36.53	6/21/2022 13:04	19.56	6/20/2022 15:37	6.08
6/21/2022 12:18	36.55	6/21/2022 13:05	19.54	6/20/2022 15:38	6.11

6/21/2022 12:19	36.55	6/21/2022 13:06	19.51	6/20/2022 15:39	6.05
6/21/2022 12:20	36.56	6/21/2022 13:07	19.54	6/20/2022 15:40	6.10
6/21/2022 12:21	36.54	6/21/2022 13:08	19.55	6/20/2022 15:41	6.08
6/21/2022 12:22	36.55	6/21/2022 13:09	19.54	6/20/2022 15:42	6.11
6/21/2022 12:23	36.56	6/21/2022 13:10	19.54	6/20/2022 15:43	6.10
6/21/2022 12:24	36.51	6/21/2022 13:11	19.50	6/20/2022 15:44	6.10
6/21/2022 12:25	36.55	6/21/2022 13:12	19.54	6/20/2022 15:45	6.09
6/21/2022 12:26	36.52	6/21/2022 13:13	19.52	6/20/2022 15:46	6.09
6/21/2022 12:27	36.54	6/21/2022 13:14	19.50	6/20/2022 15:47	6.08
6/21/2022 12:28	36.56	6/21/2022 13:15	19.52	6/20/2022 15:48	6.10
6/21/2022 12:29	36.57	6/21/2022 13:16	19.53	6/20/2022 15:49	6.06
6/21/2022 12:30	36.54	6/21/2022 13:17	19.54	6/20/2022 15:50	6.09
6/21/2022 12:31	36.52	6/21/2022 13:18	19.51	6/20/2022 15:51	6.06
6/21/2022 12:32	36.53	6/21/2022 13:19	19.52	6/20/2022 15:52	6.10
6/21/2022 12:33	36.52	6/21/2022 13:20	19.53	6/20/2022 15:53	7.56
6/21/2022 12:34	36.52	6/21/2022 13:21	19.52	6/20/2022 15:54	8.96
6/21/2022 12:35	36.53	6/21/2022 13:22	19.52	6/20/2022 15:55	9.11
6/21/2022 12:36	36.55	6/21/2022 13:23	19.53	6/20/2022 15:56	9.05
6/21/2022 12:37	36.52	6/21/2022 13:24	19.51	6/20/2022 15:57	8.54
6/21/2022 12:38	36.54	6/21/2022 13:25	19.52	6/20/2022 15:58	6.29
6/21/2022 12:39	36.53	6/21/2022 13:26	19.53	6/20/2022 15:59	6.13
6/21/2022 12:40	36.54	6/21/2022 13:27	19.54	6/20/2022 16:00	6.15
6/21/2022 12:41	36.52	6/21/2022 13:28	19.53	6/20/2022 16:01	6.12
6/21/2022 12:42	36.53	6/21/2022 13:29	19.54	6/20/2022 16:02	6.09
6/21/2022 12:43	36.54	6/21/2022 13:30	19.52	6/20/2022 16:03	6.11
6/21/2022 12:44	36.53	6/21/2022 13:31	19.54	6/20/2022 16:04	6.09
6/21/2022 12:45	36.51	6/21/2022 13:32	19.50	6/20/2022 16:05	6.10
6/21/2022 12:46	36.53	6/21/2022 13:33	19.53	6/20/2022 16:06	6.12
6/21/2022 12:47	36.57	6/21/2022 13:34	19.52	6/20/2022 16:07	6.10
6/21/2022 12:48	36.55	6/21/2022 13:35	19.49	6/20/2022 16:08	6.12
6/21/2022 12:49	36.54	6/21/2022 13:36	19.51	6/20/2022 16:09	6.10
6/21/2022 12:50	36.53	6/21/2022 13:37	19.52	6/20/2022 16:10	6.08
6/21/2022 12:51	36.56	6/21/2022 13:38	19.53	6/20/2022 16:11	6.09
6/21/2022 12:52	36.53	6/21/2022 13:39	19.52	6/20/2022 16:12	6.13
6/21/2022 12:53	36.55	6/21/2022 13:40	19.49	6/20/2022 16:13	6.12
6/21/2022 12:54	36.52	6/21/2022 13:41	19.53	6/20/2022 16:14	6.12
6/21/2022 12:55	36.52	6/21/2022 13:42	19.51	6/20/2022 16:15	6.12
6/21/2022 12:56	36.54	6/21/2022 13:43	19.54	6/20/2022 16:16	6.10
6/21/2022 12:57	36.51	6/21/2022 13:44	19.50	6/20/2022 16:17	6.10
6/21/2022 12:58	36.54	6/21/2022 13:45	19.55	6/20/2022 16:18	6.11
6/21/2022 12:59	36.55	6/21/2022 13:46	19.53	6/20/2022 16:19	6.12
6/21/2022 13:00	36.51	6/21/2022 13:47	19.53	6/20/2022 16:20	6.10
6/21/2022 13:01	36.54	6/21/2022 13:48	19.53	6/20/2022 16:21	6.08
6/21/2022 13:02	37.14	6/21/2022 13:49	19.50	6/20/2022 16:22	6.07
6/21/2022 13:03	36.66	6/21/2022 13:50	19.54	6/20/2022 16:23	6.10
6/21/2022 13:04	36.62	6/21/2022 13:51	19.51	6/20/2022 16:24	6.11
6/21/2022 13:05	36.63	6/21/2022 13:52	19.50	6/20/2022 16:25	6.11
6/21/2022 13:06	36.61	6/21/2022 13:53	19.50	6/20/2022 16:26	6.09
6/21/2022 13:07	36.59	6/21/2022 13:54	19.49	6/20/2022 16:27	6.05
6/21/2022 13:08	36.58	6/21/2022 13:55	19.52	6/20/2022 16:28	6.09
6/21/2022 13:09	36.61	6/21/2022 13:56	19.49	6/20/2022 16:29	6.08
6/21/2022 13:10	36.61	6/21/2022 13:57	19.51	6/20/2022 16:30	6.08
6/21/2022 13:11	36.59	6/21/2022 13:58	19.51	6/20/2022 16:31	6.11
6/21/2022 13:12	36.60	6/21/2022 13:59	19.51	6/20/2022 16:32	6.08
6/21/2022 13:13	36.64	6/21/2022 14:00	19.51	6/20/2022 16:33	6.11
6/21/2022 13:14	36.60	6/21/2022 14:01	19.52	6/20/2022 16:34	7.60
6/21/2022 13:15	36.64	6/21/2022 14:02	19.48	6/20/2022 16:35	8.96
6/21/2022 13:16	36.62	6/21/2022 14:03	19.52	6/20/2022 16:36	9.10
6/21/2022 13:17	36.63	6/21/2022 14:04	19.51	6/20/2022 16:37	9.01
6/21/2022 13:18	36.63	6/21/2022 14:05	19.49	6/20/2022 16:38	7.28
6/21/2022 13:19	36.62	6/21/2022 14:06	19.52	6/20/2022 16:39	6.24
6/21/2022 13:20	36.61	6/21/2022 14:07	19.52	6/20/2022 16:40	6.16
6/21/2022 13:21	36.60	6/21/2022 14:08	19.52	6/20/2022 16:41	6.14
6/21/2022 13:22	36.59	6/21/2022 14:09	19.52	6/20/2022 16:42	6.14
6/21/2022 13:23	36.60	6/21/2022 14:10	19.50	6/20/2022 16:43	6.12
6/21/2022 13:24	36.57	6/21/2022 14:11	19.49	6/20/2022 16:44	6.10
6/21/2022 13:25	36.57	6/21/2022 14:12	19.50	6/20/2022 16:45	6.11
6/21/2022 13:26	36.60	6/21/2022 14:13	19.50	6/20/2022 16:46	6.12
6/21/2022 13:27	36.58	6/21/2022 14:14	19.50	6/20/2022 16:47	6.13
6/21/2022 13:28	36.59	6/21/2022 14:15	19.51	6/20/2022 16:48	6.10
6/21/2022 13:29	36.59	6/21/2022 14:16	19.53	6/20/2022 16:49	6.12
6/21/2022 13:30	36.56	6/21/2022 14:17	19.50	6/20/2022 16:50	6.09
6/21/2022 13:31	36.59	6/21/2022 14:18	19.49	6/20/2022 16:51	6.11
6/21/2022 13:32	36.59	6/21/2022 14:19	19.48	6/20/2022 16:52	6.09
6/21/2022 13:33	36.59	6/21/2022 14:20	19.51	6/20/2022 16:53	6.10
6/21/2022 13:34	36.58	6/21/2022 14:21	19.48	6/20/2022 16:54	6.08
6/21/2022 13:35	36.59	6/21/2022 14:22	19.51	6/20/2022 16:55	6.09
6/21/2022 13:36	36.58	6/21/2022 14:23	19.50	6/20/2022 16:56	6.10
6/21/2022 13:37	36.58	6/21/2022 14:24	19.49	6/20/2022 16:57	6.10
6/21/2022 13:38	36.60	6/21/2022 14:25	19.49	6/20/2022 16:58	6.12
6/21/2022 13:39	36.59	6/21/2022 14:26	19.51	6/20/2022 16:59	6.09
6/21/2022 13:40	36.60	6/21/2022 14:27	19.48	6/20/2022 17:00	6.10
6/21/2022 13:41	36.58	6/21/2022 14:28	19.51	6/20/2022 17:01	6.15
6/21/2022 13:42	36.58	6/21/2022 14:29	19.51	6/20/2022 17:02	6.07
6/21/2022 13:43	36.62	6/21/2022 14:30	19.50	6/20/2022 17:03	6.09
6/21/2022 13:44	36.61	6/21/2022 14:31	19.50	6/20/2022 17:04	6.11
6/21/2022 13:45	36.58	6/21/2022 14:32	19.49	6/20/2022 17:05	6.08
6/21/2022 13:46	36.58	6/21/2022 14:33	19.49	6/20/2022 17:06	6.13

6/21/2022 13:47	36.55	6/21/2022 14:34	19.51	6/20/2022 17:07	6.10
6/21/2022 13:48	36.59	6/21/2022 14:35	19.49	6/20/2022 17:08	6.12
6/21/2022 13:49	36.60	6/21/2022 14:36	19.51	6/20/2022 17:09	6.12
6/21/2022 13:50	36.59	6/21/2022 14:37	19.49	6/20/2022 17:10	6.08
6/21/2022 13:51	36.59	6/21/2022 14:38	19.48	6/20/2022 17:11	6.11
6/21/2022 13:52	36.58	6/21/2022 14:39	19.50	6/20/2022 17:12	6.09
6/21/2022 13:53	36.57	6/21/2022 14:40	19.50	6/20/2022 17:13	6.10
6/21/2022 13:54	36.60	6/21/2022 14:41	19.50	6/20/2022 17:14	6.09
6/21/2022 13:55	36.59	6/21/2022 14:42	19.49	6/20/2022 17:15	6.10
6/21/2022 13:56	36.62	6/21/2022 14:43	19.47	6/20/2022 17:16	6.10
6/21/2022 13:57	36.56	6/21/2022 14:44	19.49	6/20/2022 17:17	6.09
6/21/2022 13:58	36.59	6/21/2022 14:45	19.50	6/20/2022 17:18	6.09
6/21/2022 13:59	36.63	6/21/2022 14:46	19.50	6/20/2022 17:19	6.12
6/21/2022 14:00	36.59	6/21/2022 14:47	19.50	6/20/2022 17:20	6.09
6/21/2022 14:01	36.58	6/21/2022 14:48	19.53	6/20/2022 17:21	6.10
6/21/2022 14:02	36.62	6/21/2022 14:49	19.49	6/20/2022 17:22	6.09
6/21/2022 14:03	36.60	6/21/2022 14:50	19.49	6/20/2022 17:23	6.10
6/21/2022 14:04	36.61	6/21/2022 14:51	19.49	6/20/2022 17:24	6.07
6/21/2022 14:05	36.57	6/21/2022 14:52	19.50	6/20/2022 17:25	6.13
6/21/2022 14:06	36.60	6/21/2022 14:53	19.47	6/20/2022 17:26	6.11
6/21/2022 14:07	36.63	6/21/2022 14:54	19.52	6/20/2022 17:27	6.09
6/21/2022 14:08	36.61	6/21/2022 14:55	19.52	6/20/2022 17:28	6.10
6/21/2022 14:09	36.56	6/21/2022 14:56	19.50	6/20/2022 17:29	6.11
6/21/2022 14:10	36.61	6/21/2022 14:57	19.48	6/20/2022 17:30	6.09
6/21/2022 14:11	36.63	6/21/2022 14:58	19.49	6/20/2022 17:31	6.13
6/21/2022 14:12	36.60	6/21/2022 14:59	19.49	6/20/2022 17:32	6.09
6/21/2022 14:13	36.60	6/21/2022 15:00	19.47	6/20/2022 17:33	6.10
6/21/2022 14:14	36.60	6/21/2022 15:01	19.47	6/20/2022 17:34	6.09
6/21/2022 14:15	36.60	6/21/2022 15:02	19.49	6/20/2022 17:35	6.10
6/21/2022 14:16	36.61	6/21/2022 15:03	19.52	6/20/2022 17:36	6.13
6/21/2022 14:17	36.59	6/21/2022 15:04	19.47	6/20/2022 17:37	6.08
6/21/2022 14:18	36.60	6/21/2022 15:05	19.46	6/20/2022 17:38	6.10
6/21/2022 14:19	36.62	6/21/2022 15:06	19.51	6/20/2022 17:39	6.11
6/21/2022 14:20	36.61	6/21/2022 15:07	19.49	6/20/2022 17:40	6.12
6/21/2022 14:21	36.61	6/21/2022 15:08	19.50	6/20/2022 17:41	6.11
6/21/2022 14:22	36.60	6/21/2022 15:09	19.50	6/20/2022 17:42	6.11
6/21/2022 14:23	36.59	6/21/2022 15:10	19.48	6/20/2022 17:43	6.10
6/21/2022 14:24	36.62	6/21/2022 15:11	19.48	6/20/2022 17:44	6.11
6/21/2022 14:25	36.60	6/21/2022 15:12	19.49	6/20/2022 17:45	6.11
6/21/2022 14:26	36.59	6/21/2022 15:13	19.47	6/20/2022 17:46	6.08
6/21/2022 14:27	36.62	6/21/2022 15:14	19.48	6/20/2022 17:47	6.09
6/21/2022 14:28	36.60	6/21/2022 15:15	19.49	6/20/2022 17:48	6.11
6/21/2022 14:29	36.59	6/21/2022 15:16	19.47	6/20/2022 17:49	6.09
6/21/2022 14:30	36.56	6/21/2022 15:17	19.50	6/20/2022 17:50	6.10
6/21/2022 14:31	36.62	6/21/2022 15:18	19.47	6/20/2022 17:51	6.08
6/21/2022 14:32	36.62	6/21/2022 15:19	19.52	6/20/2022 17:52	6.12
6/21/2022 14:33	36.61	6/21/2022 15:20	19.49	6/20/2022 17:53	6.07
6/21/2022 14:34	36.58	6/21/2022 15:21	19.49	6/20/2022 17:54	6.08
6/21/2022 14:35	36.57	6/21/2022 15:22	19.49	6/20/2022 17:55	6.11
6/21/2022 14:36	36.62	6/21/2022 15:23	19.50	6/20/2022 17:56	6.09
6/21/2022 14:37	36.61	6/21/2022 15:24	19.49	6/20/2022 17:57	6.09
6/21/2022 14:38	36.60	6/21/2022 15:25	19.48	6/20/2022 17:58	6.15
6/21/2022 14:39	36.60	6/21/2022 15:26	19.49	6/20/2022 17:59	6.10
6/21/2022 14:40	36.63	6/21/2022 15:27	19.51	6/20/2022 18:00	6.09
6/21/2022 14:41	36.60	6/21/2022 15:28	19.49	6/20/2022 18:01	6.11
6/21/2022 14:42	36.58	6/21/2022 15:29	19.50	6/20/2022 18:02	8.47
6/21/2022 14:43	37.40	6/21/2022 15:30	19.46	6/20/2022 18:03	8.81
6/21/2022 14:44	37.07	6/21/2022 15:31	19.48	6/20/2022 18:04	6.26
6/21/2022 14:45	36.81	6/21/2022 15:32	19.49	6/20/2022 18:05	6.12
6/21/2022 14:46	36.72	6/21/2022 15:33	19.50	6/20/2022 18:06	6.13
6/21/2022 14:47	36.75	6/21/2022 15:34	19.49	6/20/2022 18:07	6.13
6/21/2022 14:48	36.69	6/21/2022 15:35	19.47	6/20/2022 18:08	6.15
6/21/2022 14:49	36.67	6/21/2022 15:36	19.49	6/20/2022 18:09	6.10
6/21/2022 14:50	36.67	6/21/2022 15:37	19.48	6/20/2022 18:10	6.09
6/21/2022 14:51	36.64	6/21/2022 15:38	19.49	6/20/2022 18:11	6.12
6/21/2022 14:52	36.69	6/21/2022 15:39	19.52	6/20/2022 18:12	6.13
6/21/2022 14:53	36.65	6/21/2022 15:40	19.48	6/20/2022 18:13	6.15
6/21/2022 14:54	36.66	6/21/2022 15:41	19.48	6/20/2022 18:14	6.12
6/21/2022 14:55	36.64	6/21/2022 15:42	19.49	6/20/2022 18:15	6.15
6/21/2022 14:56	36.68	6/21/2022 15:43	19.48	6/20/2022 18:16	6.13
6/21/2022 14:57	36.67	6/21/2022 15:44	19.49	6/20/2022 18:17	6.12
6/21/2022 14:58	36.66	6/21/2022 15:45	19.48	6/20/2022 18:18	6.09
6/21/2022 14:59	36.68	6/21/2022 15:46	19.50	6/20/2022 18:19	6.10
6/21/2022 15:00	36.65	6/21/2022 15:47	19.49	6/20/2022 18:20	6.13
6/21/2022 15:01	36.67	6/21/2022 15:48	19.49	6/20/2022 18:21	6.09
6/21/2022 15:02	36.67	6/21/2022 15:49	19.53	6/20/2022 18:22	6.10
6/21/2022 15:03	36.66	6/21/2022 15:50	19.49	6/20/2022 18:23	6.08
6/21/2022 15:04	36.64	6/21/2022 15:51	19.49	6/20/2022 18:24	6.11
6/21/2022 15:05	36.65	6/21/2022 15:52	19.49	6/20/2022 18:25	6.09
6/21/2022 15:06	36.62	6/21/2022 15:53	19.47	6/20/2022 18:26	6.12
6/21/2022 15:07	36.66	6/21/2022 15:54	19.49	6/20/2022 18:27	6.11
6/21/2022 15:08	36.64	6/21/2022 15:55	19.45	6/20/2022 18:28	6.11
6/21/2022 15:09	36.67	6/21/2022 15:56	19.45	6/20/2022 18:29	6.09
6/21/2022 15:10	36.66	6/21/2022 15:57	19.45	6/20/2022 18:30	6.12
6/21/2022 15:11	36.70	6/21/2022 15:58	19.49	6/20/2022 18:31	6.08
6/21/2022 15:12	36.65	6/21/2022 15:59	19.49	6/20/2022 18:32	6.12
6/21/2022 15:13	36.65	6/21/2022 16:00	19.48	6/20/2022 18:33	6.12
6/21/2022 15:14	36.65	6/21/2022 16:01	19.49	6/20/2022 18:34	6.10

6/21/2022 15:15	36.64	6/21/2022 16:02	19.50	6/20/2022 18:35	6.11
6/21/2022 15:16	36.66	6/21/2022 16:03	19.49	6/20/2022 18:36	6.11
6/21/2022 15:17	36.63	6/21/2022 16:04	19.50	6/20/2022 18:37	6.11
6/21/2022 15:18	36.64	6/21/2022 16:05	19.48	6/20/2022 18:38	6.11
6/21/2022 15:19	36.69	6/21/2022 16:06	19.45	6/20/2022 18:39	6.10
6/21/2022 15:20	36.67	6/21/2022 16:07	19.49	6/20/2022 18:40	6.11
6/21/2022 15:21	36.67	6/21/2022 16:08	19.49	6/20/2022 18:41	6.12
6/21/2022 15:22	36.66	6/21/2022 16:09	19.49	6/20/2022 18:42	6.13
6/21/2022 15:23	36.66	6/21/2022 16:10	19.51	6/20/2022 18:43	6.11
6/21/2022 15:24	36.66	6/21/2022 16:11	19.47	6/20/2022 18:44	6.12
6/21/2022 15:25	36.65	6/21/2022 16:12	19.50	6/20/2022 18:45	6.10
6/21/2022 15:26	36.65	6/21/2022 16:13	19.48	6/20/2022 18:46	6.09
6/21/2022 15:27	36.67	6/21/2022 16:14	20.06	6/20/2022 18:47	6.07
6/21/2022 15:28	36.64	6/21/2022 16:15	20.19	6/20/2022 18:48	6.10
6/21/2022 15:29	36.64	6/21/2022 16:16	20.21	6/20/2022 18:49	6.10
6/21/2022 15:30	36.63	6/21/2022 16:17	20.26	6/20/2022 18:50	6.13
6/21/2022 15:31	36.66	6/21/2022 16:18	20.11	6/20/2022 18:51	6.11
6/21/2022 15:32	36.67	6/21/2022 16:19	19.72	6/20/2022 18:52	6.10
6/21/2022 15:33	36.67	6/21/2022 16:20	19.67	6/20/2022 18:53	6.14
6/21/2022 15:34	36.69	6/21/2022 16:21	19.65	6/20/2022 18:54	6.07
6/21/2022 15:35	36.64	6/21/2022 16:22	19.63	6/20/2022 18:55	6.09
6/21/2022 15:36	36.68	6/21/2022 16:23	19.59	6/20/2022 18:56	6.08
6/21/2022 15:37	36.73	6/21/2022 16:24	19.61	6/20/2022 18:57	6.09
6/21/2022 15:38	36.73	6/21/2022 16:25	19.60	6/20/2022 18:58	6.10
6/21/2022 15:39	36.70	6/21/2022 16:26	19.60	6/20/2022 18:59	6.10
6/21/2022 15:40	36.74	6/21/2022 16:27	19.59	6/20/2022 19:00	6.10
6/21/2022 15:41	36.72	6/21/2022 16:28	19.58	6/20/2022 19:01	6.10
6/21/2022 15:42	36.71	6/21/2022 16:29	19.57	6/20/2022 19:02	6.13
6/21/2022 15:43	36.70	6/21/2022 16:30	19.56	6/20/2022 19:03	6.09
6/21/2022 15:44	36.72	6/21/2022 16:31	19.57	6/20/2022 19:04	6.13
6/21/2022 15:45	36.70	6/21/2022 16:32	19.57	6/20/2022 19:05	6.13
6/21/2022 15:46	36.74	6/21/2022 16:33	19.54	6/20/2022 19:06	6.11
6/21/2022 15:47	36.69	6/21/2022 16:34	19.58	6/20/2022 19:07	6.09
6/21/2022 15:48	36.72	6/21/2022 16:35	19.58	6/20/2022 19:08	6.08
6/21/2022 15:49	36.71	6/21/2022 16:36	19.56	6/20/2022 19:09	6.07
6/21/2022 15:50	36.74	6/21/2022 16:37	19.55	6/20/2022 19:10	6.12
6/21/2022 15:51	36.72	6/21/2022 16:38	19.55	6/20/2022 19:11	6.12
6/21/2022 15:52	36.70	6/21/2022 16:39	19.54	6/20/2022 19:12	6.12
6/21/2022 15:53	36.73	6/21/2022 16:40	19.56	6/20/2022 19:13	6.08
6/21/2022 15:54	36.70	6/21/2022 16:41	19.56	6/20/2022 19:14	6.10
6/21/2022 15:55	36.71	6/21/2022 16:42	19.55	6/20/2022 19:15	6.12
6/21/2022 15:56	36.70	6/21/2022 16:43	19.57	6/20/2022 19:16	6.12
6/21/2022 15:57	36.71	6/21/2022 16:44	19.56	6/20/2022 19:17	6.09
6/21/2022 15:58	36.72	6/21/2022 16:45	19.55	6/20/2022 19:18	6.11
6/21/2022 15:59	36.73	6/21/2022 16:46	19.56	6/20/2022 19:19	6.09
6/21/2022 16:00	36.69	6/21/2022 16:47	19.53	6/20/2022 19:20	6.11
6/21/2022 16:01	36.71	6/21/2022 16:48	19.52	6/20/2022 19:21	6.10
6/21/2022 16:02	36.71	6/21/2022 16:49	19.54	6/20/2022 19:22	6.14
6/21/2022 16:03	36.71	6/21/2022 16:50	19.52	6/20/2022 19:23	6.10
6/21/2022 16:04	36.73	6/21/2022 16:51	19.55	6/20/2022 19:24	6.08
6/21/2022 16:05	36.71	6/21/2022 16:52	19.55	6/20/2022 19:25	6.09
6/21/2022 16:06	36.72	6/21/2022 16:53	19.54	6/20/2022 19:26	6.08
6/21/2022 16:07	36.71	6/21/2022 16:54	19.55	6/20/2022 19:27	6.12
6/21/2022 16:08	36.71	6/21/2022 16:55	19.53	6/20/2022 19:28	6.10
6/21/2022 16:09	36.73	6/21/2022 16:56	19.53	6/20/2022 19:29	6.10
6/21/2022 16:10	36.70	6/21/2022 16:57	19.53	6/20/2022 19:30	6.11
6/21/2022 16:11	36.69	6/21/2022 16:58	19.56	6/20/2022 19:31	6.10
6/21/2022 16:12	36.73	6/21/2022 16:59	19.51	6/20/2022 19:32	6.11
6/21/2022 16:13	36.78	6/21/2022 17:00	19.52	6/20/2022 19:33	6.13
6/21/2022 16:14	36.79	6/21/2022 17:01	19.54	6/20/2022 19:34	6.11
6/21/2022 16:15	36.80	6/21/2022 17:02	19.54	6/20/2022 19:35	6.14
6/21/2022 16:16	36.82	6/21/2022 17:03	19.52	6/20/2022 19:36	6.09
6/21/2022 16:17	36.83	6/21/2022 17:04	19.52	6/20/2022 19:37	6.09
6/21/2022 16:18	36.87	6/21/2022 17:05	19.54	6/20/2022 19:38	6.10
6/21/2022 16:19	36.88	6/21/2022 17:06	19.50	6/20/2022 19:39	6.12
6/21/2022 16:20	36.84	6/21/2022 17:07	19.55	6/20/2022 19:40	6.09
6/21/2022 16:21	36.81	6/21/2022 17:08	19.53	6/20/2022 19:41	6.11
6/21/2022 16:22	36.84	6/21/2022 17:09	19.54	6/20/2022 19:42	6.13
6/21/2022 16:23	36.81	6/21/2022 17:10	19.52	6/20/2022 19:43	6.09
6/21/2022 16:24	36.83	6/21/2022 17:11	19.55	6/20/2022 19:44	6.11
6/21/2022 16:25	36.82	6/21/2022 17:12	19.51	6/20/2022 19:45	6.12
6/21/2022 16:26	36.82	6/21/2022 17:13	19.52	6/20/2022 19:46	6.13
6/21/2022 16:27	36.82	6/21/2022 17:14	19.52	6/20/2022 19:47	6.13
6/21/2022 16:28	36.81	6/21/2022 17:15	19.54	6/20/2022 19:48	6.08
6/21/2022 16:29	36.80	6/21/2022 17:16	19.52	6/20/2022 19:49	6.10
6/21/2022 16:30	36.80	6/21/2022 17:17	19.53	6/20/2022 19:50	6.12
6/21/2022 16:31	36.81	6/21/2022 17:18	19.53	6/20/2022 19:51	6.09
6/21/2022 16:32	36.80	6/21/2022 17:19	19.53	6/20/2022 19:52	6.11
6/21/2022 16:33	36.78	6/21/2022 17:20	19.50	6/20/2022 19:53	6.08
6/21/2022 16:34	36.76	6/21/2022 17:21	19.51	6/20/2022 19:54	6.07
6/21/2022 16:35	36.76	6/21/2022 17:22	19.53	6/20/2022 19:55	6.11
6/21/2022 16:36	36.78	6/21/2022 17:23	19.51	6/20/2022 19:56	6.06
6/21/2022 16:37	36.79	6/21/2022 17:24	19.53	6/20/2022 19:57	6.11
6/21/2022 16:38	36.79	6/21/2022 17:25	19.53	6/20/2022 19:58	6.10
6/21/2022 16:39	36.80	6/21/2022 17:26	19.52	6/20/2022 19:59	6.11
6/21/2022 16:40	36.77	6/21/2022 17:27	19.50	6/20/2022 20:00	6.13
6/21/2022 16:41	36.79	6/21/2022 17:28	19.51	6/20/2022 20:01	6.11
6/21/2022 16:42	36.77	6/21/2022 17:29	19.51	6/20/2022 20:02	6.11

6/21/2022 16:43	36.80	6/21/2022 17:30	19.52	6/20/2022 20:03	6.07
6/21/2022 16:44	36.79	6/21/2022 17:31	19.53	6/20/2022 20:04	6.12
6/21/2022 16:45	36.80	6/21/2022 17:32	19.53	6/20/2022 20:05	6.09
6/21/2022 16:46	36.76	6/21/2022 17:33	19.52	6/20/2022 20:06	6.09
6/21/2022 16:47	36.78	6/21/2022 17:34	19.52	6/20/2022 20:07	6.10
6/21/2022 16:48	36.76	6/21/2022 17:35	19.51	6/20/2022 20:08	6.09
6/21/2022 16:49	36.78	6/21/2022 17:36	19.52	6/20/2022 20:09	6.11
6/21/2022 16:50	36.79	6/21/2022 17:37	19.54	6/20/2022 20:10	6.08
6/21/2022 16:51	36.79	6/21/2022 17:38	19.52	6/20/2022 20:11	6.12
6/21/2022 16:52	36.78	6/21/2022 17:39	19.52	6/20/2022 20:12	6.11
6/21/2022 16:53	36.77	6/21/2022 17:40	19.51	6/20/2022 20:13	6.08
6/21/2022 16:54	36.78	6/21/2022 17:41	19.52	6/20/2022 20:14	6.10
6/21/2022 16:55	36.76	6/21/2022 17:42	19.50	6/20/2022 20:15	6.10
6/21/2022 16:56	36.77	6/21/2022 17:43	19.50	6/20/2022 20:16	6.14
6/21/2022 16:57	36.79	6/21/2022 17:44	19.49	6/20/2022 20:17	6.12
6/21/2022 16:58	36.78	6/21/2022 17:45	19.53	6/20/2022 20:18	6.07
6/21/2022 16:59	36.77	6/21/2022 17:46	19.53	6/20/2022 20:19	6.09
6/21/2022 17:00	36.77	6/21/2022 17:47	19.53	6/20/2022 20:20	6.10
6/21/2022 17:01	36.83	6/21/2022 17:48	19.51	6/20/2022 20:21	6.13
6/21/2022 17:02	36.78	6/21/2022 17:49	19.52	6/20/2022 20:22	6.12
6/21/2022 17:03	36.79	6/21/2022 17:50	19.52	6/20/2022 20:23	6.13
6/21/2022 17:04	36.79	6/21/2022 17:51	19.51	6/20/2022 20:24	6.10
6/21/2022 17:05	36.77	6/21/2022 17:52	19.54	6/20/2022 20:25	6.08
6/21/2022 17:06	36.78	6/21/2022 17:53	19.50	6/20/2022 20:26	6.08
6/21/2022 17:07	36.79	6/21/2022 17:54	19.51	6/20/2022 20:27	6.10
6/21/2022 17:08	36.79	6/21/2022 17:55	19.52	6/20/2022 20:28	6.10
6/21/2022 17:09	36.80	6/21/2022 17:56	19.52	6/20/2022 20:29	6.10
6/21/2022 17:10	36.78	6/21/2022 17:57	19.54	6/20/2022 20:30	6.11
6/21/2022 17:11	36.81	6/21/2022 17:58	19.50	6/20/2022 20:31	6.10
6/21/2022 17:12	36.78	6/21/2022 17:59	19.51	6/20/2022 20:32	6.08
6/21/2022 17:13	36.76	6/21/2022 18:00	19.53	6/20/2022 20:33	6.09
6/21/2022 17:14	36.81	6/21/2022 18:01	19.52	6/20/2022 20:34	6.10
6/21/2022 17:15	36.76	6/21/2022 18:02	19.50	6/20/2022 20:35	6.09
6/21/2022 17:16	36.80	6/21/2022 18:03	19.51	6/20/2022 20:36	6.15
6/21/2022 17:17	36.82	6/21/2022 18:04	19.49	6/20/2022 20:37	6.10
6/21/2022 17:18	36.84	6/21/2022 18:05	19.51	6/20/2022 20:38	6.10
6/21/2022 17:19	36.83	6/21/2022 18:06	19.50	6/20/2022 20:39	6.10
6/21/2022 17:20	36.81	6/21/2022 18:07	19.51	6/20/2022 20:40	6.09
6/21/2022 17:21	36.81	6/21/2022 18:08	19.50	6/20/2022 20:41	6.10
6/21/2022 17:22	36.85	6/21/2022 18:09	19.50	6/20/2022 20:42	6.10
6/21/2022 17:23	36.83	6/21/2022 18:10	19.52	6/20/2022 20:43	6.11
6/21/2022 17:24	36.84	6/21/2022 18:11	19.50	6/20/2022 20:44	6.10
6/21/2022 17:25	36.83	6/21/2022 18:12	19.52	6/20/2022 20:45	6.10
6/21/2022 17:26	36.84	6/21/2022 18:13	19.52	6/20/2022 20:46	6.09
6/21/2022 17:27	36.80	6/21/2022 18:14	19.53	6/20/2022 20:47	6.09
6/21/2022 17:28	36.81	6/21/2022 18:15	19.52	6/20/2022 20:48	6.11
6/21/2022 17:29	36.81	6/21/2022 18:16	19.52	6/20/2022 20:49	6.11
6/21/2022 17:30	36.83	6/21/2022 18:17	19.53	6/20/2022 20:50	6.10
6/21/2022 17:31	36.80	6/21/2022 18:18	19.51	6/20/2022 20:51	6.10
6/21/2022 17:32	36.82	6/21/2022 18:19	19.50	6/20/2022 20:52	6.09
6/21/2022 17:33	36.82	6/21/2022 18:20	19.50	6/20/2022 20:53	6.12
6/21/2022 17:34	36.81	6/21/2022 18:21	19.49	6/20/2022 20:54	6.09
6/21/2022 17:35	36.81	6/21/2022 18:22	19.51	6/20/2022 20:55	6.11
6/21/2022 17:36	36.80	6/21/2022 18:23	19.51	6/20/2022 20:56	6.08
6/21/2022 17:37	36.84	6/21/2022 18:24	19.51	6/20/2022 20:57	6.09
6/21/2022 17:38	36.81	6/21/2022 18:25	19.52	6/20/2022 20:58	6.10
6/21/2022 17:39	36.81	6/21/2022 18:26	19.50	6/20/2022 20:59	6.11
6/21/2022 17:40	36.82	6/21/2022 18:27	19.50	6/20/2022 21:00	6.09
6/21/2022 17:41	36.82	6/21/2022 18:28	19.49	6/20/2022 21:01	6.09
6/21/2022 17:42	36.85	6/21/2022 18:29	19.50	6/20/2022 21:02	6.08
6/21/2022 17:43	36.80	6/21/2022 18:30	19.50	6/20/2022 21:03	6.08
6/21/2022 17:44	36.84	6/21/2022 18:31	19.48	6/20/2022 21:04	6.07
6/21/2022 17:45	36.82	6/21/2022 18:32	19.51	6/20/2022 21:05	6.12
6/21/2022 17:46	36.83	6/21/2022 18:33	19.49	6/20/2022 21:06	6.10
6/21/2022 17:47	36.84	6/21/2022 18:34	19.51	6/20/2022 21:07	6.11
6/21/2022 17:48	36.81	6/21/2022 18:35	19.50	6/20/2022 21:08	6.13
6/21/2022 17:49	36.81	6/21/2022 18:36	19.51	6/20/2022 21:09	6.13
6/21/2022 17:50	36.83	6/21/2022 18:37	19.53	6/20/2022 21:10	6.14
6/21/2022 17:51	36.85	6/21/2022 18:38	19.51	6/20/2022 21:11	6.09
6/21/2022 17:52	36.84	6/21/2022 18:39	19.50	6/20/2022 21:12	6.11
6/21/2022 17:53	36.81	6/21/2022 18:40	19.51	6/20/2022 21:13	6.09
6/21/2022 17:54	36.84	6/21/2022 18:41	19.50	6/20/2022 21:14	6.11
6/21/2022 17:55	36.80	6/21/2022 18:42	19.50	6/20/2022 21:15	6.11
6/21/2022 17:56	36.82	6/21/2022 18:43	19.53	6/20/2022 21:16	6.10
6/21/2022 17:57	36.82	6/21/2022 18:44	19.49	6/20/2022 21:17	6.11
6/21/2022 17:58	36.82	6/21/2022 18:45	19.50	6/20/2022 21:18	8.48
6/21/2022 17:59	36.85	6/21/2022 18:46	19.54	6/20/2022 21:19	8.88
6/21/2022 18:00	36.83	6/21/2022 18:47	19.53	6/20/2022 21:20	6.59
6/21/2022 18:01	36.84	6/21/2022 18:48	19.52	6/20/2022 21:21	6.20
6/21/2022 18:02	36.82	6/21/2022 18:49	19.50	6/20/2022 21:22	6.15
6/21/2022 18:03	36.83	6/21/2022 18:50	19.51	6/20/2022 21:23	6.15
6/21/2022 18:04	36.82	6/21/2022 18:51	19.52	6/20/2022 21:24	6.11
6/21/2022 18:05	36.82	6/21/2022 18:52	19.53	6/20/2022 21:25	6.09
6/21/2022 18:06	36.84	6/21/2022 18:53	19.52	6/20/2022 21:26	6.11
6/21/2022 18:07	36.83	6/21/2022 18:54	19.49	6/20/2022 21:27	6.08
6/21/2022 18:08	36.85	6/21/2022 18:55	19.51	6/20/2022 21:28	6.11
6/21/2022 18:09	36.89	6/21/2022 18:56	19.52	6/20/2022 21:29	6.09
6/21/2022 18:10	36.87	6/21/2022 18:57	19.51	6/20/2022 21:30	6.12

6/21/2022 18:11	36.86	6/21/2022 18:58	19.51	6/20/2022 21:31	6.12
6/21/2022 18:12	36.88	6/21/2022 18:59	19.49	6/20/2022 21:32	6.10
6/21/2022 18:13	36.87	6/21/2022 19:00	19.49	6/20/2022 21:33	6.11
6/21/2022 18:14	36.87	6/21/2022 19:01	19.52	6/20/2022 21:34	6.11
6/21/2022 18:15	36.87	6/21/2022 19:02	19.52	6/20/2022 21:35	6.10
6/21/2022 18:16	36.83	6/21/2022 19:03	19.53	6/20/2022 21:36	6.11
6/21/2022 18:17	36.84	6/21/2022 19:04	19.49	6/20/2022 21:37	6.12
6/21/2022 18:18	36.89	6/21/2022 19:05	19.50	6/20/2022 21:38	6.11
6/21/2022 18:19	36.86	6/21/2022 19:06	19.50	6/20/2022 21:39	6.11
6/21/2022 18:20	36.89	6/21/2022 19:07	19.49	6/20/2022 21:40	6.13
6/21/2022 18:21	36.89	6/21/2022 19:08	19.51	6/20/2022 21:41	6.11
6/21/2022 18:22	36.90	6/21/2022 19:09	19.52	6/20/2022 21:42	6.10
6/21/2022 18:23	36.87	6/21/2022 19:10	19.50	6/20/2022 21:43	6.11
6/21/2022 18:24	36.85	6/21/2022 19:11	19.51	6/20/2022 21:44	6.10
6/21/2022 18:25	36.85	6/21/2022 19:12	19.51	6/20/2022 21:45	6.10
6/21/2022 18:26	36.89	6/21/2022 19:13	19.51	6/20/2022 21:46	6.13
6/21/2022 18:27	36.83	6/21/2022 19:14	19.53	6/20/2022 21:47	6.13
6/21/2022 18:28	36.87	6/21/2022 19:15	19.50	6/20/2022 21:48	6.10
6/21/2022 18:29	36.84	6/21/2022 19:16	19.51	6/20/2022 21:49	6.08
6/21/2022 18:30	36.87	6/21/2022 19:17	19.50	6/20/2022 21:50	6.09
6/21/2022 18:31	36.85	6/21/2022 19:18	19.51	6/20/2022 21:51	6.11
6/21/2022 18:32	36.88	6/21/2022 19:19	19.53	6/20/2022 21:52	6.08
6/21/2022 18:33	36.87	6/21/2022 19:20	19.52	6/20/2022 21:53	6.10
6/21/2022 18:34	36.86	6/21/2022 19:21	19.50	6/20/2022 21:54	6.13
6/21/2022 18:35	36.87	6/21/2022 19:22	19.49	6/20/2022 21:55	6.10
6/21/2022 18:36	36.84	6/21/2022 19:23	19.50	6/20/2022 21:56	6.12
6/21/2022 18:37	36.87	6/21/2022 19:24	19.51	6/20/2022 21:57	6.06
6/21/2022 18:38	36.89	6/21/2022 19:25	19.51	6/20/2022 21:58	6.09
6/21/2022 18:39	36.88	6/21/2022 19:26	19.50	6/20/2022 21:59	6.09
6/21/2022 18:40	36.87	6/21/2022 19:27	19.48	6/20/2022 22:00	6.11
6/21/2022 18:41	36.88	6/21/2022 19:28	19.50	6/20/2022 22:01	6.09
6/21/2022 18:42	36.84	6/21/2022 19:29	19.51	6/20/2022 22:02	6.09
6/21/2022 18:43	36.87	6/21/2022 19:30	19.50	6/20/2022 22:03	6.11
6/21/2022 18:44	36.89	6/21/2022 19:31	19.50	6/20/2022 22:04	6.09
6/21/2022 18:45	36.87	6/21/2022 19:32	19.49	6/20/2022 22:05	6.10
6/21/2022 18:46	36.88	6/21/2022 19:33	19.52	6/20/2022 22:06	6.12
6/21/2022 18:47	36.88	6/21/2022 19:34	19.49	6/20/2022 22:07	6.11
6/21/2022 18:48	36.88	6/21/2022 19:35	19.53	6/20/2022 22:08	6.10
6/21/2022 18:49	36.88	6/21/2022 19:36	19.54	6/20/2022 22:09	6.10
6/21/2022 18:50	36.88	6/21/2022 19:37	19.49	6/20/2022 22:10	6.12
6/21/2022 18:51	36.86	6/21/2022 19:38	19.55	6/20/2022 22:11	6.13
6/21/2022 18:52	36.89	6/21/2022 19:39	19.51	6/20/2022 22:12	6.11
6/21/2022 18:53	36.89	6/21/2022 19:40	19.49	6/20/2022 22:13	6.10
6/21/2022 18:54	36.86	6/21/2022 19:41	19.51	6/20/2022 22:14	6.12
6/21/2022 18:55	36.87	6/21/2022 19:42	19.49	6/20/2022 22:15	6.09
6/21/2022 18:56	36.86	6/21/2022 19:43	19.52	6/20/2022 22:16	6.12
6/21/2022 18:57	36.84	6/21/2022 19:44	19.52	6/20/2022 22:17	6.15
6/21/2022 18:58	36.86	6/21/2022 19:45	19.50	6/20/2022 22:18	6.10
6/21/2022 18:59	36.86	6/21/2022 19:46	19.52	6/20/2022 22:19	6.08
6/21/2022 19:00	36.90	6/21/2022 19:47	19.51	6/20/2022 22:20	6.11
6/21/2022 19:01	36.87	6/21/2022 19:48	19.52	6/20/2022 22:21	6.13
6/21/2022 19:02	36.90	6/21/2022 19:49	19.49	6/20/2022 22:22	6.11
6/21/2022 19:03	36.89	6/21/2022 19:50	19.52	6/20/2022 22:23	6.10
6/21/2022 19:04	36.89	6/21/2022 19:51	19.49	6/20/2022 22:24	6.12
6/21/2022 19:05	36.86	6/21/2022 19:52	19.51	6/20/2022 22:25	6.11
6/21/2022 19:06	36.88	6/21/2022 19:53	19.47	6/20/2022 22:26	6.10
6/21/2022 19:07	36.89	6/21/2022 19:54	19.50	6/20/2022 22:27	6.09
6/21/2022 19:08	36.89	6/21/2022 19:55	19.51	6/20/2022 22:28	6.11
6/21/2022 19:09	36.92	6/21/2022 19:56	19.47	6/20/2022 22:29	6.10
6/21/2022 19:10	36.90	6/21/2022 19:57	19.49	6/20/2022 22:30	6.08
6/21/2022 19:11	36.89	6/21/2022 19:58	19.50	6/20/2022 22:31	6.13
6/21/2022 19:12	36.89	6/21/2022 19:59	19.50	6/20/2022 22:32	6.10
6/21/2022 19:13	36.91	6/21/2022 20:00	19.51	6/20/2022 22:33	6.11
6/21/2022 19:14	36.88	6/21/2022 20:01	19.48	6/20/2022 22:34	6.09
6/21/2022 19:15	36.88	6/21/2022 20:02	19.49	6/20/2022 22:35	6.15
6/21/2022 19:16	36.89	6/21/2022 20:03	19.52	6/20/2022 22:36	6.13
6/21/2022 19:17	36.91	6/21/2022 20:04	19.52	6/20/2022 22:37	6.07
6/21/2022 19:18	36.93	6/21/2022 20:05	19.52	6/20/2022 22:38	6.11
6/21/2022 19:19	36.91	6/21/2022 20:06	19.50	6/20/2022 22:39	6.11
6/21/2022 19:20	36.88	6/21/2022 20:07	19.49	6/20/2022 22:40	6.12
6/21/2022 19:21	36.89	6/21/2022 20:08	19.51	6/20/2022 22:41	6.12
6/21/2022 19:22	36.90	6/21/2022 20:09	19.49	6/20/2022 22:42	6.09
6/21/2022 19:23	36.91	6/21/2022 20:10	19.49	6/20/2022 22:43	6.09
6/21/2022 19:24	36.90	6/21/2022 20:11	19.51	6/20/2022 22:44	6.10
6/21/2022 19:25	36.89	6/21/2022 20:12	19.50	6/20/2022 22:45	6.10
6/21/2022 19:26	36.87	6/21/2022 20:13	19.49	6/20/2022 22:46	6.08
6/21/2022 19:27	36.89	6/21/2022 20:14	19.47	6/20/2022 22:47	6.09
6/21/2022 19:28	36.87	6/21/2022 20:15	19.50	6/20/2022 22:48	6.12
6/21/2022 19:29	36.89	6/21/2022 20:16	19.50	6/20/2022 22:49	6.09
6/21/2022 19:30	36.91	6/21/2022 20:17	19.50	6/20/2022 22:50	6.09
6/21/2022 19:31	36.92	6/21/2022 20:18	19.49	6/20/2022 22:51	6.10
6/21/2022 19:32	36.91	6/21/2022 20:19	19.50	6/20/2022 22:52	6.09
6/21/2022 19:33	36.92	6/21/2022 20:20	19.51	6/20/2022 22:53	6.08
6/21/2022 19:34	36.95	6/21/2022 20:21	19.49	6/20/2022 22:54	6.09
6/21/2022 19:35	36.88	6/21/2022 20:22	19.50	6/20/2022 22:55	6.06
6/21/2022 19:36	38.05	6/21/2022 20:23	19.49	6/20/2022 22:56	6.10
6/21/2022 19:37	37.17	6/21/2022 20:24	19.50	6/20/2022 22:57	6.08
6/21/2022 19:38	37.06	6/21/2022 20:25	19.48	6/20/2022 22:58	6.08

6/21/2022 19:39	38.05	6/21/2022 20:26	19.49	6/20/2022 22:59	6.09
6/21/2022 19:40	37.37	6/21/2022 20:27	19.52	6/20/2022 23:00	6.11
6/21/2022 19:41	37.19	6/21/2022 20:28	19.48	6/20/2022 23:01	6.11
6/21/2022 19:42	37.11	6/21/2022 20:29	19.51	6/20/2022 23:02	6.10
6/21/2022 19:43	37.06	6/21/2022 20:30	19.49	6/20/2022 23:03	6.10
6/21/2022 19:44	37.07	6/21/2022 20:31	19.51	6/20/2022 23:04	6.10
6/21/2022 19:45	37.04	6/21/2022 20:32	19.53	6/20/2022 23:05	6.12
6/21/2022 19:46	37.03	6/21/2022 20:33	19.52	6/20/2022 23:06	6.11
6/21/2022 19:47	37.03	6/21/2022 20:34	19.47	6/20/2022 23:07	6.09
6/21/2022 19:48	37.00	6/21/2022 20:35	19.52	6/20/2022 23:08	6.11
6/21/2022 19:49	37.03	6/21/2022 20:36	19.52	6/20/2022 23:09	6.08
6/21/2022 19:50	37.04	6/21/2022 20:37	19.50	6/20/2022 23:10	6.07
6/21/2022 19:51	36.99	6/21/2022 20:38	19.50	6/20/2022 23:11	6.10
6/21/2022 19:52	36.98	6/21/2022 20:39	19.53	6/20/2022 23:12	6.08
6/21/2022 19:53	36.99	6/21/2022 20:40	19.49	6/20/2022 23:13	6.11
6/21/2022 19:54	37.00	6/21/2022 20:41	19.50	6/20/2022 23:14	6.10
6/21/2022 19:55	37.00	6/21/2022 20:42	19.51	6/20/2022 23:15	6.11
6/21/2022 19:56	37.00	6/21/2022 20:43	19.51	6/20/2022 23:16	6.10
6/21/2022 19:57	36.97	6/21/2022 20:44	19.52	6/20/2022 23:17	6.14
6/21/2022 19:58	36.96	6/21/2022 20:45	19.50	6/20/2022 23:18	6.08
6/21/2022 19:59	36.99	6/21/2022 20:46	19.50	6/20/2022 23:19	6.11
6/21/2022 20:00	37.01	6/21/2022 20:47	19.50	6/20/2022 23:20	6.08
6/21/2022 20:01	37.01	6/21/2022 20:48	19.50	6/20/2022 23:21	6.10
6/21/2022 20:02	36.98	6/21/2022 20:49	19.48	6/20/2022 23:22	6.12
6/21/2022 20:03	36.99	6/21/2022 20:50	19.50	6/20/2022 23:23	6.12
6/21/2022 20:04	36.97	6/21/2022 20:51	19.47	6/20/2022 23:24	6.10
6/21/2022 20:05	36.97	6/21/2022 20:52	19.52	6/20/2022 23:25	6.12
6/21/2022 20:06	36.98	6/21/2022 20:53	19.49	6/20/2022 23:26	6.07
6/21/2022 20:07	36.98	6/21/2022 20:54	19.50	6/20/2022 23:27	6.08
6/21/2022 20:08	36.97	6/21/2022 20:55	19.48	6/20/2022 23:28	6.13
6/21/2022 20:09	36.95	6/21/2022 20:56	19.51	6/20/2022 23:29	6.12
6/21/2022 20:10	36.97	6/21/2022 20:57	19.50	6/20/2022 23:30	6.10
6/21/2022 20:11	36.99	6/21/2022 20:58	19.50	6/20/2022 23:31	6.11
6/21/2022 20:12	36.98	6/21/2022 20:59	19.48	6/20/2022 23:32	6.14
6/21/2022 20:13	36.99	6/21/2022 21:00	19.49	6/20/2022 23:33	6.09
6/21/2022 20:14	36.98	6/21/2022 21:01	19.51	6/20/2022 23:34	6.11
6/21/2022 20:15	36.95	6/21/2022 21:02	19.48	6/20/2022 23:35	6.13
6/21/2022 20:16	36.98	6/21/2022 21:03	19.51	6/20/2022 23:36	6.13
6/21/2022 20:17	36.99	6/21/2022 21:04	19.52	6/20/2022 23:37	6.09
6/21/2022 20:18	36.98	6/21/2022 21:05	19.48	6/20/2022 23:38	6.07
6/21/2022 20:19	36.96	6/21/2022 21:06	19.50	6/20/2022 23:39	6.11
6/21/2022 20:20	36.96	6/21/2022 21:07	19.47	6/20/2022 23:40	6.10
6/21/2022 20:21	36.99	6/21/2022 21:08	19.93	6/20/2022 23:41	8.36
6/21/2022 20:22	37.02	6/21/2022 21:09	20.18	6/20/2022 23:42	8.86
6/21/2022 20:23	36.97	6/21/2022 21:10	20.25	6/20/2022 23:43	6.30
6/21/2022 20:24	37.00	6/21/2022 21:11	20.27	6/20/2022 23:44	6.14
6/21/2022 20:25	36.98	6/21/2022 21:12	20.30	6/20/2022 23:45	6.12
6/21/2022 20:26	36.95	6/21/2022 21:13	19.78	6/20/2022 23:46	6.11
6/21/2022 20:27	36.94	6/21/2022 21:14	19.70	6/20/2022 23:47	6.09
6/21/2022 20:28	36.95	6/21/2022 21:15	19.67	6/20/2022 23:48	6.08
6/21/2022 20:29	36.98	6/21/2022 21:16	19.64	6/20/2022 23:49	6.13
6/21/2022 20:30	37.00	6/21/2022 21:17	19.61	6/20/2022 23:50	6.10
6/21/2022 20:31	36.97	6/21/2022 21:18	19.60	6/20/2022 23:51	6.11
6/21/2022 20:32	36.98	6/21/2022 21:19	19.62	6/20/2022 23:52	6.11
6/21/2022 20:33	36.97	6/21/2022 21:20	19.62	6/20/2022 23:53	6.13
6/21/2022 20:34	36.97	6/21/2022 21:21	19.59	6/20/2022 23:54	6.08
6/21/2022 20:35	36.99	6/21/2022 21:22	19.59	6/20/2022 23:55	6.12
6/21/2022 20:36	36.97	6/21/2022 21:23	19.63	6/20/2022 23:56	6.11
6/21/2022 20:37	36.95	6/21/2022 21:24	19.59	6/20/2022 23:57	6.11
6/21/2022 20:38	36.99	6/21/2022 21:25	19.59	6/20/2022 23:58	6.12
6/21/2022 20:39	36.98	6/21/2022 21:26	19.58	6/20/2022 23:59	6.09
6/21/2022 20:40	36.95	6/21/2022 21:27	19.58	6/21/2022 0:00	6.12
6/21/2022 20:41	37.01	6/21/2022 21:28	19.58	6/21/2022 0:01	6.10
6/21/2022 20:42	37.00	6/21/2022 21:29	19.54	6/21/2022 0:02	6.10
6/21/2022 20:43	37.00	6/21/2022 21:30	19.56	6/21/2022 0:03	6.10
6/21/2022 20:44	37.01	6/21/2022 21:31	19.57	6/21/2022 0:04	6.11
6/21/2022 20:45	36.98	6/21/2022 21:32	19.60	6/21/2022 0:05	6.09
6/21/2022 20:46	36.96	6/21/2022 21:33	19.59	6/21/2022 0:06	6.10
6/21/2022 20:47	36.99	6/21/2022 21:34	19.56	6/21/2022 0:07	6.11
6/21/2022 20:48	36.98	6/21/2022 21:35	19.59	6/21/2022 0:08	6.10
6/21/2022 20:49	37.00	6/21/2022 21:36	19.58	6/21/2022 0:09	6.09
6/21/2022 20:50	36.96	6/21/2022 21:37	19.56	6/21/2022 0:10	6.10
6/21/2022 20:51	36.98	6/21/2022 21:38	19.57	6/21/2022 0:11	6.11
6/21/2022 20:52	36.99	6/21/2022 21:39	19.57	6/21/2022 0:12	6.09
6/21/2022 20:53	36.97	6/21/2022 21:40	19.54	6/21/2022 0:13	6.09
6/21/2022 20:54	36.99	6/21/2022 21:41	19.57	6/21/2022 0:14	6.10
6/21/2022 20:55	36.98	6/21/2022 21:42	19.57	6/21/2022 0:15	6.11
6/21/2022 20:56	36.98	6/21/2022 21:43	19.55	6/21/2022 0:16	6.10
6/21/2022 20:57	36.99	6/21/2022 21:44	19.54	6/21/2022 0:17	6.09
6/21/2022 20:58	37.00	6/21/2022 21:45	19.52	6/21/2022 0:18	6.11
6/21/2022 20:59	37.00	6/21/2022 21:46	19.56	6/21/2022 0:19	6.11
6/21/2022 21:00	37.02	6/21/2022 21:47	19.52	6/21/2022 0:20	6.09
6/21/2022 21:01	37.00	6/21/2022 21:48	19.54	6/21/2022 0:21	6.16
6/21/2022 21:02	36.97	6/21/2022 21:49	19.53	6/21/2022 0:22	6.13
6/21/2022 21:03	36.97	6/21/2022 21:50	19.54	6/21/2022 0:23	6.09
6/21/2022 21:04	37.01	6/21/2022 21:51	19.56	6/21/2022 0:24	6.10
6/21/2022 21:05	37.00	6/21/2022 21:52	19.54	6/21/2022 0:25	6.10
6/21/2022 21:06	37.01	6/21/2022 21:53	19.55	6/21/2022 0:26	6.10

6/21/2022 21:07	36.98	6/21/2022 21:54	19.57	6/21/2022 0:27	6.11
6/21/2022 21:08	37.02	6/21/2022 21:55	19.55	6/21/2022 0:28	6.09
6/21/2022 21:09	36.97	6/21/2022 21:56	19.52	6/21/2022 0:29	6.08
6/21/2022 21:10	37.00	6/21/2022 21:57	19.54	6/21/2022 0:30	6.09
6/21/2022 21:11	36.99	6/21/2022 21:58	19.55	6/21/2022 0:31	6.10
6/21/2022 21:12	36.97	6/21/2022 21:59	19.54	6/21/2022 0:32	6.10
6/21/2022 21:13	37.00	6/21/2022 22:00	19.54	6/21/2022 0:33	6.10
6/21/2022 21:14	36.99	6/21/2022 22:01	19.53	6/21/2022 0:34	6.08
6/21/2022 21:15	36.97	6/21/2022 22:02	19.54	6/21/2022 0:35	6.09
6/21/2022 21:16	37.04	6/21/2022 22:03	19.55	6/21/2022 0:36	6.13
6/21/2022 21:17	37.00	6/21/2022 22:04	19.52	6/21/2022 0:37	6.11
6/21/2022 21:18	36.98	6/21/2022 22:05	19.52	6/21/2022 0:38	6.10
6/21/2022 21:19	37.01	6/21/2022 22:06	19.52	6/21/2022 0:39	6.08
6/21/2022 21:20	37.01	6/21/2022 22:07	19.55	6/21/2022 0:40	6.13
6/21/2022 21:21	37.02	6/21/2022 22:08	19.56	6/21/2022 0:41	6.11
6/21/2022 21:22	37.00	6/21/2022 22:09	19.53	6/21/2022 0:42	6.12
6/21/2022 21:23	37.01	6/21/2022 22:10	19.55	6/21/2022 0:43	6.09
6/21/2022 21:24	37.03	6/21/2022 22:11	19.54	6/21/2022 0:44	6.14
6/21/2022 21:25	37.00	6/21/2022 22:12	19.53	6/21/2022 0:45	6.11
6/21/2022 21:26	36.98	6/21/2022 22:13	19.53	6/21/2022 0:46	6.11
6/21/2022 21:27	37.00	6/21/2022 22:14	19.51	6/21/2022 0:47	6.12
6/21/2022 21:28	37.02	6/21/2022 22:15	19.54	6/21/2022 0:48	6.10
6/21/2022 21:29	37.01	6/21/2022 22:16	19.52	6/21/2022 0:49	6.08
6/21/2022 21:30	36.99	6/21/2022 22:17	19.50	6/21/2022 0:50	6.09
6/21/2022 21:31	36.98	6/21/2022 22:18	19.55	6/21/2022 0:51	6.10
6/21/2022 21:32	36.99	6/21/2022 22:19	19.51	6/21/2022 0:52	6.10
6/21/2022 21:33	36.99	6/21/2022 22:20	19.54	6/21/2022 0:53	6.07
6/21/2022 21:34	37.02	6/21/2022 22:21	19.54	6/21/2022 0:54	6.12
6/21/2022 21:35	37.02	6/21/2022 22:22	19.53	6/21/2022 0:55	6.13
6/21/2022 21:36	36.97	6/21/2022 22:23	19.51	6/21/2022 0:56	6.13
6/21/2022 21:37	36.99	6/21/2022 22:24	19.51	6/21/2022 0:57	6.10
6/21/2022 21:38	37.00	6/21/2022 22:25	19.53	6/21/2022 0:58	6.10
6/21/2022 21:39	37.03	6/21/2022 22:26	19.51	6/21/2022 0:59	6.08
6/21/2022 21:40	37.02	6/21/2022 22:27	19.51	6/21/2022 1:00	6.10
6/21/2022 21:41	36.99	6/21/2022 22:28	19.50	6/21/2022 1:01	6.08
6/21/2022 21:42	37.04	6/21/2022 22:29	19.53	6/21/2022 1:02	6.08
6/21/2022 21:43	37.02	6/21/2022 22:30	19.54	6/21/2022 1:03	6.09
6/21/2022 21:44	37.00	6/21/2022 22:31	19.50	6/21/2022 1:04	6.13
6/21/2022 21:45	37.01	6/21/2022 22:32	19.52	6/21/2022 1:05	6.11
6/21/2022 21:46	36.99	6/21/2022 22:33	19.52	6/21/2022 1:06	6.06
6/21/2022 21:47	37.02	6/21/2022 22:34	19.52	6/21/2022 1:07	8.53
6/21/2022 21:48	37.00	6/21/2022 22:35	19.53	6/21/2022 1:08	8.86
6/21/2022 21:49	37.01	6/21/2022 22:36	19.55	6/21/2022 1:09	6.37
6/21/2022 21:50	37.02	6/21/2022 22:37	19.51	6/21/2022 1:10	6.14
6/21/2022 21:51	37.04	6/21/2022 22:38	19.53	6/21/2022 1:11	6.13
6/21/2022 21:52	37.01	6/21/2022 22:39	19.51	6/21/2022 1:12	6.11
6/21/2022 21:53	37.02	6/21/2022 22:40	19.54	6/21/2022 1:13	6.11
6/21/2022 21:54	37.03	6/21/2022 22:41	19.53	6/21/2022 1:14	6.11
6/21/2022 21:55	37.06	6/21/2022 22:42	19.52	6/21/2022 1:15	6.09
6/21/2022 21:56	37.09	6/21/2022 22:43	19.51	6/21/2022 1:16	6.13
6/21/2022 21:57	37.08	6/21/2022 22:44	19.54	6/21/2022 1:17	6.11
6/21/2022 21:58	37.08	6/21/2022 22:45	19.53	6/21/2022 1:18	6.14
6/21/2022 21:59	37.03	6/21/2022 22:46	19.52	6/21/2022 1:19	6.11
6/21/2022 22:00	37.03	6/21/2022 22:47	19.53	6/21/2022 1:20	6.09
6/21/2022 22:01	37.06	6/21/2022 22:48	19.51	6/21/2022 1:21	6.11
6/21/2022 22:02	37.06	6/21/2022 22:49	19.51	6/21/2022 1:22	6.09
6/21/2022 22:03	37.02	6/21/2022 22:50	19.52	6/21/2022 1:23	6.10
6/21/2022 22:04	37.08	6/21/2022 22:51	19.49	6/21/2022 1:24	6.12
6/21/2022 22:05	37.04	6/21/2022 22:52	19.50	6/21/2022 1:25	6.11
6/21/2022 22:06	37.07	6/21/2022 22:53	19.52	6/21/2022 1:26	6.09
6/21/2022 22:07	37.08	6/21/2022 22:54	19.51	6/21/2022 1:27	6.15
6/21/2022 22:08	37.12	6/21/2022 22:55	19.53	6/21/2022 1:28	6.10
6/21/2022 22:09	37.09	6/21/2022 22:56	19.49	6/21/2022 1:29	6.08
6/21/2022 22:10	37.08	6/21/2022 22:57	19.53	6/21/2022 1:30	6.12
6/21/2022 22:11	37.08	6/21/2022 22:58	19.53	6/21/2022 1:31	6.09
6/21/2022 22:12	37.09	6/21/2022 22:59	19.51	6/21/2022 1:32	6.09
6/21/2022 22:13	37.09	6/21/2022 23:00	19.50	6/21/2022 1:33	6.09
6/21/2022 22:14	37.08	6/21/2022 23:01	19.54	6/21/2022 1:34	6.07
6/21/2022 22:15	37.06	6/21/2022 23:02	19.50	6/21/2022 1:35	6.09
6/21/2022 22:16	37.07	6/21/2022 23:03	19.52	6/21/2022 1:36	6.13
6/21/2022 22:17	37.06	6/21/2022 23:04	19.53	6/21/2022 1:37	6.10
6/21/2022 22:18	37.11	6/21/2022 23:05	19.56	6/21/2022 1:38	6.11
6/21/2022 22:19	37.06	6/21/2022 23:06	19.48	6/21/2022 1:39	6.08
6/21/2022 22:20	37.08	6/21/2022 23:07	19.52	6/21/2022 1:40	6.11
6/21/2022 22:21	37.08	6/21/2022 23:08	19.51	6/21/2022 1:41	6.11
6/21/2022 22:22	37.07	6/21/2022 23:09	19.54	6/21/2022 1:42	6.09
6/21/2022 22:23	37.04	6/21/2022 23:10	19.53	6/21/2022 1:43	6.07
6/21/2022 22:24	37.08	6/21/2022 23:11	19.52	6/21/2022 1:44	6.09
6/21/2022 22:25	37.08	6/21/2022 23:12	19.54	6/21/2022 1:45	6.11
6/21/2022 22:26	37.09	6/21/2022 23:13	19.54	6/21/2022 1:46	6.10
6/21/2022 22:27	37.03	6/21/2022 23:14	19.54	6/21/2022 1:47	6.08
6/21/2022 22:28	37.03	6/21/2022 23:15	19.51	6/21/2022 1:48	6.11
6/21/2022 22:29	37.07	6/21/2022 23:16	19.53	6/21/2022 1:49	6.09
6/21/2022 22:30	37.08	6/21/2022 23:17	19.54	6/21/2022 1:50	6.11
6/21/2022 22:31	37.08	6/21/2022 23:18	19.52	6/21/2022 1:51	6.10
6/21/2022 22:32	37.06	6/21/2022 23:19	19.52	6/21/2022 1:52	6.08
6/21/2022 22:33	37.07	6/21/2022 23:20	19.53	6/21/2022 1:53	6.10
6/21/2022 22:34	37.07	6/21/2022 23:21	19.53	6/21/2022 1:54	6.12

6/21/2022 22:35	37.07	6/21/2022 23:22	19.51	6/21/2022 1:55	6.09
6/21/2022 22:36	37.04	6/21/2022 23:23	19.51	6/21/2022 1:56	6.08
6/21/2022 22:37	37.06	6/21/2022 23:24	19.48	6/21/2022 1:57	6.07
6/21/2022 22:38	37.07	6/21/2022 23:25	19.50	6/21/2022 1:58	6.12
6/21/2022 22:39	37.04	6/21/2022 23:26	19.51	6/21/2022 1:59	6.06
6/21/2022 22:40	37.09	6/21/2022 23:27	19.51	6/21/2022 2:00	6.11
6/21/2022 22:41	37.07	6/21/2022 23:28	19.50	6/21/2022 2:01	6.09
6/21/2022 22:42	37.04	6/21/2022 23:29	19.52	6/21/2022 2:02	6.12
6/21/2022 22:43	37.07	6/21/2022 23:30	19.51	6/21/2022 2:03	6.09
6/21/2022 22:44	37.08	6/21/2022 23:31	19.52	6/21/2022 2:04	6.10
6/21/2022 22:45	37.06	6/21/2022 23:32	19.53	6/21/2022 2:05	6.06
6/21/2022 22:46	37.05	6/21/2022 23:33	19.51	6/21/2022 2:06	6.07
6/21/2022 22:47	37.05	6/21/2022 23:34	19.52	6/21/2022 2:07	6.12
6/21/2022 22:48	37.09	6/21/2022 23:35	19.52	6/21/2022 2:08	6.11
6/21/2022 22:49	37.06	6/21/2022 23:36	19.53	6/21/2022 2:09	6.10
6/21/2022 22:50	37.04	6/21/2022 23:37	19.50	6/21/2022 2:10	6.10
6/21/2022 22:51	37.10	6/21/2022 23:38	19.53	6/21/2022 2:11	6.11
6/21/2022 22:52	37.06	6/21/2022 23:39	19.53	6/21/2022 2:12	6.06
6/21/2022 22:53	37.05	6/21/2022 23:40	19.49	6/21/2022 2:13	6.10
6/21/2022 22:54	37.07	6/21/2022 23:41	19.50	6/21/2022 2:14	6.10
6/21/2022 22:55	37.08	6/21/2022 23:42	19.50	6/21/2022 2:15	6.09
6/21/2022 22:56	37.05	6/21/2022 23:43	19.52	6/21/2022 2:16	6.08
6/21/2022 22:57	37.07	6/21/2022 23:44	19.51	6/21/2022 2:17	6.09
6/21/2022 22:58	37.06	6/21/2022 23:45	19.50	6/21/2022 2:18	6.10
6/21/2022 22:59	37.04	6/21/2022 23:46	19.55	6/21/2022 2:19	6.07
6/21/2022 23:00	37.07	6/21/2022 23:47	19.49	6/21/2022 2:20	6.08
6/21/2022 23:01	37.08	6/21/2022 23:48	19.51	6/21/2022 2:21	6.07
6/21/2022 23:02	37.07	6/21/2022 23:49	19.52	6/21/2022 2:22	6.11
6/21/2022 23:03	37.05	6/21/2022 23:50	19.55	6/21/2022 2:23	6.07
6/21/2022 23:04	37.08	6/21/2022 23:51	19.52	6/21/2022 2:24	6.11
6/21/2022 23:05	37.08	6/21/2022 23:52	19.50	6/21/2022 2:25	6.12
6/21/2022 23:06	37.09	6/21/2022 23:53	19.52	6/21/2022 2:26	6.13
6/21/2022 23:07	37.05	6/21/2022 23:54	19.52	6/21/2022 2:27	6.09
6/21/2022 23:08	37.08	6/21/2022 23:55	19.53	6/21/2022 2:28	6.10
6/21/2022 23:09	37.07	6/21/2022 23:56	19.54	6/21/2022 2:29	6.09
6/21/2022 23:10	37.07	6/21/2022 23:57	19.52	6/21/2022 2:30	6.08
6/21/2022 23:11	37.09	6/21/2022 23:58	19.52	6/21/2022 2:31	6.10
6/21/2022 23:12	37.08	6/21/2022 23:59	19.52	6/21/2022 2:32	6.09
6/21/2022 23:13	37.07	6/22/2022 0:00	19.53	6/21/2022 2:33	6.10
6/21/2022 23:14	37.06	6/22/2022 0:01	19.54	6/21/2022 2:34	6.08
6/21/2022 23:15	37.09	6/22/2022 0:02	19.51	6/21/2022 2:35	6.08
6/21/2022 23:16	37.07	6/22/2022 0:03	19.51	6/21/2022 2:36	6.09
6/21/2022 23:17	37.09	6/22/2022 0:04	19.48	6/21/2022 2:37	6.08
6/21/2022 23:18	37.09	6/22/2022 0:05	19.51	6/21/2022 2:38	6.07
6/21/2022 23:19	37.07	6/22/2022 0:06	19.52	6/21/2022 2:39	6.11
6/21/2022 23:20	37.08	6/22/2022 0:07	19.51	6/21/2022 2:40	6.11
6/21/2022 23:21	37.10	6/22/2022 0:08	19.52	6/21/2022 2:41	6.09
6/21/2022 23:22	37.11	6/22/2022 0:09	19.53	6/21/2022 2:42	6.09
6/21/2022 23:23	37.10	6/22/2022 0:10	19.51	6/21/2022 2:43	6.09
6/21/2022 23:24	37.09	6/22/2022 0:11	19.51	6/21/2022 2:44	6.12
6/21/2022 23:25	37.11	6/22/2022 0:12	19.51	6/21/2022 2:45	6.09
6/21/2022 23:26	37.12	6/22/2022 0:13	19.50	6/21/2022 2:46	6.10
6/21/2022 23:27	37.11	6/22/2022 0:14	19.49	6/21/2022 2:47	6.11
6/21/2022 23:28	37.16	6/22/2022 0:15	19.51	6/21/2022 2:48	6.07
6/21/2022 23:29	37.11	6/22/2022 0:16	19.52	6/21/2022 2:49	6.10
6/21/2022 23:30	37.11	6/22/2022 0:17	19.50	6/21/2022 2:50	6.08
6/21/2022 23:31	37.13	6/22/2022 0:18	19.49	6/21/2022 2:51	6.11
6/21/2022 23:32	37.12	6/22/2022 0:19	19.51	6/21/2022 2:52	6.09
6/21/2022 23:33	37.10	6/22/2022 0:20	19.49	6/21/2022 2:53	6.06
6/21/2022 23:34	37.15	6/22/2022 0:21	19.51	6/21/2022 2:54	6.10
6/21/2022 23:35	37.14	6/22/2022 0:22	19.52	6/21/2022 2:55	6.10
6/21/2022 23:36	37.12	6/22/2022 0:23	19.52	6/21/2022 2:56	6.11
6/21/2022 23:37	37.11	6/22/2022 0:24	19.52	6/21/2022 2:57	6.12
6/21/2022 23:38	37.11	6/22/2022 0:25	19.51	6/21/2022 2:58	6.06
6/21/2022 23:39	37.11	6/22/2022 0:26	19.52	6/21/2022 2:59	6.09
6/21/2022 23:40	37.12	6/22/2022 0:27	19.49	6/21/2022 3:00	6.09
6/21/2022 23:41	37.14	6/22/2022 0:28	19.52	6/21/2022 3:01	6.09
6/21/2022 23:42	37.13	6/22/2022 0:29	19.52	6/21/2022 3:02	6.10
6/21/2022 23:43	37.10	6/22/2022 0:30	19.51	6/21/2022 3:03	6.11
6/21/2022 23:44	37.12	6/22/2022 0:31	19.49	6/21/2022 3:04	6.09
6/21/2022 23:45	37.11	6/22/2022 0:32	19.52	6/21/2022 3:05	6.12
6/21/2022 23:46	37.15	6/22/2022 0:33	19.50	6/21/2022 3:06	6.11
6/21/2022 23:47	37.12	6/22/2022 0:34	19.52	6/21/2022 3:07	6.06
6/21/2022 23:48	37.13	6/22/2022 0:35	19.51	6/21/2022 3:08	6.10
6/21/2022 23:49	37.14	6/22/2022 0:36	19.50	6/21/2022 3:09	6.08
6/21/2022 23:50	37.11	6/22/2022 0:37	19.53	6/21/2022 3:10	6.10
6/21/2022 23:51	37.13	6/22/2022 0:38	19.52	6/21/2022 3:11	6.07
6/21/2022 23:52	37.13	6/22/2022 0:39	19.53	6/21/2022 3:12	6.11
6/21/2022 23:53	37.12	6/22/2022 0:40	19.50	6/21/2022 3:13	6.10
6/21/2022 23:54	37.09	6/22/2022 0:41	19.52	6/21/2022 3:14	6.11
6/21/2022 23:55	37.13	6/22/2022 0:42	19.51	6/21/2022 3:15	6.11
6/21/2022 23:56	37.12	6/22/2022 0:43	19.54	6/21/2022 3:16	6.11
6/21/2022 23:57	37.14	6/22/2022 0:44	19.50	6/21/2022 3:17	6.12
6/21/2022 23:58	37.12	6/22/2022 0:45	19.50	6/21/2022 3:18	6.10
6/21/2022 23:59	37.14	6/22/2022 0:46	19.50	6/21/2022 3:19	6.09
6/22/2022 0:00	37.14	6/22/2022 0:47	19.52	6/21/2022 3:20	6.09
6/22/2022 0:01	37.13	6/22/2022 0:48	19.52	6/21/2022 3:21	6.09
6/22/2022 0:02	37.15	6/22/2022 0:49	19.51	6/21/2022 3:22	6.10

6/22/2022 0:03	37.16	6/22/2022 0:50	19.47	6/21/2022 3:23	6.09
6/22/2022 0:04	37.13	6/22/2022 0:51	19.51	6/21/2022 3:24	6.09
6/22/2022 0:05	37.15	6/22/2022 0:52	19.54	6/21/2022 3:25	6.10
6/22/2022 0:06	37.12	6/22/2022 0:53	19.51	6/21/2022 3:26	6.08
6/22/2022 0:07	37.13	6/22/2022 0:54	19.53	6/21/2022 3:27	6.14
6/22/2022 0:08	37.13	6/22/2022 0:55	19.50	6/21/2022 3:28	6.10
6/22/2022 0:09	37.14	6/22/2022 0:56	19.52	6/21/2022 3:29	6.11
6/22/2022 0:10	37.17	6/22/2022 0:57	19.48	6/21/2022 3:30	6.12
6/22/2022 0:11	37.13	6/22/2022 0:58	19.50	6/21/2022 3:31	6.05
6/22/2022 0:12	37.12	6/22/2022 0:59	19.49	6/21/2022 3:32	6.09
6/22/2022 0:13	37.11	6/22/2022 1:00	19.54	6/21/2022 3:33	6.06
6/22/2022 0:14	37.11	6/22/2022 1:01	19.52	6/21/2022 3:34	6.11
6/22/2022 0:15	37.15	6/22/2022 1:02	19.52	6/21/2022 3:35	6.11
6/22/2022 0:16	37.13	6/22/2022 1:03	19.51	6/21/2022 3:36	6.08
6/22/2022 0:17	37.14	6/22/2022 1:04	19.50	6/21/2022 3:37	6.09
6/22/2022 0:18	37.10	6/22/2022 1:05	19.52	6/21/2022 3:38	6.10
6/22/2022 0:19	37.12	6/22/2022 1:06	19.51	6/21/2022 3:39	6.09
6/22/2022 0:20	37.11	6/22/2022 1:07	19.52	6/21/2022 3:40	6.12
6/22/2022 0:21	37.12	6/22/2022 1:08	19.53	6/21/2022 3:41	6.09
6/22/2022 0:22	37.12	6/22/2022 1:09	19.54	6/21/2022 3:42	6.09
6/22/2022 0:23	37.12	6/22/2022 1:10	19.52	6/21/2022 3:43	6.08
6/22/2022 0:24	37.14	6/22/2022 1:11	19.51	6/21/2022 3:44	6.10
6/22/2022 0:25	37.14	6/22/2022 1:12	19.52	6/21/2022 3:45	6.09
6/22/2022 0:26	37.15	6/22/2022 1:13	19.50	6/21/2022 3:46	6.11
6/22/2022 0:27	37.16	6/22/2022 1:14	19.49	6/21/2022 3:47	8.26
6/22/2022 0:28	37.15	6/22/2022 1:15	19.51	6/21/2022 3:48	8.84
6/22/2022 0:29	37.14	6/22/2022 1:16	19.50	6/21/2022 3:49	6.31
6/22/2022 0:30	37.13	6/22/2022 1:17	19.53	6/21/2022 3:50	6.19
6/22/2022 0:31	37.13	6/22/2022 1:18	19.52	6/21/2022 3:51	6.12
6/22/2022 0:32	37.16	6/22/2022 1:19	19.50	6/21/2022 3:52	6.08
6/22/2022 0:33	37.12	6/22/2022 1:20	19.52	6/21/2022 3:53	6.13
6/22/2022 0:34	37.11	6/22/2022 1:21	19.52	6/21/2022 3:54	6.11
6/22/2022 0:35	37.14	6/22/2022 1:22	19.50	6/21/2022 3:55	6.12
6/22/2022 0:36	37.16	6/22/2022 1:23	19.51	6/21/2022 3:56	6.15
6/22/2022 0:37	37.16	6/22/2022 1:24	19.54	6/21/2022 3:57	6.10
6/22/2022 0:38	37.13	6/22/2022 1:25	19.52	6/21/2022 3:58	6.11
6/22/2022 0:39	37.19	6/22/2022 1:26	19.50	6/21/2022 3:59	6.10
6/22/2022 0:40	37.13	6/22/2022 1:27	19.49	6/21/2022 4:00	6.11
6/22/2022 0:41	37.14	6/22/2022 1:28	19.51	6/21/2022 4:01	6.08
6/22/2022 0:42	37.14	6/22/2022 1:29	19.51	6/21/2022 4:02	6.09
6/22/2022 0:43	37.15	6/22/2022 1:30	19.51	6/21/2022 4:03	6.10
6/22/2022 0:44	37.17	6/22/2022 1:31	19.51	6/21/2022 4:04	6.11
6/22/2022 0:45	37.15	6/22/2022 1:32	19.51	6/21/2022 4:05	6.10
6/22/2022 0:46	37.14	6/22/2022 1:33	19.52	6/21/2022 4:06	6.11
6/22/2022 0:47	37.17	6/22/2022 1:34	19.50	6/21/2022 4:07	6.12
6/22/2022 0:48	37.14	6/22/2022 1:35	19.50	6/21/2022 4:08	6.10
6/22/2022 0:49	37.14	6/22/2022 1:36	19.49	6/21/2022 4:09	6.11
6/22/2022 0:50	37.18	6/22/2022 1:37	19.50	6/21/2022 4:10	6.13
6/22/2022 0:51	37.16	6/22/2022 1:38	19.52	6/21/2022 4:11	6.12
6/22/2022 0:52	37.14	6/22/2022 1:39	19.53	6/21/2022 4:12	6.07
6/22/2022 0:53	37.14	6/22/2022 1:40	19.54	6/21/2022 4:13	6.13
6/22/2022 0:54	37.18	6/22/2022 1:41	19.51	6/21/2022 4:14	6.11
6/22/2022 0:55	37.17	6/22/2022 1:42	19.52	6/21/2022 4:15	6.10
6/22/2022 0:56	37.17	6/22/2022 1:43	19.46	6/21/2022 4:16	6.10
6/22/2022 0:57	37.16	6/22/2022 1:44	19.53	6/21/2022 4:17	6.09
6/22/2022 0:58	37.15	6/22/2022 1:45	19.52	6/21/2022 4:18	6.12
6/22/2022 0:59	37.15	6/22/2022 1:46	19.53	6/21/2022 4:19	6.11
6/22/2022 1:00	37.17	6/22/2022 1:47	19.53	6/21/2022 4:20	6.08
6/22/2022 1:01	37.18	6/22/2022 1:48	19.50	6/21/2022 4:21	6.10
6/22/2022 1:02	37.16	6/22/2022 1:49	19.51	6/21/2022 4:22	6.10
6/22/2022 1:03	37.16	6/22/2022 1:50	19.50	6/21/2022 4:23	6.12
6/22/2022 1:04	37.16	6/22/2022 1:51	19.52	6/21/2022 4:24	6.09
6/22/2022 1:05	37.16	6/22/2022 1:52	19.48	6/21/2022 4:25	6.08
6/22/2022 1:06	37.15	6/22/2022 1:53	19.51	6/21/2022 4:26	6.10
6/22/2022 1:07	37.13	6/22/2022 1:54	19.52	6/21/2022 4:27	6.09
6/22/2022 1:08	37.15	6/22/2022 1:55	19.51	6/21/2022 4:28	6.10
6/22/2022 1:09	37.15	6/22/2022 1:56	19.53	6/21/2022 4:29	6.10
6/22/2022 1:10	37.16	6/22/2022 1:57	19.54	6/21/2022 4:30	6.08
6/22/2022 1:11	37.17	6/22/2022 1:58	19.51	6/21/2022 4:31	6.08
6/22/2022 1:12	37.17	6/22/2022 1:59	19.52	6/21/2022 4:32	6.06
6/22/2022 1:13	37.18	6/22/2022 2:00	19.52	6/21/2022 4:33	6.10
6/22/2022 1:14	37.13	6/22/2022 2:01	19.52	6/21/2022 4:34	6.11
6/22/2022 1:15	37.20	6/22/2022 2:02	19.50	6/21/2022 4:35	6.09
6/22/2022 1:16	37.16	6/22/2022 2:03	19.52	6/21/2022 4:36	6.11
6/22/2022 1:17	37.14	6/22/2022 2:04	19.54	6/21/2022 4:37	6.10
6/22/2022 1:18	37.18	6/22/2022 2:05	19.51	6/21/2022 4:38	6.07
6/22/2022 1:19	37.14	6/22/2022 2:06	19.53	6/21/2022 4:39	6.09
6/22/2022 1:20	37.17	6/22/2022 2:07	19.49	6/21/2022 4:40	6.11
6/22/2022 1:21	37.15	6/22/2022 2:08	19.52	6/21/2022 4:41	6.08
6/22/2022 1:22	37.17	6/22/2022 2:09	19.54	6/21/2022 4:42	6.09
6/22/2022 1:23	37.21	6/22/2022 2:10	19.52	6/21/2022 4:43	6.09
6/22/2022 1:24	37.20	6/22/2022 2:11	19.49	6/21/2022 4:44	6.05
6/22/2022 1:25	37.14	6/22/2022 2:12	19.54	6/21/2022 4:45	6.10
6/22/2022 1:26	37.17	6/22/2022 2:13	19.52	6/21/2022 4:46	6.09
6/22/2022 1:27	37.19	6/22/2022 2:14	19.53	6/21/2022 4:47	6.10
6/22/2022 1:28	37.20	6/22/2022 2:15	19.53	6/21/2022 4:48	6.10
6/22/2022 1:29	37.17	6/22/2022 2:16	19.50	6/21/2022 4:49	6.08
6/22/2022 1:30	37.19	6/22/2022 2:17	19.52	6/21/2022 4:50	6.12

6/22/2022 1:31	38.01	6/22/2022 2:18	19.51	6/21/2022 4:51	6.12
6/22/2022 1:32	38.04	6/22/2022 2:19	19.51	6/21/2022 4:52	6.10
6/22/2022 1:33	37.47	6/22/2022 2:20	19.53	6/21/2022 4:53	6.13
6/22/2022 1:34	37.36	6/22/2022 2:21	19.53	6/21/2022 4:54	6.13
6/22/2022 1:35	37.32	6/22/2022 2:22	19.52	6/21/2022 4:55	6.09
6/22/2022 1:36	37.31	6/22/2022 2:23	19.53	6/21/2022 4:56	6.13
6/22/2022 1:37	37.28	6/22/2022 2:24	19.52	6/21/2022 4:57	6.09
6/22/2022 1:38	37.29	6/22/2022 2:25	19.51	6/21/2022 4:58	6.08
6/22/2022 1:39	37.30	6/22/2022 2:26	19.53	6/21/2022 4:59	6.08
6/22/2022 1:40	37.24	6/22/2022 2:27	19.53	6/21/2022 5:00	6.09
6/22/2022 1:41	37.23	6/22/2022 2:28	19.53	6/21/2022 5:01	6.08
6/22/2022 1:42	37.26	6/22/2022 2:29	19.50	6/21/2022 5:02	6.11
6/22/2022 1:43	37.24	6/22/2022 2:30	19.53	6/21/2022 5:03	6.10
6/22/2022 1:44	37.26	6/22/2022 2:31	19.50	6/21/2022 5:04	6.10
6/22/2022 1:45	37.23	6/22/2022 2:32	19.51	6/21/2022 5:05	6.10
6/22/2022 1:46	37.26	6/22/2022 2:33	19.53	6/21/2022 5:06	6.12
6/22/2022 1:47	37.27	6/22/2022 2:34	19.52	6/21/2022 5:07	6.09
6/22/2022 1:48	37.25	6/22/2022 2:35	19.53	6/21/2022 5:08	6.10
6/22/2022 1:49	37.24	6/22/2022 2:36	19.54	6/21/2022 5:09	6.08
6/22/2022 1:50	37.22	6/22/2022 2:37	19.54	6/21/2022 5:10	6.08
6/22/2022 1:51	37.24	6/22/2022 2:38	19.50	6/21/2022 5:11	6.10
6/22/2022 1:52	37.21	6/22/2022 2:39	19.47	6/21/2022 5:12	6.11
6/22/2022 1:53	37.22	6/22/2022 2:40	19.53	6/21/2022 5:13	6.07
6/22/2022 1:54	37.25	6/22/2022 2:41	19.51	6/21/2022 5:14	6.07
6/22/2022 1:55	37.24	6/22/2022 2:42	19.51	6/21/2022 5:15	6.06
6/22/2022 1:56	37.22	6/22/2022 2:43	19.50	6/21/2022 5:16	6.12
6/22/2022 1:57	37.23	6/22/2022 2:44	19.52	6/21/2022 5:17	6.12
6/22/2022 1:58	37.20	6/22/2022 2:45	19.52	6/21/2022 5:18	6.10
6/22/2022 1:59	37.25	6/22/2022 2:46	19.52	6/21/2022 5:19	6.11
6/22/2022 2:00	37.22	6/22/2022 2:47	19.51	6/21/2022 5:20	6.08
6/22/2022 2:01	37.23	6/22/2022 2:48	19.51	6/21/2022 5:21	6.11
6/22/2022 2:02	37.25	6/22/2022 2:49	19.51	6/21/2022 5:22	6.11
6/22/2022 2:03	37.23	6/22/2022 2:50	19.53	6/21/2022 5:23	6.12
6/22/2022 2:04	37.21	6/22/2022 2:51	19.53	6/21/2022 5:24	6.10
6/22/2022 2:05	37.25	6/22/2022 2:52	19.51	6/21/2022 5:25	6.08
6/22/2022 2:06	37.22	6/22/2022 2:53	19.55	6/21/2022 5:26	6.10
6/22/2022 2:07	37.24	6/22/2022 2:54	19.51	6/21/2022 5:27	6.10
6/22/2022 2:08	37.22	6/22/2022 2:55	19.53	6/21/2022 5:28	6.08
6/22/2022 2:09	37.23	6/22/2022 2:56	19.50	6/21/2022 5:29	6.10
6/22/2022 2:10	37.22	6/22/2022 2:57	19.52	6/21/2022 5:30	6.12
6/22/2022 2:11	37.23	6/22/2022 2:58	19.53	6/21/2022 5:31	6.10
6/22/2022 2:12	37.23	6/22/2022 2:59	19.52	6/21/2022 5:32	6.10
6/22/2022 2:13	37.25	6/22/2022 3:00	19.51	6/21/2022 5:33	6.11
6/22/2022 2:14	37.21	6/22/2022 3:01	19.54	6/21/2022 5:34	6.08
6/22/2022 2:15	37.25	6/22/2022 3:02	19.53	6/21/2022 5:35	6.11
6/22/2022 2:16	37.22	6/22/2022 3:03	19.53	6/21/2022 5:36	6.10
6/22/2022 2:17	37.24	6/22/2022 3:04	19.52	6/21/2022 5:37	6.09
6/22/2022 2:18	37.24	6/22/2022 3:05	19.52	6/21/2022 5:38	6.10
6/22/2022 2:19	37.21	6/22/2022 3:06	19.53	6/21/2022 5:39	6.08
6/22/2022 2:20	37.24	6/22/2022 3:07	19.55	6/21/2022 5:40	6.10
6/22/2022 2:21	37.22	6/22/2022 3:08	19.51	6/21/2022 5:41	6.12
6/22/2022 2:22	37.23	6/22/2022 3:09	19.53	6/21/2022 5:42	6.10
6/22/2022 2:23	37.23	6/22/2022 3:10	19.50	6/21/2022 5:43	6.10
6/22/2022 2:24	37.23	6/22/2022 3:11	19.51	6/21/2022 5:44	6.09
6/22/2022 2:25	37.23	6/22/2022 3:12	19.52	6/21/2022 5:45	6.12
6/22/2022 2:26	37.24	6/22/2022 3:13	19.53	6/21/2022 5:46	6.11
6/22/2022 2:27	37.23	6/22/2022 3:14	19.53	6/21/2022 5:47	6.09
6/22/2022 2:28	37.20	6/22/2022 3:15	19.53	6/21/2022 5:48	6.09
6/22/2022 2:29	37.26	6/22/2022 3:16	19.51	6/21/2022 5:49	6.11
6/22/2022 2:30	37.27	6/22/2022 3:17	19.53	6/21/2022 5:50	6.12
6/22/2022 2:31	37.26	6/22/2022 3:18	19.51	6/21/2022 5:51	6.12
6/22/2022 2:32	37.24	6/22/2022 3:19	19.53	6/21/2022 5:52	6.07
6/22/2022 2:33	37.26	6/22/2022 3:20	19.53	6/21/2022 5:53	6.08
6/22/2022 2:34	37.28	6/22/2022 3:21	19.53	6/21/2022 5:54	6.09
6/22/2022 2:35	37.23	6/22/2022 3:22	19.52	6/21/2022 5:55	6.11
6/22/2022 2:36	37.25	6/22/2022 3:23	19.50	6/21/2022 5:56	6.10
6/22/2022 2:37	37.27	6/22/2022 3:24	19.52	6/21/2022 5:57	6.08
6/22/2022 2:38	37.24	6/22/2022 3:25	19.52	6/21/2022 5:58	6.12
6/22/2022 2:39	37.25	6/22/2022 3:26	19.53	6/21/2022 5:59	6.13
6/22/2022 2:40	37.23	6/22/2022 3:27	19.53	6/21/2022 6:00	6.08
6/22/2022 2:41	37.23	6/22/2022 3:28	19.53	6/21/2022 6:01	6.08
6/22/2022 2:42	37.26	6/22/2022 3:29	19.50	6/21/2022 6:02	6.09
6/22/2022 2:43	37.23	6/22/2022 3:30	19.51	6/21/2022 6:03	6.11
6/22/2022 2:44	37.22	6/22/2022 3:31	19.54	6/21/2022 6:04	6.10
6/22/2022 2:45	37.23	6/22/2022 3:32	19.52	6/21/2022 6:05	6.09
6/22/2022 2:46	37.27	6/22/2022 3:33	19.53	6/21/2022 6:06	6.06
6/22/2022 2:47	37.26	6/22/2022 3:34	19.53	6/21/2022 6:07	6.09
6/22/2022 2:48	37.24	6/22/2022 3:35	19.55	6/21/2022 6:08	6.11
6/22/2022 2:49	37.25	6/22/2022 3:36	19.53	6/21/2022 6:09	6.10
6/22/2022 2:50	37.22	6/22/2022 3:37	19.54	6/21/2022 6:10	6.09
6/22/2022 2:51	37.24	6/22/2022 3:38	19.53	6/21/2022 6:11	6.10
6/22/2022 2:52	37.28	6/22/2022 3:39	19.54	6/21/2022 6:12	6.12
6/22/2022 2:53	37.21	6/22/2022 3:40	19.54	6/21/2022 6:13	6.09
6/22/2022 2:54	37.26	6/22/2022 3:41	19.51	6/21/2022 6:14	6.10
6/22/2022 2:55	37.27	6/22/2022 3:42	19.54	6/21/2022 6:15	6.11
6/22/2022 2:56	37.26	6/22/2022 3:43	19.52	6/21/2022 6:16	6.12
6/22/2022 2:57	37.30	6/22/2022 3:44	19.52	6/21/2022 6:17	6.09
6/22/2022 2:58	37.26	6/22/2022 3:45	19.53	6/21/2022 6:18	6.09

6/22/2022 2:59	37.27	6/22/2022 3:46	19.53	6/21/2022 6:19	6.09
6/22/2022 3:00	37.26	6/22/2022 3:47	19.53	6/21/2022 6:20	6.11
6/22/2022 3:01	37.25	6/22/2022 3:48	19.54	6/21/2022 6:21	6.11
6/22/2022 3:02	37.27	6/22/2022 3:49	19.53	6/21/2022 6:22	6.09
6/22/2022 3:03	37.26	6/22/2022 3:50	19.56	6/21/2022 6:23	6.11
6/22/2022 3:04	37.25	6/22/2022 3:51	19.52	6/21/2022 6:24	6.11
6/22/2022 3:05	37.23	6/22/2022 3:52	19.54	6/21/2022 6:25	6.09
6/22/2022 3:06	37.25	6/22/2022 3:53	19.52	6/21/2022 6:26	6.09
6/22/2022 3:07	37.27	6/22/2022 3:54	19.53	6/21/2022 6:27	6.12
6/22/2022 3:08	37.27	6/22/2022 3:55	19.51	6/21/2022 6:28	6.10
6/22/2022 3:09	37.27	6/22/2022 3:56	19.54	6/21/2022 6:29	7.60
6/22/2022 3:10	37.26	6/22/2022 3:57	19.52	6/21/2022 6:30	8.83
6/22/2022 3:11	37.25	6/22/2022 3:58	19.53	6/21/2022 6:31	6.52
6/22/2022 3:12	37.26	6/22/2022 3:59	19.53	6/21/2022 6:32	6.17
6/22/2022 3:13	37.28	6/22/2022 4:00	19.54	6/21/2022 6:33	6.14
6/22/2022 3:14	37.25	6/22/2022 4:01	19.54	6/21/2022 6:34	6.14
6/22/2022 3:15	37.28	6/22/2022 4:02	19.56	6/21/2022 6:35	6.13
6/22/2022 3:16	37.29	6/22/2022 4:03	19.55	6/21/2022 6:36	6.13
6/22/2022 3:17	37.27	6/22/2022 4:04	19.51	6/21/2022 6:37	6.10
6/22/2022 3:18	37.23	6/22/2022 4:05	19.53	6/21/2022 6:38	6.14
6/22/2022 3:19	37.26	6/22/2022 4:06	19.52	6/21/2022 6:39	6.12
6/22/2022 3:20	37.26	6/22/2022 4:07	19.53	6/21/2022 6:40	6.11
6/22/2022 3:21	37.28	6/22/2022 4:08	19.55	6/21/2022 6:41	6.10
6/22/2022 3:22	37.26	6/22/2022 4:09	19.55	6/21/2022 6:42	6.12
6/22/2022 3:23	37.28	6/22/2022 4:10	19.54	6/21/2022 6:43	6.14
6/22/2022 3:24	37.29	6/22/2022 4:11	19.55	6/21/2022 6:44	6.10
6/22/2022 3:25	37.27	6/22/2022 4:12	19.57	6/21/2022 6:45	6.13
6/22/2022 3:26	37.28	6/22/2022 4:13	19.51	6/21/2022 6:46	6.10
6/22/2022 3:27	37.25	6/22/2022 4:14	19.53	6/21/2022 6:47	6.07
6/22/2022 3:28	37.28	6/22/2022 4:15	19.51	6/21/2022 6:48	6.10
6/22/2022 3:29	37.26	6/22/2022 4:16	19.54	6/21/2022 6:49	6.10
6/22/2022 3:30	37.29	6/22/2022 4:17	19.53	6/21/2022 6:50	6.14
6/22/2022 3:31	37.28	6/22/2022 4:18	19.54	6/21/2022 6:51	6.13
6/22/2022 3:32	37.27	6/22/2022 4:19	19.56	6/21/2022 6:52	6.10
6/22/2022 3:33	37.28	6/22/2022 4:20	19.52	6/21/2022 6:53	6.13
6/22/2022 3:34	37.26	6/22/2022 4:21	19.50	6/21/2022 6:54	6.10
6/22/2022 3:35	37.28	6/22/2022 4:22	19.53	6/21/2022 6:55	6.10
6/22/2022 3:36	37.25	6/22/2022 4:23	19.53	6/21/2022 6:56	6.10
6/22/2022 3:37	37.29	6/22/2022 4:24	19.53	6/21/2022 6:57	6.11
6/22/2022 3:38	37.28	6/22/2022 4:25	19.55	6/21/2022 6:58	6.08
6/22/2022 3:39	37.27	6/22/2022 4:26	19.52	6/21/2022 6:59	6.09
6/22/2022 3:40	37.29	6/22/2022 4:27	19.53	6/21/2022 7:00	6.10
6/22/2022 3:41	37.27	6/22/2022 4:28	19.53	6/21/2022 7:01	6.09
6/22/2022 3:42	37.31	6/22/2022 4:29	19.56	6/21/2022 7:02	6.09
6/22/2022 3:43	37.31	6/22/2022 4:30	19.54	6/21/2022 7:03	6.11
6/22/2022 3:44	37.29	6/22/2022 4:31	19.54	6/21/2022 7:04	6.10
6/22/2022 3:45	37.28	6/22/2022 4:32	19.54	6/21/2022 7:05	6.12
6/22/2022 3:46	37.32	6/22/2022 4:33	20.13	6/21/2022 7:06	6.10
6/22/2022 3:47	37.32	6/22/2022 4:34	20.24	6/21/2022 7:07	6.11
6/22/2022 3:48	37.32	6/22/2022 4:35	20.30	6/21/2022 7:08	6.12
6/22/2022 3:49	37.28	6/22/2022 4:36	20.33	6/21/2022 7:09	6.12
6/22/2022 3:50	37.27	6/22/2022 4:37	20.35	6/21/2022 7:10	6.11
6/22/2022 3:51	37.30	6/22/2022 4:38	19.80	6/21/2022 7:11	6.06
6/22/2022 3:52	37.30	6/22/2022 4:39	19.75	6/21/2022 7:12	6.10
6/22/2022 3:53	37.32	6/22/2022 4:40	19.72	6/21/2022 7:13	6.10
6/22/2022 3:54	37.28	6/22/2022 4:41	19.68	6/21/2022 7:14	6.12
6/22/2022 3:55	37.30	6/22/2022 4:42	19.70	6/21/2022 7:15	6.12
6/22/2022 3:56	37.31	6/22/2022 4:43	19.67	6/21/2022 7:16	6.10
6/22/2022 3:57	37.29	6/22/2022 4:44	19.66	6/21/2022 7:17	6.11
6/22/2022 3:58	37.29	6/22/2022 4:45	19.65	6/21/2022 7:18	6.11
6/22/2022 3:59	37.29	6/22/2022 4:46	19.65	6/21/2022 7:19	6.12
6/22/2022 4:00	37.31	6/22/2022 4:47	19.64	6/21/2022 7:20	6.08
6/22/2022 4:01	37.27	6/22/2022 4:48	19.63	6/21/2022 7:21	6.10
6/22/2022 4:02	37.30	6/22/2022 4:49	19.65	6/21/2022 7:22	6.10
6/22/2022 4:03	37.33	6/22/2022 4:50	19.63	6/21/2022 7:23	6.10
6/22/2022 4:04	37.31	6/22/2022 4:51	19.64	6/21/2022 7:24	6.06
6/22/2022 4:05	37.31	6/22/2022 4:52	19.64	6/21/2022 7:25	6.12
6/22/2022 4:06	37.32	6/22/2022 4:53	19.61	6/21/2022 7:26	6.09
6/22/2022 4:07	37.33	6/22/2022 4:54	19.62	6/21/2022 7:27	6.09
6/22/2022 4:08	37.31	6/22/2022 4:55	19.61	6/21/2022 7:28	6.09
6/22/2022 4:09	37.31	6/22/2022 4:56	19.61	6/21/2022 7:29	6.09
6/22/2022 4:10	37.32	6/22/2022 4:57	19.60	6/21/2022 7:30	6.10
6/22/2022 4:11	37.31	6/22/2022 4:58	19.64	6/21/2022 7:31	6.11
6/22/2022 4:12	37.30	6/22/2022 4:59	19.60	6/21/2022 7:32	6.13
6/22/2022 4:13	37.31	6/22/2022 5:00	19.62	6/21/2022 7:33	6.08
6/22/2022 4:14	37.34	6/22/2022 5:01	19.60	6/21/2022 7:34	6.10
6/22/2022 4:15	37.33	6/22/2022 5:02	19.63	6/21/2022 7:35	6.11
6/22/2022 4:16	37.33	6/22/2022 5:03	19.64	6/21/2022 7:36	6.09
6/22/2022 4:17	37.32	6/22/2022 5:04	19.60	6/21/2022 7:37	6.09
6/22/2022 4:18	37.31	6/22/2022 5:05	19.61	6/21/2022 7:38	6.08
6/22/2022 4:19	37.30	6/22/2022 5:06	19.61	6/21/2022 7:39	6.07
6/22/2022 4:20	37.29	6/22/2022 5:07	19.61	6/21/2022 7:40	6.10
6/22/2022 4:21	37.32	6/22/2022 5:08	19.59	6/21/2022 7:41	6.10
6/22/2022 4:22	37.33	6/22/2022 5:09	19.61	6/21/2022 7:42	6.13
6/22/2022 4:23	37.34	6/22/2022 5:10	19.61	6/21/2022 7:43	6.07
6/22/2022 4:24	37.31	6/22/2022 5:11	19.60	6/21/2022 7:44	6.10
6/22/2022 4:25	37.30	6/22/2022 5:12	19.60	6/21/2022 7:45	6.08
6/22/2022 4:26	37.34	6/22/2022 5:13	19.61	6/21/2022 7:46	6.09

6/22/2022 4:27	37.33	6/22/2022 5:14	19.60	6/21/2022 7:47	6.11
6/22/2022 4:28	37.29	6/22/2022 5:15	19.60	6/21/2022 7:48	6.12
6/22/2022 4:29	37.34	6/22/2022 5:16	19.60	6/21/2022 7:49	6.10
6/22/2022 4:30	37.36	6/22/2022 5:17	19.57	6/21/2022 7:50	6.09
6/22/2022 4:31	37.32	6/22/2022 5:18	19.62	6/21/2022 7:51	6.10
6/22/2022 4:32	37.34	6/22/2022 5:19	19.59	6/21/2022 7:52	6.09
6/22/2022 4:33	37.33	6/22/2022 5:20	19.60	6/21/2022 7:53	6.12
6/22/2022 4:34	37.33	6/22/2022 5:21	19.59	6/21/2022 7:54	6.10
6/22/2022 4:35	37.30	6/22/2022 5:22	19.61	6/21/2022 7:55	6.11
6/22/2022 4:36	37.36	6/22/2022 5:23	19.62	6/21/2022 7:56	6.10
6/22/2022 4:37	37.35	6/22/2022 5:24	19.57	6/21/2022 7:57	6.11
6/22/2022 4:38	37.30	6/22/2022 5:25	19.59	6/21/2022 7:58	6.09
6/22/2022 4:39	37.31	6/22/2022 5:26	19.59	6/21/2022 7:59	6.08
6/22/2022 4:40	37.32	6/22/2022 5:27	19.59	6/21/2022 8:00	6.08
6/22/2022 4:41	37.34	6/22/2022 5:28	19.59	6/21/2022 8:01	6.09
6/22/2022 4:42	37.35	6/22/2022 5:29	19.60	6/21/2022 8:02	6.10
6/22/2022 4:43	37.35	6/22/2022 5:30	19.60	6/21/2022 8:03	6.10
6/22/2022 4:44	37.37	6/22/2022 5:31	19.58	6/21/2022 8:04	6.11
6/22/2022 4:45	37.32	6/22/2022 5:32	19.59	6/21/2022 8:05	6.08
6/22/2022 4:46	37.34	6/22/2022 5:33	19.56	6/21/2022 8:06	6.11
6/22/2022 4:47	37.34	6/22/2022 5:34	19.57	6/21/2022 8:07	6.12
6/22/2022 4:48	37.32	6/22/2022 5:35	19.57	6/21/2022 8:08	6.13
6/22/2022 4:49	37.34	6/22/2022 5:36	19.55	6/21/2022 8:09	6.10
6/22/2022 4:50	37.33	6/22/2022 5:37	19.59	6/21/2022 8:10	6.11
6/22/2022 4:51	37.34	6/22/2022 5:38	19.58	6/21/2022 8:11	6.10
6/22/2022 4:52	37.36	6/22/2022 5:39	19.60	6/21/2022 8:12	6.09
6/22/2022 4:53	37.34	6/22/2022 5:40	19.58	6/21/2022 8:13	6.12
6/22/2022 4:54	37.34	6/22/2022 5:41	19.59	6/21/2022 8:14	6.07
6/22/2022 4:55	37.36	6/22/2022 5:42	19.58	6/21/2022 8:15	6.06
6/22/2022 4:56	37.31	6/22/2022 5:43	19.60	6/21/2022 8:16	6.11
6/22/2022 4:57	37.35	6/22/2022 5:44	19.58	6/21/2022 8:17	6.11
6/22/2022 4:58	37.34	6/22/2022 5:45	19.56	6/21/2022 8:18	6.13
6/22/2022 4:59	37.33	6/22/2022 5:46	19.61	6/21/2022 8:19	6.12
6/22/2022 5:00	37.34	6/22/2022 5:47	19.58	6/21/2022 8:20	6.09
6/22/2022 5:01	37.35	6/22/2022 5:48	19.58	6/21/2022 8:21	6.10
6/22/2022 5:02	37.34	6/22/2022 5:49	19.60	6/21/2022 8:22	6.10
6/22/2022 5:03	37.36	6/22/2022 5:50	19.60	6/21/2022 8:23	6.11
6/22/2022 5:04	37.39	6/22/2022 5:51	19.58	6/21/2022 8:24	6.10
6/22/2022 5:05	37.34	6/22/2022 5:52	19.58	6/21/2022 8:25	6.11
6/22/2022 5:06	37.32	6/22/2022 5:53	19.60	6/21/2022 8:26	6.09
6/22/2022 5:07	37.36	6/22/2022 5:54	19.59	6/21/2022 8:27	6.09
6/22/2022 5:08	37.34	6/22/2022 5:55	19.60	6/21/2022 8:28	6.07
6/22/2022 5:09	37.34	6/22/2022 5:56	19.59	6/21/2022 8:29	6.08
6/22/2022 5:10	37.36	6/22/2022 5:57	19.57	6/21/2022 8:30	6.08
6/22/2022 5:11	37.37	6/22/2022 5:58	19.57	6/21/2022 8:31	6.08
6/22/2022 5:12	37.37	6/22/2022 5:59	19.60	6/21/2022 8:32	6.07
6/22/2022 5:13	37.34	6/22/2022 6:00	19.57	6/21/2022 8:33	6.09
6/22/2022 5:14	37.31	6/22/2022 6:01	19.58	6/21/2022 8:34	6.11
6/22/2022 5:15	37.37	6/22/2022 6:02	19.61	6/21/2022 8:35	6.10
6/22/2022 5:16	37.36	6/22/2022 6:03	19.59	6/21/2022 8:36	6.10
6/22/2022 5:17	37.40	6/22/2022 6:04	19.59	6/21/2022 8:37	6.09
6/22/2022 5:18	37.35	6/22/2022 6:05	19.58	6/21/2022 8:38	6.11
6/22/2022 5:19	37.36	6/22/2022 6:06	19.58	6/21/2022 8:39	6.13
6/22/2022 5:20	37.37	6/22/2022 6:07	19.55	6/21/2022 8:40	6.11
6/22/2022 5:21	37.36	6/22/2022 6:08	19.56	6/21/2022 8:41	6.07
6/22/2022 5:22	37.36	6/22/2022 6:09	19.60	6/21/2022 8:42	6.13
6/22/2022 5:23	37.35	6/22/2022 6:10	19.60	6/21/2022 8:43	6.11
6/22/2022 5:24	37.40	6/22/2022 6:11	19.59	6/21/2022 8:44	6.11
6/22/2022 5:25	37.37	6/22/2022 6:12	19.57	6/21/2022 8:45	6.10
6/22/2022 5:26	37.34	6/22/2022 6:13	19.56	6/21/2022 8:46	6.11
6/22/2022 5:27	37.36	6/22/2022 6:14	19.57	6/21/2022 8:47	6.10
6/22/2022 5:28	37.38	6/22/2022 6:15	19.58	6/21/2022 8:48	6.10
6/22/2022 5:29	37.38	6/22/2022 6:16	19.59	6/21/2022 8:49	6.10
6/22/2022 5:30	37.34	6/22/2022 6:17	19.60	6/21/2022 8:50	6.09
6/22/2022 5:31	37.37	6/22/2022 6:18	19.61	6/21/2022 8:51	6.11
6/22/2022 5:32	37.39	6/22/2022 6:19	19.57	6/21/2022 8:52	6.11
6/22/2022 5:33	37.37	6/22/2022 6:20	19.58	6/21/2022 8:53	6.12
6/22/2022 5:34	37.40	6/22/2022 6:21	19.58	6/21/2022 8:54	6.08
6/22/2022 5:35	37.37	6/22/2022 6:22	19.59	6/21/2022 8:55	6.10
6/22/2022 5:36	37.38	6/22/2022 6:23	19.58	6/21/2022 8:56	6.10
6/22/2022 5:37	37.38	6/22/2022 6:24	19.58	6/21/2022 8:57	6.08
6/22/2022 5:38	37.37	6/22/2022 6:25	19.60	6/21/2022 8:58	6.10
6/22/2022 5:39	37.37	6/22/2022 6:26	19.57	6/21/2022 8:59	6.09
6/22/2022 5:40	37.38	6/22/2022 6:27	19.56	6/21/2022 9:00	6.09
6/22/2022 5:41	37.39	6/22/2022 6:28	19.58	6/21/2022 9:01	6.10
6/22/2022 5:42	37.37	6/22/2022 6:29	19.59	6/21/2022 9:02	6.12
6/22/2022 5:43	37.39	6/22/2022 6:30	19.58	6/21/2022 9:03	6.07
6/22/2022 5:44	37.39	6/22/2022 6:31	19.60	6/21/2022 9:04	6.12
6/22/2022 5:45	37.37	6/22/2022 6:32	19.58	6/21/2022 9:05	6.09
6/22/2022 5:46	37.38	6/22/2022 6:33	19.59	6/21/2022 9:06	6.12
6/22/2022 5:47	37.37	6/22/2022 6:34	19.57	6/21/2022 9:07	6.10
6/22/2022 5:48	37.38	6/22/2022 6:35	19.60	6/21/2022 9:08	6.10
6/22/2022 5:49	37.40	6/22/2022 6:36	19.58	6/21/2022 9:09	6.10
6/22/2022 5:50	37.38	6/22/2022 6:37	19.58	6/21/2022 9:10	6.09
6/22/2022 5:51	37.39	6/22/2022 6:38	19.57	6/21/2022 9:11	6.13
6/22/2022 5:52	37.39	6/22/2022 6:39	19.57	6/21/2022 9:12	6.09
6/22/2022 5:53	37.40	6/22/2022 6:40	19.56	6/21/2022 9:13	6.11
6/22/2022 5:54	37.37	6/22/2022 6:41	19.59	6/21/2022 9:14	6.12

6/22/2022 5:55	37.43	6/22/2022 6:42	19.56	6/21/2022 9:15	6.09
6/22/2022 5:56	37.38	6/22/2022 6:43	19.60	6/21/2022 9:16	6.08
6/22/2022 5:57	37.43	6/22/2022 6:44	19.58	6/21/2022 9:17	6.09
6/22/2022 5:58	37.40	6/22/2022 6:45	19.61	6/21/2022 9:18	6.10
6/22/2022 5:59	37.39	6/22/2022 6:46	19.58	6/21/2022 9:19	6.10
6/22/2022 6:00	37.39	6/22/2022 6:47	19.59	6/21/2022 9:20	6.08
6/22/2022 6:01	37.39	6/22/2022 6:48	19.56	6/21/2022 9:21	6.10
6/22/2022 6:02	37.38	6/22/2022 6:49	19.59	6/21/2022 9:22	6.13
6/22/2022 6:03	37.41	6/22/2022 6:50	19.58	6/21/2022 9:23	6.07
6/22/2022 6:04	37.42	6/22/2022 6:51	19.58	6/21/2022 9:24	6.10
6/22/2022 6:05	37.37	6/22/2022 6:52	19.58	6/21/2022 9:25	6.10
6/22/2022 6:06	37.42	6/22/2022 6:53	19.58	6/21/2022 9:26	6.08
6/22/2022 6:07	37.39	6/22/2022 6:54	19.58	6/21/2022 9:27	6.11
6/22/2022 6:08	37.41	6/22/2022 6:55	19.58	6/21/2022 9:28	6.09
6/22/2022 6:09	37.43	6/22/2022 6:56	19.59	6/21/2022 9:29	6.11
6/22/2022 6:10	37.39	6/22/2022 6:57	19.60	6/21/2022 9:30	6.13
6/22/2022 6:11	37.42	6/22/2022 6:58	19.59	6/21/2022 9:31	6.07
6/22/2022 6:12	37.42	6/22/2022 6:59	19.60	6/21/2022 9:32	6.09
6/22/2022 6:13	37.37	6/22/2022 7:00	19.61	6/21/2022 9:33	6.11
6/22/2022 6:14	37.41	6/22/2022 7:01	19.58	6/21/2022 9:34	6.10
6/22/2022 6:15	37.42	6/22/2022 7:02	19.56	6/21/2022 9:35	6.08
6/22/2022 6:16	37.43	6/22/2022 7:03	19.59	6/21/2022 9:36	6.09
6/22/2022 6:17	37.43	6/22/2022 7:04	19.61	6/21/2022 9:37	6.13
6/22/2022 6:18	37.41	6/22/2022 7:05	19.58	6/21/2022 9:38	6.10
6/22/2022 6:19	37.41	6/22/2022 7:06	19.57	6/21/2022 9:39	6.12
6/22/2022 6:20	37.42	6/22/2022 7:07	19.58	6/21/2022 9:40	6.12
6/22/2022 6:21	37.40	6/22/2022 7:08	19.57	6/21/2022 9:41	6.11
6/22/2022 6:22	37.41	6/22/2022 7:09	19.57	6/21/2022 9:42	6.07
6/22/2022 6:23	37.41	6/22/2022 7:10	19.59	6/21/2022 9:43	6.10
6/22/2022 6:24	37.42	6/22/2022 7:11	19.58	6/21/2022 9:44	6.13
6/22/2022 6:25	37.39	6/22/2022 7:12	19.57	6/21/2022 9:45	6.10
6/22/2022 6:26	37.42	6/22/2022 7:13	19.57	6/21/2022 9:46	6.10
6/22/2022 6:27	37.44	6/22/2022 7:14	19.58	6/21/2022 9:47	6.11
6/22/2022 6:28	37.43	6/22/2022 7:15	19.58	6/21/2022 9:48	6.08
6/22/2022 6:29	37.41	6/22/2022 7:16	19.62	6/21/2022 9:49	6.11
6/22/2022 6:30	37.44	6/22/2022 7:17	19.61	6/21/2022 9:50	6.14
6/22/2022 6:31	37.39	6/22/2022 7:18	19.57	6/21/2022 9:51	6.13
6/22/2022 6:32	37.43	6/22/2022 7:19	19.59	6/21/2022 9:52	6.10
6/22/2022 6:33	37.43	6/22/2022 7:20	19.59	6/21/2022 9:53	8.72
6/22/2022 6:34	37.45	6/22/2022 7:21	19.55	6/21/2022 9:54	9.11
6/22/2022 6:35	37.41	6/22/2022 7:22	19.60	6/21/2022 9:55	9.08
6/22/2022 6:36	37.41	6/22/2022 7:23	19.58	6/21/2022 9:56	6.75
6/22/2022 6:37	37.42	6/22/2022 7:24	19.58	6/21/2022 9:57	6.21
6/22/2022 6:38	37.43	6/22/2022 7:25	19.59	6/21/2022 9:58	6.17
6/22/2022 6:39	37.45	6/22/2022 7:26	19.58	6/21/2022 9:59	6.14
6/22/2022 6:40	37.42	6/22/2022 7:27	19.60	6/21/2022 10:00	6.13
6/22/2022 6:41	37.43	6/22/2022 7:28	19.58	6/21/2022 10:01	6.08
6/22/2022 6:42	37.42	6/22/2022 7:29	19.58	6/21/2022 10:02	6.12
6/22/2022 6:43	37.41	6/22/2022 7:30	19.57	6/21/2022 10:03	6.10
6/22/2022 6:44	37.45	6/22/2022 7:31	19.58	6/21/2022 10:04	6.10
6/22/2022 6:45	37.43	6/22/2022 7:32	19.59	6/21/2022 10:05	6.14
6/22/2022 6:46	37.42	6/22/2022 7:33	19.60	6/21/2022 10:06	6.11
6/22/2022 6:47	37.45	6/22/2022 7:34	19.58	6/21/2022 10:07	6.11
6/22/2022 6:48	37.44	6/22/2022 7:35	19.60	6/21/2022 10:08	6.15
6/22/2022 6:49	37.43	6/22/2022 7:36	19.57	6/21/2022 10:09	6.13
6/22/2022 6:50	37.41	6/22/2022 7:37	19.58	6/21/2022 10:10	6.12
6/22/2022 6:51	37.46	6/22/2022 7:38	19.62	6/21/2022 10:11	6.14
6/22/2022 6:52	37.46	6/22/2022 7:39	19.59	6/21/2022 10:12	6.13
6/22/2022 6:53	37.41	6/22/2022 7:40	19.61	6/21/2022 10:13	6.08
6/22/2022 6:54	37.43	6/22/2022 7:41	19.58	6/21/2022 10:14	6.12
6/22/2022 6:55	37.41	6/22/2022 7:42	19.60	6/21/2022 10:15	6.13
6/22/2022 6:56	37.45	6/22/2022 7:43	19.59	6/21/2022 10:16	6.12
6/22/2022 6:57	37.46	6/22/2022 7:44	19.58	6/21/2022 10:17	6.13
6/22/2022 6:58	37.42	6/22/2022 7:45	19.56	6/21/2022 10:18	6.10
6/22/2022 6:59	37.44	6/22/2022 7:46	19.58	6/21/2022 10:19	6.10
6/22/2022 7:00	37.44	6/22/2022 7:47	19.57	6/21/2022 10:20	6.08
6/22/2022 7:01	37.45	6/22/2022 7:48	19.59	6/21/2022 10:21	6.11
6/22/2022 7:02	37.45	6/22/2022 7:49	19.59	6/21/2022 10:22	6.11
6/22/2022 7:03	37.44	6/22/2022 7:50	19.58	6/21/2022 10:23	6.12
6/22/2022 7:04	37.47	6/22/2022 7:51	19.59	6/21/2022 10:24	6.12
6/22/2022 7:05	37.42	6/22/2022 7:52	19.60	6/21/2022 10:25	6.12
6/22/2022 7:06	37.44	6/22/2022 7:53	19.59	6/21/2022 10:26	6.12
6/22/2022 7:07	37.44	6/22/2022 7:54	19.59	6/21/2022 10:27	6.12
6/22/2022 7:08	37.43	6/22/2022 7:55	19.60	6/21/2022 10:28	6.13
6/22/2022 7:09	37.43	6/22/2022 7:56	19.57	6/21/2022 10:29	6.13
6/22/2022 7:10	37.45	6/22/2022 7:57	19.60	6/21/2022 10:30	6.12
6/22/2022 7:11	37.46	6/22/2022 7:58	19.58	6/21/2022 10:31	6.14
6/22/2022 7:12	37.45	6/22/2022 7:59	19.57	6/21/2022 10:32	6.12
6/22/2022 7:13	37.46	6/22/2022 8:00	19.58	6/21/2022 10:33	6.10
6/22/2022 7:14	37.42	6/22/2022 8:01	19.57	6/21/2022 10:34	6.10
6/22/2022 7:15	37.44	6/22/2022 8:02	19.57	6/21/2022 10:35	6.12
6/22/2022 7:16	37.45	6/22/2022 8:03	19.56	6/21/2022 10:36	6.08
6/22/2022 7:17	37.45	6/22/2022 8:04	19.57	6/21/2022 10:37	6.14
6/22/2022 7:18	37.45	6/22/2022 8:05	19.60	6/21/2022 10:38	6.10
6/22/2022 7:19	37.47	6/22/2022 8:06	19.57	6/21/2022 10:39	6.12
6/22/2022 7:20	37.51	6/22/2022 8:07	19.57	6/21/2022 10:40	6.10
6/22/2022 7:21	37.46	6/22/2022 8:08	19.59	6/21/2022 10:41	6.11
6/22/2022 7:22	37.46	6/22/2022 8:09	19.58	6/21/2022 10:42	6.12

6/22/2022 7:23	37.49	6/22/2022 8:10	19.59	6/21/2022 10:43	6.13
6/22/2022 7:24	37.46	6/22/2022 8:11	19.57	6/21/2022 10:44	6.11
6/22/2022 7:25	37.48	6/22/2022 8:12	19.60	6/21/2022 10:45	6.13
6/22/2022 7:26	37.48	6/22/2022 8:13	19.55	6/21/2022 10:46	6.13
6/22/2022 7:27	37.43	6/22/2022 8:14	19.60	6/21/2022 10:47	6.13
6/22/2022 7:28	37.47	6/22/2022 8:15	19.58	6/21/2022 10:48	6.11
6/22/2022 7:29	37.44	6/22/2022 8:16	19.59	6/21/2022 10:49	6.12
6/22/2022 7:30	37.48	6/22/2022 8:17	19.97	6/21/2022 10:50	6.14
6/22/2022 7:31	37.43	6/22/2022 8:18	20.24	6/21/2022 10:51	6.10
6/22/2022 7:32	37.46	6/22/2022 8:19	20.31	6/21/2022 10:52	6.10
6/22/2022 7:33	37.46	6/22/2022 8:20	20.35	6/21/2022 10:53	6.10
6/22/2022 7:34	37.45	6/22/2022 8:21	20.36	6/21/2022 10:54	6.10
6/22/2022 7:35	37.47	6/22/2022 8:22	19.85	6/21/2022 10:55	6.12
6/22/2022 7:36	37.47	6/22/2022 8:23	19.80	6/21/2022 10:56	6.11
6/22/2022 7:37	37.48	6/22/2022 8:24	19.73	6/21/2022 10:57	6.13
6/22/2022 7:38	37.48	6/22/2022 8:25	19.73	6/21/2022 10:58	6.13
6/22/2022 7:39	37.50	6/22/2022 8:26	19.72	6/21/2022 10:59	6.14
6/22/2022 7:40	37.48	6/22/2022 8:27	19.72	6/21/2022 11:00	6.11
6/22/2022 7:41	37.49	6/22/2022 8:28	19.69	6/21/2022 11:01	6.14
6/22/2022 7:42	37.46	6/22/2022 8:29	19.71	6/21/2022 11:02	6.11
6/22/2022 7:43	37.49	6/22/2022 8:30	19.67	6/21/2022 11:03	6.11
6/22/2022 7:44	37.49	6/22/2022 8:31	19.68	6/21/2022 11:04	6.14
6/22/2022 7:45	37.50	6/22/2022 8:32	19.66	6/21/2022 11:05	6.11
6/22/2022 7:46	37.48	6/22/2022 8:33	19.66	6/21/2022 11:06	6.07
6/22/2022 7:47	37.47	6/22/2022 8:34	19.66	6/21/2022 11:07	6.11
6/22/2022 7:48	37.50	6/22/2022 8:35	19.65	6/21/2022 11:08	6.11
6/22/2022 7:49	37.48	6/22/2022 8:36	19.66	6/21/2022 11:09	6.11
6/22/2022 7:50	37.45	6/22/2022 8:37	19.67	6/21/2022 11:10	6.09
6/22/2022 7:51	37.47	6/22/2022 8:38	19.66	6/21/2022 11:11	6.12
6/22/2022 7:52	37.45	6/22/2022 8:39	19.65	6/21/2022 11:12	6.11
6/22/2022 7:53	37.50	6/22/2022 8:40	19.65	6/21/2022 11:13	8.29
6/22/2022 7:54	37.46	6/22/2022 8:41	19.64	6/21/2022 11:14	8.86
6/22/2022 7:55	37.49	6/22/2022 8:42	19.62	6/21/2022 11:15	6.35
6/22/2022 7:56	37.46	6/22/2022 8:43	19.66	6/21/2022 11:16	6.19
6/22/2022 7:57	37.47	6/22/2022 8:44	19.63	6/21/2022 11:17	6.15
6/22/2022 7:58	37.49	6/22/2022 8:45	19.64	6/21/2022 11:18	6.14
6/22/2022 7:59	37.49	6/22/2022 8:46	19.65	6/21/2022 11:19	6.10
6/22/2022 8:00	37.52	6/22/2022 8:47	19.62	6/21/2022 11:20	6.11
6/22/2022 8:01	37.46	6/22/2022 8:48	19.62	6/21/2022 11:21	6.12
6/22/2022 8:02	37.49	6/22/2022 8:49	19.61	6/21/2022 11:22	6.13
6/22/2022 8:03	37.49	6/22/2022 8:50	19.63	6/21/2022 11:23	6.11
6/22/2022 8:04	37.48	6/22/2022 8:51	19.62	6/21/2022 11:24	6.16
6/22/2022 8:05	37.49	6/22/2022 8:52	19.64	6/21/2022 11:25	6.11
6/22/2022 8:06	37.51	6/22/2022 8:53	19.62	6/21/2022 11:26	6.13
6/22/2022 8:07	37.47	6/22/2022 8:54	19.66	6/21/2022 11:27	6.12
6/22/2022 8:08	37.49	6/22/2022 8:55	19.66	6/21/2022 11:28	6.14
6/22/2022 8:09	37.47	6/22/2022 8:56	19.62	6/21/2022 11:29	6.12
6/22/2022 8:10	37.52	6/22/2022 8:57	19.62	6/21/2022 11:30	6.12
6/22/2022 8:11	37.49	6/22/2022 8:58	19.62	6/21/2022 11:31	6.12
6/22/2022 8:12	37.49	6/22/2022 8:59	19.64	6/21/2022 11:32	6.12
6/22/2022 8:13	37.49	6/22/2022 9:00	19.63	6/21/2022 11:33	6.11
6/22/2022 8:14	37.46	6/22/2022 9:01	19.60	6/21/2022 11:34	6.12
6/22/2022 8:15	37.51	6/22/2022 9:02	19.63	6/21/2022 11:35	6.12
6/22/2022 8:16	37.51	6/22/2022 9:03	19.65	6/21/2022 11:36	6.14
6/22/2022 8:17	37.50	6/22/2022 9:04	19.60	6/21/2022 11:37	6.12
6/22/2022 8:18	37.50	6/22/2022 9:05	19.61	6/21/2022 11:38	6.08
6/22/2022 8:19	37.50	6/22/2022 9:06	19.64	6/21/2022 11:39	6.11
6/22/2022 8:20	37.53	6/22/2022 9:07	19.65	6/21/2022 11:40	6.08
6/22/2022 8:21	37.53	6/22/2022 9:08	19.63	6/21/2022 11:41	6.13
6/22/2022 8:22	37.50	6/22/2022 9:09	19.61	6/21/2022 11:42	6.14
6/22/2022 8:23	37.51	6/22/2022 9:10	19.62	6/21/2022 11:43	6.12
6/22/2022 8:24	37.51	6/22/2022 9:11	19.61	6/21/2022 11:44	6.11
6/22/2022 8:25	37.49	6/22/2022 9:12	19.60	6/21/2022 11:45	6.11
6/22/2022 8:26	37.50	6/22/2022 9:13	19.63	6/21/2022 11:46	6.11
6/22/2022 8:27	37.50	6/22/2022 9:14	19.63	6/21/2022 11:47	6.13
6/22/2022 8:28	37.52	6/22/2022 9:15	19.60	6/21/2022 11:48	6.13
6/22/2022 8:29	37.51	6/22/2022 9:16	19.62	6/21/2022 11:49	6.11
6/22/2022 8:30	37.49	6/22/2022 9:17	19.63	6/21/2022 11:50	6.11
6/22/2022 8:31	37.52	6/22/2022 9:18	19.61	6/21/2022 11:51	6.13
6/22/2022 8:32	37.53	6/22/2022 9:19	19.62	6/21/2022 11:52	6.13
6/22/2022 8:33	37.55	6/22/2022 9:20	19.61	6/21/2022 11:53	6.13
6/22/2022 8:34	37.55	6/22/2022 9:21	19.63	6/21/2022 11:54	6.12
6/22/2022 8:35	37.57	6/22/2022 9:22	19.58	6/21/2022 11:55	6.13
6/22/2022 8:36	37.56	6/22/2022 9:23	19.63	6/21/2022 11:56	6.13
6/22/2022 8:37	37.57	6/22/2022 9:24	19.60	6/21/2022 11:57	6.14
6/22/2022 8:38	37.52	6/22/2022 9:25	19.59	6/21/2022 11:58	6.11
6/22/2022 8:39	37.53	6/22/2022 9:26	19.60	6/21/2022 11:59	6.13
6/22/2022 8:40	37.53	6/22/2022 9:27	19.61	6/21/2022 12:00	6.10
6/22/2022 8:41	37.52	6/22/2022 9:28	19.62	6/21/2022 12:01	6.09
6/22/2022 8:42	37.55	6/22/2022 9:29	19.62	6/21/2022 12:02	6.11
6/22/2022 8:43	37.54	6/22/2022 9:30	19.61	6/21/2022 12:03	6.12
6/22/2022 8:44	37.55	6/22/2022 9:31	19.60	6/21/2022 12:04	6.09
6/22/2022 8:45	37.53	6/22/2022 9:32	19.60	6/21/2022 12:05	6.11
6/22/2022 8:46	37.57	6/22/2022 9:33	19.59	6/21/2022 12:06	6.13
6/22/2022 8:47	37.54	6/22/2022 9:34	19.60	6/21/2022 12:07	6.14
6/22/2022 8:48	37.51	6/22/2022 9:35	19.61	6/21/2022 12:08	6.13
6/22/2022 8:49	37.54	6/22/2022 9:36	19.60	6/21/2022 12:09	6.15
6/22/2022 8:50	37.57	6/22/2022 9:37	19.58	6/21/2022 12:10	6.13

6/22/2022 8:51	37.55	6/22/2022 9:38	19.58	6/21/2022 12:11	6.14
6/22/2022 8:52	37.54	6/22/2022 9:39	19.61	6/21/2022 12:12	6.12
6/22/2022 8:53	37.58	6/22/2022 9:40	19.59	6/21/2022 12:13	6.12
6/22/2022 8:54	37.57	6/22/2022 9:41	19.61	6/21/2022 12:14	6.12
6/22/2022 8:55	37.58	6/22/2022 9:42	19.60	6/21/2022 12:15	6.12
6/22/2022 8:56	37.61	6/22/2022 9:43	19.58	6/21/2022 12:16	6.13
6/22/2022 8:57	37.62	6/22/2022 9:44	19.60	6/21/2022 12:17	6.14
6/22/2022 8:58	38.03	6/22/2022 9:45	19.61	6/21/2022 12:18	6.12
6/22/2022 8:59	37.72	6/22/2022 9:46	19.59	6/21/2022 12:19	6.13
6/22/2022 9:00	37.70	6/22/2022 9:47	19.60	6/21/2022 12:20	6.10
6/22/2022 9:01	37.66	6/22/2022 9:48	19.58	6/21/2022 12:21	6.13
6/22/2022 9:02	37.63	6/22/2022 9:49	19.59	6/21/2022 12:22	6.16
6/22/2022 9:03	37.63	6/22/2022 9:50	19.60	6/21/2022 12:23	8.76
6/22/2022 9:04	37.62	6/22/2022 9:51	19.59	6/21/2022 12:24	8.92
6/22/2022 9:05	37.62	6/22/2022 9:52	19.61	6/21/2022 12:25	6.29
6/22/2022 9:06	37.63	6/22/2022 9:53	19.62	6/21/2022 12:26	6.20
6/22/2022 9:07	37.59	6/22/2022 9:54	19.58	6/21/2022 12:27	6.14
6/22/2022 9:08	37.60	6/22/2022 9:55	19.60	6/21/2022 12:28	6.12
6/22/2022 9:09	37.60	6/22/2022 9:56	19.60	6/21/2022 12:29	6.13
6/22/2022 9:10	37.55	6/22/2022 9:57	19.59	6/21/2022 12:30	6.14
6/22/2022 9:11	37.60	6/22/2022 9:58	19.61	6/21/2022 12:31	6.13
6/22/2022 9:12	37.60	6/22/2022 9:59	19.57	6/21/2022 12:32	6.13
6/22/2022 9:13	37.62	6/22/2022 10:00	19.59	6/21/2022 12:33	6.14
6/22/2022 9:14	37.59	6/22/2022 10:01	19.59	6/21/2022 12:34	6.12
6/22/2022 9:15	37.57	6/22/2022 10:02	19.59	6/21/2022 12:35	6.16
6/22/2022 9:16	37.59	6/22/2022 10:03	19.59	6/21/2022 12:36	6.16
6/22/2022 9:17	37.56	6/22/2022 10:04	19.61	6/21/2022 12:37	6.11
6/22/2022 9:18	37.58	6/22/2022 10:05	19.61	6/21/2022 12:38	6.12
6/22/2022 9:19	37.59	6/22/2022 10:06	19.59	6/21/2022 12:39	6.11
6/22/2022 9:20	37.61	6/22/2022 10:07	19.58	6/21/2022 12:40	6.12
6/22/2022 9:21	37.59	6/22/2022 10:08	19.72	6/21/2022 12:41	6.14
6/22/2022 9:22	37.55	6/22/2022 10:09	20.24	6/21/2022 12:42	6.11
6/22/2022 9:23	37.60	6/22/2022 10:10	20.33	6/21/2022 12:43	6.11
6/22/2022 9:24	37.58	6/22/2022 10:11	20.40	6/21/2022 12:44	6.14
6/22/2022 9:25	37.58	6/22/2022 10:12	20.40	6/21/2022 12:45	6.14
6/22/2022 9:26	37.59	6/22/2022 10:13	20.42	6/21/2022 12:46	6.13
6/22/2022 9:27	37.56	6/22/2022 10:14	19.90	6/21/2022 12:47	6.14
6/22/2022 9:28	37.56	6/22/2022 10:15	19.82	6/21/2022 12:48	6.18
6/22/2022 9:29	37.56	6/22/2022 10:16	19.77	6/21/2022 12:49	6.12
6/22/2022 9:30	37.59	6/22/2022 10:17	19.76	6/21/2022 12:50	6.12
6/22/2022 9:31	37.60	6/22/2022 10:18	19.74	6/21/2022 12:51	6.13
6/22/2022 9:32	37.59	6/22/2022 10:19	19.74	6/21/2022 12:52	6.12
6/22/2022 9:33	37.59	6/22/2022 10:20	19.74	6/21/2022 12:53	6.12
6/22/2022 9:34	37.58	6/22/2022 10:21	19.69	6/21/2022 12:54	6.10
6/22/2022 9:35	37.59	6/22/2022 10:22	19.68	6/21/2022 12:55	6.17
6/22/2022 9:36	37.61	6/22/2022 10:23	19.71	6/21/2022 12:56	6.12
6/22/2022 9:37	37.62	6/22/2022 10:24	19.72	6/21/2022 12:57	6.13
6/22/2022 9:38	37.60	6/22/2022 10:25	19.70	6/21/2022 12:58	6.15
6/22/2022 9:39	37.60	6/22/2022 10:26	19.71	6/21/2022 12:59	6.14
6/22/2022 9:40	37.64	6/22/2022 10:27	19.65	6/21/2022 13:00	6.11
6/22/2022 9:41	37.61	6/22/2022 10:28	19.68	6/21/2022 13:01	6.14
6/22/2022 9:42	37.62	6/22/2022 10:29	19.66	6/21/2022 13:02	6.11
6/22/2022 9:43	37.63	6/22/2022 10:30	19.68	6/21/2022 13:03	6.14
6/22/2022 9:44	37.62	6/22/2022 10:31	19.68	6/21/2022 13:04	6.14
6/22/2022 9:45	37.60	6/22/2022 10:32	19.64	6/21/2022 13:05	6.11
6/22/2022 9:46	37.65	6/22/2022 10:33	19.68	6/21/2022 13:06	6.11
6/22/2022 9:47	37.62	6/22/2022 10:34	19.67	6/21/2022 13:07	6.13
6/22/2022 9:48	37.59	6/22/2022 10:35	19.68	6/21/2022 13:08	6.09
6/22/2022 9:49	37.61	6/22/2022 10:36	19.66	6/21/2022 13:09	6.13
6/22/2022 9:50	37.59	6/22/2022 10:37	19.69	6/21/2022 13:10	6.11
6/22/2022 9:51	37.61	6/22/2022 10:38	19.64	6/21/2022 13:11	6.11
6/22/2022 9:52	37.62	6/22/2022 10:39	19.67	6/21/2022 13:12	6.09
6/22/2022 9:53	37.60	6/22/2022 10:40	19.65	6/21/2022 13:13	6.12
6/22/2022 9:54	37.62	6/22/2022 10:41	19.67	6/21/2022 13:14	6.10
6/22/2022 9:55	37.60	6/22/2022 10:42	19.64	6/21/2022 13:15	6.12
6/22/2022 9:56	37.61	6/22/2022 10:43	19.66	6/21/2022 13:16	6.12
6/22/2022 9:57	37.59	6/22/2022 10:44	19.64	6/21/2022 13:17	6.14
6/22/2022 9:58	37.61	6/22/2022 10:45	19.64	6/21/2022 13:18	6.14
6/22/2022 9:59	37.56	6/22/2022 10:46	19.66	6/21/2022 13:19	6.13
6/22/2022 10:00	37.58	6/22/2022 10:47	19.65	6/21/2022 13:20	6.10
6/22/2022 10:01	37.59	6/22/2022 10:48	19.64	6/21/2022 13:21	6.12
6/22/2022 10:02	37.59	6/22/2022 10:49	19.63	6/21/2022 13:22	6.10
6/22/2022 10:03	37.59	6/22/2022 10:50	19.63	6/21/2022 13:23	6.12
6/22/2022 10:04	37.60	6/22/2022 10:51	19.63	6/21/2022 13:24	6.12
6/22/2022 10:05	37.61	6/22/2022 10:52	19.62	6/21/2022 13:25	6.12
6/22/2022 10:06	37.60	6/22/2022 10:53	19.65	6/21/2022 13:26	6.11
6/22/2022 10:07	37.62	6/22/2022 10:54	19.66	6/21/2022 13:27	6.13
6/22/2022 10:08	37.57	6/22/2022 10:55	19.62	6/21/2022 13:28	6.13
6/22/2022 10:09	37.61	6/22/2022 10:56	19.64	6/21/2022 13:29	6.14
6/22/2022 10:10	37.60	6/22/2022 10:57	19.62	6/21/2022 13:30	6.11
6/22/2022 10:11	37.60	6/22/2022 10:58	19.62	6/21/2022 13:31	6.14
6/22/2022 10:12	37.57	6/22/2022 10:59	19.65	6/21/2022 13:32	6.14
6/22/2022 10:13	37.57	6/22/2022 11:00	19.61	6/21/2022 13:33	6.16
6/22/2022 10:14	37.57	6/22/2022 11:01	19.63	6/21/2022 13:34	6.10
6/22/2022 10:15	37.61	6/22/2022 11:02	19.64	6/21/2022 13:35	6.10
6/22/2022 10:16	37.59	6/22/2022 11:03	19.64	6/21/2022 13:36	6.12
6/22/2022 10:17	37.63	6/22/2022 11:04	19.63	6/21/2022 13:37	6.13
6/22/2022 10:18	37.60	6/22/2022 11:05	19.61	6/21/2022 13:38	6.12

6/22/2022 10:19	37.59	6/22/2022 11:06	19.63	6/21/2022 13:39	6.11
6/22/2022 10:20	37.61	6/22/2022 11:07	19.63	6/21/2022 13:40	6.09
6/22/2022 10:21	37.60	6/22/2022 11:08	19.66	6/21/2022 13:41	6.14
6/22/2022 10:22	37.60	6/22/2022 11:09	19.62	6/21/2022 13:42	6.11
6/22/2022 10:23	37.59	6/22/2022 11:10	19.64	6/21/2022 13:43	6.15
6/22/2022 10:24	37.61	6/22/2022 11:11	19.65	6/21/2022 13:44	6.11
6/22/2022 10:25	37.61	6/22/2022 11:12	19.65	6/21/2022 13:45	6.10
6/22/2022 10:26	37.60	6/22/2022 11:13	19.63	6/21/2022 13:46	6.12
6/22/2022 10:27	37.60	6/22/2022 11:14	19.60	6/21/2022 13:47	6.15
6/22/2022 10:28	37.61	6/22/2022 11:15	19.64	6/21/2022 13:48	6.13
6/22/2022 10:29	37.63	6/22/2022 11:16	19.62	6/21/2022 13:49	6.14
6/22/2022 10:30	37.62	6/22/2022 11:17	19.60	6/21/2022 13:50	6.13
6/22/2022 10:31	37.60	6/22/2022 11:18	19.63	6/21/2022 13:51	6.14
6/22/2022 10:32	37.61	6/22/2022 11:19	19.61	6/21/2022 13:52	6.12
6/22/2022 10:33	37.60	6/22/2022 11:20	19.61	6/21/2022 13:53	6.08
6/22/2022 10:34	37.62	6/22/2022 11:21	19.62	6/21/2022 13:54	6.12
6/22/2022 10:35	37.62	6/22/2022 11:22	19.63	6/21/2022 13:55	6.11
6/22/2022 10:36	37.65	6/22/2022 11:23	19.64	6/21/2022 13:56	6.13
6/22/2022 10:37	38.03	6/22/2022 11:24	19.63	6/21/2022 13:57	6.13
6/22/2022 10:38	37.93	6/22/2022 11:25	19.59	6/21/2022 13:58	6.11
6/22/2022 10:39	37.76	6/22/2022 11:26	19.63	6/21/2022 13:59	6.14
6/22/2022 10:40	37.74	6/22/2022 11:27	19.62	6/21/2022 14:00	6.13
6/22/2022 10:41	37.73	6/22/2022 11:28	19.60	6/21/2022 14:01	6.10
6/22/2022 10:42	37.68	6/22/2022 11:29	19.63	6/21/2022 14:02	6.12
6/22/2022 10:43	37.67	6/22/2022 11:30	19.60	6/21/2022 14:03	6.13
6/22/2022 10:44	37.72	6/22/2022 11:31	19.61	6/21/2022 14:04	6.12
6/22/2022 10:45	37.67	6/22/2022 11:32	19.59	6/21/2022 14:05	6.15
6/22/2022 10:46	37.67	6/22/2022 11:33	19.62	6/21/2022 14:06	6.15
6/22/2022 10:47	37.65	6/22/2022 11:34	19.63	6/21/2022 14:07	6.14
6/22/2022 10:48	37.68	6/22/2022 11:35	19.62	6/21/2022 14:08	6.13
6/22/2022 10:49	37.65	6/22/2022 11:36	19.61	6/21/2022 14:09	6.11
6/22/2022 10:50	37.67	6/22/2022 11:37	19.60	6/21/2022 14:10	6.10
6/22/2022 10:51	37.65	6/22/2022 11:38	19.64	6/21/2022 14:11	6.14
6/22/2022 10:52	37.66	6/22/2022 11:39	19.61	6/21/2022 14:12	6.14
6/22/2022 10:53	37.67	6/22/2022 11:40	19.60	6/21/2022 14:13	6.12
6/22/2022 10:54	38.01	6/22/2022 11:41	19.60	6/21/2022 14:14	6.11
6/22/2022 10:55	38.06	6/22/2022 11:42	19.61	6/21/2022 14:15	6.09
6/22/2022 10:56	37.83	6/22/2022 11:43	19.60	6/21/2022 14:16	6.09
6/22/2022 10:57	38.06	6/22/2022 11:44	19.60	6/21/2022 14:17	6.13
6/22/2022 10:58	38.05	6/22/2022 11:45	19.62	6/21/2022 14:18	6.11
6/22/2022 10:59	37.93	6/22/2022 11:46	19.61	6/21/2022 14:19	6.15
6/22/2022 11:00	38.02	6/22/2022 11:47	19.61	6/21/2022 14:20	6.13
6/22/2022 11:01	38.03	6/22/2022 11:48	19.60	6/21/2022 14:21	6.13
6/22/2022 11:02	38.00	6/22/2022 11:49	19.63	6/21/2022 14:22	6.15
6/22/2022 11:03	37.93	6/22/2022 11:50	19.61	6/21/2022 14:23	6.13
6/22/2022 11:04	37.91	6/22/2022 11:51	19.60	6/21/2022 14:24	6.13
6/22/2022 11:05	37.84	6/22/2022 11:52	19.63	6/21/2022 14:25	6.13
6/22/2022 11:06	37.82	6/22/2022 11:53	19.60	6/21/2022 14:26	6.13
6/22/2022 11:07	37.82	6/22/2022 11:54	19.61	6/21/2022 14:27	6.12
6/22/2022 11:08	37.83	6/22/2022 11:55	19.59	6/21/2022 14:28	6.11
6/22/2022 11:09	37.79	6/22/2022 11:56	19.61	6/21/2022 14:29	6.12
6/22/2022 11:10	37.80	6/22/2022 11:57	19.63	6/21/2022 14:30	6.11
6/22/2022 11:11	37.79	6/22/2022 11:58	19.62	6/21/2022 14:31	6.12
6/22/2022 11:12	37.77	6/22/2022 11:59	19.62	6/21/2022 14:32	6.14
6/22/2022 11:13	37.78	6/22/2022 12:00	19.64	6/21/2022 14:33	6.12
6/22/2022 11:14	37.75	6/22/2022 12:01	19.60	6/21/2022 14:34	6.14
6/22/2022 11:15	37.74	6/22/2022 12:02	19.61	6/21/2022 14:35	6.11
6/22/2022 11:16	37.78	6/22/2022 12:03	19.59	6/21/2022 14:36	6.13
6/22/2022 11:17	37.76	6/22/2022 12:04	19.62	6/21/2022 14:37	6.12
6/22/2022 11:18	37.74	6/22/2022 12:05	19.61	6/21/2022 14:38	6.14
6/22/2022 11:19	37.74	6/22/2022 12:06	19.60	6/21/2022 14:39	6.08
6/22/2022 11:20	37.76	6/22/2022 12:07	19.62	6/21/2022 14:40	6.12
6/22/2022 11:21	37.73	6/22/2022 12:08	19.60	6/21/2022 14:41	6.14
6/22/2022 11:22	37.73	6/22/2022 12:09	19.61	6/21/2022 14:42	6.15
6/22/2022 11:23	37.72	6/22/2022 12:10	19.61	6/21/2022 14:43	6.11
6/22/2022 11:24	37.75	6/22/2022 12:11	19.60	6/21/2022 14:44	6.11
6/22/2022 11:25	37.75	6/22/2022 12:12	19.61	6/21/2022 14:45	6.13
6/22/2022 11:26	37.74	6/22/2022 12:13	19.60	6/21/2022 14:46	6.12
6/22/2022 11:27	37.73	6/22/2022 12:14	19.62	6/21/2022 14:47	6.11
6/22/2022 11:28	37.71	6/22/2022 12:15	19.62	6/21/2022 14:48	6.12
6/22/2022 11:29	37.72	6/22/2022 12:16	19.64	6/21/2022 14:49	6.12
6/22/2022 11:30	37.73	6/22/2022 12:17	19.61	6/21/2022 14:50	6.12
6/22/2022 11:31	37.74	6/22/2022 12:18	19.62	6/21/2022 14:51	6.12
6/22/2022 11:32	37.70	6/22/2022 12:19	19.60	6/21/2022 14:52	6.12
6/22/2022 11:33	37.74	6/22/2022 12:20	19.61	6/21/2022 14:53	6.10
6/22/2022 11:34	37.68	6/22/2022 12:21	19.60	6/21/2022 14:54	6.14
6/22/2022 11:35	37.71	6/22/2022 12:22	19.60	6/21/2022 14:55	6.12
6/22/2022 11:36	37.72	6/22/2022 12:23	19.60	6/21/2022 14:56	6.14
6/22/2022 11:37	37.73	6/22/2022 12:24	19.59	6/21/2022 14:57	6.13
6/22/2022 11:38	37.69	6/22/2022 12:25	19.60	6/21/2022 14:58	6.13
6/22/2022 11:39	37.71	6/22/2022 12:26	19.61	6/21/2022 14:59	6.12
6/22/2022 11:40	37.70	6/22/2022 12:27	19.59	6/21/2022 15:00	8.41
6/22/2022 11:41	37.71	6/22/2022 12:28	19.61	6/21/2022 15:01	8.87
6/22/2022 11:42	37.71	6/22/2022 12:29	19.61	6/21/2022 15:02	6.34
6/22/2022 11:43	37.71	6/22/2022 12:30	19.60	6/21/2022 15:03	6.17
6/22/2022 11:44	37.70	6/22/2022 12:31	19.62	6/21/2022 15:04	6.15
6/22/2022 11:45	37.71	6/22/2022 12:32	19.60	6/21/2022 15:05	6.17
6/22/2022 11:46	37.70	6/22/2022 12:33	19.60	6/21/2022 15:06	6.14

6/22/2022 11:47	37.71	6/22/2022 12:34	19.63	6/21/2022 15:07	6.14
6/22/2022 11:48	37.71	6/22/2022 12:35	19.60	6/21/2022 15:08	6.12
6/22/2022 11:49	37.71	6/22/2022 12:36	19.60	6/21/2022 15:09	6.15
6/22/2022 11:50	37.70	6/22/2022 12:37	19.60	6/21/2022 15:10	6.13
6/22/2022 11:51	37.72	6/22/2022 12:38	19.61	6/21/2022 15:11	6.15
6/22/2022 11:52	37.71	6/22/2022 12:39	19.62	6/21/2022 15:12	6.15
6/22/2022 11:53	37.71	6/22/2022 12:40	19.60	6/21/2022 15:13	6.13
6/22/2022 11:54	37.69	6/22/2022 12:41	19.60	6/21/2022 15:14	6.12
6/22/2022 11:55	37.68	6/22/2022 12:42	19.61	6/21/2022 15:15	6.14
6/22/2022 11:56	37.71	6/22/2022 12:43	19.59	6/21/2022 15:16	6.14
6/22/2022 11:57	37.73	6/22/2022 12:44	19.61	6/21/2022 15:17	6.13
6/22/2022 11:58	37.75	6/22/2022 12:45	19.59	6/21/2022 15:18	6.12
6/22/2022 11:59	37.74	6/22/2022 12:46	19.58	6/21/2022 15:19	6.12
6/22/2022 12:00	37.73	6/22/2022 12:47	19.63	6/21/2022 15:20	6.13
6/22/2022 12:01	37.72	6/22/2022 12:48	19.60	6/21/2022 15:21	6.12
6/22/2022 12:02	37.73	6/22/2022 12:49	19.58	6/21/2022 15:22	6.17
6/22/2022 12:03	37.74	6/22/2022 12:50	19.63	6/21/2022 15:23	6.13
6/22/2022 12:04	37.73	6/22/2022 12:51	19.60	6/21/2022 15:24	6.12
6/22/2022 12:05	37.76	6/22/2022 12:52	19.60	6/21/2022 15:25	6.11
6/22/2022 12:06	37.72	6/22/2022 12:53	19.60	6/21/2022 15:26	6.12
6/22/2022 12:07	38.04	6/22/2022 12:54	19.63	6/21/2022 15:27	6.17
6/22/2022 12:08	38.04	6/22/2022 12:55	19.59	6/21/2022 15:28	6.14
6/22/2022 12:09	37.96	6/22/2022 12:56	19.60	6/21/2022 15:29	6.12
6/22/2022 12:10	38.00	6/22/2022 12:57	19.61	6/21/2022 15:30	8.24
6/22/2022 12:11	38.03	6/22/2022 12:58	19.60	6/21/2022 15:31	8.88
6/22/2022 12:12	37.99	6/22/2022 12:59	19.58	6/21/2022 15:32	6.34
6/22/2022 12:13	37.94	6/22/2022 13:00	19.58	6/21/2022 15:33	6.22
6/22/2022 12:14	37.93	6/22/2022 13:01	19.62	6/21/2022 15:34	6.19
6/22/2022 12:15	37.89	6/22/2022 13:02	19.60	6/21/2022 15:35	6.15
6/22/2022 12:16	37.85	6/22/2022 13:03	19.60	6/21/2022 15:36	6.15
6/22/2022 12:17	37.86	6/22/2022 13:04	19.60	6/21/2022 15:37	6.14
6/22/2022 12:18	37.85	6/22/2022 13:05	19.61	6/21/2022 15:38	6.17
6/22/2022 12:19	37.81	6/22/2022 13:06	19.60	6/21/2022 15:39	6.14
6/22/2022 12:20	37.81	6/22/2022 13:07	19.61	6/21/2022 15:40	6.16
6/22/2022 12:21	37.82	6/22/2022 13:08	19.61	6/21/2022 15:41	6.15
6/22/2022 12:22	37.81	6/22/2022 13:09	19.61	6/21/2022 15:42	6.15
6/22/2022 12:23	38.07	6/22/2022 13:10	19.61	6/21/2022 15:43	6.19
6/22/2022 12:24	38.03	6/22/2022 13:11	19.59	6/21/2022 15:44	6.13
6/22/2022 12:25	38.01	6/22/2022 13:12	19.61	6/21/2022 15:45	6.17
6/22/2022 12:26	38.07	6/22/2022 13:13	19.60	6/21/2022 15:46	6.13
6/22/2022 12:27	38.06	6/22/2022 13:14	19.63	6/21/2022 15:47	6.15
6/22/2022 12:28	38.04	6/22/2022 13:15	19.62	6/21/2022 15:48	6.15
6/22/2022 12:29	38.01	6/22/2022 13:16	19.60	6/21/2022 15:49	6.15
6/22/2022 12:30	38.07	6/22/2022 13:17	19.59	6/21/2022 15:50	6.14
6/22/2022 12:31	38.02	6/22/2022 13:18	19.60	6/21/2022 15:51	6.13
6/22/2022 12:32	38.01	6/22/2022 13:19	19.57	6/21/2022 15:52	6.12
6/22/2022 12:33	38.03	6/22/2022 13:20	19.60	6/21/2022 15:53	6.13
6/22/2022 12:34	38.01	6/22/2022 13:21	19.60	6/21/2022 15:54	6.13
6/22/2022 12:35	37.97	6/22/2022 13:22	19.60	6/21/2022 15:55	6.13
6/22/2022 12:36	37.98	6/22/2022 13:23	19.58	6/21/2022 15:56	6.14
6/22/2022 12:37	37.97	6/22/2022 13:24	19.59	6/21/2022 15:57	6.12
6/22/2022 12:38	37.96	6/22/2022 13:25	19.58	6/21/2022 15:58	6.17
6/22/2022 12:39	37.95	6/22/2022 13:26	19.60	6/21/2022 15:59	6.14
6/22/2022 12:40	37.91	6/22/2022 13:27	19.58	6/21/2022 16:00	6.13
6/22/2022 12:41	37.93	6/22/2022 13:28	19.58	6/21/2022 16:01	6.16
6/22/2022 12:42	37.88	6/22/2022 13:29	19.58	6/21/2022 16:02	6.14
6/22/2022 12:43	37.88	6/22/2022 13:30	19.58	6/21/2022 16:03	6.12
6/22/2022 12:44	37.87	6/22/2022 13:31	19.60	6/21/2022 16:04	6.12
6/22/2022 12:45	37.88	6/22/2022 13:32	19.60	6/21/2022 16:05	6.14
6/22/2022 12:46	37.87	6/22/2022 13:33	19.59	6/21/2022 16:06	6.13
6/22/2022 12:47	37.88	6/22/2022 13:34	19.57	6/21/2022 16:07	6.13
6/22/2022 12:48	37.88	6/22/2022 13:35	19.57	6/21/2022 16:08	6.13
6/22/2022 12:49	37.86	6/22/2022 13:36	19.58	6/21/2022 16:09	6.13
6/22/2022 12:50	37.86	6/22/2022 13:37	19.61	6/21/2022 16:10	6.16
6/22/2022 12:51	37.85	6/22/2022 13:38	19.60	6/21/2022 16:11	6.12
6/22/2022 12:52	37.85	6/22/2022 13:39	19.58	6/21/2022 16:12	6.13
6/22/2022 12:53	37.79	6/22/2022 13:40	19.60	6/21/2022 16:13	6.14
6/22/2022 12:54	37.83	6/22/2022 13:41	19.57	6/21/2022 16:14	6.15
6/22/2022 12:55	37.86	6/22/2022 13:42	19.60	6/21/2022 16:15	6.10
6/22/2022 12:56	37.84	6/22/2022 13:43	19.61	6/21/2022 16:16	6.14
6/22/2022 12:57	37.85	6/22/2022 13:44	19.59	6/21/2022 16:17	6.12
6/22/2022 12:58	37.83	6/22/2022 13:45	19.58	6/21/2022 16:18	6.13
6/22/2022 12:59	37.83	6/22/2022 13:46	19.60	6/21/2022 16:19	6.15
6/22/2022 13:00	37.85	6/22/2022 13:47	19.60	6/21/2022 16:20	6.12
6/22/2022 13:01	37.83	6/22/2022 13:48	19.60	6/21/2022 16:21	6.15
6/22/2022 13:02	37.87	6/22/2022 13:49	19.60	6/21/2022 16:22	6.13
6/22/2022 13:03	37.88	6/22/2022 13:50	19.58	6/21/2022 16:23	6.13
6/22/2022 13:04	37.85	6/22/2022 13:51	19.58	6/21/2022 16:24	6.12
6/22/2022 13:05	37.87	6/22/2022 13:52	19.60	6/21/2022 16:25	6.11
6/22/2022 13:06	37.86	6/22/2022 13:53	19.60	6/21/2022 16:26	6.13
6/22/2022 13:07	37.86	6/22/2022 13:54	19.56	6/21/2022 16:27	6.13
6/22/2022 13:08	37.84	6/22/2022 13:55	19.59	6/21/2022 16:28	6.14
6/22/2022 13:09	37.88	6/22/2022 13:56	19.59	6/21/2022 16:29	6.13
6/22/2022 13:10	37.85	6/22/2022 13:57	19.58	6/21/2022 16:30	6.13
6/22/2022 13:11	37.82	6/22/2022 13:58	19.57	6/21/2022 16:31	6.13
6/22/2022 13:12	37.83	6/22/2022 13:59	19.59	6/21/2022 16:32	6.16
6/22/2022 13:13	37.85	6/22/2022 14:00	19.60	6/21/2022 16:33	6.14
6/22/2022 13:14	37.83	6/22/2022 14:01	19.61	6/21/2022 16:34	6.13

6/22/2022 13:15	37.82	6/22/2022 14:02	19.60	6/21/2022 16:35	6.14
6/22/2022 13:16	38.08	6/22/2022 14:03	19.58	6/21/2022 16:36	6.17
6/22/2022 13:17	38.10	6/22/2022 14:04	19.61	6/21/2022 16:37	6.15
6/22/2022 13:18	38.01	6/22/2022 14:05	19.58	6/21/2022 16:38	6.13
6/22/2022 13:19	38.05	6/22/2022 14:06	19.61	6/21/2022 16:39	6.09
6/22/2022 13:20	38.03	6/22/2022 14:07	19.58	6/21/2022 16:40	6.15
6/22/2022 13:21	38.04	6/22/2022 14:08	19.59	6/21/2022 16:41	6.15
6/22/2022 13:22	38.03	6/22/2022 14:09	19.58	6/21/2022 16:42	6.14
6/22/2022 13:23	38.02	6/22/2022 14:10	19.61	6/21/2022 16:43	6.16
6/22/2022 13:24	37.98	6/22/2022 14:11	19.57	6/21/2022 16:44	6.17
6/22/2022 13:25	37.99	6/22/2022 14:12	19.58	6/21/2022 16:45	6.12
6/22/2022 13:26	37.93	6/22/2022 14:13	19.59	6/21/2022 16:46	6.13
6/22/2022 13:27	37.93	6/22/2022 14:14	19.62	6/21/2022 16:47	6.18
6/22/2022 13:28	37.92	6/22/2022 14:15	19.59	6/21/2022 16:48	6.11
6/22/2022 13:29	37.92	6/22/2022 14:16	19.58	6/21/2022 16:49	6.16
6/22/2022 13:30	37.92	6/22/2022 14:17	19.58	6/21/2022 16:50	6.10
6/22/2022 13:31	37.91	6/22/2022 14:18	19.59	6/21/2022 16:51	6.14
6/22/2022 13:32	37.89	6/22/2022 14:19	19.59	6/21/2022 16:52	6.14
6/22/2022 13:33	38.04	6/22/2022 14:20	19.61	6/21/2022 16:53	6.16
6/22/2022 13:34	38.04	6/22/2022 14:21	19.60	6/21/2022 16:54	6.15
6/22/2022 13:35	38.03	6/22/2022 14:22	19.61	6/21/2022 16:55	6.16
6/22/2022 13:36	38.03	6/22/2022 14:23	20.19	6/21/2022 16:56	6.15
6/22/2022 13:37	38.04	6/22/2022 14:24	20.28	6/21/2022 16:57	6.11
6/22/2022 13:38	38.03	6/22/2022 14:25	20.36	6/21/2022 16:58	6.13
6/22/2022 13:39	38.03	6/22/2022 14:26	20.42	6/21/2022 16:59	6.13
6/22/2022 13:40	38.02	6/22/2022 14:27	20.41	6/21/2022 17:00	6.14
6/22/2022 13:41	38.03	6/22/2022 14:28	19.88	6/21/2022 17:01	6.16
6/22/2022 13:42	38.05	6/22/2022 14:29	19.82	6/21/2022 17:02	6.15
6/22/2022 13:43	38.03	6/22/2022 14:30	19.76	6/21/2022 17:03	6.13
6/22/2022 13:44	38.01	6/22/2022 14:31	19.76	6/21/2022 17:04	6.14
6/22/2022 13:45	38.03	6/22/2022 14:32	19.75	6/21/2022 17:05	6.12
6/22/2022 13:46	37.98	6/22/2022 14:33	19.75	6/21/2022 17:06	6.15
6/22/2022 13:47	38.00	6/22/2022 14:34	19.71	6/21/2022 17:07	6.13
6/22/2022 13:48	37.98	6/22/2022 14:35	19.71	6/21/2022 17:08	6.15
6/22/2022 13:49	37.98	6/22/2022 14:36	19.71	6/21/2022 17:09	6.17
6/22/2022 13:50	37.99	6/22/2022 14:37	19.69	6/21/2022 17:10	6.13
6/22/2022 13:51	38.00	6/22/2022 14:38	19.70	6/21/2022 17:11	6.15
6/22/2022 13:52	38.00	6/22/2022 14:39	19.69	6/21/2022 17:12	6.13
6/22/2022 13:53	37.96	6/22/2022 14:40	19.68	6/21/2022 17:13	6.13
6/22/2022 13:54	37.96	6/22/2022 14:41	19.70	6/21/2022 17:14	6.12
6/22/2022 13:55	37.95	6/22/2022 14:42	19.67	6/21/2022 17:15	6.15
6/22/2022 13:56	37.96	6/22/2022 14:43	19.67	6/21/2022 17:16	6.13
6/22/2022 13:57	37.94	6/22/2022 14:44	19.66	6/21/2022 17:17	6.17
6/22/2022 13:58	37.96	6/22/2022 14:45	19.67	6/21/2022 17:18	6.15
6/22/2022 13:59	37.93	6/22/2022 14:46	19.67	6/21/2022 17:19	6.16
6/22/2022 14:00	37.90	6/22/2022 14:47	19.65	6/21/2022 17:20	6.13
6/22/2022 14:01	37.93	6/22/2022 14:48	19.67	6/21/2022 17:21	6.12
6/22/2022 14:02	37.92	6/22/2022 14:49	19.66	6/21/2022 17:22	6.14
6/22/2022 14:03	37.90	6/22/2022 14:50	19.67	6/21/2022 17:23	6.13
6/22/2022 14:04	37.93	6/22/2022 14:51	19.65	6/21/2022 17:24	6.14
6/22/2022 14:05	37.91	6/22/2022 14:52	19.66	6/21/2022 17:25	6.12
6/22/2022 14:06	37.92	6/22/2022 14:53	19.66	6/21/2022 17:26	6.13
6/22/2022 14:07	37.91	6/22/2022 14:54	19.65	6/21/2022 17:27	6.12
6/22/2022 14:08	37.90	6/22/2022 14:55	19.63	6/21/2022 17:28	6.11
6/22/2022 14:09	37.93	6/22/2022 14:56	19.65	6/21/2022 17:29	6.16
6/22/2022 14:10	37.93	6/22/2022 14:57	19.62	6/21/2022 17:30	8.50
6/22/2022 14:11	37.95	6/22/2022 14:58	19.61	6/21/2022 17:31	9.10
6/22/2022 14:12	37.94	6/22/2022 14:59	19.65	6/21/2022 17:32	9.15
6/22/2022 14:13	37.91	6/22/2022 15:00	19.66	6/21/2022 17:33	9.01
6/22/2022 14:14	37.93	6/22/2022 15:01	19.64	6/21/2022 17:34	7.29
6/22/2022 14:15	37.92	6/22/2022 15:02	19.65	6/21/2022 17:35	6.26
6/22/2022 14:16	37.94	6/22/2022 15:03	19.62	6/21/2022 17:36	6.16
6/22/2022 14:17	38.04	6/22/2022 15:04	19.62	6/21/2022 17:37	6.19
6/22/2022 14:18	38.03	6/22/2022 15:05	19.64	6/21/2022 17:38	6.16
6/22/2022 14:19	38.06	6/22/2022 15:06	19.63	6/21/2022 17:39	6.15
6/22/2022 14:20	38.03	6/22/2022 15:07	19.63	6/21/2022 17:40	6.16
6/22/2022 14:21	38.05	6/22/2022 15:08	19.66	6/21/2022 17:41	6.18
6/22/2022 14:22	38.08	6/22/2022 15:09	19.65	6/21/2022 17:42	6.15
6/22/2022 14:23	38.06	6/22/2022 15:10	19.61	6/21/2022 17:43	6.17
6/22/2022 14:24	38.05	6/22/2022 15:11	19.64	6/21/2022 17:44	6.12
6/22/2022 14:25	38.02	6/22/2022 15:12	19.64	6/21/2022 17:45	6.12
6/22/2022 14:26	38.04	6/22/2022 15:13	19.64	6/21/2022 17:46	6.11
6/22/2022 14:27	38.03	6/22/2022 15:14	19.62	6/21/2022 17:47	6.13
6/22/2022 14:28	38.03	6/22/2022 15:15	19.63	6/21/2022 17:48	6.15
6/22/2022 14:29	38.03	6/22/2022 15:16	19.62	6/21/2022 17:49	6.14
6/22/2022 14:30	38.05	6/22/2022 15:17	19.63	6/21/2022 17:50	6.15
6/22/2022 14:31	38.05	6/22/2022 15:18	19.63	6/21/2022 17:51	6.13
6/22/2022 14:32	38.03	6/22/2022 15:19	19.63	6/21/2022 17:52	6.15
6/22/2022 14:33	38.02	6/22/2022 15:20	19.64	6/21/2022 17:53	6.16
6/22/2022 14:34	38.05	6/22/2022 15:21	19.62	6/21/2022 17:54	6.18
6/22/2022 14:35	38.01	6/22/2022 15:22	19.67	6/21/2022 17:55	6.16
6/22/2022 14:36	38.02	6/22/2022 15:23	19.65	6/21/2022 17:56	6.15
6/22/2022 14:37	38.00	6/22/2022 15:24	19.64	6/21/2022 17:57	6.17
6/22/2022 14:38	38.02	6/22/2022 15:25	19.62	6/21/2022 17:58	6.14
6/22/2022 14:39	37.99	6/22/2022 15:26	19.64	6/21/2022 17:59	6.13
6/22/2022 14:40	38.01	6/22/2022 15:27	19.62	6/21/2022 18:00	6.12
6/22/2022 14:41	38.00	6/22/2022 15:28	19.61	6/21/2022 18:01	6.16
6/22/2022 14:42	37.99	6/22/2022 15:29	19.64	6/21/2022 18:02	6.17

6/22/2022 14:43	37.98	6/22/2022 15:30	19.61	6/21/2022 18:03	6.16
6/22/2022 14:44	37.96	6/22/2022 15:31	19.62	6/21/2022 18:04	6.16
6/22/2022 14:45	37.98	6/22/2022 15:32	19.63	6/21/2022 18:05	6.16
6/22/2022 14:46	38.04	6/22/2022 15:33	19.65	6/21/2022 18:06	6.17
6/22/2022 14:47	38.01	6/22/2022 15:34	19.64	6/21/2022 18:07	6.14
6/22/2022 14:48	38.02	6/22/2022 15:35	19.63	6/21/2022 18:08	6.14
6/22/2022 14:49	38.05	6/22/2022 15:36	19.62	6/21/2022 18:09	6.13
6/22/2022 14:50	38.00	6/22/2022 15:37	19.60	6/21/2022 18:10	6.16
6/22/2022 14:51	38.02	6/22/2022 15:38	19.62	6/21/2022 18:11	6.15
6/22/2022 14:52	38.02	6/22/2022 15:39	19.63	6/21/2022 18:12	6.13
6/22/2022 14:53	38.00	6/22/2022 15:40	19.61	6/21/2022 18:13	6.19
6/22/2022 14:54	38.04	6/22/2022 15:41	19.63	6/21/2022 18:14	6.15
6/22/2022 14:55	38.02	6/22/2022 15:42	19.61	6/21/2022 18:15	6.14
6/22/2022 14:56	38.00	6/22/2022 15:43	19.62	6/21/2022 18:16	6.15
6/22/2022 14:57	37.99	6/22/2022 15:44	19.61	6/21/2022 18:17	6.15
6/22/2022 14:58	37.97	6/22/2022 15:45	19.60	6/21/2022 18:18	6.15
6/22/2022 14:59	37.99	6/22/2022 15:46	19.63	6/21/2022 18:19	6.16
6/22/2022 15:00	37.97	6/22/2022 15:47	19.63	6/21/2022 18:20	6.17
6/22/2022 15:01	37.99	6/22/2022 15:48	19.62	6/21/2022 18:21	6.15
6/22/2022 15:02	38.01	6/22/2022 15:49	19.63	6/21/2022 18:22	6.15
6/22/2022 15:03	38.00	6/22/2022 15:50	19.62	6/21/2022 18:23	6.14
6/22/2022 15:04	37.99	6/22/2022 15:51	19.62	6/21/2022 18:24	6.15
6/22/2022 15:05	38.02	6/22/2022 15:52	19.62	6/21/2022 18:25	6.13
6/22/2022 15:06	37.98	6/22/2022 15:53	19.61	6/21/2022 18:26	6.15
6/22/2022 15:07	38.00	6/22/2022 15:54	19.61	6/21/2022 18:27	6.14
6/22/2022 15:08	38.00	6/22/2022 15:55	19.59	6/21/2022 18:28	6.15
6/22/2022 15:09	37.98	6/22/2022 15:56	19.59	6/21/2022 18:29	6.14
6/22/2022 15:10	37.94	6/22/2022 15:57	19.59	6/21/2022 18:30	6.16
6/22/2022 15:11	37.97	6/22/2022 15:58	19.60	6/21/2022 18:31	6.15
6/22/2022 15:12	37.97	6/22/2022 15:59	19.63	6/21/2022 18:32	6.13
6/22/2022 15:13	37.94	6/22/2022 16:00	19.58	6/21/2022 18:33	6.15
6/22/2022 15:14	37.98	6/22/2022 16:01	19.58	6/21/2022 18:34	6.13
6/22/2022 15:15	37.96	6/22/2022 16:02	19.62	6/21/2022 18:35	6.13
6/22/2022 15:16	37.93	6/22/2022 16:03	19.60	6/21/2022 18:36	6.14
6/22/2022 15:17	37.97	6/22/2022 16:04	19.61	6/21/2022 18:37	6.14
6/22/2022 15:18	37.98	6/22/2022 16:05	19.62	6/21/2022 18:38	6.12
6/22/2022 15:19	37.97	6/22/2022 16:06	19.62	6/21/2022 18:39	6.13
6/22/2022 15:20	38.01	6/22/2022 16:07	19.59	6/21/2022 18:40	6.11
6/22/2022 15:21	38.03	6/22/2022 16:08	19.62	6/21/2022 18:41	6.13
6/22/2022 15:22	38.00	6/22/2022 16:09	19.60	6/21/2022 18:42	6.11
6/22/2022 15:23	37.98	6/22/2022 16:10	19.61	6/21/2022 18:43	6.15
6/22/2022 15:24	37.96	6/22/2022 16:11	19.59	6/21/2022 18:44	6.13
6/22/2022 15:25	38.02	6/22/2022 16:12	19.61	6/21/2022 18:45	6.16
6/22/2022 15:26	38.03	6/22/2022 16:13	19.61	6/21/2022 18:46	6.16
6/22/2022 15:27	38.04	6/22/2022 16:14	19.60	6/21/2022 18:47	6.15
6/22/2022 15:28	38.02	6/22/2022 16:15	19.59	6/21/2022 18:48	6.15
6/22/2022 15:29	38.03	6/22/2022 16:16	19.61	6/21/2022 18:49	6.13
6/22/2022 15:30	38.04	6/22/2022 16:17	19.60	6/21/2022 18:50	6.15
6/22/2022 15:31	38.02	6/22/2022 16:18	19.59	6/21/2022 18:51	6.14
6/22/2022 15:32	38.04	6/22/2022 16:19	19.59	6/21/2022 18:52	6.17
6/22/2022 15:33	38.04	6/22/2022 16:20	19.59	6/21/2022 18:53	6.13
6/22/2022 15:34	38.00	6/22/2022 16:21	19.61	6/21/2022 18:54	6.13
6/22/2022 15:35	38.04	6/22/2022 16:22	19.61	6/21/2022 18:55	6.14
6/22/2022 15:36	38.03	6/22/2022 16:23	19.58	6/21/2022 18:56	6.14
6/22/2022 15:37	38.01	6/22/2022 16:24	19.59	6/21/2022 18:57	6.13
6/22/2022 15:38	38.04	6/22/2022 16:25	19.61	6/21/2022 18:58	6.14
6/22/2022 15:39	38.02	6/22/2022 16:26	19.60	6/21/2022 18:59	6.15
6/22/2022 15:40	38.01	6/22/2022 16:27	19.62	6/21/2022 19:00	6.13
6/22/2022 15:41	38.02	6/22/2022 16:28	19.61	6/21/2022 19:01	6.13
6/22/2022 15:42	38.02	6/22/2022 16:29	19.59	6/21/2022 19:02	6.16
6/22/2022 15:43	38.01	6/22/2022 16:30	19.61	6/21/2022 19:03	6.16
6/22/2022 15:44	38.03	6/22/2022 16:31	19.59	6/21/2022 19:04	6.16
6/22/2022 15:45	37.98	6/22/2022 16:32	19.61	6/21/2022 19:05	6.14
6/22/2022 15:46	38.01	6/22/2022 16:33	19.59	6/21/2022 19:06	6.18
6/22/2022 15:47	38.03	6/22/2022 16:34	19.62	6/21/2022 19:07	6.11
6/22/2022 15:48	38.00	6/22/2022 16:35	19.59	6/21/2022 19:08	6.14
6/22/2022 15:49	38.01	6/22/2022 16:36	19.60	6/21/2022 19:09	6.13
6/22/2022 15:50	38.00	6/22/2022 16:37	19.61	6/21/2022 19:10	6.13
6/22/2022 15:51	37.99	6/22/2022 16:38	19.62	6/21/2022 19:11	6.14
6/22/2022 15:52	37.98	6/22/2022 16:39	19.59	6/21/2022 19:12	6.13
6/22/2022 15:53	37.99	6/22/2022 16:40	19.59	6/21/2022 19:13	6.13
6/22/2022 15:54	38.00	6/22/2022 16:41	19.60	6/21/2022 19:14	8.61
6/22/2022 15:55	38.04	6/22/2022 16:42	19.59	6/21/2022 19:15	8.86
6/22/2022 15:56	38.05	6/22/2022 16:43	19.58	6/21/2022 19:16	6.28
6/22/2022 15:57	38.03	6/22/2022 16:44	19.61	6/21/2022 19:17	6.17
6/22/2022 15:58	38.00	6/22/2022 16:45	19.60	6/21/2022 19:18	6.18
6/22/2022 15:59	38.01	6/22/2022 16:46	19.61	6/21/2022 19:19	6.15
6/22/2022 16:00	37.99	6/22/2022 16:47	19.58	6/21/2022 19:20	6.17
6/22/2022 16:01	38.01	6/22/2022 16:48	19.59	6/21/2022 19:21	6.20
6/22/2022 16:02	38.01	6/22/2022 16:49	19.61	6/21/2022 19:22	6.12
6/22/2022 16:03	37.99	6/22/2022 16:50	19.60	6/21/2022 19:23	6.15
6/22/2022 16:04	37.98	6/22/2022 16:51	19.62	6/21/2022 19:24	6.15
6/22/2022 16:05	37.99	6/22/2022 16:52	19.61	6/21/2022 19:25	6.14
6/22/2022 16:06	38.01	6/22/2022 16:53	19.60	6/21/2022 19:26	6.14
6/22/2022 16:07	38.00	6/22/2022 16:54	19.58	6/21/2022 19:27	6.11
6/22/2022 16:08	37.98	6/22/2022 16:55	19.61	6/21/2022 19:28	6.13
6/22/2022 16:09	38.03	6/22/2022 16:56	19.59	6/21/2022 19:29	6.11
6/22/2022 16:10	38.03	6/22/2022 16:57	19.61	6/21/2022 19:30	6.19

6/22/2022 16:11	38.03	6/22/2022 16:58	19.61	6/21/2022 19:31	6.15
6/22/2022 16:12	38.02	6/22/2022 16:59	19.59	6/21/2022 19:32	6.14
6/22/2022 16:13	38.00	6/22/2022 17:00	19.57	6/21/2022 19:33	6.15
6/22/2022 16:14	38.01	6/22/2022 17:01	19.58	6/21/2022 19:34	6.17
6/22/2022 16:15	37.96	6/22/2022 17:02	19.62	6/21/2022 19:35	6.13
6/22/2022 16:16	37.99	6/22/2022 17:03	19.60	6/21/2022 19:36	6.16
6/22/2022 16:17	37.99	6/22/2022 17:04	19.60	6/21/2022 19:37	6.12
6/22/2022 16:18	37.99	6/22/2022 17:05	19.59	6/21/2022 19:38	6.14
6/22/2022 16:19	38.01	6/22/2022 17:06	19.59	6/21/2022 19:39	6.14
6/22/2022 16:20	37.99	6/22/2022 17:07	19.58	6/21/2022 19:40	6.16
6/22/2022 16:21	37.99	6/22/2022 17:08	19.60	6/21/2022 19:41	6.18
6/22/2022 16:22	38.00	6/22/2022 17:09	19.60	6/21/2022 19:42	6.16
6/22/2022 16:23	37.96	6/22/2022 17:10	19.59	6/21/2022 19:43	6.10
6/22/2022 16:24	37.96	6/22/2022 17:11	19.61	6/21/2022 19:44	6.13
6/22/2022 16:25	37.97	6/22/2022 17:12	19.60	6/21/2022 19:45	6.14
6/22/2022 16:26	37.98	6/22/2022 17:13	19.59	6/21/2022 19:46	6.18
6/22/2022 16:27	37.98	6/22/2022 17:14	19.60	6/21/2022 19:47	6.12
6/22/2022 16:28	37.95	6/22/2022 17:15	19.59	6/21/2022 19:48	6.16
6/22/2022 16:29	37.99	6/22/2022 17:16	19.57	6/21/2022 19:49	6.14
6/22/2022 16:30	37.98	6/22/2022 17:17	19.60	6/21/2022 19:50	6.12
6/22/2022 16:31	37.99	6/22/2022 17:18	19.59	6/21/2022 19:51	6.16
6/22/2022 16:32	37.95	6/22/2022 17:19	19.61	6/21/2022 19:52	6.15
6/22/2022 16:33	37.98	6/22/2022 17:20	19.60	6/21/2022 19:53	6.16
6/22/2022 16:34	37.95	6/22/2022 17:21	19.61	6/21/2022 19:54	6.15
6/22/2022 16:35	37.96	6/22/2022 17:22	19.58	6/21/2022 19:55	6.13
6/22/2022 16:36	37.96	6/22/2022 17:23	19.59	6/21/2022 19:56	6.15
6/22/2022 16:37	37.97	6/22/2022 17:24	19.57	6/21/2022 19:57	6.16
6/22/2022 16:38	37.95	6/22/2022 17:25	19.59	6/21/2022 19:58	6.13
6/22/2022 16:39	37.95	6/22/2022 17:26	19.60	6/21/2022 19:59	6.14
6/22/2022 16:40	37.96	6/22/2022 17:27	19.60	6/21/2022 20:00	6.13
6/22/2022 16:41	37.96	6/22/2022 17:28	19.59	6/21/2022 20:01	6.15
6/22/2022 16:42	37.97	6/22/2022 17:29	19.57	6/21/2022 20:02	6.16
6/22/2022 16:43	37.97	6/22/2022 17:30	19.59	6/21/2022 20:03	6.15
6/22/2022 16:44	38.01	6/22/2022 17:31	19.62	6/21/2022 20:04	6.12
6/22/2022 16:45	37.98	6/22/2022 17:32	19.58	6/21/2022 20:05	6.13
6/22/2022 16:46	38.03	6/22/2022 17:33	19.57	6/21/2022 20:06	6.15
6/22/2022 16:47	37.97	6/22/2022 17:34	19.59	6/21/2022 20:07	6.13
6/22/2022 16:48	37.97	6/22/2022 17:35	19.60	6/21/2022 20:08	6.12
6/22/2022 16:49	38.03	6/22/2022 17:36	19.58	6/21/2022 20:09	6.14
6/22/2022 16:50	38.00	6/22/2022 17:37	19.61	6/21/2022 20:10	6.15
6/22/2022 16:51	37.99	6/22/2022 17:38	19.60	6/21/2022 20:11	6.12
6/22/2022 16:52	38.01	6/22/2022 17:39	19.59	6/21/2022 20:12	6.15
6/22/2022 16:53	37.99	6/22/2022 17:40	19.59	6/21/2022 20:13	6.14
6/22/2022 16:54	38.02	6/22/2022 17:41	19.62	6/21/2022 20:14	6.15
6/22/2022 16:55	38.04	6/22/2022 17:42	19.58	6/21/2022 20:15	6.11
6/22/2022 16:56	37.97	6/22/2022 17:43	19.60	6/21/2022 20:16	6.15
6/22/2022 16:57	37.99	6/22/2022 17:44	19.60	6/21/2022 20:17	6.12
6/22/2022 16:58	37.98	6/22/2022 17:45	19.60	6/21/2022 20:18	6.12
6/22/2022 16:59	37.99	6/22/2022 17:46	19.58	6/21/2022 20:19	6.14
6/22/2022 17:00	37.99	6/22/2022 17:47	19.61	6/21/2022 20:20	6.14
6/22/2022 17:01	37.96	6/22/2022 17:48	19.62	6/21/2022 20:21	6.14
6/22/2022 17:02	37.97	6/22/2022 17:49	19.60	6/21/2022 20:22	6.17
6/22/2022 17:03	37.97	6/22/2022 17:50	19.58	6/21/2022 20:23	6.15
6/22/2022 17:04	38.01	6/22/2022 17:51	19.60	6/21/2022 20:24	6.14
6/22/2022 17:05	37.96	6/22/2022 17:52	19.59	6/21/2022 20:25	6.13
6/22/2022 17:06	37.97	6/22/2022 17:53	19.59	6/21/2022 20:26	6.15
6/22/2022 17:07	37.98	6/22/2022 17:54	19.59	6/21/2022 20:27	6.13
6/22/2022 17:08	37.97	6/22/2022 17:55	19.60	6/21/2022 20:28	6.15
6/22/2022 17:09	37.94	6/22/2022 17:56	19.60	6/21/2022 20:29	6.11
6/22/2022 17:10	37.97	6/22/2022 17:57	19.59	6/21/2022 20:30	6.10
6/22/2022 17:11	37.97	6/22/2022 17:58	19.60	6/21/2022 20:31	6.14
6/22/2022 17:12	38.00	6/22/2022 17:59	19.59	6/21/2022 20:32	6.14
6/22/2022 17:13	38.00	6/22/2022 18:00	19.60	6/21/2022 20:33	6.12
6/22/2022 17:14	37.99	6/22/2022 18:01	19.58	6/21/2022 20:34	6.12
6/22/2022 17:15	37.96	6/22/2022 18:02	19.58	6/21/2022 20:35	6.13
6/22/2022 17:16	38.00	6/22/2022 18:03	19.59	6/21/2022 20:36	6.14
6/22/2022 17:17	37.96	6/22/2022 18:04	19.60	6/21/2022 20:37	6.13
6/22/2022 17:18	37.95	6/22/2022 18:05	19.61	6/21/2022 20:38	6.13
6/22/2022 17:19	37.98	6/22/2022 18:06	19.62	6/21/2022 20:39	6.13
6/22/2022 17:20	37.98	6/22/2022 18:07	19.62	6/21/2022 20:40	6.14
6/22/2022 17:21	37.96	6/22/2022 18:08	19.59	6/21/2022 20:41	6.13
6/22/2022 17:22	37.96	6/22/2022 18:09	19.59	6/21/2022 20:42	6.15
6/22/2022 17:23	37.98	6/22/2022 18:10	19.58	6/21/2022 20:43	6.16
6/22/2022 17:24	37.94	6/22/2022 18:11	19.61	6/21/2022 20:44	6.15
6/22/2022 17:25	37.96	6/22/2022 18:12	19.57	6/21/2022 20:45	6.15
6/22/2022 17:26	37.95	6/22/2022 18:13	19.59	6/21/2022 20:46	6.14
6/22/2022 17:27	37.95	6/22/2022 18:14	19.57	6/21/2022 20:47	6.14
6/22/2022 17:28	37.97	6/22/2022 18:15	19.60	6/21/2022 20:48	6.15
6/22/2022 17:29	37.97	6/22/2022 18:16	19.60	6/21/2022 20:49	6.15
6/22/2022 17:30	37.97	6/22/2022 18:17	19.60	6/21/2022 20:50	6.12
6/22/2022 17:31	37.95	6/22/2022 18:18	19.59	6/21/2022 20:51	6.15
6/22/2022 17:32	37.97	6/22/2022 18:19	19.57	6/21/2022 20:52	6.14
6/22/2022 17:33	37.98	6/22/2022 18:20	19.59	6/21/2022 20:53	6.14
6/22/2022 17:34	37.96	6/22/2022 18:21	19.60	6/21/2022 20:54	6.11
6/22/2022 17:35	37.99	6/22/2022 18:22	19.57	6/21/2022 20:55	6.12
6/22/2022 17:36	37.96	6/22/2022 18:23	19.58	6/21/2022 20:56	6.14
6/22/2022 17:37	37.98	6/22/2022 18:24	19.59	6/21/2022 20:57	6.12
6/22/2022 17:38	38.00	6/22/2022 18:25	19.61	6/21/2022 20:58	6.16

6/22/2022 17:39	38.01	6/22/2022 18:26	19.62	6/21/2022 20:59	6.11
6/22/2022 17:40	38.01	6/22/2022 18:27	19.60	6/21/2022 21:00	6.14
6/22/2022 17:41	38.02	6/22/2022 18:28	19.60	6/21/2022 21:01	6.12
6/22/2022 17:42	38.02	6/22/2022 18:29	19.57	6/21/2022 21:02	6.15
6/22/2022 17:43	38.00	6/22/2022 18:30	19.58	6/21/2022 21:03	6.15
6/22/2022 17:44	37.99	6/22/2022 18:31	19.58	6/21/2022 21:04	6.13
6/22/2022 17:45	37.98	6/22/2022 18:32	19.56	6/21/2022 21:05	6.17
6/22/2022 17:46	37.99	6/22/2022 18:33	19.59	6/21/2022 21:06	6.16
6/22/2022 17:47	37.98	6/22/2022 18:34	19.58	6/21/2022 21:07	6.13
6/22/2022 17:48	37.97	6/22/2022 18:35	19.57	6/21/2022 21:08	6.11
6/22/2022 17:49	37.99	6/22/2022 18:36	19.59	6/21/2022 21:09	6.17
6/22/2022 17:50	37.96	6/22/2022 18:37	19.60	6/21/2022 21:10	6.13
6/22/2022 17:51	37.99	6/22/2022 18:38	19.58	6/21/2022 21:11	6.15
6/22/2022 17:52	37.99	6/22/2022 18:39	19.58	6/21/2022 21:12	6.13
6/22/2022 17:53	37.95	6/22/2022 18:40	19.58	6/21/2022 21:13	6.11
6/22/2022 17:54	37.98	6/22/2022 18:41	19.60	6/21/2022 21:14	6.11
6/22/2022 17:55	38.00	6/22/2022 18:42	19.59	6/21/2022 21:15	6.14
6/22/2022 17:56	37.99	6/22/2022 18:43	19.58	6/21/2022 21:16	6.17
6/22/2022 17:57	37.99	6/22/2022 18:44	19.60	6/21/2022 21:17	6.16
6/22/2022 17:58	37.96	6/22/2022 18:45	19.58	6/21/2022 21:18	6.12
6/22/2022 17:59	38.02	6/22/2022 18:46	19.60	6/21/2022 21:19	6.11
6/22/2022 18:00	water level	6/22/2022 18:47	19.57	6/21/2022 21:20	6.15
6/22/2022 18:01	below transducer	6/22/2022 18:48	19.59	6/21/2022 21:21	6.13
6/22/2022 18:02		6/22/2022 18:49	19.56	6/21/2022 21:22	6.17
6/22/2022 18:03		6/22/2022 18:50	19.60	6/21/2022 21:23	6.14
6/22/2022 18:04		6/22/2022 18:51	19.58	6/21/2022 21:24	6.14
6/22/2022 18:05		6/22/2022 18:52	19.60	6/21/2022 21:25	6.15
6/22/2022 18:06		6/22/2022 18:53	19.57	6/21/2022 21:26	6.15
6/22/2022 18:07		6/22/2022 18:54	19.60	6/21/2022 21:27	6.14
6/22/2022 18:08		6/22/2022 18:55	19.59	6/21/2022 21:28	6.13
6/22/2022 18:09		6/22/2022 18:56	19.58	6/21/2022 21:29	6.14
6/22/2022 18:10		6/22/2022 18:57	19.59	6/21/2022 21:30	6.10
6/22/2022 18:11		6/22/2022 18:58	19.59	6/21/2022 21:31	6.15
6/22/2022 18:12		6/22/2022 18:59	19.57	6/21/2022 21:32	6.11
6/22/2022 18:13		6/22/2022 19:00	19.62	6/21/2022 21:33	6.13
6/22/2022 18:14		6/22/2022 19:01	19.60	6/21/2022 21:34	6.19
6/22/2022 18:15		6/22/2022 19:02	19.60	6/21/2022 21:35	6.13
6/22/2022 18:16		6/22/2022 19:03	19.56	6/21/2022 21:36	6.13
6/22/2022 18:17		6/22/2022 19:04	19.58	6/21/2022 21:37	6.16
6/22/2022 18:18		6/22/2022 19:05	19.58	6/21/2022 21:38	6.12
6/22/2022 18:19		6/22/2022 19:06	19.58	6/21/2022 21:39	6.11
6/22/2022 18:20		6/22/2022 19:07	19.58	6/21/2022 21:40	6.10
6/22/2022 18:21		6/22/2022 19:08	19.59	6/21/2022 21:41	6.16
6/22/2022 18:22		6/22/2022 19:09	19.60	6/21/2022 21:42	6.14
6/22/2022 18:23		6/22/2022 19:10	19.58	6/21/2022 21:43	6.12
6/22/2022 18:24		6/22/2022 19:11	19.58	6/21/2022 21:44	6.14
6/22/2022 18:25		6/22/2022 19:12	19.60	6/21/2022 21:45	6.15
6/22/2022 18:26		6/22/2022 19:13	19.58	6/21/2022 21:46	6.13
6/22/2022 18:27		6/22/2022 19:14	19.60	6/21/2022 21:47	6.11
6/22/2022 18:28		6/22/2022 19:15	19.60	6/21/2022 21:48	6.11
6/22/2022 18:29		6/22/2022 19:16	19.58	6/21/2022 21:49	6.17
6/22/2022 18:30		6/22/2022 19:17	19.58	6/21/2022 21:50	6.16
6/22/2022 18:31		6/22/2022 19:18	19.57	6/21/2022 21:51	6.16
6/22/2022 18:32		6/22/2022 19:19	19.58	6/21/2022 21:52	6.14
6/22/2022 18:33		6/22/2022 19:20	19.58	6/21/2022 21:53	6.13
6/22/2022 18:34		6/22/2022 19:21	19.56	6/21/2022 21:54	6.15
6/22/2022 18:35		6/22/2022 19:22	19.60	6/21/2022 21:55	6.10
6/22/2022 18:36		6/22/2022 19:23	19.58	6/21/2022 21:56	6.12
6/22/2022 18:37		6/22/2022 19:24	19.58	6/21/2022 21:57	6.15
6/22/2022 18:38		6/22/2022 19:25	19.59	6/21/2022 21:58	6.11
6/22/2022 18:39		6/22/2022 19:26	19.60	6/21/2022 21:59	6.13
6/22/2022 18:40		6/22/2022 19:27	19.59	6/21/2022 22:00	6.14
6/22/2022 18:41		6/22/2022 19:28	19.57	6/21/2022 22:01	6.14
6/22/2022 18:42		6/22/2022 19:29	19.60	6/21/2022 22:02	6.12
6/22/2022 18:43		6/22/2022 19:30	19.58	6/21/2022 22:03	6.14
6/22/2022 18:44		6/22/2022 19:31	19.59	6/21/2022 22:04	6.12
6/22/2022 18:45		6/22/2022 19:32	19.61	6/21/2022 22:05	6.13
6/22/2022 18:46		6/22/2022 19:33	19.60	6/21/2022 22:06	6.14
6/22/2022 18:47		6/22/2022 19:34	19.60	6/21/2022 22:07	6.13
6/22/2022 18:48		6/22/2022 19:35	19.59	6/21/2022 22:08	6.15
6/22/2022 18:49		6/22/2022 19:36	19.59	6/21/2022 22:09	6.11
6/22/2022 18:50		6/22/2022 19:37	19.59	6/21/2022 22:10	6.14
6/22/2022 18:51		6/22/2022 19:38	19.60	6/21/2022 22:11	6.09
6/22/2022 18:52		6/22/2022 19:39	19.61	6/21/2022 22:12	6.15
6/22/2022 18:53		6/22/2022 19:40	19.60	6/21/2022 22:13	6.13
6/22/2022 18:54		6/22/2022 19:41	19.61	6/21/2022 22:14	6.13
6/22/2022 18:55		6/22/2022 19:42	19.58	6/21/2022 22:15	6.17
6/22/2022 18:56		6/22/2022 19:43	19.58	6/21/2022 22:16	6.13
6/22/2022 18:57		6/22/2022 19:44	19.59	6/21/2022 22:17	6.14
6/22/2022 18:58		6/22/2022 19:45	19.58	6/21/2022 22:18	6.13
6/22/2022 18:59		6/22/2022 19:46	19.59	6/21/2022 22:19	6.16
6/22/2022 19:00		6/22/2022 19:47	19.60	6/21/2022 22:20	6.11
6/22/2022 19:01		6/22/2022 19:48	19.61	6/21/2022 22:21	6.15
6/22/2022 19:02		6/22/2022 19:49	19.57	6/21/2022 22:22	6.14
6/22/2022 19:03		6/22/2022 19:50	19.58	6/21/2022 22:23	6.14
6/22/2022 19:04		6/22/2022 19:51	19.57	6/21/2022 22:24	6.13
6/22/2022 19:05		6/22/2022 19:52	19.58	6/21/2022 22:25	6.14
6/22/2022 19:06		6/22/2022 19:53	19.56	6/21/2022 22:26	6.13

6/22/2022 19:07	6/22/2022 19:54	19.60	6/21/2022 22:27	6.12
6/22/2022 19:08	6/22/2022 19:55	19.60	6/21/2022 22:28	6.14
6/22/2022 19:09	6/22/2022 19:56	19.80	6/21/2022 22:29	6.11
6/22/2022 19:10	6/22/2022 19:57	20.21	6/21/2022 22:30	6.12
6/22/2022 19:11	6/22/2022 19:58	20.31	6/21/2022 22:31	6.14
6/22/2022 19:12	6/22/2022 19:59	20.39	6/21/2022 22:32	6.11
6/22/2022 19:13	6/22/2022 20:00	20.36	6/21/2022 22:33	6.17
6/22/2022 19:14	6/22/2022 20:01	19.92	6/21/2022 22:34	6.14
6/22/2022 19:15	6/22/2022 20:02	19.84	6/21/2022 22:35	6.15
6/22/2022 19:16	6/22/2022 20:03	19.76	6/21/2022 22:36	6.14
6/22/2022 19:17	6/22/2022 20:04	19.75	6/21/2022 22:37	6.13
6/22/2022 19:18	6/22/2022 20:05	19.70	6/21/2022 22:38	6.12
6/22/2022 19:19	6/22/2022 20:06	19.71	6/21/2022 22:39	6.12
6/22/2022 19:20	6/22/2022 20:07	19.69	6/21/2022 22:40	6.13
6/22/2022 19:21	6/22/2022 20:08	19.72	6/21/2022 22:41	6.17
6/22/2022 19:22	6/22/2022 20:09	19.68	6/21/2022 22:42	6.12
6/22/2022 19:23	6/22/2022 20:10	19.68	6/21/2022 22:43	6.13
6/22/2022 19:24	6/22/2022 20:11	19.69	6/21/2022 22:44	6.12
6/22/2022 19:25	6/22/2022 20:12	19.68	6/21/2022 22:45	6.11
6/22/2022 19:26	6/22/2022 20:13	19.67	6/21/2022 22:46	6.12
6/22/2022 19:27	6/22/2022 20:14	19.68	6/21/2022 22:47	6.17
6/22/2022 19:28	6/22/2022 20:15	19.69	6/21/2022 22:48	6.11
6/22/2022 19:29	6/22/2022 20:16	19.67	6/21/2022 22:49	6.14
6/22/2022 19:30	6/22/2022 20:17	19.67	6/21/2022 22:50	6.14
6/22/2022 19:31	6/22/2022 20:18	19.66	6/21/2022 22:51	6.13
6/22/2022 19:32	6/22/2022 20:19	19.67	6/21/2022 22:52	6.14
6/22/2022 19:33	6/22/2022 20:20	19.68	6/21/2022 22:53	6.12
6/22/2022 19:34	6/22/2022 20:21	19.66	6/21/2022 22:54	6.09
6/22/2022 19:35	6/22/2022 20:22	19.67	6/21/2022 22:55	6.12
6/22/2022 19:36	6/22/2022 20:23	19.67	6/21/2022 22:56	6.15
6/22/2022 19:37	6/22/2022 20:24	19.65	6/21/2022 22:57	6.15
6/22/2022 19:38	6/22/2022 20:25	19.62	6/21/2022 22:58	6.17
6/22/2022 19:39	6/22/2022 20:26	19.66	6/21/2022 22:59	6.11
6/22/2022 19:40	6/22/2022 20:27	19.66	6/21/2022 23:00	6.14
6/22/2022 19:41	6/22/2022 20:28	19.64	6/21/2022 23:01	6.12
6/22/2022 19:42	6/22/2022 20:29	19.65	6/21/2022 23:02	6.13
6/22/2022 19:43	6/22/2022 20:30	19.64	6/21/2022 23:03	6.13
6/22/2022 19:44	6/22/2022 20:31	19.66	6/21/2022 23:04	6.15
6/22/2022 19:45	6/22/2022 20:32	19.65	6/21/2022 23:05	6.16
6/22/2022 19:46	6/22/2022 20:33	19.65	6/21/2022 23:06	6.11
6/22/2022 19:47	6/22/2022 20:34	19.62	6/21/2022 23:07	6.14
6/22/2022 19:48	6/22/2022 20:35	19.63	6/21/2022 23:08	6.13
6/22/2022 19:49	6/22/2022 20:36	19.64	6/21/2022 23:09	6.09
6/22/2022 19:50	6/22/2022 20:37	19.63	6/21/2022 23:10	6.13
6/22/2022 19:51	6/22/2022 20:38	19.63	6/21/2022 23:11	6.12
6/22/2022 19:52	6/22/2022 20:39	19.63	6/21/2022 23:12	6.12
6/22/2022 19:53	6/22/2022 20:40	19.64	6/21/2022 23:13	6.12
6/22/2022 19:54	6/22/2022 20:41	19.64	6/21/2022 23:14	6.10
6/22/2022 19:55	6/22/2022 20:42	19.61	6/21/2022 23:15	6.16
6/22/2022 19:56	6/22/2022 20:43	19.65	6/21/2022 23:16	6.14
6/22/2022 19:57	6/22/2022 20:44	19.62	6/21/2022 23:17	6.12
6/22/2022 19:58	6/22/2022 20:45	19.62	6/21/2022 23:18	6.11
6/22/2022 19:59	6/22/2022 20:46	19.62	6/21/2022 23:19	6.11
6/22/2022 20:00	6/22/2022 20:47	19.65	6/21/2022 23:20	6.16
6/22/2022 20:01	6/22/2022 20:48	19.63	6/21/2022 23:21	6.13
6/22/2022 20:02	6/22/2022 20:49	19.62	6/21/2022 23:22	6.14
6/22/2022 20:03	6/22/2022 20:50	19.61	6/21/2022 23:23	6.12
6/22/2022 20:04	6/22/2022 20:51	19.61	6/21/2022 23:24	6.13
6/22/2022 20:05	6/22/2022 20:52	19.63	6/21/2022 23:25	6.12
6/22/2022 20:06	6/22/2022 20:53	19.64	6/21/2022 23:26	6.12
6/22/2022 20:07	6/22/2022 20:54	19.64	6/21/2022 23:27	6.08
6/22/2022 20:08	6/22/2022 20:55	19.62	6/21/2022 23:28	6.11
6/22/2022 20:09	6/22/2022 20:56	19.61	6/21/2022 23:29	6.14
6/22/2022 20:10	6/22/2022 20:57	19.64	6/21/2022 23:30	6.13
6/22/2022 20:11	6/22/2022 20:58	19.62	6/21/2022 23:31	6.14
6/22/2022 20:12	6/22/2022 20:59	19.61	6/21/2022 23:32	6.12
6/22/2022 20:13	6/22/2022 21:00	19.61	6/21/2022 23:33	6.11
6/22/2022 20:14	6/22/2022 21:01	19.64	6/21/2022 23:34	6.12
6/22/2022 20:15	6/22/2022 21:02	19.61	6/21/2022 23:35	6.11
6/22/2022 20:16	6/22/2022 21:03	19.61	6/21/2022 23:36	6.11
6/22/2022 20:17	6/22/2022 21:04	19.62	6/21/2022 23:37	6.12
6/22/2022 20:18	6/22/2022 21:05	19.63	6/21/2022 23:38	6.15
6/22/2022 20:19	6/22/2022 21:06	19.62	6/21/2022 23:39	6.14
6/22/2022 20:20	6/22/2022 21:07	19.65	6/21/2022 23:40	6.13
6/22/2022 20:21	6/22/2022 21:08	19.62	6/21/2022 23:41	6.14
6/22/2022 20:22	6/22/2022 21:09	19.60	6/21/2022 23:42	6.14
6/22/2022 20:23	6/22/2022 21:10	19.63	6/21/2022 23:43	6.13
6/22/2022 20:24	6/22/2022 21:11	19.63	6/21/2022 23:44	6.13
6/22/2022 20:25	6/22/2022 21:12	19.64	6/21/2022 23:45	6.12
6/22/2022 20:26	6/22/2022 21:13	19.61	6/21/2022 23:46	6.11
6/22/2022 20:27	6/22/2022 21:14	19.62	6/21/2022 23:47	6.12
6/22/2022 20:28	6/22/2022 21:15	19.60	6/21/2022 23:48	6.13
6/22/2022 20:29	6/22/2022 21:16	19.60	6/21/2022 23:49	6.11
6/22/2022 20:30	6/22/2022 21:17	19.62	6/21/2022 23:50	6.14
6/22/2022 20:31	6/22/2022 21:18	19.62	6/21/2022 23:51	6.16
6/22/2022 20:32	6/22/2022 21:19	19.63	6/21/2022 23:52	6.17
6/22/2022 20:33	6/22/2022 21:20	19.63	6/21/2022 23:53	6.12
6/22/2022 20:34	6/22/2022 21:21	19.63	6/21/2022 23:54	6.15

6/22/2022 20:35	6/22/2022 21:22	19.64	6/21/2022 23:55	6.14
6/22/2022 20:36	6/22/2022 21:23	19.63	6/21/2022 23:56	6.12
6/22/2022 20:37	6/22/2022 21:24	19.63	6/21/2022 23:57	6.11
6/22/2022 20:38	6/22/2022 21:25	19.64	6/21/2022 23:58	6.12
6/22/2022 20:39	6/22/2022 21:26	19.60	6/21/2022 23:59	6.16
6/22/2022 20:40	6/22/2022 21:27	19.62	6/22/2022 0:00	6.11
6/22/2022 20:41	6/22/2022 21:28	19.63	6/22/2022 0:01	6.13
6/22/2022 20:42	6/22/2022 21:29	19.61	6/22/2022 0:02	6.12
6/22/2022 20:43	6/22/2022 21:30	19.62	6/22/2022 0:03	6.13
6/22/2022 20:44	6/22/2022 21:31	19.63	6/22/2022 0:04	6.11
6/22/2022 20:45	6/22/2022 21:32	19.63	6/22/2022 0:05	6.11
6/22/2022 20:46	6/22/2022 21:33	19.64	6/22/2022 0:06	6.17
6/22/2022 20:47	6/22/2022 21:34	19.64	6/22/2022 0:07	6.13
6/22/2022 20:48	6/22/2022 21:35	19.61	6/22/2022 0:08	6.41
6/22/2022 20:49	6/22/2022 21:36	19.62	6/22/2022 0:09	8.78
6/22/2022 20:50	6/22/2022 21:37	19.64	6/22/2022 0:10	8.95
6/22/2022 20:51	6/22/2022 21:38	19.64	6/22/2022 0:11	6.34
6/22/2022 20:52	6/22/2022 21:39	19.61	6/22/2022 0:12	6.19
6/22/2022 20:53	6/22/2022 21:40	19.64	6/22/2022 0:13	6.15
6/22/2022 20:54	6/22/2022 21:41	19.63	6/22/2022 0:14	6.18
6/22/2022 20:55	6/22/2022 21:42	19.63	6/22/2022 0:15	6.15
6/22/2022 20:56	6/22/2022 21:43	19.62	6/22/2022 0:16	6.13
6/22/2022 20:57	6/22/2022 21:44	19.62	6/22/2022 0:17	6.15
6/22/2022 20:58	6/22/2022 21:45	19.64	6/22/2022 0:18	6.16
6/22/2022 20:59	6/22/2022 21:46	19.63	6/22/2022 0:19	6.15
6/22/2022 21:00	6/22/2022 21:47	19.62	6/22/2022 0:20	6.16
6/22/2022 21:01	6/22/2022 21:48	19.63	6/22/2022 0:21	6.13
6/22/2022 21:02	6/22/2022 21:49	19.60	6/22/2022 0:22	6.16
6/22/2022 21:03	6/22/2022 21:50	19.60	6/22/2022 0:23	6.16
6/22/2022 21:04	6/22/2022 21:51	19.62	6/22/2022 0:24	6.14
6/22/2022 21:05	6/22/2022 21:52	19.63	6/22/2022 0:25	6.15
6/22/2022 21:06	6/22/2022 21:53	19.61	6/22/2022 0:26	6.14
6/22/2022 21:07	6/22/2022 21:54	19.62	6/22/2022 0:27	6.13
6/22/2022 21:08	6/22/2022 21:55	19.62	6/22/2022 0:28	6.15
6/22/2022 21:09	6/22/2022 21:56	19.61	6/22/2022 0:29	6.11
6/22/2022 21:10	6/22/2022 21:57	19.64	6/22/2022 0:30	6.12
6/22/2022 21:11	6/22/2022 21:58	19.59	6/22/2022 0:31	6.11
6/22/2022 21:12	6/22/2022 21:59	19.61	6/22/2022 0:32	6.11
6/22/2022 21:13	6/22/2022 22:00	19.64	6/22/2022 0:33	6.13
6/22/2022 21:14	6/22/2022 22:01	19.61	6/22/2022 0:34	6.14
6/22/2022 21:15	6/22/2022 22:02	19.63	6/22/2022 0:35	6.09
6/22/2022 21:16	6/22/2022 22:03	19.63	6/22/2022 0:36	6.14
6/22/2022 21:17	6/22/2022 22:04	19.62	6/22/2022 0:37	6.12
6/22/2022 21:18	6/22/2022 22:05	19.65	6/22/2022 0:38	6.10
6/22/2022 21:19	6/22/2022 22:06	19.62	6/22/2022 0:39	6.14
6/22/2022 21:20	6/22/2022 22:07	19.62	6/22/2022 0:40	6.12
6/22/2022 21:21	6/22/2022 22:08	19.61	6/22/2022 0:41	6.12
6/22/2022 21:22	6/22/2022 22:09	19.59	6/22/2022 0:42	6.13
6/22/2022 21:23	6/22/2022 22:10	19.61	6/22/2022 0:43	6.13
6/22/2022 21:24	6/22/2022 22:11	19.63	6/22/2022 0:44	6.15
6/22/2022 21:25	6/22/2022 22:12	19.62	6/22/2022 0:45	6.16
6/22/2022 21:26	6/22/2022 22:13	19.61	6/22/2022 0:46	6.13
6/22/2022 21:27	6/22/2022 22:14	19.64	6/22/2022 0:47	6.13
6/22/2022 21:28	6/22/2022 22:15	19.61	6/22/2022 0:48	6.13
6/22/2022 21:29	6/22/2022 22:16	19.61	6/22/2022 0:49	6.13
6/22/2022 21:30	6/22/2022 22:17	19.63	6/22/2022 0:50	6.11
6/22/2022 21:31	6/22/2022 22:18	19.61	6/22/2022 0:51	6.14
6/22/2022 21:32	6/22/2022 22:19	19.59	6/22/2022 0:52	8.52
6/22/2022 21:33	6/22/2022 22:20	19.64	6/22/2022 0:53	8.95
6/22/2022 21:34	6/22/2022 22:21	19.62	6/22/2022 0:54	6.94
6/22/2022 21:35	6/22/2022 22:22	19.60	6/22/2022 0:55	6.23
6/22/2022 21:36	6/22/2022 22:23	19.62	6/22/2022 0:56	6.22
6/22/2022 21:37	6/22/2022 22:24	19.62	6/22/2022 0:57	6.21
6/22/2022 21:38	6/22/2022 22:25	19.61	6/22/2022 0:58	6.17
6/22/2022 21:39	6/22/2022 22:26	19.63	6/22/2022 0:59	6.13
6/22/2022 21:40	6/22/2022 22:27	19.62	6/22/2022 1:00	6.12
6/22/2022 21:41	6/22/2022 22:28	19.61	6/22/2022 1:01	6.14
6/22/2022 21:42	6/22/2022 22:29	19.61	6/22/2022 1:02	6.16
6/22/2022 21:43	6/22/2022 22:30	19.61	6/22/2022 1:03	6.18
6/22/2022 21:44	6/22/2022 22:31	19.60	6/22/2022 1:04	6.13
6/22/2022 21:45	6/22/2022 22:32	19.62	6/22/2022 1:05	6.16
6/22/2022 21:46	6/22/2022 22:33	19.63	6/22/2022 1:06	6.12
6/22/2022 21:47	6/22/2022 22:34	19.62	6/22/2022 1:07	6.16
6/22/2022 21:48	6/22/2022 22:35	19.62	6/22/2022 1:08	6.18
6/22/2022 21:49	6/22/2022 22:36	19.61	6/22/2022 1:09	6.16
6/22/2022 21:50	6/22/2022 22:37	19.61	6/22/2022 1:10	6.15
6/22/2022 21:51	6/22/2022 22:38	19.62	6/22/2022 1:11	6.15
6/22/2022 21:52	6/22/2022 22:39	19.60	6/22/2022 1:12	6.13
6/22/2022 21:53	6/22/2022 22:40	19.63	6/22/2022 1:13	6.12
6/22/2022 21:54	6/22/2022 22:41	19.62	6/22/2022 1:14	6.11
6/22/2022 21:55	6/22/2022 22:42	19.60	6/22/2022 1:15	6.14
6/22/2022 21:56	6/22/2022 22:43	19.61	6/22/2022 1:16	6.15
6/22/2022 21:57	6/22/2022 22:44	19.58	6/22/2022 1:17	6.16
6/22/2022 21:58	6/22/2022 22:45	19.61	6/22/2022 1:18	6.14
6/22/2022 21:59	6/22/2022 22:46	19.61	6/22/2022 1:19	6.13
6/22/2022 22:00	6/22/2022 22:47	19.59	6/22/2022 1:20	6.16
6/22/2022 22:01	6/22/2022 22:48	19.63	6/22/2022 1:21	6.11
6/22/2022 22:02	6/22/2022 22:49	19.64	6/22/2022 1:22	6.12

6/22/2022 22:03	6/22/2022 22:50	19.62	6/22/2022 1:23	6.16
6/22/2022 22:04	6/22/2022 22:51	19.62	6/22/2022 1:24	6.10
6/22/2022 22:05	6/22/2022 22:52	19.60	6/22/2022 1:25	6.13
6/22/2022 22:06	6/22/2022 22:53	19.62	6/22/2022 1:26	6.12
6/22/2022 22:07	6/22/2022 22:54	19.61	6/22/2022 1:27	6.10
6/22/2022 22:08	6/22/2022 22:55	19.59	6/22/2022 1:28	6.15
6/22/2022 22:09	6/22/2022 22:56	19.61	6/22/2022 1:29	6.13
6/22/2022 22:10	6/22/2022 22:57	19.63	6/22/2022 1:30	6.17
6/22/2022 22:11	6/22/2022 22:58	20.05	6/22/2022 1:31	6.17
6/22/2022 22:12	6/22/2022 22:59	20.28	6/22/2022 1:32	6.15
6/22/2022 22:13	6/22/2022 23:00	20.34	6/22/2022 1:33	6.12
6/22/2022 22:14	6/22/2022 23:01	20.38	6/22/2022 1:34	6.13
6/22/2022 22:15	6/22/2022 23:02	20.42	6/22/2022 1:35	6.12
6/22/2022 22:16	6/22/2022 23:03	20.06	6/22/2022 1:36	6.13
6/22/2022 22:17	6/22/2022 23:04	19.88	6/22/2022 1:37	6.13
6/22/2022 22:18	6/22/2022 23:05	19.82	6/22/2022 1:38	6.15
6/22/2022 22:19	6/22/2022 23:06	19.81	6/22/2022 1:39	6.12
6/22/2022 22:20	6/22/2022 23:07	19.75	6/22/2022 1:40	6.11
6/22/2022 22:21	6/22/2022 23:08	19.74	6/22/2022 1:41	6.15
6/22/2022 22:22	6/22/2022 23:09	19.73	6/22/2022 1:42	6.11
6/22/2022 22:23	6/22/2022 23:10	19.73	6/22/2022 1:43	6.13
6/22/2022 22:24	6/22/2022 23:11	19.73	6/22/2022 1:44	6.15
6/22/2022 22:25	6/22/2022 23:12	19.72	6/22/2022 1:45	6.11
6/22/2022 22:26	6/22/2022 23:13	19.73	6/22/2022 1:46	6.14
6/22/2022 22:27	6/22/2022 23:14	19.71	6/22/2022 1:47	6.14
6/22/2022 22:28	6/22/2022 23:15	19.69	6/22/2022 1:48	6.11
6/22/2022 22:29	6/22/2022 23:16	19.74	6/22/2022 1:49	6.11
6/22/2022 22:30	6/22/2022 23:17	19.69	6/22/2022 1:50	6.13
6/22/2022 22:31	6/22/2022 23:18	19.70	6/22/2022 1:51	6.13
6/22/2022 22:32	6/22/2022 23:19	19.68	6/22/2022 1:52	6.14
6/22/2022 22:33	6/22/2022 23:20	19.70	6/22/2022 1:53	6.16
6/22/2022 22:34	6/22/2022 23:21	19.65	6/22/2022 1:54	6.14
6/22/2022 22:35	6/22/2022 23:22	19.67	6/22/2022 1:55	6.13
6/22/2022 22:36	6/22/2022 23:23	19.68	6/22/2022 1:56	6.14
6/22/2022 22:37	6/22/2022 23:24	19.69	6/22/2022 1:57	6.11
6/22/2022 22:38	6/22/2022 23:25	19.67	6/22/2022 1:58	6.15
6/22/2022 22:39	6/22/2022 23:26	19.68	6/22/2022 1:59	6.15
6/22/2022 22:40	6/22/2022 23:27	19.67	6/22/2022 2:00	6.14
6/22/2022 22:41	6/22/2022 23:28	19.68	6/22/2022 2:01	6.16
6/22/2022 22:42	6/22/2022 23:29	19.68	6/22/2022 2:02	6.12
6/22/2022 22:43	6/22/2022 23:30	19.65	6/22/2022 2:03	6.14
6/22/2022 22:44	6/22/2022 23:31	19.67	6/22/2022 2:04	6.13
6/22/2022 22:45	6/22/2022 23:32	19.66	6/22/2022 2:05	6.16
6/22/2022 22:46	6/22/2022 23:33	19.68	6/22/2022 2:06	6.19
6/22/2022 22:47	6/22/2022 23:34	19.66	6/22/2022 2:07	6.11
6/22/2022 22:48	6/22/2022 23:35	19.64	6/22/2022 2:08	6.14
6/22/2022 22:49	6/22/2022 23:36	19.67	6/22/2022 2:09	6.12
6/22/2022 22:50	6/22/2022 23:37	19.68	6/22/2022 2:10	6.15
6/22/2022 22:51	6/22/2022 23:38	19.65	6/22/2022 2:11	6.14
6/22/2022 22:52	6/22/2022 23:39	19.64	6/22/2022 2:12	6.14
6/22/2022 22:53	6/22/2022 23:40	19.67	6/22/2022 2:13	6.12
6/22/2022 22:54	6/22/2022 23:41	19.65	6/22/2022 2:14	6.13
6/22/2022 22:55	6/22/2022 23:42	19.64	6/22/2022 2:15	6.10
6/22/2022 22:56	6/22/2022 23:43	19.65	6/22/2022 2:16	6.14
6/22/2022 22:57	6/22/2022 23:44	19.66	6/22/2022 2:17	6.10
6/22/2022 22:58	6/22/2022 23:45	19.68	6/22/2022 2:18	6.10
6/22/2022 22:59	6/22/2022 23:46	19.65	6/22/2022 2:19	6.12
6/22/2022 23:00	6/22/2022 23:47	19.65	6/22/2022 2:20	6.13
6/22/2022 23:01	6/22/2022 23:48	19.66	6/22/2022 2:21	6.10
6/22/2022 23:02	6/22/2022 23:49	19.65	6/22/2022 2:22	6.11
6/22/2022 23:03	6/22/2022 23:50	19.64	6/22/2022 2:23	6.12
6/22/2022 23:04	6/22/2022 23:51	19.63	6/22/2022 2:24	6.15
6/22/2022 23:05	6/22/2022 23:52	19.64	6/22/2022 2:25	6.10
6/22/2022 23:06	6/22/2022 23:53	19.64	6/22/2022 2:26	6.16
6/22/2022 23:07	6/22/2022 23:54	19.61	6/22/2022 2:27	6.10
6/22/2022 23:08	6/22/2022 23:55	19.60	6/22/2022 2:28	6.11
6/22/2022 23:09	6/22/2022 23:56	19.64	6/22/2022 2:29	6.11
6/22/2022 23:10	6/22/2022 23:57	19.61	6/22/2022 2:30	6.12
6/22/2022 23:11	6/22/2022 23:58	19.64	6/22/2022 2:31	6.10
6/22/2022 23:12	6/22/2022 23:59	19.62	6/22/2022 2:32	6.11
6/22/2022 23:13	6/23/2022 0:00	19.63	6/22/2022 2:33	6.12
6/22/2022 23:14	6/23/2022 0:01	19.64	6/22/2022 2:34	6.15
6/22/2022 23:15	6/23/2022 0:02	19.64	6/22/2022 2:35	6.12
6/22/2022 23:16	6/23/2022 0:03	19.62	6/22/2022 2:36	6.11
6/22/2022 23:17	6/23/2022 0:04	19.63	6/22/2022 2:37	6.15
6/22/2022 23:18	6/23/2022 0:05	19.64	6/22/2022 2:38	6.11
6/22/2022 23:19	6/23/2022 0:06	19.63	6/22/2022 2:39	6.10
6/22/2022 23:20	6/23/2022 0:07	19.63	6/22/2022 2:40	6.12
6/22/2022 23:21	6/23/2022 0:08	19.61	6/22/2022 2:41	6.16
6/22/2022 23:22	6/23/2022 0:09	19.62	6/22/2022 2:42	6.12
6/22/2022 23:23	6/23/2022 0:10	19.61	6/22/2022 2:43	6.13
6/22/2022 23:24	6/23/2022 0:11	19.61	6/22/2022 2:44	6.13
6/22/2022 23:25	6/23/2022 0:12	19.62	6/22/2022 2:45	6.15
6/22/2022 23:26	6/23/2022 0:13	19.64	6/22/2022 2:46	6.14
6/22/2022 23:27	6/23/2022 0:14	19.64	6/22/2022 2:47	6.15
6/22/2022 23:28	6/23/2022 0:15	19.64	6/22/2022 2:48	6.09
6/22/2022 23:29	6/23/2022 0:16	19.60	6/22/2022 2:49	6.16
6/22/2022 23:30	6/23/2022 0:17	19.62	6/22/2022 2:50	6.12

6/22/2022 23:31	6/23/2022 0:18	19.63	6/22/2022 2:51	6.13
6/22/2022 23:32	6/23/2022 0:19	19.65	6/22/2022 2:52	6.10
6/22/2022 23:33	6/23/2022 0:20	19.60	6/22/2022 2:53	6.12
6/22/2022 23:34	6/23/2022 0:21	19.63	6/22/2022 2:54	6.12
6/22/2022 23:35	6/23/2022 0:22	19.60	6/22/2022 2:55	6.12
6/22/2022 23:36	6/23/2022 0:23	19.60	6/22/2022 2:56	6.12
6/22/2022 23:37	6/23/2022 0:24	19.63	6/22/2022 2:57	6.14
6/22/2022 23:38	6/23/2022 0:25	19.61	6/22/2022 2:58	6.09
6/22/2022 23:39	6/23/2022 0:26	19.62	6/22/2022 2:59	6.12
6/22/2022 23:40	6/23/2022 0:27	19.62	6/22/2022 3:00	6.11
6/22/2022 23:41	6/23/2022 0:28	19.62	6/22/2022 3:01	6.11
6/22/2022 23:42	6/23/2022 0:29	19.60	6/22/2022 3:02	6.12
6/22/2022 23:43	6/23/2022 0:30	19.61	6/22/2022 3:03	6.11
6/22/2022 23:44	6/23/2022 0:31	19.61	6/22/2022 3:04	6.13
6/22/2022 23:45	6/23/2022 0:32	19.61	6/22/2022 3:05	6.13
6/22/2022 23:46	6/23/2022 0:33	19.62	6/22/2022 3:06	6.12
6/22/2022 23:47	6/23/2022 0:34	19.59	6/22/2022 3:07	6.12
6/22/2022 23:48	6/23/2022 0:35	19.61	6/22/2022 3:08	6.11
6/22/2022 23:49	6/23/2022 0:36	19.62	6/22/2022 3:09	6.13
6/22/2022 23:50	6/23/2022 0:37	19.61	6/22/2022 3:10	6.11
6/22/2022 23:51	6/23/2022 0:38	19.59	6/22/2022 3:11	6.13
6/22/2022 23:52	6/23/2022 0:39	19.60	6/22/2022 3:12	6.13
6/22/2022 23:53	6/23/2022 0:40	19.60	6/22/2022 3:13	6.14
6/22/2022 23:54	6/23/2022 0:41	19.61	6/22/2022 3:14	6.12
6/22/2022 23:55	6/23/2022 0:42	19.59	6/22/2022 3:15	6.15
6/22/2022 23:56	6/23/2022 0:43	19.59	6/22/2022 3:16	6.13
6/22/2022 23:57	6/23/2022 0:44	19.59	6/22/2022 3:17	6.13
6/22/2022 23:58	6/23/2022 0:45	19.62	6/22/2022 3:18	6.12
6/22/2022 23:59	6/23/2022 0:46	19.65	6/22/2022 3:19	6.11
6/23/2022 0:00	6/23/2022 0:47	19.61	6/22/2022 3:20	6.13
6/23/2022 0:01	6/23/2022 0:48	19.61	6/22/2022 3:21	6.13
6/23/2022 0:02	6/23/2022 0:49	19.63	6/22/2022 3:22	6.09
6/23/2022 0:03	6/23/2022 0:50	19.60	6/22/2022 3:23	6.11
6/23/2022 0:04	6/23/2022 0:51	19.61	6/22/2022 3:24	6.12
6/23/2022 0:05	6/23/2022 0:52	19.63	6/22/2022 3:25	6.12
6/23/2022 0:06	6/23/2022 0:53	19.63	6/22/2022 3:26	6.13
6/23/2022 0:07	6/23/2022 0:54	19.63	6/22/2022 3:27	6.13
6/23/2022 0:08	6/23/2022 0:55	19.62	6/22/2022 3:28	6.08
6/23/2022 0:09	6/23/2022 0:56	19.63	6/22/2022 3:29	6.15
6/23/2022 0:10	6/23/2022 0:57	19.61	6/22/2022 3:30	6.12
6/23/2022 0:11	6/23/2022 0:58	19.61	6/22/2022 3:31	6.11
6/23/2022 0:12	6/23/2022 0:59	19.61	6/22/2022 3:32	6.12
6/23/2022 0:13	6/23/2022 1:00	19.58	6/22/2022 3:33	6.11
6/23/2022 0:14	6/23/2022 1:01	19.61	6/22/2022 3:34	6.11
6/23/2022 0:15	6/23/2022 1:02	19.61	6/22/2022 3:35	6.12
6/23/2022 0:16	6/23/2022 1:03	19.61	6/22/2022 3:36	6.11
6/23/2022 0:17	6/23/2022 1:04	19.62	6/22/2022 3:37	6.12
6/23/2022 0:18	6/23/2022 1:05	19.60	6/22/2022 3:38	6.14
6/23/2022 0:19	6/23/2022 1:06	19.61	6/22/2022 3:39	6.11
6/23/2022 0:20	6/23/2022 1:07	19.64	6/22/2022 3:40	6.14
6/23/2022 0:21	6/23/2022 1:08	19.60	6/22/2022 3:41	6.11
6/23/2022 0:22	6/23/2022 1:09	19.61	6/22/2022 3:42	6.13
6/23/2022 0:23	6/23/2022 1:10	19.60	6/22/2022 3:43	6.14
6/23/2022 0:24	6/23/2022 1:11	19.62	6/22/2022 3:44	6.11
6/23/2022 0:25	6/23/2022 1:12	19.59	6/22/2022 3:45	6.09
6/23/2022 0:26	6/23/2022 1:13	19.58	6/22/2022 3:46	6.11
6/23/2022 0:27	6/23/2022 1:14	19.61	6/22/2022 3:47	6.11
6/23/2022 0:28	6/23/2022 1:15	19.61	6/22/2022 3:48	6.11
6/23/2022 0:29	6/23/2022 1:16	19.60	6/22/2022 3:49	6.13
6/23/2022 0:30	6/23/2022 1:17	19.57	6/22/2022 3:50	6.12
6/23/2022 0:31	6/23/2022 1:18	19.62	6/22/2022 3:51	6.10
6/23/2022 0:32	6/23/2022 1:19	19.62	6/22/2022 3:52	6.14
6/23/2022 0:33	6/23/2022 1:20	19.60	6/22/2022 3:53	6.13
6/23/2022 0:34	6/23/2022 1:21	19.62	6/22/2022 3:54	6.09
6/23/2022 0:35	6/23/2022 1:22	19.62	6/22/2022 3:55	6.13
6/23/2022 0:36	6/23/2022 1:23	19.62	6/22/2022 3:56	6.11
6/23/2022 0:37	6/23/2022 1:24	19.61	6/22/2022 3:57	6.11
6/23/2022 0:38	6/23/2022 1:25	19.61	6/22/2022 3:58	6.11
6/23/2022 0:39	6/23/2022 1:26	19.60	6/22/2022 3:59	6.12
6/23/2022 0:40	6/23/2022 1:27	19.60	6/22/2022 4:00	6.10
6/23/2022 0:41	6/23/2022 1:28	19.60	6/22/2022 4:01	6.09
6/23/2022 0:42	6/23/2022 1:29	19.60	6/22/2022 4:02	6.15
6/23/2022 0:43	6/23/2022 1:30	19.58	6/22/2022 4:03	6.08
6/23/2022 0:44	6/23/2022 1:31	19.61	6/22/2022 4:04	6.11
6/23/2022 0:45	6/23/2022 1:32	19.62	6/22/2022 4:05	6.11
6/23/2022 0:46	6/23/2022 1:33	19.59	6/22/2022 4:06	6.11
6/23/2022 0:47	6/23/2022 1:34	19.61	6/22/2022 4:07	6.11
6/23/2022 0:48	6/23/2022 1:35	19.59	6/22/2022 4:08	6.11
6/23/2022 0:49	6/23/2022 1:36	19.61	6/22/2022 4:09	6.09
6/23/2022 0:50	6/23/2022 1:37	19.61	6/22/2022 4:10	6.13
6/23/2022 0:51	6/23/2022 1:38	19.63	6/22/2022 4:11	6.13
6/23/2022 0:52	6/23/2022 1:39	19.60	6/22/2022 4:12	6.14
6/23/2022 0:53	6/23/2022 1:40	19.60	6/22/2022 4:13	6.16
6/23/2022 0:54	6/23/2022 1:41	19.61	6/22/2022 4:14	6.10
6/23/2022 0:55	6/23/2022 1:42	19.62	6/22/2022 4:15	6.12
6/23/2022 0:56	6/23/2022 1:43	19.60	6/22/2022 4:16	6.10
6/23/2022 0:57	6/23/2022 1:44	19.59	6/22/2022 4:17	6.12
6/23/2022 0:58	6/23/2022 1:45	19.62	6/22/2022 4:18	6.12

6/23/2022 0:59	6/23/2022 1:46	19.61	6/22/2022 4:19	6.11
6/23/2022 1:00	6/23/2022 1:47	19.59	6/22/2022 4:20	6.10
6/23/2022 1:01	6/23/2022 1:48	19.60	6/22/2022 4:21	6.10
6/23/2022 1:02	6/23/2022 1:49	19.63	6/22/2022 4:22	6.11
6/23/2022 1:03	6/23/2022 1:50	19.59	6/22/2022 4:23	6.11
6/23/2022 1:04	6/23/2022 1:51	19.60	6/22/2022 4:24	6.13
6/23/2022 1:05	6/23/2022 1:52	19.62	6/22/2022 4:25	6.14
6/23/2022 1:06	6/23/2022 1:53	19.60	6/22/2022 4:26	6.15
6/23/2022 1:07	6/23/2022 1:54	19.60	6/22/2022 4:27	6.11
6/23/2022 1:08	6/23/2022 1:55	19.59	6/22/2022 4:28	6.10
6/23/2022 1:09	6/23/2022 1:56	19.62	6/22/2022 4:29	6.12
6/23/2022 1:10	6/23/2022 1:57	19.59	6/22/2022 4:30	6.12
6/23/2022 1:11	6/23/2022 1:58	19.62	6/22/2022 4:31	6.15
6/23/2022 1:12	6/23/2022 1:59	19.58	6/22/2022 4:32	6.12
6/23/2022 1:13	6/23/2022 2:00	19.61	6/22/2022 4:33	6.17
6/23/2022 1:14	6/23/2022 2:01	19.58	6/22/2022 4:34	6.12
6/23/2022 1:15	6/23/2022 2:02	19.61	6/22/2022 4:35	6.13
6/23/2022 1:16	6/23/2022 2:03	19.62	6/22/2022 4:36	6.12
6/23/2022 1:17	6/23/2022 2:04	19.59	6/22/2022 4:37	6.13
6/23/2022 1:18	6/23/2022 2:05	19.61	6/22/2022 4:38	6.11
6/23/2022 1:19	6/23/2022 2:06	19.61	6/22/2022 4:39	6.12
6/23/2022 1:20	6/23/2022 2:07	19.59	6/22/2022 4:40	6.13
6/23/2022 1:21	6/23/2022 2:08	19.59	6/22/2022 4:41	6.12
6/23/2022 1:22	6/23/2022 2:09	19.62	6/22/2022 4:42	6.10
6/23/2022 1:23	6/23/2022 2:10	19.61	6/22/2022 4:43	6.10
6/23/2022 1:24	6/23/2022 2:11	19.60	6/22/2022 4:44	6.13
6/23/2022 1:25	6/23/2022 2:12	19.60	6/22/2022 4:45	6.12
6/23/2022 1:26	6/23/2022 2:13	19.57	6/22/2022 4:46	6.12
6/23/2022 1:27	6/23/2022 2:14	19.61	6/22/2022 4:47	6.11
6/23/2022 1:28	6/23/2022 2:15	19.61	6/22/2022 4:48	6.11
6/23/2022 1:29	6/23/2022 2:16	19.60	6/22/2022 4:49	6.11
6/23/2022 1:30	6/23/2022 2:17	19.59	6/22/2022 4:50	6.12
6/23/2022 1:31	6/23/2022 2:18	19.58	6/22/2022 4:51	6.11
6/23/2022 1:32	6/23/2022 2:19	19.62	6/22/2022 4:52	6.13
6/23/2022 1:33	6/23/2022 2:20	19.59	6/22/2022 4:53	6.08
6/23/2022 1:34	6/23/2022 2:21	19.59	6/22/2022 4:54	6.10
6/23/2022 1:35	6/23/2022 2:22	19.59	6/22/2022 4:55	6.12
6/23/2022 1:36	6/23/2022 2:23	19.60	6/22/2022 4:56	6.11
6/23/2022 1:37	6/23/2022 2:24	19.60	6/22/2022 4:57	6.12
6/23/2022 1:38	6/23/2022 2:25	19.60	6/22/2022 4:58	6.14
6/23/2022 1:39	6/23/2022 2:26	19.59	6/22/2022 4:59	6.11
6/23/2022 1:40	6/23/2022 2:27	19.60	6/22/2022 5:00	6.12
6/23/2022 1:41	6/23/2022 2:28	19.62	6/22/2022 5:01	6.11
6/23/2022 1:42	6/23/2022 2:29	19.58	6/22/2022 5:02	6.11
6/23/2022 1:43	6/23/2022 2:30	19.59	6/22/2022 5:03	6.13
6/23/2022 1:44	6/23/2022 2:31	19.58	6/22/2022 5:04	6.09
6/23/2022 1:45	6/23/2022 2:32	19.61	6/22/2022 5:05	6.12
6/23/2022 1:46	6/23/2022 2:33	19.58	6/22/2022 5:06	6.12
6/23/2022 1:47	6/23/2022 2:34	19.61	6/22/2022 5:07	6.09
6/23/2022 1:48	6/23/2022 2:35	19.60	6/22/2022 5:08	6.08
6/23/2022 1:49	6/23/2022 2:36	19.61	6/22/2022 5:09	6.15
6/23/2022 1:50	6/23/2022 2:37	19.60	6/22/2022 5:10	6.09
6/23/2022 1:51	6/23/2022 2:38	19.59	6/22/2022 5:11	6.10
6/23/2022 1:52	6/23/2022 2:39	19.60	6/22/2022 5:12	6.15
6/23/2022 1:53	6/23/2022 2:40	19.57	6/22/2022 5:13	6.13
6/23/2022 1:54	6/23/2022 2:41	19.61	6/22/2022 5:14	6.13
6/23/2022 1:55	6/23/2022 2:42	19.60	6/22/2022 5:15	6.10
6/23/2022 1:56	6/23/2022 2:43	19.60	6/22/2022 5:16	6.12
6/23/2022 1:57	6/23/2022 2:44	19.61	6/22/2022 5:17	6.12
6/23/2022 1:58	6/23/2022 2:45	19.60	6/22/2022 5:18	6.12
6/23/2022 1:59	6/23/2022 2:46	19.60	6/22/2022 5:19	6.14
6/23/2022 2:00	6/23/2022 2:47	19.60	6/22/2022 5:20	6.11
6/23/2022 2:01	6/23/2022 2:48	19.58	6/22/2022 5:21	6.11
6/23/2022 2:02	6/23/2022 2:49	19.60	6/22/2022 5:22	6.11
6/23/2022 2:03	6/23/2022 2:50	19.60	6/22/2022 5:23	6.13
6/23/2022 2:04	6/23/2022 2:51	19.61	6/22/2022 5:24	6.11
6/23/2022 2:05	6/23/2022 2:52	19.61	6/22/2022 5:25	6.13
6/23/2022 2:06	6/23/2022 2:53	19.60	6/22/2022 5:26	6.07
6/23/2022 2:07	6/23/2022 2:54	19.60	6/22/2022 5:27	8.36
6/23/2022 2:08	6/23/2022 2:55	19.57	6/22/2022 5:28	8.89
6/23/2022 2:09	6/23/2022 2:56	19.58	6/22/2022 5:29	6.29
6/23/2022 2:10	6/23/2022 2:57	19.59	6/22/2022 5:30	6.18
6/23/2022 2:11	6/23/2022 2:58	19.62	6/22/2022 5:31	6.17
6/23/2022 2:12	6/23/2022 2:59	19.57	6/22/2022 5:32	6.13
6/23/2022 2:13	6/23/2022 3:00	19.60	6/22/2022 5:33	6.15
6/23/2022 2:14	6/23/2022 3:01	19.60	6/22/2022 5:34	6.12
6/23/2022 2:15	6/23/2022 3:02	19.60	6/22/2022 5:35	6.10
6/23/2022 2:16	6/23/2022 3:03	19.55	6/22/2022 5:36	6.11
6/23/2022 2:17	6/23/2022 3:04	19.61	6/22/2022 5:37	6.13
6/23/2022 2:18	6/23/2022 3:05	19.61	6/22/2022 5:38	6.13
6/23/2022 2:19	6/23/2022 3:06	19.61	6/22/2022 5:39	6.11
6/23/2022 2:20	6/23/2022 3:07	19.59	6/22/2022 5:40	6.13
6/23/2022 2:21	6/23/2022 3:08	19.59	6/22/2022 5:41	6.09
6/23/2022 2:22	6/23/2022 3:09	19.59	6/22/2022 5:42	6.10
6/23/2022 2:23	6/23/2022 3:10	19.60	6/22/2022 5:43	6.13
6/23/2022 2:24	6/23/2022 3:11	19.58	6/22/2022 5:44	6.12
6/23/2022 2:25	6/23/2022 3:12	19.56	6/22/2022 5:45	6.17
6/23/2022 2:26	6/23/2022 3:13	19.58	6/22/2022 5:46	6.11

6/23/2022 2:27	6/23/2022 3:14	19.60	6/22/2022 5:47	6.10
6/23/2022 2:28	6/23/2022 3:15	19.58	6/22/2022 5:48	6.11
6/23/2022 2:29	6/23/2022 3:16	19.57	6/22/2022 5:49	6.14
6/23/2022 2:30	6/23/2022 3:17	19.59	6/22/2022 5:50	6.13
6/23/2022 2:31	6/23/2022 3:18	19.58	6/22/2022 5:51	6.13
6/23/2022 2:32	6/23/2022 3:19	19.57	6/22/2022 5:52	6.10
6/23/2022 2:33	6/23/2022 3:20	19.59	6/22/2022 5:53	6.13
6/23/2022 2:34	6/23/2022 3:21	19.61	6/22/2022 5:54	6.12
6/23/2022 2:35	6/23/2022 3:22	19.59	6/22/2022 5:55	6.10
6/23/2022 2:36	6/23/2022 3:23	19.62	6/22/2022 5:56	6.12
6/23/2022 2:37	6/23/2022 3:24	19.60	6/22/2022 5:57	6.10
6/23/2022 2:38	6/23/2022 3:25	19.60	6/22/2022 5:58	6.12
6/23/2022 2:39	6/23/2022 3:26	19.60	6/22/2022 5:59	6.07
6/23/2022 2:40	6/23/2022 3:27	19.57	6/22/2022 6:00	6.14
6/23/2022 2:41	6/23/2022 3:28	19.59	6/22/2022 6:01	6.11
6/23/2022 2:42	6/23/2022 3:29	19.60	6/22/2022 6:02	6.10
6/23/2022 2:43	6/23/2022 3:30	19.59	6/22/2022 6:03	6.11
6/23/2022 2:44	6/23/2022 3:31	19.61	6/22/2022 6:04	6.12
6/23/2022 2:45	6/23/2022 3:32	19.60	6/22/2022 6:05	6.13
6/23/2022 2:46	6/23/2022 3:33	19.59	6/22/2022 6:06	6.11
6/23/2022 2:47	6/23/2022 3:34	19.56	6/22/2022 6:07	6.10
6/23/2022 2:48	6/23/2022 3:35	19.59	6/22/2022 6:08	6.14
6/23/2022 2:49	6/23/2022 3:36	19.61	6/22/2022 6:09	6.13
6/23/2022 2:50	6/23/2022 3:37	19.56	6/22/2022 6:10	6.15
6/23/2022 2:51	6/23/2022 3:38	19.58	6/22/2022 6:11	6.09
6/23/2022 2:52	6/23/2022 3:39	19.57	6/22/2022 6:12	6.15
6/23/2022 2:53	6/23/2022 3:40	19.58	6/22/2022 6:13	6.11
6/23/2022 2:54	6/23/2022 3:41	19.60	6/22/2022 6:14	6.14
6/23/2022 2:55	6/23/2022 3:42	19.57	6/22/2022 6:15	6.15
6/23/2022 2:56	6/23/2022 3:43	19.57	6/22/2022 6:16	6.09
6/23/2022 2:57	6/23/2022 3:44	19.57	6/22/2022 6:17	6.12
6/23/2022 2:58	6/23/2022 3:45	19.58	6/22/2022 6:18	6.08
6/23/2022 2:59	6/23/2022 3:46	19.60	6/22/2022 6:19	6.09
6/23/2022 3:00	6/23/2022 3:47	19.60	6/22/2022 6:20	6.13
6/23/2022 3:01	6/23/2022 3:48	19.56	6/22/2022 6:21	6.10
6/23/2022 3:02	6/23/2022 3:49	19.59	6/22/2022 6:22	6.12
6/23/2022 3:03	6/23/2022 3:50	19.59	6/22/2022 6:23	6.13
6/23/2022 3:04	6/23/2022 3:51	19.60	6/22/2022 6:24	6.08
6/23/2022 3:05	6/23/2022 3:52	19.59	6/22/2022 6:25	6.09
6/23/2022 3:06	6/23/2022 3:53	19.58	6/22/2022 6:26	6.11
6/23/2022 3:07	6/23/2022 3:54	19.59	6/22/2022 6:27	6.13
6/23/2022 3:08	6/23/2022 3:55	19.60	6/22/2022 6:28	6.10
6/23/2022 3:09	6/23/2022 3:56	19.59	6/22/2022 6:29	6.14
6/23/2022 3:10	6/23/2022 3:57	19.58	6/22/2022 6:30	6.09
6/23/2022 3:11	6/23/2022 3:58	19.56	6/22/2022 6:31	6.10
6/23/2022 3:12	6/23/2022 3:59	19.59	6/22/2022 6:32	6.11
6/23/2022 3:13	6/23/2022 4:00	19.57	6/22/2022 6:33	6.11
6/23/2022 3:14	6/23/2022 4:01	19.60	6/22/2022 6:34	6.14
6/23/2022 3:15	6/23/2022 4:02	19.59	6/22/2022 6:35	6.12
6/23/2022 3:16	6/23/2022 4:03	19.59	6/22/2022 6:36	6.13
6/23/2022 3:17	6/23/2022 4:04	19.60	6/22/2022 6:37	6.12
6/23/2022 3:18	6/23/2022 4:05	19.60	6/22/2022 6:38	6.11
6/23/2022 3:19	6/23/2022 4:06	19.56	6/22/2022 6:39	6.09
6/23/2022 3:20	6/23/2022 4:07	19.59	6/22/2022 6:40	6.09
6/23/2022 3:21	6/23/2022 4:08	19.59	6/22/2022 6:41	6.13
6/23/2022 3:22	6/23/2022 4:09	19.58	6/22/2022 6:42	6.13
6/23/2022 3:23	6/23/2022 4:10	19.60	6/22/2022 6:43	6.13
6/23/2022 3:24	6/23/2022 4:11	19.59	6/22/2022 6:44	6.09
6/23/2022 3:25	6/23/2022 4:12	19.59	6/22/2022 6:45	6.11
6/23/2022 3:26	6/23/2022 4:13	19.59	6/22/2022 6:46	6.12
6/23/2022 3:27	6/23/2022 4:14	19.59	6/22/2022 6:47	6.13
6/23/2022 3:28	6/23/2022 4:15	19.60	6/22/2022 6:48	6.13
6/23/2022 3:29	6/23/2022 4:16	19.58	6/22/2022 6:49	6.14
6/23/2022 3:30	6/23/2022 4:17	19.60	6/22/2022 6:50	6.11
6/23/2022 3:31	6/23/2022 4:18	19.61	6/22/2022 6:51	6.09
6/23/2022 3:32	6/23/2022 4:19	19.58	6/22/2022 6:52	6.14
6/23/2022 3:33	6/23/2022 4:20	19.60	6/22/2022 6:53	6.12
6/23/2022 3:34	6/23/2022 4:21	19.63	6/22/2022 6:54	6.12
6/23/2022 3:35	6/23/2022 4:22	19.61	6/22/2022 6:55	6.13
6/23/2022 3:36	6/23/2022 4:23	19.58	6/22/2022 6:56	6.13
6/23/2022 3:37	6/23/2022 4:24	19.60	6/22/2022 6:57	6.10
6/23/2022 3:38	6/23/2022 4:25	19.59	6/22/2022 6:58	6.11
6/23/2022 3:39	6/23/2022 4:26	19.59	6/22/2022 6:59	6.13
6/23/2022 3:40	6/23/2022 4:27	19.61	6/22/2022 7:00	6.12
6/23/2022 3:41	6/23/2022 4:28	19.58	6/22/2022 7:01	6.10
6/23/2022 3:42	6/23/2022 4:29	19.58	6/22/2022 7:02	6.13
6/23/2022 3:43	6/23/2022 4:30	19.61	6/22/2022 7:03	6.11
6/23/2022 3:44	6/23/2022 4:31	19.60	6/22/2022 7:04	6.12
6/23/2022 3:45	6/23/2022 4:32	19.58	6/22/2022 7:05	6.12
6/23/2022 3:46	6/23/2022 4:33	19.59	6/22/2022 7:06	6.10
6/23/2022 3:47	6/23/2022 4:34	19.60	6/22/2022 7:07	6.12
6/23/2022 3:48	6/23/2022 4:35	19.59	6/22/2022 7:08	6.10
6/23/2022 3:49	6/23/2022 4:36	19.58	6/22/2022 7:09	6.10
6/23/2022 3:50	6/23/2022 4:37	19.59	6/22/2022 7:10	6.12
6/23/2022 3:51	6/23/2022 4:38	19.61	6/22/2022 7:11	6.12
6/23/2022 3:52	6/23/2022 4:39	19.56	6/22/2022 7:12	6.12
6/23/2022 3:53	6/23/2022 4:40	19.58	6/22/2022 7:13	6.12
6/23/2022 3:54	6/23/2022 4:41	19.60	6/22/2022 7:14	6.13

6/23/2022 3:55	6/23/2022 4:42	19.59	6/22/2022 7:15	6.11
6/23/2022 3:56	6/23/2022 4:43	19.58	6/22/2022 7:16	6.10
6/23/2022 3:57	6/23/2022 4:44	19.60	6/22/2022 7:17	6.12
6/23/2022 3:58	6/23/2022 4:45	19.58	6/22/2022 7:18	6.10
6/23/2022 3:59	6/23/2022 4:46	19.60	6/22/2022 7:19	6.12
6/23/2022 4:00	6/23/2022 4:47	19.57	6/22/2022 7:20	6.13
6/23/2022 4:01	6/23/2022 4:48	19.59	6/22/2022 7:21	6.14
6/23/2022 4:02	6/23/2022 4:49	19.58	6/22/2022 7:22	6.10
6/23/2022 4:03	6/23/2022 4:50	19.59	6/22/2022 7:23	6.14
6/23/2022 4:04	6/23/2022 4:51	19.58	6/22/2022 7:24	6.13
6/23/2022 4:05	6/23/2022 4:52	19.59	6/22/2022 7:25	6.09
6/23/2022 4:06	6/23/2022 4:53	19.59	6/22/2022 7:26	6.13
6/23/2022 4:07	6/23/2022 4:54	19.58	6/22/2022 7:27	6.12
6/23/2022 4:08	6/23/2022 4:55	19.57	6/22/2022 7:28	6.09
6/23/2022 4:09	6/23/2022 4:56	19.62	6/22/2022 7:29	6.13
6/23/2022 4:10	6/23/2022 4:57	19.58	6/22/2022 7:30	6.11
6/23/2022 4:11	6/23/2022 4:58	19.59	6/22/2022 7:31	6.13
6/23/2022 4:12	6/23/2022 4:59	19.61	6/22/2022 7:32	6.13
6/23/2022 4:13	6/23/2022 5:00	19.60	6/22/2022 7:33	6.11
6/23/2022 4:14	6/23/2022 5:01	19.58	6/22/2022 7:34	6.16
6/23/2022 4:15	6/23/2022 5:02	19.58	6/22/2022 7:35	6.14
6/23/2022 4:16	6/23/2022 5:03	19.59	6/22/2022 7:36	6.10
6/23/2022 4:17	6/23/2022 5:04	19.58	6/22/2022 7:37	6.11
6/23/2022 4:18	6/23/2022 5:05	19.59	6/22/2022 7:38	6.09
6/23/2022 4:19	6/23/2022 5:06	19.58	6/22/2022 7:39	6.11
6/23/2022 4:20	6/23/2022 5:07	19.58	6/22/2022 7:40	6.11
6/23/2022 4:21	6/23/2022 5:08	19.59	6/22/2022 7:41	6.12
6/23/2022 4:22	6/23/2022 5:09	19.59	6/22/2022 7:42	6.10
6/23/2022 4:23	6/23/2022 5:10	19.59	6/22/2022 7:43	6.13
6/23/2022 4:24	6/23/2022 5:11	19.58	6/22/2022 7:44	6.13
6/23/2022 4:25	6/23/2022 5:12	19.59	6/22/2022 7:45	6.11
6/23/2022 4:26	6/23/2022 5:13	19.57	6/22/2022 7:46	6.13
6/23/2022 4:27	6/23/2022 5:14	19.59	6/22/2022 7:47	6.14
6/23/2022 4:28	6/23/2022 5:15	19.56	6/22/2022 7:48	6.12
6/23/2022 4:29	6/23/2022 5:16	19.59	6/22/2022 7:49	6.16
6/23/2022 4:30	6/23/2022 5:17	19.58	6/22/2022 7:50	6.12
6/23/2022 4:31	6/23/2022 5:18	19.59	6/22/2022 7:51	6.13
6/23/2022 4:32	6/23/2022 5:19	19.56	6/22/2022 7:52	6.12
6/23/2022 4:33	6/23/2022 5:20	19.58	6/22/2022 7:53	6.15
6/23/2022 4:34	6/23/2022 5:21	19.59	6/22/2022 7:54	6.13
6/23/2022 4:35	6/23/2022 5:22	19.59	6/22/2022 7:55	6.12
6/23/2022 4:36	6/23/2022 5:23	19.57	6/22/2022 7:56	6.12
6/23/2022 4:37	6/23/2022 5:24	19.57	6/22/2022 7:57	6.15
6/23/2022 4:38	6/23/2022 5:25	19.60	6/22/2022 7:58	6.10
6/23/2022 4:39	6/23/2022 5:26	19.59	6/22/2022 7:59	6.12
6/23/2022 4:40	6/23/2022 5:27	19.59	6/22/2022 8:00	6.11
6/23/2022 4:41	6/23/2022 5:28	19.61	6/22/2022 8:01	6.10
6/23/2022 4:42	6/23/2022 5:29	19.56	6/22/2022 8:02	6.12
6/23/2022 4:43	6/23/2022 5:30	19.56	6/22/2022 8:03	6.17
6/23/2022 4:44	6/23/2022 5:31	19.58	6/22/2022 8:04	6.10
6/23/2022 4:45	6/23/2022 5:32	19.57	6/22/2022 8:05	6.11
6/23/2022 4:46	6/23/2022 5:33	19.58	6/22/2022 8:06	6.10
6/23/2022 4:47	6/23/2022 5:34	19.58	6/22/2022 8:07	6.09
6/23/2022 4:48	6/23/2022 5:35	19.58	6/22/2022 8:08	6.13
6/23/2022 4:49	6/23/2022 5:36	19.57	6/22/2022 8:09	6.12
6/23/2022 4:50	6/23/2022 5:37	19.58	6/22/2022 8:10	6.14
6/23/2022 4:51	6/23/2022 5:38	19.59	6/22/2022 8:11	6.14
6/23/2022 4:52	6/23/2022 5:39	19.59	6/22/2022 8:12	6.12
6/23/2022 4:53	6/23/2022 5:40	19.60	6/22/2022 8:13	6.11
6/23/2022 4:54	6/23/2022 5:41	19.61	6/22/2022 8:14	6.09
6/23/2022 4:55	6/23/2022 5:42	19.57	6/22/2022 8:15	6.11
6/23/2022 4:56	6/23/2022 5:43	19.58	6/22/2022 8:16	6.11
6/23/2022 4:57	6/23/2022 5:44	19.57	6/22/2022 8:17	6.11
6/23/2022 4:58	6/23/2022 5:45	19.59	6/22/2022 8:18	6.14
6/23/2022 4:59	6/23/2022 5:46	19.58	6/22/2022 8:19	6.14
6/23/2022 5:00	6/23/2022 5:47	19.59	6/22/2022 8:20	6.12
6/23/2022 5:01	6/23/2022 5:48	19.58	6/22/2022 8:21	6.10
6/23/2022 5:02	6/23/2022 5:49	19.58	6/22/2022 8:22	6.08
6/23/2022 5:03	6/23/2022 5:50	19.58	6/22/2022 8:23	6.10
6/23/2022 5:04	6/23/2022 5:51	19.56	6/22/2022 8:24	6.14
6/23/2022 5:05	6/23/2022 5:52	19.57	6/22/2022 8:25	6.09
6/23/2022 5:06	6/23/2022 5:53	19.59	6/22/2022 8:26	6.13
6/23/2022 5:07	6/23/2022 5:54	19.60	6/22/2022 8:27	6.12
6/23/2022 5:08	6/23/2022 5:55	19.60	6/22/2022 8:28	6.12
6/23/2022 5:09	6/23/2022 5:56	19.61	6/22/2022 8:29	6.11
6/23/2022 5:10	6/23/2022 5:57	19.59	6/22/2022 8:30	6.10
6/23/2022 5:11	6/23/2022 5:58	20.20	6/22/2022 8:31	6.14
6/23/2022 5:12	6/23/2022 5:59	20.30	6/22/2022 8:32	6.09
6/23/2022 5:13	6/23/2022 6:00	20.34	6/22/2022 8:33	6.11
6/23/2022 5:14	6/23/2022 6:01	20.36	6/22/2022 8:34	6.09
6/23/2022 5:15	6/23/2022 6:02	19.94	6/22/2022 8:35	6.12
6/23/2022 5:16	6/23/2022 6:03	19.79	6/22/2022 8:36	6.12
6/23/2022 5:17	6/23/2022 6:04	19.76	6/22/2022 8:37	6.11
6/23/2022 5:18	6/23/2022 6:05	19.75	6/22/2022 8:38	6.10
6/23/2022 5:19	6/23/2022 6:06	19.72	6/22/2022 8:39	6.13
6/23/2022 5:20	6/23/2022 6:07	19.72	6/22/2022 8:40	6.10
6/23/2022 5:21	6/23/2022 6:08	19.73	6/22/2022 8:41	6.14
6/23/2022 5:22	6/23/2022 6:09	19.70	6/22/2022 8:42	6.12

6/23/2022 5:23	6/23/2022 6:10	19.69	6/22/2022 8:43	6.11
6/23/2022 5:24	6/23/2022 6:11	19.69	6/22/2022 8:44	6.11
6/23/2022 5:25	6/23/2022 6:12	19.70	6/22/2022 8:45	6.08
6/23/2022 5:26	6/23/2022 6:13	19.67	6/22/2022 8:46	6.12
6/23/2022 5:27	6/23/2022 6:14	19.69	6/22/2022 8:47	6.13
6/23/2022 5:28	6/23/2022 6:15	19.68	6/22/2022 8:48	6.13
6/23/2022 5:29	6/23/2022 6:16	19.69	6/22/2022 8:49	6.12
6/23/2022 5:30	6/23/2022 6:17	19.66	6/22/2022 8:50	6.14
6/23/2022 5:31	6/23/2022 6:18	19.69	6/22/2022 8:51	6.12
6/23/2022 5:32	6/23/2022 6:19	19.69	6/22/2022 8:52	6.13
6/23/2022 5:33	6/23/2022 6:20	19.66	6/22/2022 8:53	6.10
6/23/2022 5:34	6/23/2022 6:21	19.66	6/22/2022 8:54	6.10
6/23/2022 5:35	6/23/2022 6:22	19.69	6/22/2022 8:55	6.13
6/23/2022 5:36	6/23/2022 6:23	19.69	6/22/2022 8:56	6.12
6/23/2022 5:37	6/23/2022 6:24	19.65	6/22/2022 8:57	6.09
6/23/2022 5:38	6/23/2022 6:25	19.66	6/22/2022 8:58	6.13
6/23/2022 5:39	6/23/2022 6:26	19.64	6/22/2022 8:59	6.11
6/23/2022 5:40	6/23/2022 6:27	19.64	6/22/2022 9:00	6.12
6/23/2022 5:41	6/23/2022 6:28	19.65	6/22/2022 9:01	6.12
6/23/2022 5:42	6/23/2022 6:29	19.65	6/22/2022 9:02	6.10
6/23/2022 5:43	6/23/2022 6:30	19.66	6/22/2022 9:03	6.12
6/23/2022 5:44	6/23/2022 6:31	19.66	6/22/2022 9:04	6.11
6/23/2022 5:45	6/23/2022 6:32	19.66	6/22/2022 9:05	6.13
6/23/2022 5:46	6/23/2022 6:33	19.68	6/22/2022 9:06	6.14
6/23/2022 5:47	6/23/2022 6:34	19.66	6/22/2022 9:07	6.09
6/23/2022 5:48	6/23/2022 6:35	19.67	6/22/2022 9:08	6.13
6/23/2022 5:49	6/23/2022 6:36	19.64	6/22/2022 9:09	6.12
6/23/2022 5:50	6/23/2022 6:37	19.63	6/22/2022 9:10	6.13
6/23/2022 5:51	6/23/2022 6:38	19.66	6/22/2022 9:11	6.14
6/23/2022 5:52	6/23/2022 6:39	19.63	6/22/2022 9:12	6.13
6/23/2022 5:53	6/23/2022 6:40	19.66	6/22/2022 9:13	6.12
6/23/2022 5:54	6/23/2022 6:41	19.62	6/22/2022 9:14	6.15
6/23/2022 5:55	6/23/2022 6:42	19.66	6/22/2022 9:15	6.10
6/23/2022 5:56	6/23/2022 6:43	19.65	6/22/2022 9:16	6.10
6/23/2022 5:57	6/23/2022 6:44	19.64	6/22/2022 9:17	6.11
6/23/2022 5:58	6/23/2022 6:45	19.62	6/22/2022 9:18	6.14
6/23/2022 5:59	6/23/2022 6:46	19.62	6/22/2022 9:19	6.13
6/23/2022 6:00	6/23/2022 6:47	19.63	6/22/2022 9:20	6.12
6/23/2022 6:01	6/23/2022 6:48	19.64	6/22/2022 9:21	6.12
6/23/2022 6:02	6/23/2022 6:49	19.63	6/22/2022 9:22	6.12
6/23/2022 6:03	6/23/2022 6:50	19.63	6/22/2022 9:23	6.11
6/23/2022 6:04	6/23/2022 6:51	19.63	6/22/2022 9:24	6.12
6/23/2022 6:05	6/23/2022 6:52	19.62	6/22/2022 9:25	6.11
6/23/2022 6:06	6/23/2022 6:53	19.62	6/22/2022 9:26	6.11
6/23/2022 6:07	6/23/2022 6:54	19.63	6/22/2022 9:27	6.13
6/23/2022 6:08	6/23/2022 6:55	19.64	6/22/2022 9:28	6.13
6/23/2022 6:09	6/23/2022 6:56	19.63	6/22/2022 9:29	6.13
6/23/2022 6:10	6/23/2022 6:57	19.63	6/22/2022 9:30	6.14
6/23/2022 6:11	6/23/2022 6:58	19.63	6/22/2022 9:31	6.12
6/23/2022 6:12	6/23/2022 6:59	19.62	6/22/2022 9:32	6.10
6/23/2022 6:13	6/23/2022 7:00	19.63	6/22/2022 9:33	6.09
6/23/2022 6:14	6/23/2022 7:01	19.61	6/22/2022 9:34	6.11
6/23/2022 6:15	6/23/2022 7:02	19.61	6/22/2022 9:35	6.10
6/23/2022 6:16	6/23/2022 7:03	19.65	6/22/2022 9:36	6.12
6/23/2022 6:17	6/23/2022 7:04	19.62	6/22/2022 9:37	6.11
6/23/2022 6:18	6/23/2022 7:05	19.62	6/22/2022 9:38	6.09
6/23/2022 6:19	6/23/2022 7:06	19.64	6/22/2022 9:39	6.08
6/23/2022 6:20	6/23/2022 7:07	19.65	6/22/2022 9:40	6.12
6/23/2022 6:21	6/23/2022 7:08	19.63	6/22/2022 9:41	6.11
6/23/2022 6:22	6/23/2022 7:09	19.61	6/22/2022 9:42	6.09
6/23/2022 6:23	6/23/2022 7:10	19.64	6/22/2022 9:43	6.09
6/23/2022 6:24	6/23/2022 7:11	19.62	6/22/2022 9:44	6.11
6/23/2022 6:25	6/23/2022 7:12	19.62	6/22/2022 9:45	6.10
6/23/2022 6:26	6/23/2022 7:13	19.62	6/22/2022 9:46	6.11
6/23/2022 6:27	6/23/2022 7:14	19.63	6/22/2022 9:47	6.10
6/23/2022 6:28	6/23/2022 7:15	19.62	6/22/2022 9:48	6.12
6/23/2022 6:29	6/23/2022 7:16	19.66	6/22/2022 9:49	6.08
6/23/2022 6:30	6/23/2022 7:17	19.59	6/22/2022 9:50	6.09
6/23/2022 6:31	6/23/2022 7:18	19.61	6/22/2022 9:51	6.11
6/23/2022 6:32	6/23/2022 7:19	19.62	6/22/2022 9:52	6.12
6/23/2022 6:33	6/23/2022 7:20	19.62	6/22/2022 9:53	6.13
6/23/2022 6:34	6/23/2022 7:21	19.63	6/22/2022 9:54	6.14
6/23/2022 6:35	6/23/2022 7:22	19.63	6/22/2022 9:55	6.12
6/23/2022 6:36	6/23/2022 7:23	19.63	6/22/2022 9:56	6.11
6/23/2022 6:37	6/23/2022 7:24	19.61	6/22/2022 9:57	6.10
6/23/2022 6:38	6/23/2022 7:25	19.63	6/22/2022 9:58	6.09
6/23/2022 6:39	6/23/2022 7:26	19.63	6/22/2022 9:59	6.11
6/23/2022 6:40	6/23/2022 7:27	20.22	6/22/2022 10:00	6.12
6/23/2022 6:41	6/23/2022 7:28	20.34	6/22/2022 10:01	6.10
6/23/2022 6:42	6/23/2022 7:29	20.36	6/22/2022 10:02	6.13
6/23/2022 6:43	6/23/2022 7:30	20.41	6/22/2022 10:03	6.10
6/23/2022 6:44	6/23/2022 7:31	20.43	6/22/2022 10:04	6.09
6/23/2022 6:45	6/23/2022 7:32	20.03	6/22/2022 10:05	6.16
6/23/2022 6:46	6/23/2022 7:33	19.90	6/22/2022 10:06	6.10
6/23/2022 6:47	6/23/2022 7:34	19.82	6/22/2022 10:07	6.12
6/23/2022 6:48	6/23/2022 7:35	19.79	6/22/2022 10:08	6.12
6/23/2022 6:49	6/23/2022 7:36	19.78	6/22/2022 10:09	6.09
6/23/2022 6:50	6/23/2022 7:37	19.80	6/22/2022 10:10	6.12

6/23/2022 6:51	6/23/2022 7:38	19.75	6/22/2022 10:11	6.12
6/23/2022 6:52	6/23/2022 7:39	19.77	6/22/2022 10:12	6.13
6/23/2022 6:53	6/23/2022 7:40	19.76	6/22/2022 10:13	6.12
6/23/2022 6:54	6/23/2022 7:41	19.73	6/22/2022 10:14	6.15
6/23/2022 6:55	6/23/2022 7:42	19.74	6/22/2022 10:15	6.08
6/23/2022 6:56	6/23/2022 7:43	19.72	6/22/2022 10:16	6.08
6/23/2022 6:57	6/23/2022 7:44	19.73	6/22/2022 10:17	6.11
6/23/2022 6:58	6/23/2022 7:45	19.74	6/22/2022 10:18	6.09
6/23/2022 6:59	6/23/2022 7:46	19.70	6/22/2022 10:19	6.14
6/23/2022 7:00	6/23/2022 7:47	19.72	6/22/2022 10:20	6.11
6/23/2022 7:01	6/23/2022 7:48	19.68	6/22/2022 10:21	6.11
6/23/2022 7:02	6/23/2022 7:49	19.73	6/22/2022 10:22	6.09
6/23/2022 7:03	6/23/2022 7:50	19.71	6/22/2022 10:23	6.12
6/23/2022 7:04	6/23/2022 7:51	19.69	6/22/2022 10:24	6.13
6/23/2022 7:05	6/23/2022 7:52	19.70	6/22/2022 10:25	6.09
6/23/2022 7:06	6/23/2022 7:53	19.72	6/22/2022 10:26	6.12
6/23/2022 7:07	6/23/2022 7:54	19.70	6/22/2022 10:27	6.10
6/23/2022 7:08	6/23/2022 7:55	19.69	6/22/2022 10:28	6.10
6/23/2022 7:09	6/23/2022 7:56	19.68	6/22/2022 10:29	6.12
6/23/2022 7:10	6/23/2022 7:57	19.69	6/22/2022 10:30	6.15
6/23/2022 7:11	6/23/2022 7:58	19.70	6/22/2022 10:31	6.11
6/23/2022 7:12	6/23/2022 7:59	19.66	6/22/2022 10:32	6.10
6/23/2022 7:13	6/23/2022 8:00	19.69	6/22/2022 10:33	6.12
6/23/2022 7:14	6/23/2022 8:01	19.69	6/22/2022 10:34	6.12
6/23/2022 7:15	6/23/2022 8:02	19.68	6/22/2022 10:35	6.11
6/23/2022 7:16	6/23/2022 8:03	19.66	6/22/2022 10:36	6.08
6/23/2022 7:17	6/23/2022 8:04	19.66	6/22/2022 10:37	6.09
6/23/2022 7:18	6/23/2022 8:05	19.68	6/22/2022 10:38	6.15
6/23/2022 7:19	6/23/2022 8:06	19.63	6/22/2022 10:39	6.15
6/23/2022 7:20	6/23/2022 8:07	19.67	6/22/2022 10:40	6.12
6/23/2022 7:21	6/23/2022 8:08	19.65	6/22/2022 10:41	6.13
6/23/2022 7:22	6/23/2022 8:09	19.66	6/22/2022 10:42	6.09
6/23/2022 7:23	6/23/2022 8:10	19.65	6/22/2022 10:43	6.12
6/23/2022 7:24	6/23/2022 8:11	19.68	6/22/2022 10:44	6.10
6/23/2022 7:25	6/23/2022 8:12	19.67	6/22/2022 10:45	8.46
6/23/2022 7:26	6/23/2022 8:13	19.65	6/22/2022 10:46	8.94
6/23/2022 7:27	6/23/2022 8:14	19.68	6/22/2022 10:47	6.41
6/23/2022 7:28	6/23/2022 8:15	19.66	6/22/2022 10:48	6.17
6/23/2022 7:29	6/23/2022 8:16	19.65	6/22/2022 10:49	6.15
6/23/2022 7:30	6/23/2022 8:17	19.68	6/22/2022 10:50	6.15
6/23/2022 7:31	6/23/2022 8:18	19.64	6/22/2022 10:51	6.14
6/23/2022 7:32	6/23/2022 8:19	19.69	6/22/2022 10:52	6.15
6/23/2022 7:33	6/23/2022 8:20	19.66	6/22/2022 10:53	6.15
6/23/2022 7:34	6/23/2022 8:21	19.66	6/22/2022 10:54	6.13
6/23/2022 7:35	6/23/2022 8:22	19.67	6/22/2022 10:55	6.14
6/23/2022 7:36	6/23/2022 8:23	19.67	6/22/2022 10:56	6.14
6/23/2022 7:37	6/23/2022 8:24	19.65	6/22/2022 10:57	6.12
6/23/2022 7:38	6/23/2022 8:25	19.66	6/22/2022 10:58	6.13
6/23/2022 7:39	6/23/2022 8:26	19.66	6/22/2022 10:59	6.11
6/23/2022 7:40	6/23/2022 8:27	19.65	6/22/2022 11:00	6.10
6/23/2022 7:41	6/23/2022 8:28	19.64	6/22/2022 11:01	6.13
6/23/2022 7:42	6/23/2022 8:29	19.68	6/22/2022 11:02	6.13
6/23/2022 7:43	6/23/2022 8:30	19.64	6/22/2022 11:03	6.13
6/23/2022 7:44	6/23/2022 8:31	19.65	6/22/2022 11:04	6.10
6/23/2022 7:45	6/23/2022 8:32	19.65	6/22/2022 11:05	6.14
6/23/2022 7:46	6/23/2022 8:33	19.67	6/22/2022 11:06	6.09
6/23/2022 7:47	6/23/2022 8:34	19.62	6/22/2022 11:07	6.13
6/23/2022 7:48	6/23/2022 8:35	19.64	6/22/2022 11:08	6.11
6/23/2022 7:49	6/23/2022 8:36	19.68	6/22/2022 11:09	6.12
6/23/2022 7:50	6/23/2022 8:37	19.62	6/22/2022 11:10	6.12
6/23/2022 7:51	6/23/2022 8:38	19.66	6/22/2022 11:11	6.12
6/23/2022 7:52	6/23/2022 8:39	19.66	6/22/2022 11:12	6.09
6/23/2022 7:53	6/23/2022 8:40	19.65	6/22/2022 11:13	6.10
6/23/2022 7:54	6/23/2022 8:41	19.65	6/22/2022 11:14	6.13
6/23/2022 7:55	6/23/2022 8:42	19.65	6/22/2022 11:15	6.12
6/23/2022 7:56	6/23/2022 8:43	19.66	6/22/2022 11:16	6.12
6/23/2022 7:57	6/23/2022 8:44	19.65	6/22/2022 11:17	6.14
6/23/2022 7:58	6/23/2022 8:45	19.62	6/22/2022 11:18	6.08
6/23/2022 7:59	6/23/2022 8:46	19.65	6/22/2022 11:19	6.09
6/23/2022 8:00	6/23/2022 8:47	19.67	6/22/2022 11:20	6.14
6/23/2022 8:01	6/23/2022 8:48	19.65	6/22/2022 11:21	6.11
6/23/2022 8:02	6/23/2022 8:49	19.64	6/22/2022 11:22	6.13
6/23/2022 8:03	6/23/2022 8:50	19.65	6/22/2022 11:23	6.09
6/23/2022 8:04	6/23/2022 8:51	19.66	6/22/2022 11:24	6.13
6/23/2022 8:05	6/23/2022 8:52	19.63	6/22/2022 11:25	6.11
6/23/2022 8:06	6/23/2022 8:53	19.63	6/22/2022 11:26	6.10
6/23/2022 8:07	6/23/2022 8:54	19.65	6/22/2022 11:27	6.15
6/23/2022 8:08	6/23/2022 8:55	19.66	6/22/2022 11:28	6.12
6/23/2022 8:09	6/23/2022 8:56	19.64	6/22/2022 11:29	6.12
6/23/2022 8:10	6/23/2022 8:57	19.63	6/22/2022 11:30	6.14
6/23/2022 8:11	6/23/2022 8:58	19.63	6/22/2022 11:31	6.11
6/23/2022 8:12	6/23/2022 8:59	19.67	6/22/2022 11:32	6.09
6/23/2022 8:13	6/23/2022 9:00	19.64	6/22/2022 11:33	6.14
6/23/2022 8:14	6/23/2022 9:01	19.64	6/22/2022 11:34	6.12
6/23/2022 8:15	6/23/2022 9:02	19.64	6/22/2022 11:35	6.12
6/23/2022 8:16	6/23/2022 9:03	19.63	6/22/2022 11:36	6.13
6/23/2022 8:17	6/23/2022 9:04	19.65	6/22/2022 11:37	6.11
6/23/2022 8:18	6/23/2022 9:05	19.61	6/22/2022 11:38	6.14

6/23/2022 8:19	6/23/2022 9:06	19.64	6/22/2022 11:39	6.12
6/23/2022 8:20	6/23/2022 9:07	19.64	6/22/2022 11:40	6.10
6/23/2022 8:21	6/23/2022 9:08	19.65	6/22/2022 11:41	6.09
6/23/2022 8:22	6/23/2022 9:09	19.65	6/22/2022 11:42	6.12
6/23/2022 8:23	6/23/2022 9:10	19.63	6/22/2022 11:43	6.14
6/23/2022 8:24	6/23/2022 9:11	19.65	6/22/2022 11:44	6.12
6/23/2022 8:25	6/23/2022 9:12	19.63	6/22/2022 11:45	6.12
6/23/2022 8:26	6/23/2022 9:13	19.64	6/22/2022 11:46	6.09
6/23/2022 8:27	6/23/2022 9:14	19.65	6/22/2022 11:47	6.21
6/23/2022 8:28	6/23/2022 9:15	19.64	6/22/2022 11:48	8.79
6/23/2022 8:29	6/23/2022 9:16	19.63	6/22/2022 11:49	8.91
6/23/2022 8:30	6/23/2022 9:17	19.66	6/22/2022 11:50	6.27
6/23/2022 8:31	6/23/2022 9:18	19.64	6/22/2022 11:51	6.19
6/23/2022 8:32	6/23/2022 9:19	19.65	6/22/2022 11:52	6.16
6/23/2022 8:33	6/23/2022 9:20	19.61	6/22/2022 11:53	6.16
6/23/2022 8:34	6/23/2022 9:21	19.65	6/22/2022 11:54	6.14
6/23/2022 8:35	6/23/2022 9:22	19.65	6/22/2022 11:55	6.15
6/23/2022 8:36	6/23/2022 9:23	19.65	6/22/2022 11:56	6.12
6/23/2022 8:37	6/23/2022 9:24	19.63	6/22/2022 11:57	6.12
6/23/2022 8:38	6/23/2022 9:25	19.64	6/22/2022 11:58	6.16
6/23/2022 8:39	6/23/2022 9:26	19.63	6/22/2022 11:59	6.15
6/23/2022 8:40	6/23/2022 9:27	19.66	6/22/2022 12:00	6.13
6/23/2022 8:41	6/23/2022 9:28	19.62	6/22/2022 12:01	6.12
6/23/2022 8:42	6/23/2022 9:29	19.63	6/22/2022 12:02	6.13
6/23/2022 8:43	6/23/2022 9:30	19.63	6/22/2022 12:03	6.12
6/23/2022 8:44	6/23/2022 9:31	19.63	6/22/2022 12:04	6.13
6/23/2022 8:45	6/23/2022 9:32	19.60	6/22/2022 12:05	6.11
6/23/2022 8:46	6/23/2022 9:33	19.61	6/22/2022 12:06	6.11
6/23/2022 8:47	6/23/2022 9:34	19.63	6/22/2022 12:07	6.13
6/23/2022 8:48	6/23/2022 9:35	19.61	6/22/2022 12:08	6.09
6/23/2022 8:49	6/23/2022 9:36	19.63	6/22/2022 12:09	6.15
6/23/2022 8:50	6/23/2022 9:37	19.64	6/22/2022 12:10	6.15
6/23/2022 8:51	6/23/2022 9:38	19.63	6/22/2022 12:11	6.13
6/23/2022 8:52	6/23/2022 9:39	19.64	6/22/2022 12:12	6.13
6/23/2022 8:53	6/23/2022 9:40	19.63	6/22/2022 12:13	6.12
6/23/2022 8:54	6/23/2022 9:41	19.62	6/22/2022 12:14	6.15
6/23/2022 8:55	6/23/2022 9:42	19.63	6/22/2022 12:15	6.13
6/23/2022 8:56	6/23/2022 9:43	19.62	6/22/2022 12:16	6.13
6/23/2022 8:57	6/23/2022 9:44	19.64	6/22/2022 12:17	6.15
6/23/2022 8:58	6/23/2022 9:45	19.64	6/22/2022 12:18	6.15
6/23/2022 8:59	6/23/2022 9:46	19.61	6/22/2022 12:19	6.11
6/23/2022 9:00	6/23/2022 9:47	19.63	6/22/2022 12:20	6.12
6/23/2022 9:01	6/23/2022 9:48	19.62	6/22/2022 12:21	6.14
6/23/2022 9:02	6/23/2022 9:49	19.62	6/22/2022 12:22	6.14
6/23/2022 9:03	6/23/2022 9:50	19.63	6/22/2022 12:23	6.13
6/23/2022 9:04	6/23/2022 9:51	19.61	6/22/2022 12:24	6.12
6/23/2022 9:05	6/23/2022 9:52	19.61	6/22/2022 12:25	6.14
6/23/2022 9:06	6/23/2022 9:53	19.62	6/22/2022 12:26	6.14
6/23/2022 9:07	6/23/2022 9:54	19.63	6/22/2022 12:27	6.13
6/23/2022 9:08	6/23/2022 9:55	19.64	6/22/2022 12:28	6.13
6/23/2022 9:09	6/23/2022 9:56	19.65	6/22/2022 12:29	6.16
6/23/2022 9:10	6/23/2022 9:57	19.64	6/22/2022 12:30	6.10
6/23/2022 9:11	6/23/2022 9:58	19.64	6/22/2022 12:31	6.14
6/23/2022 9:12	6/23/2022 9:59	19.62	6/22/2022 12:32	6.09
6/23/2022 9:13	6/23/2022 10:00	19.63	6/22/2022 12:33	6.13
6/23/2022 9:14	6/23/2022 10:01	19.65	6/22/2022 12:34	6.11
6/23/2022 9:15	6/23/2022 10:02	20.04	6/22/2022 12:35	6.09
6/23/2022 9:16	6/23/2022 10:03	20.29	6/22/2022 12:36	6.14
6/23/2022 9:17	6/23/2022 10:04	20.36	6/22/2022 12:37	6.13
6/23/2022 9:18	6/23/2022 10:05	20.37	6/22/2022 12:38	6.12
6/23/2022 9:19	6/23/2022 10:06	20.46	6/22/2022 12:39	6.15
6/23/2022 9:20	6/23/2022 10:07	20.48	6/22/2022 12:40	6.11
6/23/2022 9:21	6/23/2022 10:08	19.95	6/22/2022 12:41	6.11
6/23/2022 9:22	6/23/2022 10:09	19.84	6/22/2022 12:42	6.11
6/23/2022 9:23	6/23/2022 10:10	19.84	6/22/2022 12:43	6.15
6/23/2022 9:24	6/23/2022 10:11	19.78	6/22/2022 12:44	6.15
6/23/2022 9:25	6/23/2022 10:12	19.79	6/22/2022 12:45	6.16
6/23/2022 9:26	6/23/2022 10:13	19.78	6/22/2022 12:46	6.12
6/23/2022 9:27	6/23/2022 10:14	19.78	6/22/2022 12:47	6.13
6/23/2022 9:28	6/23/2022 10:15	19.77	6/22/2022 12:48	6.13
6/23/2022 9:29	6/23/2022 10:16	19.75	6/22/2022 12:49	6.14
6/23/2022 9:30	6/23/2022 10:17	19.75	6/22/2022 12:50	6.12
6/23/2022 9:31	6/23/2022 10:18	19.76	6/22/2022 12:51	6.09
6/23/2022 9:32	6/23/2022 10:19	19.74	6/22/2022 12:52	6.11
6/23/2022 9:33	6/23/2022 10:20	19.73	6/22/2022 12:53	6.11
6/23/2022 9:34	6/23/2022 10:21	19.72	6/22/2022 12:54	6.09
6/23/2022 9:35	6/23/2022 10:22	19.72	6/22/2022 12:55	6.13
6/23/2022 9:36	6/23/2022 10:23	19.71	6/22/2022 12:56	6.12
6/23/2022 9:37	6/23/2022 10:24	19.72	6/22/2022 12:57	6.14
6/23/2022 9:38	6/23/2022 10:25	19.72	6/22/2022 12:58	6.09
6/23/2022 9:39	6/23/2022 10:26	19.70	6/22/2022 12:59	6.10
6/23/2022 9:40	6/23/2022 10:27	19.69	6/22/2022 13:00	6.14
6/23/2022 9:41	6/23/2022 10:28	19.73	6/22/2022 13:01	6.11
6/23/2022 9:42	6/23/2022 10:29	19.72	6/22/2022 13:02	6.09
6/23/2022 9:43	6/23/2022 10:30	19.70	6/22/2022 13:03	6.14
6/23/2022 9:44	6/23/2022 10:31	19.72	6/22/2022 13:04	6.10
6/23/2022 9:45	6/23/2022 10:32	19.70	6/22/2022 13:05	6.13
6/23/2022 9:46	6/23/2022 10:33	19.71	6/22/2022 13:06	7.14

6/23/2022 9:47	6/23/2022 10:34	19.70	6/22/2022 13:07	8.82
6/23/2022 9:48	6/23/2022 10:35	19.71	6/22/2022 13:08	6.84
6/23/2022 9:49	6/23/2022 10:36	19.71	6/22/2022 13:09	6.23
6/23/2022 9:50	6/23/2022 10:37	19.71	6/22/2022 13:10	6.16
6/23/2022 9:51	6/23/2022 10:38	19.71	6/22/2022 13:11	6.14
6/23/2022 9:52	6/23/2022 10:39	19.71	6/22/2022 13:12	6.13
6/23/2022 9:53	6/23/2022 10:40	19.69	6/22/2022 13:13	6.13
6/23/2022 9:54	6/23/2022 10:41	19.69	6/22/2022 13:14	6.11
6/23/2022 9:55	6/23/2022 10:42	19.68	6/22/2022 13:15	6.16
6/23/2022 9:56	6/23/2022 10:43	19.68	6/22/2022 13:16	6.11
6/23/2022 9:57	6/23/2022 10:44	19.68	6/22/2022 13:17	6.14
6/23/2022 9:58	6/23/2022 10:45	19.68	6/22/2022 13:18	6.11
6/23/2022 9:59	6/23/2022 10:46	19.71	6/22/2022 13:19	6.12
6/23/2022 10:00	6/23/2022 10:47	19.69	6/22/2022 13:20	6.14
6/23/2022 10:01	6/23/2022 10:48	19.67	6/22/2022 13:21	6.12
6/23/2022 10:02	6/23/2022 10:49	19.67	6/22/2022 13:22	6.10
6/23/2022 10:03	6/23/2022 10:50	19.71	6/22/2022 13:23	6.12
6/23/2022 10:04	6/23/2022 10:51	19.70	6/22/2022 13:24	6.14
6/23/2022 10:05	6/23/2022 10:52	19.69	6/22/2022 13:25	6.13
6/23/2022 10:06	6/23/2022 10:53	19.68	6/22/2022 13:26	6.14
6/23/2022 10:07	6/23/2022 10:54	19.65	6/22/2022 13:27	6.13
6/23/2022 10:08	6/23/2022 10:55	19.64	6/22/2022 13:28	6.14
6/23/2022 10:09	6/23/2022 10:56	19.70	6/22/2022 13:29	6.11
6/23/2022 10:10	6/23/2022 10:57	19.69	6/22/2022 13:30	6.12
6/23/2022 10:11	6/23/2022 10:58	19.69	6/22/2022 13:31	6.11
6/23/2022 10:12	6/23/2022 10:59	19.69	6/22/2022 13:32	6.14
6/23/2022 10:13	6/23/2022 11:00	20.26	6/22/2022 13:33	6.11
6/23/2022 10:14	6/23/2022 11:01	20.37	6/22/2022 13:34	6.13
6/23/2022 10:15	6/23/2022 11:02	20.45	6/22/2022 13:35	6.13
6/23/2022 10:16	6/23/2022 11:03	20.49	6/22/2022 13:36	6.13
6/23/2022 10:17	6/23/2022 11:04	20.50	6/22/2022 13:37	6.11
6/23/2022 10:18	6/23/2022 11:05	19.94	6/22/2022 13:38	6.11
6/23/2022 10:19	6/23/2022 11:06	19.90	6/22/2022 13:39	6.13
6/23/2022 10:20	6/23/2022 11:07	19.81	6/22/2022 13:40	6.13
6/23/2022 10:21	6/23/2022 11:08	19.84	6/22/2022 13:41	6.10
6/23/2022 10:22	6/23/2022 11:09	19.83	6/22/2022 13:42	6.10
6/23/2022 10:23	6/23/2022 11:10	19.80	6/22/2022 13:43	6.15
6/23/2022 10:24	6/23/2022 11:11	19.80	6/22/2022 13:44	6.11
6/23/2022 10:25	6/23/2022 11:12	19.78	6/22/2022 13:45	6.12
6/23/2022 10:26	6/23/2022 11:13	19.76	6/22/2022 13:46	6.13
6/23/2022 10:27	6/23/2022 11:14	19.79	6/22/2022 13:47	6.11
6/23/2022 10:28	6/23/2022 11:15	19.78	6/22/2022 13:48	6.12
6/23/2022 10:29	6/23/2022 11:16	19.79	6/22/2022 13:49	6.11
6/23/2022 10:30	6/23/2022 11:17	19.74	6/22/2022 13:50	6.15
6/23/2022 10:31	6/23/2022 11:18	19.75	6/22/2022 13:51	6.14
6/23/2022 10:32	6/23/2022 11:19	19.74	6/22/2022 13:52	6.14
6/23/2022 10:33	6/23/2022 11:20	19.73	6/22/2022 13:53	6.12
6/23/2022 10:34	6/23/2022 11:21	19.75	6/22/2022 13:54	6.14
6/23/2022 10:35	6/23/2022 11:22	19.73	6/22/2022 13:55	6.13
6/23/2022 10:36	6/23/2022 11:23	19.75	6/22/2022 13:56	6.13
6/23/2022 10:37	6/23/2022 11:24	19.74	6/22/2022 13:57	6.15
6/23/2022 10:38	6/23/2022 11:25	19.75	6/22/2022 13:58	6.12
6/23/2022 10:39	6/23/2022 11:26	19.72	6/22/2022 13:59	6.10
6/23/2022 10:40	6/23/2022 11:27	19.71	6/22/2022 14:00	6.11
6/23/2022 10:41	6/23/2022 11:28	19.73	6/22/2022 14:01	6.13
6/23/2022 10:42	6/23/2022 11:29	19.73	6/22/2022 14:02	6.13
6/23/2022 10:43	6/23/2022 11:30	19.72	6/22/2022 14:03	6.13
6/23/2022 10:44	6/23/2022 11:31	19.72	6/22/2022 14:04	6.13
6/23/2022 10:45	6/23/2022 11:32	19.72	6/22/2022 14:05	6.11
6/23/2022 10:46	6/23/2022 11:33	19.71	6/22/2022 14:06	6.14
6/23/2022 10:47	6/23/2022 11:34	19.68	6/22/2022 14:07	6.12
6/23/2022 10:48	6/23/2022 11:35	19.71	6/22/2022 14:08	6.11
6/23/2022 10:49	6/23/2022 11:36	19.69	6/22/2022 14:09	6.12
6/23/2022 10:50	6/23/2022 11:37	19.71	6/22/2022 14:10	6.13
6/23/2022 10:51	6/23/2022 11:38	19.70	6/22/2022 14:11	6.11
6/23/2022 10:52	6/23/2022 11:39	19.71	6/22/2022 14:12	6.13
6/23/2022 10:53	6/23/2022 11:40	19.71	6/22/2022 14:13	6.13
6/23/2022 10:54	6/23/2022 11:41	19.73	6/22/2022 14:14	6.14
6/23/2022 10:55	6/23/2022 11:42	19.70	6/22/2022 14:15	6.11
6/23/2022 10:56	6/23/2022 11:43	19.70	6/22/2022 14:16	6.12
6/23/2022 10:57	6/23/2022 11:44	19.70	6/22/2022 14:17	6.10
6/23/2022 10:58	6/23/2022 11:45	19.69	6/22/2022 14:18	6.14
6/23/2022 10:59	6/23/2022 11:46	19.70	6/22/2022 14:19	6.13
6/23/2022 11:00	6/23/2022 11:47	19.71	6/22/2022 14:20	6.10
6/23/2022 11:01	6/23/2022 11:48	19.70	6/22/2022 14:21	6.14
6/23/2022 11:02	6/23/2022 11:49	19.71	6/22/2022 14:22	6.13
6/23/2022 11:03	6/23/2022 11:50	19.69	6/22/2022 14:23	6.15
6/23/2022 11:04	6/23/2022 11:51	19.69	6/22/2022 14:24	6.13
6/23/2022 11:05	6/23/2022 11:52	19.71	6/22/2022 14:25	6.11
6/23/2022 11:06	6/23/2022 11:53	19.70	6/22/2022 14:26	6.10
6/23/2022 11:07	6/23/2022 11:54	19.70	6/22/2022 14:27	6.12
6/23/2022 11:08	6/23/2022 11:55	19.67	6/22/2022 14:28	6.12
6/23/2022 11:09	6/23/2022 11:56	19.67	6/22/2022 14:29	6.14
6/23/2022 11:10	6/23/2022 11:57	19.70	6/22/2022 14:30	6.13
6/23/2022 11:11	6/23/2022 11:58	19.69	6/22/2022 14:31	6.13
6/23/2022 11:12	6/23/2022 11:59	19.69	6/22/2022 14:32	6.12
6/23/2022 11:13	6/23/2022 12:00	19.68	6/22/2022 14:33	6.11
6/23/2022 11:14	6/23/2022 12:01	19.68	6/22/2022 14:34	6.12

6/23/2022 11:15	6/23/2022 12:02	19.69	6/22/2022 14:35	6.13
6/23/2022 11:16	6/23/2022 12:03	19.68	6/22/2022 14:36	6.11
6/23/2022 11:17	6/23/2022 12:04	19.66	6/22/2022 14:37	6.14
6/23/2022 11:18	6/23/2022 12:05	19.68	6/22/2022 14:38	6.10
6/23/2022 11:19	6/23/2022 12:06	19.68	6/22/2022 14:39	6.13
6/23/2022 11:20	6/23/2022 12:07	19.73	6/22/2022 14:40	6.09
6/23/2022 11:21	6/23/2022 12:08	19.69	6/22/2022 14:41	6.13
6/23/2022 11:22	6/23/2022 12:09	19.71	6/22/2022 14:42	6.13
6/23/2022 11:23	6/23/2022 12:10	19.69	6/22/2022 14:43	6.14
6/23/2022 11:24	6/23/2022 12:11	19.64	6/22/2022 14:44	6.14
6/23/2022 11:25	6/23/2022 12:12	19.67	6/22/2022 14:45	6.09
6/23/2022 11:26	6/23/2022 12:13	19.67	6/22/2022 14:46	6.11
6/23/2022 11:27	6/23/2022 12:14	19.67	6/22/2022 14:47	6.14
6/23/2022 11:28	6/23/2022 12:15	19.68	6/22/2022 14:48	6.13
6/23/2022 11:29	6/23/2022 12:16	19.67	6/22/2022 14:49	6.09
6/23/2022 11:30	6/23/2022 12:17	19.67	6/22/2022 14:50	6.10
6/23/2022 11:31	6/23/2022 12:18	19.68	6/22/2022 14:51	6.10
6/23/2022 11:32	6/23/2022 12:19	19.68	6/22/2022 14:52	6.14
6/23/2022 11:33	6/23/2022 12:20	19.67	6/22/2022 14:53	6.15
6/23/2022 11:34	6/23/2022 12:21	19.67	6/22/2022 14:54	6.14
6/23/2022 11:35	6/23/2022 12:22	19.66	6/22/2022 14:55	6.09
6/23/2022 11:36	6/23/2022 12:23	19.67	6/22/2022 14:56	6.12
6/23/2022 11:37	6/23/2022 12:24	19.68	6/22/2022 14:57	6.11
6/23/2022 11:38	6/23/2022 12:25	19.68	6/22/2022 14:58	6.10
6/23/2022 11:39	6/23/2022 12:26	19.67	6/22/2022 14:59	6.14
6/23/2022 11:40	6/23/2022 12:27	19.67	6/22/2022 15:00	6.12
6/23/2022 11:41	6/23/2022 12:28	19.66	6/22/2022 15:01	6.84
6/23/2022 11:42	6/23/2022 12:29	19.68	6/22/2022 15:02	8.84
6/23/2022 11:43	6/23/2022 12:30	19.67	6/22/2022 15:03	7.56
6/23/2022 11:44	6/23/2022 12:31	19.67	6/22/2022 15:04	6.24
6/23/2022 11:45	6/23/2022 12:32	19.67	6/22/2022 15:05	6.16
6/23/2022 11:46	6/23/2022 12:33	19.70	6/22/2022 15:06	6.14
6/23/2022 11:47	6/23/2022 12:34	19.66	6/22/2022 15:07	6.12
6/23/2022 11:48	6/23/2022 12:35	19.68	6/22/2022 15:08	6.13
6/23/2022 11:49	6/23/2022 12:36	19.69	6/22/2022 15:09	6.10
6/23/2022 11:50	6/23/2022 12:37	19.66	6/22/2022 15:10	6.13
6/23/2022 11:51	6/23/2022 12:38	19.69	6/22/2022 15:11	6.14
6/23/2022 11:52	6/23/2022 12:39	19.66	6/22/2022 15:12	6.17
6/23/2022 11:53	6/23/2022 12:40	19.66	6/22/2022 15:13	6.13
6/23/2022 11:54	6/23/2022 12:41	19.66	6/22/2022 15:14	6.15
6/23/2022 11:55	6/23/2022 12:42	19.69	6/22/2022 15:15	6.12
6/23/2022 11:56	6/23/2022 12:43	19.66	6/22/2022 15:16	6.14
6/23/2022 11:57	6/23/2022 12:44	19.67	6/22/2022 15:17	6.13
6/23/2022 11:58	6/23/2022 12:45	19.66	6/22/2022 15:18	6.13
6/23/2022 11:59	6/23/2022 12:46	19.67	6/22/2022 15:19	6.15
6/23/2022 12:00	6/23/2022 12:47	19.66	6/22/2022 15:20	6.12
6/23/2022 12:01	6/23/2022 12:48	19.66	6/22/2022 15:21	6.13
6/23/2022 12:02	6/23/2022 12:49	19.67	6/22/2022 15:22	6.11
6/23/2022 12:03	6/23/2022 12:50	19.67	6/22/2022 15:23	6.11
6/23/2022 12:04	6/23/2022 12:51	19.66	6/22/2022 15:24	6.14
6/23/2022 12:05	6/23/2022 12:52	19.69	6/22/2022 15:25	6.11
6/23/2022 12:06	6/23/2022 12:53	19.65	6/22/2022 15:26	6.11
6/23/2022 12:07	6/23/2022 12:54	19.67	6/22/2022 15:27	6.16
6/23/2022 12:08	6/23/2022 12:55	19.69	6/22/2022 15:28	6.11
6/23/2022 12:09	6/23/2022 12:56	19.65	6/22/2022 15:29	6.10
6/23/2022 12:10	6/23/2022 12:57	19.66	6/22/2022 15:30	6.15
6/23/2022 12:11	6/23/2022 12:58	19.65	6/22/2022 15:31	6.12
6/23/2022 12:12	6/23/2022 12:59	19.67	6/22/2022 15:32	6.13
6/23/2022 12:13	6/23/2022 13:00	19.69	6/22/2022 15:33	6.12
6/23/2022 12:14	6/23/2022 13:01	19.68	6/22/2022 15:34	6.11
6/23/2022 12:15	6/23/2022 13:02	19.68	6/22/2022 15:35	6.10
6/23/2022 12:16	6/23/2022 13:03	19.65	6/22/2022 15:36	6.12
6/23/2022 12:17	6/23/2022 13:04	19.66	6/22/2022 15:37	6.12
6/23/2022 12:18	6/23/2022 13:05	19.67	6/22/2022 15:38	6.14
6/23/2022 12:19	6/23/2022 13:06	19.68	6/22/2022 15:39	6.10
6/23/2022 12:20	6/23/2022 13:07	19.66	6/22/2022 15:40	6.10
6/23/2022 12:21	6/23/2022 13:08	19.68	6/22/2022 15:41	6.13
6/23/2022 12:22	6/23/2022 13:09	19.63	6/22/2022 15:42	6.11
6/23/2022 12:23	6/23/2022 13:10	19.64	6/22/2022 15:43	6.15
6/23/2022 12:24	6/23/2022 13:11	19.66	6/22/2022 15:44	6.13
6/23/2022 12:25	6/23/2022 13:12	19.66	6/22/2022 15:45	6.13
6/23/2022 12:26	6/23/2022 13:13	19.66	6/22/2022 15:46	6.10
6/23/2022 12:27	6/23/2022 13:14	19.67	6/22/2022 15:47	6.12
6/23/2022 12:28	6/23/2022 13:15	19.66	6/22/2022 15:48	6.14
6/23/2022 12:29	6/23/2022 13:16	19.69	6/22/2022 15:49	6.14
6/23/2022 12:30	6/23/2022 13:17	19.66	6/22/2022 15:50	6.13
6/23/2022 12:31	6/23/2022 13:18	19.65	6/22/2022 15:51	6.13
6/23/2022 12:32	6/23/2022 13:19	19.66	6/22/2022 15:52	6.12
6/23/2022 12:33	6/23/2022 13:20	19.68	6/22/2022 15:53	6.10
6/23/2022 12:34	6/23/2022 13:21	19.67	6/22/2022 15:54	6.10
6/23/2022 12:35	6/23/2022 13:22	19.67	6/22/2022 15:55	6.13
6/23/2022 12:36	6/23/2022 13:23	19.65	6/22/2022 15:56	6.13
6/23/2022 12:37	6/23/2022 13:24	19.66	6/22/2022 15:57	6.12
6/23/2022 12:38	6/23/2022 13:25	19.65	6/22/2022 15:58	6.11
6/23/2022 12:39	6/23/2022 13:26	19.65	6/22/2022 15:59	6.10
6/23/2022 12:40	6/23/2022 13:27	19.66	6/22/2022 16:00	6.11
6/23/2022 12:41	6/23/2022 13:28	19.66	6/22/2022 16:01	6.13
6/23/2022 12:42	6/23/2022 13:29	19.64	6/22/2022 16:02	6.12

6/23/2022 12:43	6/23/2022 13:30	19.65	6/22/2022 16:03	6.10
6/23/2022 12:44	6/23/2022 13:31	19.66	6/22/2022 16:04	6.13
6/23/2022 12:45	6/23/2022 13:32	19.67	6/22/2022 16:05	6.11
6/23/2022 12:46	6/23/2022 13:33	19.64	6/22/2022 16:06	6.13
6/23/2022 12:47	6/23/2022 13:34	19.67	6/22/2022 16:07	6.12
6/23/2022 12:48	6/23/2022 13:35	19.66	6/22/2022 16:08	6.13
6/23/2022 12:49	6/23/2022 13:36	19.65	6/22/2022 16:09	6.14
6/23/2022 12:50	6/23/2022 13:37	19.68	6/22/2022 16:10	6.13
6/23/2022 12:51	6/23/2022 13:38	19.66	6/22/2022 16:11	6.13
6/23/2022 12:52	6/23/2022 13:39	19.68	6/22/2022 16:12	6.12
6/23/2022 12:53	6/23/2022 13:40	19.65	6/22/2022 16:13	6.13
6/23/2022 12:54	6/23/2022 13:41	19.66	6/22/2022 16:14	6.17
6/23/2022 12:55	6/23/2022 13:42	19.64	6/22/2022 16:15	6.11
6/23/2022 12:56	6/23/2022 13:43	19.68	6/22/2022 16:16	6.12
6/23/2022 12:57	6/23/2022 13:44	19.64	6/22/2022 16:17	6.11
6/23/2022 12:58	6/23/2022 13:45	19.66	6/22/2022 16:18	6.13
6/23/2022 12:59	6/23/2022 13:46	19.69	6/22/2022 16:19	6.10
6/23/2022 13:00	6/23/2022 13:47	19.64	6/22/2022 16:20	6.12
6/23/2022 13:01	6/23/2022 13:48	19.66	6/22/2022 16:21	6.10
6/23/2022 13:02	6/23/2022 13:49	19.66	6/22/2022 16:22	6.12
6/23/2022 13:03	6/23/2022 13:50	19.66	6/22/2022 16:23	6.12
6/23/2022 13:04	6/23/2022 13:51	19.67	6/22/2022 16:24	6.12
6/23/2022 13:05	6/23/2022 13:52	19.69	6/22/2022 16:25	8.31
6/23/2022 13:06	6/23/2022 13:53	19.64	6/22/2022 16:26	8.94
6/23/2022 13:07	6/23/2022 13:54	19.65	6/22/2022 16:27	6.75
6/23/2022 13:08	6/23/2022 13:55	19.65	6/22/2022 16:28	6.19
6/23/2022 13:09	6/23/2022 13:56	19.64	6/22/2022 16:29	6.17
6/23/2022 13:10	6/23/2022 13:57	19.67	6/22/2022 16:30	6.15
6/23/2022 13:11	6/23/2022 13:58	19.65	6/22/2022 16:31	6.13
6/23/2022 13:12	6/23/2022 13:59	19.65	6/22/2022 16:32	6.15
6/23/2022 13:13	6/23/2022 14:00	19.63	6/22/2022 16:33	6.16
6/23/2022 13:14	6/23/2022 14:01	19.66	6/22/2022 16:34	6.13
6/23/2022 13:15	6/23/2022 14:02	19.66	6/22/2022 16:35	6.14
6/23/2022 13:16	6/23/2022 14:03	19.65	6/22/2022 16:36	6.13
6/23/2022 13:17	6/23/2022 14:04	19.66	6/22/2022 16:37	6.12
6/23/2022 13:18	6/23/2022 14:05	19.67	6/22/2022 16:38	6.13
6/23/2022 13:19	6/23/2022 14:06	19.65	6/22/2022 16:39	6.12
6/23/2022 13:20	6/23/2022 14:07	19.64	6/22/2022 16:40	6.16
6/23/2022 13:21	6/23/2022 14:08	19.64	6/22/2022 16:41	6.12
6/23/2022 13:22	6/23/2022 14:09	19.64	6/22/2022 16:42	6.12
6/23/2022 13:23	6/23/2022 14:10	19.66	6/22/2022 16:43	6.10
6/23/2022 13:24	6/23/2022 14:11	19.65	6/22/2022 16:44	6.14
6/23/2022 13:25	6/23/2022 14:12	19.68	6/22/2022 16:45	6.09
6/23/2022 13:26	6/23/2022 14:13	19.66	6/22/2022 16:46	6.14
6/23/2022 13:27	6/23/2022 14:14	19.63	6/22/2022 16:47	6.14
6/23/2022 13:28	6/23/2022 14:15	19.66	6/22/2022 16:48	6.14
6/23/2022 13:29	6/23/2022 14:16	19.65	6/22/2022 16:49	6.12
6/23/2022 13:30	6/23/2022 14:17	19.66	6/22/2022 16:50	6.14
6/23/2022 13:31	6/23/2022 14:18	19.65	6/22/2022 16:51	6.12
6/23/2022 13:32	6/23/2022 14:19	19.65	6/22/2022 16:52	6.11
6/23/2022 13:33	6/23/2022 14:20	19.64	6/22/2022 16:53	6.09
6/23/2022 13:34	6/23/2022 14:21	19.64	6/22/2022 16:54	6.14
6/23/2022 13:35	6/23/2022 14:22	19.64	6/22/2022 16:55	6.13
6/23/2022 13:36	6/23/2022 14:23	19.65	6/22/2022 16:56	6.12
6/23/2022 13:37	6/23/2022 14:24	19.64	6/22/2022 16:57	6.15
6/23/2022 13:38	6/23/2022 14:25	19.64	6/22/2022 16:58	6.10
6/23/2022 13:39	6/23/2022 14:26	19.67	6/22/2022 16:59	6.09
6/23/2022 13:40	6/23/2022 14:27	19.65	6/22/2022 17:00	6.16
6/23/2022 13:41	6/23/2022 14:28	19.63	6/22/2022 17:01	6.14
6/23/2022 13:42	6/23/2022 14:29	19.64	6/22/2022 17:02	6.11
6/23/2022 13:43	6/23/2022 14:30	19.62	6/22/2022 17:03	6.11
6/23/2022 13:44	6/23/2022 14:31	19.67	6/22/2022 17:04	6.14
6/23/2022 13:45	6/23/2022 14:32	19.64	6/22/2022 17:05	6.12
6/23/2022 13:46	6/23/2022 14:33	19.64	6/22/2022 17:06	6.14
6/23/2022 13:47	6/23/2022 14:34	19.66	6/22/2022 17:07	6.13
6/23/2022 13:48	6/23/2022 14:35	19.65	6/22/2022 17:08	6.10
6/23/2022 13:49	6/23/2022 14:36	19.65	6/22/2022 17:09	6.11
6/23/2022 13:50	6/23/2022 14:37	19.63	6/22/2022 17:10	6.13
6/23/2022 13:51	6/23/2022 14:38	19.65	6/22/2022 17:11	6.13
6/23/2022 13:52	6/23/2022 14:39	19.63	6/22/2022 17:12	6.12
6/23/2022 13:53	6/23/2022 14:40	19.65	6/22/2022 17:13	6.12
6/23/2022 13:54	6/23/2022 14:41	19.64	6/22/2022 17:14	6.14
6/23/2022 13:55	6/23/2022 14:42	19.65	6/22/2022 17:15	6.12
6/23/2022 13:56	6/23/2022 14:43	19.64	6/22/2022 17:16	6.15
6/23/2022 13:57	6/23/2022 14:44	19.64	6/22/2022 17:17	6.11
6/23/2022 13:58	6/23/2022 14:45	19.64	6/22/2022 17:18	6.11
6/23/2022 13:59	6/23/2022 14:46	19.65	6/22/2022 17:19	6.12
6/23/2022 14:00	6/23/2022 14:47	19.64	6/22/2022 17:20	6.13
6/23/2022 14:01	6/23/2022 14:48	19.63	6/22/2022 17:21	6.13
6/23/2022 14:02	6/23/2022 14:49	19.63	6/22/2022 17:22	6.09
6/23/2022 14:03	6/23/2022 14:50	19.65	6/22/2022 17:23	6.12
6/23/2022 14:04	6/23/2022 14:51	19.63	6/22/2022 17:24	6.13
6/23/2022 14:05	6/23/2022 14:52	19.62	6/22/2022 17:25	6.12
6/23/2022 14:06	6/23/2022 14:53	19.62	6/22/2022 17:26	6.13
6/23/2022 14:07	6/23/2022 14:54	19.64	6/22/2022 17:27	6.08
6/23/2022 14:08	6/23/2022 14:55	19.63	6/22/2022 17:28	6.15
6/23/2022 14:09	6/23/2022 14:56	19.62	6/22/2022 17:29	6.11
6/23/2022 14:10	6/23/2022 14:57	19.64	6/22/2022 17:30	6.13

6/23/2022 14:11	6/23/2022 14:58	19.64	6/22/2022 17:31	6.09
6/23/2022 14:12	6/23/2022 14:59	20.13	6/22/2022 17:32	6.11
6/23/2022 14:13	6/23/2022 15:00	20.31	6/22/2022 17:33	6.13
6/23/2022 14:14	6/23/2022 15:01	20.40	6/22/2022 17:34	6.10
6/23/2022 14:15	6/23/2022 15:02	20.41	6/22/2022 17:35	6.13
6/23/2022 14:16	6/23/2022 15:03	20.45	6/22/2022 17:36	6.15
6/23/2022 14:17	6/23/2022 15:04	19.95	6/22/2022 17:37	6.14
6/23/2022 14:18	6/23/2022 15:05	19.86	6/22/2022 17:38	6.12
6/23/2022 14:19	6/23/2022 15:06	19.81	6/22/2022 17:39	6.11
6/23/2022 14:20	6/23/2022 15:07	19.77	6/22/2022 17:40	6.12
6/23/2022 14:21	6/23/2022 15:08	19.74	6/22/2022 17:41	6.11
6/23/2022 14:22	6/23/2022 15:09	19.74	6/22/2022 17:42	6.10
6/23/2022 14:23	6/23/2022 15:10	19.73	6/22/2022 17:43	6.13
6/23/2022 14:24	6/23/2022 15:11	19.74	6/22/2022 17:44	6.13
6/23/2022 14:25	6/23/2022 15:12	19.74	6/22/2022 17:45	6.13
6/23/2022 14:26	6/23/2022 15:13	19.73	6/22/2022 17:46	6.12
6/23/2022 14:27	6/23/2022 15:14	19.74	6/22/2022 17:47	6.12
6/23/2022 14:28	6/23/2022 15:15	19.70	6/22/2022 17:48	6.10
6/23/2022 14:29	6/23/2022 15:16	19.71	6/22/2022 17:49	6.10
6/23/2022 14:30	6/23/2022 15:17	19.69	6/22/2022 17:50	6.14
6/23/2022 14:31	6/23/2022 15:18	19.72	6/22/2022 17:51	6.12
6/23/2022 14:32	6/23/2022 15:19	19.72	6/22/2022 17:52	6.12
6/23/2022 14:33	6/23/2022 15:20	19.68	6/22/2022 17:53	6.09
6/23/2022 14:34	6/23/2022 15:21	19.69	6/22/2022 17:54	6.09
6/23/2022 14:35	6/23/2022 15:22	19.72	6/22/2022 17:55	6.11
6/23/2022 14:36	6/23/2022 15:23	19.70	6/22/2022 17:56	6.09
6/23/2022 14:37	6/23/2022 15:24	19.70	6/22/2022 17:57	6.12
6/23/2022 14:38	6/23/2022 15:25	19.68	6/22/2022 17:58	6.10
6/23/2022 14:39	6/23/2022 15:26	19.67	6/22/2022 17:59	6.11
6/23/2022 14:40	6/23/2022 15:27	19.70	6/22/2022 18:00	6.15
6/23/2022 14:41	6/23/2022 15:28	19.68	6/22/2022 18:01	6.13
6/23/2022 14:42	6/23/2022 15:29	19.67	6/22/2022 18:02	6.12
6/23/2022 14:43	6/23/2022 15:30	19.69	6/22/2022 18:03	6.11
6/23/2022 14:44	6/23/2022 15:31	19.66	6/22/2022 18:04	6.10
6/23/2022 14:45	6/23/2022 15:32	19.67	6/22/2022 18:05	6.11
6/23/2022 14:46	6/23/2022 15:33	19.69	6/22/2022 18:06	6.11
6/23/2022 14:47	6/23/2022 15:34	19.67	6/22/2022 18:07	6.09
6/23/2022 14:48	6/23/2022 15:35	19.66	6/22/2022 18:08	6.13
6/23/2022 14:49	6/23/2022 15:36	19.68	6/22/2022 18:09	6.11
6/23/2022 14:50	6/23/2022 15:37	19.69	6/22/2022 18:10	6.12
6/23/2022 14:51	6/23/2022 15:38	19.67	6/22/2022 18:11	6.09
6/23/2022 14:52	6/23/2022 15:39	19.66	6/22/2022 18:12	6.11
6/23/2022 14:53	6/23/2022 15:40	19.68	6/22/2022 18:13	6.13
6/23/2022 14:54	6/23/2022 15:41	19.69	6/22/2022 18:14	6.10
6/23/2022 14:55	6/23/2022 15:42	19.65	6/22/2022 18:15	6.11
6/23/2022 14:56	6/23/2022 15:43	19.67	6/22/2022 18:16	6.13
6/23/2022 14:57	6/23/2022 15:44	19.67	6/22/2022 18:17	6.13
6/23/2022 14:58	6/23/2022 15:45	19.69	6/22/2022 18:18	6.14
6/23/2022 14:59	6/23/2022 15:46	19.67	6/22/2022 18:19	6.09
6/23/2022 15:00	6/23/2022 15:47	19.67	6/22/2022 18:20	6.12
6/23/2022 15:01	6/23/2022 15:48	19.67	6/22/2022 18:21	6.11
6/23/2022 15:02	6/23/2022 15:49	19.67	6/22/2022 18:22	6.14
6/23/2022 15:03	6/23/2022 15:50	19.66	6/22/2022 18:23	6.13
6/23/2022 15:04	6/23/2022 15:51	19.68	6/22/2022 18:24	6.13
6/23/2022 15:05	6/23/2022 15:52	19.68	6/22/2022 18:25	6.12
6/23/2022 15:06	6/23/2022 15:53	19.67	6/22/2022 18:26	6.15
6/23/2022 15:07	6/23/2022 15:54	19.66	6/22/2022 18:27	6.13
6/23/2022 15:08	6/23/2022 15:55	19.64	6/22/2022 18:28	6.12
6/23/2022 15:09	6/23/2022 15:56	19.67	6/22/2022 18:29	6.10
6/23/2022 15:10	6/23/2022 15:57	19.63	6/22/2022 18:30	6.09
6/23/2022 15:11	6/23/2022 15:58	19.67	6/22/2022 18:31	6.16
6/23/2022 15:12	6/23/2022 15:59	19.66	6/22/2022 18:32	6.14
6/23/2022 15:13	6/23/2022 16:00	19.68	6/22/2022 18:33	6.11
6/23/2022 15:14	6/23/2022 16:01	19.67	6/22/2022 18:34	6.09
6/23/2022 15:15	6/23/2022 16:02	19.67	6/22/2022 18:35	6.12
6/23/2022 15:16	6/23/2022 16:03	19.68	6/22/2022 18:36	6.11
6/23/2022 15:17	6/23/2022 16:04	19.64	6/22/2022 18:37	6.11
6/23/2022 15:18	6/23/2022 16:05	19.66	6/22/2022 18:38	6.12
6/23/2022 15:19	6/23/2022 16:06	19.64	6/22/2022 18:39	6.15
6/23/2022 15:20	6/23/2022 16:07	19.62	6/22/2022 18:40	6.09
6/23/2022 15:21	6/23/2022 16:08	19.68	6/22/2022 18:41	6.11
6/23/2022 15:22	6/23/2022 16:09	19.66	6/22/2022 18:42	6.13
6/23/2022 15:23	6/23/2022 16:10	19.68	6/22/2022 18:43	6.14
6/23/2022 15:24	6/23/2022 16:11	19.69	6/22/2022 18:44	6.15
6/23/2022 15:25	6/23/2022 16:12	19.66	6/22/2022 18:45	6.11
6/23/2022 15:26	6/23/2022 16:13	19.68	6/22/2022 18:46	6.12
6/23/2022 15:27	6/23/2022 16:14	19.64	6/22/2022 18:47	6.13
6/23/2022 15:28	6/23/2022 16:15	19.66	6/22/2022 18:48	6.10
6/23/2022 15:29	6/23/2022 16:16	19.67	6/22/2022 18:49	6.09
6/23/2022 15:30	6/23/2022 16:17	19.67	6/22/2022 18:50	6.09
6/23/2022 15:31	6/23/2022 16:18	19.65	6/22/2022 18:51	6.12
6/23/2022 15:32	6/23/2022 16:19	19.65	6/22/2022 18:52	6.12
6/23/2022 15:33	6/23/2022 16:20	19.64	6/22/2022 18:53	6.12
6/23/2022 15:34	6/23/2022 16:21	19.66	6/22/2022 18:54	6.12
6/23/2022 15:35	6/23/2022 16:22	19.66	6/22/2022 18:55	6.14
6/23/2022 15:36	6/23/2022 16:23	19.67	6/22/2022 18:56	6.11
6/23/2022 15:37	6/23/2022 16:24	19.65	6/22/2022 18:57	6.11
6/23/2022 15:38	6/23/2022 16:25	19.64	6/22/2022 18:58	6.14

6/23/2022 15:39	6/23/2022 16:26	19.69	6/22/2022 18:59	6.11
6/23/2022 15:40	6/23/2022 16:27	19.67	6/22/2022 19:00	6.12
6/23/2022 15:41	6/23/2022 16:28	19.68	6/22/2022 19:01	6.13
6/23/2022 15:42	6/23/2022 16:29	19.67	6/22/2022 19:02	6.12
6/23/2022 15:43	6/23/2022 16:30	19.65	6/22/2022 19:03	6.10
6/23/2022 15:44	6/23/2022 16:31	19.67	6/22/2022 19:04	6.15
6/23/2022 15:45	6/23/2022 16:32	19.66	6/22/2022 19:05	6.11
6/23/2022 15:46	6/23/2022 16:33	19.67	6/22/2022 19:06	6.10
6/23/2022 15:47	6/23/2022 16:34	19.66	6/22/2022 19:07	6.09
6/23/2022 15:48	6/23/2022 16:35	19.66	6/22/2022 19:08	6.13
6/23/2022 15:49	6/23/2022 16:36	19.63	6/22/2022 19:09	6.13
6/23/2022 15:50	6/23/2022 16:37	19.63	6/22/2022 19:10	6.15
6/23/2022 15:51	6/23/2022 16:38	19.65	6/22/2022 19:11	6.13
6/23/2022 15:52	6/23/2022 16:39	19.66	6/22/2022 19:12	6.12
6/23/2022 15:53	6/23/2022 16:40	19.68	6/22/2022 19:13	6.10
6/23/2022 15:54	6/23/2022 16:41	19.64	6/22/2022 19:14	6.10
6/23/2022 15:55	6/23/2022 16:42	19.68	6/22/2022 19:15	6.10
6/23/2022 15:56	6/23/2022 16:43	19.65	6/22/2022 19:16	6.12
6/23/2022 15:57	6/23/2022 16:44	19.67	6/22/2022 19:17	6.13
6/23/2022 15:58	6/23/2022 16:45	19.65	6/22/2022 19:18	6.12
6/23/2022 15:59	6/23/2022 16:46	19.65	6/22/2022 19:19	6.11
6/23/2022 16:00	6/23/2022 16:47	19.65	6/22/2022 19:20	6.10
6/23/2022 16:01	6/23/2022 16:48	19.66	6/22/2022 19:21	6.11
6/23/2022 16:02	6/23/2022 16:49	19.65	6/22/2022 19:22	6.12
6/23/2022 16:03	6/23/2022 16:50	19.64	6/22/2022 19:23	6.13
6/23/2022 16:04	6/23/2022 16:51	19.64	6/22/2022 19:24	6.12
6/23/2022 16:05	6/23/2022 16:52	19.64	6/22/2022 19:25	6.12
6/23/2022 16:06	6/23/2022 16:53	19.67	6/22/2022 19:26	6.13
6/23/2022 16:07	6/23/2022 16:54	19.66	6/22/2022 19:27	6.12
6/23/2022 16:08	6/23/2022 16:55	19.65	6/22/2022 19:28	6.10
6/23/2022 16:09	6/23/2022 16:56	19.65	6/22/2022 19:29	6.08
6/23/2022 16:10	6/23/2022 16:57	19.66	6/22/2022 19:30	6.10
6/23/2022 16:11	6/23/2022 16:58	19.66	6/22/2022 19:31	6.12
6/23/2022 16:12	6/23/2022 16:59	19.64	6/22/2022 19:32	6.12
6/23/2022 16:13	6/23/2022 17:00	19.66	6/22/2022 19:33	6.10
6/23/2022 16:14	6/23/2022 17:01	19.65	6/22/2022 19:34	6.12
6/23/2022 16:15	6/23/2022 17:02	19.64	6/22/2022 19:35	6.13
6/23/2022 16:16	6/23/2022 17:03	19.64	6/22/2022 19:36	6.10
6/23/2022 16:17	6/23/2022 17:04	19.65	6/22/2022 19:37	6.16
6/23/2022 16:18	6/23/2022 17:05	19.66	6/22/2022 19:38	6.14
6/23/2022 16:19	6/23/2022 17:06	19.67	6/22/2022 19:39	6.13
6/23/2022 16:20	6/23/2022 17:07	19.67	6/22/2022 19:40	6.12
6/23/2022 16:21	6/23/2022 17:08	19.64	6/22/2022 19:41	6.12
6/23/2022 16:22	6/23/2022 17:09	19.64	6/22/2022 19:42	6.11
6/23/2022 16:23	6/23/2022 17:10	19.66	6/22/2022 19:43	6.11
6/23/2022 16:24	6/23/2022 17:11	19.66	6/22/2022 19:44	6.13
6/23/2022 16:25	6/23/2022 17:12	19.65	6/22/2022 19:45	6.11
6/23/2022 16:26	6/23/2022 17:13	19.63	6/22/2022 19:46	6.11
6/23/2022 16:27	6/23/2022 17:14	19.65	6/22/2022 19:47	6.09
6/23/2022 16:28	6/23/2022 17:15	19.67	6/22/2022 19:48	6.10
6/23/2022 16:29	6/23/2022 17:16	19.64	6/22/2022 19:49	6.11
6/23/2022 16:30	6/23/2022 17:17	19.67	6/22/2022 19:50	6.11
6/23/2022 16:31	6/23/2022 17:18	19.63	6/22/2022 19:51	6.11
6/23/2022 16:32	6/23/2022 17:19	19.66	6/22/2022 19:52	6.10
6/23/2022 16:33	6/23/2022 17:20	19.66	6/22/2022 19:53	6.15
6/23/2022 16:34	6/23/2022 17:21	19.64	6/22/2022 19:54	6.12
6/23/2022 16:35	6/23/2022 17:22	19.65	6/22/2022 19:55	6.13
6/23/2022 16:36	6/23/2022 17:23	19.66	6/22/2022 19:56	6.11
6/23/2022 16:37	6/23/2022 17:24	19.67	6/22/2022 19:57	6.12
6/23/2022 16:38	6/23/2022 17:25	19.66	6/22/2022 19:58	6.12
6/23/2022 16:39	6/23/2022 17:26	19.63	6/22/2022 19:59	6.13
6/23/2022 16:40	6/23/2022 17:27	19.66	6/22/2022 20:00	6.12
6/23/2022 16:41	6/23/2022 17:28	19.63	6/22/2022 20:01	6.11
6/23/2022 16:42	6/23/2022 17:29	19.64	6/22/2022 20:02	6.11
6/23/2022 16:43	6/23/2022 17:30	19.64	6/22/2022 20:03	6.14
6/23/2022 16:44	6/23/2022 17:31	19.65	6/22/2022 20:04	6.11
6/23/2022 16:45	6/23/2022 17:32	19.65	6/22/2022 20:05	6.12
6/23/2022 16:46	6/23/2022 17:33	19.66	6/22/2022 20:06	6.11
6/23/2022 16:47	6/23/2022 17:34	19.63	6/22/2022 20:07	6.11
6/23/2022 16:48	6/23/2022 17:35	19.67	6/22/2022 20:08	6.12
6/23/2022 16:49	6/23/2022 17:36	19.67	6/22/2022 20:09	6.12
6/23/2022 16:50	6/23/2022 17:37	19.64	6/22/2022 20:10	6.11
6/23/2022 16:51	6/23/2022 17:38	19.67	6/22/2022 20:11	6.08
6/23/2022 16:52	6/23/2022 17:39	19.67	6/22/2022 20:12	6.11
6/23/2022 16:53	6/23/2022 17:40	19.65	6/22/2022 20:13	6.13
6/23/2022 16:54	6/23/2022 17:41	19.63	6/22/2022 20:14	6.11
6/23/2022 16:55	6/23/2022 17:42	19.65	6/22/2022 20:15	6.13
6/23/2022 16:56	6/23/2022 17:43	19.64	6/22/2022 20:16	6.10
6/23/2022 16:57	6/23/2022 17:44	19.64	6/22/2022 20:17	6.10
6/23/2022 16:58	6/23/2022 17:45	19.62	6/22/2022 20:18	6.10
6/23/2022 16:59	6/23/2022 17:46	19.68	6/22/2022 20:19	6.14
6/23/2022 17:00	6/23/2022 17:47	19.66	6/22/2022 20:20	6.12
6/23/2022 17:01	6/23/2022 17:48	19.67	6/22/2022 20:21	6.10
6/23/2022 17:02	6/23/2022 17:49	19.67	6/22/2022 20:22	6.14
6/23/2022 17:03	6/23/2022 17:50	19.64	6/22/2022 20:23	6.10
6/23/2022 17:04	6/23/2022 17:51	19.65	6/22/2022 20:24	6.10
6/23/2022 17:05	6/23/2022 17:52	19.65	6/22/2022 20:25	6.14
6/23/2022 17:06	6/23/2022 17:53	19.64	6/22/2022 20:26	6.13

6/23/2022 17:07	6/23/2022 17:54	19.65	6/22/2022 20:27	6.10
6/23/2022 17:08	6/23/2022 17:55	19.64	6/22/2022 20:28	6.09
6/23/2022 17:09	6/23/2022 17:56	19.63	6/22/2022 20:29	6.13
6/23/2022 17:10	6/23/2022 17:57	19.64	6/22/2022 20:30	6.10
6/23/2022 17:11	6/23/2022 17:58	19.64	6/22/2022 20:31	6.10
6/23/2022 17:12	6/23/2022 17:59	19.63	6/22/2022 20:32	6.13
6/23/2022 17:13	6/23/2022 18:00	19.63	6/22/2022 20:33	6.11
6/23/2022 17:14	6/23/2022 18:01	19.67	6/22/2022 20:34	6.11
6/23/2022 17:15	6/23/2022 18:02	19.64	6/22/2022 20:35	6.11
6/23/2022 17:16	6/23/2022 18:03	19.64	6/22/2022 20:36	6.12
6/23/2022 17:17	6/23/2022 18:04	19.64	6/22/2022 20:37	6.09
6/23/2022 17:18	6/23/2022 18:05	19.65	6/22/2022 20:38	6.07
6/23/2022 17:19	6/23/2022 18:06	19.64	6/22/2022 20:39	6.10
6/23/2022 17:20	6/23/2022 18:07	19.65	6/22/2022 20:40	6.12
6/23/2022 17:21	6/23/2022 18:08	19.64	6/22/2022 20:41	6.13
6/23/2022 17:22	6/23/2022 18:09	19.63	6/22/2022 20:42	6.12
6/23/2022 17:23	6/23/2022 18:10	19.64	6/22/2022 20:43	6.09
6/23/2022 17:24	6/23/2022 18:11	19.65	6/22/2022 20:44	6.11
6/23/2022 17:25	6/23/2022 18:12	19.63	6/22/2022 20:45	6.11
6/23/2022 17:26	6/23/2022 18:13	19.64	6/22/2022 20:46	6.14
6/23/2022 17:27	6/23/2022 18:14	19.63	6/22/2022 20:47	6.13
6/23/2022 17:28	6/23/2022 18:15	19.66	6/22/2022 20:48	6.09
6/23/2022 17:29	6/23/2022 18:16	19.64	6/22/2022 20:49	6.13
6/23/2022 17:30	6/23/2022 18:17	19.64	6/22/2022 20:50	6.11
6/23/2022 17:31	6/23/2022 18:18	19.64	6/22/2022 20:51	6.14
6/23/2022 17:32	6/23/2022 18:19	19.63	6/22/2022 20:52	6.11
6/23/2022 17:33	6/23/2022 18:20	19.65	6/22/2022 20:53	6.07
6/23/2022 17:34	6/23/2022 18:21	19.62	6/22/2022 20:54	6.13
6/23/2022 17:35	6/23/2022 18:22	19.63	6/22/2022 20:55	6.13
6/23/2022 17:36	6/23/2022 18:23	19.66	6/22/2022 20:56	6.10
6/23/2022 17:37	6/23/2022 18:24	19.63	6/22/2022 20:57	6.12
6/23/2022 17:38	6/23/2022 18:25	19.67	6/22/2022 20:58	6.16
6/23/2022 17:39	6/23/2022 18:26	19.67	6/22/2022 20:59	6.10
6/23/2022 17:40	6/23/2022 18:27	19.65	6/22/2022 21:00	6.11
6/23/2022 17:41	6/23/2022 18:28	19.63	6/22/2022 21:01	6.12
6/23/2022 17:42	6/23/2022 18:29	19.61	6/22/2022 21:02	6.13
6/23/2022 17:43	6/23/2022 18:30	19.65	6/22/2022 21:03	6.11
6/23/2022 17:44	6/23/2022 18:31	19.65	6/22/2022 21:04	6.12
6/23/2022 17:45	6/23/2022 18:32	19.65	6/22/2022 21:05	6.12
6/23/2022 17:46	6/23/2022 18:33	19.65	6/22/2022 21:06	6.10
6/23/2022 17:47	6/23/2022 18:34	19.66	6/22/2022 21:07	6.10
6/23/2022 17:48	6/23/2022 18:35	19.66	6/22/2022 21:08	6.10
6/23/2022 17:49	6/23/2022 18:36	19.64	6/22/2022 21:09	6.11
6/23/2022 17:50	6/23/2022 18:37	19.65	6/22/2022 21:10	6.14
6/23/2022 17:51	6/23/2022 18:38	19.64	6/22/2022 21:11	6.12
6/23/2022 17:52	6/23/2022 18:39	19.65	6/22/2022 21:12	6.08
6/23/2022 17:53	6/23/2022 18:40	19.64	6/22/2022 21:13	6.13
6/23/2022 17:54	6/23/2022 18:41	19.64	6/22/2022 21:14	6.13
6/23/2022 17:55	6/23/2022 18:42	19.65	6/22/2022 21:15	6.13
6/23/2022 17:56	6/23/2022 18:43	19.65	6/22/2022 21:16	6.12
6/23/2022 17:57	6/23/2022 18:44	19.65	6/22/2022 21:17	6.10
6/23/2022 17:58	6/23/2022 18:45	19.64	6/22/2022 21:18	6.14
6/23/2022 17:59	6/23/2022 18:46	19.65	6/22/2022 21:19	6.11
6/23/2022 18:00	6/23/2022 18:47	19.66	6/22/2022 21:20	6.10
6/23/2022 18:01	6/23/2022 18:48	19.65	6/22/2022 21:21	6.14
6/23/2022 18:02	6/23/2022 18:49	19.67	6/22/2022 21:22	6.11
6/23/2022 18:03	6/23/2022 18:50	19.66	6/22/2022 21:23	6.13
6/23/2022 18:04	6/23/2022 18:51	19.66	6/22/2022 21:24	6.10
6/23/2022 18:05	6/23/2022 18:52	19.63	6/22/2022 21:25	6.12
6/23/2022 18:06	6/23/2022 18:53	19.66	6/22/2022 21:26	6.11
6/23/2022 18:07	6/23/2022 18:54	19.65	6/22/2022 21:27	6.13
6/23/2022 18:08	6/23/2022 18:55	19.65	6/22/2022 21:28	6.09
6/23/2022 18:09	6/23/2022 18:56	19.64	6/22/2022 21:29	6.12
6/23/2022 18:10	6/23/2022 18:57	19.66	6/22/2022 21:30	6.14
6/23/2022 18:11	6/23/2022 18:58	19.64	6/22/2022 21:31	6.09
6/23/2022 18:12	6/23/2022 18:59	19.65	6/22/2022 21:32	6.11
6/23/2022 18:13	6/23/2022 19:00	19.63	6/22/2022 21:33	6.12
6/23/2022 18:14	6/23/2022 19:01	19.62	6/22/2022 21:34	6.11
6/23/2022 18:15	6/23/2022 19:02	19.65	6/22/2022 21:35	6.13
6/23/2022 18:16	6/23/2022 19:03	19.65	6/22/2022 21:36	6.08
6/23/2022 18:17	6/23/2022 19:04	19.65	6/22/2022 21:37	6.09
6/23/2022 18:18	6/23/2022 19:05	19.66	6/22/2022 21:38	6.10
6/23/2022 18:19	6/23/2022 19:06	19.66	6/22/2022 21:39	6.11
6/23/2022 18:20	6/23/2022 19:07	19.65	6/22/2022 21:40	6.11
6/23/2022 18:21	6/23/2022 19:08	19.65	6/22/2022 21:41	6.13
6/23/2022 18:22	6/23/2022 19:09	19.65	6/22/2022 21:42	6.10
6/23/2022 18:23	6/23/2022 19:10	19.65	6/22/2022 21:43	6.16
6/23/2022 18:24	6/23/2022 19:11	19.64	6/22/2022 21:44	6.11
6/23/2022 18:25	6/23/2022 19:12	19.67	6/22/2022 21:45	6.12
6/23/2022 18:26	6/23/2022 19:13	19.63	6/22/2022 21:46	6.11
6/23/2022 18:27	6/23/2022 19:14	19.65	6/22/2022 21:47	6.13
6/23/2022 18:28	6/23/2022 19:15	19.64	6/22/2022 21:48	6.11
6/23/2022 18:29	6/23/2022 19:16	19.64	6/22/2022 21:49	6.16
6/23/2022 18:30	6/23/2022 19:17	19.61	6/22/2022 21:50	6.11
6/23/2022 18:31	6/23/2022 19:18	20.29	6/22/2022 21:51	6.11
6/23/2022 18:32	6/23/2022 19:19	20.35	6/22/2022 21:52	6.11
6/23/2022 18:33	6/23/2022 19:20	20.40	6/22/2022 21:53	6.12
6/23/2022 18:34	6/23/2022 19:21	20.45	6/22/2022 21:54	6.12

6/23/2022 18:35	6/23/2022 19:22	20.03	6/22/2022 21:55	6.12
6/23/2022 18:36	6/23/2022 19:23	19.88	6/22/2022 21:56	6.11
6/23/2022 18:37	6/23/2022 19:24	19.87	6/22/2022 21:57	6.11
6/23/2022 18:38	6/23/2022 19:25	19.79	6/22/2022 21:58	6.12
6/23/2022 18:39	6/23/2022 19:26	19.79	6/22/2022 21:59	6.11
6/23/2022 18:40	6/23/2022 19:27	19.78	6/22/2022 22:00	6.14
6/23/2022 18:41	6/23/2022 19:28	19.76	6/22/2022 22:01	6.15
6/23/2022 18:42	6/23/2022 19:29	19.75	6/22/2022 22:02	6.08
6/23/2022 18:43	6/23/2022 19:30	19.75	6/22/2022 22:03	6.11
6/23/2022 18:44	6/23/2022 19:31	19.74	6/22/2022 22:04	6.14
6/23/2022 18:45	6/23/2022 19:32	19.75	6/22/2022 22:05	6.13
6/23/2022 18:46	6/23/2022 19:33	19.71	6/22/2022 22:06	6.10
6/23/2022 18:47	6/23/2022 19:34	19.72	6/22/2022 22:07	6.10
6/23/2022 18:48	6/23/2022 19:35	19.73	6/22/2022 22:08	6.10
6/23/2022 18:49	6/23/2022 19:36	19.75	6/22/2022 22:09	6.12
6/23/2022 18:50	6/23/2022 19:37	19.73	6/22/2022 22:10	6.13
6/23/2022 18:51	6/23/2022 19:38	19.73	6/22/2022 22:11	6.11
6/23/2022 18:52	6/23/2022 19:39	19.73	6/22/2022 22:12	6.13
6/23/2022 18:53	6/23/2022 19:40	19.73	6/22/2022 22:13	6.11
6/23/2022 18:54	6/23/2022 19:41	19.72	6/22/2022 22:14	6.11
6/23/2022 18:55	6/23/2022 19:42	19.73	6/22/2022 22:15	6.12
6/23/2022 18:56	6/23/2022 19:43	19.73	6/22/2022 22:16	6.11
6/23/2022 18:57	6/23/2022 19:44	19.74	6/22/2022 22:17	6.10
6/23/2022 18:58	6/23/2022 19:45	19.74	6/22/2022 22:18	6.11
6/23/2022 18:59	6/23/2022 19:46	19.71	6/22/2022 22:19	6.13
6/23/2022 19:00	6/23/2022 19:47	19.70	6/22/2022 22:20	6.11
6/23/2022 19:01	6/23/2022 19:48	19.72	6/22/2022 22:21	6.11
6/23/2022 19:02	6/23/2022 19:49	19.71	6/22/2022 22:22	6.11
6/23/2022 19:03	6/23/2022 19:50	19.73	6/22/2022 22:23	6.12
6/23/2022 19:04	6/23/2022 19:51	19.69	6/22/2022 22:24	6.15
6/23/2022 19:05	6/23/2022 19:52	19.72	6/22/2022 22:25	6.12
6/23/2022 19:06	6/23/2022 19:53	19.72	6/22/2022 22:26	6.12
6/23/2022 19:07	6/23/2022 19:54	19.68	6/22/2022 22:27	6.11
6/23/2022 19:08	6/23/2022 19:55	19.73	6/22/2022 22:28	6.12
6/23/2022 19:09	6/23/2022 19:56	19.73	6/22/2022 22:29	6.11
6/23/2022 19:10	6/23/2022 19:57	19.70	6/22/2022 22:30	6.12
6/23/2022 19:11	6/23/2022 19:58	19.72	6/22/2022 22:31	6.15
6/23/2022 19:12	6/23/2022 19:59	19.70	6/22/2022 22:32	6.11
6/23/2022 19:13	6/23/2022 20:00	19.69	6/22/2022 22:33	6.15
6/23/2022 19:14	6/23/2022 20:01	19.70	6/22/2022 22:34	6.10
6/23/2022 19:15	6/23/2022 20:02	19.71	6/22/2022 22:35	6.12
6/23/2022 19:16	6/23/2022 20:03	19.70	6/22/2022 22:36	6.14
6/23/2022 19:17	6/23/2022 20:04	19.70	6/22/2022 22:37	6.13
6/23/2022 19:18	6/23/2022 20:05	19.69	6/22/2022 22:38	6.13
6/23/2022 19:19	6/23/2022 20:06	19.70	6/22/2022 22:39	6.13
6/23/2022 19:20	6/23/2022 20:07	19.71	6/22/2022 22:40	6.13
6/23/2022 19:21	6/23/2022 20:08	19.69	6/22/2022 22:41	6.11
6/23/2022 19:22	6/23/2022 20:09	19.69	6/22/2022 22:42	6.15
6/23/2022 19:23	6/23/2022 20:10	19.69	6/22/2022 22:43	6.08
6/23/2022 19:24	6/23/2022 20:11	19.68	6/22/2022 22:44	6.10
6/23/2022 19:25	6/23/2022 20:12	19.70	6/22/2022 22:45	6.12
6/23/2022 19:26	6/23/2022 20:13	19.69	6/22/2022 22:46	6.14
6/23/2022 19:27	6/23/2022 20:14	19.67	6/22/2022 22:47	6.12
6/23/2022 19:28	6/23/2022 20:15	19.70	6/22/2022 22:48	6.10
6/23/2022 19:29	6/23/2022 20:16	19.72	6/22/2022 22:49	6.12
6/23/2022 19:30	6/23/2022 20:17	19.70	6/22/2022 22:50	6.11
6/23/2022 19:31	6/23/2022 20:18	19.69	6/22/2022 22:51	6.12
6/23/2022 19:32	6/23/2022 20:19	19.68	6/22/2022 22:52	6.12
6/23/2022 19:33	6/23/2022 20:20	19.66	6/22/2022 22:53	6.13
6/23/2022 19:34	6/23/2022 20:21	19.69	6/22/2022 22:54	6.12
6/23/2022 19:35	6/23/2022 20:22	19.67	6/22/2022 22:55	6.13
6/23/2022 19:36	6/23/2022 20:23	19.69	6/22/2022 22:56	6.12
6/23/2022 19:37	6/23/2022 20:24	19.67	6/22/2022 22:57	6.13
6/23/2022 19:38	6/23/2022 20:25	19.69	6/22/2022 22:58	6.12
6/23/2022 19:39	6/23/2022 20:26	19.69	6/22/2022 22:59	6.08
6/23/2022 19:40	6/23/2022 20:27	19.67	6/22/2022 23:00	6.09
6/23/2022 19:41	6/23/2022 20:28	19.68	6/22/2022 23:01	6.11
6/23/2022 19:42	6/23/2022 20:29	19.68	6/22/2022 23:02	6.11
6/23/2022 19:43	6/23/2022 20:30	19.69	6/22/2022 23:03	6.10
6/23/2022 19:44	6/23/2022 20:31	19.70	6/22/2022 23:04	6.12
6/23/2022 19:45	6/23/2022 20:32	19.63	6/22/2022 23:05	6.10
6/23/2022 19:46	6/23/2022 20:33	19.69	6/22/2022 23:06	6.10
6/23/2022 19:47	6/23/2022 20:34	19.67	6/22/2022 23:07	6.11
6/23/2022 19:48	6/23/2022 20:35	19.70	6/22/2022 23:08	6.11
6/23/2022 19:49	6/23/2022 20:36	19.68	6/22/2022 23:09	6.10
6/23/2022 19:50	6/23/2022 20:37	19.68	6/22/2022 23:10	6.11
6/23/2022 19:51	6/23/2022 20:38	19.70	6/22/2022 23:11	6.11
6/23/2022 19:52	6/23/2022 20:39	19.70	6/22/2022 23:12	6.12
6/23/2022 19:53	6/23/2022 20:40	19.68	6/22/2022 23:13	6.11
6/23/2022 19:54	6/23/2022 20:41	19.68	6/22/2022 23:14	6.10
6/23/2022 19:55	6/23/2022 20:42	19.66	6/22/2022 23:15	6.14
6/23/2022 19:56	6/23/2022 20:43	19.67	6/22/2022 23:16	6.13
6/23/2022 19:57	6/23/2022 20:44	19.66	6/22/2022 23:17	6.10
6/23/2022 19:58	6/23/2022 20:45	19.67	6/22/2022 23:18	6.13
6/23/2022 19:59	6/23/2022 20:46	19.66	6/22/2022 23:19	6.10
6/23/2022 20:00	6/23/2022 20:47	19.67	6/22/2022 23:20	6.11
6/23/2022 20:01	6/23/2022 20:48	19.69	6/22/2022 23:21	6.10
6/23/2022 20:02	6/23/2022 20:49	19.66	6/22/2022 23:22	6.10

6/23/2022 20:03		6/23/2022 20:50	19.66	6/22/2022 23:23	6.10
6/23/2022 20:04		6/23/2022 20:51	19.67	6/22/2022 23:24	6.13
6/23/2022 20:05		6/23/2022 20:52	19.69	6/22/2022 23:25	6.10
6/23/2022 20:06		6/23/2022 20:53	19.66	6/22/2022 23:26	6.10
6/23/2022 20:07		6/23/2022 20:54	19.67	6/22/2022 23:27	6.13
6/23/2022 20:08		6/23/2022 20:55	19.67	6/22/2022 23:28	6.10
6/23/2022 20:09		6/23/2022 20:56	19.65	6/22/2022 23:29	6.06
6/23/2022 20:10		6/23/2022 20:57	19.66	6/22/2022 23:30	6.11
6/23/2022 20:11		6/23/2022 20:58	19.68	6/22/2022 23:31	6.13
6/23/2022 20:12		6/23/2022 20:59	19.67	6/22/2022 23:32	6.09
6/23/2022 20:13		6/23/2022 21:00	19.66	6/22/2022 23:33	6.09
6/23/2022 20:14		6/23/2022 21:01	19.65	6/22/2022 23:34	6.11
6/23/2022 20:15		6/23/2022 21:02	19.66	6/22/2022 23:35	6.07
6/23/2022 20:16		6/23/2022 21:03	19.66	6/22/2022 23:36	6.13
6/23/2022 20:17		6/23/2022 21:04	19.69	6/22/2022 23:37	6.11
6/23/2022 20:18		6/23/2022 21:05	19.66	6/22/2022 23:38	6.11
6/23/2022 20:19		6/23/2022 21:06	19.66	6/22/2022 23:39	6.10
6/23/2022 20:20		6/23/2022 21:07	19.70	6/22/2022 23:40	6.13
6/23/2022 20:21		6/23/2022 21:08	19.66	6/22/2022 23:41	6.10
6/23/2022 20:22		6/23/2022 21:09	19.67	6/22/2022 23:42	6.12
6/23/2022 20:23		6/23/2022 21:10	19.68	6/22/2022 23:43	6.11
6/23/2022 20:24		6/23/2022 21:11	19.67	6/22/2022 23:44	6.09
6/23/2022 20:25		6/23/2022 21:12	19.66	6/22/2022 23:45	6.12
6/23/2022 20:26		6/23/2022 21:13	19.68	6/22/2022 23:46	6.09
6/23/2022 20:27		6/23/2022 21:14	19.67	6/22/2022 23:47	6.09
6/23/2022 20:28		6/23/2022 21:15	19.68	6/22/2022 23:48	6.11
6/23/2022 20:29		6/23/2022 21:16	19.66	6/22/2022 23:49	6.12
6/23/2022 20:30		6/23/2022 21:17	19.69	6/22/2022 23:50	6.13
6/23/2022 20:31		6/23/2022 21:18	19.66	6/22/2022 23:51	6.10
6/23/2022 20:32		6/23/2022 21:19	19.63	6/22/2022 23:52	6.11
6/23/2022 20:33		6/23/2022 21:20	19.67	6/22/2022 23:53	6.11
6/23/2022 20:34		6/23/2022 21:21	19.65	6/22/2022 23:54	6.11
6/23/2022 20:35		6/23/2022 21:22	19.66	6/22/2022 23:55	6.13
6/23/2022 20:36		6/23/2022 21:23	19.67	6/22/2022 23:56	6.12
6/23/2022 20:37		6/23/2022 21:24	19.66	6/22/2022 23:57	6.13
6/23/2022 20:38		6/23/2022 21:25	19.66	6/22/2022 23:58	6.12
6/23/2022 20:39		6/23/2022 21:26	19.67	6/22/2022 23:59	6.09
6/23/2022 20:40		6/23/2022 21:27	19.63	6/23/2022 0:00	6.11
6/23/2022 20:41		6/23/2022 21:28	19.65	6/23/2022 0:01	6.09
6/23/2022 20:42		6/23/2022 21:29	19.67	6/23/2022 0:02	6.10
6/23/2022 20:43		6/23/2022 21:30	19.65	6/23/2022 0:03	6.12
6/23/2022 20:44		6/23/2022 21:31	19.67	6/23/2022 0:04	6.07
6/23/2022 20:45		6/23/2022 21:32	19.67	6/23/2022 0:05	6.10
6/23/2022 20:46		6/23/2022 21:33	19.68	6/23/2022 0:06	6.09
6/23/2022 20:47		6/23/2022 21:34	19.66	6/23/2022 0:07	6.12
6/23/2022 20:48	37.97	6/23/2022 21:35	19.64	6/23/2022 0:08	6.09
6/23/2022 20:49	37.98	6/23/2022 21:36	19.67	6/23/2022 0:09	8.27
6/23/2022 20:50	37.97	6/23/2022 21:37	19.68	6/23/2022 0:10	8.88
6/23/2022 20:51	37.97	6/23/2022 21:38	19.69	6/23/2022 0:11	6.39
6/23/2022 20:52	37.98	6/23/2022 21:39	19.66	6/23/2022 0:12	6.16
6/23/2022 20:53	37.98	6/23/2022 21:40	19.65	6/23/2022 0:13	6.13
6/23/2022 20:54	37.91	6/23/2022 21:41	19.69	6/23/2022 0:14	6.13
6/23/2022 20:55	37.92	6/23/2022 21:42	19.66	6/23/2022 0:15	6.13
6/23/2022 20:56	37.93	6/23/2022 21:43	19.66	6/23/2022 0:16	6.14
6/23/2022 20:57	37.93	6/23/2022 21:44	19.65	6/23/2022 0:17	6.13
6/23/2022 20:58	37.92	6/23/2022 21:45	19.67	6/23/2022 0:18	6.11
6/23/2022 20:59	37.92	6/23/2022 21:46	19.67	6/23/2022 0:19	6.14
6/23/2022 21:00	37.92	6/23/2022 21:47	19.65	6/23/2022 0:20	6.13
6/23/2022 21:01	37.87	6/23/2022 21:48	19.66	6/23/2022 0:21	6.14
6/23/2022 21:02	37.88	6/23/2022 21:49	19.66	6/23/2022 0:22	6.09
6/23/2022 21:03	37.90	6/23/2022 21:50	19.65	6/23/2022 0:23	6.14
6/23/2022 21:04	37.87	6/23/2022 21:51	19.66	6/23/2022 0:24	6.13
6/23/2022 21:05	37.88	6/23/2022 21:52	19.67	6/23/2022 0:25	6.13
6/23/2022 21:06	37.84	6/23/2022 21:53	19.67	6/23/2022 0:26	6.10
6/23/2022 21:07	37.86	6/23/2022 21:54	19.66	6/23/2022 0:27	6.14
6/23/2022 21:08	37.85	6/23/2022 21:55	19.65	6/23/2022 0:28	6.11
6/23/2022 21:09	37.83	6/23/2022 21:56	19.69	6/23/2022 0:29	6.10
6/23/2022 21:10	37.84	6/23/2022 21:57	19.66	6/23/2022 0:30	6.11
6/23/2022 21:11	37.86	6/23/2022 21:58	19.66	6/23/2022 0:31	6.11
6/23/2022 21:12	37.84	6/23/2022 21:59	19.67	6/23/2022 0:32	6.12
6/23/2022 21:13	37.82	6/23/2022 22:00	19.65	6/23/2022 0:33	6.10
6/23/2022 21:14	37.82	6/23/2022 22:01	19.66	6/23/2022 0:34	6.15
6/23/2022 21:15	37.83	6/23/2022 22:02	19.64	6/23/2022 0:35	6.14
6/23/2022 21:16	37.82	6/23/2022 22:03	19.69	6/23/2022 0:36	6.13
6/23/2022 21:17	37.81	6/23/2022 22:04	19.67	6/23/2022 0:37	6.09
6/23/2022 21:18	37.81	6/23/2022 22:05	19.64	6/23/2022 0:38	6.13
6/23/2022 21:19	37.78	6/23/2022 22:06	19.69	6/23/2022 0:39	6.11
6/23/2022 21:20	37.78	6/23/2022 22:07	19.65	6/23/2022 0:40	6.11
6/23/2022 21:21	37.80	6/23/2022 22:08	19.65	6/23/2022 0:41	8.43
6/23/2022 21:22	37.79	6/23/2022 22:09	19.65	6/23/2022 0:42	8.91
6/23/2022 21:23	37.77	6/23/2022 22:10	19.67	6/23/2022 0:43	6.71
6/23/2022 21:24	37.77	6/23/2022 22:11	19.64	6/23/2022 0:44	6.19
6/23/2022 21:25	37.73	6/23/2022 22:12	19.66	6/23/2022 0:45	6.15
6/23/2022 21:26	37.77	6/23/2022 22:13	19.66	6/23/2022 0:46	6.12
6/23/2022 21:27	37.76	6/23/2022 22:14	19.67	6/23/2022 0:47	6.16
6/23/2022 21:28	37.80	6/23/2022 22:15	19.64	6/23/2022 0:48	6.13
6/23/2022 21:29	37.78	6/23/2022 22:16	19.65	6/23/2022 0:49	6.13
6/23/2022 21:30	37.80	6/23/2022 22:17	19.66	6/23/2022 0:50	6.13

6/23/2022 21:31	37.80	6/23/2022 22:18	19.66	6/23/2022 0:51	6.13
6/23/2022 21:32	37.79	6/23/2022 22:19	19.65	6/23/2022 0:52	6.13
6/23/2022 21:33	37.77	6/23/2022 22:20	19.67	6/23/2022 0:53	6.11
6/23/2022 21:34	37.79	6/23/2022 22:21	19.69	6/23/2022 0:54	7.02
6/23/2022 21:35	37.75	6/23/2022 22:22	19.65	6/23/2022 0:55	8.80
6/23/2022 21:36	37.75	6/23/2022 22:23	19.66	6/23/2022 0:56	8.65
6/23/2022 21:37	37.76	6/23/2022 22:24	19.64	6/23/2022 0:57	6.31
6/23/2022 21:38	37.76	6/23/2022 22:25	19.64	6/23/2022 0:58	6.19
6/23/2022 21:39	37.75	6/23/2022 22:26	19.67	6/23/2022 0:59	6.18
6/23/2022 21:40	37.75	6/23/2022 22:27	19.69	6/23/2022 1:00	6.16
6/23/2022 21:41	37.75	6/23/2022 22:28	19.67	6/23/2022 1:01	6.16
6/23/2022 21:42	37.72	6/23/2022 22:29	19.65	6/23/2022 1:02	6.16
6/23/2022 21:43	37.72	6/23/2022 22:30	19.65	6/23/2022 1:03	6.13
6/23/2022 21:44	37.70	6/23/2022 22:31	19.65	6/23/2022 1:04	6.11
6/23/2022 21:45	37.70	6/23/2022 22:32	19.68	6/23/2022 1:05	6.14
6/23/2022 21:46	37.68	6/23/2022 22:33	19.66	6/23/2022 1:06	6.14
6/23/2022 21:47	37.72	6/23/2022 22:34	19.66	6/23/2022 1:07	6.12
6/23/2022 21:48	37.67	6/23/2022 22:35	19.65	6/23/2022 1:08	6.14
6/23/2022 21:49	37.68	6/23/2022 22:36	19.62	6/23/2022 1:09	6.11
6/23/2022 21:50	37.67	6/23/2022 22:37	19.64	6/23/2022 1:10	6.13
6/23/2022 21:51	37.62	6/23/2022 22:38	19.66	6/23/2022 1:11	6.14
6/23/2022 21:52	37.67	6/23/2022 22:39	19.63	6/23/2022 1:12	6.15
6/23/2022 21:53	37.67	6/23/2022 22:40	19.65	6/23/2022 1:13	6.12
6/23/2022 21:54	37.64	6/23/2022 22:41	19.67	6/23/2022 1:14	6.13
6/23/2022 21:55	37.64	6/23/2022 22:42	19.65	6/23/2022 1:15	6.11
6/23/2022 21:56	37.62	6/23/2022 22:43	19.67	6/23/2022 1:16	6.11
6/23/2022 21:57	37.62	6/23/2022 22:44	19.66	6/23/2022 1:17	6.13
6/23/2022 21:58	37.61	6/23/2022 22:45	19.67	6/23/2022 1:18	6.10
6/23/2022 21:59	37.62	6/23/2022 22:46	19.66	6/23/2022 1:19	6.13
6/23/2022 22:00	37.61	6/23/2022 22:47	19.64	6/23/2022 1:20	8.74
6/23/2022 22:01	37.64	6/23/2022 22:48	19.65	6/23/2022 1:21	7.88
6/23/2022 22:02	37.60	6/23/2022 22:49	19.65	6/23/2022 1:22	6.22
6/23/2022 22:03	37.65	6/23/2022 22:50	19.63	6/23/2022 1:23	6.16
6/23/2022 22:04	37.62	6/23/2022 22:51	19.66	6/23/2022 1:24	6.17
6/23/2022 22:05	37.64	6/23/2022 22:52	19.66	6/23/2022 1:25	6.15
6/23/2022 22:06	37.64	6/23/2022 22:53	19.65	6/23/2022 1:26	6.13
6/23/2022 22:07	37.64	6/23/2022 22:54	19.65	6/23/2022 1:27	6.14
6/23/2022 22:08	37.61	6/23/2022 22:55	19.64	6/23/2022 1:28	6.14
6/23/2022 22:09	37.62	6/23/2022 22:56	19.65	6/23/2022 1:29	6.14
6/23/2022 22:10	37.57	6/23/2022 22:57	19.65	6/23/2022 1:30	6.13
6/23/2022 22:11	37.62	6/23/2022 22:58	19.65	6/23/2022 1:31	6.14
6/23/2022 22:12	37.57	6/23/2022 22:59	19.65	6/23/2022 1:32	6.12
6/23/2022 22:13	37.55	6/23/2022 23:00	19.63	6/23/2022 1:33	6.14
6/23/2022 22:14	37.56	6/23/2022 23:01	19.68	6/23/2022 1:34	6.15
6/23/2022 22:15	37.55	6/23/2022 23:02	19.65	6/23/2022 1:35	8.61
6/23/2022 22:16	37.54	6/23/2022 23:03	19.65	6/23/2022 1:36	8.97
6/23/2022 22:17	37.56	6/23/2022 23:04	19.64	6/23/2022 1:37	6.53
6/23/2022 22:18	37.53	6/23/2022 23:05	19.68	6/23/2022 1:38	6.17
6/23/2022 22:19	37.54	6/23/2022 23:06	19.65	6/23/2022 1:39	6.18
6/23/2022 22:20	37.55	6/23/2022 23:07	19.67	6/23/2022 1:40	6.19
6/23/2022 22:21	37.51	6/23/2022 23:08	19.64	6/23/2022 1:41	6.18
6/23/2022 22:22	37.52	6/23/2022 23:09	19.65	6/23/2022 1:42	6.12
6/23/2022 22:23	37.52	6/23/2022 23:10	19.64	6/23/2022 1:43	6.15
6/23/2022 22:24	37.55	6/23/2022 23:11	19.64	6/23/2022 1:44	6.13
6/23/2022 22:25	37.47	6/23/2022 23:12	19.65	6/23/2022 1:45	6.13
6/23/2022 22:26	37.56	6/23/2022 23:13	19.67	6/23/2022 1:46	6.15
6/23/2022 22:27	37.50	6/23/2022 23:14	19.66	6/23/2022 1:47	7.62
6/23/2022 22:28	37.50	6/23/2022 23:15	19.66	6/23/2022 1:48	8.93
6/23/2022 22:29	37.53	6/23/2022 23:16	19.65	6/23/2022 1:49	7.19
6/23/2022 22:30	37.51	6/23/2022 23:17	19.68	6/23/2022 1:50	6.24
6/23/2022 22:31	37.47	6/23/2022 23:18	19.65	6/23/2022 1:51	6.19
6/23/2022 22:32	37.46	6/23/2022 23:19	19.66	6/23/2022 1:52	6.18
6/23/2022 22:33	37.44	6/23/2022 23:20	19.64	6/23/2022 1:53	6.15
6/23/2022 22:34	37.45	6/23/2022 23:21	19.66	6/23/2022 1:54	6.17
6/23/2022 22:35	37.48	6/23/2022 23:22	19.66	6/23/2022 1:55	6.13
6/23/2022 22:36	37.47	6/23/2022 23:23	19.66	6/23/2022 1:56	6.16
6/23/2022 22:37	37.46	6/23/2022 23:24	19.66	6/23/2022 1:57	6.13
6/23/2022 22:38	37.47	6/23/2022 23:25	19.66	6/23/2022 1:58	6.12
6/23/2022 22:39	37.42	6/23/2022 23:26	19.65	6/23/2022 1:59	6.15
6/23/2022 22:40	37.45	6/23/2022 23:27	19.65	6/23/2022 2:00	6.14
6/23/2022 22:41	37.43	6/23/2022 23:28	19.65	6/23/2022 2:01	6.13
6/23/2022 22:42	37.45	6/23/2022 23:29	19.64	6/23/2022 2:02	6.14
6/23/2022 22:43	37.69	6/23/2022 23:30	19.66	6/23/2022 2:03	6.12
6/23/2022 22:44	38.03	6/23/2022 23:31	19.65	6/23/2022 2:04	6.12
6/23/2022 22:45	37.71	6/23/2022 23:32	19.63	6/23/2022 2:05	6.12
6/23/2022 22:46	38.00	6/23/2022 23:33	19.66	6/23/2022 2:06	6.14
6/23/2022 22:47	37.93	6/23/2022 23:34	19.65	6/23/2022 2:07	6.13
6/23/2022 22:48	37.71	6/23/2022 23:35	19.63	6/23/2022 2:08	6.15
6/23/2022 22:49	37.63	6/23/2022 23:36	19.65	6/23/2022 2:09	6.13
6/23/2022 22:50	37.62	6/23/2022 23:37	19.67	6/23/2022 2:10	6.13
6/23/2022 22:51	37.59	6/23/2022 23:38	19.64	6/23/2022 2:11	6.11
6/23/2022 22:52	37.58	6/23/2022 23:39	19.65	6/23/2022 2:12	6.16
6/23/2022 22:53	37.53	6/23/2022 23:40	19.65	6/23/2022 2:13	6.14
6/23/2022 22:54	38.02	6/23/2022 23:41	19.63	6/23/2022 2:14	6.12
6/23/2022 22:55	37.70	6/23/2022 23:42	19.67	6/23/2022 2:15	6.14
6/23/2022 22:56	37.62	6/23/2022 23:43	19.65	6/23/2022 2:16	6.14
6/23/2022 22:57	37.59	6/23/2022 23:44	19.68	6/23/2022 2:17	6.12
6/23/2022 22:58	37.54	6/23/2022 23:45	19.66	6/23/2022 2:18	6.13

6/23/2022 22:59	37.56	6/23/2022 23:46	19.67	6/23/2022 2:19	6.12
6/23/2022 23:00	37.53	6/23/2022 23:47	19.63	6/23/2022 2:20	6.14
6/23/2022 23:01	38.02	6/23/2022 23:48	19.64	6/23/2022 2:21	6.13
6/23/2022 23:02	38.02	6/23/2022 23:49	19.65	6/23/2022 2:22	6.11
6/23/2022 23:03	37.74	6/23/2022 23:50	19.67	6/23/2022 2:23	6.15
6/23/2022 23:04	38.03	6/23/2022 23:51	19.66	6/23/2022 2:24	6.13
6/23/2022 23:05	37.97	6/23/2022 23:52	19.65	6/23/2022 2:25	6.13
6/23/2022 23:06	37.74	6/23/2022 23:53	19.65	6/23/2022 2:26	6.13
6/23/2022 23:07	37.70	6/23/2022 23:54	19.65	6/23/2022 2:27	6.13
6/23/2022 23:08	37.65	6/23/2022 23:55	19.64	6/23/2022 2:28	6.11
6/23/2022 23:09	37.59	6/23/2022 23:56	19.64	6/23/2022 2:29	6.13
6/23/2022 23:10	37.59	6/23/2022 23:57	19.66	6/23/2022 2:30	6.14
6/23/2022 23:11	37.59	6/23/2022 23:58	19.66	6/23/2022 2:31	6.15
6/23/2022 23:12	37.51	6/23/2022 23:59	19.64	6/23/2022 2:32	6.13
6/23/2022 23:13	37.52	6/24/2022 0:00	19.65	6/23/2022 2:33	6.10
6/23/2022 23:14	37.52	6/24/2022 0:01	19.64	6/23/2022 2:34	6.10
6/23/2022 23:15	37.49	6/24/2022 0:02	19.65	6/23/2022 2:35	6.13
6/23/2022 23:16	37.45	6/24/2022 0:03	19.66	6/23/2022 2:36	6.14
6/23/2022 23:17	37.48	6/24/2022 0:04	19.67	6/23/2022 2:37	6.09
6/23/2022 23:18	37.43	6/24/2022 0:05	19.65	6/23/2022 2:38	6.14
6/23/2022 23:19	37.48	6/24/2022 0:06	19.64	6/23/2022 2:39	6.10
6/23/2022 23:20	37.43	6/24/2022 0:07	19.65	6/23/2022 2:40	6.10
6/23/2022 23:21	37.45	6/24/2022 0:08	19.65	6/23/2022 2:41	6.12
6/23/2022 23:22	37.45	6/24/2022 0:09	19.61	6/23/2022 2:42	6.11
6/23/2022 23:23	37.42	6/24/2022 0:10	19.66	6/23/2022 2:43	6.15
6/23/2022 23:24	37.40	6/24/2022 0:11	19.66	6/23/2022 2:44	6.14
6/23/2022 23:25	37.43	6/24/2022 0:12	19.65	6/23/2022 2:45	6.13
6/23/2022 23:26	37.40	6/24/2022 0:13	19.66	6/23/2022 2:46	6.13
6/23/2022 23:27	37.39	6/24/2022 0:14	19.66	6/23/2022 2:47	6.15
6/23/2022 23:28	37.38	6/24/2022 0:15	19.66	6/23/2022 2:48	6.13
6/23/2022 23:29	37.37	6/24/2022 0:16	19.66	6/23/2022 2:49	6.13
6/23/2022 23:30	37.36	6/24/2022 0:17	19.67	6/23/2022 2:50	6.15
6/23/2022 23:31	37.36	6/24/2022 0:18	19.66	6/23/2022 2:51	6.11
6/23/2022 23:32	37.36	6/24/2022 0:19	19.65	6/23/2022 2:52	6.12
6/23/2022 23:33	37.34	6/24/2022 0:20	19.63	6/23/2022 2:53	6.12
6/23/2022 23:34	37.36	6/24/2022 0:21	19.66	6/23/2022 2:54	6.10
6/23/2022 23:35	37.31	6/24/2022 0:22	19.65	6/23/2022 2:55	6.13
6/23/2022 23:36	37.34	6/24/2022 0:23	19.65	6/23/2022 2:56	6.12
6/23/2022 23:37	37.32	6/24/2022 0:24	19.65	6/23/2022 2:57	6.10
6/23/2022 23:38	37.31	6/24/2022 0:25	19.63	6/23/2022 2:58	6.13
6/23/2022 23:39	37.30	6/24/2022 0:26	19.66	6/23/2022 2:59	6.14
6/23/2022 23:40	38.05	6/24/2022 0:27	19.67	6/23/2022 3:00	6.11
6/23/2022 23:41	37.51	6/24/2022 0:28	19.63	6/23/2022 3:01	6.13
6/23/2022 23:42	37.38	6/24/2022 0:29	19.67	6/23/2022 3:02	6.13
6/23/2022 23:43	37.36	6/24/2022 0:30	19.64	6/23/2022 3:03	6.13
6/23/2022 23:44	37.37	6/24/2022 0:31	19.65	6/23/2022 3:04	6.13
6/23/2022 23:45	37.36	6/24/2022 0:32	19.65	6/23/2022 3:05	6.11
6/23/2022 23:46	37.35	6/24/2022 0:33	19.68	6/23/2022 3:06	6.14
6/23/2022 23:47	37.32	6/24/2022 0:34	19.67	6/23/2022 3:07	6.13
6/23/2022 23:48	37.30	6/24/2022 0:35	19.65	6/23/2022 3:08	6.14
6/23/2022 23:49	37.31	6/24/2022 0:36	19.64	6/23/2022 3:09	6.13
6/23/2022 23:50	37.29	6/24/2022 0:37	19.65	6/23/2022 3:10	6.08
6/23/2022 23:51	37.27	6/24/2022 0:38	19.65	6/23/2022 3:11	6.12
6/23/2022 23:52	37.26	6/24/2022 0:39	19.65	6/23/2022 3:12	6.12
6/23/2022 23:53	37.26	6/24/2022 0:40	19.65	6/23/2022 3:13	6.12
6/23/2022 23:54	37.28	6/24/2022 0:41	19.66	6/23/2022 3:14	6.13
6/23/2022 23:55	37.26	6/24/2022 0:42	19.65	6/23/2022 3:15	6.11
6/23/2022 23:56	37.28	6/24/2022 0:43	19.68	6/23/2022 3:16	6.10
6/23/2022 23:57	37.22	6/24/2022 0:44	19.65	6/23/2022 3:17	6.11
6/23/2022 23:58	37.26	6/24/2022 0:45	19.66	6/23/2022 3:18	6.11
6/23/2022 23:59	37.22	6/24/2022 0:46	19.67	6/23/2022 3:19	6.13
6/24/2022 0:00	37.21	6/24/2022 0:47	19.65	6/23/2022 3:20	6.14
6/24/2022 0:01	37.21	6/24/2022 0:48	19.64	6/23/2022 3:21	6.14
6/24/2022 0:02	37.22	6/24/2022 0:49	19.66	6/23/2022 3:22	6.13
6/24/2022 0:03	37.21	6/24/2022 0:50	19.65	6/23/2022 3:23	6.15
6/24/2022 0:04	37.21	6/24/2022 0:51	19.67	6/23/2022 3:24	6.11
6/24/2022 0:05	37.20	6/24/2022 0:52	19.65	6/23/2022 3:25	6.12
6/24/2022 0:06	37.16	6/24/2022 0:53	19.65	6/23/2022 3:26	6.13
6/24/2022 0:07	37.20	6/24/2022 0:54	19.64	6/23/2022 3:27	6.09
6/24/2022 0:08	37.20	6/24/2022 0:55	19.64	6/23/2022 3:28	6.13
6/24/2022 0:09	37.22	6/24/2022 0:56	19.65	6/23/2022 3:29	6.12
6/24/2022 0:10	37.21	6/24/2022 0:57	19.66	6/23/2022 3:30	6.10
6/24/2022 0:11	37.21	6/24/2022 0:58	19.65	6/23/2022 3:31	6.11
6/24/2022 0:12	37.22	6/24/2022 0:59	19.63	6/23/2022 3:32	6.10
6/24/2022 0:13	37.22	6/24/2022 1:00	19.66	6/23/2022 3:33	6.12
6/24/2022 0:14	37.20	6/24/2022 1:01	19.66	6/23/2022 3:34	6.13
6/24/2022 0:15	37.23	6/24/2022 1:02	19.61	6/23/2022 3:35	6.14
6/24/2022 0:16	37.19	6/24/2022 1:03	19.66	6/23/2022 3:36	6.14
6/24/2022 0:17	37.16	6/24/2022 1:04	19.65	6/23/2022 3:37	6.10
6/24/2022 0:18	37.21	6/24/2022 1:05	19.65	6/23/2022 3:38	6.12
6/24/2022 0:19	37.17	6/24/2022 1:06	19.68	6/23/2022 3:39	6.14
6/24/2022 0:20	37.18	6/24/2022 1:07	19.67	6/23/2022 3:40	6.14
6/24/2022 0:21	37.18	6/24/2022 1:08	19.64	6/23/2022 3:41	6.11
6/24/2022 0:22	37.14	6/24/2022 1:09	19.65	6/23/2022 3:42	6.08
6/24/2022 0:23	37.16	6/24/2022 1:10	19.66	6/23/2022 3:43	6.09
6/24/2022 0:24	37.14	6/24/2022 1:11	19.66	6/23/2022 3:44	6.12
6/24/2022 0:25	37.16	6/24/2022 1:12	19.66	6/23/2022 3:45	6.08
6/24/2022 0:26	37.13	6/24/2022 1:13	19.65	6/23/2022 3:46	6.12

6/24/2022 0:27	37.14	6/24/2022 1:14	19.68	6/23/2022 3:47	6.13
6/24/2022 0:28	37.11	6/24/2022 1:15	19.63	6/23/2022 3:48	6.10
6/24/2022 0:29	37.16	6/24/2022 1:16	19.66	6/23/2022 3:49	6.12
6/24/2022 0:30	37.12	6/24/2022 1:17	19.65	6/23/2022 3:50	6.13
6/24/2022 0:31	37.11	6/24/2022 1:18	19.66	6/23/2022 3:51	6.10
6/24/2022 0:32	37.09	6/24/2022 1:19	19.66	6/23/2022 3:52	6.12
6/24/2022 0:33	37.22	6/24/2022 1:20	19.63	6/23/2022 3:53	6.14
6/24/2022 0:34	37.63	6/24/2022 1:21	19.66	6/23/2022 3:54	6.10
6/24/2022 0:35	37.24	6/24/2022 1:22	19.67	6/23/2022 3:55	6.11
6/24/2022 0:36	37.19	6/24/2022 1:23	19.64	6/23/2022 3:56	6.13
6/24/2022 0:37	37.19	6/24/2022 1:24	19.67	6/23/2022 3:57	6.11
6/24/2022 0:38	37.17	6/24/2022 1:25	19.66	6/23/2022 3:58	6.09
6/24/2022 0:39	37.13	6/24/2022 1:26	19.67	6/23/2022 3:59	6.10
6/24/2022 0:40	37.12	6/24/2022 1:27	19.67	6/23/2022 4:00	6.13
6/24/2022 0:41	37.15	6/24/2022 1:28	19.67	6/23/2022 4:01	6.14
6/24/2022 0:42	37.16	6/24/2022 1:29	19.66	6/23/2022 4:02	6.11
6/24/2022 0:43	37.19	6/24/2022 1:30	19.67	6/23/2022 4:03	6.13
6/24/2022 0:44	37.17	6/24/2022 1:31	19.65	6/23/2022 4:04	6.11
6/24/2022 0:45	37.18	6/24/2022 1:32	19.67	6/23/2022 4:05	6.12
6/24/2022 0:46	37.21	6/24/2022 1:33	19.66	6/23/2022 4:06	6.11
6/24/2022 0:47	37.18	6/24/2022 1:34	19.65	6/23/2022 4:07	6.12
6/24/2022 0:48	37.16	6/24/2022 1:35	19.64	6/23/2022 4:08	6.15
6/24/2022 0:49	37.15	6/24/2022 1:36	19.65	6/23/2022 4:09	6.10
6/24/2022 0:50	37.17	6/24/2022 1:37	19.66	6/23/2022 4:10	6.10
6/24/2022 0:51	37.18	6/24/2022 1:38	19.66	6/23/2022 4:11	6.12
6/24/2022 0:52	37.20	6/24/2022 1:39	19.65	6/23/2022 4:12	6.15
6/24/2022 0:53	37.21	6/24/2022 1:40	19.66	6/23/2022 4:13	6.11
6/24/2022 0:54	37.23	6/24/2022 1:41	19.65	6/23/2022 4:14	6.11
6/24/2022 0:55	37.26	6/24/2022 1:42	19.66	6/23/2022 4:15	6.13
6/24/2022 0:56	37.24	6/24/2022 1:43	19.66	6/23/2022 4:16	6.09
6/24/2022 0:57	37.31	6/24/2022 1:44	19.64	6/23/2022 4:17	6.10
6/24/2022 0:58	37.27	6/24/2022 1:45	19.66	6/23/2022 4:18	6.13
6/24/2022 0:59	37.25	6/24/2022 1:46	19.66	6/23/2022 4:19	6.11
6/24/2022 1:00	37.31	6/24/2022 1:47	19.66	6/23/2022 4:20	6.12
6/24/2022 1:01	37.27	6/24/2022 1:48	19.65	6/23/2022 4:21	6.11
6/24/2022 1:02	37.24	6/24/2022 1:49	19.66	6/23/2022 4:22	6.09
6/24/2022 1:03	37.23	6/24/2022 1:50	19.65	6/23/2022 4:23	6.14
6/24/2022 1:04	37.22	6/24/2022 1:51	19.66	6/23/2022 4:24	6.09
6/24/2022 1:05	37.22	6/24/2022 1:52	19.65	6/23/2022 4:25	6.10
6/24/2022 1:06	37.15	6/24/2022 1:53	19.63	6/23/2022 4:26	6.09
6/24/2022 1:07	37.21	6/24/2022 1:54	19.66	6/23/2022 4:27	6.14
6/24/2022 1:08	37.20	6/24/2022 1:55	19.66	6/23/2022 4:28	6.11
6/24/2022 1:09	37.17	6/24/2022 1:56	19.66	6/23/2022 4:29	6.11
6/24/2022 1:10	37.18	6/24/2022 1:57	19.63	6/23/2022 4:30	6.10
6/24/2022 1:11	37.18	6/24/2022 1:58	19.67	6/23/2022 4:31	6.09
6/24/2022 1:12	37.20	6/24/2022 1:59	19.67	6/23/2022 4:32	6.12
6/24/2022 1:13	37.17	6/24/2022 2:00	19.64	6/23/2022 4:33	6.13
6/24/2022 1:14	37.16	6/24/2022 2:01	19.70	6/23/2022 4:34	6.08
6/24/2022 1:15	37.16	6/24/2022 2:02	19.64	6/23/2022 4:35	6.09
6/24/2022 1:16	37.16	6/24/2022 2:03	19.67	6/23/2022 4:36	6.09
6/24/2022 1:17	37.16	6/24/2022 2:04	19.68	6/23/2022 4:37	6.12
6/24/2022 1:18	37.14	6/24/2022 2:05	19.65	6/23/2022 4:38	6.13
6/24/2022 1:19	37.13	6/24/2022 2:06	19.65	6/23/2022 4:39	6.11
6/24/2022 1:20	37.12	6/24/2022 2:07	19.68	6/23/2022 4:40	6.12
6/24/2022 1:21	37.12	6/24/2022 2:08	19.67	6/23/2022 4:41	6.13
6/24/2022 1:22	37.11	6/24/2022 2:09	19.67	6/23/2022 4:42	6.12
6/24/2022 1:23	37.13	6/24/2022 2:10	19.65	6/23/2022 4:43	6.13
6/24/2022 1:24	37.11	6/24/2022 2:11	19.65	6/23/2022 4:44	6.11
6/24/2022 1:25	37.13	6/24/2022 2:12	19.65	6/23/2022 4:45	6.13
6/24/2022 1:26	37.09	6/24/2022 2:13	19.70	6/23/2022 4:46	6.11
6/24/2022 1:27	37.11	6/24/2022 2:14	19.66	6/23/2022 4:47	6.10
6/24/2022 1:28	37.08	6/24/2022 2:15	19.66	6/23/2022 4:48	6.12
6/24/2022 1:29	37.09	6/24/2022 2:16	19.65	6/23/2022 4:49	6.11
6/24/2022 1:30	37.05	6/24/2022 2:17	19.66	6/23/2022 4:50	6.12
6/24/2022 1:31	37.09	6/24/2022 2:18	19.68	6/23/2022 4:51	6.11
6/24/2022 1:32	37.10	6/24/2022 2:19	19.68	6/23/2022 4:52	6.15
6/24/2022 1:33	37.08	6/24/2022 2:20	19.65	6/23/2022 4:53	6.13
6/24/2022 1:34	37.07	6/24/2022 2:21	19.68	6/23/2022 4:54	6.11
6/24/2022 1:35	37.07	6/24/2022 2:22	19.67	6/23/2022 4:55	6.09
6/24/2022 1:36	37.05	6/24/2022 2:23	19.68	6/23/2022 4:56	6.12
6/24/2022 1:37	37.05	6/24/2022 2:24	19.67	6/23/2022 4:57	6.10
6/24/2022 1:38	37.04	6/24/2022 2:25	19.67	6/23/2022 4:58	6.13
6/24/2022 1:39	37.04	6/24/2022 2:26	19.64	6/23/2022 4:59	6.09
6/24/2022 1:40	37.06	6/24/2022 2:27	19.66	6/23/2022 5:00	6.11
6/24/2022 1:41	37.06	6/24/2022 2:28	19.66	6/23/2022 5:01	6.10
6/24/2022 1:42	37.07	6/24/2022 2:29	19.66	6/23/2022 5:02	6.10
6/24/2022 1:43	37.09	6/24/2022 2:30	19.66	6/23/2022 5:03	6.09
6/24/2022 1:44	37.06	6/24/2022 2:31	19.67	6/23/2022 5:04	6.12
6/24/2022 1:45	37.02	6/24/2022 2:32	19.70	6/23/2022 5:05	6.12
6/24/2022 1:46	37.02	6/24/2022 2:33	19.70	6/23/2022 5:06	6.09
6/24/2022 1:47	37.05	6/24/2022 2:34	19.68	6/23/2022 5:07	6.09
6/24/2022 1:48	37.05	6/24/2022 2:35	19.65	6/23/2022 5:08	6.14
6/24/2022 1:49	37.03	6/24/2022 2:36	19.67	6/23/2022 5:09	6.10
6/24/2022 1:50	37.03	6/24/2022 2:37	19.65	6/23/2022 5:10	6.08
6/24/2022 1:51	37.02	6/24/2022 2:38	19.65	6/23/2022 5:11	6.13
6/24/2022 1:52	37.01	6/24/2022 2:39	19.66	6/23/2022 5:12	6.13
6/24/2022 1:53	37.00	6/24/2022 2:40	19.67	6/23/2022 5:13	6.11
6/24/2022 1:54	37.00	6/24/2022 2:41	19.66	6/23/2022 5:14	6.10

6/24/2022 1:55	37.01	6/24/2022 2:42	19.66	6/23/2022 5:15	6.11
6/24/2022 1:56	37.02	6/24/2022 2:43	19.66	6/23/2022 5:16	6.11
6/24/2022 1:57	37.02	6/24/2022 2:44	19.67	6/23/2022 5:17	6.13
6/24/2022 1:58	37.01	6/24/2022 2:45	19.69	6/23/2022 5:18	6.12
6/24/2022 1:59	37.01	6/24/2022 2:46	19.67	6/23/2022 5:19	6.13
6/24/2022 2:00	37.01	6/24/2022 2:47	19.67	6/23/2022 5:20	6.11
6/24/2022 2:01	36.99	6/24/2022 2:48	19.65	6/23/2022 5:21	6.08
6/24/2022 2:02	36.97	6/24/2022 2:49	19.66	6/23/2022 5:22	6.10
6/24/2022 2:03	36.97	6/24/2022 2:50	19.66	6/23/2022 5:23	6.09
6/24/2022 2:04	36.95	6/24/2022 2:51	19.67	6/23/2022 5:24	6.10
6/24/2022 2:05	36.97	6/24/2022 2:52	19.66	6/23/2022 5:25	6.12
6/24/2022 2:06	36.97	6/24/2022 2:53	19.67	6/23/2022 5:26	6.11
6/24/2022 2:07	36.98	6/24/2022 2:54	19.68	6/23/2022 5:27	6.13
6/24/2022 2:08	37.01	6/24/2022 2:55	19.64	6/23/2022 5:28	6.08
6/24/2022 2:09	37.01	6/24/2022 2:56	19.71	6/23/2022 5:29	6.13
6/24/2022 2:10	37.06	6/24/2022 2:57	19.67	6/23/2022 5:30	6.08
6/24/2022 2:11	37.01	6/24/2022 2:58	19.68	6/23/2022 5:31	6.13
6/24/2022 2:12	37.05	6/24/2022 2:59	19.69	6/23/2022 5:32	6.10
6/24/2022 2:13	37.07	6/24/2022 3:00	19.69	6/23/2022 5:33	6.11
6/24/2022 2:14	37.06	6/24/2022 3:01	19.66	6/23/2022 5:34	6.09
6/24/2022 2:15	37.05	6/24/2022 3:02	19.64	6/23/2022 5:35	6.12
6/24/2022 2:16	37.10	6/24/2022 3:03	19.64	6/23/2022 5:36	6.11
6/24/2022 2:17	37.06	6/24/2022 3:04	19.70	6/23/2022 5:37	6.10
6/24/2022 2:18	37.09	6/24/2022 3:05	19.66	6/23/2022 5:38	6.12
6/24/2022 2:19	37.10	6/24/2022 3:06	19.66	6/23/2022 5:39	6.11
6/24/2022 2:20	37.09	6/24/2022 3:07	19.65	6/23/2022 5:40	6.12
6/24/2022 2:21	37.07	6/24/2022 3:08	19.68	6/23/2022 5:41	6.10
6/24/2022 2:22	37.07	6/24/2022 3:09	19.70	6/23/2022 5:42	6.13
6/24/2022 2:23	37.09	6/24/2022 3:10	19.68	6/23/2022 5:43	6.12
6/24/2022 2:24	37.10	6/24/2022 3:11	19.65	6/23/2022 5:44	6.12
6/24/2022 2:25	37.12	6/24/2022 3:12	19.70	6/23/2022 5:45	6.12
6/24/2022 2:26	37.10	6/24/2022 3:13	19.68	6/23/2022 5:46	6.13
6/24/2022 2:27	37.09	6/24/2022 3:14	19.65	6/23/2022 5:47	6.11
6/24/2022 2:28	37.05	6/24/2022 3:15	19.68	6/23/2022 5:48	6.10
6/24/2022 2:29	37.09	6/24/2022 3:16	19.66	6/23/2022 5:49	6.12
6/24/2022 2:30	37.04	6/24/2022 3:17	19.68	6/23/2022 5:50	6.15
6/24/2022 2:31	37.03	6/24/2022 3:18	19.66	6/23/2022 5:51	6.16
6/24/2022 2:32	37.02	6/24/2022 3:19	19.67	6/23/2022 5:52	6.11
6/24/2022 2:33	36.99	6/24/2022 3:20	19.67	6/23/2022 5:53	6.13
6/24/2022 2:34	37.01	6/24/2022 3:21	19.69	6/23/2022 5:54	6.10
6/24/2022 2:35	37.02	6/24/2022 3:22	19.66	6/23/2022 5:55	6.10
6/24/2022 2:36	36.98	6/24/2022 3:23	19.66	6/23/2022 5:56	6.13
6/24/2022 2:37	36.97	6/24/2022 3:24	19.67	6/23/2022 5:57	6.11
6/24/2022 2:38	36.95	6/24/2022 3:25	19.69	6/23/2022 5:58	6.13
6/24/2022 2:39	36.93	6/24/2022 3:26	19.67	6/23/2022 5:59	6.10
6/24/2022 2:40	36.92	6/24/2022 3:27	19.65	6/23/2022 6:00	6.10
6/24/2022 2:41	36.96	6/24/2022 3:28	19.66	6/23/2022 6:01	6.11
6/24/2022 2:42	36.95	6/24/2022 3:29	19.67	6/23/2022 6:02	6.09
6/24/2022 2:43	36.92	6/24/2022 3:30	19.68	6/23/2022 6:03	6.10
6/24/2022 2:44	36.89	6/24/2022 3:31	19.68	6/23/2022 6:04	6.08
6/24/2022 2:45	36.88	6/24/2022 3:32	19.68	6/23/2022 6:05	6.09
6/24/2022 2:46	36.89	6/24/2022 3:33	19.68	6/23/2022 6:06	6.12
6/24/2022 2:47	36.91	6/24/2022 3:34	19.67	6/23/2022 6:07	6.10
6/24/2022 2:48	36.88	6/24/2022 3:35	19.66	6/23/2022 6:08	6.12
6/24/2022 2:49	36.88	6/24/2022 3:36	19.69	6/23/2022 6:09	6.13
6/24/2022 2:50	36.88	6/24/2022 3:37	19.68	6/23/2022 6:10	6.12
6/24/2022 2:51	36.87	6/24/2022 3:38	19.65	6/23/2022 6:11	6.10
6/24/2022 2:52	36.87	6/24/2022 3:39	19.68	6/23/2022 6:12	6.12
6/24/2022 2:53	36.84	6/24/2022 3:40	19.67	6/23/2022 6:13	6.11
6/24/2022 2:54	36.86	6/24/2022 3:41	19.69	6/23/2022 6:14	6.11
6/24/2022 2:55	36.84	6/24/2022 3:42	19.69	6/23/2022 6:15	6.10
6/24/2022 2:56	36.84	6/24/2022 3:43	19.66	6/23/2022 6:16	6.11
6/24/2022 2:57	36.81	6/24/2022 3:44	19.68	6/23/2022 6:17	6.09
6/24/2022 2:58	36.83	6/24/2022 3:45	19.66	6/23/2022 6:18	6.14
6/24/2022 2:59	36.83	6/24/2022 3:46	20.25	6/23/2022 6:19	6.11
6/24/2022 3:00	36.81	6/24/2022 3:47	20.36	6/23/2022 6:20	6.09
6/24/2022 3:01	36.82	6/24/2022 3:48	20.41	6/23/2022 6:21	6.12
6/24/2022 3:02	36.81	6/24/2022 3:49	20.45	6/23/2022 6:22	6.11
6/24/2022 3:03	36.79	6/24/2022 3:50	20.32	6/23/2022 6:23	6.11
6/24/2022 3:04	36.78	6/24/2022 3:51	19.92	6/23/2022 6:24	6.15
6/24/2022 3:05	36.78	6/24/2022 3:52	19.85	6/23/2022 6:25	6.15
6/24/2022 3:06	36.81	6/24/2022 3:53	19.84	6/23/2022 6:26	6.09
6/24/2022 3:07	36.77	6/24/2022 3:54	19.81	6/23/2022 6:27	6.11
6/24/2022 3:08	36.78	6/24/2022 3:55	19.81	6/23/2022 6:28	6.12
6/24/2022 3:09	36.79	6/24/2022 3:56	19.78	6/23/2022 6:29	6.12
6/24/2022 3:10	36.79	6/24/2022 3:57	19.77	6/23/2022 6:30	6.12
6/24/2022 3:11	36.78	6/24/2022 3:58	19.80	6/23/2022 6:31	6.08
6/24/2022 3:12	36.76	6/24/2022 3:59	19.74	6/23/2022 6:32	6.14
6/24/2022 3:13	36.73	6/24/2022 4:00	19.77	6/23/2022 6:33	6.13
6/24/2022 3:14	36.78	6/24/2022 4:01	19.74	6/23/2022 6:34	6.09
6/24/2022 3:15	36.73	6/24/2022 4:02	19.76	6/23/2022 6:35	6.08
6/24/2022 3:16	36.75	6/24/2022 4:03	19.78	6/23/2022 6:36	6.12
6/24/2022 3:17	36.75	6/24/2022 4:04	19.74	6/23/2022 6:37	6.10
6/24/2022 3:18	36.71	6/24/2022 4:05	19.74	6/23/2022 6:38	6.12
6/24/2022 3:19	36.74	6/24/2022 4:06	19.75	6/23/2022 6:39	6.13
6/24/2022 3:20	36.73	6/24/2022 4:07	19.75	6/23/2022 6:40	6.10
6/24/2022 3:21	36.72	6/24/2022 4:08	19.71	6/23/2022 6:41	6.07
6/24/2022 3:22	36.73	6/24/2022 4:09	19.75	6/23/2022 6:42	6.13

6/24/2022 3:23	36.71	6/24/2022 4:10	19.75	6/23/2022 6:43	6.12
6/24/2022 3:24	36.68	6/24/2022 4:11	19.72	6/23/2022 6:44	6.10
6/24/2022 3:25	36.71	6/24/2022 4:12	19.75	6/23/2022 6:45	6.13
6/24/2022 3:26	36.71	6/24/2022 4:13	19.76	6/23/2022 6:46	6.12
6/24/2022 3:27	36.71	6/24/2022 4:14	19.73	6/23/2022 6:47	6.10
6/24/2022 3:28	36.69	6/24/2022 4:15	19.74	6/23/2022 6:48	6.12
6/24/2022 3:29	36.72	6/24/2022 4:16	19.71	6/23/2022 6:49	6.09
6/24/2022 3:30	36.69	6/24/2022 4:17	19.74	6/23/2022 6:50	6.09
6/24/2022 3:31	36.67	6/24/2022 4:18	19.72	6/23/2022 6:51	6.11
6/24/2022 3:32	36.69	6/24/2022 4:19	19.74	6/23/2022 6:52	6.10
6/24/2022 3:33	36.66	6/24/2022 4:20	19.74	6/23/2022 6:53	6.11
6/24/2022 3:34	36.70	6/24/2022 4:21	19.70	6/23/2022 6:54	6.14
6/24/2022 3:35	36.67	6/24/2022 4:22	19.72	6/23/2022 6:55	6.08
6/24/2022 3:36	36.67	6/24/2022 4:23	19.71	6/23/2022 6:56	6.10
6/24/2022 3:37	36.68	6/24/2022 4:24	19.72	6/23/2022 6:57	6.12
6/24/2022 3:38	36.66	6/24/2022 4:25	19.72	6/23/2022 6:58	6.10
6/24/2022 3:39	36.67	6/24/2022 4:26	19.72	6/23/2022 6:59	6.12
6/24/2022 3:40	36.65	6/24/2022 4:27	19.71	6/23/2022 7:00	6.09
6/24/2022 3:41	36.64	6/24/2022 4:28	19.70	6/23/2022 7:01	6.12
6/24/2022 3:42	36.64	6/24/2022 4:29	19.72	6/23/2022 7:02	6.13
6/24/2022 3:43	36.66	6/24/2022 4:30	19.71	6/23/2022 7:03	6.10
6/24/2022 3:44	36.64	6/24/2022 4:31	19.71	6/23/2022 7:04	6.09
6/24/2022 3:45	36.63	6/24/2022 4:32	19.73	6/23/2022 7:05	6.10
6/24/2022 3:46	36.65	6/24/2022 4:33	19.73	6/23/2022 7:06	6.13
6/24/2022 3:47	36.62	6/24/2022 4:34	19.68	6/23/2022 7:07	6.12
6/24/2022 3:48	36.65	6/24/2022 4:35	19.70	6/23/2022 7:08	6.11
6/24/2022 3:49	36.65	6/24/2022 4:36	19.71	6/23/2022 7:09	6.11
6/24/2022 3:50	36.63	6/24/2022 4:37	19.71	6/23/2022 7:10	6.10
6/24/2022 3:51	36.57	6/24/2022 4:38	19.72	6/23/2022 7:11	6.14
6/24/2022 3:52	36.64	6/24/2022 4:39	19.72	6/23/2022 7:12	6.10
6/24/2022 3:53	36.63	6/24/2022 4:40	19.70	6/23/2022 7:13	6.11
6/24/2022 3:54	36.62	6/24/2022 4:41	19.73	6/23/2022 7:14	6.11
6/24/2022 3:55	36.61	6/24/2022 4:42	19.71	6/23/2022 7:15	6.13
6/24/2022 3:56	36.63	6/24/2022 4:43	19.70	6/23/2022 7:16	6.15
6/24/2022 3:57	36.63	6/24/2022 4:44	19.68	6/23/2022 7:17	6.10
6/24/2022 3:58	36.60	6/24/2022 4:45	19.71	6/23/2022 7:18	6.12
6/24/2022 3:59	36.62	6/24/2022 4:46	19.68	6/23/2022 7:19	6.12
6/24/2022 4:00	36.58	6/24/2022 4:47	19.72	6/23/2022 7:20	6.10
6/24/2022 4:01	36.61	6/24/2022 4:48	19.74	6/23/2022 7:21	6.13
6/24/2022 4:02	36.56	6/24/2022 4:49	19.72	6/23/2022 7:22	6.12
6/24/2022 4:03	36.59	6/24/2022 4:50	19.72	6/23/2022 7:23	6.11
6/24/2022 4:04	36.57	6/24/2022 4:51	19.69	6/23/2022 7:24	6.13
6/24/2022 4:05	36.57	6/24/2022 4:52	19.71	6/23/2022 7:25	6.10
6/24/2022 4:06	36.55	6/24/2022 4:53	19.70	6/23/2022 7:26	6.11
6/24/2022 4:07	36.57	6/24/2022 4:54	19.68	6/23/2022 7:27	6.13
6/24/2022 4:08	36.59	6/24/2022 4:55	19.71	6/23/2022 7:28	6.10
6/24/2022 4:09	36.57	6/24/2022 4:56	19.72	6/23/2022 7:29	6.11
6/24/2022 4:10	36.58	6/24/2022 4:57	19.70	6/23/2022 7:30	6.15
6/24/2022 4:11	36.56	6/24/2022 4:58	19.72	6/23/2022 7:31	6.11
6/24/2022 4:12	36.57	6/24/2022 4:59	19.69	6/23/2022 7:32	6.13
6/24/2022 4:13	36.57	6/24/2022 5:00	19.70	6/23/2022 7:33	6.15
6/24/2022 4:14	36.54	6/24/2022 5:01	19.69	6/23/2022 7:34	6.11
6/24/2022 4:15	36.55	6/24/2022 5:02	19.72	6/23/2022 7:35	6.13
6/24/2022 4:16	36.53	6/24/2022 5:03	19.70	6/23/2022 7:36	6.13
6/24/2022 4:17	36.53	6/24/2022 5:04	19.72	6/23/2022 7:37	6.14
6/24/2022 4:18	36.55	6/24/2022 5:05	19.70	6/23/2022 7:38	6.12
6/24/2022 4:19	36.55	6/24/2022 5:06	19.70	6/23/2022 7:39	6.11
6/24/2022 4:20	36.54	6/24/2022 5:07	19.70	6/23/2022 7:40	6.11
6/24/2022 4:21	36.51	6/24/2022 5:08	19.72	6/23/2022 7:41	6.11
6/24/2022 4:22	36.52	6/24/2022 5:09	19.70	6/23/2022 7:42	7.36
6/24/2022 4:23	36.53	6/24/2022 5:10	19.72	6/23/2022 7:43	8.77
6/24/2022 4:24	36.51	6/24/2022 5:11	19.70	6/23/2022 7:44	6.68
6/24/2022 4:25	36.53	6/24/2022 5:12	19.72	6/23/2022 7:45	6.19
6/24/2022 4:26	36.53	6/24/2022 5:13	19.70	6/23/2022 7:46	6.14
6/24/2022 4:27	36.52	6/24/2022 5:14	19.69	6/23/2022 7:47	6.13
6/24/2022 4:28	36.52	6/24/2022 5:15	19.68	6/23/2022 7:48	6.12
6/24/2022 4:29	36.49	6/24/2022 5:16	19.69	6/23/2022 7:49	6.12
6/24/2022 4:30	36.50	6/24/2022 5:17	19.71	6/23/2022 7:50	6.13
6/24/2022 4:31	36.51	6/24/2022 5:18	19.70	6/23/2022 7:51	6.15
6/24/2022 4:32	36.49	6/24/2022 5:19	19.69	6/23/2022 7:52	6.09
6/24/2022 4:33	36.47	6/24/2022 5:20	19.69	6/23/2022 7:53	6.14
6/24/2022 4:34	36.51	6/24/2022 5:21	19.74	6/23/2022 7:54	6.11
6/24/2022 4:35	36.52	6/24/2022 5:22	19.69	6/23/2022 7:55	6.10
6/24/2022 4:36	36.49	6/24/2022 5:23	19.74	6/23/2022 7:56	6.14
6/24/2022 4:37	36.49	6/24/2022 5:24	19.69	6/23/2022 7:57	6.14
6/24/2022 4:38	36.50	6/24/2022 5:25	19.70	6/23/2022 7:58	6.11
6/24/2022 4:39	36.47	6/24/2022 5:26	19.69	6/23/2022 7:59	6.14
6/24/2022 4:40	36.49	6/24/2022 5:27	19.73	6/23/2022 8:00	6.10
6/24/2022 4:41	36.47	6/24/2022 5:28	19.67	6/23/2022 8:01	6.10
6/24/2022 4:42	36.46	6/24/2022 5:29	19.67	6/23/2022 8:02	6.12
6/24/2022 4:43	36.48	6/24/2022 5:30	19.69	6/23/2022 8:03	6.09
6/24/2022 4:44	36.51	6/24/2022 5:31	19.70	6/23/2022 8:04	6.14
6/24/2022 4:45	36.45	6/24/2022 5:32	19.68	6/23/2022 8:05	6.14
6/24/2022 4:46	36.49	6/24/2022 5:33	19.70	6/23/2022 8:06	6.10
6/24/2022 4:47	36.43	6/24/2022 5:34	19.71	6/23/2022 8:07	6.11
6/24/2022 4:48	36.47	6/24/2022 5:35	19.71	6/23/2022 8:08	6.15
6/24/2022 4:49	36.47	6/24/2022 5:36	19.69	6/23/2022 8:09	6.08
6/24/2022 4:50	36.45	6/24/2022 5:37	19.71	6/23/2022 8:10	6.14

6/24/2022 4:51	36.42	6/24/2022 5:38	19.70	6/23/2022 8:11	6.12
6/24/2022 4:52	36.44	6/24/2022 5:39	19.71	6/23/2022 8:12	6.11
6/24/2022 4:53	36.46	6/24/2022 5:40	19.71	6/23/2022 8:13	6.09
6/24/2022 4:54	36.46	6/24/2022 5:41	19.71	6/23/2022 8:14	6.10
6/24/2022 4:55	36.44	6/24/2022 5:42	19.70	6/23/2022 8:15	6.12
6/24/2022 4:56	36.46	6/24/2022 5:43	19.69	6/23/2022 8:16	6.13
6/24/2022 4:57	36.41	6/24/2022 5:44	19.70	6/23/2022 8:17	6.10
6/24/2022 4:58	36.43	6/24/2022 5:45	19.69	6/23/2022 8:18	6.12
6/24/2022 4:59	36.43	6/24/2022 5:46	19.69	6/23/2022 8:19	6.11
6/24/2022 5:00	36.44	6/24/2022 5:47	19.72	6/23/2022 8:20	6.11
6/24/2022 5:01	36.45	6/24/2022 5:48	19.68	6/23/2022 8:21	6.11
6/24/2022 5:02	36.43	6/24/2022 5:49	19.71	6/23/2022 8:22	6.12
6/24/2022 5:03	36.42	6/24/2022 5:50	19.71	6/23/2022 8:23	6.12
6/24/2022 5:04	36.42	6/24/2022 5:51	19.70	6/23/2022 8:24	6.10
6/24/2022 5:05	36.43	6/24/2022 5:52	19.72	6/23/2022 8:25	6.10
6/24/2022 5:06	36.37	6/24/2022 5:53	19.72	6/23/2022 8:26	6.13
6/24/2022 5:07	36.41	6/24/2022 5:54	19.71	6/23/2022 8:27	6.11
6/24/2022 5:08	36.42	6/24/2022 5:55	19.69	6/23/2022 8:28	6.10
6/24/2022 5:09	36.41	6/24/2022 5:56	19.70	6/23/2022 8:29	6.14
6/24/2022 5:10	36.39	6/24/2022 5:57	19.71	6/23/2022 8:30	6.12
6/24/2022 5:11	36.41	6/24/2022 5:58	19.70	6/23/2022 8:31	6.08
6/24/2022 5:12	36.44	6/24/2022 5:59	19.72	6/23/2022 8:32	6.08
6/24/2022 5:13	36.41	6/24/2022 6:00	19.71	6/23/2022 8:33	6.11
6/24/2022 5:14	36.41	6/24/2022 6:01	19.70	6/23/2022 8:34	6.10
6/24/2022 5:15	36.39	6/24/2022 6:02	19.70	6/23/2022 8:35	6.13
6/24/2022 5:16	36.40	6/24/2022 6:03	19.73	6/23/2022 8:36	6.13
6/24/2022 5:17	36.39	6/24/2022 6:04	19.70	6/23/2022 8:37	6.10
6/24/2022 5:18	36.38	6/24/2022 6:05	19.69	6/23/2022 8:38	6.13
6/24/2022 5:19	36.38	6/24/2022 6:06	19.70	6/23/2022 8:39	6.12
6/24/2022 5:20	36.37	6/24/2022 6:07	19.71	6/23/2022 8:40	6.11
6/24/2022 5:21	36.35	6/24/2022 6:08	19.67	6/23/2022 8:41	6.11
6/24/2022 5:22	36.40	6/24/2022 6:09	19.71	6/23/2022 8:42	6.11
6/24/2022 5:23	36.35	6/24/2022 6:10	19.69	6/23/2022 8:43	6.11
6/24/2022 5:24	36.38	6/24/2022 6:11	19.71	6/23/2022 8:44	6.10
6/24/2022 5:25	36.38	6/24/2022 6:12	19.72	6/23/2022 8:45	6.13
6/24/2022 5:26	36.36	6/24/2022 6:13	19.69	6/23/2022 8:46	6.07
6/24/2022 5:27	36.36	6/24/2022 6:14	19.72	6/23/2022 8:47	6.10
6/24/2022 5:28	36.38	6/24/2022 6:15	19.70	6/23/2022 8:48	6.13
6/24/2022 5:29	36.37	6/24/2022 6:16	19.72	6/23/2022 8:49	6.09
6/24/2022 5:30	36.35	6/24/2022 6:17	19.70	6/23/2022 8:50	6.12
6/24/2022 5:31	36.35	6/24/2022 6:18	19.70	6/23/2022 8:51	6.09
6/24/2022 5:32	36.36	6/24/2022 6:19	19.71	6/23/2022 8:52	6.09
6/24/2022 5:33	36.35	6/24/2022 6:20	19.73	6/23/2022 8:53	6.12
6/24/2022 5:34	36.33	6/24/2022 6:21	19.69	6/23/2022 8:54	6.12
6/24/2022 5:35	36.35	6/24/2022 6:22	19.72	6/23/2022 8:55	6.09
6/24/2022 5:36	36.35	6/24/2022 6:23	19.70	6/23/2022 8:56	6.10
6/24/2022 5:37	36.35	6/24/2022 6:24	19.71	6/23/2022 8:57	6.11
6/24/2022 5:38	36.33	6/24/2022 6:25	19.71	6/23/2022 8:58	6.11
6/24/2022 5:39	36.34	6/24/2022 6:26	19.73	6/23/2022 8:59	6.10
6/24/2022 5:40	36.34	6/24/2022 6:27	19.70	6/23/2022 9:00	6.12
6/24/2022 5:41	36.34	6/24/2022 6:28	19.71	6/23/2022 9:01	6.10
6/24/2022 5:42	36.35	6/24/2022 6:29	19.70	6/23/2022 9:02	6.12
6/24/2022 5:43	36.34	6/24/2022 6:30	19.71	6/23/2022 9:03	6.13
6/24/2022 5:44	36.31	6/24/2022 6:31	19.69	6/23/2022 9:04	6.11
6/24/2022 5:45	36.33	6/24/2022 6:32	19.72	6/23/2022 9:05	6.13
6/24/2022 5:46	36.33	6/24/2022 6:33	19.71	6/23/2022 9:06	6.11
6/24/2022 5:47	36.30	6/24/2022 6:34	19.72	6/23/2022 9:07	6.12
6/24/2022 5:48	36.32	6/24/2022 6:35	19.71	6/23/2022 9:08	6.12
6/24/2022 5:49	36.29	6/24/2022 6:36	19.71	6/23/2022 9:09	6.09
6/24/2022 5:50	36.30	6/24/2022 6:37	19.72	6/23/2022 9:10	6.11
6/24/2022 5:51	36.30	6/24/2022 6:38	19.73	6/23/2022 9:11	6.11
6/24/2022 5:52	36.30	6/24/2022 6:39	19.71	6/23/2022 9:12	6.09
6/24/2022 5:53	36.29	6/24/2022 6:40	19.71	6/23/2022 9:13	6.09
6/24/2022 5:54	36.27	6/24/2022 6:41	19.70	6/23/2022 9:14	6.10
6/24/2022 5:55	36.29	6/24/2022 6:42	19.70	6/23/2022 9:15	6.11
6/24/2022 5:56	36.31	6/24/2022 6:43	19.68	6/23/2022 9:16	6.15
6/24/2022 5:57	36.27	6/24/2022 6:44	19.70	6/23/2022 9:17	6.13
6/24/2022 5:58	36.31	6/24/2022 6:45	19.71	6/23/2022 9:18	6.12
6/24/2022 5:59	36.27	6/24/2022 6:46	19.72	6/23/2022 9:19	6.11
6/24/2022 6:00	36.30	6/24/2022 6:47	19.72	6/23/2022 9:20	6.11
6/24/2022 6:01	36.29	6/24/2022 6:48	19.70	6/23/2022 9:21	6.13
6/24/2022 6:02	36.29	6/24/2022 6:49	19.70	6/23/2022 9:22	6.08
6/24/2022 6:03	36.28	6/24/2022 6:50	19.71	6/23/2022 9:23	6.11
6/24/2022 6:04	36.26	6/24/2022 6:51	19.73	6/23/2022 9:24	6.11
6/24/2022 6:05	36.28	6/24/2022 6:52	19.70	6/23/2022 9:25	6.12
6/24/2022 6:06	36.28	6/24/2022 6:53	19.69	6/23/2022 9:26	6.15
6/24/2022 6:07	36.31	6/24/2022 6:54	19.69	6/23/2022 9:27	6.11
6/24/2022 6:08	36.26	6/24/2022 6:55	19.70	6/23/2022 9:28	6.08
6/24/2022 6:09	36.29	6/24/2022 6:56	19.71	6/23/2022 9:29	6.11
6/24/2022 6:10	36.27	6/24/2022 6:57	19.67	6/23/2022 9:30	6.10
6/24/2022 6:11	36.29	6/24/2022 6:58	19.70	6/23/2022 9:31	6.12
6/24/2022 6:12	36.27	6/24/2022 6:59	19.70	6/23/2022 9:32	6.12
6/24/2022 6:13	36.26	6/24/2022 7:00	19.71	6/23/2022 9:33	6.09
6/24/2022 6:14	36.25	6/24/2022 7:01	19.70	6/23/2022 9:34	6.11
6/24/2022 6:15	36.26	6/24/2022 7:02	19.70	6/23/2022 9:35	6.11
6/24/2022 6:16	36.27	6/24/2022 7:03	19.69	6/23/2022 9:36	6.12
6/24/2022 6:17	36.28	6/24/2022 7:04	19.67	6/23/2022 9:37	6.13
6/24/2022 6:18	36.25	6/24/2022 7:05	19.70	6/23/2022 9:38	6.12

6/24/2022 6:19	36.24	6/24/2022 7:06	19.67	6/23/2022 9:39	6.11
6/24/2022 6:20	36.26	6/24/2022 7:07	19.69	6/23/2022 9:40	6.11
6/24/2022 6:21	36.26	6/24/2022 7:08	19.71	6/23/2022 9:41	6.13
6/24/2022 6:22	36.26	6/24/2022 7:09	19.71	6/23/2022 9:42	6.12
6/24/2022 6:23	36.24	6/24/2022 7:10	19.68	6/23/2022 9:43	6.10
6/24/2022 6:24	36.26	6/24/2022 7:11	19.69	6/23/2022 9:44	6.14
6/24/2022 6:25	36.23	6/24/2022 7:12	19.67	6/23/2022 9:45	6.12
6/24/2022 6:26	36.27	6/24/2022 7:13	19.70	6/23/2022 9:46	6.14
6/24/2022 6:27	36.20	6/24/2022 7:14	19.71	6/23/2022 9:47	6.12
6/24/2022 6:28	36.22	6/24/2022 7:15	19.72	6/23/2022 9:48	6.10
6/24/2022 6:29	36.24	6/24/2022 7:16	19.70	6/23/2022 9:49	6.09
6/24/2022 6:30	36.25	6/24/2022 7:17	19.71	6/23/2022 9:50	6.11
6/24/2022 6:31	36.25	6/24/2022 7:18	19.71	6/23/2022 9:51	6.13
6/24/2022 6:32	36.24	6/24/2022 7:19	19.72	6/23/2022 9:52	6.13
6/24/2022 6:33	36.22	6/24/2022 7:20	19.68	6/23/2022 9:53	6.14
6/24/2022 6:34	36.23	6/24/2022 7:21	19.67	6/23/2022 9:54	6.09
6/24/2022 6:35	36.23	6/24/2022 7:22	19.68	6/23/2022 9:55	6.11
6/24/2022 6:36	36.19	6/24/2022 7:23	19.72	6/23/2022 9:56	6.12
6/24/2022 6:37	36.22	6/24/2022 7:24	19.67	6/23/2022 9:57	6.12
6/24/2022 6:38	36.21	6/24/2022 7:25	19.71	6/23/2022 9:58	6.12
6/24/2022 6:39	36.20	6/24/2022 7:26	19.71	6/23/2022 9:59	6.12
6/24/2022 6:40	36.19	6/24/2022 7:27	19.70	6/23/2022 10:00	6.11
6/24/2022 6:41	36.20	6/24/2022 7:28	19.71	6/23/2022 10:01	6.10
6/24/2022 6:42	36.24	6/24/2022 7:29	19.69	6/23/2022 10:02	6.11
6/24/2022 6:43	36.19	6/24/2022 7:30	19.69	6/23/2022 10:03	6.12
6/24/2022 6:44	36.19	6/24/2022 7:31	19.69	6/23/2022 10:04	6.10
6/24/2022 6:45	36.21	6/24/2022 7:32	19.68	6/23/2022 10:05	6.13
6/24/2022 6:46	36.19	6/24/2022 7:33	19.73	6/23/2022 10:06	6.15
6/24/2022 6:47	36.20	6/24/2022 7:34	19.69	6/23/2022 10:07	6.12
6/24/2022 6:48	36.21	6/24/2022 7:35	19.71	6/23/2022 10:08	6.13
6/24/2022 6:49	36.20	6/24/2022 7:36	19.68	6/23/2022 10:09	6.12
6/24/2022 6:50	36.19	6/24/2022 7:37	19.70	6/23/2022 10:10	6.11
6/24/2022 6:51	36.19	6/24/2022 7:38	19.70	6/23/2022 10:11	6.12
6/24/2022 6:52	36.17	6/24/2022 7:39	19.69	6/23/2022 10:12	6.10
6/24/2022 6:53	36.20	6/24/2022 7:40	19.69	6/23/2022 10:13	6.14
6/24/2022 6:54	36.18	6/24/2022 7:41	19.70	6/23/2022 10:14	6.12
6/24/2022 6:55	36.19	6/24/2022 7:42	19.67	6/23/2022 10:15	6.11
6/24/2022 6:56	36.15	6/24/2022 7:43	19.70	6/23/2022 10:16	6.13
6/24/2022 6:57	36.16	6/24/2022 7:44	19.70	6/23/2022 10:17	6.11
6/24/2022 6:58	36.20	6/24/2022 7:45	19.67	6/23/2022 10:18	6.11
6/24/2022 6:59	36.20	6/24/2022 7:46	19.71	6/23/2022 10:19	6.13
6/24/2022 7:00	36.16	6/24/2022 7:47	19.69	6/23/2022 10:20	6.14
6/24/2022 7:01	36.15	6/24/2022 7:48	19.71	6/23/2022 10:21	6.10
6/24/2022 7:02	36.17	6/24/2022 7:49	19.69	6/23/2022 10:22	6.11
6/24/2022 7:03	36.16	6/24/2022 7:50	19.70	6/23/2022 10:23	6.13
6/24/2022 7:04	36.17	6/24/2022 7:51	19.70	6/23/2022 10:24	6.13
6/24/2022 7:05	36.18	6/24/2022 7:52	19.70	6/23/2022 10:25	6.13
6/24/2022 7:06	36.17	6/24/2022 7:53	19.72	6/23/2022 10:26	6.12
6/24/2022 7:07	36.17	6/24/2022 7:54	19.70	6/23/2022 10:27	6.08
6/24/2022 7:08	36.15	6/24/2022 7:55	19.69	6/23/2022 10:28	6.14
6/24/2022 7:09	36.15	6/24/2022 7:56	19.72	6/23/2022 10:29	6.11
6/24/2022 7:10	36.16	6/24/2022 7:57	19.69	6/23/2022 10:30	6.12
6/24/2022 7:11	36.15	6/24/2022 7:58	19.72	6/23/2022 10:31	6.15
6/24/2022 7:12	36.15	6/24/2022 7:59	19.70	6/23/2022 10:32	6.12
6/24/2022 7:13	36.12	6/24/2022 8:00	19.68	6/23/2022 10:33	6.11
6/24/2022 7:14	36.15	6/24/2022 8:01	19.68	6/23/2022 10:34	6.14
6/24/2022 7:15	36.18	6/24/2022 8:02	19.69	6/23/2022 10:35	6.13
6/24/2022 7:16	36.17	6/24/2022 8:03	19.69	6/23/2022 10:36	6.13
6/24/2022 7:17	36.18	6/24/2022 8:04	19.69	6/23/2022 10:37	6.10
6/24/2022 7:18	36.13	6/24/2022 8:05	19.69	6/23/2022 10:38	6.14
6/24/2022 7:19	36.15	6/24/2022 8:06	19.68	6/23/2022 10:39	6.15
6/24/2022 7:20	36.15	6/24/2022 8:07	19.71	6/23/2022 10:40	6.14
6/24/2022 7:21	36.13	6/24/2022 8:08	19.68	6/23/2022 10:41	6.11
6/24/2022 7:22	36.12	6/24/2022 8:09	19.69	6/23/2022 10:42	6.14
6/24/2022 7:23	36.11	6/24/2022 8:10	19.70	6/23/2022 10:43	6.11
6/24/2022 7:24	36.15	6/24/2022 8:11	19.70	6/23/2022 10:44	6.11
6/24/2022 7:25	36.14	6/24/2022 8:12	19.70	6/23/2022 10:45	6.12
6/24/2022 7:26	36.09	6/24/2022 8:13	19.70	6/23/2022 10:46	6.11
6/24/2022 7:27	36.11	6/24/2022 8:14	19.70	6/23/2022 10:47	6.11
6/24/2022 7:28	36.11	6/24/2022 8:15	20.28	6/23/2022 10:48	6.10
6/24/2022 7:29	36.12	6/24/2022 8:16	20.40	6/23/2022 10:49	6.12
6/24/2022 7:30	36.08	6/24/2022 8:17	20.46	6/23/2022 10:50	6.10
6/24/2022 7:31	36.13	6/24/2022 8:18	20.50	6/23/2022 10:51	6.14
6/24/2022 7:32	36.12	6/24/2022 8:19	20.51	6/23/2022 10:52	6.82
6/24/2022 7:33	36.11	6/24/2022 8:20	20.53	6/23/2022 10:53	8.81
6/24/2022 7:34	36.11	6/24/2022 8:21	19.98	6/23/2022 10:54	7.75
6/24/2022 7:35	36.10	6/24/2022 8:22	19.93	6/23/2022 10:55	6.24
6/24/2022 7:36	36.14	6/24/2022 8:23	19.87	6/23/2022 10:56	6.16
6/24/2022 7:37	36.12	6/24/2022 8:24	19.90	6/23/2022 10:57	6.14
6/24/2022 7:38	36.12	6/24/2022 8:25	19.87	6/23/2022 10:58	6.14
6/24/2022 7:39	36.11	6/24/2022 8:26	19.85	6/23/2022 10:59	6.14
6/24/2022 7:40	36.14	6/24/2022 8:27	19.83	6/23/2022 11:00	6.14
6/24/2022 7:41	36.08	6/24/2022 8:28	19.84	6/23/2022 11:01	6.13
6/24/2022 7:42	36.11	6/24/2022 8:29	19.80	6/23/2022 11:02	6.13
6/24/2022 7:43	36.09	6/24/2022 8:30	19.81	6/23/2022 11:03	6.12
6/24/2022 7:44	36.08	6/24/2022 8:31	19.81	6/23/2022 11:04	6.11
6/24/2022 7:45	36.10	6/24/2022 8:32	19.79	6/23/2022 11:05	6.14
6/24/2022 7:46	36.08	6/24/2022 8:33	19.82	6/23/2022 11:06	6.13

6/24/2022 7:47	36.09	6/24/2022 8:34	19.79	6/23/2022 11:07	6.13
6/24/2022 7:48	36.09	6/24/2022 8:35	19.78	6/23/2022 11:08	6.13
6/24/2022 7:49	36.08	6/24/2022 8:36	19.78	6/23/2022 11:09	6.10
6/24/2022 7:50	36.08	6/24/2022 8:37	19.77	6/23/2022 11:10	6.13
6/24/2022 7:51	36.09	6/24/2022 8:38	19.78	6/23/2022 11:11	6.15
6/24/2022 7:52	36.07	6/24/2022 8:39	19.77	6/23/2022 11:12	6.11
6/24/2022 7:53	36.11	6/24/2022 8:40	19.77	6/23/2022 11:13	6.13
6/24/2022 7:54	36.06	6/24/2022 8:41	19.76	6/23/2022 11:14	6.11
6/24/2022 7:55	36.08	6/24/2022 8:42	19.75	6/23/2022 11:15	6.14
6/24/2022 7:56	36.07	6/24/2022 8:43	19.92	6/23/2022 11:16	6.12
6/24/2022 7:57	36.10	6/24/2022 8:44	20.40	6/23/2022 11:17	6.13
6/24/2022 7:58	36.09	6/24/2022 8:45	20.45	6/23/2022 11:18	6.15
6/24/2022 7:59	36.08	6/24/2022 8:46	20.54	6/23/2022 11:19	6.10
6/24/2022 8:00	36.11	6/24/2022 8:47	20.60	6/23/2022 11:20	6.13
6/24/2022 8:01	36.11	6/24/2022 8:48	20.56	6/23/2022 11:21	6.09
6/24/2022 8:02	36.11	6/24/2022 8:49	20.02	6/23/2022 11:22	6.13
6/24/2022 8:03	36.10	6/24/2022 8:50	19.97	6/23/2022 11:23	6.12
6/24/2022 8:04	36.11	6/24/2022 8:51	19.95	6/23/2022 11:24	6.11
6/24/2022 8:05	36.10	6/24/2022 8:52	19.90	6/23/2022 11:25	6.15
6/24/2022 8:06	36.10	6/24/2022 8:53	19.90	6/23/2022 11:26	6.11
6/24/2022 8:07	36.11	6/24/2022 8:54	19.88	6/23/2022 11:27	6.12
6/24/2022 8:08	36.08	6/24/2022 8:55	19.86	6/23/2022 11:28	6.15
6/24/2022 8:09	36.10	6/24/2022 8:56	19.87	6/23/2022 11:29	6.16
6/24/2022 8:10	37.57	6/24/2022 8:57	19.87	6/23/2022 11:30	6.14
6/24/2022 8:11	36.76	6/24/2022 8:58	19.85	6/23/2022 11:31	6.13
6/24/2022 8:12	37.30	6/24/2022 8:59	19.83	6/23/2022 11:32	6.13
6/24/2022 8:13	36.62	6/24/2022 9:00	19.84	6/23/2022 11:33	6.13
6/24/2022 8:14	36.40	6/24/2022 9:01	19.83	6/23/2022 11:34	6.13
6/24/2022 8:15	36.33	6/24/2022 9:02	19.85	6/23/2022 11:35	6.11
6/24/2022 8:16	36.30	6/24/2022 9:03	19.83	6/23/2022 11:36	6.12
6/24/2022 8:17	36.27	6/24/2022 9:04	19.79	6/23/2022 11:37	6.09
6/24/2022 8:18	36.25	6/24/2022 9:05	19.83	6/23/2022 11:38	6.11
6/24/2022 8:19	36.23	6/24/2022 9:06	19.82	6/23/2022 11:39	6.10
6/24/2022 8:20	36.21	6/24/2022 9:07	19.82	6/23/2022 11:40	6.16
6/24/2022 8:21	36.20	6/24/2022 9:08	19.81	6/23/2022 11:41	6.13
6/24/2022 8:22	36.18	6/24/2022 9:09	19.78	6/23/2022 11:42	6.14
6/24/2022 8:23	37.20	6/24/2022 9:10	19.81	6/23/2022 11:43	6.13
6/24/2022 8:24	36.54	6/24/2022 9:11	19.78	6/23/2022 11:44	6.14
6/24/2022 8:25	36.34	6/24/2022 9:12	19.78	6/23/2022 11:45	6.14
6/24/2022 8:26	36.27	6/24/2022 9:13	19.84	6/23/2022 11:46	6.14
6/24/2022 8:27	36.27	6/24/2022 9:14	19.78	6/23/2022 11:47	6.09
6/24/2022 8:28	36.22	6/24/2022 9:15	19.78	6/23/2022 11:48	6.15
6/24/2022 8:29	36.21	6/24/2022 9:16	19.79	6/23/2022 11:49	6.14
6/24/2022 8:30	36.17	6/24/2022 9:17	19.80	6/23/2022 11:50	6.13
6/24/2022 8:31	36.18	6/24/2022 9:18	19.78	6/23/2022 11:51	6.11
6/24/2022 8:32	36.20	6/24/2022 9:19	19.79	6/23/2022 11:52	6.14
6/24/2022 8:33	36.17	6/24/2022 9:20	19.81	6/23/2022 11:53	6.14
6/24/2022 8:34	36.13	6/24/2022 9:21	19.77	6/23/2022 11:54	6.16
6/24/2022 8:35	36.17	6/24/2022 9:22	19.74	6/23/2022 11:55	6.12
6/24/2022 8:36	36.17	6/24/2022 9:23	19.79	6/23/2022 11:56	6.12
6/24/2022 8:37	36.16	6/24/2022 9:24	19.79	6/23/2022 11:57	6.12
6/24/2022 8:38	36.14	6/24/2022 9:25	19.79	6/23/2022 11:58	6.11
6/24/2022 8:39	36.14	6/24/2022 9:26	19.75	6/23/2022 11:59	6.14
6/24/2022 8:40	36.11	6/24/2022 9:27	19.76	6/23/2022 12:00	6.13
6/24/2022 8:41	36.10	6/24/2022 9:28	19.79	6/23/2022 12:01	6.11
6/24/2022 8:42	36.13	6/24/2022 9:29	19.77	6/23/2022 12:02	6.10
6/24/2022 8:43	36.10	6/24/2022 9:30	19.77	6/23/2022 12:03	6.11
6/24/2022 8:44	36.10	6/24/2022 9:31	19.77	6/23/2022 12:04	6.15
6/24/2022 8:45	36.13	6/24/2022 9:32	19.77	6/23/2022 12:05	6.15
6/24/2022 8:46	36.10	6/24/2022 9:33	19.77	6/23/2022 12:06	6.12
6/24/2022 8:47	36.08	6/24/2022 9:34	19.73	6/23/2022 12:07	6.14
6/24/2022 8:48	36.10	6/24/2022 9:35	19.76	6/23/2022 12:08	6.12
6/24/2022 8:49	36.11	6/24/2022 9:36	19.77	6/23/2022 12:09	6.12
6/24/2022 8:50	36.09	6/24/2022 9:37	19.78	6/23/2022 12:10	6.13
6/24/2022 8:51	36.09	6/24/2022 9:38	19.75	6/23/2022 12:11	6.17
6/24/2022 8:52	36.09	6/24/2022 9:39	19.76	6/23/2022 12:12	6.13
6/24/2022 8:53	36.08	6/24/2022 9:40	19.76	6/23/2022 12:13	6.13
6/24/2022 8:54	36.07	6/24/2022 9:41	19.74	6/23/2022 12:14	6.14
6/24/2022 8:55	36.06	6/24/2022 9:42	19.75	6/23/2022 12:15	6.12
6/24/2022 8:56	36.05	6/24/2022 9:43	19.73	6/23/2022 12:16	6.12
6/24/2022 8:57	36.08	6/24/2022 9:44	19.74	6/23/2022 12:17	7.56
6/24/2022 8:58	36.06	6/24/2022 9:45	19.75	6/23/2022 12:18	8.87
6/24/2022 8:59	36.05	6/24/2022 9:46	19.74	6/23/2022 12:19	6.68
6/24/2022 9:00	36.06	6/24/2022 9:47	19.76	6/23/2022 12:20	6.21
6/24/2022 9:01	36.05	6/24/2022 9:48	19.72	6/23/2022 12:21	6.13
6/24/2022 9:02	36.07	6/24/2022 9:49	19.74	6/23/2022 12:22	6.16
6/24/2022 9:03	36.06	6/24/2022 9:50	19.75	6/23/2022 12:23	6.14
6/24/2022 9:04	36.05	6/24/2022 9:51	19.76	6/23/2022 12:24	6.14
6/24/2022 9:05	36.07	6/24/2022 9:52	19.75	6/23/2022 12:25	6.16
6/24/2022 9:06	36.06	6/24/2022 9:53	19.75	6/23/2022 12:26	6.12
6/24/2022 9:07	36.04	6/24/2022 9:54	19.75	6/23/2022 12:27	6.15
6/24/2022 9:08	36.03	6/24/2022 9:55	19.76	6/23/2022 12:28	6.16
6/24/2022 9:09	36.05	6/24/2022 9:56	19.76	6/23/2022 12:29	6.16
6/24/2022 9:10	36.07	6/24/2022 9:57	19.76	6/23/2022 12:30	6.09
6/24/2022 9:11	36.08	6/24/2022 9:58	19.72	6/23/2022 12:31	6.13
6/24/2022 9:12	36.08	6/24/2022 9:59	19.74	6/23/2022 12:32	6.14
6/24/2022 9:13	36.08	6/24/2022 10:00	19.74	6/23/2022 12:33	6.14
6/24/2022 9:14	36.07	6/24/2022 10:01	19.76	6/23/2022 12:34	6.11

6/24/2022 9:15	36.08	6/24/2022 10:02	19.75	6/23/2022 12:35	6.12
6/24/2022 9:16	36.07	6/24/2022 10:03	19.74	6/23/2022 12:36	6.13
6/24/2022 9:17	36.06	6/24/2022 10:04	19.75	6/23/2022 12:37	6.15
6/24/2022 9:18	36.04	6/24/2022 10:05	19.75	6/23/2022 12:38	6.12
6/24/2022 9:19	36.05	6/24/2022 10:06	19.73	6/23/2022 12:39	6.14
6/24/2022 9:20	36.06	6/24/2022 10:07	19.75	6/23/2022 12:40	6.17
6/24/2022 9:21	37.28	6/24/2022 10:08	19.74	6/23/2022 12:41	6.13
6/24/2022 9:22	36.30	6/24/2022 10:09	19.74	6/23/2022 12:42	6.15
6/24/2022 9:23	36.21	6/24/2022 10:10	19.72	6/23/2022 12:43	6.17
6/24/2022 9:24	36.14	6/24/2022 10:11	19.72	6/23/2022 12:44	6.16
6/24/2022 9:25	36.10	6/24/2022 10:12	19.76	6/23/2022 12:45	6.13
6/24/2022 9:26	36.09	6/24/2022 10:13	19.76	6/23/2022 12:46	6.14
6/24/2022 9:27	36.07	6/24/2022 10:14	19.71	6/23/2022 12:47	6.15
6/24/2022 9:28	36.88	6/24/2022 10:15	19.71	6/23/2022 12:48	6.13
6/24/2022 9:29	36.24	6/24/2022 10:16	19.74	6/23/2022 12:49	6.13
6/24/2022 9:30	36.18	6/24/2022 10:17	19.73	6/23/2022 12:50	6.12
6/24/2022 9:31	36.19	6/24/2022 10:18	19.74	6/23/2022 12:51	6.17
6/24/2022 9:32	36.14	6/24/2022 10:19	19.73	6/23/2022 12:52	6.14
6/24/2022 9:33	36.10	6/24/2022 10:20	19.76	6/23/2022 12:53	6.13
6/24/2022 9:34	36.13	6/24/2022 10:21	19.75	6/23/2022 12:54	6.14
6/24/2022 9:35	36.06	6/24/2022 10:22	19.73	6/23/2022 12:55	6.14
6/24/2022 9:36	36.07	6/24/2022 10:23	19.73	6/23/2022 12:56	6.14
6/24/2022 9:37	36.08	6/24/2022 10:24	19.73	6/23/2022 12:57	6.12
6/24/2022 9:38	36.06	6/24/2022 10:25	19.72	6/23/2022 12:58	6.15
6/24/2022 9:39	36.04	6/24/2022 10:26	19.74	6/23/2022 12:59	6.15
6/24/2022 9:40	36.04	6/24/2022 10:27	19.74	6/23/2022 13:00	6.15
6/24/2022 9:41	36.03	6/24/2022 10:28	19.75	6/23/2022 13:01	6.09
6/24/2022 9:42	36.01	6/24/2022 10:29	19.75	6/23/2022 13:02	6.11
6/24/2022 9:43	36.03	6/24/2022 10:30	19.74	6/23/2022 13:03	6.16
6/24/2022 9:44	36.05	6/24/2022 10:31	19.77	6/23/2022 13:04	6.16
6/24/2022 9:45	36.04	6/24/2022 10:32	19.73	6/23/2022 13:05	6.14
6/24/2022 9:46	36.02	6/24/2022 10:33	19.70	6/23/2022 13:06	6.12
6/24/2022 9:47	36.04	6/24/2022 10:34	19.76	6/23/2022 13:07	6.16
6/24/2022 9:48	36.00	6/24/2022 10:35	19.72	6/23/2022 13:08	6.14
6/24/2022 9:49	36.02	6/24/2022 10:36	19.71	6/23/2022 13:09	6.13
6/24/2022 9:50	36.00	6/24/2022 10:37	19.73	6/23/2022 13:10	6.13
6/24/2022 9:51	36.04	6/24/2022 10:38	19.69	6/23/2022 13:11	6.14
6/24/2022 9:52	36.03	6/24/2022 10:39	19.72	6/23/2022 13:12	6.12
6/24/2022 9:53	36.00	6/24/2022 10:40	19.72	6/23/2022 13:13	6.14
6/24/2022 9:54	36.01	6/24/2022 10:41	19.73	6/23/2022 13:14	6.15
6/24/2022 9:55	35.99	6/24/2022 10:42	19.73	6/23/2022 13:15	6.12
6/24/2022 9:56	35.99	6/24/2022 10:43	19.72	6/23/2022 13:16	6.15
6/24/2022 9:57	36.01	6/24/2022 10:44	19.74	6/23/2022 13:17	6.10
6/24/2022 9:58	35.99	6/24/2022 10:45	19.71	6/23/2022 13:18	6.15
6/24/2022 9:59	36.00	6/24/2022 10:46	19.69	6/23/2022 13:19	6.11
6/24/2022 10:00	35.98	6/24/2022 10:47	19.73	6/23/2022 13:20	6.14
6/24/2022 10:01	35.98	6/24/2022 10:48	19.73	6/23/2022 13:21	6.15
6/24/2022 10:02	36.94	6/24/2022 10:49	19.73	6/23/2022 13:22	6.10
6/24/2022 10:03	36.63	6/24/2022 10:50	19.75	6/23/2022 13:23	6.13
6/24/2022 10:04	36.61	6/24/2022 10:51	19.69	6/23/2022 13:24	6.13
6/24/2022 10:05	37.81	6/24/2022 10:52	19.74	6/23/2022 13:25	6.15
6/24/2022 10:06	36.44	6/24/2022 10:53	19.73	6/23/2022 13:26	6.15
6/24/2022 10:07	37.74	6/24/2022 10:54	19.74	6/23/2022 13:27	6.15
6/24/2022 10:08	36.77	6/24/2022 10:55	19.72	6/23/2022 13:28	6.16
6/24/2022 10:09	37.38	6/24/2022 10:56	19.73	6/23/2022 13:29	6.16
6/24/2022 10:10	37.71	6/24/2022 10:57	19.72	6/23/2022 13:30	6.13
6/24/2022 10:11	36.57	6/24/2022 10:58	19.71	6/23/2022 13:31	6.15
6/24/2022 10:12	37.87	6/24/2022 10:59	19.72	6/23/2022 13:32	6.15
6/24/2022 10:13	36.65	6/24/2022 11:00	19.71	6/23/2022 13:33	6.15
6/24/2022 10:14	37.86	6/24/2022 11:01	19.72	6/23/2022 13:34	6.12
6/24/2022 10:15	37.00	6/24/2022 11:02	19.72	6/23/2022 13:35	6.12
6/24/2022 10:16	37.40	6/24/2022 11:03	19.70	6/23/2022 13:36	6.15
6/24/2022 10:17	36.94	6/24/2022 11:04	19.72	6/23/2022 13:37	6.15
6/24/2022 10:18	36.59	6/24/2022 11:05	19.73	6/23/2022 13:38	6.15
6/24/2022 10:19	36.47	6/24/2022 11:06	19.75	6/23/2022 13:39	6.14
6/24/2022 10:20	36.48	6/24/2022 11:07	19.71	6/23/2022 13:40	6.15
6/24/2022 10:21	36.42	6/24/2022 11:08	19.71	6/23/2022 13:41	6.14
6/24/2022 10:22	36.37	6/24/2022 11:09	19.72	6/23/2022 13:42	6.15
6/24/2022 10:23	36.33	6/24/2022 11:10	19.71	6/23/2022 13:43	6.13
6/24/2022 10:24	36.34	6/24/2022 11:11	19.73	6/23/2022 13:44	6.15
6/24/2022 10:25	36.32	6/24/2022 11:12	19.72	6/23/2022 13:45	6.14
6/24/2022 10:26	36.29	6/24/2022 11:13	19.70	6/23/2022 13:46	6.20
6/24/2022 10:27	36.26	6/24/2022 11:14	19.73	6/23/2022 13:47	6.11
6/24/2022 10:28	36.27	6/24/2022 11:15	19.69	6/23/2022 13:48	6.12
6/24/2022 10:29	36.25	6/24/2022 11:16	19.72	6/23/2022 13:49	6.13
6/24/2022 10:30	36.20	6/24/2022 11:17	19.71	6/23/2022 13:50	6.16
6/24/2022 10:31	36.22	6/24/2022 11:18	19.72	6/23/2022 13:51	6.18
6/24/2022 10:32	36.16	6/24/2022 11:19	19.72	6/23/2022 13:52	6.13
6/24/2022 10:33	36.16	6/24/2022 11:20	19.73	6/23/2022 13:53	6.14
6/24/2022 10:34	36.19	6/24/2022 11:21	20.32	6/23/2022 13:54	6.14
6/24/2022 10:35	36.17	6/24/2022 11:22	20.44	6/23/2022 13:55	6.14
6/24/2022 10:36	36.16	6/24/2022 11:23	20.46	6/23/2022 13:56	6.13
6/24/2022 10:37	36.70	6/24/2022 11:24	20.50	6/23/2022 13:57	6.16
6/24/2022 10:38	36.30	6/24/2022 11:25	20.54	6/23/2022 13:58	6.17
6/24/2022 10:39	36.26	6/24/2022 11:26	20.55	6/23/2022 13:59	6.14
6/24/2022 10:40	36.24	6/24/2022 11:27	20.06	6/23/2022 14:00	6.17
6/24/2022 10:41	36.20	6/24/2022 11:28	19.98	6/23/2022 14:01	6.13
6/24/2022 10:42	36.19	6/24/2022 11:29	19.92	6/23/2022 14:02	6.13

6/24/2022 10:43	36.14	6/24/2022 11:30	19.93	6/23/2022 14:03	6.13
6/24/2022 10:44	36.16	6/24/2022 11:31	19.89	6/23/2022 14:04	6.16
6/24/2022 10:45	36.17	6/24/2022 11:32	19.89	6/23/2022 14:05	6.11
6/24/2022 10:46	36.17	6/24/2022 11:33	19.87	6/23/2022 14:06	6.13
6/24/2022 10:47	36.12	6/24/2022 11:34	19.87	6/23/2022 14:07	6.15
6/24/2022 10:48	36.13	6/24/2022 11:35	19.84	6/23/2022 14:08	6.18
6/24/2022 10:49	36.11	6/24/2022 11:36	19.84	6/23/2022 14:09	6.15
6/24/2022 10:50	36.14	6/24/2022 11:37	19.85	6/23/2022 14:10	6.14
6/24/2022 10:51	36.11	6/24/2022 11:38	19.84	6/23/2022 14:11	6.16
6/24/2022 10:52	37.46	6/24/2022 11:39	19.82	6/23/2022 14:12	6.15
6/24/2022 10:53	36.30	6/24/2022 11:40	19.83	6/23/2022 14:13	6.13
6/24/2022 10:54	36.23	6/24/2022 11:41	19.83	6/23/2022 14:14	6.12
6/24/2022 10:55	36.20	6/24/2022 11:42	19.81	6/23/2022 14:15	6.15
6/24/2022 10:56	36.17	6/24/2022 11:43	19.83	6/23/2022 14:16	6.16
6/24/2022 10:57	36.16	6/24/2022 11:44	19.82	6/23/2022 14:17	6.12
6/24/2022 10:58	36.17	6/24/2022 11:45	19.79	6/23/2022 14:18	6.12
6/24/2022 10:59	36.13	6/24/2022 11:46	19.81	6/23/2022 14:19	6.14
6/24/2022 11:00	37.49	6/24/2022 11:47	19.78	6/23/2022 14:20	6.13
6/24/2022 11:01	36.33	6/24/2022 11:48	19.82	6/23/2022 14:21	6.17
6/24/2022 11:02	36.23	6/24/2022 11:49	19.82	6/23/2022 14:22	6.11
6/24/2022 11:03	36.19	6/24/2022 11:50	19.81	6/23/2022 14:23	6.15
6/24/2022 11:04	36.24	6/24/2022 11:51	19.78	6/23/2022 14:24	6.13
6/24/2022 11:05	36.19	6/24/2022 11:52	19.79	6/23/2022 14:25	6.12
6/24/2022 11:06	36.17	6/24/2022 11:53	19.79	6/23/2022 14:26	6.14
6/24/2022 11:07	36.13	6/24/2022 11:54	19.78	6/23/2022 14:27	6.13
6/24/2022 11:08	36.12	6/24/2022 11:55	19.78	6/23/2022 14:28	6.16
6/24/2022 11:09	36.10	6/24/2022 11:56	19.79	6/23/2022 14:29	6.13
6/24/2022 11:10	36.10	6/24/2022 11:57	19.78	6/23/2022 14:30	6.15
6/24/2022 11:11	36.09	6/24/2022 11:58	19.80	6/23/2022 14:31	6.11
6/24/2022 11:12	36.12	6/24/2022 11:59	19.80	6/23/2022 14:32	6.14
6/24/2022 11:13	36.08	6/24/2022 12:00	19.79	6/23/2022 14:33	6.17
6/24/2022 11:14	36.07	6/24/2022 12:01	19.77	6/23/2022 14:34	6.17
6/24/2022 11:15	36.11	6/24/2022 12:02	19.76	6/23/2022 14:35	6.16
6/24/2022 11:16	36.07	6/24/2022 12:03	19.79	6/23/2022 14:36	6.14
6/24/2022 11:17	36.05	6/24/2022 12:04	19.79	6/23/2022 14:37	6.14
6/24/2022 11:18	36.06	6/24/2022 12:05	19.76	6/23/2022 14:38	6.13
6/24/2022 11:19	36.03	6/24/2022 12:06	19.76	6/23/2022 14:39	6.13
6/24/2022 11:20	36.03	6/24/2022 12:07	19.75	6/23/2022 14:40	6.16
6/24/2022 11:21	36.01	6/24/2022 12:08	19.79	6/23/2022 14:41	6.13
6/24/2022 11:22	36.05	6/24/2022 12:09	19.76	6/23/2022 14:42	6.14
6/24/2022 11:23	36.04	6/24/2022 12:10	19.75	6/23/2022 14:43	6.14
6/24/2022 11:24	36.04	6/24/2022 12:11	19.77	6/23/2022 14:44	6.16
6/24/2022 11:25	36.01	6/24/2022 12:12	19.76	6/23/2022 14:45	6.15
6/24/2022 11:26	35.99	6/24/2022 12:13	19.77	6/23/2022 14:46	6.14
6/24/2022 11:27	36.01	6/24/2022 12:14	19.76	6/23/2022 14:47	6.12
6/24/2022 11:28	35.99	6/24/2022 12:15	19.77	6/23/2022 14:48	6.13
6/24/2022 11:29	35.98	6/24/2022 12:16	19.77	6/23/2022 14:49	6.14
6/24/2022 11:30	36.01	6/24/2022 12:17	19.75	6/23/2022 14:50	6.15
6/24/2022 11:31	35.97	6/24/2022 12:18	19.71	6/23/2022 14:51	6.15
6/24/2022 11:32	35.99	6/24/2022 12:19	19.76	6/23/2022 14:52	6.13
6/24/2022 11:33	36.00	6/24/2022 12:20	19.76	6/23/2022 14:53	6.14
6/24/2022 11:34	35.96	6/24/2022 12:21	19.77	6/23/2022 14:54	6.14
6/24/2022 11:35	35.97	6/24/2022 12:22	19.75	6/23/2022 14:55	6.18
6/24/2022 11:36	35.98	6/24/2022 12:23	19.73	6/23/2022 14:56	6.14
6/24/2022 11:37	35.94	6/24/2022 12:24	19.76	6/23/2022 14:57	6.20
6/24/2022 11:38	35.96	6/24/2022 12:25	19.72	6/23/2022 14:58	6.14
6/24/2022 11:39	35.94	6/24/2022 12:26	19.76	6/23/2022 14:59	6.13
6/24/2022 11:40	35.95	6/24/2022 12:27	19.76	6/23/2022 15:00	6.13
6/24/2022 11:41	35.93	6/24/2022 12:28	19.75	6/23/2022 15:01	6.12
6/24/2022 11:42	35.95	6/24/2022 12:29	19.75	6/23/2022 15:02	6.13
6/24/2022 11:43	35.94	6/24/2022 12:30	19.74	6/23/2022 15:03	6.10
6/24/2022 11:44	35.90	6/24/2022 12:31	19.74	6/23/2022 15:04	6.14
6/24/2022 11:45	35.91	6/24/2022 12:32	19.77	6/23/2022 15:05	6.14
6/24/2022 11:46	36.77	6/24/2022 12:33	19.76	6/23/2022 15:06	6.15
6/24/2022 11:47	36.10	6/24/2022 12:34	19.76	6/23/2022 15:07	6.14
6/24/2022 11:48	36.04	6/24/2022 12:35	19.73	6/23/2022 15:08	6.12
6/24/2022 11:49	36.01	6/24/2022 12:36	19.75	6/23/2022 15:09	6.15
6/24/2022 11:50	35.98	6/24/2022 12:37	19.73	6/23/2022 15:10	6.12
6/24/2022 11:51	36.57	6/24/2022 12:38	19.77	6/23/2022 15:11	6.14
6/24/2022 11:52	36.12	6/24/2022 12:39	19.74	6/23/2022 15:12	6.13
6/24/2022 11:53	36.07	6/24/2022 12:40	19.73	6/23/2022 15:13	6.15
6/24/2022 11:54	36.02	6/24/2022 12:41	19.74	6/23/2022 15:14	6.12
6/24/2022 11:55	35.98	6/24/2022 12:42	19.77	6/23/2022 15:15	6.15
6/24/2022 11:56	35.99	6/24/2022 12:43	19.73	6/23/2022 15:16	6.15
6/24/2022 11:57	36.00	6/24/2022 12:44	19.75	6/23/2022 15:17	6.14
6/24/2022 11:58	35.98	6/24/2022 12:45	19.73	6/23/2022 15:18	6.14
6/24/2022 11:59	35.98	6/24/2022 12:46	19.73	6/23/2022 15:19	6.16
6/24/2022 12:00	35.97	6/24/2022 12:47	19.74	6/23/2022 15:20	6.14
6/24/2022 12:01	35.93	6/24/2022 12:48	19.74	6/23/2022 15:21	6.14
6/24/2022 12:02	35.95	6/24/2022 12:49	19.70	6/23/2022 15:22	6.15
6/24/2022 12:03	35.96	6/24/2022 12:50	19.73	6/23/2022 15:23	6.13
6/24/2022 12:04	35.94	6/24/2022 12:51	19.75	6/23/2022 15:24	6.11
6/24/2022 12:05	35.95	6/24/2022 12:52	19.75	6/23/2022 15:25	6.17
6/24/2022 12:06	35.94	6/24/2022 12:53	19.73	6/23/2022 15:26	6.15
6/24/2022 12:07	35.92	6/24/2022 12:54	19.72	6/23/2022 15:27	6.12
6/24/2022 12:08	35.90	6/24/2022 12:55	19.73	6/23/2022 15:28	6.14
6/24/2022 12:09	35.91	6/24/2022 12:56	19.74	6/23/2022 15:29	6.16
6/24/2022 12:10	35.90	6/24/2022 12:57	19.72	6/23/2022 15:30	6.15

6/24/2022 12:11	36.55	6/24/2022 12:58	19.75	6/23/2022 15:31	6.13
6/24/2022 12:12	36.08	6/24/2022 12:59	19.73	6/23/2022 15:32	6.12
6/24/2022 12:13	36.00	6/24/2022 13:00	19.74	6/23/2022 15:33	6.15
6/24/2022 12:14	36.00	6/24/2022 13:01	19.73	6/23/2022 15:34	6.13
6/24/2022 12:15	35.97	6/24/2022 13:02	19.74	6/23/2022 15:35	6.17
6/24/2022 12:16	35.94	6/24/2022 13:03	19.70	6/23/2022 15:36	6.15
6/24/2022 12:17	36.43	6/24/2022 13:04	19.71	6/23/2022 15:37	6.11
6/24/2022 12:18	36.33	6/24/2022 13:05	19.74	6/23/2022 15:38	6.15
6/24/2022 12:19	36.04	6/24/2022 13:06	19.73	6/23/2022 15:39	6.13
6/24/2022 12:20	36.02	6/24/2022 13:07	19.76	6/23/2022 15:40	6.14
6/24/2022 12:21	35.97	6/24/2022 13:08	19.75	6/23/2022 15:41	6.16
6/24/2022 12:22	35.94	6/24/2022 13:09	19.73	6/23/2022 15:42	6.16
6/24/2022 12:23	35.98	6/24/2022 13:10	19.73	6/23/2022 15:43	6.17
6/24/2022 12:24	35.96	6/24/2022 13:11	19.72	6/23/2022 15:44	6.15
6/24/2022 12:25	35.96	6/24/2022 13:12	19.73	6/23/2022 15:45	6.15
6/24/2022 12:26	35.95	6/24/2022 13:13	19.71	6/23/2022 15:46	6.15
6/24/2022 12:27	35.92	6/24/2022 13:14	19.72	6/23/2022 15:47	6.12
6/24/2022 12:28	35.91	6/24/2022 13:15	19.71	6/23/2022 15:48	6.16
6/24/2022 12:29	35.96	6/24/2022 13:16	19.73	6/23/2022 15:49	6.15
6/24/2022 12:30	35.94	6/24/2022 13:17	19.71	6/23/2022 15:50	6.13
6/24/2022 12:31	35.94	6/24/2022 13:18	19.73	6/23/2022 15:51	6.16
6/24/2022 12:32	37.26	6/24/2022 13:19	19.73	6/23/2022 15:52	6.16
6/24/2022 12:33	36.16	6/24/2022 13:20	19.72	6/23/2022 15:53	6.13
6/24/2022 12:34	36.06	6/24/2022 13:21	19.76	6/23/2022 15:54	6.14
6/24/2022 12:35	36.01	6/24/2022 13:22	19.72	6/23/2022 15:55	6.16
6/24/2022 12:36	36.02	6/24/2022 13:23	19.73	6/23/2022 15:56	6.12
6/24/2022 12:37	35.98	6/24/2022 13:24	19.71	6/23/2022 15:57	7.54
6/24/2022 12:38	35.97	6/24/2022 13:25	19.71	6/23/2022 15:58	8.87
6/24/2022 12:39	35.95	6/24/2022 13:26	19.72	6/23/2022 15:59	7.42
6/24/2022 12:40	37.20	6/24/2022 13:27	19.72	6/23/2022 16:00	6.23
6/24/2022 12:41	36.15	6/24/2022 13:28	19.72	6/23/2022 16:01	6.16
6/24/2022 12:42	35.98	6/24/2022 13:29	19.72	6/23/2022 16:02	6.20
6/24/2022 12:43	36.02	6/24/2022 13:30	19.71	6/23/2022 16:03	6.19
6/24/2022 12:44	35.99	6/24/2022 13:31	19.72	6/23/2022 16:04	6.17
6/24/2022 12:45	35.95	6/24/2022 13:32	19.72	6/23/2022 16:05	6.16
6/24/2022 12:46	35.99	6/24/2022 13:33	19.72	6/23/2022 16:06	6.15
6/24/2022 12:47	35.95	6/24/2022 13:34	19.74	6/23/2022 16:07	6.15
6/24/2022 12:48	35.95	6/24/2022 13:35	19.71	6/23/2022 16:08	6.15
6/24/2022 12:49	35.92	6/24/2022 13:36	19.72	6/23/2022 16:09	6.16
6/24/2022 12:50	35.92	6/24/2022 13:37	19.75	6/23/2022 16:10	6.16
6/24/2022 12:51	35.88	6/24/2022 13:38	19.72	6/23/2022 16:11	6.17
6/24/2022 12:52	35.93	6/24/2022 13:39	19.72	6/23/2022 16:12	6.18
6/24/2022 12:53	35.92	6/24/2022 13:40	19.72	6/23/2022 16:13	6.16
6/24/2022 12:54	35.92	6/24/2022 13:41	19.71	6/23/2022 16:14	6.16
6/24/2022 12:55	35.88	6/24/2022 13:42	19.70	6/23/2022 16:15	6.13
6/24/2022 12:56	35.86	6/24/2022 13:43	19.71	6/23/2022 16:16	6.14
6/24/2022 12:57	35.86	6/24/2022 13:44	19.72	6/23/2022 16:17	6.14
6/24/2022 12:58	35.90	6/24/2022 13:45	19.72	6/23/2022 16:18	6.15
6/24/2022 12:59	35.89	6/24/2022 13:46	19.70	6/23/2022 16:19	6.15
6/24/2022 13:00	36.99	6/24/2022 13:47	19.73	6/23/2022 16:20	6.17
6/24/2022 13:01	36.06	6/24/2022 13:48	19.71	6/23/2022 16:21	6.18
6/24/2022 13:02	35.98	6/24/2022 13:49	19.71	6/23/2022 16:22	6.14
6/24/2022 13:03	35.96	6/24/2022 13:50	19.71	6/23/2022 16:23	6.17
6/24/2022 13:04	35.92	6/24/2022 13:51	19.70	6/23/2022 16:24	6.15
6/24/2022 13:05	35.94	6/24/2022 13:52	19.71	6/23/2022 16:25	6.15
6/24/2022 13:06	35.88	6/24/2022 13:53	19.70	6/23/2022 16:26	6.19
6/24/2022 13:07	35.89	6/24/2022 13:54	19.71	6/23/2022 16:27	6.13
6/24/2022 13:08	35.88	6/24/2022 13:55	19.71	6/23/2022 16:28	6.12
6/24/2022 13:09	35.88	6/24/2022 13:56	19.71	6/23/2022 16:29	6.16
6/24/2022 13:10	35.87	6/24/2022 13:57	19.72	6/23/2022 16:30	6.18
6/24/2022 13:11	35.85	6/24/2022 13:58	19.71	6/23/2022 16:31	6.12
6/24/2022 13:12	35.87	6/24/2022 13:59	19.72	6/23/2022 16:32	6.15
6/24/2022 13:13	35.86	6/24/2022 14:00	19.71	6/23/2022 16:33	6.14
6/24/2022 13:14	35.87	6/24/2022 14:01	19.72	6/23/2022 16:34	6.17
6/24/2022 13:15	35.90	6/24/2022 14:02	19.70	6/23/2022 16:35	6.14
6/24/2022 13:16	35.86	6/24/2022 14:03	19.70	6/23/2022 16:36	6.15
6/24/2022 13:17	35.86	6/24/2022 14:04	19.72	6/23/2022 16:37	6.12
6/24/2022 13:18	35.91	6/24/2022 14:05	19.70	6/23/2022 16:38	6.15
6/24/2022 13:19	35.85	6/24/2022 14:06	19.69	6/23/2022 16:39	6.15
6/24/2022 13:20	35.85	6/24/2022 14:07	19.70	6/23/2022 16:40	6.17
6/24/2022 13:21	35.86	6/24/2022 14:08	19.71	6/23/2022 16:41	6.15
6/24/2022 13:22	35.86	6/24/2022 14:09	19.74	6/23/2022 16:42	6.16
6/24/2022 13:23	35.86	6/24/2022 14:10	19.71	6/23/2022 16:43	6.14
6/24/2022 13:24	35.85	6/24/2022 14:11	19.68	6/23/2022 16:44	6.15
6/24/2022 13:25	35.85	6/24/2022 14:12	19.71	6/23/2022 16:45	6.13
6/24/2022 13:26	35.86	6/24/2022 14:13	19.69	6/23/2022 16:46	6.14
6/24/2022 13:27	35.84	6/24/2022 14:14	19.70	6/23/2022 16:47	6.14
6/24/2022 13:28	35.83	6/24/2022 14:15	19.73	6/23/2022 16:48	6.16
6/24/2022 13:29	35.81	6/24/2022 14:16	19.70	6/23/2022 16:49	6.15
6/24/2022 13:30	35.84	6/24/2022 14:17	19.70	6/23/2022 16:50	6.14
6/24/2022 13:31	35.82	6/24/2022 14:18	19.69	6/23/2022 16:51	6.18
6/24/2022 13:32	35.79	6/24/2022 14:19	19.70	6/23/2022 16:52	6.18
6/24/2022 13:33	35.85	6/24/2022 14:20	19.70	6/23/2022 16:53	6.15
6/24/2022 13:34	35.83	6/24/2022 14:21	19.69	6/23/2022 16:54	6.16
6/24/2022 13:35	35.81	6/24/2022 14:22	19.71	6/23/2022 16:55	6.15
6/24/2022 13:36	35.81	6/24/2022 14:23	19.71	6/23/2022 16:56	6.13
6/24/2022 13:37	35.79	6/24/2022 14:24	19.71	6/23/2022 16:57	6.16
6/24/2022 13:38	35.78	6/24/2022 14:25	19.71	6/23/2022 16:58	6.15

6/24/2022 13:39	35.76	6/24/2022 14:26	19.70	6/23/2022 16:59	6.18
6/24/2022 13:40	35.76	6/24/2022 14:27	19.69	6/23/2022 17:00	6.16
6/24/2022 13:41	35.79	6/24/2022 14:28	19.72	6/23/2022 17:01	6.18
6/24/2022 13:42	35.78	6/24/2022 14:29	19.68	6/23/2022 17:02	6.15
6/24/2022 13:43	35.79	6/24/2022 14:30	19.70	6/23/2022 17:03	6.16
6/24/2022 13:44	35.77	6/24/2022 14:31	19.74	6/23/2022 17:04	6.15
6/24/2022 13:45	35.75	6/24/2022 14:32	19.73	6/23/2022 17:05	6.18
6/24/2022 13:46	35.81	6/24/2022 14:33	19.69	6/23/2022 17:06	6.16
6/24/2022 13:47	35.75	6/24/2022 14:34	19.70	6/23/2022 17:07	6.17
6/24/2022 13:48	35.78	6/24/2022 14:35	19.69	6/23/2022 17:08	6.18
6/24/2022 13:49	35.76	6/24/2022 14:36	19.70	6/23/2022 17:09	6.15
6/24/2022 13:50	35.73	6/24/2022 14:37	19.70	6/23/2022 17:10	6.16
6/24/2022 13:51	35.77	6/24/2022 14:38	19.70	6/23/2022 17:11	6.18
6/24/2022 13:52	35.73	6/24/2022 14:39	19.69	6/23/2022 17:12	6.16
6/24/2022 13:53	35.75	6/24/2022 14:40	19.71	6/23/2022 17:13	6.15
6/24/2022 13:54	35.76	6/24/2022 14:41	19.69	6/23/2022 17:14	6.15
6/24/2022 13:55	35.76	6/24/2022 14:42	19.70	6/23/2022 17:15	6.16
6/24/2022 13:56	35.75	6/24/2022 14:43	19.71	6/23/2022 17:16	6.15
6/24/2022 13:57	35.75	6/24/2022 14:44	19.69	6/23/2022 17:17	6.15
6/24/2022 13:58	35.70	6/24/2022 14:45	19.71	6/23/2022 17:18	6.14
6/24/2022 13:59	35.75	6/24/2022 14:46	19.67	6/23/2022 17:19	6.16
6/24/2022 14:00	35.73	6/24/2022 14:47	19.74	6/23/2022 17:20	6.16
6/24/2022 14:01	35.72	6/24/2022 14:48	19.70	6/23/2022 17:21	6.14
6/24/2022 14:02	35.74	6/24/2022 14:49	19.71	6/23/2022 17:22	6.17
6/24/2022 14:03	35.74	6/24/2022 14:50	19.72	6/23/2022 17:23	6.13
6/24/2022 14:04	35.73	6/24/2022 14:51	19.67	6/23/2022 17:24	6.14
6/24/2022 14:05	35.71	6/24/2022 14:52	19.70	6/23/2022 17:25	6.10
6/24/2022 14:06	35.71	6/24/2022 14:53	19.70	6/23/2022 17:26	6.15
6/24/2022 14:07	35.72	6/24/2022 14:54	19.71	6/23/2022 17:27	6.17
6/24/2022 14:08	35.73	6/24/2022 14:55	19.71	6/23/2022 17:28	6.20
6/24/2022 14:09	35.72	6/24/2022 14:56	19.69	6/23/2022 17:29	6.14
6/24/2022 14:10	35.71	6/24/2022 14:57	19.71	6/23/2022 17:30	6.17
6/24/2022 14:11	35.70	6/24/2022 14:58	19.69	6/23/2022 17:31	6.14
6/24/2022 14:12	35.71	6/24/2022 14:59	19.71	6/23/2022 17:32	6.12
6/24/2022 14:13	35.70	6/24/2022 15:00	19.69	6/23/2022 17:33	6.15
6/24/2022 14:14	35.72	6/24/2022 15:01	19.69	6/23/2022 17:34	6.14
6/24/2022 14:15	35.74	6/24/2022 15:02	19.68	6/23/2022 17:35	6.16
6/24/2022 14:16	35.70	6/24/2022 15:03	19.70	6/23/2022 17:36	6.16
6/24/2022 14:17	35.68	6/24/2022 15:04	19.69	6/23/2022 17:37	6.15
6/24/2022 14:18	35.72	6/24/2022 15:05	19.71	6/23/2022 17:38	6.16
6/24/2022 14:19	35.67	6/24/2022 15:06	19.73	6/23/2022 17:39	6.15
6/24/2022 14:20	35.70	6/24/2022 15:07	19.70	6/23/2022 17:40	6.15
6/24/2022 14:21	35.72	6/24/2022 15:08	19.71	6/23/2022 17:41	6.17
6/24/2022 14:22	35.71	6/24/2022 15:09	19.70	6/23/2022 17:42	6.17
6/24/2022 14:23	35.73	6/24/2022 15:10	19.71	6/23/2022 17:43	6.14
6/24/2022 14:24	35.74	6/24/2022 15:11	19.66	6/23/2022 17:44	6.15
6/24/2022 14:25	35.73	6/24/2022 15:12	19.69	6/23/2022 17:45	6.13
6/24/2022 14:26	35.73	6/24/2022 15:13	19.70	6/23/2022 17:46	6.16
6/24/2022 14:27	35.69	6/24/2022 15:14	19.71	6/23/2022 17:47	6.15
6/24/2022 14:28	35.72	6/24/2022 15:15	19.69	6/23/2022 17:48	6.16
6/24/2022 14:29	35.71	6/24/2022 15:16	19.70	6/23/2022 17:49	6.12
6/24/2022 14:30	35.69	6/24/2022 15:17	19.73	6/23/2022 17:50	6.14
6/24/2022 14:31	35.68	6/24/2022 15:18	19.69	6/23/2022 17:51	6.13
6/24/2022 14:32	35.72	6/24/2022 15:19	19.70	6/23/2022 17:52	6.14
6/24/2022 14:33	35.73	6/24/2022 15:20	19.70	6/23/2022 17:53	6.16
6/24/2022 14:34	35.72	6/24/2022 15:21	19.70	6/23/2022 17:54	6.16
6/24/2022 14:35	35.73	6/24/2022 15:22	19.71	6/23/2022 17:55	6.13
6/24/2022 14:36	35.70	6/24/2022 15:23	19.72	6/23/2022 17:56	6.16
6/24/2022 14:37	35.70	6/24/2022 15:24	19.69	6/23/2022 17:57	6.15
6/24/2022 14:38	35.69	6/24/2022 15:25	19.67	6/23/2022 17:58	6.17
6/24/2022 14:39	35.68	6/24/2022 15:26	19.69	6/23/2022 17:59	6.17
6/24/2022 14:40	35.69	6/24/2022 15:27	19.72	6/23/2022 18:00	6.12
6/24/2022 14:41	35.68	6/24/2022 15:28	19.70	6/23/2022 18:01	6.17
6/24/2022 14:42	35.70	6/24/2022 15:29	19.71	6/23/2022 18:02	6.17
6/24/2022 14:43	35.68	6/24/2022 15:30	19.70	6/23/2022 18:03	6.17
6/24/2022 14:44	35.68	6/24/2022 15:31	19.69	6/23/2022 18:04	6.15
6/24/2022 14:45	35.71	6/24/2022 15:32	19.68	6/23/2022 18:05	6.17
6/24/2022 14:46	35.66	6/24/2022 15:33	19.71	6/23/2022 18:06	6.14
6/24/2022 14:47	35.67	6/24/2022 15:34	19.71	6/23/2022 18:07	6.18
6/24/2022 14:48	35.69	6/24/2022 15:35	19.67	6/23/2022 18:08	6.18
6/24/2022 14:49	35.64	6/24/2022 15:36	19.73	6/23/2022 18:09	6.17
6/24/2022 14:50	35.64	6/24/2022 15:37	19.69	6/23/2022 18:10	6.15
6/24/2022 14:51	35.66	6/24/2022 15:38	19.69	6/23/2022 18:11	6.13
6/24/2022 14:52	35.64	6/24/2022 15:39	19.70	6/23/2022 18:12	6.14
6/24/2022 14:53	35.67	6/24/2022 15:40	19.70	6/23/2022 18:13	6.12
6/24/2022 14:54	35.62	6/24/2022 15:41	19.67	6/23/2022 18:14	6.18
6/24/2022 14:55	35.65	6/24/2022 15:42	19.70	6/23/2022 18:15	6.16
6/24/2022 14:56	35.67	6/24/2022 15:43	19.69	6/23/2022 18:16	6.17
6/24/2022 14:57	35.68	6/24/2022 15:44	19.69	6/23/2022 18:17	6.15
6/24/2022 14:58	35.68	6/24/2022 15:45	19.70	6/23/2022 18:18	6.15
6/24/2022 14:59	35.68	6/24/2022 15:46	19.70	6/23/2022 18:19	6.14
6/24/2022 15:00	35.70	6/24/2022 15:47	19.71	6/23/2022 18:20	6.15
6/24/2022 15:01	35.68	6/24/2022 15:48	19.71	6/23/2022 18:21	6.16
6/24/2022 15:02	35.70	6/24/2022 15:49	19.70	6/23/2022 18:22	6.15
6/24/2022 15:03	35.64	6/24/2022 15:50	19.72	6/23/2022 18:23	6.12
6/24/2022 15:04	35.66	6/24/2022 15:51	19.69	6/23/2022 18:24	6.15
6/24/2022 15:05	35.66	6/24/2022 15:52	19.71	6/23/2022 18:25	6.14
6/24/2022 15:06	35.65	6/24/2022 15:53	19.68	6/23/2022 18:26	6.16

6/24/2022 15:07	35.65	6/24/2022 15:54	19.68	6/23/2022 18:27	6.16
6/24/2022 15:08	35.68	6/24/2022 15:55	19.68	6/23/2022 18:28	6.17
6/24/2022 15:09	35.67	6/24/2022 15:56	19.73	6/23/2022 18:29	6.15
6/24/2022 15:10	35.65	6/24/2022 15:57	19.70	6/23/2022 18:30	6.16
6/24/2022 15:11	35.62	6/24/2022 15:58	19.68	6/23/2022 18:31	6.15
6/24/2022 15:12	35.67	6/24/2022 15:59	19.69	6/23/2022 18:32	6.17
6/24/2022 15:13	35.66	6/24/2022 16:00	19.69	6/23/2022 18:33	6.13
6/24/2022 15:14	35.64	6/24/2022 16:01	19.69	6/23/2022 18:34	6.16
6/24/2022 15:15	35.66	6/24/2022 16:02	19.69	6/23/2022 18:35	6.18
6/24/2022 15:16	35.61	6/24/2022 16:03	19.70	6/23/2022 18:36	6.16
6/24/2022 15:17	35.67	6/24/2022 16:04	19.69	6/23/2022 18:37	6.16
6/24/2022 15:18	35.63	6/24/2022 16:05	19.71	6/23/2022 18:38	6.17
6/24/2022 15:19	35.62	6/24/2022 16:06	19.70	6/23/2022 18:39	6.15
6/24/2022 15:20	35.63	6/24/2022 16:07	19.70	6/23/2022 18:40	6.16
6/24/2022 15:21	35.62	6/24/2022 16:08	19.69	6/23/2022 18:41	6.15
6/24/2022 15:22	35.68	6/24/2022 16:09	19.68	6/23/2022 18:42	6.11
6/24/2022 15:23	35.62	6/24/2022 16:10	20.30	6/23/2022 18:43	6.16
6/24/2022 15:24	35.62	6/24/2022 16:11	20.40	6/23/2022 18:44	6.18
6/24/2022 15:25	35.60	6/24/2022 16:12	20.45	6/23/2022 18:45	6.13
6/24/2022 15:26	35.59	6/24/2022 16:13	20.52	6/23/2022 18:46	6.15
6/24/2022 15:27	35.60	6/24/2022 16:14	20.32	6/23/2022 18:47	6.17
6/24/2022 15:28	35.63	6/24/2022 16:15	19.94	6/23/2022 18:48	6.14
6/24/2022 15:29	35.62	6/24/2022 16:16	19.91	6/23/2022 18:49	6.15
6/24/2022 15:30	35.60	6/24/2022 16:17	19.87	6/23/2022 18:50	6.16
6/24/2022 15:31	35.62	6/24/2022 16:18	19.84	6/23/2022 18:51	6.18
6/24/2022 15:32	35.61	6/24/2022 16:19	19.84	6/23/2022 18:52	6.17
6/24/2022 15:33	35.60	6/24/2022 16:20	19.85	6/23/2022 18:53	6.14
6/24/2022 15:34	35.62	6/24/2022 16:21	19.82	6/23/2022 18:54	6.15
6/24/2022 15:35	35.61	6/24/2022 16:22	19.81	6/23/2022 18:55	6.15
6/24/2022 15:36	35.60	6/24/2022 16:23	19.80	6/23/2022 18:56	6.12
6/24/2022 15:37	35.58	6/24/2022 16:24	19.80	6/23/2022 18:57	6.12
6/24/2022 15:38	35.58	6/24/2022 16:25	19.79	6/23/2022 18:58	6.17
6/24/2022 15:39	35.57	6/24/2022 16:26	19.80	6/23/2022 18:59	6.14
6/24/2022 15:40	35.58	6/24/2022 16:27	19.78	6/23/2022 19:00	6.16
6/24/2022 15:41	35.60	6/24/2022 16:28	19.80	6/23/2022 19:01	6.15
6/24/2022 15:42	35.59	6/24/2022 16:29	19.81	6/23/2022 19:02	6.14
6/24/2022 15:43	35.58	6/24/2022 16:30	19.77	6/23/2022 19:03	6.17
6/24/2022 15:44	35.56	6/24/2022 16:31	19.77	6/23/2022 19:04	6.15
6/24/2022 15:45	35.58	6/24/2022 16:32	19.77	6/23/2022 19:05	6.12
6/24/2022 15:46	35.57	6/24/2022 16:33	19.77	6/23/2022 19:06	6.14
6/24/2022 15:47	35.56	6/24/2022 16:34	19.75	6/23/2022 19:07	6.16
6/24/2022 15:48	35.56	6/24/2022 16:35	19.78	6/23/2022 19:08	6.13
6/24/2022 15:49	35.56	6/24/2022 16:36	19.75	6/23/2022 19:09	6.11
6/24/2022 15:50	35.57	6/24/2022 16:37	19.77	6/23/2022 19:10	6.14
6/24/2022 15:51	35.58	6/24/2022 16:38	19.77	6/23/2022 19:11	6.15
6/24/2022 15:52	35.58	6/24/2022 16:39	19.77	6/23/2022 19:12	6.17
6/24/2022 15:53	35.56	6/24/2022 16:40	19.79	6/23/2022 19:13	6.16
6/24/2022 15:54	35.55	6/24/2022 16:41	19.75	6/23/2022 19:14	6.14
6/24/2022 15:55	35.57	6/24/2022 16:42	19.76	6/23/2022 19:15	6.13
6/24/2022 15:56	35.57	6/24/2022 16:43	19.76	6/23/2022 19:16	6.15
6/24/2022 15:57	35.58	6/24/2022 16:44	19.76	6/23/2022 19:17	6.13
6/24/2022 15:58	35.55	6/24/2022 16:45	19.76	6/23/2022 19:18	6.14
6/24/2022 15:59	35.55	6/24/2022 16:46	19.76	6/23/2022 19:19	6.14
6/24/2022 16:00	35.56	6/24/2022 16:47	19.76	6/23/2022 19:20	6.17
6/24/2022 16:01	35.55	6/24/2022 16:48	19.76	6/23/2022 19:21	6.16
6/24/2022 16:02	35.56	6/24/2022 16:49	19.73	6/23/2022 19:22	6.15
6/24/2022 16:03	35.56	6/24/2022 16:50	19.76	6/23/2022 19:23	6.15
6/24/2022 16:04	35.54	6/24/2022 16:51	19.77	6/23/2022 19:24	6.16
6/24/2022 16:05	35.54	6/24/2022 16:52	19.75	6/23/2022 19:25	6.16
6/24/2022 16:06	35.56	6/24/2022 16:53	19.76	6/23/2022 19:26	6.15
6/24/2022 16:07	35.54	6/24/2022 16:54	19.76	6/23/2022 19:27	6.14
6/24/2022 16:08	35.54	6/24/2022 16:55	19.73	6/23/2022 19:28	6.17
6/24/2022 16:09	35.54	6/24/2022 16:56	19.74	6/23/2022 19:29	6.15
6/24/2022 16:10	35.51	6/24/2022 16:57	19.75	6/23/2022 19:30	6.15
6/24/2022 16:11	35.54	6/24/2022 16:58	19.74	6/23/2022 19:31	6.15
6/24/2022 16:12	35.53	6/24/2022 16:59	19.73	6/23/2022 19:32	6.16
6/24/2022 16:13	35.55	6/24/2022 17:00	19.75	6/23/2022 19:33	6.13
6/24/2022 16:14	35.54	6/24/2022 17:01	19.75	6/23/2022 19:34	6.17
6/24/2022 16:15	35.56	6/24/2022 17:02	19.74	6/23/2022 19:35	6.14
6/24/2022 16:16	35.53	6/24/2022 17:03	19.73	6/23/2022 19:36	6.17
6/24/2022 16:17	35.54	6/24/2022 17:04	19.75	6/23/2022 19:37	6.16
6/24/2022 16:18	35.52	6/24/2022 17:05	19.75	6/23/2022 19:38	6.13
6/24/2022 16:19	35.53	6/24/2022 17:06	19.75	6/23/2022 19:39	6.15
6/24/2022 16:20	35.53	6/24/2022 17:07	19.75	6/23/2022 19:40	6.19
6/24/2022 16:21	35.51	6/24/2022 17:08	19.74	6/23/2022 19:41	6.19
6/24/2022 16:22	35.55	6/24/2022 17:09	19.76	6/23/2022 19:42	6.17
6/24/2022 16:23	35.49	6/24/2022 17:10	19.72	6/23/2022 19:43	6.16
6/24/2022 16:24	35.54	6/24/2022 17:11	19.74	6/23/2022 19:44	6.14
6/24/2022 16:25	35.54	6/24/2022 17:12	19.74	6/23/2022 19:45	6.19
6/24/2022 16:26	35.52	6/24/2022 17:13	19.74	6/23/2022 19:46	6.13
6/24/2022 16:27	35.50	6/24/2022 17:14	19.75	6/23/2022 19:47	6.19
6/24/2022 16:28	35.51	6/24/2022 17:15	19.74	6/23/2022 19:48	6.14
6/24/2022 16:29	35.51	6/24/2022 17:16	19.75	6/23/2022 19:49	6.20
6/24/2022 16:30	35.51	6/24/2022 17:17	19.75	6/23/2022 19:50	6.14
6/24/2022 16:31	35.48	6/24/2022 17:18	19.73	6/23/2022 19:51	6.17
6/24/2022 16:32	36.67	6/24/2022 17:19	19.74	6/23/2022 19:52	6.17
6/24/2022 16:33	35.72	6/24/2022 17:20	19.74	6/23/2022 19:53	6.15
6/24/2022 16:34	35.63	6/24/2022 17:21	19.73	6/23/2022 19:54	6.13

6/24/2022 16:35	35.62	6/24/2022 17:22	19.73	6/23/2022 19:55	6.14
6/24/2022 16:36	35.57	6/24/2022 17:23	19.73	6/23/2022 19:56	6.17
6/24/2022 16:37	35.54	6/24/2022 17:24	19.73	6/23/2022 19:57	6.14
6/24/2022 16:38	35.60	6/24/2022 17:25	19.75	6/23/2022 19:58	6.17
6/24/2022 16:39	35.56	6/24/2022 17:26	19.72	6/23/2022 19:59	6.14
6/24/2022 16:40	35.54	6/24/2022 17:27	19.73	6/23/2022 20:00	6.16
6/24/2022 16:41	35.55	6/24/2022 17:28	19.73	6/23/2022 20:01	6.15
6/24/2022 16:42	35.53	6/24/2022 17:29	19.75	6/23/2022 20:02	6.16
6/24/2022 16:43	35.56	6/24/2022 17:30	19.73	6/23/2022 20:03	6.13
6/24/2022 16:44	35.49	6/24/2022 17:31	19.72	6/23/2022 20:04	6.15
6/24/2022 16:45	35.54	6/24/2022 17:32	19.73	6/23/2022 20:05	6.16
6/24/2022 16:46	35.57	6/24/2022 17:33	19.74	6/23/2022 20:06	6.17
6/24/2022 16:47	35.56	6/24/2022 17:34	19.74	6/23/2022 20:07	6.12
6/24/2022 16:48	35.57	6/24/2022 17:35	19.73	6/23/2022 20:08	6.15
6/24/2022 16:49	35.54	6/24/2022 17:36	19.74	6/23/2022 20:09	6.15
6/24/2022 16:50	35.57	6/24/2022 17:37	19.73	6/23/2022 20:10	6.16
6/24/2022 16:51	35.56	6/24/2022 17:38	19.73	6/23/2022 20:11	6.17
6/24/2022 16:52	35.59	6/24/2022 17:39	19.73	6/23/2022 20:12	6.16
6/24/2022 16:53	35.58	6/24/2022 17:40	19.73	6/23/2022 20:13	6.17
6/24/2022 16:54	35.59	6/24/2022 17:41	19.75	6/23/2022 20:14	6.15
6/24/2022 16:55	35.55	6/24/2022 17:42	19.72	6/23/2022 20:15	6.16
6/24/2022 16:56	35.57	6/24/2022 17:43	19.73	6/23/2022 20:16	6.15
6/24/2022 16:57	35.53	6/24/2022 17:44	19.72	6/23/2022 20:17	6.14
6/24/2022 16:58	35.55	6/24/2022 17:45	19.74	6/23/2022 20:18	6.17
6/24/2022 16:59	35.53	6/24/2022 17:46	19.73	6/23/2022 20:19	6.16
6/24/2022 17:00	35.56	6/24/2022 17:47	19.72	6/23/2022 20:20	6.17
6/24/2022 17:01	35.54	6/24/2022 17:48	19.74	6/23/2022 20:21	6.17
6/24/2022 17:02	35.54	6/24/2022 17:49	19.71	6/23/2022 20:22	6.13
6/24/2022 17:03	35.54	6/24/2022 17:50	19.72	6/23/2022 20:23	6.18
6/24/2022 17:04	35.52	6/24/2022 17:51	19.72	6/23/2022 20:24	6.12
6/24/2022 17:05	35.53	6/24/2022 17:52	19.74	6/23/2022 20:25	6.13
6/24/2022 17:06	35.51	6/24/2022 17:53	19.72	6/23/2022 20:26	6.16
6/24/2022 17:07	35.50	6/24/2022 17:54	19.73	6/23/2022 20:27	6.14
6/24/2022 17:08	35.50	6/24/2022 17:55	19.74	6/23/2022 20:28	6.16
6/24/2022 17:09	35.52	6/24/2022 17:56	19.71	6/23/2022 20:29	6.15
6/24/2022 17:10	35.52	6/24/2022 17:57	19.72	6/23/2022 20:30	6.16
6/24/2022 17:11	35.48	6/24/2022 17:58	19.70	6/23/2022 20:31	6.16
6/24/2022 17:12	35.50	6/24/2022 17:59	19.71	6/23/2022 20:32	6.17
6/24/2022 17:13	35.51	6/24/2022 18:00	19.72	6/23/2022 20:33	6.13
6/24/2022 17:14	35.51	6/24/2022 18:01	19.76	6/23/2022 20:34	6.15
6/24/2022 17:15	35.51	6/24/2022 18:02	19.74	6/23/2022 20:35	6.15
6/24/2022 17:16	35.49	6/24/2022 18:03	19.72	6/23/2022 20:36	6.16
6/24/2022 17:17	35.48	6/24/2022 18:04	19.73	6/23/2022 20:37	6.13
6/24/2022 17:18	35.48	6/24/2022 18:05	19.73	6/23/2022 20:38	6.16
6/24/2022 17:19	35.48	6/24/2022 18:06	19.72	6/23/2022 20:39	6.17
6/24/2022 17:20	35.49	6/24/2022 18:07	19.72	6/23/2022 20:40	6.16
6/24/2022 17:21	35.45	6/24/2022 18:08	19.73	6/23/2022 20:41	6.13
6/24/2022 17:22	35.50	6/24/2022 18:09	19.73	6/23/2022 20:42	6.16
6/24/2022 17:23	35.49	6/24/2022 18:10	19.73	6/23/2022 20:43	6.13
6/24/2022 17:24	35.51	6/24/2022 18:11	19.72	6/23/2022 20:44	6.17
6/24/2022 17:25	35.47	6/24/2022 18:12	19.74	6/23/2022 20:45	6.16
6/24/2022 17:26	35.47	6/24/2022 18:13	19.74	6/23/2022 20:46	6.18
6/24/2022 17:27	35.53	6/24/2022 18:14	19.72	6/23/2022 20:47	6.10
6/24/2022 17:28	35.53	6/24/2022 18:15	19.71	6/23/2022 20:48	6.18
6/24/2022 17:29	35.54	6/24/2022 18:16	19.71	6/23/2022 20:49	6.17
6/24/2022 17:30	35.55	6/24/2022 18:17	19.74	6/23/2022 20:50	6.16
6/24/2022 17:31	35.53	6/24/2022 18:18	19.74	6/23/2022 20:51	6.15
6/24/2022 17:32	35.48	6/24/2022 18:19	19.70	6/23/2022 20:52	6.17
6/24/2022 17:33	35.53	6/24/2022 18:20	19.72	6/23/2022 20:53	6.11
6/24/2022 17:34	35.50	6/24/2022 18:21	19.73	6/23/2022 20:54	6.19
6/24/2022 17:35	35.49	6/24/2022 18:22	19.73	6/23/2022 20:55	6.13
6/24/2022 17:36	35.49	6/24/2022 18:23	19.72	6/23/2022 20:56	6.16
6/24/2022 17:37	35.48	6/24/2022 18:24	19.75	6/23/2022 20:57	6.16
6/24/2022 17:38	35.46	6/24/2022 18:25	19.71	6/23/2022 20:58	6.14
6/24/2022 17:39	35.47	6/24/2022 18:26	19.74	6/23/2022 20:59	6.19
6/24/2022 17:40	35.47	6/24/2022 18:27	19.73	6/23/2022 21:00	6.11
6/24/2022 17:41	35.49	6/24/2022 18:28	19.72	6/23/2022 21:01	6.14
6/24/2022 17:42	35.48	6/24/2022 18:29	19.72	6/23/2022 21:02	6.14
6/24/2022 17:43	35.48	6/24/2022 18:30	19.72	6/23/2022 21:03	6.17
6/24/2022 17:44	35.54	6/24/2022 18:31	19.72	6/23/2022 21:04	6.14
6/24/2022 17:45	35.54	6/24/2022 18:32	19.72	6/23/2022 21:05	6.16
6/24/2022 17:46	35.54	6/24/2022 18:33	19.74	6/23/2022 21:06	6.14
6/24/2022 17:47	35.59	6/24/2022 18:34	19.69	6/23/2022 21:07	6.18
6/24/2022 17:48	35.62	6/24/2022 18:35	19.73	6/23/2022 21:08	6.16
6/24/2022 17:49	35.67	6/24/2022 18:36	19.72	6/23/2022 21:09	6.15
6/24/2022 17:50	35.69	6/24/2022 18:37	19.72	6/23/2022 21:10	6.16
6/24/2022 17:51	35.72	6/24/2022 18:38	19.72	6/23/2022 21:11	6.14
6/24/2022 17:52	35.75	6/24/2022 18:39	19.71	6/23/2022 21:12	6.14
6/24/2022 17:53	35.79	6/24/2022 18:40	19.73	6/23/2022 21:13	6.18
6/24/2022 17:54	35.79	6/24/2022 18:41	19.74	6/23/2022 21:14	6.16
6/24/2022 17:55	35.80	6/24/2022 18:42	19.72	6/23/2022 21:15	6.14
6/24/2022 17:56	35.84	6/24/2022 18:43	19.71	6/23/2022 21:16	6.13
6/24/2022 17:57	35.82	6/24/2022 18:44	19.72	6/23/2022 21:17	6.13
6/24/2022 17:58	35.77	6/24/2022 18:45	19.73	6/23/2022 21:18	6.15
6/24/2022 17:59	35.79	6/24/2022 18:46	19.73	6/23/2022 21:19	6.17
6/24/2022 18:00	35.75	6/24/2022 18:47	19.71	6/23/2022 21:20	6.12
6/24/2022 18:01	35.74	6/24/2022 18:48	19.73	6/23/2022 21:21	6.14
6/24/2022 18:02	35.74	6/24/2022 18:49	19.74	6/23/2022 21:22	6.18

6/24/2022 18:03	35.75	6/24/2022 18:50	19.74	6/23/2022 21:23	6.13
6/24/2022 18:04	35.72	6/24/2022 18:51	19.74	6/23/2022 21:24	6.19
6/24/2022 18:05	35.75	6/24/2022 18:52	19.70	6/23/2022 21:25	6.13
6/24/2022 18:06	35.70	6/24/2022 18:53	19.72	6/23/2022 21:26	6.15
6/24/2022 18:07	35.71	6/24/2022 18:54	19.71	6/23/2022 21:27	6.15
6/24/2022 18:08	35.69	6/24/2022 18:55	19.70	6/23/2022 21:28	6.15
6/24/2022 18:09	35.69	6/24/2022 18:56	19.71	6/23/2022 21:29	6.14
6/24/2022 18:10	35.70	6/24/2022 18:57	19.75	6/23/2022 21:30	6.13
6/24/2022 18:11	35.67	6/24/2022 18:58	19.74	6/23/2022 21:31	6.16
6/24/2022 18:12	35.66	6/24/2022 18:59	19.71	6/23/2022 21:32	6.16
6/24/2022 18:13	35.65	6/24/2022 19:00	19.72	6/23/2022 21:33	6.17
6/24/2022 18:14	35.69	6/24/2022 19:01	19.72	6/23/2022 21:34	6.19
6/24/2022 18:15	35.66	6/24/2022 19:02	19.68	6/23/2022 21:35	6.16
6/24/2022 18:16	35.69	6/24/2022 19:03	19.73	6/23/2022 21:36	6.14
6/24/2022 18:17	35.67	6/24/2022 19:04	19.69	6/23/2022 21:37	6.15
6/24/2022 18:18	35.68	6/24/2022 19:05	19.70	6/23/2022 21:38	6.17
6/24/2022 18:19	35.66	6/24/2022 19:06	19.71	6/23/2022 21:39	6.15
6/24/2022 18:20	35.64	6/24/2022 19:07	19.74	6/23/2022 21:40	6.12
6/24/2022 18:21	35.61	6/24/2022 19:08	19.70	6/23/2022 21:41	6.17
6/24/2022 18:22	35.61	6/24/2022 19:09	19.74	6/23/2022 21:42	6.13
6/24/2022 18:23	35.64	6/24/2022 19:10	19.73	6/23/2022 21:43	6.14
6/24/2022 18:24	35.61	6/24/2022 19:11	19.72	6/23/2022 21:44	6.14
6/24/2022 18:25	35.57	6/24/2022 19:12	19.72	6/23/2022 21:45	6.16
6/24/2022 18:26	35.59	6/24/2022 19:13	19.70	6/23/2022 21:46	6.15
6/24/2022 18:27	35.60	6/24/2022 19:14	19.73	6/23/2022 21:47	6.15
6/24/2022 18:28	35.59	6/24/2022 19:15	19.72	6/23/2022 21:48	6.14
6/24/2022 18:29	35.62	6/24/2022 19:16	19.70	6/23/2022 21:49	6.18
6/24/2022 18:30	35.59	6/24/2022 19:17	19.72	6/23/2022 21:50	6.14
6/24/2022 18:31	35.58	6/24/2022 19:18	19.72	6/23/2022 21:51	6.16
6/24/2022 18:32	35.56	6/24/2022 19:19	19.71	6/23/2022 21:52	6.14
6/24/2022 18:33	35.58	6/24/2022 19:20	19.73	6/23/2022 21:53	6.18
6/24/2022 18:34	35.53	6/24/2022 19:21	19.71	6/23/2022 21:54	6.16
6/24/2022 18:35	35.56	6/24/2022 19:22	19.71	6/23/2022 21:55	6.16
6/24/2022 18:36	35.53	6/24/2022 19:23	19.70	6/23/2022 21:56	6.19
6/24/2022 18:37	35.56	6/24/2022 19:24	19.73	6/23/2022 21:57	6.18
6/24/2022 18:38	35.52	6/24/2022 19:25	19.71	6/23/2022 21:58	6.16
6/24/2022 18:39	35.53	6/24/2022 19:26	19.73	6/23/2022 21:59	6.14
6/24/2022 18:40	35.53	6/24/2022 19:27	19.72	6/23/2022 22:00	6.13
6/24/2022 18:41	35.55	6/24/2022 19:28	19.74	6/23/2022 22:01	6.14
6/24/2022 18:42	35.52	6/24/2022 19:29	19.75	6/23/2022 22:02	6.10
6/24/2022 18:43	35.53	6/24/2022 19:30	19.71	6/23/2022 22:03	6.17
6/24/2022 18:44	35.53	6/24/2022 19:31	19.73	6/23/2022 22:04	6.15
6/24/2022 18:45	35.53	6/24/2022 19:32	19.72	6/23/2022 22:05	6.15
6/24/2022 18:46	35.49	6/24/2022 19:33	19.71	6/23/2022 22:06	6.15
6/24/2022 18:47	35.51	6/24/2022 19:34	19.73	6/23/2022 22:07	6.17
6/24/2022 18:48	35.49	6/24/2022 19:35	19.71	6/23/2022 22:08	6.15
6/24/2022 18:49	35.52	6/24/2022 19:36	19.71	6/23/2022 22:09	6.20
6/24/2022 18:50	35.52	6/24/2022 19:37	19.71	6/23/2022 22:10	6.12
6/24/2022 18:51	35.52	6/24/2022 19:38	19.73	6/23/2022 22:11	6.15
6/24/2022 18:52	35.50	6/24/2022 19:39	19.75	6/23/2022 22:12	6.13
6/24/2022 18:53	35.50	6/24/2022 19:40	19.72	6/23/2022 22:13	6.13
6/24/2022 18:54	35.51	6/24/2022 19:41	19.70	6/23/2022 22:14	6.18
6/24/2022 18:55	35.53	6/24/2022 19:42	19.72	6/23/2022 22:15	6.16
6/24/2022 18:56	35.46	6/24/2022 19:43	19.70	6/23/2022 22:16	6.15
6/24/2022 18:57	35.48	6/24/2022 19:44	19.72	6/23/2022 22:17	6.14
6/24/2022 18:58	35.45	6/24/2022 19:45	19.72	6/23/2022 22:18	6.14
6/24/2022 18:59	35.47	6/24/2022 19:46	19.72	6/23/2022 22:19	6.14
6/24/2022 19:00	35.46	6/24/2022 19:47	19.72	6/23/2022 22:20	6.14
6/24/2022 19:01	35.45	6/24/2022 19:48	19.74	6/23/2022 22:21	6.17
6/24/2022 19:02	35.47	6/24/2022 19:49	19.72	6/23/2022 22:22	7.46
6/24/2022 19:03	35.49	6/24/2022 19:50	19.74	6/23/2022 22:23	8.89
6/24/2022 19:04	35.47	6/24/2022 19:51	19.73	6/23/2022 22:24	6.93
6/24/2022 19:05	35.45	6/24/2022 19:52	19.72	6/23/2022 22:25	6.23
6/24/2022 19:06	35.44	6/24/2022 19:53	19.69	6/23/2022 22:26	6.18
6/24/2022 19:07	36.84	6/24/2022 19:54	19.75	6/23/2022 22:27	6.14
6/24/2022 19:08	35.67	6/24/2022 19:55	19.73	6/23/2022 22:28	6.15
6/24/2022 19:09	35.54	6/24/2022 19:56	19.74	6/23/2022 22:29	6.17
6/24/2022 19:10	35.53	6/24/2022 19:57	19.72	6/23/2022 22:30	6.18
6/24/2022 19:11	35.55	6/24/2022 19:58	19.72	6/23/2022 22:31	6.16
6/24/2022 19:12	35.48	6/24/2022 19:59	19.70	6/23/2022 22:32	6.15
6/24/2022 19:13	35.50	6/24/2022 20:00	19.72	6/23/2022 22:33	6.16
6/24/2022 19:14	35.50	6/24/2022 20:01	19.72	6/23/2022 22:34	6.17
6/24/2022 19:15	35.47	6/24/2022 20:02	19.72	6/23/2022 22:35	6.14
6/24/2022 19:16	35.45	6/24/2022 20:03	19.74	6/23/2022 22:36	6.15
6/24/2022 19:17	35.50	6/24/2022 20:04	19.73	6/23/2022 22:37	6.17
6/24/2022 19:18	35.48	6/24/2022 20:05	19.72	6/23/2022 22:38	6.13
6/24/2022 19:19	35.47	6/24/2022 20:06	19.71	6/23/2022 22:39	6.14
6/24/2022 19:20	35.47	6/24/2022 20:07	19.71	6/23/2022 22:40	6.15
6/24/2022 19:21	35.47	6/24/2022 20:08	19.72	6/23/2022 22:41	6.18
6/24/2022 19:22	35.45	6/24/2022 20:09	19.71	6/23/2022 22:42	6.17
6/24/2022 19:23	35.44	6/24/2022 20:10	19.71	6/23/2022 22:43	6.18
6/24/2022 19:24	35.45	6/24/2022 20:11	19.73	6/23/2022 22:44	6.16
6/24/2022 19:25	35.45	6/24/2022 20:12	19.71	6/23/2022 22:45	6.13
6/24/2022 19:26	35.43	6/24/2022 20:13	19.70	6/23/2022 22:46	6.16
6/24/2022 19:27	35.44	6/24/2022 20:14	19.75	6/23/2022 22:47	6.15
6/24/2022 19:28	35.44	6/24/2022 20:15	19.73	6/23/2022 22:48	6.15
6/24/2022 19:29	35.46	6/24/2022 20:16	19.73	6/23/2022 22:49	6.15
6/24/2022 19:30	35.43	6/24/2022 20:17	19.73	6/23/2022 22:50	6.13

6/24/2022 19:31	35.44	6/24/2022 20:18	19.71	6/23/2022 22:51	6.18
6/24/2022 19:32	35.45	6/24/2022 20:19	19.74	6/23/2022 22:52	6.13
6/24/2022 19:33	35.42	6/24/2022 20:20	19.70	6/23/2022 22:53	6.16
6/24/2022 19:34	35.41	6/24/2022 20:21	19.71	6/23/2022 22:54	6.13
6/24/2022 19:35	35.42	6/24/2022 20:22	19.74	6/23/2022 22:55	6.16
6/24/2022 19:36	35.43	6/24/2022 20:23	19.72	6/23/2022 22:56	6.17
6/24/2022 19:37	35.41	6/24/2022 20:24	19.73	6/23/2022 22:57	6.15
6/24/2022 19:38	35.45	6/24/2022 20:25	19.74	6/23/2022 22:58	6.12
6/24/2022 19:39	35.43	6/24/2022 20:26	19.71	6/23/2022 22:59	6.17
6/24/2022 19:40	35.40	6/24/2022 20:27	19.70	6/23/2022 23:00	6.19
6/24/2022 19:41	35.44	6/24/2022 20:28	19.71	6/23/2022 23:01	6.14
6/24/2022 19:42	35.41	6/24/2022 20:29	19.74	6/23/2022 23:02	6.16
6/24/2022 19:43	35.44	6/24/2022 20:30	19.71	6/23/2022 23:03	6.15
6/24/2022 19:44	35.37	6/24/2022 20:31	19.71	6/23/2022 23:04	6.13
6/24/2022 19:45	35.41	6/24/2022 20:32	19.72	6/23/2022 23:05	6.16
6/24/2022 19:46	35.40	6/24/2022 20:33	19.74	6/23/2022 23:06	6.18
6/24/2022 19:47	35.39	6/24/2022 20:34	19.73	6/23/2022 23:07	6.13
6/24/2022 19:48	35.38	6/24/2022 20:35	19.74	6/23/2022 23:08	6.15
6/24/2022 19:49	35.39	6/24/2022 20:36	19.75	6/23/2022 23:09	6.14
6/24/2022 19:50	35.37	6/24/2022 20:37	19.71	6/23/2022 23:10	6.17
6/24/2022 19:51	35.41	6/24/2022 20:38	19.72	6/23/2022 23:11	6.16
6/24/2022 19:52	35.41	6/24/2022 20:39	19.71	6/23/2022 23:12	6.17
6/24/2022 19:53	35.39	6/24/2022 20:40	19.70	6/23/2022 23:13	6.16
6/24/2022 19:54	35.38	6/24/2022 20:41	19.72	6/23/2022 23:14	6.16
6/24/2022 19:55	35.40	6/24/2022 20:42	19.73	6/23/2022 23:15	6.15
6/24/2022 19:56	35.39	6/24/2022 20:43	19.71	6/23/2022 23:16	6.18
6/24/2022 19:57	35.40	6/24/2022 20:44	19.69	6/23/2022 23:17	6.17
6/24/2022 19:58	35.41	6/24/2022 20:45	19.71	6/23/2022 23:18	6.16
6/24/2022 19:59	35.40	6/24/2022 20:46	19.69	6/23/2022 23:19	6.16
6/24/2022 20:00	35.39	6/24/2022 20:47	19.71	6/23/2022 23:20	6.18
6/24/2022 20:01	35.38	6/24/2022 20:48	19.73	6/23/2022 23:21	6.12
6/24/2022 20:02	35.41	6/24/2022 20:49	19.73	6/23/2022 23:22	6.16
6/24/2022 20:03	35.38	6/24/2022 20:50	19.72	6/23/2022 23:23	6.16
6/24/2022 20:04	35.39	6/24/2022 20:51	19.72	6/23/2022 23:24	6.16
6/24/2022 20:05	35.39	6/24/2022 20:52	19.74	6/23/2022 23:25	6.13
6/24/2022 20:06	35.35	6/24/2022 20:53	19.74	6/23/2022 23:26	6.16
6/24/2022 20:07	35.39	6/24/2022 20:54	19.73	6/23/2022 23:27	6.14
6/24/2022 20:08	35.39	6/24/2022 20:55	19.73	6/23/2022 23:28	6.15
6/24/2022 20:09	35.36	6/24/2022 20:56	19.73	6/23/2022 23:29	6.15
6/24/2022 20:10	35.36	6/24/2022 20:57	19.73	6/23/2022 23:30	6.12
6/24/2022 20:11	35.37	6/24/2022 20:58	19.73	6/23/2022 23:31	6.14
6/24/2022 20:12	35.36	6/24/2022 20:59	19.73	6/23/2022 23:32	6.14
6/24/2022 20:13	35.36	6/24/2022 21:00	19.72	6/23/2022 23:33	6.14
6/24/2022 20:14	35.38	6/24/2022 21:01	19.72	6/23/2022 23:34	6.16
6/24/2022 20:15	35.36	6/24/2022 21:02	19.72	6/23/2022 23:35	6.15
6/24/2022 20:16	35.36	6/24/2022 21:03	19.72	6/23/2022 23:36	6.15
6/24/2022 20:17	35.38	6/24/2022 21:04	19.72	6/23/2022 23:37	6.15
6/24/2022 20:18	35.34	6/24/2022 21:05	19.73	6/23/2022 23:38	6.16
6/24/2022 20:19	35.38	6/24/2022 21:06	19.72	6/23/2022 23:39	6.15
6/24/2022 20:20	35.35	6/24/2022 21:07	19.72	6/23/2022 23:40	6.15
6/24/2022 20:21	35.35	6/24/2022 21:08	20.33	6/23/2022 23:41	6.16
6/24/2022 20:22	35.34	6/24/2022 21:09	20.41	6/23/2022 23:42	6.15
6/24/2022 20:23	35.33	6/24/2022 21:10	20.47	6/23/2022 23:43	6.13
6/24/2022 20:24	35.35	6/24/2022 21:11	20.50	6/23/2022 23:44	6.18
6/24/2022 20:25	35.35	6/24/2022 21:12	20.56	6/23/2022 23:45	6.14
6/24/2022 20:26	35.37	6/24/2022 21:13	20.04	6/23/2022 23:46	6.14
6/24/2022 20:27	35.34	6/24/2022 21:14	19.94	6/23/2022 23:47	6.17
6/24/2022 20:28	35.32	6/24/2022 21:15	19.91	6/23/2022 23:48	6.11
6/24/2022 20:29	35.35	6/24/2022 21:16	19.91	6/23/2022 23:49	6.12
6/24/2022 20:30	35.33	6/24/2022 21:17	19.89	6/23/2022 23:50	6.14
6/24/2022 20:31	35.36	6/24/2022 21:18	19.88	6/23/2022 23:51	6.14
6/24/2022 20:32	35.36	6/24/2022 21:19	19.86	6/23/2022 23:52	8.51
6/24/2022 20:33	35.32	6/24/2022 21:20	19.86	6/23/2022 23:53	8.90
6/24/2022 20:34	35.32	6/24/2022 21:21	19.84	6/23/2022 23:54	6.35
6/24/2022 20:35	35.37	6/24/2022 21:22	19.83	6/23/2022 23:55	6.18
6/24/2022 20:36	35.35	6/24/2022 21:23	19.81	6/23/2022 23:56	6.19
6/24/2022 20:37	35.32	6/24/2022 21:24	19.82	6/23/2022 23:57	6.21
6/24/2022 20:38	35.36	6/24/2022 21:25	19.83	6/23/2022 23:58	6.16
6/24/2022 20:39	35.31	6/24/2022 21:26	19.82	6/23/2022 23:59	6.18
6/24/2022 20:40	35.31	6/24/2022 21:27	19.84	6/24/2022 0:00	6.15
6/24/2022 20:41	35.35	6/24/2022 21:28	19.79	6/24/2022 0:01	6.15
6/24/2022 20:42	35.33	6/24/2022 21:29	19.80	6/24/2022 0:02	6.16
6/24/2022 20:43	35.34	6/24/2022 21:30	19.80	6/24/2022 0:03	6.14
6/24/2022 20:44	35.33	6/24/2022 21:31	19.81	6/24/2022 0:04	6.15
6/24/2022 20:45	35.31	6/24/2022 21:32	19.79	6/24/2022 0:05	6.15
6/24/2022 20:46	35.32	6/24/2022 21:33	19.80	6/24/2022 0:06	6.18
6/24/2022 20:47	35.36	6/24/2022 21:34	19.81	6/24/2022 0:07	6.16
6/24/2022 20:48	35.31	6/24/2022 21:35	19.82	6/24/2022 0:08	6.16
6/24/2022 20:49	35.32	6/24/2022 21:36	19.80	6/24/2022 0:09	6.15
6/24/2022 20:50	35.30	6/24/2022 21:37	19.79	6/24/2022 0:10	6.16
6/24/2022 20:51	35.33	6/24/2022 21:38	19.80	6/24/2022 0:11	6.14
6/24/2022 20:52	35.30	6/24/2022 21:39	19.79	6/24/2022 0:12	6.15
6/24/2022 20:53	35.30	6/24/2022 21:40	19.80	6/24/2022 0:13	6.19
6/24/2022 20:54	35.33	6/24/2022 21:41	19.79	6/24/2022 0:14	6.13
6/24/2022 20:55	35.32	6/24/2022 21:42	19.80	6/24/2022 0:15	6.15
6/24/2022 20:56	35.30	6/24/2022 21:43	19.77	6/24/2022 0:16	6.15
6/24/2022 20:57	35.33	6/24/2022 21:44	19.77	6/24/2022 0:17	6.16
6/24/2022 20:58	35.31	6/24/2022 21:45	19.77	6/24/2022 0:18	6.15

6/24/2022 20:59	35.32	6/24/2022 21:46	19.77	6/24/2022 0:19	6.16
6/24/2022 21:00	35.30	6/24/2022 21:47	19.81	6/24/2022 0:20	6.15
6/24/2022 21:01	35.31	6/24/2022 21:48	19.81	6/24/2022 0:21	6.16
6/24/2022 21:02	35.34	6/24/2022 21:49	19.77	6/24/2022 0:22	6.15
6/24/2022 21:03	35.29	6/24/2022 21:50	19.79	6/24/2022 0:23	6.16
6/24/2022 21:04	35.32	6/24/2022 21:51	19.77	6/24/2022 0:24	6.15
6/24/2022 21:05	35.29	6/24/2022 21:52	19.78	6/24/2022 0:25	6.18
6/24/2022 21:06	35.30	6/24/2022 21:53	19.77	6/24/2022 0:26	6.17
6/24/2022 21:07	35.30	6/24/2022 21:54	19.79	6/24/2022 0:27	6.14
6/24/2022 21:08	35.31	6/24/2022 21:55	19.78	6/24/2022 0:28	6.15
6/24/2022 21:09	35.33	6/24/2022 21:56	19.79	6/24/2022 0:29	6.16
6/24/2022 21:10	35.29	6/24/2022 21:57	19.77	6/24/2022 0:30	6.18
6/24/2022 21:11	35.31	6/24/2022 21:58	19.77	6/24/2022 0:31	6.20
6/24/2022 21:12	35.29	6/24/2022 21:59	19.78	6/24/2022 0:32	6.12
6/24/2022 21:13	35.28	6/24/2022 22:00	19.75	6/24/2022 0:33	6.14
6/24/2022 21:14	35.29	6/24/2022 22:01	19.75	6/24/2022 0:34	6.15
6/24/2022 21:15	35.31	6/24/2022 22:02	19.78	6/24/2022 0:35	6.12
6/24/2022 21:16	35.30	6/24/2022 22:03	19.76	6/24/2022 0:36	6.15
6/24/2022 21:17	35.25	6/24/2022 22:04	19.78	6/24/2022 0:37	6.16
6/24/2022 21:18	35.29	6/24/2022 22:05	19.78	6/24/2022 0:38	6.18
6/24/2022 21:19	35.27	6/24/2022 22:06	19.78	6/24/2022 0:39	6.12
6/24/2022 21:20	35.28	6/24/2022 22:07	19.75	6/24/2022 0:40	6.16
6/24/2022 21:21	35.30	6/24/2022 22:08	19.78	6/24/2022 0:41	6.17
6/24/2022 21:22	35.27	6/24/2022 22:09	19.76	6/24/2022 0:42	6.17
6/24/2022 21:23	35.29	6/24/2022 22:10	19.77	6/24/2022 0:43	6.17
6/24/2022 21:24	35.27	6/24/2022 22:11	19.77	6/24/2022 0:44	6.17
6/24/2022 21:25	35.29	6/24/2022 22:12	19.80	6/24/2022 0:45	6.10
6/24/2022 21:26	35.27	6/24/2022 22:13	19.79	6/24/2022 0:46	6.15
6/24/2022 21:27	35.31	6/24/2022 22:14	19.75	6/24/2022 0:47	6.18
6/24/2022 21:28	35.28	6/24/2022 22:15	19.76	6/24/2022 0:48	6.14
6/24/2022 21:29	35.28	6/24/2022 22:16	19.79	6/24/2022 0:49	6.13
6/24/2022 21:30	35.27	6/24/2022 22:17	19.78	6/24/2022 0:50	6.13
6/24/2022 21:31	35.29	6/24/2022 22:18	19.77	6/24/2022 0:51	6.16
6/24/2022 21:32	35.24	6/24/2022 22:19	19.80	6/24/2022 0:52	6.17
6/24/2022 21:33	35.27	6/24/2022 22:20	19.76	6/24/2022 0:53	6.19
6/24/2022 21:34	35.28	6/24/2022 22:21	19.76	6/24/2022 0:54	6.11
6/24/2022 21:35	35.27	6/24/2022 22:22	19.77	6/24/2022 0:55	6.15
6/24/2022 21:36	35.28	6/24/2022 22:23	20.04	6/24/2022 0:56	6.14
6/24/2022 21:37	35.28	6/24/2022 22:24	20.40	6/24/2022 0:57	6.14
6/24/2022 21:38	35.24	6/24/2022 22:25	20.52	6/24/2022 0:58	6.16
6/24/2022 21:39	35.24	6/24/2022 22:26	20.52	6/24/2022 0:59	6.17
6/24/2022 21:40	35.28	6/24/2022 22:27	20.54	6/24/2022 1:00	6.15
6/24/2022 21:41	35.27	6/24/2022 22:28	20.10	6/24/2022 1:01	6.14
6/24/2022 21:42	35.27	6/24/2022 22:29	19.93	6/24/2022 1:02	6.14
6/24/2022 21:43	35.27	6/24/2022 22:30	19.95	6/24/2022 1:03	6.13
6/24/2022 21:44	35.22	6/24/2022 22:31	19.93	6/24/2022 1:04	6.15
6/24/2022 21:45	35.25	6/24/2022 22:32	19.90	6/24/2022 1:05	6.17
6/24/2022 21:46	35.28	6/24/2022 22:33	19.89	6/24/2022 1:06	6.16
6/24/2022 21:47	35.27	6/24/2022 22:34	19.88	6/24/2022 1:07	6.13
6/24/2022 21:48	35.24	6/24/2022 22:35	19.90	6/24/2022 1:08	6.14
6/24/2022 21:49	35.27	6/24/2022 22:36	19.86	6/24/2022 1:09	6.17
6/24/2022 21:50	35.27	6/24/2022 22:37	19.88	6/24/2022 1:10	6.14
6/24/2022 21:51	35.25	6/24/2022 22:38	19.85	6/24/2022 1:11	6.17
6/24/2022 21:52	35.24	6/24/2022 22:39	19.85	6/24/2022 1:12	6.15
6/24/2022 21:53	35.25	6/24/2022 22:40	19.85	6/24/2022 1:13	6.16
6/24/2022 21:54	35.24	6/24/2022 22:41	19.84	6/24/2022 1:14	6.17
6/24/2022 21:55	35.25	6/24/2022 22:42	19.83	6/24/2022 1:15	6.16
6/24/2022 21:56	35.28	6/24/2022 22:43	19.86	6/24/2022 1:16	6.15
6/24/2022 21:57	35.25	6/24/2022 22:44	19.83	6/24/2022 1:17	6.17
6/24/2022 21:58	35.25	6/24/2022 22:45	19.79	6/24/2022 1:18	6.14
6/24/2022 21:59	35.27	6/24/2022 22:46	19.84	6/24/2022 1:19	6.17
6/24/2022 22:00	35.23	6/24/2022 22:47	19.82	6/24/2022 1:20	6.14
6/24/2022 22:01	35.26	6/24/2022 22:48	19.83	6/24/2022 1:21	6.16
6/24/2022 22:02	35.24	6/24/2022 22:49	19.83	6/24/2022 1:22	6.15
6/24/2022 22:03	35.21	6/24/2022 22:50	19.82	6/24/2022 1:23	6.13
6/24/2022 22:04	35.21	6/24/2022 22:51	19.82	6/24/2022 1:24	6.14
6/24/2022 22:05	35.26	6/24/2022 22:52	19.81	6/24/2022 1:25	6.13
6/24/2022 22:06	35.22	6/24/2022 22:53	19.79	6/24/2022 1:26	6.19
6/24/2022 22:07	35.23	6/24/2022 22:54	19.81	6/24/2022 1:27	6.13
6/24/2022 22:08	35.25	6/24/2022 22:55	19.80	6/24/2022 1:28	6.15
6/24/2022 22:09	35.24	6/24/2022 22:56	19.80	6/24/2022 1:29	6.17
6/24/2022 22:10	35.23	6/24/2022 22:57	19.81	6/24/2022 1:30	6.17
6/24/2022 22:11	35.25	6/24/2022 22:58	19.80	6/24/2022 1:31	6.15
6/24/2022 22:12	35.21	6/24/2022 22:59	19.78	6/24/2022 1:32	6.14
6/24/2022 22:13	35.21	6/24/2022 23:00	19.80	6/24/2022 1:33	6.16
6/24/2022 22:14	35.23	6/24/2022 23:01	19.78	6/24/2022 1:34	6.16
6/24/2022 22:15	35.21	6/24/2022 23:02	19.83	6/24/2022 1:35	6.13
6/24/2022 22:16	35.25	6/24/2022 23:03	19.78	6/24/2022 1:36	6.16
6/24/2022 22:17	35.24	6/24/2022 23:04	19.78	6/24/2022 1:37	6.14
6/24/2022 22:18	35.22	6/24/2022 23:05	19.80	6/24/2022 1:38	6.16
6/24/2022 22:19	35.24	6/24/2022 23:06	19.81	6/24/2022 1:39	6.16
6/24/2022 22:20	35.21	6/24/2022 23:07	19.79	6/24/2022 1:40	6.12
6/24/2022 22:21	35.18	6/24/2022 23:08	19.77	6/24/2022 1:41	6.12
6/24/2022 22:22	35.24	6/24/2022 23:09	19.77	6/24/2022 1:42	6.14
6/24/2022 22:23	35.25	6/24/2022 23:10	19.79	6/24/2022 1:43	6.14
6/24/2022 22:24	35.23	6/24/2022 23:11	19.81	6/24/2022 1:44	6.16
6/24/2022 22:25	35.24	6/24/2022 23:12	19.77	6/24/2022 1:45	6.16
6/24/2022 22:26	35.22	6/24/2022 23:13	19.78	6/24/2022 1:46	6.17

6/24/2022 22:27	35.21	6/24/2022 23:14	19.78	6/24/2022 1:47	6.13
6/24/2022 22:28	35.20	6/24/2022 23:15	19.79	6/24/2022 1:48	6.15
6/24/2022 22:29	35.23	6/24/2022 23:16	19.79	6/24/2022 1:49	6.14
6/24/2022 22:30	35.21	6/24/2022 23:17	19.78	6/24/2022 1:50	6.15
6/24/2022 22:31	35.20	6/24/2022 23:18	19.79	6/24/2022 1:51	6.17
6/24/2022 22:32	35.21	6/24/2022 23:19	19.80	6/24/2022 1:52	6.11
6/24/2022 22:33	35.20	6/24/2022 23:20	19.78	6/24/2022 1:53	6.13
6/24/2022 22:34	35.19	6/24/2022 23:21	19.78	6/24/2022 1:54	6.14
6/24/2022 22:35	35.19	6/24/2022 23:22	19.81	6/24/2022 1:55	6.14
6/24/2022 22:36	35.20	6/24/2022 23:23	19.78	6/24/2022 1:56	6.16
6/24/2022 22:37	35.21	6/24/2022 23:24	19.78	6/24/2022 1:57	6.15
6/24/2022 22:38	35.17	6/24/2022 23:25	19.78	6/24/2022 1:58	6.15
6/24/2022 22:39	35.16	6/24/2022 23:26	19.80	6/24/2022 1:59	6.14
6/24/2022 22:40	35.20	6/24/2022 23:27	19.78	6/24/2022 2:00	6.16
6/24/2022 22:41	35.17	6/24/2022 23:28	19.77	6/24/2022 2:01	6.13
6/24/2022 22:42	35.21	6/24/2022 23:29	19.76	6/24/2022 2:02	6.15
6/24/2022 22:43	35.23	6/24/2022 23:30	19.77	6/24/2022 2:03	6.14
6/24/2022 22:44	35.22	6/24/2022 23:31	19.76	6/24/2022 2:04	6.15
6/24/2022 22:45	35.21	6/24/2022 23:32	19.78	6/24/2022 2:05	6.15
6/24/2022 22:46	35.21	6/24/2022 23:33	19.76	6/24/2022 2:06	6.13
6/24/2022 22:47	35.24	6/24/2022 23:34	19.76	6/24/2022 2:07	6.17
6/24/2022 22:48	35.25	6/24/2022 23:35	19.77	6/24/2022 2:08	6.14
6/24/2022 22:49	35.23	6/24/2022 23:36	19.76	6/24/2022 2:09	6.12
6/24/2022 22:50	35.27	6/24/2022 23:37	19.78	6/24/2022 2:10	6.16
6/24/2022 22:51	35.21	6/24/2022 23:38	19.77	6/24/2022 2:11	6.15
6/24/2022 22:52	35.25	6/24/2022 23:39	19.77	6/24/2022 2:12	6.15
6/24/2022 22:53	35.25	6/24/2022 23:40	19.79	6/24/2022 2:13	6.15
6/24/2022 22:54	35.23	6/24/2022 23:41	19.75	6/24/2022 2:14	6.16
6/24/2022 22:55	35.21	6/24/2022 23:42	19.76	6/24/2022 2:15	6.16
6/24/2022 22:56	35.21	6/24/2022 23:43	19.79	6/24/2022 2:16	6.14
6/24/2022 22:57	35.20	6/24/2022 23:44	19.76	6/24/2022 2:17	6.15
6/24/2022 22:58	35.24	6/24/2022 23:45	19.74	6/24/2022 2:18	6.14
6/24/2022 22:59	35.19	6/24/2022 23:46	19.79	6/24/2022 2:19	6.16
6/24/2022 23:00	35.18	6/24/2022 23:47	19.76	6/24/2022 2:20	6.14
6/24/2022 23:01	35.22	6/24/2022 23:48	19.77	6/24/2022 2:21	6.12
6/24/2022 23:02	35.22	6/24/2022 23:49	19.76	6/24/2022 2:22	6.12
6/24/2022 23:03	35.21	6/24/2022 23:50	19.76	6/24/2022 2:23	6.15
6/24/2022 23:04	35.18	6/24/2022 23:51	19.77	6/24/2022 2:24	6.15
6/24/2022 23:05	35.18	6/24/2022 23:52	19.78	6/24/2022 2:25	6.17
6/24/2022 23:06	35.15	6/24/2022 23:53	19.78	6/24/2022 2:26	6.15
6/24/2022 23:07	35.19	6/24/2022 23:54	19.80	6/24/2022 2:27	6.18
6/24/2022 23:08	35.18	6/24/2022 23:55	19.79	6/24/2022 2:28	6.16
6/24/2022 23:09	35.19	6/24/2022 23:56	19.78	6/24/2022 2:29	6.14
6/24/2022 23:10	35.19	6/24/2022 23:57	19.77	6/24/2022 2:30	6.18
6/24/2022 23:11	35.18	6/24/2022 23:58	19.77	6/24/2022 2:31	6.16
6/24/2022 23:12	35.16	6/24/2022 23:59	19.79	6/24/2022 2:32	6.16
6/24/2022 23:13	35.18	6/25/2022 0:00	19.76	6/24/2022 2:33	6.18
6/24/2022 23:14	35.21	6/25/2022 0:01	19.73	6/24/2022 2:34	6.13
6/24/2022 23:15	35.15	6/25/2022 0:02	19.77	6/24/2022 2:35	6.17
6/24/2022 23:16	35.17	6/25/2022 0:03	19.76	6/24/2022 2:36	6.17
6/24/2022 23:17	35.18	6/25/2022 0:04	19.77	6/24/2022 2:37	6.13
6/24/2022 23:18	35.19	6/25/2022 0:05	19.75	6/24/2022 2:38	6.17
6/24/2022 23:19	35.21	6/25/2022 0:06	19.76	6/24/2022 2:39	6.15
6/24/2022 23:20	35.18	6/25/2022 0:07	19.74	6/24/2022 2:40	6.11
6/24/2022 23:21	35.20	6/25/2022 0:08	19.74	6/24/2022 2:41	6.15
6/24/2022 23:22	35.16	6/25/2022 0:09	19.76	6/24/2022 2:42	6.14
6/24/2022 23:23	35.16	6/25/2022 0:10	19.77	6/24/2022 2:43	6.14
6/24/2022 23:24	35.18	6/25/2022 0:11	19.76	6/24/2022 2:44	6.14
6/24/2022 23:25	35.19	6/25/2022 0:12	19.78	6/24/2022 2:45	6.14
6/24/2022 23:26	35.19	6/25/2022 0:13	19.76	6/24/2022 2:46	6.13
6/24/2022 23:27	35.16	6/25/2022 0:14	19.76	6/24/2022 2:47	6.17
6/24/2022 23:28	35.17	6/25/2022 0:15	19.74	6/24/2022 2:48	6.14
6/24/2022 23:29	35.17	6/25/2022 0:16	19.77	6/24/2022 2:49	6.14
6/24/2022 23:30	35.17	6/25/2022 0:17	19.75	6/24/2022 2:50	6.17
6/24/2022 23:31	35.17	6/25/2022 0:18	19.75	6/24/2022 2:51	6.13
6/24/2022 23:32	35.15	6/25/2022 0:19	19.76	6/24/2022 2:52	6.14
6/24/2022 23:33	35.17	6/25/2022 0:20	19.75	6/24/2022 2:53	6.16
6/24/2022 23:34	35.16	6/25/2022 0:21	19.74	6/24/2022 2:54	6.16
6/24/2022 23:35	35.18	6/25/2022 0:22	19.75	6/24/2022 2:55	6.15
6/24/2022 23:36	35.18	6/25/2022 0:23	19.75	6/24/2022 2:56	6.16
6/24/2022 23:37	35.18	6/25/2022 0:24	19.74	6/24/2022 2:57	6.17
6/24/2022 23:38	35.17	6/25/2022 0:25	19.74	6/24/2022 2:58	6.13
6/24/2022 23:39	35.20	6/25/2022 0:26	19.75	6/24/2022 2:59	6.12
6/24/2022 23:40	35.19	6/25/2022 0:27	19.74	6/24/2022 3:00	6.17
6/24/2022 23:41	35.22	6/25/2022 0:28	19.75	6/24/2022 3:01	6.15
6/24/2022 23:42	35.20	6/25/2022 0:29	19.75	6/24/2022 3:02	6.16
6/24/2022 23:43	35.20	6/25/2022 0:30	19.78	6/24/2022 3:03	6.16
6/24/2022 23:44	35.18	6/25/2022 0:31	19.78	6/24/2022 3:04	6.14
6/24/2022 23:45	35.21	6/25/2022 0:32	19.76	6/24/2022 3:05	6.13
6/24/2022 23:46	35.20	6/25/2022 0:33	19.76	6/24/2022 3:06	6.14
6/24/2022 23:47	35.22	6/25/2022 0:34	19.74	6/24/2022 3:07	6.13
6/24/2022 23:48	35.22	6/25/2022 0:35	19.76	6/24/2022 3:08	6.17
6/24/2022 23:49	35.25	6/25/2022 0:36	19.78	6/24/2022 3:09	6.16
6/24/2022 23:50	35.22	6/25/2022 0:37	19.76	6/24/2022 3:10	6.16
6/24/2022 23:51	35.21	6/25/2022 0:38	19.75	6/24/2022 3:11	6.16
6/24/2022 23:52	35.19	6/25/2022 0:39	19.73	6/24/2022 3:12	6.14
6/24/2022 23:53	35.21	6/25/2022 0:40	19.78	6/24/2022 3:13	6.14
6/24/2022 23:54	35.22	6/25/2022 0:41	19.76	6/24/2022 3:14	6.15

6/24/2022 23:55	35.20	6/25/2022 0:42	19.76	6/24/2022 3:15	6.12
6/24/2022 23:56	35.23	6/25/2022 0:43	19.75	6/24/2022 3:16	6.17
6/24/2022 23:57	35.22	6/25/2022 0:44	19.77	6/24/2022 3:17	6.14
6/24/2022 23:58	35.14	6/25/2022 0:45	19.76	6/24/2022 3:18	6.15
6/24/2022 23:59	35.19	6/25/2022 0:46	19.76	6/24/2022 3:19	6.16
6/25/2022 0:00	35.16	6/25/2022 0:47	19.75	6/24/2022 3:20	6.15
6/25/2022 0:01	35.20	6/25/2022 0:48	19.76	6/24/2022 3:21	6.15
6/25/2022 0:02	35.15	6/25/2022 0:49	19.77	6/24/2022 3:22	6.12
6/25/2022 0:03	35.16	6/25/2022 0:50	19.72	6/24/2022 3:23	6.16
6/25/2022 0:04	35.15	6/25/2022 0:51	19.75	6/24/2022 3:24	6.16
6/25/2022 0:05	35.16	6/25/2022 0:52	19.76	6/24/2022 3:25	6.16
6/25/2022 0:06	35.14	6/25/2022 0:53	19.76	6/24/2022 3:26	6.15
6/25/2022 0:07	35.16	6/25/2022 0:54	19.74	6/24/2022 3:27	6.14
6/25/2022 0:08	35.20	6/25/2022 0:55	19.72	6/24/2022 3:28	6.16
6/25/2022 0:09	35.15	6/25/2022 0:56	19.75	6/24/2022 3:29	6.16
6/25/2022 0:10	35.15	6/25/2022 0:57	19.78	6/24/2022 3:30	6.16
6/25/2022 0:11	35.17	6/25/2022 0:58	19.75	6/24/2022 3:31	6.13
6/25/2022 0:12	35.14	6/25/2022 0:59	19.76	6/24/2022 3:32	6.16
6/25/2022 0:13	35.16	6/25/2022 1:00	19.74	6/24/2022 3:33	6.17
6/25/2022 0:14	35.15	6/25/2022 1:01	19.74	6/24/2022 3:34	6.16
6/25/2022 0:15	35.15	6/25/2022 1:02	19.73	6/24/2022 3:35	6.12
6/25/2022 0:16	35.16	6/25/2022 1:03	19.75	6/24/2022 3:36	6.18
6/25/2022 0:17	35.14	6/25/2022 1:04	19.77	6/24/2022 3:37	6.19
6/25/2022 0:18	35.14	6/25/2022 1:05	19.73	6/24/2022 3:38	6.16
6/25/2022 0:19	35.14	6/25/2022 1:06	19.75	6/24/2022 3:39	6.14
6/25/2022 0:20	35.16	6/25/2022 1:07	19.77	6/24/2022 3:40	6.14
6/25/2022 0:21	35.17	6/25/2022 1:08	19.75	6/24/2022 3:41	6.14
6/25/2022 0:22	35.15	6/25/2022 1:09	19.75	6/24/2022 3:42	6.17
6/25/2022 0:23	35.15	6/25/2022 1:10	19.77	6/24/2022 3:43	6.15
6/25/2022 0:24	35.16	6/25/2022 1:11	19.78	6/24/2022 3:44	6.14
6/25/2022 0:25	35.12	6/25/2022 1:12	19.73	6/24/2022 3:45	6.15
6/25/2022 0:26	35.14	6/25/2022 1:13	19.75	6/24/2022 3:46	6.13
6/25/2022 0:27	35.16	6/25/2022 1:14	19.74	6/24/2022 3:47	6.15
6/25/2022 0:28	35.12	6/25/2022 1:15	19.76	6/24/2022 3:48	6.16
6/25/2022 0:29	35.10	6/25/2022 1:16	19.75	6/24/2022 3:49	6.16
6/25/2022 0:30	35.12	6/25/2022 1:17	19.77	6/24/2022 3:50	6.15
6/25/2022 0:31	35.13	6/25/2022 1:18	19.76	6/24/2022 3:51	6.15
6/25/2022 0:32	35.11	6/25/2022 1:19	19.72	6/24/2022 3:52	6.16
6/25/2022 0:33	35.14	6/25/2022 1:20	19.76	6/24/2022 3:53	6.14
6/25/2022 0:34	35.11	6/25/2022 1:21	19.76	6/24/2022 3:54	6.17
6/25/2022 0:35	35.09	6/25/2022 1:22	19.75	6/24/2022 3:55	6.14
6/25/2022 0:36	35.13	6/25/2022 1:23	19.76	6/24/2022 3:56	6.12
6/25/2022 0:37	35.12	6/25/2022 1:24	19.72	6/24/2022 3:57	6.15
6/25/2022 0:38	35.14	6/25/2022 1:25	19.74	6/24/2022 3:58	6.13
6/25/2022 0:39	35.15	6/25/2022 1:26	19.74	6/24/2022 3:59	6.17
6/25/2022 0:40	35.14	6/25/2022 1:27	19.72	6/24/2022 4:00	6.13
6/25/2022 0:41	35.12	6/25/2022 1:28	19.75	6/24/2022 4:01	6.14
6/25/2022 0:42	35.09	6/25/2022 1:29	19.77	6/24/2022 4:02	6.12
6/25/2022 0:43	35.14	6/25/2022 1:30	19.78	6/24/2022 4:03	6.17
6/25/2022 0:44	35.14	6/25/2022 1:31	19.73	6/24/2022 4:04	6.15
6/25/2022 0:45	35.14	6/25/2022 1:32	19.75	6/24/2022 4:05	6.15
6/25/2022 0:46	35.12	6/25/2022 1:33	19.74	6/24/2022 4:06	6.18
6/25/2022 0:47	35.10	6/25/2022 1:34	19.75	6/24/2022 4:07	6.13
6/25/2022 0:48	35.09	6/25/2022 1:35	19.76	6/24/2022 4:08	6.14
6/25/2022 0:49	35.13	6/25/2022 1:36	19.77	6/24/2022 4:09	6.16
6/25/2022 0:50	35.07	6/25/2022 1:37	19.74	6/24/2022 4:10	6.16
6/25/2022 0:51	35.10	6/25/2022 1:38	19.73	6/24/2022 4:11	6.16
6/25/2022 0:52	35.12	6/25/2022 1:39	19.74	6/24/2022 4:12	6.15
6/25/2022 0:53	35.11	6/25/2022 1:40	19.75	6/24/2022 4:13	6.15
6/25/2022 0:54	35.09	6/25/2022 1:41	19.74	6/24/2022 4:14	6.15
6/25/2022 0:55	35.08	6/25/2022 1:42	19.73	6/24/2022 4:15	6.14
6/25/2022 0:56	35.10	6/25/2022 1:43	19.76	6/24/2022 4:16	6.17
6/25/2022 0:57	35.11	6/25/2022 1:44	19.77	6/24/2022 4:17	6.16
6/25/2022 0:58	35.11	6/25/2022 1:45	19.73	6/24/2022 4:18	6.16
6/25/2022 0:59	35.11	6/25/2022 1:46	19.75	6/24/2022 4:19	6.18
6/25/2022 1:00	35.09	6/25/2022 1:47	19.76	6/24/2022 4:20	6.14
6/25/2022 1:01	35.09	6/25/2022 1:48	19.75	6/24/2022 4:21	6.13
6/25/2022 1:02	35.08	6/25/2022 1:49	19.74	6/24/2022 4:22	6.17
6/25/2022 1:03	35.09	6/25/2022 1:50	19.76	6/24/2022 4:23	6.14
6/25/2022 1:04	35.10	6/25/2022 1:51	19.76	6/24/2022 4:24	6.17
6/25/2022 1:05	35.10	6/25/2022 1:52	19.75	6/24/2022 4:25	6.17
6/25/2022 1:06	35.09	6/25/2022 1:53	19.72	6/24/2022 4:26	6.14
6/25/2022 1:07	35.08	6/25/2022 1:54	19.74	6/24/2022 4:27	6.12
6/25/2022 1:08	35.09	6/25/2022 1:55	19.72	6/24/2022 4:28	6.16
6/25/2022 1:09	35.09	6/25/2022 1:56	19.75	6/24/2022 4:29	6.14
6/25/2022 1:10	35.08	6/25/2022 1:57	19.72	6/24/2022 4:30	6.14
6/25/2022 1:11	35.07	6/25/2022 1:58	19.75	6/24/2022 4:31	6.15
6/25/2022 1:12	35.11	6/25/2022 1:59	19.75	6/24/2022 4:32	6.16
6/25/2022 1:13	35.09	6/25/2022 2:00	19.75	6/24/2022 4:33	6.14
6/25/2022 1:14	35.06	6/25/2022 2:01	19.76	6/24/2022 4:34	6.15
6/25/2022 1:15	35.10	6/25/2022 2:02	19.75	6/24/2022 4:35	6.13
6/25/2022 1:16	35.09	6/25/2022 2:03	19.75	6/24/2022 4:36	6.16
6/25/2022 1:17	35.07	6/25/2022 2:04	19.74	6/24/2022 4:37	6.15
6/25/2022 1:18	35.08	6/25/2022 2:05	19.76	6/24/2022 4:38	6.13
6/25/2022 1:19	35.07	6/25/2022 2:06	19.73	6/24/2022 4:39	6.13
6/25/2022 1:20	35.07	6/25/2022 2:07	19.70	6/24/2022 4:40	6.14
6/25/2022 1:21	35.10	6/25/2022 2:08	19.72	6/24/2022 4:41	6.15
6/25/2022 1:22	35.08	6/25/2022 2:09	19.77	6/24/2022 4:42	6.15

6/25/2022 1:23	35.06	6/25/2022 2:10	19.76	6/24/2022 4:43	6.17
6/25/2022 1:24	35.07	6/25/2022 2:11	19.73	6/24/2022 4:44	6.15
6/25/2022 1:25	35.07	6/25/2022 2:12	19.73	6/24/2022 4:45	6.16
6/25/2022 1:26	35.07	6/25/2022 2:13	19.74	6/24/2022 4:46	6.16
6/25/2022 1:27	35.13	6/25/2022 2:14	19.75	6/24/2022 4:47	6.15
6/25/2022 1:28	35.07	6/25/2022 2:15	19.78	6/24/2022 4:48	8.66
6/25/2022 1:29	35.08	6/25/2022 2:16	19.75	6/24/2022 4:49	8.01
6/25/2022 1:30	35.09	6/25/2022 2:17	19.75	6/24/2022 4:50	6.28
6/25/2022 1:31	35.08	6/25/2022 2:18	19.75	6/24/2022 4:51	6.18
6/25/2022 1:32	35.06	6/25/2022 2:19	19.74	6/24/2022 4:52	6.22
6/25/2022 1:33	35.09	6/25/2022 2:20	19.76	6/24/2022 4:53	6.18
6/25/2022 1:34	35.07	6/25/2022 2:21	19.73	6/24/2022 4:54	6.18
6/25/2022 1:35	35.06	6/25/2022 2:22	19.76	6/24/2022 4:55	6.16
6/25/2022 1:36	35.08	6/25/2022 2:23	19.74	6/24/2022 4:56	6.16
6/25/2022 1:37	35.07	6/25/2022 2:24	19.75	6/24/2022 4:57	6.17
6/25/2022 1:38	35.01	6/25/2022 2:25	19.75	6/24/2022 4:58	6.16
6/25/2022 1:39	35.04	6/25/2022 2:26	19.72	6/24/2022 4:59	6.16
6/25/2022 1:40	35.05	6/25/2022 2:27	19.75	6/24/2022 5:00	6.17
6/25/2022 1:41	35.04	6/25/2022 2:28	19.75	6/24/2022 5:01	6.17
6/25/2022 1:42	35.05	6/25/2022 2:29	19.74	6/24/2022 5:02	6.16
6/25/2022 1:43	35.05	6/25/2022 2:30	19.78	6/24/2022 5:03	6.17
6/25/2022 1:44	35.06	6/25/2022 2:31	19.76	6/24/2022 5:04	6.19
6/25/2022 1:45	35.04	6/25/2022 2:32	19.73	6/24/2022 5:05	6.15
6/25/2022 1:46	35.08	6/25/2022 2:33	19.76	6/24/2022 5:06	6.14
6/25/2022 1:47	35.04	6/25/2022 2:34	19.74	6/24/2022 5:07	6.17
6/25/2022 1:48	35.04	6/25/2022 2:35	19.73	6/24/2022 5:08	6.14
6/25/2022 1:49	35.06	6/25/2022 2:36	19.76	6/24/2022 5:09	6.18
6/25/2022 1:50	35.04	6/25/2022 2:37	19.77	6/24/2022 5:10	6.15
6/25/2022 1:51	35.02	6/25/2022 2:38	19.76	6/24/2022 5:11	6.16
6/25/2022 1:52	35.03	6/25/2022 2:39	19.76	6/24/2022 5:12	6.18
6/25/2022 1:53	35.06	6/25/2022 2:40	19.73	6/24/2022 5:13	6.14
6/25/2022 1:54	35.01	6/25/2022 2:41	19.75	6/24/2022 5:14	6.17
6/25/2022 1:55	35.06	6/25/2022 2:42	19.75	6/24/2022 5:15	6.16
6/25/2022 1:56	35.03	6/25/2022 2:43	19.76	6/24/2022 5:16	6.15
6/25/2022 1:57	36.45	6/25/2022 2:44	19.74	6/24/2022 5:17	6.15
6/25/2022 1:58	35.31	6/25/2022 2:45	19.73	6/24/2022 5:18	6.16
6/25/2022 1:59	35.18	6/25/2022 2:46	19.74	6/24/2022 5:19	6.15
6/25/2022 2:00	35.14	6/25/2022 2:47	19.76	6/24/2022 5:20	6.15
6/25/2022 2:01	35.11	6/25/2022 2:48	19.75	6/24/2022 5:21	6.12
6/25/2022 2:02	35.10	6/25/2022 2:49	19.76	6/24/2022 5:22	6.16
6/25/2022 2:03	35.11	6/25/2022 2:50	19.75	6/24/2022 5:23	6.15
6/25/2022 2:04	35.13	6/25/2022 2:51	19.75	6/24/2022 5:24	6.15
6/25/2022 2:05	35.10	6/25/2022 2:52	19.76	6/24/2022 5:25	6.15
6/25/2022 2:06	35.07	6/25/2022 2:53	19.74	6/24/2022 5:26	6.15
6/25/2022 2:07	35.10	6/25/2022 2:54	19.74	6/24/2022 5:27	6.17
6/25/2022 2:08	35.09	6/25/2022 2:55	19.77	6/24/2022 5:28	6.13
6/25/2022 2:09	35.08	6/25/2022 2:56	19.74	6/24/2022 5:29	6.15
6/25/2022 2:10	35.07	6/25/2022 2:57	19.74	6/24/2022 5:30	6.15
6/25/2022 2:11	35.06	6/25/2022 2:58	19.74	6/24/2022 5:31	6.18
6/25/2022 2:12	35.04	6/25/2022 2:59	19.76	6/24/2022 5:32	6.14
6/25/2022 2:13	35.05	6/25/2022 3:00	19.76	6/24/2022 5:33	6.16
6/25/2022 2:14	35.05	6/25/2022 3:01	19.74	6/24/2022 5:34	6.15
6/25/2022 2:15	35.05	6/25/2022 3:02	19.75	6/24/2022 5:35	6.14
6/25/2022 2:16	35.03	6/25/2022 3:03	19.73	6/24/2022 5:36	6.17
6/25/2022 2:17	35.06	6/25/2022 3:04	19.77	6/24/2022 5:37	6.16
6/25/2022 2:18	35.56	6/25/2022 3:05	19.75	6/24/2022 5:38	6.17
6/25/2022 2:19	35.50	6/25/2022 3:06	19.72	6/24/2022 5:39	6.13
6/25/2022 2:20	35.22	6/25/2022 3:07	19.74	6/24/2022 5:40	6.14
6/25/2022 2:21	35.17	6/25/2022 3:08	19.74	6/24/2022 5:41	6.17
6/25/2022 2:22	35.15	6/25/2022 3:09	19.74	6/24/2022 5:42	6.15
6/25/2022 2:23	35.11	6/25/2022 3:10	19.75	6/24/2022 5:43	6.16
6/25/2022 2:24	35.08	6/25/2022 3:11	19.77	6/24/2022 5:44	6.15
6/25/2022 2:25	35.09	6/25/2022 3:12	19.76	6/24/2022 5:45	6.16
6/25/2022 2:26	35.10	6/25/2022 3:13	19.77	6/24/2022 5:46	6.15
6/25/2022 2:27	35.11	6/25/2022 3:14	19.77	6/24/2022 5:47	6.13
6/25/2022 2:28	35.07	6/25/2022 3:15	19.73	6/24/2022 5:48	6.14
6/25/2022 2:29	35.08	6/25/2022 3:16	19.73	6/24/2022 5:49	6.15
6/25/2022 2:30	35.08	6/25/2022 3:17	19.73	6/24/2022 5:50	6.16
6/25/2022 2:31	35.09	6/25/2022 3:18	19.74	6/24/2022 5:51	6.11
6/25/2022 2:32	35.06	6/25/2022 3:19	19.74	6/24/2022 5:52	6.12
6/25/2022 2:33	35.10	6/25/2022 3:20	19.77	6/24/2022 5:53	6.16
6/25/2022 2:34	35.05	6/25/2022 3:21	19.74	6/24/2022 5:54	6.16
6/25/2022 2:35	35.08	6/25/2022 3:22	19.72	6/24/2022 5:55	6.16
6/25/2022 2:36	35.06	6/25/2022 3:23	19.75	6/24/2022 5:56	6.14
6/25/2022 2:37	35.07	6/25/2022 3:24	19.75	6/24/2022 5:57	6.14
6/25/2022 2:38	35.04	6/25/2022 3:25	19.72	6/24/2022 5:58	6.16
6/25/2022 2:39	35.08	6/25/2022 3:26	19.76	6/24/2022 5:59	6.15
6/25/2022 2:40	35.05	6/25/2022 3:27	19.74	6/24/2022 6:00	6.14
6/25/2022 2:41	35.02	6/25/2022 3:28	19.73	6/24/2022 6:01	6.18
6/25/2022 2:42	35.05	6/25/2022 3:29	19.74	6/24/2022 6:02	6.16
6/25/2022 2:43	35.02	6/25/2022 3:30	19.73	6/24/2022 6:03	6.14
6/25/2022 2:44	35.03	6/25/2022 3:31	19.75	6/24/2022 6:04	6.14
6/25/2022 2:45	35.03	6/25/2022 3:32	19.76	6/24/2022 6:05	6.12
6/25/2022 2:46	35.05	6/25/2022 3:33	19.74	6/24/2022 6:06	6.17
6/25/2022 2:47	35.06	6/25/2022 3:34	19.75	6/24/2022 6:07	6.15
6/25/2022 2:48	35.05	6/25/2022 3:35	19.72	6/24/2022 6:08	6.16
6/25/2022 2:49	35.03	6/25/2022 3:36	19.77	6/24/2022 6:09	6.18
6/25/2022 2:50	35.03	6/25/2022 3:37	19.76	6/24/2022 6:10	6.15

6/25/2022 2:51	35.02	6/25/2022 3:38	19.74	6/24/2022 6:11	6.16
6/25/2022 2:52	35.05	6/25/2022 3:39	19.75	6/24/2022 6:12	6.20
6/25/2022 2:53	35.05	6/25/2022 3:40	19.76	6/24/2022 6:13	6.14
6/25/2022 2:54	35.02	6/25/2022 3:41	19.73	6/24/2022 6:14	6.16
6/25/2022 2:55	35.04	6/25/2022 3:42	19.75	6/24/2022 6:15	6.18
6/25/2022 2:56	35.04	6/25/2022 3:43	19.71	6/24/2022 6:16	6.17
6/25/2022 2:57	35.03	6/25/2022 3:44	19.75	6/24/2022 6:17	6.15
6/25/2022 2:58	35.01	6/25/2022 3:45	19.76	6/24/2022 6:18	6.17
6/25/2022 2:59	35.02	6/25/2022 3:46	19.74	6/24/2022 6:19	6.15
6/25/2022 3:00	35.01	6/25/2022 3:47	19.74	6/24/2022 6:20	6.15
6/25/2022 3:01	35.03	6/25/2022 3:48	19.75	6/24/2022 6:21	6.17
6/25/2022 3:02	35.07	6/25/2022 3:49	19.76	6/24/2022 6:22	6.15
6/25/2022 3:03	35.03	6/25/2022 3:50	19.74	6/24/2022 6:23	6.15
6/25/2022 3:04	35.02	6/25/2022 3:51	19.72	6/24/2022 6:24	6.14
6/25/2022 3:05	35.03	6/25/2022 3:52	19.74	6/24/2022 6:25	6.17
6/25/2022 3:06	35.02	6/25/2022 3:53	19.74	6/24/2022 6:26	6.13
6/25/2022 3:07	35.01	6/25/2022 3:54	19.73	6/24/2022 6:27	6.14
6/25/2022 3:08	35.03	6/25/2022 3:55	19.75	6/24/2022 6:28	6.19
6/25/2022 3:09	35.01	6/25/2022 3:56	19.72	6/24/2022 6:29	6.15
6/25/2022 3:10	34.99	6/25/2022 3:57	19.72	6/24/2022 6:30	6.15
6/25/2022 3:11	35.00	6/25/2022 3:58	19.74	6/24/2022 6:31	6.18
6/25/2022 3:12	35.00	6/25/2022 3:59	19.74	6/24/2022 6:32	6.15
6/25/2022 3:13	35.02	6/25/2022 4:00	19.72	6/24/2022 6:33	6.14
6/25/2022 3:14	35.01	6/25/2022 4:01	19.75	6/24/2022 6:34	6.17
6/25/2022 3:15	35.01	6/25/2022 4:02	19.76	6/24/2022 6:35	6.13
6/25/2022 3:16	35.00	6/25/2022 4:03	19.75	6/24/2022 6:36	6.13
6/25/2022 3:17	34.96	6/25/2022 4:04	19.75	6/24/2022 6:37	6.15
6/25/2022 3:18	35.00	6/25/2022 4:05	19.76	6/24/2022 6:38	6.14
6/25/2022 3:19	35.02	6/25/2022 4:06	19.73	6/24/2022 6:39	6.14
6/25/2022 3:20	34.98	6/25/2022 4:07	19.72	6/24/2022 6:40	6.18
6/25/2022 3:21	34.97	6/25/2022 4:08	19.73	6/24/2022 6:41	6.16
6/25/2022 3:22	35.01	6/25/2022 4:09	19.77	6/24/2022 6:42	6.13
6/25/2022 3:23	35.00	6/25/2022 4:10	19.75	6/24/2022 6:43	6.16
6/25/2022 3:24	35.01	6/25/2022 4:11	19.72	6/24/2022 6:44	6.15
6/25/2022 3:25	34.96	6/25/2022 4:12	19.75	6/24/2022 6:45	6.16
6/25/2022 3:26	35.00	6/25/2022 4:13	19.76	6/24/2022 6:46	6.15
6/25/2022 3:27	35.01	6/25/2022 4:14	19.74	6/24/2022 6:47	6.16
6/25/2022 3:28	35.00	6/25/2022 4:15	19.75	6/24/2022 6:48	6.13
6/25/2022 3:29	34.98	6/25/2022 4:16	19.76	6/24/2022 6:49	6.13
6/25/2022 3:30	34.99	6/25/2022 4:17	19.74	6/24/2022 6:50	6.15
6/25/2022 3:31	34.98	6/25/2022 4:18	19.74	6/24/2022 6:51	6.17
6/25/2022 3:32	35.01	6/25/2022 4:19	19.75	6/24/2022 6:52	6.17
6/25/2022 3:33	34.99	6/25/2022 4:20	19.74	6/24/2022 6:53	6.16
6/25/2022 3:34	34.99	6/25/2022 4:21	19.74	6/24/2022 6:54	6.13
6/25/2022 3:35	35.00	6/25/2022 4:22	19.74	6/24/2022 6:55	6.17
6/25/2022 3:36	35.00	6/25/2022 4:23	19.75	6/24/2022 6:56	6.16
6/25/2022 3:37	34.97	6/25/2022 4:24	19.75	6/24/2022 6:57	6.15
6/25/2022 3:38	34.98	6/25/2022 4:25	19.77	6/24/2022 6:58	6.16
6/25/2022 3:39	34.97	6/25/2022 4:26	19.74	6/24/2022 6:59	6.18
6/25/2022 3:40	34.99	6/25/2022 4:27	19.75	6/24/2022 7:00	6.17
6/25/2022 3:41	34.97	6/25/2022 4:28	19.75	6/24/2022 7:01	6.16
6/25/2022 3:42	34.99	6/25/2022 4:29	19.75	6/24/2022 7:02	6.18
6/25/2022 3:43	34.99	6/25/2022 4:30	19.76	6/24/2022 7:03	6.16
6/25/2022 3:44	34.98	6/25/2022 4:31	19.75	6/24/2022 7:04	6.18
6/25/2022 3:45	35.00	6/25/2022 4:32	19.72	6/24/2022 7:05	6.12
6/25/2022 3:46	34.96	6/25/2022 4:33	19.76	6/24/2022 7:06	6.14
6/25/2022 3:47	35.01	6/25/2022 4:34	19.76	6/24/2022 7:07	6.16
6/25/2022 3:48	35.02	6/25/2022 4:35	19.71	6/24/2022 7:08	6.16
6/25/2022 3:49	34.98	6/25/2022 4:36	19.76	6/24/2022 7:09	6.13
6/25/2022 3:50	35.00	6/25/2022 4:37	19.76	6/24/2022 7:10	6.13
6/25/2022 3:51	34.97	6/25/2022 4:38	19.75	6/24/2022 7:11	6.16
6/25/2022 3:52	34.97	6/25/2022 4:39	19.74	6/24/2022 7:12	6.12
6/25/2022 3:53	34.97	6/25/2022 4:40	19.74	6/24/2022 7:13	6.17
6/25/2022 3:54	35.03	6/25/2022 4:41	19.74	6/24/2022 7:14	6.16
6/25/2022 3:55	34.97	6/25/2022 4:42	19.74	6/24/2022 7:15	6.17
6/25/2022 3:56	34.97	6/25/2022 4:43	19.73	6/24/2022 7:16	6.14
6/25/2022 3:57	35.00	6/25/2022 4:44	19.75	6/24/2022 7:17	6.13
6/25/2022 3:58	34.99	6/25/2022 4:45	19.80	6/24/2022 7:18	6.16
6/25/2022 3:59	34.96	6/25/2022 4:46	19.76	6/24/2022 7:19	6.14
6/25/2022 4:00	35.00	6/25/2022 4:47	19.78	6/24/2022 7:20	6.14
6/25/2022 4:01	35.00	6/25/2022 4:48	19.73	6/24/2022 7:21	6.17
6/25/2022 4:02	34.98	6/25/2022 4:49	19.75	6/24/2022 7:22	6.15
6/25/2022 4:03	34.99	6/25/2022 4:50	19.74	6/24/2022 7:23	6.15
6/25/2022 4:04	34.94	6/25/2022 4:51	19.76	6/24/2022 7:24	6.15
6/25/2022 4:05	34.99	6/25/2022 4:52	19.73	6/24/2022 7:25	6.15
6/25/2022 4:06	35.01	6/25/2022 4:53	19.75	6/24/2022 7:26	6.18
6/25/2022 4:07	34.99	6/25/2022 4:54	19.75	6/24/2022 7:27	6.13
6/25/2022 4:08	34.96	6/25/2022 4:55	19.75	6/24/2022 7:28	6.18
6/25/2022 4:09	34.99	6/25/2022 4:56	19.74	6/24/2022 7:29	6.16
6/25/2022 4:10	34.98	6/25/2022 4:57	19.75	6/24/2022 7:30	6.13
6/25/2022 4:11	34.93	6/25/2022 4:58	19.74	6/24/2022 7:31	6.16
6/25/2022 4:12	34.98	6/25/2022 4:59	19.76	6/24/2022 7:32	6.13
6/25/2022 4:13	34.96	6/25/2022 5:00	19.76	6/24/2022 7:33	6.14
6/25/2022 4:14	34.98	6/25/2022 5:01	19.75	6/24/2022 7:34	6.12
6/25/2022 4:15	34.94	6/25/2022 5:02	19.76	6/24/2022 7:35	6.15
6/25/2022 4:16	34.94	6/25/2022 5:03	19.73	6/24/2022 7:36	6.17
6/25/2022 4:17	34.96	6/25/2022 5:04	19.77	6/24/2022 7:37	6.15
6/25/2022 4:18	34.98	6/25/2022 5:05	19.76	6/24/2022 7:38	6.15

6/25/2022 4:19	34.99	6/25/2022 5:06	19.72	6/24/2022 7:39	6.13
6/25/2022 4:20	34.96	6/25/2022 5:07	19.74	6/24/2022 7:40	6.14
6/25/2022 4:21	34.96	6/25/2022 5:08	19.75	6/24/2022 7:41	6.15
6/25/2022 4:22	34.94	6/25/2022 5:09	19.75	6/24/2022 7:42	6.17
6/25/2022 4:23	34.99	6/25/2022 5:10	19.74	6/24/2022 7:43	6.13
6/25/2022 4:24	34.96	6/25/2022 5:11	19.77	6/24/2022 7:44	6.14
6/25/2022 4:25	34.97	6/25/2022 5:12	19.75	6/24/2022 7:45	6.14
6/25/2022 4:26	34.98	6/25/2022 5:13	19.75	6/24/2022 7:46	6.17
6/25/2022 4:27	34.97	6/25/2022 5:14	19.75	6/24/2022 7:47	6.16
6/25/2022 4:28	34.94	6/25/2022 5:15	19.76	6/24/2022 7:48	6.14
6/25/2022 4:29	34.95	6/25/2022 5:16	19.74	6/24/2022 7:49	6.17
6/25/2022 4:30	35.00	6/25/2022 5:17	19.74	6/24/2022 7:50	6.16
6/25/2022 4:31	34.96	6/25/2022 5:18	19.77	6/24/2022 7:51	6.17
6/25/2022 4:32	34.95	6/25/2022 5:19	19.74	6/24/2022 7:52	6.16
6/25/2022 4:33	34.97	6/25/2022 5:20	19.76	6/24/2022 7:53	6.12
6/25/2022 4:34	34.97	6/25/2022 5:21	19.76	6/24/2022 7:54	6.15
6/25/2022 4:35	34.97	6/25/2022 5:22	19.77	6/24/2022 7:55	6.14
6/25/2022 4:36	34.94	6/25/2022 5:23	19.75	6/24/2022 7:56	6.14
6/25/2022 4:37	34.96	6/25/2022 5:24	19.77	6/24/2022 7:57	6.16
6/25/2022 4:38	34.95	6/25/2022 5:25	19.79	6/24/2022 7:58	6.13
6/25/2022 4:39	34.99	6/25/2022 5:26	19.74	6/24/2022 7:59	6.14
6/25/2022 4:40	34.95	6/25/2022 5:27	19.75	6/24/2022 8:00	6.15
6/25/2022 4:41	34.95	6/25/2022 5:28	19.75	6/24/2022 8:01	6.14
6/25/2022 4:42	34.92	6/25/2022 5:29	19.75	6/24/2022 8:02	6.18
6/25/2022 4:43	34.95	6/25/2022 5:30	19.75	6/24/2022 8:03	6.17
6/25/2022 4:44	34.98	6/25/2022 5:31	19.77	6/24/2022 8:04	6.19
6/25/2022 4:45	34.96	6/25/2022 5:32	19.72	6/24/2022 8:05	6.18
6/25/2022 4:46	34.98	6/25/2022 5:33	19.74	6/24/2022 8:06	6.17
6/25/2022 4:47	34.95	6/25/2022 5:34	19.76	6/24/2022 8:07	6.16
6/25/2022 4:48	34.94	6/25/2022 5:35	19.78	6/24/2022 8:08	6.17
6/25/2022 4:49	34.93	6/25/2022 5:36	19.77	6/24/2022 8:09	6.16
6/25/2022 4:50	34.97	6/25/2022 5:37	19.73	6/24/2022 8:10	6.16
6/25/2022 4:51	34.99	6/25/2022 5:38	19.75	6/24/2022 8:11	6.12
6/25/2022 4:52	34.96	6/25/2022 5:39	19.76	6/24/2022 8:12	6.16
6/25/2022 4:53	34.95	6/25/2022 5:40	19.75	6/24/2022 8:13	6.16
6/25/2022 4:54	34.95	6/25/2022 5:41	19.76	6/24/2022 8:14	6.14
6/25/2022 4:55	34.97	6/25/2022 5:42	19.77	6/24/2022 8:15	6.14
6/25/2022 4:56	34.92	6/25/2022 5:43	19.74	6/24/2022 8:16	6.19
6/25/2022 4:57	34.96	6/25/2022 5:44	19.77	6/24/2022 8:17	6.14
6/25/2022 4:58	34.95	6/25/2022 5:45	19.76	6/24/2022 8:18	6.11
6/25/2022 4:59	34.94	6/25/2022 5:46	19.78	6/24/2022 8:19	6.13
6/25/2022 5:00	34.95	6/25/2022 5:47	19.76	6/24/2022 8:20	6.16
6/25/2022 5:01	34.94	6/25/2022 5:48	19.76	6/24/2022 8:21	6.16
6/25/2022 5:02	34.96	6/25/2022 5:49	19.79	6/24/2022 8:22	6.17
6/25/2022 5:03	34.92	6/25/2022 5:50	19.75	6/24/2022 8:23	6.17
6/25/2022 5:04	34.95	6/25/2022 5:51	19.80	6/24/2022 8:24	6.13
6/25/2022 5:05	34.93	6/25/2022 5:52	19.75	6/24/2022 8:25	6.14
6/25/2022 5:06	34.94	6/25/2022 5:53	19.76	6/24/2022 8:26	6.15
6/25/2022 5:07	34.95	6/25/2022 5:54	19.73	6/24/2022 8:27	6.15
6/25/2022 5:08	34.94	6/25/2022 5:55	19.77	6/24/2022 8:28	6.12
6/25/2022 5:09	34.97	6/25/2022 5:56	19.75	6/24/2022 8:29	6.16
6/25/2022 5:10	34.96	6/25/2022 5:57	19.75	6/24/2022 8:30	6.14
6/25/2022 5:11	34.94	6/25/2022 5:58	19.79	6/24/2022 8:31	6.18
6/25/2022 5:12	34.92	6/25/2022 5:59	19.78	6/24/2022 8:32	6.15
6/25/2022 5:13	34.95	6/25/2022 6:00	19.73	6/24/2022 8:33	6.12
6/25/2022 5:14	34.94	6/25/2022 6:01	19.76	6/24/2022 8:34	6.14
6/25/2022 5:15	34.92	6/25/2022 6:02	19.75	6/24/2022 8:35	6.18
6/25/2022 5:16	34.95	6/25/2022 6:03	20.37	6/24/2022 8:36	6.18
6/25/2022 5:17	34.93	6/25/2022 6:04	20.48	6/24/2022 8:37	6.17
6/25/2022 5:18	34.95	6/25/2022 6:05	20.53	6/24/2022 8:38	6.14
6/25/2022 5:19	34.95	6/25/2022 6:06	20.53	6/24/2022 8:39	6.15
6/25/2022 5:20	34.95	6/25/2022 6:07	20.57	6/24/2022 8:40	6.13
6/25/2022 5:21	34.91	6/25/2022 6:08	20.02	6/24/2022 8:41	6.15
6/25/2022 5:22	34.93	6/25/2022 6:09	19.94	6/24/2022 8:42	6.15
6/25/2022 5:23	34.93	6/25/2022 6:10	19.93	6/24/2022 8:43	6.15
6/25/2022 5:24	34.91	6/25/2022 6:11	19.92	6/24/2022 8:44	6.16
6/25/2022 5:25	34.93	6/25/2022 6:12	19.90	6/24/2022 8:45	6.13
6/25/2022 5:26	34.96	6/25/2022 6:13	19.86	6/24/2022 8:46	6.14
6/25/2022 5:27	34.89	6/25/2022 6:14	19.84	6/24/2022 8:47	6.13
6/25/2022 5:28	34.93	6/25/2022 6:15	19.86	6/24/2022 8:48	6.11
6/25/2022 5:29	34.93	6/25/2022 6:16	19.85	6/24/2022 8:49	6.15
6/25/2022 5:30	34.93	6/25/2022 6:17	19.87	6/24/2022 8:50	6.16
6/25/2022 5:31	34.95	6/25/2022 6:18	19.86	6/24/2022 8:51	6.16
6/25/2022 5:32	34.95	6/25/2022 6:19	19.88	6/24/2022 8:52	6.15
6/25/2022 5:33	34.91	6/25/2022 6:20	19.85	6/24/2022 8:53	6.14
6/25/2022 5:34	34.92	6/25/2022 6:21	19.84	6/24/2022 8:54	6.14
6/25/2022 5:35	34.94	6/25/2022 6:22	19.86	6/24/2022 8:55	6.15
6/25/2022 5:36	34.91	6/25/2022 6:23	19.83	6/24/2022 8:56	6.17
6/25/2022 5:37	34.94	6/25/2022 6:24	19.85	6/24/2022 8:57	6.13
6/25/2022 5:38	34.95	6/25/2022 6:25	19.82	6/24/2022 8:58	6.16
6/25/2022 5:39	34.92	6/25/2022 6:26	19.80	6/24/2022 8:59	6.13
6/25/2022 5:40	34.93	6/25/2022 6:27	19.82	6/24/2022 9:00	6.15
6/25/2022 5:41	34.94	6/25/2022 6:28	19.83	6/24/2022 9:01	6.15
6/25/2022 5:42	34.93	6/25/2022 6:29	19.81	6/24/2022 9:02	6.14
6/25/2022 5:43	34.91	6/25/2022 6:30	19.83	6/24/2022 9:03	6.12
6/25/2022 5:44	34.95	6/25/2022 6:31	19.84	6/24/2022 9:04	6.17
6/25/2022 5:45	34.91	6/25/2022 6:32	19.82	6/24/2022 9:05	6.14
6/25/2022 5:46	34.91	6/25/2022 6:33	19.84	6/24/2022 9:06	6.16

6/25/2022 5:47	34.90	6/25/2022 6:34	19.80	6/24/2022 9:07	6.15
6/25/2022 5:48	34.91	6/25/2022 6:35	19.80	6/24/2022 9:08	6.15
6/25/2022 5:49	34.93	6/25/2022 6:36	19.81	6/24/2022 9:09	6.13
6/25/2022 5:50	34.93	6/25/2022 6:37	19.80	6/24/2022 9:10	6.13
6/25/2022 5:51	34.91	6/25/2022 6:38	19.81	6/24/2022 9:11	6.16
6/25/2022 5:52	34.93	6/25/2022 6:39	19.81	6/24/2022 9:12	6.12
6/25/2022 5:53	34.92	6/25/2022 6:40	19.79	6/24/2022 9:13	6.17
6/25/2022 5:54	34.92	6/25/2022 6:41	19.81	6/24/2022 9:14	6.15
6/25/2022 5:55	34.88	6/25/2022 6:42	19.84	6/24/2022 9:15	6.14
6/25/2022 5:56	34.94	6/25/2022 6:43	19.81	6/24/2022 9:16	6.15
6/25/2022 5:57	34.93	6/25/2022 6:44	19.81	6/24/2022 9:17	6.15
6/25/2022 5:58	34.94	6/25/2022 6:45	19.83	6/24/2022 9:18	6.17
6/25/2022 5:59	34.93	6/25/2022 6:46	19.79	6/24/2022 9:19	6.13
6/25/2022 6:00	34.92	6/25/2022 6:47	19.81	6/24/2022 9:20	6.17
6/25/2022 6:01	34.92	6/25/2022 6:48	19.81	6/24/2022 9:21	6.14
6/25/2022 6:02	34.91	6/25/2022 6:49	19.82	6/24/2022 9:22	6.16
6/25/2022 6:03	34.91	6/25/2022 6:50	19.83	6/24/2022 9:23	6.16
6/25/2022 6:04	34.92	6/25/2022 6:51	19.80	6/24/2022 9:24	6.14
6/25/2022 6:05	34.95	6/25/2022 6:52	19.76	6/24/2022 9:25	6.14
6/25/2022 6:06	34.91	6/25/2022 6:53	19.80	6/24/2022 9:26	6.14
6/25/2022 6:07	34.90	6/25/2022 6:54	19.80	6/24/2022 9:27	6.16
6/25/2022 6:08	34.91	6/25/2022 6:55	19.80	6/24/2022 9:28	6.14
6/25/2022 6:09	34.92	6/25/2022 6:56	19.79	6/24/2022 9:29	6.14
6/25/2022 6:10	34.92	6/25/2022 6:57	19.79	6/24/2022 9:30	6.15
6/25/2022 6:11	34.88	6/25/2022 6:58	19.80	6/24/2022 9:31	6.16
6/25/2022 6:12	34.92	6/25/2022 6:59	19.79	6/24/2022 9:32	6.16
6/25/2022 6:13	34.91	6/25/2022 7:00	19.79	6/24/2022 9:33	6.18
6/25/2022 6:14	34.92	6/25/2022 7:01	19.79	6/24/2022 9:34	6.14
6/25/2022 6:15	34.88	6/25/2022 7:02	19.78	6/24/2022 9:35	6.16
6/25/2022 6:16	34.92	6/25/2022 7:03	19.82	6/24/2022 9:36	6.14
6/25/2022 6:17	34.90	6/25/2022 7:04	19.77	6/24/2022 9:37	6.14
6/25/2022 6:18	34.91	6/25/2022 7:05	19.79	6/24/2022 9:38	6.16
6/25/2022 6:19	34.91	6/25/2022 7:06	19.79	6/24/2022 9:39	6.18
6/25/2022 6:20	34.92	6/25/2022 7:07	19.80	6/24/2022 9:40	6.13
6/25/2022 6:21	34.93	6/25/2022 7:08	19.80	6/24/2022 9:41	6.13
6/25/2022 6:22	34.95	6/25/2022 7:09	19.80	6/24/2022 9:42	6.19
6/25/2022 6:23	34.90	6/25/2022 7:10	19.77	6/24/2022 9:43	6.14
6/25/2022 6:24	34.92	6/25/2022 7:11	19.80	6/24/2022 9:44	6.13
6/25/2022 6:25	34.93	6/25/2022 7:12	19.77	6/24/2022 9:45	6.15
6/25/2022 6:26	34.92	6/25/2022 7:13	19.79	6/24/2022 9:46	6.14
6/25/2022 6:27	34.88	6/25/2022 7:14	19.78	6/24/2022 9:47	6.15
6/25/2022 6:28	34.91	6/25/2022 7:15	19.79	6/24/2022 9:48	8.21
6/25/2022 6:29	34.90	6/25/2022 7:16	19.80	6/24/2022 9:49	8.94
6/25/2022 6:30	34.91	6/25/2022 7:17	19.81	6/24/2022 9:50	6.82
6/25/2022 6:31	34.91	6/25/2022 7:18	19.76	6/24/2022 9:51	6.26
6/25/2022 6:32	34.92	6/25/2022 7:19	19.77	6/24/2022 9:52	6.18
6/25/2022 6:33	34.92	6/25/2022 7:20	19.78	6/24/2022 9:53	6.21
6/25/2022 6:34	34.90	6/25/2022 7:21	19.79	6/24/2022 9:54	6.17
6/25/2022 6:35	34.90	6/25/2022 7:22	19.79	6/24/2022 9:55	6.16
6/25/2022 6:36	34.89	6/25/2022 7:23	19.78	6/24/2022 9:56	6.20
6/25/2022 6:37	34.92	6/25/2022 7:24	19.80	6/24/2022 9:57	6.16
6/25/2022 6:38	34.89	6/25/2022 7:25	19.80	6/24/2022 9:58	6.18
6/25/2022 6:39	34.90	6/25/2022 7:26	19.79	6/24/2022 9:59	6.14
6/25/2022 6:40	34.90	6/25/2022 7:27	19.76	6/24/2022 10:00	6.19
6/25/2022 6:41	34.90	6/25/2022 7:28	19.78	6/24/2022 10:01	6.15
6/25/2022 6:42	34.88	6/25/2022 7:29	19.77	6/24/2022 10:02	6.17
6/25/2022 6:43	34.92	6/25/2022 7:30	19.78	6/24/2022 10:03	6.16
6/25/2022 6:44	34.94	6/25/2022 7:31	19.79	6/24/2022 10:04	6.18
6/25/2022 6:45	34.89	6/25/2022 7:32	19.79	6/24/2022 10:05	6.18
6/25/2022 6:46	34.92	6/25/2022 7:33	19.78	6/24/2022 10:06	6.13
6/25/2022 6:47	34.88	6/25/2022 7:34	19.79	6/24/2022 10:07	6.17
6/25/2022 6:48	34.90	6/25/2022 7:35	19.80	6/24/2022 10:08	6.14
6/25/2022 6:49	34.90	6/25/2022 7:36	19.80	6/24/2022 10:09	6.13
6/25/2022 6:50	34.90	6/25/2022 7:37	19.77	6/24/2022 10:10	6.17
6/25/2022 6:51	34.90	6/25/2022 7:38	19.80	6/24/2022 10:11	6.17
6/25/2022 6:52	34.91	6/25/2022 7:39	19.76	6/24/2022 10:12	6.15
6/25/2022 6:53	34.88	6/25/2022 7:40	19.80	6/24/2022 10:13	6.14
6/25/2022 6:54	34.90	6/25/2022 7:41	19.80	6/24/2022 10:14	6.14
6/25/2022 6:55	34.89	6/25/2022 7:42	19.79	6/24/2022 10:15	6.14
6/25/2022 6:56	34.88	6/25/2022 7:43	19.80	6/24/2022 10:16	6.17
6/25/2022 6:57	34.89	6/25/2022 7:44	19.78	6/24/2022 10:17	6.16
6/25/2022 6:58	34.87	6/25/2022 7:45	19.75	6/24/2022 10:18	6.18
6/25/2022 6:59	34.88	6/25/2022 7:46	19.80	6/24/2022 10:19	6.17
6/25/2022 7:00	34.86	6/25/2022 7:47	19.79	6/24/2022 10:20	6.14
6/25/2022 7:01	34.91	6/25/2022 7:48	19.78	6/24/2022 10:21	6.16
6/25/2022 7:02	34.92	6/25/2022 7:49	19.79	6/24/2022 10:22	6.14
6/25/2022 7:03	34.90	6/25/2022 7:50	19.78	6/24/2022 10:23	6.16
6/25/2022 7:04	34.89	6/25/2022 7:51	19.80	6/24/2022 10:24	6.14
6/25/2022 7:05	34.90	6/25/2022 7:52	19.76	6/24/2022 10:25	6.14
6/25/2022 7:06	34.87	6/25/2022 7:53	19.79	6/24/2022 10:26	6.15
6/25/2022 7:07	34.88	6/25/2022 7:54	19.79	6/24/2022 10:27	6.15
6/25/2022 7:08	34.89	6/25/2022 7:55	19.79	6/24/2022 10:28	6.20
6/25/2022 7:09	34.91	6/25/2022 7:56	19.77	6/24/2022 10:29	6.17
6/25/2022 7:10	34.90	6/25/2022 7:57	19.75	6/24/2022 10:30	6.17
6/25/2022 7:11	34.88	6/25/2022 7:58	19.77	6/24/2022 10:31	6.15
6/25/2022 7:12	34.88	6/25/2022 7:59	19.77	6/24/2022 10:32	6.17
6/25/2022 7:13	34.90	6/25/2022 8:00	19.77	6/24/2022 10:33	6.15
6/25/2022 7:14	34.89	6/25/2022 8:01	19.79	6/24/2022 10:34	6.14

6/25/2022 7:15	34.91	6/25/2022 8:02	19.80	6/24/2022 10:35	6.17
6/25/2022 7:16	34.88	6/25/2022 8:03	19.78	6/24/2022 10:36	6.18
6/25/2022 7:17	34.90	6/25/2022 8:04	19.76	6/24/2022 10:37	6.18
6/25/2022 7:18	34.94	6/25/2022 8:05	19.80	6/24/2022 10:38	6.15
6/25/2022 7:19	34.93	6/25/2022 8:06	19.78	6/24/2022 10:39	6.14
6/25/2022 7:20	34.90	6/25/2022 8:07	19.77	6/24/2022 10:40	6.14
6/25/2022 7:21	34.96	6/25/2022 8:08	19.77	6/24/2022 10:41	6.18
6/25/2022 7:22	34.90	6/25/2022 8:09	19.75	6/24/2022 10:42	6.12
6/25/2022 7:23	34.96	6/25/2022 8:10	19.75	6/24/2022 10:43	6.16
6/25/2022 7:24	34.94	6/25/2022 8:11	19.78	6/24/2022 10:44	6.19
6/25/2022 7:25	34.93	6/25/2022 8:12	19.77	6/24/2022 10:45	6.18
6/25/2022 7:26	34.90	6/25/2022 8:13	19.76	6/24/2022 10:46	6.13
6/25/2022 7:27	34.89	6/25/2022 8:14	19.80	6/24/2022 10:47	6.17
6/25/2022 7:28	34.93	6/25/2022 8:15	19.77	6/24/2022 10:48	6.18
6/25/2022 7:29	34.91	6/25/2022 8:16	19.78	6/24/2022 10:49	6.16
6/25/2022 7:30	34.90	6/25/2022 8:17	19.77	6/24/2022 10:50	6.14
6/25/2022 7:31	34.87	6/25/2022 8:18	20.29	6/24/2022 10:51	6.16
6/25/2022 7:32	34.90	6/25/2022 8:19	20.48	6/24/2022 10:52	6.16
6/25/2022 7:33	34.90	6/25/2022 8:20	20.52	6/24/2022 10:53	6.19
6/25/2022 7:34	34.90	6/25/2022 8:21	20.58	6/24/2022 10:54	6.15
6/25/2022 7:35	34.87	6/25/2022 8:22	20.60	6/24/2022 10:55	6.13
6/25/2022 7:36	34.89	6/25/2022 8:23	20.13	6/24/2022 10:56	6.14
6/25/2022 7:37	34.90	6/25/2022 8:24	20.05	6/24/2022 10:57	6.12
6/25/2022 7:38	34.88	6/25/2022 8:25	19.96	6/24/2022 10:58	6.13
6/25/2022 7:39	34.88	6/25/2022 8:26	19.96	6/24/2022 10:59	6.18
6/25/2022 7:40	34.89	6/25/2022 8:27	19.95	6/24/2022 11:00	6.15
6/25/2022 7:41	34.89	6/25/2022 8:28	19.92	6/24/2022 11:01	6.15
6/25/2022 7:42	34.89	6/25/2022 8:29	19.94	6/24/2022 11:02	6.13
6/25/2022 7:43	34.91	6/25/2022 8:30	19.89	6/24/2022 11:03	6.15
6/25/2022 7:44	34.89	6/25/2022 8:31	19.91	6/24/2022 11:04	6.13
6/25/2022 7:45	34.88	6/25/2022 8:32	19.89	6/24/2022 11:05	6.18
6/25/2022 7:46	34.87	6/25/2022 8:33	19.88	6/24/2022 11:06	6.16
6/25/2022 7:47	34.92	6/25/2022 8:34	19.86	6/24/2022 11:07	6.16
6/25/2022 7:48	34.87	6/25/2022 8:35	19.86	6/24/2022 11:08	6.14
6/25/2022 7:49	34.91	6/25/2022 8:36	19.87	6/24/2022 11:09	6.14
6/25/2022 7:50	34.89	6/25/2022 8:37	19.85	6/24/2022 11:10	6.14
6/25/2022 7:51	34.87	6/25/2022 8:38	19.87	6/24/2022 11:11	6.16
6/25/2022 7:52	34.88	6/25/2022 8:39	19.86	6/24/2022 11:12	6.14
6/25/2022 7:53	34.90	6/25/2022 8:40	19.86	6/24/2022 11:13	6.14
6/25/2022 7:54	34.87	6/25/2022 8:41	19.86	6/24/2022 11:14	6.15
6/25/2022 7:55	34.87	6/25/2022 8:42	19.85	6/24/2022 11:15	6.16
6/25/2022 7:56	34.86	6/25/2022 8:43	19.86	6/24/2022 11:16	6.16
6/25/2022 7:57	34.88	6/25/2022 8:44	19.86	6/24/2022 11:17	6.14
6/25/2022 7:58	34.86	6/25/2022 8:45	19.82	6/24/2022 11:18	6.14
6/25/2022 7:59	34.87	6/25/2022 8:46	19.85	6/24/2022 11:19	6.16
6/25/2022 8:00	34.88	6/25/2022 8:47	19.84	6/24/2022 11:20	6.15
6/25/2022 8:01	34.88	6/25/2022 8:48	19.84	6/24/2022 11:21	6.17
6/25/2022 8:02	34.90	6/25/2022 8:49	19.84	6/24/2022 11:22	6.15
6/25/2022 8:03	34.88	6/25/2022 8:50	19.83	6/24/2022 11:23	6.15
6/25/2022 8:04	34.88	6/25/2022 8:51	19.84	6/24/2022 11:24	6.15
6/25/2022 8:05	34.87	6/25/2022 8:52	19.83	6/24/2022 11:25	6.17
6/25/2022 8:06	34.88	6/25/2022 8:53	19.85	6/24/2022 11:26	6.15
6/25/2022 8:07	34.85	6/25/2022 8:54	19.83	6/24/2022 11:27	6.12
6/25/2022 8:08	34.86	6/25/2022 8:55	19.83	6/24/2022 11:28	6.15
6/25/2022 8:09	34.85	6/25/2022 8:56	19.82	6/24/2022 11:29	6.14
6/25/2022 8:10	34.89	6/25/2022 8:57	19.82	6/24/2022 11:30	8.09
6/25/2022 8:11	34.90	6/25/2022 8:58	19.85	6/24/2022 11:31	8.91
6/25/2022 8:12	34.90	6/25/2022 8:59	19.81	6/24/2022 11:32	6.76
6/25/2022 8:13	34.86	6/25/2022 9:00	19.84	6/24/2022 11:33	6.25
6/25/2022 8:14	34.86	6/25/2022 9:01	19.81	6/24/2022 11:34	6.21
6/25/2022 8:15	34.87	6/25/2022 9:02	19.84	6/24/2022 11:35	6.20
6/25/2022 8:16	34.83	6/25/2022 9:03	19.81	6/24/2022 11:36	6.18
6/25/2022 8:17	34.84	6/25/2022 9:04	19.82	6/24/2022 11:37	6.16
6/25/2022 8:18	34.87	6/25/2022 9:05	19.82	6/24/2022 11:38	6.16
6/25/2022 8:19	34.87	6/25/2022 9:06	19.81	6/24/2022 11:39	6.17
6/25/2022 8:20	34.85	6/25/2022 9:07	19.83	6/24/2022 11:40	6.18
6/25/2022 8:21	34.83	6/25/2022 9:08	19.81	6/24/2022 11:41	6.17
6/25/2022 8:22	34.84	6/25/2022 9:09	19.84	6/24/2022 11:42	6.18
6/25/2022 8:23	34.87	6/25/2022 9:10	19.83	6/24/2022 11:43	6.17
6/25/2022 8:24	34.88	6/25/2022 9:11	19.82	6/24/2022 11:44	6.17
6/25/2022 8:25	34.86	6/25/2022 9:12	19.83	6/24/2022 11:45	6.17
6/25/2022 8:26	34.84	6/25/2022 9:13	19.83	6/24/2022 11:46	6.19
6/25/2022 8:27	34.84	6/25/2022 9:14	19.84	6/24/2022 11:47	6.16
6/25/2022 8:28	34.86	6/25/2022 9:15	19.79	6/24/2022 11:48	6.13
6/25/2022 8:29	34.87	6/25/2022 9:16	19.82	6/24/2022 11:49	6.15
6/25/2022 8:30	34.85	6/25/2022 9:17	19.83	6/24/2022 11:50	6.17
6/25/2022 8:31	34.86	6/25/2022 9:18	19.86	6/24/2022 11:51	6.16
6/25/2022 8:32	34.86	6/25/2022 9:19	19.82	6/24/2022 11:52	6.15
6/25/2022 8:33	34.83	6/25/2022 9:20	19.82	6/24/2022 11:53	6.19
6/25/2022 8:34	34.85	6/25/2022 9:21	19.82	6/24/2022 11:54	6.13
6/25/2022 8:35	34.88	6/25/2022 9:22	19.81	6/24/2022 11:55	6.13
6/25/2022 8:36	34.90	6/25/2022 9:23	19.81	6/24/2022 11:56	6.16
6/25/2022 8:37	34.88	6/25/2022 9:24	19.84	6/24/2022 11:57	6.17
6/25/2022 8:38	34.88	6/25/2022 9:25	19.81	6/24/2022 11:58	6.19
6/25/2022 8:39	34.92	6/25/2022 9:26	19.84	6/24/2022 11:59	6.16
6/25/2022 8:40	34.89	6/25/2022 9:27	19.80	6/24/2022 12:00	6.16
6/25/2022 8:41	34.88	6/25/2022 9:28	19.81	6/24/2022 12:01	6.18
6/25/2022 8:42	34.91	6/25/2022 9:29	19.82	6/24/2022 12:02	6.17

6/25/2022 8:43	34.91	6/25/2022 9:30	19.84	6/24/2022 12:03	6.19
6/25/2022 8:44	34.89	6/25/2022 9:31	19.79	6/24/2022 12:04	6.15
6/25/2022 8:45	34.86	6/25/2022 9:32	19.82	6/24/2022 12:05	6.17
6/25/2022 8:46	34.88	6/25/2022 9:33	19.81	6/24/2022 12:06	6.15
6/25/2022 8:47	34.90	6/25/2022 9:34	19.84	6/24/2022 12:07	6.15
6/25/2022 8:48	34.85	6/25/2022 9:35	19.80	6/24/2022 12:08	6.18
6/25/2022 8:49	34.88	6/25/2022 9:36	19.82	6/24/2022 12:09	6.17
6/25/2022 8:50	34.85	6/25/2022 9:37	19.82	6/24/2022 12:10	6.18
6/25/2022 8:51	34.86	6/25/2022 9:38	19.81	6/24/2022 12:11	6.16
6/25/2022 8:52	34.87	6/25/2022 9:39	19.80	6/24/2022 12:12	6.15
6/25/2022 8:53	34.86	6/25/2022 9:40	19.81	6/24/2022 12:13	6.18
6/25/2022 8:54	34.91	6/25/2022 9:41	19.79	6/24/2022 12:14	6.19
6/25/2022 8:55	34.91	6/25/2022 9:42	19.82	6/24/2022 12:15	6.17
6/25/2022 8:56	34.90	6/25/2022 9:43	19.79	6/24/2022 12:16	6.15
6/25/2022 8:57	34.93	6/25/2022 9:44	20.34	6/24/2022 12:17	6.17
6/25/2022 8:58	34.90	6/25/2022 9:45	20.51	6/24/2022 12:18	6.17
6/25/2022 8:59	34.92	6/25/2022 9:46	20.57	6/24/2022 12:19	6.13
6/25/2022 9:00	34.92	6/25/2022 9:47	20.59	6/24/2022 12:20	6.16
6/25/2022 9:01	34.89	6/25/2022 9:48	20.62	6/24/2022 12:21	6.16
6/25/2022 9:02	34.89	6/25/2022 9:49	20.09	6/24/2022 12:22	6.16
6/25/2022 9:03	34.89	6/25/2022 9:50	20.02	6/24/2022 12:23	6.18
6/25/2022 9:04	34.90	6/25/2022 9:51	19.98	6/24/2022 12:24	6.19
6/25/2022 9:05	34.88	6/25/2022 9:52	19.96	6/24/2022 12:25	6.17
6/25/2022 9:06	34.87	6/25/2022 9:53	19.94	6/24/2022 12:26	6.16
6/25/2022 9:07	34.87	6/25/2022 9:54	19.92	6/24/2022 12:27	6.15
6/25/2022 9:08	34.90	6/25/2022 9:55	19.90	6/24/2022 12:28	6.18
6/25/2022 9:09	34.91	6/25/2022 9:56	19.91	6/24/2022 12:29	6.15
6/25/2022 9:10	34.85	6/25/2022 9:57	19.90	6/24/2022 12:30	6.16
6/25/2022 9:11	34.86	6/25/2022 9:58	19.91	6/24/2022 12:31	6.15
6/25/2022 9:12	35.56	6/25/2022 9:59	19.89	6/24/2022 12:32	6.16
6/25/2022 9:13	35.17	6/25/2022 10:00	19.92	6/24/2022 12:33	6.16
6/25/2022 9:14	35.02	6/25/2022 10:01	19.88	6/24/2022 12:34	6.15
6/25/2022 9:15	34.96	6/25/2022 10:02	19.91	6/24/2022 12:35	6.18
6/25/2022 9:16	34.96	6/25/2022 10:03	19.88	6/24/2022 12:36	6.16
6/25/2022 9:17	34.90	6/25/2022 10:04	19.88	6/24/2022 12:37	6.14
6/25/2022 9:18	34.95	6/25/2022 10:05	19.85	6/24/2022 12:38	6.19
6/25/2022 9:19	34.91	6/25/2022 10:06	19.87	6/24/2022 12:39	6.15
6/25/2022 9:20	34.92	6/25/2022 10:07	19.88	6/24/2022 12:40	6.14
6/25/2022 9:21	34.88	6/25/2022 10:08	19.87	6/24/2022 12:41	6.12
6/25/2022 9:22	34.91	6/25/2022 10:09	19.87	6/24/2022 12:42	6.17
6/25/2022 9:23	34.92	6/25/2022 10:10	19.89	6/24/2022 12:43	6.14
6/25/2022 9:24	34.88	6/25/2022 10:11	19.86	6/24/2022 12:44	6.16
6/25/2022 9:25	34.91	6/25/2022 10:12	19.87	6/24/2022 12:45	6.16
6/25/2022 9:26	34.90	6/25/2022 10:13	19.83	6/24/2022 12:46	6.18
6/25/2022 9:27	34.89	6/25/2022 10:14	19.86	6/24/2022 12:47	6.16
6/25/2022 9:28	34.90	6/25/2022 10:15	19.86	6/24/2022 12:48	6.17
6/25/2022 9:29	34.87	6/25/2022 10:16	19.84	6/24/2022 12:49	6.16
6/25/2022 9:30	34.87	6/25/2022 10:17	19.83	6/24/2022 12:50	6.14
6/25/2022 9:31	34.88	6/25/2022 10:18	19.85	6/24/2022 12:51	6.16
6/25/2022 9:32	34.91	6/25/2022 10:19	19.83	6/24/2022 12:52	6.17
6/25/2022 9:33	34.86	6/25/2022 10:20	19.85	6/24/2022 12:53	6.15
6/25/2022 9:34	34.87	6/25/2022 10:21	19.85	6/24/2022 12:54	6.14
6/25/2022 9:35	34.87	6/25/2022 10:22	19.87	6/24/2022 12:55	6.14
6/25/2022 9:36	34.85	6/25/2022 10:23	19.86	6/24/2022 12:56	6.17
6/25/2022 9:37	34.87	6/25/2022 10:24	19.84	6/24/2022 12:57	6.14
6/25/2022 9:38	34.88	6/25/2022 10:25	19.84	6/24/2022 12:58	6.15
6/25/2022 9:39	34.89	6/25/2022 10:26	19.83	6/24/2022 12:59	6.17
6/25/2022 9:40	34.84	6/25/2022 10:27	19.84	6/24/2022 13:00	6.15
6/25/2022 9:41	34.84	6/25/2022 10:28	19.85	6/24/2022 13:01	6.15
6/25/2022 9:42	34.87	6/25/2022 10:29	19.84	6/24/2022 13:02	6.18
6/25/2022 9:43	34.86	6/25/2022 10:30	19.84	6/24/2022 13:03	6.16
6/25/2022 9:44	34.88	6/25/2022 10:31	19.81	6/24/2022 13:04	6.12
6/25/2022 9:45	34.86	6/25/2022 10:32	19.81	6/24/2022 13:05	6.14
6/25/2022 9:46	34.83	6/25/2022 10:33	19.83	6/24/2022 13:06	6.15
6/25/2022 9:47	34.88	6/25/2022 10:34	19.83	6/24/2022 13:07	6.17
6/25/2022 9:48	34.84	6/25/2022 10:35	19.83	6/24/2022 13:08	6.17
6/25/2022 9:49	34.88	6/25/2022 10:36	19.82	6/24/2022 13:09	6.17
6/25/2022 9:50	34.85	6/25/2022 10:37	19.85	6/24/2022 13:10	6.15
6/25/2022 9:51	34.88	6/25/2022 10:38	19.83	6/24/2022 13:11	6.17
6/25/2022 9:52	34.82	6/25/2022 10:39	19.83	6/24/2022 13:12	6.16
6/25/2022 9:53	34.85	6/25/2022 10:40	19.81	6/24/2022 13:13	6.14
6/25/2022 9:54	34.82	6/25/2022 10:41	19.83	6/24/2022 13:14	6.14
6/25/2022 9:55	34.85	6/25/2022 10:42	19.83	6/24/2022 13:15	6.19
6/25/2022 9:56	34.86	6/25/2022 10:43	19.83	6/24/2022 13:16	6.16
6/25/2022 9:57	34.84	6/25/2022 10:44	19.82	6/24/2022 13:17	6.18
6/25/2022 9:58	34.87	6/25/2022 10:45	19.83	6/24/2022 13:18	6.16
6/25/2022 9:59	34.83	6/25/2022 10:46	19.83	6/24/2022 13:19	6.19
6/25/2022 10:00	34.87	6/25/2022 10:47	19.84	6/24/2022 13:20	6.13
6/25/2022 10:01	34.82	6/25/2022 10:48	19.83	6/24/2022 13:21	6.17
6/25/2022 10:02	34.87	6/25/2022 10:49	19.83	6/24/2022 13:22	6.19
6/25/2022 10:03	34.85	6/25/2022 10:50	19.83	6/24/2022 13:23	6.15
6/25/2022 10:04	34.83	6/25/2022 10:51	19.81	6/24/2022 13:24	6.15
6/25/2022 10:05	34.84	6/25/2022 10:52	19.84	6/24/2022 13:25	6.15
6/25/2022 10:06	34.85	6/25/2022 10:53	19.82	6/24/2022 13:26	6.16
6/25/2022 10:07	34.86	6/25/2022 10:54	19.81	6/24/2022 13:27	6.18
6/25/2022 10:08	34.84	6/25/2022 10:55	19.84	6/24/2022 13:28	6.16
6/25/2022 10:09	34.83	6/25/2022 10:56	19.83	6/24/2022 13:29	6.15
6/25/2022 10:10	34.83	6/25/2022 10:57	19.82	6/24/2022 13:30	6.18

6/25/2022 10:11	34.84	6/25/2022 10:58	19.84	6/24/2022 13:31	6.16
6/25/2022 10:12	34.79	6/25/2022 10:59	19.84	6/24/2022 13:32	6.18
6/25/2022 10:13	34.82	6/25/2022 11:00	19.81	6/24/2022 13:33	6.14
6/25/2022 10:14	34.84	6/25/2022 11:01	19.80	6/24/2022 13:34	6.19
6/25/2022 10:15	34.82	6/25/2022 11:02	19.85	6/24/2022 13:35	6.15
6/25/2022 10:16	34.82	6/25/2022 11:03	19.83	6/24/2022 13:36	6.15
6/25/2022 10:17	34.81	6/25/2022 11:04	19.83	6/24/2022 13:37	6.18
6/25/2022 10:18	34.83	6/25/2022 11:05	19.82	6/24/2022 13:38	6.17
6/25/2022 10:19	34.85	6/25/2022 11:06	19.80	6/24/2022 13:39	6.16
6/25/2022 10:20	34.79	6/25/2022 11:07	19.82	6/24/2022 13:40	6.17
6/25/2022 10:21	34.84	6/25/2022 11:08	19.81	6/24/2022 13:41	6.16
6/25/2022 10:22	34.83	6/25/2022 11:09	19.81	6/24/2022 13:42	6.17
6/25/2022 10:23	34.82	6/25/2022 11:10	19.84	6/24/2022 13:43	6.17
6/25/2022 10:24	34.83	6/25/2022 11:11	19.82	6/24/2022 13:44	6.18
6/25/2022 10:25	36.10	6/25/2022 11:12	19.82	6/24/2022 13:45	6.17
6/25/2022 10:26	35.00	6/25/2022 11:13	19.84	6/24/2022 13:46	6.17
6/25/2022 10:27	34.94	6/25/2022 11:14	19.84	6/24/2022 13:47	6.16
6/25/2022 10:28	34.92	6/25/2022 11:15	19.82	6/24/2022 13:48	6.19
6/25/2022 10:29	34.91	6/25/2022 11:16	19.82	6/24/2022 13:49	6.16
6/25/2022 10:30	34.87	6/25/2022 11:17	19.83	6/24/2022 13:50	6.16
6/25/2022 10:31	34.85	6/25/2022 11:18	19.82	6/24/2022 13:51	6.20
6/25/2022 10:32	34.83	6/25/2022 11:19	19.79	6/24/2022 13:52	6.17
6/25/2022 10:33	34.84	6/25/2022 11:20	19.83	6/24/2022 13:53	6.14
6/25/2022 10:34	34.85	6/25/2022 11:21	19.83	6/24/2022 13:54	6.17
6/25/2022 10:35	34.86	6/25/2022 11:22	19.81	6/24/2022 13:55	6.17
6/25/2022 10:36	34.89	6/25/2022 11:23	19.81	6/24/2022 13:56	6.18
6/25/2022 10:37	34.89	6/25/2022 11:24	19.82	6/24/2022 13:57	6.14
6/25/2022 10:38	34.88	6/25/2022 11:25	19.83	6/24/2022 13:58	6.18
6/25/2022 10:39	34.85	6/25/2022 11:26	19.83	6/24/2022 13:59	6.17
6/25/2022 10:40	34.89	6/25/2022 11:27	19.82	6/24/2022 14:00	6.18
6/25/2022 10:41	34.88	6/25/2022 11:28	19.81	6/24/2022 14:01	6.16
6/25/2022 10:42	34.91	6/25/2022 11:29	19.80	6/24/2022 14:02	6.18
6/25/2022 10:43	34.89	6/25/2022 11:30	19.80	6/24/2022 14:03	6.16
6/25/2022 10:44	34.90	6/25/2022 11:31	19.84	6/24/2022 14:04	6.16
6/25/2022 10:45	34.87	6/25/2022 11:32	19.84	6/24/2022 14:05	6.13
6/25/2022 10:46	34.90	6/25/2022 11:33	19.82	6/24/2022 14:06	6.14
6/25/2022 10:47	34.89	6/25/2022 11:34	19.82	6/24/2022 14:07	6.16
6/25/2022 10:48	34.90	6/25/2022 11:35	19.81	6/24/2022 14:08	6.18
6/25/2022 10:49	34.89	6/25/2022 11:36	19.83	6/24/2022 14:09	6.20
6/25/2022 10:50	34.87	6/25/2022 11:37	19.81	6/24/2022 14:10	6.17
6/25/2022 10:51	34.86	6/25/2022 11:38	19.83	6/24/2022 14:11	6.17
6/25/2022 10:52	34.86	6/25/2022 11:39	19.81	6/24/2022 14:12	6.14
6/25/2022 10:53	34.84	6/25/2022 11:40	19.80	6/24/2022 14:13	8.70
6/25/2022 10:54	34.88	6/25/2022 11:41	19.81	6/24/2022 14:14	8.22
6/25/2022 10:55	34.84	6/25/2022 11:42	19.83	6/24/2022 14:15	6.29
6/25/2022 10:56	34.89	6/25/2022 11:43	19.82	6/24/2022 14:16	6.21
6/25/2022 10:57	34.81	6/25/2022 11:44	19.80	6/24/2022 14:17	6.20
6/25/2022 10:58	34.84	6/25/2022 11:45	19.80	6/24/2022 14:18	6.20
6/25/2022 10:59	34.84	6/25/2022 11:46	19.82	6/24/2022 14:19	6.19
6/25/2022 11:00	34.84	6/25/2022 11:47	19.82	6/24/2022 14:20	6.18
6/25/2022 11:01	34.86	6/25/2022 11:48	19.83	6/24/2022 14:21	6.15
6/25/2022 11:02	34.83	6/25/2022 11:49	19.81	6/24/2022 14:22	6.16
6/25/2022 11:03	34.80	6/25/2022 11:50	19.80	6/24/2022 14:23	6.19
6/25/2022 11:04	34.84	6/25/2022 11:51	19.79	6/24/2022 14:24	6.17
6/25/2022 11:05	34.84	6/25/2022 11:52	19.84	6/24/2022 14:25	6.17
6/25/2022 11:06	34.81	6/25/2022 11:53	19.80	6/24/2022 14:26	6.18
6/25/2022 11:07	34.81	6/25/2022 11:54	19.81	6/24/2022 14:27	6.19
6/25/2022 11:08	34.80	6/25/2022 11:55	19.79	6/24/2022 14:28	6.12
6/25/2022 11:09	34.83	6/25/2022 11:56	19.82	6/24/2022 14:29	6.18
6/25/2022 11:10	34.83	6/25/2022 11:57	19.80	6/24/2022 14:30	6.20
6/25/2022 11:11	34.83	6/25/2022 11:58	19.81	6/24/2022 14:31	6.15
6/25/2022 11:12	34.82	6/25/2022 11:59	19.81	6/24/2022 14:32	6.15
6/25/2022 11:13	34.84	6/25/2022 12:00	19.79	6/24/2022 14:33	6.14
6/25/2022 11:14	34.83	6/25/2022 12:01	19.81	6/24/2022 14:34	6.16
6/25/2022 11:15	34.83	6/25/2022 12:02	19.80	6/24/2022 14:35	6.16
6/25/2022 11:16	34.80	6/25/2022 12:03	19.80	6/24/2022 14:36	6.18
6/25/2022 11:17	34.83	6/25/2022 12:04	19.82	6/24/2022 14:37	6.17
6/25/2022 11:18	34.82	6/25/2022 12:05	19.80	6/24/2022 14:38	6.17
6/25/2022 11:19	34.82	6/25/2022 12:06	19.83	6/24/2022 14:39	6.16
6/25/2022 11:20	34.82	6/25/2022 12:07	19.81	6/24/2022 14:40	6.16
6/25/2022 11:21	34.82	6/25/2022 12:08	19.83	6/24/2022 14:41	6.18
6/25/2022 11:22	34.81	6/25/2022 12:09	19.81	6/24/2022 14:42	6.19
6/25/2022 11:23	34.83	6/25/2022 12:10	19.83	6/24/2022 14:43	6.21
6/25/2022 11:24	34.79	6/25/2022 12:11	19.81	6/24/2022 14:44	6.19
6/25/2022 11:25	34.81	6/25/2022 12:12	19.82	6/24/2022 14:45	6.20
6/25/2022 11:26	34.81	6/25/2022 12:13	19.82	6/24/2022 14:46	6.19
6/25/2022 11:27	34.81	6/25/2022 12:14	19.81	6/24/2022 14:47	6.19
6/25/2022 11:28	34.83	6/25/2022 12:15	19.81	6/24/2022 14:48	6.19
6/25/2022 11:29	34.78	6/25/2022 12:16	19.84	6/24/2022 14:49	6.16
6/25/2022 11:30	34.83	6/25/2022 12:17	19.82	6/24/2022 14:50	6.20
6/25/2022 11:31	34.80	6/25/2022 12:18	19.81	6/24/2022 14:51	6.17
6/25/2022 11:32	34.80	6/25/2022 12:19	19.79	6/24/2022 14:52	6.19
6/25/2022 11:33	34.81	6/25/2022 12:20	19.81	6/24/2022 14:53	6.17
6/25/2022 11:34	34.75	6/25/2022 12:21	19.79	6/24/2022 14:54	6.16
6/25/2022 11:35	34.81	6/25/2022 12:22	19.80	6/24/2022 14:55	6.18
6/25/2022 11:36	34.80	6/25/2022 12:23	19.81	6/24/2022 14:56	6.16
6/25/2022 11:37	34.80	6/25/2022 12:24	19.79	6/24/2022 14:57	6.14
6/25/2022 11:38	34.79	6/25/2022 12:25	19.82	6/24/2022 14:58	6.16

6/25/2022 11:39	34.80	6/25/2022 12:26	19.80	6/24/2022 14:59	6.23
6/25/2022 11:40	34.79	6/25/2022 12:27	19.80	6/24/2022 15:00	6.20
6/25/2022 11:41	34.80	6/25/2022 12:28	19.83	6/24/2022 15:01	6.20
6/25/2022 11:42	34.79	6/25/2022 12:29	19.79	6/24/2022 15:02	6.18
6/25/2022 11:43	34.81	6/25/2022 12:30	19.82	6/24/2022 15:03	6.19
6/25/2022 11:44	34.79	6/25/2022 12:31	19.81	6/24/2022 15:04	6.20
6/25/2022 11:45	34.79	6/25/2022 12:32	19.81	6/24/2022 15:05	6.17
6/25/2022 11:46	34.82	6/25/2022 12:33	19.80	6/24/2022 15:06	6.19
6/25/2022 11:47	34.85	6/25/2022 12:34	19.80	6/24/2022 15:07	6.18
6/25/2022 11:48	34.84	6/25/2022 12:35	19.79	6/24/2022 15:08	6.18
6/25/2022 11:49	34.82	6/25/2022 12:36	19.81	6/24/2022 15:09	6.17
6/25/2022 11:50	34.83	6/25/2022 12:37	19.82	6/24/2022 15:10	6.19
6/25/2022 11:51	34.81	6/25/2022 12:38	19.78	6/24/2022 15:11	6.17
6/25/2022 11:52	34.84	6/25/2022 12:39	19.81	6/24/2022 15:12	6.18
6/25/2022 11:53	34.81	6/25/2022 12:40	19.81	6/24/2022 15:13	6.19
6/25/2022 11:54	34.81	6/25/2022 12:41	19.83	6/24/2022 15:14	6.16
6/25/2022 11:55	34.83	6/25/2022 12:42	19.83	6/24/2022 15:15	6.17
6/25/2022 11:56	34.83	6/25/2022 12:43	19.81	6/24/2022 15:16	6.17
6/25/2022 11:57	34.83	6/25/2022 12:44	19.80	6/24/2022 15:17	6.15
6/25/2022 11:58	34.86	6/25/2022 12:45	19.81	6/24/2022 15:18	6.18
6/25/2022 11:59	34.85	6/25/2022 12:46	19.81	6/24/2022 15:19	6.20
6/25/2022 12:00	34.82	6/25/2022 12:47	19.81	6/24/2022 15:20	6.17
6/25/2022 12:01	34.81	6/25/2022 12:48	19.80	6/24/2022 15:21	6.17
6/25/2022 12:02	34.83	6/25/2022 12:49	19.81	6/24/2022 15:22	6.17
6/25/2022 12:03	34.84	6/25/2022 12:50	19.80	6/24/2022 15:23	6.20
6/25/2022 12:04	36.36	6/25/2022 12:51	19.78	6/24/2022 15:24	6.17
6/25/2022 12:05	35.22	6/25/2022 12:52	19.81	6/24/2022 15:25	6.16
6/25/2022 12:06	36.30	6/25/2022 12:53	19.79	6/24/2022 15:26	6.18
6/25/2022 12:07	35.90	6/25/2022 12:54	19.82	6/24/2022 15:27	6.18
6/25/2022 12:08	35.27	6/25/2022 12:55	19.82	6/24/2022 15:28	6.20
6/25/2022 12:09	35.17	6/25/2022 12:56	19.82	6/24/2022 15:29	6.19
6/25/2022 12:10	35.10	6/25/2022 12:57	19.82	6/24/2022 15:30	6.20
6/25/2022 12:11	35.04	6/25/2022 12:58	19.80	6/24/2022 15:31	6.18
6/25/2022 12:12	35.06	6/25/2022 12:59	19.81	6/24/2022 15:32	6.18
6/25/2022 12:13	36.33	6/25/2022 13:00	19.81	6/24/2022 15:33	6.18
6/25/2022 12:14	35.19	6/25/2022 13:01	19.81	6/24/2022 15:34	6.18
6/25/2022 12:15	35.09	6/25/2022 13:02	19.81	6/24/2022 15:35	6.18
6/25/2022 12:16	35.05	6/25/2022 13:03	19.81	6/24/2022 15:36	6.18
6/25/2022 12:17	35.04	6/25/2022 13:04	19.81	6/24/2022 15:37	6.17
6/25/2022 12:18	35.04	6/25/2022 13:05	19.83	6/24/2022 15:38	6.20
6/25/2022 12:19	35.00	6/25/2022 13:06	19.81	6/24/2022 15:39	6.17
6/25/2022 12:20	34.99	6/25/2022 13:07	19.78	6/24/2022 15:40	6.19
6/25/2022 12:21	34.97	6/25/2022 13:08	19.79	6/24/2022 15:41	6.20
6/25/2022 12:22	34.96	6/25/2022 13:09	19.80	6/24/2022 15:42	6.17
6/25/2022 12:23	34.93	6/25/2022 13:10	19.79	6/24/2022 15:43	6.17
6/25/2022 12:24	35.53	6/25/2022 13:11	19.77	6/24/2022 15:44	6.16
6/25/2022 12:25	35.08	6/25/2022 13:12	19.81	6/24/2022 15:45	6.17
6/25/2022 12:26	35.02	6/25/2022 13:13	19.81	6/24/2022 15:46	6.15
6/25/2022 12:27	34.98	6/25/2022 13:14	19.79	6/24/2022 15:47	6.16
6/25/2022 12:28	34.98	6/25/2022 13:15	19.82	6/24/2022 15:48	6.17
6/25/2022 12:29	34.97	6/25/2022 13:16	19.80	6/24/2022 15:49	6.17
6/25/2022 12:30	34.95	6/25/2022 13:17	19.80	6/24/2022 15:50	6.22
6/25/2022 12:31	34.94	6/25/2022 13:18	19.81	6/24/2022 15:51	6.15
6/25/2022 12:32	34.95	6/25/2022 13:19	19.80	6/24/2022 15:52	6.19
6/25/2022 12:33	34.95	6/25/2022 13:20	19.82	6/24/2022 15:53	6.17
6/25/2022 12:34	34.91	6/25/2022 13:21	19.77	6/24/2022 15:54	6.20
6/25/2022 12:35	34.91	6/25/2022 13:22	19.83	6/24/2022 15:55	6.18
6/25/2022 12:36	34.85	6/25/2022 13:23	19.80	6/24/2022 15:56	6.20
6/25/2022 12:37	34.88	6/25/2022 13:24	19.78	6/24/2022 15:57	6.18
6/25/2022 12:38	34.89	6/25/2022 13:25	19.81	6/24/2022 15:58	6.16
6/25/2022 12:39	34.90	6/25/2022 13:26	19.82	6/24/2022 15:59	6.19
6/25/2022 12:40	34.89	6/25/2022 13:27	19.76	6/24/2022 16:00	6.17
6/25/2022 12:41	34.93	6/25/2022 13:28	19.83	6/24/2022 16:01	6.18
6/25/2022 12:42	34.90	6/25/2022 13:29	19.79	6/24/2022 16:02	6.19
6/25/2022 12:43	34.96	6/25/2022 13:30	19.80	6/24/2022 16:03	6.16
6/25/2022 12:44	34.93	6/25/2022 13:31	19.77	6/24/2022 16:04	6.17
6/25/2022 12:45	34.96	6/25/2022 13:32	19.80	6/24/2022 16:05	6.17
6/25/2022 12:46	34.98	6/25/2022 13:33	19.81	6/24/2022 16:06	6.19
6/25/2022 12:47	34.95	6/25/2022 13:34	19.80	6/24/2022 16:07	6.17
6/25/2022 12:48	35.58	6/25/2022 13:35	19.79	6/24/2022 16:08	6.17
6/25/2022 12:49	35.51	6/25/2022 13:36	19.82	6/24/2022 16:09	6.19
6/25/2022 12:50	35.14	6/25/2022 13:37	19.80	6/24/2022 16:10	6.19
6/25/2022 12:51	35.07	6/25/2022 13:38	19.80	6/24/2022 16:11	6.19
6/25/2022 12:52	35.04	6/25/2022 13:39	19.79	6/24/2022 16:12	6.18
6/25/2022 12:53	35.00	6/25/2022 13:40	19.79	6/24/2022 16:13	6.20
6/25/2022 12:54	35.02	6/25/2022 13:41	19.80	6/24/2022 16:14	6.16
6/25/2022 12:55	34.96	6/25/2022 13:42	19.82	6/24/2022 16:15	6.19
6/25/2022 12:56	34.96	6/25/2022 13:43	19.81	6/24/2022 16:16	6.17
6/25/2022 12:57	34.98	6/25/2022 13:44	19.80	6/24/2022 16:17	6.16
6/25/2022 12:58	34.98	6/25/2022 13:45	19.80	6/24/2022 16:18	6.18
6/25/2022 12:59	35.00	6/25/2022 13:46	19.81	6/24/2022 16:19	6.16
6/25/2022 13:00	34.96	6/25/2022 13:47	19.79	6/24/2022 16:20	6.19
6/25/2022 13:01	34.99	6/25/2022 13:48	19.80	6/24/2022 16:21	6.19
6/25/2022 13:02	34.95	6/25/2022 13:49	19.82	6/24/2022 16:22	6.20
6/25/2022 13:03	34.96	6/25/2022 13:50	19.79	6/24/2022 16:23	6.17
6/25/2022 13:04	34.94	6/25/2022 13:51	19.80	6/24/2022 16:24	6.17
6/25/2022 13:05	34.92	6/25/2022 13:52	19.81	6/24/2022 16:25	6.17
6/25/2022 13:06	34.94	6/25/2022 13:53	19.82	6/24/2022 16:26	6.19

6/25/2022 13:07	34.93	6/25/2022 13:54	19.81	6/24/2022 16:27	6.14
6/25/2022 13:08	34.89	6/25/2022 13:55	19.80	6/24/2022 16:28	6.15
6/25/2022 13:09	34.92	6/25/2022 13:56	19.80	6/24/2022 16:29	6.19
6/25/2022 13:10	34.91	6/25/2022 13:57	19.83	6/24/2022 16:30	6.22
6/25/2022 13:11	34.90	6/25/2022 13:58	19.82	6/24/2022 16:31	6.15
6/25/2022 13:12	34.90	6/25/2022 13:59	19.79	6/24/2022 16:32	6.16
6/25/2022 13:13	34.89	6/25/2022 14:00	19.81	6/24/2022 16:33	6.19
6/25/2022 13:14	34.89	6/25/2022 14:01	19.81	6/24/2022 16:34	6.21
6/25/2022 13:15	34.92	6/25/2022 14:02	19.81	6/24/2022 16:35	6.19
6/25/2022 13:16	34.88	6/25/2022 14:03	19.79	6/24/2022 16:36	6.20
6/25/2022 13:17	34.89	6/25/2022 14:04	19.77	6/24/2022 16:37	6.19
6/25/2022 13:18	34.86	6/25/2022 14:05	19.83	6/24/2022 16:38	6.16
6/25/2022 13:19	34.87	6/25/2022 14:06	19.82	6/24/2022 16:39	6.20
6/25/2022 13:20	34.87	6/25/2022 14:07	19.81	6/24/2022 16:40	6.19
6/25/2022 13:21	34.85	6/25/2022 14:08	19.78	6/24/2022 16:41	6.19
6/25/2022 13:22	34.87	6/25/2022 14:09	19.81	6/24/2022 16:42	6.20
6/25/2022 13:23	34.87	6/25/2022 14:10	19.80	6/24/2022 16:43	6.17
6/25/2022 13:24	34.84	6/25/2022 14:11	19.82	6/24/2022 16:44	6.19
6/25/2022 13:25	34.84	6/25/2022 14:12	19.82	6/24/2022 16:45	6.18
6/25/2022 13:26	34.85	6/25/2022 14:13	19.80	6/24/2022 16:46	6.18
6/25/2022 13:27	34.84	6/25/2022 14:14	19.81	6/24/2022 16:47	6.15
6/25/2022 13:28	34.81	6/25/2022 14:15	19.82	6/24/2022 16:48	6.18
6/25/2022 13:29	34.83	6/25/2022 14:16	19.79	6/24/2022 16:49	6.19
6/25/2022 13:30	34.84	6/25/2022 14:17	19.80	6/24/2022 16:50	6.18
6/25/2022 13:31	34.82	6/25/2022 14:18	19.82	6/24/2022 16:51	6.18
6/25/2022 13:32	34.82	6/25/2022 14:19	19.80	6/24/2022 16:52	6.20
6/25/2022 13:33	35.85	6/25/2022 14:20	19.79	6/24/2022 16:53	6.16
6/25/2022 13:34	35.12	6/25/2022 14:21	19.81	6/24/2022 16:54	6.19
6/25/2022 13:35	34.95	6/25/2022 14:22	20.34	6/24/2022 16:55	6.16
6/25/2022 13:36	34.93	6/25/2022 14:23	20.49	6/24/2022 16:56	6.17
6/25/2022 13:37	36.28	6/25/2022 14:24	20.53	6/24/2022 16:57	6.14
6/25/2022 13:38	35.11	6/25/2022 14:25	20.61	6/24/2022 16:58	6.18
6/25/2022 13:39	35.02	6/25/2022 14:26	20.60	6/24/2022 16:59	6.21
6/25/2022 13:40	34.96	6/25/2022 14:27	20.09	6/24/2022 17:00	6.21
6/25/2022 13:41	34.93	6/25/2022 14:28	20.04	6/24/2022 17:01	6.17
6/25/2022 13:42	34.91	6/25/2022 14:29	19.98	6/24/2022 17:02	6.17
6/25/2022 13:43	34.93	6/25/2022 14:30	19.98	6/24/2022 17:03	6.17
6/25/2022 13:44	34.91	6/25/2022 14:31	19.96	6/24/2022 17:04	6.20
6/25/2022 13:45	34.91	6/25/2022 14:32	19.95	6/24/2022 17:05	6.21
6/25/2022 13:46	34.88	6/25/2022 14:33	19.94	6/24/2022 17:06	6.19
6/25/2022 13:47	34.86	6/25/2022 14:34	19.93	6/24/2022 17:07	6.16
6/25/2022 13:48	34.86	6/25/2022 14:35	19.92	6/24/2022 17:08	6.17
6/25/2022 13:49	34.86	6/25/2022 14:36	19.92	6/24/2022 17:09	6.21
6/25/2022 13:50	34.86	6/25/2022 14:37	19.89	6/24/2022 17:10	6.19
6/25/2022 13:51	34.89	6/25/2022 14:38	19.89	6/24/2022 17:11	6.17
6/25/2022 13:52	34.88	6/25/2022 14:39	19.90	6/24/2022 17:12	6.20
6/25/2022 13:53	34.90	6/25/2022 14:40	19.90	6/24/2022 17:13	6.17
6/25/2022 13:54	34.89	6/25/2022 14:41	19.87	6/24/2022 17:14	6.19
6/25/2022 13:55	34.89	6/25/2022 14:42	19.89	6/24/2022 17:15	6.17
6/25/2022 13:56	34.89	6/25/2022 14:43	19.88	6/24/2022 17:16	6.19
6/25/2022 13:57	34.90	6/25/2022 14:44	19.89	6/24/2022 17:17	6.19
6/25/2022 13:58	34.86	6/25/2022 14:45	19.89	6/24/2022 17:18	6.19
6/25/2022 13:59	34.85	6/25/2022 14:46	19.89	6/24/2022 17:19	6.18
6/25/2022 14:00	34.84	6/25/2022 14:47	19.88	6/24/2022 17:20	6.18
6/25/2022 14:01	34.84	6/25/2022 14:48	19.85	6/24/2022 17:21	6.20
6/25/2022 14:02	34.85	6/25/2022 14:49	19.86	6/24/2022 17:22	6.22
6/25/2022 14:03	34.87	6/25/2022 14:50	19.84	6/24/2022 17:23	6.19
6/25/2022 14:04	34.86	6/25/2022 14:51	19.86	6/24/2022 17:24	6.20
6/25/2022 14:05	34.85	6/25/2022 14:52	19.85	6/24/2022 17:25	6.20
6/25/2022 14:06	34.82	6/25/2022 14:53	19.87	6/24/2022 17:26	6.21
6/25/2022 14:07	34.85	6/25/2022 14:54	19.86	6/24/2022 17:27	6.18
6/25/2022 14:08	34.83	6/25/2022 14:55	19.85	6/24/2022 17:28	6.17
6/25/2022 14:09	34.82	6/25/2022 14:56	19.87	6/24/2022 17:29	6.21
6/25/2022 14:10	34.84	6/25/2022 14:57	19.87	6/24/2022 17:30	6.17
6/25/2022 14:11	34.88	6/25/2022 14:58	19.85	6/24/2022 17:31	6.22
6/25/2022 14:12	34.87	6/25/2022 14:59	19.87	6/24/2022 17:32	6.20
6/25/2022 14:13	34.86	6/25/2022 15:00	19.85	6/24/2022 17:33	6.19
6/25/2022 14:14	34.85	6/25/2022 15:01	19.83	6/24/2022 17:34	6.19
6/25/2022 14:15	34.84	6/25/2022 15:02	19.87	6/24/2022 17:35	6.18
6/25/2022 14:16	34.86	6/25/2022 15:03	19.84	6/24/2022 17:36	6.19
6/25/2022 14:17	34.87	6/25/2022 15:04	19.87	6/24/2022 17:37	6.19
6/25/2022 14:18	34.89	6/25/2022 15:05	19.86	6/24/2022 17:38	6.21
6/25/2022 14:19	34.86	6/25/2022 15:06	19.86	6/24/2022 17:39	6.22
6/25/2022 14:20	34.86	6/25/2022 15:07	19.85	6/24/2022 17:40	6.18
6/25/2022 14:21	34.89	6/25/2022 15:08	19.85	6/24/2022 17:41	6.20
6/25/2022 14:22	34.83	6/25/2022 15:09	19.85	6/24/2022 17:42	6.15
6/25/2022 14:23	34.85	6/25/2022 15:10	19.84	6/24/2022 17:43	6.19
6/25/2022 14:24	34.85	6/25/2022 15:11	19.84	6/24/2022 17:44	6.18
6/25/2022 14:25	34.86	6/25/2022 15:12	19.85	6/24/2022 17:45	6.16
6/25/2022 14:26	34.83	6/25/2022 15:13	19.84	6/24/2022 17:46	6.21
6/25/2022 14:27	34.80	6/25/2022 15:14	19.85	6/24/2022 17:47	6.20
6/25/2022 14:28	34.84	6/25/2022 15:15	19.86	6/24/2022 17:48	6.17
6/25/2022 14:29	34.87	6/25/2022 15:16	19.85	6/24/2022 17:49	6.19
6/25/2022 14:30	34.80	6/25/2022 15:17	19.84	6/24/2022 17:50	6.21
6/25/2022 14:31	34.81	6/25/2022 15:18	19.83	6/24/2022 17:51	6.17
6/25/2022 14:32	34.78	6/25/2022 15:19	19.84	6/24/2022 17:52	6.20
6/25/2022 14:33	34.83	6/25/2022 15:20	19.84	6/24/2022 17:53	6.20
6/25/2022 14:34	34.80	6/25/2022 15:21	19.86	6/24/2022 17:54	6.17

6/25/2022 14:35	34.82	6/25/2022 15:22	19.84	6/24/2022 17:55	6.19
6/25/2022 14:36	34.83	6/25/2022 15:23	19.85	6/24/2022 17:56	6.18
6/25/2022 14:37	34.81	6/25/2022 15:24	19.85	6/24/2022 17:57	6.18
6/25/2022 14:38	34.82	6/25/2022 15:25	19.84	6/24/2022 17:58	6.19
6/25/2022 14:39	34.80	6/25/2022 15:26	19.81	6/24/2022 17:59	6.17
6/25/2022 14:40	34.79	6/25/2022 15:27	19.81	6/24/2022 18:00	6.20
6/25/2022 14:41	34.79	6/25/2022 15:28	19.81	6/24/2022 18:01	6.19
6/25/2022 14:42	34.84	6/25/2022 15:29	19.82	6/24/2022 18:02	6.17
6/25/2022 14:43	34.78	6/25/2022 15:30	19.81	6/24/2022 18:03	6.16
6/25/2022 14:44	34.81	6/25/2022 15:31	19.83	6/24/2022 18:04	6.20
6/25/2022 14:45	34.78	6/25/2022 15:32	19.83	6/24/2022 18:05	6.22
6/25/2022 14:46	34.80	6/25/2022 15:33	19.82	6/24/2022 18:06	6.20
6/25/2022 14:47	34.81	6/25/2022 15:34	19.84	6/24/2022 18:07	6.17
6/25/2022 14:48	34.79	6/25/2022 15:35	19.82	6/24/2022 18:08	6.18
6/25/2022 14:49	34.75	6/25/2022 15:36	19.84	6/24/2022 18:09	6.15
6/25/2022 14:50	34.77	6/25/2022 15:37	19.85	6/24/2022 18:10	6.14
6/25/2022 14:51	34.78	6/25/2022 15:38	19.82	6/24/2022 18:11	6.19
6/25/2022 14:52	34.78	6/25/2022 15:39	19.86	6/24/2022 18:12	6.18
6/25/2022 14:53	34.78	6/25/2022 15:40	19.83	6/24/2022 18:13	6.19
6/25/2022 14:54	34.80	6/25/2022 15:41	19.81	6/24/2022 18:14	6.17
6/25/2022 14:55	34.78	6/25/2022 15:42	19.83	6/24/2022 18:15	6.18
6/25/2022 14:56	34.75	6/25/2022 15:43	19.82	6/24/2022 18:16	6.19
6/25/2022 14:57	34.77	6/25/2022 15:44	19.84	6/24/2022 18:17	6.17
6/25/2022 14:58	34.75	6/25/2022 15:45	19.83	6/24/2022 18:18	6.17
6/25/2022 14:59	34.79	6/25/2022 15:46	19.81	6/24/2022 18:19	6.20
6/25/2022 15:00	34.78	6/25/2022 15:47	19.81	6/24/2022 18:20	6.19
6/25/2022 15:01	34.79	6/25/2022 15:48	19.80	6/24/2022 18:21	6.19
6/25/2022 15:02	34.77	6/25/2022 15:49	19.85	6/24/2022 18:22	6.18
6/25/2022 15:03	34.76	6/25/2022 15:50	19.82	6/24/2022 18:23	6.18
6/25/2022 15:04	34.77	6/25/2022 15:51	19.81	6/24/2022 18:24	6.17
6/25/2022 15:05	34.77	6/25/2022 15:52	19.82	6/24/2022 18:25	6.17
6/25/2022 15:06	34.77	6/25/2022 15:53	19.81	6/24/2022 18:26	6.20
6/25/2022 15:07	34.77	6/25/2022 15:54	19.83	6/24/2022 18:27	6.20
6/25/2022 15:08	34.74	6/25/2022 15:55	19.83	6/24/2022 18:28	6.16
6/25/2022 15:09	34.75	6/25/2022 15:56	19.81	6/24/2022 18:29	6.18
6/25/2022 15:10	34.73	6/25/2022 15:57	19.82	6/24/2022 18:30	6.18
6/25/2022 15:11	34.77	6/25/2022 15:58	19.84	6/24/2022 18:31	6.18
6/25/2022 15:12	34.77	6/25/2022 15:59	19.83	6/24/2022 18:32	6.20
6/25/2022 15:13	34.76	6/25/2022 16:00	19.80	6/24/2022 18:33	6.20
6/25/2022 15:14	34.74	6/25/2022 16:01	19.81	6/24/2022 18:34	6.19
6/25/2022 15:15	34.75	6/25/2022 16:02	19.83	6/24/2022 18:35	6.21
6/25/2022 15:16	34.76	6/25/2022 16:03	19.82	6/24/2022 18:36	6.17
6/25/2022 15:17	34.74	6/25/2022 16:04	19.83	6/24/2022 18:37	6.21
6/25/2022 15:18	34.77	6/25/2022 16:05	19.85	6/24/2022 18:38	6.21
6/25/2022 15:19	34.76	6/25/2022 16:06	19.85	6/24/2022 18:39	6.21
6/25/2022 15:20	34.75	6/25/2022 16:07	19.81	6/24/2022 18:40	6.21
6/25/2022 15:21	34.74	6/25/2022 16:08	19.82	6/24/2022 18:41	6.22
6/25/2022 15:22	34.73	6/25/2022 16:09	19.82	6/24/2022 18:42	6.18
6/25/2022 15:23	34.76	6/25/2022 16:10	19.84	6/24/2022 18:43	6.18
6/25/2022 15:24	34.73	6/25/2022 16:11	19.84	6/24/2022 18:44	6.21
6/25/2022 15:25	34.72	6/25/2022 16:12	19.81	6/24/2022 18:45	6.19
6/25/2022 15:26	34.74	6/25/2022 16:13	19.82	6/24/2022 18:46	6.20
6/25/2022 15:27	34.74	6/25/2022 16:14	19.83	6/24/2022 18:47	6.18
6/25/2022 15:28	34.77	6/25/2022 16:15	19.83	6/24/2022 18:48	6.19
6/25/2022 15:29	34.74	6/25/2022 16:16	19.84	6/24/2022 18:49	6.21
6/25/2022 15:30	34.74	6/25/2022 16:17	19.83	6/24/2022 18:50	6.17
6/25/2022 15:31	34.73	6/25/2022 16:18	19.82	6/24/2022 18:51	6.19
6/25/2022 15:32	34.74	6/25/2022 16:19	19.84	6/24/2022 18:52	6.19
6/25/2022 15:33	34.72	6/25/2022 16:20	19.83	6/24/2022 18:53	6.20
6/25/2022 15:34	34.75	6/25/2022 16:21	19.83	6/24/2022 18:54	6.17
6/25/2022 15:35	34.74	6/25/2022 16:22	19.83	6/24/2022 18:55	6.21
6/25/2022 15:36	34.71	6/25/2022 16:23	19.81	6/24/2022 18:56	6.19
6/25/2022 15:37	34.73	6/25/2022 16:24	19.81	6/24/2022 18:57	6.16
6/25/2022 15:38	34.74	6/25/2022 16:25	19.84	6/24/2022 18:58	6.20
6/25/2022 15:39	34.72	6/25/2022 16:26	19.82	6/24/2022 18:59	6.19
6/25/2022 15:40	34.73	6/25/2022 16:27	19.81	6/24/2022 19:00	6.18
6/25/2022 15:41	34.77	6/25/2022 16:28	19.82	6/24/2022 19:01	6.18
6/25/2022 15:42	34.73	6/25/2022 16:29	19.83	6/24/2022 19:02	6.20
6/25/2022 15:43	34.72	6/25/2022 16:30	19.82	6/24/2022 19:03	6.21
6/25/2022 15:44	34.81	6/25/2022 16:31	19.82	6/24/2022 19:04	6.19
6/25/2022 15:45	34.80	6/25/2022 16:32	19.82	6/24/2022 19:05	6.21
6/25/2022 15:46	34.83	6/25/2022 16:33	19.81	6/24/2022 19:06	6.21
6/25/2022 15:47	34.83	6/25/2022 16:34	19.82	6/24/2022 19:07	6.19
6/25/2022 15:48	34.83	6/25/2022 16:35	19.81	6/24/2022 19:08	6.19
6/25/2022 15:49	34.81	6/25/2022 16:36	19.83	6/24/2022 19:09	6.17
6/25/2022 15:50	34.82	6/25/2022 16:37	19.82	6/24/2022 19:10	6.19
6/25/2022 15:51	34.79	6/25/2022 16:38	19.81	6/24/2022 19:11	6.18
6/25/2022 15:52	34.77	6/25/2022 16:39	19.84	6/24/2022 19:12	6.17
6/25/2022 15:53	34.82	6/25/2022 16:40	19.79	6/24/2022 19:13	6.18
6/25/2022 15:54	34.78	6/25/2022 16:41	19.82	6/24/2022 19:14	6.19
6/25/2022 15:55	34.74	6/25/2022 16:42	19.81	6/24/2022 19:15	6.19
6/25/2022 15:56	34.77	6/25/2022 16:43	19.81	6/24/2022 19:16	6.22
6/25/2022 15:57	34.77	6/25/2022 16:44	19.79	6/24/2022 19:17	6.54
6/25/2022 15:58	34.78	6/25/2022 16:45	19.82	6/24/2022 19:18	8.93
6/25/2022 15:59	34.74	6/25/2022 16:46	19.79	6/24/2022 19:19	9.11
6/25/2022 16:00	34.78	6/25/2022 16:47	19.81	6/24/2022 19:20	9.04
6/25/2022 16:01	34.77	6/25/2022 16:48	19.80	6/24/2022 19:21	6.46
6/25/2022 16:02	34.79	6/25/2022 16:49	19.82	6/24/2022 19:22	6.23

6/25/2022 16:03	34.76	6/25/2022 16:50	19.83	6/24/2022 19:23	6.22
6/25/2022 16:04	34.75	6/25/2022 16:51	19.81	6/24/2022 19:24	6.20
6/25/2022 16:05	34.76	6/25/2022 16:52	19.83	6/24/2022 19:25	6.22
6/25/2022 16:06	34.74	6/25/2022 16:53	19.80	6/24/2022 19:26	6.20
6/25/2022 16:07	34.76	6/25/2022 16:54	19.83	6/24/2022 19:27	6.22
6/25/2022 16:08	34.76	6/25/2022 16:55	19.81	6/24/2022 19:28	6.21
6/25/2022 16:09	34.74	6/25/2022 16:56	19.83	6/24/2022 19:29	6.18
6/25/2022 16:10	34.75	6/25/2022 16:57	19.83	6/24/2022 19:30	6.23
6/25/2022 16:11	34.72	6/25/2022 16:58	19.79	6/24/2022 19:31	6.19
6/25/2022 16:12	34.72	6/25/2022 16:59	19.83	6/24/2022 19:32	6.22
6/25/2022 16:13	34.75	6/25/2022 17:00	19.79	6/24/2022 19:33	6.21
6/25/2022 16:14	34.73	6/25/2022 17:01	19.82	6/24/2022 19:34	6.22
6/25/2022 16:15	34.72	6/25/2022 17:02	19.83	6/24/2022 19:35	6.17
6/25/2022 16:16	34.71	6/25/2022 17:03	19.79	6/24/2022 19:36	6.24
6/25/2022 16:17	34.73	6/25/2022 17:04	19.83	6/24/2022 19:37	6.20
6/25/2022 16:18	34.74	6/25/2022 17:05	19.84	6/24/2022 19:38	6.19
6/25/2022 16:19	34.74	6/25/2022 17:06	19.84	6/24/2022 19:39	6.17
6/25/2022 16:20	34.76	6/25/2022 17:07	19.82	6/24/2022 19:40	6.22
6/25/2022 16:21	34.75	6/25/2022 17:08	19.80	6/24/2022 19:41	6.21
6/25/2022 16:22	34.77	6/25/2022 17:09	19.82	6/24/2022 19:42	6.22
6/25/2022 16:23	34.75	6/25/2022 17:10	19.82	6/24/2022 19:43	6.18
6/25/2022 16:24	34.78	6/25/2022 17:11	19.81	6/24/2022 19:44	6.19
6/25/2022 16:25	34.75	6/25/2022 17:12	19.81	6/24/2022 19:45	6.20
6/25/2022 16:26	34.74	6/25/2022 17:13	19.80	6/24/2022 19:46	6.17
6/25/2022 16:27	34.73	6/25/2022 17:14	19.81	6/24/2022 19:47	6.21
6/25/2022 16:28	34.76	6/25/2022 17:15	19.82	6/24/2022 19:48	6.20
6/25/2022 16:29	34.74	6/25/2022 17:16	19.80	6/24/2022 19:49	6.18
6/25/2022 16:30	34.71	6/25/2022 17:17	19.82	6/24/2022 19:50	6.20
6/25/2022 16:31	34.75	6/25/2022 17:18	19.80	6/24/2022 19:51	6.21
6/25/2022 16:32	34.73	6/25/2022 17:19	19.81	6/24/2022 19:52	6.19
6/25/2022 16:33	34.74	6/25/2022 17:20	19.81	6/24/2022 19:53	6.22
6/25/2022 16:34	34.73	6/25/2022 17:21	19.82	6/24/2022 19:54	6.18
6/25/2022 16:35	34.77	6/25/2022 17:22	19.80	6/24/2022 19:55	6.22
6/25/2022 16:36	34.74	6/25/2022 17:23	19.82	6/24/2022 19:56	6.16
6/25/2022 16:37	34.70	6/25/2022 17:24	19.83	6/24/2022 19:57	6.19
6/25/2022 16:38	34.73	6/25/2022 17:25	19.82	6/24/2022 19:58	6.16
6/25/2022 16:39	34.71	6/25/2022 17:26	19.79	6/24/2022 19:59	6.19
6/25/2022 16:40	34.73	6/25/2022 17:27	19.79	6/24/2022 20:00	6.21
6/25/2022 16:41	34.73	6/25/2022 17:28	19.83	6/24/2022 20:01	6.18
6/25/2022 16:42	34.71	6/25/2022 17:29	19.80	6/24/2022 20:02	6.17
6/25/2022 16:43	34.72	6/25/2022 17:30	19.81	6/24/2022 20:03	6.21
6/25/2022 16:44	34.73	6/25/2022 17:31	19.80	6/24/2022 20:04	6.20
6/25/2022 16:45	34.67	6/25/2022 17:32	19.83	6/24/2022 20:05	6.18
6/25/2022 16:46	34.70	6/25/2022 17:33	19.79	6/24/2022 20:06	6.18
6/25/2022 16:47	34.72	6/25/2022 17:34	19.82	6/24/2022 20:07	6.21
6/25/2022 16:48	34.68	6/25/2022 17:35	19.82	6/24/2022 20:08	6.20
6/25/2022 16:49	34.72	6/25/2022 17:36	19.83	6/24/2022 20:09	6.21
6/25/2022 16:50	34.72	6/25/2022 17:37	19.80	6/24/2022 20:10	6.15
6/25/2022 16:51	34.69	6/25/2022 17:38	19.82	6/24/2022 20:11	6.18
6/25/2022 16:52	34.71	6/25/2022 17:39	19.78	6/24/2022 20:12	6.20
6/25/2022 16:53	34.70	6/25/2022 17:40	19.84	6/24/2022 20:13	6.16
6/25/2022 16:54	34.70	6/25/2022 17:41	19.81	6/24/2022 20:14	6.23
6/25/2022 16:55	34.71	6/25/2022 17:42	19.83	6/24/2022 20:15	6.18
6/25/2022 16:56	34.71	6/25/2022 17:43	19.81	6/24/2022 20:16	6.20
6/25/2022 16:57	34.67	6/25/2022 17:44	19.81	6/24/2022 20:17	6.20
6/25/2022 16:58	34.72	6/25/2022 17:45	19.81	6/24/2022 20:18	6.21
6/25/2022 16:59	34.70	6/25/2022 17:46	19.80	6/24/2022 20:19	6.20
6/25/2022 17:00	34.71	6/25/2022 17:47	19.80	6/24/2022 20:20	6.21
6/25/2022 17:01	34.67	6/25/2022 17:48	19.82	6/24/2022 20:21	6.21
6/25/2022 17:02	34.67	6/25/2022 17:49	19.80	6/24/2022 20:22	6.19
6/25/2022 17:03	34.71	6/25/2022 17:50	19.82	6/24/2022 20:23	6.18
6/25/2022 17:04	34.69	6/25/2022 17:51	19.79	6/24/2022 20:24	6.19
6/25/2022 17:05	34.68	6/25/2022 17:52	19.81	6/24/2022 20:25	6.19
6/25/2022 17:06	34.67	6/25/2022 17:53	19.84	6/24/2022 20:26	6.19
6/25/2022 17:07	34.69	6/25/2022 17:54	19.78	6/24/2022 20:27	6.23
6/25/2022 17:08	34.72	6/25/2022 17:55	19.81	6/24/2022 20:28	6.21
6/25/2022 17:09	34.69	6/25/2022 17:56	19.82	6/24/2022 20:29	6.20
6/25/2022 17:10	34.70	6/25/2022 17:57	19.80	6/24/2022 20:30	6.21
6/25/2022 17:11	34.69	6/25/2022 17:58	19.82	6/24/2022 20:31	6.19
6/25/2022 17:12	34.68	6/25/2022 17:59	19.80	6/24/2022 20:32	6.20
6/25/2022 17:13	34.70	6/25/2022 18:00	19.79	6/24/2022 20:33	6.17
6/25/2022 17:14	34.69	6/25/2022 18:01	19.82	6/24/2022 20:34	6.17
6/25/2022 17:15	34.71	6/25/2022 18:02	19.81	6/24/2022 20:35	6.19
6/25/2022 17:16	34.72	6/25/2022 18:03	19.83	6/24/2022 20:36	6.21
6/25/2022 17:17	34.71	6/25/2022 18:04	19.81	6/24/2022 20:37	6.23
6/25/2022 17:18	34.70	6/25/2022 18:05	19.80	6/24/2022 20:38	6.23
6/25/2022 17:19	34.71	6/25/2022 18:06	19.80	6/24/2022 20:39	6.19
6/25/2022 17:20	34.70	6/25/2022 18:07	19.83	6/24/2022 20:40	6.18
6/25/2022 17:21	34.71	6/25/2022 18:08	19.79	6/24/2022 20:41	6.20
6/25/2022 17:22	34.70	6/25/2022 18:09	19.81	6/24/2022 20:42	6.16
6/25/2022 17:23	34.72	6/25/2022 18:10	19.81	6/24/2022 20:43	6.23
6/25/2022 17:24	34.74	6/25/2022 18:11	19.82	6/24/2022 20:44	6.18
6/25/2022 17:25	34.76	6/25/2022 18:12	19.81	6/24/2022 20:45	6.15
6/25/2022 17:26	34.77	6/25/2022 18:13	19.81	6/24/2022 20:46	6.21
6/25/2022 17:27	34.79	6/25/2022 18:14	19.84	6/24/2022 20:47	6.19
6/25/2022 17:28	34.79	6/25/2022 18:15	19.80	6/24/2022 20:48	6.18
6/25/2022 17:29	34.76	6/25/2022 18:16	20.27	6/24/2022 20:49	6.19
6/25/2022 17:30	34.76	6/25/2022 18:17	20.47	6/24/2022 20:50	6.17

6/25/2022 17:31	34.75	6/25/2022 18:18	20.53	6/24/2022 20:51	6.18
6/25/2022 17:32	34.77	6/25/2022 18:19	20.64	6/24/2022 20:52	6.21
6/25/2022 17:33	34.71	6/25/2022 18:20	20.65	6/24/2022 20:53	6.19
6/25/2022 17:34	34.73	6/25/2022 18:21	20.68	6/24/2022 20:54	6.18
6/25/2022 17:35	34.74	6/25/2022 18:22	20.66	6/24/2022 20:55	6.21
6/25/2022 17:36	34.72	6/25/2022 18:23	20.15	6/24/2022 20:56	6.17
6/25/2022 17:37	34.75	6/25/2022 18:24	20.08	6/24/2022 20:57	6.23
6/25/2022 17:38	34.73	6/25/2022 18:25	20.06	6/24/2022 20:58	6.17
6/25/2022 17:39	34.72	6/25/2022 18:26	20.02	6/24/2022 20:59	6.18
6/25/2022 17:40	34.71	6/25/2022 18:27	20.00	6/24/2022 21:00	6.19
6/25/2022 17:41	34.72	6/25/2022 18:28	19.97	6/24/2022 21:01	6.18
6/25/2022 17:42	34.68	6/25/2022 18:29	19.97	6/24/2022 21:02	6.17
6/25/2022 17:43	34.71	6/25/2022 18:30	19.97	6/24/2022 21:03	6.18
6/25/2022 17:44	34.71	6/25/2022 18:31	19.95	6/24/2022 21:04	6.19
6/25/2022 17:45	34.72	6/25/2022 18:32	19.94	6/24/2022 21:05	6.21
6/25/2022 17:46	34.70	6/25/2022 18:33	19.94	6/24/2022 21:06	6.19
6/25/2022 17:47	34.72	6/25/2022 18:34	19.95	6/24/2022 21:07	6.20
6/25/2022 17:48	34.70	6/25/2022 18:35	19.92	6/24/2022 21:08	6.20
6/25/2022 17:49	34.73	6/25/2022 18:36	19.92	6/24/2022 21:09	6.22
6/25/2022 17:50	34.69	6/25/2022 18:37	19.92	6/24/2022 21:10	6.23
6/25/2022 17:51	34.68	6/25/2022 18:38	19.94	6/24/2022 21:11	6.20
6/25/2022 17:52	34.71	6/25/2022 18:39	19.92	6/24/2022 21:12	6.20
6/25/2022 17:53	34.69	6/25/2022 18:40	19.90	6/24/2022 21:13	6.18
6/25/2022 17:54	34.72	6/25/2022 18:41	19.88	6/24/2022 21:14	6.20
6/25/2022 17:55	34.69	6/25/2022 18:42	19.91	6/24/2022 21:15	6.21
6/25/2022 17:56	34.68	6/25/2022 18:43	19.92	6/24/2022 21:16	6.19
6/25/2022 17:57	34.68	6/25/2022 18:44	19.90	6/24/2022 21:17	6.20
6/25/2022 17:58	34.67	6/25/2022 18:45	19.89	6/24/2022 21:18	6.20
6/25/2022 17:59	34.70	6/25/2022 18:46	19.89	6/24/2022 21:19	6.20
6/25/2022 18:00	34.68	6/25/2022 18:47	19.91	6/24/2022 21:20	6.22
6/25/2022 18:01	34.65	6/25/2022 18:48	19.90	6/24/2022 21:21	6.17
6/25/2022 18:02	34.67	6/25/2022 18:49	19.89	6/24/2022 21:22	6.21
6/25/2022 18:03	34.67	6/25/2022 18:50	19.89	6/24/2022 21:23	6.21
6/25/2022 18:04	34.67	6/25/2022 18:51	19.90	6/24/2022 21:24	6.21
6/25/2022 18:05	34.68	6/25/2022 18:52	19.88	6/24/2022 21:25	6.18
6/25/2022 18:06	34.66	6/25/2022 18:53	19.90	6/24/2022 21:26	6.21
6/25/2022 18:07	34.68	6/25/2022 18:54	19.87	6/24/2022 21:27	6.22
6/25/2022 18:08	34.69	6/25/2022 18:55	19.87	6/24/2022 21:28	6.23
6/25/2022 18:09	34.68	6/25/2022 18:56	19.88	6/24/2022 21:29	6.19
6/25/2022 18:10	34.68	6/25/2022 18:57	19.88	6/24/2022 21:30	6.21
6/25/2022 18:11	34.67	6/25/2022 18:58	19.87	6/24/2022 21:31	6.20
6/25/2022 18:12	34.64	6/25/2022 18:59	19.88	6/24/2022 21:32	6.19
6/25/2022 18:13	34.67	6/25/2022 19:00	19.87	6/24/2022 21:33	6.19
6/25/2022 18:14	34.69	6/25/2022 19:01	19.87	6/24/2022 21:34	6.18
6/25/2022 18:15	34.66	6/25/2022 19:02	19.88	6/24/2022 21:35	6.21
6/25/2022 18:16	34.67	6/25/2022 19:03	19.86	6/24/2022 21:36	6.17
6/25/2022 18:17	34.66	6/25/2022 19:04	19.87	6/24/2022 21:37	6.19
6/25/2022 18:18	34.68	6/25/2022 19:05	19.88	6/24/2022 21:38	6.18
6/25/2022 18:19	34.64	6/25/2022 19:06	19.86	6/24/2022 21:39	6.18
6/25/2022 18:20	34.66	6/25/2022 19:07	19.87	6/24/2022 21:40	6.17
6/25/2022 18:21	34.64	6/25/2022 19:08	19.85	6/24/2022 21:41	6.19
6/25/2022 18:22	34.67	6/25/2022 19:09	19.86	6/24/2022 21:42	6.19
6/25/2022 18:23	34.66	6/25/2022 19:10	19.86	6/24/2022 21:43	6.20
6/25/2022 18:24	34.64	6/25/2022 19:11	19.85	6/24/2022 21:44	6.17
6/25/2022 18:25	34.66	6/25/2022 19:12	19.89	6/24/2022 21:45	6.19
6/25/2022 18:26	34.65	6/25/2022 19:13	19.83	6/24/2022 21:46	6.21
6/25/2022 18:27	34.65	6/25/2022 19:14	19.87	6/24/2022 21:47	6.22
6/25/2022 18:28	34.66	6/25/2022 19:15	19.86	6/24/2022 21:48	6.17
6/25/2022 18:29	34.65	6/25/2022 19:16	19.86	6/24/2022 21:49	6.20
6/25/2022 18:30	34.67	6/25/2022 19:17	19.85	6/24/2022 21:50	6.16
6/25/2022 18:31	34.63	6/25/2022 19:18	19.85	6/24/2022 21:51	6.20
6/25/2022 18:32	34.64	6/25/2022 19:19	19.84	6/24/2022 21:52	6.18
6/25/2022 18:33	34.63	6/25/2022 19:20	19.84	6/24/2022 21:53	6.21
6/25/2022 18:34	34.63	6/25/2022 19:21	19.84	6/24/2022 21:54	6.20
6/25/2022 18:35	34.67	6/25/2022 19:22	19.83	6/24/2022 21:55	6.18
6/25/2022 18:36	34.64	6/25/2022 19:23	19.85	6/24/2022 21:56	6.17
6/25/2022 18:37	34.64	6/25/2022 19:24	19.83	6/24/2022 21:57	6.21
6/25/2022 18:38	34.66	6/25/2022 19:25	19.86	6/24/2022 21:58	6.21
6/25/2022 18:39	34.65	6/25/2022 19:26	19.87	6/24/2022 21:59	6.20
6/25/2022 18:40	34.64	6/25/2022 19:27	19.85	6/24/2022 22:00	6.21
6/25/2022 18:41	34.64	6/25/2022 19:28	19.85	6/24/2022 22:01	6.22
6/25/2022 18:42	34.65	6/25/2022 19:29	19.85	6/24/2022 22:02	6.23
6/25/2022 18:43	34.62	6/25/2022 19:30	19.85	6/24/2022 22:03	6.19
6/25/2022 18:44	34.64	6/25/2022 19:31	19.84	6/24/2022 22:04	6.18
6/25/2022 18:45	34.62	6/25/2022 19:32	19.86	6/24/2022 22:05	6.19
6/25/2022 18:46	34.63	6/25/2022 19:33	19.84	6/24/2022 22:06	6.19
6/25/2022 18:47	34.63	6/25/2022 19:34	19.87	6/24/2022 22:07	6.23
6/25/2022 18:48	34.62	6/25/2022 19:35	19.85	6/24/2022 22:08	6.21
6/25/2022 18:49	34.64	6/25/2022 19:36	19.87	6/24/2022 22:09	6.20
6/25/2022 18:50	34.63	6/25/2022 19:37	19.84	6/24/2022 22:10	6.19
6/25/2022 18:51	34.65	6/25/2022 19:38	19.82	6/24/2022 22:11	6.20
6/25/2022 18:52	34.65	6/25/2022 19:39	19.84	6/24/2022 22:12	6.22
6/25/2022 18:53	34.64	6/25/2022 19:40	19.86	6/24/2022 22:13	6.19
6/25/2022 18:54	34.64	6/25/2022 19:41	19.83	6/24/2022 22:14	6.21
6/25/2022 18:55	34.61	6/25/2022 19:42	19.85	6/24/2022 22:15	6.22
6/25/2022 18:56	34.61	6/25/2022 19:43	19.84	6/24/2022 22:16	6.18
6/25/2022 18:57	34.63	6/25/2022 19:44	19.84	6/24/2022 22:17	6.22
6/25/2022 18:58	34.63	6/25/2022 19:45	19.83	6/24/2022 22:18	6.18

6/25/2022 18:59	34.63	6/25/2022 19:46	19.84	6/24/2022 22:19	6.20
6/25/2022 19:00	34.60	6/25/2022 19:47	19.85	6/24/2022 22:20	6.20
6/25/2022 19:01	34.64	6/25/2022 19:48	19.85	6/24/2022 22:21	6.20
6/25/2022 19:02	34.62	6/25/2022 19:49	19.83	6/24/2022 22:22	6.20
6/25/2022 19:03	34.64	6/25/2022 19:50	19.83	6/24/2022 22:23	6.20
6/25/2022 19:04	34.63	6/25/2022 19:51	19.86	6/24/2022 22:24	6.18
6/25/2022 19:05	34.64	6/25/2022 19:52	19.86	6/24/2022 22:25	6.20
6/25/2022 19:06	34.68	6/25/2022 19:53	19.83	6/24/2022 22:26	6.17
6/25/2022 19:07	34.64	6/25/2022 19:54	19.83	6/24/2022 22:27	6.19
6/25/2022 19:08	34.62	6/25/2022 19:55	19.86	6/24/2022 22:28	6.17
6/25/2022 19:09	34.62	6/25/2022 19:56	19.82	6/24/2022 22:29	6.19
6/25/2022 19:10	34.63	6/25/2022 19:57	19.86	6/24/2022 22:30	6.24
6/25/2022 19:11	34.63	6/25/2022 19:58	19.81	6/24/2022 22:31	6.20
6/25/2022 19:12	34.63	6/25/2022 19:59	19.84	6/24/2022 22:32	6.16
6/25/2022 19:13	34.63	6/25/2022 20:00	19.86	6/24/2022 22:33	6.19
6/25/2022 19:14	34.64	6/25/2022 20:01	19.84	6/24/2022 22:34	6.17
6/25/2022 19:15	34.61	6/25/2022 20:02	19.83	6/24/2022 22:35	6.17
6/25/2022 19:16	34.65	6/25/2022 20:03	19.84	6/24/2022 22:36	6.20
6/25/2022 19:17	34.58	6/25/2022 20:04	19.86	6/24/2022 22:37	6.19
6/25/2022 19:18	34.62	6/25/2022 20:05	19.81	6/24/2022 22:38	6.17
6/25/2022 19:19	34.62	6/25/2022 20:06	19.84	6/24/2022 22:39	6.20
6/25/2022 19:20	34.59	6/25/2022 20:07	19.85	6/24/2022 22:40	6.20
6/25/2022 19:21	34.62	6/25/2022 20:08	19.83	6/24/2022 22:41	6.22
6/25/2022 19:22	34.63	6/25/2022 20:09	19.83	6/24/2022 22:42	6.17
6/25/2022 19:23	34.61	6/25/2022 20:10	19.84	6/24/2022 22:43	6.21
6/25/2022 19:24	34.61	6/25/2022 20:11	19.85	6/24/2022 22:44	6.20
6/25/2022 19:25	34.62	6/25/2022 20:12	19.86	6/24/2022 22:45	6.21
6/25/2022 19:26	34.62	6/25/2022 20:13	19.84	6/24/2022 22:46	6.20
6/25/2022 19:27	34.64	6/25/2022 20:14	19.84	6/24/2022 22:47	6.23
6/25/2022 19:28	34.63	6/25/2022 20:15	19.84	6/24/2022 22:48	6.20
6/25/2022 19:29	34.61	6/25/2022 20:16	19.86	6/24/2022 22:49	6.19
6/25/2022 19:30	34.61	6/25/2022 20:17	19.81	6/24/2022 22:50	6.17
6/25/2022 19:31	34.58	6/25/2022 20:18	19.84	6/24/2022 22:51	6.22
6/25/2022 19:32	34.61	6/25/2022 20:19	19.85	6/24/2022 22:52	6.20
6/25/2022 19:33	34.62	6/25/2022 20:20	19.83	6/24/2022 22:53	6.22
6/25/2022 19:34	34.60	6/25/2022 20:21	19.82	6/24/2022 22:54	6.20
6/25/2022 19:35	34.63	6/25/2022 20:22	19.86	6/24/2022 22:55	6.20
6/25/2022 19:36	34.60	6/25/2022 20:23	19.84	6/24/2022 22:56	6.19
6/25/2022 19:37	34.60	6/25/2022 20:24	19.83	6/24/2022 22:57	6.19
6/25/2022 19:38	34.58	6/25/2022 20:25	19.82	6/24/2022 22:58	6.19
6/25/2022 19:39	34.60	6/25/2022 20:26	19.85	6/24/2022 22:59	6.22
6/25/2022 19:40	34.64	6/25/2022 20:27	19.86	6/24/2022 23:00	6.18
6/25/2022 19:41	34.57	6/25/2022 20:28	19.86	6/24/2022 23:01	6.19
6/25/2022 19:42	34.59	6/25/2022 20:29	19.83	6/24/2022 23:02	6.21
6/25/2022 19:43	34.61	6/25/2022 20:30	19.82	6/24/2022 23:03	6.18
6/25/2022 19:44	34.60	6/25/2022 20:31	19.84	6/24/2022 23:04	6.20
6/25/2022 19:45	34.59	6/25/2022 20:32	19.85	6/24/2022 23:05	6.18
6/25/2022 19:46	34.61	6/25/2022 20:33	19.85	6/24/2022 23:06	6.21
6/25/2022 19:47	34.59	6/25/2022 20:34	19.83	6/24/2022 23:07	6.18
6/25/2022 19:48	34.58	6/25/2022 20:35	19.83	6/24/2022 23:08	6.18
6/25/2022 19:49	34.63	6/25/2022 20:36	19.83	6/24/2022 23:09	6.19
6/25/2022 19:50	34.60	6/25/2022 20:37	19.84	6/24/2022 23:10	6.23
6/25/2022 19:51	34.59	6/25/2022 20:38	19.86	6/24/2022 23:11	6.16
6/25/2022 19:52	34.59	6/25/2022 20:39	19.84	6/24/2022 23:12	6.20
6/25/2022 19:53	34.62	6/25/2022 20:40	19.83	6/24/2022 23:13	8.67
6/25/2022 19:54	34.60	6/25/2022 20:41	19.81	6/24/2022 23:14	8.92
6/25/2022 19:55	34.57	6/25/2022 20:42	19.83	6/24/2022 23:15	6.35
6/25/2022 19:56	34.60	6/25/2022 20:43	19.83	6/24/2022 23:16	6.21
6/25/2022 19:57	34.58	6/25/2022 20:44	19.84	6/24/2022 23:17	6.23
6/25/2022 19:58	34.61	6/25/2022 20:45	19.83	6/24/2022 23:18	6.24
6/25/2022 19:59	34.59	6/25/2022 20:46	19.83	6/24/2022 23:19	6.17
6/25/2022 20:00	34.58	6/25/2022 20:47	19.82	6/24/2022 23:20	6.20
6/25/2022 20:01	34.59	6/25/2022 20:48	19.83	6/24/2022 23:21	6.18
6/25/2022 20:02	34.59	6/25/2022 20:49	19.82	6/24/2022 23:22	6.21
6/25/2022 20:03	34.61	6/25/2022 20:50	19.82	6/24/2022 23:23	6.21
6/25/2022 20:04	34.58	6/25/2022 20:51	19.83	6/24/2022 23:24	6.21
6/25/2022 20:05	34.60	6/25/2022 20:52	19.82	6/24/2022 23:25	6.18
6/25/2022 20:06	34.57	6/25/2022 20:53	19.82	6/24/2022 23:26	6.20
6/25/2022 20:07	34.60	6/25/2022 20:54	19.85	6/24/2022 23:27	6.20
6/25/2022 20:08	34.59	6/25/2022 20:55	19.83	6/24/2022 23:28	6.19
6/25/2022 20:09	34.60	6/25/2022 20:56	19.80	6/24/2022 23:29	6.19
6/25/2022 20:10	34.60	6/25/2022 20:57	19.83	6/24/2022 23:30	6.19
6/25/2022 20:11	34.60	6/25/2022 20:58	19.84	6/24/2022 23:31	6.21
6/25/2022 20:12	34.58	6/25/2022 20:59	19.83	6/24/2022 23:32	6.21
6/25/2022 20:13	34.56	6/25/2022 21:00	19.80	6/24/2022 23:33	6.18
6/25/2022 20:14	34.61	6/25/2022 21:01	19.84	6/24/2022 23:34	6.19
6/25/2022 20:15	34.59	6/25/2022 21:02	19.83	6/24/2022 23:35	6.18
6/25/2022 20:16	34.61	6/25/2022 21:03	19.81	6/24/2022 23:36	6.21
6/25/2022 20:17	34.60	6/25/2022 21:04	19.81	6/24/2022 23:37	6.22
6/25/2022 20:18	34.64	6/25/2022 21:05	19.84	6/24/2022 23:38	6.21
6/25/2022 20:19	34.56	6/25/2022 21:06	19.82	6/24/2022 23:39	6.21
6/25/2022 20:20	34.60	6/25/2022 21:07	19.82	6/24/2022 23:40	6.18
6/25/2022 20:21	34.60	6/25/2022 21:08	19.81	6/24/2022 23:41	6.18
6/25/2022 20:22	34.55	6/25/2022 21:09	19.84	6/24/2022 23:42	6.17
6/25/2022 20:23	34.59	6/25/2022 21:10	19.83	6/24/2022 23:43	6.21
6/25/2022 20:24	34.56	6/25/2022 21:11	19.82	6/24/2022 23:44	6.23
6/25/2022 20:25	34.57	6/25/2022 21:12	19.82	6/24/2022 23:45	6.17
6/25/2022 20:26	34.59	6/25/2022 21:13	19.85	6/24/2022 23:46	6.19

6/25/2022 20:27	34.58	6/25/2022 21:14	19.82	6/24/2022 23:47	6.19
6/25/2022 20:28	34.58	6/25/2022 21:15	19.81	6/24/2022 23:48	6.19
6/25/2022 20:29	34.58	6/25/2022 21:16	19.82	6/24/2022 23:49	6.19
6/25/2022 20:30	34.57	6/25/2022 21:17	19.83	6/24/2022 23:50	6.24
6/25/2022 20:31	34.58	6/25/2022 21:18	19.84	6/24/2022 23:51	6.17
6/25/2022 20:32	34.56	6/25/2022 21:19	19.82	6/24/2022 23:52	6.20
6/25/2022 20:33	34.58	6/25/2022 21:20	19.82	6/24/2022 23:53	6.20
6/25/2022 20:34	34.60	6/25/2022 21:21	19.82	6/24/2022 23:54	6.21
6/25/2022 20:35	34.58	6/25/2022 21:22	19.82	6/24/2022 23:55	6.21
6/25/2022 20:36	34.56	6/25/2022 21:23	19.83	6/24/2022 23:56	6.20
6/25/2022 20:37	34.60	6/25/2022 21:24	19.83	6/24/2022 23:57	6.20
6/25/2022 20:38	34.58	6/25/2022 21:25	19.81	6/24/2022 23:58	6.19
6/25/2022 20:39	34.60	6/25/2022 21:26	19.83	6/24/2022 23:59	6.19
6/25/2022 20:40	34.56	6/25/2022 21:27	19.83	6/25/2022 0:00	6.16
6/25/2022 20:41	34.60	6/25/2022 21:28	19.80	6/25/2022 0:01	6.18
6/25/2022 20:42	34.58	6/25/2022 21:29	19.83	6/25/2022 0:02	6.19
6/25/2022 20:43	34.56	6/25/2022 21:30	19.85	6/25/2022 0:03	6.17
6/25/2022 20:44	34.58	6/25/2022 21:31	19.84	6/25/2022 0:04	6.20
6/25/2022 20:45	34.59	6/25/2022 21:32	19.83	6/25/2022 0:05	6.22
6/25/2022 20:46	34.59	6/25/2022 21:33	19.83	6/25/2022 0:06	6.20
6/25/2022 20:47	34.58	6/25/2022 21:34	19.82	6/25/2022 0:07	6.16
6/25/2022 20:48	34.59	6/25/2022 21:35	19.84	6/25/2022 0:08	6.18
6/25/2022 20:49	34.59	6/25/2022 21:36	19.83	6/25/2022 0:09	6.18
6/25/2022 20:50	34.56	6/25/2022 21:37	19.84	6/25/2022 0:10	6.17
6/25/2022 20:51	34.54	6/25/2022 21:38	19.84	6/25/2022 0:11	6.21
6/25/2022 20:52	34.57	6/25/2022 21:39	19.81	6/25/2022 0:12	6.21
6/25/2022 20:53	34.56	6/25/2022 21:40	19.84	6/25/2022 0:13	6.19
6/25/2022 20:54	34.60	6/25/2022 21:41	19.82	6/25/2022 0:14	6.20
6/25/2022 20:55	34.56	6/25/2022 21:42	19.82	6/25/2022 0:15	6.20
6/25/2022 20:56	34.61	6/25/2022 21:43	19.84	6/25/2022 0:16	6.19
6/25/2022 20:57	34.58	6/25/2022 21:44	19.85	6/25/2022 0:17	6.21
6/25/2022 20:58	34.55	6/25/2022 21:45	19.84	6/25/2022 0:18	6.20
6/25/2022 20:59	34.56	6/25/2022 21:46	19.81	6/25/2022 0:19	6.20
6/25/2022 21:00	34.54	6/25/2022 21:47	19.84	6/25/2022 0:20	6.19
6/25/2022 21:01	34.59	6/25/2022 21:48	19.82	6/25/2022 0:21	6.20
6/25/2022 21:02	34.56	6/25/2022 21:49	19.82	6/25/2022 0:22	6.18
6/25/2022 21:03	34.58	6/25/2022 21:50	19.81	6/25/2022 0:23	6.21
6/25/2022 21:04	34.57	6/25/2022 21:51	19.83	6/25/2022 0:24	6.18
6/25/2022 21:05	34.59	6/25/2022 21:52	19.84	6/25/2022 0:25	6.18
6/25/2022 21:06	34.56	6/25/2022 21:53	19.83	6/25/2022 0:26	6.17
6/25/2022 21:07	34.57	6/25/2022 21:54	19.82	6/25/2022 0:27	6.21
6/25/2022 21:08	34.56	6/25/2022 21:55	19.80	6/25/2022 0:28	6.22
6/25/2022 21:09	34.56	6/25/2022 21:56	19.84	6/25/2022 0:29	6.17
6/25/2022 21:10	34.56	6/25/2022 21:57	19.82	6/25/2022 0:30	6.22
6/25/2022 21:11	34.55	6/25/2022 21:58	19.82	6/25/2022 0:31	6.19
6/25/2022 21:12	34.57	6/25/2022 21:59	19.81	6/25/2022 0:32	6.19
6/25/2022 21:13	34.58	6/25/2022 22:00	19.84	6/25/2022 0:33	6.21
6/25/2022 21:14	34.59	6/25/2022 22:01	19.84	6/25/2022 0:34	6.18
6/25/2022 21:15	34.55	6/25/2022 22:02	19.82	6/25/2022 0:35	6.20
6/25/2022 21:16	34.58	6/25/2022 22:03	19.85	6/25/2022 0:36	6.20
6/25/2022 21:17	34.58	6/25/2022 22:04	19.83	6/25/2022 0:37	8.80
6/25/2022 21:18	34.56	6/25/2022 22:05	19.82	6/25/2022 0:38	7.46
6/25/2022 21:19	34.60	6/25/2022 22:06	19.83	6/25/2022 0:39	6.25
6/25/2022 21:20	34.59	6/25/2022 22:07	19.85	6/25/2022 0:40	6.23
6/25/2022 21:21	34.54	6/25/2022 22:08	19.84	6/25/2022 0:41	6.24
6/25/2022 21:22	34.53	6/25/2022 22:09	19.82	6/25/2022 0:42	6.23
6/25/2022 21:23	34.55	6/25/2022 22:10	19.83	6/25/2022 0:43	6.22
6/25/2022 21:24	34.56	6/25/2022 22:11	19.86	6/25/2022 0:44	6.19
6/25/2022 21:25	34.56	6/25/2022 22:12	19.82	6/25/2022 0:45	6.19
6/25/2022 21:26	34.58	6/25/2022 22:13	19.85	6/25/2022 0:46	6.22
6/25/2022 21:27	34.54	6/25/2022 22:14	19.81	6/25/2022 0:47	6.23
6/25/2022 21:28	34.57	6/25/2022 22:15	19.84	6/25/2022 0:48	6.17
6/25/2022 21:29	34.54	6/25/2022 22:16	19.82	6/25/2022 0:49	6.18
6/25/2022 21:30	34.55	6/25/2022 22:17	19.84	6/25/2022 0:50	6.21
6/25/2022 21:31	34.56	6/25/2022 22:18	20.37	6/25/2022 0:51	6.21
6/25/2022 21:32	34.54	6/25/2022 22:19	20.50	6/25/2022 0:52	6.19
6/25/2022 21:33	34.58	6/25/2022 22:20	20.60	6/25/2022 0:53	6.20
6/25/2022 21:34	34.56	6/25/2022 22:21	20.61	6/25/2022 0:54	6.18
6/25/2022 21:35	34.54	6/25/2022 22:22	20.42	6/25/2022 0:55	6.21
6/25/2022 21:36	34.56	6/25/2022 22:23	20.06	6/25/2022 0:56	6.20
6/25/2022 21:37	34.56	6/25/2022 22:24	20.04	6/25/2022 0:57	6.18
6/25/2022 21:38	34.55	6/25/2022 22:25	20.01	6/25/2022 0:58	6.21
6/25/2022 21:39	34.55	6/25/2022 22:26	19.96	6/25/2022 0:59	6.19
6/25/2022 21:40	34.58	6/25/2022 22:27	19.97	6/25/2022 1:00	6.21
6/25/2022 21:41	34.55	6/25/2022 22:28	19.95	6/25/2022 1:01	6.20
6/25/2022 21:42	34.55	6/25/2022 22:29	19.94	6/25/2022 1:02	6.20
6/25/2022 21:43	34.56	6/25/2022 22:30	19.92	6/25/2022 1:03	6.17
6/25/2022 21:44	34.56	6/25/2022 22:31	19.95	6/25/2022 1:04	6.23
6/25/2022 21:45	34.58	6/25/2022 22:32	19.92	6/25/2022 1:05	6.23
6/25/2022 21:46	34.52	6/25/2022 22:33	19.92	6/25/2022 1:06	6.19
6/25/2022 21:47	34.57	6/25/2022 22:34	19.94	6/25/2022 1:07	6.20
6/25/2022 21:48	34.54	6/25/2022 22:35	19.93	6/25/2022 1:08	6.19
6/25/2022 21:49	34.54	6/25/2022 22:36	19.91	6/25/2022 1:09	6.18
6/25/2022 21:50	34.54	6/25/2022 22:37	19.90	6/25/2022 1:10	6.20
6/25/2022 21:51	34.55	6/25/2022 22:38	19.91	6/25/2022 1:11	6.19
6/25/2022 21:52	34.57	6/25/2022 22:39	19.87	6/25/2022 1:12	6.18
6/25/2022 21:53	34.54	6/25/2022 22:40	19.89	6/25/2022 1:13	6.19
6/25/2022 21:54	34.55	6/25/2022 22:41	19.89	6/25/2022 1:14	6.18

6/25/2022 21:55	34.58	6/25/2022 22:42	19.89	6/25/2022 1:15	6.19
6/25/2022 21:56	34.57	6/25/2022 22:43	19.91	6/25/2022 1:16	8.52
6/25/2022 21:57	34.53	6/25/2022 22:44	19.89	6/25/2022 1:17	8.93
6/25/2022 21:58	34.56	6/25/2022 22:45	19.91	6/25/2022 1:18	6.37
6/25/2022 21:59	34.55	6/25/2022 22:46	19.86	6/25/2022 1:19	6.23
6/25/2022 22:00	34.58	6/25/2022 22:47	19.89	6/25/2022 1:20	6.22
6/25/2022 22:01	34.57	6/25/2022 22:48	19.88	6/25/2022 1:21	6.24
6/25/2022 22:02	34.55	6/25/2022 22:49	19.88	6/25/2022 1:22	6.20
6/25/2022 22:03	34.57	6/25/2022 22:50	19.87	6/25/2022 1:23	6.19
6/25/2022 22:04	34.55	6/25/2022 22:51	19.89	6/25/2022 1:24	6.21
6/25/2022 22:05	34.57	6/25/2022 22:52	19.90	6/25/2022 1:25	6.21
6/25/2022 22:06	34.52	6/25/2022 22:53	19.88	6/25/2022 1:26	6.22
6/25/2022 22:07	34.56	6/25/2022 22:54	19.87	6/25/2022 1:27	6.19
6/25/2022 22:08	34.54	6/25/2022 22:55	19.88	6/25/2022 1:28	6.19
6/25/2022 22:09	34.55	6/25/2022 22:56	19.89	6/25/2022 1:29	6.21
6/25/2022 22:10	34.53	6/25/2022 22:57	19.89	6/25/2022 1:30	6.20
6/25/2022 22:11	34.53	6/25/2022 22:58	19.88	6/25/2022 1:31	6.22
6/25/2022 22:12	34.53	6/25/2022 22:59	19.89	6/25/2022 1:32	6.21
6/25/2022 22:13	34.54	6/25/2022 23:00	19.85	6/25/2022 1:33	6.20
6/25/2022 22:14	34.57	6/25/2022 23:01	19.87	6/25/2022 1:34	6.21
6/25/2022 22:15	34.52	6/25/2022 23:02	19.88	6/25/2022 1:35	6.20
6/25/2022 22:16	34.52	6/25/2022 23:03	19.91	6/25/2022 1:36	6.19
6/25/2022 22:17	34.51	6/25/2022 23:04	19.86	6/25/2022 1:37	6.20
6/25/2022 22:18	34.55	6/25/2022 23:05	19.84	6/25/2022 1:38	6.20
6/25/2022 22:19	34.53	6/25/2022 23:06	19.89	6/25/2022 1:39	6.24
6/25/2022 22:20	34.54	6/25/2022 23:07	19.88	6/25/2022 1:40	6.21
6/25/2022 22:21	34.52	6/25/2022 23:08	19.85	6/25/2022 1:41	6.19
6/25/2022 22:22	34.52	6/25/2022 23:09	19.88	6/25/2022 1:42	6.21
6/25/2022 22:23	34.54	6/25/2022 23:10	19.87	6/25/2022 1:43	6.22
6/25/2022 22:24	34.57	6/25/2022 23:11	19.87	6/25/2022 1:44	6.18
6/25/2022 22:25	34.53	6/25/2022 23:12	19.84	6/25/2022 1:45	6.17
6/25/2022 22:26	34.54	6/25/2022 23:13	19.86	6/25/2022 1:46	6.17
6/25/2022 22:27	34.58	6/25/2022 23:14	19.85	6/25/2022 1:47	6.19
6/25/2022 22:28	34.57	6/25/2022 23:15	19.84	6/25/2022 1:48	6.20
6/25/2022 22:29	34.54	6/25/2022 23:16	19.83	6/25/2022 1:49	6.15
6/25/2022 22:30	34.51	6/25/2022 23:17	19.87	6/25/2022 1:50	6.20
6/25/2022 22:31	34.53	6/25/2022 23:18	19.87	6/25/2022 1:51	6.21
6/25/2022 22:32	34.54	6/25/2022 23:19	19.87	6/25/2022 1:52	6.17
6/25/2022 22:33	34.54	6/25/2022 23:20	19.88	6/25/2022 1:53	6.20
6/25/2022 22:34	34.52	6/25/2022 23:21	19.85	6/25/2022 1:54	6.22
6/25/2022 22:35	34.55	6/25/2022 23:22	19.87	6/25/2022 1:55	6.19
6/25/2022 22:36	34.54	6/25/2022 23:23	19.86	6/25/2022 1:56	6.21
6/25/2022 22:37	34.56	6/25/2022 23:24	19.85	6/25/2022 1:57	6.19
6/25/2022 22:38	34.55	6/25/2022 23:25	19.83	6/25/2022 1:58	6.20
6/25/2022 22:39	34.53	6/25/2022 23:26	19.87	6/25/2022 1:59	6.19
6/25/2022 22:40	34.51	6/25/2022 23:27	19.85	6/25/2022 2:00	6.18
6/25/2022 22:41	34.56	6/25/2022 23:28	19.84	6/25/2022 2:01	6.18
6/25/2022 22:42	34.52	6/25/2022 23:29	19.87	6/25/2022 2:02	6.19
6/25/2022 22:43	34.52	6/25/2022 23:30	19.86	6/25/2022 2:03	6.20
6/25/2022 22:44	34.55	6/25/2022 23:31	19.87	6/25/2022 2:04	6.19
6/25/2022 22:45	34.54	6/25/2022 23:32	19.85	6/25/2022 2:05	6.19
6/25/2022 22:46	34.54	6/25/2022 23:33	19.85	6/25/2022 2:06	6.21
6/25/2022 22:47	34.52	6/25/2022 23:34	19.87	6/25/2022 2:07	6.20
6/25/2022 22:48	34.50	6/25/2022 23:35	19.86	6/25/2022 2:08	6.20
6/25/2022 22:49	34.55	6/25/2022 23:36	19.88	6/25/2022 2:09	6.21
6/25/2022 22:50	34.55	6/25/2022 23:37	19.89	6/25/2022 2:10	6.18
6/25/2022 22:51	34.52	6/25/2022 23:38	19.84	6/25/2022 2:11	6.18
6/25/2022 22:52	34.51	6/25/2022 23:39	19.88	6/25/2022 2:12	6.18
6/25/2022 22:53	34.51	6/25/2022 23:40	19.86	6/25/2022 2:13	6.23
6/25/2022 22:54	34.51	6/25/2022 23:41	19.84	6/25/2022 2:14	6.21
6/25/2022 22:55	34.55	6/25/2022 23:42	19.82	6/25/2022 2:15	6.20
6/25/2022 22:56	34.55	6/25/2022 23:43	19.85	6/25/2022 2:16	6.19
6/25/2022 22:57	34.51	6/25/2022 23:44	19.85	6/25/2022 2:17	6.19
6/25/2022 22:58	34.50	6/25/2022 23:45	19.83	6/25/2022 2:18	6.22
6/25/2022 22:59	34.54	6/25/2022 23:46	19.85	6/25/2022 2:19	6.17
6/25/2022 23:00	34.53	6/25/2022 23:47	19.85	6/25/2022 2:20	6.17
6/25/2022 23:01	34.51	6/25/2022 23:48	19.88	6/25/2022 2:21	6.20
6/25/2022 23:02	34.52	6/25/2022 23:49	19.84	6/25/2022 2:22	6.19
6/25/2022 23:03	34.52	6/25/2022 23:50	19.85	6/25/2022 2:23	6.18
6/25/2022 23:04	34.53	6/25/2022 23:51	19.84	6/25/2022 2:24	6.20
6/25/2022 23:05	34.57	6/25/2022 23:52	19.87	6/25/2022 2:25	6.22
6/25/2022 23:06	34.61	6/25/2022 23:53	19.85	6/25/2022 2:26	6.19
6/25/2022 23:07	34.62	6/25/2022 23:54	19.84	6/25/2022 2:27	6.19
6/25/2022 23:08	34.61	6/25/2022 23:55	19.84	6/25/2022 2:28	6.22
6/25/2022 23:09	34.62	6/25/2022 23:56	19.86	6/25/2022 2:29	6.21
6/25/2022 23:10	34.59	6/25/2022 23:57	19.85	6/25/2022 2:30	6.22
6/25/2022 23:11	34.59	6/25/2022 23:58	19.85	6/25/2022 2:31	6.19
6/25/2022 23:12	34.54	6/25/2022 23:59	19.83	6/25/2022 2:32	6.19
6/25/2022 23:13	34.59	6/26/2022 0:00	19.83	6/25/2022 2:33	6.19
6/25/2022 23:14	34.60	6/26/2022 0:01	19.84	6/25/2022 2:34	6.20
6/25/2022 23:15	34.65	6/26/2022 0:02	19.85	6/25/2022 2:35	6.21
6/25/2022 23:16	34.62	6/26/2022 0:03	19.83	6/25/2022 2:36	6.18
6/25/2022 23:17	34.62	6/26/2022 0:04	19.83	6/25/2022 2:37	6.21
6/25/2022 23:18	34.61	6/26/2022 0:05	19.86	6/25/2022 2:38	6.19
6/25/2022 23:19	34.60	6/26/2022 0:06	19.85	6/25/2022 2:39	6.21
6/25/2022 23:20	34.60	6/26/2022 0:07	19.83	6/25/2022 2:40	6.19
6/25/2022 23:21	34.60	6/26/2022 0:08	19.84	6/25/2022 2:41	6.18
6/25/2022 23:22	34.61	6/26/2022 0:09	19.85	6/25/2022 2:42	6.21

6/25/2022 23:23	34.59	6/26/2022 0:10	19.85	6/25/2022 2:43	6.20
6/25/2022 23:24	34.62	6/26/2022 0:11	19.83	6/25/2022 2:44	6.20
6/25/2022 23:25	34.60	6/26/2022 0:12	19.82	6/25/2022 2:45	6.19
6/25/2022 23:26	34.60	6/26/2022 0:13	19.83	6/25/2022 2:46	6.19
6/25/2022 23:27	34.62	6/26/2022 0:14	19.86	6/25/2022 2:47	6.21
6/25/2022 23:28	34.62	6/26/2022 0:15	19.84	6/25/2022 2:48	6.18
6/25/2022 23:29	34.60	6/26/2022 0:16	19.86	6/25/2022 2:49	6.16
6/25/2022 23:30	34.61	6/26/2022 0:17	19.82	6/25/2022 2:50	6.19
6/25/2022 23:31	34.59	6/26/2022 0:18	19.84	6/25/2022 2:51	6.20
6/25/2022 23:32	34.58	6/26/2022 0:19	19.84	6/25/2022 2:52	6.18
6/25/2022 23:33	34.59	6/26/2022 0:20	19.84	6/25/2022 2:53	6.20
6/25/2022 23:34	34.56	6/26/2022 0:21	19.85	6/25/2022 2:54	6.20
6/25/2022 23:35	34.59	6/26/2022 0:22	19.82	6/25/2022 2:55	6.20
6/25/2022 23:36	34.59	6/26/2022 0:23	19.85	6/25/2022 2:56	6.18
6/25/2022 23:37	34.63	6/26/2022 0:24	19.84	6/25/2022 2:57	6.21
6/25/2022 23:38	34.64	6/26/2022 0:25	19.84	6/25/2022 2:58	6.17
6/25/2022 23:39	34.70	6/26/2022 0:26	19.83	6/25/2022 2:59	6.22
6/25/2022 23:40	34.71	6/26/2022 0:27	19.83	6/25/2022 3:00	6.21
6/25/2022 23:41	34.70	6/26/2022 0:28	19.84	6/25/2022 3:01	6.19
6/25/2022 23:42	34.74	6/26/2022 0:29	19.83	6/25/2022 3:02	6.16
6/25/2022 23:43	34.80	6/26/2022 0:30	19.82	6/25/2022 3:03	6.18
6/25/2022 23:44	34.79	6/26/2022 0:31	19.83	6/25/2022 3:04	6.19
6/25/2022 23:45	34.76	6/26/2022 0:32	19.84	6/25/2022 3:05	6.18
6/25/2022 23:46	34.80	6/26/2022 0:33	19.83	6/25/2022 3:06	6.18
6/25/2022 23:47	34.80	6/26/2022 0:34	19.83	6/25/2022 3:07	6.21
6/25/2022 23:48	34.82	6/26/2022 0:35	19.83	6/25/2022 3:08	6.17
6/25/2022 23:49	34.79	6/26/2022 0:36	19.83	6/25/2022 3:09	6.18
6/25/2022 23:50	34.77	6/26/2022 0:37	19.83	6/25/2022 3:10	6.21
6/25/2022 23:51	34.78	6/26/2022 0:38	19.81	6/25/2022 3:11	6.19
6/25/2022 23:52	34.75	6/26/2022 0:39	19.83	6/25/2022 3:12	6.18
6/25/2022 23:53	34.76	6/26/2022 0:40	19.87	6/25/2022 3:13	6.20
6/25/2022 23:54	34.71	6/26/2022 0:41	19.83	6/25/2022 3:14	6.17
6/25/2022 23:55	34.72	6/26/2022 0:42	19.82	6/25/2022 3:15	6.21
6/25/2022 23:56	34.74	6/26/2022 0:43	19.85	6/25/2022 3:16	6.21
6/25/2022 23:57	34.75	6/26/2022 0:44	19.84	6/25/2022 3:17	6.19
6/25/2022 23:58	34.75	6/26/2022 0:45	19.84	6/25/2022 3:18	6.18
6/25/2022 23:59	34.75	6/26/2022 0:46	19.81	6/25/2022 3:19	6.17
6/26/2022 0:00	34.73	6/26/2022 0:47	19.85	6/25/2022 3:20	6.18
6/26/2022 0:01	34.71	6/26/2022 0:48	19.83	6/25/2022 3:21	6.20
6/26/2022 0:02	34.73	6/26/2022 0:49	19.83	6/25/2022 3:22	6.21
6/26/2022 0:03	34.72	6/26/2022 0:50	19.86	6/25/2022 3:23	6.19
6/26/2022 0:04	34.70	6/26/2022 0:51	19.84	6/25/2022 3:24	6.21
6/26/2022 0:05	34.70	6/26/2022 0:52	19.87	6/25/2022 3:25	6.21
6/26/2022 0:06	34.70	6/26/2022 0:53	19.83	6/25/2022 3:26	6.19
6/26/2022 0:07	34.69	6/26/2022 0:54	19.86	6/25/2022 3:27	6.17
6/26/2022 0:08	34.70	6/26/2022 0:55	19.83	6/25/2022 3:28	6.16
6/26/2022 0:09	34.69	6/26/2022 0:56	19.84	6/25/2022 3:29	6.20
6/26/2022 0:10	34.67	6/26/2022 0:57	19.84	6/25/2022 3:30	6.20
6/26/2022 0:11	34.67	6/26/2022 0:58	19.83	6/25/2022 3:31	6.18
6/26/2022 0:12	34.65	6/26/2022 0:59	19.81	6/25/2022 3:32	6.19
6/26/2022 0:13	34.67	6/26/2022 1:00	19.83	6/25/2022 3:33	6.18
6/26/2022 0:14	34.65	6/26/2022 1:01	19.84	6/25/2022 3:34	6.20
6/26/2022 0:15	34.67	6/26/2022 1:02	19.84	6/25/2022 3:35	6.20
6/26/2022 0:16	34.64	6/26/2022 1:03	19.84	6/25/2022 3:36	6.21
6/26/2022 0:17	34.67	6/26/2022 1:04	19.82	6/25/2022 3:37	6.23
6/26/2022 0:18	34.67	6/26/2022 1:05	19.82	6/25/2022 3:38	6.19
6/26/2022 0:19	34.66	6/26/2022 1:06	19.86	6/25/2022 3:39	6.19
6/26/2022 0:20	34.68	6/26/2022 1:07	19.83	6/25/2022 3:40	6.17
6/26/2022 0:21	34.63	6/26/2022 1:08	19.86	6/25/2022 3:41	6.19
6/26/2022 0:22	34.66	6/26/2022 1:09	19.85	6/25/2022 3:42	6.21
6/26/2022 0:23	34.63	6/26/2022 1:10	19.84	6/25/2022 3:43	6.20
6/26/2022 0:24	34.62	6/26/2022 1:11	19.84	6/25/2022 3:44	6.19
6/26/2022 0:25	34.69	6/26/2022 1:12	19.83	6/25/2022 3:45	6.19
6/26/2022 0:26	34.69	6/26/2022 1:13	19.82	6/25/2022 3:46	6.21
6/26/2022 0:27	34.70	6/26/2022 1:14	19.83	6/25/2022 3:47	6.22
6/26/2022 0:28	34.68	6/26/2022 1:15	19.84	6/25/2022 3:48	6.16
6/26/2022 0:29	34.67	6/26/2022 1:16	19.82	6/25/2022 3:49	6.19
6/26/2022 0:30	34.68	6/26/2022 1:17	19.84	6/25/2022 3:50	6.22
6/26/2022 0:31	34.64	6/26/2022 1:18	19.83	6/25/2022 3:51	6.19
6/26/2022 0:32	34.65	6/26/2022 1:19	19.85	6/25/2022 3:52	6.17
6/26/2022 0:33	34.65	6/26/2022 1:20	19.85	6/25/2022 3:53	6.20
6/26/2022 0:34	34.64	6/26/2022 1:21	19.83	6/25/2022 3:54	6.19
6/26/2022 0:35	34.64	6/26/2022 1:22	19.84	6/25/2022 3:55	6.20
6/26/2022 0:36	34.61	6/26/2022 1:23	19.82	6/25/2022 3:56	6.20
6/26/2022 0:37	34.62	6/26/2022 1:24	19.83	6/25/2022 3:57	6.20
6/26/2022 0:38	34.65	6/26/2022 1:25	19.84	6/25/2022 3:58	6.17
6/26/2022 0:39	34.63	6/26/2022 1:26	19.87	6/25/2022 3:59	6.21
6/26/2022 0:40	34.66	6/26/2022 1:27	19.82	6/25/2022 4:00	6.18
6/26/2022 0:41	34.64	6/26/2022 1:28	19.85	6/25/2022 4:01	6.20
6/26/2022 0:42	34.61	6/26/2022 1:29	19.83	6/25/2022 4:02	6.20
6/26/2022 0:43	34.61	6/26/2022 1:30	19.83	6/25/2022 4:03	6.19
6/26/2022 0:44	34.62	6/26/2022 1:31	19.83	6/25/2022 4:04	6.19
6/26/2022 0:45	34.60	6/26/2022 1:32	19.85	6/25/2022 4:05	6.16
6/26/2022 0:46	34.60	6/26/2022 1:33	19.83	6/25/2022 4:06	6.18
6/26/2022 0:47	34.63	6/26/2022 1:34	19.82	6/25/2022 4:07	6.18
6/26/2022 0:48	34.62	6/26/2022 1:35	19.84	6/25/2022 4:08	6.20
6/26/2022 0:49	34.64	6/26/2022 1:36	19.83	6/25/2022 4:09	6.20
6/26/2022 0:50	34.64	6/26/2022 1:37	19.87	6/25/2022 4:10	6.20

6/26/2022 0:51	34.64	6/26/2022 1:38	19.84	6/25/2022 4:11	6.20
6/26/2022 0:52	34.65	6/26/2022 1:39	19.84	6/25/2022 4:12	6.22
6/26/2022 0:53	34.63	6/26/2022 1:40	19.84	6/25/2022 4:13	6.19
6/26/2022 0:54	34.62	6/26/2022 1:41	19.86	6/25/2022 4:14	6.18
6/26/2022 0:55	34.60	6/26/2022 1:42	19.84	6/25/2022 4:15	6.20
6/26/2022 0:56	34.61	6/26/2022 1:43	19.83	6/25/2022 4:16	6.18
6/26/2022 0:57	34.60	6/26/2022 1:44	19.84	6/25/2022 4:17	6.19
6/26/2022 0:58	34.58	6/26/2022 1:45	19.82	6/25/2022 4:18	6.18
6/26/2022 0:59	34.62	6/26/2022 1:46	19.83	6/25/2022 4:19	6.22
6/26/2022 1:00	34.60	6/26/2022 1:47	19.82	6/25/2022 4:20	6.20
6/26/2022 1:01	34.63	6/26/2022 1:48	19.81	6/25/2022 4:21	6.19
6/26/2022 1:02	34.66	6/26/2022 1:49	19.80	6/25/2022 4:22	6.16
6/26/2022 1:03	34.66	6/26/2022 1:50	19.83	6/25/2022 4:23	6.18
6/26/2022 1:04	34.63	6/26/2022 1:51	19.82	6/25/2022 4:24	6.18
6/26/2022 1:05	34.59	6/26/2022 1:52	19.83	6/25/2022 4:25	6.19
6/26/2022 1:06	34.61	6/26/2022 1:53	19.85	6/25/2022 4:26	6.17
6/26/2022 1:07	34.60	6/26/2022 1:54	19.83	6/25/2022 4:27	6.20
6/26/2022 1:08	34.62	6/26/2022 1:55	19.86	6/25/2022 4:28	6.21
6/26/2022 1:09	34.59	6/26/2022 1:56	19.82	6/25/2022 4:29	6.20
6/26/2022 1:10	34.61	6/26/2022 1:57	19.85	6/25/2022 4:30	6.19
6/26/2022 1:11	34.61	6/26/2022 1:58	19.85	6/25/2022 4:31	6.19
6/26/2022 1:12	34.61	6/26/2022 1:59	19.83	6/25/2022 4:32	6.19
6/26/2022 1:13	34.61	6/26/2022 2:00	19.82	6/25/2022 4:33	6.20
6/26/2022 1:14	34.60	6/26/2022 2:01	19.86	6/25/2022 4:34	6.19
6/26/2022 1:15	34.59	6/26/2022 2:02	19.84	6/25/2022 4:35	6.21
6/26/2022 1:16	34.56	6/26/2022 2:03	19.86	6/25/2022 4:36	6.19
6/26/2022 1:17	34.60	6/26/2022 2:04	19.82	6/25/2022 4:37	6.17
6/26/2022 1:18	34.59	6/26/2022 2:05	19.83	6/25/2022 4:38	6.17
6/26/2022 1:19	34.57	6/26/2022 2:06	19.83	6/25/2022 4:39	6.17
6/26/2022 1:20	34.59	6/26/2022 2:07	19.84	6/25/2022 4:40	6.19
6/26/2022 1:21	34.57	6/26/2022 2:08	19.80	6/25/2022 4:41	6.21
6/26/2022 1:22	34.59	6/26/2022 2:09	19.82	6/25/2022 4:42	6.19
6/26/2022 1:23	34.56	6/26/2022 2:10	19.83	6/25/2022 4:43	6.15
6/26/2022 1:24	34.57	6/26/2022 2:11	19.83	6/25/2022 4:44	6.21
6/26/2022 1:25	34.60	6/26/2022 2:12	19.80	6/25/2022 4:45	6.23
6/26/2022 1:26	34.56	6/26/2022 2:13	19.84	6/25/2022 4:46	6.22
6/26/2022 1:27	34.59	6/26/2022 2:14	19.81	6/25/2022 4:47	6.21
6/26/2022 1:28	34.57	6/26/2022 2:15	19.83	6/25/2022 4:48	7.72
6/26/2022 1:29	34.55	6/26/2022 2:16	19.80	6/25/2022 4:49	8.88
6/26/2022 1:30	34.58	6/26/2022 2:17	19.85	6/25/2022 4:50	6.59
6/26/2022 1:31	34.57	6/26/2022 2:18	19.84	6/25/2022 4:51	6.26
6/26/2022 1:32	34.55	6/26/2022 2:19	19.83	6/25/2022 4:52	6.24
6/26/2022 1:33	34.55	6/26/2022 2:20	19.82	6/25/2022 4:53	6.22
6/26/2022 1:34	34.57	6/26/2022 2:21	19.84	6/25/2022 4:54	6.20
6/26/2022 1:35	34.57	6/26/2022 2:22	19.86	6/25/2022 4:55	6.21
6/26/2022 1:36	34.55	6/26/2022 2:23	19.86	6/25/2022 4:56	6.22
6/26/2022 1:37	34.55	6/26/2022 2:24	19.84	6/25/2022 4:57	6.25
6/26/2022 1:38	34.55	6/26/2022 2:25	19.82	6/25/2022 4:58	6.17
6/26/2022 1:39	34.53	6/26/2022 2:26	19.83	6/25/2022 4:59	6.20
6/26/2022 1:40	34.56	6/26/2022 2:27	19.82	6/25/2022 5:00	6.17
6/26/2022 1:41	34.55	6/26/2022 2:28	19.83	6/25/2022 5:01	6.21
6/26/2022 1:42	34.55	6/26/2022 2:29	19.83	6/25/2022 5:02	6.17
6/26/2022 1:43	34.52	6/26/2022 2:30	19.81	6/25/2022 5:03	6.18
6/26/2022 1:44	34.55	6/26/2022 2:31	19.83	6/25/2022 5:04	6.19
6/26/2022 1:45	34.56	6/26/2022 2:32	19.84	6/25/2022 5:05	6.19
6/26/2022 1:46	34.54	6/26/2022 2:33	19.83	6/25/2022 5:06	6.18
6/26/2022 1:47	34.59	6/26/2022 2:34	19.86	6/25/2022 5:07	6.23
6/26/2022 1:48	34.54	6/26/2022 2:35	19.83	6/25/2022 5:08	6.22
6/26/2022 1:49	34.54	6/26/2022 2:36	19.82	6/25/2022 5:09	6.17
6/26/2022 1:50	34.54	6/26/2022 2:37	19.84	6/25/2022 5:10	6.17
6/26/2022 1:51	34.55	6/26/2022 2:38	19.84	6/25/2022 5:11	6.20
6/26/2022 1:52	34.51	6/26/2022 2:39	19.84	6/25/2022 5:12	6.21
6/26/2022 1:53	34.54	6/26/2022 2:40	19.83	6/25/2022 5:13	6.22
6/26/2022 1:54	34.53	6/26/2022 2:41	19.84	6/25/2022 5:14	6.21
6/26/2022 1:55	34.55	6/26/2022 2:42	19.83	6/25/2022 5:15	6.21
6/26/2022 1:56	34.55	6/26/2022 2:43	19.85	6/25/2022 5:16	6.19
6/26/2022 1:57	34.52	6/26/2022 2:44	19.84	6/25/2022 5:17	6.19
6/26/2022 1:58	34.53	6/26/2022 2:45	19.86	6/25/2022 5:18	6.20
6/26/2022 1:59	34.49	6/26/2022 2:46	19.84	6/25/2022 5:19	6.19
6/26/2022 2:00	34.55	6/26/2022 2:47	19.85	6/25/2022 5:20	6.24
6/26/2022 2:01	34.50	6/26/2022 2:48	19.84	6/25/2022 5:21	6.22
6/26/2022 2:02	34.53	6/26/2022 2:49	19.84	6/25/2022 5:22	6.23
6/26/2022 2:03	34.53	6/26/2022 2:50	19.84	6/25/2022 5:23	6.18
6/26/2022 2:04	34.51	6/26/2022 2:51	19.84	6/25/2022 5:24	6.22
6/26/2022 2:05	34.49	6/26/2022 2:52	19.81	6/25/2022 5:25	6.20
6/26/2022 2:06	34.52	6/26/2022 2:53	19.83	6/25/2022 5:26	6.18
6/26/2022 2:07	34.51	6/26/2022 2:54	19.83	6/25/2022 5:27	6.18
6/26/2022 2:08	34.53	6/26/2022 2:55	19.83	6/25/2022 5:28	6.19
6/26/2022 2:09	34.53	6/26/2022 2:56	19.84	6/25/2022 5:29	6.18
6/26/2022 2:10	34.55	6/26/2022 2:57	19.87	6/25/2022 5:30	6.19
6/26/2022 2:11	34.49	6/26/2022 2:58	19.83	6/25/2022 5:31	6.21
6/26/2022 2:12	34.52	6/26/2022 2:59	19.82	6/25/2022 5:32	6.20
6/26/2022 2:13	34.52	6/26/2022 3:00	19.83	6/25/2022 5:33	6.20
6/26/2022 2:14	34.53	6/26/2022 3:01	19.83	6/25/2022 5:34	6.22
6/26/2022 2:15	34.53	6/26/2022 3:02	19.85	6/25/2022 5:35	6.21
6/26/2022 2:16	34.53	6/26/2022 3:03	19.82	6/25/2022 5:36	6.17
6/26/2022 2:17	34.49	6/26/2022 3:04	19.84	6/25/2022 5:37	6.22
6/26/2022 2:18	34.46	6/26/2022 3:05	19.83	6/25/2022 5:38	6.21

6/26/2022 2:19	34.50	6/26/2022 3:06	19.83	6/25/2022 5:39	6.19
6/26/2022 2:20	34.49	6/26/2022 3:07	19.84	6/25/2022 5:40	6.19
6/26/2022 2:21	34.49	6/26/2022 3:08	19.86	6/25/2022 5:41	6.19
6/26/2022 2:22	34.49	6/26/2022 3:09	19.84	6/25/2022 5:42	6.18
6/26/2022 2:23	34.50	6/26/2022 3:10	19.84	6/25/2022 5:43	6.22
6/26/2022 2:24	34.53	6/26/2022 3:11	19.83	6/25/2022 5:44	6.21
6/26/2022 2:25	34.53	6/26/2022 3:12	19.82	6/25/2022 5:45	6.22
6/26/2022 2:26	34.53	6/26/2022 3:13	19.85	6/25/2022 5:46	6.23
6/26/2022 2:27	34.51	6/26/2022 3:14	19.84	6/25/2022 5:47	6.21
6/26/2022 2:28	34.50	6/26/2022 3:15	19.84	6/25/2022 5:48	6.17
6/26/2022 2:29	34.51	6/26/2022 3:16	19.83	6/25/2022 5:49	6.20
6/26/2022 2:30	34.48	6/26/2022 3:17	19.84	6/25/2022 5:50	6.17
6/26/2022 2:31	34.48	6/26/2022 3:18	19.82	6/25/2022 5:51	6.20
6/26/2022 2:32	34.51	6/26/2022 3:19	19.83	6/25/2022 5:52	6.19
6/26/2022 2:33	34.52	6/26/2022 3:20	19.83	6/25/2022 5:53	6.23
6/26/2022 2:34	34.51	6/26/2022 3:21	19.84	6/25/2022 5:54	6.19
6/26/2022 2:35	34.50	6/26/2022 3:22	19.82	6/25/2022 5:55	6.15
6/26/2022 2:36	34.52	6/26/2022 3:23	19.81	6/25/2022 5:56	6.20
6/26/2022 2:37	34.53	6/26/2022 3:24	19.82	6/25/2022 5:57	6.20
6/26/2022 2:38	34.48	6/26/2022 3:25	19.81	6/25/2022 5:58	6.21
6/26/2022 2:39	34.51	6/26/2022 3:26	19.86	6/25/2022 5:59	6.19
6/26/2022 2:40	34.50	6/26/2022 3:27	19.84	6/25/2022 6:00	6.16
6/26/2022 2:41	34.48	6/26/2022 3:28	19.87	6/25/2022 6:01	6.20
6/26/2022 2:42	34.50	6/26/2022 3:29	19.86	6/25/2022 6:02	6.16
6/26/2022 2:43	34.51	6/26/2022 3:30	19.85	6/25/2022 6:03	6.23
6/26/2022 2:44	34.48	6/26/2022 3:31	19.84	6/25/2022 6:04	6.20
6/26/2022 2:45	34.46	6/26/2022 3:32	19.81	6/25/2022 6:05	6.17
6/26/2022 2:46	34.52	6/26/2022 3:33	19.81	6/25/2022 6:06	6.22
6/26/2022 2:47	34.48	6/26/2022 3:34	19.82	6/25/2022 6:07	6.22
6/26/2022 2:48	34.50	6/26/2022 3:35	19.84	6/25/2022 6:08	6.18
6/26/2022 2:49	34.47	6/26/2022 3:36	19.85	6/25/2022 6:09	6.17
6/26/2022 2:50	34.48	6/26/2022 3:37	19.84	6/25/2022 6:10	6.19
6/26/2022 2:51	34.51	6/26/2022 3:38	19.84	6/25/2022 6:11	6.20
6/26/2022 2:52	34.49	6/26/2022 3:39	19.84	6/25/2022 6:12	6.23
6/26/2022 2:53	34.48	6/26/2022 3:40	19.83	6/25/2022 6:13	6.19
6/26/2022 2:54	34.49	6/26/2022 3:41	19.83	6/25/2022 6:14	6.22
6/26/2022 2:55	34.48	6/26/2022 3:42	19.83	6/25/2022 6:15	6.20
6/26/2022 2:56	34.47	6/26/2022 3:43	19.82	6/25/2022 6:16	6.20
6/26/2022 2:57	34.49	6/26/2022 3:44	19.84	6/25/2022 6:17	6.18
6/26/2022 2:58	34.49	6/26/2022 3:45	19.83	6/25/2022 6:18	6.19
6/26/2022 2:59	34.53	6/26/2022 3:46	19.84	6/25/2022 6:19	6.21
6/26/2022 3:00	34.47	6/26/2022 3:47	19.85	6/25/2022 6:20	6.20
6/26/2022 3:01	34.49	6/26/2022 3:48	19.81	6/25/2022 6:21	6.21
6/26/2022 3:02	34.47	6/26/2022 3:49	19.84	6/25/2022 6:22	6.17
6/26/2022 3:03	34.48	6/26/2022 3:50	19.82	6/25/2022 6:23	6.21
6/26/2022 3:04	34.49	6/26/2022 3:51	19.85	6/25/2022 6:24	6.17
6/26/2022 3:05	34.51	6/26/2022 3:52	19.83	6/25/2022 6:25	6.20
6/26/2022 3:06	34.47	6/26/2022 3:53	19.83	6/25/2022 6:26	6.21
6/26/2022 3:07	34.48	6/26/2022 3:54	19.86	6/25/2022 6:27	6.22
6/26/2022 3:08	34.46	6/26/2022 3:55	19.83	6/25/2022 6:28	6.19
6/26/2022 3:09	34.45	6/26/2022 3:56	19.85	6/25/2022 6:29	6.16
6/26/2022 3:10	34.48	6/26/2022 3:57	19.84	6/25/2022 6:30	6.20
6/26/2022 3:11	34.48	6/26/2022 3:58	19.83	6/25/2022 6:31	6.21
6/26/2022 3:12	34.47	6/26/2022 3:59	19.83	6/25/2022 6:32	6.19
6/26/2022 3:13	34.46	6/26/2022 4:00	19.84	6/25/2022 6:33	6.20
6/26/2022 3:14	34.48	6/26/2022 4:01	19.84	6/25/2022 6:34	6.19
6/26/2022 3:15	34.47	6/26/2022 4:02	19.86	6/25/2022 6:35	6.18
6/26/2022 3:16	34.47	6/26/2022 4:03	19.84	6/25/2022 6:36	6.19
6/26/2022 3:17	34.44	6/26/2022 4:04	19.87	6/25/2022 6:37	6.20
6/26/2022 3:18	34.47	6/26/2022 4:05	19.87	6/25/2022 6:38	6.21
6/26/2022 3:19	34.46	6/26/2022 4:06	19.85	6/25/2022 6:39	6.20
6/26/2022 3:20	34.47	6/26/2022 4:07	19.84	6/25/2022 6:40	6.18
6/26/2022 3:21	34.44	6/26/2022 4:08	19.83	6/25/2022 6:41	6.20
6/26/2022 3:22	34.47	6/26/2022 4:09	19.84	6/25/2022 6:42	6.18
6/26/2022 3:23	34.47	6/26/2022 4:10	19.86	6/25/2022 6:43	6.20
6/26/2022 3:24	34.48	6/26/2022 4:11	19.86	6/25/2022 6:44	6.19
6/26/2022 3:25	34.45	6/26/2022 4:12	19.83	6/25/2022 6:45	6.15
6/26/2022 3:26	34.47	6/26/2022 4:13	19.82	6/25/2022 6:46	6.22
6/26/2022 3:27	34.49	6/26/2022 4:14	19.85	6/25/2022 6:47	6.18
6/26/2022 3:28	34.47	6/26/2022 4:15	19.84	6/25/2022 6:48	6.21
6/26/2022 3:29	34.46	6/26/2022 4:16	19.84	6/25/2022 6:49	6.20
6/26/2022 3:30	34.46	6/26/2022 4:17	19.84	6/25/2022 6:50	6.24
6/26/2022 3:31	34.46	6/26/2022 4:18	19.88	6/25/2022 6:51	6.19
6/26/2022 3:32	34.46	6/26/2022 4:19	19.86	6/25/2022 6:52	6.19
6/26/2022 3:33	34.46	6/26/2022 4:20	19.83	6/25/2022 6:53	6.19
6/26/2022 3:34	34.45	6/26/2022 4:21	19.84	6/25/2022 6:54	6.20
6/26/2022 3:35	34.47	6/26/2022 4:22	19.84	6/25/2022 6:55	6.17
6/26/2022 3:36	34.47	6/26/2022 4:23	19.84	6/25/2022 6:56	6.20
6/26/2022 3:37	34.48	6/26/2022 4:24	19.87	6/25/2022 6:57	6.22
6/26/2022 3:38	34.46	6/26/2022 4:25	19.83	6/25/2022 6:58	6.19
6/26/2022 3:39	34.44	6/26/2022 4:26	19.86	6/25/2022 6:59	6.19
6/26/2022 3:40	34.45	6/26/2022 4:27	19.85	6/25/2022 7:00	6.20
6/26/2022 3:41	34.45	6/26/2022 4:28	19.86	6/25/2022 7:01	6.21
6/26/2022 3:42	34.47	6/26/2022 4:29	19.85	6/25/2022 7:02	6.17
6/26/2022 3:43	34.48	6/26/2022 4:30	19.88	6/25/2022 7:03	6.17
6/26/2022 3:44	34.48	6/26/2022 4:31	19.84	6/25/2022 7:04	6.17
6/26/2022 3:45	34.45	6/26/2022 4:32	19.84	6/25/2022 7:05	6.18
6/26/2022 3:46	34.44	6/26/2022 4:33	19.83	6/25/2022 7:06	6.19

6/26/2022 3:47	34.45	6/26/2022 4:34	19.88	6/25/2022 7:07	6.22
6/26/2022 3:48	34.46	6/26/2022 4:35	19.85	6/25/2022 7:08	6.17
6/26/2022 3:49	34.46	6/26/2022 4:36	19.85	6/25/2022 7:09	6.18
6/26/2022 3:50	34.49	6/26/2022 4:37	19.85	6/25/2022 7:10	6.22
6/26/2022 3:51	34.49	6/26/2022 4:38	19.84	6/25/2022 7:11	6.22
6/26/2022 3:52	34.47	6/26/2022 4:39	19.86	6/25/2022 7:12	6.21
6/26/2022 3:53	34.45	6/26/2022 4:40	19.84	6/25/2022 7:13	6.17
6/26/2022 3:54	34.47	6/26/2022 4:41	19.87	6/25/2022 7:14	6.21
6/26/2022 3:55	34.46	6/26/2022 4:42	19.87	6/25/2022 7:15	6.19
6/26/2022 3:56	34.47	6/26/2022 4:43	19.81	6/25/2022 7:16	6.17
6/26/2022 3:57	34.46	6/26/2022 4:44	19.85	6/25/2022 7:17	6.20
6/26/2022 3:58	34.46	6/26/2022 4:45	19.87	6/25/2022 7:18	6.17
6/26/2022 3:59	34.47	6/26/2022 4:46	19.85	6/25/2022 7:19	6.22
6/26/2022 4:00	34.48	6/26/2022 4:47	19.85	6/25/2022 7:20	6.21
6/26/2022 4:01	34.47	6/26/2022 4:48	19.85	6/25/2022 7:21	6.23
6/26/2022 4:02	34.45	6/26/2022 4:49	19.84	6/25/2022 7:22	6.19
6/26/2022 4:03	34.43	6/26/2022 4:50	19.86	6/25/2022 7:23	6.20
6/26/2022 4:04	34.46	6/26/2022 4:51	19.89	6/25/2022 7:24	6.21
6/26/2022 4:05	34.47	6/26/2022 4:52	19.88	6/25/2022 7:25	6.17
6/26/2022 4:06	34.48	6/26/2022 4:53	19.86	6/25/2022 7:26	6.18
6/26/2022 4:07	34.43	6/26/2022 4:54	19.86	6/25/2022 7:27	6.19
6/26/2022 4:08	34.47	6/26/2022 4:55	19.86	6/25/2022 7:28	6.20
6/26/2022 4:09	34.46	6/26/2022 4:56	19.87	6/25/2022 7:29	6.18
6/26/2022 4:10	34.43	6/26/2022 4:57	19.85	6/25/2022 7:30	6.20
6/26/2022 4:11	34.45	6/26/2022 4:58	19.88	6/25/2022 7:31	6.22
6/26/2022 4:12	34.48	6/26/2022 4:59	19.85	6/25/2022 7:32	6.20
6/26/2022 4:13	34.45	6/26/2022 5:00	19.87	6/25/2022 7:33	6.20
6/26/2022 4:14	34.46	6/26/2022 5:01	19.86	6/25/2022 7:34	6.20
6/26/2022 4:15	34.49	6/26/2022 5:02	19.85	6/25/2022 7:35	6.21
6/26/2022 4:16	34.48	6/26/2022 5:03	19.86	6/25/2022 7:36	6.22
6/26/2022 4:17	34.51	6/26/2022 5:04	19.85	6/25/2022 7:37	6.21
6/26/2022 4:18	34.47	6/26/2022 5:05	19.83	6/25/2022 7:38	6.22
6/26/2022 4:19	34.51	6/26/2022 5:06	19.85	6/25/2022 7:39	6.21
6/26/2022 4:20	34.51	6/26/2022 5:07	19.85	6/25/2022 7:40	6.19
6/26/2022 4:21	34.50	6/26/2022 5:08	19.85	6/25/2022 7:41	6.19
6/26/2022 4:22	34.47	6/26/2022 5:09	19.87	6/25/2022 7:42	6.19
6/26/2022 4:23	34.48	6/26/2022 5:10	19.86	6/25/2022 7:43	6.22
6/26/2022 4:24	34.44	6/26/2022 5:11	19.85	6/25/2022 7:44	6.15
6/26/2022 4:25	34.48	6/26/2022 5:12	19.86	6/25/2022 7:45	6.19
6/26/2022 4:26	34.45	6/26/2022 5:13	19.84	6/25/2022 7:46	6.21
6/26/2022 4:27	34.48	6/26/2022 5:14	19.83	6/25/2022 7:47	6.22
6/26/2022 4:28	34.46	6/26/2022 5:15	19.88	6/25/2022 7:48	6.20
6/26/2022 4:29	34.44	6/26/2022 5:16	19.87	6/25/2022 7:49	6.21
6/26/2022 4:30	34.45	6/26/2022 5:17	19.85	6/25/2022 7:50	6.21
6/26/2022 4:31	34.45	6/26/2022 5:18	19.85	6/25/2022 7:51	6.19
6/26/2022 4:32	34.43	6/26/2022 5:19	19.85	6/25/2022 7:52	6.19
6/26/2022 4:33	34.47	6/26/2022 5:20	19.84	6/25/2022 7:53	6.16
6/26/2022 4:34	34.47	6/26/2022 5:21	19.85	6/25/2022 7:54	6.19
6/26/2022 4:35	34.46	6/26/2022 5:22	19.86	6/25/2022 7:55	6.19
6/26/2022 4:36	34.46	6/26/2022 5:23	19.88	6/25/2022 7:56	6.21
6/26/2022 4:37	34.45	6/26/2022 5:24	19.87	6/25/2022 7:57	6.22
6/26/2022 4:38	34.45	6/26/2022 5:25	19.87	6/25/2022 7:58	6.18
6/26/2022 4:39	34.44	6/26/2022 5:26	19.85	6/25/2022 7:59	6.20
6/26/2022 4:40	34.46	6/26/2022 5:27	19.88	6/25/2022 8:00	6.22
6/26/2022 4:41	34.46	6/26/2022 5:28	19.87	6/25/2022 8:01	6.20
6/26/2022 4:42	34.47	6/26/2022 5:29	19.86	6/25/2022 8:02	6.18
6/26/2022 4:43	34.44	6/26/2022 5:30	19.86	6/25/2022 8:03	6.19
6/26/2022 4:44	34.46	6/26/2022 5:31	19.88	6/25/2022 8:04	6.21
6/26/2022 4:45	34.48	6/26/2022 5:32	19.87	6/25/2022 8:05	6.21
6/26/2022 4:46	34.48	6/26/2022 5:33	19.87	6/25/2022 8:06	6.17
6/26/2022 4:47	34.45	6/26/2022 5:34	19.88	6/25/2022 8:07	6.22
6/26/2022 4:48	34.45	6/26/2022 5:35	19.85	6/25/2022 8:08	6.17
6/26/2022 4:49	34.45	6/26/2022 5:36	19.84	6/25/2022 8:09	6.20
6/26/2022 4:50	34.48	6/26/2022 5:37	19.88	6/25/2022 8:10	6.17
6/26/2022 4:51	34.49	6/26/2022 5:38	19.86	6/25/2022 8:11	6.21
6/26/2022 4:52	34.49	6/26/2022 5:39	19.86	6/25/2022 8:12	6.23
6/26/2022 4:53	34.46	6/26/2022 5:40	19.86	6/25/2022 8:13	6.18
6/26/2022 4:54	34.45	6/26/2022 5:41	19.88	6/25/2022 8:14	6.18
6/26/2022 4:55	34.46	6/26/2022 5:42	19.83	6/25/2022 8:15	6.22
6/26/2022 4:56	34.45	6/26/2022 5:43	19.86	6/25/2022 8:16	6.18
6/26/2022 4:57	34.44	6/26/2022 5:44	19.87	6/25/2022 8:17	6.20
6/26/2022 4:58	34.45	6/26/2022 5:45	19.86	6/25/2022 8:18	6.18
6/26/2022 4:59	34.45	6/26/2022 5:46	19.85	6/25/2022 8:19	6.19
6/26/2022 5:00	34.48	6/26/2022 5:47	19.84	6/25/2022 8:20	6.18
6/26/2022 5:01	34.46	6/26/2022 5:48	19.84	6/25/2022 8:21	6.17
6/26/2022 5:02	34.48	6/26/2022 5:49	19.84	6/25/2022 8:22	6.18
6/26/2022 5:03	34.46	6/26/2022 5:50	19.85	6/25/2022 8:23	6.20
6/26/2022 5:04	34.48	6/26/2022 5:51	19.86	6/25/2022 8:24	6.18
6/26/2022 5:05	34.45	6/26/2022 5:52	19.87	6/25/2022 8:25	6.20
6/26/2022 5:06	34.43	6/26/2022 5:53	19.85	6/25/2022 8:26	6.19
6/26/2022 5:07	34.45	6/26/2022 5:54	19.86	6/25/2022 8:27	6.18
6/26/2022 5:08	34.44	6/26/2022 5:55	19.87	6/25/2022 8:28	6.20
6/26/2022 5:09	34.47	6/26/2022 5:56	19.87	6/25/2022 8:29	6.19
6/26/2022 5:10	34.46	6/26/2022 5:57	19.86	6/25/2022 8:30	6.17
6/26/2022 5:11	34.46	6/26/2022 5:58	19.86	6/25/2022 8:31	6.21
6/26/2022 5:12	34.46	6/26/2022 5:59	19.87	6/25/2022 8:32	6.21
6/26/2022 5:13	34.44	6/26/2022 6:00	19.85	6/25/2022 8:33	8.42
6/26/2022 5:14	34.44	6/26/2022 6:01	19.86	6/25/2022 8:34	8.94

6/26/2022 5:15	34.43	6/26/2022 6:02	19.84	6/25/2022 8:35	6.39
6/26/2022 5:16	34.42	6/26/2022 6:03	19.86	6/25/2022 8:36	6.23
6/26/2022 5:17	34.42	6/26/2022 6:04	19.85	6/25/2022 8:37	6.21
6/26/2022 5:18	34.44	6/26/2022 6:05	19.87	6/25/2022 8:38	6.25
6/26/2022 5:19	34.45	6/26/2022 6:06	19.87	6/25/2022 8:39	6.22
6/26/2022 5:20	34.46	6/26/2022 6:07	19.86	6/25/2022 8:40	6.25
6/26/2022 5:21	34.45	6/26/2022 6:08	19.89	6/25/2022 8:41	6.19
6/26/2022 5:22	34.42	6/26/2022 6:09	19.85	6/25/2022 8:42	6.22
6/26/2022 5:23	34.46	6/26/2022 6:10	19.85	6/25/2022 8:43	6.22
6/26/2022 5:24	34.42	6/26/2022 6:11	19.84	6/25/2022 8:44	6.20
6/26/2022 5:25	34.47	6/26/2022 6:12	19.86	6/25/2022 8:45	6.18
6/26/2022 5:26	34.44	6/26/2022 6:13	19.86	6/25/2022 8:46	6.18
6/26/2022 5:27	34.45	6/26/2022 6:14	19.88	6/25/2022 8:47	6.20
6/26/2022 5:28	34.44	6/26/2022 6:15	19.87	6/25/2022 8:48	6.19
6/26/2022 5:29	34.43	6/26/2022 6:16	19.89	6/25/2022 8:49	6.24
6/26/2022 5:30	34.43	6/26/2022 6:17	19.88	6/25/2022 8:50	6.19
6/26/2022 5:31	34.45	6/26/2022 6:18	19.88	6/25/2022 8:51	6.19
6/26/2022 5:32	34.44	6/26/2022 6:19	19.87	6/25/2022 8:52	6.22
6/26/2022 5:33	34.45	6/26/2022 6:20	19.87	6/25/2022 8:53	6.20
6/26/2022 5:34	34.44	6/26/2022 6:21	19.86	6/25/2022 8:54	6.22
6/26/2022 5:35	34.44	6/26/2022 6:22	19.86	6/25/2022 8:55	6.22
6/26/2022 5:36	34.46	6/26/2022 6:23	19.85	6/25/2022 8:56	6.18
6/26/2022 5:37	34.45	6/26/2022 6:24	19.88	6/25/2022 8:57	6.20
6/26/2022 5:38	34.43	6/26/2022 6:25	19.86	6/25/2022 8:58	6.17
6/26/2022 5:39	34.49	6/26/2022 6:26	19.87	6/25/2022 8:59	6.23
6/26/2022 5:40	34.43	6/26/2022 6:27	19.88	6/25/2022 9:00	6.19
6/26/2022 5:41	34.47	6/26/2022 6:28	19.86	6/25/2022 9:01	6.19
6/26/2022 5:42	34.46	6/26/2022 6:29	19.87	6/25/2022 9:02	6.20
6/26/2022 5:43	34.43	6/26/2022 6:30	19.85	6/25/2022 9:03	6.22
6/26/2022 5:44	34.42	6/26/2022 6:31	19.86	6/25/2022 9:04	6.21
6/26/2022 5:45	34.45	6/26/2022 6:32	19.87	6/25/2022 9:05	6.21
6/26/2022 5:46	34.45	6/26/2022 6:33	19.87	6/25/2022 9:06	6.21
6/26/2022 5:47	34.42	6/26/2022 6:34	19.86	6/25/2022 9:07	6.21
6/26/2022 5:48	34.46	6/26/2022 6:35	19.87	6/25/2022 9:08	6.18
6/26/2022 5:49	34.43	6/26/2022 6:36	19.86	6/25/2022 9:09	6.22
6/26/2022 5:50	34.46	6/26/2022 6:37	19.89	6/25/2022 9:10	6.17
6/26/2022 5:51	34.47	6/26/2022 6:38	19.87	6/25/2022 9:11	6.18
6/26/2022 5:52	34.43	6/26/2022 6:39	19.86	6/25/2022 9:12	6.22
6/26/2022 5:53	34.45	6/26/2022 6:40	19.86	6/25/2022 9:13	6.21
6/26/2022 5:54	34.42	6/26/2022 6:41	19.88	6/25/2022 9:14	6.22
6/26/2022 5:55	34.44	6/26/2022 6:42	19.86	6/25/2022 9:15	6.17
6/26/2022 5:56	34.44	6/26/2022 6:43	19.86	6/25/2022 9:16	6.17
6/26/2022 5:57	34.44	6/26/2022 6:44	19.87	6/25/2022 9:17	6.21
6/26/2022 5:58	34.47	6/26/2022 6:45	19.88	6/25/2022 9:18	6.18
6/26/2022 5:59	34.45	6/26/2022 6:46	19.88	6/25/2022 9:19	6.20
6/26/2022 6:00	34.43	6/26/2022 6:47	19.85	6/25/2022 9:20	6.20
6/26/2022 6:01	34.45	6/26/2022 6:48	19.88	6/25/2022 9:21	6.21
6/26/2022 6:02	34.44	6/26/2022 6:49	19.87	6/25/2022 9:22	6.22
6/26/2022 6:03	34.42	6/26/2022 6:50	19.88	6/25/2022 9:23	6.21
6/26/2022 6:04	34.42	6/26/2022 6:51	19.87	6/25/2022 9:24	6.20
6/26/2022 6:05	34.46	6/26/2022 6:52	19.86	6/25/2022 9:25	6.21
6/26/2022 6:06	34.47	6/26/2022 6:53	19.88	6/25/2022 9:26	6.20
6/26/2022 6:07	34.44	6/26/2022 6:54	19.87	6/25/2022 9:27	6.23
6/26/2022 6:08	34.47	6/26/2022 6:55	19.87	6/25/2022 9:28	6.19
6/26/2022 6:09	34.43	6/26/2022 6:56	19.88	6/25/2022 9:29	6.21
6/26/2022 6:10	34.46	6/26/2022 6:57	19.87	6/25/2022 9:30	6.19
6/26/2022 6:11	34.44	6/26/2022 6:58	19.87	6/25/2022 9:31	6.21
6/26/2022 6:12	34.42	6/26/2022 6:59	19.86	6/25/2022 9:32	6.23
6/26/2022 6:13	34.46	6/26/2022 7:00	19.85	6/25/2022 9:33	6.19
6/26/2022 6:14	34.44	6/26/2022 7:01	19.88	6/25/2022 9:34	6.20
6/26/2022 6:15	34.43	6/26/2022 7:02	19.84	6/25/2022 9:35	6.21
6/26/2022 6:16	34.43	6/26/2022 7:03	19.88	6/25/2022 9:36	6.21
6/26/2022 6:17	34.44	6/26/2022 7:04	19.88	6/25/2022 9:37	6.20
6/26/2022 6:18	34.43	6/26/2022 7:05	19.88	6/25/2022 9:38	6.19
6/26/2022 6:19	34.42	6/26/2022 7:06	19.86	6/25/2022 9:39	6.17
6/26/2022 6:20	34.44	6/26/2022 7:07	19.86	6/25/2022 9:40	6.23
6/26/2022 6:21	34.42	6/26/2022 7:08	19.87	6/25/2022 9:41	6.20
6/26/2022 6:22	34.44	6/26/2022 7:09	19.87	6/25/2022 9:42	6.20
6/26/2022 6:23	34.46	6/26/2022 7:10	19.87	6/25/2022 9:43	6.18
6/26/2022 6:24	34.45	6/26/2022 7:11	19.89	6/25/2022 9:44	6.21
6/26/2022 6:25	34.42	6/26/2022 7:12	19.85	6/25/2022 9:45	6.22
6/26/2022 6:26	34.46	6/26/2022 7:13	19.86	6/25/2022 9:46	6.22
6/26/2022 6:27	34.44	6/26/2022 7:14	19.88	6/25/2022 9:47	6.22
6/26/2022 6:28	34.44	6/26/2022 7:15	19.89	6/25/2022 9:48	6.21
6/26/2022 6:29	34.43	6/26/2022 7:16	19.88	6/25/2022 9:49	6.21
6/26/2022 6:30	34.46	6/26/2022 7:17	19.87	6/25/2022 9:50	6.20
6/26/2022 6:31	34.44	6/26/2022 7:18	19.88	6/25/2022 9:51	6.20
6/26/2022 6:32	34.44	6/26/2022 7:19	19.87	6/25/2022 9:52	6.18
6/26/2022 6:33	34.45	6/26/2022 7:20	19.87	6/25/2022 9:53	6.18
6/26/2022 6:34	34.43	6/26/2022 7:21	19.86	6/25/2022 9:54	8.76
6/26/2022 6:35	34.43	6/26/2022 7:22	19.87	6/25/2022 9:55	7.94
6/26/2022 6:36	34.44	6/26/2022 7:23	19.88	6/25/2022 9:56	6.32
6/26/2022 6:37	34.43	6/26/2022 7:24	19.87	6/25/2022 9:57	6.23
6/26/2022 6:38	34.42	6/26/2022 7:25	19.88	6/25/2022 9:58	6.20
6/26/2022 6:39	34.43	6/26/2022 7:26	19.86	6/25/2022 9:59	6.24
6/26/2022 6:40	34.43	6/26/2022 7:27	19.84	6/25/2022 10:00	6.21
6/26/2022 6:41	34.42	6/26/2022 7:28	19.84	6/25/2022 10:01	6.22
6/26/2022 6:42	34.48	6/26/2022 7:29	19.86	6/25/2022 10:02	6.22

6/26/2022 6:43	34.44	6/26/2022 7:30	19.90	6/25/2022 10:03	6.20
6/26/2022 6:44	34.42	6/26/2022 7:31	19.86	6/25/2022 10:04	6.20
6/26/2022 6:45	34.43	6/26/2022 7:32	19.86	6/25/2022 10:05	6.20
6/26/2022 6:46	34.43	6/26/2022 7:33	19.88	6/25/2022 10:06	6.20
6/26/2022 6:47	34.45	6/26/2022 7:34	19.87	6/25/2022 10:07	6.19
6/26/2022 6:48	34.44	6/26/2022 7:35	19.88	6/25/2022 10:08	6.21
6/26/2022 6:49	34.43	6/26/2022 7:36	19.89	6/25/2022 10:09	6.20
6/26/2022 6:50	34.43	6/26/2022 7:37	19.89	6/25/2022 10:10	6.22
6/26/2022 6:51	34.42	6/26/2022 7:38	19.88	6/25/2022 10:11	6.21
6/26/2022 6:52	34.41	6/26/2022 7:39	19.86	6/25/2022 10:12	6.21
6/26/2022 6:53	34.42	6/26/2022 7:40	19.89	6/25/2022 10:13	6.23
6/26/2022 6:54	34.44	6/26/2022 7:41	19.87	6/25/2022 10:14	6.20
6/26/2022 6:55	34.42	6/26/2022 7:42	19.88	6/25/2022 10:15	6.23
6/26/2022 6:56	34.41	6/26/2022 7:43	19.88	6/25/2022 10:16	6.19
6/26/2022 6:57	34.43	6/26/2022 7:44	19.89	6/25/2022 10:17	6.23
6/26/2022 6:58	34.42	6/26/2022 7:45	19.89	6/25/2022 10:18	6.23
6/26/2022 6:59	34.40	6/26/2022 7:46	19.89	6/25/2022 10:19	6.20
6/26/2022 7:00	34.46	6/26/2022 7:47	19.86	6/25/2022 10:20	6.21
6/26/2022 7:01	34.43	6/26/2022 7:48	19.87	6/25/2022 10:21	6.23
6/26/2022 7:02	34.43	6/26/2022 7:49	19.87	6/25/2022 10:22	6.23
6/26/2022 7:03	34.44	6/26/2022 7:50	19.85	6/25/2022 10:23	6.20
6/26/2022 7:04	34.44	6/26/2022 7:51	20.27	6/25/2022 10:24	6.23
6/26/2022 7:05	34.46	6/26/2022 7:52	20.53	6/25/2022 10:25	6.20
6/26/2022 7:06	34.43	6/26/2022 7:53	20.61	6/25/2022 10:26	6.18
6/26/2022 7:07	34.44	6/26/2022 7:54	20.68	6/25/2022 10:27	6.21
6/26/2022 7:08	34.41	6/26/2022 7:55	20.67	6/25/2022 10:28	6.20
6/26/2022 7:09	34.43	6/26/2022 7:56	20.24	6/25/2022 10:29	6.16
6/26/2022 7:10	34.44	6/26/2022 7:57	20.13	6/25/2022 10:30	6.20
6/26/2022 7:11	34.43	6/26/2022 7:58	20.10	6/25/2022 10:31	6.21
6/26/2022 7:12	34.42	6/26/2022 7:59	20.04	6/25/2022 10:32	6.20
6/26/2022 7:13	34.43	6/26/2022 8:00	20.02	6/25/2022 10:33	6.22
6/26/2022 7:14	34.43	6/26/2022 8:01	20.01	6/25/2022 10:34	6.19
6/26/2022 7:15	34.44	6/26/2022 8:02	20.01	6/25/2022 10:35	6.20
6/26/2022 7:16	34.46	6/26/2022 8:03	20.00	6/25/2022 10:36	6.22
6/26/2022 7:17	34.47	6/26/2022 8:04	19.96	6/25/2022 10:37	6.22
6/26/2022 7:18	34.49	6/26/2022 8:05	19.97	6/25/2022 10:38	6.20
6/26/2022 7:19	34.44	6/26/2022 8:06	19.97	6/25/2022 10:39	6.20
6/26/2022 7:20	34.47	6/26/2022 8:07	19.97	6/25/2022 10:40	6.19
6/26/2022 7:21	34.48	6/26/2022 8:08	19.98	6/25/2022 10:41	6.21
6/26/2022 7:22	34.42	6/26/2022 8:09	19.95	6/25/2022 10:42	6.21
6/26/2022 7:23	34.49	6/26/2022 8:10	19.97	6/25/2022 10:43	6.23
6/26/2022 7:24	34.47	6/26/2022 8:11	19.94	6/25/2022 10:44	6.23
6/26/2022 7:25	34.46	6/26/2022 8:12	19.94	6/25/2022 10:45	6.19
6/26/2022 7:26	34.44	6/26/2022 8:13	19.97	6/25/2022 10:46	6.23
6/26/2022 7:27	34.41	6/26/2022 8:14	19.94	6/25/2022 10:47	6.23
6/26/2022 7:28	34.45	6/26/2022 8:15	19.96	6/25/2022 10:48	6.19
6/26/2022 7:29	34.45	6/26/2022 8:16	19.94	6/25/2022 10:49	6.24
6/26/2022 7:30	34.44	6/26/2022 8:17	19.94	6/25/2022 10:50	6.22
6/26/2022 7:31	34.47	6/26/2022 8:18	19.96	6/25/2022 10:51	6.21
6/26/2022 7:32	34.44	6/26/2022 8:19	19.94	6/25/2022 10:52	6.22
6/26/2022 7:33	34.49	6/26/2022 8:20	19.92	6/25/2022 10:53	6.21
6/26/2022 7:34	34.43	6/26/2022 8:21	19.94	6/25/2022 10:54	6.22
6/26/2022 7:35	34.43	6/26/2022 8:22	19.93	6/25/2022 10:55	6.20
6/26/2022 7:36	34.47	6/26/2022 8:23	19.94	6/25/2022 10:56	6.20
6/26/2022 7:37	34.46	6/26/2022 8:24	19.94	6/25/2022 10:57	6.21
6/26/2022 7:38	34.47	6/26/2022 8:25	19.95	6/25/2022 10:58	6.23
6/26/2022 7:39	34.43	6/26/2022 8:26	19.94	6/25/2022 10:59	6.22
6/26/2022 7:40	34.43	6/26/2022 8:27	19.93	6/25/2022 11:00	6.17
6/26/2022 7:41	34.42	6/26/2022 8:28	19.92	6/25/2022 11:01	6.21
6/26/2022 7:42	34.42	6/26/2022 8:29	19.93	6/25/2022 11:02	6.20
6/26/2022 7:43	34.46	6/26/2022 8:30	19.91	6/25/2022 11:03	6.18
6/26/2022 7:44	34.44	6/26/2022 8:31	19.92	6/25/2022 11:04	6.18
6/26/2022 7:45	34.46	6/26/2022 8:32	19.92	6/25/2022 11:05	6.17
6/26/2022 7:46	34.44	6/26/2022 8:33	19.96	6/25/2022 11:06	6.21
6/26/2022 7:47	34.44	6/26/2022 8:34	19.91	6/25/2022 11:07	6.20
6/26/2022 7:48	34.42	6/26/2022 8:35	19.92	6/25/2022 11:08	6.20
6/26/2022 7:49	34.46	6/26/2022 8:36	19.90	6/25/2022 11:09	6.23
6/26/2022 7:50	34.41	6/26/2022 8:37	19.92	6/25/2022 11:10	6.23
6/26/2022 7:51	34.40	6/26/2022 8:38	19.92	6/25/2022 11:11	6.17
6/26/2022 7:52	34.46	6/26/2022 8:39	19.92	6/25/2022 11:12	6.20
6/26/2022 7:53	34.44	6/26/2022 8:40	19.91	6/25/2022 11:13	6.20
6/26/2022 7:54	34.45	6/26/2022 8:41	19.94	6/25/2022 11:14	6.20
6/26/2022 7:55	34.41	6/26/2022 8:42	19.91	6/25/2022 11:15	6.23
6/26/2022 7:56	34.42	6/26/2022 8:43	19.92	6/25/2022 11:16	6.21
6/26/2022 7:57	34.44	6/26/2022 8:44	19.91	6/25/2022 11:17	6.21
6/26/2022 7:58	34.44	6/26/2022 8:45	19.90	6/25/2022 11:18	6.22
6/26/2022 7:59	34.43	6/26/2022 8:46	19.89	6/25/2022 11:19	6.24
6/26/2022 8:00	34.41	6/26/2022 8:47	19.91	6/25/2022 11:20	6.21
6/26/2022 8:01	34.41	6/26/2022 8:48	19.88	6/25/2022 11:21	6.26
6/26/2022 8:02	34.40	6/26/2022 8:49	19.91	6/25/2022 11:22	6.23
6/26/2022 8:03	34.43	6/26/2022 8:50	19.91	6/25/2022 11:23	6.17
6/26/2022 8:04	34.42	6/26/2022 8:51	19.90	6/25/2022 11:24	6.20
6/26/2022 8:05	34.43	6/26/2022 8:52	19.91	6/25/2022 11:25	6.21
6/26/2022 8:06	34.46	6/26/2022 8:53	19.89	6/25/2022 11:26	6.20
6/26/2022 8:07	34.45	6/26/2022 8:54	19.91	6/25/2022 11:27	6.19
6/26/2022 8:08	34.43	6/26/2022 8:55	19.91	6/25/2022 11:28	6.24
6/26/2022 8:09	34.44	6/26/2022 8:56	19.92	6/25/2022 11:29	6.21
6/26/2022 8:10	34.47	6/26/2022 8:57	19.90	6/25/2022 11:30	6.20

6/26/2022 8:11	34.46	6/26/2022 8:58	19.88	6/25/2022 11:31	6.22
6/26/2022 8:12	34.46	6/26/2022 8:59	19.90	6/25/2022 11:32	6.22
6/26/2022 8:13	34.49	6/26/2022 9:00	19.88	6/25/2022 11:33	6.19
6/26/2022 8:14	34.43	6/26/2022 9:01	19.88	6/25/2022 11:34	6.20
6/26/2022 8:15	34.46	6/26/2022 9:02	19.90	6/25/2022 11:35	8.72
6/26/2022 8:16	34.44	6/26/2022 9:03	19.90	6/25/2022 11:36	8.06
6/26/2022 8:17	34.47	6/26/2022 9:04	19.88	6/25/2022 11:37	6.30
6/26/2022 8:18	34.43	6/26/2022 9:05	19.90	6/25/2022 11:38	6.25
6/26/2022 8:19	34.43	6/26/2022 9:06	19.91	6/25/2022 11:39	6.21
6/26/2022 8:20	34.48	6/26/2022 9:07	19.91	6/25/2022 11:40	6.21
6/26/2022 8:21	34.49	6/26/2022 9:08	19.89	6/25/2022 11:41	6.25
6/26/2022 8:22	34.48	6/26/2022 9:09	19.89	6/25/2022 11:42	6.22
6/26/2022 8:23	34.48	6/26/2022 9:10	19.90	6/25/2022 11:43	6.23
6/26/2022 8:24	34.48	6/26/2022 9:11	19.88	6/25/2022 11:44	6.25
6/26/2022 8:25	34.45	6/26/2022 9:12	19.90	6/25/2022 11:45	6.22
6/26/2022 8:26	34.48	6/26/2022 9:13	19.89	6/25/2022 11:46	6.23
6/26/2022 8:27	34.46	6/26/2022 9:14	19.88	6/25/2022 11:47	6.23
6/26/2022 8:28	34.48	6/26/2022 9:15	19.88	6/25/2022 11:48	6.20
6/26/2022 8:29	34.45	6/26/2022 9:16	19.91	6/25/2022 11:49	6.23
6/26/2022 8:30	34.49	6/26/2022 9:17	19.90	6/25/2022 11:50	6.19
6/26/2022 8:31	34.50	6/26/2022 9:18	19.91	6/25/2022 11:51	6.22
6/26/2022 8:32	34.48	6/26/2022 9:19	19.90	6/25/2022 11:52	6.17
6/26/2022 8:33	34.48	6/26/2022 9:20	19.90	6/25/2022 11:53	6.18
6/26/2022 8:34	34.48	6/26/2022 9:21	19.88	6/25/2022 11:54	6.23
6/26/2022 8:35	34.47	6/26/2022 9:22	19.89	6/25/2022 11:55	6.21
6/26/2022 8:36	34.52	6/26/2022 9:23	19.91	6/25/2022 11:56	6.24
6/26/2022 8:37	34.49	6/26/2022 9:24	19.89	6/25/2022 11:57	6.23
6/26/2022 8:38	34.46	6/26/2022 9:25	19.88	6/25/2022 11:58	6.22
6/26/2022 8:39	34.47	6/26/2022 9:26	19.91	6/25/2022 11:59	6.22
6/26/2022 8:40	34.48	6/26/2022 9:27	19.89	6/25/2022 12:00	6.23
6/26/2022 8:41	34.46	6/26/2022 9:28	19.89	6/25/2022 12:01	6.21
6/26/2022 8:42	34.47	6/26/2022 9:29	19.90	6/25/2022 12:02	6.23
6/26/2022 8:43	34.47	6/26/2022 9:30	19.89	6/25/2022 12:03	6.22
6/26/2022 8:44	34.48	6/26/2022 9:31	19.91	6/25/2022 12:04	6.23
6/26/2022 8:45	34.47	6/26/2022 9:32	19.85	6/25/2022 12:05	6.21
6/26/2022 8:46	34.44	6/26/2022 9:33	19.89	6/25/2022 12:06	6.20
6/26/2022 8:47	34.48	6/26/2022 9:34	19.89	6/25/2022 12:07	6.18
6/26/2022 8:48	34.45	6/26/2022 9:35	19.87	6/25/2022 12:08	6.24
6/26/2022 8:49	34.46	6/26/2022 9:36	19.88	6/25/2022 12:09	6.21
6/26/2022 8:50	34.46	6/26/2022 9:37	19.89	6/25/2022 12:10	6.20
6/26/2022 8:51	34.49	6/26/2022 9:38	19.88	6/25/2022 12:11	6.25
6/26/2022 8:52	34.45	6/26/2022 9:39	19.93	6/25/2022 12:12	6.21
6/26/2022 8:53	34.48	6/26/2022 9:40	19.86	6/25/2022 12:13	6.24
6/26/2022 8:54	34.46	6/26/2022 9:41	19.88	6/25/2022 12:14	6.22
6/26/2022 8:55	34.46	6/26/2022 9:42	19.92	6/25/2022 12:15	6.23
6/26/2022 8:56	34.45	6/26/2022 9:43	19.89	6/25/2022 12:16	6.21
6/26/2022 8:57	34.46	6/26/2022 9:44	19.89	6/25/2022 12:17	6.21
6/26/2022 8:58	34.42	6/26/2022 9:45	19.91	6/25/2022 12:18	6.21
6/26/2022 8:59	34.43	6/26/2022 9:46	19.89	6/25/2022 12:19	6.22
6/26/2022 9:00	34.42	6/26/2022 9:47	19.87	6/25/2022 12:20	6.22
6/26/2022 9:01	34.47	6/26/2022 9:48	19.90	6/25/2022 12:21	6.26
6/26/2022 9:02	34.42	6/26/2022 9:49	19.90	6/25/2022 12:22	6.20
6/26/2022 9:03	34.46	6/26/2022 9:50	19.90	6/25/2022 12:23	6.19
6/26/2022 9:04	34.46	6/26/2022 9:51	19.90	6/25/2022 12:24	6.20
6/26/2022 9:05	34.39	6/26/2022 9:52	19.88	6/25/2022 12:25	6.22
6/26/2022 9:06	34.45	6/26/2022 9:53	19.89	6/25/2022 12:26	6.19
6/26/2022 9:07	34.46	6/26/2022 9:54	19.91	6/25/2022 12:27	6.19
6/26/2022 9:08	34.47	6/26/2022 9:55	19.91	6/25/2022 12:28	6.19
6/26/2022 9:09	34.47	6/26/2022 9:56	19.88	6/25/2022 12:29	6.20
6/26/2022 9:10	34.48	6/26/2022 9:57	19.90	6/25/2022 12:30	6.23
6/26/2022 9:11	34.45	6/26/2022 9:58	19.89	6/25/2022 12:31	6.23
6/26/2022 9:12	34.49	6/26/2022 9:59	19.89	6/25/2022 12:32	6.22
6/26/2022 9:13	34.49	6/26/2022 10:00	19.88	6/25/2022 12:33	6.19
6/26/2022 9:14	34.46	6/26/2022 10:01	19.88	6/25/2022 12:34	6.24
6/26/2022 9:15	34.46	6/26/2022 10:02	19.89	6/25/2022 12:35	6.22
6/26/2022 9:16	34.45	6/26/2022 10:03	19.88	6/25/2022 12:36	6.21
6/26/2022 9:17	34.47	6/26/2022 10:04	19.86	6/25/2022 12:37	6.21
6/26/2022 9:18	34.46	6/26/2022 10:05	19.90	6/25/2022 12:38	6.22
6/26/2022 9:19	34.46	6/26/2022 10:06	19.89	6/25/2022 12:39	6.21
6/26/2022 9:20	34.44	6/26/2022 10:07	19.91	6/25/2022 12:40	6.22
6/26/2022 9:21	34.46	6/26/2022 10:08	19.88	6/25/2022 12:41	6.23
6/26/2022 9:22	34.46	6/26/2022 10:09	19.88	6/25/2022 12:42	6.24
6/26/2022 9:23	34.46	6/26/2022 10:10	19.90	6/25/2022 12:43	6.19
6/26/2022 9:24	34.51	6/26/2022 10:11	19.87	6/25/2022 12:44	6.20
6/26/2022 9:25	34.50	6/26/2022 10:12	19.90	6/25/2022 12:45	6.22
6/26/2022 9:26	34.46	6/26/2022 10:13	19.89	6/25/2022 12:46	6.23
6/26/2022 9:27	34.48	6/26/2022 10:14	19.88	6/25/2022 12:47	6.24
6/26/2022 9:28	34.47	6/26/2022 10:15	19.89	6/25/2022 12:48	6.19
6/26/2022 9:29	34.46	6/26/2022 10:16	19.88	6/25/2022 12:49	6.22
6/26/2022 9:30	34.49	6/26/2022 10:17	19.90	6/25/2022 12:50	6.21
6/26/2022 9:31	34.47	6/26/2022 10:18	19.90	6/25/2022 12:51	6.20
6/26/2022 9:32	34.48	6/26/2022 10:19	19.88	6/25/2022 12:52	6.17
6/26/2022 9:33	34.49	6/26/2022 10:20	19.91	6/25/2022 12:53	6.20
6/26/2022 9:34	34.46	6/26/2022 10:21	19.90	6/25/2022 12:54	6.21
6/26/2022 9:35	34.44	6/26/2022 10:22	19.89	6/25/2022 12:55	6.20
6/26/2022 9:36	34.42	6/26/2022 10:23	19.92	6/25/2022 12:56	6.19
6/26/2022 9:37	34.44	6/26/2022 10:24	19.88	6/25/2022 12:57	6.20
6/26/2022 9:38	34.47	6/26/2022 10:25	19.89	6/25/2022 12:58	6.21

6/26/2022 9:39	34.47	6/26/2022 10:26	19.89	6/25/2022 12:59	6.22
6/26/2022 9:40	34.44	6/26/2022 10:27	19.87	6/25/2022 13:00	6.22
6/26/2022 9:41	34.44	6/26/2022 10:28	19.89	6/25/2022 13:01	6.22
6/26/2022 9:42	34.44	6/26/2022 10:29	19.88	6/25/2022 13:02	6.20
6/26/2022 9:43	34.47	6/26/2022 10:30	19.91	6/25/2022 13:03	6.22
6/26/2022 9:44	34.45	6/26/2022 10:31	19.89	6/25/2022 13:04	6.22
6/26/2022 9:45	34.49	6/26/2022 10:32	19.87	6/25/2022 13:05	6.22
6/26/2022 9:46	34.43	6/26/2022 10:33	19.89	6/25/2022 13:06	6.24
6/26/2022 9:47	34.44	6/26/2022 10:34	19.89	6/25/2022 13:07	6.22
6/26/2022 9:48	34.45	6/26/2022 10:35	19.90	6/25/2022 13:08	6.22
6/26/2022 9:49	34.44	6/26/2022 10:36	19.89	6/25/2022 13:09	6.22
6/26/2022 9:50	34.43	6/26/2022 10:37	19.91	6/25/2022 13:10	6.22
6/26/2022 9:51	34.47	6/26/2022 10:38	19.89	6/25/2022 13:11	6.20
6/26/2022 9:52	34.44	6/26/2022 10:39	19.88	6/25/2022 13:12	6.24
6/26/2022 9:53	34.45	6/26/2022 10:40	19.88	6/25/2022 13:13	6.19
6/26/2022 9:54	34.46	6/26/2022 10:41	19.89	6/25/2022 13:14	6.25
6/26/2022 9:55	34.43	6/26/2022 10:42	19.91	6/25/2022 13:15	6.23
6/26/2022 9:56	34.42	6/26/2022 10:43	19.89	6/25/2022 13:16	6.23
6/26/2022 9:57	34.43	6/26/2022 10:44	19.90	6/25/2022 13:17	6.22
6/26/2022 9:58	34.45	6/26/2022 10:45	19.89	6/25/2022 13:18	6.23
6/26/2022 9:59	34.43	6/26/2022 10:46	19.89	6/25/2022 13:19	6.20
6/26/2022 10:00	34.44	6/26/2022 10:47	19.92	6/25/2022 13:20	6.20
6/26/2022 10:01	34.43	6/26/2022 10:48	19.88	6/25/2022 13:21	6.23
6/26/2022 10:02	34.43	6/26/2022 10:49	19.90	6/25/2022 13:22	6.24
6/26/2022 10:03	34.39	6/26/2022 10:50	19.90	6/25/2022 13:23	6.20
6/26/2022 10:04	34.38	6/26/2022 10:51	19.88	6/25/2022 13:24	6.21
6/26/2022 10:05	34.43	6/26/2022 10:52	19.88	6/25/2022 13:25	6.22
6/26/2022 10:06	34.44	6/26/2022 10:53	19.89	6/25/2022 13:26	6.20
6/26/2022 10:07	34.43	6/26/2022 10:54	19.88	6/25/2022 13:27	6.24
6/26/2022 10:08	34.41	6/26/2022 10:55	19.89	6/25/2022 13:28	6.22
6/26/2022 10:09	34.41	6/26/2022 10:56	19.91	6/25/2022 13:29	6.21
6/26/2022 10:10	34.43	6/26/2022 10:57	19.91	6/25/2022 13:30	6.21
6/26/2022 10:11	34.44	6/26/2022 10:58	19.89	6/25/2022 13:31	6.24
6/26/2022 10:12	34.37	6/26/2022 10:59	19.91	6/25/2022 13:32	6.23
6/26/2022 10:13	34.44	6/26/2022 11:00	19.89	6/25/2022 13:33	6.23
6/26/2022 10:14	34.39	6/26/2022 11:01	19.89	6/25/2022 13:34	6.22
6/26/2022 10:15	34.43	6/26/2022 11:02	19.91	6/25/2022 13:35	6.22
6/26/2022 10:16	34.44	6/26/2022 11:03	19.86	6/25/2022 13:36	6.18
6/26/2022 10:17	34.44	6/26/2022 11:04	19.88	6/25/2022 13:37	6.24
6/26/2022 10:18	34.40	6/26/2022 11:05	19.88	6/25/2022 13:38	6.21
6/26/2022 10:19	34.42	6/26/2022 11:06	19.88	6/25/2022 13:39	6.23
6/26/2022 10:20	34.43	6/26/2022 11:07	19.89	6/25/2022 13:40	6.23
6/26/2022 10:21	34.41	6/26/2022 11:08	19.89	6/25/2022 13:41	6.22
6/26/2022 10:22	34.44	6/26/2022 11:09	19.89	6/25/2022 13:42	6.21
6/26/2022 10:23	34.41	6/26/2022 11:10	19.89	6/25/2022 13:43	6.20
6/26/2022 10:24	34.39	6/26/2022 11:11	19.90	6/25/2022 13:44	6.23
6/26/2022 10:25	34.42	6/26/2022 11:12	19.90	6/25/2022 13:45	6.22
6/26/2022 10:26	34.40	6/26/2022 11:13	19.88	6/25/2022 13:46	6.22
6/26/2022 10:27	34.41	6/26/2022 11:14	19.89	6/25/2022 13:47	6.25
6/26/2022 10:28	34.43	6/26/2022 11:15	19.90	6/25/2022 13:48	6.22
6/26/2022 10:29	34.40	6/26/2022 11:16	20.48	6/25/2022 13:49	6.21
6/26/2022 10:30	34.41	6/26/2022 11:17	20.63	6/25/2022 13:50	6.22
6/26/2022 10:31	34.41	6/26/2022 11:18	20.65	6/25/2022 13:51	6.23
6/26/2022 10:32	34.43	6/26/2022 11:19	20.72	6/25/2022 13:52	6.25
6/26/2022 10:33	34.41	6/26/2022 11:20	20.73	6/25/2022 13:53	6.25
6/26/2022 10:34	34.38	6/26/2022 11:21	20.21	6/25/2022 13:54	6.22
6/26/2022 10:35	34.39	6/26/2022 11:22	20.15	6/25/2022 13:55	6.21
6/26/2022 10:36	34.40	6/26/2022 11:23	20.07	6/25/2022 13:56	6.19
6/26/2022 10:37	34.42	6/26/2022 11:24	20.06	6/25/2022 13:57	6.23
6/26/2022 10:38	34.45	6/26/2022 11:25	20.04	6/25/2022 13:58	6.21
6/26/2022 10:39	34.43	6/26/2022 11:26	20.01	6/25/2022 13:59	6.21
6/26/2022 10:40	34.44	6/26/2022 11:27	20.01	6/25/2022 14:00	6.20
6/26/2022 10:41	34.41	6/26/2022 11:28	20.03	6/25/2022 14:01	6.23
6/26/2022 10:42	34.42	6/26/2022 11:29	20.00	6/25/2022 14:02	6.23
6/26/2022 10:43	34.42	6/26/2022 11:30	19.98	6/25/2022 14:03	6.21
6/26/2022 10:44	34.44	6/26/2022 11:31	19.99	6/25/2022 14:04	6.22
6/26/2022 10:45	34.43	6/26/2022 11:32	19.99	6/25/2022 14:05	6.23
6/26/2022 10:46	34.44	6/26/2022 11:33	20.02	6/25/2022 14:06	6.26
6/26/2022 10:47	34.40	6/26/2022 11:34	19.99	6/25/2022 14:07	6.21
6/26/2022 10:48	34.44	6/26/2022 11:35	20.00	6/25/2022 14:08	6.24
6/26/2022 10:49	34.44	6/26/2022 11:36	19.99	6/25/2022 14:09	6.23
6/26/2022 10:50	34.41	6/26/2022 11:37	19.96	6/25/2022 14:10	6.19
6/26/2022 10:51	34.42	6/26/2022 11:38	19.97	6/25/2022 14:11	6.23
6/26/2022 10:52	34.42	6/26/2022 11:39	19.96	6/25/2022 14:12	6.25
6/26/2022 10:53	34.41	6/26/2022 11:40	19.99	6/25/2022 14:13	6.25
6/26/2022 10:54	34.39	6/26/2022 11:41	19.96	6/25/2022 14:14	6.25
6/26/2022 10:55	34.42	6/26/2022 11:42	19.95	6/25/2022 14:15	6.21
6/26/2022 10:56	34.43	6/26/2022 11:43	19.95	6/25/2022 14:16	6.22
6/26/2022 10:57	34.41	6/26/2022 11:44	19.97	6/25/2022 14:17	6.23
6/26/2022 10:58	34.39	6/26/2022 11:45	19.96	6/25/2022 14:18	6.23
6/26/2022 10:59	34.42	6/26/2022 11:46	19.95	6/25/2022 14:19	6.20
6/26/2022 11:00	34.40	6/26/2022 11:47	19.96	6/25/2022 14:20	6.25
6/26/2022 11:01	34.42	6/26/2022 11:48	19.96	6/25/2022 14:21	6.19
6/26/2022 11:02	34.40	6/26/2022 11:49	19.95	6/25/2022 14:22	6.23
6/26/2022 11:03	34.38	6/26/2022 11:50	19.95	6/25/2022 14:23	6.25
6/26/2022 11:04	34.40	6/26/2022 11:51	19.95	6/25/2022 14:24	6.26
6/26/2022 11:05	34.42	6/26/2022 11:52	19.94	6/25/2022 14:25	6.25
6/26/2022 11:06	34.42	6/26/2022 11:53	19.96	6/25/2022 14:26	6.22

6/26/2022 11:07	34.40	6/26/2022 11:54	19.94	6/25/2022 14:27	6.25
6/26/2022 11:08	34.42	6/26/2022 11:55	19.96	6/25/2022 14:28	6.23
6/26/2022 11:09	34.40	6/26/2022 11:56	19.95	6/25/2022 14:29	6.24
6/26/2022 11:10	34.38	6/26/2022 11:57	19.95	6/25/2022 14:30	6.25
6/26/2022 11:11	34.39	6/26/2022 11:58	19.92	6/25/2022 14:31	6.20
6/26/2022 11:12	34.37	6/26/2022 11:59	19.94	6/25/2022 14:32	6.20
6/26/2022 11:13	34.39	6/26/2022 12:00	19.95	6/25/2022 14:33	6.21
6/26/2022 11:14	34.39	6/26/2022 12:01	19.94	6/25/2022 14:34	6.23
6/26/2022 11:15	34.42	6/26/2022 12:02	19.93	6/25/2022 14:35	6.24
6/26/2022 11:16	34.40	6/26/2022 12:03	19.92	6/25/2022 14:36	6.22
6/26/2022 11:17	34.38	6/26/2022 12:04	19.93	6/25/2022 14:37	6.24
6/26/2022 11:18	34.42	6/26/2022 12:05	19.93	6/25/2022 14:38	6.25
6/26/2022 11:19	34.40	6/26/2022 12:06	19.91	6/25/2022 14:39	6.21
6/26/2022 11:20	34.39	6/26/2022 12:07	19.95	6/25/2022 14:40	6.19
6/26/2022 11:21	34.40	6/26/2022 12:08	19.95	6/25/2022 14:41	6.26
6/26/2022 11:22	34.42	6/26/2022 12:09	19.93	6/25/2022 14:42	6.23
6/26/2022 11:23	34.41	6/26/2022 12:10	19.91	6/25/2022 14:43	6.23
6/26/2022 11:24	34.40	6/26/2022 12:11	19.91	6/25/2022 14:44	6.20
6/26/2022 11:25	34.38	6/26/2022 12:12	19.93	6/25/2022 14:45	6.22
6/26/2022 11:26	34.39	6/26/2022 12:13	19.93	6/25/2022 14:46	6.20
6/26/2022 11:27	34.41	6/26/2022 12:14	19.91	6/25/2022 14:47	6.22
6/26/2022 11:28	34.41	6/26/2022 12:15	19.95	6/25/2022 14:48	6.22
6/26/2022 11:29	34.40	6/26/2022 12:16	19.93	6/25/2022 14:49	6.22
6/26/2022 11:30	34.41	6/26/2022 12:17	19.93	6/25/2022 14:50	6.24
6/26/2022 11:31	34.38	6/26/2022 12:18	19.92	6/25/2022 14:51	6.18
6/26/2022 11:32	34.37	6/26/2022 12:19	19.91	6/25/2022 14:52	6.22
6/26/2022 11:33	34.42	6/26/2022 12:20	19.94	6/25/2022 14:53	6.22
6/26/2022 11:34	34.38	6/26/2022 12:21	19.92	6/25/2022 14:54	6.22
6/26/2022 11:35	34.42	6/26/2022 12:22	19.91	6/25/2022 14:55	6.20
6/26/2022 11:36	34.40	6/26/2022 12:23	19.94	6/25/2022 14:56	6.19
6/26/2022 11:37	34.38	6/26/2022 12:24	19.94	6/25/2022 14:57	6.21
6/26/2022 11:38	34.37	6/26/2022 12:25	19.91	6/25/2022 14:58	6.24
6/26/2022 11:39	34.39	6/26/2022 12:26	19.92	6/25/2022 14:59	6.26
6/26/2022 11:40	34.41	6/26/2022 12:27	19.92	6/25/2022 15:00	6.22
6/26/2022 11:41	34.39	6/26/2022 12:28	19.92	6/25/2022 15:01	6.27
6/26/2022 11:42	34.39	6/26/2022 12:29	19.95	6/25/2022 15:02	6.27
6/26/2022 11:43	34.38	6/26/2022 12:30	19.93	6/25/2022 15:03	6.23
6/26/2022 11:44	34.38	6/26/2022 12:31	19.91	6/25/2022 15:04	6.23
6/26/2022 11:45	34.38	6/26/2022 12:32	19.93	6/25/2022 15:05	6.23
6/26/2022 11:46	34.36	6/26/2022 12:33	19.91	6/25/2022 15:06	6.22
6/26/2022 11:47	34.39	6/26/2022 12:34	19.90	6/25/2022 15:07	6.22
6/26/2022 11:48	34.37	6/26/2022 12:35	19.92	6/25/2022 15:08	6.24
6/26/2022 11:49	34.39	6/26/2022 12:36	19.91	6/25/2022 15:09	6.22
6/26/2022 11:50	34.38	6/26/2022 12:37	19.91	6/25/2022 15:10	6.24
6/26/2022 11:51	34.40	6/26/2022 12:38	19.90	6/25/2022 15:11	6.23
6/26/2022 11:52	34.37	6/26/2022 12:39	19.92	6/25/2022 15:12	6.21
6/26/2022 11:53	34.34	6/26/2022 12:40	19.91	6/25/2022 15:13	6.21
6/26/2022 11:54	34.40	6/26/2022 12:41	19.92	6/25/2022 15:14	6.24
6/26/2022 11:55	34.36	6/26/2022 12:42	19.91	6/25/2022 15:15	6.21
6/26/2022 11:56	34.39	6/26/2022 12:43	19.90	6/25/2022 15:16	6.23
6/26/2022 11:57	34.38	6/26/2022 12:44	19.92	6/25/2022 15:17	6.23
6/26/2022 11:58	34.37	6/26/2022 12:45	19.91	6/25/2022 15:18	6.23
6/26/2022 11:59	34.40	6/26/2022 12:46	19.90	6/25/2022 15:19	6.24
6/26/2022 12:00	34.39	6/26/2022 12:47	19.90	6/25/2022 15:20	6.22
6/26/2022 12:01	34.35	6/26/2022 12:48	19.90	6/25/2022 15:21	6.21
6/26/2022 12:02	34.36	6/26/2022 12:49	19.90	6/25/2022 15:22	6.23
6/26/2022 12:03	34.37	6/26/2022 12:50	19.90	6/25/2022 15:23	6.21
6/26/2022 12:04	34.34	6/26/2022 12:51	19.92	6/25/2022 15:24	6.24
6/26/2022 12:05	34.34	6/26/2022 12:52	19.91	6/25/2022 15:25	6.20
6/26/2022 12:06	34.35	6/26/2022 12:53	19.91	6/25/2022 15:26	6.25
6/26/2022 12:07	34.37	6/26/2022 12:54	19.91	6/25/2022 15:27	6.22
6/26/2022 12:08	34.37	6/26/2022 12:55	19.92	6/25/2022 15:28	6.25
6/26/2022 12:09	34.40	6/26/2022 12:56	19.89	6/25/2022 15:29	6.22
6/26/2022 12:10	34.42	6/26/2022 12:57	19.90	6/25/2022 15:30	6.24
6/26/2022 12:11	34.38	6/26/2022 12:58	19.93	6/25/2022 15:31	6.20
6/26/2022 12:12	34.41	6/26/2022 12:59	19.91	6/25/2022 15:32	6.22
6/26/2022 12:13	34.37	6/26/2022 13:00	19.90	6/25/2022 15:33	6.22
6/26/2022 12:14	34.36	6/26/2022 13:01	19.89	6/25/2022 15:34	6.22
6/26/2022 12:15	34.36	6/26/2022 13:02	19.92	6/25/2022 15:35	6.23
6/26/2022 12:16	34.37	6/26/2022 13:03	19.92	6/25/2022 15:36	6.26
6/26/2022 12:17	34.40	6/26/2022 13:04	19.88	6/25/2022 15:37	6.21
6/26/2022 12:18	34.40	6/26/2022 13:05	19.93	6/25/2022 15:38	6.23
6/26/2022 12:19	34.39	6/26/2022 13:06	19.92	6/25/2022 15:39	6.25
6/26/2022 12:20	34.34	6/26/2022 13:07	19.90	6/25/2022 15:40	6.25
6/26/2022 12:21	34.34	6/26/2022 13:08	19.91	6/25/2022 15:41	6.24
6/26/2022 12:22	34.36	6/26/2022 13:09	19.91	6/25/2022 15:42	6.22
6/26/2022 12:23	34.38	6/26/2022 13:10	19.92	6/25/2022 15:43	6.22
6/26/2022 12:24	34.36	6/26/2022 13:11	19.91	6/25/2022 15:44	6.20
6/26/2022 12:25	34.37	6/26/2022 13:12	19.90	6/25/2022 15:45	6.24
6/26/2022 12:26	34.36	6/26/2022 13:13	19.90	6/25/2022 15:46	6.20
6/26/2022 12:27	34.40	6/26/2022 13:14	19.92	6/25/2022 15:47	6.22
6/26/2022 12:28	34.39	6/26/2022 13:15	19.88	6/25/2022 15:48	6.22
6/26/2022 12:29	34.37	6/26/2022 13:16	20.49	6/25/2022 15:49	6.19
6/26/2022 12:30	34.35	6/26/2022 13:17	20.60	6/25/2022 15:50	6.25
6/26/2022 12:31	34.39	6/26/2022 13:18	20.66	6/25/2022 15:51	6.21
6/26/2022 12:32	34.39	6/26/2022 13:19	20.71	6/25/2022 15:52	6.25
6/26/2022 12:33	34.34	6/26/2022 13:20	20.48	6/25/2022 15:53	6.24
6/26/2022 12:34	34.37	6/26/2022 13:21	20.15	6/25/2022 15:54	6.26

6/26/2022 12:35	34.39	6/26/2022 13:22	20.09	6/25/2022 15:55	6.24
6/26/2022 12:36	34.34	6/26/2022 13:23	20.08	6/25/2022 15:56	6.23
6/26/2022 12:37	34.35	6/26/2022 13:24	20.07	6/25/2022 15:57	6.24
6/26/2022 12:38	34.33	6/26/2022 13:25	20.05	6/25/2022 15:58	6.22
6/26/2022 12:39	34.35	6/26/2022 13:26	20.00	6/25/2022 15:59	6.24
6/26/2022 12:40	34.34	6/26/2022 13:27	20.02	6/25/2022 16:00	6.23
6/26/2022 12:41	34.37	6/26/2022 13:28	20.03	6/25/2022 16:01	6.20
6/26/2022 12:42	34.36	6/26/2022 13:29	20.02	6/25/2022 16:02	6.23
6/26/2022 12:43	34.36	6/26/2022 13:30	19.98	6/25/2022 16:03	6.25
6/26/2022 12:44	34.37	6/26/2022 13:31	20.00	6/25/2022 16:04	6.23
6/26/2022 12:45	34.38	6/26/2022 13:32	20.01	6/25/2022 16:05	6.24
6/26/2022 12:46	34.37	6/26/2022 13:33	20.00	6/25/2022 16:06	6.25
6/26/2022 12:47	34.35	6/26/2022 13:34	19.98	6/25/2022 16:07	6.24
6/26/2022 12:48	34.34	6/26/2022 13:35	19.97	6/25/2022 16:08	6.22
6/26/2022 12:49	34.35	6/26/2022 13:36	19.97	6/25/2022 16:09	6.22
6/26/2022 12:50	34.37	6/26/2022 13:37	19.98	6/25/2022 16:10	6.22
6/26/2022 12:51	34.40	6/26/2022 13:38	19.96	6/25/2022 16:11	6.24
6/26/2022 12:52	34.43	6/26/2022 13:39	19.98	6/25/2022 16:12	6.24
6/26/2022 12:53	34.38	6/26/2022 13:40	20.01	6/25/2022 16:13	6.25
6/26/2022 12:54	34.38	6/26/2022 13:41	19.94	6/25/2022 16:14	6.23
6/26/2022 12:55	34.38	6/26/2022 13:42	19.98	6/25/2022 16:15	6.26
6/26/2022 12:56	34.36	6/26/2022 13:43	19.95	6/25/2022 16:16	6.24
6/26/2022 12:57	34.40	6/26/2022 13:44	19.98	6/25/2022 16:17	6.25
6/26/2022 12:58	34.39	6/26/2022 13:45	19.97	6/25/2022 16:18	6.22
6/26/2022 12:59	34.36	6/26/2022 13:46	19.97	6/25/2022 16:19	6.22
6/26/2022 13:00	34.38	6/26/2022 13:47	19.96	6/25/2022 16:20	6.23
6/26/2022 13:01	34.39	6/26/2022 13:48	19.96	6/25/2022 16:21	6.22
6/26/2022 13:02	34.38	6/26/2022 13:49	19.95	6/25/2022 16:22	6.24
6/26/2022 13:03	34.34	6/26/2022 13:50	19.94	6/25/2022 16:23	6.22
6/26/2022 13:04	34.35	6/26/2022 13:51	19.96	6/25/2022 16:24	6.25
6/26/2022 13:05	34.38	6/26/2022 13:52	19.97	6/25/2022 16:25	6.24
6/26/2022 13:06	34.36	6/26/2022 13:53	19.98	6/25/2022 16:26	6.22
6/26/2022 13:07	34.37	6/26/2022 13:54	19.96	6/25/2022 16:27	6.22
6/26/2022 13:08	34.35	6/26/2022 13:55	19.98	6/25/2022 16:28	6.24
6/26/2022 13:09	34.37	6/26/2022 13:56	19.94	6/25/2022 16:29	6.24
6/26/2022 13:10	34.34	6/26/2022 13:57	19.94	6/25/2022 16:30	6.23
6/26/2022 13:11	34.34	6/26/2022 13:58	19.94	6/25/2022 16:31	6.23
6/26/2022 13:12	34.38	6/26/2022 13:59	19.97	6/25/2022 16:32	6.23
6/26/2022 13:13	34.36	6/26/2022 14:00	19.95	6/25/2022 16:33	6.24
6/26/2022 13:14	34.35	6/26/2022 14:01	19.97	6/25/2022 16:34	6.26
6/26/2022 13:15	34.35	6/26/2022 14:02	19.95	6/25/2022 16:35	6.25
6/26/2022 13:16	34.35	6/26/2022 14:03	19.92	6/25/2022 16:36	6.23
6/26/2022 13:17	34.36	6/26/2022 14:04	19.93	6/25/2022 16:37	6.24
6/26/2022 13:18	34.35	6/26/2022 14:05	19.95	6/25/2022 16:38	6.23
6/26/2022 13:19	34.36	6/26/2022 14:06	19.94	6/25/2022 16:39	6.23
6/26/2022 13:20	34.35	6/26/2022 14:07	19.94	6/25/2022 16:40	6.18
6/26/2022 13:21	34.34	6/26/2022 14:08	19.94	6/25/2022 16:41	6.22
6/26/2022 13:22	34.34	6/26/2022 14:09	19.94	6/25/2022 16:42	6.24
6/26/2022 13:23	34.32	6/26/2022 14:10	19.93	6/25/2022 16:43	6.25
6/26/2022 13:24	34.33	6/26/2022 14:11	19.94	6/25/2022 16:44	6.24
6/26/2022 13:25	34.35	6/26/2022 14:12	19.92	6/25/2022 16:45	6.25
6/26/2022 13:26	34.36	6/26/2022 14:13	19.93	6/25/2022 16:46	6.24
6/26/2022 13:27	34.34	6/26/2022 14:14	19.90	6/25/2022 16:47	6.22
6/26/2022 13:28	34.33	6/26/2022 14:15	19.92	6/25/2022 16:48	6.21
6/26/2022 13:29	34.33	6/26/2022 14:16	19.93	6/25/2022 16:49	6.25
6/26/2022 13:30	34.33	6/26/2022 14:17	19.92	6/25/2022 16:50	6.23
6/26/2022 13:31	34.35	6/26/2022 14:18	19.92	6/25/2022 16:51	6.24
6/26/2022 13:32	34.31	6/26/2022 14:19	19.92	6/25/2022 16:52	6.21
6/26/2022 13:33	34.33	6/26/2022 14:20	19.94	6/25/2022 16:53	6.26
6/26/2022 13:34	34.36	6/26/2022 14:21	19.90	6/25/2022 16:54	6.27
6/26/2022 13:35	34.33	6/26/2022 14:22	19.92	6/25/2022 16:55	6.23
6/26/2022 13:36	34.32	6/26/2022 14:23	19.93	6/25/2022 16:56	6.22
6/26/2022 13:37	34.33	6/26/2022 14:24	19.92	6/25/2022 16:57	6.24
6/26/2022 13:38	34.33	6/26/2022 14:25	19.92	6/25/2022 16:58	6.23
6/26/2022 13:39	34.32	6/26/2022 14:26	19.90	6/25/2022 16:59	6.25
6/26/2022 13:40	34.30	6/26/2022 14:27	19.91	6/25/2022 17:00	6.26
6/26/2022 13:41	34.33	6/26/2022 14:28	19.90	6/25/2022 17:01	6.25
6/26/2022 13:42	34.31	6/26/2022 14:29	19.94	6/25/2022 17:02	6.26
6/26/2022 13:43	34.34	6/26/2022 14:30	19.96	6/25/2022 17:03	6.20
6/26/2022 13:44	34.34	6/26/2022 14:31	19.91	6/25/2022 17:04	6.21
6/26/2022 13:45	34.34	6/26/2022 14:32	19.92	6/25/2022 17:05	6.25
6/26/2022 13:46	34.30	6/26/2022 14:33	19.93	6/25/2022 17:06	6.23
6/26/2022 13:47	34.32	6/26/2022 14:34	19.94	6/25/2022 17:07	6.25
6/26/2022 13:48	34.32	6/26/2022 14:35	19.90	6/25/2022 17:08	6.25
6/26/2022 13:49	34.34	6/26/2022 14:36	19.91	6/25/2022 17:09	6.23
6/26/2022 13:50	34.30	6/26/2022 14:37	19.91	6/25/2022 17:10	6.21
6/26/2022 13:51	34.29	6/26/2022 14:38	19.89	6/25/2022 17:11	6.24
6/26/2022 13:52	34.30	6/26/2022 14:39	19.91	6/25/2022 17:12	6.24
6/26/2022 13:53	34.30	6/26/2022 14:40	19.92	6/25/2022 17:13	6.23
6/26/2022 13:54	34.31	6/26/2022 14:41	19.93	6/25/2022 17:14	6.21
6/26/2022 13:55	34.30	6/26/2022 14:42	19.92	6/25/2022 17:15	6.22
6/26/2022 13:56	34.31	6/26/2022 14:43	19.93	6/25/2022 17:16	6.24
6/26/2022 13:57	34.33	6/26/2022 14:44	19.93	6/25/2022 17:17	6.24
6/26/2022 13:58	34.31	6/26/2022 14:45	19.90	6/25/2022 17:18	6.26
6/26/2022 13:59	34.30	6/26/2022 14:46	19.92	6/25/2022 17:19	6.24
6/26/2022 14:00	34.34	6/26/2022 14:47	19.91	6/25/2022 17:20	6.26
6/26/2022 14:01	34.30	6/26/2022 14:48	19.93	6/25/2022 17:21	6.22
6/26/2022 14:02	34.33	6/26/2022 14:49	19.93	6/25/2022 17:22	6.24

6/26/2022 14:03	34.35	6/26/2022 14:50	19.89	6/25/2022 17:23	6.23
6/26/2022 14:04	34.31	6/26/2022 14:51	19.90	6/25/2022 17:24	6.23
6/26/2022 14:05	34.33	6/26/2022 14:52	19.95	6/25/2022 17:25	6.27
6/26/2022 14:06	34.29	6/26/2022 14:53	19.93	6/25/2022 17:26	6.25
6/26/2022 14:07	34.32	6/26/2022 14:54	19.96	6/25/2022 17:27	6.22
6/26/2022 14:08	34.32	6/26/2022 14:55	19.92	6/25/2022 17:28	6.24
6/26/2022 14:09	34.29	6/26/2022 14:56	19.92	6/25/2022 17:29	6.22
6/26/2022 14:10	34.32	6/26/2022 14:57	19.92	6/25/2022 17:30	6.20
6/26/2022 14:11	34.30	6/26/2022 14:58	19.92	6/25/2022 17:31	6.24
6/26/2022 14:12	34.31	6/26/2022 14:59	19.93	6/25/2022 17:32	6.23
6/26/2022 14:13	34.29	6/26/2022 15:00	19.93	6/25/2022 17:33	6.26
6/26/2022 14:14	34.29	6/26/2022 15:01	19.92	6/25/2022 17:34	6.23
6/26/2022 14:15	34.32	6/26/2022 15:02	19.92	6/25/2022 17:35	6.25
6/26/2022 14:16	34.31	6/26/2022 15:03	19.90	6/25/2022 17:36	6.24
6/26/2022 14:17	34.27	6/26/2022 15:04	19.91	6/25/2022 17:37	6.23
6/26/2022 14:18	34.31	6/26/2022 15:05	19.90	6/25/2022 17:38	6.22
6/26/2022 14:19	34.31	6/26/2022 15:06	19.88	6/25/2022 17:39	6.24
6/26/2022 14:20	34.29	6/26/2022 15:07	19.90	6/25/2022 17:40	6.21
6/26/2022 14:21	34.29	6/26/2022 15:08	19.92	6/25/2022 17:41	6.21
6/26/2022 14:22	34.30	6/26/2022 15:09	19.93	6/25/2022 17:42	6.24
6/26/2022 14:23	34.29	6/26/2022 15:10	19.92	6/25/2022 17:43	6.26
6/26/2022 14:24	34.27	6/26/2022 15:11	19.90	6/25/2022 17:44	6.23
6/26/2022 14:25	34.30	6/26/2022 15:12	19.94	6/25/2022 17:45	6.24
6/26/2022 14:26	34.29	6/26/2022 15:13	19.92	6/25/2022 17:46	6.22
6/26/2022 14:27	34.34	6/26/2022 15:14	19.93	6/25/2022 17:47	6.26
6/26/2022 14:28	34.29	6/26/2022 15:15	19.92	6/25/2022 17:48	6.22
6/26/2022 14:29	34.27	6/26/2022 15:16	19.90	6/25/2022 17:49	6.26
6/26/2022 14:30	34.31	6/26/2022 15:17	19.91	6/25/2022 17:50	6.21
6/26/2022 14:31	34.32	6/26/2022 15:18	19.92	6/25/2022 17:51	6.22
6/26/2022 14:32	34.30	6/26/2022 15:19	19.91	6/25/2022 17:52	6.24
6/26/2022 14:33	34.33	6/26/2022 15:20	19.91	6/25/2022 17:53	6.24
6/26/2022 14:34	34.29	6/26/2022 15:21	19.91	6/25/2022 17:54	6.23
6/26/2022 14:35	34.27	6/26/2022 15:22	19.90	6/25/2022 17:55	6.23
6/26/2022 14:36	34.29	6/26/2022 15:23	19.90	6/25/2022 17:56	6.22
6/26/2022 14:37	34.28	6/26/2022 15:24	19.89	6/25/2022 17:57	6.23
6/26/2022 14:38	34.28	6/26/2022 15:25	19.90	6/25/2022 17:58	6.21
6/26/2022 14:39	34.32	6/26/2022 15:26	19.92	6/25/2022 17:59	6.25
6/26/2022 14:40	34.27	6/26/2022 15:27	19.91	6/25/2022 18:00	6.23
6/26/2022 14:41	34.31	6/26/2022 15:28	19.90	6/25/2022 18:01	6.27
6/26/2022 14:42	34.29	6/26/2022 15:29	19.90	6/25/2022 18:02	6.21
6/26/2022 14:43	34.26	6/26/2022 15:30	19.89	6/25/2022 18:03	6.24
6/26/2022 14:44	34.32	6/26/2022 15:31	19.90	6/25/2022 18:04	6.24
6/26/2022 14:45	34.27	6/26/2022 15:32	19.91	6/25/2022 18:05	6.25
6/26/2022 14:46	34.30	6/26/2022 15:33	19.90	6/25/2022 18:06	8.69
6/26/2022 14:47	34.29	6/26/2022 15:34	19.90	6/25/2022 18:07	9.01
6/26/2022 14:48	34.29	6/26/2022 15:35	19.92	6/25/2022 18:08	6.43
6/26/2022 14:49	34.30	6/26/2022 15:36	19.90	6/25/2022 18:09	6.31
6/26/2022 14:50	34.28	6/26/2022 15:37	19.93	6/25/2022 18:10	6.26
6/26/2022 14:51	34.29	6/26/2022 15:38	19.90	6/25/2022 18:11	6.26
6/26/2022 14:52	34.29	6/26/2022 15:39	19.91	6/25/2022 18:12	6.27
6/26/2022 14:53	34.26	6/26/2022 15:40	19.91	6/25/2022 18:13	6.22
6/26/2022 14:54	34.25	6/26/2022 15:41	19.91	6/25/2022 18:14	6.23
6/26/2022 14:55	34.28	6/26/2022 15:42	19.91	6/25/2022 18:15	6.26
6/26/2022 14:56	34.30	6/26/2022 15:43	19.91	6/25/2022 18:16	6.26
6/26/2022 14:57	34.21	6/26/2022 15:44	19.92	6/25/2022 18:17	6.26
6/26/2022 14:58	34.30	6/26/2022 15:45	19.89	6/25/2022 18:18	6.26
6/26/2022 14:59	34.27	6/26/2022 15:46	19.89	6/25/2022 18:19	6.23
6/26/2022 15:00	34.31	6/26/2022 15:47	19.90	6/25/2022 18:20	6.25
6/26/2022 15:01	34.30	6/26/2022 15:48	19.90	6/25/2022 18:21	6.23
6/26/2022 15:02	34.27	6/26/2022 15:49	19.90	6/25/2022 18:22	6.28
6/26/2022 15:03	34.28	6/26/2022 15:50	19.91	6/25/2022 18:23	6.23
6/26/2022 15:04	34.28	6/26/2022 15:51	19.94	6/25/2022 18:24	6.23
6/26/2022 15:05	34.24	6/26/2022 15:52	19.89	6/25/2022 18:25	6.24
6/26/2022 15:06	34.23	6/26/2022 15:53	19.90	6/25/2022 18:26	6.27
6/26/2022 15:07	34.27	6/26/2022 15:54	19.90	6/25/2022 18:27	6.23
6/26/2022 15:08	34.29	6/26/2022 15:55	19.90	6/25/2022 18:28	6.25
6/26/2022 15:09	34.24	6/26/2022 15:56	19.90	6/25/2022 18:29	6.26
6/26/2022 15:10	34.28	6/26/2022 15:57	19.91	6/25/2022 18:30	6.22
6/26/2022 15:11	34.28	6/26/2022 15:58	19.90	6/25/2022 18:31	6.25
6/26/2022 15:12	34.25	6/26/2022 15:59	19.92	6/25/2022 18:32	6.26
6/26/2022 15:13	34.26	6/26/2022 16:00	19.92	6/25/2022 18:33	6.26
6/26/2022 15:14	34.29	6/26/2022 16:01	19.89	6/25/2022 18:34	6.23
6/26/2022 15:15	34.28	6/26/2022 16:02	19.91	6/25/2022 18:35	6.23
6/26/2022 15:16	34.25	6/26/2022 16:03	19.91	6/25/2022 18:36	6.23
6/26/2022 15:17	34.28	6/26/2022 16:04	19.90	6/25/2022 18:37	6.22
6/26/2022 15:18	34.29	6/26/2022 16:05	19.92	6/25/2022 18:38	6.21
6/26/2022 15:19	34.28	6/26/2022 16:06	19.90	6/25/2022 18:39	6.24
6/26/2022 15:20	34.27	6/26/2022 16:07	19.90	6/25/2022 18:40	6.23
6/26/2022 15:21	34.26	6/26/2022 16:08	19.91	6/25/2022 18:41	6.24
6/26/2022 15:22	34.24	6/26/2022 16:09	19.93	6/25/2022 18:42	6.26
6/26/2022 15:23	34.27	6/26/2022 16:10	19.90	6/25/2022 18:43	6.25
6/26/2022 15:24	34.26	6/26/2022 16:11	19.88	6/25/2022 18:44	6.26
6/26/2022 15:25	34.28	6/26/2022 16:12	19.92	6/25/2022 18:45	6.25
6/26/2022 15:26	34.26	6/26/2022 16:13	19.90	6/25/2022 18:46	6.27
6/26/2022 15:27	34.27	6/26/2022 16:14	19.89	6/25/2022 18:47	6.24
6/26/2022 15:28	34.25	6/26/2022 16:15	19.91	6/25/2022 18:48	6.25
6/26/2022 15:29	34.27	6/26/2022 16:16	19.89	6/25/2022 18:49	6.23
6/26/2022 15:30	34.26	6/26/2022 16:17	19.89	6/25/2022 18:50	6.26

6/26/2022 15:31	34.28	6/26/2022 16:18	19.92	6/25/2022 18:51	6.24
6/26/2022 15:32	34.27	6/26/2022 16:19	19.89	6/25/2022 18:52	6.23
6/26/2022 15:33	34.29	6/26/2022 16:20	19.91	6/25/2022 18:53	6.24
6/26/2022 15:34	34.23	6/26/2022 16:21	19.92	6/25/2022 18:54	6.22
6/26/2022 15:35	34.23	6/26/2022 16:22	19.91	6/25/2022 18:55	6.25
6/26/2022 15:36	34.26	6/26/2022 16:23	19.91	6/25/2022 18:56	6.25
6/26/2022 15:37	34.26	6/26/2022 16:24	19.89	6/25/2022 18:57	6.25
6/26/2022 15:38	34.31	6/26/2022 16:25	19.88	6/25/2022 18:58	6.23
6/26/2022 15:39	34.30	6/26/2022 16:26	19.90	6/25/2022 18:59	6.28
6/26/2022 15:40	34.29	6/26/2022 16:27	19.88	6/25/2022 19:00	6.23
6/26/2022 15:41	34.30	6/26/2022 16:28	19.92	6/25/2022 19:01	6.26
6/26/2022 15:42	34.31	6/26/2022 16:29	19.88	6/25/2022 19:02	6.26
6/26/2022 15:43	34.30	6/26/2022 16:30	19.92	6/25/2022 19:03	6.26
6/26/2022 15:44	34.29	6/26/2022 16:31	19.91	6/25/2022 19:04	6.25
6/26/2022 15:45	34.28	6/26/2022 16:32	19.87	6/25/2022 19:05	6.25
6/26/2022 15:46	34.28	6/26/2022 16:33	19.90	6/25/2022 19:06	6.23
6/26/2022 15:47	34.30	6/26/2022 16:34	19.89	6/25/2022 19:07	6.24
6/26/2022 15:48	34.26	6/26/2022 16:35	19.89	6/25/2022 19:08	6.24
6/26/2022 15:49	34.30	6/26/2022 16:36	19.92	6/25/2022 19:09	6.25
6/26/2022 15:50	34.27	6/26/2022 16:37	19.90	6/25/2022 19:10	6.28
6/26/2022 15:51	34.30	6/26/2022 16:38	19.92	6/25/2022 19:11	6.25
6/26/2022 15:52	34.27	6/26/2022 16:39	19.91	6/25/2022 19:12	6.26
6/26/2022 15:53	34.27	6/26/2022 16:40	19.91	6/25/2022 19:13	6.25
6/26/2022 15:54	34.28	6/26/2022 16:41	19.92	6/25/2022 19:14	6.26
6/26/2022 15:55	34.26	6/26/2022 16:42	19.89	6/25/2022 19:15	6.24
6/26/2022 15:56	34.27	6/26/2022 16:43	19.88	6/25/2022 19:16	6.24
6/26/2022 15:57	34.28	6/26/2022 16:44	19.92	6/25/2022 19:17	6.25
6/26/2022 15:58	34.29	6/26/2022 16:45	19.91	6/25/2022 19:18	6.23
6/26/2022 15:59	34.28	6/26/2022 16:46	19.94	6/25/2022 19:19	6.24
6/26/2022 16:00	34.27	6/26/2022 16:47	19.91	6/25/2022 19:20	6.22
6/26/2022 16:01	34.29	6/26/2022 16:48	19.91	6/25/2022 19:21	6.25
6/26/2022 16:02	34.30	6/26/2022 16:49	19.94	6/25/2022 19:22	6.24
6/26/2022 16:03	34.28	6/26/2022 16:50	19.90	6/25/2022 19:23	6.22
6/26/2022 16:04	34.30	6/26/2022 16:51	19.91	6/25/2022 19:24	6.22
6/26/2022 16:05	34.28	6/26/2022 16:52	19.92	6/25/2022 19:25	6.23
6/26/2022 16:06	34.28	6/26/2022 16:53	19.92	6/25/2022 19:26	6.25
6/26/2022 16:07	34.27	6/26/2022 16:54	19.91	6/25/2022 19:27	6.26
6/26/2022 16:08	34.27	6/26/2022 16:55	19.94	6/25/2022 19:28	6.25
6/26/2022 16:09	34.29	6/26/2022 16:56	19.92	6/25/2022 19:29	6.23
6/26/2022 16:10	34.28	6/26/2022 16:57	19.90	6/25/2022 19:30	8.02
6/26/2022 16:11	34.27	6/26/2022 16:58	19.89	6/25/2022 19:31	9.09
6/26/2022 16:12	34.29	6/26/2022 16:59	19.91	6/25/2022 19:32	9.19
6/26/2022 16:13	34.28	6/26/2022 17:00	19.91	6/25/2022 19:33	9.03
6/26/2022 16:14	34.24	6/26/2022 17:01	19.93	6/25/2022 19:34	6.42
6/26/2022 16:15	34.27	6/26/2022 17:02	19.89	6/25/2022 19:35	6.32
6/26/2022 16:16	34.26	6/26/2022 17:03	19.90	6/25/2022 19:36	6.27
6/26/2022 16:17	34.26	6/26/2022 17:04	19.89	6/25/2022 19:37	6.27
6/26/2022 16:18	34.28	6/26/2022 17:05	19.88	6/25/2022 19:38	6.28
6/26/2022 16:19	34.25	6/26/2022 17:06	19.89	6/25/2022 19:39	6.25
6/26/2022 16:20	34.26	6/26/2022 17:07	19.91	6/25/2022 19:40	6.23
6/26/2022 16:21	34.25	6/26/2022 17:08	19.91	6/25/2022 19:41	6.26
6/26/2022 16:22	34.30	6/26/2022 17:09	19.91	6/25/2022 19:42	6.23
6/26/2022 16:23	34.30	6/26/2022 17:10	19.91	6/25/2022 19:43	6.26
6/26/2022 16:24	34.29	6/26/2022 17:11	19.92	6/25/2022 19:44	6.27
6/26/2022 16:25	34.25	6/26/2022 17:12	19.90	6/25/2022 19:45	6.28
6/26/2022 16:26	34.27	6/26/2022 17:13	19.90	6/25/2022 19:46	6.27
6/26/2022 16:27	34.28	6/26/2022 17:14	19.91	6/25/2022 19:47	6.23
6/26/2022 16:28	34.25	6/26/2022 17:15	19.93	6/25/2022 19:48	6.27
6/26/2022 16:29	34.24	6/26/2022 17:16	19.94	6/25/2022 19:49	6.27
6/26/2022 16:30	34.27	6/26/2022 17:17	19.92	6/25/2022 19:50	6.24
6/26/2022 16:31	34.25	6/26/2022 17:18	19.91	6/25/2022 19:51	6.23
6/26/2022 16:32	34.27	6/26/2022 17:19	19.90	6/25/2022 19:52	6.26
6/26/2022 16:33	34.23	6/26/2022 17:20	19.91	6/25/2022 19:53	6.24
6/26/2022 16:34	34.22	6/26/2022 17:21	19.87	6/25/2022 19:54	6.25
6/26/2022 16:35	34.30	6/26/2022 17:22	19.92	6/25/2022 19:55	6.23
6/26/2022 16:36	34.24	6/26/2022 17:23	19.93	6/25/2022 19:56	6.27
6/26/2022 16:37	34.25	6/26/2022 17:24	19.89	6/25/2022 19:57	6.27
6/26/2022 16:38	34.25	6/26/2022 17:25	19.91	6/25/2022 19:58	6.25
6/26/2022 16:39	34.23	6/26/2022 17:26	19.91	6/25/2022 19:59	6.28
6/26/2022 16:40	34.24	6/26/2022 17:27	19.91	6/25/2022 20:00	6.29
6/26/2022 16:41	34.24	6/26/2022 17:28	19.90	6/25/2022 20:01	6.25
6/26/2022 16:42	34.25	6/26/2022 17:29	19.90	6/25/2022 20:02	6.25
6/26/2022 16:43	34.22	6/26/2022 17:30	19.89	6/25/2022 20:03	6.21
6/26/2022 16:44	34.25	6/26/2022 17:31	19.93	6/25/2022 20:04	6.23
6/26/2022 16:45	34.27	6/26/2022 17:32	19.93	6/25/2022 20:05	6.25
6/26/2022 16:46	34.26	6/26/2022 17:33	19.90	6/25/2022 20:06	6.24
6/26/2022 16:47	34.23	6/26/2022 17:34	19.91	6/25/2022 20:07	6.26
6/26/2022 16:48	34.24	6/26/2022 17:35	19.91	6/25/2022 20:08	6.22
6/26/2022 16:49	34.25	6/26/2022 17:36	19.90	6/25/2022 20:09	6.26
6/26/2022 16:50	34.26	6/26/2022 17:37	19.92	6/25/2022 20:10	6.28
6/26/2022 16:51	34.23	6/26/2022 17:38	19.91	6/25/2022 20:11	6.27
6/26/2022 16:52	34.26	6/26/2022 17:39	19.89	6/25/2022 20:12	6.25
6/26/2022 16:53	34.26	6/26/2022 17:40	19.93	6/25/2022 20:13	6.23
6/26/2022 16:54	34.27	6/26/2022 17:41	19.90	6/25/2022 20:14	6.23
6/26/2022 16:55	34.24	6/26/2022 17:42	19.89	6/25/2022 20:15	6.25
6/26/2022 16:56	34.24	6/26/2022 17:43	19.93	6/25/2022 20:16	6.22
6/26/2022 16:57	34.24	6/26/2022 17:44	19.91	6/25/2022 20:17	6.27
6/26/2022 16:58	34.21	6/26/2022 17:45	19.92	6/25/2022 20:18	6.24

6/26/2022 16:59	34.28	6/26/2022 17:46	19.91	6/25/2022 20:19	6.25
6/26/2022 17:00	34.23	6/26/2022 17:47	19.89	6/25/2022 20:20	6.28
6/26/2022 17:01	34.22	6/26/2022 17:48	19.89	6/25/2022 20:21	6.23
6/26/2022 17:02	34.26	6/26/2022 17:49	19.90	6/25/2022 20:22	6.26
6/26/2022 17:03	34.24	6/26/2022 17:50	19.91	6/25/2022 20:23	6.25
6/26/2022 17:04	34.25	6/26/2022 17:51	19.89	6/25/2022 20:24	6.28
6/26/2022 17:05	34.25	6/26/2022 17:52	19.91	6/25/2022 20:25	6.27
6/26/2022 17:06	34.25	6/26/2022 17:53	19.92	6/25/2022 20:26	6.26
6/26/2022 17:07	34.24	6/26/2022 17:54	19.92	6/25/2022 20:27	6.24
6/26/2022 17:08	34.26	6/26/2022 17:55	19.89	6/25/2022 20:28	6.23
6/26/2022 17:09	34.25	6/26/2022 17:56	19.92	6/25/2022 20:29	6.25
6/26/2022 17:10	34.22	6/26/2022 17:57	19.92	6/25/2022 20:30	6.21
6/26/2022 17:11	34.22	6/26/2022 17:58	19.92	6/25/2022 20:31	6.29
6/26/2022 17:12	34.24	6/26/2022 17:59	19.89	6/25/2022 20:32	6.25
6/26/2022 17:13	34.22	6/26/2022 18:00	19.90	6/25/2022 20:33	6.26
6/26/2022 17:14	34.24	6/26/2022 18:01	19.93	6/25/2022 20:34	6.23
6/26/2022 17:15	34.23	6/26/2022 18:02	19.95	6/25/2022 20:35	6.25
6/26/2022 17:16	34.25	6/26/2022 18:03	19.91	6/25/2022 20:36	6.24
6/26/2022 17:17	34.22	6/26/2022 18:04	19.88	6/25/2022 20:37	6.25
6/26/2022 17:18	34.20	6/26/2022 18:05	19.91	6/25/2022 20:38	6.25
6/26/2022 17:19	34.21	6/26/2022 18:06	19.89	6/25/2022 20:39	6.23
6/26/2022 17:20	34.23	6/26/2022 18:07	19.92	6/25/2022 20:40	6.22
6/26/2022 17:21	34.25	6/26/2022 18:08	19.91	6/25/2022 20:41	6.24
6/26/2022 17:22	34.24	6/26/2022 18:09	19.90	6/25/2022 20:42	6.22
6/26/2022 17:23	34.24	6/26/2022 18:10	19.89	6/25/2022 20:43	6.25
6/26/2022 17:24	34.24	6/26/2022 18:11	19.91	6/25/2022 20:44	6.27
6/26/2022 17:25	34.25	6/26/2022 18:12	19.89	6/25/2022 20:45	6.27
6/26/2022 17:26	34.24	6/26/2022 18:13	19.89	6/25/2022 20:46	6.26
6/26/2022 17:27	34.23	6/26/2022 18:14	19.90	6/25/2022 20:47	6.24
6/26/2022 17:28	34.22	6/26/2022 18:15	19.90	6/25/2022 20:48	6.24
6/26/2022 17:29	34.23	6/26/2022 18:16	19.89	6/25/2022 20:49	6.26
6/26/2022 17:30	34.25	6/26/2022 18:17	19.89	6/25/2022 20:50	6.24
6/26/2022 17:31	34.25	6/26/2022 18:18	19.94	6/25/2022 20:51	6.24
6/26/2022 17:32	34.25	6/26/2022 18:19	19.91	6/25/2022 20:52	6.22
6/26/2022 17:33	34.23	6/26/2022 18:20	19.89	6/25/2022 20:53	6.24
6/26/2022 17:34	34.22	6/26/2022 18:21	19.89	6/25/2022 20:54	6.24
6/26/2022 17:35	34.26	6/26/2022 18:22	19.90	6/25/2022 20:55	6.22
6/26/2022 17:36	34.22	6/26/2022 18:23	19.90	6/25/2022 20:56	6.23
6/26/2022 17:37	34.22	6/26/2022 18:24	19.91	6/25/2022 20:57	6.23
6/26/2022 17:38	34.21	6/26/2022 18:25	19.91	6/25/2022 20:58	6.27
6/26/2022 17:39	34.24	6/26/2022 18:26	19.89	6/25/2022 20:59	6.24
6/26/2022 17:40	34.22	6/26/2022 18:27	19.93	6/25/2022 21:00	6.24
6/26/2022 17:41	34.25	6/26/2022 18:28	19.87	6/25/2022 21:01	6.24
6/26/2022 17:42	34.23	6/26/2022 18:29	19.91	6/25/2022 21:02	6.23
6/26/2022 17:43	34.22	6/26/2022 18:30	19.90	6/25/2022 21:03	6.25
6/26/2022 17:44	34.24	6/26/2022 18:31	19.91	6/25/2022 21:04	6.22
6/26/2022 17:45	34.21	6/26/2022 18:32	19.89	6/25/2022 21:05	6.24
6/26/2022 17:46	34.21	6/26/2022 18:33	19.93	6/25/2022 21:06	6.27
6/26/2022 17:47	34.23	6/26/2022 18:34	19.90	6/25/2022 21:07	6.23
6/26/2022 17:48	34.22	6/26/2022 18:35	19.90	6/25/2022 21:08	6.24
6/26/2022 17:49	34.23	6/26/2022 18:36	19.91	6/25/2022 21:09	6.24
6/26/2022 17:50	34.24	6/26/2022 18:37	19.91	6/25/2022 21:10	6.24
6/26/2022 17:51	34.21	6/26/2022 18:38	19.93	6/25/2022 21:11	6.27
6/26/2022 17:52	34.23	6/26/2022 18:39	19.93	6/25/2022 21:12	6.20
6/26/2022 17:53	34.21	6/26/2022 18:40	19.90	6/25/2022 21:13	6.24
6/26/2022 17:54	34.24	6/26/2022 18:41	19.92	6/25/2022 21:14	6.26
6/26/2022 17:55	34.25	6/26/2022 18:42	19.89	6/25/2022 21:15	6.23
6/26/2022 17:56	34.23	6/26/2022 18:43	19.90	6/25/2022 21:16	6.25
6/26/2022 17:57	34.20	6/26/2022 18:44	19.92	6/25/2022 21:17	6.25
6/26/2022 17:58	34.22	6/26/2022 18:45	19.91	6/25/2022 21:18	6.25
6/26/2022 17:59	34.23	6/26/2022 18:46	19.91	6/25/2022 21:19	6.24
6/26/2022 18:00	34.24	6/26/2022 18:47	19.92	6/25/2022 21:20	6.23
6/26/2022 18:01	34.22	6/26/2022 18:48	19.90	6/25/2022 21:21	6.22
6/26/2022 18:02	34.22	6/26/2022 18:49	19.89	6/25/2022 21:22	6.27
6/26/2022 18:03	34.21	6/26/2022 18:50	19.89	6/25/2022 21:23	6.23
6/26/2022 18:04	34.21	6/26/2022 18:51	19.91	6/25/2022 21:24	6.26
6/26/2022 18:05	34.24	6/26/2022 18:52	19.90	6/25/2022 21:25	6.23
6/26/2022 18:06	34.23	6/26/2022 18:53	19.93	6/25/2022 21:26	6.25
6/26/2022 18:07	34.21	6/26/2022 18:54	19.92	6/25/2022 21:27	6.22
6/26/2022 18:08	34.20	6/26/2022 18:55	19.90	6/25/2022 21:28	6.25
6/26/2022 18:09	34.22	6/26/2022 18:56	19.92	6/25/2022 21:29	6.25
6/26/2022 18:10	34.21	6/26/2022 18:57	19.91	6/25/2022 21:30	6.24
6/26/2022 18:11	34.25	6/26/2022 18:58	19.90	6/25/2022 21:31	6.25
6/26/2022 18:12	34.29	6/26/2022 18:59	19.91	6/25/2022 21:32	6.24
6/26/2022 18:13	34.27	6/26/2022 19:00	19.93	6/25/2022 21:33	6.27
6/26/2022 18:14	34.26	6/26/2022 19:01	19.92	6/25/2022 21:34	6.25
6/26/2022 18:15	34.25	6/26/2022 19:02	20.48	6/25/2022 21:35	6.24
6/26/2022 18:16	34.27	6/26/2022 19:03	20.62	6/25/2022 21:36	6.24
6/26/2022 18:17	34.25	6/26/2022 19:04	20.65	6/25/2022 21:37	6.26
6/26/2022 18:18	34.27	6/26/2022 19:05	20.70	6/25/2022 21:38	6.26
6/26/2022 18:19	34.26	6/26/2022 19:06	20.74	6/25/2022 21:39	6.26
6/26/2022 18:20	34.22	6/26/2022 19:07	20.28	6/25/2022 21:40	6.24
6/26/2022 18:21	34.26	6/26/2022 19:08	20.16	6/25/2022 21:41	6.24
6/26/2022 18:22	34.25	6/26/2022 19:09	20.13	6/25/2022 21:42	6.23
6/26/2022 18:23	34.25	6/26/2022 19:10	20.07	6/25/2022 21:43	6.22
6/26/2022 18:24	34.23	6/26/2022 19:11	20.07	6/25/2022 21:44	6.21
6/26/2022 18:25	34.24	6/26/2022 19:12	20.06	6/25/2022 21:45	6.26
6/26/2022 18:26	34.23	6/26/2022 19:13	20.06	6/25/2022 21:46	6.24

6/26/2022 18:27	34.24	6/26/2022 19:14	20.03	6/25/2022 21:47	6.25
6/26/2022 18:28	34.23	6/26/2022 19:15	20.03	6/25/2022 21:48	6.27
6/26/2022 18:29	34.22	6/26/2022 19:16	20.05	6/25/2022 21:49	6.24
6/26/2022 18:30	34.23	6/26/2022 19:17	20.03	6/25/2022 21:50	6.24
6/26/2022 18:31	34.23	6/26/2022 19:18	20.02	6/25/2022 21:51	6.25
6/26/2022 18:32	34.22	6/26/2022 19:19	19.99	6/25/2022 21:52	6.29
6/26/2022 18:33	34.22	6/26/2022 19:20	20.00	6/25/2022 21:53	6.26
6/26/2022 18:34	34.22	6/26/2022 19:21	20.01	6/25/2022 21:54	6.24
6/26/2022 18:35	34.24	6/26/2022 19:22	20.01	6/25/2022 21:55	6.26
6/26/2022 18:36	34.24	6/26/2022 19:23	19.99	6/25/2022 21:56	6.25
6/26/2022 18:37	34.22	6/26/2022 19:24	20.01	6/25/2022 21:57	6.23
6/26/2022 18:38	34.24	6/26/2022 19:25	19.99	6/25/2022 21:58	6.28
6/26/2022 18:39	34.21	6/26/2022 19:26	20.00	6/25/2022 21:59	6.25
6/26/2022 18:40	34.21	6/26/2022 19:27	20.00	6/25/2022 22:00	6.24
6/26/2022 18:41	34.25	6/26/2022 19:28	20.00	6/25/2022 22:01	6.25
6/26/2022 18:42	34.23	6/26/2022 19:29	19.98	6/25/2022 22:02	6.20
6/26/2022 18:43	34.22	6/26/2022 19:30	19.98	6/25/2022 22:03	6.27
6/26/2022 18:44	34.21	6/26/2022 19:31	19.97	6/25/2022 22:04	6.26
6/26/2022 18:45	34.22	6/26/2022 19:32	20.00	6/25/2022 22:05	6.25
6/26/2022 18:46	34.23	6/26/2022 19:33	19.97	6/25/2022 22:06	6.24
6/26/2022 18:47	34.21	6/26/2022 19:34	19.98	6/25/2022 22:07	6.27
6/26/2022 18:48	34.20	6/26/2022 19:35	19.99	6/25/2022 22:08	6.25
6/26/2022 18:49	34.23	6/26/2022 19:36	19.96	6/25/2022 22:09	6.25
6/26/2022 18:50	34.22	6/26/2022 19:37	19.98	6/25/2022 22:10	6.25
6/26/2022 18:51	34.22	6/26/2022 19:38	19.94	6/25/2022 22:11	6.25
6/26/2022 18:52	34.21	6/26/2022 19:39	19.96	6/25/2022 22:12	6.24
6/26/2022 18:53	34.24	6/26/2022 19:40	19.96	6/25/2022 22:13	6.23
6/26/2022 18:54	34.20	6/26/2022 19:41	19.97	6/25/2022 22:14	6.23
6/26/2022 18:55	34.24	6/26/2022 19:42	19.98	6/25/2022 22:15	6.25
6/26/2022 18:56	34.20	6/26/2022 19:43	19.96	6/25/2022 22:16	6.25
6/26/2022 18:57	34.20	6/26/2022 19:44	19.97	6/25/2022 22:17	6.24
6/26/2022 18:58	34.24	6/26/2022 19:45	20.02	6/25/2022 22:18	6.23
6/26/2022 18:59	34.22	6/26/2022 19:46	19.97	6/25/2022 22:19	6.25
6/26/2022 19:00	34.24	6/26/2022 19:47	19.99	6/25/2022 22:20	6.23
6/26/2022 19:01	34.22	6/26/2022 19:48	19.95	6/25/2022 22:21	6.27
6/26/2022 19:02	34.22	6/26/2022 19:49	19.98	6/25/2022 22:22	6.21
6/26/2022 19:03	34.20	6/26/2022 19:50	19.95	6/25/2022 22:23	6.23
6/26/2022 19:04	34.23	6/26/2022 19:51	19.96	6/25/2022 22:24	6.24
6/26/2022 19:05	34.24	6/26/2022 19:52	19.96	6/25/2022 22:25	6.25
6/26/2022 19:06	34.21	6/26/2022 19:53	19.96	6/25/2022 22:26	6.26
6/26/2022 19:07	34.23	6/26/2022 19:54	19.93	6/25/2022 22:27	6.23
6/26/2022 19:08	34.20	6/26/2022 19:55	19.96	6/25/2022 22:28	6.25
6/26/2022 19:09	34.24	6/26/2022 19:56	19.95	6/25/2022 22:29	6.24
6/26/2022 19:10	34.22	6/26/2022 19:57	19.99	6/25/2022 22:30	6.23
6/26/2022 19:11	34.18	6/26/2022 19:58	19.97	6/25/2022 22:31	6.23
6/26/2022 19:12	34.20	6/26/2022 19:59	19.96	6/25/2022 22:32	6.27
6/26/2022 19:13	34.21	6/26/2022 20:00	19.93	6/25/2022 22:33	6.27
6/26/2022 19:14	34.20	6/26/2022 20:01	19.96	6/25/2022 22:34	6.25
6/26/2022 19:15	34.21	6/26/2022 20:02	19.94	6/25/2022 22:35	6.27
6/26/2022 19:16	34.20	6/26/2022 20:03	19.93	6/25/2022 22:36	6.23
6/26/2022 19:17	34.19	6/26/2022 20:04	19.96	6/25/2022 22:37	6.25
6/26/2022 19:18	34.20	6/26/2022 20:05	19.94	6/25/2022 22:38	6.26
6/26/2022 19:19	34.20	6/26/2022 20:06	19.95	6/25/2022 22:39	6.22
6/26/2022 19:20	34.21	6/26/2022 20:07	19.94	6/25/2022 22:40	6.25
6/26/2022 19:21	34.21	6/26/2022 20:08	19.94	6/25/2022 22:41	6.22
6/26/2022 19:22	34.22	6/26/2022 20:09	19.96	6/25/2022 22:42	6.24
6/26/2022 19:23	34.17	6/26/2022 20:10	19.96	6/25/2022 22:43	6.24
6/26/2022 19:24	34.21	6/26/2022 20:11	19.97	6/25/2022 22:44	6.24
6/26/2022 19:25	34.23	6/26/2022 20:12	19.96	6/25/2022 22:45	6.28
6/26/2022 19:26	34.20	6/26/2022 20:13	19.95	6/25/2022 22:46	6.23
6/26/2022 19:27	34.22	6/26/2022 20:14	19.96	6/25/2022 22:47	6.25
6/26/2022 19:28	34.24	6/26/2022 20:15	19.93	6/25/2022 22:48	6.23
6/26/2022 19:29	34.18	6/26/2022 20:16	19.96	6/25/2022 22:49	6.24
6/26/2022 19:30	34.21	6/26/2022 20:17	19.95	6/25/2022 22:50	6.19
6/26/2022 19:31	34.18	6/26/2022 20:18	19.94	6/25/2022 22:51	6.23
6/26/2022 19:32	34.18	6/26/2022 20:19	19.94	6/25/2022 22:52	6.24
6/26/2022 19:33	34.20	6/26/2022 20:20	19.95	6/25/2022 22:53	6.26
6/26/2022 19:34	34.22	6/26/2022 20:21	19.94	6/25/2022 22:54	6.24
6/26/2022 19:35	34.21	6/26/2022 20:22	19.95	6/25/2022 22:55	6.25
6/26/2022 19:36	34.22	6/26/2022 20:23	19.94	6/25/2022 22:56	6.26
6/26/2022 19:37	34.20	6/26/2022 20:24	19.95	6/25/2022 22:57	6.21
6/26/2022 19:38	34.22	6/26/2022 20:25	19.93	6/25/2022 22:58	6.25
6/26/2022 19:39	34.21	6/26/2022 20:26	19.93	6/25/2022 22:59	6.21
6/26/2022 19:40	34.20	6/26/2022 20:27	19.97	6/25/2022 23:00	6.23
6/26/2022 19:41	34.25	6/26/2022 20:28	19.94	6/25/2022 23:01	6.26
6/26/2022 19:42	34.24	6/26/2022 20:29	19.94	6/25/2022 23:02	6.21
6/26/2022 19:43	34.24	6/26/2022 20:30	19.96	6/25/2022 23:03	6.23
6/26/2022 19:44	34.25	6/26/2022 20:31	19.95	6/25/2022 23:04	6.25
6/26/2022 19:45	34.21	6/26/2022 20:32	19.94	6/25/2022 23:05	6.23
6/26/2022 19:46	34.23	6/26/2022 20:33	19.96	6/25/2022 23:06	8.06
6/26/2022 19:47	34.23	6/26/2022 20:34	19.93	6/25/2022 23:07	8.96
6/26/2022 19:48	34.23	6/26/2022 20:35	19.95	6/25/2022 23:08	6.59
6/26/2022 19:49	34.22	6/26/2022 20:36	19.92	6/25/2022 23:09	6.30
6/26/2022 19:50	34.23	6/26/2022 20:37	19.95	6/25/2022 23:10	6.28
6/26/2022 19:51	34.23	6/26/2022 20:38	19.93	6/25/2022 23:11	6.24
6/26/2022 19:52	34.24	6/26/2022 20:39	19.92	6/25/2022 23:12	6.27
6/26/2022 19:53	34.26	6/26/2022 20:40	19.95	6/25/2022 23:13	6.27
6/26/2022 19:54	34.27	6/26/2022 20:41	19.96	6/25/2022 23:14	6.29

6/26/2022 19:55	34.29	6/26/2022 20:42	19.91	6/25/2022 23:15	6.28
6/26/2022 19:56	34.28	6/26/2022 20:43	19.96	6/25/2022 23:16	6.26
6/26/2022 19:57	34.28	6/26/2022 20:44	19.95	6/25/2022 23:17	6.26
6/26/2022 19:58	34.32	6/26/2022 20:45	19.95	6/25/2022 23:18	6.26
6/26/2022 19:59	34.28	6/26/2022 20:46	19.93	6/25/2022 23:19	6.26
6/26/2022 20:00	34.30	6/26/2022 20:47	19.94	6/25/2022 23:20	6.26
6/26/2022 20:01	34.30	6/26/2022 20:48	19.95	6/25/2022 23:21	6.25
6/26/2022 20:02	34.29	6/26/2022 20:49	19.95	6/25/2022 23:22	6.26
6/26/2022 20:03	34.27	6/26/2022 20:50	19.93	6/25/2022 23:23	6.24
6/26/2022 20:04	34.30	6/26/2022 20:51	19.93	6/25/2022 23:24	6.24
6/26/2022 20:05	34.24	6/26/2022 20:52	19.93	6/25/2022 23:25	6.26
6/26/2022 20:06	34.28	6/26/2022 20:53	19.97	6/25/2022 23:26	6.27
6/26/2022 20:07	34.25	6/26/2022 20:54	19.93	6/25/2022 23:27	6.27
6/26/2022 20:08	34.28	6/26/2022 20:55	19.95	6/25/2022 23:28	6.25
6/26/2022 20:09	34.26	6/26/2022 20:56	19.93	6/25/2022 23:29	6.22
6/26/2022 20:10	34.25	6/26/2022 20:57	19.96	6/25/2022 23:30	6.25
6/26/2022 20:11	34.32	6/26/2022 20:58	19.93	6/25/2022 23:31	6.26
6/26/2022 20:12	34.27	6/26/2022 20:59	19.95	6/25/2022 23:32	6.25
6/26/2022 20:13	34.28	6/26/2022 21:00	19.96	6/25/2022 23:33	6.24
6/26/2022 20:14	34.29	6/26/2022 21:01	19.97	6/25/2022 23:34	6.24
6/26/2022 20:15	34.29	6/26/2022 21:02	19.95	6/25/2022 23:35	6.27
6/26/2022 20:16	34.30	6/26/2022 21:03	19.94	6/25/2022 23:36	6.28
6/26/2022 20:17	34.28	6/26/2022 21:04	19.96	6/25/2022 23:37	6.24
6/26/2022 20:18	34.27	6/26/2022 21:05	19.91	6/25/2022 23:38	6.27
6/26/2022 20:19	34.29	6/26/2022 21:06	19.95	6/25/2022 23:39	6.25
6/26/2022 20:20	34.31	6/26/2022 21:07	19.97	6/25/2022 23:40	6.22
6/26/2022 20:21	34.26	6/26/2022 21:08	19.95	6/25/2022 23:41	6.25
6/26/2022 20:22	34.28	6/26/2022 21:09	19.94	6/25/2022 23:42	6.22
6/26/2022 20:23	34.28	6/26/2022 21:10	19.95	6/25/2022 23:43	6.26
6/26/2022 20:24	34.26	6/26/2022 21:11	19.94	6/25/2022 23:44	6.26
6/26/2022 20:25	34.25	6/26/2022 21:12	19.93	6/25/2022 23:45	6.23
6/26/2022 20:26	34.24	6/26/2022 21:13	19.95	6/25/2022 23:46	6.27
6/26/2022 20:27	34.25	6/26/2022 21:14	19.95	6/25/2022 23:47	6.25
6/26/2022 20:28	34.26	6/26/2022 21:15	19.95	6/25/2022 23:48	6.22
6/26/2022 20:29	34.27	6/26/2022 21:16	19.98	6/25/2022 23:49	6.23
6/26/2022 20:30	34.24	6/26/2022 21:17	19.93	6/25/2022 23:50	6.21
6/26/2022 20:31	34.26	6/26/2022 21:18	19.94	6/25/2022 23:51	6.25
6/26/2022 20:32	34.26	6/26/2022 21:19	19.94	6/25/2022 23:52	6.25
6/26/2022 20:33	34.26	6/26/2022 21:20	19.93	6/25/2022 23:53	6.23
6/26/2022 20:34	34.24	6/26/2022 21:21	19.94	6/25/2022 23:54	6.22
6/26/2022 20:35	34.24	6/26/2022 21:22	19.96	6/25/2022 23:55	6.25
6/26/2022 20:36	34.23	6/26/2022 21:23	19.97	6/25/2022 23:56	6.27
6/26/2022 20:37	34.23	6/26/2022 21:24	19.94	6/25/2022 23:57	6.23
6/26/2022 20:38	34.24	6/26/2022 21:25	19.93	6/25/2022 23:58	6.25
6/26/2022 20:39	34.26	6/26/2022 21:26	19.91	6/25/2022 23:59	6.26
6/26/2022 20:40	34.25	6/26/2022 21:27	19.94	6/26/2022 0:00	6.23
6/26/2022 20:41	34.25	6/26/2022 21:28	19.93	6/26/2022 0:01	6.24
6/26/2022 20:42	34.22	6/26/2022 21:29	19.94	6/26/2022 0:02	6.26
6/26/2022 20:43	34.24	6/26/2022 21:30	19.93	6/26/2022 0:03	6.25
6/26/2022 20:44	34.21	6/26/2022 21:31	19.98	6/26/2022 0:04	6.26
6/26/2022 20:45	34.25	6/26/2022 21:32	19.94	6/26/2022 0:05	6.26
6/26/2022 20:46	34.24	6/26/2022 21:33	19.94	6/26/2022 0:06	6.26
6/26/2022 20:47	34.24	6/26/2022 21:34	19.93	6/26/2022 0:07	6.25
6/26/2022 20:48	34.23	6/26/2022 21:35	19.94	6/26/2022 0:08	6.26
6/26/2022 20:49	34.22	6/26/2022 21:36	19.94	6/26/2022 0:09	6.24
6/26/2022 20:50	34.23	6/26/2022 21:37	19.96	6/26/2022 0:10	6.25
6/26/2022 20:51	34.22	6/26/2022 21:38	19.94	6/26/2022 0:11	6.23
6/26/2022 20:52	34.24	6/26/2022 21:39	19.94	6/26/2022 0:12	6.23
6/26/2022 20:53	34.24	6/26/2022 21:40	19.93	6/26/2022 0:13	6.23
6/26/2022 20:54	34.24	6/26/2022 21:41	19.97	6/26/2022 0:14	6.22
6/26/2022 20:55	34.25	6/26/2022 21:42	19.95	6/26/2022 0:15	6.24
6/26/2022 20:56	34.24	6/26/2022 21:43	19.92	6/26/2022 0:16	6.23
6/26/2022 20:57	34.23	6/26/2022 21:44	19.95	6/26/2022 0:17	6.23
6/26/2022 20:58	34.23	6/26/2022 21:45	19.94	6/26/2022 0:18	6.25
6/26/2022 20:59	34.21	6/26/2022 21:46	19.95	6/26/2022 0:19	6.24
6/26/2022 21:00	34.23	6/26/2022 21:47	19.94	6/26/2022 0:20	6.21
6/26/2022 21:01	34.22	6/26/2022 21:48	19.97	6/26/2022 0:21	6.23
6/26/2022 21:02	34.24	6/26/2022 21:49	19.96	6/26/2022 0:22	6.28
6/26/2022 21:03	34.22	6/26/2022 21:50	19.94	6/26/2022 0:23	6.24
6/26/2022 21:04	34.23	6/26/2022 21:51	19.95	6/26/2022 0:24	6.25
6/26/2022 21:05	34.25	6/26/2022 21:52	19.95	6/26/2022 0:25	6.24
6/26/2022 21:06	34.24	6/26/2022 21:53	19.95	6/26/2022 0:26	6.24
6/26/2022 21:07	34.18	6/26/2022 21:54	19.96	6/26/2022 0:27	6.24
6/26/2022 21:08	34.20	6/26/2022 21:55	19.93	6/26/2022 0:28	6.25
6/26/2022 21:09	34.25	6/26/2022 21:56	19.95	6/26/2022 0:29	6.26
6/26/2022 21:10	34.22	6/26/2022 21:57	19.93	6/26/2022 0:30	6.23
6/26/2022 21:11	34.21	6/26/2022 21:58	19.90	6/26/2022 0:31	6.23
6/26/2022 21:12	34.21	6/26/2022 21:59	19.95	6/26/2022 0:32	6.26
6/26/2022 21:13	34.19	6/26/2022 22:00	19.96	6/26/2022 0:33	6.27
6/26/2022 21:14	34.24	6/26/2022 22:01	19.95	6/26/2022 0:34	6.23
6/26/2022 21:15	34.24	6/26/2022 22:02	19.94	6/26/2022 0:35	6.24
6/26/2022 21:16	34.20	6/26/2022 22:03	19.97	6/26/2022 0:36	6.25
6/26/2022 21:17	34.21	6/26/2022 22:04	19.95	6/26/2022 0:37	6.26
6/26/2022 21:18	34.24	6/26/2022 22:05	19.96	6/26/2022 0:38	6.25
6/26/2022 21:19	34.19	6/26/2022 22:06	19.94	6/26/2022 0:39	6.20
6/26/2022 21:20	34.23	6/26/2022 22:07	20.56	6/26/2022 0:40	6.26
6/26/2022 21:21	34.23	6/26/2022 22:08	20.67	6/26/2022 0:41	6.26
6/26/2022 21:22	34.22	6/26/2022 22:09	20.72	6/26/2022 0:42	6.24

6/26/2022 21:23	34.19	6/26/2022 22:10	20.75	6/26/2022 0:43	6.25
6/26/2022 21:24	34.21	6/26/2022 22:11	20.28	6/26/2022 0:44	6.25
6/26/2022 21:25	34.22	6/26/2022 22:12	20.17	6/26/2022 0:45	6.24
6/26/2022 21:26	34.24	6/26/2022 22:13	20.13	6/26/2022 0:46	6.25
6/26/2022 21:27	34.20	6/26/2022 22:14	20.13	6/26/2022 0:47	6.27
6/26/2022 21:28	34.19	6/26/2022 22:15	20.09	6/26/2022 0:48	6.24
6/26/2022 21:29	34.21	6/26/2022 22:16	20.10	6/26/2022 0:49	6.22
6/26/2022 21:30	34.22	6/26/2022 22:17	20.07	6/26/2022 0:50	6.25
6/26/2022 21:31	34.22	6/26/2022 22:18	20.05	6/26/2022 0:51	6.26
6/26/2022 21:32	34.22	6/26/2022 22:19	20.07	6/26/2022 0:52	6.22
6/26/2022 21:33	34.24	6/26/2022 22:20	20.05	6/26/2022 0:53	6.20
6/26/2022 21:34	34.24	6/26/2022 22:21	20.04	6/26/2022 0:54	6.23
6/26/2022 21:35	34.21	6/26/2022 22:22	20.05	6/26/2022 0:55	8.56
6/26/2022 21:36	34.20	6/26/2022 22:23	20.02	6/26/2022 0:56	8.95
6/26/2022 21:37	34.20	6/26/2022 22:24	20.06	6/26/2022 0:57	6.40
6/26/2022 21:38	34.21	6/26/2022 22:25	20.02	6/26/2022 0:58	6.29
6/26/2022 21:39	34.22	6/26/2022 22:26	20.05	6/26/2022 0:59	6.27
6/26/2022 21:40	34.23	6/26/2022 22:27	20.02	6/26/2022 1:00	6.26
6/26/2022 21:41	34.22	6/26/2022 22:28	20.04	6/26/2022 1:01	6.26
6/26/2022 21:42	34.22	6/26/2022 22:29	20.03	6/26/2022 1:02	6.25
6/26/2022 21:43	34.23	6/26/2022 22:30	20.02	6/26/2022 1:03	6.29
6/26/2022 21:44	34.20	6/26/2022 22:31	20.03	6/26/2022 1:04	6.25
6/26/2022 21:45	34.21	6/26/2022 22:32	19.98	6/26/2022 1:05	6.25
6/26/2022 21:46	34.22	6/26/2022 22:33	20.03	6/26/2022 1:06	6.27
6/26/2022 21:47	34.19	6/26/2022 22:34	20.00	6/26/2022 1:07	6.26
6/26/2022 21:48	34.21	6/26/2022 22:35	19.98	6/26/2022 1:08	6.25
6/26/2022 21:49	34.23	6/26/2022 22:36	20.00	6/26/2022 1:09	6.26
6/26/2022 21:50	34.21	6/26/2022 22:37	20.00	6/26/2022 1:10	6.25
6/26/2022 21:51	34.21	6/26/2022 22:38	20.02	6/26/2022 1:11	6.27
6/26/2022 21:52	34.21	6/26/2022 22:39	19.99	6/26/2022 1:12	6.24
6/26/2022 21:53	34.21	6/26/2022 22:40	20.00	6/26/2022 1:13	6.26
6/26/2022 21:54	34.22	6/26/2022 22:41	19.98	6/26/2022 1:14	6.27
6/26/2022 21:55	34.20	6/26/2022 22:42	20.00	6/26/2022 1:15	6.23
6/26/2022 21:56	34.22	6/26/2022 22:43	19.98	6/26/2022 1:16	6.26
6/26/2022 21:57	34.22	6/26/2022 22:44	20.01	6/26/2022 1:17	6.26
6/26/2022 21:58	34.23	6/26/2022 22:45	20.00	6/26/2022 1:18	6.24
6/26/2022 21:59	34.20	6/26/2022 22:46	20.00	6/26/2022 1:19	6.26
6/26/2022 22:00	34.21	6/26/2022 22:47	20.00	6/26/2022 1:20	6.25
6/26/2022 22:01	34.19	6/26/2022 22:48	20.01	6/26/2022 1:21	6.27
6/26/2022 22:02	34.21	6/26/2022 22:49	19.97	6/26/2022 1:22	6.26
6/26/2022 22:03	34.22	6/26/2022 22:50	19.97	6/26/2022 1:23	6.26
6/26/2022 22:04	34.22	6/26/2022 22:51	20.02	6/26/2022 1:24	6.25
6/26/2022 22:05	34.22	6/26/2022 22:52	19.98	6/26/2022 1:25	6.25
6/26/2022 22:06	34.22	6/26/2022 22:53	19.99	6/26/2022 1:26	6.25
6/26/2022 22:07	34.19	6/26/2022 22:54	19.97	6/26/2022 1:27	6.25
6/26/2022 22:08	34.21	6/26/2022 22:55	19.96	6/26/2022 1:28	6.22
6/26/2022 22:09	34.19	6/26/2022 22:56	19.98	6/26/2022 1:29	6.24
6/26/2022 22:10	34.23	6/26/2022 22:57	19.98	6/26/2022 1:30	6.25
6/26/2022 22:11	34.20	6/26/2022 22:58	20.00	6/26/2022 1:31	6.20
6/26/2022 22:12	34.20	6/26/2022 22:59	19.99	6/26/2022 1:32	6.25
6/26/2022 22:13	34.26	6/26/2022 23:00	20.00	6/26/2022 1:33	6.23
6/26/2022 22:14	34.23	6/26/2022 23:01	19.99	6/26/2022 1:34	6.26
6/26/2022 22:15	34.22	6/26/2022 23:02	20.00	6/26/2022 1:35	6.27
6/26/2022 22:16	34.27	6/26/2022 23:03	19.96	6/26/2022 1:36	6.25
6/26/2022 22:17	34.23	6/26/2022 23:04	19.98	6/26/2022 1:37	6.25
6/26/2022 22:18	34.19	6/26/2022 23:05	19.99	6/26/2022 1:38	6.23
6/26/2022 22:19	34.21	6/26/2022 23:06	19.96	6/26/2022 1:39	6.26
6/26/2022 22:20	34.23	6/26/2022 23:07	19.99	6/26/2022 1:40	6.25
6/26/2022 22:21	34.22	6/26/2022 23:08	19.99	6/26/2022 1:41	6.24
6/26/2022 22:22	34.24	6/26/2022 23:09	19.99	6/26/2022 1:42	6.25
6/26/2022 22:23	34.25	6/26/2022 23:10	19.98	6/26/2022 1:43	6.25
6/26/2022 22:24	34.23	6/26/2022 23:11	19.99	6/26/2022 1:44	6.24
6/26/2022 22:25	34.20	6/26/2022 23:12	19.99	6/26/2022 1:45	6.25
6/26/2022 22:26	34.21	6/26/2022 23:13	19.99	6/26/2022 1:46	6.25
6/26/2022 22:27	34.21	6/26/2022 23:14	20.00	6/26/2022 1:47	6.24
6/26/2022 22:28	34.24	6/26/2022 23:15	19.98	6/26/2022 1:48	6.29
6/26/2022 22:29	34.22	6/26/2022 23:16	19.99	6/26/2022 1:49	6.24
6/26/2022 22:30	34.23	6/26/2022 23:17	19.98	6/26/2022 1:50	6.26
6/26/2022 22:31	34.21	6/26/2022 23:18	19.96	6/26/2022 1:51	6.26
6/26/2022 22:32	34.20	6/26/2022 23:19	19.98	6/26/2022 1:52	6.23
6/26/2022 22:33	34.21	6/26/2022 23:20	19.96	6/26/2022 1:53	6.25
6/26/2022 22:34	34.24	6/26/2022 23:21	19.97	6/26/2022 1:54	6.27
6/26/2022 22:35	34.22	6/26/2022 23:22	19.97	6/26/2022 1:55	6.23
6/26/2022 22:36	34.21	6/26/2022 23:23	19.98	6/26/2022 1:56	6.25
6/26/2022 22:37	34.21	6/26/2022 23:24	19.98	6/26/2022 1:57	6.24
6/26/2022 22:38	34.19	6/26/2022 23:25	19.97	6/26/2022 1:58	6.23
6/26/2022 22:39	34.19	6/26/2022 23:26	19.94	6/26/2022 1:59	6.21
6/26/2022 22:40	34.20	6/26/2022 23:27	19.96	6/26/2022 2:00	6.24
6/26/2022 22:41	34.18	6/26/2022 23:28	19.98	6/26/2022 2:01	6.28
6/26/2022 22:42	34.21	6/26/2022 23:29	19.96	6/26/2022 2:02	6.24
6/26/2022 22:43	34.22	6/26/2022 23:30	19.96	6/26/2022 2:03	6.25
6/26/2022 22:44	34.21	6/26/2022 23:31	19.95	6/26/2022 2:04	6.22
6/26/2022 22:45	34.18	6/26/2022 23:32	19.97	6/26/2022 2:05	6.25
6/26/2022 22:46	34.18	6/26/2022 23:33	19.94	6/26/2022 2:06	6.24
6/26/2022 22:47	34.21	6/26/2022 23:34	19.95	6/26/2022 2:07	6.24
6/26/2022 22:48	34.22	6/26/2022 23:35	19.96	6/26/2022 2:08	6.25
6/26/2022 22:49	34.22	6/26/2022 23:36	19.97	6/26/2022 2:09	6.25
6/26/2022 22:50	34.21	6/26/2022 23:37	19.97	6/26/2022 2:10	6.26

6/26/2022 22:51	34.18	6/26/2022 23:38	19.96	6/26/2022 2:11	6.24
6/26/2022 22:52	34.21	6/26/2022 23:39	19.98	6/26/2022 2:12	6.21
6/26/2022 22:53	34.21	6/26/2022 23:40	19.98	6/26/2022 2:13	6.24
6/26/2022 22:54	34.21	6/26/2022 23:41	19.98	6/26/2022 2:14	6.21
6/26/2022 22:55	34.23	6/26/2022 23:42	19.97	6/26/2022 2:15	6.23
6/26/2022 22:56	34.23	6/26/2022 23:43	19.98	6/26/2022 2:16	6.25
6/26/2022 22:57	34.22	6/26/2022 23:44	19.98	6/26/2022 2:17	6.23
6/26/2022 22:58	34.24	6/26/2022 23:45	19.94	6/26/2022 2:18	6.22
6/26/2022 22:59	34.23	6/26/2022 23:46	19.97	6/26/2022 2:19	6.24
6/26/2022 23:00	34.26	6/26/2022 23:47	19.96	6/26/2022 2:20	6.24
6/26/2022 23:01	34.21	6/26/2022 23:48	19.95	6/26/2022 2:21	6.23
6/26/2022 23:02	34.21	6/26/2022 23:49	19.96	6/26/2022 2:22	6.24
6/26/2022 23:03	34.23	6/26/2022 23:50	19.94	6/26/2022 2:23	6.25
6/26/2022 23:04	34.21	6/26/2022 23:51	19.98	6/26/2022 2:24	6.26
6/26/2022 23:05	34.19	6/26/2022 23:52	19.98	6/26/2022 2:25	6.25
6/26/2022 23:06	34.26	6/26/2022 23:53	19.97	6/26/2022 2:26	6.24
6/26/2022 23:07	34.20	6/26/2022 23:54	19.95	6/26/2022 2:27	6.24
6/26/2022 23:08	34.21	6/26/2022 23:55	19.95	6/26/2022 2:28	6.27
6/26/2022 23:09	34.22	6/26/2022 23:56	19.97	6/26/2022 2:29	6.25
6/26/2022 23:10	34.22	6/26/2022 23:57	19.95	6/26/2022 2:30	6.24
6/26/2022 23:11	34.23	6/26/2022 23:58	19.97	6/26/2022 2:31	6.23
6/26/2022 23:12	34.21	6/26/2022 23:59	19.97	6/26/2022 2:32	6.24
6/26/2022 23:13	34.23	6/27/2022 0:00	19.96	6/26/2022 2:33	6.23
6/26/2022 23:14	34.20	6/27/2022 0:01	19.96	6/26/2022 2:34	6.23
6/26/2022 23:15	34.20	6/27/2022 0:02	19.95	6/26/2022 2:35	6.25
6/26/2022 23:16	34.27	6/27/2022 0:03	19.97	6/26/2022 2:36	6.23
6/26/2022 23:17	34.26	6/27/2022 0:04	19.95	6/26/2022 2:37	6.24
6/26/2022 23:18	34.26	6/27/2022 0:05	19.97	6/26/2022 2:38	6.25
6/26/2022 23:19	34.27	6/27/2022 0:06	19.94	6/26/2022 2:39	6.25
6/26/2022 23:20	34.24	6/27/2022 0:07	19.98	6/26/2022 2:40	6.22
6/26/2022 23:21	34.26	6/27/2022 0:08	19.97	6/26/2022 2:41	6.25
6/26/2022 23:22	34.23	6/27/2022 0:09	19.99	6/26/2022 2:42	6.25
6/26/2022 23:23	34.24	6/27/2022 0:10	19.97	6/26/2022 2:43	6.23
6/26/2022 23:24	34.25	6/27/2022 0:11	19.95	6/26/2022 2:44	6.23
6/26/2022 23:25	34.24	6/27/2022 0:12	19.98	6/26/2022 2:45	6.24
6/26/2022 23:26	34.25	6/27/2022 0:13	19.97	6/26/2022 2:46	6.23
6/26/2022 23:27	34.21	6/27/2022 0:14	19.96	6/26/2022 2:47	6.22
6/26/2022 23:28	34.21	6/27/2022 0:15	19.95	6/26/2022 2:48	6.24
6/26/2022 23:29	34.24	6/27/2022 0:16	19.98	6/26/2022 2:49	6.26
6/26/2022 23:30	34.23	6/27/2022 0:17	19.95	6/26/2022 2:50	6.24
6/26/2022 23:31	34.23	6/27/2022 0:18	19.96	6/26/2022 2:51	6.26
6/26/2022 23:32	34.22	6/27/2022 0:19	19.96	6/26/2022 2:52	6.25
6/26/2022 23:33	34.22	6/27/2022 0:20	19.97	6/26/2022 2:53	6.27
6/26/2022 23:34	34.23	6/27/2022 0:21	19.96	6/26/2022 2:54	6.26
6/26/2022 23:35	34.23	6/27/2022 0:22	19.94	6/26/2022 2:55	6.24
6/26/2022 23:36	34.22	6/27/2022 0:23	19.96	6/26/2022 2:56	6.24
6/26/2022 23:37	34.23	6/27/2022 0:24	19.96	6/26/2022 2:57	6.25
6/26/2022 23:38	34.21	6/27/2022 0:25	19.96	6/26/2022 2:58	6.24
6/26/2022 23:39	34.22	6/27/2022 0:26	19.96	6/26/2022 2:59	6.23
6/26/2022 23:40	34.24	6/27/2022 0:27	19.97	6/26/2022 3:00	6.23
6/26/2022 23:41	34.25	6/27/2022 0:28	19.97	6/26/2022 3:01	6.22
6/26/2022 23:42	34.20	6/27/2022 0:29	19.97	6/26/2022 3:02	6.24
6/26/2022 23:43	34.22	6/27/2022 0:30	19.94	6/26/2022 3:03	6.25
6/26/2022 23:44	34.18	6/27/2022 0:31	19.96	6/26/2022 3:04	6.23
6/26/2022 23:45	34.20	6/27/2022 0:32	19.97	6/26/2022 3:05	6.24
6/26/2022 23:46	34.21	6/27/2022 0:33	19.95	6/26/2022 3:06	6.22
6/26/2022 23:47	34.21	6/27/2022 0:34	19.98	6/26/2022 3:07	6.24
6/26/2022 23:48	34.20	6/27/2022 0:35	19.97	6/26/2022 3:08	6.20
6/26/2022 23:49	34.19	6/27/2022 0:36	19.96	6/26/2022 3:09	6.26
6/26/2022 23:50	34.20	6/27/2022 0:37	19.97	6/26/2022 3:10	6.22
6/26/2022 23:51	34.21	6/27/2022 0:38	19.97	6/26/2022 3:11	6.23
6/26/2022 23:52	34.18	6/27/2022 0:39	19.96	6/26/2022 3:12	6.22
6/26/2022 23:53	34.21	6/27/2022 0:40	19.96	6/26/2022 3:13	6.25
6/26/2022 23:54	34.22	6/27/2022 0:41	19.99	6/26/2022 3:14	6.23
6/26/2022 23:55	34.22	6/27/2022 0:42	19.98	6/26/2022 3:15	6.24
6/26/2022 23:56	34.20	6/27/2022 0:43	19.95	6/26/2022 3:16	6.22
6/26/2022 23:57	34.22	6/27/2022 0:44	19.97	6/26/2022 3:17	6.23
6/26/2022 23:58	34.16	6/27/2022 0:45	19.97	6/26/2022 3:18	6.24
6/26/2022 23:59	34.20	6/27/2022 0:46	19.96	6/26/2022 3:19	6.22
6/27/2022 0:00	34.22	6/27/2022 0:47	19.96	6/26/2022 3:20	6.22
6/27/2022 0:01	34.21	6/27/2022 0:48	19.97	6/26/2022 3:21	6.27
6/27/2022 0:02	34.22	6/27/2022 0:49	19.97	6/26/2022 3:22	6.26
6/27/2022 0:03	34.21	6/27/2022 0:50	19.96	6/26/2022 3:23	6.26
6/27/2022 0:04	34.19	6/27/2022 0:51	19.94	6/26/2022 3:24	6.26
6/27/2022 0:05	34.21	6/27/2022 0:52	19.95	6/26/2022 3:25	6.25
6/27/2022 0:06	34.21	6/27/2022 0:53	19.96	6/26/2022 3:26	6.22
6/27/2022 0:07	34.19	6/27/2022 0:54	19.97	6/26/2022 3:27	6.23
6/27/2022 0:08	34.20	6/27/2022 0:55	19.96	6/26/2022 3:28	6.25
6/27/2022 0:09	34.19	6/27/2022 0:56	19.94	6/26/2022 3:29	6.21
6/27/2022 0:10	34.19	6/27/2022 0:57	19.95	6/26/2022 3:30	6.25
6/27/2022 0:11	34.20	6/27/2022 0:58	19.94	6/26/2022 3:31	6.27
6/27/2022 0:12	34.20	6/27/2022 0:59	19.98	6/26/2022 3:32	6.23
6/27/2022 0:13	34.23	6/27/2022 1:00	19.97	6/26/2022 3:33	6.23
6/27/2022 0:14	34.19	6/27/2022 1:01	19.98	6/26/2022 3:34	6.24
6/27/2022 0:15	34.20	6/27/2022 1:02	19.94	6/26/2022 3:35	6.20
6/27/2022 0:16	34.19	6/27/2022 1:03	19.95	6/26/2022 3:36	6.24
6/27/2022 0:17	34.20	6/27/2022 1:04	19.95	6/26/2022 3:37	6.24
6/27/2022 0:18	34.20	6/27/2022 1:05	19.96	6/26/2022 3:38	6.22

6/27/2022 0:19	34.16	6/27/2022 1:06	19.96	6/26/2022 3:39	6.22
6/27/2022 0:20	34.19	6/27/2022 1:07	19.94	6/26/2022 3:40	6.23
6/27/2022 0:21	34.20	6/27/2022 1:08	19.96	6/26/2022 3:41	6.24
6/27/2022 0:22	34.20	6/27/2022 1:09	19.93	6/26/2022 3:42	6.25
6/27/2022 0:23	34.19	6/27/2022 1:10	19.95	6/26/2022 3:43	6.24
6/27/2022 0:24	34.19	6/27/2022 1:11	19.93	6/26/2022 3:44	6.23
6/27/2022 0:25	34.16	6/27/2022 1:12	19.95	6/26/2022 3:45	6.26
6/27/2022 0:26	34.19	6/27/2022 1:13	19.96	6/26/2022 3:46	6.26
6/27/2022 0:27	34.20	6/27/2022 1:14	19.97	6/26/2022 3:47	6.22
6/27/2022 0:28	34.20	6/27/2022 1:15	19.99	6/26/2022 3:48	6.23
6/27/2022 0:29	34.17	6/27/2022 1:16	19.94	6/26/2022 3:49	6.23
6/27/2022 0:30	34.21	6/27/2022 1:17	19.95	6/26/2022 3:50	6.24
6/27/2022 0:31	34.19	6/27/2022 1:18	19.93	6/26/2022 3:51	6.26
6/27/2022 0:32	34.18	6/27/2022 1:19	19.94	6/26/2022 3:52	6.22
6/27/2022 0:33	34.19	6/27/2022 1:20	19.96	6/26/2022 3:53	6.23
6/27/2022 0:34	34.19	6/27/2022 1:21	19.94	6/26/2022 3:54	6.24
6/27/2022 0:35	34.17	6/27/2022 1:22	19.96	6/26/2022 3:55	6.26
6/27/2022 0:36	34.16	6/27/2022 1:23	19.94	6/26/2022 3:56	6.23
6/27/2022 0:37	34.19	6/27/2022 1:24	19.96	6/26/2022 3:57	6.23
6/27/2022 0:38	34.19	6/27/2022 1:25	19.96	6/26/2022 3:58	6.21
6/27/2022 0:39	34.15	6/27/2022 1:26	19.97	6/26/2022 3:59	6.25
6/27/2022 0:40	34.17	6/27/2022 1:27	19.97	6/26/2022 4:00	6.25
6/27/2022 0:41	34.19	6/27/2022 1:28	19.99	6/26/2022 4:01	6.22
6/27/2022 0:42	34.19	6/27/2022 1:29	19.97	6/26/2022 4:02	6.23
6/27/2022 0:43	34.20	6/27/2022 1:30	19.98	6/26/2022 4:03	6.24
6/27/2022 0:44	34.26	6/27/2022 1:31	19.96	6/26/2022 4:04	6.23
6/27/2022 0:45	34.26	6/27/2022 1:32	19.96	6/26/2022 4:05	6.19
6/27/2022 0:46	34.29	6/27/2022 1:33	19.96	6/26/2022 4:06	6.23
6/27/2022 0:47	34.28	6/27/2022 1:34	19.97	6/26/2022 4:07	6.25
6/27/2022 0:48	34.29	6/27/2022 1:35	19.94	6/26/2022 4:08	6.23
6/27/2022 0:49	34.26	6/27/2022 1:36	19.96	6/26/2022 4:09	6.24
6/27/2022 0:50	34.29	6/27/2022 1:37	19.94	6/26/2022 4:10	6.24
6/27/2022 0:51	34.34	6/27/2022 1:38	19.98	6/26/2022 4:11	6.24
6/27/2022 0:52	34.32	6/27/2022 1:39	19.96	6/26/2022 4:12	6.28
6/27/2022 0:53	34.34	6/27/2022 1:40	19.96	6/26/2022 4:13	6.21
6/27/2022 0:54	34.35	6/27/2022 1:41	19.96	6/26/2022 4:14	6.23
6/27/2022 0:55	34.35	6/27/2022 1:42	19.94	6/26/2022 4:15	6.22
6/27/2022 0:56	34.42	6/27/2022 1:43	19.94	6/26/2022 4:16	6.24
6/27/2022 0:57	34.38	6/27/2022 1:44	19.95	6/26/2022 4:17	6.23
6/27/2022 0:58	34.41	6/27/2022 1:45	19.95	6/26/2022 4:18	6.24
6/27/2022 0:59	34.40	6/27/2022 1:46	19.95	6/26/2022 4:19	6.23
6/27/2022 1:00	34.41	6/27/2022 1:47	19.97	6/26/2022 4:20	6.25
6/27/2022 1:01	34.44	6/27/2022 1:48	19.95	6/26/2022 4:21	6.23
6/27/2022 1:02	34.43	6/27/2022 1:49	19.95	6/26/2022 4:22	6.22
6/27/2022 1:03	34.40	6/27/2022 1:50	19.95	6/26/2022 4:23	6.23
6/27/2022 1:04	34.39	6/27/2022 1:51	19.95	6/26/2022 4:24	6.24
6/27/2022 1:05	34.37	6/27/2022 1:52	19.95	6/26/2022 4:25	6.22
6/27/2022 1:06	34.35	6/27/2022 1:53	19.96	6/26/2022 4:26	6.23
6/27/2022 1:07	34.35	6/27/2022 1:54	19.97	6/26/2022 4:27	6.26
6/27/2022 1:08	34.36	6/27/2022 1:55	19.96	6/26/2022 4:28	6.24
6/27/2022 1:09	34.36	6/27/2022 1:56	19.94	6/26/2022 4:29	6.25
6/27/2022 1:10	34.38	6/27/2022 1:57	19.96	6/26/2022 4:30	6.22
6/27/2022 1:11	34.38	6/27/2022 1:58	19.94	6/26/2022 4:31	6.25
6/27/2022 1:12	34.37	6/27/2022 1:59	19.95	6/26/2022 4:32	6.22
6/27/2022 1:13	34.34	6/27/2022 2:00	19.95	6/26/2022 4:33	6.22
6/27/2022 1:14	34.35	6/27/2022 2:01	19.96	6/26/2022 4:34	6.25
6/27/2022 1:15	34.30	6/27/2022 2:02	19.97	6/26/2022 4:35	6.25
6/27/2022 1:16	34.37	6/27/2022 2:03	19.95	6/26/2022 4:36	6.22
6/27/2022 1:17	34.34	6/27/2022 2:04	19.98	6/26/2022 4:37	6.26
6/27/2022 1:18	34.34	6/27/2022 2:05	19.97	6/26/2022 4:38	6.22
6/27/2022 1:19	34.37	6/27/2022 2:06	19.94	6/26/2022 4:39	6.25
6/27/2022 1:20	34.37	6/27/2022 2:07	19.97	6/26/2022 4:40	6.25
6/27/2022 1:21	34.31	6/27/2022 2:08	19.94	6/26/2022 4:41	6.25
6/27/2022 1:22	34.32	6/27/2022 2:09	19.98	6/26/2022 4:42	6.23
6/27/2022 1:23	34.35	6/27/2022 2:10	19.96	6/26/2022 4:43	6.24
6/27/2022 1:24	34.33	6/27/2022 2:11	19.96	6/26/2022 4:44	6.22
6/27/2022 1:25	34.32	6/27/2022 2:12	19.95	6/26/2022 4:45	6.26
6/27/2022 1:26	34.32	6/27/2022 2:13	19.95	6/26/2022 4:46	6.25
6/27/2022 1:27	34.36	6/27/2022 2:14	19.96	6/26/2022 4:47	6.25
6/27/2022 1:28	34.35	6/27/2022 2:15	19.97	6/26/2022 4:48	6.21
6/27/2022 1:29	34.34	6/27/2022 2:16	19.97	6/26/2022 4:49	6.27
6/27/2022 1:30	34.36	6/27/2022 2:17	19.94	6/26/2022 4:50	6.27
6/27/2022 1:31	34.32	6/27/2022 2:18	19.95	6/26/2022 4:51	6.23
6/27/2022 1:32	34.35	6/27/2022 2:19	19.96	6/26/2022 4:52	6.24
6/27/2022 1:33	34.35	6/27/2022 2:20	19.98	6/26/2022 4:53	6.24
6/27/2022 1:34	34.32	6/27/2022 2:21	19.97	6/26/2022 4:54	6.21
6/27/2022 1:35	34.35	6/27/2022 2:22	19.96	6/26/2022 4:55	6.27
6/27/2022 1:36	34.34	6/27/2022 2:23	19.93	6/26/2022 4:56	6.27
6/27/2022 1:37	34.39	6/27/2022 2:24	19.97	6/26/2022 4:57	6.23
6/27/2022 1:38	34.35	6/27/2022 2:25	19.93	6/26/2022 4:58	6.23
6/27/2022 1:39	34.34	6/27/2022 2:26	19.97	6/26/2022 4:59	6.23
6/27/2022 1:40	34.31	6/27/2022 2:27	19.96	6/26/2022 5:00	6.19
6/27/2022 1:41	34.28	6/27/2022 2:28	19.96	6/26/2022 5:01	6.23
6/27/2022 1:42	34.32	6/27/2022 2:29	19.95	6/26/2022 5:02	6.25
6/27/2022 1:43	34.29	6/27/2022 2:30	19.95	6/26/2022 5:03	6.24
6/27/2022 1:44	34.34	6/27/2022 2:31	19.97	6/26/2022 5:04	6.24
6/27/2022 1:45	34.37	6/27/2022 2:32	19.94	6/26/2022 5:05	6.23
6/27/2022 1:46	34.32	6/27/2022 2:33	19.96	6/26/2022 5:06	6.26

6/27/2022 1:47	34.32	6/27/2022 2:34	19.97	6/26/2022 5:07	6.25
6/27/2022 1:48	34.31	6/27/2022 2:35	19.97	6/26/2022 5:08	6.25
6/27/2022 1:49	34.32	6/27/2022 2:36	19.96	6/26/2022 5:09	6.26
6/27/2022 1:50	34.31	6/27/2022 2:37	19.95	6/26/2022 5:10	6.25
6/27/2022 1:51	34.29	6/27/2022 2:38	19.95	6/26/2022 5:11	6.23
6/27/2022 1:52	34.29	6/27/2022 2:39	19.95	6/26/2022 5:12	6.25
6/27/2022 1:53	34.35	6/27/2022 2:40	19.95	6/26/2022 5:13	6.24
6/27/2022 1:54	34.32	6/27/2022 2:41	19.95	6/26/2022 5:14	6.27
6/27/2022 1:55	34.33	6/27/2022 2:42	19.95	6/26/2022 5:15	6.22
6/27/2022 1:56	34.33	6/27/2022 2:43	19.94	6/26/2022 5:16	6.25
6/27/2022 1:57	34.31	6/27/2022 2:44	19.95	6/26/2022 5:17	6.26
6/27/2022 1:58	34.32	6/27/2022 2:45	19.98	6/26/2022 5:18	6.21
6/27/2022 1:59	34.33	6/27/2022 2:46	19.94	6/26/2022 5:19	6.24
6/27/2022 2:00	34.31	6/27/2022 2:47	19.94	6/26/2022 5:20	6.22
6/27/2022 2:01	34.29	6/27/2022 2:48	19.96	6/26/2022 5:21	6.26
6/27/2022 2:02	34.29	6/27/2022 2:49	19.96	6/26/2022 5:22	6.22
6/27/2022 2:03	34.28	6/27/2022 2:50	19.97	6/26/2022 5:23	6.25
6/27/2022 2:04	34.30	6/27/2022 2:51	19.95	6/26/2022 5:24	6.24
6/27/2022 2:05	34.28	6/27/2022 2:52	19.93	6/26/2022 5:25	6.25
6/27/2022 2:06	34.32	6/27/2022 2:53	19.96	6/26/2022 5:26	6.23
6/27/2022 2:07	34.35	6/27/2022 2:54	19.93	6/26/2022 5:27	6.22
6/27/2022 2:08	34.35	6/27/2022 2:55	19.93	6/26/2022 5:28	6.25
6/27/2022 2:09	34.36	6/27/2022 2:56	19.96	6/26/2022 5:29	6.22
6/27/2022 2:10	34.39	6/27/2022 2:57	19.96	6/26/2022 5:30	6.29
6/27/2022 2:11	34.38	6/27/2022 2:58	19.95	6/26/2022 5:31	6.23
6/27/2022 2:12	34.40	6/27/2022 2:59	19.96	6/26/2022 5:32	6.26
6/27/2022 2:13	34.39	6/27/2022 3:00	19.98	6/26/2022 5:33	6.24
6/27/2022 2:14	34.37	6/27/2022 3:01	19.96	6/26/2022 5:34	6.26
6/27/2022 2:15	34.41	6/27/2022 3:02	19.95	6/26/2022 5:35	6.27
6/27/2022 2:16	34.40	6/27/2022 3:03	19.96	6/26/2022 5:36	6.21
6/27/2022 2:17	34.43	6/27/2022 3:04	19.95	6/26/2022 5:37	6.25
6/27/2022 2:18	34.46	6/27/2022 3:05	19.95	6/26/2022 5:38	6.20
6/27/2022 2:19	34.45	6/27/2022 3:06	19.93	6/26/2022 5:39	6.22
6/27/2022 2:20	34.43	6/27/2022 3:07	19.96	6/26/2022 5:40	6.23
6/27/2022 2:21	34.43	6/27/2022 3:08	19.97	6/26/2022 5:41	6.24
6/27/2022 2:22	34.48	6/27/2022 3:09	19.96	6/26/2022 5:42	6.25
6/27/2022 2:23	34.46	6/27/2022 3:10	19.98	6/26/2022 5:43	6.26
6/27/2022 2:24	34.48	6/27/2022 3:11	19.95	6/26/2022 5:44	6.22
6/27/2022 2:25	34.49	6/27/2022 3:12	19.95	6/26/2022 5:45	6.26
6/27/2022 2:26	34.50	6/27/2022 3:13	19.96	6/26/2022 5:46	6.19
6/27/2022 2:27	34.48	6/27/2022 3:14	19.97	6/26/2022 5:47	6.25
6/27/2022 2:28	34.46	6/27/2022 3:15	19.96	6/26/2022 5:48	6.22
6/27/2022 2:29	34.42	6/27/2022 3:16	19.95	6/26/2022 5:49	6.28
6/27/2022 2:30	34.43	6/27/2022 3:17	19.98	6/26/2022 5:50	6.27
6/27/2022 2:31	34.44	6/27/2022 3:18	19.99	6/26/2022 5:51	6.24
6/27/2022 2:32	34.41	6/27/2022 3:19	19.97	6/26/2022 5:52	6.22
6/27/2022 2:33	34.42	6/27/2022 3:20	19.96	6/26/2022 5:53	6.25
6/27/2022 2:34	34.42	6/27/2022 3:21	19.97	6/26/2022 5:54	6.27
6/27/2022 2:35	34.42	6/27/2022 3:22	19.95	6/26/2022 5:55	6.27
6/27/2022 2:36	34.38	6/27/2022 3:23	19.97	6/26/2022 5:56	6.25
6/27/2022 2:37	34.38	6/27/2022 3:24	19.97	6/26/2022 5:57	6.24
6/27/2022 2:38	34.36	6/27/2022 3:25	19.97	6/26/2022 5:58	6.22
6/27/2022 2:39	34.37	6/27/2022 3:26	19.95	6/26/2022 5:59	6.24
6/27/2022 2:40	34.34	6/27/2022 3:27	19.97	6/26/2022 6:00	6.21
6/27/2022 2:41	34.36	6/27/2022 3:28	19.93	6/26/2022 6:01	6.25
6/27/2022 2:42	34.35	6/27/2022 3:29	19.97	6/26/2022 6:02	6.22
6/27/2022 2:43	34.34	6/27/2022 3:30	19.97	6/26/2022 6:03	6.22
6/27/2022 2:44	34.33	6/27/2022 3:31	20.00	6/26/2022 6:04	6.24
6/27/2022 2:45	34.34	6/27/2022 3:32	19.96	6/26/2022 6:05	6.25
6/27/2022 2:46	34.33	6/27/2022 3:33	19.95	6/26/2022 6:06	6.24
6/27/2022 2:47	34.33	6/27/2022 3:34	19.96	6/26/2022 6:07	8.83
6/27/2022 2:48	34.29	6/27/2022 3:35	19.95	6/26/2022 6:08	8.07
6/27/2022 2:49	34.32	6/27/2022 3:36	19.97	6/26/2022 6:09	6.34
6/27/2022 2:50	34.36	6/27/2022 3:37	19.96	6/26/2022 6:10	6.26
6/27/2022 2:51	34.33	6/27/2022 3:38	19.93	6/26/2022 6:11	6.27
6/27/2022 2:52	34.29	6/27/2022 3:39	19.97	6/26/2022 6:12	6.26
6/27/2022 2:53	34.33	6/27/2022 3:40	19.96	6/26/2022 6:13	6.25
6/27/2022 2:54	34.31	6/27/2022 3:41	19.95	6/26/2022 6:14	6.23
6/27/2022 2:55	34.26	6/27/2022 3:42	19.96	6/26/2022 6:15	6.23
6/27/2022 2:56	34.30	6/27/2022 3:43	19.95	6/26/2022 6:16	6.25
6/27/2022 2:57	34.33	6/27/2022 3:44	19.96	6/26/2022 6:17	6.24
6/27/2022 2:58	34.30	6/27/2022 3:45	19.94	6/26/2022 6:18	6.24
6/27/2022 2:59	34.30	6/27/2022 3:46	19.95	6/26/2022 6:19	6.23
6/27/2022 3:00	34.29	6/27/2022 3:47	19.96	6/26/2022 6:20	6.25
6/27/2022 3:01	34.28	6/27/2022 3:48	19.96	6/26/2022 6:21	6.28
6/27/2022 3:02	34.30	6/27/2022 3:49	19.95	6/26/2022 6:22	6.24
6/27/2022 3:03	34.31	6/27/2022 3:50	19.98	6/26/2022 6:23	6.25
6/27/2022 3:04	34.27	6/27/2022 3:51	19.97	6/26/2022 6:24	6.25
6/27/2022 3:05	34.27	6/27/2022 3:52	19.98	6/26/2022 6:25	6.24
6/27/2022 3:06	34.28	6/27/2022 3:53	19.95	6/26/2022 6:26	6.22
6/27/2022 3:07	34.26	6/27/2022 3:54	19.95	6/26/2022 6:27	6.26
6/27/2022 3:08	34.26	6/27/2022 3:55	19.96	6/26/2022 6:28	6.23
6/27/2022 3:09	34.28	6/27/2022 3:56	19.94	6/26/2022 6:29	6.21
6/27/2022 3:10	34.30	6/27/2022 3:57	19.96	6/26/2022 6:30	6.24
6/27/2022 3:11	34.26	6/27/2022 3:58	19.98	6/26/2022 6:31	6.23
6/27/2022 3:12	34.25	6/27/2022 3:59	19.96	6/26/2022 6:32	6.24
6/27/2022 3:13	34.25	6/27/2022 4:00	19.95	6/26/2022 6:33	6.24
6/27/2022 3:14	34.27	6/27/2022 4:01	19.96	6/26/2022 6:34	6.25

6/27/2022 3:15	34.26	6/27/2022 4:02	19.95	6/26/2022 6:35	6.26
6/27/2022 3:16	34.24	6/27/2022 4:03	19.96	6/26/2022 6:36	6.24
6/27/2022 3:17	34.26	6/27/2022 4:04	19.96	6/26/2022 6:37	6.24
6/27/2022 3:18	34.26	6/27/2022 4:05	19.93	6/26/2022 6:38	6.22
6/27/2022 3:19	34.23	6/27/2022 4:06	19.97	6/26/2022 6:39	6.26
6/27/2022 3:20	34.24	6/27/2022 4:07	19.97	6/26/2022 6:40	6.25
6/27/2022 3:21	34.25	6/27/2022 4:08	19.94	6/26/2022 6:41	6.24
6/27/2022 3:22	34.24	6/27/2022 4:09	19.97	6/26/2022 6:42	6.26
6/27/2022 3:23	34.25	6/27/2022 4:10	19.96	6/26/2022 6:43	6.24
6/27/2022 3:24	34.20	6/27/2022 4:11	19.95	6/26/2022 6:44	6.23
6/27/2022 3:25	34.25	6/27/2022 4:12	19.96	6/26/2022 6:45	6.24
6/27/2022 3:26	34.21	6/27/2022 4:13	19.96	6/26/2022 6:46	6.23
6/27/2022 3:27	34.25	6/27/2022 4:14	19.96	6/26/2022 6:47	6.25
6/27/2022 3:28	34.24	6/27/2022 4:15	19.97	6/26/2022 6:48	6.24
6/27/2022 3:29	34.22	6/27/2022 4:16	19.95	6/26/2022 6:49	6.25
6/27/2022 3:30	34.25	6/27/2022 4:17	19.95	6/26/2022 6:50	6.23
6/27/2022 3:31	34.22	6/27/2022 4:18	19.95	6/26/2022 6:51	6.23
6/27/2022 3:32	34.25	6/27/2022 4:19	19.96	6/26/2022 6:52	6.22
6/27/2022 3:33	34.22	6/27/2022 4:20	19.95	6/26/2022 6:53	6.24
6/27/2022 3:34	34.26	6/27/2022 4:21	19.95	6/26/2022 6:54	6.20
6/27/2022 3:35	34.25	6/27/2022 4:22	19.98	6/26/2022 6:55	6.25
6/27/2022 3:36	34.23	6/27/2022 4:23	19.95	6/26/2022 6:56	6.22
6/27/2022 3:37	34.22	6/27/2022 4:24	19.95	6/26/2022 6:57	6.24
6/27/2022 3:38	34.22	6/27/2022 4:25	19.97	6/26/2022 6:58	6.27
6/27/2022 3:39	34.23	6/27/2022 4:26	19.96	6/26/2022 6:59	6.26
6/27/2022 3:40	34.22	6/27/2022 4:27	19.96	6/26/2022 7:00	6.22
6/27/2022 3:41	34.21	6/27/2022 4:28	19.95	6/26/2022 7:01	6.21
6/27/2022 3:42	34.21	6/27/2022 4:29	19.93	6/26/2022 7:02	6.22
6/27/2022 3:43	34.18	6/27/2022 4:30	19.96	6/26/2022 7:03	6.26
6/27/2022 3:44	34.20	6/27/2022 4:31	19.98	6/26/2022 7:04	6.25
6/27/2022 3:45	34.22	6/27/2022 4:32	19.94	6/26/2022 7:05	6.24
6/27/2022 3:46	34.21	6/27/2022 4:33	19.94	6/26/2022 7:06	6.23
6/27/2022 3:47	34.17	6/27/2022 4:34	19.95	6/26/2022 7:07	6.24
6/27/2022 3:48	34.21	6/27/2022 4:35	19.94	6/26/2022 7:08	6.25
6/27/2022 3:49	34.21	6/27/2022 4:36	19.94	6/26/2022 7:09	6.26
6/27/2022 3:50	34.17	6/27/2022 4:37	19.94	6/26/2022 7:10	6.24
6/27/2022 3:51	34.19	6/27/2022 4:38	19.96	6/26/2022 7:11	6.24
6/27/2022 3:52	34.23	6/27/2022 4:39	19.96	6/26/2022 7:12	6.22
6/27/2022 3:53	34.19	6/27/2022 4:40	19.94	6/26/2022 7:13	6.25
6/27/2022 3:54	34.22	6/27/2022 4:41	19.94	6/26/2022 7:14	6.26
6/27/2022 3:55	34.18	6/27/2022 4:42	19.96	6/26/2022 7:15	6.22
6/27/2022 3:56	34.19	6/27/2022 4:43	19.96	6/26/2022 7:16	6.24
6/27/2022 3:57	34.22	6/27/2022 4:44	19.95	6/26/2022 7:17	6.21
6/27/2022 3:58	34.19	6/27/2022 4:45	19.95	6/26/2022 7:18	6.23
6/27/2022 3:59	34.15	6/27/2022 4:46	19.96	6/26/2022 7:19	6.27
6/27/2022 4:00	34.19	6/27/2022 4:47	19.95	6/26/2022 7:20	6.27
6/27/2022 4:01	34.20	6/27/2022 4:48	19.95	6/26/2022 7:21	6.24
6/27/2022 4:02	34.20	6/27/2022 4:49	19.96	6/26/2022 7:22	6.24
6/27/2022 4:03	34.21	6/27/2022 4:50	19.97	6/26/2022 7:23	6.25
6/27/2022 4:04	34.15	6/27/2022 4:51	19.94	6/26/2022 7:24	6.27
6/27/2022 4:05	34.22	6/27/2022 4:52	19.94	6/26/2022 7:25	6.25
6/27/2022 4:06	34.17	6/27/2022 4:53	19.94	6/26/2022 7:26	6.24
6/27/2022 4:07	34.21	6/27/2022 4:54	19.95	6/26/2022 7:27	6.24
6/27/2022 4:08	34.19	6/27/2022 4:55	19.93	6/26/2022 7:28	6.25
6/27/2022 4:09	34.19	6/27/2022 4:56	19.97	6/26/2022 7:29	6.23
6/27/2022 4:10	34.20	6/27/2022 4:57	19.95	6/26/2022 7:30	6.23
6/27/2022 4:11	34.20	6/27/2022 4:58	19.95	6/26/2022 7:31	6.24
6/27/2022 4:12	34.19	6/27/2022 4:59	19.97	6/26/2022 7:32	6.25
6/27/2022 4:13	34.18	6/27/2022 5:00	19.94	6/26/2022 7:33	6.25
6/27/2022 4:14	34.17	6/27/2022 5:01	19.97	6/26/2022 7:34	6.21
6/27/2022 4:15	34.18	6/27/2022 5:02	19.95	6/26/2022 7:35	6.25
6/27/2022 4:16	34.19	6/27/2022 5:03	19.94	6/26/2022 7:36	6.27
6/27/2022 4:17	34.19	6/27/2022 5:04	19.97	6/26/2022 7:37	6.24
6/27/2022 4:18	34.14	6/27/2022 5:05	19.95	6/26/2022 7:38	6.27
6/27/2022 4:19	34.18	6/27/2022 5:06	19.98	6/26/2022 7:39	6.24
6/27/2022 4:20	34.16	6/27/2022 5:07	19.92	6/26/2022 7:40	6.27
6/27/2022 4:21	34.15	6/27/2022 5:08	19.96	6/26/2022 7:41	6.23
6/27/2022 4:22	34.18	6/27/2022 5:09	19.96	6/26/2022 7:42	6.23
6/27/2022 4:23	34.17	6/27/2022 5:10	19.97	6/26/2022 7:43	6.23
6/27/2022 4:24	34.17	6/27/2022 5:11	19.93	6/26/2022 7:44	6.24
6/27/2022 4:25	34.19	6/27/2022 5:12	19.95	6/26/2022 7:45	6.22
6/27/2022 4:26	34.15	6/27/2022 5:13	19.96	6/26/2022 7:46	6.24
6/27/2022 4:27	34.20	6/27/2022 5:14	19.98	6/26/2022 7:47	6.27
6/27/2022 4:28	34.17	6/27/2022 5:15	19.96	6/26/2022 7:48	6.20
6/27/2022 4:29	34.18	6/27/2022 5:16	19.94	6/26/2022 7:49	6.23
6/27/2022 4:30	34.18	6/27/2022 5:17	19.95	6/26/2022 7:50	6.23
6/27/2022 4:31	34.16	6/27/2022 5:18	19.95	6/26/2022 7:51	6.24
6/27/2022 4:32	34.18	6/27/2022 5:19	19.98	6/26/2022 7:52	6.24
6/27/2022 4:33	34.17	6/27/2022 5:20	19.95	6/26/2022 7:53	6.26
6/27/2022 4:34	34.19	6/27/2022 5:21	19.95	6/26/2022 7:54	6.24
6/27/2022 4:35	34.18	6/27/2022 5:22	19.97	6/26/2022 7:55	6.24
6/27/2022 4:36	34.17	6/27/2022 5:23	19.98	6/26/2022 7:56	6.27
6/27/2022 4:37	34.15	6/27/2022 5:24	19.96	6/26/2022 7:57	6.23
6/27/2022 4:38	34.17	6/27/2022 5:25	19.94	6/26/2022 7:58	6.22
6/27/2022 4:39	34.13	6/27/2022 5:26	19.95	6/26/2022 7:59	6.22
6/27/2022 4:40	34.18	6/27/2022 5:27	19.94	6/26/2022 8:00	6.21
6/27/2022 4:41	34.17	6/27/2022 5:28	19.97	6/26/2022 8:01	6.24
6/27/2022 4:42	34.16	6/27/2022 5:29	19.97	6/26/2022 8:02	6.24

6/27/2022 4:43	34.19	6/27/2022 5:30	19.94	6/26/2022 8:03	6.22
6/27/2022 4:44	34.16	6/27/2022 5:31	19.96	6/26/2022 8:04	6.25
6/27/2022 4:45	34.15	6/27/2022 5:32	19.96	6/26/2022 8:05	6.25
6/27/2022 4:46	34.20	6/27/2022 5:33	19.95	6/26/2022 8:06	6.23
6/27/2022 4:47	34.17	6/27/2022 5:34	19.94	6/26/2022 8:07	6.23
6/27/2022 4:48	34.18	6/27/2022 5:35	19.95	6/26/2022 8:08	6.25
6/27/2022 4:49	34.16	6/27/2022 5:36	19.99	6/26/2022 8:09	6.27
6/27/2022 4:50	34.16	6/27/2022 5:37	19.96	6/26/2022 8:10	6.23
6/27/2022 4:51	34.18	6/27/2022 5:38	19.95	6/26/2022 8:11	6.25
6/27/2022 4:52	34.16	6/27/2022 5:39	19.95	6/26/2022 8:12	6.24
6/27/2022 4:53	34.17	6/27/2022 5:40	19.97	6/26/2022 8:13	6.23
6/27/2022 4:54	34.19	6/27/2022 5:41	19.94	6/26/2022 8:14	6.22
6/27/2022 4:55	34.14	6/27/2022 5:42	19.95	6/26/2022 8:15	6.23
6/27/2022 4:56	34.17	6/27/2022 5:43	19.96	6/26/2022 8:16	6.24
6/27/2022 4:57	34.18	6/27/2022 5:44	19.94	6/26/2022 8:17	6.21
6/27/2022 4:58	34.13	6/27/2022 5:45	19.95	6/26/2022 8:18	6.28
6/27/2022 4:59	34.16	6/27/2022 5:46	19.98	6/26/2022 8:19	6.24
6/27/2022 5:00	34.14	6/27/2022 5:47	19.96	6/26/2022 8:20	6.25
6/27/2022 5:01	34.15	6/27/2022 5:48	19.96	6/26/2022 8:21	6.25
6/27/2022 5:02	34.15	6/27/2022 5:49	20.57	6/26/2022 8:22	6.22
6/27/2022 5:03	34.15	6/27/2022 5:50	20.66	6/26/2022 8:23	6.24
6/27/2022 5:04	34.18	6/27/2022 5:51	20.72	6/26/2022 8:24	6.21
6/27/2022 5:05	34.15	6/27/2022 5:52	20.76	6/26/2022 8:25	6.22
6/27/2022 5:06	34.14	6/27/2022 5:53	20.55	6/26/2022 8:26	6.25
6/27/2022 5:07	34.16	6/27/2022 5:54	20.26	6/26/2022 8:27	6.24
6/27/2022 5:08	34.19	6/27/2022 5:55	20.18	6/26/2022 8:28	6.21
6/27/2022 5:09	34.15	6/27/2022 5:56	20.15	6/26/2022 8:29	6.22
6/27/2022 5:10	34.15	6/27/2022 5:57	20.12	6/26/2022 8:30	6.21
6/27/2022 5:11	34.15	6/27/2022 5:58	20.12	6/26/2022 8:31	6.20
6/27/2022 5:12	34.16	6/27/2022 5:59	20.12	6/26/2022 8:32	6.26
6/27/2022 5:13	34.12	6/27/2022 6:00	20.07	6/26/2022 8:33	6.23
6/27/2022 5:14	34.14	6/27/2022 6:01	20.07	6/26/2022 8:34	6.24
6/27/2022 5:15	34.15	6/27/2022 6:02	20.07	6/26/2022 8:35	6.26
6/27/2022 5:16	34.16	6/27/2022 6:03	20.06	6/26/2022 8:36	6.21
6/27/2022 5:17	34.16	6/27/2022 6:04	20.05	6/26/2022 8:37	6.28
6/27/2022 5:18	34.16	6/27/2022 6:05	20.04	6/26/2022 8:38	6.25
6/27/2022 5:19	34.14	6/27/2022 6:06	20.04	6/26/2022 8:39	6.23
6/27/2022 5:20	34.14	6/27/2022 6:07	20.06	6/26/2022 8:40	6.24
6/27/2022 5:21	34.13	6/27/2022 6:08	20.07	6/26/2022 8:41	6.24
6/27/2022 5:22	34.12	6/27/2022 6:09	20.06	6/26/2022 8:42	6.23
6/27/2022 5:23	34.16	6/27/2022 6:10	20.05	6/26/2022 8:43	6.25
6/27/2022 5:24	34.15	6/27/2022 6:11	20.02	6/26/2022 8:44	6.24
6/27/2022 5:25	34.14	6/27/2022 6:12	20.04	6/26/2022 8:45	6.24
6/27/2022 5:26	34.15	6/27/2022 6:13	20.01	6/26/2022 8:46	6.23
6/27/2022 5:27	34.13	6/27/2022 6:14	20.01	6/26/2022 8:47	6.24
6/27/2022 5:28	34.12	6/27/2022 6:15	20.04	6/26/2022 8:48	6.26
6/27/2022 5:29	34.18	6/27/2022 6:16	20.02	6/26/2022 8:49	6.25
6/27/2022 5:30	34.18	6/27/2022 6:17	20.04	6/26/2022 8:50	6.24
6/27/2022 5:31	34.15	6/27/2022 6:18	20.03	6/26/2022 8:51	6.23
6/27/2022 5:32	34.15	6/27/2022 6:19	20.04	6/26/2022 8:52	6.25
6/27/2022 5:33	34.15	6/27/2022 6:20	20.01	6/26/2022 8:53	6.27
6/27/2022 5:34	34.17	6/27/2022 6:21	20.03	6/26/2022 8:54	6.24
6/27/2022 5:35	34.12	6/27/2022 6:22	20.03	6/26/2022 8:55	6.23
6/27/2022 5:36	34.15	6/27/2022 6:23	20.02	6/26/2022 8:56	6.25
6/27/2022 5:37	34.15	6/27/2022 6:24	20.00	6/26/2022 8:57	6.24
6/27/2022 5:38	34.14	6/27/2022 6:25	20.02	6/26/2022 8:58	6.24
6/27/2022 5:39	34.11	6/27/2022 6:26	20.02	6/26/2022 8:59	6.23
6/27/2022 5:40	34.15	6/27/2022 6:27	20.00	6/26/2022 9:00	6.24
6/27/2022 5:41	34.15	6/27/2022 6:28	20.01	6/26/2022 9:01	6.26
6/27/2022 5:42	34.12	6/27/2022 6:29	20.02	6/26/2022 9:02	6.24
6/27/2022 5:43	34.12	6/27/2022 6:30	20.02	6/26/2022 9:03	6.21
6/27/2022 5:44	34.17	6/27/2022 6:31	20.02	6/26/2022 9:04	6.25
6/27/2022 5:45	34.17	6/27/2022 6:32	19.99	6/26/2022 9:05	6.25
6/27/2022 5:46	34.11	6/27/2022 6:33	20.02	6/26/2022 9:06	6.24
6/27/2022 5:47	34.14	6/27/2022 6:34	20.00	6/26/2022 9:07	6.24
6/27/2022 5:48	34.14	6/27/2022 6:35	20.02	6/26/2022 9:08	6.24
6/27/2022 5:49	34.13	6/27/2022 6:36	20.04	6/26/2022 9:09	6.24
6/27/2022 5:50	34.14	6/27/2022 6:37	19.99	6/26/2022 9:10	6.18
6/27/2022 5:51	34.16	6/27/2022 6:38	20.01	6/26/2022 9:11	6.25
6/27/2022 5:52	34.12	6/27/2022 6:39	19.99	6/26/2022 9:12	6.25
6/27/2022 5:53	34.14	6/27/2022 6:40	20.00	6/26/2022 9:13	6.23
6/27/2022 5:54	34.13	6/27/2022 6:41	20.01	6/26/2022 9:14	6.24
6/27/2022 5:55	34.15	6/27/2022 6:42	19.99	6/26/2022 9:15	6.26
6/27/2022 5:56	34.15	6/27/2022 6:43	19.98	6/26/2022 9:16	6.22
6/27/2022 5:57	34.13	6/27/2022 6:44	20.01	6/26/2022 9:17	6.24
6/27/2022 5:58	34.14	6/27/2022 6:45	20.03	6/26/2022 9:18	6.24
6/27/2022 5:59	34.15	6/27/2022 6:46	20.02	6/26/2022 9:19	6.23
6/27/2022 6:00	34.13	6/27/2022 6:47	19.99	6/26/2022 9:20	6.24
6/27/2022 6:01	34.15	6/27/2022 6:48	20.00	6/26/2022 9:21	6.25
6/27/2022 6:02	34.14	6/27/2022 6:49	19.99	6/26/2022 9:22	6.24
6/27/2022 6:03	34.14	6/27/2022 6:50	19.99	6/26/2022 9:23	6.23
6/27/2022 6:04	34.15	6/27/2022 6:51	19.99	6/26/2022 9:24	6.25
6/27/2022 6:05	34.12	6/27/2022 6:52	20.00	6/26/2022 9:25	6.25
6/27/2022 6:06	34.11	6/27/2022 6:53	19.99	6/26/2022 9:26	6.23
6/27/2022 6:07	34.11	6/27/2022 6:54	20.00	6/26/2022 9:27	6.24
6/27/2022 6:08	34.13	6/27/2022 6:55	20.01	6/26/2022 9:28	6.24
6/27/2022 6:09	34.11	6/27/2022 6:56	19.99	6/26/2022 9:29	6.26
6/27/2022 6:10	34.10	6/27/2022 6:57	19.95	6/26/2022 9:30	6.26

6/27/2022 6:11	34.14	6/27/2022 6:58	20.04	6/26/2022 9:31	6.24
6/27/2022 6:12	34.14	6/27/2022 6:59	19.99	6/26/2022 9:32	6.22
6/27/2022 6:13	34.14	6/27/2022 7:00	19.99	6/26/2022 9:33	6.22
6/27/2022 6:14	34.13	6/27/2022 7:01	19.99	6/26/2022 9:34	6.24
6/27/2022 6:15	34.17	6/27/2022 7:02	20.02	6/26/2022 9:35	6.28
6/27/2022 6:16	34.12	6/27/2022 7:03	19.99	6/26/2022 9:36	6.24
6/27/2022 6:17	34.14	6/27/2022 7:04	20.00	6/26/2022 9:37	6.22
6/27/2022 6:18	34.14	6/27/2022 7:05	20.01	6/26/2022 9:38	6.23
6/27/2022 6:19	34.13	6/27/2022 7:06	20.00	6/26/2022 9:39	6.27
6/27/2022 6:20	34.13	6/27/2022 7:07	20.01	6/26/2022 9:40	6.24
6/27/2022 6:21	34.14	6/27/2022 7:08	19.99	6/26/2022 9:41	6.23
6/27/2022 6:22	34.13	6/27/2022 7:09	20.02	6/26/2022 9:42	6.22
6/27/2022 6:23	34.12	6/27/2022 7:10	20.01	6/26/2022 9:43	6.25
6/27/2022 6:24	34.15	6/27/2022 7:11	19.98	6/26/2022 9:44	6.23
6/27/2022 6:25	34.13	6/27/2022 7:12	19.99	6/26/2022 9:45	6.26
6/27/2022 6:26	34.12	6/27/2022 7:13	20.00	6/26/2022 9:46	6.23
6/27/2022 6:27	34.12	6/27/2022 7:14	19.99	6/26/2022 9:47	6.26
6/27/2022 6:28	34.12	6/27/2022 7:15	19.99	6/26/2022 9:48	6.25
6/27/2022 6:29	34.13	6/27/2022 7:16	19.95	6/26/2022 9:49	6.27
6/27/2022 6:30	34.11	6/27/2022 7:17	19.99	6/26/2022 9:50	6.23
6/27/2022 6:31	34.12	6/27/2022 7:18	19.98	6/26/2022 9:51	6.24
6/27/2022 6:32	34.13	6/27/2022 7:19	20.00	6/26/2022 9:52	6.26
6/27/2022 6:33	34.16	6/27/2022 7:20	20.00	6/26/2022 9:53	6.24
6/27/2022 6:34	34.13	6/27/2022 7:21	19.97	6/26/2022 9:54	6.24
6/27/2022 6:35	34.14	6/27/2022 7:22	19.98	6/26/2022 9:55	6.25
6/27/2022 6:36	34.11	6/27/2022 7:23	19.98	6/26/2022 9:56	6.26
6/27/2022 6:37	34.12	6/27/2022 7:24	19.98	6/26/2022 9:57	6.20
6/27/2022 6:38	34.13	6/27/2022 7:25	19.98	6/26/2022 9:58	6.25
6/27/2022 6:39	34.15	6/27/2022 7:26	19.97	6/26/2022 9:59	6.23
6/27/2022 6:40	34.15	6/27/2022 7:27	20.00	6/26/2022 10:00	6.25
6/27/2022 6:41	34.12	6/27/2022 7:28	19.98	6/26/2022 10:01	6.23
6/27/2022 6:42	34.10	6/27/2022 7:29	20.00	6/26/2022 10:02	6.25
6/27/2022 6:43	34.12	6/27/2022 7:30	19.99	6/26/2022 10:03	6.27
6/27/2022 6:44	34.11	6/27/2022 7:31	19.98	6/26/2022 10:04	6.25
6/27/2022 6:45	34.12	6/27/2022 7:32	19.97	6/26/2022 10:05	6.25
6/27/2022 6:46	34.10	6/27/2022 7:33	19.98	6/26/2022 10:06	6.24
6/27/2022 6:47	34.13	6/27/2022 7:34	19.99	6/26/2022 10:07	6.25
6/27/2022 6:48	34.11	6/27/2022 7:35	19.98	6/26/2022 10:08	6.24
6/27/2022 6:49	34.12	6/27/2022 7:36	20.00	6/26/2022 10:09	6.25
6/27/2022 6:50	34.15	6/27/2022 7:37	20.01	6/26/2022 10:10	6.28
6/27/2022 6:51	34.11	6/27/2022 7:38	19.97	6/26/2022 10:11	6.27
6/27/2022 6:52	34.13	6/27/2022 7:39	19.98	6/26/2022 10:12	6.25
6/27/2022 6:53	34.15	6/27/2022 7:40	19.98	6/26/2022 10:13	6.26
6/27/2022 6:54	34.13	6/27/2022 7:41	19.95	6/26/2022 10:14	6.21
6/27/2022 6:55	34.16	6/27/2022 7:42	19.99	6/26/2022 10:15	6.25
6/27/2022 6:56	34.11	6/27/2022 7:43	19.97	6/26/2022 10:16	6.25
6/27/2022 6:57	34.10	6/27/2022 7:44	19.98	6/26/2022 10:17	6.24
6/27/2022 6:58	34.13	6/27/2022 7:45	19.97	6/26/2022 10:18	6.25
6/27/2022 6:59	34.11	6/27/2022 7:46	19.98	6/26/2022 10:19	6.24
6/27/2022 7:00	34.13	6/27/2022 7:47	19.97	6/26/2022 10:20	7.66
6/27/2022 7:01	34.14	6/27/2022 7:48	19.99	6/26/2022 10:21	8.99
6/27/2022 7:02	34.13	6/27/2022 7:49	19.99	6/26/2022 10:22	7.45
6/27/2022 7:03	34.16	6/27/2022 7:50	19.99	6/26/2022 10:23	6.34
6/27/2022 7:04	34.17	6/27/2022 7:51	19.99	6/26/2022 10:24	6.29
6/27/2022 7:05	34.19	6/27/2022 7:52	19.97	6/26/2022 10:25	6.28
6/27/2022 7:06	34.22	6/27/2022 7:53	19.96	6/26/2022 10:26	6.28
6/27/2022 7:07	34.27	6/27/2022 7:54	19.97	6/26/2022 10:27	6.25
6/27/2022 7:08	34.30	6/27/2022 7:55	19.99	6/26/2022 10:28	6.23
6/27/2022 7:09	34.32	6/27/2022 7:56	20.00	6/26/2022 10:29	6.26
6/27/2022 7:10	34.32	6/27/2022 7:57	19.99	6/26/2022 10:30	6.23
6/27/2022 7:11	34.35	6/27/2022 7:58	19.98	6/26/2022 10:31	6.24
6/27/2022 7:12	34.36	6/27/2022 7:59	19.99	6/26/2022 10:32	6.25
6/27/2022 7:13	34.39	6/27/2022 8:00	19.97	6/26/2022 10:33	6.23
6/27/2022 7:14	34.39	6/27/2022 8:01	19.98	6/26/2022 10:34	6.28
6/27/2022 7:15	34.41	6/27/2022 8:02	19.99	6/26/2022 10:35	6.24
6/27/2022 7:16	34.41	6/27/2022 8:03	19.98	6/26/2022 10:36	6.28
6/27/2022 7:17	34.46	6/27/2022 8:04	19.98	6/26/2022 10:37	6.23
6/27/2022 7:18	34.46	6/27/2022 8:05	19.98	6/26/2022 10:38	6.26
6/27/2022 7:19	34.48	6/27/2022 8:06	19.96	6/26/2022 10:39	6.26
6/27/2022 7:20	34.50	6/27/2022 8:07	19.98	6/26/2022 10:40	6.27
6/27/2022 7:21	34.47	6/27/2022 8:08	19.98	6/26/2022 10:41	6.25
6/27/2022 7:22	34.53	6/27/2022 8:09	19.99	6/26/2022 10:42	6.26
6/27/2022 7:23	34.52	6/27/2022 8:10	20.00	6/26/2022 10:43	6.25
6/27/2022 7:24	34.54	6/27/2022 8:11	19.98	6/26/2022 10:44	6.25
6/27/2022 7:25	34.55	6/27/2022 8:12	19.97	6/26/2022 10:45	6.25
6/27/2022 7:26	34.54	6/27/2022 8:13	19.99	6/26/2022 10:46	6.27
6/27/2022 7:27	34.56	6/27/2022 8:14	19.97	6/26/2022 10:47	6.24
6/27/2022 7:28	34.59	6/27/2022 8:15	19.99	6/26/2022 10:48	6.26
6/27/2022 7:29	34.57	6/27/2022 8:16	19.98	6/26/2022 10:49	6.24
6/27/2022 7:30	34.58	6/27/2022 8:17	19.99	6/26/2022 10:50	6.27
6/27/2022 7:31	34.58	6/27/2022 8:18	19.95	6/26/2022 10:51	6.27
6/27/2022 7:32	34.59	6/27/2022 8:19	19.98	6/26/2022 10:52	6.25
6/27/2022 7:33	34.57	6/27/2022 8:20	19.99	6/26/2022 10:53	6.23
6/27/2022 7:34	34.60	6/27/2022 8:21	20.00	6/26/2022 10:54	6.25
6/27/2022 7:35	34.61	6/27/2022 8:22	19.95	6/26/2022 10:55	6.28
6/27/2022 7:36	34.64	6/27/2022 8:23	19.99	6/26/2022 10:56	6.25
6/27/2022 7:37	34.65	6/27/2022 8:24	19.99	6/26/2022 10:57	6.24
6/27/2022 7:38	34.64	6/27/2022 8:25	19.96	6/26/2022 10:58	6.23

6/27/2022 7:39	34.63	6/27/2022 8:26	19.98	6/26/2022 10:59	6.26
6/27/2022 7:40	34.65	6/27/2022 8:27	19.96	6/26/2022 11:00	6.24
6/27/2022 7:41	34.66	6/27/2022 8:28	19.97	6/26/2022 11:01	6.24
6/27/2022 7:42	34.66	6/27/2022 8:29	19.99	6/26/2022 11:02	6.25
6/27/2022 7:43	34.70	6/27/2022 8:30	19.98	6/26/2022 11:03	6.25
6/27/2022 7:44	34.74	6/27/2022 8:31	19.97	6/26/2022 11:04	6.25
6/27/2022 7:45	34.80	6/27/2022 8:32	19.97	6/26/2022 11:05	6.22
6/27/2022 7:46	34.79	6/27/2022 8:33	19.98	6/26/2022 11:06	6.25
6/27/2022 7:47	34.85	6/27/2022 8:34	19.96	6/26/2022 11:07	6.25
6/27/2022 7:48	34.86	6/27/2022 8:35	19.96	6/26/2022 11:08	6.23
6/27/2022 7:49	34.88	6/27/2022 8:36	19.98	6/26/2022 11:09	6.27
6/27/2022 7:50	34.92	6/27/2022 8:37	19.97	6/26/2022 11:10	6.25
6/27/2022 7:51	34.96	6/27/2022 8:38	19.99	6/26/2022 11:11	6.23
6/27/2022 7:52	35.05	6/27/2022 8:39	19.97	6/26/2022 11:12	6.24
6/27/2022 7:53	35.03	6/27/2022 8:40	19.98	6/26/2022 11:13	6.21
6/27/2022 7:54	35.05	6/27/2022 8:41	19.96	6/26/2022 11:14	6.24
6/27/2022 7:55	35.11	6/27/2022 8:42	19.98	6/26/2022 11:15	6.25
6/27/2022 7:56	35.11	6/27/2022 8:43	19.95	6/26/2022 11:16	6.26
6/27/2022 7:57	35.12	6/27/2022 8:44	19.98	6/26/2022 11:17	6.24
6/27/2022 7:58	35.18	6/27/2022 8:45	19.97	6/26/2022 11:18	6.27
6/27/2022 7:59	35.17	6/27/2022 8:46	20.01	6/26/2022 11:19	6.24
6/27/2022 8:00	35.20	6/27/2022 8:47	19.97	6/26/2022 11:20	6.25
6/27/2022 8:01	35.21	6/27/2022 8:48	19.97	6/26/2022 11:21	6.24
6/27/2022 8:02	35.27	6/27/2022 8:49	19.98	6/26/2022 11:22	6.25
6/27/2022 8:03	35.25	6/27/2022 8:50	19.99	6/26/2022 11:23	6.24
6/27/2022 8:04	35.27	6/27/2022 8:51	19.97	6/26/2022 11:24	6.27
6/27/2022 8:05	35.25	6/27/2022 8:52	19.96	6/26/2022 11:25	6.26
6/27/2022 8:06	35.22	6/27/2022 8:53	19.97	6/26/2022 11:26	6.27
6/27/2022 8:07	35.27	6/27/2022 8:54	19.99	6/26/2022 11:27	6.26
6/27/2022 8:08	35.23	6/27/2022 8:55	19.97	6/26/2022 11:28	6.27
6/27/2022 8:09	35.23	6/27/2022 8:56	19.97	6/26/2022 11:29	6.27
6/27/2022 8:10	35.18	6/27/2022 8:57	19.98	6/26/2022 11:30	6.25
6/27/2022 8:11	35.21	6/27/2022 8:58	19.99	6/26/2022 11:31	6.24
6/27/2022 8:12	35.15	6/27/2022 8:59	19.95	6/26/2022 11:32	6.25
6/27/2022 8:13	35.16	6/27/2022 9:00	19.95	6/26/2022 11:33	6.25
6/27/2022 8:14	35.14	6/27/2022 9:01	20.54	6/26/2022 11:34	6.25
6/27/2022 8:15	35.15	6/27/2022 9:02	20.66	6/26/2022 11:35	6.26
6/27/2022 8:16	35.14	6/27/2022 9:03	20.76	6/26/2022 11:36	6.29
6/27/2022 8:17	35.16	6/27/2022 9:04	20.74	6/26/2022 11:37	6.30
6/27/2022 8:18	35.11	6/27/2022 9:05	20.79	6/26/2022 11:38	6.23
6/27/2022 8:19	35.14	6/27/2022 9:06	20.80	6/26/2022 11:39	6.26
6/27/2022 8:20	35.15	6/27/2022 9:07	20.30	6/26/2022 11:40	6.27
6/27/2022 8:21	35.17	6/27/2022 9:08	20.21	6/26/2022 11:41	6.26
6/27/2022 8:22	35.17	6/27/2022 9:09	20.20	6/26/2022 11:42	6.21
6/27/2022 8:23	35.17	6/27/2022 9:10	20.16	6/26/2022 11:43	6.24
6/27/2022 8:24	35.11	6/27/2022 9:11	20.16	6/26/2022 11:44	6.27
6/27/2022 8:25	35.07	6/27/2022 9:12	20.12	6/26/2022 11:45	6.25
6/27/2022 8:26	35.09	6/27/2022 9:13	20.14	6/26/2022 11:46	6.24
6/27/2022 8:27	35.06	6/27/2022 9:14	20.10	6/26/2022 11:47	6.27
6/27/2022 8:28	35.00	6/27/2022 9:15	20.09	6/26/2022 11:48	6.27
6/27/2022 8:29	34.98	6/27/2022 9:16	20.10	6/26/2022 11:49	6.25
6/27/2022 8:30	34.98	6/27/2022 9:17	20.08	6/26/2022 11:50	6.24
6/27/2022 8:31	34.94	6/27/2022 9:18	20.08	6/26/2022 11:51	6.24
6/27/2022 8:32	34.92	6/27/2022 9:19	20.06	6/26/2022 11:52	6.24
6/27/2022 8:33	34.92	6/27/2022 9:20	20.08	6/26/2022 11:53	6.26
6/27/2022 8:34	34.91	6/27/2022 9:21	20.05	6/26/2022 11:54	6.25
6/27/2022 8:35	34.85	6/27/2022 9:22	20.09	6/26/2022 11:55	6.23
6/27/2022 8:36	34.87	6/27/2022 9:23	20.06	6/26/2022 11:56	6.23
6/27/2022 8:37	34.87	6/27/2022 9:24	20.05	6/26/2022 11:57	6.28
6/27/2022 8:38	34.85	6/27/2022 9:25	20.07	6/26/2022 11:58	6.25
6/27/2022 8:39	34.83	6/27/2022 9:26	20.04	6/26/2022 11:59	6.25
6/27/2022 8:40	34.79	6/27/2022 9:27	20.05	6/26/2022 12:00	6.26
6/27/2022 8:41	34.81	6/27/2022 9:28	20.03	6/26/2022 12:01	6.28
6/27/2022 8:42	34.80	6/27/2022 9:29	20.06	6/26/2022 12:02	6.27
6/27/2022 8:43	34.78	6/27/2022 9:30	20.04	6/26/2022 12:03	6.25
6/27/2022 8:44	34.76	6/27/2022 9:31	20.05	6/26/2022 12:04	6.25
6/27/2022 8:45	34.75	6/27/2022 9:32	20.05	6/26/2022 12:05	6.28
6/27/2022 8:46	34.73	6/27/2022 9:33	20.05	6/26/2022 12:06	6.24
6/27/2022 8:47	34.73	6/27/2022 9:34	20.04	6/26/2022 12:07	6.25
6/27/2022 8:48	34.71	6/27/2022 9:35	20.03	6/26/2022 12:08	6.24
6/27/2022 8:49	34.73	6/27/2022 9:36	20.02	6/26/2022 12:09	6.27
6/27/2022 8:50	34.70	6/27/2022 9:37	20.00	6/26/2022 12:10	6.24
6/27/2022 8:51	34.65	6/27/2022 9:38	20.00	6/26/2022 12:11	6.27
6/27/2022 8:52	34.70	6/27/2022 9:39	20.03	6/26/2022 12:12	6.26
6/27/2022 8:53	34.68	6/27/2022 9:40	20.04	6/26/2022 12:13	6.27
6/27/2022 8:54	34.70	6/27/2022 9:41	20.02	6/26/2022 12:14	6.28
6/27/2022 8:55	34.68	6/27/2022 9:42	20.04	6/26/2022 12:15	6.25
6/27/2022 8:56	34.64	6/27/2022 9:43	20.01	6/26/2022 12:16	6.27
6/27/2022 8:57	34.64	6/27/2022 9:44	19.99	6/26/2022 12:17	8.82
6/27/2022 8:58	34.66	6/27/2022 9:45	20.02	6/26/2022 12:18	7.77
6/27/2022 8:59	34.62	6/27/2022 9:46	20.02	6/26/2022 12:19	6.35
6/27/2022 9:00	34.64	6/27/2022 9:47	20.02	6/26/2022 12:20	6.29
6/27/2022 9:01	34.65	6/27/2022 9:48	20.03	6/26/2022 12:21	6.26
6/27/2022 9:02	34.62	6/27/2022 9:49	20.02	6/26/2022 12:22	6.28
6/27/2022 9:03	34.65	6/27/2022 9:50	19.98	6/26/2022 12:23	6.27
6/27/2022 9:04	34.63	6/27/2022 9:51	20.01	6/26/2022 12:24	6.26
6/27/2022 9:05	34.62	6/27/2022 9:52	20.01	6/26/2022 12:25	6.27
6/27/2022 9:06	34.60	6/27/2022 9:53	20.46	6/26/2022 12:26	6.27

6/27/2022 9:07	34.59
6/27/2022 9:08	34.60
6/27/2022 9:09	34.58
6/27/2022 9:10	34.59
6/27/2022 9:11	34.62
6/27/2022 9:12	34.57
6/27/2022 9:13	34.59
6/27/2022 9:14	34.57
6/27/2022 9:15	34.54
6/27/2022 9:16	34.55
6/27/2022 9:17	34.55
6/27/2022 9:18	34.56
6/27/2022 9:19	34.52
6/27/2022 9:20	34.53
6/27/2022 9:21	34.52
6/27/2022 9:22	34.55
6/27/2022 9:23	34.51
6/27/2022 9:24	34.53
6/27/2022 9:25	34.51
6/27/2022 9:26	34.54
6/27/2022 9:27	34.51
6/27/2022 9:28	34.51
6/27/2022 9:29	34.50
6/27/2022 9:30	34.49
6/27/2022 9:31	34.48
6/27/2022 9:32	34.49
6/27/2022 9:33	34.51
6/27/2022 9:34	34.46
6/27/2022 9:35	34.49
6/27/2022 9:36	34.48
6/27/2022 9:37	34.50
6/27/2022 9:38	34.44
6/27/2022 9:39	34.45
6/27/2022 9:40	34.48
6/27/2022 9:41	34.46
6/27/2022 9:42	34.49
6/27/2022 9:43	34.50
6/27/2022 9:44	34.50
6/27/2022 9:45	34.47
6/27/2022 9:46	34.52
6/27/2022 9:47	34.49
6/27/2022 9:48	34.47
6/27/2022 9:49	34.48
6/27/2022 9:50	34.46
6/27/2022 9:51	34.50
6/27/2022 9:52	34.44
6/27/2022 9:53	34.46
6/27/2022 9:54	34.50
6/27/2022 9:55	34.48

6/27/2022 9:54	20.68
6/27/2022 9:55	20.73
6/27/2022 9:56	20.80
6/27/2022 9:57	20.83
6/27/2022 9:58	20.85
6/27/2022 9:59	20.44
6/27/2022 10:00	20.29
6/27/2022 10:01	20.24
6/27/2022 10:02	20.21
6/27/2022 10:03	20.19
6/27/2022 10:04	20.18
6/27/2022 10:05	20.16
6/27/2022 10:06	20.13
6/27/2022 10:07	20.15
6/27/2022 10:08	20.16
6/27/2022 10:09	20.11
6/27/2022 10:10	20.13
6/27/2022 10:11	20.14
6/27/2022 10:12	20.09
6/27/2022 10:13	20.10
6/27/2022 10:14	20.13
6/27/2022 10:15	20.09
6/27/2022 10:16	20.10
6/27/2022 10:17	20.07
6/27/2022 10:18	20.07
6/27/2022 10:19	20.09
6/27/2022 10:20	20.53
6/27/2022 10:21	20.73
6/27/2022 10:22	20.80
6/27/2022 10:23	20.86
6/27/2022 10:24	20.90
6/27/2022 10:25	20.91
6/27/2022 10:26	20.40
6/27/2022 10:27	20.31
6/27/2022 10:28	20.27
6/27/2022 10:29	20.26
6/27/2022 10:30	20.24
6/27/2022 10:31	20.22
6/27/2022 10:32	20.18
6/27/2022 10:33	20.18
6/27/2022 10:34	20.16
6/27/2022 10:35	20.18
6/27/2022 10:36	20.18
6/27/2022 10:37	20.19
6/27/2022 10:38	20.13
6/27/2022 10:39	20.17
6/27/2022 10:40	20.15
6/27/2022 10:41	20.13
6/27/2022 10:42	20.15
6/27/2022 10:43	20.14
6/27/2022 10:44	20.13
6/27/2022 10:45	20.12
6/27/2022 10:46	20.12
6/27/2022 10:47	20.09
6/27/2022 10:48	20.09
6/27/2022 10:49	20.10
6/27/2022 10:50	20.11
6/27/2022 10:51	20.11
6/27/2022 10:52	20.13
6/27/2022 10:53	20.09
6/27/2022 10:54	20.10
6/27/2022 10:55	20.11
6/27/2022 10:56	20.10
6/27/2022 10:57	20.09
6/27/2022 10:58	20.06
6/27/2022 10:59	20.06
6/27/2022 11:00	20.09
6/27/2022 11:01	20.10
6/27/2022 11:02	20.07
6/27/2022 11:03	20.09
6/27/2022 11:04	20.07
6/27/2022 11:05	20.04
6/27/2022 11:06	20.08
6/27/2022 11:07	20.07
6/27/2022 11:08	20.10
6/27/2022 11:09	20.07
6/27/2022 11:10	20.06
6/27/2022 11:11	20.07
6/27/2022 11:12	20.06

6/26/2022 12:27	6.25
6/26/2022 12:28	6.30
6/26/2022 12:29	6.23
6/26/2022 12:30	6.25
6/26/2022 12:31	6.25
6/26/2022 12:32	6.25
6/26/2022 12:33	6.23
6/26/2022 12:34	6.25
6/26/2022 12:35	6.24
6/26/2022 12:36	6.25
6/26/2022 12:37	6.26
6/26/2022 12:38	6.26
6/26/2022 12:39	6.29
6/26/2022 12:40	6.25
6/26/2022 12:41	6.22
6/26/2022 12:42	6.27
6/26/2022 12:43	6.29
6/26/2022 12:44	6.22
6/26/2022 12:45	6.25
6/26/2022 12:46	6.26
6/26/2022 12:47	6.26
6/26/2022 12:48	6.27
6/26/2022 12:49	6.27
6/26/2022 12:50	6.28
6/26/2022 12:51	6.26
6/26/2022 12:52	6.28
6/26/2022 12:53	6.27
6/26/2022 12:54	6.27
6/26/2022 12:55	6.28
6/26/2022 12:56	6.28
6/26/2022 12:57	6.28
6/26/2022 12:58	6.27
6/26/2022 12:59	6.24
6/26/2022 13:00	6.27
6/26/2022 13:01	6.27
6/26/2022 13:02	6.26
6/26/2022 13:03	6.23
6/26/2022 13:04	6.28
6/26/2022 13:05	6.23
6/26/2022 13:06	6.26
6/26/2022 13:07	6.23
6/26/2022 13:08	6.26
6/26/2022 13:09	6.27
6/26/2022 13:10	6.28
6/26/2022 13:11	6.28
6/26/2022 13:12	6.28
6/26/2022 13:13	6.24
6/26/2022 13:14	6.30
6/26/2022 13:15	6.28
6/26/2022 13:16	6.27
6/26/2022 13:17	6.26
6/26/2022 13:18	6.26
6/26/2022 13:19	6.26
6/26/2022 13:20	6.25
6/26/2022 13:21	6.28
6/26/2022 13:22	8.90
6/26/2022 13:23	9.02
6/26/2022 13:24	6.45
6/26/2022 13:25	6.30
6/26/2022 13:26	6.27
6/26/2022 13:27	6.31
6/26/2022 13:28	6.29
6/26/2022 13:29	6.28
6/26/2022 13:30	6.27
6/26/2022 13:31	6.28
6/26/2022 13:32	6.84
6/26/2022 13:33	8.96
6/26/2022 13:34	9.08
6/26/2022 13:35	6.53
6/26/2022 13:36	6.31
6/26/2022 13:37	6.29
6/26/2022 13:38	6.29
6/26/2022 13:39	6.29
6/26/2022 13:40	6.32
6/26/2022 13:41	6.28
6/26/2022 13:42	6.27
6/26/2022 13:43	6.28
6/26/2022 13:44	6.32
6/26/2022 13:45	6.30
6/26/2022 13:46	6.30
6/26/2022 13:47	6.28
6/26/2022 13:48	6.26
6/26/2022 13:49	6.26
6/26/2022 13:50	6.28
6/26/2022 13:51	6.30
6/26/2022 13:52	6.27
6/26/2022 13:53	6.29
6/26/2022 13:54	6.30

6/26/2022 13:55	6.26
6/26/2022 13:56	6.28
6/26/2022 13:57	6.28
6/26/2022 13:58	6.23
6/26/2022 13:59	6.31
6/26/2022 14:00	6.27
6/26/2022 14:01	6.26
6/26/2022 14:02	6.27
6/26/2022 14:03	6.27
6/26/2022 14:04	6.25
6/26/2022 14:05	6.26
6/26/2022 14:06	6.27
6/26/2022 14:07	6.25
6/26/2022 14:08	6.26
6/26/2022 14:09	6.26
6/26/2022 14:10	6.27
6/26/2022 14:11	6.27
6/26/2022 14:12	6.29
6/26/2022 14:13	6.28
6/26/2022 14:14	6.30
6/26/2022 14:15	6.29
6/26/2022 14:16	6.25
6/26/2022 14:17	6.27
6/26/2022 14:18	6.24
6/26/2022 14:19	6.30
6/26/2022 14:20	6.29
6/26/2022 14:21	6.26
6/26/2022 14:22	6.26
6/26/2022 14:23	6.28
6/26/2022 14:24	6.30
6/26/2022 14:25	6.27
6/26/2022 14:26	6.25
6/26/2022 14:27	6.26
6/26/2022 14:28	6.28
6/26/2022 14:29	6.26
6/26/2022 14:30	6.26
6/26/2022 14:31	6.24
6/26/2022 14:32	6.28
6/26/2022 14:33	6.27
6/26/2022 14:34	6.28
6/26/2022 14:35	6.29
6/26/2022 14:36	6.28
6/26/2022 14:37	6.28
6/26/2022 14:38	6.28
6/26/2022 14:39	6.29
6/26/2022 14:40	6.30
6/26/2022 14:41	6.27
6/26/2022 14:42	6.24
6/26/2022 14:43	6.29
6/26/2022 14:44	6.29
6/26/2022 14:45	6.25
6/26/2022 14:46	6.26
6/26/2022 14:47	6.31
6/26/2022 14:48	6.28
6/26/2022 14:49	6.28
6/26/2022 14:50	6.26
6/26/2022 14:51	6.29
6/26/2022 14:52	6.30
6/26/2022 14:53	6.30
6/26/2022 14:54	6.28
6/26/2022 14:55	6.28
6/26/2022 14:56	6.29
6/26/2022 14:57	6.27
6/26/2022 14:58	6.28
6/26/2022 14:59	6.29
6/26/2022 15:00	6.29
6/26/2022 15:01	6.29
6/26/2022 15:02	6.29
6/26/2022 15:03	6.27
6/26/2022 15:04	6.26
6/26/2022 15:05	6.28
6/26/2022 15:06	6.27
6/26/2022 15:07	6.26
6/26/2022 15:08	6.28
6/26/2022 15:09	6.27
6/26/2022 15:10	6.26
6/26/2022 15:11	6.26
6/26/2022 15:12	6.27
6/26/2022 15:13	6.28
6/26/2022 15:14	6.27
6/26/2022 15:15	6.25
6/26/2022 15:16	6.30
6/26/2022 15:17	6.29
6/26/2022 15:18	6.27
6/26/2022 15:19	6.29
6/26/2022 15:20	6.26
6/26/2022 15:21	6.28
6/26/2022 15:22	6.29

6/26/2022 15:23	6.24
6/26/2022 15:24	6.27
6/26/2022 15:25	6.28
6/26/2022 15:26	6.30
6/26/2022 15:27	6.28
6/26/2022 15:28	6.29
6/26/2022 15:29	6.27
6/26/2022 15:30	6.30
6/26/2022 15:31	6.26
6/26/2022 15:32	6.26
6/26/2022 15:33	6.29
6/26/2022 15:34	6.25
6/26/2022 15:35	6.29
6/26/2022 15:36	6.29
6/26/2022 15:37	6.28
6/26/2022 15:38	6.30
6/26/2022 15:39	6.28
6/26/2022 15:40	6.30
6/26/2022 15:41	6.27
6/26/2022 15:42	6.30
6/26/2022 15:43	6.27
6/26/2022 15:44	6.28
6/26/2022 15:45	6.31
6/26/2022 15:46	6.29
6/26/2022 15:47	6.28
6/26/2022 15:48	6.25
6/26/2022 15:49	6.27
6/26/2022 15:50	6.31
6/26/2022 15:51	6.27
6/26/2022 15:52	6.29
6/26/2022 15:53	6.29
6/26/2022 15:54	6.28
6/26/2022 15:55	6.29
6/26/2022 15:56	6.27
6/26/2022 15:57	6.27
6/26/2022 15:58	6.29
6/26/2022 15:59	6.27
6/26/2022 16:00	6.29
6/26/2022 16:01	6.25
6/26/2022 16:02	6.30
6/26/2022 16:03	6.28
6/26/2022 16:04	6.27
6/26/2022 16:05	6.29
6/26/2022 16:06	6.26
6/26/2022 16:07	6.29
6/26/2022 16:08	6.29
6/26/2022 16:09	6.31
6/26/2022 16:10	6.33
6/26/2022 16:11	6.23
6/26/2022 16:12	6.28
6/26/2022 16:13	6.30
6/26/2022 16:14	6.26
6/26/2022 16:15	6.27
6/26/2022 16:16	6.24
6/26/2022 16:17	6.27
6/26/2022 16:18	6.27
6/26/2022 16:19	6.29
6/26/2022 16:20	6.27
6/26/2022 16:21	6.28
6/26/2022 16:22	6.29
6/26/2022 16:23	6.28
6/26/2022 16:24	6.26
6/26/2022 16:25	6.28
6/26/2022 16:26	6.28
6/26/2022 16:27	6.28
6/26/2022 16:28	6.25
6/26/2022 16:29	6.25
6/26/2022 16:30	6.31
6/26/2022 16:31	6.28
6/26/2022 16:32	6.29
6/26/2022 16:33	6.30
6/26/2022 16:34	6.26
6/26/2022 16:35	6.25
6/26/2022 16:36	6.26
6/26/2022 16:37	6.26
6/26/2022 16:38	6.29
6/26/2022 16:39	6.29
6/26/2022 16:40	6.27
6/26/2022 16:41	6.29
6/26/2022 16:42	6.28
6/26/2022 16:43	6.28
6/26/2022 16:44	6.29
6/26/2022 16:45	6.32
6/26/2022 16:46	6.25
6/26/2022 16:47	6.31
6/26/2022 16:48	6.28
6/26/2022 16:49	6.28
6/26/2022 16:50	6.27

6/26/2022 16:51	6.28
6/26/2022 16:52	6.29
6/26/2022 16:53	6.27
6/26/2022 16:54	6.30
6/26/2022 16:55	6.27
6/26/2022 16:56	6.30
6/26/2022 16:57	6.29
6/26/2022 16:58	6.26
6/26/2022 16:59	6.30
6/26/2022 17:00	6.31
6/26/2022 17:01	6.32
6/26/2022 17:02	6.26
6/26/2022 17:03	6.29
6/26/2022 17:04	6.28
6/26/2022 17:05	6.31
6/26/2022 17:06	6.30
6/26/2022 17:07	6.29
6/26/2022 17:08	6.29
6/26/2022 17:09	6.29
6/26/2022 17:10	6.29
6/26/2022 17:11	6.29
6/26/2022 17:12	6.30
6/26/2022 17:13	6.29
6/26/2022 17:14	6.28
6/26/2022 17:15	6.27
6/26/2022 17:16	6.29
6/26/2022 17:17	6.30
6/26/2022 17:18	6.27
6/26/2022 17:19	6.30
6/26/2022 17:20	6.27
6/26/2022 17:21	6.31
6/26/2022 17:22	6.29
6/26/2022 17:23	6.28
6/26/2022 17:24	6.27
6/26/2022 17:25	6.28
6/26/2022 17:26	6.30
6/26/2022 17:27	6.31
6/26/2022 17:28	6.26
6/26/2022 17:29	6.31
6/26/2022 17:30	6.27
6/26/2022 17:31	6.25
6/26/2022 17:32	6.30
6/26/2022 17:33	6.29
6/26/2022 17:34	6.29
6/26/2022 17:35	6.29
6/26/2022 17:36	6.32
6/26/2022 17:37	6.28
6/26/2022 17:38	6.28
6/26/2022 17:39	6.28
6/26/2022 17:40	6.29
6/26/2022 17:41	6.30
6/26/2022 17:42	6.25
6/26/2022 17:43	6.30
6/26/2022 17:44	6.29
6/26/2022 17:45	6.29
6/26/2022 17:46	6.28
6/26/2022 17:47	6.30
6/26/2022 17:48	6.31
6/26/2022 17:49	6.29
6/26/2022 17:50	6.28
6/26/2022 17:51	6.30
6/26/2022 17:52	6.24
6/26/2022 17:53	6.31
6/26/2022 17:54	6.29
6/26/2022 17:55	6.27
6/26/2022 17:56	6.29
6/26/2022 17:57	6.29
6/26/2022 17:58	6.27
6/26/2022 17:59	6.32
6/26/2022 18:00	6.28
6/26/2022 18:01	6.26
6/26/2022 18:02	6.28
6/26/2022 18:03	6.30
6/26/2022 18:04	6.25
6/26/2022 18:05	6.31
6/26/2022 18:06	6.29
6/26/2022 18:07	6.29
6/26/2022 18:08	6.28
6/26/2022 18:09	6.25
6/26/2022 18:10	6.29
6/26/2022 18:11	6.31
6/26/2022 18:12	7.37
6/26/2022 18:13	8.97
6/26/2022 18:14	7.41
6/26/2022 18:15	6.36
6/26/2022 18:16	6.32
6/26/2022 18:17	6.32
6/26/2022 18:18	6.30

6/26/2022 18:19	6.31
6/26/2022 18:20	6.30
6/26/2022 18:21	6.29
6/26/2022 18:22	6.28
6/26/2022 18:23	6.29
6/26/2022 18:24	6.27
6/26/2022 18:25	6.28
6/26/2022 18:26	6.27
6/26/2022 18:27	6.33
6/26/2022 18:28	6.25
6/26/2022 18:29	6.31
6/26/2022 18:30	6.27
6/26/2022 18:31	6.27
6/26/2022 18:32	6.31
6/26/2022 18:33	6.33
6/26/2022 18:34	6.29
6/26/2022 18:35	6.30
6/26/2022 18:36	6.30
6/26/2022 18:37	6.29
6/26/2022 18:38	6.27
6/26/2022 18:39	6.29
6/26/2022 18:40	6.29
6/26/2022 18:41	6.29
6/26/2022 18:42	6.27
6/26/2022 18:43	6.30
6/26/2022 18:44	6.28
6/26/2022 18:45	6.26
6/26/2022 18:46	6.27
6/26/2022 18:47	6.30
6/26/2022 18:48	6.30
6/26/2022 18:49	6.34
6/26/2022 18:50	6.30
6/26/2022 18:51	6.25
6/26/2022 18:52	6.28
6/26/2022 18:53	6.28
6/26/2022 18:54	6.29
6/26/2022 18:55	6.31
6/26/2022 18:56	6.28
6/26/2022 18:57	6.29
6/26/2022 18:58	6.29
6/26/2022 18:59	6.29
6/26/2022 19:00	6.26
6/26/2022 19:01	6.31
6/26/2022 19:02	6.28
6/26/2022 19:03	6.29
6/26/2022 19:04	6.30
6/26/2022 19:05	6.30
6/26/2022 19:06	6.26
6/26/2022 19:07	6.29
6/26/2022 19:08	6.27
6/26/2022 19:09	6.30
6/26/2022 19:10	6.25
6/26/2022 19:11	6.29
6/26/2022 19:12	6.30
6/26/2022 19:13	6.31
6/26/2022 19:14	6.32
6/26/2022 19:15	6.29
6/26/2022 19:16	6.29
6/26/2022 19:17	6.31
6/26/2022 19:18	6.29
6/26/2022 19:19	6.29
6/26/2022 19:20	6.29
6/26/2022 19:21	6.29
6/26/2022 19:22	6.29
6/26/2022 19:23	6.28
6/26/2022 19:24	6.31
6/26/2022 19:25	6.26
6/26/2022 19:26	6.30
6/26/2022 19:27	6.30
6/26/2022 19:28	6.28
6/26/2022 19:29	6.29
6/26/2022 19:30	6.29
6/26/2022 19:31	6.31
6/26/2022 19:32	6.29
6/26/2022 19:33	6.28
6/26/2022 19:34	6.28
6/26/2022 19:35	6.27
6/26/2022 19:36	6.29
6/26/2022 19:37	6.28
6/26/2022 19:38	6.30
6/26/2022 19:39	6.28
6/26/2022 19:40	6.29
6/26/2022 19:41	6.28
6/26/2022 19:42	6.28
6/26/2022 19:43	6.30
6/26/2022 19:44	6.29
6/26/2022 19:45	6.30
6/26/2022 19:46	6.32

6/26/2022 19:47	6.29
6/26/2022 19:48	6.27
6/26/2022 19:49	6.28
6/26/2022 19:50	6.29
6/26/2022 19:51	6.25
6/26/2022 19:52	6.30
6/26/2022 19:53	6.26
6/26/2022 19:54	6.27
6/26/2022 19:55	6.31
6/26/2022 19:56	6.29
6/26/2022 19:57	6.28
6/26/2022 19:58	6.31
6/26/2022 19:59	6.29
6/26/2022 20:00	6.28
6/26/2022 20:01	6.28
6/26/2022 20:02	6.32
6/26/2022 20:03	6.29
6/26/2022 20:04	6.32
6/26/2022 20:05	6.25
6/26/2022 20:06	6.29
6/26/2022 20:07	6.29
6/26/2022 20:08	6.32
6/26/2022 20:09	6.28
6/26/2022 20:10	6.28
6/26/2022 20:11	6.28
6/26/2022 20:12	6.29
6/26/2022 20:13	6.29
6/26/2022 20:14	6.29
6/26/2022 20:15	6.29
6/26/2022 20:16	6.29
6/26/2022 20:17	6.31
6/26/2022 20:18	6.28
6/26/2022 20:19	6.31
6/26/2022 20:20	6.25
6/26/2022 20:21	6.29
6/26/2022 20:22	6.31
6/26/2022 20:23	6.29
6/26/2022 20:24	6.29
6/26/2022 20:25	6.27
6/26/2022 20:26	6.29
6/26/2022 20:27	6.29
6/26/2022 20:28	6.29
6/26/2022 20:29	6.30
6/26/2022 20:30	6.27
6/26/2022 20:31	6.27
6/26/2022 20:32	6.30
6/26/2022 20:33	6.31
6/26/2022 20:34	6.31
6/26/2022 20:35	6.29
6/26/2022 20:36	6.31
6/26/2022 20:37	6.28
6/26/2022 20:38	6.31
6/26/2022 20:39	6.28
6/26/2022 20:40	6.25
6/26/2022 20:41	6.29
6/26/2022 20:42	6.29
6/26/2022 20:43	6.24
6/26/2022 20:44	6.27
6/26/2022 20:45	6.30
6/26/2022 20:46	6.28
6/26/2022 20:47	6.32
6/26/2022 20:48	6.28
6/26/2022 20:49	6.28
6/26/2022 20:50	6.28
6/26/2022 20:51	6.30
6/26/2022 20:52	6.27
6/26/2022 20:53	6.29
6/26/2022 20:54	6.28
6/26/2022 20:55	6.29
6/26/2022 20:56	6.30
6/26/2022 20:57	6.27
6/26/2022 20:58	6.30
6/26/2022 20:59	6.30
6/26/2022 21:00	6.28
6/26/2022 21:01	6.30
6/26/2022 21:02	6.25
6/26/2022 21:03	6.27
6/26/2022 21:04	6.28
6/26/2022 21:05	6.29
6/26/2022 21:06	6.28
6/26/2022 21:07	6.29
6/26/2022 21:08	6.30
6/26/2022 21:09	6.28
6/26/2022 21:10	6.27
6/26/2022 21:11	6.31
6/26/2022 21:12	6.31
6/26/2022 21:13	6.32
6/26/2022 21:14	6.28

6/26/2022 21:15	6.28
6/26/2022 21:16	6.32
6/26/2022 21:17	6.31
6/26/2022 21:18	6.29
6/26/2022 21:19	6.29
6/26/2022 21:20	6.28
6/26/2022 21:21	6.26
6/26/2022 21:22	6.31
6/26/2022 21:23	6.30
6/26/2022 21:24	6.31
6/26/2022 21:25	6.28
6/26/2022 21:26	6.29
6/26/2022 21:27	6.27
6/26/2022 21:28	6.33
6/26/2022 21:29	6.31
6/26/2022 21:30	6.29
6/26/2022 21:31	6.28
6/26/2022 21:32	6.31
6/26/2022 21:33	6.29
6/26/2022 21:34	6.28
6/26/2022 21:35	6.29
6/26/2022 21:36	6.30
6/26/2022 21:37	6.28
6/26/2022 21:38	6.26
6/26/2022 21:39	6.26
6/26/2022 21:40	6.29
6/26/2022 21:41	6.28
6/26/2022 21:42	6.30
6/26/2022 21:43	6.32
6/26/2022 21:44	6.31
6/26/2022 21:45	6.33
6/26/2022 21:46	6.26
6/26/2022 21:47	6.30
6/26/2022 21:48	6.27
6/26/2022 21:49	6.29
6/26/2022 21:50	6.31
6/26/2022 21:51	6.30
6/26/2022 21:52	6.26
6/26/2022 21:53	6.28
6/26/2022 21:54	6.30
6/26/2022 21:55	6.30
6/26/2022 21:56	6.30
6/26/2022 21:57	6.28
6/26/2022 21:58	6.27
6/26/2022 21:59	6.29
6/26/2022 22:00	6.28
6/26/2022 22:01	6.31
6/26/2022 22:02	6.31
6/26/2022 22:03	6.33
6/26/2022 22:04	6.28
6/26/2022 22:05	6.30
6/26/2022 22:06	6.29
6/26/2022 22:07	6.31
6/26/2022 22:08	6.31
6/26/2022 22:09	6.29
6/26/2022 22:10	6.29
6/26/2022 22:11	6.32
6/26/2022 22:12	6.30
6/26/2022 22:13	6.29
6/26/2022 22:14	6.26
6/26/2022 22:15	6.28
6/26/2022 22:16	6.29
6/26/2022 22:17	6.29
6/26/2022 22:18	6.30
6/26/2022 22:19	6.28
6/26/2022 22:20	6.28
6/26/2022 22:21	6.30
6/26/2022 22:22	6.27
6/26/2022 22:23	6.28
6/26/2022 22:24	6.30
6/26/2022 22:25	6.30
6/26/2022 22:26	6.29
6/26/2022 22:27	6.27
6/26/2022 22:28	6.28
6/26/2022 22:29	6.32
6/26/2022 22:30	6.29
6/26/2022 22:31	6.25
6/26/2022 22:32	6.29
6/26/2022 22:33	6.28
6/26/2022 22:34	6.31
6/26/2022 22:35	6.31
6/26/2022 22:36	6.27
6/26/2022 22:37	6.29
6/26/2022 22:38	6.29
6/26/2022 22:39	6.28
6/26/2022 22:40	6.28
6/26/2022 22:41	6.27
6/26/2022 22:42	6.29

6/26/2022 22:43	6.27
6/26/2022 22:44	6.29
6/26/2022 22:45	6.27
6/26/2022 22:46	6.30
6/26/2022 22:47	6.27
6/26/2022 22:48	6.31
6/26/2022 22:49	6.27
6/26/2022 22:50	6.28
6/26/2022 22:51	6.28
6/26/2022 22:52	6.30
6/26/2022 22:53	6.26
6/26/2022 22:54	6.31
6/26/2022 22:55	6.26
6/26/2022 22:56	6.27
6/26/2022 22:57	6.29
6/26/2022 22:58	6.30
6/26/2022 22:59	6.28
6/26/2022 23:00	6.30
6/26/2022 23:01	6.27
6/26/2022 23:02	6.28
6/26/2022 23:03	6.32
6/26/2022 23:04	6.30
6/26/2022 23:05	6.28
6/26/2022 23:06	6.30
6/26/2022 23:07	6.30
6/26/2022 23:08	6.26
6/26/2022 23:09	6.31
6/26/2022 23:10	6.28
6/26/2022 23:11	6.29
6/26/2022 23:12	6.27
6/26/2022 23:13	6.29
6/26/2022 23:14	6.28
6/26/2022 23:15	6.31
6/26/2022 23:16	6.27
6/26/2022 23:17	6.30
6/26/2022 23:18	6.28
6/26/2022 23:19	6.27
6/26/2022 23:20	6.28
6/26/2022 23:21	6.31
6/26/2022 23:22	6.32
6/26/2022 23:23	6.31
6/26/2022 23:24	6.28
6/26/2022 23:25	6.30
6/26/2022 23:26	6.29
6/26/2022 23:27	6.27
6/26/2022 23:28	6.30
6/26/2022 23:29	6.30
6/26/2022 23:30	6.29
6/26/2022 23:31	6.31
6/26/2022 23:32	6.29
6/26/2022 23:33	6.28
6/26/2022 23:34	6.28
6/26/2022 23:35	6.28
6/26/2022 23:36	6.31
6/26/2022 23:37	6.30
6/26/2022 23:38	6.31
6/26/2022 23:39	6.29
6/26/2022 23:40	6.30
6/26/2022 23:41	6.29
6/26/2022 23:42	6.29
6/26/2022 23:43	6.29
6/26/2022 23:44	6.30
6/26/2022 23:45	6.29
6/26/2022 23:46	6.26
6/26/2022 23:47	6.29
6/26/2022 23:48	6.28
6/26/2022 23:49	6.31
6/26/2022 23:50	6.30
6/26/2022 23:51	6.29
6/26/2022 23:52	6.30
6/26/2022 23:53	6.32
6/26/2022 23:54	6.30
6/26/2022 23:55	6.29
6/26/2022 23:56	6.30
6/26/2022 23:57	6.30
6/26/2022 23:58	6.27
6/26/2022 23:59	6.29
6/27/2022 0:00	6.29
6/27/2022 0:01	6.30
6/27/2022 0:02	6.27
6/27/2022 0:03	6.29
6/27/2022 0:04	6.29
6/27/2022 0:05	6.31
6/27/2022 0:06	6.28
6/27/2022 0:07	6.27
6/27/2022 0:08	6.26
6/27/2022 0:09	6.33
6/27/2022 0:10	6.29

6/27/2022 0:11	6.30
6/27/2022 0:12	6.25
6/27/2022 0:13	6.32
6/27/2022 0:14	6.28
6/27/2022 0:15	6.28
6/27/2022 0:16	6.30
6/27/2022 0:17	6.29
6/27/2022 0:18	6.25
6/27/2022 0:19	6.28
6/27/2022 0:20	6.28
6/27/2022 0:21	6.29
6/27/2022 0:22	6.29
6/27/2022 0:23	6.29
6/27/2022 0:24	6.30
6/27/2022 0:25	6.28
6/27/2022 0:26	6.29
6/27/2022 0:27	6.29
6/27/2022 0:28	6.31
6/27/2022 0:29	6.28
6/27/2022 0:30	6.29
6/27/2022 0:31	6.27
6/27/2022 0:32	6.28
6/27/2022 0:33	6.29
6/27/2022 0:34	6.85
6/27/2022 0:35	8.93
6/27/2022 0:36	7.24
6/27/2022 0:37	6.38
6/27/2022 0:38	6.30
6/27/2022 0:39	6.31
6/27/2022 0:40	6.30
6/27/2022 0:41	6.28
6/27/2022 0:42	6.26
6/27/2022 0:43	6.29
6/27/2022 0:44	6.28
6/27/2022 0:45	6.32
6/27/2022 0:46	6.28
6/27/2022 0:47	6.27
6/27/2022 0:48	6.28
6/27/2022 0:49	6.28
6/27/2022 0:50	6.29
6/27/2022 0:51	6.29
6/27/2022 0:52	6.29
6/27/2022 0:53	6.29
6/27/2022 0:54	6.30
6/27/2022 0:55	6.29
6/27/2022 0:56	6.28
6/27/2022 0:57	6.30
6/27/2022 0:58	6.32
6/27/2022 0:59	6.30
6/27/2022 1:00	6.28
6/27/2022 1:01	6.28
6/27/2022 1:02	6.29
6/27/2022 1:03	6.29
6/27/2022 1:04	6.30
6/27/2022 1:05	6.33
6/27/2022 1:06	6.31
6/27/2022 1:07	6.29
6/27/2022 1:08	6.31
6/27/2022 1:09	6.33
6/27/2022 1:10	6.29
6/27/2022 1:11	6.28
6/27/2022 1:12	6.27
6/27/2022 1:13	6.28
6/27/2022 1:14	6.31
6/27/2022 1:15	6.26
6/27/2022 1:16	6.32
6/27/2022 1:17	6.27
6/27/2022 1:18	6.27
6/27/2022 1:19	6.29
6/27/2022 1:20	6.29
6/27/2022 1:21	6.30
6/27/2022 1:22	6.28
6/27/2022 1:23	6.28
6/27/2022 1:24	6.31
6/27/2022 1:25	6.29
6/27/2022 1:26	6.30
6/27/2022 1:27	6.29
6/27/2022 1:28	6.28
6/27/2022 1:29	6.30
6/27/2022 1:30	6.29
6/27/2022 1:31	6.26
6/27/2022 1:32	6.27
6/27/2022 1:33	6.27
6/27/2022 1:34	6.26
6/27/2022 1:35	6.27
6/27/2022 1:36	6.31
6/27/2022 1:37	6.30
6/27/2022 1:38	6.26

6/27/2022 1:39	6.28
6/27/2022 1:40	6.28
6/27/2022 1:41	6.28
6/27/2022 1:42	6.30
6/27/2022 1:43	6.27
6/27/2022 1:44	6.28
6/27/2022 1:45	6.28
6/27/2022 1:46	6.28
6/27/2022 1:47	6.29
6/27/2022 1:48	6.29
6/27/2022 1:49	6.28
6/27/2022 1:50	6.29
6/27/2022 1:51	6.29
6/27/2022 1:52	6.28
6/27/2022 1:53	6.30
6/27/2022 1:54	6.29
6/27/2022 1:55	6.29
6/27/2022 1:56	6.30
6/27/2022 1:57	6.29
6/27/2022 1:58	6.28
6/27/2022 1:59	6.27
6/27/2022 2:00	6.27
6/27/2022 2:01	6.28
6/27/2022 2:02	6.27
6/27/2022 2:03	6.25
6/27/2022 2:04	6.28
6/27/2022 2:05	6.28
6/27/2022 2:06	6.28
6/27/2022 2:07	6.30
6/27/2022 2:08	6.30
6/27/2022 2:09	6.30
6/27/2022 2:10	6.27
6/27/2022 2:11	6.29
6/27/2022 2:12	6.27
6/27/2022 2:13	6.27
6/27/2022 2:14	6.29
6/27/2022 2:15	6.28
6/27/2022 2:16	6.28
6/27/2022 2:17	6.27
6/27/2022 2:18	6.26
6/27/2022 2:19	6.26
6/27/2022 2:20	6.98
6/27/2022 2:21	8.93
6/27/2022 2:22	7.17
6/27/2022 2:23	6.34
6/27/2022 2:24	6.32
6/27/2022 2:25	6.32
6/27/2022 2:26	6.31
6/27/2022 2:27	6.30
6/27/2022 2:28	6.29
6/27/2022 2:29	6.30
6/27/2022 2:30	6.30
6/27/2022 2:31	6.31
6/27/2022 2:32	6.30
6/27/2022 2:33	6.29
6/27/2022 2:34	6.32
6/27/2022 2:35	6.29
6/27/2022 2:36	6.30
6/27/2022 2:37	6.31
6/27/2022 2:38	6.29
6/27/2022 2:39	6.31
6/27/2022 2:40	6.30
6/27/2022 2:41	6.28
6/27/2022 2:42	6.31
6/27/2022 2:43	6.29
6/27/2022 2:44	6.29
6/27/2022 2:45	6.31
6/27/2022 2:46	6.28
6/27/2022 2:47	6.31
6/27/2022 2:48	6.28
6/27/2022 2:49	6.30
6/27/2022 2:50	6.28
6/27/2022 2:51	6.30
6/27/2022 2:52	6.30
6/27/2022 2:53	6.27
6/27/2022 2:54	6.30
6/27/2022 2:55	6.25
6/27/2022 2:56	6.28
6/27/2022 2:57	6.27
6/27/2022 2:58	6.30
6/27/2022 2:59	6.28
6/27/2022 3:00	6.28
6/27/2022 3:01	6.29
6/27/2022 3:02	6.28
6/27/2022 3:03	6.31
6/27/2022 3:04	6.29
6/27/2022 3:05	6.31
6/27/2022 3:06	6.28

6/27/2022 3:07	6.28
6/27/2022 3:08	6.28
6/27/2022 3:09	6.29
6/27/2022 3:10	6.28
6/27/2022 3:11	6.30
6/27/2022 3:12	6.29
6/27/2022 3:13	6.27
6/27/2022 3:14	6.26
6/27/2022 3:15	6.29
6/27/2022 3:16	6.26
6/27/2022 3:17	6.31
6/27/2022 3:18	6.27
6/27/2022 3:19	6.26
6/27/2022 3:20	6.28
6/27/2022 3:21	6.29
6/27/2022 3:22	6.29
6/27/2022 3:23	6.31
6/27/2022 3:24	6.28
6/27/2022 3:25	6.27
6/27/2022 3:26	6.27
6/27/2022 3:27	6.29
6/27/2022 3:28	6.31
6/27/2022 3:29	6.28
6/27/2022 3:30	6.29
6/27/2022 3:31	6.29
6/27/2022 3:32	6.27
6/27/2022 3:33	6.26
6/27/2022 3:34	6.29
6/27/2022 3:35	6.28
6/27/2022 3:36	6.28
6/27/2022 3:37	6.29
6/27/2022 3:38	6.26
6/27/2022 3:39	6.26
6/27/2022 3:40	6.29
6/27/2022 3:41	6.29
6/27/2022 3:42	6.30
6/27/2022 3:43	6.30
6/27/2022 3:44	6.29
6/27/2022 3:45	6.30
6/27/2022 3:46	6.30
6/27/2022 3:47	6.26
6/27/2022 3:48	6.26
6/27/2022 3:49	6.28
6/27/2022 3:50	6.26
6/27/2022 3:51	6.32
6/27/2022 3:52	6.28
6/27/2022 3:53	6.28
6/27/2022 3:54	6.28
6/27/2022 3:55	6.28
6/27/2022 3:56	6.27
6/27/2022 3:57	6.30
6/27/2022 3:58	6.25
6/27/2022 3:59	6.30
6/27/2022 4:00	6.29
6/27/2022 4:01	6.26
6/27/2022 4:02	6.26
6/27/2022 4:03	6.27
6/27/2022 4:04	6.27
6/27/2022 4:05	6.30
6/27/2022 4:06	6.26
6/27/2022 4:07	6.27
6/27/2022 4:08	6.28
6/27/2022 4:09	6.31
6/27/2022 4:10	6.27
6/27/2022 4:11	6.24
6/27/2022 4:12	6.26
6/27/2022 4:13	6.28
6/27/2022 4:14	6.27
6/27/2022 4:15	6.28
6/27/2022 4:16	6.28
6/27/2022 4:17	6.27
6/27/2022 4:18	6.30
6/27/2022 4:19	6.26
6/27/2022 4:20	6.31
6/27/2022 4:21	6.26
6/27/2022 4:22	6.29
6/27/2022 4:23	6.29
6/27/2022 4:24	6.26
6/27/2022 4:25	6.28
6/27/2022 4:26	6.26
6/27/2022 4:27	6.29
6/27/2022 4:28	6.29
6/27/2022 4:29	6.26
6/27/2022 4:30	6.29
6/27/2022 4:31	6.29
6/27/2022 4:32	6.27
6/27/2022 4:33	6.27
6/27/2022 4:34	6.29

6/27/2022 4:35	6.26
6/27/2022 4:36	6.26
6/27/2022 4:37	6.27
6/27/2022 4:38	6.28
6/27/2022 4:39	6.28
6/27/2022 4:40	6.29
6/27/2022 4:41	6.26
6/27/2022 4:42	6.27
6/27/2022 4:43	6.31
6/27/2022 4:44	6.28
6/27/2022 4:45	6.28
6/27/2022 4:46	6.28
6/27/2022 4:47	6.25
6/27/2022 4:48	6.31
6/27/2022 4:49	6.26
6/27/2022 4:50	6.28
6/27/2022 4:51	6.26
6/27/2022 4:52	6.27
6/27/2022 4:53	6.29
6/27/2022 4:54	6.30
6/27/2022 4:55	6.27
6/27/2022 4:56	6.27
6/27/2022 4:57	6.26
6/27/2022 4:58	6.28
6/27/2022 4:59	6.29
6/27/2022 5:00	6.26
6/27/2022 5:01	6.26
6/27/2022 5:02	6.27
6/27/2022 5:03	6.28
6/27/2022 5:04	6.25
6/27/2022 5:05	6.27
6/27/2022 5:06	6.29
6/27/2022 5:07	6.30
6/27/2022 5:08	6.27
6/27/2022 5:09	6.28
6/27/2022 5:10	6.28
6/27/2022 5:11	6.26
6/27/2022 5:12	6.27
6/27/2022 5:13	6.28
6/27/2022 5:14	6.28
6/27/2022 5:15	6.26
6/27/2022 5:16	6.26
6/27/2022 5:17	6.24
6/27/2022 5:18	6.30
6/27/2022 5:19	6.29
6/27/2022 5:20	6.31
6/27/2022 5:21	6.29
6/27/2022 5:22	6.26
6/27/2022 5:23	6.27
6/27/2022 5:24	6.28
6/27/2022 5:25	6.29
6/27/2022 5:26	6.27
6/27/2022 5:27	6.27
6/27/2022 5:28	6.30
6/27/2022 5:29	6.27
6/27/2022 5:30	6.27
6/27/2022 5:31	6.26
6/27/2022 5:32	6.27
6/27/2022 5:33	6.27
6/27/2022 5:34	6.29
6/27/2022 5:35	6.26
6/27/2022 5:36	6.26
6/27/2022 5:37	6.26
6/27/2022 5:38	6.29
6/27/2022 5:39	6.28
6/27/2022 5:40	6.30
6/27/2022 5:41	6.27
6/27/2022 5:42	6.27
6/27/2022 5:43	6.27
6/27/2022 5:44	6.27
6/27/2022 5:45	6.28
6/27/2022 5:46	6.29
6/27/2022 5:47	6.28
6/27/2022 5:48	6.28
6/27/2022 5:49	6.29
6/27/2022 5:50	6.26
6/27/2022 5:51	6.26
6/27/2022 5:52	6.27
6/27/2022 5:53	6.29
6/27/2022 5:54	6.28
6/27/2022 5:55	6.28
6/27/2022 5:56	6.32
6/27/2022 5:57	6.28
6/27/2022 5:58	6.28
6/27/2022 5:59	6.30
6/27/2022 6:00	6.27
6/27/2022 6:01	6.23
6/27/2022 6:02	6.28

6/27/2022 6:03	6.26
6/27/2022 6:04	6.32
6/27/2022 6:05	6.26
6/27/2022 6:06	6.26
6/27/2022 6:07	6.30
6/27/2022 6:08	6.28
6/27/2022 6:09	6.27
6/27/2022 6:10	6.28
6/27/2022 6:11	6.28
6/27/2022 6:12	6.25
6/27/2022 6:13	6.29
6/27/2022 6:14	6.25
6/27/2022 6:15	6.30
6/27/2022 6:16	6.28
6/27/2022 6:17	6.28
6/27/2022 6:18	6.24
6/27/2022 6:19	6.24
6/27/2022 6:20	6.28
6/27/2022 6:21	6.27
6/27/2022 6:22	6.26
6/27/2022 6:23	6.25
6/27/2022 6:24	6.28
6/27/2022 6:25	6.30
6/27/2022 6:26	6.28
6/27/2022 6:27	6.26
6/27/2022 6:28	6.29
6/27/2022 6:29	6.29
6/27/2022 6:30	6.30
6/27/2022 6:31	6.30
6/27/2022 6:32	6.26
6/27/2022 6:33	6.27
6/27/2022 6:34	6.26
6/27/2022 6:35	6.31
6/27/2022 6:36	6.29
6/27/2022 6:37	6.27
6/27/2022 6:38	6.30
6/27/2022 6:39	6.27
6/27/2022 6:40	6.26
6/27/2022 6:41	6.31
6/27/2022 6:42	6.32
6/27/2022 6:43	6.28
6/27/2022 6:44	6.25
6/27/2022 6:45	6.26
6/27/2022 6:46	6.28
6/27/2022 6:47	6.29
6/27/2022 6:48	6.25
6/27/2022 6:49	6.29
6/27/2022 6:50	6.27
6/27/2022 6:51	6.26
6/27/2022 6:52	6.28
6/27/2022 6:53	6.28
6/27/2022 6:54	6.26
6/27/2022 6:55	6.25
6/27/2022 6:56	6.29
6/27/2022 6:57	6.31
6/27/2022 6:58	6.30
6/27/2022 6:59	6.26
6/27/2022 7:00	6.28
6/27/2022 7:01	6.30
6/27/2022 7:02	6.30
6/27/2022 7:03	6.27
6/27/2022 7:04	6.26
6/27/2022 7:05	6.28
6/27/2022 7:06	6.30
6/27/2022 7:07	6.28
6/27/2022 7:08	6.30
6/27/2022 7:09	6.30
6/27/2022 7:10	6.28
6/27/2022 7:11	6.29
6/27/2022 7:12	6.29
6/27/2022 7:13	6.27
6/27/2022 7:14	6.29
6/27/2022 7:15	6.30
6/27/2022 7:16	6.22
6/27/2022 7:17	6.27
6/27/2022 7:18	6.28
6/27/2022 7:19	6.28
6/27/2022 7:20	6.25
6/27/2022 7:21	6.31
6/27/2022 7:22	6.30
6/27/2022 7:23	6.30
6/27/2022 7:24	6.27
6/27/2022 7:25	6.27
6/27/2022 7:26	6.29
6/27/2022 7:27	6.25
6/27/2022 7:28	6.30
6/27/2022 7:29	6.26
6/27/2022 7:30	6.26

6/27/2022 7:31	6.30
6/27/2022 7:32	6.25
6/27/2022 7:33	6.25
6/27/2022 7:34	6.30
6/27/2022 7:35	6.28
6/27/2022 7:36	6.26
6/27/2022 7:37	6.28
6/27/2022 7:38	6.26
6/27/2022 7:39	6.28
6/27/2022 7:40	6.27
6/27/2022 7:41	6.27
6/27/2022 7:42	6.27
6/27/2022 7:43	6.27
6/27/2022 7:44	6.25
6/27/2022 7:45	6.27
6/27/2022 7:46	6.29
6/27/2022 7:47	6.26
6/27/2022 7:48	6.27
6/27/2022 7:49	6.27
6/27/2022 7:50	6.25
6/27/2022 7:51	6.28
6/27/2022 7:52	6.31
6/27/2022 7:53	6.28
6/27/2022 7:54	6.29
6/27/2022 7:55	6.27
6/27/2022 7:56	6.26
6/27/2022 7:57	6.31
6/27/2022 7:58	6.32
6/27/2022 7:59	6.27
6/27/2022 8:00	6.28
6/27/2022 8:01	6.28
6/27/2022 8:02	6.27
6/27/2022 8:03	6.27
6/27/2022 8:04	6.29
6/27/2022 8:05	6.31
6/27/2022 8:06	6.27
6/27/2022 8:07	6.29
6/27/2022 8:08	6.27
6/27/2022 8:09	6.28
6/27/2022 8:10	6.28
6/27/2022 8:11	6.31
6/27/2022 8:12	6.27
6/27/2022 8:13	6.29
6/27/2022 8:14	6.30
6/27/2022 8:15	6.28
6/27/2022 8:16	6.25
6/27/2022 8:17	6.31
6/27/2022 8:18	6.24
6/27/2022 8:19	6.29
6/27/2022 8:20	6.27
6/27/2022 8:21	6.28
6/27/2022 8:22	6.26
6/27/2022 8:23	6.26
6/27/2022 8:24	6.27
6/27/2022 8:25	6.26
6/27/2022 8:26	6.26
6/27/2022 8:27	6.28
6/27/2022 8:28	6.27
6/27/2022 8:29	6.28
6/27/2022 8:30	6.27
6/27/2022 8:31	6.27
6/27/2022 8:32	6.27
6/27/2022 8:33	6.30
6/27/2022 8:34	6.28
6/27/2022 8:35	6.26
6/27/2022 8:36	6.28
6/27/2022 8:37	6.28
6/27/2022 8:38	6.28
6/27/2022 8:39	6.30
6/27/2022 8:40	6.28
6/27/2022 8:41	6.31
6/27/2022 8:42	6.27
6/27/2022 8:43	6.31
6/27/2022 8:44	6.29
6/27/2022 8:45	6.25
6/27/2022 8:46	6.28
6/27/2022 8:47	6.27
6/27/2022 8:48	6.27
6/27/2022 8:49	6.27
6/27/2022 8:50	8.02
6/27/2022 8:51	8.99
6/27/2022 8:52	6.60
6/27/2022 8:53	6.31
6/27/2022 8:54	6.31
6/27/2022 8:55	6.33
6/27/2022 8:56	6.29
6/27/2022 8:57	6.29
6/27/2022 8:58	6.27

6/27/2022 8:59	6.29
6/27/2022 9:00	6.29
6/27/2022 9:01	6.28
6/27/2022 9:02	6.31
6/27/2022 9:03	6.27
6/27/2022 9:04	6.29
6/27/2022 9:05	6.32
6/27/2022 9:06	6.27
6/27/2022 9:07	6.27
6/27/2022 9:08	6.26
6/27/2022 9:09	6.28
6/27/2022 9:10	6.28
6/27/2022 9:11	6.24
6/27/2022 9:12	6.30
6/27/2022 9:13	6.31
6/27/2022 9:14	6.27
6/27/2022 9:15	6.28
6/27/2022 9:16	6.28
6/27/2022 9:17	6.28
6/27/2022 9:18	6.29
6/27/2022 9:19	6.25
6/27/2022 9:20	6.26
6/27/2022 9:21	6.28
6/27/2022 9:22	6.30
6/27/2022 9:23	6.30
6/27/2022 9:24	6.26
6/27/2022 9:25	6.28
6/27/2022 9:26	6.29
6/27/2022 9:27	6.28
6/27/2022 9:28	6.29
6/27/2022 9:29	6.29
6/27/2022 9:30	6.29
6/27/2022 9:31	6.30
6/27/2022 9:32	6.30
6/27/2022 9:33	6.31
6/27/2022 9:34	6.27
6/27/2022 9:35	6.26
6/27/2022 9:36	6.27
6/27/2022 9:37	6.27
6/27/2022 9:38	6.28
6/27/2022 9:39	6.26
6/27/2022 9:40	6.28
6/27/2022 9:41	6.28
6/27/2022 9:42	6.26
6/27/2022 9:43	6.29
6/27/2022 9:44	6.27
6/27/2022 9:45	6.27
6/27/2022 9:46	6.30
6/27/2022 9:47	6.26
6/27/2022 9:48	6.31
6/27/2022 9:49	6.28
6/27/2022 9:50	6.30
6/27/2022 9:51	6.26
6/27/2022 9:52	6.27
6/27/2022 9:53	6.28
6/27/2022 9:54	6.26
6/27/2022 9:55	6.27
6/27/2022 9:56	6.26
6/27/2022 9:57	6.31
6/27/2022 9:58	6.26
6/27/2022 9:59	6.29
6/27/2022 10:00	6.30
6/27/2022 10:01	6.26
6/27/2022 10:02	6.26
6/27/2022 10:03	6.28
6/27/2022 10:04	6.29
6/27/2022 10:05	6.30
6/27/2022 10:06	6.28
6/27/2022 10:07	6.28
6/27/2022 10:08	6.26
6/27/2022 10:09	6.29
6/27/2022 10:10	6.29
6/27/2022 10:11	6.29
6/27/2022 10:12	6.27
6/27/2022 10:13	6.29
6/27/2022 10:14	6.28
6/27/2022 10:15	6.28
6/27/2022 10:16	6.27
6/27/2022 10:17	6.28
6/27/2022 10:18	6.29
6/27/2022 10:19	6.28
6/27/2022 10:20	6.29
6/27/2022 10:21	6.28
6/27/2022 10:22	6.29
6/27/2022 10:23	6.30
6/27/2022 10:24	6.28
6/27/2022 10:25	6.28
6/27/2022 10:26	6.28

6/27/2022 10:27	6.26
6/27/2022 10:28	6.28
6/27/2022 10:29	6.28
6/27/2022 10:30	6.29
6/27/2022 10:31	6.27
6/27/2022 10:32	6.26
6/27/2022 10:33	6.25
6/27/2022 10:34	6.29
6/27/2022 10:35	6.24
6/27/2022 10:36	6.26
6/27/2022 10:37	6.26
6/27/2022 10:38	6.28
6/27/2022 10:39	6.27
6/27/2022 10:40	6.29
6/27/2022 10:41	6.30
6/27/2022 10:42	6.32
6/27/2022 10:43	6.24
6/27/2022 10:44	6.26
6/27/2022 10:45	6.28
6/27/2022 10:46	6.26
6/27/2022 10:47	6.28
6/27/2022 10:48	6.29
6/27/2022 10:49	6.30
6/27/2022 10:50	6.26
6/27/2022 10:51	6.29
6/27/2022 10:52	6.28
6/27/2022 10:53	6.30
6/27/2022 10:54	6.26
6/27/2022 10:55	6.26
6/27/2022 10:56	6.28
6/27/2022 10:57	6.31
6/27/2022 10:58	6.28
6/27/2022 10:59	6.28
6/27/2022 11:00	6.30
6/27/2022 11:01	6.29
6/27/2022 11:02	6.28
6/27/2022 11:03	6.28
6/27/2022 11:04	6.30
6/27/2022 11:05	6.29
6/27/2022 11:06	6.28
6/27/2022 11:07	6.27
6/27/2022 11:08	6.26
6/27/2022 11:09	6.29
6/27/2022 11:10	6.27
6/27/2022 11:11	6.26
6/27/2022 11:12	6.27
6/27/2022 11:13	6.30
6/27/2022 11:14	6.29
6/27/2022 11:15	6.29
6/27/2022 11:16	6.28
6/27/2022 11:17	6.29
6/27/2022 11:18	6.28
6/27/2022 11:19	6.29
6/27/2022 11:20	6.30
6/27/2022 11:21	6.29
6/27/2022 11:22	6.28
6/27/2022 11:23	6.29
6/27/2022 11:24	6.27
6/27/2022 11:25	6.30
6/27/2022 11:26	6.26
6/27/2022 11:27	6.29
6/27/2022 11:28	6.27
6/27/2022 11:29	6.25
6/27/2022 11:30	6.30
6/27/2022 11:31	6.27
6/27/2022 11:32	6.28
6/27/2022 11:33	6.30
6/27/2022 11:34	6.26
6/27/2022 11:35	6.27
6/27/2022 11:36	6.30
6/27/2022 11:37	7.40
6/27/2022 11:38	8.97
6/27/2022 11:39	7.06
6/27/2022 11:40	6.36
6/27/2022 11:41	6.34
6/27/2022 11:42	6.31
6/27/2022 11:43	6.31
6/27/2022 11:44	6.29
6/27/2022 11:45	6.26
6/27/2022 11:46	6.28
6/27/2022 11:47	6.31
6/27/2022 11:48	6.29
6/27/2022 11:49	6.30
6/27/2022 11:50	6.29
6/27/2022 11:51	6.27
6/27/2022 11:52	6.28
6/27/2022 11:53	6.31
6/27/2022 11:54	6.28

6/27/2022 11:55	6.32
6/27/2022 11:56	6.29
6/27/2022 11:57	6.30
6/27/2022 11:58	6.30
6/27/2022 11:59	6.30
6/27/2022 12:00	6.29
6/27/2022 12:01	6.29
6/27/2022 12:02	6.30
6/27/2022 12:03	6.29
6/27/2022 12:04	6.29
6/27/2022 12:05	6.28
6/27/2022 12:06	6.31
6/27/2022 12:07	6.30
6/27/2022 12:08	6.30
6/27/2022 12:09	6.30
6/27/2022 12:10	6.31
6/27/2022 12:11	6.28
6/27/2022 12:12	6.28
6/27/2022 12:13	6.28
6/27/2022 12:14	6.28
6/27/2022 12:15	6.27
6/27/2022 12:16	6.30
6/27/2022 12:17	6.27
6/27/2022 12:18	6.27
6/27/2022 12:19	6.28
6/27/2022 12:20	6.29
6/27/2022 12:21	6.28
6/27/2022 12:22	6.32
6/27/2022 12:23	6.27
6/27/2022 12:24	6.28
6/27/2022 12:25	6.31
6/27/2022 12:26	6.29
6/27/2022 12:27	6.27
6/27/2022 12:28	6.29
6/27/2022 12:29	6.29
6/27/2022 12:30	6.31
6/27/2022 12:31	6.29
6/27/2022 12:32	6.28
6/27/2022 12:33	6.28
6/27/2022 12:34	6.29
6/27/2022 12:35	6.30
6/27/2022 12:36	6.30
6/27/2022 12:37	6.28
6/27/2022 12:38	6.29
6/27/2022 12:39	6.27
6/27/2022 12:40	6.30
6/27/2022 12:41	6.27
6/27/2022 12:42	6.28
6/27/2022 12:43	6.31
6/27/2022 12:44	6.29
6/27/2022 12:45	6.33
6/27/2022 12:46	6.29
6/27/2022 12:47	6.27
6/27/2022 12:48	8.82
6/27/2022 12:49	8.12
6/27/2022 12:50	6.39
6/27/2022 12:51	6.28
6/27/2022 12:52	6.33
6/27/2022 12:53	6.30
6/27/2022 12:54	6.30

PZ-1 Shallow

Date and Time	Temperature (C)	Level Depth To Water (ft)
6/16/2022 15:15	14.84	4.02
6/16/2022 15:25	14.47	4.03
6/16/2022 15:35	14.41	4.02
6/16/2022 15:45	14.34	4.02
6/16/2022 15:55	14.30	4.02
6/16/2022 16:05	14.27	4.01
6/16/2022 16:15	14.26	4.01
6/16/2022 16:25	14.25	4.00
6/16/2022 16:35	14.23	4.00
6/16/2022 16:45	14.22	4.00
6/16/2022 16:55	14.21	3.99
6/16/2022 17:05	14.20	3.99
6/16/2022 17:15	14.19	3.99
6/16/2022 17:25	14.18	3.98
6/16/2022 17:35	14.18	3.98
6/16/2022 17:45	14.17	3.97
6/16/2022 17:55	14.17	3.97
6/16/2022 18:05	14.16	3.97
6/16/2022 18:15	14.16	3.97
6/16/2022 18:25	14.15	3.96
6/16/2022 18:35	14.15	3.97
6/16/2022 18:45	14.15	3.96
6/16/2022 18:55	14.15	3.96
6/16/2022 19:05	14.15	3.96
6/16/2022 19:15	14.14	3.95
6/16/2022 19:25	14.15	3.95
6/16/2022 19:35	14.14	3.95
6/16/2022 19:45	14.14	3.94
6/16/2022 19:55	14.14	3.95
6/16/2022 20:05	14.14	3.94
6/16/2022 20:15	14.14	3.93
6/16/2022 20:25	14.14	3.94
6/16/2022 20:35	14.14	3.93
6/16/2022 20:45	14.14	3.93
6/16/2022 20:55	14.14	3.93
6/16/2022 21:05	14.14	3.92
6/16/2022 21:15	14.14	3.92
6/16/2022 21:25	14.14	3.92
6/16/2022 21:35	14.14	3.91
6/16/2022 21:45	14.14	3.92
6/16/2022 21:55	14.14	3.91
6/16/2022 22:05	14.14	3.91
6/16/2022 22:15	14.14	3.91
6/16/2022 22:25	14.14	3.91
6/16/2022 22:35	14.14	3.91
6/16/2022 22:45	14.14	3.90
6/16/2022 22:55	14.14	3.90
6/16/2022 23:05	14.14	3.90
6/16/2022 23:15	14.14	3.90
6/16/2022 23:25	14.14	3.90
6/16/2022 23:35	14.14	3.90
6/16/2022 23:45	14.15	3.89
6/16/2022 23:55	14.14	3.89
6/17/2022 0:05	14.14	3.90
6/17/2022 0:15	14.14	3.89
6/17/2022 0:25	14.15	3.89
6/17/2022 0:35	14.15	3.89
6/17/2022 0:45	14.15	3.89
6/17/2022 0:55	14.16	3.89
6/17/2022 1:05	14.15	3.88
6/17/2022 1:15	14.15	3.88
6/17/2022 1:25	14.15	3.88
6/17/2022 1:35	14.15	3.89
6/17/2022 1:45	14.15	3.88
6/17/2022 1:55	14.15	3.88
6/17/2022 2:05	14.15	3.88
6/17/2022 2:15	14.15	3.87
6/17/2022 2:25	14.15	3.87
6/17/2022 2:35	14.15	3.87
6/17/2022 2:45	14.15	3.87
6/17/2022 2:55	14.15	3.87
6/17/2022 3:05	14.15	3.87
6/17/2022 3:15	14.16	3.87
6/17/2022 3:25	14.15	3.87
6/17/2022 3:35	14.16	3.87
6/17/2022 3:45	14.16	3.86
6/17/2022 3:55	14.16	3.86
6/17/2022 4:05	14.16	3.86
6/17/2022 4:15	14.16	3.86
6/17/2022 4:25	14.16	3.86
6/17/2022 4:35	14.16	3.86
6/17/2022 4:45	14.16	3.86

PZ-1 Deep

Date and Time	Temperature (C)	Level Depth To Water (ft)	Deeper PZ Adjusted to Match Shallow PZ top of casing height
6/16/2022 15:18	14.73	2.80	3.68
6/16/2022 15:20	14.47	2.82	3.70
6/16/2022 15:30	14.10	2.80	3.68
6/16/2022 15:40	14.02	2.80	3.68
6/16/2022 15:50	13.99	2.81	3.69
6/16/2022 16:00	13.97	2.81	3.69
6/16/2022 16:10	13.96	2.81	3.69
6/16/2022 16:20	13.95	2.81	3.69
6/16/2022 16:30	13.95	2.81	3.69
6/16/2022 16:40	13.95	2.82	3.70
6/16/2022 16:50	13.94	2.82	3.70
6/16/2022 17:00	13.94	2.82	3.70
6/16/2022 17:10	13.94	2.82	3.70
6/16/2022 17:20	13.94	2.82	3.70
6/16/2022 17:30	13.94	2.82	3.70
6/16/2022 17:40	13.94	2.82	3.70
6/16/2022 17:50	13.94	2.83	3.71
6/16/2022 18:00	13.93	2.82	3.70
6/16/2022 18:10	13.93	2.83	3.71
6/16/2022 18:20	13.94	2.83	3.71
6/16/2022 18:30	13.94	2.83	3.71
6/16/2022 18:40	13.93	2.83	3.71
6/16/2022 18:50	13.93	2.83	3.71
6/16/2022 19:00	13.93	2.83	3.71
6/16/2022 19:10	13.94	2.83	3.71
6/16/2022 19:20	13.93	2.83	3.71
6/16/2022 19:30	13.94	2.83	3.71
6/16/2022 19:40	13.94	2.83	3.71
6/16/2022 19:50	13.94	2.83	3.71
6/16/2022 20:00	13.93	2.83	3.71
6/16/2022 20:10	13.94	2.84	3.72
6/16/2022 20:20	13.94	2.84	3.72
6/16/2022 20:30	13.94	2.84	3.72
6/16/2022 20:40	13.94	2.84	3.72
6/16/2022 20:50	13.94	2.84	3.72
6/16/2022 21:00	13.94	2.84	3.72
6/16/2022 21:10	13.94	2.84	3.72
6/16/2022 21:20	13.94	2.84	3.72
6/16/2022 21:30	13.94	2.84	3.72
6/16/2022 21:40	13.94	2.85	3.73
6/16/2022 21:50	13.94	2.84	3.72
6/16/2022 22:00	13.94	2.85	3.73
6/16/2022 22:10	13.95	2.85	3.73
6/16/2022 22:20	13.94	2.85	3.73
6/16/2022 22:30	13.94	2.85	3.73
6/14/2022 11:26	13.94	2.76	3.64
6/16/2022 22:50	13.95	2.85	3.73
6/16/2022 23:00	13.95	2.85	3.73
6/16/2022 23:10	13.95	2.85	3.73
6/16/2022 23:20	13.95	2.85	3.73
6/16/2022 23:30	13.95	2.85	3.73
6/16/2022 23:40	13.95	2.85	3.73
6/16/2022 23:50	13.95	2.85	3.73
6/17/2022 0:00	13.95	2.85	3.73
6/17/2022 0:10	13.95	2.85	3.73
6/17/2022 0:20	13.95	2.86	3.74
6/17/2022 0:30	13.95	2.86	3.74
6/17/2022 0:40	13.95	2.86	3.74
6/17/2022 0:50	13.95	2.86	3.74
6/17/2022 1:00	13.95	2.86	3.74
6/17/2022 1:10	13.95	2.86	3.74
6/17/2022 1:20	13.96	2.86	3.74
6/17/2022 1:30	13.96	2.86	3.74
6/17/2022 1:40	13.96	2.86	3.74
6/17/2022 1:50	13.96	2.86	3.74
6/17/2022 2:00	13.96	2.86	3.74
6/17/2022 2:10	13.96	2.86	3.74
6/17/2022 2:20	13.95	2.86	3.74
6/17/2022 2:30	13.96	2.86	3.74
6/17/2022 2:40	13.96	2.86	3.74
6/17/2022 2:50	13.96	2.86	3.74
6/17/2022 3:00	13.96	2.87	3.75
6/17/2022 3:10	13.96	2.86	3.74
6/17/2022 3:20	13.96	2.87	3.75
6/17/2022 3:30	13.96	2.86	3.74
6/17/2022 3:40	13.96	2.86	3.74
6/17/2022 3:50	13.96	2.87	3.75
6/17/2022 4:00	13.97	2.87	3.75
6/17/2022 4:10	13.97	2.87	3.75
6/17/2022 4:20	13.97	2.87	3.75
6/17/2022 4:30	13.96	2.87	3.75
6/17/2022 4:40	13.97	2.87	3.75

6/17/2022 4:55	14.16	3.86	6/17/2022 4:50	13.97	2.87	3.75
6/17/2022 5:05	14.16	3.86	6/17/2022 5:00	13.97	2.87	3.75
6/17/2022 5:15	14.16	3.86	6/17/2022 5:10	13.97	2.87	3.75
6/17/2022 5:25	14.16	3.85	6/17/2022 5:20	13.97	2.87	3.75
6/17/2022 5:35	14.17	3.85	6/17/2022 5:30	13.97	2.87	3.75
6/17/2022 5:45	14.17	3.86	6/17/2022 5:40	13.97	2.87	3.75
6/17/2022 5:55	14.17	3.85	6/17/2022 5:50	13.97	2.88	3.76
6/17/2022 6:05	14.17	3.85	6/17/2022 6:00	13.97	2.87	3.75
6/17/2022 6:15	14.17	3.85	6/17/2022 6:10	13.97	2.87	3.75
6/17/2022 6:25	14.17	3.85	6/17/2022 6:20	13.97	2.87	3.75
6/17/2022 6:35	14.17	3.85	6/17/2022 6:30	13.97	2.87	3.75
6/17/2022 6:45	14.17	3.85	6/17/2022 6:40	13.97	2.87	3.75
6/17/2022 6:55	14.17	3.85	6/17/2022 6:50	13.98	2.87	3.75
6/17/2022 7:05	14.17	3.85	6/17/2022 7:00	13.98	2.88	3.76
6/17/2022 7:15	14.17	3.85	6/17/2022 7:10	13.98	2.87	3.75
6/17/2022 7:25	14.20	3.85	6/17/2022 7:20	13.98	2.88	3.76
6/17/2022 7:35	14.18	3.85	6/17/2022 7:30	13.98	2.88	3.76
6/17/2022 7:45	14.17	3.84	6/17/2022 7:40	13.98	2.87	3.75
6/17/2022 7:55	14.17	3.85	6/17/2022 7:50	13.98	2.88	3.76
6/17/2022 8:05	14.17	3.85	6/17/2022 8:00	13.98	2.88	3.76
6/17/2022 8:15	14.17	3.85	6/17/2022 8:10	13.98	2.88	3.76
6/17/2022 8:25	14.17	3.84	6/17/2022 8:20	13.98	2.88	3.76
6/17/2022 8:35	14.17	3.84	6/17/2022 8:30	13.98	2.88	3.76
6/17/2022 8:45	14.18	3.84	6/17/2022 8:40	13.98	2.88	3.76
6/17/2022 8:55	14.18	3.84	6/17/2022 8:50	13.98	2.88	3.76
6/17/2022 9:05	14.18	3.84	6/17/2022 9:00	13.98	2.88	3.76
6/17/2022 9:15	14.18	3.84	6/17/2022 9:10	13.98	2.88	3.76
6/17/2022 9:25	14.18	3.84	6/17/2022 9:20	13.98	2.88	3.76
6/17/2022 9:35	14.18	3.84	6/17/2022 9:30	13.98	2.88	3.76
6/17/2022 9:45	14.18	3.84	6/17/2022 9:40	13.99	2.88	3.76
6/17/2022 9:55	14.18	3.86	6/17/2022 9:50	13.99	2.88	3.76
6/17/2022 10:05	14.23	3.85	6/17/2022 10:00	13.99	2.88	3.76
6/17/2022 10:15	14.20	3.84	6/17/2022 10:10	13.99	2.88	3.76
6/17/2022 10:25	14.19	3.85	6/17/2022 10:20	13.99	2.88	3.76
6/17/2022 10:35	14.19	3.85	6/17/2022 10:30	13.99	2.89	3.77
6/17/2022 10:45	14.19	3.85	6/17/2022 10:40	13.99	2.88	3.76
6/17/2022 10:55	14.19	3.85	6/17/2022 10:50	13.99	2.88	3.76
6/17/2022 11:05	14.18	3.85	6/17/2022 11:00	13.99	2.88	3.76
6/17/2022 11:15	14.18	3.84	6/17/2022 11:10	13.99	2.88	3.76
6/17/2022 11:25	14.18	3.84	6/17/2022 11:20	13.99	2.88	3.76
6/17/2022 11:35	14.18	3.84	6/17/2022 11:30	13.99	2.88	3.76
6/17/2022 11:45	14.18	3.84	6/17/2022 11:40	13.99	2.89	3.77
6/17/2022 11:55	14.18	3.84	6/17/2022 11:50	13.99	2.89	3.77
6/17/2022 12:05	14.18	3.84	6/17/2022 12:00	13.99	2.88	3.76
6/17/2022 12:15	14.18	3.84	6/17/2022 12:10	13.99	2.89	3.77
6/17/2022 12:25	14.19	3.84	6/17/2022 12:20	13.99	2.89	3.77
6/17/2022 12:35	14.19	3.84	6/17/2022 12:30	14.00	2.88	3.76
6/17/2022 12:45	14.20	3.85	6/17/2022 12:40	14.00	2.88	3.76
6/17/2022 12:55	14.20	3.84	6/17/2022 12:41	14.00	2.90	3.78
6/17/2022 13:05	14.19	3.84	6/17/2022 12:41	14.00	2.90	3.78
6/17/2022 13:15	14.19	3.84	6/17/2022 12:51	13.99	2.88	3.76
6/17/2022 13:25	14.19	3.84	6/17/2022 13:01	13.99	2.88	3.76
6/17/2022 13:35	14.19	3.83	6/17/2022 13:11	13.99	2.88	3.76
6/17/2022 13:45	14.19	3.84	6/17/2022 13:21	13.99	2.88	3.76
6/17/2022 13:55	14.19	3.84	6/17/2022 13:31	13.99	2.88	3.76
6/17/2022 14:05	14.21	3.84	6/17/2022 13:41	13.99	2.88	3.76
6/17/2022 14:15	14.19	3.84	6/17/2022 13:51	13.99	2.88	3.76
6/17/2022 14:25	14.20	3.84	6/17/2022 14:01	13.99	2.88	3.76
6/17/2022 14:35	14.19	3.84	6/17/2022 14:11	13.99	2.88	3.76
6/17/2022 14:45	14.19	3.84	6/17/2022 14:21	14.00	2.88	3.76
6/17/2022 14:55	14.19	3.84	6/17/2022 14:31	14.00	2.88	3.76
6/17/2022 15:05	14.19	3.84	6/17/2022 14:41	14.00	2.88	3.76
6/17/2022 15:15	14.19	3.84	6/17/2022 14:51	14.00	2.88	3.76
6/17/2022 15:25	14.19	3.84	6/17/2022 15:01	14.00	2.89	3.77
6/17/2022 15:35	14.19	3.84	6/17/2022 15:11	14.00	2.89	3.77
6/17/2022 15:45	14.19	3.84	6/17/2022 15:21	14.00	2.89	3.77
6/17/2022 15:55	14.19	3.84	6/17/2022 15:31	14.00	2.89	3.77
6/17/2022 16:05	14.19	3.84	6/17/2022 15:41	14.00	2.89	3.77
6/17/2022 16:15	14.19	3.84	6/17/2022 15:51	14.00	2.89	3.77
6/17/2022 16:25	14.20	3.85	6/17/2022 16:01	14.00	2.89	3.77
6/17/2022 16:35	14.19	3.84	6/17/2022 16:11	14.00	2.89	3.77
6/17/2022 16:45	14.19	3.85	6/17/2022 16:21	14.00	2.89	3.77
6/17/2022 16:55	14.20	3.85	6/17/2022 16:31	14.00	2.89	3.77
6/17/2022 17:05	14.20	3.86	6/17/2022 16:41	14.00	2.89	3.77
6/17/2022 17:15	14.20	3.85	6/17/2022 16:51	14.00	2.89	3.77
6/17/2022 17:25	14.20	3.86	6/17/2022 17:01	14.00	2.89	3.77
6/17/2022 17:35	14.20	3.86	6/17/2022 17:11	14.01	2.89	3.77
6/17/2022 17:45	14.20	3.86	6/17/2022 17:21	14.01	2.89	3.77
6/17/2022 17:55	14.20	3.86	6/17/2022 17:31	14.01	2.90	3.78
6/17/2022 18:05	14.20	3.86	6/17/2022 17:41	14.01	2.90	3.78
6/17/2022 18:15	14.20	3.86	6/17/2022 17:51	14.01	2.90	3.78
6/17/2022 18:25	14.20	3.86	6/17/2022 18:01	14.01	2.89	3.77
6/17/2022 18:35	14.20	3.86	6/17/2022 18:11	14.01	2.90	3.78
6/17/2022 18:45	14.21	3.87	6/17/2022 18:21	14.01	2.90	3.78
6/17/2022 18:55	14.21	3.87	6/17/2022 18:31	14.01	2.90	3.78
6/17/2022 19:05	14.20	3.87	6/17/2022 18:41	14.01	2.90	3.78
6/17/2022 19:15	14.20	3.87	6/17/2022 18:51	14.01	2.90	3.78
6/17/2022 19:25	14.21	3.87	6/17/2022 19:01	14.01	2.90	3.78

6/17/2022 19:35	14.20	3.87	6/17/2022 19:11	14.01	2.90	3.78
6/17/2022 19:45	14.22	3.87	6/17/2022 19:21	14.01	2.90	3.78
6/17/2022 19:55	14.21	3.87	6/17/2022 19:31	14.02	2.90	3.78
6/17/2022 20:05	14.21	3.87	6/17/2022 19:41	14.01	2.90	3.78
6/17/2022 20:15	14.21	3.88	6/17/2022 19:51	14.02	2.90	3.78
6/17/2022 20:25	14.21	3.87	6/17/2022 20:01	14.02	2.91	3.79
6/17/2022 20:35	14.22	3.88	6/17/2022 20:11	14.02	2.90	3.78
6/17/2022 20:45	14.21	3.88	6/17/2022 20:21	14.02	2.90	3.78
6/17/2022 20:55	14.21	3.88	6/17/2022 20:31	14.02	2.91	3.79
6/17/2022 21:05	14.21	3.88	6/17/2022 20:41	14.02	2.91	3.79
6/17/2022 21:15	14.22	3.88	6/17/2022 20:51	14.02	2.91	3.79
6/17/2022 21:25	14.22	3.88	6/17/2022 21:01	14.02	2.91	3.79
6/17/2022 21:35	14.22	3.88	6/17/2022 21:11	14.02	2.90	3.78
6/17/2022 21:45	14.22	3.88	6/17/2022 21:21	14.02	2.91	3.79
6/17/2022 21:55	14.23	3.92	6/17/2022 21:31	14.02	2.91	3.79
6/17/2022 22:05	14.26	3.90	6/17/2022 21:41	14.02	2.91	3.79
6/17/2022 22:15	14.24	3.89	6/17/2022 21:51	14.03	2.91	3.79
6/17/2022 22:25	14.24	3.89	6/17/2022 22:01	14.03	2.91	3.79
6/17/2022 22:35	14.24	3.90	6/17/2022 22:11	14.03	2.91	3.79
6/17/2022 22:45	14.23	3.90	6/17/2022 22:21	14.03	2.91	3.79
6/17/2022 22:55	14.24	3.92	6/17/2022 22:31	14.03	2.91	3.79
6/17/2022 23:05	14.24	3.92	6/17/2022 22:41	14.03	2.91	3.79
6/17/2022 23:15	14.24	3.91	6/17/2022 22:51	14.03	2.91	3.79
6/17/2022 23:25	14.24	3.90	6/17/2022 23:01	14.03	2.91	3.79
6/17/2022 23:35	14.24	3.91	6/17/2022 23:11	14.03	2.91	3.79
6/17/2022 23:45	14.24	3.92	6/17/2022 23:21	14.03	2.91	3.79
6/17/2022 23:55	14.24	3.91	6/17/2022 23:31	14.04	2.91	3.79
6/18/2022 0:05	14.24	3.90	6/17/2022 23:41	14.03	2.91	3.79
6/18/2022 0:15	14.24	3.91	6/17/2022 23:51	14.04	2.92	3.80
6/18/2022 0:25	14.24	3.91	6/18/2022 0:01	14.04	2.92	3.80
6/18/2022 0:35	14.24	3.91	6/18/2022 0:11	14.04	2.92	3.80
6/18/2022 0:45	14.25	3.91	6/18/2022 0:21	14.04	2.92	3.80
6/18/2022 0:55	14.24	3.91	6/18/2022 0:31	14.04	2.92	3.80
6/18/2022 1:05	14.25	3.92	6/18/2022 0:41	14.04	2.92	3.80
6/18/2022 1:15	14.25	3.91	6/18/2022 0:51	14.04	2.92	3.80
6/18/2022 1:25	14.24	3.91	6/18/2022 1:01	14.04	2.92	3.80
6/18/2022 1:35	14.24	3.92	6/18/2022 1:11	14.04	2.92	3.80
6/18/2022 1:45	14.25	3.92	6/18/2022 1:21	14.04	2.92	3.80
6/18/2022 1:55	14.25	3.92	6/18/2022 1:31	14.04	2.92	3.80
6/18/2022 2:05	14.26	3.92	6/18/2022 1:41	14.05	2.92	3.80
6/18/2022 2:15	14.25	3.92	6/18/2022 1:51	14.05	2.92	3.80
6/18/2022 2:25	14.26	3.92	6/18/2022 2:01	14.05	2.92	3.80
6/18/2022 2:35	14.26	3.92	6/18/2022 2:11	14.05	2.92	3.80
6/18/2022 2:45	14.26	3.92	6/18/2022 2:21	14.05	2.92	3.80
6/18/2022 2:55	14.27	3.94	6/18/2022 2:31	14.05	2.92	3.80
6/18/2022 3:05	14.27	3.92	6/18/2022 2:41	14.05	2.92	3.80
6/18/2022 3:15	14.27	3.92	6/18/2022 2:51	14.05	2.92	3.80
6/18/2022 3:25	14.27	3.92	6/18/2022 3:01	14.06	2.92	3.80
6/18/2022 3:35	14.27	3.93	6/18/2022 3:11	14.06	2.92	3.80
6/18/2022 3:45	14.27	3.93	6/18/2022 3:21	14.06	2.92	3.80
6/18/2022 3:55	14.28	3.93	6/18/2022 3:31	14.06	2.93	3.81
6/18/2022 4:05	14.28	3.94	6/18/2022 3:41	14.06	2.93	3.81
6/18/2022 4:15	14.28	3.93	6/18/2022 3:51	14.06	2.92	3.80
6/18/2022 4:25	14.28	3.95	6/18/2022 4:01	14.06	2.92	3.80
6/18/2022 4:35	14.28	3.95	6/18/2022 4:11	14.06	2.92	3.80
6/18/2022 4:45	14.28	3.94	6/18/2022 4:21	14.06	2.92	3.80
6/18/2022 4:55	14.28	3.93	6/18/2022 4:31	14.07	2.93	3.81
6/18/2022 5:05	14.29	3.95	6/18/2022 4:41	14.07	2.93	3.81
6/18/2022 5:15	14.29	3.95	6/18/2022 4:51	14.07	2.93	3.81
6/18/2022 5:25	14.29	3.94	6/18/2022 5:01	14.07	2.92	3.80
6/18/2022 5:35	14.29	3.96	6/18/2022 5:11	14.07	2.93	3.81
6/18/2022 5:45	14.30	3.96	6/18/2022 5:21	14.07	2.93	3.81
6/18/2022 5:55	14.29	3.94	6/18/2022 5:31	14.07	2.93	3.81
6/18/2022 6:05	14.29	3.94	6/18/2022 5:41	14.07	2.93	3.81
6/18/2022 6:15	14.29	3.94	6/18/2022 5:51	14.07	2.93	3.81
6/18/2022 6:25	14.29	3.94	6/18/2022 6:01	14.07	2.93	3.81
6/18/2022 6:35	14.31	3.94	6/18/2022 6:11	14.08	2.93	3.81
6/18/2022 6:45	14.30	3.94	6/18/2022 6:21	14.08	2.93	3.81
6/18/2022 6:55	14.30	3.94	6/18/2022 6:31	14.08	2.93	3.81
6/18/2022 7:05	14.30	3.93	6/18/2022 6:41	14.08	2.93	3.81
6/18/2022 7:15	14.33	3.99	6/18/2022 6:51	14.08	2.93	3.81
6/18/2022 7:25	14.32	3.95	6/18/2022 7:01	14.09	2.93	3.81
6/18/2022 7:35	14.32	3.96	6/18/2022 7:11	14.08	2.93	3.81
6/18/2022 7:45	14.32	3.95	6/18/2022 7:21	14.09	2.93	3.81
6/18/2022 7:55	14.32	3.97	6/18/2022 7:31	14.09	2.93	3.81
6/18/2022 8:05	14.32	3.97	6/18/2022 7:41	14.09	2.93	3.81
6/18/2022 8:15	14.31	3.95	6/18/2022 7:51	14.09	2.93	3.81
6/18/2022 8:25	14.31	3.95	6/18/2022 8:01	14.09	2.93	3.81
6/18/2022 8:35	14.32	3.95	6/18/2022 8:11	14.09	2.93	3.81
6/18/2022 8:45	14.32	3.95	6/18/2022 8:21	14.09	2.93	3.81
6/18/2022 8:55	14.32	3.95	6/18/2022 8:31	14.10	2.94	3.82
6/18/2022 9:05	14.32	3.95	6/18/2022 8:41	14.10	2.94	3.82
6/18/2022 9:15	14.32	3.95	6/18/2022 8:51	14.10	2.93	3.81
6/18/2022 9:25	14.33	3.97	6/18/2022 9:01	14.10	2.93	3.81
6/18/2022 9:35	14.33	3.96	6/18/2022 9:11	14.10	2.94	3.82
6/18/2022 9:45	14.33	3.96	6/18/2022 9:21	14.10	2.94	3.82
6/18/2022 9:55	14.32	3.98	6/18/2022 9:31	14.10	2.94	3.82
6/18/2022 10:05	14.32	3.96	6/18/2022 9:41	14.10	2.94	3.82

6/18/2022 10:15	14.33	3.96	6/18/2022 9:51	14.11	2.94	3.82
6/18/2022 10:25	14.33	3.97	6/18/2022 10:01	14.11	2.94	3.82
6/18/2022 10:35	14.33	3.96	6/18/2022 10:11	14.11	2.94	3.82
6/18/2022 10:45	14.33	3.96	6/18/2022 10:21	14.11	2.94	3.82
6/18/2022 10:55	14.33	3.96	6/18/2022 10:31	14.11	2.94	3.82
6/18/2022 11:05	14.34	3.97	6/18/2022 10:41	14.11	2.94	3.82
6/18/2022 11:15	14.34	3.97	6/18/2022 10:51	14.11	2.94	3.82
6/18/2022 11:25	14.34	3.97	6/18/2022 11:01	14.11	2.94	3.82
6/18/2022 11:35	14.35	3.98	6/18/2022 11:11	14.11	2.94	3.82
6/18/2022 11:45	14.36	3.97	6/18/2022 11:21	14.11	2.94	3.82
6/18/2022 11:55	14.35	3.99	6/18/2022 11:31	14.12	2.94	3.82
6/18/2022 12:05	14.35	3.97	6/18/2022 11:41	14.12	2.94	3.82
6/18/2022 12:15	14.35	3.98	6/18/2022 11:51	14.12	2.94	3.82
6/18/2022 12:25	14.35	3.98	6/18/2022 12:01	14.12	2.94	3.82
6/18/2022 12:35	14.35	3.98	6/18/2022 12:11	14.12	2.94	3.82
6/18/2022 12:45	14.35	4.01	6/18/2022 12:21	14.12	2.94	3.82
6/18/2022 12:55	14.35	3.99	6/18/2022 12:31	14.12	2.94	3.82
6/18/2022 13:05	14.35	3.98	6/18/2022 12:41	14.13	2.94	3.82
6/18/2022 13:15	14.35	3.98	6/18/2022 12:51	14.13	2.94	3.82
6/18/2022 13:25	14.36	3.99	6/18/2022 13:01	14.13	2.94	3.82
6/18/2022 13:35	14.35	3.98	6/18/2022 13:11	14.13	2.94	3.82
6/18/2022 13:45	14.36	4.00	6/18/2022 13:21	14.13	2.94	3.82
6/18/2022 13:55	14.36	4.00	6/18/2022 13:31	14.13	2.94	3.82
6/18/2022 14:05	14.36	4.00	6/18/2022 13:41	14.13	2.94	3.82
6/18/2022 14:15	14.36	4.00	6/18/2022 13:51	14.13	2.95	3.83
6/18/2022 14:25	14.36	3.99	6/18/2022 14:01	14.13	2.94	3.82
6/18/2022 14:35	14.36	3.99	6/18/2022 14:11	14.14	2.94	3.82
6/18/2022 14:45	14.36	3.99	6/18/2022 14:21	14.14	2.94	3.82
6/18/2022 14:55	14.37	4.02	6/18/2022 14:31	14.14	2.94	3.82
6/18/2022 15:05	14.37	4.01	6/18/2022 14:41	14.14	2.95	3.83
6/18/2022 15:15	14.37	4.02	6/18/2022 14:51	14.14	2.95	3.83
6/18/2022 15:25	14.37	4.01	6/18/2022 15:01	14.14	2.95	3.83
6/18/2022 15:35	14.37	4.02	6/18/2022 15:11	14.14	2.95	3.83
6/18/2022 15:45	14.38	4.01	6/18/2022 15:21	14.14	2.95	3.83
6/18/2022 15:55	14.37	4.02	6/18/2022 15:31	14.14	2.94	3.82
6/18/2022 16:05	14.37	4.00	6/18/2022 15:41	14.14	2.94	3.82
6/18/2022 16:15	14.37	4.00	6/18/2022 15:51	14.15	2.94	3.82
6/18/2022 16:25	14.40	4.01	6/18/2022 16:01	14.15	2.95	3.83
6/18/2022 16:35	14.38	4.01	6/18/2022 16:11	14.15	2.95	3.83
6/18/2022 16:45	14.38	4.01	6/18/2022 16:21	14.15	2.95	3.83
6/18/2022 16:55	14.38	4.01	6/18/2022 16:31	14.15	2.94	3.82
6/18/2022 17:05	14.38	4.01	6/18/2022 16:41	14.15	2.94	3.82
6/18/2022 17:15	14.38	4.01	6/18/2022 16:51	14.15	2.95	3.83
6/18/2022 17:25	14.38	4.03	6/18/2022 17:01	14.15	2.94	3.82
6/18/2022 17:35	14.38	4.03	6/18/2022 17:11	14.15	2.95	3.83
6/18/2022 17:45	14.38	4.04	6/18/2022 17:21	14.16	2.94	3.82
6/18/2022 17:55	14.38	4.03	6/18/2022 17:31	14.16	2.94	3.82
6/18/2022 18:05	14.38	4.03	6/18/2022 17:41	14.16	2.94	3.82
6/18/2022 18:15	14.38	4.02	6/18/2022 17:51	14.16	2.94	3.82
6/18/2022 18:25	14.38	4.02	6/18/2022 18:01	14.16	2.94	3.82
6/18/2022 18:35	14.38	4.02	6/18/2022 18:11	14.16	2.95	3.83
6/18/2022 18:45	14.38	4.05	6/18/2022 18:21	14.16	2.96	3.84
6/18/2022 18:55	14.39	4.04	6/18/2022 18:31	14.16	2.95	3.83
6/18/2022 19:05	14.39	4.03	6/18/2022 18:41	14.16	2.95	3.83
6/18/2022 19:15	14.39	4.03	6/18/2022 18:51	14.16	2.95	3.83
6/18/2022 19:25	14.39	4.03	6/18/2022 19:01	14.16	2.95	3.83
6/18/2022 19:35	14.39	4.03	6/18/2022 19:11	14.17	2.95	3.83
6/18/2022 19:45	14.39	4.03	6/18/2022 19:21	14.16	2.95	3.83
6/18/2022 19:55	14.39	4.03	6/18/2022 19:31	14.17	2.95	3.83
6/18/2022 20:05	14.39	4.05	6/18/2022 19:41	14.17	2.95	3.83
6/18/2022 20:15	14.39	4.03	6/18/2022 19:51	14.17	2.95	3.83
6/18/2022 20:25	14.39	4.03	6/18/2022 20:01	14.17	2.95	3.83
6/18/2022 20:35	14.39	4.06	6/18/2022 20:11	14.17	2.95	3.83
6/18/2022 20:45	14.40	4.04	6/18/2022 20:21	14.17	2.95	3.83
6/18/2022 20:55	14.39	4.04	6/18/2022 20:31	14.17	2.95	3.83
6/18/2022 21:05	14.39	4.03	6/18/2022 20:41	14.17	2.96	3.84
6/18/2022 21:15	14.39	4.04	6/18/2022 20:51	14.17	2.96	3.84
6/18/2022 21:25	14.39	4.04	6/18/2022 21:01	14.17	2.96	3.84
6/18/2022 21:35	14.39	4.03	6/18/2022 21:11	14.17	2.96	3.84
6/18/2022 21:45	14.40	4.05	6/18/2022 21:21	14.17	2.96	3.84
6/18/2022 21:55	14.41	4.06	6/18/2022 21:31	14.18	2.96	3.84
6/18/2022 22:05	14.42	4.05	6/18/2022 21:41	14.17	2.96	3.84
6/18/2022 22:15	14.41	4.07	6/18/2022 21:51	14.18	2.96	3.84
6/18/2022 22:25	14.41	4.06	6/18/2022 22:01	14.18	2.96	3.84
6/18/2022 22:35	14.40	4.05	6/18/2022 22:11	14.18	2.97	3.85
6/18/2022 22:45	14.40	4.05	6/18/2022 22:21	14.18	2.96	3.84
6/18/2022 22:55	14.40	4.05	6/18/2022 22:31	14.18	2.96	3.84
6/18/2022 23:05	14.40	4.05	6/18/2022 22:41	14.18	2.97	3.85
6/18/2022 23:15	14.40	4.06	6/18/2022 22:51	14.18	2.97	3.85
6/18/2022 23:25	14.41	4.06	6/18/2022 23:01	14.18	2.97	3.85
6/18/2022 23:35	14.41	4.06	6/18/2022 23:11	14.18	2.97	3.85
6/18/2022 23:45	14.41	4.05	6/18/2022 23:21	14.18	2.97	3.85
6/18/2022 23:55	14.40	4.05	6/18/2022 23:31	14.18	2.97	3.85
6/19/2022 0:05	14.40	4.05	6/18/2022 23:41	14.19	2.97	3.85
6/19/2022 0:15	14.41	4.05	6/18/2022 23:51	14.19	2.97	3.85
6/19/2022 0:25	14.40	4.05	6/19/2022 0:01	14.19	2.98	3.86
6/19/2022 0:35	14.41	4.05	6/19/2022 0:11	14.19	2.97	3.85
6/19/2022 0:45	14.40	4.05	6/19/2022 0:21	14.19	2.97	3.85

6/19/2022 0:55	14.41	4.06	6/19/2022 0:31	14.19	2.98	3.86
6/19/2022 1:05	14.41	4.08	6/19/2022 0:41	14.19	2.97	3.85
6/19/2022 1:15	14.40	4.05	6/19/2022 0:51	14.19	2.98	3.86
6/19/2022 1:25	14.41	4.05	6/19/2022 1:01	14.19	2.98	3.86
6/19/2022 1:35	14.40	4.05	6/19/2022 1:11	14.19	2.98	3.86
6/19/2022 1:45	14.41	4.06	6/19/2022 1:21	14.19	2.98	3.86
6/19/2022 1:55	14.41	4.05	6/19/2022 1:31	14.19	2.98	3.86
6/19/2022 2:05	14.41	4.05	6/19/2022 1:41	14.19	2.98	3.86
6/19/2022 2:15	14.41	4.09	6/19/2022 1:51	14.19	2.98	3.86
6/19/2022 2:25	14.41	4.06	6/19/2022 2:01	14.19	2.98	3.86
6/19/2022 2:35	14.41	4.08	6/19/2022 2:11	14.19	2.98	3.86
6/19/2022 2:45	14.41	4.07	6/19/2022 2:21	14.20	2.98	3.86
6/19/2022 2:55	14.41	4.06	6/19/2022 2:31	14.19	2.98	3.86
6/19/2022 3:05	14.41	4.05	6/19/2022 2:41	14.19	2.98	3.86
6/19/2022 3:15	14.41	4.07	6/19/2022 2:51	14.19	2.98	3.86
6/19/2022 3:25	14.41	4.07	6/19/2022 3:01	14.20	2.98	3.86
6/19/2022 3:35	14.41	4.08	6/19/2022 3:11	14.20	2.98	3.86
6/19/2022 3:45	14.41	4.08	6/19/2022 3:21	14.20	2.98	3.86
6/19/2022 3:55	14.41	4.08	6/19/2022 3:31	14.20	2.99	3.87
6/19/2022 4:05	14.41	4.08	6/19/2022 3:41	14.20	2.98	3.86
6/19/2022 4:15	14.41	4.07	6/19/2022 3:51	14.20	2.99	3.87
6/19/2022 4:25	14.41	4.07	6/19/2022 4:01	14.20	2.99	3.87
6/19/2022 4:35	14.41	4.07	6/19/2022 4:11	14.20	2.99	3.87
6/19/2022 4:45	14.41	4.06	6/19/2022 4:21	14.20	2.99	3.87
6/19/2022 4:55	14.41	4.07	6/19/2022 4:31	14.20	2.99	3.87
6/19/2022 5:05	14.41	4.08	6/19/2022 4:41	14.20	2.99	3.87
6/19/2022 5:15	14.41	4.08	6/19/2022 4:51	14.20	2.99	3.87
6/19/2022 5:25	14.42	4.10	6/19/2022 5:01	14.20	2.99	3.87
6/19/2022 5:35	14.41	4.09	6/19/2022 5:11	14.20	2.99	3.87
6/19/2022 5:45	14.41	4.11	6/19/2022 5:21	14.20	2.99	3.87
6/19/2022 5:55	14.41	4.10	6/19/2022 5:31	14.20	2.99	3.87
6/19/2022 6:05	14.41	4.08	6/19/2022 5:41	14.20	2.99	3.87
6/19/2022 6:15	14.41	4.08	6/19/2022 5:51	14.20	2.99	3.87
6/19/2022 6:25	14.41	4.07	6/19/2022 6:01	14.20	2.99	3.87
6/19/2022 6:35	14.41	4.08	6/19/2022 6:11	14.20	2.99	3.87
6/19/2022 6:45	14.41	4.08	6/19/2022 6:21	14.20	2.99	3.87
6/19/2022 6:55	14.41	4.08	6/19/2022 6:31	14.20	3.00	3.88
6/19/2022 7:05	14.41	4.08	6/19/2022 6:41	14.20	2.99	3.87
6/19/2022 7:15	14.42	4.08	6/19/2022 6:51	14.20	2.99	3.87
6/19/2022 7:25	14.41	4.08	6/19/2022 7:01	14.20	3.00	3.88
6/19/2022 7:35	14.41	4.08	6/19/2022 7:11	14.20	2.99	3.87
6/19/2022 7:45	14.41	4.09	6/19/2022 7:21	14.20	2.99	3.87
6/19/2022 7:55	14.41	4.08	6/19/2022 7:31	14.20	2.99	3.87
6/19/2022 8:05	14.41	4.08	6/19/2022 7:41	14.20	2.99	3.87
6/19/2022 8:15	14.41	4.08	6/19/2022 7:51	14.21	3.00	3.88
6/19/2022 8:25	14.40	4.08	6/19/2022 8:01	14.20	3.00	3.88
6/19/2022 8:35	14.40	4.07	6/19/2022 8:11	14.20	3.00	3.88
6/19/2022 8:45	14.41	4.10	6/19/2022 8:21	14.20	3.00	3.88
6/19/2022 8:55	14.41	4.10	6/19/2022 8:31	14.20	3.00	3.88
6/19/2022 9:05	14.41	4.10	6/19/2022 8:41	14.20	3.00	3.88
6/19/2022 9:15	14.41	4.09	6/19/2022 8:51	14.20	3.00	3.88
6/19/2022 9:25	14.40	4.10	6/19/2022 9:01	14.20	3.00	3.88
6/19/2022 9:35	14.40	4.09	6/19/2022 9:11	14.20	3.00	3.88
6/19/2022 9:45	14.40	4.09	6/19/2022 9:21	14.20	3.00	3.88
6/19/2022 9:55	14.40	4.10	6/19/2022 9:31	14.20	3.01	3.89
6/19/2022 10:05	14.40	4.11	6/19/2022 9:41	14.20	3.00	3.88
6/19/2022 10:15	14.40	4.10	6/19/2022 9:51	14.20	3.00	3.88
6/19/2022 10:25	14.40	4.10	6/19/2022 10:01	14.20	3.00	3.88
6/19/2022 10:35	14.41	4.10	6/19/2022 10:11	14.20	3.00	3.88
6/19/2022 10:45	14.40	4.10	6/19/2022 10:21	14.20	3.00	3.88
6/19/2022 10:55	14.40	4.09	6/19/2022 10:31	14.20	3.00	3.88
6/19/2022 11:05	14.40	4.10	6/19/2022 10:41	14.20	3.00	3.88
6/19/2022 11:15	14.40	4.10	6/19/2022 10:51	14.20	3.01	3.89
6/19/2022 11:25	14.39	4.10	6/19/2022 11:01	14.20	3.01	3.89
6/19/2022 11:35	14.39	4.10	6/19/2022 11:11	14.20	3.01	3.89
6/19/2022 11:45	14.40	4.10	6/19/2022 11:21	14.20	3.01	3.89
6/19/2022 11:55	14.39	4.10	6/19/2022 11:31	14.20	3.01	3.89
6/19/2022 12:05	14.39	4.10	6/19/2022 11:41	14.20	3.00	3.88
6/19/2022 12:15	14.39	4.14	6/19/2022 11:51	14.20	3.01	3.89
6/19/2022 12:25	14.39	4.12	6/19/2022 12:01	14.20	3.00	3.88
6/19/2022 12:35	14.39	4.12	6/19/2022 12:11	14.20	3.01	3.89
6/19/2022 12:45	14.39	4.12	6/19/2022 12:21	14.20	3.01	3.89
6/19/2022 12:55	14.39	4.12	6/19/2022 12:31	14.20	3.01	3.89
6/19/2022 13:05	14.39	4.11	6/19/2022 12:41	14.20	3.01	3.89
6/19/2022 13:15	14.39	4.11	6/19/2022 12:51	14.20	3.01	3.89
6/19/2022 13:25	14.38	4.13	6/19/2022 13:01	14.20	3.01	3.89
6/19/2022 13:35	14.38	4.11	6/19/2022 13:11	14.20	3.01	3.89
6/19/2022 13:45	14.39	4.12	6/19/2022 13:21	14.20	3.01	3.89
6/19/2022 13:55	14.39	4.12	6/19/2022 13:31	14.20	3.01	3.89
6/19/2022 14:05	14.38	4.13	6/19/2022 13:41	14.20	3.01	3.89
6/19/2022 14:15	14.38	4.13	6/19/2022 13:51	14.19	3.01	3.89
6/19/2022 14:25	14.38	4.12	6/19/2022 14:01	14.19	3.00	3.88
6/19/2022 14:35	14.38	4.12	6/19/2022 14:11	14.19	3.01	3.89
6/19/2022 14:45	14.37	4.11	6/19/2022 14:21	14.19	3.01	3.89
6/19/2022 14:55	14.38	4.14	6/19/2022 14:31	14.19	3.01	3.89
6/19/2022 15:05	14.38	4.15	6/19/2022 14:41	14.19	3.01	3.89
6/19/2022 15:15	14.37	4.13	6/19/2022 14:51	14.19	3.01	3.89
6/19/2022 15:25	14.37	4.14	6/19/2022 15:01	14.19	3.01	3.89

6/19/2022 15:35	14.37	4.13	6/19/2022 15:11	14.19	3.01	3.89
6/19/2022 15:45	14.37	4.12	6/19/2022 15:21	14.19	3.01	3.89
6/19/2022 15:55	14.37	4.12	6/19/2022 15:31	14.19	3.02	3.90
6/19/2022 16:05	14.37	4.12	6/19/2022 15:41	14.19	3.01	3.89
6/19/2022 16:15	14.37	4.13	6/19/2022 15:51	14.19	3.02	3.90
6/19/2022 16:25	14.37	4.13	6/19/2022 16:01	14.19	3.02	3.90
6/19/2022 16:35	14.37	4.13	6/19/2022 16:11	14.19	3.02	3.90
6/19/2022 16:45	14.36	4.14	6/19/2022 16:21	14.19	3.02	3.90
6/19/2022 16:55	14.36	4.13	6/19/2022 16:31	14.19	3.02	3.90
6/19/2022 17:05	14.36	4.13	6/19/2022 16:41	14.19	3.02	3.90
6/19/2022 17:15	14.36	4.14	6/19/2022 16:51	14.19	3.02	3.90
6/19/2022 17:25	14.36	4.13	6/19/2022 17:01	14.19	3.02	3.90
6/19/2022 17:35	14.36	4.14	6/19/2022 17:11	14.19	3.02	3.90
6/19/2022 17:45	14.36	4.15	6/19/2022 17:21	14.18	3.02	3.90
6/19/2022 17:55	14.36	4.15	6/19/2022 17:31	14.18	3.02	3.90
6/19/2022 18:05	14.35	4.14	6/19/2022 17:41	14.18	3.02	3.90
6/19/2022 18:15	14.36	4.15	6/19/2022 17:51	14.18	3.02	3.90
6/19/2022 18:25	14.35	4.15	6/19/2022 18:01	14.18	3.02	3.90
6/19/2022 18:35	14.36	4.15	6/19/2022 18:11	14.18	3.01	3.89
6/19/2022 18:45	14.36	4.16	6/19/2022 18:21	14.18	3.01	3.89
6/19/2022 18:55	14.35	4.15	6/19/2022 18:31	14.18	3.02	3.90
6/19/2022 19:05	14.35	4.15	6/19/2022 18:41	14.18	3.02	3.90
6/19/2022 19:15	14.35	4.16	6/19/2022 18:51	14.18	3.02	3.90
6/19/2022 19:25	14.35	4.15	6/19/2022 19:01	14.18	3.02	3.90
6/19/2022 19:35	14.35	4.18	6/19/2022 19:11	14.18	3.03	3.91
6/19/2022 19:45	14.35	4.17	6/19/2022 19:21	14.18	3.02	3.90
6/19/2022 19:55	14.35	4.18	6/19/2022 19:31	14.18	3.03	3.91
6/19/2022 20:05	14.34	4.17	6/19/2022 19:41	14.18	3.02	3.90
6/19/2022 20:15	14.35	4.20	6/19/2022 19:51	14.18	3.03	3.91
6/19/2022 20:25	14.34	4.17	6/19/2022 20:01	14.17	3.02	3.90
6/19/2022 20:35	14.34	4.16	6/19/2022 20:11	14.18	3.03	3.91
6/19/2022 20:45	14.34	4.17	6/19/2022 20:21	14.17	3.02	3.90
6/19/2022 20:55	14.34	4.16	6/19/2022 20:31	14.17	3.03	3.91
6/19/2022 21:05	14.34	4.17	6/19/2022 20:41	14.17	3.02	3.90
6/19/2022 21:15	14.33	4.16	6/19/2022 20:51	14.17	3.02	3.90
6/19/2022 21:25	14.34	4.17	6/19/2022 21:01	14.17	3.03	3.91
6/19/2022 21:35	14.33	4.16	6/19/2022 21:11	14.17	3.02	3.90
6/19/2022 21:45	14.33	4.16	6/19/2022 21:21	14.17	3.03	3.91
6/19/2022 21:55	14.33	4.17	6/19/2022 21:31	14.17	3.03	3.91
6/19/2022 22:05	14.33	4.16	6/19/2022 21:41	14.17	3.03	3.91
6/19/2022 22:15	14.34	4.19	6/19/2022 21:51	14.17	3.03	3.91
6/19/2022 22:25	14.33	4.20	6/19/2022 22:01	14.17	3.03	3.91
6/19/2022 22:35	14.33	4.19	6/19/2022 22:11	14.17	3.03	3.91
6/19/2022 22:45	14.32	4.18	6/19/2022 22:21	14.17	3.03	3.91
6/19/2022 22:55	14.32	4.17	6/19/2022 22:31	14.17	3.03	3.91
6/19/2022 23:05	14.32	4.16	6/19/2022 22:41	14.17	3.03	3.91
6/19/2022 23:15	14.33	4.16	6/19/2022 22:51	14.16	3.03	3.91
6/19/2022 23:25	14.33	4.17	6/19/2022 23:01	14.16	3.03	3.91
6/19/2022 23:35	14.32	4.16	6/19/2022 23:11	14.16	3.04	3.92
6/19/2022 23:45	14.32	4.16	6/19/2022 23:21	14.16	3.03	3.91
6/19/2022 23:55	14.32	4.17	6/19/2022 23:31	14.16	3.04	3.92
6/20/2022 0:05	14.32	4.16	6/19/2022 23:41	14.16	3.03	3.91
6/20/2022 0:15	14.32	4.15	6/19/2022 23:51	14.16	3.03	3.91
6/20/2022 0:25	14.32	4.16	6/20/2022 0:01	14.16	3.03	3.91
6/20/2022 0:35	14.32	4.16	6/20/2022 0:11	14.16	3.03	3.91
6/20/2022 0:45	14.32	4.15	6/20/2022 0:21	14.16	3.03	3.91
6/20/2022 0:55	14.31	4.15	6/20/2022 0:31	14.16	3.03	3.91
6/20/2022 1:05	14.31	4.16	6/20/2022 0:41	14.16	3.03	3.91
6/20/2022 1:15	14.32	4.16	6/20/2022 0:51	14.16	3.04	3.92
6/20/2022 1:25	14.31	4.16	6/20/2022 1:01	14.16	3.03	3.91
6/20/2022 1:35	14.31	4.17	6/20/2022 1:11	14.16	3.03	3.91
6/20/2022 1:45	14.31	4.16	6/20/2022 1:21	14.16	3.03	3.91
6/20/2022 1:55	14.30	4.16	6/20/2022 1:31	14.15	3.03	3.91
6/20/2022 2:05	14.31	4.16	6/20/2022 1:41	14.15	3.03	3.91
6/20/2022 2:15	14.31	4.16	6/20/2022 1:51	14.15	3.04	3.92
6/20/2022 2:25	14.30	4.16	6/20/2022 2:01	14.15	3.04	3.92
6/20/2022 2:35	14.30	4.16	6/20/2022 2:11	14.15	3.04	3.92
6/20/2022 2:45	14.30	4.17	6/20/2022 2:21	14.15	3.03	3.91
6/20/2022 2:55	14.31	4.16	6/20/2022 2:31	14.15	3.04	3.92
6/20/2022 3:05	14.31	4.16	6/20/2022 2:41	14.15	3.04	3.92
6/20/2022 3:15	14.31	4.17	6/20/2022 2:51	14.15	3.04	3.92
6/20/2022 3:25	14.31	4.17	6/20/2022 3:01	14.15	3.04	3.92
6/20/2022 3:35	14.31	4.17	6/20/2022 3:11	14.15	3.04	3.92
6/20/2022 3:45	14.30	4.17	6/20/2022 3:21	14.15	3.04	3.92
6/20/2022 3:55	14.30	4.17	6/20/2022 3:31	14.15	3.04	3.92
6/20/2022 4:05	14.30	4.17	6/20/2022 3:41	14.15	3.04	3.92
6/20/2022 4:15	14.30	4.21	6/20/2022 3:51	14.14	3.04	3.92
6/20/2022 4:25	14.30	4.19	6/20/2022 4:01	14.14	3.04	3.92
6/20/2022 4:35	14.30	4.21	6/20/2022 4:11	14.14	3.04	3.92
6/20/2022 4:45	14.30	4.21	6/20/2022 4:21	14.14	3.04	3.92
6/20/2022 4:55	14.30	4.19	6/20/2022 4:31	14.14	3.04	3.92
6/20/2022 5:05	14.30	4.18	6/20/2022 4:41	14.14	3.04	3.92
6/20/2022 5:15	14.29	4.18	6/20/2022 4:51	14.14	3.04	3.92
6/20/2022 5:25	14.29	4.18	6/20/2022 5:01	14.14	3.04	3.92
6/20/2022 5:35	14.29	4.17	6/20/2022 5:11	14.14	3.04	3.92
6/20/2022 5:45	14.29	4.19	6/20/2022 5:21	14.14	3.05	3.93
6/20/2022 5:55	14.29	4.18	6/20/2022 5:31	14.14	3.04	3.92
6/20/2022 6:05	14.29	4.20	6/20/2022 5:41	14.14	3.04	3.92

6/20/2022 6:15	14.29	4.18	6/20/2022 5:51	14.14	3.05	3.93
6/20/2022 6:25	14.29	4.18	6/20/2022 6:01	14.14	3.05	3.93
6/20/2022 6:35	14.28	4.18	6/20/2022 6:11	14.13	3.05	3.93
6/20/2022 6:45	14.29	4.26	6/20/2022 6:21	14.13	3.05	3.93
6/20/2022 6:55	14.28	4.21	6/20/2022 6:31	14.13	3.05	3.93
6/20/2022 7:05	14.28	4.18	6/20/2022 6:41	14.13	3.05	3.93
6/20/2022 7:15	14.28	4.18	6/20/2022 6:51	14.13	3.05	3.93
6/20/2022 7:25	14.28	4.18	6/20/2022 7:01	14.13	3.05	3.93
6/20/2022 7:35	14.28	4.18	6/20/2022 7:11	14.13	3.05	3.93
6/20/2022 7:45	14.28	4.20	6/20/2022 7:21	14.13	3.05	3.93
6/20/2022 7:55	14.28	4.19	6/20/2022 7:31	14.13	3.05	3.93
6/20/2022 8:05	14.28	4.20	6/20/2022 7:41	14.13	3.05	3.93
6/20/2022 8:15	14.28	4.19	6/20/2022 7:51	14.13	3.05	3.93
6/20/2022 8:25	14.27	4.18	6/20/2022 8:01	14.13	3.05	3.93
6/20/2022 8:35	14.28	4.19	6/20/2022 8:11	14.13	3.05	3.93
6/20/2022 8:45	14.27	4.23	6/20/2022 8:21	14.12	3.05	3.93
6/20/2022 8:55	14.27	4.19	6/20/2022 8:31	14.12	3.05	3.93
6/20/2022 9:05	14.27	4.19	6/20/2022 8:41	14.12	3.05	3.93
6/20/2022 9:15	14.27	4.22	6/20/2022 8:51	14.12	3.05	3.93
6/20/2022 9:25	14.27	4.19	6/20/2022 9:01	14.12	3.05	3.93
6/20/2022 9:35	14.27	4.19	6/20/2022 9:11	14.12	3.05	3.93
6/20/2022 9:45	14.27	4.21	6/20/2022 9:21	14.12	3.05	3.93
6/20/2022 9:55	14.26	4.21	6/20/2022 9:31	14.12	3.05	3.93
6/20/2022 10:05	14.27	4.19	6/20/2022 9:41	14.12	3.05	3.93
6/20/2022 10:15	14.26	4.19	6/20/2022 9:51	14.12	3.05	3.93
6/20/2022 10:25	14.26	4.19	6/20/2022 10:01	14.12	3.05	3.93
6/20/2022 10:35	14.26	4.21	6/20/2022 10:11	14.12	3.05	3.93
6/20/2022 10:45	14.26	4.20	6/20/2022 10:21	14.11	3.05	3.93
6/20/2022 10:55	14.26	4.20	6/20/2022 10:31	14.11	3.05	3.93
6/20/2022 11:05	14.26	4.20	6/20/2022 10:41	14.11	3.05	3.93
6/20/2022 11:15	14.26	4.19	6/20/2022 10:51	14.11	3.05	3.93
6/20/2022 11:25	14.26	4.20	6/20/2022 11:01	14.11	3.05	3.93
6/20/2022 11:35	14.26	4.19	6/20/2022 11:11	14.11	3.05	3.93
6/20/2022 11:45	14.26	4.20	6/20/2022 11:21	14.11	3.05	3.93
6/20/2022 11:55	14.25	4.19	6/20/2022 11:31	14.11	3.06	3.94
6/20/2022 12:05	14.25	4.20	6/20/2022 11:41	14.11	3.05	3.93
6/20/2022 12:15	14.25	4.21	6/20/2022 11:51	14.11	3.06	3.94
6/20/2022 12:25	14.25	4.21	6/20/2022 12:01	14.11	3.06	3.94
6/20/2022 12:35	14.25	4.21	6/20/2022 12:11	14.11	3.06	3.94
6/20/2022 12:45	14.25	4.20	6/20/2022 12:21	14.11	3.06	3.94
6/20/2022 12:55	14.25	4.22	6/20/2022 12:31	14.10	3.06	3.94
6/20/2022 13:05	14.25	4.23	6/20/2022 12:41	14.10	3.06	3.94
6/20/2022 13:15	14.25	4.21	6/20/2022 12:51	14.10	3.06	3.94
6/20/2022 13:25	14.24	4.20	6/20/2022 13:01	14.10	3.06	3.94
6/20/2022 13:35	14.24	4.21	6/20/2022 13:11	14.10	3.06	3.94
6/20/2022 13:45	14.24	4.21	6/20/2022 13:21	14.10	3.06	3.94
6/20/2022 13:55	14.24	4.22	6/20/2022 13:31	14.10	3.06	3.94
6/20/2022 14:05	14.24	4.22	6/20/2022 13:41	14.10	3.06	3.94
6/20/2022 14:15	14.24	4.22	6/20/2022 13:51	14.10	3.06	3.94
6/20/2022 14:25	14.24	4.23	6/20/2022 14:01	14.10	3.05	3.93
6/20/2022 14:35	14.23	4.22	6/20/2022 14:11	14.10	3.05	3.93
6/20/2022 14:45	14.23	4.22	6/20/2022 14:21	14.10	3.05	3.93
6/20/2022 14:55	14.23	4.21	6/20/2022 14:31	14.09	3.06	3.94
6/20/2022 15:05	14.23	4.23	6/20/2022 14:41	14.09	3.06	3.94
6/20/2022 15:15	14.23	4.23	6/20/2022 14:51	14.09	3.05	3.93
6/20/2022 15:25	14.23	4.22	6/20/2022 15:01	14.09	3.05	3.93
6/20/2022 15:35	14.26	4.21	6/20/2022 15:11	14.09	3.07	3.95
6/20/2022 15:45	14.24	4.22	6/20/2022 15:21	14.09	3.07	3.95
6/20/2022 15:55	14.24	4.22	6/20/2022 15:31	14.09	3.07	3.95
6/20/2022 16:05	14.23	4.22	6/20/2022 15:41	14.09	3.06	3.94
6/20/2022 16:15	14.23	4.24	6/20/2022 15:51	14.09	3.07	3.95
6/20/2022 16:25	14.23	4.22	6/20/2022 16:01	14.08	3.07	3.95
6/20/2022 16:35	14.23	4.23	6/20/2022 16:11	14.08	3.07	3.95
6/20/2022 16:45	14.22	4.22	6/20/2022 16:21	14.08	3.07	3.95
6/20/2022 16:55	14.22	4.23	6/20/2022 16:31	14.08	3.07	3.95
6/20/2022 17:05	14.22	4.22	6/20/2022 16:41	14.08	3.07	3.95
6/20/2022 17:15	14.22	4.23	6/20/2022 16:51	14.08	3.07	3.95
6/20/2022 17:25	14.22	4.23	6/20/2022 17:01	14.08	3.07	3.95
6/20/2022 17:35	14.22	4.23	6/20/2022 17:11	14.08	3.07	3.95
6/20/2022 17:45	14.22	4.24	6/20/2022 17:21	14.08	3.07	3.95
6/20/2022 17:55	14.22	4.26	6/20/2022 17:31	14.08	3.08	3.96
6/20/2022 18:05	14.21	4.25	6/20/2022 17:41	14.08	3.07	3.95
6/20/2022 18:15	14.21	4.26	6/20/2022 17:51	14.08	3.08	3.96
6/20/2022 18:25	14.21	4.26	6/20/2022 18:01	14.07	3.08	3.96
6/20/2022 18:35	14.21	4.24	6/20/2022 18:11	14.07	3.08	3.96
6/20/2022 18:45	14.21	4.24	6/20/2022 18:21	14.07	3.08	3.96
6/20/2022 18:55	14.20	4.24	6/20/2022 18:31	14.07	3.08	3.96
6/20/2022 19:05	14.21	4.23	6/20/2022 18:41	14.07	3.08	3.96
6/20/2022 19:15	14.20	4.24	6/20/2022 18:51	14.07	3.08	3.96
6/20/2022 19:25	14.20	4.24	6/20/2022 19:01	14.07	3.08	3.96
6/20/2022 19:35	14.20	4.24	6/20/2022 19:11	14.07	3.08	3.96
6/20/2022 19:45	14.20	4.25	6/20/2022 19:21	14.07	3.08	3.96
6/20/2022 19:55	14.20	4.24	6/20/2022 19:31	14.07	3.08	3.96
6/20/2022 20:05	14.20	4.24	6/20/2022 19:41	14.06	3.08	3.96
6/20/2022 20:15	14.19	4.24	6/20/2022 19:51	14.07	3.08	3.96
6/20/2022 20:25	14.20	4.25	6/20/2022 20:01	14.06	3.08	3.96
6/20/2022 20:35	14.20	4.24	6/20/2022 20:11	14.06	3.09	3.97
6/20/2022 20:45	14.19	4.24	6/20/2022 20:21	14.06	3.09	3.97

6/20/2022 20:55	14.19	4.25	6/20/2022 20:31	14.06	3.08	3.96
6/20/2022 21:05	14.19	4.25	6/20/2022 20:41	14.06	3.08	3.96
6/20/2022 21:15	14.19	4.24	6/20/2022 20:51	14.06	3.09	3.97
6/20/2022 21:25	14.20	4.27	6/20/2022 21:01	14.06	3.08	3.96
6/20/2022 21:35	14.19	4.25	6/20/2022 21:11	14.06	3.09	3.97
6/20/2022 21:45	14.19	4.25	6/20/2022 21:21	14.06	3.05	3.93
6/20/2022 21:55	14.18	4.26	6/20/2022 21:31	14.06	3.07	3.95
6/20/2022 22:05	14.18	4.25	6/20/2022 21:41	14.06	3.08	3.96
6/20/2022 22:15	14.18	4.25	6/20/2022 21:51	14.06	3.08	3.96
6/20/2022 22:25	14.18	4.25	6/20/2022 22:01	14.05	3.08	3.96
6/20/2022 22:35	14.18	4.24	6/20/2022 22:11	14.05	3.08	3.96
6/20/2022 22:45	14.18	4.24	6/20/2022 22:21	14.05	3.08	3.96
6/20/2022 22:55	14.17	4.24	6/20/2022 22:31	14.05	3.08	3.96
6/20/2022 23:05	14.17	4.24	6/20/2022 22:41	14.05	3.08	3.96
6/20/2022 23:15	14.18	4.25	6/20/2022 22:51	14.05	3.08	3.96
6/20/2022 23:25	14.18	4.25	6/20/2022 23:01	14.05	3.09	3.97
6/20/2022 23:35	14.18	4.25	6/20/2022 23:11	14.05	3.09	3.97
6/20/2022 23:45	14.17	4.26	6/20/2022 23:21	14.05	3.08	3.96
6/20/2022 23:55	14.18	4.25	6/20/2022 23:31	14.05	3.09	3.97
6/21/2022 0:05	14.17	4.25	6/20/2022 23:41	14.05	3.08	3.96
6/21/2022 0:15	14.17	4.25	6/20/2022 23:51	14.04	3.09	3.97
6/21/2022 0:25	14.17	4.25	6/21/2022 0:01	14.04	3.09	3.97
6/21/2022 0:35	14.17	4.25	6/21/2022 0:11	14.04	3.09	3.97
6/21/2022 0:45	14.17	4.25	6/21/2022 0:21	14.04	3.09	3.97
6/21/2022 0:55	14.17	4.26	6/21/2022 0:31	14.04	3.09	3.97
6/21/2022 1:05	14.17	4.28	6/21/2022 0:41	14.04	3.09	3.97
6/21/2022 1:15	14.16	4.25	6/21/2022 0:51	14.04	3.09	3.97
6/21/2022 1:25	14.17	4.25	6/21/2022 1:01	14.04	3.09	3.97
6/21/2022 1:35	14.16	4.26	6/21/2022 1:11	14.04	3.09	3.97
6/21/2022 1:45	14.17	4.26	6/21/2022 1:21	14.04	3.09	3.97
6/21/2022 1:55	14.17	4.26	6/21/2022 1:31	14.04	3.09	3.97
6/21/2022 2:05	14.16	4.26	6/21/2022 1:41	14.04	3.09	3.97
6/21/2022 2:15	14.17	4.26	6/21/2022 1:51	14.04	3.09	3.97
6/21/2022 2:25	14.16	4.26	6/21/2022 2:01	14.03	3.09	3.97
6/21/2022 2:35	14.16	4.26	6/21/2022 2:11	14.03	3.10	3.98
6/21/2022 2:45	14.16	4.26	6/21/2022 2:21	14.04	3.09	3.97
6/21/2022 2:55	14.16	4.26	6/21/2022 2:31	14.03	3.09	3.97
6/21/2022 3:05	14.16	4.26	6/21/2022 2:41	14.03	3.09	3.97
6/21/2022 3:15	14.16	4.27	6/21/2022 2:51	14.04	3.09	3.97
6/21/2022 3:25	14.16	4.26	6/21/2022 3:01	14.03	3.09	3.97
6/21/2022 3:35	14.16	4.27	6/21/2022 3:11	14.03	3.10	3.98
6/21/2022 3:45	14.16	4.26	6/21/2022 3:21	14.03	3.09	3.97
6/21/2022 3:55	14.16	4.26	6/21/2022 3:31	14.03	3.10	3.98
6/21/2022 4:05	14.17	4.27	6/21/2022 3:41	14.03	3.10	3.98
6/21/2022 4:15	14.17	4.26	6/21/2022 3:51	14.03	3.10	3.98
6/21/2022 4:25	14.16	4.27	6/21/2022 4:01	14.03	3.10	3.98
6/21/2022 4:35	14.17	4.27	6/21/2022 4:11	14.03	3.10	3.98
6/21/2022 4:45	14.16	4.26	6/21/2022 4:21	14.03	3.09	3.97
6/21/2022 4:55	14.16	4.27	6/21/2022 4:31	14.03	3.10	3.98
6/21/2022 5:05	14.16	4.27	6/21/2022 4:41	14.03	3.09	3.97
6/21/2022 5:15	14.16	4.26	6/21/2022 4:51	14.03	3.10	3.98
6/21/2022 5:25	14.17	4.27	6/21/2022 5:01	14.03	3.09	3.97
6/21/2022 5:35	14.16	4.27	6/21/2022 5:11	14.03	3.10	3.98
6/21/2022 5:45	14.16	4.26	6/21/2022 5:21	14.03	3.10	3.98
6/21/2022 5:55	14.16	4.26	6/21/2022 5:31	14.03	3.10	3.98
6/21/2022 6:05	14.16	4.26	6/21/2022 5:41	14.03	3.10	3.98
6/21/2022 6:15	14.16	4.28	6/21/2022 5:51	14.03	3.10	3.98
6/21/2022 6:25	14.16	4.27	6/21/2022 6:01	14.02	3.10	3.98
6/21/2022 6:35	14.16	4.27	6/21/2022 6:11	14.02	3.10	3.98
6/21/2022 6:45	14.16	4.27	6/21/2022 6:21	14.02	3.10	3.98
6/21/2022 6:55	14.16	4.27	6/21/2022 6:31	14.02	3.10	3.98
6/21/2022 7:05	14.16	4.27	6/21/2022 6:41	14.02	3.10	3.98
6/21/2022 7:15	14.16	4.27	6/21/2022 6:51	14.02	3.10	3.98
6/21/2022 7:25	14.16	4.27	6/21/2022 7:01	14.02	3.10	3.98
6/21/2022 7:35	14.16	4.27	6/21/2022 7:11	14.02	3.10	3.98
6/21/2022 7:45	14.15	4.28	6/21/2022 7:21	14.02	3.10	3.98
6/21/2022 7:55	14.16	4.27	6/21/2022 7:31	14.02	3.10	3.98
6/21/2022 8:05	14.15	4.27	6/21/2022 7:41	14.02	3.10	3.98
6/21/2022 8:15	14.16	4.27	6/21/2022 7:51	14.02	3.10	3.98
6/21/2022 8:25	14.15	4.28	6/21/2022 8:01	14.02	3.10	3.98
6/21/2022 8:35	14.15	4.27	6/21/2022 8:11	14.02	3.10	3.98
6/21/2022 8:45	14.15	4.27	6/21/2022 8:21	14.02	3.10	3.98
6/21/2022 8:55	14.15	4.27	6/21/2022 8:31	14.02	3.10	3.98
6/21/2022 9:05	14.15	4.27	6/21/2022 8:41	14.02	3.10	3.98
6/21/2022 9:15	14.16	4.27	6/21/2022 8:51	14.02	3.10	3.98
6/21/2022 9:25	14.15	4.27	6/21/2022 9:01	14.02	3.10	3.98
6/21/2022 9:35	14.15	4.27	6/21/2022 9:11	14.02	3.10	3.98
6/21/2022 9:45	14.16	4.27	6/21/2022 9:21	14.02	3.10	3.98
6/21/2022 9:55	14.15	4.27	6/21/2022 9:31	14.02	3.10	3.98
6/21/2022 10:05	14.16	4.28	6/21/2022 9:41	14.02	3.10	3.98
6/21/2022 10:15	14.15	4.27	6/21/2022 9:51	14.02	3.11	3.99
6/21/2022 10:25	14.15	4.27	6/21/2022 10:01	14.02	3.10	3.98
6/21/2022 10:35	14.15	4.29	6/21/2022 10:11	14.02	3.10	3.98
6/21/2022 10:45	14.15	4.28	6/21/2022 10:21	14.02	3.10	3.98
6/21/2022 10:55	14.15	4.27	6/21/2022 10:31	14.02	3.10	3.98
6/21/2022 11:05	14.15	4.27	6/21/2022 10:41	14.01	3.10	3.98
6/21/2022 11:15	14.15	4.28	6/21/2022 10:51	14.02	3.10	3.98
6/21/2022 11:25	14.15	4.28	6/21/2022 11:01	14.01	3.10	3.98

6/21/2022 11:35	14.15	4.28	6/21/2022 11:11	14.01	3.10	3.98
6/21/2022 11:45	14.15	4.28	6/21/2022 11:21	14.01	3.11	3.99
6/21/2022 11:55	14.15	4.28	6/21/2022 11:31	14.01	3.11	3.99
6/21/2022 12:05	14.16	4.29	6/21/2022 11:41	14.01	3.11	3.99
6/21/2022 12:15	14.15	4.29	6/21/2022 11:51	14.01	3.11	3.99
6/21/2022 12:25	14.15	4.30	6/21/2022 12:01	14.01	3.11	3.99
6/21/2022 12:35	14.15	4.30	6/21/2022 12:11	14.01	3.10	3.98
6/21/2022 12:45	14.15	4.29	6/21/2022 12:21	14.01	3.11	3.99
6/21/2022 12:55	14.15	4.29	6/21/2022 12:31	14.02	3.08	3.96
6/21/2022 13:05	14.15	4.30	6/21/2022 12:41	14.01	3.09	3.97
6/21/2022 13:15	14.15	4.28	6/21/2022 12:51	14.01	3.10	3.98
6/21/2022 13:25	14.14	4.29	6/21/2022 13:01	14.01	3.11	3.99
6/21/2022 13:35	14.15	4.30	6/21/2022 13:11	14.01	3.11	3.99
6/21/2022 13:45	14.15	4.29	6/21/2022 13:21	14.01	3.11	3.99
6/21/2022 13:55	14.14	4.29	6/21/2022 13:31	14.01	3.11	3.99
6/21/2022 14:05	14.14	4.29	6/21/2022 13:41	14.01	3.11	3.99
6/21/2022 14:15	14.15	4.29	6/21/2022 13:51	14.00	3.11	3.99
6/21/2022 14:25	14.14	4.29	6/21/2022 14:01	14.01	3.11	3.99
6/21/2022 14:35	14.14	4.29	6/21/2022 14:11	14.01	3.11	3.99
6/21/2022 14:45	14.15	4.30	6/21/2022 14:21	14.00	3.11	3.99
6/21/2022 14:55	14.14	4.29	6/21/2022 14:31	14.00	3.11	3.99
6/21/2022 15:05	14.14	4.30	6/21/2022 14:41	14.00	3.11	3.99
6/21/2022 15:15	14.14	4.30	6/21/2022 14:51	14.00	3.11	3.99
6/21/2022 15:25	14.14	4.29	6/21/2022 15:01	14.00	3.11	3.99
6/21/2022 15:35	14.14	4.31	6/21/2022 15:11	14.00	3.12	4.00
6/21/2022 15:45	14.14	4.29	6/21/2022 15:21	14.00	3.11	3.99
6/21/2022 15:55	14.14	4.30	6/21/2022 15:31	14.00	3.12	4.00
6/21/2022 16:05	14.14	4.30	6/21/2022 15:41	14.00	3.11	3.99
6/21/2022 16:15	14.14	4.30	6/21/2022 15:51	14.00	3.11	3.99
6/21/2022 16:25	14.14	4.30	6/21/2022 16:01	14.00	3.12	4.00
6/21/2022 16:35	14.14	4.30	6/21/2022 16:11	14.00	3.11	3.99
6/21/2022 16:45	14.14	4.30	6/21/2022 16:21	14.00	3.12	4.00
6/21/2022 16:55	14.14	4.31	6/21/2022 16:31	14.00	3.12	4.00
6/21/2022 17:05	14.14	4.31	6/21/2022 16:41	14.00	3.12	4.00
6/21/2022 17:15	14.14	4.33	6/21/2022 16:51	14.00	3.12	4.00
6/21/2022 17:25	14.14	4.31	6/21/2022 17:01	14.00	3.12	4.00
6/21/2022 17:35	14.14	4.31	6/21/2022 17:11	14.00	3.12	4.00
6/21/2022 17:45	14.14	4.31	6/21/2022 17:21	14.00	3.12	4.00
6/21/2022 17:55	14.14	4.31	6/21/2022 17:31	14.00	3.11	3.99
6/21/2022 18:05	14.14	4.31	6/21/2022 17:41	14.00	3.12	4.00
6/21/2022 18:15	14.13	4.31	6/21/2022 17:51	14.00	3.12	4.00
6/21/2022 18:25	14.14	4.30	6/21/2022 18:01	14.00	3.12	4.00
6/21/2022 18:35	14.14	4.31	6/21/2022 18:11	14.00	3.12	4.00
6/21/2022 18:45	14.14	4.31	6/21/2022 18:21	14.00	3.12	4.00
6/21/2022 18:55	14.14	4.31	6/21/2022 18:31	13.99	3.12	4.00
6/21/2022 19:05	14.14	4.32	6/21/2022 18:41	13.99	3.10	3.98
6/21/2022 19:15	14.14	4.31	6/21/2022 18:51	13.99	3.11	3.99
6/21/2022 19:25	14.14	4.32	6/21/2022 19:01	13.99	3.11	3.99
6/21/2022 19:35	14.14	4.32	6/21/2022 19:11	13.99	3.12	4.00
6/21/2022 19:45	14.15	4.32	6/21/2022 19:21	13.99	3.12	4.00
6/21/2022 19:55	14.14	4.31	6/21/2022 19:31	13.99	3.12	4.00
6/21/2022 20:05	14.14	4.32	6/21/2022 19:41	13.99	3.11	3.99
6/21/2022 20:15	14.14	4.31	6/21/2022 19:51	13.99	3.11	3.99
6/21/2022 20:25	14.14	4.33	6/21/2022 20:01	13.99	3.11	3.99
6/21/2022 20:35	14.13	4.31	6/21/2022 20:11	13.99	3.12	4.00
6/21/2022 20:45	14.14	4.31	6/21/2022 20:21	13.99	3.11	3.99
6/21/2022 20:55	14.14	4.32	6/21/2022 20:31	13.99	3.12	4.00
6/21/2022 21:05	14.13	4.32	6/21/2022 20:41	13.99	3.12	4.00
6/21/2022 21:15	14.13	4.32	6/21/2022 20:51	13.99	3.12	4.00
6/21/2022 21:25	14.14	4.32	6/21/2022 21:01	13.99	3.12	4.00
6/21/2022 21:35	14.14	4.33	6/21/2022 21:11	13.99	3.12	4.00
6/21/2022 21:45	14.13	4.33	6/21/2022 21:21	13.99	3.12	4.00
6/21/2022 21:55	14.13	4.32	6/21/2022 21:31	13.99	3.12	4.00
6/21/2022 22:05	14.14	4.32	6/21/2022 21:41	13.99	3.12	4.00
6/21/2022 22:15	14.13	4.32	6/21/2022 21:51	13.99	3.12	4.00
6/21/2022 22:25	14.13	4.35	6/21/2022 22:01	13.99	3.12	4.00
6/21/2022 22:35	14.13	4.33	6/21/2022 22:11	13.98	3.12	4.00
6/21/2022 22:45	14.13	4.34	6/21/2022 22:21	13.98	3.12	4.00
6/21/2022 22:55	14.13	4.34	6/21/2022 22:31	13.98	3.12	4.00
6/21/2022 23:05	14.13	4.32	6/21/2022 22:41	13.98	3.12	4.00
6/21/2022 23:15	14.13	4.35	6/21/2022 22:51	13.98	3.12	4.00
6/21/2022 23:25	14.13	4.33	6/21/2022 23:01	13.98	3.12	4.00
6/21/2022 23:35	14.14	4.32	6/21/2022 23:11	13.99	3.12	4.00
6/21/2022 23:45	14.13	4.32	6/21/2022 23:21	13.98	3.13	4.01
6/21/2022 23:55	14.13	4.34	6/21/2022 23:31	13.98	3.12	4.00
6/22/2022 0:05	14.13	4.32	6/21/2022 23:41	13.98	3.12	4.00
6/22/2022 0:15	14.13	4.33	6/21/2022 23:51	13.98	3.13	4.01
6/22/2022 0:25	14.13	4.32	6/22/2022 0:01	13.98	3.13	4.01
6/22/2022 0:35	14.13	4.32	6/22/2022 0:11	13.98	3.13	4.01
6/22/2022 0:45	14.13	4.31	6/22/2022 0:21	13.98	3.12	4.00
6/22/2022 0:55	14.13	4.31	6/22/2022 0:31	13.98	3.12	4.00
6/22/2022 1:05	14.13	4.31	6/22/2022 0:41	13.98	3.12	4.00
6/22/2022 1:15	14.13	4.31	6/22/2022 0:51	13.98	3.12	4.00
6/22/2022 1:25	14.13	4.32	6/22/2022 1:01	13.98	3.12	4.00
6/22/2022 1:35	14.13	4.31	6/22/2022 1:11	13.98	3.12	4.00
6/22/2022 1:45	14.14	4.31	6/22/2022 1:21	13.98	3.12	4.00
6/22/2022 1:55	14.13	4.31	6/22/2022 1:31	13.98	3.12	4.00
6/22/2022 2:05	14.13	4.29	6/22/2022 1:41	13.98	3.12	4.00

6/22/2022 2:15	14.13	4.30	6/22/2022 1:51	13.98	3.12	4.00
6/22/2022 2:25	14.14	4.29	6/22/2022 2:01	13.98	3.12	4.00
6/22/2022 2:35	14.13	4.29	6/22/2022 2:11	13.98	3.12	4.00
6/22/2022 2:45	14.14	4.29	6/22/2022 2:21	13.98	3.12	4.00
6/22/2022 2:55	14.13	4.30	6/22/2022 2:31	13.98	3.11	3.99
6/22/2022 3:05	14.14	4.30	6/22/2022 2:41	13.98	3.12	4.00
6/22/2022 3:15	14.13	4.29	6/22/2022 2:51	13.98	3.12	4.00
6/22/2022 3:25	14.13	4.29	6/22/2022 3:01	13.98	3.12	4.00
6/22/2022 3:35	14.13	4.28	6/22/2022 3:11	13.98	3.12	4.00
6/22/2022 3:45	14.14	4.29	6/22/2022 3:21	13.98	3.12	4.00
6/22/2022 3:55	14.13	4.28	6/22/2022 3:31	13.98	3.12	4.00
6/22/2022 4:05	14.14	4.29	6/22/2022 3:41	13.98	3.12	4.00
6/22/2022 4:15	14.13	4.28	6/22/2022 3:51	13.98	3.12	4.00
6/22/2022 4:25	14.13	4.28	6/22/2022 4:01	13.98	3.12	4.00
6/22/2022 4:35	14.13	4.29	6/22/2022 4:11	13.98	3.12	4.00
6/22/2022 4:45	14.13	4.28	6/22/2022 4:21	13.98	3.12	4.00
6/22/2022 4:55	14.13	4.28	6/22/2022 4:31	13.98	3.12	4.00
6/22/2022 5:05	14.14	4.28	6/22/2022 4:41	13.98	3.12	4.00
6/22/2022 5:15	14.13	4.28	6/22/2022 4:51	13.98	3.12	4.00
6/22/2022 5:25	14.13	4.28	6/22/2022 5:01	13.98	3.12	4.00
6/22/2022 5:35	14.13	4.28	6/22/2022 5:11	13.98	3.12	4.00
6/22/2022 5:45	14.13	4.27	6/22/2022 5:21	13.98	3.12	4.00
6/22/2022 5:55	14.13	4.28	6/22/2022 5:31	13.98	3.13	4.01
6/22/2022 6:05	14.13	4.27	6/22/2022 5:41	13.98	3.12	4.00
6/22/2022 6:15	14.13	4.27	6/22/2022 5:51	13.98	3.12	4.00
6/22/2022 6:25	14.14	4.29	6/22/2022 6:01	13.98	3.12	4.00
6/22/2022 6:35	14.13	4.27	6/22/2022 6:11	13.98	3.12	4.00
6/22/2022 6:45	14.14	4.28	6/22/2022 6:21	13.98	3.12	4.00
6/22/2022 6:55	14.14	4.28	6/22/2022 6:31	13.98	3.13	4.01
6/22/2022 7:05	14.13	4.27	6/22/2022 6:41	13.98	3.12	4.00
6/22/2022 7:15	14.14	4.27	6/22/2022 6:51	13.98	3.12	4.00
6/22/2022 7:25	14.14	4.30	6/22/2022 7:01	13.98	3.12	4.00
6/22/2022 7:35	14.14	4.30	6/22/2022 7:11	13.98	3.13	4.01
6/22/2022 7:45	14.14	4.27	6/22/2022 7:21	13.98	3.13	4.01
6/22/2022 7:55	14.14	4.28	6/22/2022 7:31	13.98	3.13	4.01
6/22/2022 8:05	14.13	4.27	6/22/2022 7:41	13.98	3.13	4.01
6/22/2022 8:15	14.13	4.27	6/22/2022 7:51	13.98	3.12	4.00
6/22/2022 8:25	14.14	4.28	6/22/2022 8:01	13.98	3.13	4.01
6/22/2022 8:35	14.14	4.28	6/22/2022 8:11	13.98	3.13	4.01
6/22/2022 8:45	14.14	4.28	6/22/2022 8:21	13.98	3.13	4.01
6/22/2022 8:55	14.14	4.27	6/22/2022 8:31	13.98	3.13	4.01
6/22/2022 9:05	14.14	4.27	6/22/2022 8:38	14.00	3.14	4.02
6/22/2022 9:15	14.14	4.27	6/22/2022 8:48	13.98	3.14	4.02
6/22/2022 9:25	14.13	4.27	6/22/2022 8:58	13.98	3.14	4.02
6/22/2022 9:35	14.14	4.27	6/22/2022 9:08	13.98	3.14	4.02
6/22/2022 9:45	14.14	4.30	6/22/2022 9:18	13.98	3.14	4.02
6/22/2022 9:55	14.14	4.26	6/22/2022 9:28	13.98	3.14	4.02
6/22/2022 10:05	14.14	4.27	6/22/2022 9:38	13.98	3.14	4.02
6/22/2022 10:15	14.14	4.27	6/22/2022 9:48	13.98	3.15	4.03
6/22/2022 10:25	14.14	4.27	6/22/2022 9:58	13.98	3.14	4.02
6/22/2022 10:35	14.14	4.26	6/22/2022 10:08	13.98	3.14	4.02
6/22/2022 10:45	14.14	4.27	6/22/2022 10:18	13.98	3.14	4.02
6/22/2022 10:55	14.14	4.26	6/22/2022 10:28	13.98	3.15	4.03
6/22/2022 11:05	14.14	4.26	6/22/2022 10:38	13.98	3.14	4.02
6/22/2022 11:15	14.14	4.26	6/22/2022 10:48	13.98	3.15	4.03
6/22/2022 11:25	14.14	4.26	6/22/2022 10:58	13.98	3.14	4.02
6/22/2022 11:35	14.14	4.25	6/22/2022 11:08	13.98	3.15	4.03
6/22/2022 11:45	14.14	4.27	6/22/2022 11:18	13.98	3.15	4.03
6/22/2022 11:55	14.14	4.26	6/22/2022 11:28	13.98	3.15	4.03
6/22/2022 12:05	14.14	4.28	6/22/2022 11:38	13.98	3.15	4.03
6/22/2022 12:15	14.14	4.26	6/22/2022 11:48	13.98	3.15	4.03
6/22/2022 12:25	14.14	4.26	6/22/2022 11:58	13.98	3.15	4.03
6/22/2022 12:35	14.14	4.26	6/22/2022 12:08	13.98	3.15	4.03
6/22/2022 12:45	14.14	4.26	6/22/2022 12:18	13.98	3.15	4.03
6/22/2022 12:55	14.14	4.26	6/22/2022 12:28	13.98	3.15	4.03
6/22/2022 13:05	14.14	4.26	6/22/2022 12:38	13.98	3.15	4.03
6/22/2022 13:15	14.14	4.26	6/22/2022 12:48	13.98	3.15	4.03
6/22/2022 13:25	14.14	4.27	6/22/2022 12:58	13.98	3.15	4.03
6/22/2022 13:35	14.14	4.28	6/22/2022 13:08	13.98	3.15	4.03
6/22/2022 13:45	14.14	4.26	6/22/2022 13:18	13.98	3.15	4.03
6/22/2022 13:55	14.14	4.26	6/22/2022 13:28	13.98	3.15	4.03
6/22/2022 14:05	14.14	4.26	6/22/2022 13:38	13.98	3.15	4.03
6/22/2022 14:15	14.14	4.27	6/22/2022 13:48	13.98	3.15	4.03
6/22/2022 14:25	14.14	4.28	6/22/2022 13:58	13.98	3.15	4.03
6/22/2022 14:35	14.15	4.27	6/22/2022 14:08	13.98	3.15	4.03
6/22/2022 14:45	14.15	4.26	6/22/2022 14:18	13.98	3.15	4.03
6/22/2022 14:55	14.14	4.26	6/22/2022 14:28	13.98	3.15	4.03
6/22/2022 15:05	14.14	4.25	6/22/2022 14:38	13.98	3.15	4.03
6/22/2022 15:15	14.14	4.25	6/22/2022 14:45	13.99	3.12	4.00
6/22/2022 15:25	14.14	4.25	6/22/2022 14:55	13.99	3.13	4.01
6/22/2022 15:35	14.14	4.26	6/22/2022 15:05	13.99	3.13	4.01
6/22/2022 15:45	14.14	4.25	6/22/2022 15:15	13.98	3.14	4.02
6/22/2022 15:55	14.14	4.25	6/22/2022 15:25	13.98	3.13	4.01
6/22/2022 16:05	14.14	4.27	6/22/2022 15:35	13.98	3.14	4.02
6/22/2022 16:15	14.15	4.25	6/22/2022 15:45	13.98	3.14	4.02
6/22/2022 16:25	14.15	4.25	6/22/2022 15:55	13.98	3.14	4.02
6/22/2022 16:35	14.14	4.25	6/22/2022 16:05	13.98	3.14	4.02
6/22/2022 16:45	14.13	4.25	6/22/2022 16:15	13.98	3.14	4.02

6/22/2022 16:55	14.14	4.24	6/22/2022 16:25	13.98	3.14	4.02
6/22/2022 17:05	14.14	4.25	6/22/2022 16:35	13.98	3.14	4.02
6/22/2022 17:15	14.14	4.25	6/22/2022 16:45	13.98	3.14	4.02
6/22/2022 17:25	14.14	4.25	6/22/2022 16:55	13.98	3.14	4.02
6/22/2022 17:35	14.15	4.26	6/22/2022 17:05	13.98	3.14	4.02
6/22/2022 17:45	14.14	4.25	6/22/2022 17:15	13.98	3.14	4.02
6/22/2022 17:55	14.14	4.25	6/22/2022 17:25	13.98	3.15	4.03
6/22/2022 18:05	14.14	4.25	6/22/2022 17:35	13.98	3.14	4.02
6/22/2022 18:15	14.14	4.25	6/22/2022 17:45	13.98	3.15	4.03
6/22/2022 18:25	14.14	4.25	6/22/2022 17:55	13.98	3.14	4.02
6/22/2022 18:35	14.14	4.25	6/22/2022 18:05	13.98	3.14	4.02
6/22/2022 18:45	14.14	4.25	6/22/2022 18:15	13.98	3.15	4.03
6/22/2022 18:55	14.14	4.25	6/22/2022 18:25	13.98	3.15	4.03
6/22/2022 19:05	14.14	4.26	6/22/2022 18:35	13.98	3.15	4.03
6/22/2022 19:15	14.14	4.25	6/22/2022 18:45	13.98	3.15	4.03
6/22/2022 19:25	14.14	4.25	6/22/2022 18:55	13.98	3.15	4.03
6/22/2022 19:35	14.14	4.25	6/22/2022 19:05	13.98	3.15	4.03
6/22/2022 19:45	14.16	4.27	6/22/2022 19:15	13.98	3.15	4.03
6/22/2022 19:55	14.14	4.24	6/22/2022 19:25	13.98	3.15	4.03
6/22/2022 20:05	14.14	4.25	6/22/2022 19:35	13.98	3.14	4.02
6/22/2022 20:15	14.13	4.24	6/22/2022 19:45	13.98	3.15	4.03
6/22/2022 20:25	14.14	4.24	6/22/2022 19:55	13.98	3.15	4.03
6/22/2022 20:35	14.13	4.24	6/22/2022 20:05	13.98	3.15	4.03
6/22/2022 20:45	14.13	4.25	6/22/2022 20:15	13.98	3.15	4.03
6/22/2022 20:55	14.13	4.24	6/22/2022 20:25	13.98	3.15	4.03
6/22/2022 21:05	14.13	4.24	6/22/2022 20:35	13.98	3.15	4.03
6/22/2022 21:15	14.13	4.25	6/22/2022 20:45	13.98	3.15	4.03
6/22/2022 21:25	14.13	4.25	6/22/2022 20:55	13.98	3.15	4.03
6/22/2022 21:35	14.13	4.24	6/22/2022 21:05	13.98	3.15	4.03
6/22/2022 21:45	14.13	4.24	6/22/2022 21:15	13.98	3.15	4.03
6/22/2022 21:55	14.13	4.24	6/22/2022 21:25	13.98	3.15	4.03
6/22/2022 22:05	14.13	4.24	6/22/2022 21:35	13.98	3.15	4.03
6/22/2022 22:15	14.13	4.23	6/22/2022 21:45	13.98	3.15	4.03
6/22/2022 22:25	14.14	4.24	6/22/2022 21:55	13.98	3.15	4.03
6/22/2022 22:35	14.14	4.24	6/22/2022 22:05	13.98	3.15	4.03
6/22/2022 22:45	14.13	4.23	6/22/2022 22:15	13.98	3.15	4.03
6/22/2022 22:55	14.13	4.23	6/22/2022 22:25	13.98	3.15	4.03
6/22/2022 23:05	14.13	4.23	6/22/2022 22:35	13.98	3.15	4.03
6/22/2022 23:15	14.13	4.23	6/22/2022 22:45	13.98	3.15	4.03
6/22/2022 23:25	14.13	4.22	6/22/2022 22:55	13.98	3.15	4.03
6/22/2022 23:35	14.13	4.22	6/22/2022 23:05	13.98	3.15	4.03
6/22/2022 23:45	14.13	4.22	6/22/2022 23:15	13.98	3.15	4.03
6/22/2022 23:55	14.13	4.22	6/22/2022 23:25	13.98	3.15	4.03
6/23/2022 0:05	14.13	4.22	6/22/2022 23:35	13.98	3.15	4.03
6/23/2022 0:15	14.13	4.22	6/22/2022 23:45	13.98	3.15	4.03
6/23/2022 0:25	14.13	4.22	6/22/2022 23:55	13.98	3.15	4.03
6/23/2022 0:35	14.13	4.28	6/23/2022 0:05	13.98	3.15	4.03
6/23/2022 0:45	14.13	4.23	6/23/2022 0:15	13.98	3.15	4.03
6/23/2022 0:55	14.13	4.23	6/23/2022 0:25	13.98	3.15	4.03
6/23/2022 1:05	14.13	4.22	6/23/2022 0:35	13.98	3.15	4.03
6/23/2022 1:15	14.13	4.22	6/23/2022 0:45	13.98	3.15	4.03
6/23/2022 1:25	14.13	4.21	6/23/2022 0:55	13.98	3.15	4.03
6/23/2022 1:35	14.13	4.21	6/23/2022 1:05	13.98	3.15	4.03
6/23/2022 1:45	14.13	4.23	6/23/2022 1:15	13.98	3.15	4.03
6/23/2022 1:55	14.13	4.21	6/23/2022 1:25	13.98	3.15	4.03
6/23/2022 2:05	14.13	4.22	6/23/2022 1:35	13.98	3.15	4.03
6/23/2022 2:15	14.14	4.22	6/23/2022 1:45	13.98	3.15	4.03
6/23/2022 2:25	14.14	4.22	6/23/2022 1:55	13.98	3.15	4.03
6/23/2022 2:35	14.13	4.22	6/23/2022 2:05	13.98	3.15	4.03
6/23/2022 2:45	14.13	4.21	6/23/2022 2:15	13.98	3.15	4.03
6/23/2022 2:55	14.13	4.22	6/23/2022 2:25	13.98	3.15	4.03
6/23/2022 3:05	14.13	4.22	6/23/2022 2:35	13.98	3.15	4.03
6/23/2022 3:15	14.13	4.21	6/23/2022 2:45	13.98	3.15	4.03
6/23/2022 3:25	14.13	4.22	6/23/2022 2:55	13.98	3.15	4.03
6/23/2022 3:35	14.13	4.21	6/23/2022 3:05	13.98	3.15	4.03
6/23/2022 3:45	14.12	4.21	6/23/2022 3:15	13.98	3.15	4.03
6/23/2022 3:55	14.12	4.21	6/23/2022 3:25	13.98	3.16	4.04
6/23/2022 4:05	14.13	4.21	6/23/2022 3:35	13.98	3.15	4.03
6/23/2022 4:15	14.13	4.21	6/23/2022 3:45	13.98	3.15	4.03
6/23/2022 4:25	14.13	4.21	6/23/2022 3:55	13.97	3.16	4.04
6/23/2022 4:35	14.13	4.22	6/23/2022 4:05	13.98	3.15	4.03
6/23/2022 4:45	14.13	4.21	6/23/2022 4:15	13.98	3.15	4.03
6/23/2022 4:55	14.13	4.21	6/23/2022 4:25	13.98	3.16	4.04
6/23/2022 5:05	14.13	4.21	6/23/2022 4:35	13.98	3.16	4.04
6/23/2022 5:15	14.13	4.21	6/23/2022 4:45	13.98	3.15	4.03
6/23/2022 5:25	14.13	4.21	6/23/2022 4:55	13.98	3.16	4.04
6/23/2022 5:35	14.13	4.22	6/23/2022 5:05	13.97	3.16	4.04
6/23/2022 5:45	14.13	4.21	6/23/2022 5:15	13.98	3.16	4.04
6/23/2022 5:55	14.13	4.21	6/23/2022 5:25	13.98	3.16	4.04
6/23/2022 6:05	14.12	4.21	6/23/2022 5:35	13.98	3.16	4.04
6/23/2022 6:15	14.12	4.19	6/23/2022 5:45	13.97	3.16	4.04
6/23/2022 6:25	14.13	4.25	6/23/2022 5:55	13.98	3.15	4.03
6/23/2022 6:35	14.13	4.21	6/23/2022 6:05	13.98	3.16	4.04
6/23/2022 6:45	14.13	4.21	6/23/2022 6:15	13.97	3.14	4.02
6/23/2022 6:55	14.12	4.20	6/23/2022 6:25	13.98	3.14	4.02
6/23/2022 7:05	14.12	4.20	6/23/2022 6:35	13.98	3.15	4.03
6/23/2022 7:15	14.12	4.20	6/23/2022 6:45	13.97	3.15	4.03
6/23/2022 7:25	14.11	4.20	6/23/2022 6:55	13.97	3.15	4.03

6/23/2022 7:35	14.12	4.21	6/23/2022 7:05	13.98	3.15	4.03
6/23/2022 7:45	14.12	4.21	6/23/2022 7:15	13.97	3.15	4.03
6/23/2022 7:55	14.12	4.22	6/23/2022 7:25	13.97	3.16	4.04
6/23/2022 8:05	14.12	4.21	6/23/2022 7:35	13.97	3.16	4.04
6/23/2022 8:15	14.12	4.20	6/23/2022 7:45	13.97	3.16	4.04
6/23/2022 8:25	14.12	4.21	6/23/2022 7:55	13.97	3.16	4.04
6/23/2022 8:35	14.11	4.20	6/23/2022 8:05	13.97	3.16	4.04
6/23/2022 8:45	14.11	4.21	6/23/2022 8:15	13.97	3.16	4.04
6/23/2022 8:55	14.12	4.20	6/23/2022 8:25	13.97	3.16	4.04
6/23/2022 9:05	14.11	4.20	6/23/2022 8:35	13.97	3.16	4.04
6/23/2022 9:15	14.11	4.20	6/23/2022 8:45	13.97	3.16	4.04
6/23/2022 9:25	14.12	4.21	6/23/2022 8:55	13.97	3.16	4.04
6/23/2022 9:35	14.11	4.21	6/23/2022 9:05	13.97	3.16	4.04
6/23/2022 9:45	14.11	4.20	6/23/2022 9:15	13.97	3.16	4.04
6/23/2022 9:55	14.11	4.20	6/23/2022 9:25	13.97	3.16	4.04
6/23/2022 10:05	14.11	4.21	6/23/2022 9:35	13.97	3.16	4.04
6/23/2022 10:15	14.11	4.20	6/23/2022 9:45	13.97	3.16	4.04
6/23/2022 10:25	14.11	4.20	6/23/2022 9:55	13.97	3.16	4.04
6/23/2022 10:35	14.11	4.20	6/23/2022 10:05	13.97	3.16	4.04
6/23/2022 10:45	14.11	4.20	6/23/2022 10:15	13.97	3.16	4.04
6/23/2022 10:55	14.11	4.20	6/23/2022 10:25	13.97	3.16	4.04
6/23/2022 11:05	14.12	4.22	6/23/2022 10:35	13.97	3.16	4.04
6/23/2022 11:15	14.11	4.21	6/23/2022 10:45	13.97	3.16	4.04
6/23/2022 11:25	14.11	4.21	6/23/2022 10:55	13.97	3.16	4.04
6/23/2022 11:35	14.11	4.21	6/23/2022 11:05	13.97	3.15	4.03
6/23/2022 11:45	14.11	4.20	6/23/2022 11:15	13.97	3.15	4.03
6/23/2022 11:55	14.11	4.20	6/23/2022 11:25	13.97	3.15	4.03
6/23/2022 12:05	14.11	4.21	6/23/2022 11:35	13.97	3.15	4.03
6/23/2022 12:15	14.11	4.21	6/23/2022 11:45	13.97	3.15	4.03
6/23/2022 12:25	14.11	4.21	6/23/2022 11:55	13.97	3.15	4.03
6/23/2022 12:35	14.11	4.21	6/23/2022 12:05	13.97	3.15	4.03
6/23/2022 12:45	14.11	4.21	6/23/2022 12:15	13.97	3.15	4.03
6/23/2022 12:55	14.11	4.21	6/23/2022 12:25	13.97	3.15	4.03
6/23/2022 13:05	14.11	4.21	6/23/2022 12:35	13.97	3.15	4.03
6/23/2022 13:15	14.11	4.21	6/23/2022 12:45	13.97	3.15	4.03
6/23/2022 13:25	14.11	4.21	6/23/2022 12:55	13.97	3.15	4.03
6/23/2022 13:35	14.11	4.21	6/23/2022 13:05	13.97	3.15	4.03
6/23/2022 13:45	14.10	4.21	6/23/2022 13:15	13.97	3.16	4.04
6/23/2022 13:55	14.10	4.21	6/23/2022 13:25	13.97	3.16	4.04
6/23/2022 14:05	14.10	4.21	6/23/2022 13:35	13.97	3.16	4.04
6/23/2022 14:15	14.10	4.21	6/23/2022 13:45	13.96	3.16	4.04
6/23/2022 14:25	14.10	4.22	6/23/2022 13:55	13.96	3.16	4.04
6/23/2022 14:35	14.10	4.21	6/23/2022 14:05	13.97	3.16	4.04
6/23/2022 14:45	14.11	4.21	6/23/2022 14:15	13.96	3.16	4.04
6/23/2022 14:55	14.10	4.21	6/23/2022 14:25	13.96	3.15	4.03
6/23/2022 15:05	14.10	4.21	6/23/2022 14:35	13.96	3.16	4.04
6/23/2022 15:15	14.11	4.23	6/23/2022 14:45	13.96	3.16	4.04
6/23/2022 15:25	14.10	4.22	6/23/2022 14:55	13.96	3.16	4.04
6/23/2022 15:35	14.10	4.22	6/23/2022 15:05	13.96	3.16	4.04
6/23/2022 15:45	14.10	4.22	6/23/2022 15:15	13.96	3.16	4.04
6/23/2022 15:55	14.09	4.21	6/23/2022 15:25	13.96	3.16	4.04
6/23/2022 16:05	14.09	4.22	6/23/2022 15:35	13.96	3.16	4.04
6/23/2022 16:15	14.10	4.22	6/23/2022 15:45	13.96	3.16	4.04
6/23/2022 16:25	14.09	4.22	6/23/2022 15:55	13.96	3.16	4.04
6/23/2022 16:35	14.09	4.22	6/23/2022 16:05	13.96	3.16	4.04
6/23/2022 16:45	14.09	4.22	6/23/2022 16:15	13.96	3.16	4.04
6/23/2022 16:55	14.09	4.22	6/23/2022 16:25	13.96	3.16	4.04
6/23/2022 17:05	14.09	4.22	6/23/2022 16:35	13.96	3.16	4.04
6/23/2022 17:15	14.09	4.22	6/23/2022 16:45	13.96	3.16	4.04
6/23/2022 17:25	14.09	4.23	6/23/2022 16:55	13.96	3.16	4.04
6/23/2022 17:35	14.09	4.23	6/23/2022 17:05	13.96	3.16	4.04
6/23/2022 17:45	14.09	4.22	6/23/2022 17:15	13.96	3.16	4.04
6/23/2022 17:55	14.09	4.23	6/23/2022 17:25	13.96	3.16	4.04
6/23/2022 18:05	14.09	4.23	6/23/2022 17:35	13.96	3.16	4.04
6/23/2022 18:15	14.09	4.23	6/23/2022 17:45	13.96	3.17	4.05
6/23/2022 18:25	14.09	4.23	6/23/2022 17:55	13.96	3.16	4.04
6/23/2022 18:35	14.09	4.23	6/23/2022 18:05	13.96	3.15	4.03
6/23/2022 18:45	14.09	4.23	6/23/2022 18:15	13.96	3.16	4.04
6/23/2022 18:55	14.09	4.23	6/23/2022 18:25	13.96	3.16	4.04
6/23/2022 19:05	14.09	4.23	6/23/2022 18:35	13.96	3.16	4.04
6/23/2022 19:15	14.09	4.24	6/23/2022 18:45	13.96	3.16	4.04
6/23/2022 19:25	14.09	4.24	6/23/2022 18:55	13.96	3.16	4.04
6/23/2022 19:35	14.09	4.23	6/23/2022 19:05	13.96	3.16	4.04
6/23/2022 19:45	14.09	4.24	6/23/2022 19:15	13.96	3.16	4.04
6/23/2022 19:55	14.09	4.23	6/23/2022 19:25	13.96	3.16	4.04
6/23/2022 20:05	14.09	4.24	6/23/2022 19:35	13.96	3.17	4.05
6/23/2022 20:15	14.09	4.23	6/23/2022 19:45	13.95	3.16	4.04
6/23/2022 20:25	14.09	4.24	6/23/2022 19:55	13.96	3.16	4.04
6/23/2022 20:35	14.09	4.24	6/23/2022 20:05	13.96	3.16	4.04
6/23/2022 20:45	14.09	4.23	6/23/2022 20:15	13.96	3.16	4.04
6/23/2022 20:55	14.09	4.23	6/23/2022 20:25	13.96	3.17	4.05
6/23/2022 21:05	14.09	4.23	6/23/2022 20:35	13.96	3.16	4.04
6/23/2022 21:15	14.08	4.24	6/23/2022 20:45	13.96	3.16	4.04
6/23/2022 21:25	14.09	4.23	6/23/2022 20:55	13.95	3.17	4.05
6/23/2022 21:35	14.09	4.23	6/23/2022 21:05	13.95	3.16	4.04
6/23/2022 21:45	14.08	4.24	6/23/2022 21:15	13.95	3.17	4.05
6/23/2022 21:55	14.09	4.23	6/23/2022 21:25	13.95	3.17	4.05
6/23/2022 22:05	14.09	4.23	6/23/2022 21:35	13.96	3.17	4.05

6/23/2022 22:15	14.08	4.23	6/23/2022 21:45	13.95	3.16	4.04
6/23/2022 22:25	14.08	4.24	6/23/2022 21:55	13.96	3.17	4.05
6/23/2022 22:35	14.09	4.24	6/23/2022 22:05	13.95	3.17	4.05
6/23/2022 22:45	14.09	4.24	6/23/2022 22:15	13.96	3.17	4.05
6/23/2022 22:55	14.09	4.24	6/23/2022 22:25	13.95	3.16	4.04
6/23/2022 23:05	14.09	4.24	6/23/2022 22:35	13.95	3.17	4.05
6/23/2022 23:15	14.08	4.24	6/23/2022 22:45	13.95	3.17	4.05
6/23/2022 23:25	14.08	4.24	6/23/2022 22:55	13.95	3.17	4.05
6/23/2022 23:35	14.08	4.24	6/23/2022 23:05	13.95	3.17	4.05
6/23/2022 23:45	14.08	4.24	6/23/2022 23:15	13.95	3.17	4.05
6/23/2022 23:55	14.08	4.24	6/23/2022 23:25	13.95	3.17	4.05
6/24/2022 0:05	14.09	4.27	6/23/2022 23:35	13.96	3.17	4.05
6/24/2022 0:15	14.09	4.27	6/23/2022 23:45	13.95	3.17	4.05
6/24/2022 0:25	14.09	4.27	6/23/2022 23:55	13.95	3.17	4.05
6/24/2022 0:35	14.09	4.25	6/24/2022 0:05	13.95	3.17	4.05
6/24/2022 0:45	14.09	4.26	6/24/2022 0:15	13.96	3.17	4.05
6/24/2022 0:55	14.09	4.26	6/24/2022 0:25	13.96	3.17	4.05
6/24/2022 1:05	14.09	4.25	6/24/2022 0:35	13.95	3.17	4.05
6/24/2022 1:15	14.09	4.26	6/24/2022 0:45	13.95	3.17	4.05
6/24/2022 1:25	14.09	4.27	6/24/2022 0:55	13.95	3.17	4.05
6/24/2022 1:35	14.09	4.25	6/24/2022 1:05	13.95	3.17	4.05
6/24/2022 1:45	14.09	4.25	6/24/2022 1:15	13.95	3.17	4.05
6/24/2022 1:55	14.09	4.25	6/24/2022 1:25	13.95	3.17	4.05
6/24/2022 2:05	14.09	4.25	6/24/2022 1:35	13.95	3.17	4.05
6/24/2022 2:15	14.09	4.25	6/24/2022 1:45	13.95	3.17	4.05
6/24/2022 2:25	14.09	4.26	6/24/2022 1:55	13.96	3.17	4.05
6/24/2022 2:35	14.09	4.25	6/24/2022 2:05	13.95	3.17	4.05
6/24/2022 2:45	14.09	4.25	6/24/2022 2:15	13.96	3.17	4.05
6/24/2022 2:55	14.09	4.25	6/24/2022 2:25	13.95	3.17	4.05
6/24/2022 3:05	14.09	4.25	6/24/2022 2:35	13.96	3.17	4.05
6/24/2022 3:15	14.09	4.25	6/24/2022 2:45	13.95	3.18	4.06
6/24/2022 3:25	14.09	4.25	6/24/2022 2:55	13.95	3.17	4.05
6/24/2022 3:35	14.09	4.25	6/24/2022 3:05	13.96	3.17	4.05
6/24/2022 3:45	14.09	4.26	6/24/2022 3:15	13.96	3.17	4.05
6/24/2022 3:55	14.09	4.25	6/24/2022 3:25	13.95	3.17	4.05
6/24/2022 4:05	14.09	4.25	6/24/2022 3:35	13.96	3.17	4.05
6/24/2022 4:15	14.09	4.25	6/24/2022 3:45	13.96	3.17	4.05
6/24/2022 4:25	14.09	4.25	6/24/2022 3:55	13.95	3.17	4.05
6/24/2022 4:35	14.09	4.26	6/24/2022 4:05	13.95	3.18	4.06
6/24/2022 4:45	14.09	4.26	6/24/2022 4:15	13.96	3.18	4.06
6/24/2022 4:55	14.09	4.25	6/24/2022 4:25	13.96	3.18	4.06
6/24/2022 5:05	14.09	4.25	6/24/2022 4:35	13.96	3.18	4.06
6/24/2022 5:15	14.09	4.26	6/24/2022 4:45	13.96	3.18	4.06
6/24/2022 5:25	14.10	4.26	6/24/2022 4:55	13.96	3.17	4.05
6/24/2022 5:35	14.10	4.26	6/24/2022 5:05	13.96	3.18	4.06
6/24/2022 5:45	14.10	4.26	6/24/2022 5:15	13.96	3.18	4.06
6/24/2022 5:55	14.09	4.26	6/24/2022 5:25	13.96	3.18	4.06
6/24/2022 6:05	14.10	4.26	6/24/2022 5:35	13.96	3.18	4.06
6/24/2022 6:15	14.10	4.27	6/24/2022 5:45	13.96	3.18	4.06
6/24/2022 6:25	14.10	4.26	6/24/2022 5:55	13.96	3.18	4.06
6/24/2022 6:35	14.10	4.26	6/24/2022 6:05	13.96	3.18	4.06
6/24/2022 6:45	14.10	4.26	6/24/2022 6:15	13.96	3.18	4.06
6/24/2022 6:55	14.10	4.26	6/24/2022 6:25	13.96	3.18	4.06
6/24/2022 7:05	14.10	4.26	6/24/2022 6:35	13.96	3.18	4.06
6/24/2022 7:15	14.10	4.26	6/24/2022 6:45	13.96	3.18	4.06
6/24/2022 7:25	14.10	4.26	6/24/2022 6:55	13.96	3.18	4.06
6/24/2022 7:35	14.10	4.26	6/24/2022 7:05	13.96	3.18	4.06
6/24/2022 7:45	14.11	4.27	6/24/2022 7:15	13.96	3.18	4.06
6/24/2022 7:55	14.10	4.26	6/24/2022 7:25	13.96	3.18	4.06
6/24/2022 8:05	14.10	4.27	6/24/2022 7:35	13.96	3.18	4.06
6/24/2022 8:15	14.10	4.26	6/24/2022 7:45	13.96	3.18	4.06
6/24/2022 8:25	14.10	4.27	6/24/2022 7:55	13.96	3.18	4.06
6/24/2022 8:35	14.10	4.26	6/24/2022 8:05	13.96	3.18	4.06
6/24/2022 8:45	14.10	4.26	6/24/2022 8:15	13.96	3.18	4.06
6/24/2022 8:55	14.10	4.26	6/24/2022 8:25	13.96	3.19	4.07
6/24/2022 9:05	14.11	4.26	6/24/2022 8:35	13.96	3.18	4.06
6/24/2022 9:15	14.10	4.26	6/24/2022 8:45	13.96	3.18	4.06
6/24/2022 9:25	14.10	4.26	6/24/2022 8:55	13.96	3.19	4.07
6/24/2022 9:35	14.11	4.26	6/24/2022 9:05	13.96	3.18	4.06
6/24/2022 9:45	14.10	4.26	6/24/2022 9:15	13.96	3.18	4.06
6/24/2022 9:55	14.10	4.26	6/24/2022 9:25	13.96	3.18	4.06
6/24/2022 10:05	14.10	4.26	6/24/2022 9:35	13.96	3.18	4.06
6/24/2022 10:15	14.10	4.26	6/24/2022 9:45	13.96	3.18	4.06
6/24/2022 10:25	14.11	4.27	6/24/2022 9:55	13.96	3.19	4.07
6/24/2022 10:35	14.11	4.26	6/24/2022 10:05	13.96	3.18	4.06
6/24/2022 10:45	14.10	4.26	6/24/2022 10:15	13.96	3.18	4.06
6/24/2022 10:55	14.11	4.26	6/24/2022 10:25	13.96	3.19	4.07
6/24/2022 11:05	14.11	4.26	6/24/2022 10:35	13.96	3.18	4.06
6/24/2022 11:15	14.11	4.27	6/24/2022 10:45	13.96	3.19	4.07
6/24/2022 11:25	14.11	4.26	6/24/2022 10:55	13.96	3.18	4.06
6/24/2022 11:35	14.11	4.26	6/24/2022 11:05	13.96	3.19	4.07
6/24/2022 11:45	14.11	4.27	6/24/2022 11:15	13.96	3.19	4.07
6/24/2022 11:55	14.11	4.27	6/24/2022 11:25	13.96	3.18	4.06
6/24/2022 12:05	14.11	4.27	6/24/2022 11:35	13.96	3.19	4.07
6/24/2022 12:15	14.11	4.26	6/24/2022 11:45	13.97	3.19	4.07
6/24/2022 12:25	14.11	4.27	6/24/2022 11:55	13.97	3.19	4.07
6/24/2022 12:35	14.11	4.27	6/24/2022 12:03	13.97	3.21	4.09
6/24/2022 12:45	14.11	4.27	6/24/2022 12:13	13.97	3.19	4.07

6/24/2022 12:55	14.11	4.27	6/24/2022 12:23	13.97	3.19	4.07
6/24/2022 13:05	14.11	4.26	6/24/2022 12:33	13.97	3.19	4.07
6/24/2022 13:15	14.11	4.27	6/24/2022 12:43	13.97	3.19	4.07
6/24/2022 13:25	14.11	4.28	6/24/2022 12:53	13.97	3.19	4.07
6/24/2022 13:35	14.11	4.27	6/24/2022 13:03	13.97	3.19	4.07
6/24/2022 13:45	14.11	4.27	6/24/2022 13:13	13.97	3.19	4.07
6/24/2022 13:55	14.11	4.28	6/24/2022 13:23	13.97	3.19	4.07
6/24/2022 14:05	14.12	4.29	6/24/2022 13:33	13.97	3.19	4.07
6/24/2022 14:15	14.11	4.28	6/24/2022 13:43	13.97	3.20	4.08
6/24/2022 14:25	14.12	4.28	6/24/2022 13:53	13.97	3.20	4.08
6/24/2022 14:35	14.11	4.28	6/24/2022 14:03	13.97	3.19	4.07
6/24/2022 14:45	14.11	4.28	6/24/2022 14:13	13.97	3.19	4.07
6/24/2022 14:55	14.11	4.28	6/24/2022 14:23	13.97	3.19	4.07
6/24/2022 15:05	14.11	4.29	6/24/2022 14:33	13.97	3.20	4.08
6/24/2022 15:15	14.11	4.28	6/24/2022 14:43	13.97	3.20	4.08
6/24/2022 15:25	14.11	4.29	6/24/2022 14:53	13.97	3.20	4.08
6/24/2022 15:35	14.11	4.29	6/24/2022 15:03	13.97	3.19	4.07
6/24/2022 15:45	14.11	4.29	6/24/2022 15:13	13.97	3.20	4.08
6/24/2022 15:55	14.11	4.29	6/24/2022 15:23	13.97	3.20	4.08
6/24/2022 16:05	14.12	4.29	6/24/2022 15:33	13.97	3.20	4.08
6/24/2022 16:15	14.11	4.29	6/24/2022 15:43	13.97	3.20	4.08
6/24/2022 16:25	14.11	4.31	6/24/2022 15:53	13.97	3.20	4.08
6/24/2022 16:35	14.12	4.30	6/24/2022 16:03	13.97	3.20	4.08
6/24/2022 16:45	14.12	4.29	6/24/2022 16:13	13.97	3.20	4.08
6/24/2022 16:55	14.12	4.29	6/24/2022 16:23	13.97	3.20	4.08
6/24/2022 17:05	14.12	4.29	6/24/2022 16:33	13.97	3.20	4.08
6/24/2022 17:15	14.12	4.29	6/24/2022 16:43	13.97	3.20	4.08
6/24/2022 17:25	14.12	4.30	6/24/2022 16:53	13.97	3.20	4.08
6/24/2022 17:35	14.11	4.30	6/24/2022 17:03	13.97	3.20	4.08
6/24/2022 17:45	14.12	4.29	6/24/2022 17:13	13.97	3.20	4.08
6/24/2022 17:55	14.12	4.31	6/24/2022 17:23	13.97	3.20	4.08
6/24/2022 18:05	14.12	4.31	6/24/2022 17:33	13.97	3.20	4.08
6/24/2022 18:15	14.12	4.31	6/24/2022 17:43	13.97	3.20	4.08
6/24/2022 18:25	14.12	4.31	6/24/2022 17:53	13.97	3.20	4.08
6/24/2022 18:35	14.12	4.31	6/24/2022 18:03	13.97	3.20	4.08
6/24/2022 18:45	14.12	4.32	6/24/2022 18:13	13.97	3.20	4.08
6/24/2022 18:55	14.12	4.31	6/24/2022 18:23	13.97	3.20	4.08
6/24/2022 19:05	14.12	4.31	6/24/2022 18:33	13.98	3.20	4.08
6/24/2022 19:15	14.13	4.32	6/24/2022 18:43	13.98	3.20	4.08
6/24/2022 19:25	14.13	4.34	6/24/2022 18:53	13.97	3.21	4.09
6/24/2022 19:35	14.13	4.34	6/24/2022 19:03	13.98	3.20	4.08
6/24/2022 19:45	14.12	4.32	6/24/2022 19:13	13.98	3.20	4.08
6/24/2022 19:55	14.13	4.34	6/24/2022 19:23	13.98	3.20	4.08
6/24/2022 20:05	14.13	4.32	6/24/2022 19:33	13.98	3.20	4.08
6/24/2022 20:15	14.13	4.33	6/24/2022 19:43	13.98	3.21	4.09
6/24/2022 20:25	14.13	4.35	6/24/2022 19:53	13.98	3.20	4.08
6/24/2022 20:35	14.13	4.34	6/24/2022 20:03	13.98	3.21	4.09
6/24/2022 20:45	14.13	4.32	6/24/2022 20:13	13.98	3.21	4.09
6/24/2022 20:55	14.13	4.35	6/24/2022 20:23	13.98	3.20	4.08
6/24/2022 21:05	14.13	4.32	6/24/2022 20:33	13.98	3.20	4.08
6/24/2022 21:15	14.13	4.33	6/24/2022 20:43	13.98	3.20	4.08
6/24/2022 21:25	14.13	4.33	6/24/2022 20:53	13.98	3.21	4.09
6/24/2022 21:35	14.13	4.33	6/24/2022 21:03	13.98	3.21	4.09
6/24/2022 21:45	14.13	4.33	6/24/2022 21:13	13.98	3.21	4.09
6/24/2022 21:55	14.13	4.32	6/24/2022 21:23	13.98	3.20	4.08
6/24/2022 22:05	14.13	4.33	6/24/2022 21:33	13.98	3.20	4.08
6/24/2022 22:15	14.13	4.34	6/24/2022 21:43	13.98	3.21	4.09
6/24/2022 22:25	14.14	4.33	6/24/2022 21:53	13.98	3.21	4.09
6/24/2022 22:35	14.13	4.33	6/24/2022 22:03	13.98	3.21	4.09
6/24/2022 22:45	14.14	4.33	6/24/2022 22:13	13.98	3.21	4.09
6/24/2022 22:55	14.13	4.33	6/24/2022 22:23	13.98	3.21	4.09
6/24/2022 23:05	14.14	4.33	6/24/2022 22:33	13.98	3.20	4.08
6/24/2022 23:15	14.14	4.34	6/24/2022 22:43	13.99	3.21	4.09
6/24/2022 23:25	14.14	4.33	6/24/2022 22:53	13.98	3.21	4.09
6/24/2022 23:35	14.14	4.33	6/24/2022 23:03	13.98	3.21	4.09
6/24/2022 23:45	14.14	4.33	6/24/2022 23:13	13.98	3.21	4.09
6/24/2022 23:55	14.14	4.33	6/24/2022 23:23	13.99	3.21	4.09
6/25/2022 0:05	14.15	4.34	6/24/2022 23:33	13.99	3.21	4.09
6/25/2022 0:15	14.15	4.34	6/24/2022 23:43	13.99	3.21	4.09
6/25/2022 0:25	14.15	4.34	6/24/2022 23:53	13.99	3.21	4.09
6/25/2022 0:35	14.15	4.34	6/25/2022 0:03	13.99	3.21	4.09
6/25/2022 0:45	14.14	4.34	6/25/2022 0:13	13.99	3.21	4.09
6/25/2022 0:55	14.14	4.34	6/25/2022 0:23	13.99	3.21	4.09
6/25/2022 1:05	14.15	4.34	6/25/2022 0:33	13.99	3.21	4.09
6/25/2022 1:15	14.15	4.34	6/25/2022 0:43	13.99	3.21	4.09
6/25/2022 1:25	14.15	4.34	6/25/2022 0:53	13.99	3.22	4.10
6/25/2022 1:35	14.15	4.34	6/25/2022 1:03	13.99	3.21	4.09
6/25/2022 1:45	14.15	4.34	6/25/2022 1:13	13.99	3.21	4.09
6/25/2022 1:55	14.16	4.34	6/25/2022 1:23	13.99	3.22	4.10
6/25/2022 2:05	14.16	4.34	6/25/2022 1:33	13.99	3.21	4.09
6/25/2022 2:15	14.16	4.34	6/25/2022 1:43	14.00	3.21	4.09
6/25/2022 2:25	14.16	4.34	6/25/2022 1:53	14.00	3.21	4.09
6/25/2022 2:35	14.16	4.34	6/25/2022 2:03	14.00	3.21	4.09
6/25/2022 2:45	14.16	4.34	6/25/2022 2:13	14.00	3.21	4.09
6/25/2022 2:55	14.17	4.35	6/25/2022 2:23	14.00	3.21	4.09
6/25/2022 3:05	14.16	4.35	6/25/2022 2:33	14.00	3.22	4.10
6/25/2022 3:15	14.16	4.34	6/25/2022 2:43	14.00	3.21	4.09
6/25/2022 3:25	14.17	4.35	6/25/2022 2:53	14.00	3.22	4.10

6/25/2022 3:35	14.16	4.35	6/25/2022 3:03	14.00	3.22	4.10
6/25/2022 3:45	14.17	4.34	6/25/2022 3:13	14.00	3.21	4.09
6/25/2022 3:55	14.17	4.34	6/25/2022 3:23	14.00	3.22	4.10
6/25/2022 4:05	14.17	4.35	6/25/2022 3:33	14.00	3.22	4.10
6/25/2022 4:15	14.17	4.34	6/25/2022 3:43	14.00	3.22	4.10
6/25/2022 4:25	14.17	4.35	6/25/2022 3:53	14.01	3.22	4.10
6/25/2022 4:35	14.17	4.34	6/25/2022 4:03	14.01	3.21	4.09
6/25/2022 4:45	14.17	4.35	6/25/2022 4:13	14.01	3.21	4.09
6/25/2022 4:55	14.18	4.35	6/25/2022 4:23	14.01	3.22	4.10
6/25/2022 5:05	14.18	4.35	6/25/2022 4:33	14.01	3.22	4.10
6/25/2022 5:15	14.18	4.34	6/25/2022 4:43	14.01	3.22	4.10
6/25/2022 5:25	14.18	4.35	6/25/2022 4:53	14.01	3.22	4.10
6/25/2022 5:35	14.19	4.36	6/25/2022 5:03	14.01	3.22	4.10
6/25/2022 5:45	14.18	4.35	6/25/2022 5:13	14.01	3.22	4.10
6/25/2022 5:55	14.19	4.35	6/25/2022 5:23	14.01	3.22	4.10
6/25/2022 6:05	14.18	4.35	6/25/2022 5:33	14.01	3.22	4.10
6/25/2022 6:15	14.18	4.35	6/25/2022 5:43	14.01	3.22	4.10
6/25/2022 6:25	14.19	4.35	6/25/2022 5:53	14.02	3.22	4.10
6/25/2022 6:35	14.19	4.35	6/25/2022 6:03	14.02	3.22	4.10
6/25/2022 6:45	14.19	4.36	6/25/2022 6:13	14.02	3.22	4.10
6/25/2022 6:55	14.19	4.35	6/25/2022 6:23	14.02	3.22	4.10
6/25/2022 7:05	14.19	4.36	6/25/2022 6:33	14.02	3.22	4.10
6/25/2022 7:15	14.19	4.35	6/25/2022 6:43	14.02	3.22	4.10
6/25/2022 7:25	14.20	4.35	6/25/2022 6:53	14.02	3.23	4.11
6/25/2022 7:35	14.20	4.35	6/25/2022 7:03	14.02	3.22	4.10
6/25/2022 7:45	14.20	4.35	6/25/2022 7:13	14.02	3.22	4.10
6/25/2022 7:55	14.20	4.35	6/25/2022 7:23	14.02	3.22	4.10
6/25/2022 8:05	14.20	4.36	6/25/2022 7:33	14.02	3.22	4.10
6/25/2022 8:15	14.20	4.36	6/25/2022 7:43	14.02	3.23	4.11
6/25/2022 8:25	14.21	4.36	6/25/2022 7:53	14.02	3.22	4.10
6/25/2022 8:35	14.21	4.36	6/25/2022 8:03	14.03	3.22	4.10
6/25/2022 8:45	14.21	4.37	6/25/2022 8:13	14.03	3.22	4.10
6/25/2022 8:55	14.21	4.36	6/25/2022 8:23	14.03	3.22	4.10
6/25/2022 9:05	14.21	4.35	6/25/2022 8:33	14.03	3.23	4.11
6/25/2022 9:15	14.22	4.36	6/25/2022 8:43	14.03	3.22	4.10
6/25/2022 9:25	14.21	4.35	6/25/2022 8:53	14.03	3.23	4.11
6/25/2022 9:35	14.21	4.37	6/25/2022 9:03	14.03	3.23	4.11
6/25/2022 9:45	14.22	4.36	6/25/2022 9:13	14.03	3.23	4.11
6/25/2022 9:55	14.22	4.36	6/25/2022 9:23	14.03	3.23	4.11
6/25/2022 10:05	14.21	4.35	6/25/2022 9:33	14.04	3.23	4.11
6/25/2022 10:15	14.22	4.36	6/25/2022 9:43	14.04	3.23	4.11
6/25/2022 10:25	14.22	4.36	6/25/2022 9:53	14.04	3.23	4.11
6/25/2022 10:35	14.22	4.36	6/25/2022 10:03	14.04	3.23	4.11
6/25/2022 10:45	14.23	4.37	6/25/2022 10:13	14.04	3.23	4.11
6/25/2022 10:55	14.23	4.37	6/25/2022 10:23	14.04	3.23	4.11
6/25/2022 11:05	14.23	4.38	6/25/2022 10:33	14.04	3.23	4.11
6/25/2022 11:15	14.23	4.36	6/25/2022 10:43	14.04	3.23	4.11
6/25/2022 11:25	14.23	4.37	6/25/2022 10:53	14.04	3.23	4.11
6/25/2022 11:35	14.23	4.36	6/25/2022 11:03	14.04	3.23	4.11
6/25/2022 11:45	14.23	4.36	6/25/2022 11:13	14.05	3.23	4.11
6/25/2022 11:55	14.23	4.37	6/25/2022 11:23	14.05	3.23	4.11
6/25/2022 12:05	14.24	4.37	6/25/2022 11:33	14.05	3.23	4.11
6/25/2022 12:15	14.23	4.37	6/25/2022 11:43	14.05	3.23	4.11
6/25/2022 12:25	14.23	4.37	6/25/2022 11:53	14.05	3.23	4.11
6/25/2022 12:35	14.24	4.37	6/25/2022 12:03	14.05	3.23	4.11
6/25/2022 12:45	14.24	4.37	6/25/2022 12:13	14.05	3.23	4.11
6/25/2022 12:55	14.24	4.37	6/25/2022 12:23	14.05	3.23	4.11
6/25/2022 13:05	14.25	4.38	6/25/2022 12:33	14.05	3.23	4.11
6/25/2022 13:15	14.25	4.38	6/25/2022 12:43	14.05	3.24	4.12
6/25/2022 13:25	14.25	4.38	6/25/2022 12:53	14.05	3.24	4.12
6/25/2022 13:35	14.25	4.38	6/25/2022 13:03	14.06	3.23	4.11
6/25/2022 13:45	14.25	4.37	6/25/2022 13:13	14.06	3.24	4.12
6/25/2022 13:55	14.25	4.39	6/25/2022 13:23	14.06	3.23	4.11
6/25/2022 14:05	14.25	4.38	6/25/2022 13:33	14.06	3.24	4.12
6/25/2022 14:15	14.25	4.39	6/25/2022 13:43	14.06	3.24	4.12
6/25/2022 14:25	14.26	4.39	6/25/2022 13:53	14.06	3.24	4.12
6/25/2022 14:35	14.25	4.38	6/25/2022 14:03	14.06	3.23	4.11
6/25/2022 14:45	14.26	4.40	6/25/2022 14:13	14.06	3.24	4.12
6/25/2022 14:55	14.26	4.39	6/25/2022 14:23	14.06	3.24	4.12
6/25/2022 15:05	14.26	4.39	6/25/2022 14:33	14.06	3.23	4.11
6/25/2022 15:15	14.26	4.39	6/25/2022 14:43	14.06	3.24	4.12
6/25/2022 15:25	14.26	4.40	6/25/2022 14:53	14.07	3.24	4.12
6/25/2022 15:35	14.26	4.40	6/25/2022 15:03	14.07	3.24	4.12
6/25/2022 15:45	14.26	4.39	6/25/2022 15:13	14.07	3.24	4.12
6/25/2022 15:55	14.26	4.39	6/25/2022 15:23	14.07	3.24	4.12
6/25/2022 16:05	14.26	4.39	6/25/2022 15:33	14.07	3.24	4.12
6/25/2022 16:15	14.26	4.40	6/25/2022 15:43	14.07	3.24	4.12
6/25/2022 16:25	14.27	4.41	6/25/2022 15:53	14.07	3.24	4.12
6/25/2022 16:35	14.27	4.40	6/25/2022 16:03	14.07	3.24	4.12
6/25/2022 16:45	14.27	4.40	6/25/2022 16:13	14.07	3.25	4.13
6/25/2022 16:55	14.27	4.39	6/25/2022 16:23	14.07	3.24	4.12
6/25/2022 17:05	14.27	4.40	6/25/2022 16:33	14.07	3.24	4.12
6/25/2022 17:15	14.27	4.40	6/25/2022 16:43	14.07	3.25	4.13
6/25/2022 17:25	14.27	4.40	6/25/2022 16:53	14.07	3.25	4.13
6/25/2022 17:35	14.28	4.40	6/25/2022 17:03	14.08	3.24	4.12
6/25/2022 17:45	14.27	4.40	6/25/2022 17:13	14.08	3.24	4.12
6/25/2022 17:55	14.28	4.40	6/25/2022 17:23	14.08	3.24	4.12
6/25/2022 18:05	14.29	4.41	6/25/2022 17:33	14.08	3.25	4.13

6/25/2022 18:15	14.28	4.40	6/25/2022 17:43	14.08	3.24	4.12
6/25/2022 18:25	14.28	4.42	6/25/2022 17:53	14.08	3.25	4.13
6/25/2022 18:35	14.28	4.41	6/25/2022 18:03	14.08	3.25	4.13
6/25/2022 18:45	14.28	4.44	6/25/2022 18:13	14.08	3.24	4.12
6/25/2022 18:55	14.29	4.41	6/25/2022 18:23	14.09	3.24	4.12
6/25/2022 19:05	14.29	4.41	6/25/2022 18:33	14.09	3.25	4.13
6/25/2022 19:15	14.28	4.41	6/25/2022 18:43	14.09	3.25	4.13
6/25/2022 19:25	14.29	4.41	6/25/2022 18:53	14.09	3.25	4.13
6/25/2022 19:35	14.29	4.41	6/25/2022 19:03	14.09	3.25	4.13
6/25/2022 19:45	14.29	4.42	6/25/2022 19:13	14.09	3.24	4.12
6/25/2022 19:55	14.29	4.41	6/25/2022 19:23	14.09	3.25	4.13
6/25/2022 20:05	14.30	4.43	6/25/2022 19:33	14.09	3.25	4.13
6/25/2022 20:15	14.30	4.42	6/25/2022 19:43	14.09	3.25	4.13
6/25/2022 20:25	14.30	4.42	6/25/2022 19:53	14.09	3.25	4.13
6/25/2022 20:35	14.30	4.42	6/25/2022 20:03	14.10	3.25	4.13
6/25/2022 20:45	14.30	4.42	6/25/2022 20:13	14.10	3.25	4.13
6/25/2022 20:55	14.30	4.43	6/25/2022 20:23	14.10	3.24	4.12
6/25/2022 21:05	14.30	4.44	6/25/2022 20:33	14.10	3.25	4.13
6/25/2022 21:15	14.30	4.43	6/25/2022 20:43	14.10	3.25	4.13
6/25/2022 21:25	14.30	4.43	6/25/2022 20:53	14.10	3.25	4.13
6/25/2022 21:35	14.30	4.42	6/25/2022 21:03	14.10	3.25	4.13
6/25/2022 21:45	14.31	4.43	6/25/2022 21:13	14.10	3.25	4.13
6/25/2022 21:55	14.31	4.42	6/25/2022 21:23	14.10	3.25	4.13
6/25/2022 22:05	14.31	4.43	6/25/2022 21:33	14.10	3.25	4.13
6/25/2022 22:15	14.31	4.43	6/25/2022 21:43	14.10	3.25	4.13
6/25/2022 22:25	14.31	4.43	6/25/2022 21:53	14.10	3.25	4.13
6/25/2022 22:35	14.31	4.44	6/25/2022 22:03	14.11	3.25	4.13
6/25/2022 22:45	14.32	4.43	6/25/2022 22:13	14.11	3.25	4.13
6/25/2022 22:55	14.32	4.43	6/25/2022 22:23	14.11	3.25	4.13
6/25/2022 23:05	14.32	4.45	6/25/2022 22:33	14.11	3.25	4.13
6/25/2022 23:15	14.32	4.44	6/25/2022 22:43	14.11	3.25	4.13
6/25/2022 23:25	14.32	4.43	6/25/2022 22:53	14.11	3.25	4.13
6/25/2022 23:35	14.32	4.44	6/25/2022 23:03	14.11	3.25	4.13
6/25/2022 23:45	14.32	4.44	6/25/2022 23:13	14.12	3.25	4.13
6/25/2022 23:55	14.32	4.43	6/25/2022 23:23	14.12	3.25	4.13
6/26/2022 0:05	14.32	4.44	6/25/2022 23:33	14.12	3.25	4.13
6/26/2022 0:15	14.33	4.44	6/25/2022 23:43	14.12	3.25	4.13
6/26/2022 0:25	14.33	4.45	6/25/2022 23:53	14.12	3.25	4.13
6/26/2022 0:35	14.33	4.46	6/26/2022 0:03	14.12	3.25	4.13
6/26/2022 0:45	14.33	4.45	6/26/2022 0:13	14.12	3.26	4.14
6/26/2022 0:55	14.34	4.45	6/26/2022 0:23	14.12	3.26	4.14
6/26/2022 1:05	14.33	4.45	6/26/2022 0:33	14.12	3.25	4.13
6/26/2022 1:15	14.34	4.46	6/26/2022 0:43	14.13	3.26	4.14
6/26/2022 1:25	14.34	4.46	6/26/2022 0:53	14.13	3.26	4.14
6/26/2022 1:35	14.34	4.46	6/26/2022 1:03	14.13	3.25	4.13
6/26/2022 1:45	14.34	4.44	6/26/2022 1:13	14.13	3.26	4.14
6/26/2022 1:55	14.34	4.45	6/26/2022 1:23	14.13	3.26	4.14
6/26/2022 2:05	14.35	4.46	6/26/2022 1:33	14.13	3.26	4.14
6/26/2022 2:15	14.35	4.45	6/26/2022 1:43	14.13	3.26	4.14
6/26/2022 2:25	14.35	4.45	6/26/2022 1:53	14.14	3.26	4.14
6/26/2022 2:35	14.35	4.46	6/26/2022 2:03	14.14	3.26	4.14
6/26/2022 2:45	14.36	4.45	6/26/2022 2:13	14.14	3.26	4.14
6/26/2022 2:55	14.36	4.46	6/26/2022 2:23	14.14	3.26	4.14
6/26/2022 3:05	14.36	4.45	6/26/2022 2:33	14.14	3.26	4.14
6/26/2022 3:15	14.36	4.46	6/26/2022 2:43	14.14	3.26	4.14
6/26/2022 3:25	14.36	4.45	6/26/2022 2:53	14.14	3.26	4.14
6/26/2022 3:35	14.36	4.45	6/26/2022 3:03	14.14	3.26	4.14
6/26/2022 3:45	14.36	4.45	6/26/2022 3:13	14.15	3.26	4.14
6/26/2022 3:55	14.37	4.45	6/26/2022 3:23	14.15	3.26	4.14
6/26/2022 4:05	14.37	4.45	6/26/2022 3:33	14.15	3.26	4.14
6/26/2022 4:15	14.37	4.46	6/26/2022 3:43	14.15	3.26	4.14
6/26/2022 4:25	14.37	4.46	6/26/2022 3:53	14.15	3.26	4.14
6/26/2022 4:35	14.38	4.46	6/26/2022 4:03	14.15	3.27	4.15
6/26/2022 4:45	14.38	4.46	6/26/2022 4:13	14.15	3.26	4.14
6/26/2022 4:55	14.38	4.46	6/26/2022 4:23	14.15	3.26	4.14
6/26/2022 5:05	14.39	4.46	6/26/2022 4:33	14.15	3.26	4.14
6/26/2022 5:15	14.38	4.45	6/26/2022 4:43	14.16	3.26	4.14
6/26/2022 5:25	14.38	4.45	6/26/2022 4:53	14.16	3.27	4.15
6/26/2022 5:35	14.39	4.45	6/26/2022 5:03	14.16	3.26	4.14
6/26/2022 5:45	14.39	4.46	6/26/2022 5:13	14.16	3.26	4.14
6/26/2022 5:55	14.39	4.45	6/26/2022 5:23	14.16	3.26	4.14
6/26/2022 6:05	14.40	4.46	6/26/2022 5:33	14.16	3.26	4.14
6/26/2022 6:15	14.40	4.46	6/26/2022 5:43	14.17	3.27	4.15
6/26/2022 6:25	14.40	4.46	6/26/2022 5:53	14.17	3.27	4.15
6/26/2022 6:35	14.40	4.46	6/26/2022 6:03	14.17	3.26	4.14
6/26/2022 6:45	14.40	4.46	6/26/2022 6:13	14.17	3.27	4.15
6/26/2022 6:55	14.40	4.46	6/26/2022 6:23	14.17	3.27	4.15
6/26/2022 7:05	14.41	4.48	6/26/2022 6:33	14.17	3.26	4.14
6/26/2022 7:15	14.41	4.46	6/26/2022 6:43	14.18	3.27	4.15
6/26/2022 7:25	14.40	4.46	6/26/2022 6:53	14.18	3.27	4.15
6/26/2022 7:35	14.41	4.47	6/26/2022 7:03	14.18	3.27	4.15
6/26/2022 7:45	14.41	4.46	6/26/2022 7:13	14.18	3.27	4.15
6/26/2022 7:55	14.41	4.46	6/26/2022 7:23	14.18	3.27	4.15
6/26/2022 8:05	14.42	4.46	6/26/2022 7:33	14.18	3.27	4.15
6/26/2022 8:15	14.41	4.46	6/26/2022 7:43	14.18	3.27	4.15
6/26/2022 8:25	14.42	4.46	6/26/2022 7:53	14.19	3.27	4.15
6/26/2022 8:35	14.42	4.46	6/26/2022 8:03	14.19	3.27	4.15
6/26/2022 8:45	14.42	4.47	6/26/2022 8:13	14.19	3.27	4.15

6/26/2022 8:55	14.42	4.46	6/26/2022 8:23	14.19	3.27	4.15
6/26/2022 9:05	14.43	4.47	6/26/2022 8:33	14.19	3.27	4.15
6/26/2022 9:15	14.43	4.46	6/26/2022 8:43	14.19	3.27	4.15
6/26/2022 9:25	14.43	4.46	6/26/2022 8:53	14.19	3.27	4.15
6/26/2022 9:35	14.43	4.46	6/26/2022 9:03	14.20	3.27	4.15
6/26/2022 9:45	14.44	4.48	6/26/2022 9:13	14.20	3.27	4.15
6/26/2022 9:55	14.44	4.48	6/26/2022 9:23	14.20	3.27	4.15
6/26/2022 10:05	14.45	4.47	6/26/2022 9:33	14.20	3.27	4.15
6/26/2022 10:15	14.44	4.47	6/26/2022 9:43	14.20	3.28	4.16
6/26/2022 10:25	14.44	4.47	6/26/2022 9:53	14.20	3.27	4.15
6/26/2022 10:35	14.44	4.47	6/26/2022 10:03	14.20	3.28	4.16
6/26/2022 10:45	14.45	4.47	6/26/2022 10:13	14.21	3.28	4.16
6/26/2022 10:55	14.45	4.47	6/26/2022 10:23	14.21	3.28	4.16
6/26/2022 11:05	14.45	4.47	6/26/2022 10:33	14.21	3.27	4.15
6/26/2022 11:15	14.45	4.47	6/26/2022 10:43	14.21	3.28	4.16
6/26/2022 11:25	14.45	4.47	6/26/2022 10:53	14.21	3.28	4.16
6/26/2022 11:35	14.45	4.47	6/26/2022 11:03	14.21	3.28	4.16
6/26/2022 11:45	14.45	4.47	6/26/2022 11:13	14.22	3.28	4.16
6/26/2022 11:55	14.46	4.47	6/26/2022 11:23	14.22	3.28	4.16
6/26/2022 12:05	14.46	4.48	6/26/2022 11:33	14.22	3.28	4.16
6/26/2022 12:15	14.46	4.47	6/26/2022 11:43	14.22	3.28	4.16
6/26/2022 12:25	14.46	4.47	6/26/2022 11:53	14.22	3.28	4.16
6/26/2022 12:35	14.46	4.47	6/26/2022 12:03	14.22	3.28	4.16
6/26/2022 12:45	14.47	4.48	6/26/2022 12:13	14.22	3.28	4.16
6/26/2022 12:55	14.47	4.48	6/26/2022 12:23	14.23	3.28	4.16
6/26/2022 13:05	14.47	4.48	6/26/2022 12:33	14.22	3.28	4.16
6/26/2022 13:15	14.47	4.48	6/26/2022 12:43	14.23	3.28	4.16
6/26/2022 13:25	14.48	4.48	6/26/2022 12:53	14.23	3.28	4.16
6/26/2022 13:35	14.48	4.49	6/26/2022 13:03	14.23	3.28	4.16
6/26/2022 13:45	14.48	4.48	6/26/2022 13:13	14.23	3.28	4.16
6/26/2022 13:55	14.48	4.49	6/26/2022 13:23	14.23	3.28	4.16
6/26/2022 14:05	14.48	4.48	6/26/2022 13:33	14.23	3.28	4.16
6/26/2022 14:15	14.48	4.48	6/26/2022 13:43	14.24	3.28	4.16
6/26/2022 14:25	14.48	4.48	6/26/2022 13:53	14.24	3.29	4.17
6/26/2022 14:35	14.48	4.49	6/26/2022 14:03	14.24	3.28	4.16
6/26/2022 14:45	14.49	4.49	6/26/2022 14:13	14.24	3.28	4.16
6/26/2022 14:55	14.49	4.48	6/26/2022 14:23	14.24	3.28	4.16
6/26/2022 15:05	14.49	4.49	6/26/2022 14:33	14.24	3.29	4.17
6/26/2022 15:15	14.50	4.49	6/26/2022 14:43	14.24	3.29	4.17
6/26/2022 15:25	14.49	4.50	6/26/2022 14:53	14.24	3.28	4.16
6/26/2022 15:35	14.50	4.50	6/26/2022 15:03	14.25	3.28	4.16
6/26/2022 15:45	14.50	4.49	6/26/2022 15:13	14.25	3.29	4.17
6/26/2022 15:55	14.50	4.49	6/26/2022 15:23	14.25	3.29	4.17
6/26/2022 16:05	14.50	4.50	6/26/2022 15:33	14.25	3.28	4.16
6/26/2022 16:15	14.50	4.50	6/26/2022 15:43	14.25	3.29	4.17
6/26/2022 16:25	14.50	4.49	6/26/2022 15:53	14.26	3.29	4.17
6/26/2022 16:35	14.50	4.50	6/26/2022 16:03	14.25	3.29	4.17
6/26/2022 16:45	14.50	4.50	6/26/2022 16:13	14.25	3.29	4.17
6/26/2022 16:55	14.50	4.50	6/26/2022 16:23	14.26	3.29	4.17
6/26/2022 17:05	14.51	4.50	6/26/2022 16:33	14.26	3.29	4.17
6/26/2022 17:15	14.51	4.50	6/26/2022 16:43	14.26	3.29	4.17
6/26/2022 17:25	14.51	4.50	6/26/2022 16:53	14.26	3.29	4.17
6/26/2022 17:35	14.51	4.50	6/26/2022 17:03	14.26	3.29	4.17
6/26/2022 17:45	14.51	4.50	6/26/2022 17:13	14.26	3.29	4.17
6/26/2022 17:55	14.51	4.50	6/26/2022 17:23	14.27	3.29	4.17
6/26/2022 18:05	14.51	4.50	6/26/2022 17:33	14.27	3.29	4.17
6/26/2022 18:15	14.51	4.50	6/26/2022 17:43	14.27	3.29	4.17
6/26/2022 18:25	14.52	4.50	6/26/2022 17:53	14.27	3.29	4.17
6/26/2022 18:35	14.52	4.50	6/26/2022 18:03	14.27	3.29	4.17
6/26/2022 18:45	14.52	4.51	6/26/2022 18:13	14.27	3.29	4.17
6/26/2022 18:55	14.52	4.51	6/26/2022 18:23	14.27	3.29	4.17
6/26/2022 19:05	14.53	4.51	6/26/2022 18:33	14.27	3.29	4.17
6/26/2022 19:15	14.53	4.51	6/26/2022 18:43	14.28	3.29	4.17
6/26/2022 19:25	14.53	4.52	6/26/2022 18:53	14.28	3.29	4.17
6/26/2022 19:35	14.53	4.51	6/26/2022 19:03	14.28	3.29	4.17
6/26/2022 19:45	14.53	4.51	6/26/2022 19:13	14.28	3.29	4.17
6/26/2022 19:55	14.53	4.52	6/26/2022 19:23	14.28	3.29	4.17
6/26/2022 20:05	14.53	4.51	6/26/2022 19:33	14.28	3.29	4.17
6/26/2022 20:15	14.54	4.51	6/26/2022 19:43	14.29	3.29	4.17
6/26/2022 20:25	14.53	4.51	6/26/2022 19:53	14.28	3.29	4.17
6/26/2022 20:35	14.54	4.53	6/26/2022 20:03	14.29	3.30	4.18
6/26/2022 20:45	14.54	4.53	6/26/2022 20:13	14.29	3.29	4.17
6/26/2022 20:55	14.54	4.53	6/26/2022 20:23	14.29	3.30	4.18
6/26/2022 21:05	14.54	4.52	6/26/2022 20:33	14.29	3.29	4.17
6/26/2022 21:15	14.55	4.54	6/26/2022 20:43	14.29	3.30	4.18
6/26/2022 21:25	14.55	4.52	6/26/2022 20:53	14.29	3.30	4.18
6/26/2022 21:35	14.55	4.53	6/26/2022 21:03	14.30	3.29	4.17
6/26/2022 21:45	14.55	4.52	6/26/2022 21:13	14.30	3.30	4.18
6/26/2022 21:55	14.55	4.53	6/26/2022 21:23	14.30	3.30	4.18
6/26/2022 22:05	14.55	4.53	6/26/2022 21:33	14.30	3.30	4.18
6/26/2022 22:15	14.55	4.52	6/26/2022 21:43	14.30	3.30	4.18
6/26/2022 22:25	14.55	4.53	6/26/2022 21:53	14.30	3.30	4.18
6/26/2022 22:35	14.56	4.52	6/26/2022 22:03	14.30	3.30	4.18
6/26/2022 22:45	14.56	4.54	6/26/2022 22:13	14.30	3.30	4.18
6/26/2022 22:55	14.56	4.53	6/26/2022 22:23	14.31	3.30	4.18
6/26/2022 23:05	14.56	4.52	6/26/2022 22:33	14.31	3.30	4.18
6/26/2022 23:15	14.56	4.53	6/26/2022 22:43	14.31	3.30	4.18
6/26/2022 23:25	14.57	4.53	6/26/2022 22:53	14.31	3.30	4.18

6/26/2022 23:35	14.57	4.53	6/26/2022 23:03	14.31	3.30	4.18
6/26/2022 23:45	14.57	4.54	6/26/2022 23:13	14.31	3.30	4.18
6/26/2022 23:55	14.57	4.53	6/26/2022 23:23	14.31	3.30	4.18
6/27/2022 0:05	14.57	4.54	6/26/2022 23:33	14.32	3.30	4.18
6/27/2022 0:15	14.57	4.53	6/26/2022 23:43	14.32	3.30	4.18
6/27/2022 0:25	14.58	4.53	6/26/2022 23:53	14.32	3.30	4.18
6/27/2022 0:35	14.58	4.53	6/27/2022 0:03	14.32	3.30	4.18
6/27/2022 0:45	14.59	4.54	6/27/2022 0:13	14.33	3.30	4.18
6/27/2022 0:55	14.58	4.54	6/27/2022 0:23	14.33	3.30	4.18
6/27/2022 1:05	14.58	4.53	6/27/2022 0:33	14.33	3.30	4.18
6/27/2022 1:15	14.59	4.54	6/27/2022 0:43	14.33	3.30	4.18
6/27/2022 1:25	14.59	4.54	6/27/2022 0:53	14.33	3.30	4.18
6/27/2022 1:35	14.59	4.54	6/27/2022 1:03	14.33	3.30	4.18
6/27/2022 1:45	14.60	4.54	6/27/2022 1:13	14.33	3.30	4.18
6/27/2022 1:55	14.59	4.54	6/27/2022 1:23	14.33	3.31	4.19
6/27/2022 2:05	14.59	4.54	6/27/2022 1:33	14.34	3.31	4.19
6/27/2022 2:15	14.60	4.54	6/27/2022 1:43	14.34	3.31	4.19
6/27/2022 2:25	14.60	4.54	6/27/2022 1:53	14.34	3.30	4.18
6/27/2022 2:35	14.60	4.54	6/27/2022 2:03	14.34	3.30	4.18
6/27/2022 2:45	14.61	4.54	6/27/2022 2:13	14.34	3.31	4.19
6/27/2022 2:55	14.61	4.54	6/27/2022 2:23	14.34	3.31	4.19
6/27/2022 3:05	14.61	4.55	6/27/2022 2:33	14.35	3.31	4.19
6/27/2022 3:15	14.61	4.54	6/27/2022 2:43	14.35	3.31	4.19
6/27/2022 3:25	14.61	4.54	6/27/2022 2:53	14.35	3.31	4.19
6/27/2022 3:35	14.61	4.54	6/27/2022 3:03	14.35	3.31	4.19
6/27/2022 3:45	14.62	4.54	6/27/2022 3:13	14.35	3.31	4.19
6/27/2022 3:55	14.62	4.55	6/27/2022 3:23	14.35	3.31	4.19
6/27/2022 4:05	14.62	4.54	6/27/2022 3:33	14.36	3.31	4.19
6/27/2022 4:15	14.63	4.54	6/27/2022 3:43	14.36	3.31	4.19
6/27/2022 4:25	14.63	4.56	6/27/2022 3:53	14.36	3.31	4.19
6/27/2022 4:35	14.63	4.54	6/27/2022 4:03	14.36	3.31	4.19
6/27/2022 4:45	14.63	4.55	6/27/2022 4:13	14.36	3.31	4.19
6/27/2022 4:55	14.63	4.55	6/27/2022 4:23	14.36	3.31	4.19
6/27/2022 5:05	14.64	4.54	6/27/2022 4:33	14.37	3.31	4.19
6/27/2022 5:15	14.64	4.55	6/27/2022 4:43	14.37	3.31	4.19
6/27/2022 5:25	14.64	4.55	6/27/2022 4:53	14.37	3.32	4.20
6/27/2022 5:35	14.64	4.54	6/27/2022 5:03	14.37	3.31	4.19
6/27/2022 5:45	14.65	4.55	6/27/2022 5:13	14.37	3.31	4.19
6/27/2022 5:55	14.65	4.54	6/27/2022 5:23	14.37	3.31	4.19
6/27/2022 6:05	14.65	4.56	6/27/2022 5:33	14.38	3.31	4.19
6/27/2022 6:15	14.65	4.55	6/27/2022 5:43	14.38	3.31	4.19
6/27/2022 6:25	14.65	4.54	6/27/2022 5:53	14.38	3.32	4.20
6/27/2022 6:35	14.65	4.55	6/27/2022 6:03	14.38	3.31	4.19
6/27/2022 6:45	14.65	4.55	6/27/2022 6:13	14.38	3.32	4.20
6/27/2022 6:55	14.66	4.55	6/27/2022 6:23	14.38	3.31	4.19
6/27/2022 7:05	14.66	4.55	6/27/2022 6:33	14.39	3.32	4.20
6/27/2022 7:15	14.66	4.55	6/27/2022 6:43	14.39	3.32	4.20
6/27/2022 7:25	14.67	4.57	6/27/2022 6:53	14.39	3.32	4.20
6/27/2022 7:35	14.67	4.55	6/27/2022 7:03	14.39	3.32	4.20
6/27/2022 7:45	14.67	4.55	6/27/2022 7:13	14.39	3.31	4.19
6/27/2022 7:55	14.67	4.55	6/27/2022 7:23	14.40	3.32	4.20
6/27/2022 8:05	14.67	4.55	6/27/2022 7:33	14.40	3.32	4.20
6/27/2022 8:15	14.68	4.55	6/27/2022 7:43	14.40	3.32	4.20
6/27/2022 8:25	14.68	4.57	6/27/2022 7:53	14.40	3.32	4.20
6/27/2022 8:35	14.68	4.55	6/27/2022 8:03	14.40	3.31	4.19
6/27/2022 8:45	14.68	4.55	6/27/2022 8:13	14.40	3.32	4.20
6/27/2022 8:55	14.68	4.56	6/27/2022 8:23	14.40	3.32	4.20
6/27/2022 9:05	14.68	4.55	6/27/2022 8:33	14.41	3.32	4.20
6/27/2022 9:15	14.69	4.55	6/27/2022 8:43	14.41	3.32	4.20
6/27/2022 9:25	14.68	4.55	6/27/2022 8:53	14.41	3.32	4.20
6/27/2022 9:35	14.69	4.55	6/27/2022 9:03	14.41	3.32	4.20
6/27/2022 9:45	14.70	4.55	6/27/2022 9:13	14.41	3.32	4.20
6/27/2022 9:55	14.70	4.57	6/27/2022 9:23	14.41	3.32	4.20
6/27/2022 10:05	14.70	4.55	6/27/2022 9:33	14.42	3.32	4.20
6/27/2022 10:15	14.70	4.55	6/27/2022 9:43	14.42	3.32	4.20
6/27/2022 10:25	14.70	4.55	6/27/2022 9:53	14.42	3.32	4.20
6/27/2022 10:35	14.70	4.55	6/27/2022 10:03	14.42	3.32	4.20
6/27/2022 10:45	14.70	4.55	6/27/2022 10:13	14.42	3.32	4.20
6/27/2022 10:55	14.71	4.54	6/27/2022 10:23	14.42	3.32	4.20
6/27/2022 11:05	14.71	4.55	6/27/2022 10:33	14.43	3.32	4.20
6/27/2022 11:15	14.71	4.54	6/27/2022 10:43	14.43	3.32	4.20
6/27/2022 11:25	14.72	4.55	6/27/2022 10:53	14.43	3.32	4.20
6/27/2022 11:35	14.71	4.54	6/27/2022 11:03	14.43	3.32	4.20
6/27/2022 11:45	14.72	4.55	6/27/2022 11:13	14.43	3.32	4.20
6/27/2022 11:55	14.72	4.54	6/27/2022 11:23	14.43	3.32	4.20
6/27/2022 12:05	14.72	4.54	6/27/2022 11:33	14.44	3.32	4.20
6/27/2022 12:15	14.72	4.54	6/27/2022 11:43	14.44	3.32	4.20
6/27/2022 12:25	14.72	4.54	6/27/2022 11:53	14.44	3.32	4.20
6/27/2022 12:35	14.72	4.54	6/27/2022 12:03	14.44	3.32	4.20
6/27/2022 12:45	14.72	4.54	6/27/2022 12:13	14.44	3.32	4.20
6/27/2022 12:55	14.72	4.54	6/27/2022 12:23	14.44	3.32	4.20
6/27/2022 13:05	14.74	4.55	6/27/2022 12:33	14.45	3.33	4.21
6/27/2022 13:15	14.73	4.54	6/27/2022 12:43	14.45	3.32	4.20
6/27/2022 13:25	14.73	4.54	6/27/2022 12:53	14.45	3.33	4.21
6/27/2022 13:35	14.73	4.54	6/27/2022 13:03	14.45	3.33	4.21
6/27/2022 13:45	14.74	4.54	6/27/2022 13:13	14.45	3.32	4.20
6/27/2022 13:55	14.74	4.54	6/27/2022 13:23	14.46	3.33	4.21
6/27/2022 14:05	14.75	4.54	6/27/2022 13:33	14.46	3.33	4.21

6/27/2022 14:15	14.74	4.53	6/27/2022 13:43	14.46	3.33	4.21
6/27/2022 14:25	14.74	4.53	6/27/2022 13:53	14.46	3.33	4.21
6/27/2022 14:35	14.75	4.53	6/27/2022 14:03	14.46	3.33	4.21
6/27/2022 14:45	14.75	4.53	6/27/2022 14:13	14.46	3.33	4.21
6/27/2022 14:55	14.75	4.54	6/27/2022 14:23	14.46	3.33	4.21
6/27/2022 15:05	14.75	4.53	6/27/2022 14:33	14.47	3.33	4.21
6/27/2022 15:15	14.75	4.54	6/27/2022 14:43	14.47	3.33	4.21
6/27/2022 15:25	14.75	4.53	6/27/2022 14:53	14.47	3.33	4.21
6/27/2022 15:35	14.75	4.52	6/27/2022 15:03	14.47	3.33	4.21
6/27/2022 15:45	14.76	4.52	6/27/2022 15:13	14.47	3.33	4.21
6/27/2022 15:55	14.75	4.52	6/27/2022 15:23	14.48	3.33	4.21
6/27/2022 16:05	14.75	4.51	6/27/2022 15:33	14.48	3.33	4.21
6/27/2022 16:15	14.76	4.51	6/27/2022 15:43	14.48	3.33	4.21
6/27/2022 16:25	14.76	4.51	6/27/2022 15:53	14.48	3.33	4.21
6/27/2022 16:35	14.76	4.52	6/27/2022 16:03	14.48	3.33	4.21
6/27/2022 16:45	14.76	4.51	6/27/2022 16:13	14.48	3.33	4.21
6/27/2022 16:55	14.77	4.51	6/27/2022 16:23	14.48	3.33	4.21
6/27/2022 17:05	14.77	4.50	6/27/2022 16:33	14.48	3.33	4.21
6/27/2022 17:15	14.77	4.50	6/27/2022 16:43	14.49	3.33	4.21
6/27/2022 17:25	14.77	4.50	6/27/2022 16:53	14.49	3.33	4.21
6/27/2022 17:35	14.77	4.50	6/27/2022 17:03	14.49	3.33	4.21
6/27/2022 17:45	14.77	4.50	6/27/2022 17:13	14.49	3.33	4.21
6/27/2022 17:55	14.78	4.49	6/27/2022 17:23	14.49	3.33	4.21
6/27/2022 18:05	14.78	4.49	6/27/2022 17:33	14.49	3.33	4.21
6/27/2022 18:15	14.78	4.50	6/27/2022 17:43	14.50	3.33	4.21
6/27/2022 18:25	14.78	4.50	6/27/2022 17:53	14.50	3.33	4.21
6/27/2022 18:35	14.78	4.49	6/27/2022 18:03	14.50	3.33	4.21
6/27/2022 18:45	14.78	4.50	6/27/2022 18:13	14.50	3.33	4.21
6/27/2022 18:55	14.78	4.49	6/27/2022 18:23	14.50	3.33	4.21
6/27/2022 19:05	14.79	4.49	6/27/2022 18:33	14.50	3.33	4.21
6/27/2022 19:15	14.79	4.49	6/27/2022 18:43	14.50	3.33	4.21
6/27/2022 19:25	14.80	4.50	6/27/2022 18:53	14.51	3.33	4.21
6/27/2022 19:35	14.79	4.49	6/27/2022 19:03	14.51	3.33	4.21
6/27/2022 19:45	14.79	4.49	6/27/2022 19:13	14.51	3.33	4.21
6/27/2022 19:55	14.79	4.50	6/27/2022 19:23	14.51	3.33	4.21
6/27/2022 20:05	14.80	4.49	6/27/2022 19:33	14.51	3.33	4.21
6/27/2022 20:15	14.80	4.49	6/27/2022 19:43	14.51	3.34	4.22
6/27/2022 20:25	14.81	4.49	6/27/2022 19:53	14.51	3.33	4.21
6/27/2022 20:35	14.80	4.48	6/27/2022 20:03	14.52	3.33	4.21
6/27/2022 20:45	14.80	4.49	6/27/2022 20:13	14.52	3.34	4.22
6/27/2022 20:55	14.80	4.49	6/27/2022 20:23	14.52	3.34	4.22
6/27/2022 21:05	14.81	4.49	6/27/2022 20:33	14.52	3.34	4.22
6/27/2022 21:15	14.81	4.49	6/27/2022 20:43	14.52	3.33	4.21
6/27/2022 21:25	14.81	4.49	6/27/2022 20:53	14.53	3.34	4.22
6/27/2022 21:35	14.81	4.49	6/27/2022 21:03	14.53	3.34	4.22
6/27/2022 21:45	14.81	4.48	6/27/2022 21:13	14.53	3.34	4.22
6/27/2022 21:55	14.81	4.48	6/27/2022 21:23	14.53	3.34	4.22
6/27/2022 22:05	14.81	4.48	6/27/2022 21:33	14.53	3.34	4.22
6/27/2022 22:15	14.81	4.48	6/27/2022 21:43	14.53	3.34	4.22
6/27/2022 22:25	14.83	4.50	6/27/2022 21:53	14.53	3.34	4.22
6/27/2022 22:35	14.82	4.49	6/27/2022 22:03	14.53	3.34	4.22
6/27/2022 22:45	14.82	4.50	6/27/2022 22:13	14.53	3.34	4.22
6/27/2022 22:55	14.82	4.49	6/27/2022 22:23	14.54	3.34	4.22
6/27/2022 23:05	14.83	4.48	6/27/2022 22:33	14.54	3.34	4.22
6/27/2022 23:15	14.82	4.49	6/27/2022 22:43	14.54	3.34	4.22
6/27/2022 23:25	14.82	4.49	6/27/2022 22:53	14.54	3.34	4.22
6/27/2022 23:35	14.83	4.48	6/27/2022 23:03	14.54	3.34	4.22
6/27/2022 23:45	14.83	4.48	6/27/2022 23:13	14.54	3.34	4.22
6/27/2022 23:55	14.83	4.48	6/27/2022 23:23	14.54	3.34	4.22
6/28/2022 0:05	14.83	4.49	6/27/2022 23:33	14.55	3.34	4.22
6/28/2022 0:15	14.83	4.48	6/27/2022 23:43	14.55	3.34	4.22
6/28/2022 0:25	14.84	4.49	6/27/2022 23:53	14.55	3.34	4.22
6/28/2022 0:35	14.84	4.48	6/28/2022 0:03	14.55	3.34	4.22
6/28/2022 0:45	14.84	4.48	6/28/2022 0:13	14.55	3.34	4.22
6/28/2022 0:55	14.84	4.49	6/28/2022 0:23	14.55	3.34	4.22
6/28/2022 1:05	14.84	4.49	6/28/2022 0:33	14.56	3.34	4.22
6/28/2022 1:15	14.84	4.49	6/28/2022 0:43	14.56	3.34	4.22
6/28/2022 1:25	14.85	4.49	6/28/2022 0:53	14.56	3.34	4.22
6/28/2022 1:35	14.85	4.48	6/28/2022 1:03	14.56	3.34	4.22
6/28/2022 1:45	14.85	4.48	6/28/2022 1:13	14.56	3.34	4.22
6/28/2022 1:55	14.85	4.48	6/28/2022 1:23	14.56	3.34	4.22
6/28/2022 2:05	14.85	4.48	6/28/2022 1:33	14.56	3.34	4.22
6/28/2022 2:15	14.86	4.51	6/28/2022 1:43	14.57	3.34	4.22
6/28/2022 2:25	14.85	4.49	6/28/2022 1:53	14.57	3.34	4.22
6/28/2022 2:35	14.85	4.49	6/28/2022 2:03	14.57	3.34	4.22
6/28/2022 2:45	14.85	4.48	6/28/2022 2:13	14.57	3.34	4.22
6/28/2022 2:55	14.85	4.49	6/28/2022 2:23	14.57	3.34	4.22
6/28/2022 3:05	14.86	4.49	6/28/2022 2:33	14.57	3.34	4.22
6/28/2022 3:15	14.86	4.51	6/28/2022 2:43	14.57	3.34	4.22
6/28/2022 3:25	14.86	4.49	6/28/2022 2:53	14.58	3.35	4.23
6/28/2022 3:35	14.86	4.48	6/28/2022 3:03	14.58	3.34	4.22
6/28/2022 3:45	14.87	4.49	6/28/2022 3:13	14.58	3.34	4.22
6/28/2022 3:55	14.87	4.49	6/28/2022 3:23	14.58	3.34	4.22
6/28/2022 4:05	14.87	4.49	6/28/2022 3:33	14.58	3.35	4.23
6/28/2022 4:15	14.87	4.49	6/28/2022 3:43	14.58	3.35	4.23
6/28/2022 4:25	14.87	4.48	6/28/2022 3:53	14.58	3.35	4.23
6/28/2022 4:35	14.87	4.48	6/28/2022 4:03	14.59	3.35	4.23
6/28/2022 4:45	14.87	4.49	6/28/2022 4:13	14.59	3.34	4.22

6/28/2022 4:55	14.87	4.49	6/28/2022 4:23	14.59	3.35	4.23
6/28/2022 5:05	14.87	4.49	6/28/2022 4:33	14.59	3.35	4.23
6/28/2022 5:15	14.88	4.49	6/28/2022 4:43	14.59	3.35	4.23
6/28/2022 5:25	14.88	4.49	6/28/2022 4:53	14.59	3.35	4.23
6/28/2022 5:35	14.88	4.48	6/28/2022 5:03	14.59	3.35	4.23
6/28/2022 5:45	14.88	4.49	6/28/2022 5:13	14.59	3.35	4.23
6/28/2022 5:55	14.89	4.49	6/28/2022 5:23	14.59	3.35	4.23
6/28/2022 6:05	14.88	4.49	6/28/2022 5:33	14.60	3.35	4.23
6/28/2022 6:15	14.90	4.50	6/28/2022 5:43	14.60	3.35	4.23
6/28/2022 6:25	14.89	4.49	6/28/2022 5:53	14.60	3.35	4.23
6/28/2022 6:35	14.88	4.49	6/28/2022 6:03	14.60	3.35	4.23
6/28/2022 6:45	14.89	4.49	6/28/2022 6:13	14.60	3.35	4.23
6/28/2022 6:55	14.89	4.49	6/28/2022 6:23	14.60	3.35	4.23
6/28/2022 7:05	14.89	4.49	6/28/2022 6:33	14.60	3.35	4.23
6/28/2022 7:15	14.89	4.49	6/28/2022 6:43	14.61	3.35	4.23
6/28/2022 7:25	14.89	4.49	6/28/2022 6:53	14.61	3.35	4.23
6/28/2022 7:35	14.90	4.50	6/28/2022 7:03	14.61	3.35	4.23
6/28/2022 7:45	14.89	4.49	6/28/2022 7:13	14.61	3.35	4.23
6/28/2022 7:55	14.89	4.49	6/28/2022 7:23	14.61	3.35	4.23
6/28/2022 8:05	14.90	4.49	6/28/2022 7:33	14.61	3.35	4.23
6/28/2022 8:15	14.90	4.51	6/28/2022 7:43	14.61	3.35	4.23
6/28/2022 8:25	14.91	4.49	6/28/2022 7:53	14.61	3.35	4.23
6/28/2022 8:35	14.90	4.49	6/28/2022 8:03	14.62	3.35	4.23
6/28/2022 8:45	14.90	4.50	6/28/2022 8:13	14.62	3.35	4.23
6/28/2022 8:55	14.91	4.50	6/28/2022 8:23	14.62	3.35	4.23
6/28/2022 9:05	14.90	4.49	6/28/2022 8:33	14.62	3.35	4.23
6/28/2022 9:15	14.90	4.52	6/28/2022 8:43	14.62	3.35	4.23
6/28/2022 9:25	14.91	4.49	6/28/2022 8:53	14.62	3.35	4.23
6/28/2022 9:35	14.91	4.50	6/28/2022 9:03	14.62	3.36	4.24
			6/28/2022 9:13	14.63	3.35	4.23
			6/28/2022 9:23	14.63	3.35	4.23
			6/28/2022 9:33	14.63	3.36	4.24
			6/28/2022 9:38	14.63	3.37	4.25

SUMMIT CLUB AT ARMONK
SEWAGE TREATMENT PLANT

PREPARED FOR

SUMMIT CLUB PARTNERS, LLC

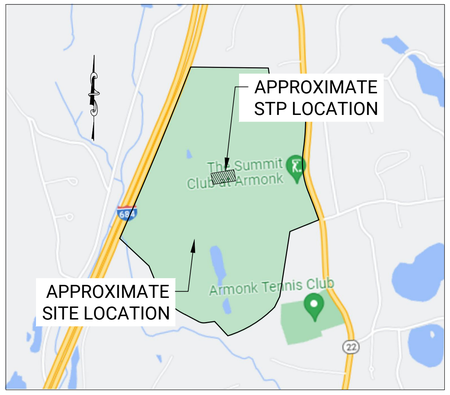

KEY MAP
SCALE: 1"=1000'

SITUATED IN

ARMONK

TOWN OF NORTH CASTLE

WESTCHESTER COUNTY, NEW YORK

SHEET LIST

SHEET No.	TITLE
–	COVER
STP-1	OVERALL SITE PLAN
STP-2	STP SITE PLAN
STP-3	PROCESS FLOW DIAGRAM & HYDRAULIC PROFILE
STP-4	EQUALIZATION TANK DETAILS
STP-5	CONSTANT HEAD BOX, FLOW METER PIT, SCREEN, & ODOR CONTROL DETAILS
STP-6	BESST DETAILS
STP-7	TERTIARY FILTER AND UV DISINFECTION DETAILS
STP-8	CONTROL BUILDING PLAN & BLOWER DETAILS
STP-9	SANITARY DETAILS
STP-10	MISCELLANEOUS DETAILS

R&M GENERAL NOTES

1. R&M ENGINEERING SHALL NOT BE RESPONSIBLE FOR CONSTRUCTION MEANS, METHODS, TECHNIQUES, OR PROCEDURES UTILIZED BY THE CONTRACTOR, NOR FOR THE SAFETY OF PUBLIC OR CONTRACTOR'S EMPLOYEES; OR FOR THE FAILURE OF THE CONTRACTOR TO CARRY OUT THE WORK IN ACCORDANCE WITH THE CONTRACT DOCUMENTS.
2. ALL EXISTING STRUCTURES SPECIFIED TO BE REMOVED, SHALL BE REMOVED AND BACKFILLED. BACKFILL TO BE SELECT GRANULAR FILL, COMPACTED TO 95% MAXIMUM DENSITY AT OPTIMUM MOISTURE CONTENT, AS DETERMINED BY MODIFIED PROCTOR TEST.
3. ALL FILL SHALL BE SELECT GRANULAR MATERIAL COMPACTED TO 95% OF THE MAXIMUM DENSITY AT THE OPTIMUM MOISTURE CONTENT, AS DETERMINED BY THE MODIFIED PROCTOR TEST.
4. LOCATION OF EXISTING UTILITIES SHALL BE VERIFIED BY CONTRACTOR PRIOR TO EXCAVATION.
5. ALL SITE WORK SHALL BE IN ACCORDANCE WITH THE REQUIREMENTS OF THE TOWN, COUNTY, STATE OR AS SPECIFIED HEREIN, LATEST EDITIONS.
6. CONTRACTOR SHALL BE RESPONSIBLE FOR OBTAINING ALL PERMITS NECESSARY FOR THE INSTALLATION OF THE SEWAGE TREATMENT PLANT. CONTRACTOR SHALL BE RESPONSIBLE FOR MEETING ALL REQUIREMENTS FOR THE PRECONSTRUCTION OF THE SEWAGE TREATMENT PLANT FROM ALL AGENCIES. CONTRACTOR SHALL COORDINATE THE REQUIRED INSPECTIONS DIRECTLY WITH ALL REGULATORY AGENCIES AS REQUIRED.
7. CONTRACTOR SHALL BE RESPONSIBLE FOR OBTAINING ANY AND ALL PERMITS NECESSARY TO REMOVE ANY EXCAVATED MATERIALS.
8. UNSUITABLE MATERIAL, AS DEFINED IN SECTION 203 OF THE N.Y.S.D.O.T. STANDARD SPECIFICATIONS SHALL BE REMOVED AND REPLACED WITH SELECT GRANULAR MATERIAL.
9. SELECT GRANULAR MATERIAL SHALL BE AS DEFINED IN SECTION 203 OF THE N.Y.S.D.O.T. STANDARD SPECIFICATIONS.
10. COMPACTION SHALL CONFORM TO N.Y.S.D.O.T. SECTION 203.
11. DEBRIS SHALL NOT BE BURIED ON THE SUBJECT SITE. ALL UNSUITABLE MATERIAL AND DEBRIS SHALL BE DISPOSED OF IN ACCORDANCE WITH ALL TOWN, COUNTY, STATE AND FEDERAL LAWS AND APPLICABLE CODES.
12. ALL STRUCTURES SHALL BE REINFORCED PRECAST CONCRETE, UNLESS OTHERWISE NOTED, WITH PRECAST OPENINGS FOR ALL PIPES. THE STRUCTURES SHALL CONFORM TO THE COUNTY STANDARD DETAILS AND SPECIFICATIONS.
13. CONSTRUCTION OF THE SEWAGE TREATMENT PLANT SHALL CONFORM TO WESTCHESTER DEPARTMENT OF PUBLIC WORKS (WCDPW) AND WESTCHESTER COUNTY DEPARTMENT OF HEALTH (WCDH) STANDARDS AND SPECIFICATIONS.
14. THE CONTRACTOR SHALL FURNISH AND INSTALL TEMPORARY SHEETING, SHORING AND BRACING OF EXCAVATIONS AS REQUIRED TO COMPLETE THE CONTRACT WORK.
15. CONTRACTOR SHALL SUBMIT SHOP DRAWINGS FOR ALL RELATED ITEMS PERTAINING TO THE SEWAGE TREATMENT PLANT FOR REVIEW AND APPROVAL. THE SHOP DRAWINGS WILL BE REVIEWED AND APPROVED BY R&M ENGINEERING AND WCDH PRIOR TO ORDERING MATERIALS.
16. ALL INVERTS, LOCATIONS AND ELEVATIONS CERTIFIED BY DESIGN ENGINEER.
17. A CLEANOUT SHALL BE INSTALLED AT THE FACE OF ALL BUILDINGS.

PROJECT NOTES

1. THE CONTRACTORS SHALL VERIFY ALL FIELD CONDITIONS AND DIMENSIONS PRIOR TO PROVIDING BID PROPOSAL. THE CONTRACTORS WILL BE RESPONSIBLE FOR FIELD FIT AND QUALITY OF WORK SATISFACTORY TO THE REGULATORY AGENCY AND THE ENGINEER. NO ALLOWANCE WILL BE MADE ON BEHALF OF ANY ERROR OR NEGLECT ON THE PART OF THE CONTRACTORS.
2. CONTRACTORS SHALL VISIT THE SITE, REVIEW ALL CONSTRUCTION DOCUMENTS PRIOR TO SUBMITTING THE BID. CONTRACTORS SHALL INFORM THE ENGINEER OF ANY OMISSIONS AND/OR DEFICIENCIES.
3. CONTRACTORS SHALL BE RESPONSIBLE FOR ANY AND ALL MARK OUTS FOR ALL UNDERGROUND UTILITIES AND SERVICES IN THE AREA AND RELOCATE THEM AS REQUIRED THROUGHOUT THE PROJECT PER RELEVANT CODE. THE ENGINEER SHALL BE NOTIFIED OF ANY CONFLICTS BETWEEN EXISTING UTILITIES AND THE PROPOSED WORK, PRIOR TO THE START OF CONSTRUCTION. ALL OTHER WORK PERFORMED SHALL BE AS SPECIFIED HEREIN AND IN ACCORDANCE WITH THE TOWN OF NORTH CASTLE, WESTCHESTER COUNTY STANDARDS.
4. INSTALLATION OF THE ELECTRIC SERVICE IS THE RESPONSIBILITY OF THE CONTRACTORS, ALL WORK SHALL CONFORM, AT A MINIMUM TO THE REQUIREMENTS OF PUBLIC SERVICE ELECTRIC AND GAS AND REGULATORY AGENCIES HAVING JURISDICTION.
5. INSTALLATION OF THE GAS SERVICE IS THE RESPONSIBILITY OF THE CONTRACTORS, ALL WORK SHALL CONFORM, AT A MINIMUM, TO THE REQUIREMENTS OF CON EDISON AND REGULATORY AGENCIES HAVING JURISDICTION.
6. INSTALLATION OF THE TELEPHONE SERVICE IS THE RESPONSIBILITY OF THE CONTRACTORS, ALL WORK SHALL CONFORM, AT A MINIMUM, TO THE REQUIREMENTS OF VERIZON AND REGULATORY AGENCIES HAVING JURISDICTION.
7. THE CONTRACTORS SHALL BE RESPONSIBLE FOR OBTAINING ALL PERMITS NECESSARY FOR THE INSTALLATION OF ALL UTILITIES, THE CONTRACTORS SHALL BE RESPONSIBLE FOR MEETING ALL REQUIREMENTS FOR PRE-CONSTRCUTION OF ANY SANITARY SYSTEM FROM ALL GOVERNING AGENCIES. ALL WORK SHALL CONFORM TO THE REQUIREMENTS OF ALL THE UTILITIES OR MUNICIPAL AGENCIES HAVING JURISDICTION. THE CONTRACTORS SHALL COORDINATE THE REQUIRED UTILITY AND MUNICIPAL INSPECTORS.
8. CONTRACTORS WILL BE RESPONSIBLE FOR COMPLIANCE WITH FEDERAL, STATE, COUNTY AND LOCAL SAFETY CODES.
9. CONTRACTORS WILL BE RESPONSIBLE FOR RESTORATION OF ANY AND ALL DAMAGE TO ANY STRUCTURES, GRADE, ASPHALT, PAVEMENT, ETC. AS REQUIRED BY AGENCIES HAVING JURISDICTION, AT NO ADDITIONAL COST TO THE OWNER.
10. CONTRACTORS SHALL BE RESPONSIBLE FOR THE TRAFFIC MAINTENANCE THROUGHOUT THE PROJECT.
11. CONTRACTORS SHALL EMPLOY ALL SAFETY MEASURES INCLUDING SHEETING AND SHORING TO PROTECT THE STRUCTURES AND PERSONS.
12. CONTRACTORS SHOULD COORDINATE THE WORK WITH ALL AUTHORITIES HAVING JURISDICTION.
13. CONTRACTORS SHALL NOT BACKFILL ANY WORK PRIOR TO THE INSPECTIONS BY THE ENGINEER AND WCDH. BACKFILLING SHOULD BE ACCORDING TO WCDH STANDARDS AND WITH THE SATISFACTION OF THE ENGINEER AND WCDPW.
14. ALL MATERIAL, WORKMANSHIP, INSTALLATIONS PROCEDURES AND MAINTENANCE OF TRAFFIC SHALL BE PERFORMED BY THE CONTRACTORS IN ACCORDANCE WITH WCDH STANDARDS.
15. THE CONTRACTOR IS REMINDED THAT ALL CONSTRUCTION PRACTICES MUST FOLLOW OSHA REQUIREMENTS AND ANY OTHER APPLICABLE LAWS. CONSEQUENTLY, ALL BELOW GRADE, ABOVE GRADE, CONFINED SPACE AND SIMILAR ASPECTS OF THE WORK SHOULD BE CARRIED OUT IN COMPLIANCE WITH ALL APPLICABLE REGULATIONS.
16. ALL EXISTING STRUCTURES WHICH ARE TO BE REMOVED SHALL BE BACKFILLED WITH SELECT GRANULAR FILL WHICH HAS BEEN COMPACTED TO A 95% MAXIMUM DENSITY AT THE OPTIMUM MOISTURE CONTENT AS DETERMINED BY A MODIFIED PROCTOR TEST.
17. DEBRIS SHALL NOT BE BURIED ON THE SUBJECT SITE. ALL UNSUITABLE MATERIAL AND DEBRIS SHALL BE DISPOSED OF IN ACCORDANCE WITH ALL LOCAL TOWN, COUNTY, STATE AND FEDERAL LAW AND APPLICABLE CODES.
18. THE OWNER SHALL ENGAGE AND PAY FOR A NEW YORK STATE LICENSED SURVEYOR (NYSLS) TO STAKE OUT AND SURVEY THE SEWAGE TREATMENT PLANT AND DISPOSAL SYSTEM FOR INSTALLATION AND PREPARATION OF AS-BUILT DRAWINGS.
19. THE CONTRACTORS SHALL SCHEDULE CONSTRUCTION ACTIVITIES WITH THE OWNER'S NYSLS FOR THE INSTALLATION OF THE SEWAGE TREATMENT PLANT DISPOSAL SYSTEM, INCLUDING THE STP BUILDING, EFFLUENT OUTFALL PIPING AND STRUCTURES, FORCE MAINS, CLEAN OUTS, AIR RELIEF VALVES, DRAIN VALVES, MANHOLES, ETC.
20. THE NYSLS SHALL SUBMIT THREE (3) SIGNED AND SEALED COPIES OF THE AS BUILT PLANS TO THE ENGINEER, AS WELL AS A DIGITAL COPY OF THE DRAWINGS IN AUTOCAD FORMAT. AS-BUILT PLANS SHALL INDICATE THE FOLLOWING:
    - 20.1. LOCATIONS AND PIPE INVERT ELEVATIONS OF EFFLUENT PIPING & STRUCTURES.
    - 20.2. GRADES AND PIPING FEATURES INCLUDING DIAMETER, DEPTH, INCOMING SEWER INVERT, FORCE MAIN INVERT, ETC.
    - 20.3. ALIGNMENT, INVERT ELEVATIONS, DIAMETERS, CLASS AND TYPE OF PIPE, LENGTHS OF FORCE MAIN, LOCATIONS OF VALVES, CLEANOUTS, SIZES.
    - 20.4. LOCATIONS OF ALL UTILITIES, DRAINAGE STRUCTURES AND PIPING, AND CROSSINGS WITH OTHER UTILITIES, DRAINAGE, ETC.
    - 20.5. STP STRUCTURES AND ELEVATION, PIPE INVERTS AND LOCATIONS, TOP OF TANK SLAB LOCATION AND CORNER ELEVATIONS, ETC.
21. SIZES AND SCALES OF AS-BUILT PLANS AND PROFILES TO BE SAME AS APPROVED ENGINEERING DRAWINGS.
22. NYSLS SHALL MAKE CORRECTIONS/AMENDMENTS TO THE AS-BUILT DRAWINGS AS REQUIRED TO MEET THE APPROVAL OF THE REGULATORY AGENCIES.
23. CONTRACTOR SHALL CORRECT DEFICIENT WORK.
24. UPON RECEIPT OF REGULATORY AGENCY APPROVAL OF THE AS-BUILT PLANS, THE NYSLS SHALL COMPLY WITH THE CURRENT REQUIREMENTS OF THE REGULATORY AGENCIES WITH RESPECT TO THE FINAL DOCUMENTATION OF AS-BUILTS.

WCDH APPROVAL STAMP

No.	REVISION DESCRIPTION	DATE	BY

OWNER:
SUMMIT CLUB PARTNERS, LLC
568 BEDFORD ROAD (NY-22)
ARMONK, NY 10504

APPLICANT:
SUMMIT CLUB PARTNERS, LLC
568 BEDFORD ROAD (NY-22)
ARMONK, NY 10504

COVER

THE SUMMIT CLUB AT ARMONK
SEWAGE TREATMENT PLANT
SITUATED IN
ARMONK
TOWN OF NORTH CASTLE,
WESTCHESTER COUNTY, NEW YORK

WCTM: DISTRICT 003, SECTION 101.02, BLOCK 1, LOT 28.1 & 28.2

STATE OF NEW YORK · MATTHEW P. SCHEINER · 087181 · LICENSED PROFESSIONAL ENGINEER

Matthew P. Scheiner, P.E.
NY State License No. 087181

R&M ENGINEERING
Robinson & Muller Engineers, P.C.
50 Elm Street
Huntington, NY 11743
Office: (631) 271-0576
Fax: (631) 271-0592
www.rmengineering.com

DWN. BY:	SNM	CHK'D. BY:	MPS	SCALE:	AS NOTED	SHEET:
DATE:	SEPT 2022	DATE:	SEPT 2022	JOB No.:	2021-201	

TEST PIT

TP-24

(EL. 565.0±) GROUND SURFACE

FEET	CLASSIFICATION
1	BRN. TOPSOIL
5	BRN. COARSE TO FINE SAND, SOME SILT, LITTLE COARSE TO FINE GRAVEL, WITH OCCASIONAL COBBLES
	POSSIBLE WEATHERED BEDROCK/BOULDER

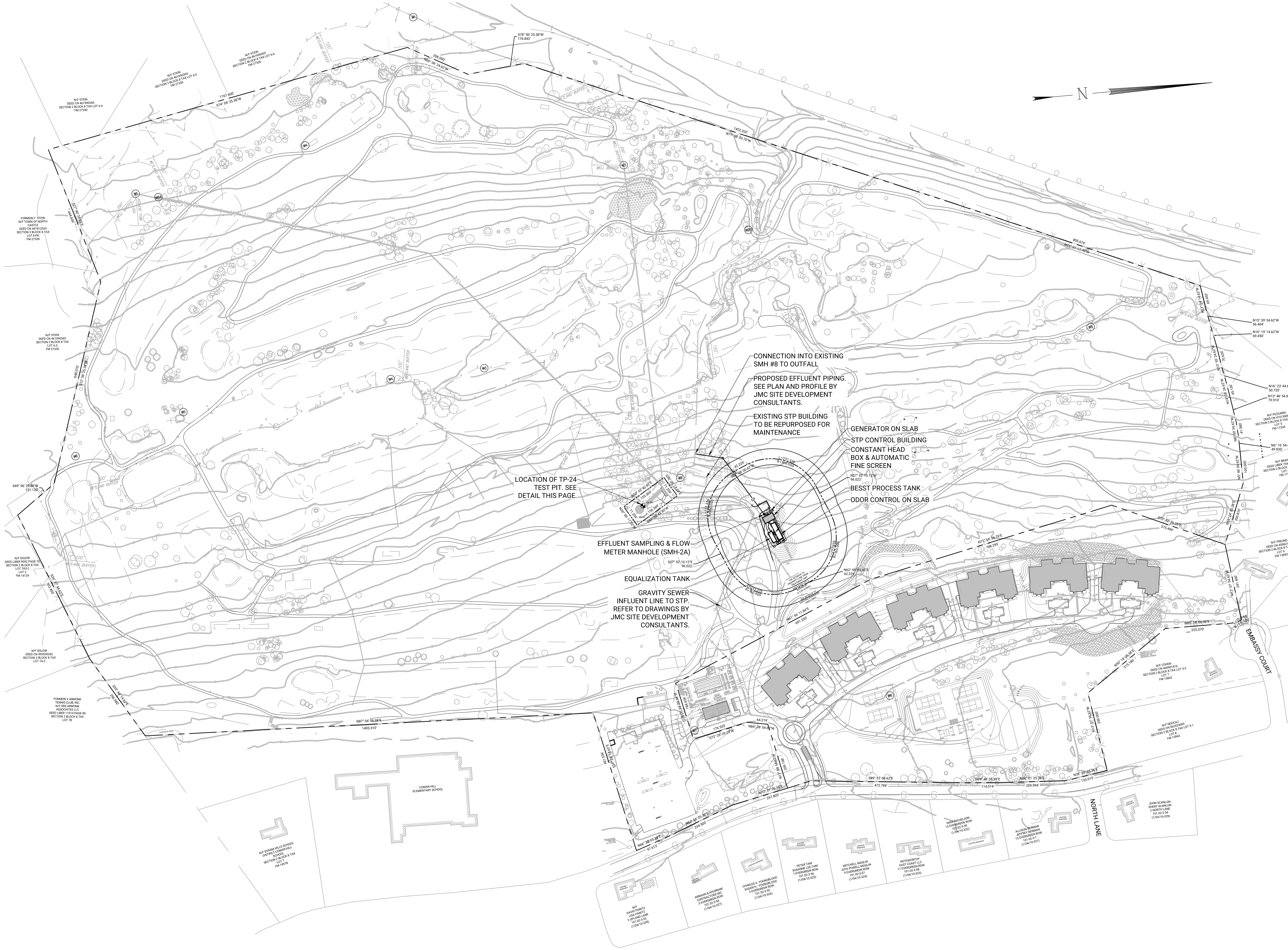

OVERALL SITE PLAN
SCALE: 1" = 150'

NOTE: EXISTING SURVEY, PROPOSED SITE PLAN , OUTFALL LINE EXTENSION, AND SEWER COLLECTION & CONVEYANCE SYSTEM BY JMC PLANNING, ENGINEERING, LANDSCAPE ARCHITECTURE & LAND SURVEYING, PLLC (JMC SITE DEVELOPMENT CONSULTANTS).

WCDH APPROVAL STAMP

No.	REVISION DESCRIPTION	DATE	BY

OWNER:
SUMMIT CLUB PARTNERS, LLC
568 BEDFORD ROAD (NY-22)
ARMONK, NY 10504

APPLICANT:
SUMMIT CLUB PARTNERS, LLC
568 BEDFORD ROAD (NY-22)
ARMONK, NY 10504

OVERALL SITE PLAN

THE SUMMIT CLUB AT ARMONK SEWAGE TREATMENT PLANT

SITUATED IN

ARMONK
TOWN OF NORTH CASTLE,
WESTCHESTER COUNTY, NEW YORK

WCTM: DISTRICT 003, SECTION 101.02, BLOCK 1, LOT 28.1 & 28.2

STATE OF NEW YORK – MATTHEW P. SCHEINER – 087181 – LICENSED PROFESSIONAL ENGINEER

Matthew P. Scheiner, P.E.
NY State License No. 087181

R&M ENGINEERING
Robinson & Muller Engineers, P.C.
50 Elm Street
Huntington, NY 11743
Office: (631) 271-0576
Fax: (631) 271-0592
www.rmengineering.com

DWN. BY: SNM	CHK'D. BY: MPS	SCALE: AS NOTED	SHEET:
DATE: SEPT 2022	DATE: SEPT 2022	JOB No.: 2021-201	STP-1

Drawing Name: P:\2021 Projects\2021-201\R&M\STP Design\2022-09-08 (2021-201) Proposed STP Site Plan (Rev.0).dwg Last Modified: Oct 21, 2022 – 1:50pm Plotted on: Oct 21, 2022 – 1:51pm by smonastero

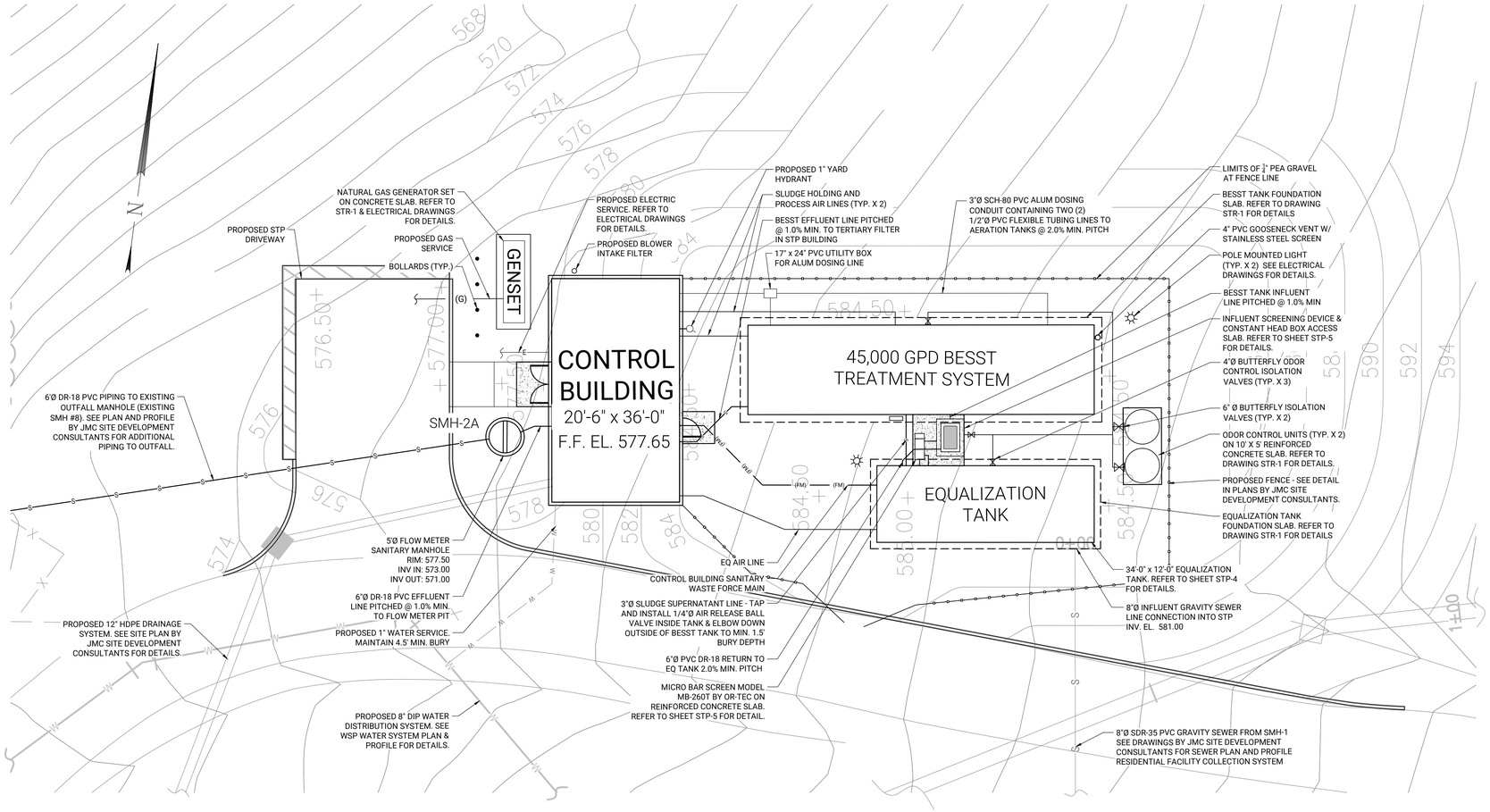

STP SITE PLAN
SCALE: 1" = 10'

NOTE: SITE SURVEY, SITE DESIGN, SEWER COLLECTION & CONVEYANCE SYSTEM, AND STP OUTFALL CONVEYANCE SYSTEM BY JMC SITE DEVELOPMENT CONSULTANTS.

DESIGN SANITARY FLOW:

USE	AREA (s.f.)	EMPLOYEES	SEATS/ STATIONS	GOLFERS	BEDROOMS	SWIMMERS	USAGE RATE (gpd/units)**	USAGE (gpd)
Townhomes	-	-	-	-	162	-	110.0	17,820
Bar/Lounge	-	-	35	-	-	-	16.0	560
Restaurant	-	-	252	-	-	-	28.00	7,056
Golf Tournament	-	-	-	144	-	-	16.0	2,304
Country Club	-	20	-	-	-	-	12.0	240
Golf Course	-	15	-	-	-	-	12.0	180
Seasonal GC Staff	-	-	-	-	12	-	60.00	720
Pool	3,850	-	-	-	-	257	8.00	2,053
Spas	240	-	-	-	-	24	8	192
Excess Pool Deck	8,517	–	–	–	–	170	8	1,363
WWTP	-	-	-	-	-	-	55	55
Proposed Total Flow	-	-	-	-	-	-	-	32,543
Future Townhomes	-	-	-	-	36	-	110	3,960
Future Guest Cottages	-	-	-	-	40	-	110	4,400
Future Total Flow	-	-	-	-	-	-	-	8,360
Total Design Flow	12,607	35	287	144	174	451	-	40,903
SAY	-	-	-	-	-	-	-	45,000

**NOTES:
1. THE PROJECTED FLOW RATES ARE BASED ON THE TYPICAL PER-UNIT HYDRAULIC LOADING RATES FROM TABLE B-3 IN "NEW YORK STATE DESIGN STANDARDS FOR INTERMEDIATE SIZED WASTEWATER TREATMENT SYSTEMS," 2014.
2. HYDRAULIC LOADING RATES ARE DECREASED BY 20 PERCENT IN INSTALLATIONS SERVING PREMISES EQUIPPED WITH WATER-SAVING PLUMBING FIXTURES AS DICTATED BY SECTION B.6.B IN THE NYS DEC DESIGN STANDARDS.

STP PIPING SCHEDULE

PIPE/DESCRIPTION	NOMINAL DIAMETER (INCHES)	PIPE TYPE
ALUM DOSING CONDUIT, STP BUILDING TO BESST TANK	3"	SCH-80 PVC
STP BUILDING SANITARY WASTE LINE	2"	SCH-80 PVC
INFLUENT FORCEMAIN TO SCREEN	3"	SCH-40 316 S.S.
CONSTANT HEAD BOX PIPING	6"	DR-18 PVC
EFFLUENT PIPING	6"	DR-18 PVC
PROCESS AIR	4"	SCH-40 304 S.S.
SHT/EQ AIR	4"	SCH-40 304 S.S.
TERTIARY FILTER AIR	4"	SCH-40 304 S.S.
SLUDGE SUPERNATANT	3"	SCH-80 PVC
ODOR CONTROL PIPING	4", 6" BEFORE TEE @ UNIT	SCH-80 PVC
INCOMING WATER SERVICE	1"	COPPER

WCDH APPROVAL STAMP

No.	REVISION DESCRIPTION	DATE	BY
1.	-	-	-

OWNER:
SUMMIT CLUB PARTNERS, LLC
568 BEDFORD ROAD (NY-22)
ARMONK, NY 10504

APPLICANT:
SUMMIT CLUB PARTNERS, LLC
568 BEDFORD ROAD (NY-22)
ARMONK, NY 10504

STATE OF NEW YORK · MATTHEW P SCHEINER · 087181 · LICENSED PROFESSIONAL ENGINEER

Matthew P. Scheiner, P.E.
NY State License No. 087181

STP SITE PLAN

THE SUMMIT CLUB AT ARMONK
SEWAGE TREATMENT PLANT

SITUATED IN

ARMONK
TOWN OF NORTH CASTLE,
WESTCHESTER COUNTY, NEW YORK

WCTM: DISTRICT 003, SECTION 101.02, BLOCK 1, LOT 28.1 & 28.2

R&M ENGINEERING
Robinson & Muller Engineers, P.C.
50 Elm Street
Huntington, NY 11743
Office: (631) 271-0576
Fax: (631) 271-0592
www.rmengineering.com

DWN. BY:	SNM	CHK'D. BY:	MPS	SCALE:	AS NOTED	SHEET:	STP-3
DATE:	SEPT 2022	DATE:	SEPT 2022	JOB No.:	2021-201		

Drawing Name: P:\2021 Projects\2021-201\R&M\STP Design\2022-09-08 (2021-201) Proposed STP Site Plan (Rev.0).dwg Last Modified: Oct 21, 2022 – 1:50pm Plotted on: Oct 21, 2022 – 1:52pm by smonastero

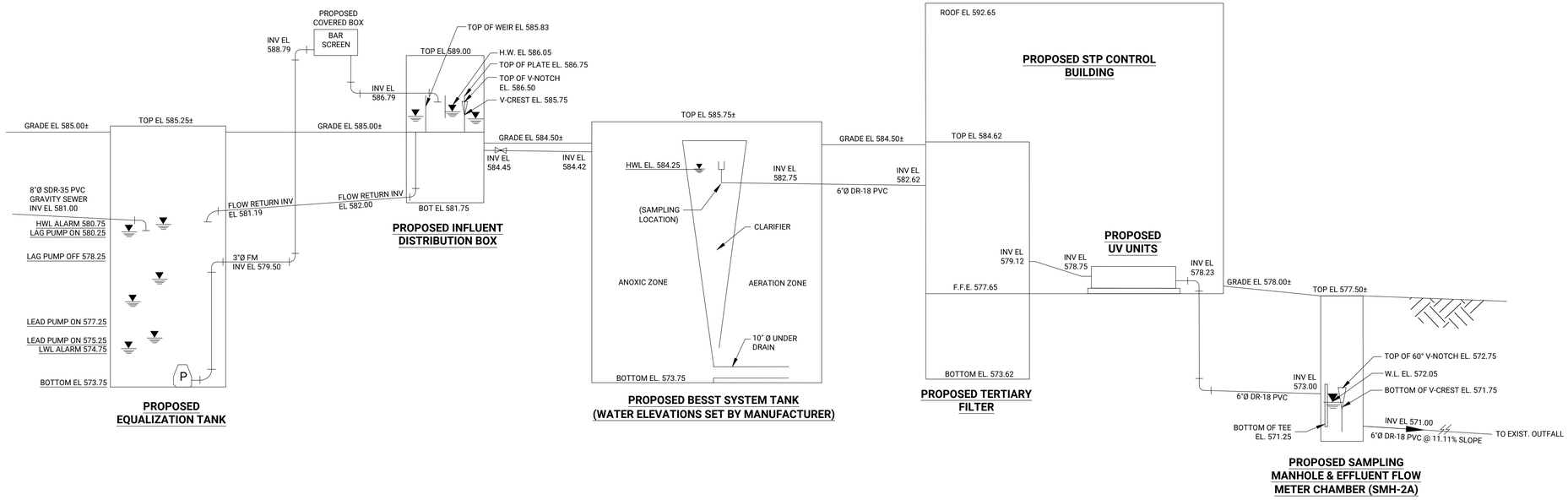

HYDRAULIC PROFILE

SCALE: N.T.S

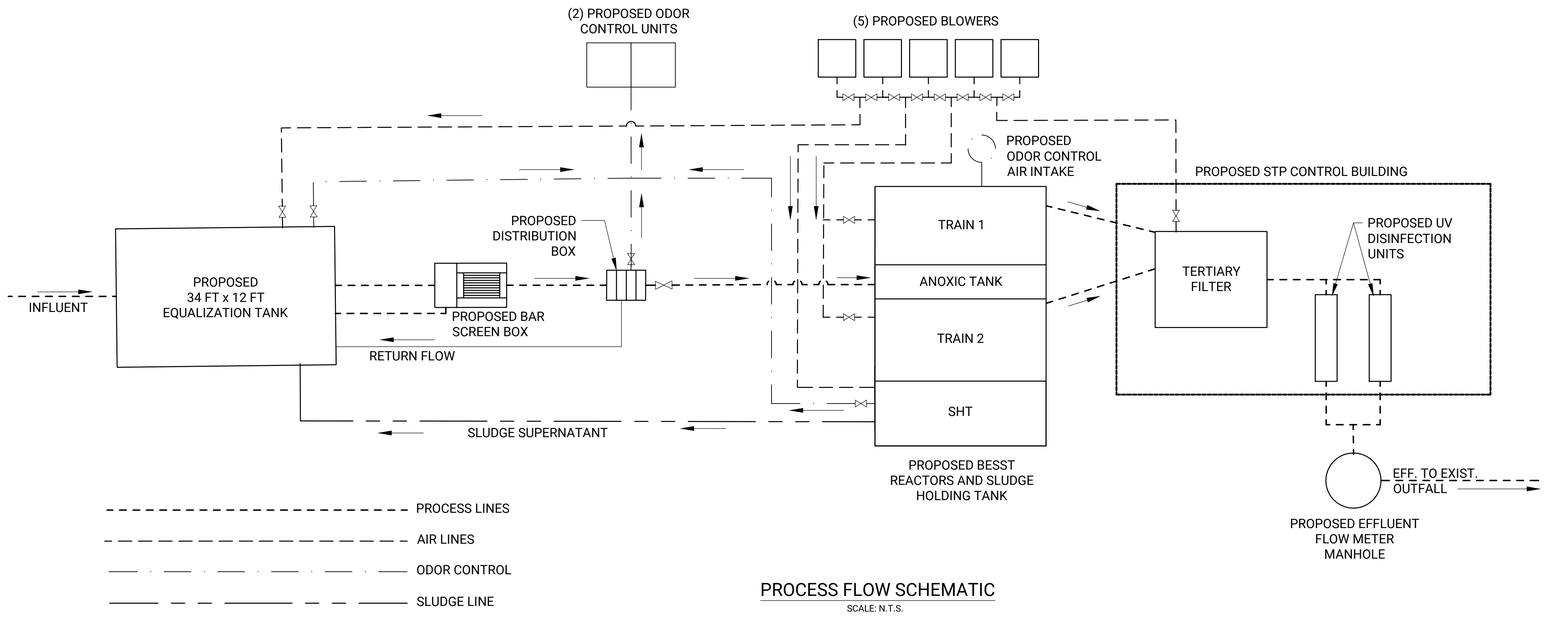

PROCESS FLOW SCHEMATIC

SCALE: N.T.S.

WCDH APPROVAL STAMP

No.	REVISION DESCRIPTION	DATE	BY

OWNER:
SUMMIT CLUB PARTNERS, LLC
568 BEDFORD ROAD (NY-22)
ARMONK, NY 10504

APPLICANT:
SUMMIT CLUB PARTNERS, LLC
568 BEDFORD ROAD
ARMONK, NY 10504

PROCESS FLOW DIAGRAM & HYDRAULIC PROFILE

THE SUMMIT CLUB AT ARMONK SEWAGE TREATMENT PLANT

SITUATED IN

ARMONK
TOWN OF NORTH CASTLE,
WESTCHESTER COUNTY, NEW YORK

WCTM: DISTRICT 003, SECTION 101.02, BLOCK 01, LOT 28.1 & 28.2

STATE OF NEW YORK · MATTHEW P. SCHEINER · 087181 · LICENSED PROFESSIONAL ENGINEER

Matthew P. Scheiner, P.E.
NY State License No. 087181

R&M ENGINEERING
Robinson & Muller Engineers, P.C.
50 Elm Street
Huntington, NY 11743
Office: (631) 271-0576
Fax: (631) 271-0592
www.rmengineering.com

DWN. BY:	SNM	CHK'D. BY:	MPS	SCALE:	AS NOTED	SHEET:	STP-3
DATE:	SEPT 2022	DATE:	SEPT 2022	JOB No.:	2021-201		

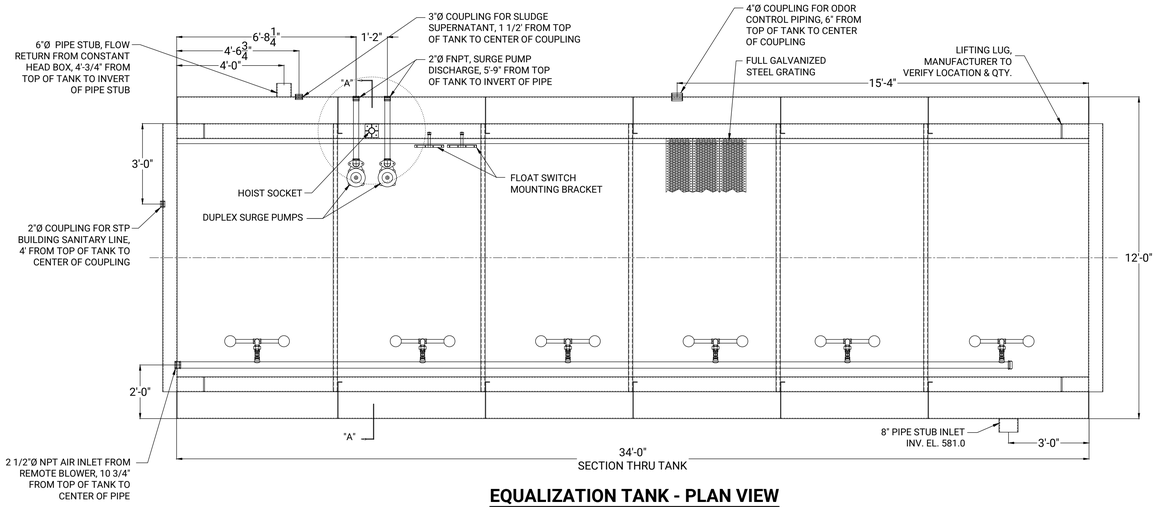

EQUALIZATION TANK - PLAN VIEW

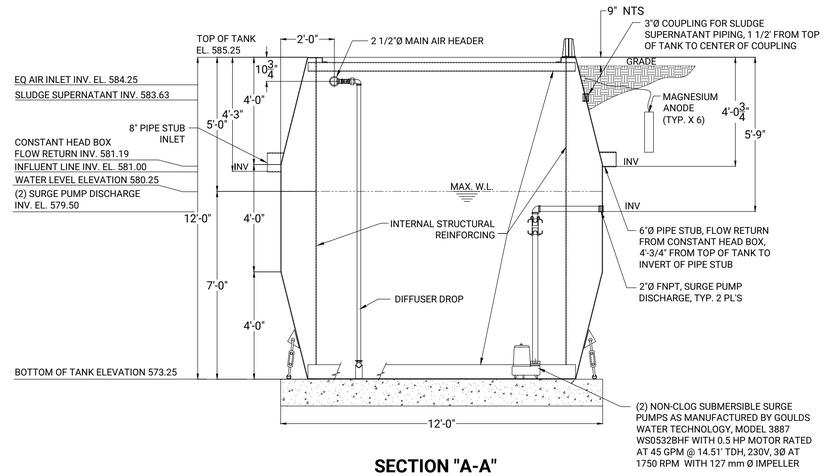

SECTION "A-A"

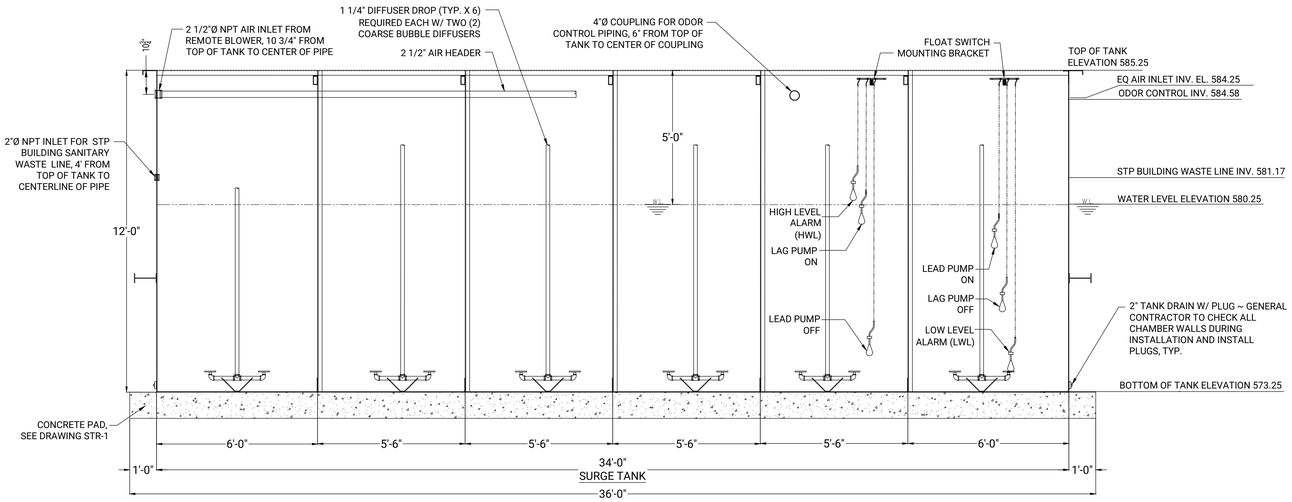

EQUALIZATION TANK - SECTION VIEW

PROTECTION AGAINST CORROSION

AFTER COMPLETION OF WELDING AND FABRICATION OF THE TANK, THE FOLLOWING WILL OCCUR:

SURFACE PREPARATION:
ALL SURFACES SHALL RECEIVE A SSPC-10 NEAR WHITE METAL FINISH OBTAINING A 1.5 TO 3.0 MIL SURFACE PROFILE.

PAINT:
INTERIOR AND EXTERIOR APPLICATION THICKNESS SHALL BE 8 TO 10 MILS D.F.T. OF TNEMEC-46H-413 COAL TAR EPOXY OR EQUAL.

COLOR: BLACK FINISH: SATIN

FLOAT SWITCH LEGEND	
HIGH LEVEL ALARM (HWL)	580.75
LAG PUMP ON	580.25
LAG PUMP OFF	578.25
LEAD PUMP ON	577.25
LEAD PUMP OFF	575.25
LOW LEVEL ALARM (LWL)	574.75

EQ VOLUME REQUIRED

20% AVERAGE DAILY FLOW	45,000 GPD x 0.20 = 9,000 GPD
5% FILTER DAILY FLOW	45,000 GPD x 0.05 = 2,250 GPD
25% SHT VOLUME	13,757 GAL x 0.25 = 3,439.25 GPD

TOTAL VOLUME REQUIRED = 14,689.25 GALLONS (1,963.80 C.F.)

EQ VOLUME PROVIDED = 15,051 GALLONS (2,012.17 C.F.)

GENERAL NOTES:
1. PLANT TO BE SHIPPED BLOWER MOTOR UNIT(S), PUMP CONTROL PANEL, GRATING, ANODES, HANDRAIL LOOSE FOR FIELD INSTALLATION BY OTHERS.

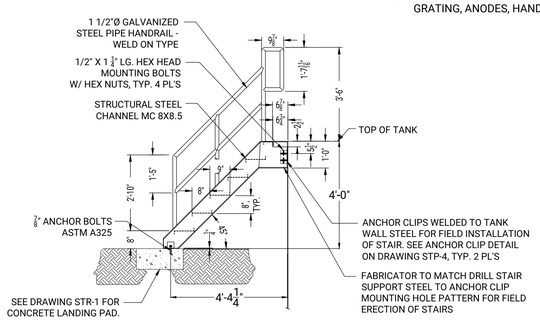

ELEVATION VIEW

NOTES:
1. TWO (2) STAIR ASSEMBLIES REQUIRED.
2. LADDER SHALL BE HOT DIPPED GALVANIZED. SEE BESST TANK DETAIL FOR LOCATION OF STAIRS.

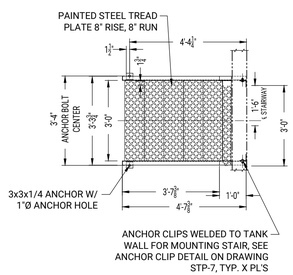

PLAN VIEW

NOTES:
1. TWO (2) CLIPS REQUIRED PER STAIR ASSEMBLY.
2. HANDRAIL NOT SHOWN IN THIS VIEW.
3. FABRICATOR TO PROVIDE LOOSE FASTENERS PER STAIR ASSEMBLY - (4) 3/4" X 1 3/4" LG. HEX HEAD MOUNTING BOLTS W/ HEX NUTS.

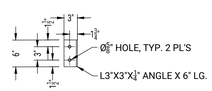

STAIR MOUNTING ANGLE CLIP DETAIL

NOTES:
1. TWO (2) CLIPS REQUIRED PER STAIR ASSEMBLY.
2. DETAIL IS AT 2X SCALE.

WCDH APPROVAL STAMP

No.	REVISION DESCRIPTION	DATE	BY

OWNER:
SUMMIT CLUB PARTNERS, LLC
568 BEDFORD ROAD (NY-22)
ARMONK, NY 10504

APPLICANT:
SUMMIT CLUB PARTNERS, LLC
568 BEDFORD ROAD
ARMONK, NY 10504

EQUALIZATION TANK DETAILS

THE SUMMIT CLUB AT ARMONK SEWAGE TREATMENT PLANT

SITUATED IN

ARMONK
TOWN OF NORTH CASTLE,
WESTCHESTER COUNTY, NEW YORK

WCTM: DISTRICT 003, SECTION 101.02, BLOCK 01, LOT 28.1 & 28.2

STATE OF NEW YORK · MATTHEW P. SCHEINER · 087181 · LICENSED PROFESSIONAL ENGINEER

Matthew P. Scheiner, P.E.
NY State License No. 087181

Robinson & Muller Engineers, P.C.
50 Elm Street
Huntington, NY 11743
Office: (631) 271-0576
Fax: (631) 271-0592
www.rmengineering.com

DWN. BY:	SNM	CHK'D. BY:	MPS	SCALE:	AS NOTED	SHEET:	STP-4
DATE:	SEPT 2022	DATE:	SEPT 2022	JOB No.:	2021-201		

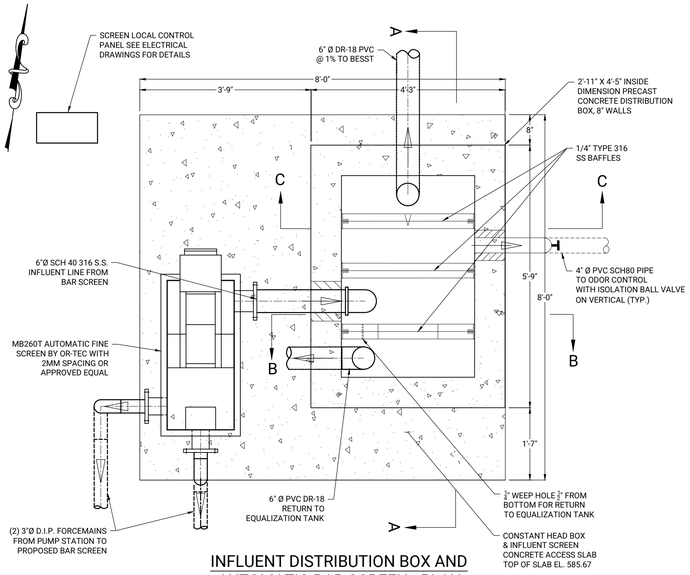

INFLUENT DISTRIBUTION BOX AND AUTOMATIC BAR SCREEN - PLAN

SCALE: 1/2" = 1'

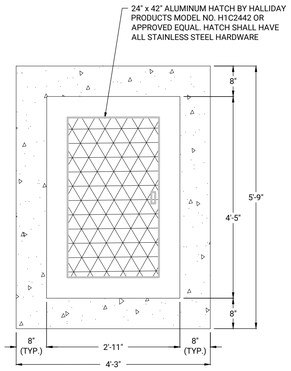

INFLUENT DISTRIBUTION BOX TOP SLAB

SCALE: 1/2" = 1'

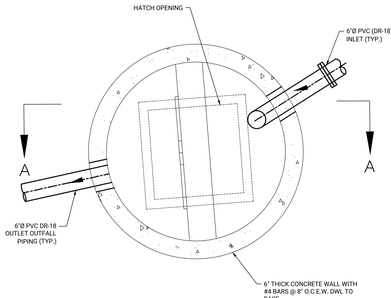

5' DIAMETER EFFLUENT FLOW METER AND SAMPLING MANHOLE - PLAN

SCALE: 1/2" = 1'

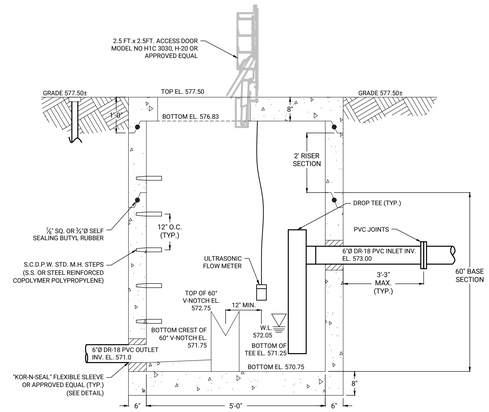

5' DIAMETER EFFLUENT FLOW METER AND SAMPLING MANHOLE

SECTION A - A

SCALE: 1/2" = 1'

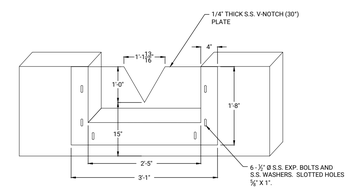

NOTES:
1. ALL MANHOLES SECTIONS SHALL CONFORM TO A.S.T.M. C-478, LATEST REVISION STANDARD SPECIFICATIONS FOR PRECAST REINFORCED CONCRETE M.H. SECTION.
2. MANHOLE RISER SECTION TO BE FURNISHED IN 1,2,3, OR 4' HEIGHTS AS REQUIRED.
3. MANUFACTURER TO CERTIFY THAT MANHOLES DELIVERED MEET ALL WCDH REQUIREMENTS.
4. LOADING TO CONFORM T AASHTO H-20 LOADING
5. REBAR TO CONFORM TO ASTM A-615-60 Fs=60,000PSI
6. WELDED WIRE MESH TO CONFORM TO A.S.T.M. A185 Fs=65,000PSI
7. CONCRETE TO BE 4000PSI @ 28 DAYS
8. FLAT SLAB TOPS (NO JOINT) MUST HAVE TOP & BOTTOM STEEL.

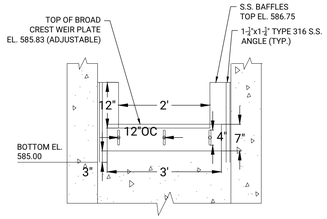

SECTION B-B

SCALE: 1/2" = 1'

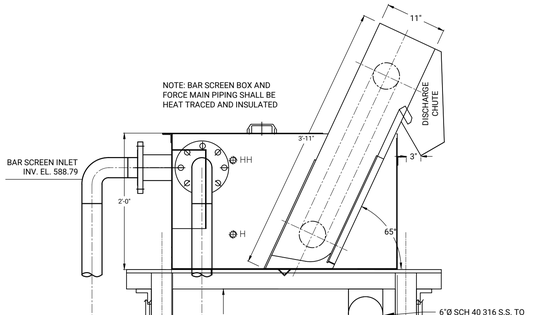

BAR SCREEN INSTALLATION DETAIL SECTION D-D

SCALE: 1"=1'

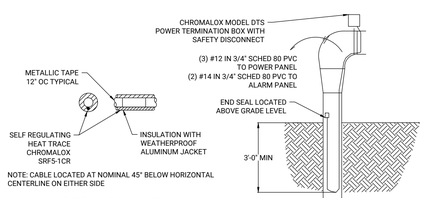

NOTE: CABLE LOCATED AT NOMINAL 45° BELOW HORIZONTAL CENTERLINE ON EITHER SIDE

CABLE TRACE LOCATION DETAIL

N.T.S

CABLE TRACE DETAIL

N.T.S

NOTES:
1. HEAT TRACE SHALL BE CHROMALOX TYPE SRF5-1CR 120V, WITH RT-RES END SEAL AND DTS POWER TERMINATION BOX WITH LINE VOLTAGE THERMOSTAT AND DRY ALARM CONTACTS.
2. INSTALL USING AT-1 ALUMINUM TAPE AND CL-1 CAUTION LABELS.
3. PIPE INSULATION SHALL BE 1-1/2" FIBERGLASS WITH ALUMINUM WEATHER PROOF COVER..

SECTION A-A INFLUENT DISTRIBUTION BOX

SCALE: 1/2" = 1'

SECTION C-C

SCALE: 1/2" = 1'

PLAN VIEW

SIERRA ENVIRONMENTAL TECHNOLOGIES ODOR CONTROL UNIT DETAILS

SCALE: 3/4" = 1'

TANK FOOTPRINT

ODOR CONTROL FAN (TO BE MOUNTED TO ODOR CONTROL CONCRETE PAD)

ELEVATION VIEW

NOTES:			
RESIN, CORROSION LINER:	HETRON 922 VINYL ESTER		
CORROSION LINER THICKNESS:	120 MILS NOMINAL		
INTERIOR SURFACING VEIL:	SINGLE PLY NEXUS		
RESIN, STRUCTURAL:	HETRON 922 VINYL ESTER		
EXTERIOR GELCOAT:	LIGHT GRAY WITH UV INHIBITORS		
GELCOAT NOTES:	N/A		
TOP FLANGE THK:	0.5" X 3"WIDE	COVER THK:	0.55"
BASEPLATE THK:	0.35"	INTERNAL RING THK:	0.25"
SIDEWALL THK:	0.26"		
EXTERNAL NOZZLE PROJECTION:	N/A		
INTERNAL NOZZLE PROJECTION:	N/A		
BOLT MATERIAL:	316SS		
GASKET MATERIAL:	1/8"THK EPDM		
POST CURE REQ'D:	NO		
HYDROTEST REQ'D:	NO		
TANK WEIGHT EMPTY:	407 LBS.		
DESIGN PRESSURE:	±8"W.C.	DESIGNED WIND SPEED:	N/A
DESIGN TEMPERATURE:	150°F	DESIGNED SEISMIC ZONE:	N/A
DESIGN SPECIFIC GRAVITY:	1.0		
CONTENTS:	WATER + 700LBS. MEDIA		

- TANK TO BE BUILT PER ASTM D3299, ASTM D4097, AND PS 15-69, AS APPLICABLE.
- PROPER VENTING OF THE VESSEL TO BE THE RESPONSIBILITY OF THE CUSTOMER. VENTS SHALL BE SIZED TO PREVENT ANY OCCURRANCE OF PRESSURE OR VACUUM BEYOND THE DESIGN PARAMETERS STATED ABOVE.
- ALL ELEVATIONS TO BE MEASURED FROM REFERENCE LINE.
- ALL NOZZLE BOLT HOLES TO STRADDLE TANKS MAJOR CENTERLINES.
- ALL NOZZLES TO BE COVERED WITH PLYWOOD DURING TRANSIT.
- FULL FACE GASKETS MUST BE USED ON ALL FIBERGLASS FLANGES. RING TYPE GASKETS ARE NOT SUITABLE.
- FLANGE BOLT-UP TORQUE SHOULD NOT EXCEED 25 FT LBS. FOR BOLTS UP TO 1/2" DIAMETER AND 50 FT LBS. FOR 5/8" DIAMETER AND LARGER.

DESCRIPTION		
ITEM	PART NUMBER	QTY
1	VESSEL, 48" ID, FRP	1
2	U-BOLT, 304SS	2
3	LD-8 ATTENUATOR	1
4	FLEX CONNECTOR	2
5	8IN NPS X 4'L, PIPE STUB, PVC	1
6	8IN NPS, 90DEG ELBOW, PVC	1
7	8IN NPS X 13.75'L, PIPE STUB, PVC	1
8	BLOWER, W/ DRIP COVER, 6" DUCT FLANGE INLET	1
9	MOTOR DRIP COVER	1
10	6IN DUCT FLANGE GASKET, EPDM	1
11	3/8"-10 HEX BOLT, SS	8
12	3/8" LOCK WASHER, SS	8
13	3/8" FLAT WASHER, SS	16
14	3/8" HEX NUT, SS	8
15	7/16"-14 X 1.5"L HEX BOLT, SS	32
16	7/16"-14 HEX NUT, SS	32
17	7/16" LOCK WASHER, SS	32
18	7/16" FLAT WASHER, SS	64
19	VESSEL COVER	1
20	VESSEL GASKET, EPDM	1

(LL) LIFT LUGS TO BE INSTALLED IN ANY TWO HOLES 180° APART.

NOZZLES SCHEDULE

MARK	SIZE	REQ'D	DESCRIPTION	SERVICE
A	3/4"	1	FNPT HALF CPLG W/VALVE	DRAIN
B	1"	1	FNPT HALF CPLG	SAMPLE
C	1"	1	FNPT HALF CPLG	SAMPLE
D	8"	1	FRP PIPE STUB	AIR INLET
E	4 1/2"	1	HOLE	AIR OUTLET
F	4"	1	PIPE STUB	BLOWER OUTLET
TD	""	4	SEE DETAIL	TIE DOWN
LL	""	2	SEE REF02B	LIFT LUG
GR	1"	1	SEE REF051	GROUND ROD
NP	""	1	SEE REF010	DF NAMEPLATE

WCDH APPROVAL STAMP

No.	REVISION DESCRIPTION	DATE	BY

OWNER:
SUMMIT CLUB PARTNERS, LLC
568 BEDFORD ROAD (NY-22)
ARMONK, NY 10504

APPLICANT:
SUMMIT CLUB PARTNERS, LLC
568 BEDFORD ROAD
ARMONK, NY 10504

CONSTANT HEAD BOX, FLOW METER PIT, SCREEN, & ODOR CONTROL DETAILS

THE SUMMIT CLUB AT ARMONK SEWAGE TREATMENT PLANT

SITUATED IN

ARMONK
TOWN OF NORTH CASTLE,
WESTCHESTER COUNTY, NEW YORK

WCTM: DISTRICT 003, SECTION 101.02, BLOCK 01, LOT 28.1 & 28.2

STATE OF NEW YORK · MATTHEW P. SCHEINER · 087181 · LICENSED PROFESSIONAL ENGINEER

Matthew P. Scheiner, P.E.
NY State License No. 087181

R&M ENGINEERING
Robinson & Muller Engineers, P.C.
50 Elm Street
Huntington, NY 11743
Office: (631) 271-0576
Fax: (631) 271-0592
www.rmengineering.com

DWN. BY:	SNM	CHK'D. BY:	MPS	SCALE:	AS NOTED	SHEET:	STP-5
DATE:	SEPT 2022	DATE:	SEPT 2022	JOB No.:	2021-201		

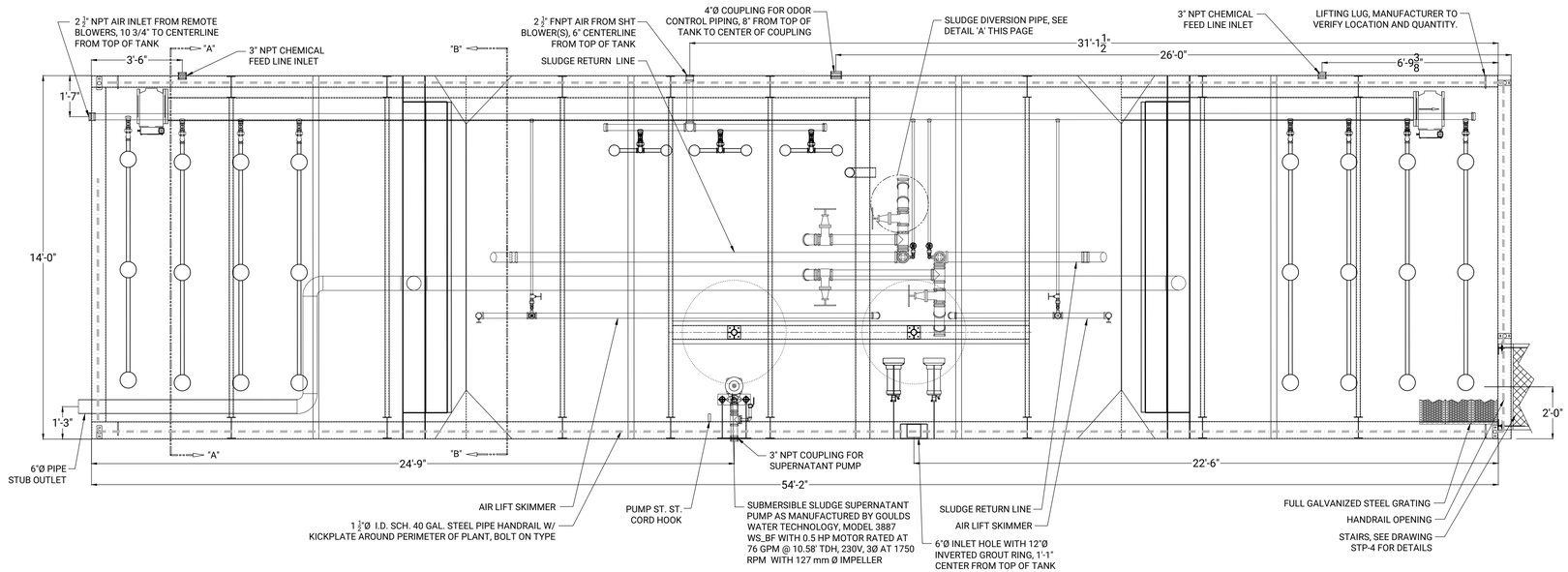

PLAN VIEW

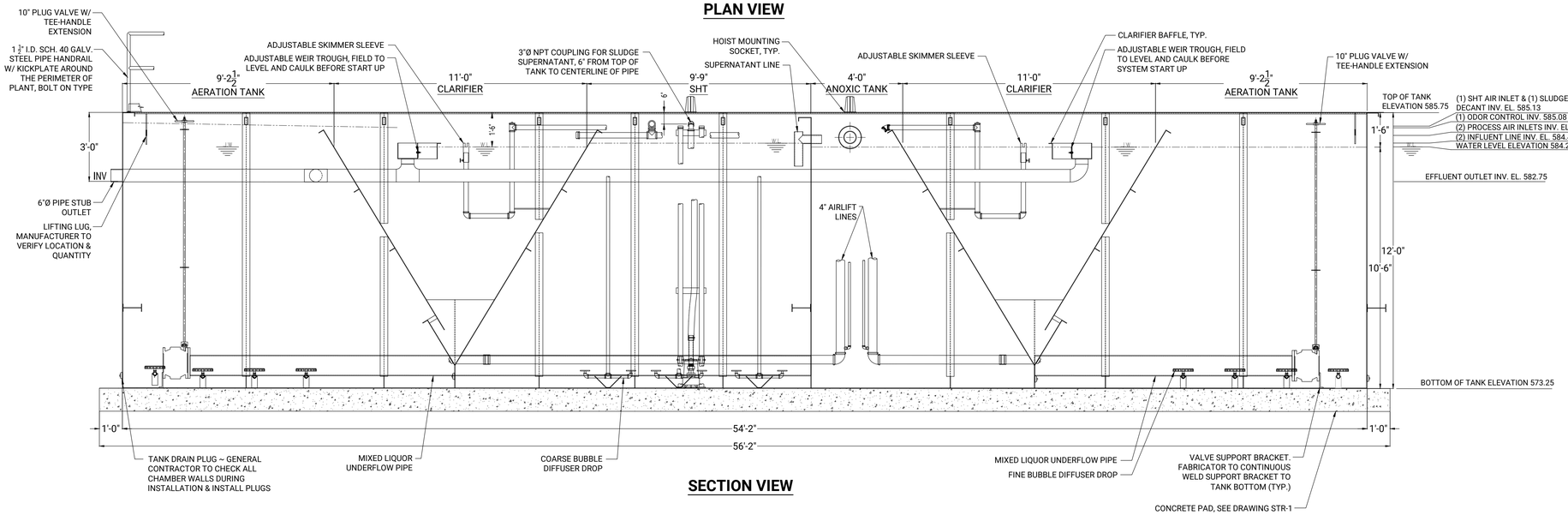

SECTION VIEW

NOTES:
1. STAIRS, MIXERS, AND HOISTS NOT SHOWN IN THIS VIEW.
2. PLANT TO BE SHIPPED W/ BLOWER MOTOR UNIT(S), CONTROL PANEL, GRATING, HANDRAIL, MIXERS LOOSE FOR FIELD INSTALLATION BY OTHERS.

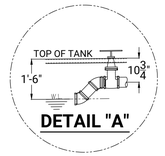

DETAIL "A"

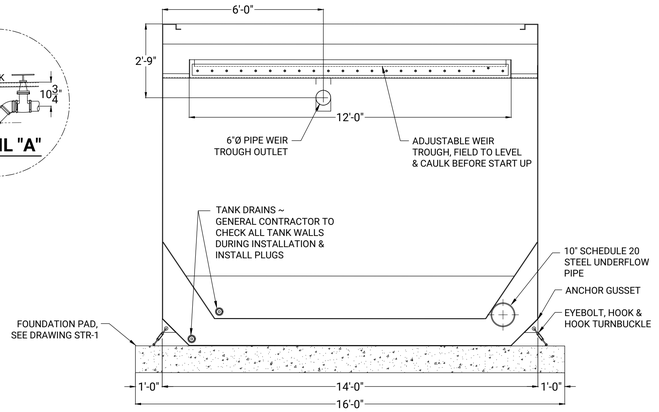

SECTION "B-B"

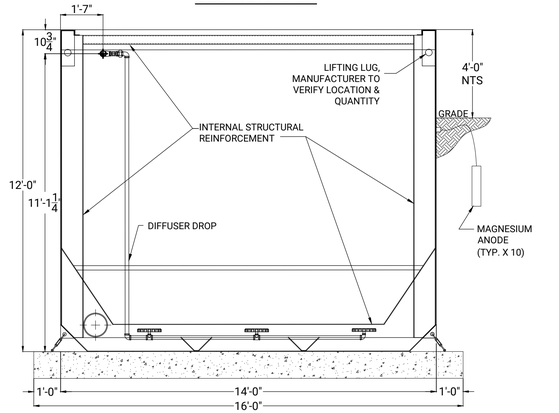

SECTION "A-A"

PROTECTION AGAINST CORROSION

AFTER COMPLETION OF WELDING AND FABRICATION OF THE TANK, THE FOLLOWING
WILL OCCUR:

SURFACE PREPARATION:
ALL SURFACES SHALL RECEIVE A SSPC-10 NEAR WHITE METAL FINISH OBTAINING A 1.5 TO 3.0 MIL SURFACE PROFILE.

PAINT:
INTERIOR AND EXTERIOR APPLICATION THICKNESS SHALL BE 8 TO 10 MILS D.F.T. OF TNEMEC-46H-413 COAL TAR EPOXY OR EQUAL.

COLOR: BLACK FINISH: SATIN

DESIGN DATA

MODEL NUMBER	DESIGN FLOW G.P.D.	ANOXIC TANK VOLUME GALLON	CLARIFIER VOLUME GALLON	AERATION TANK VOLUME GALLON	SLUDGE HOLDING VOLUME GALLON
PES-45	45,000	7,434 TOTAL	12,144 TOTAL	26,295 TOTAL	13,757

WCDH APPROVAL STAMP

No.	REVISION DESCRIPTION	DATE	BY

OWNER:
SUMMIT CLUB PARTNERS, LLC
568 BEDFORD ROAD (NY-22)
ARMONK, NY 10504

APPLICANT:
SUMMIT CLUB PARTNERS, LLC
568 BEDFORD ROAD
ARMONK, NY 10504

BESST DETAILS

THE SUMMIT CLUB AT ARMONK
SEWAGE TREATMENT PLANT
SITUATED IN
ARMONK
TOWN OF NORTH CASTLE,
WESTCHESTER COUNTY, NEW YORK

WCTM: DISTRICT 003, SECTION 101.02, BLOCK 01, LOT 28.1 & 28.2

STATE OF NEW YORK · MATTHEW P. SCHEINER · 087181 · LICENSED PROFESSIONAL ENGINEER

Matthew P. Scheiner, P.E.
NY State License No. 087181

Robinson & Muller Engineers, P.C.
50 Elm Street
Huntington, NY 11743
Office: (631) 271-0576
Fax: (631) 271-0592
www.rmengineering.com

DWN. BY:	SNM	CHK'D. BY:	MPS	SCALE:	AS NOTED	SHEET:	STP-6
DATE:	SEPT 2022	DATE:	SEPT 2022	JOB No.:	2021-201		

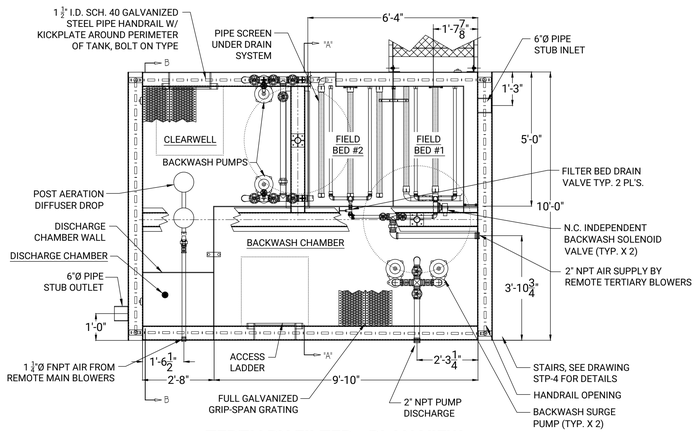

TERTIARY FILTER - PLAN VIEW

NOTES:
1. CONTROL PANEL SHALL BE MOUNTED REMOTELY.

DESIGN DATA				
MODEL NO.	DESIGN FLOW GPD	CLEARWELL VOL. GAL.	BACKWASH CHAMBER VOL. GAL.	FILTER BED TOTAL SQ. FT.
PST-31.5	45,000	2,520	2,520	31.5

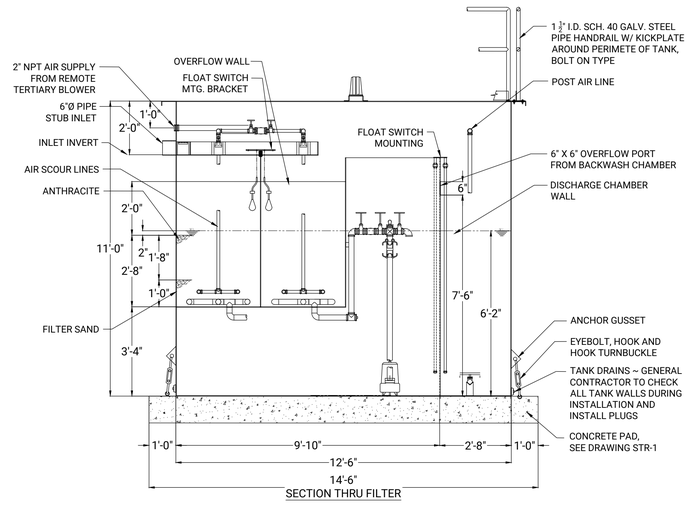

TERTIARY FILTER - SECTION THROUGH FILTER

NOTES:
1. STAIRS NOT SHOWN IN SECTION VIEW.

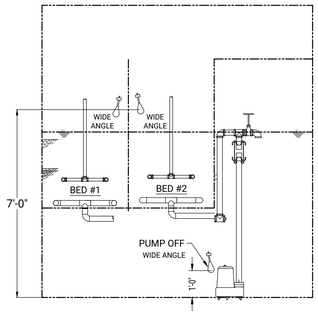

CLEARWELL

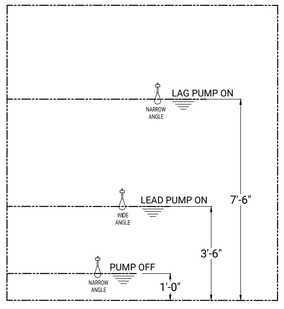

BACKWASH SURGE CHAMBER

FLOAT SWITCH SETTINGS

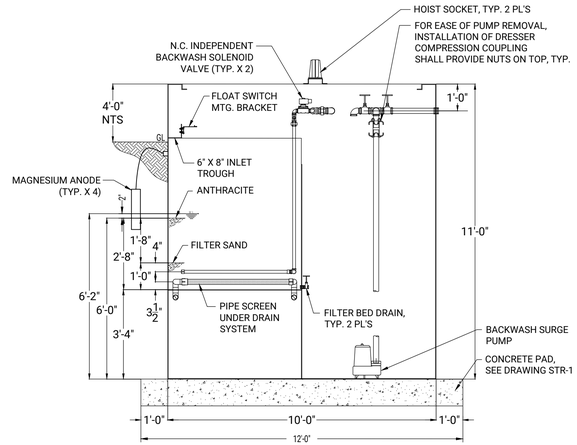

SECTION "A-A"

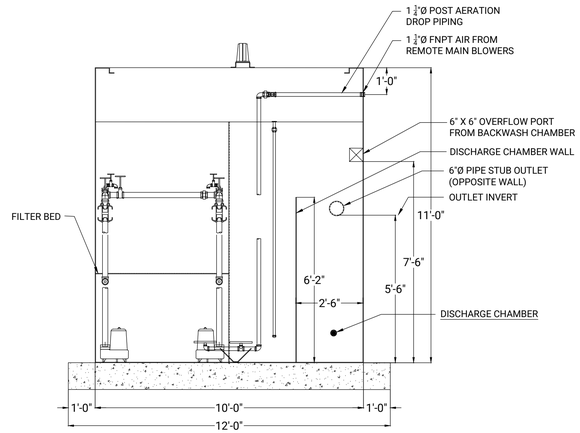

SECTION "B-B"

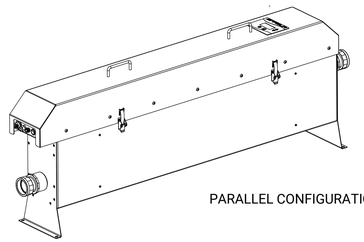

PARALLEL CONFIGURATION

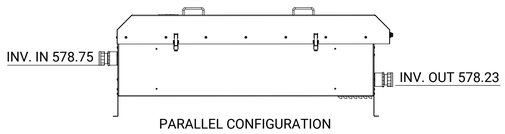

PARALLEL CONFIGURATION

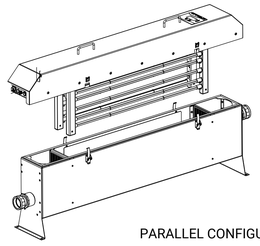

PARALLEL CONFIGURATION

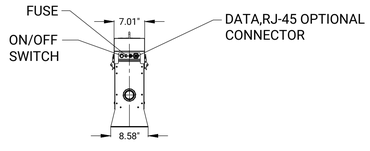

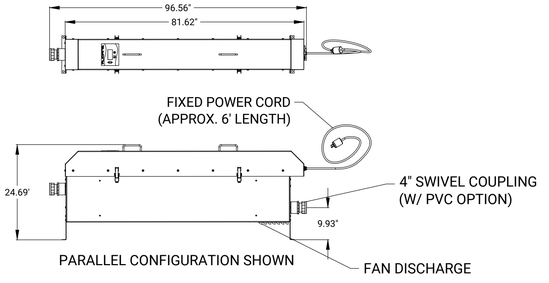

PARALLEL CONFIGURATION SHOWN

ENAQUA M4-P8M ULTRAVIOLET DISINFECTION SYSTEM

SCALE: NTS

WCDH APPROVAL STAMP

No.	REVISION DESCRIPTION	DATE	BY

OWNER:
SUMMIT CLUB PARTNERS, LLC
568 BEDFORD ROAD (NY-22)
ARMONK, NY 10504

APPLICANT:
SUMMIT CLUB PARTNERS, LLC
568 BEDFORD ROAD
ARMONK, NY 10504

TERTIARY FILTER AND UV DISINFECTION DETAILS

THE SUMMIT CLUB AT ARMONK
SEWAGE TREATMENT PLANT

SITUATED IN

ARMONK
TOWN OF NORTH CASTLE,
WESTCHESTER COUNTY, NEW YORK

WCTM: DISTRICT 003, SECTION 101.02, BLOCK 01, LOT 28.1 & 28.2

STATE OF NEW YORK · MATTHEW P. SCHEINER · 087181 · LICENSED PROFESSIONAL ENGINEER

Matthew P. Scheiner, P.E.
NY State License No. 087181

R&M ENGINEERING
Robinson & Muller Engineers, P.C.
50 Elm Street
Huntington, NY 11743
Office: (631) 271-0576
Fax: (631) 271-0592
www.rmengineering.com

DWN. BY:	SNM	CHK'D. BY:	MPS	SCALE:	AS NOTED	SHEET:	STP-7
DATE:	SEPT 2022	DATE:	SEPT 2022	JOB No.:	2021-201		

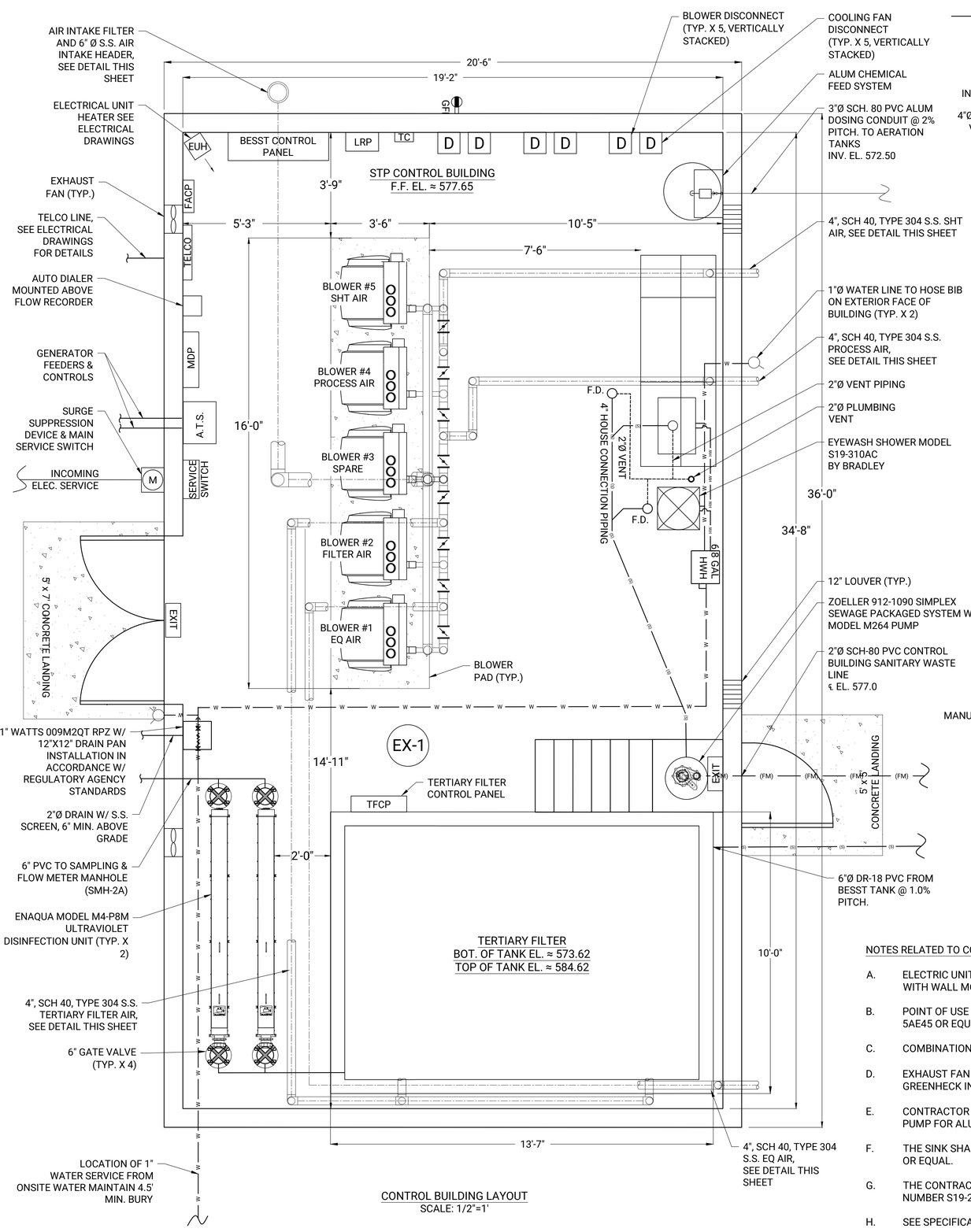

CONTROL BUILDING LAYOUT
SCALE: 1/2"=1'

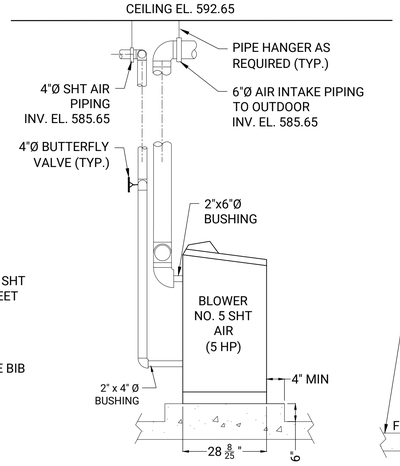

BLOWER NO. 2 - SHT AIR- SIDE VIEW DETAIL
KAESER MODEL NO.: BB 52 C - 5HP MOTORS
SCALE: NTS

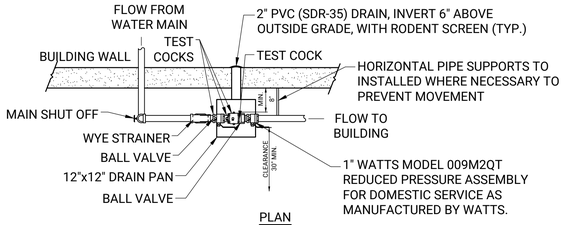

PLAN

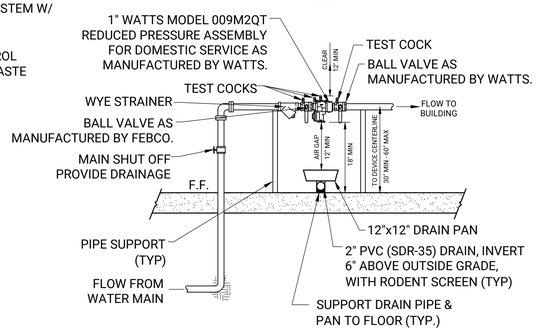

ELEVATION

1" REDUCED PRESSURE ZONE ASSEMBLY (RPZ) DETAIL (DOMESTIC SERVICE)
SCALE: N.T.S.

BLOWER INTAKE PIPING WALL DETAIL
SCALE: NTS

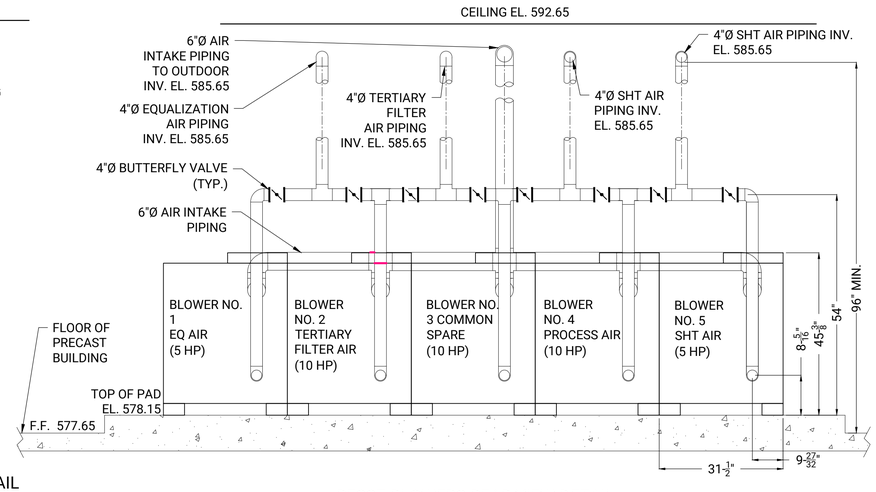

BESST BLOWERS REAR VIEW DETAIL
KAESER MODEL NO.: BB 52 C (5 HP MOTORS)
& BB 69C (10 HP MOTORS)
SCALE: NTS

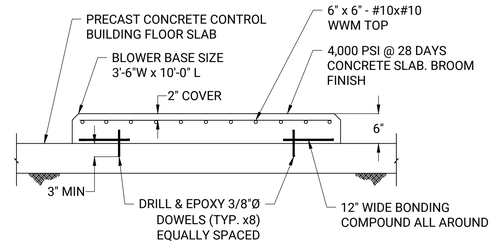

BLOWER PAD DETAILS
SCALE: NTS

NOTES RELATED TO CONTROL BUILDING

A. ELECTRIC UNIT HEATER SHALL BE 3 KW -10,000 BTUH, 208V, 1Ø UNIT BY DAYTON OR EQUAL. HEATER SHALL BE PROVIDED WITH WALL MOUNTED THERMOSTAT AND 24-HR TIMER.

B. POINT OF USE WATER HEATER SHALL BE MODEL ARISTON GL6+, 1.5 KW, 110 V BY BOSCH GROUP, GRAINGER STOCK NUMBER 5AE45 OR EQUAL, WITH 6+ GALLONS TANK VOLUME AND 6.8 GPH RECOVERY AT 90° F RISE.

C. COMBINATION EMERGENCY EYE WASH AND SHOWER STATION SHALL BE MODEL NUMBER S19-310AC BY BRADLEY OR EQUAL.

D. EXHAUST FAN (EX-1) SHALL BE 2,776 CFM, 0.25 SP, 1750 RPM, 1' Ø, 1/2 HP, MODEL #AE16-428-A5X-QD AS MANUFACTURED BY GREENHECK INC. OR EQUAL.

E. CONTRACTOR SHALL INSTALL ALL DOUBLE WALL PIPING INCLUDING VALVE, TWO (2) 55 GALLONS DRUMS AND CHEMICAL PUMP FOR ALUM DOSING OF THE AERATION TANKS. CHEMICAL PUMP SHALL BE QG400-Q0SSYW BY FLUID METERING INC.

F. THE SINK SHALL BE SANI LAV WITH DOUBLE FOOT VALVE AS SUPPLIED BY GRAINGER, MODEL NUMBERS 1HLF5 AND 1HLF8, OR EQUAL.

G. THE CONTRACTOR SHALL PROVIDE A MIXING VALVE FOR THE HOT WATER HEATER AS MANUFACTURED BY BRADLEY, MODEL NUMBER S19-2100, GRAINGER ITEM NUMBER 4YF95, OR EQUAL.

H. SEE SPECIFICATIONS FOR MORE INFORMATION ON LABORATORY FURNITURE.

WCDH APPROVAL STAMP

No.	REVISION DESCRIPTION	DATE	BY

OWNER:
SUMMIT CLUB PARTNERS, LLC
568 BEDFORD ROAD (NY-22)
ARMONK, NY 10504

APPLICANT:
SUMMIT CLUB PARTNERS, LLC
568 BEDFORD ROAD
ARMONK, NY 10504

CONTROL BUILDING AND BLOWER DETAILS

THE SUMMIT CLUB AT ARMONK SEWAGE TREATMENT PLANT

SITUATED IN

ARMONK
TOWN OF NORTH CASTLE,
WESTCHESTER COUNTY, NEW YORK

WCTM: DISTRICT 003, SECTION 101.02, BLOCK 01, LOT 28.1 & 28.2

STATE OF NEW YORK · MATTHEW P. SCHEINER · 087181 · LICENSED PROFESSIONAL ENGINEER

Matthew P. Scheiner, P.E.
NY State License No. 087181

R&M ENGINEERING
Robinson & Muller Engineers, P.C.
50 Elm Street
Huntington, NY 11743
Office: (631) 271-0576
Fax: (631) 271-0592
www.rmengineering.com

DWN. BY:	SNM	CHK'D. BY:	MPS	SCALE:	AS NOTED	SHEET:
DATE:	SEPT 2022	DATE:	SEPT 2022	JOB No.:	2021-201	STP-8

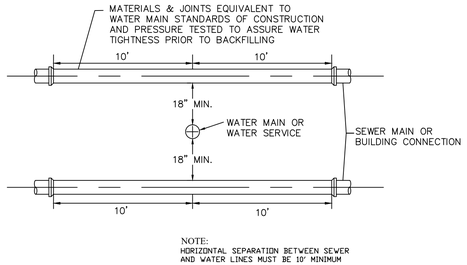

WATER/SEWER CROSSING DETAIL

SCALE: N.T.S.

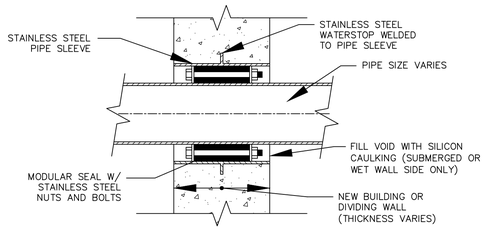

NOTES:

1. MODULAR SEAL STRIP SHALL BE PLACED SO THAT BOLTS CAN BE ADJUSTED DURING NORMAL OPERATION.
2. WALLS 12" OR LARGER IN THICKNESS SHALL REQUIRE 2 MODULAR SEAL STRIPS.

TYPICAL CARRIER PIPE PENETRATION THRU WALL

SCALE: N.T.S.

(USE FOR ALL NEW WALL PENETRATIONS)

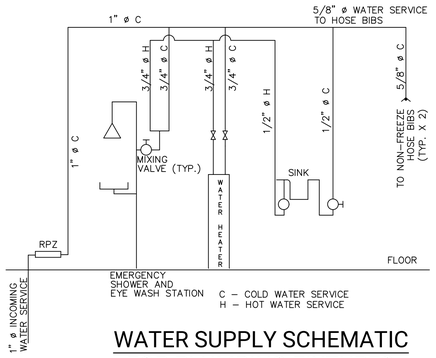

WATER SUPPLY SCHEMATIC FOR PLUMBING FIXTURES

SCALE: N.T.S.

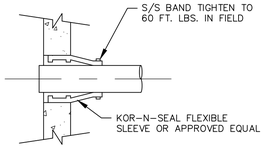

PIPE CONNECTION DETAIL

SCALE: N.T.S.

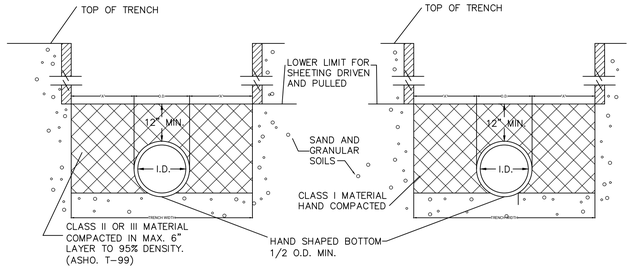

SEWER FOUNDATION IN GRANULAR SOILS ALL TRENCH DEPTHS

SCALE: N.T.S.

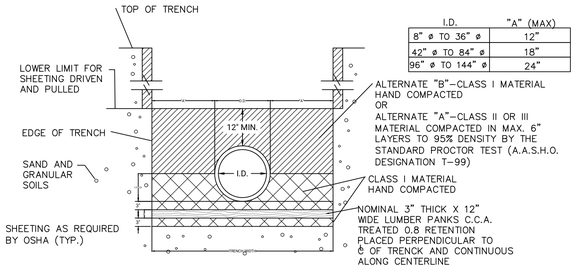

I.D.	"A" (MAX)
8" ø TO 36" ø	12"
42" ø TO 84" ø	18"
96" ø TO 144" ø	24"

SEWER FOUNDATION IN ORGANIC SOILS SEWER FOUNDATIONS

SCALE: N.T.S.

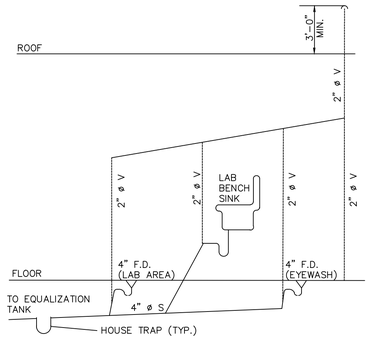

SANITARY RISER DIAGRAM

SCALE: N.T.S.

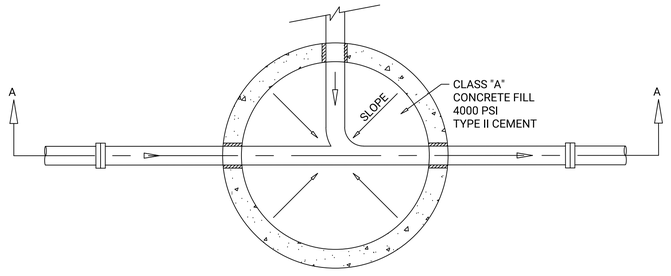

PLAN

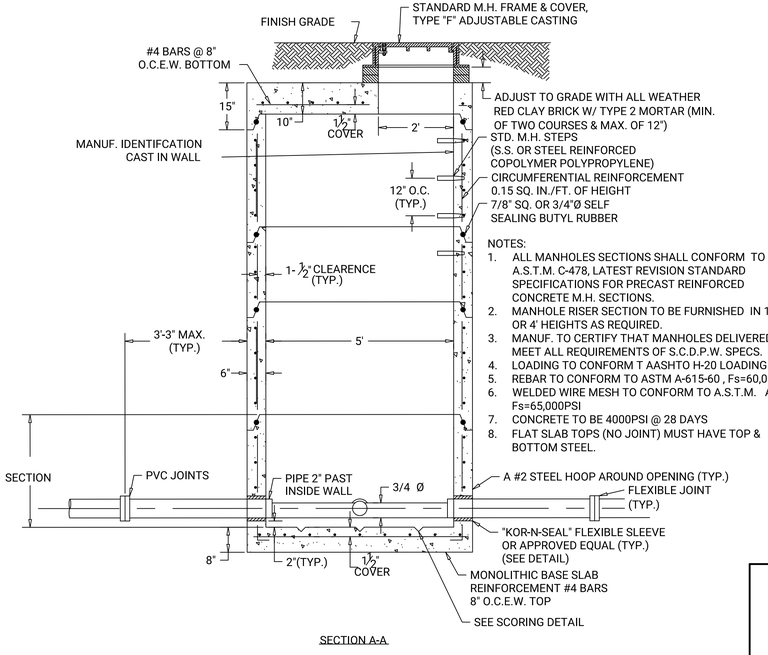

NOTES:

1. ALL MANHOLES SECTIONS SHALL CONFORM TO A.S.T.M. C-478, LATEST REVISION STANDARD SPECIFICATIONS FOR PRECAST REINFORCED CONCRETE M.H. SECTIONS.
2. MANHOLE RISER SECTION TO BE FURNISHED IN 1,2,3, OR 4' HEIGHTS AS REQUIRED.
3. MANUF. TO CERTIFY THAT MANHOLES DELIVERED MEET ALL REQUIREMENTS OF S.C.D.P.W. SPECS.
4. LOADING TO CONFORM T AASHTO H-20 LOADING
5. REBAR TO CONFORM TO ASTM A-615-60 , Fs=60,000PSI
6. WELDED WIRE MESH TO CONFORM TO A.S.T.M. A185 Fs=65,000PSI
7. CONCRETE TO BE 4000PSI @ 28 DAYS
8. FLAT SLAB TOPS (NO JOINT) MUST HAVE TOP & BOTTOM STEEL.

SECTION A-A

5' DIAMETER SANITARY SEWER MANHOLE

SCALE: N.T.S.

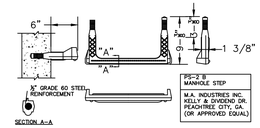

STRUCTURAL MANHOLE STEP DETAIL

SCALE: N.T.S.

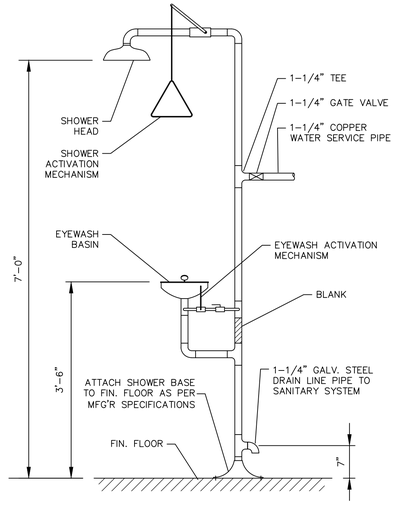

EMERGENCY EYEWASH AND SHOWER DETAIL

SCALE: N.T.S.

WCDH APPROVAL STAMP

No.	REVISION DESCRIPTION	DATE	BY

OWNER:
SUMMIT CLUB PARTNERS, LLC
568 BEDFORD ROAD (NY-22)
ARMONK, NY 10504

APPLICANT:
SUMMIT CLUB PARTNERS, LLC
568 BEDFORD ROAD
ARMONK, NY 10504

SANITARY DETAILS

THE SUMMIT CLUB AT ARMONK
SEWAGE TREATMENT PLANT
SITUATED IN
ARMONK
TOWN OF NORTH CASTLE,
WESTCHESTER COUNTY, NEW YORK

WCTM: DISTRICT 003, SECTION 101.02, BLOCK 01, LOT 28.1 & 28.2

STATE OF NEW YORK · MATTHEW P. SCHEINER · 087181 · LICENSED PROFESSIONAL ENGINEER

Matthew P. Scheiner, P.E.
NY State License No. 087181

R&M ENGINEERING
Robinson & Muller Engineers, P.C.
50 Elm Street
Huntington, NY 11743
Office: (631) 271-0576
Fax: (631) 271-0592
www.rmengineering.com

DWN. BY:	SNM	CHK'D. BY:	MPS	SCALE:	AS NOTED	SHEET:	STP-9
DATE:	SEPT 2022	DATE:	SEPT 2022	JOB No.:	2021-201		

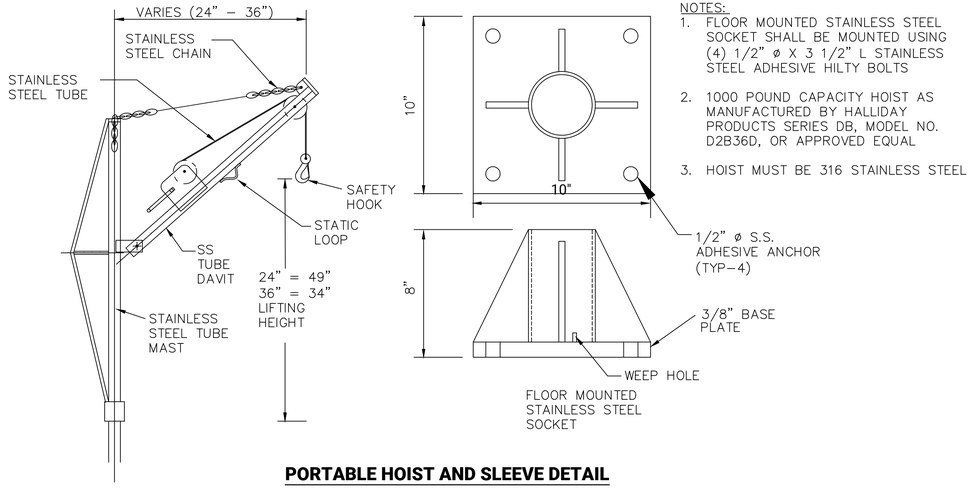

NOTES:
1. FLOOR MOUNTED STAINLESS STEEL SOCKET SHALL BE MOUNTED USING (4) 1/2" ø X 3 1/2" L STAINLESS STEEL ADHESIVE HILTY BOLTS
2. 1000 POUND CAPACITY HOIST AS MANUFACTURED BY HALLIDAY PRODUCTS SERIES DB, MODEL NO. D2B36D, OR APPROVED EQUAL
3. HOIST MUST BE 316 STAINLESS STEEL

PORTABLE HOIST AND SLEEVE DETAIL
N.T.S.

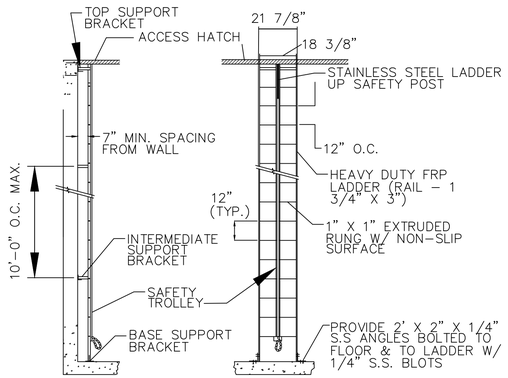

FRP LADDER DETAIL
N.T.S.

NOTES:
1. STEEL SHALL BE COATED W/ TWO COATS OF KOPPERS BITUMASTIC NO. 300–3 OR APPROVED EQUAL.
2. ALL HARDWARE SHALL BE STAINLSS STEEL

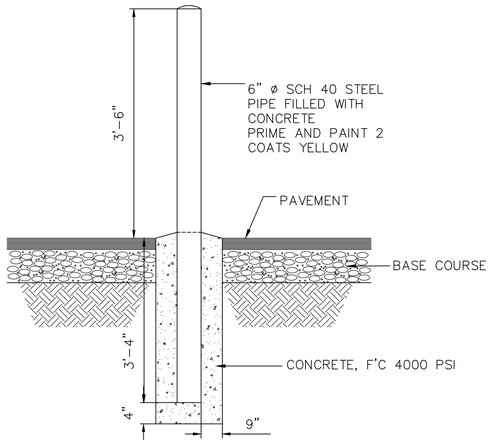

TYPICAL BOLLARD DETAIL
N.T.S.

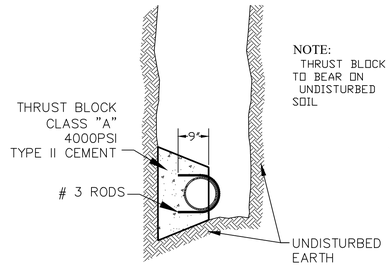

SECTION

NOTE:
THRUST BLOCK TO BEAR ON UNDISTURBED SOIL

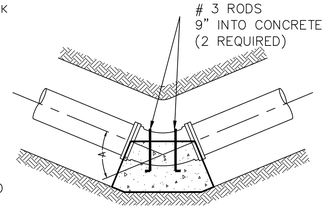

PLAN

NOTE: MAX. TEXT PRESSURE 200 PSI

PIPE SIZE	DEAD END OR TEE	90° BEND	45° BEND	22–½" BEND
4"	1 ½	2	1	½
6"	3	4	2 ½	1 ½
8"	5	7	4	2
10"	7	10	5	2 ½
12"	10	15	7 ½	4
16",20",24"	16	24	12	6

THRUST BLOCK BEARING AREA
SQUARE FOOT BEARING AREA OF BLOCKING ON UNDISTURBED EARTH

TRUST BLOCK DETAIL
N.T.S.

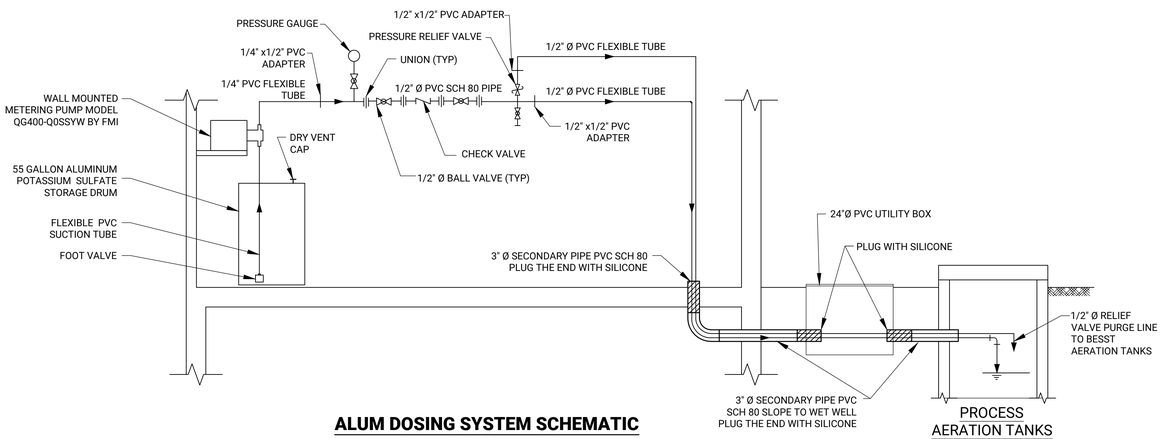

ALUM DOSING SYSTEM SCHEMATIC
N.T.S.

WCDH APPROVAL STAMP

No.	REVISION DESCRIPTION	DATE	BY

OWNER:
SUMMIT CLUB PARTNERS, LLC
568 BEDFORD ROAD (NY-22)
ARMONK, NY 10504

APPLICANT:
SUMMIT CLUB PARTNERS, LLC
568 BEDFORD ROAD
ARMONK, NY 10504

Matthew P. Scheiner, P.E.
NY State License No. 087181

MISCELLANEOUS DETAILS

THE SUMMIT CLUB AT ARMONK SEWAGE TREATMENT PLANT

SITUATED IN

ARMONK
TOWN OF NORTH CASTLE,
WESTCHESTER COUNTY, NEW YORK

WCTM: DISTRICT 003, SECTION 101.02, BLOCK 01, LOT 28.1 & 28.2

Robinson & Muller Engineers, P.C.
50 Elm Street
Huntington, NY 11743
Office: (631) 271-0576
Fax: (631) 271-0592
www.rmengineering.com

DWN. BY:	SNM	CHK'D. BY:	MPS	SCALE:	AS NOTED	SHEET:	STP-10
DATE:	SEPT 2022	DATE:	SEPT 2022	JOB No.:	2021-201		

ENGINEERING REPORT

For

THE SUMMIT CLUB AT ARMONK

Sewage Treatment Plant Replacement

Armonk
Town of North Castle
Westchester County, NY 10504

R&M Job No.: 2021-201

Prepared for

Summit Club Partners, LLC
568 Bedford Road (NY-22)
Armonk, NY 10504

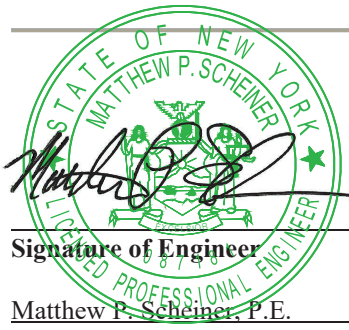

Signature of Engineer

Matthew P. Scheiner, P.E.
Printed Name

Partner, R&M Engineering
Title

September 15, 2022
Revision Date

FOREWORD

This Engineering report has been prepared in compliance with the requirements of the *New York State Design Standards for Intermediate Sized Wastewater Treatment Systems* (issued by New York State Department of Environmental Conservative (NYSDEC)), requirements of Chapter 873, Article VIII of the Westchester County Sanitary Code and in general follows the guidelines of the *Recommended Standards For Wastewater Facilities* (Ten State Standards).

This Engineering Report has been prepared to address the complete replacement of the existing Sewage Treatment Plant (STP) to serve the proposed redevelopment of the property to update the existing golf course with a new clubhouse, amenities complex, and residential community comprised of 72 townhomes. The parcel for The Summit Club at Armonk project is located east of Interstate 684 and approximately 720 feet north of Blair Road in Armonk, Town of North Castle, New York.

Copyright 2022 Robinson & Muller Engineers, P.C.

TABLE OF CONTENTS

SECTION		PAGE NO.
	FOREWORD	
I	GENERAL INFORMATION	3
II	INTRODUCTION	4
III	PROPOSED TREATMENT PLANT CAPACITY	5
IV	INFLUENT SEWAGE CHARACTERISTICS	7
V	EFFLUENT REQUIREMENTS	8
VI	TREATMENT OPTIONS	9
VII	TREATMENT FACILITY DESIGN	11

APPENDICES

APPENDIX A - SOIL BORING REPORT

APPENDIX B - PUMP PERFORMANCE CURVES

APPENDIX C - MANUFACTURER'S PROCESS CALCULATIONS

APPENDIX D - BLOWER PERFORMANCE DATA

APPENDIX E - DISINFECTION EQUIPMENT CUTS

APPENDIX F - SAMPLING LOCATIONS

FIGURES

DRAWING NO. 1 STP SITE PLAN

DRAWING NO. 2 HYDRAULIC PROFILE

DRAWING NO. 3 MANUFACTURER'S STP LAYOUT

(All Drawings are located at the end of this document.)

SECTION I

GENERAL INFORMATION

Project Name: The Summit Club at Armonk STP Replacement

Applicant: Summit Club Partners, LLC
c/o Mr. Jeffrey Mendell
568 Bedford Road
Armonk, New York 10504

Project Description: The applicant proposes to redevelop the existing golf course to also include 72 townhouse units, clubhouse, and a new amenities complex including a pool, spas, restaurant, and bar and lounge. The existing sewage treatment plant (STP) will be replaced, with the STP relocated and capacity upsized to meet the treatment and disposal needs of the golf course and proposed community as well as additional future expansion of the residential space.

Project Location: The total site area where The Summit Club at Armonk development is proposed is 156.29 acres at 568 & 570 Bedford Road in Armonk, NY. The parcel for the Summit Club redevelopment is located east of Interstate 684 and approximately 720 feet north of Blair Road in Armonk, Town of North Castle, New York.

Consulting Engineer: Robinson & Muller Engineers, P.C.
50 Elm Street
Huntington, N.Y. 11743
Phone: (631) 271 – 0576, Fax: (631) 271 - 0592
E-Mail: MScheiner@rmengineering.com

SECTION II

INTRODUCTION

General

This Engineering Report has been prepared for The Summit Club at Armonk project, the development of a housing community of 72 townhomes and golf and country club. There are also future plans for expansion of the residential complex with additional townhomes and private guest cottages. A projected flow of 45,000 gpd shall be used as the basis of design when accounting for contributions to the existing STP from the proposed and potential future development. The project site is the Summit Club golf course in Armonk, Town of North Castle, New York.

The total project site area for the Summit Club development is 156.29 acres. The existing STP is situated on the site between the ninth hole green and fairway bunker within the existing framed building. This building will be used in the redevelopment as an equipment storage building. As such, a replacement STP is proposed within the hillside between the existing driveway to the existing STP building and the south side of the existing driving range.

Project Site

The overall existing site where the STP will be located varies in elevation from approximately 640 feet above mean sea level (AMSL) in the northeast portion of the property to 400 feet AMSL in the western portions of the property. The STP will be in the southeast portion of the property where the ground surface is proposed to be approximately 534-574 feet AMSL. Based on the subsurface soil and foundation investigation report by Carlin-Simpson & Associates in Appendix A, groundwater was only encountered in one of ten borings taken and four of eleven test pits excavated, reflecting variation in the location of long-term water table at the project site. Based on the information available from the investigation, it is assumed that the flow direction in the project site area is generally to the west.

The subject parcel for the STP and residential complex is a part of lot 101.02-1-28.2 (568 Bedford Road) and the golf course is on parcel 101.02-1-28.1 (570 Bedford Road). There are fourteen (14) currently private wells onsite, which are at least 50 feet away from the STP outfall line. The STP shall be serviced by a dedicated 1” water service tapped into the proposed potable water distribution line from the proposed potable water treatment building to be located adjacent to the existing STP building.

SECTION III

PROPOSED TREATMENT PLANT CAPACITY

SANITARY SEWAGE FLOW

The average daily design flow for sewage is the average of the daily volumes of sewage to be received at the STP for a continuous twelve (12) month period. For the community and golf club, the flow is determined by the criteria from Table B3 – Typical Per-Unit Hydraulic Loading Rates from the Department of Environmental Conservation (NYS DEC) "Design Standards for Wastewater Treatment Works, Intermediate Sized Sewage Facilities" (2014 Edition) as follows:

1.	Townhomes	162 Bedrooms	@ 110 gpd/Bedroom	=	17,820 gpd
2.	Bar & Grill	35 Seats	@ 16 gpd/Seat*	=	560 gpd
3.	Restaurant	252 Seats	@ 28 gpd/Seat*	=	7,056 gpd
4.	Golf Tournament	144 Golfers	@ 16 gpd/Golfer*	=	2,304 gpd
5.	Country Club	20 Employees	@ 12 gpd/Employee*	=	240 gpd
6.	Golf Course (GC)	15 Employees	@ 12 gpd/Employee*	=	180 gpd
7.	Seasonal GC Staff	12 Bedrooms	@ 60 gpd/Bedroom*	=	720 gpd
8.	Pool	257 Swimmers	@ 8 gpd/Swimmer*	=	2,053 gpd
9.	Spas	24 Swimmers	@ 8 gpd/Swimmer*	=	192 gpd
10.	Excess Pool Deck	170 Swimmers	@ 8 gpd/Swimmer*	=	1,363 gpd
11.	STP Equipment Washdown/Lab	___	55 gpd	=	55 gpd
			Proposed Total Flow	=	**32,543 gpd**
			Future Total Flow (Including Add'tl Guest Cottages + Townhomes)	=	**8,360 gpd**
			Total Average Daily Design Flow	=	**40,903 gpd**
			SAY	=	**45,000 gpd**

*These identified per-unit hydraulic loading rates in the above table have been reduced by 20% because they follow the guidelines set in the NYS DEC design standards for establishments with water-saving plumbing fixtures.

In the table above, items 1-9 result in a proposed flow of 32,543 gpd and the breakdown also includes planned future flows with a maximum contribution of 12,457 gpd. Therefore, a maximum average daily design flow of 45,000 gpd will be used to size the STP for the purposes of this report.

The State Pollutant Discharge Elimination System (SPDES) Permit No. 0069299 for the existing STP established an effluent limitation for flow of 0.016 MGD (16,000 gpd), while the actual flows are minimal and taken care of with temporary facilities while the golf course is closed for renovations. Since this report will evaluate and involve the complete replacement of the existing STP, the flow through the STP is proposed to increase to 45,000 gpd. With the existing discharge permit being expired and the increase in flow, a new SPDES Permit will be obtained from the NYS DEC as required.

In accordance with “Figure 1” of the Ten State Standards, the peak hourly flow for a population of approximately 600 (45,000 gpd ÷ 75 gpd per person) is 3.93 times the average daily flow rate. Peak hourly flow is therefore calculated to be 45,000 gpd x 3.93 = 176,850 gpd (122.81 gpm, say 123 gpm).

SECTION IV

INFLUENT SEWAGE CHARACTERISTICS

The standard influent untreated sewage design characteristics provided in the New York State Department of Environmental Conservation (NYS DEC) "Design Standards for Wastewater Treatment Works, Intermediate Sized Sewage Facilities" (2014 Edition) are as follows:

BOD_5:	155-286 mg/L
TSS:	155-330 mg/L
TP:	6-12 mg/L
Ammonia:	4-13 mg/L
FOG:	70-105 mg/L

Based on the above influent sewage characteristics and influent flow of 45,000 gallons per day, the influent loads that the expanded STP shall be capable of treating have been calculated as follows:

lbs. of pollutants = mg / L pollutant x 8.34 lb. / gal. x flow (Q) in gals. / day x 10^{-6}

BOD_5:	240 mg/L x 8.34 lb. /gal. x 45,000 gpd x 10^{-6}	=	90.07	lb. BOD_5 / day
TSS:	240 mg/L x 8.34 lb. /gal. x 45,000 gpd x 10^{-6}	=	90.07	lb. SS / day
TKN:	40 mg/L x 8.34 lb. /gal. x 45,000 gpd x 10^{-6}	=	15.01	lb. TKN/day
TP:	8 mg/L x 8.34 lb. /gal. x 45,000 gpd x 10^{-6}	=	3.00	lb. TP/day

SECTION V

EFFLUENT REQUIREMENTS

The treated effluent from the proposed Summit Club community and golf club will discharge to surface water, an onsite tributary to Byram River classified by NYS DEC as a Class B(T) stream. Class B(T) streams typically support public swimming, recreation, and fishing, more specifically trout populations. Due to inconsistencies in flow and effluent dilution ratio. The receiving tributary is classified as an "intermittent stream," which has typical effluent limits as specified in Table B-4B of the NYS DEC standards.

Consequently, we expect that the State Pollutant Discharge Elimination System (SPDES) permit to align with these limits. The 30-day arithmetic average flow limit listed on the permit will be the design flow of 45,000 GPD, and the preliminary effluent limits for the parcel provided by the NYS DEC Division of Water Quality specific to the project are outlined below:

$BOD_{5:}$	5.0 mg/L Daily Max.
TSS:	10.0 mg/L Daily Max.
Settleable Solids:	0.1 mg/L Daily Max.
Ammonia (Summer):	0.9 mg/L Daily Max.
Ammonia (Winter):	1.8 mg/L Daily Max.
Phosphorus:	1.0 mg/L Monthly Average
Fecal Coliform:	400 No./100 mL (7-day geometric mean)
Fecal Coliform:	200 No./100 mL (30-day geometric mean)

The daily maximum limit for the Summer is applicable between June 1st through October 31st each calendar year, while the limit for Winter applies November 1st through May 31st. Based on the selected Purestream Biologically Engineered Single Sludge Treatment (BESST) process for the STP replacement, the following effluent quality is anticipated:

$BOD_{5:}$	< 5.0 mg/L
TSS:	< 10.0 mg/L
Ammonia:	< 0.9 mg/L
Phosphorus:	< 1.0 mg/L
Fecal Coliform:	< 200 No./100 mL (30-day geometric mean)

The effluent quality is expected to meet or exceed the effluent requirements.

SECTION VI

TREATMENT OPTIONS

Based on density restrictions, formal sewage treatment must be provided for the proposed project. Generally, two options are available:

- Off-Site Treatment and
- On-Site Treatment.

Off-Site Treatment

Off-site treatment requires that there be an existing STP which:

- is sufficiently close to the project site to allow for economical transfer of sanitary sewage flow from the project site to the host STP site;
- has sufficient uncommitted excess capacity for the expected proposed and future sanitary sewage flow (if any); and
- is capable of treating the sewage to the required effluent quality.

After reviewing the site and the surrounding area, no STP sites were found that could potentially serve as an optimal alternative to replacing the existing STP and have the capacity to receive sewage from the Summit Club golf course and residential complex, and therefore we have concluded that it is not feasible to use an off-site treatment option.

On-Site Treatment

Some onsite treatment plants use extended aeration process or Rotating Biological Contactors (RBCs) followed by a deep bed denitrification filter(s). Other STPs use Sequencing Batch Reactors (SBR), Membrane Bio-Reactors (MBR), and the Biologically Engineered Single Sludge Treatment (BESST) process.

The BESST process was selected for the project based upon its record of process stability and ability to consistently achieve the NYS DEC & Westchester County sanitary sewage design goals for treatment of sanitary sewage.

Sanitary sewage will be transported to the STP from the residences and amenities complex via an 8” PVC gravity collection and conveyance system designed by JMC Planning Engineering, Landscape Architecture & Land Surveying, PLLC (JMC).

Description of Selected BESST Treatment Process:

The BESST process is a continuous flow modified extended aeration process. Sewage enters first into the anoxic chamber where it mixes with Return Activated Sludge (RAS) from the clarifier. The nitrogen removal process is completed here as nitrite (NO_2-N) and nitrate (NO_3-N) produced in the aeration zone are converted to nitrogen gas (N_2). Some of the influent BOD_5 is consumed in this denitrification process. The dissolved oxygen (DO) level is maintained below 0.2 mg/l, and submerged mixers keep mixed liquor suspended solids (MLSS) in suspension.

The mixed liquor is transferred by gravity from the anoxic chamber to the far end of the aeration chamber through a submerged transfer pipe. BOD_5 removal and nitrification take place here as the mixed liquor is aerated by fine bubble air diffusers. The aerated mixed liquor then flows into the bottom of the clarifier by means of a baffle.

In the clarifier, solids settle to the bottom as the supernatant flows over the effluent weir and is gravity discharged to the effluent recharge system. Waste Activated Sludge (WAS) sludge is returned to the sludge holding tank.

SECTION VII
TREATMENT FACILITY DESIGN

Drawing No. 1 – STP Site Plan shows the proposed location of the STP and effluent piping connecting into the existing outfall line that discharges to surface water. Drawing No. 2 - Hydraulic Profile illustrates the proposed hydraulic flow profile of sewage and sludge flows through the STP through the existing sewer manhole that will be used as the connection point into the outfall line.

The proposed sewage treatment and disposal facilities will consist of an equalization tank, a 45,000 gpd BESST process train including a sludge holding tank, an influent screening device and constant head box on a precast concrete access slab, a proposed flow metering effluent manhole, approximately 300 feet of 6" PVC piping to reach the existing outfall piping, and a proposed 20.5-ft by 35-ft masonry STP building containing a tertiary filter and two (2) UV treatment units. Each step of the process and the required support systems are described below.

All side walls, end walls, bottom, and partitions of the BESST process and equalization tanks shall be of structural grade ASTM-A36 steel plate and all internal piping will be constructed of type 316 stainless steel. There shall be full grating over each of the BESST tanks, including the tertiary filter within the building, and a set of stairs for Operator access to the tertiary filter that extends above the first floor elevation of the STP building. The perimeter of the process tank and filter will be equipped with galvanized steel safety handrails and kickplate at top of tank elevation.

Influent Equalization Tank

The 8" diameter PVC gravity sewer line has a proposed invert into the equalization tank set at 4.0 feet below the top of tank elevation. The existing flow equalization tank will be equipped with two (2) Goulds Model 3887 WS05BHF non-clog submersible pumps to convey sanitary sewage out of the tank to the anoxic tank internal to the BESST process train. Each pump will have the capacity to handle at a minimum the peak influent flow of 45 gpm at 14.51 ft. TDH. Pump performance curves can be found in Appendix B.

The equalization volume in the tank will be provided between the lead pump "off" elevation to the lag pump "on" elevation, consisting of a proportion of the daily average flow, sludge holding tank volume, and tertiary filter volume.

Equalization Volume Required	=	20% of Daily Average Flow + 25% Sludge Holding Tank Volume + 5% Daily Flow Filter Volume
	=	45,000 x 0.20 + 13,757 x 0.25 + 45,000 x 0.05
Total Required Equalization Volume	=	14,689.25 gallons (1,963.80 cu. ft.)

The minimum vertical difference between "Lag Pump On" float level elevation and the "Lead Off" float level elevation shall be 5.0 ft. A total equalization storage volume of 15,051 gallons will be provided, which is well above the minimum calculated above.

The applicable criteria of Chapter 60 "Screening, Grit Removal and Flow Equalization" of the Ten State Standards including general criteria and the special considerations and standards for flow equalization structures. The 34'-0" x 12'-0" x 7'-0" SWD equalization tank has full grating over the tank with removable panels for operator access. Operation of the pumps will be controlled by use of a pressure transducer, and all pressure transducer and tank elevations are shown below:

Float	**Height**
Top of Equalization Tank	585.25
Approximate Grade El.	585.00
Influent Line El.	581.00
High Water Level Alarm	580.75
Lag Pump On	580.25
Lag Pump Off	578.25
Lead Pump On	577.25
Lead Pump Off	575.25
Low Water Level Alarm	574.75
Bottom of Equalization Tank	573.75

Table – Equalization Pump Float Levels

Influent Screening Device

The two (2) explosion proof submersible raw sewage pumps specified in the previous section will pump the sewage from the equalization tank to a covered fine bar screen via two (2) 3" diameter force mains. The bar screen shall be mounted on the precast concrete access slab that is located between the proposed equalization and BESST process tank. See Drawing No. 1 – STP Site Plan for proposed location of the access slab. The screen

will have the capacity to process the flow from both equalization pumps in the event that they run simultaneously. The screened solids will be disposed of manually. The selected screening device is a model MB 260T by Or-Tec, Inc. with a 2 mm screen opening. The screened influent will pass through a constant head box prior to being conveyed to the anoxic tank via gravity.

Anoxic Compartment

See Appendix C – Manufacturer's Process Calculations for Anoxic Compartment calculations.

The equalized sewage will enter the anoxic compartment where it will mix with the return activated sludge (RAS) which is returned from the bottom of the clarifier by means of air lift pumps. This anoxic compartment will act as a selector conditioning zone for the microorganisms which will consume the pollutants in the sewage. Some of the influent BOD_5 will be consumed by the denitrifying bacteria as they complete the nitrogen removal process (Denitrification) and convert nitrate (NO_3) to nitrogen gas (N_2). Two (2) electric submersible mixers on slide rail assemblies with manual hoists will be provided within the anoxic compartment to prevent settling. The mixed liquor will flow into the far end of the bottom of the aeration compartment through a submerged transfer pipe.

The BESST anoxic zone will be 14'-0" wide by 4'-0" long (plan view at the water level), and have a 10'-6" effective depth (12'-0" total sidewall depth). The total volume of the anoxic zone shared between the two trains shall be 993.85 cu.ft. (7,434.0 gallons) . With a design flow of 45,000 GPD, the detention time will be 3.96 hours.

Aeration Compartment

See Appendix C – Manufacturer's Process Calculations for Aeration Compartment calculations.

The mixed liquor will be aerated by a fine bubble air diffusion system to provide process oxygen and prevent solids settlement. The remaining BOD_5 will be removed and the nitrification process which begins as ammonia (NH_3) is converted to nitrite (NO_2) and nitrate (NO_3). The mixed liquor will then flow into the bottom of each clarifier by means of a baffle design integral to the clarifier. Return sludge will be removed from the bottom of each clarifier and pumped to the anoxic zone by means of air lift pumps. Oxygen levels in each aeration compartment will be controlled by utilizing a portable hand-held D.O. monitoring probe and adjusting the manual VFD's on each blower.

The air requirement for the aeration tanks is determined by the manufacturer based on the oxygen and air consumption rates, including a safety factor of 5 scfm. The calculation is outlined below:

Air Flow Rate Required:

$$Oxygen = \ Q((S_O - S_R)/0.68) - 1.42P_X + \ 4.57Q(N_O - N)$$

$$Oxygen = \ 170.33((0.24 - 0.0037)/0.68) - 1.42(14.004) + \ 4.57(170.33)(0.04 - 0.001)$$

$$Oxygen = \ 69.655 \ kg \ O_2/day$$

$$Air = O_2(\frac{c_S}{c_S - 2})(\frac{o_K}{0.024a})$$

$$Air = 69.655(\frac{8.1224}{8.1224 - 2}))(\frac{1.30}{0.024 * 30})$$

$$Air = 166.85 \ Nm^3/h$$

$$Air = \left(166.85 \frac{Nm^3}{h} * 35.31 \frac{m^3}{ft^3} * \frac{1 \ min}{60 \ hr}\right) = 98.19 \ cfm + 5 \ cfm =$$

$$Air = 103.19 \ cfm$$

Therefore, for each aeration tank the required amount of air is 51.60 cfm, and the air provided for the aeration tanks will come from the main process blower. See Appendix C for a breakdown of the manufacturer's BESST calculations as well as a list of inputs for the above calculations.

Each proposed aeration compartment will be 14'-0" wide by 9'-2 ½" long (plan view at the water level), and have a 10'-6" effective depth (12'-0" total sidewall depth). The aeration volume in each treatment train will be 1,757.69 cu.ft. (13,147.5 gallons), for a total volume of 3,515.37 cu.ft. (26,295 gallons). With the design flow of 45,000 GPD, the detention time will be 14.02 hours. The combined detention time for the anoxic zones and the aeration zones will be 17.98 hrs.

Clarifier

See Appendix C – Manufacturer's Process Calculations for Clarifier calculations.

The clarifier has a triangular cross-section. Mixed liquor will enter the clarifier through the baffle at the bottom of the clarifier and flow upward. As the mixed liquor rises, heavier solids settle out, and in effect, form a blanket which filters out colloids and very fine particles. A distinct interface forms between the supernatant and the sludge blanket. An air lift pump will be used to remove the activated sludge from the bottom of the clarifier and either discharge it to the anoxic chamber or waste it to the sludge storage tanks. Nitrified return activated sludge (RAS) will be recycled to the anoxic chamber to maintain the biomass concentration required for the treatment process. The RAS rate is proposed to be 4 times the design flow rate for the STP (45,000 GPD x 4 / 1440 min/day / 2 process trains = 62.50 gpm per process train).

Since there are two (2) sludge airlifts rated at 13 scfm each and two (2) skimmer airlifts rated at 5 scfm, the required amount of air for the airlift lines is 36 scfm. The airlift calculations from the manufacturer and performance curves are shown in Appendix C.

Periodically, waste activated sludge (WAS) will be pumped to the sludge storage tanks to control the solids retention time (SRT) of the biomass. FOG and skimmings will be transferred through the airlift system back to the sludge holding tanks. The design SRT is 29.2 days. An air lift skimmer will be used to remove floatables such as light plastics, fats and oils from the surface of the clarifier. Clarifier supernatant flows over a weir into a trough and flows by gravity to the tertiary filter.

Each clarifier will measure 14'-0" wide by 11'-0" long (plan view at the water level), and have a 10'-6" effective depth (12'-0" total sidewall depth). Each clarifier has a volume of 811.76 cu.ft. (6,072 gallons), for a total of 1,623.53 cu.ft. (12,144 gallons). Detention time in the clarifiers at average flow of 45,000 gpd will be 6.48 hrs. The combined detention time for the anoxic zones, the aeration zones, and the clarifiers will be 24.46 hrs. Surface loading rate will be 146.10 GPD/sq.ft. (45,000 gpd/(2 units X 154 sq.ft. per unit) and weir loading rate will be 1,607.14 GPD/Ft. (45,000 GPD/(2 Units X 14'-0" L)). These values are within the limitations set forth by the Ten States Standards.

Blowers

1. Process Air / Airlift Blowers
   A total of two (2) blowers, each with a minimum capacity of 148 scfm, will be provided for the aeration tanks and sludge airlifts, which is greater than the required capacity of 138.19 cfm (103.19 cfm + 36.0 cfm = 138.19 cfm) for both tanks, See Appendix C – Manufacturer's Process Calculations for the aeration and airlift calculations. One (1) blower will act as the duty blower, and the standby blower will as function as a common spare for the aeration/airlift, the equalization tank, sludge holding tank, and tertiary filter. The blower selected for this duty is the Kaeser Model BB69C with a 10.0 HP motor. See Appendix D for blower performance data. Each blower will be supplied with a manual VFD control system with an electrical bypass. High and low pressure switches will be provided with manual valves to accommodate usage of the standby blower.

2. Equalization Tank / Sludge Holding Tank Air Blowers
   Two (2) blowers, each with a minimum capacity of 74 scfm, will be dedicated for the equalization and sludge holding tanks. This minimum capacity is greater than the required capacities of the equalization tanks and sludge holding tank of 18.81 cfm and 55.22 cfm, respectively. The blower selected is the Kaeser Model BB52C, with a 5.0 HP motor, see Appendix D for blower performance data. Each blower will be supplied with a manual VFD control system with an electrical bypass. High and low pressure switches will be provided with manual valves to accommodate usage of the standby blower.

3. Tertiary Filter Air Blower
   One (1) duty blower, with a minimum capacity of 160 scfm, will be provided for the tertiary filter, which is greater than the required capacity of 126.40 cfm, based on an air supply rate of 4 cfm/sq. ft. of filter beds. The total square footprint of the proposed filter beds is 31.5 square feet. The blower selected is the Kaeser Model BB69C, with a 10.0 HP motor, See Appendix D for blower performance data. High and low pressure switches will be provided with manual valves to accommodate usage of the standby blower.

The blowers will be provided with sound enclosures and will be housed in the proposed STP control building.

Tertiary Filtration and Disinfection

To meet the stringent effluent BOD_5 and TSS limits for the STP outlined in Section V, a dual-media, dual-bed auto backwash tertiary filter and ultraviolet disinfection will be provided following the BESST extended aeration process. The tertiary filter unit to be provided as a pre-designed unit is the PURESTREAM PST-31.5 that includes filter beds, a clear well chamber, and backwash capabilities to treat secondary effluent to meet the design limits.

Drawings of the tertiary filter unit are included in Drawing No. 3 – Manufacturer's STP Layout. All side walls, bottom, and partitions of the filter will be of structural grade ¼" steel plate, the internal air scour lines will be Schedule 40 perforated PVC pipe, and the backwash surge and backwash pump piping is Schedule 40 PVC pipe with iron pipe fittings.

Disinfection of the effluent from the tertiary filter will be achieved using two (2) Enaqua Model M4 ultraviolet disinfection system units that will also be located in the proposed STP control building. The proposed in-line units will be installed in a flow-through configuration and fed by gravity from the filter. Isolation valves will be provided on the incoming lines to control flow in the event of maintenance, replacement, or repair work on one unit. See Appendix E regarding additional information on the UV disinfection system specified.

Effluent Flow Metering

A flow meter will be provided at a common location in the proposed 5' diameter sampling manhole and effluent flow meter chamber. The instrumentation will provide a visual readout of instantaneous flow using a flow totalizer and a flow recorder and will be located in a dry location adjacent to the control equipment in the proposed STP control building.

Effluent Recharge

The treated effluent from the STP is discharged to Byram River from an existing outfall to the tributary located in the northwest region of the subject parcel. The replacement STP will be connected into the existing buried 6" diameter SDR-35 PVC outfall line at an existing manhole west of the existing STP building. The effluent recharge piping and structures shall remain intact downstream of the referenced manhole, and no sufficient evidence exists to warrant a modification of the existing outfall location.

Sludge Holding Tank

The sludge holding tank will be used to hold wasted sludge prior to disposal and will be provided as a part of the main treatment process tank. Sludge holding tank sizing is based on an equivalent sewage flow of 75 gpd per capita and 3 cubic feet of sludge per capita per month. For the equivalent population of 600 people (45,000 gpd ÷ 75 gpd/capita) and 3 cubic feet of sludge per capita per month, the required tank volume is 1,800 cu.ft. (600 people X 3 cu.ft./capita), or 13,464.0 gallons. The sludge holding zone will measure 14'-0" wide by 9'-9" long (plan view at the water level) with a 10'-6" SWD (12'-0" total sidewall depth), providing a total volume of 1,839.17 cu. ft. (13,757 gallons). This will provide 39.17 cu. ft. (293.00 gal) greater than the 1,800 cu. ft needed of sludge storage, or approximately 30.65 days of storage capacity.

Air will be supplied to the sludge holding tank at a minimum rate of 30 cfm per 1000 cu. ft. of tank volume via non-clog coarse bubble diffusers to keep the contents aerobic to avoid septic odors and contents of the sludge holding tanks in the completely mixed condition. Consequently, the total air supply rate will be as follows:

CFM = 1,839.17 cu.ft. x 30 cfm/1000 cu. ft.
= **55.17 cfm**

Sludge and scum removal will be via scavenger truck to an approved off-site treatment facility, while the sludge supernatant will be returned by gravity flow to the anoxic zone of the treatment process. The supernatant pump provided will be the Goulds Model 3887 WS05BHF submersible sewage pump, which will provide a minimum capacity of 76 gpm at 10.58 ft. TDH to elevate the sludge supernatant back to the equalization tank so decanted liquid can be rescreened prior to entering the treatment tanks. The sludge decant pump will be controlled by a dedicated control panel, which will contain a start timer, a stop timer, and a float override. Pump performance curves can be found in Appendix B.

Chemical Dosing

Dosing of alum to the aeration compartments of the BESST system is required to comply with the Total Phosphorus effluent limit dictated by the SPDES permit. A suitably sized chemical metering pump and storage tank with containment will be provided.

STP Control Building

The proposed STP control building will contain the tertiary filter, two (2) UV units, five (5) blowers, and spare mechanical equipment, electrical panels and controls.

A laboratory area will be provided within the building for the Operator, which shall include an emergency eyewash and safety shower installed as per 10 State Standards requirements. The structure will provide the necessary protection of the process controls and blowers from the elements (cold weather, rain, frost) and a dry, heated environment with proper ventilation for operating personnel for operation and maintenance functions, process testing, and record-keeping. Sufficient lighting shall be provided for safe working conditions.

The laboratory area of the STP control building will provide space to store instruments and test kits for process monitoring. The instruments and test kits to be provided will include:

* Portable dissolved oxygen meter
* pH meter
* Temperature meter or thermometer
* 1-liter graduated cylinders for settleability tests
* Hach DR900 colorimeter for Ammonia, Nitrite and Nitrate Measurement

Sufficient storage within the STP control building has been allotted for tools, spare parts, and lubricants as well as drawer space for the operator to store maintenance logs and treatment plant records. Spare parts and lubricants will be provided as part of the facility construction. Required logs and records will be discussed in detail in the facility Operation and Maintenance Manual to be prepared by the Engineer of Record during the construction period.

A new asphalt driveway will be paved on the west side of the STP control building to allow for Operator and visitor parking as well as a turnaround point for sludge pump trucks.

Standby Power

A standby gas generator will provide power to all the STP equipment during utility power outages. The generator will be pad mounted outside the STP control building in a louvered enclosure and will be provided with residential grade silencer.

Miscellaneous Facility Design Features

Separation Distances - Table B-1 "Recommended Minimum Aerial Separation Distance from Treatment Facility" of the NYS DEC standards for Intermediate Sized Wastewater Treatment Systems requires a 200-ft. minimum radial distance to existing downwind dwellings from STP treatment processes enclosed in a building. Table B-1 also requires a 150-ft. minimum separation distance from the treatment units to neighboring property lines with residential use. The above requirements are met for the replacement STP process as shown in the proposed site plan in Figure 1.

Table B-2 "Minimum Horizontal Separation Distances" presents the 50-ft. distance requirement for sewer piping from drilled wells. The existing private wells on the parcel are all located greater than 50 feet from the proposed gravity sewer piping for the replacement STP.

Water Supply - There shall be a 1" diameter water service for the STP that taps into the water supply distribution system located approximately 30 ft southwest of the proposed STP control building that runs from the proposed water treatment plant. A reduced pressure backflow preventer will be provided on the water supply into the treatment plant to protect the community water supply from possible contamination.

Ventilation - Ventilation will be provided to maintain a dry, comfortable condition inside the control building. Six (6) air changes per hour will be provided.

Testing - The design documents will contain provisions for structure, piping and equipment testing in accordance with the NYS DEC Standards and the requirements outlined in 10 State Standards. This will include structure water tightness testing, piping pressure testing, and operational testing of equipment (including pumps, controls, and alarms).

Certifications - Manufacturers certifications of successful equipment testing and Engineer of Record certification of installation and testing will be provided in accordance with the provisions of Sections F and G of the NYS DEC Standards.

Sampling Locations - Wastewater samples are to be taken at the plant influent (equalization tank) and the plant effluent (flow meter chamber). The sample locations are identified in the SPDES process flow diagram presented in Appendix F – Sampling Locations.

APPENDIX A

SOIL BORING RESULTS

BY CARLIN-SIMPSON & ASSOCIATES

CARLIN • SIMPSON & ASSOCIATES

Consulting Geotechnical and Environmental Engineers

61 Main Street, Sayreville, New Jersey 08872
Tel. (732) 432-5757
Fax. (732) 432-5717

Principal:
Robert B. Simpson, P.E.

Associates:
Robert H. Barnes, P.E.
Meredith R. Anke, P.E.
Kurt W. Anke
Eric J. Shaw

13 February 2013
Revised 16 October 2013

Brynwood Partners, LLC
c/o Corigin Holdings
505 Fifth Avenue, 22nd Floor
New York, NY 10017

Attn: Ms. Megan Maciejowski

Re: Report on Subsurface Soil and Foundation Investigation
Brynwood Club Development
Bedford Road
Town of North Castle, NY (12-175)

Dear Ms. Maciejowski:

In accordance with our proposals dated 20 November 2012 and 9 September 2013 and your subsequent authorization, we have completed a Subsurface Soil and Foundation Investigation for the referenced site. The purpose of this study is to preliminarily determine the nature and engineering properties of the subsurface soil and bedrock as well as the groundwater conditions for the planned development, to recommend a practical foundation scheme, to determine the allowable bearing capacity of the site soils, and to determine the subsurface soil and groundwater conditions and soil permeability in the new stormwater management areas.

We understand that the planned construction will consist of 21 new structures, roadways, parking areas, retaining walls, tennis courts, underground utilities, and a stormwater management system. To guide us in our study, you have provided us with a site plan that indicates the existing site conditions and the location of the planned new development.

Our scope of work for this project included the following:

1. Reviewed the proposed layout, the existing site conditions, the expected soil conditions, and planned this study.

2. Retained General Borings, Inc. to advance 11 test borings at the subject site.

3. Retained Traficante Contracting Inc. to excavate 18 test pits at the subject site.

4. Inspected ten (10) supplemental test pits that were excavated at the site by Brynwood Club personnel.

5. Laid out the boring and test pit locations in the field, provided full time inspection of the explorations, obtained soil samples, and prepared detailed logs and a Boring and Test Pit Location Plan.

6. Performed three (3) field percolation tests and one (1) borehole permeability test.

7. Performed soil identification tests on selected soil samples in our laboratory.

8. Analyzed the field and laboratory test data and prepared this report containing the results of this study.

SITE DESCRIPTION

The project site is located on the Brynwood Club property on Bedford Road in North Castle, Westchester County, New York. The subject property is currently occupied by a golf club with a clubhouse building, tennis courts, and a few smaller out-structures. The proposed development area is also occupied by an asphalt paved parking lot and driveways as well as grass lawn areas and wooded areas. There are numerous existing underground utilities located throughout the property.

Within the proposed development area, the existing site grades vary from approximately elevation +610.0 at the southwest corner of the subject site and the westernmost portion of the site, to elevation +640.0 on the east side of the existing clubhouse building, to elevation +674.5 in the existing tennis court area in the northeastern portion of the property.

SUBSURFACE CONDITIONS

To determine the subsurface soil, bedrock, and groundwater conditions, we advanced 11 test borings and 28 test pits at the site. The borings and test pits were performed at the locations shown on the enclosed Boring and Test Pit Location Plan. Detailed logs have been prepared and are included in this report. Our field engineer visually identified all soil samples and selected soil samples were tested in our laboratory. The results of these tests are also included in this report.

Soil

The soil descriptions shown on the boring and test pit logs are based on the Burmister Classification System. In this system, the soil is divided into three components: Sand (S), Silt ($) and Gravel (G). The major component is indicated in all capital letters, the

lesser in lower case letters. The following modifiers indicate the quantity of each lesser component:

Modifier	Quantity
trace (t)	0 -10%
little (l)	10% - 20%
some (s)	20% - 35%
and (a)	35% - 50%

The subsurface soil conditions observed in the borings and test pits can be summarized as follows:

Stratum 1 Topsoil — The surface layer at most of the boring and test pit locations consists of brown topsoil that typically ranges from about 0'3" to 1'6" in thickness.

Stratum 2 Existing Fill — Beneath the topsoil and at the surface in three (3) of the borings (B-6, B-8, and B-9) and ten (10) of the test pits (TP-2, TP-9, TP-10, TP-12, TP-14, TP-16, TP-19, TP-21, TP-26, and TP-28) is existing fill that consists of loose to medium dense brown coarse to fine SAND, little (to and) Silt, trace (to some) coarse to fine Gravel. Cobbles, boulders, topsoil, roots, and debris were also present within the fill at some of the test locations. The existing fill was encountered to depths ranging from 1'0" to more than 9'0" beneath the existing ground surface. Test pits TP-9 and TP-28 were terminated in the fill at final depths of 6'9" and 9'0" beneath the ground surface, respectively.

Stratum 3 Sandy Silt or Silty Sand — Underlying the topsoil and existing fill is virgin soil that is comprised of medium dense to dense brown, light brown, or gray brown SILT some (to and), coarse to fine Sand, trace (to little) coarse to fine Gravel or coarse to fine SAND, little (to and) Silt, trace (to and) coarse to fine Gravel, with occasional cobbles and boulders. The Sandy Silt or Silty Sand stratum continued to depths ranging from 2'0" to 12'0" below the existing ground surface. Boring B-8 and test pits TP-8, TP-10, TP-12, TP-19, TP-20, TP-22, and TP-26 were terminated in this stratum at final depths ranging from 5'0" to 12'0" beneath the ground surface.

Stratum 4 Sand or Sandy Gravel — Below the Sandy Silt or Silty Sand at several test locations is completely weathered Gneiss bedrock that generally consists of dense to very dense brown or gray brown coarse to fine SAND, little (to some) Silt, trace (to some) coarse to fine Gravel or coarse to fine GRAVEL and, coarse to fine Sand, trace Silt. Where encountered in the borings and test pits, the completely weathered bedrock was present at depths ranging from 2'0" to 7'0" beneath the ground surface and continued to depths ranging from 4'7" to 15'2" below the existing ground surface.

Stratum 5 Gneiss Bedrock

Gneiss bedrock was encountered at 27 of the 39 test locations. Where encountered in the borings and test pits, gneiss bedrock was observed at depths ranging from 1'8" to 15'2" beneath the existing ground surface. In general, the quality of the bedrock will improve with depth.

At boring B-10, the bedrock was cored between the depths of 2'0" and 7'0". The core recovery was 86% and the Rock Quality Designation (RQD) of the recovered core was 53%. This indicates that the quality of the upper five (5) feet of the Gneiss bedrock is fair. The Gneiss bedrock is moderately weathered and in a blocky and seamy condition.

Groundwater

Observations for groundwater were made during sampling and upon completion of the drilling operations at each boring location. In auger drilling operations, water is not introduced into the boreholes, and the groundwater position can often be determined by observing water flowing into or out of the boreholes. Furthermore, visual observation of the soil samples retrieved during the auger drilling and in the test pits can often be used in evaluating the groundwater conditions.

Groundwater was encountered in test pit TP-8 at a depth of 4'1" (+609.9), in test pit TP-13 at a depth of 4'10" (+631.2), in boring B-8 at a depth of 3'3" (+608.3), in test pit TP-22 at a depth of 4'6" (+470.5), and in test pit TP-28 at a depth of 8'0" (+491.0) beneath the ground surface. Groundwater was not encountered in any of the other borings or test pits that were performed at the subject site during this investigation.

Variations in the location of the long-term water table may occur as a result of changes in precipitation, evaporation, surface water runoff, and other factors not immediately apparent at the time of this exploration. Based on the site conditions, trapped groundwater may be encountered in the silty site soils and/or along the soil/rock interface during wet periods. Proper groundwater control measures will be required in the event that trapped water is encountered in the site excavations.

Bedrock

Bedrock was encountered in 27 of the 39 explorations that were performed at the site during this investigation. Completely weathered bedrock was encountered at ten (10) test locations at depths ranging from 2'0" to 7'0" below the existing ground surface. Harder bedrock was encountered in the remaining locations and below the completely weathered rock at depths ranging from 1'8" to 15'2" beneath the ground surface. These depths correspond to bedrock elevations ranging between approximately elevation +471.0 and elevation +669.8.

Based on the boring and test pit data and the site plans provided to this office, bedrock was encountered above the planned finished floor elevation in portions of the site. The observed depth to bedrock at each boring and test pit location is summarized in Table 1 in the following section of this report.

The bedrock encountered at the site consists of weathered Gneiss. Based on our experience, the in-situ bedrock will range from highly weathered, fractured rock to massive, intact rock. Penetration into the bedrock with excavation equipment will depend of the degree of weathering and fracturing in the rock. We anticipate that the ”rippability” of the bedrock will be variable and very limited. Based on our observations, harder rock will be encountered and blasting and/or the use of hydraulic hammers will be required to excavate the harder, intact bedrock. Rock removal is discussed further in a separate section of this report.

EVALUATION

At the time of this report, the proposed layout, the proposed finished floor elevations, and the site grading were preliminary. Therefore, the following evaluation is preliminary in nature and has been generalized for the expected development. The recommendations below are intended for planning purposes only and are not intended for final design and construction. Additional subsurface investigation will be required for the proposed buildings and retaining walls. Preliminarily, we estimate that an additional 12 to 15 explorations will be required for this project. Once the site plans have been further developed, a copy shall be forwarded to our office so that we can review it along with the recommendations in this report. At that time, we will provide specific recommendations for additional subsurface investigation. After the supplemental investigation has been completed, additional geotechnical recommendations will be provided for the project site. As a result, the recommendations within this report are subject to change.

Based on the preliminary site plans, we understand that the planned construction will consist of 21 new structures that will include seven (7) golf residences, seven (7) club villas, five (5) golf cottages, one (1) fairway residences building, and one (1) clubhouse building. The proposed construction will also include new asphalt paved roadways and parking areas, retaining walls, tennis courts, underground utilities, and a stormwater management system.

The grading plan provided to this office indicates that the proposed finished floor elevations vary across the site. In addition, the fairway residences, golf cottages, and golf residences will have basements. Based on the existing and proposed grades, cuts ranging up to approximately 14’0” and fills ranging up to approximately 10’0” are expected to achieve the proposed floor slab subgrade elevations. In the proposed pavement areas, cuts ranging up to approximately 6’0” and fills ranging up to approximately 8’0” are expected to achieve the proposed pavement subgrade elevations.

The boring and test pit data indicates that there is existing fill (Stratum 2) present in portions of the site to depths ranging from 1’0” to more than 9’0” below the existing ground surface. The existing fill generally consists of loose to medium dense Sand with varying amounts of Silt and Gravel and occasional cobbles, boulders, topsoil, roots, and debris. Underlying the existing fill is medium dense to dense Sandy Silt or Silty Sand (Stratum 3). The Sandy Silt or Silty Sand is underlain by dense to very dense completely weathered Gneiss bedrock (Stratum 4) in areas followed by more competent Gneiss bedrock (Stratum 5), which was encountered at depths ranging from 2’0” to 15’2” beneath the existing ground surface. The existing fill and bedrock observations are summarized in Table 1 below.

Table 1 - Summary of Boring and Test Pit Data

Boring or Test Pit No.	Approximate Ground Surface Elevation	Depth to Bottom of Existing Fill (Elevation)	Depth to Weathered Bedrock (Elevation)	Depth to Bedrock or Auger Refusal (Elevation)
B-1	+661.0	NE	5’0” (+656.0)	8’0” (+653.0)
B-2	+628.0	NE	NE	7’0” (+621.0)
B-3	+620.0	NE	2’0” (+618.0)	4’9” (+615.3)
B-4	+628.0	NE	2’0” (+626.0)	10’6” (+617.5)
B-5	+623.0	NE	2’0” (+621.0)	8’6” (+614.5)
B-6	+617.0	1’0” (+616.0)	NE	5’6” (+611.5)
B-7	+628.0	NE	5’0” (+623.0)	15’2” (+612.8)
B-8	+609.0	5’6” (+603.5)	NE	NE to 12’0”
B-9	+674.0	7’0” (+667.0)	7’0” (+667.0)	7’6” (+666.5)
B-10	+638.8	NE	NE	2’0” (+636.8)
B-11	+640.0	NE	4’0” (+636.0)	5’6” (+634.5)
TP-1	+662.0	NE	NE	2’0” (+660.0)
TP-2	+672.0	1’10” (+670.2)	NE	4’4” (+667.7)
TP-3	+672.0	NE	NE	2’2” (+669.8)
TP-4	+672.0	NE	NE	3’6” (+668.5)
TP-5	+670.0	NE	3’8” (+666.3)	4’9” (+665.3)
TP-6	+672.0	NE	2’10” (+669.2)	4’7” (+667.4)
TP-7	+620.0	NE	NE	2’8” (+617.3)
TP-8	+614.0	NE	NE	NE to 5’0”
TP-9	+628.0	>6’9” (<+621.3)	NE	NE to 6’9”
TP-10	+625.0	3’0” (+622.0)	NE	NE to 8’0”
TP-11	+642.0	NE	3’9” (+638.3)	6’0” (+636.0)
TP-12	+635.0	5’0” (+630.0)	NE	NE to 6’6”
TP-13	+636.0	NE	NE	7’5” (+628.6)
TP-14	+625.0	5’0” (+620.0)	NE	5’0” (+620.0)
TP-15	+668.0	NE	NE	1’8” (+666.3)
TP-16	+651.0	1’10” (+649.2)	NE	4’10” (+646.2)
TP-17	+655.0	NE	NE	NE to 1’0”
TP-18	+670.0	NE	NE	NE to 7’0”
TP-19	+427.0	2’5” (+424.6)	NE	NE to 7’0”
TP-20	+415.0	NE	NE	NE to 8’0”
TP-21	+478.0	1’4” (+476.7)	NE	7’0” (+471.0)
TP-22	+475.0	NE	NE	NE to 7’6”
TP-23	+496.0	NE	NE	3’10” (+492.2)
TP-24	+564.0	NE	NE	6’8” (+557.3)
TP-25	+633.0	NE	NE	3’4” (+629.7)
TP-26	+669.0	5’6” (+663.5)	NE	NE to 8’0”

Boring or Test Pit No.	Approximate Ground Surface Elevation	Depth to Bottom of Existing Fill (Elevation)	Depth to Weathered Bedrock (Elevation)	Depth to Bedrock or Auger Refusal (Elevation)
TP-27	+561.0	NE	NE	4'4" (+556.7)
TP-28	+499.0	>9'0" (<+490.0)	NE	NE to 9'0"

Notes: NE – Not Encountered
B-8: Groundwater at +608.3
TP-8: Groundwater at +609.9
TP-9: Terminated in the Existing Fill
TP-13: Groundwater at +631.2
TP-22: Groundwater at +470.5
TP-28: Groundwater at +491.0
TP-28: Terminated in the Existing Fill

Removal of Existing Structures from New Building and Pavement Areas

Building Areas

The site plan indicates that existing structures are present in some of the proposed building areas. The existing structures will be removed as part of the proposed development. All debris resulting from the demolition of these items must be completely removed from the new building areas, extending at least ten (10) feet beyond the new building limits, where practical. This shall include the complete removal of all foundations, walls, slabs, utilities, sidewalks, pavement, and miscellaneous debris. Where the removal of existing items or associated materials extends below the planned building, the resulting excavations shall be backfilled with new compacted fill as described below.

Existing utilities, where they are encountered within the planned building areas, should be either abandoned or rerouted around the new structures. Once the utility has been rerouted or abandoned, the section of pipe and any associated structure within the building areas should be completely removed. The removal of the pipe and structure must also include any loose fill around the pipe or structure. After the pipe, associated structure, and associated loose backfill have been removed, the resulting excavation shall be backfilled with new controlled fill as described below.

New compacted fill shall consist of either suitable on-site soil or imported sand and gravel. Imported sand and gravel fill shall contain less than 20% by weight passing a No. 200 sieve. The fill shall be placed in layers not exceeding one (1) foot in loose thickness. In the proposed building area, new fill shall be compacted to at least 95% of its Maximum Modified Dry Density (ASTM D1557). Each layer shall be compacted, tested, and approved prior to placing subsequent layers.

Pavement Areas

In the proposed pavement areas, any existing structures and debris resulting from the demolition of the structures must be completely removed from the new pavement areas, extending at least five (5) feet beyond the new paving limits, where practical. The

excavations resulting from the removal of existing items shall be backfilled using controlled compacted fill. New fill shall consist of either suitable on-site soil or imported sand and gravel placed in one (1) foot loose layers and compacted to at least 92% of its Maximum Modified Dry Density (ASTM D1557).

Implications of Existing Fill

The boring and test pit data indicates that existing fill is present in portions of the site. Where encountered in the borings and test pits, the fill extended to depths ranging from 1'0" to more than 9'0" beneath the existing ground surface. These depths correspond to elevations ranging from approximately +424.6 to elevation +670.2. The depth of the existing fill is expected to be variable and may be deeper in unexplored areas of the site and around the existing site buildings.

The existing fill is not an acceptable bearing material for the new building foundations or floor slabs. The consistency and density of the fill material are not predictable. Certain areas may contain clean dense soils while other areas may contain loose material, topsoil, and/or debris. The existing fill creates the possibility of intolerable differential settlements under loading.

To eliminate the potential for damaging differential settlements, we recommend that the existing fill be completely removed from the new building areas. Based on the existing grades and the proposed finished floor elevations, we expect that some of the existing fill will be removed during the planned building excavations. However, existing fill is expected to be encountered below the planned subgrade elevation in portions of the site. Undercutting of the subgrade will be required in these areas to remove the existing fill or otherwise unsuitable materials from the building areas. The over-excavated areas shall then be replaced with new structural fill, as necessary, to achieve the planned subgrade elevations.

To further evaluate the existing fill conditions in and around the planned building areas, we recommend that a series of supplemental test pits be performed at the time of construction. The test pits should be conducted under the full time observation of a Carlin-Simpson & Associates representative. These test pits will allow us to confirm the consistency, thickness, and horizontal limits of the existing fill material.

Provided that the existing fill and any other unsuitable materials encountered during construction are removed, it is our opinion that the new structural fill and virgin soils can adequately support the new building foundations and floor slabs.

Rock Removal - Blasting Issues

As discussed above, bedrock was encountered at 27 of the 39 test locations during this study. The bedrock was encountered at depths ranging from 1'8" to 15'2" beneath the ground surface. These depths correspond to bedrock elevations ranging between approximately elevation +611.5 and elevation +669.8. Based on the site plans provided to this office, bedrock was encountered above the planned finished floor elevation in portions of the site. Bedrock may also be encountered at higher elevations in the unexplored areas of the site.

The bedrock encountered in the borings and test pits consists of weathered Gneiss. Based on our experience, the in-situ bedrock will range from highly weathered, fractured rock to massive, intact rock. To excavate the rock, the upper 1'0" to 5'0" of rock may be "rippable" by using large construction equipment. The use of hydraulic hammers and/or blasting will be required in order to achieve deeper excavations. Zones of weathered rock may exist deeper than 5'0" but conditions are expected to be highly variable. Hard rock will be encountered during construction.

In order to develop the site, rock removal will be required in areas to achieve the proposed grades. Rock removal may also be required for the new pavement and utilities in portions of the site. Rock blasting will likely be required to achieve the proposed grades in areas. Nearby buildings and existing underground utilities could be affected by the blasting.

The Blasting Contractor should avoid over-blasting the rock. Over-blasting will disturb the deeper intact rock that will be used as bearing material for the proposed foundations and floor slab.

The blasting operation will be monitored by a seismologist using a seismograph. The Peak Particle Velocity emanating from any blast will be restricted to 2.0 in/sec. Each blast will be monitored to insure that this criteria is not exceeded.

The U.S. Bureau of Mines [Nicholas et al (1971)] has established that a threshold of 4.0 in/sec will likely crack plaster and thus they recommend that the safe vibrational criterion be 2.0 in/sec. This criterion has been used successfully in the industry. Each blast will be monitored independently to insure that this criterion is not exceeded. The monitoring results shall be provided to the Blasting Contractor as soon as possible so that the blasting program can be modified if necessary.

We recommend that a minimum of four (4) monitoring points be established, to the north, east, south and west of the planned blast area. The seismograph sensors should be placed near the closest structure and at any structures identified during the pre-blast survey that are considered to be susceptible to vibration damage.

Prior to the start of any construction, a Blasting Management Plan shall be prepared by the Blasting Contractor for this project. This plan shall be in accordance with State regulations and the Explosive Materials Code, NFPA No. 495, National Fire Prevention Association. Additionally, all blasting should adhere to the provisions of 29 CFR Ch. XVII Section 1910.109 for explosives and blasting agents and to all local requirements.

Prior to any blasting work being done, a licensed professional engineer shall be retained to perform a detailed pre-blast survey of existing structures located within 500 feet of the planned blast area. The pre-blast survey shall be conducted in accordance with the requirements of local authorities. A copy of all reports prepared by the licensed engineer shall be submitted to the Town Engineer and the Owner's representative in a timely manner.

Prior to the beginning of blasting, a notice will be sent to all residential and commercial property owners within a 500 foot radius of the blast area. This notification will

be given at least 48 hours before blasting takes place. A contact person will be established and named in this notice to respond to all concerns raised by nearby residents during the blasting phase of the project. The contact person will respond to any inquiries within 24 hours.

Preparation of New Building Areas and Removal of Existing Fill

In order to prepare the building areas for construction, all surface materials such as topsoil, asphalt, and surface vegetation shall be removed from the planned building areas, extending at least ten (10) feet beyond the new construction limits, where feasible.

The boring data indicates that existing fill is present within portions the proposed building areas. Fill material may also be present in other unexplored portions of the site. Where encountered in the test borings, the existing fill extended to depths ranging from about 1'0" to 7'0" below the existing ground surface. As shown in Table 1 above, the approximate bottom of the fill material ranges from elevation +603.5 to elevation +670.2. The existing fill is expected to vary in thickness across the site and may extend deeper in the unexplored areas and around the existing site structures.

After the surface materials are removed, the existing fill shall be excavated from the new building areas. The removal of the existing fill from the new building areas shall extend through the existing fill, down to the virgin soil or weathered bedrock. At the bottom of the excavation, the removal of the unsuitable material shall extend horizontally beyond the building lines a minimum distance of three (3) feet plus a distance equal to the depth of the excavation below the planned finished floor elevation. For example, if the removal of the existing fill extends vertically five (5) feet below the planned finished floor elevation, the excavation must extend horizontally a minimum of eight (8) feet (3 feet plus 5 feet) beyond the new building line at that location.

The removal of the existing fill from the planned building areas shall be performed under the full time observation of Carlin-Simpson & Associates. The on-site representative from Carlin-Simpson & Associates shall direct the Contractor during this operation to ensure that all of the unsuitable material has been removed from the proposed building areas.

During the removal of the unsuitable material from the building areas, the Contractor should segregate the potentially re-usable existing fill material from the non-reusable fill (i.e. debris and topsoil). The on-site representative from Carlin-Simpson & Associate shall evaluate the suitability of the excavated materials for use as structural fill during the excavation and prior to its re-use. Potentially usable fill should be stockpiled and covered with tarps or plastic sheeting for protection from excess moisture. Any fill material that is wet must be dried prior to its re-use.

After the surface materials and existing fill have been removed and prior to the placement of new structural fill, the exposed subgrade must be graded level and proofrolled by several passes of a vibratory drum roller. The proofrolling operation is necessary to densify the underlying soils. Carlin-Simpson & Associates shall be retained to observe the proofrolling of the subgrade. If any soft or otherwise unsuitable soils are noted, the

unsuitable material shall be removed and replaced with new structural fill. Carlin-Simpson & Associates shall be responsible for determining what material, if any, is to be removed and will direct the contractor during this operation.

New structural fill required to achieve final grades shall consist of either suitable on-site soil or imported sand and gravel. Imported fill shall contain less than 20% by weight passing a No. 200 sieve. The structural fill shall be placed in layers not exceeding one (1) foot in loose thickness and each layer shall be compacted to at least 95% of its Maximum Modified Dry Density (ASTM D1557). Each layer must be compacted, tested, and approved prior to placing subsequent layers. The suitability of the excavated soil for reuse as structural fill is discussed in a following section of this report.

After the installation of structural fill has been completed to the required subgrade elevations, the virgin soil and new structural fill may be used to support the proposed building foundations and floor slabs.

New Building Foundations

According to the boring data, the foundation bearing materials will consist of medium dense to dense virgin soil, weathered bedrock, and new structural fill. Foundations for the proposed structures may be designed as a shallow spread footing bearing on the virgin soil, weathered bedrock, or new structural fill utilizing a net allowable bearing pressure of 4,000 psf (2.0 TSF).

Exterior footings shall bear at a depth of at least 42 inches below finished outside grade for protection from frost. Interior column footings may bear on the virgin soil, weathered bedrock, or new structural fill just below the floor slab provided the building is heated during winter. Column footings shall have a minimum dimension of 30 inches. The wall footings shall have a minimum width of 18 inches.

Prior to the placement of formwork, reinforcement steel, and concrete, the bearing subgrade soil shall be cleaned of all loose soil and compacted with several passes of a small vibratory drum trench compactor (i.e. Wacker Model RT560), a heavy vibratory plate tamper (i.e. Wacker BPU 3545A or equivalent), or “jumping jack” style tamper (i.e. Wacker Model BS 600). This must be performed under the inspection of a representative from Carlin-Simpson & Associates. If instability is observed during the compaction of the bearing subgrade, the soft soil shall be removed and replaced with new compacted fill.

Where rock is encountered in the foundation excavations, “Special Construction Procedures” must be employed. When continuous wall footings or closely spaced column footings (20 feet or less) bear on dissimilar material (i.e. rock and soil) the potential for differential movement exists. A footing bearing in rock will not move, whereas a footing bearing on soil will settle slightly due to the compressive nature of all soils when subjected to new loads. The area between movement and non-movement will develop a (shear) stress point. Cracks in foundations and walls will be the result from such movement. Therefore, continuous wall footings must bear either entirely on rock or entirely on soil for any individual building. Alternatively, for larger structures, transition zones can be constructed to create a gradual transition from a soil to a rock bearing subgrade.

Adjacent column footings greater than 20 feet apart may bear on dissimilar material (i.e. soil and rock). Any individual column footing must bear entirely on the same type bearing material (i.e. all soil or all rock).

Where rock and soil both exist at the bearing elevation within a foundation excavation, the footings must either be lowered to bear entirely on rock, or a minimum of 18 inches of rock must be removed from below planned footing bottom. The over-excavated 18 inches must then be filled with a granular material having a maximum particle size of ½-inch and containing at least 15% but not more than 30% material by weight passing a No. 200 sieve. The fill shall be placed in six (6) inch layers and each layer shall be compacted to at least 95% of its Maximum Modified Dry Density (ASTM D1557). This procedure will create a "cushion" atop the rock and reduce the potential for differential movement. For soft, rippable rock, this procedure will not be required.

If during the excavation for continuous foundations, the transition from soil to rock is gradual (i.e. from medium dense soil to dense weathered rock to very dense rock) over a distance of 20 feet or more, the "Special Construction Procedures" may not be required. This would have to be evaluated in the field on a case-by-case basis by the representative from Carlin-Simpson & Associates at the time of construction.

Where the transition from rock to soil is abrupt within the excavation for continuous wall foundations, transition zones can be constructed by over-excavating the rock in steps and increasing the "soil cushion" thickness over a distance of 24 feet or more. To construct the transition zone, the bedrock is over-excavated in a series of steps, each step being six (6) inches in depth and at least eight (8) feet in length. The first step is six (6) inches deep, the second step is 12 inches deep, and the final step is 18 inches deep. The over-excavation is then backfilled with the soil cushion material described above.

Floor Slab

After the footings and foundation walls are installed, fill will be required to backfill the excavations and to raise grades in the building areas to the slab subgrade elevations. New fill for the floor slab shall consist of either suitable on-site soil or imported sand and gravel containing less than 20% material by weight passing a No. 200 sieve. The fill shall be placed in layers not exceeding one (1) foot in loose thickness and each layer shall be compacted to at least 92% of its Maximum Modified Dry Density (ASTM D1557). Fill layers shall be compacted, tested, and approved before placing subsequent layers.

The floor may be designed as a slab on grade, bearing on virgin soil, weathered bedrock, bedrock, or new structural fill. We recommend a Modulus of Subgrade Reaction (k) of 200 pounds per cubic inch (pci) be used for design. A six (6) inch layer of 3/4-inch crushed stone is recommended beneath the concrete slab for additional support and drainage. In the event that the floor slab is constructed directly on Gneiss bedrock, a minimum of 12 inches of crushed stone or DGA should be provided beneath the floor slab for drainage and to act as a cushion on the rock. Sump pits and pumps are recommended where basements are planned.

Settlement

Settlement of individual footings, designed in accordance with recommendations presented in this report, is expected to be within tolerable limits for the proposed structure. For footings placed on natural soils or new compacted fill approved by Carlin-Simpson & Associates and constructed in accordance with the requirements outlined in this report, maximum total settlement is expected to be on the order of 1/2-inch or less. Maximum differential settlement between adjacent columns or load bearing walls is expected to be half the total settlement.

The above settlement values are based on our engineering experience with similar soil conditions and the anticipated structural loading, and are to guide the Structural Engineer with his design. To minimize difficulties during the foundation installation phase, it is critical that Carlin-Simpson & Associates be retained to observe the foundation bearing surfaces and to confirm the recommended bearing pressures and that the existing fill and unsuitable materials have been removed from beneath the new foundations.

Foundation Walls

In the event that foundation walls are required, the soil adjacent to the building walls will exert a horizontal pressure against the walls. This pressure is based on the soil density and Coefficient of Earth Pressure at Rest (k_o), which is applicable to non-yielding building walls. We estimate that the backfill material will have an in-place (moist) density of about 130 pcf and a k_o of 0.5. Based on these properties, the soil will produce an Equivalent Fluid Pressure of 65 pcf against the building walls.

For sliding, the coefficient of friction between concrete and the virgin site soils or new structural fill is 0.45. For clean sound rock, a friction coefficient of 0.55 can be used. Where passive lateral earth pressure is to be included in the design of the wall, a design value of 195 psf/ft may be used. This is based on a Coefficient of Passive Earth Pressure (k_p) of 3.0, an in-place soil backfill density of 130 pcf, and a factor of safety of 2.0.

Where foundation walls are required, we recommend that a footing drain be placed around the exterior of the new structure to prevent water from accumulating against the foundation wall. This drain may consist of a minimum four (4) inch diameter, rigid wall perforated PVC pipe surrounded by at least 12 inches of 3/4-inch clean crushed stone. The stone shall be wrapped in a geotextile fabric, Mirafi 140N or equivalent. The foundation drainpipe should be extended to daylight or to the stormwater collection system. The outside face of the foundation wall, where it extends below grade, must be damp proofed or waterproofed.

The foundation walls should be backfilled with suitable structural fill placed in layers up to one (1) foot in loose thickness. The new fill should be compacted with a vibratory drum trench compactor (i.e. Wacker Model RT560), a heavy vibratory plate tamper (i.e. Wacker BPU 3545A or equivalent) or “jumping jack” style tamper (i.e. Wacker Model BS 600) to at least 92% of its Maximum Modified Dry Density (ASTM D1557). Heavy equipment should not be operated near the wall as damage to the wall could occur.

Outside the structure, the backfill placed adjacent to the foundation walls and above the footing drain shall consist of either clean crushed stone or an imported sand and gravel mixture containing less than 10% by weight passing a No. 200 sieve and placed in layers not exceeding one (1) foot in thickness. This clean sand and gravel or crushed stone backfill shall extend a minimum of one (1) foot horizontally from the back face of the foundation walls, and shall extend vertically up the wall face to two (2) feet below the finished ground surface elevation.

Beyond this point, the foundation walls should be backfilled with suitable soil placed in layers up to one (1) foot in thickness. The new fill should be compacted with a vibratory drum trench compactor (i.e. Wacker Model RT560), a heavy vibratory plate tamper (i.e. Wacker BPU 3545A or equivalent), or "jumping jack" style tamper (i.e. Wacker Model BS 600) to at least 92% of its Maximum Modified Dry Density (ASTM D1557). Heavy equipment should not be operated near the walls as damage to the walls could occur. Material excavated from the cut areas on site will be suitable for reuse as compacted fill, provided that it remains relatively dry enough to be adequately compacted to the required density and does not contain any debris or organic material (i.e. topsoil and roots).

Seismic Design Considerations

From site-specific test boring data, the Site Class was determined from Table 1615.1.1 of the New York State Building Code. The site-specific data used to determine the Site Class typically includes soil test borings to determine Standard Penetration resistances (N-values). Based on the average N-values in the upper 100 feet of soil profile, the site can be classified as Site Class C – Very Dense Soil and Soft Rock Profile.

New structures should be designed to resist stress produced by lateral forces computed in accordance with Section 1615 of the New York State Building Code. The values in Table 2 shall be used for this project. Based on the information obtained from the borings, it is our opinion that the potential for liquefaction of the native soils at the site due to earthquake activity is relatively low.

Table 2 – Seismic Design Parameter Values

Mapped Spectral Response Acceleration for Short Periods, [Fig 1615 (1)]	S_S=0.347g
Mapped Spectral Response Acceleration at 1-Second Period, [Fig 1615 (2)]	S_{S1}=0.070g
Site Coefficient [Table 1615.1.2 (1)]	F_a=1.20
Site Coefficient [Table 1615.1.2 (2)]	F_v=1.70
Max Considered Earthquake Spectral Response for Short Periods [Eq 16-16]	S_{MS}=0.416g
Max Considered Earthquake Spectral Respond at 1-Second Period [Eq 16-17]	S_{M1}=0.119g
Design Spectral Response Acceleration for Short Periods [Eq 16-18]	S_{DS}=0.278g
Design Spectral Response Acceleration for 1-Second Period [Eq 16-19]	S_{D1}=0.079g

Site Retaining Walls

In order to develop the site, retaining walls will be required in areas. The site retaining walls may be designed as either cast-in-place steel reinforced concrete walls or geogrid reinforced modular block (MSE) walls. The preliminary site plans show five (5)

retaining walls. The maximum exposed height of these walls ranges from approximately seven (7) feet to 12 feet but the top and bottom wall elevations were not finalized at the time of this report.

The following recommendations are preliminary in nature based on the boring and test pit data from other areas of the project site during this investigation. The recommendations below are intended for planning purposes only and are not intended for final design and construction. A supplemental subsurface investigation is required for the proposed retaining walls so that additional design recommendations can be provided.

In the event that existing fill materials are present within the proposed wall areas, these materials must be completely removed from the limits of new wall construction. The removal of the topsoil or other unsuitable fill materials shall extend horizontally a minimum distance of five (5) feet beyond the front face of the new wall or extend horizontally a minimum distance equivalent to the vertical depth of the required excavation below the proposed wall base or foundation bearing elevation, whichever is greater. This is required to ensure that all unsuitable material has been removed from beneath the wall base or foundation zone of influence, which shall be defined by an imaginary plane projecting downward and away from the front edge of the wall base or foundation on a one horizontal to one vertical (1H:1V) projection.

The foundations for the new retaining wall may be placed on the virgin soil, weathered bedrock, or on new compacted fill approved by Carlin-Simpson & Associates. New compacted fill shall consist of either suitable on-site soil or imported sand and gravel. Imported fill shall contain less than 20% by weight passing the No. 200 sieve. The fill shall be placed in one (1) foot thick loose layers and compacted to at least 95% of its Maximum Modified Dry Density. Preliminarily, the footings or base of the wall can be designed using a net design bearing pressure of 4,000 psf (2.0 TSF).

For MSE walls, the wall base or foundation must be adequately embedded for internal and global stability. The embedment depth will be determined by the Wall Design Engineer. For reinforced concrete walls, the footing or base of the wall shall bear at least 42 inches below finished grade of the outside face of the wall for protection from frost. The wall foundation or base may bear at shallower depths when installed directly on the bedrock since rock is not susceptible to frost. Where both soil and rock are encountered within the wall foundation or base excavation, the “Special Construction Procedures” discussed above for the building foundations must be utilized.

Drains must be provided behind the retaining walls to prevent the buildup of hydrostatic pressure against the walls. The drain should consist of a 4-inch diameter perforated PVC pipe, surrounded with 3/4-inch clean crushed stone and wrapped in a geotextile fabric, Mirafi 140N or equivalent. The drain should be installed behind the base or foundation of the retaining wall to collect the water behind the wall and be connected into the site stormwater collection system or extended to daylight beyond the wall area.

Backfill placed directly behind the retaining walls shall consist of either suitable on-site soil or imported sand and gravel containing less than 20% by weight passing a No. 200 sieve. Each layer shall be compacted using a hand guided mechanical tamper to 92% of its

Maximum Modified Dry Density (ASTM D1557). Excessive compaction adjacent to the retaining walls must be avoided. Layers shall be tested and approved before placing subsequent layers. Large compaction equipment must not be used within ten (10) feet of the new walls to prevent potential damage to the walls.

The soil adjacent to the site retaining walls will exert a horizontal pressure against the walls. This pressure is based on the soil density and the Coefficient of Active Earth Pressure (k_a). We estimate that the backfill material will have an in-place (moist) density of about 130 pcf and an angle of internal friction (ϕ) of 30°. For design, soil cohesion is assumed to be zero for the foundation soil, retained soil, and reinforced backfill. The active earth pressure coefficient (k_a) is 0.33 provided the grade behind the wall is level. Based on these properties, the retained soil will produce an Equivalent Fluid Pressure of 42.9 pcf against the retaining walls. If a sloping grade exists behind the new walls, the k_a and the Equivalent Fluid Pressure must be adjusted accordingly. In addition, any surcharge loads from structures, vehicles, or other retaining walls (i.e. tiered walls) must be considered in the wall design.

For sliding, the friction coefficient between mass concrete and the virgin site soils or new compacted fill is 0.45. For clean sound rock, a friction coefficient of 0.55 can be used. Where passive lateral earth pressure is to be included in the design of the wall, a maximum design value of 195 psf/ft may be used. This is based on a Coefficient of Passive Earth Pressure (k_p) of 3.0, an in-place soil backfill density of 130 pcf, and a factor of safety of 2.0.

The Wall Design Engineer shall prepare a complete wall design (i.e. drawings, specifications, and calculations), which shall be designed and sealed by a Professional Engineer registered in the State of New York and submitted to Carlin-Simpson & Associates for review and approval. MSE retaining walls shall be designed in accordance with the recommendations of the NCMA Design Manual for Segmental Retaining Walls (Current Edition).

The MSE wall design shall consider the internal stability of the reinforced soil mass and shall be in completed accordance with acceptable engineering practice. In addition, external stability, including sliding, overturning, and bearing, as well as global slope stability shall be evaluated in accordance with acceptable engineering practice.

The MSE Wall Designer Engineer shall be responsible for determining the required geogrid reinforcement lengths and elevations based on his stability analysis (including global stability) and the properties of the geogrid reinforcement used in the design. We anticipate that in the critical areas of the wall, global stability will be the controlling design criteria for the design of the geogrid reinforcement.

Stormwater Management Areas

We understand that the planned development will include one or more stormwater management areas. The preliminary grading plan shows a proposed infiltration basin with a forebay in the western portion of the project site. The plan also indicates that the basin will have a bottom elevation at +610.0. We also understand that there is an alternate stormwater

management area in the southwestern portion of the site, near the proposed fairway residences building. In addition, stormwater management areas will likely be required throughout the golf course property. However, at the time this report was prepared, the proposed stormwater management system had not been designed and the location, grades, and invert elevations of the system had not been finalized.

During this study, four (4) borings, one (1) test pit, one (1) borehole permeability test, and four (4) percolation tests were performed within or near the planned stormwater management areas. An addition ten (10) test pits (TP-19 through TP-28) were excavated at potential stormwater management areas throughout the golf course property. The tests were performed at the locations shown on the attached Boring and Test Pit Location Plan. The proposed test depths were provided by the project Site Engineer. The test depths were modified, however, based on the depth to bedrock encountered at the test locations.

The soil conditions encountered within the proposed infiltration basin area consist of a surface layer of topsoil (Stratum 1), approximately 0'6" to 0'9" in thickness, followed by existing fill (Stratum 2) in boring B-6. Below the topsoil and fill is virgin soil that consists of layers of Sandy Silt, Silty Sand, Sandy Gravel, Gravelly Sand, or Silty Gravelly Sand (Strata 3 and 4) followed by Gneiss bedrock (Stratum 5). Bedrock was encountered in the proposed infiltration basin area at depths ranging from 2'8" to 8'6" beneath the ground surface. These depths correspond to bedrock elevations ranging between elevation +611.5 and elevation +617.3, which is above the proposed bottom elevation of the infiltration basin.

In the alternate stormwater management area, the topsoil was underlain by approximately 5'6" of existing fill (Stratum 2) followed by layers of Sandy Silt and Silty Sand (Stratum 3). Groundwater was encountered in this portion of the site at depths ranging from 0'6" to 3'3" below the ground surface, which corresponds to groundwater levels ranging from approximately elevation +608.3 to elevation +613.2.

The subsurface soil and groundwater conditions encountered in the potential stormwater management areas throughout the golf course property vary across the site. The boring and test pit observations are summarized in Table 1 above.

In December 2012 and January 2013, permeability tests were performed within the proposed stormwater management areas. One (1) borehole permeability test (BP-4) and four (4) percolation tests (P-1 through P-4) were performed. The infiltration rates at the test locations are summarized in Table 3 below.

Table 3 – Field Permeability Test Results

Permeability Test No.	Permeability Test Depth (Elevation)	Permeability Rate	Soil Description
BP-4	7'0" (+621.0)	2.4 in/hour	Brown coarse to fine SAND, little Silt, some (+) coarse to fine Gravel
P-1	3'6" (+616.5)	>20 in/hour	Brown coarse to fine GRAVEL and, coarse to fine Sand, trace Silt
P-2	1'8" (+610.3)	NR	*Groundwater encountered 0'6" below the ground surface*

Permeability Test No.	Permeability Test Depth (Elevation)	Permeability Rate	Soil Description
P-3	2'8" (+613.3)	>20 in/hour	Brown coarse to fine SAND, some Silt, and (-) coarse to fine Gravel
P-4	2'0" (+613.0)	NR	*Groundwater encountered 1'10" below the ground surface*

NR – Not Recorded

Based on the field tests, the virgin soil in the areas of tests P-1 and P-3 has a permeability rate that exceeds 20 inches per hour. However, these tests were performed at elevations of +616.5 and +613.3, which are approximately 6'6" and 3'3" higher than the planned bottom of the proposed infiltration basin. Bedrock was encountered at depths of 4'9" (+615.3) and 5'6" (+611.5) below the surface at these test locations. In the event the virgin soil in the areas of tests P-1 and P-3 can be utilized for the stormwater management system, a permeability rate of 10 inches per hour should be used for preliminary design. This design permeability rate includes a factor of safety of 2.0.

Field permeability tests could not be performed at test locations P-2 and P-4 during this study since groundwater was encountered at depths of 0'6" (+611.5) and 1'10" (+613.2) below the ground surface, respectively. Should stormwater management areas be planned in other portions of the site, they must be evaluated on a case-by-case basis.

The stormwater management system should be designed in accordance with the applicable New York State Department of Conservation (NYSDEC) regulations and the New York State Stormwater Management Design Manual (August 2010). The testing requirements are outlined in Appendix D of the manual. The testing that was performed during this preliminary study was for initial feasibility testing for the stormwater management areas. Therefore, additional testing within the proposed subsurface system areas will be required to confirm the soil conditions and infiltration rates at the bottom of the system and to finalize the design of the system.

Pavement

We understand that the proposed construction will also include new asphalt paved driveways and parking areas. Based on the preliminary grading plan provided to this office, cuts ranging up to approximately 6'0" and fills ranging up to approximately 8'0" are anticipated to achieve the proposed pavement subgrade elevations. To prepare the new pavement areas, the existing surface materials (i.e. topsoil, vegetation, asphalt, etc.) must be removed from the planned pavement areas.

After all surface materials have been removed; the exposed subgrade that is either at or below the planned subgrade elevation shall be proofrolled with a large vibratory drum roller (i.e. Dynapac 250 or equivalent) to densify the underlying soils. The on-site representative from Carlin-Simpson & Associates shall witness the proofrolling operation. If any excessive movement is noted during the proofrolling, the soft or unsuitable soil shall be removed and replaced with new compacted fill.

Areas where existing fill is encountered shall be compacted in place. Carlin-Simpson & Associates must evaluate these areas for the presence of soft or unsuitable material within the existing fill matrix. Portions of this fill may have to be removed and replaced with new compacted fill. Carlin-Simpson & Associates will determine this during construction.

Where new fill is required to achieve final grades, it shall consist of either suitable on-site soil or imported sand and gravel. Imported sand and gravel shall contain less than 20% by weight passing a No. 200 sieve. New fill shall be placed in layers not exceeding one (1) foot in loose thickness and each layer shall be compacted to at least 92% of its Maximum Modified Dry Density (ASTM D1557). After the planned subgrade has been proofrolled and new compacted fill has been placed as required, the new pavement subbase may be placed on the existing site soils and new compacted fill.

When new fill is placed on a sloped subgrade, the fill layers must be benched a minimum of three (3) feet into the existing embankment. Fill layers shall be placed in horizontal layers, beginning at the base of the slope. End dumping over the top of a slope is not permitted.

The new pavement subbase may be placed on engineer-approved densified existing fill, virgin soil, or new compacted fill. A minimum of six (6) inches of dense graded aggregate (DGA) is recommended for the subbase layer for drainage and additional pavement support. We recommend that the following pavement sections be used for the parking lots and driveways. These pavement sections are subject to local government approval.

Parking Lots (Light Duty)

1 ½"	Asphalt Wearing Surface Course	NYSDOT, Type 6F
2"	Asphalt Base Course	NYSDOT, Type 1
6"	Stone Subbase (DGA)	NYSDOT, Type 4
	Approved Compacted Subgrade (Minimum CBR = 10)	

Driveways (Medium Duty)

1 ½"	Asphalt Wearing Surface Course	NYSDOT, Type 6F
2 ½"	Asphalt Base Course	NYSDOT, Type 1
8"	Stone Subbase (DGA)	NYSDOT, Type 4
	Approved Compacted Subgrade (Minimum CBR = 10)	

Based on the boring and test pit data, we anticipate that the existing site soils and new compacted fill will provide a CBR value that is equal to or greater than 10, which can adequately support the above pavement sections.

Utilities

New utilities may bear in the virgin soil, existing fill, new compacted fill, weathered rock, or rock. The bottom of all trenches should be excavated clean so a hard bottom is provided for pipe support. If any soft areas or unsuitable existing fill conditions are

encountered during the construction operation, these materials must be removed and replaced with new compacted fill.

In the event that the trench bottom becomes soft due to the inflow of surface or trapped water, the soft soil shall be removed and the excavation filled with a minimum of six (6) inches of 3/4-inch clean crushed stone to provide a firm base for support of the pipe. Sump pits and pumps should be adequate to keep the excavations dry.

After the utility is installed, the trench must be backfilled with compacted fill. The fill shall consist of suitable on-site soil or imported sand and gravel containing less than 20% by weight passing a No. 200 sieve. Large rock fragments must not be placed directly against the pipe. Controlled compacted fill shall be placed in one (1) foot loose layers and each layer shall be compacted to at least 92% of its Maximum Modified Dry Density (ASTM D1557). The backfill must be free of topsoil, debris and large boulders or rock fragments.

Temporary Construction Excavations

Temporary construction excavations shall be conducted in accordance with the most recent OSHA guidelines or applicable federal, state, or local codes. Based on the results of the borings and test pits, we believe the site soils and rock would have the following classifications as defined by OSHA guidelines.

Soil/Rock Type	Possible Classification
On Site Fill	Type "C"
Virgin Sandy Soils	Type "B" or "C"
Weathered or Intact Bedrock	Type "A" or Stable Rock

Further evaluation of the site soil deposits will be required in the field by a qualified person at the time of the excavation to determine the proper OSHA classification and allowable slope configuration. Temporary support (i.e. sheeting and shoring) should be used for any excavation that cannot be sloped or benched in accordance with the applicable regulations.

Suitability of the In-Situ Soils for Use as Compacted Fill

The suitability of each soil stratum for use as compacted fill is discussed below.

Stratum 1 Topsoil — Topsoil is not suitable for use as compacted fill. During construction, it may be stockpiled on site for later use in the landscaped areas or removed from the site.

Stratum 2 Existing Fill — The existing fill that was encountered at the site generally consists of brown coarse to fine Sand, little (to and) Silt, trace (to some) coarse to fine Gravel with occasional cobbles, boulders, topsoil, roots, and debris. Some of the existing fill may be suitable for use as compacted fill at the site

provided that it remains relatively dry for optimum compaction and that any debris (i.e. concrete, wood, etc.) and organic material (i.e. topsoil, roots, etc.) have been removed prior to its reuse.

Strata 3 & 4 Sandy Silt, Silty Sand, Sand, or Sandy Gravel

The virgin site soils that may be excavated during construction consist of layers of Sandy Silt, Silty Sand, Sand or Sandy Gravel with occasional cobbles and boulders. This material is generally suitable for use as compacted fill, provided that it remains relatively dry for optimum compaction. Large cobbles and boulders shall not be used as new structural fill in the proposed building areas or in utility trenches.

Stratum 5 Gneiss Bedrock

Excavated rock may also be used as fill material for the building and paved areas provided that the material conforms to the required gradation, is well-graded, and has been approved prior to use by Carlin-Simpson & Associates. All rock fill must be well blended with smaller rock fragments and/or soil. Open voids within the rock fill matrix must be avoided. Small boulders up to 24 inches in diameter may be placed in parking lot fills deeper than ten (10) feet below the finished pavement. Boulders must not be clustered and must be sufficiently surrounded with soil fill. We recommend that the boulders and excavated rock be processed by a crusher to provide suitable fill material for the building and pavement areas.

Rock fill shall be placed in 12-inch loose layers and compacted with multiple passes of a large vibratory roller to a firm and non-yielding state as determined by the on-site representative from Carlin-Simpson & Associates. Rock fill should not be used where it will interfere with the installation of foundations or utilities. Also, it shall not be used as backfill directly against concrete walls or utilities. Use of rock fill within the planned building and pavement areas shall be limited to the gradations limitations provided in Table 4 below.

Table 4 - Gradation Limitations for Rock Fill

Area	Location	Maximum Particle Size
Building Area	Within 4 feet of Finished Floor	3 inches
	More than 4 feet below Finished Floor	12 inches
Pavement Area	Within 4 feet of Finished Grade	6 inches
	More than 4 feet below Finished Grade	18 inches
	More than 10 feet below Finished Grade	24 inches

Proper moisture conditioning of the soil will be required. In the event that the on-site material is too wet at the time of placement and cannot be adequately compacted, the soil should be aerated and allowed to dry or the material removed and a drier cleaner fill material used. In the event that the on-site material is too dry at the time of placement and cannot be adequately compacted, water may be needed to increase the soil moisture content for proper compaction.

The in-situ soils which exist throughout the site may become soft and weave if exposed to excessive moisture and construction traffic. The instability will occur quickly when exposed to these elements and it will be difficult to stabilize the subgrade. We recommend that adequate site drainage be implemented early in the construction schedule and if the subgrade becomes wet, the Contractor should limit construction activity until the soil has dried.

GENERAL

The findings, conclusions and recommendations presented in this report represent our professional opinions concerning subsurface conditions at the site. The opinions presented are relative to the dates of our site work and should not be relied on to represent conditions at later dates or at locations not explored. The opinions included herein are based on information provided to us, the data obtained at specific locations during the study and our past experience. If additional information becomes available that might impact our geotechnical opinions, it will be necessary for Carlin-Simpson & Associates to review the information, reassess the potential concerns, and re-evaluate our conclusions and recommendations. Additional subsurface exploration may be required.

Regardless of the thoroughness of a geotechnical exploration, there is the possibility that conditions between borings and test pits will differ from those encountered at specific boring or test pit locations, that conditions are not as anticipated by the designers and/or the contractors, or that either natural events or the construction process have altered the subsurface conditions. These variations are an inherent risk associated with subsurface conditions in this region and the approximate methods used to obtain the data. These variations may not be apparent until construction.

The professional opinions presented in this geotechnical report are not final. Field observations and foundation installation monitoring by the geotechnical engineer, as well as soil density testing and other quality assurance functions associated with site earthwork and foundation construction, are an extension of this report. Therefore, Carlin-Simpson & Associates should be retained by the Owner to observe all earthwork and foundation construction, to document that the conditions anticipated in this study actually exist, and to finalize or amend our conclusions and recommendations Carlin-Simpson & Associates is not responsible or liable for the conclusions and recommendations presented in this report if Carlin-Simpson & Associates does not perform these observation and testing services.

Therefore, in order to preserve continuity in this project, the Owner must retain the services of Carlin-Simpson & Associates to provide full time geotechnical related monitoring and testing during construction. At a minimum, this shall include the observation and testing of the following: 1) the removal of existing fill and unsuitable soil, where required; 2) the proofrolling of the subgrade soil prior to the placement of new compacted fill; 3) the placement and compaction of controlled fill; 4) the excavation for the building foundations; 5) the preparation of the subgrade for the floor slabs and pavement areas; and 6) the construction of the proposed retaining walls.

This report has been prepared in accordance with generally accepted geotechnical engineering practice. No other warranty is expressed or implied. The evaluations and

recommendations presented in this report are based on the available project information, as well as on the results of the exploration. Carlin-Simpson & Associates should be given the opportunity to review the final drawings and site plans for this project to determine if changes to the recommendations outlined in this report are needed. Should the nature of the project change, these recommendations should be re-evaluated.

This report is provided for the exclusive use of Brynwood Partners, LLC and the project specific design team and may not be used or relied upon in connection with other projects or by other third parties. Carlin-Simpson & Associates disclaims liability for any such third party use or reliance without express written permission. Use of this report or the findings, conclusions or recommendations by others will be at the sole risk of the user. Carlin-Simpson & Associates is not responsible or liable for the interpretation by others of the data in this report, nor their conclusions, recommendations or opinions.

If the conditions encountered during construction vary significantly from those stated in this report, this office should be notified immediately so that additional recommendations can be made.

Thank you for allowing us to assist you with this project. Should you have any questions or comments, please contact this office.

Very truly yours,

CARLIN-SIMPSON & ASSOCIATES

M. Anke

MEREDITH R. ANKE, P.E.
Project Engineer

Robert Simpson

ROBERT B. SIMPSON, P.E.

File No. 12-175

CARLIN - SIMPSON & ASSOCIATES Sayreville, NJ	TEST BORING LOG	BORING NUMBER B-1

Project:	**Proposed Renovations, Byrnwood Club Development, North Castle, NY**									**SHEET NO.:**	1 of 1
Client:	**JBM Realty**									**JOB NUMBER:**	12-175
Drilling Contractor:	**General Borings, Inc.**									**ELEVATION:**	+661.0
GROUNDWATER						**CASING**	**SAMPLE**	**CORE**	**TUBE**	**DATUM:**	
DATE	**TIME**	**DEPTH**	**CASING**	**TYPE**		**HSA**	**SS**			**START DATE:**	18 Dec 12
No water encountered				**DIA.**		**3 1/4"**	**1 3/8"**			**FINISH DATE:**	18 Dec 12
				WGHT			**140#**			**DRILLER:**	T. McGovern
				FALL			**30"**			**INSPECTOR:**	JB

Depth (ft.)	Casing Blows per Foot	Sample No.	Blows on Sample Spoon per 6"	Sym	IDENTIFICATION	REMARKS
			7		**Clay Tennis Court** 0'6"	
1		**S-1**	9		Br $ a (+), cf S, l (-) mf G	Rec = 17"
			12			moist
2			14			
			19		same	
3		**S-2**	23		**Brown SILT and (+), coarse to fine**	Rec = 15"
			50/3"		**Sand, little (-) medium to fine Gravel**	moist
4						possible weathered rock in tip
5					5'0"	
			29		Br cf S, l (+) $ (completely weathered gneiss)	
6		**S-3**	75/4"			Rec = 6"
					Brown coarse to fine SAND, little (+)	moist
7					**Silt (completely weathered Gneiss)**	
		S-4	70/3"			Rec = 3"
8					8'0"	moist
					End of Boring @ 8'0"	Auger refusal @ 8'0"
9						
10						
11						
12						
13						
14						
15						
16						
17						
18						
19						
20						
21						
22						

CARLIN - SIMPSON & ASSOCIATES Sayreville, NJ	TEST BORING LOG	BORING NUMBER B-2

Project:	**Proposed Renovations, Byrnwood Club Development, North Castle, NY**								**SHEET NO.:**	1 of 1
Client:	**JBM Realty**								**JOB NUMBER:**	12-175
Drilling Contractor:	**General Borings, Inc.**								**ELEVATION:**	+628.0
GROUNDWATER					**CASING**	**SAMPLE**	**CORE**	**TUBE**	**DATUM:**	
DATE	**TIME**	**DEPTH**	**CASING**	**TYPE**	**HSA**	**SS**			**START DATE:**	18 Dec 12
No water encountered				**DIA.**	**3 1/4"**	**1 3/8"**			**FINISH DATE:**	18 Dec 12
				WGHT		**140#**			**DRILLER:**	T. McGovern
				FALL		**30"**			**INSPECTOR:**	JB

Depth (ft.)	Casing Blows per Foot	Sample No.	Blows on Sample Spoon per 6"	Sym	IDENTIFICATION	REMARKS
			2		**Topsoil** 0'6"	
1		**S-1**	3		Br $ a (+), cf S, t mf G	Rec = 15"
			2			moist
2			2			
			3		same	
3		**S-2**	9			Rec = 16"
			11		**Brown SILT and (+), coarse to fine**	moist
4			15		**Sand, trace medium to fine Gravel**	
5						
			10		same	
6		**S-3**	12			Rec = 17"
			16			moist
7			50/3"		7'0"	weathered rock in tip
					End of Boring @ 7'0"	Auger refusal @ 7'0"
8						
9						
10						
11						
12						
13						
14						
15						
16						
17						
18						
19						
20						
21						
22						

CARLIN - SIMPSON & ASSOCIATES Sayreville, NJ	TEST BORING LOG	BORING NUMBER B-3

Project:	**Proposed Renovations, Byrnwood Club Development, North Castle, NY**								**SHEET NO.:**	1 of 1
Client:	**JBM Realty**								**JOB NUMBER:**	12-175
Drilling Contractor:	**General Borings, Inc.**								**ELEVATION:**	+620.0
GROUNDWATER					**CASING**	**SAMPLE**	**CORE**	**TUBE**	**DATUM:**	
DATE	**TIME**	**DEPTH**	**CASING**	**TYPE**	**HSA**	**SS**			**START DATE:**	18 Dec 12
No water encountered				**DIA.**	**3 1/4"**	**1 3/8"**			**FINISH DATE:**	18 Dec 12
				WGHT		**140#**			**DRILLER:**	T. McGovern
				FALL		**30"**			**INSPECTOR:**	JB

Depth (ft.)	Casing Blows per Foot	Sample No.	Blows on Sample Spoon per 6"	Sym	IDENTIFICATION	REMARKS
			3		**Topsoil** 0'6"	
1		**S-1**	6		Br $ a (-), cf S, t mf G	Rec = 17"
			6		**Brown SILT and (-), coarse to fine**	moist
2			14		**Sand, trace medium to fine Gravel** 2'0"	
		S-2	25/5"		Lt br cf G a, cf S, t $ (completely weathered gneiss)	Rec = 5"
3					**Light brown coarse to fine GRAVEL**	moist
					and, coarse to fine Sand, trace	
4					**Silt (completely weathered Gneiss)**	
			23		Br cf G s, cf S, t $ (completely weathered gneiss)	
5		**S-3**	75/3"		4'9"	Rec = 6"
					End of Boring @ 4'9"	moist
6						Auger refusal @ 4'9"
7						
8						
9						
10						
11						
12						
13						
14						
15						
16						
17						
18						
19						
20						
21						
22						

CARLIN - SIMPSON & ASSOCIATES Sayreville, NJ	TEST BORING LOG	BORING NUMBER B-4

Project:	**Proposed Renovations, Byrnwood Club Development, North Castle, NY**								**SHEET NO.:**	1 of 1
Client:	**JBM Realty**								**JOB NUMBER:**	12-175
Drilling Contractor:	**General Borings, Inc.**								**ELEVATION:**	+628.0
GROUNDWATER					**CASING**	**SAMPLE**	**CORE**	**TUBE**	**DATUM:**	
DATE	**TIME**	**DEPTH**	**CASING**	**TYPE**	**HSA**	**SS**			**START DATE:**	18 Dec 12
No water encountered				**DIA.**	**3 1/4"**	**1 3/8"**			**FINISH DATE:**	18 Dec 12
				WGHT		**140#**			**DRILLER:**	T. McGovern
				FALL		**30"**			**INSPECTOR:**	JB

Depth (ft.)	Casing Blows per Foot	Sample No.	Blows on Sample Spoon per 6"	Sym	IDENTIFICATION	REMARKS
			2		**Topsoil** 0'6"	
1		**S-1**	1		Br cf S, a $, t f G	Rec = 14"
			2		**Brown coarse to fine SAND, and**	moist
2			2		**Silt, trace fine Gravel** 2'0"	
			10		Gr cf S t $, a cf G (completely weathered gneiss)	
3		**S-2**	20			Rec = 13"
			45			moist
4			35			weathered rock 3'-4'
5						
			9		Br cf S, l $, s (+) cf G (completely weathered gneiss)	
6		**S-3**	11			Rec = 17"
			13		**Brown coarse to fine SAND, little**	moist
7			10		**Silt, some (+) coarse to fine Gravel**	
			18		same **(completely weathered Gneiss)**	
8		**S-4**	26			Rec = 14"
			30			moist
9			43			
10						
		S-5	75/6"		same 10'6"	Refusal on spoon @ 10'6"
11					**End of Boring @ 10'6"**	
12						
13						
14						
15						
16						
17						
18						
19						
20						
21						
22						

CARLIN - SIMPSON & ASSOCIATES Sayreville, NJ	TEST BORING LOG	BORING NUMBER B-5

Project:	**Proposed Renovations, Byrnwood Club Development, North Castle, NY**	**SHEET NO.:**	1 of 1
Client:	**JBM Realty**	**JOB NUMBER:**	12-175
Drilling Contractor:	**General Borings, Inc.**	**ELEVATION:**	+623.0

GROUNDWATER									
DATE	TIME	DEPTH	CASING		CASING	SAMPLE	CORE	TUBE	**DATUM:**
No water encountered				TYPE	HSA	SS			**START DATE:** 18 Dec 12
				DIA.	3 1/4"	1 3/8"			**FINISH DATE:** 18 Dec 12
				WGHT		140#			**DRILLER:** T. McGovern
				FALL		30"			**INSPECTOR:** JB

Depth (ft.)	Casing Blows per Foot	Sample No.	Blows on Sample Spoon per 6"	Sym	IDENTIFICATION	REMARKS
			2		Br cf S, s (+) $, t f G	
1		S-1	2		**Brown coarse to fine SAND,**	Rec = 17"
			3		**some (+) Silt, trace fine Gravel**	moist
2			13		2'0"	
			22		Br cf S, l $, s cf G	
3		S-2	10			Rec = 17"
			16		**Brown coarse to fine SAND, little**	moist
4			26		**Silt, some coarse to fine Gravel**	weathered rock in tip
					(completely weathered Gneiss)	
5						
			23		same, weathered gneiss	
6		S-3	62			Rec = 18"
			55			moist
7			81			weathered rock
8						
					8'6"	Auger refusal @ 8'6"
9					**End of Boring @ 8'6"**	
10						
11						
12						
13						
14						
15						
16						
17						
18						
19						
20						
21						
22						

CARLIN - SIMPSON & ASSOCIATES Sayreville, NJ	TEST BORING LOG	BORING NUMBER B-6

Project:	**Proposed Renovations, Byrnwood Club Development, North Castle, NY**								**SHEET NO.:**	1 of 1
Client:	**JBM Realty**								**JOB NUMBER:**	12-175
Drilling Contractor:	**General Borings, Inc.**								**ELEVATION:**	+617.0
GROUNDWATER					**CASING**	**SAMPLE**	**CORE**	**TUBE**	**DATUM:**	
DATE	**TIME**	**DEPTH**	**CASING**	**TYPE**	**HSA**	**SS**			**START DATE:**	19 Dec 12
No water encountered				**DIA.**	**3 1/4"**	**1 3/8"**			**FINISH DATE:**	19 Dec 12
				WGHT		**140#**			**DRILLER:**	T. McGovern
				FALL		**30"**			**INSPECTOR:**	KWA

Depth (ft.)	Casing Blows per Foot	Sample No.	Blows on Sample Spoon per 6"	Sym	IDENTIFICATION		REMARKS
			2		**Topsoil**	0'6"	
1		**S-1**	6		FILL (Br cf S, l $)	1'0"	Rec = 10"
			5		**FILL (Brown coarse to fine SAND, little Silt)**		moist
2			10				
			12		Br cf S, s $, a (-) cf G		
3		**S-2**	11				Rec = 11"
			11		same		moist
4			52		**Brown coarse to fine SAND, some Silt, and (-) coarse to fine Gravel**		
5							
		S-3	75/2"			5'6"	No recovery
6					**End of Boring @ 5'6"**		Auger refusal @ 5'6"
7							
8							
9							
10							
11							
12							
13							
14							
15							
16							
17							
18							
19							
20							
21							
22							

CARLIN - SIMPSON & ASSOCIATES Sayreville, NJ	TEST BORING LOG	BORING NUMBER B-7

Project:	**Proposed Renovations, Byrnwood Club Development, North Castle, NY**								**SHEET NO.:**	1 of 1
Client:	**JBM Realty**								**JOB NUMBER:**	12-175
Drilling Contractor:	**General Borings, Inc.**								**ELEVATION:**	+628.0
GROUNDWATER					**CASING**	**SAMPLE**	**CORE**	**TUBE**	**DATUM:**	
DATE	**TIME**	**DEPTH**	**CASING**	**TYPE**	**HSA**	**SS**			**START DATE:**	19 Dec 12
No water encountered				**DIA.**	**3 1/4"**	**1 3/8"**			**FINISH DATE:**	19 Dec 12
				WGHT		**140#**			**DRILLER:**	T. McGovern
				FALL		**30"**			**INSPECTOR:**	KWA

Depth (ft.)	Casing Blows per Foot	Sample No.	Blows on Sample Spoon per 6"	Sym	IDENTIFICATION	REMARKS
			2		**Topsoil** 0'6"	
1		**S-1**	4		Br cf S, l $,l f G	Rec = 18"
			4			moist
2			5			
			13		same	
3		**S-2**	28		**Brown coarse to fine SAND,**	Rec = 17"
			21		**little Silt, little fine Gravel**	moist
4			22			
5					5'0"	
			12		Br cf S, l $, t f G (completely weathered gniess)	
6		**S-3**	14			Rec = 15"
			19			moist
7			28		**Brown coarse to fine SAND, little**	very dense augering 7'-10'
					Silt, trace fine Gravel (completely	
8					**weathered Geniss)**	
9						
10						
			75		same	
11		**S-4**	50/3"			Rec = 6"
						moist
12						very dense augering 10'-15'
13						
14						
15						
		S-4	50/2"		same 15'2"	No recovery
16					**End of Boring @ 15'2"**	Spoon bouncing @ 15'2"
17						
18						
19						
20						
21						
22						

CARLIN - SIMPSON & ASSOCIATES Sayreville, NJ	TEST BORING LOG	BORING NUMBER B-8

Project:	Proposed Renovations, Byrnwood Club Development, North Castle, NY	**SHEET NO.:**	1 of 1
Client:	JBM Realty	**JOB NUMBER:**	12-175
Drilling Contractor:	General Borings, Inc.	**ELEVATION:**	+609.0
		DATUM:	
START DATE:	19 Dec 12		
FINISH DATE:	19 Dec 12		
DRILLER:	T. McGovern		
INSPECTOR:	KWA		

GROUNDWATER					CASING	SAMPLE	CORE	TUBE
DATE	TIME	DEPTH	CASING	TYPE	HSA	SS		
19 Dec 12	1130	3'3"	None	DIA.	3 1/4"	1 3/8"		
				WGHT		140#		
				FALL		30"		

Depth (ft.)	Casing Blows per Foot	Sample No.	Blows on Sample Spoon per 6"	Sym	IDENTIFICATION	REMARKS
			2		**Brown Topsoil** 0'6"	
1		**S-1**	4		FILL (Br cf S, a $, t cf G)	Rec = 4"
			8			moist
2			7			
			10		FILL (same)	
3		**S-2**	11			No recovery
			11		**FILL (Brown coarse to fine SAND,**	moist
4			13		**and Silt, trace coarse to fine Gravel)**	
5						
			13		FILL (same) 5'6"	
6		**S-3**	8		Mtld gr, or br Cy $ s, cf S, w/t roots	Rec = 18"
			7		**Mottled gray, orange brown Clayey**	moist
7			8		**SILT some, coarse to fine Sand, with** 7'0"	
			8		**roots**	
8		**S-4**	8		Gr br cf S, s (+) $, l cf G	Rec = 15"
			7			wet
9			8		**Gray brown coarse to fine SAND,**	
					some (+) Silt, little coarse to fine	
10					**Gravel**	
			15		same, l cf G	
11		**S-5**	25			Rec = 16"
			26			wet
12			35		12'0"	
					End of Boring @ 12'0"	
13						
14						
15						
16						
17						
18						
19						
20						
21						
22						

CARLIN - SIMPSON & ASSOCIATES Sayreville, NJ	TEST BORING LOG	BORING NUMBER B-9

Project:	Proposed Renovations, Byrnwood Club Development, North Castle, NY	**SHEET NO.:**	1 of 1
Client:	JBM Realty	**JOB NUMBER:**	12-175
Drilling Contractor:	General Borings, Inc.	**ELEVATION:**	+674.0
		DATUM:	

GROUNDWATER					CASING	SAMPLE	CORE	TUBE		
DATE	TIME	DEPTH	CASING	TYPE	HSA	SS			START DATE:	19 Dec 12
No water encountered				DIA.	3 1/4"	1 3/8"			FINISH DATE:	19 Dec 12
				WGHT		140#			DRILLER:	T. McGovern
				FALL		30"			INSPECTOR:	KWA

Depth (ft.)	Casing Blows per Foot	Sample No.	Blows on Sample Spoon per 6"	Sym	IDENTIFICATION	REMARKS
			8		**Clay Tennis Court** 0'6"	
1		**S-1**	8		FILL (Br cf S, s $, s (+) cf G)	Rec = 17"
			8			moist
2			17			
			17		FILL (same)	
3		**S-2**	12			Rec = 15"
			7		**FILL (Brown coarse to fine Sand,**	moist
4			13		**some Silt, some (+) coarse to fine**	
					Gravel)	
5						
			10		FILL (Br cf S, s $, l cf G)	
6		**S-3**	4			Rec = 15"
			5			moist
7			11		7'0"	
		S-4	50/3"		**Highly to moderately weathered** 7'6"	Rec = 3"
8					**Gneiss**	moist
					Eknd of Boring @ 7'6"	Auger refusal @ 7'0"
9						
10						
11						
12						
13						
14						
15						
16						
17						
18						
19						
20						
21						
22						

CARLIN - SIMPSON & ASSOCIATES Sayreville, NJ	TEST BORING LOG	BORING NUMBER B-10

Project:	**Proposed Renovations, Byrnwood Club Development, North Castle, NY**								**SHEET NO.:**	1 of 1
Client:	**JBM Realty**								**JOB NUMBER:**	12-175
Drilling Contractor:	**General Borings, Inc.**								**ELEVATION:**	+638.8
GROUNDWATER					**CASING**	**SAMPLE**	**CORE**	**TUBE**	**DATUM:**	
DATE	**TIME**	**DEPTH**	**CASING**	**TYPE**	**HSA**	**SS**			**START DATE:**	19 Dec 12
No water encountered				**DIA.**	**3 1/4"**	**1 3/8"**			**FINISH DATE:**	19 Dec 12
				WGHT		**140#**			**DRILLER:**	T. McGovern
				FALL		**30"**			**INSPECTOR:**	JB

Depth (ft.)	Casing Blows per Foot	Sample No.	Blows on Sample Spoon per 6"	Sym	IDENTIFICATION	REMARKS
			2		**Topsoil** 0'1"	
1		**S-1**	3		Br cf $ s, cf S, l cf G	Rec = 15"
			6		**Brown coarse to fine SILT some, coarse to**	moist
2			50/3"		**fine Sand, little coarse to fine Gravel** 2'0"	Auger refusal @ 2'0"
3						
		Run #1			**Gray, white Gneiss**	Run #1
4						2'0"-7'0"
						Run = 60"
5					5'0"	Rec = 52" = 86%
					Soil seam	RQD = 53%
6					5'8"	
					Gray, white Gneiss	
7					7'0"	
					End of Boring @ 7'0"	
8						
9						
10						
11						
12						
13						
14						
15						
16						
17						
18						
19						
20						
21						
22						

CARLIN - SIMPSON & ASSOCIATES Sayreville, NJ	TEST BORING LOG	BORING NUMBER B-11

Project:	**Proposed Renovations, Byrnwood Club Development, North Castle, NY**									**SHEET NO.:**	1 of 1
Client:	**JBM Realty**									**JOB NUMBER:**	12-175
Drilling Contractor:	**General Borings, Inc.**									**ELEVATION:**	+640.0
GROUNDWATER					**CASING**	**SAMPLE**	**CORE**	**TUBE**		**DATUM:**	
DATE	**TIME**	**DEPTH**	**CASING**	**TYPE**	**HSA**	**SS**				**START DATE:**	19 Dec 12
No water encountered				**DIA.**	**3 1/4"**	**1 3/8"**				**FINISH DATE:**	19 Dec 12
				WGHT		**140#**				**DRILLER:**	T. McGovern
				FALL		**30"**				**INSPECTOR:**	KWA

Depth (ft.)	Casing Blows per Foot	Sample No.	Blows on Sample Spoon per 6"	Sym	IDENTIFICATION	REMARKS
			2		**Topsoil**	
1		**S-1**	3		0'9"	Rec = 20"
			3		Br cf S, l (+) $	moist
2			7			
			5		same, dk br	
3		**S-2**	6		**Brown coarse to fine SAND,**	Rec = 17"
			8		**little (+) Silt**	moist
4			23		4'0"	
5					**Completely to highly weathered**	
					Gneiss	
6					5'6"	Auger refusal @ 5'6"
7					**End of Boring @ 5'6"**	
8						
9						
10						
11						
12						
13						
14						
15						
16						
17						
18						
19						
20						
21						
22						

Byrnwood Club Development
Bedford Road
Town of New Castle, NY
(12-175)

3 January 2013

TEST PIT LOGS

TP-1	Elevation +662		
0-0'9"	Brown Topsoil		
0'9"-2'0"	Brown coarse to fine SAND, and Silt, trace (+) medium to fine Gravel	medium dense	moist
2'0"	Gneiss bedrock No water encountered		

TP-2	Elevation +672		
0-1'10"	FILL (Brown coarse to fine SAND, some silt, little (-) coarse to fine Gravel, with topsoil)	medium dense	moist
1'10"-4'4"	Light brown coarse to fine SAND, some (+) Silt	medium dense	moist
4'4"	Gneiss bedrock No water encountered		

TP-3	Elevation +672		
0-0'9"	Dark brown Topsoil with surface debris		
0'9"-2'2"	Brown coarse to fine SAND, some Silt	medium dense	moist
2'2"	Gneiss bedrock No water encountered		

Byrnwood Club Development
Bedford Road
Town of New Castle, NY
(12-175)

3 January 2013

TEST PIT LOGS

TP-4	Elevation +672		
0-0'6"	Brown Topsoil		
0'6"-3'6"	Brown coarse to fine SAND, and (-) Silt, some coarse to fine Gravel	medium dense	moist
3'6"	Gneiss bedrock No water encountered		

TP-5	Elevation +670		
0-0'7"	Brown Topsoil		
0'7"-3'8"	Light brown coarse to fine SAND, some (+) Silt	medium dense	moist
3'8"-4'9"	Brown coarse to fine SAND, some Silt (completely weathered gneiss)	dense	moist
4'9"	Gneiss bedrock No water encountered		

Byrnwood Club Development
Bedford Road
Town of New Castle, NY
(12-175)

3 January 2013

TEST PIT LOGS

TP-6	Elevation +672		
0-0'10"	Brown Topsoil		
0'10"-2'10"	Light brown coarse to fine SAND, some (-) Silt, little coarse to fine Gravel	medium dense	moist
2'10"-4'7"	Brown coarse to fine SAND, some Silt, little coarse to fine Gravel (completely weathered gneiss)	dense	moist
4'7"	Gneiss bedrock No water encountered		

TP-7	Elevation +620		
0-0'9"	Brown Topsoil		
0'9"-2'8"	Brown coarse to fine SAND, some Silt, trace coarse to fine Gravel	medium dense	moist
2'8"	Probable Gneiss bedrock		
	Test pit abandoned No water encountered		

TP-8	Elevation +614		
0-0'8"	Dark brown Topsoil		
0'8"-5'0"	Mottled orange brown, gray coarse to fine SAND, and (-) Silt	medium dense	moist
	Groundwater encountered @ 4'1"	slow inflow	

Byrnwood Club Development
Bedford Road
Town of New Castle, NY
(12-175)

3 January 2013

TEST PIT LOGS

TP-9	Elevation +628		
0-0'4"	Topsoil		
0'4"-6'9"	FILL (Brown coarse to fine SAND, some (+) Silt, some (+) coarse to fine Gravel, with cobbles and boulders)	medium dense	moist
6'9"	FILL (Gray coarse to fine SAND, trace (+) Silt)	medium dense	moist
	Possible cover over for utility Test pit was abandoned		
	No water encountered		

TP-10	Elevation +625		
0-0'4"	Topsoil		
0'4"-3'0"	FILL (Boulders with topsoil)	loose	moist
3'0"-8'0"	Brown coarse to fine SAND, some (+) Silt	medium dense	moist
	No water encountered		

Byrnwood Club Development
Bedford Road
Town of New Castle, NY
(12-175)

3 January 2013

TEST PIT LOGS

TP-11	Elevation +642		
0-0'6"	Brown Topsoil		
0'6"-3'9"	Brown coarse to fine SAND, some Silt, little coarse to fine Gravel, with occasional cobbles and boulders	medium dense	moist
3'9"-6'0"	Brown coarse to fine SAND, little (+) Silt, some coarse to fine Gravel (completely weathered gneiss)	dense	moist
6'0"	Weathered Gneiss bedrock No water encountered		

TP-12	Elevation +635		
0-0'6"	Brown Topsoil		
0'6"-5'0"	FILL (Brown coarse to fine SAND, some (+) Silt, little (-) coarse to fine Gravel, with trace of debris)	loose	moist
5'0"-6'6"	Orange brown, gray coarse to fine SAND and Silt	dense	moist
	Refusal on boulder No water encountered		

Byrnwood Club Development
Bedford Road
Town of New Castle, NY
(12-175)

4 January 2013

TEST PIT LOGS

TP-13	Elevation +636		
0-0'9"	Brown Topsoil with roots		
0'9"-6'3"	Brown coarse to fine SAND, and Silt, little coarse to fine Gravel	medium dense	moist
6'3"-7'5"	Brown coarse to fine SAND, some (+) Silt, little (-) coarse to fine Gravel	dense	moist
7'5"	Gneiss bedrock		
	Groundwater encountered @ 4'10"	slow inflow	

TP-14	Elevation +625		
0-0'3"	Brown Topsoil		
0'3"-3'4"	FILL (Gray brown coarse to fine SAND, some Silt, little coarse to fine Gravel, with cobbles and boulders)	loose	moist
3'4"-5'0"	FILL (Brown coarse to fine SAND, little Silt)	medium dense	moist
5'0"	Gneiss bedrock No water encountered		

Byrnwood Club Development
Bedford Road
Town of New Castle, NY
(12-175)

4 January 2013

TEST PIT LOGS

TP-15	Elevation +668		
0-0'3"	Brown Topsoil		
0'3"-1'8"	Brown coarse to fine SAND, some (+) Silt, some (-) coarse to fine Gravel, with occasional cobbles and boulders	medium dense	moist
1'8"	Gneiss bedrock No water encountered		

TP-16	Elevation +651		
0-0'8"	Dark brown Topsoil		
0'8"-1'10"	FILL (Brown coarse to fine SAND, some (+) Silt, trace medium to fine Gravel, with cobbles)	medium dense	moist
1'10"-4'10"	Brown coarse to fine SAND, some (+) Silt, trace medium to fine Gravel	medium dense	moist
4'10"	Gneiss bedrock No water encountered		

Byrnwood Club Development
Bedford Road
Town of New Castle, NY
(12-175)

4 January 2013

TEST PIT LOGS

TP-17	Elevation +655		
0-0'3"	Topsoil		
0'3"-1'0"	Brown coarse to fine SAND, some (+) Silt, little coarse to fine Gravel	medium dense	moist
	Encountered irrigation pipes Test pit abandoned No water encountered		
TP-18	Elevation +670		
0-0'10"	Brown Topsoil		
0'10"-7'0"	Brown SILT and, coarse to fine Sand, little (-) medium to fine Gravel	medium dense	moist
	No water encountered		

Brynwood Club Development
Bedford Road
Town of North Castle, NY
(12-175)

13 September 2013

TEST PIT LOGS

TP-19

0-2'5"	FILL (Brown coarse to fine SAND, some Silt, some coarse to fine Gravel, with topsoil, cobbles, boulders)	loose	moist
2'5"-7'0"	Brown coarse to fine SAND, some Silt, little coarse to fine Gravel	medium dense	moist
	No water encountered		

TP-20

0-0'6"	Brown Topsoil		
0'6"-4'3"	Brown, orange brown coarse to fine SAND, some Silt, little coarse to fine Gravel	medium dense	moist
4'3"-8'0"	Orange brown coarse to fine SAND, little (-) Silt, some coarse to fine Gravel, with occasional cobbles	medium dense	moist
	No water encountered		

Brynwood Club Development
Bedford Road
Town of North Castle, NY
(12-175)

13 September 2013

TEST PIT LOGS

TP-21

0-0'6"	Dark brown Topsoil		
0'6"-1'4"	FILL (Brown coarse to fine SAND, some (-) Silt, trace medium to fine Gravel, with few roots)	medium dense	moist
1'4"-7'0"	Brown coarse to fine SAND, little Silt, trace (+) coarse to fine Gravel, with occasional cobbles	medium dense	moist
7'0"	Possible weathered bedrock		
	No water encountered		

TP-22

0-1'6"	Dark brown Topsoil, with roots		
1'6"-2'8"	Mottled gray brown, orange brown Clayey SILT, little medium to fine Sand	medium dense	moist
2'8"-3'6"	Brown coarse to fine SAND, some (+) Silt, little medium to fine Gravel	medium dense	moist
3'6"-6'0"	Brown coarse to fine SAND, little (+) Silt, come coarse to fine Gravel	medium dense	wet
6'0"-7'6"	Gray brown SILT little, coarse to fine Sand, trace medium to fine Gravel	medium dense	wet
	Groundwater encountered @ 4'6"	slow inflow	

Brynwood Club Development
Bedford Road
Town of North Castle, NY
(12-175)

13 September 2013

TEST PIT LOGS

TP-23

0-0'7"	Brown Topsoil		
0'7"-3'10"	Brown coarse to fine SAND, and (-) Silt, little (-) coarse to fine Gravel	dense	moist
3'10"	Weathered bedrock		
	No water encountered		

TP-24

0-0'8"	Brown Topsoil		
0'8"-6'8"	Brown coarse to fine SAND, some (+) Silt, little (-) coarse to fine Gravel, with occasional cobbles	medium dense	moist
6'8"	Possible weathered bedrock or boulder		
	No water encountered		

TP-25

0-0'4"	Brown Topsoil		
0'4"-3'4"	Brown coarse to fine SAND, and Silt, trace medium to fine Gravel	medium dense	moist
3'4"	Possible bedrock or boulder		
	No water encountered		

Brynwood Club Development
Bedford Road
Town of North Castle, NY
(12-175)

13 September 2013

TEST PIT LOGS

TP-26

0-0'6"	Brown Topsoil		
0'6"-2'8"	FILL (Brown coarse to fine SAND, some (-) Silt, little coarse to fine Gravel, with cobbles and boulders)	medium dense	moist
2'8"-4'0"	FILL (Brown Topsoil, with trace roots)		
4'0"-5'6"	FILL (Dark gray brown Clayey SILT, and, coarse to fine Sand, with trace roots, trace debris)	medium stiff	moist
5'6"-8'0"	Brown coarse to fine SAND, and (-) Silt, trace coarse to fine Gravel	medium dense	moist
	No water encountered		

TP-27

0-0'9"	Brown Topsoil, with roots		
0'9"-4'4"	Light brown coarse to fine SAND, little Silt, trace coarse to fine Gravel	medium dense	dry
4'4"	Probable weathered bedrock		
	No water encountered		

Brynwood Club Development
Bedford Road
Town of North Castle, NY
(12-175)

13 September 2013

TEST PIT LOGS

TP-28

0-0'4"	Brown Topsoil		
0'4"-8'6"	FILL (Brown coarse to fine SAND, little Silt, little coarse to fine Gravel, with organics, debris)	loose	moist
8'6"-9'0"	FILL (Gray coarse to fine SAND, some Silt, little coarse to fine Gravel, with organics)	medium dense	wet
	Groundwater encountered @ 8'0"		

Byrnwood Club Development
Bedford Road
Town of New Castle, NY
(12-175)

18 -19 December 2012

Borehole Permeability Test (B-4)

Ground Surface Elevation: +628.0
Top of Casing Elevation: +631.5
Bottom of Test Hole Elevation: +621.0
Test Hole Depth from Ground Surface Elevation: 7'0" (84")

Pre-Soak:

Start Date: 18 Dec 2012 Time: 1545 Water Level*: 4'4"
End Date: 19 Dec 2012 Time: 0900 Water Level*: 7'1"

33" drop H_2O in 1035 minutes (17 hr. 15 min.) = 0.03 inches per minute

Test:

Start Date: 19 Dec 2012 Time: 1000 Water Level*: 4'3"
End Date: 19 Dec 2012 Time: 1515 Water Level*: 5'3.5"

12.5" drop H_2O in 315 minutes (5 hr. 15 min.) = 0.04 inches per minute

Time	Water Level*	Interval Water Level Drop (Inches)	Cumulative Water Level Drop (Inches)
1000	4'3"	0	0
1100	4'6"	3	3
1200	4'8"	2	5
1300	4'10"	2	7
1400	5'1"	3	10
1515	5'3.5"	2.5	12.5

Water Level* - Depth below top of casing (elevation +631.5)

Byrnwood Club Development
Bedford Road
Town of New Castle, NY
(12-175)

3 January 2013

Percolation Test P-1
(Elevation +620)

Test hole depth 42" from ground surface elevation

Pre-Soak

0-10 min, 22" drop of H2O (pipe drained)
22" drop H2O in 10 minutes = 2.20 inches per minute

Test Run #1

5 min, 15" drop H2O (re-filled pipe)

Test Run #2

5 min, 14" drop H2O (re-filled pipe)

Test Run #3

5 min, 12" drop H2O (re-filled pipe)

Final Test Reading

Start @ 1245, 14" from top of pipe
Finish @ 1300, 36" drop from top of pipe (pipe drained)
22" drop H2O in 15 minutes = 1.46 inches per minute

Percolation Hole P-2
(Elevation + 612)

Test hole depth 20" from ground elevation
Groundwater @ 0'6" below surface
Percolation test unable to be performed

Byrnwood Club Development
Bedford Road
Town of New Castle, NY
(12-175)

3 January 2013

Percolation Test P-3
(Elevation + 616)

Test hole depth 32" from ground surface elevation

Pre-Soak

0-24 min, 17" drop of H2O (pipe drained)
17" drop H2O in 24 minutes = 0.71 inches per minute

Test Run #1

5 min, 5" drop H2O (re-filled pipe)

Test Run #2

5 min, 5" drop H2O (re-filled pipe)

Test Run #3

5 min, 4" drop H2O (re-filled pipe)

Final Test Reading

Start @ 1535, 15" from top of pipe
Finish @ 1605, 28" drop from top of pipe
13" drop H2O in 30 minutes = 0.43 inches per minute

Percolation Hole P-4
(Elevation + 615)

Test hole depth 24" from ground elevation
Groundwater @ 1'10" below surface
Percolation test unable to be performed

CARLIN-SIMPSON & ASSOCIATES
SAYREVILLE, NJ 08872

SIEVE ANALYSIS

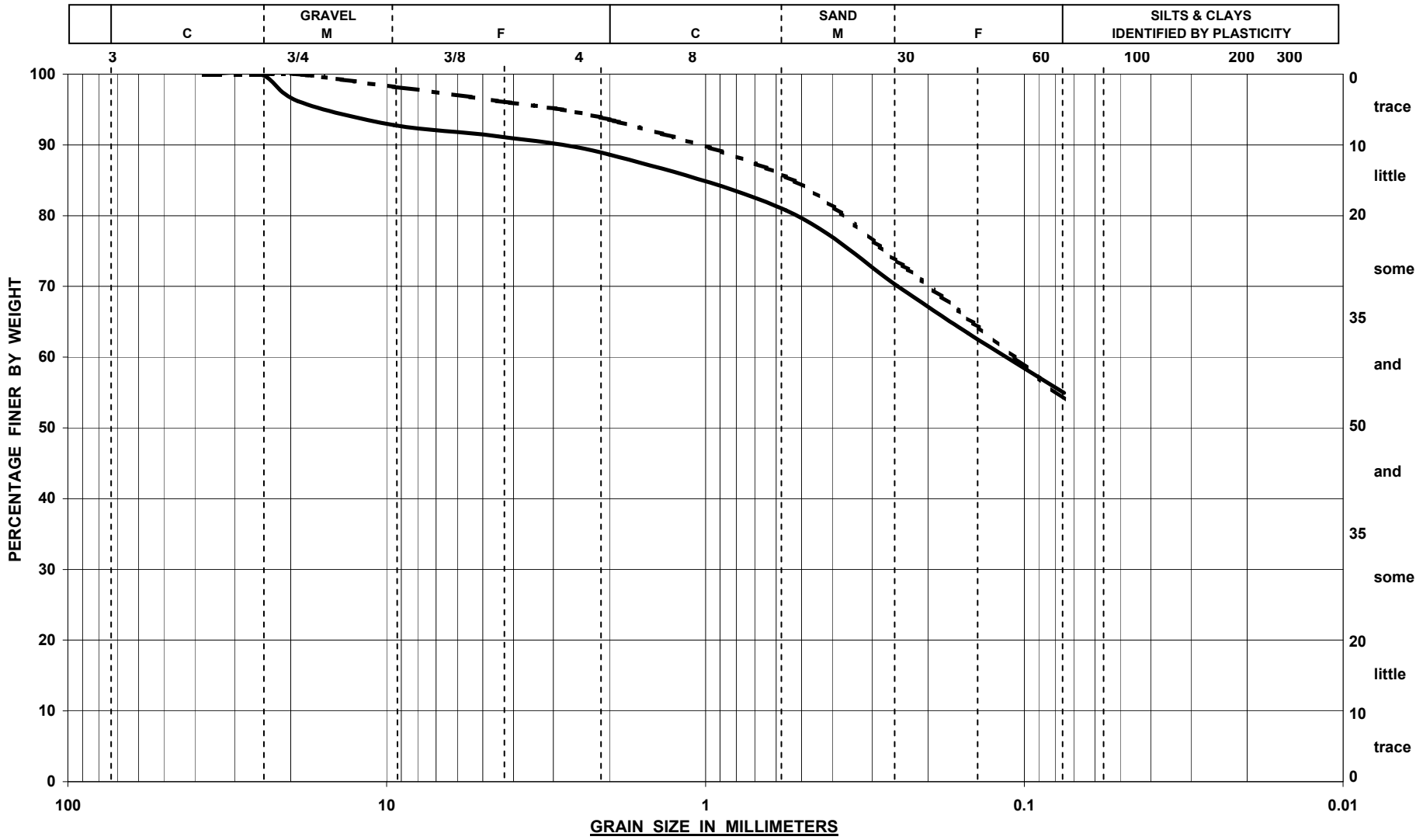

SYMBOL	BORING	SAMPLE	DEPTH	DESCRIPTION	NAT MC
———	B-1	S-1	0' 0" - 2' 0"	Brown SILT and (+), coarse to fine Sand, little (-) medium to fine Gravel	14.0%
— -	B-2	S-2	2' 0" - 4' 0"	Brown SILT and (+), coarse to fine Sand, trace medium to fine Gravel	14.2%

PROJECT Brynwood Club, Bedford Road, North Castle, NY **BY** MW **DATE** 7-Jan-13 **JOB NO** 12-175

CARLIN-SIMPSON & ASSOCIATES
SAYREVILLE, NJ 08872

SIEVE ANALYSIS

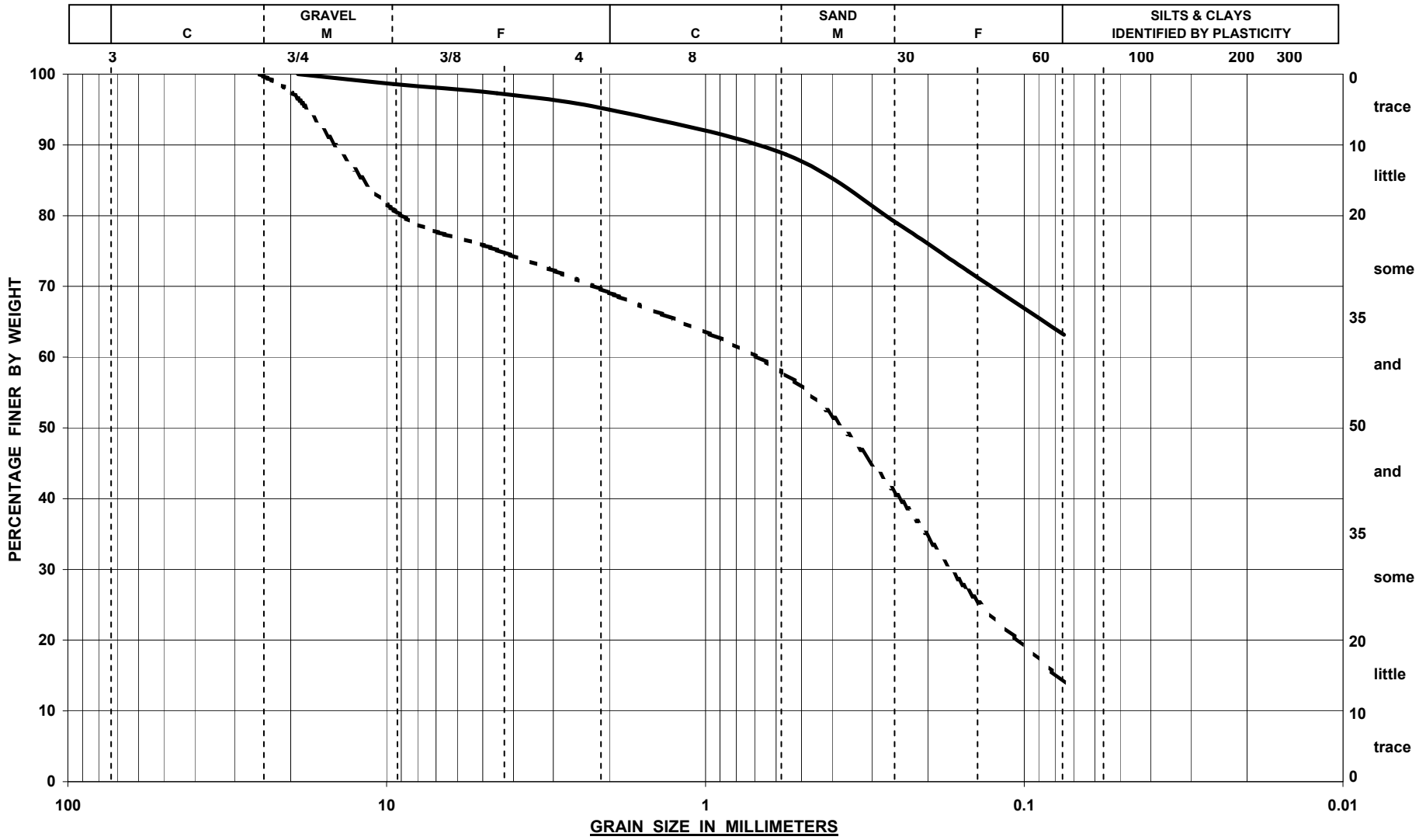

SYMBOL	BORING	SAMPLE	DEPTH	DESCRIPTION	NAT MC
———	B-3	S-1	0' 0" - 2' 0"	Brown SILT and (-), coarse to fine Sand, trace medium to fine Gravel	24.2%
— -	B-4	S-3	5' 0" - 7' 0"	Brown coarse to fine SAND, little Silt, some (+) medium to fine Gravel	12.1%

PROJECT Brynwood Club, Bedford Road, North Castle, NY **BY** MW **DATE** 7-Jan-13 **JOB NO** 12-175

CARLIN-SIMPSON & ASSOCIATES
SAYREVILLE, NJ 08872

SIEVE ANALYSIS

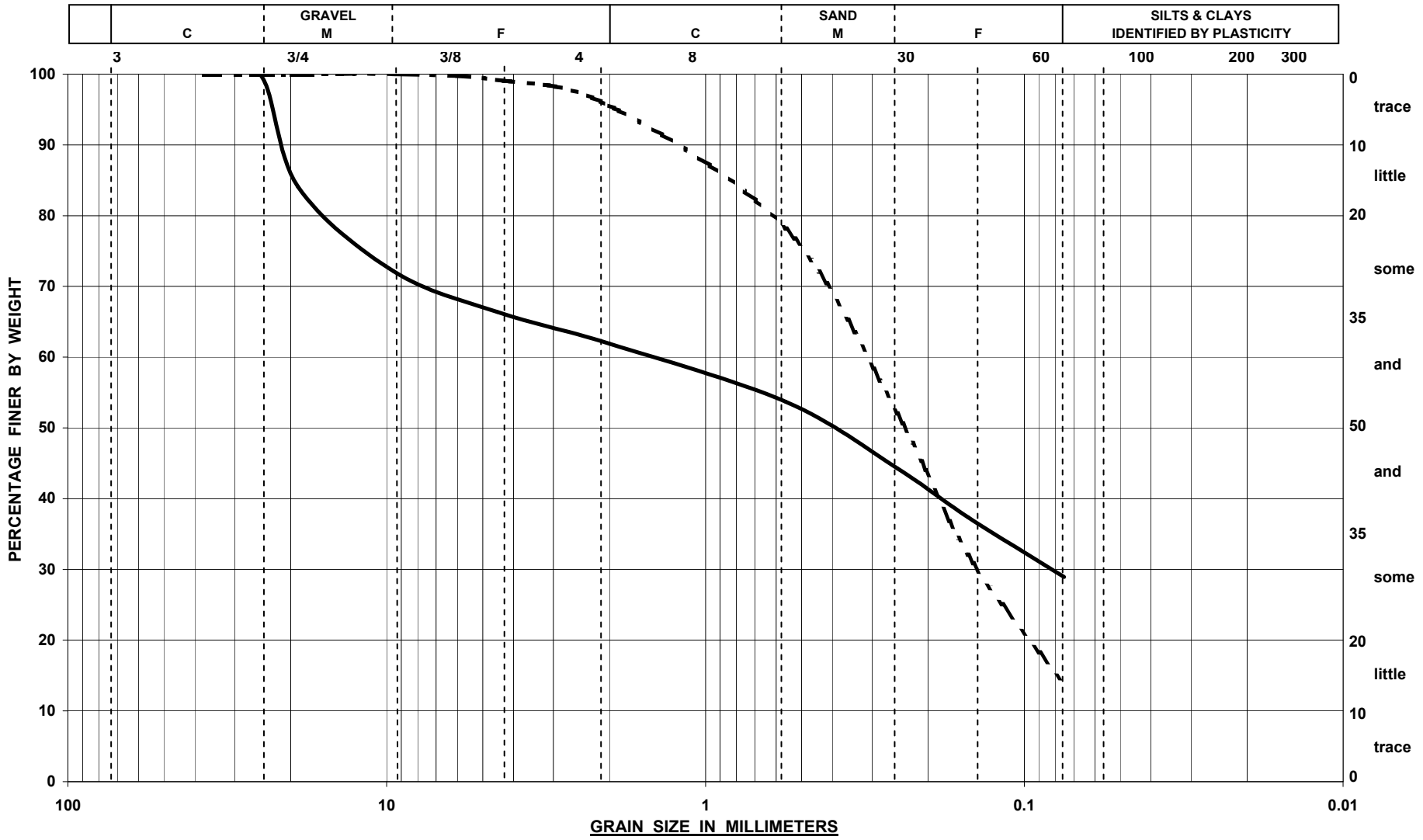

SYMBOL	BORING	SAMPLE	DEPTH	DESCRIPTION	NAT MC
———	B-6	S-2	2' 0" - 4' 0"	Brown coarse to fine Sand, some Silt, and (-) coarse to fine Gravel	9.9%
— -	B-7	S-3	5' 0" - 7' 0"	Brown coarse to fine SAND, little Silt, trace fine Gravel	8.7%

PROJECT Brynwood Club, Bedford Road, North Castle, NY **BY** MW **DATE** 10-Jan-13 **JOB NO** 12-175

CARLIN-SIMPSON & ASSOCIATES
SAYREVILLE, NJ 08872

SIEVE ANALYSIS

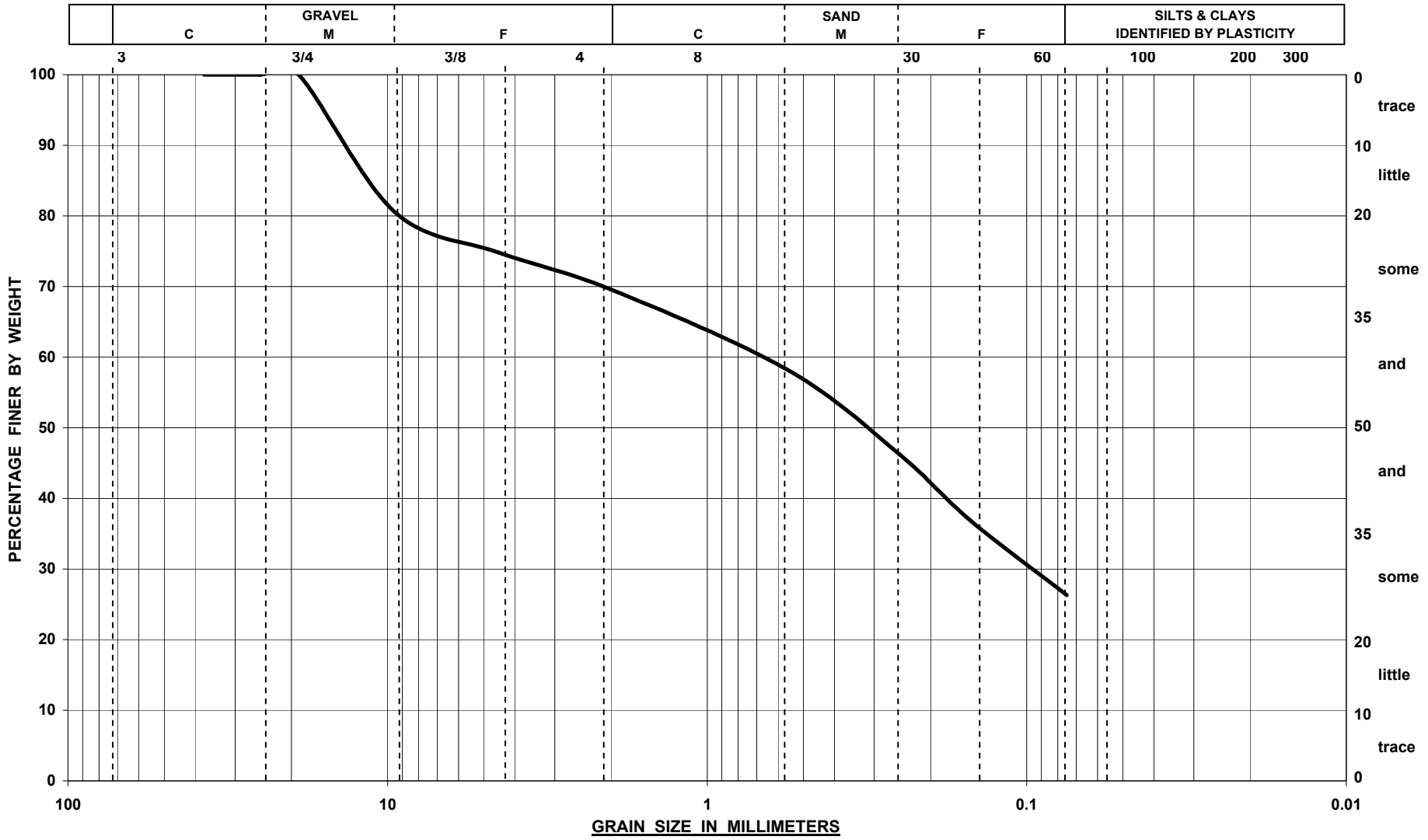

SYMBOL	BORING	SAMPLE	DEPTH	DESCRIPTION	NAT MC
———	B-9	S-2	2' 0" - 4' 0"	FILL (brown coarse to fine Sand, some Silt, some (+) medium to fine Gravel	15.0%

PROJECT Brynwood Club, Bedford Road, North Castle, NY **BY** MW **DATE** 7-Jan-13 **JOB NO** 12-175

CARLIN-SIMPSON & ASSOCIATES
SAYREVILLE, NJ 08872

SIEVE ANALYSIS

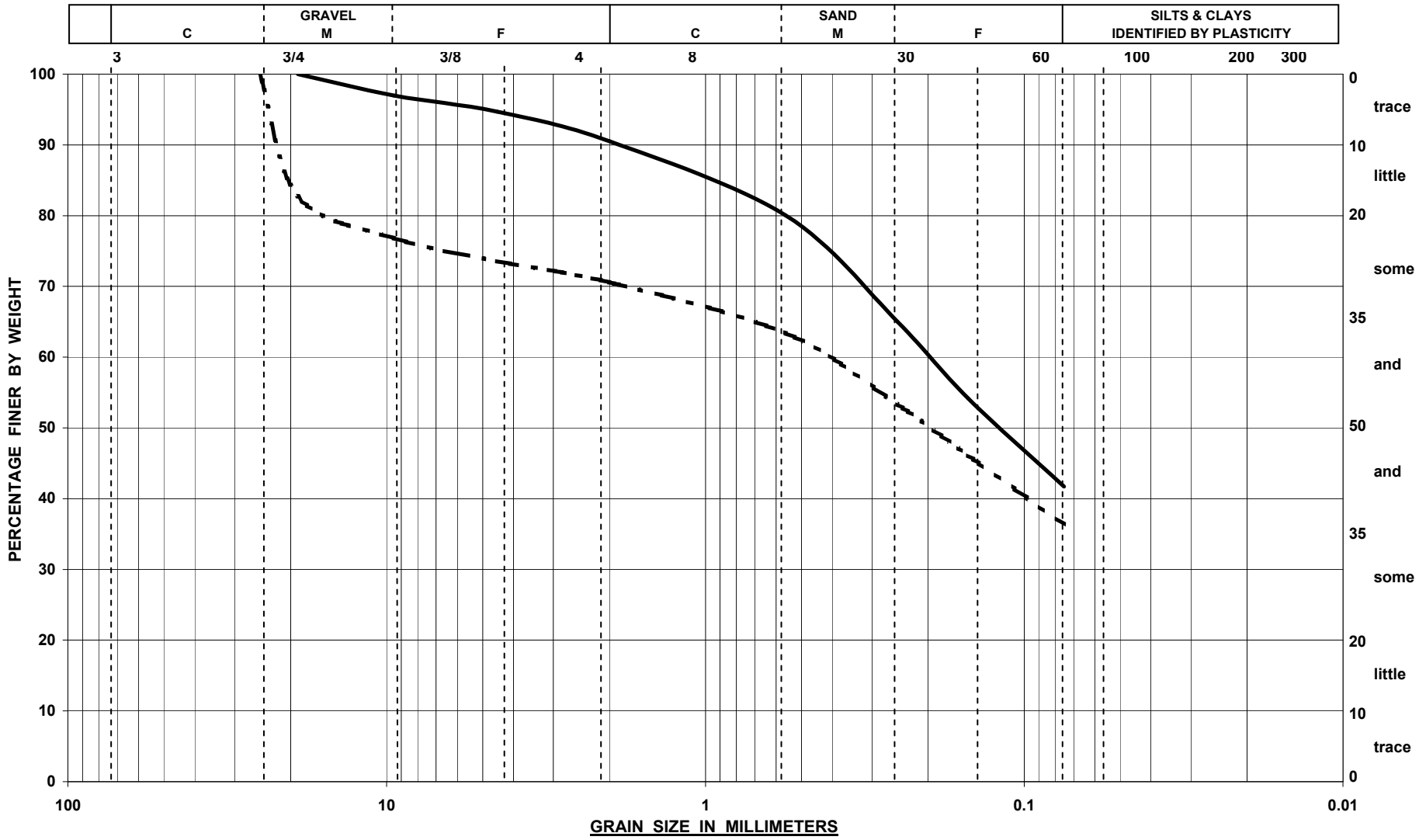

SYMBOL	Test Pit	SAMPLE	DEPTH	DESCRIPTION	NAT MC
———	TP-1	S-1		Brown coarse to fine SAND, and Silt, trace (+) medium to fine Gravel	18.2%
— -	TP-4	S-1		Brown coarse to fine Sand, and (-) Silt, some coarse to fine Gravel	14.0%

PROJECT Brynwood Club, Bedford Road, North Castle, NY **BY** MW **DATE** 7-Jan-13 **JOB NO** 12-175

CARLIN-SIMPSON & ASSOCIATES
SAYREVILLE, NJ 08872

SIEVE ANALYSIS

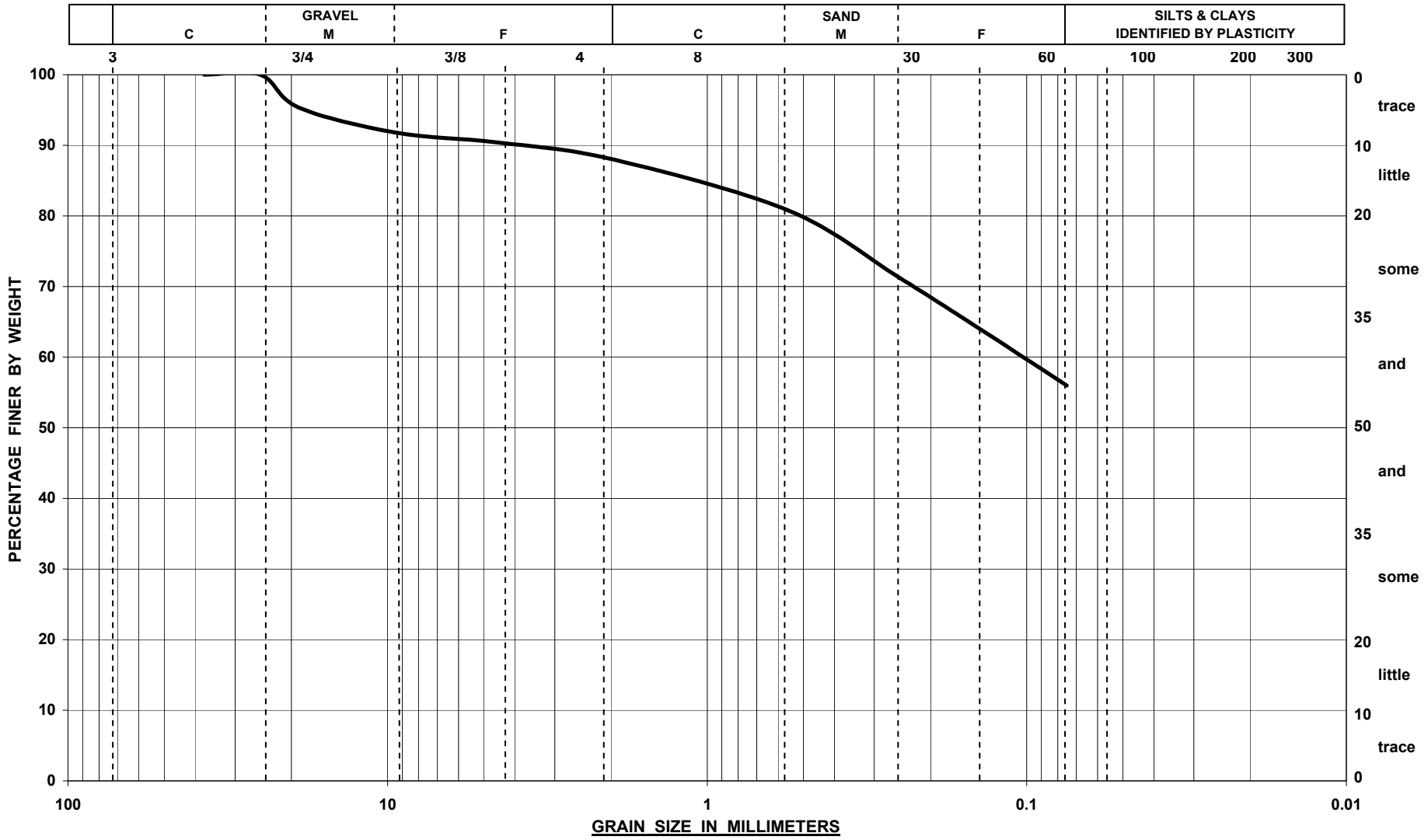

SYMBOL	Test Pit	SAMPLE	DEPTH	DESCRIPTION	NAT MC
———	TP-18	S-1	0' 10" - 7' 0"	Brown SILT and, coarse to fine Sand, little (-) medium to fine Gravel	18.0%

PROJECT Brynwood Club, Bedford Road, North Castle, NY **BY** MW **DATE** 7-Jan-13 **JOB NO** 12-175

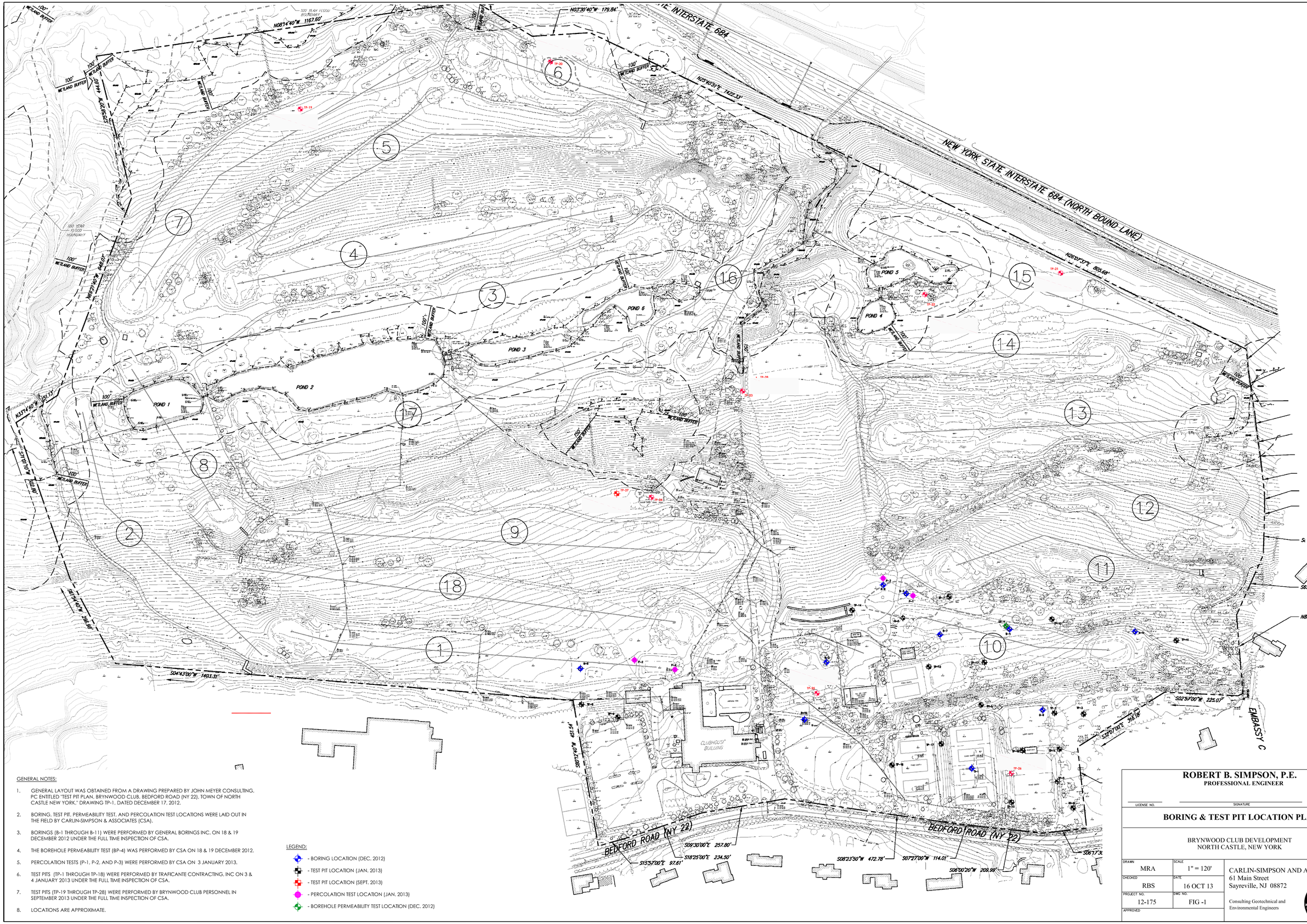

GENERAL NOTES:

1. GENERAL LAYOUT WAS OBTAINED FROM A DRAWING PREPARED BY JOHN MEYER CONSULTING, PC ENTITLED "TEST PIT PLAN, BRYNWOOD CLUB, BEDFORD ROAD (NY 22), TOWN OF NORTH CASTLE NEW YORK," DRAWING TP-1, DATED DECEMBER 17, 2012.
2. BORING, TEST PIT, PERMEABILITY TEST, AND PERCOLATION TEST LOCATIONS WERE LAID OUT IN THE FIELD BY CARLIN-SIMPSON & ASSOCIATES (CSA).
3. BORINGS (B-1 THROUGH B-11) WERE PERFORMED BY GENERAL BORINGS INC. ON 18 & 19 DECEMBER 2012 UNDER THE FULL TIME INSPECTION OF CSA.
4. THE BOREHOLE PERMEABILITY TEST (BP-4) WAS PERFORMED BY CSA ON 18 & 19 DECEMBER 2012.
5. PERCOLATION TESTS (P-1, P-2, AND P-3) WERE PERFORMED BY CSA ON 3 JANUARY 2013.
6. TEST PITS (TP-1 THROUGH TP-18) WERE PERFORMED BY TRAFICANTE CONTRACTING, INC ON 3 & 4 JANUARY 2013 UNDER THE FULL TIME INSPECTION OF CSA.
7. TEST PITS (TP-19 THROUGH TP-28) WERE PERFORMED BY BRYNWOOD CLUB PERSONNEL IN SEPTEMBER 2013 UNDER THE FULL TIME INSPECTION OF CSA.
8. LOCATIONS ARE APPROXIMATE.

LEGEND:

- BORING LOCATION (DEC. 2012)
- TEST PIT LOCATION (JAN. 2013)
- TEST PIT LOCATION (SEPT. 2013)
- PERCOLATION TEST LOCATION (JAN. 2013)
- BOREHOLE PERMEABILITY TEST LOCATION (DEC. 2012)

ROBERT B. SIMPSON, P.E.
PROFESSIONAL ENGINEER

LICENSE NO. _____ SIGNATURE _____

BORING & TEST PIT LOCATION PLAN

BRYNWOOD CLUB DEVELOPMENT
NORTH CASTLE, NEW YORK

DRAWN: MRA	SCALE: 1" = 120'
CHECKED: RBS	DATE: 16 OCT 13
PROJECT NO.: 12-175	DWG NO.: FIG -1
APPROVED	

CARLIN-SIMPSON AND ASSOCIATES
61 Main Street
Sayreville, NJ 08872
Consulting Geotechnical and Environmental Engineers

APPENDIX B

PUMP PERFORMANCE CURVES

EQUALIZATION TANK

1. SELECT SYSTEM HEAD POINTS	FLOW IN GPM:	20.00	35.00	45.00	65.00	85.00

2A. FORCE MAIN DATA :

PIPE TYPE :	SCH. 40 SS
C FACTOR :	120
NOMINAL DIA. (in.) :	3
INSIDE DIA. (in.) :	3
INSIDE DIA. (ft.) :	0.25
ID AREA (sq. ft.) :	0.049
LENGTH (ft.)	15

'E HYDRAULIC VALUES

FLOW RATE (gpm)	(cfs)	VELOCITY (fps)	VEL. HEAD (ft.)					
20	0.0446	0.91	0.01	0.01				
35	0.0780	1.59	0.04		0.04			
45	0.1003	2.04	0.06			0.06		
65	0.1448	2.95	0.14				0.14	
85	0.1894	3.86	0.23					0.23

2. TOTAL VELOCITY HEAD LOSS (STEP 2A + STEP 2B)....	0.01	0.04	0.06	0.14	0.23

3. PIPE LOSS

A. 3" DIAMETER SCH. 40 SS HEAD LOSS

@ GPM	HAZEN & WILLIAMS (ft.)					
20	0.03	0.03				
35	0.08		0.08			
45	0.12			0.12		
65	0.24				0.24	
85	0.39					0.39

3. SUM OF ALL PIPE LOSS (ft.)	0.03	0.08	0.12	0.24	0.39

4. MINOR LOSSES

A. 3" DIAMETER SCH. 40 SS HEAD LOSS

QUANTITY	TYPE OF LOSS	k FACTOR	k total
1	inlet	0.50	0.50
1	outlet	1.00	1.00
5	90 - elbow	0.51	2.55
0	45 - elbow	0.27	0.00
0	22.5 - elbow		0.00
0	tee (thru)	0.34	0.00
0	tee (branch)	1.02	0.00
0	gate valve	0.14	0.00
0	plug valve	1.00	0.00
0	butterfly valve		0.00
0	check valve	1.70	0.00
0	special control valve		0.00
0	wye fitting		0.00
1	reducer	0.33	0.33
		K TOTAL	4.38

@ GPM	VELOCITY HEAD (ft.)	K TOTAL	LOSS (ft.)					
20	0.01	4.38	0.06	0.06				
35	0.04	4.38	0.17		0.17			
45	0.06	4.38	0.28			0.28		
65	0.14	4.38	0.59				0.59	
85	0.23	4.38	1.01					1.01

4. SUM OF ALL MINOR LOSSES (ft.).	0.06	0.17	0.28	0.59	1.01
5. SUM OF ALL LOSSES (STEP 2 + STEP 3+ STEP 4).	0.10	0.29	0.47	0.97	1.64

6. STATIC HEAD					
a. MAX. STATIC.	14.04	14.04	14.04	14.04	14.04
b. MIN. STATIC.	8.04	8.04	8.04	8.04	8.04
7. TOTAL DYNAMIC HEAD (TDH)					
a. TDH max. .(STEP 5 + STEP 6a).	14.14	14.33	14.51	15.01	15.68
b. TDH max. .(STEP 5 + STEP 6b).	8.14	8.33	8.51	9.01	9.68

8. SYSTEM HEAD CURVES

C VALUE = 14 120

FLOW (GPM)	TDH max. (FT.)	TDH min. (FT.)
0	14.04	8.04
20	14.14	8.14
35	14.33	8.33
45	14.51	8.51
65	15.01	9.01
85	15.68	9.68

TECHNICAL BROCHURE
B3887BF R2

WS_BF Series

Model 3887BF

SUBMERSIBLE SEWAGE PUMP

BUILT IN THE USA
ENGINEERED, ASSEMBLED & TESTED

GOULDS WATER TECHNOLOGY
a xylem brand

FEATURES

Impeller: Cast iron, semi-open, non-clog, dynamically balanced with pump out vanes for mechanical seal protection.

Casing: Cast iron flanged volute type for maximum efficiency. Designed for easy installation on A10-20 slide rail or base elbow rail systems.

Mechanical Seal: SILICON CARBIDE VS. SILICON CARBIDE sealing faces for superior abrasive resistance, stainless steel metal parts, BUNA-N elastomers.

Shaft: Corrosion-resistant, 300 series stainless steel. Threaded design. Locknut on all models to guard against component damage on accidental reverse rotation.

Fasteners: 300 series stainless steel.

Capable of running dry without damage to components.

Designed for continuous operation when fully submerged.

EXTENDED WARRANTY AVAILABLE FOR RESIDENTIAL APPLICATIONS.

AGENCY LISTINGS

Tested to UL 778 and CSA 22.2 108 Standards
By Canadian Standards Association
File #LR38549

APPLICATIONS

Specifically designed for the following uses:

- Homes
- Water transfer
- Sewage systems
- Light industrial
- Dewatering/Effluent
- Commercial applications

Anywhere waste or drainage must be disposed of quickly, quietly and efficiently.

SPECIFICATIONS

Pump

- Solids handling capabilities: 2" maximum
- Capacities: up to 185 GPM
- Total heads: up to 38 feet TDH
- Discharge size: 2" NPT threaded companion flange as standard. 3" option available but must be ordered separately. (Order no. A1-3)
- Temperature: 104°F (40°C) continuous
  140°F (60°C) intermittent.

MOTORS

- Fully submerged in high grade turbine oil for lubrication and efficient heat transfer. All ratings are within the working limits of the motor.
- Class B insulation

Single phase (60 Hz):

- Capacitor start motors for maximum starting torque.
- Built-in overload with automatic reset.
- SJTOW or STOW severe duty oil and water resistant power cords.
- ⅓ – 1 HP models have NEMA three prong grounding plugs.

Three phase (60 Hz):

- Class 10 overload protection must be provided in separately ordered starter unit.
- STOW power cords all have bare lead cord ends.

- **Bearings:** Upper and lower heavy duty ball bearing construction.
- **Designed for Continuous Operation:** Pump ratings are within the motor manufacturer's recommended working limits, can be operated continuously without damage when fully submerged.
- **Power Cable:** Severe duty rated, oil and water resistant. Epoxy seal on motor end provides secondary moisture barrier in case of outer jacket damage and to prevent oil wicking. Standard cord is 20'. Optional lengths are available.
- **Motor Cover O-ring:** Assures positive sealing against contaminants and oil leakage.

MOTOR AND MODEL INFORMATION

Order Number	HP	Phase	Volts	RPM	Impeller Diameter (in.)	Maximum Amps	Locked Rotor Amps	KVA Code	Full Load Efficiency	Resistance		Weight (lbs.)
										Start	Line-Line	
WS0311BF	0.33	1	115	1750	4.69	10.7	30.0	M	54	11.9	1.7	63
WS0318BF			208			6.8	19.5	K	51	9.1	4.2	
WS0312BF			230			4.9	14.1	L	53	14.5	8.0	
WS0511BF	0.5		115		5.00	14.5	31.1	J	55	9.3	1.4	65
WS0518BF			208			8.0	19.5	K	51	9.1	4.2	
WS0512BF			230			7.3	16.5	J	54	11.7	5.6	
WS0538BF		3	200			3.8	12.3	K	75	-	6.7	
WS0532BF			230			3.3	9.7	K	75	-	9.9	
WS0534BF			460			1.7	4.9	K	75	-	39.4	
WS0537BF			575			1.4	4.3	K	68	-	47.8	
WS0718BF	0.75	1	208		5.38	11.0	39.0	K	65	2.6	1.4	85
WS0712BF			230			9.4	24.8	J	57	4.8	2.3	
WS0738BF		3	200			4.1	21.2	H	74	-	4.3	
WS0732BF			230			3.6	17.3	J	76	-	5.6	
WS0734BF			460			1.8	8.9	J	76	-	22.4	
WS0737BF			575			1.5	7.3	J	71	-	29.2	
WS1018BF	1	1	208		5.75	14.0	39.0	K	65	2.6	1.4	
WS1012BF			230			12.3	30.5	H	60	4.3	1.8	
WS1038BF		3	200			6.0	21.2	H	74	-	4.3	
WS1032BF			230			5.8	17.3	J	76	-	5.6	
WS1034BF			460			2.9	8.9	J	76	-	22.4	
WS1037BF			575			2.4	7.3	J	71	-	29.2	

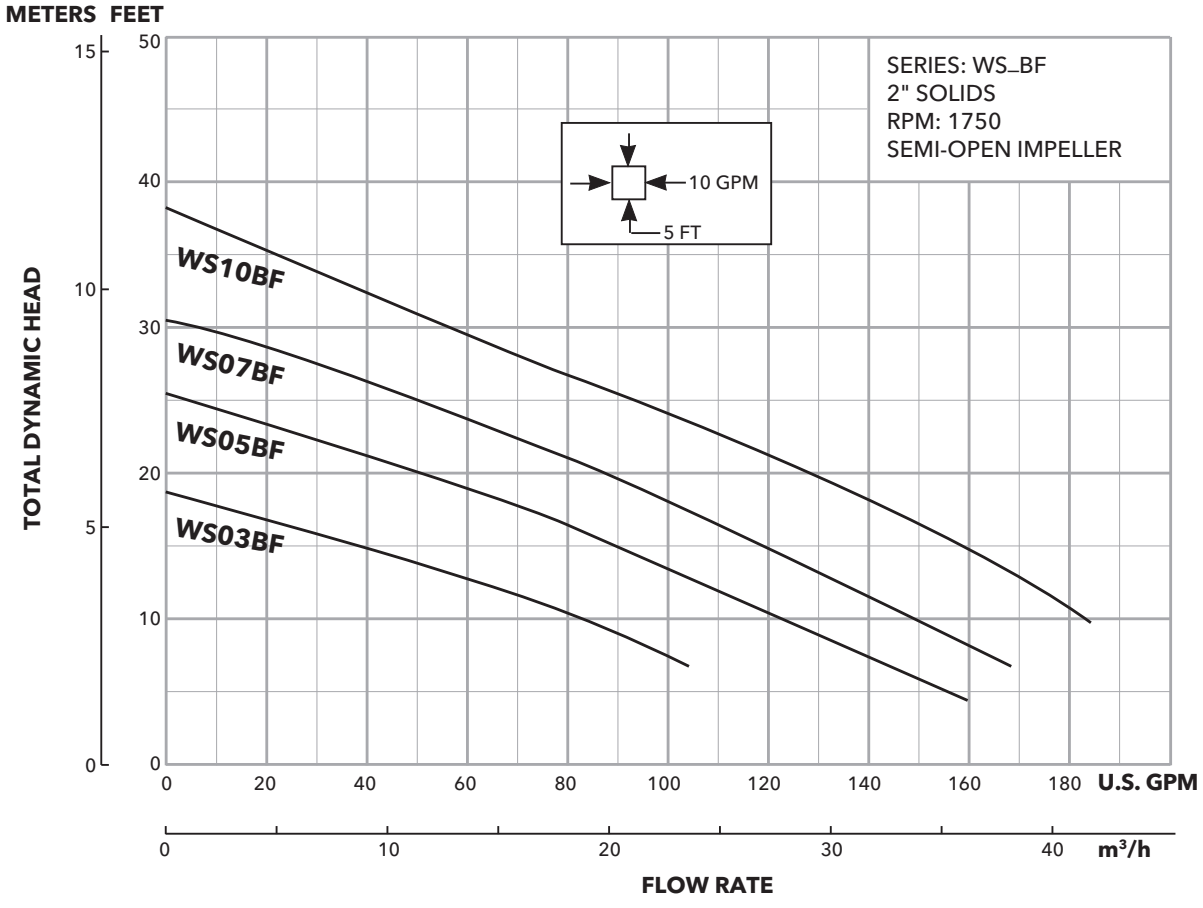

PERFORMANCE RATINGS (gallons per minute)

Order No.		WS03BF	WS05BF	WS07BF	WS10BF
HP ▶		⅓	½	¾	1
RPM ▶		1750	1750	1750	1750
Total Head Feet of Water	10 ▶	80	122	145	183
	15	36	90	116	152
	20	–	50	86	123
	25	–	–	48	95
	30	–	–	–	58
	35	–	–	–	20

COMPONENTS

Item No.	Description
1	Impeller
2	Casing
3	Mechanical Seal
4	Motor Shaft
5	Motor
6	Ball Bearings
7	Power Cable
8	Casing O-Ring

* For available repair parts, see repair parts book.

DIMENSIONS

(All dimensions are in inches. Do not use for construction purposes.)

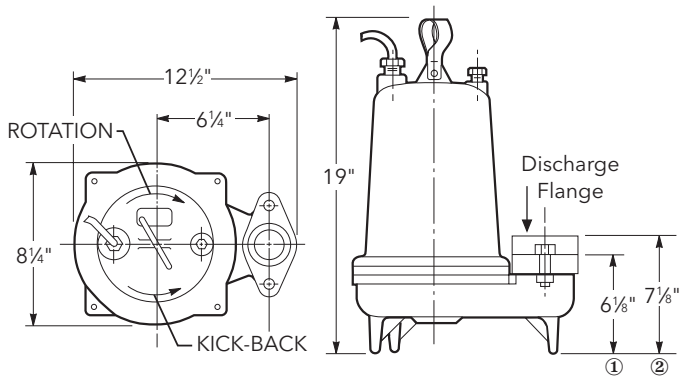

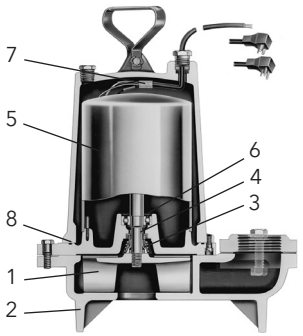

Discharge Flange:

① 2" NPT standard
② 3" NPT optional (order an A1-3)

xylem
Let's Solve Water

Xylem Inc.
2881 East Bayard Street Ext., Suite A
Seneca Falls, NY 13148
Phone: (866) 325-4210
Fax: (888) 322-5877
www.gouldswatertechnology.com

Goulds is a registered trademark of Goulds Pumps, Inc. and is used under license.
© 2016 Xylem Inc. B3887BF R2 September 2016

SLUDGE DECANT PUMP

1. SELECT SYSTEM HEAD POINTS	FLOW IN GPM:	55.00	70.00	76.00	95.00	115.00

2A. FORCE MAIN DATA :

PIPE TYPE :	SCH 80 PVC
C FACTOR :	120
NOMINAL DIA. (in.) :	3
INSIDE DIA. (in.) :	3.042
INSIDE DIA. (ft.) :	0.25
ID AREA (sq. ft.) :	0.050
LENGTH (ft.)	25

'E HYDRAULIC VALUES

FLOW RATE (gpm)	(cfs)	VELOCITY (fps)	VEL. HEAD (ft.)					
55	0.1225	2.43	0.09	0.09				
70	0.1560	3.09	0.15		0.15			
76	0.1693	3.36	0.17			0.17		
95	0.2117	4.20	0.27				0.27	
115	0.2562	5.08	0.40					0.40

2. TOTAL VELOCITY HEAD LOSS (STEP 2A + STEP 2B)....	0.09	0.15	0.17	0.27	0.40

3. PIPE LOSS

A 3" DIAMETER SCH 80 PVC HEADLOSS

@ GPM	HAZEN & WILLIAMS (ft.)					
55	0.27	0.27				
70	0.43		0.43			
76	0.50			0.50		
95	0.76				0.76	
115	1.08					1.08

3. SUM OF ALL PIPE LOSS (ft.)	0.27	0.43	0.50	0.76	1.08

4. MINOR LOSSES

A 3" DIAMETER SCH 80 PVC HEADLOSS

QUANTITY	TYPE OF LOSS	k FACTOR	k total
1	inlet	0.50	0.50
1	outlet	1.00	1.00
3	90 - elbow	0.51	1.53
	45 - elbow	0.27	0.00
0	22.5 - elbow		0.00
0	tee (thru)	0.34	0.00
0	tee (branch)	1.02	0.00
0	gate valve	0.14	0.00
0	plug valve	1.00	0.00
0	butterfly valve		0.00
0	check valve	1.70	0.00
0	special control valve		0.00
0	wye fitting		0.00
0	reducer	0.33	0.00
		K TOTAL	3.03

@ GPM	VELOCITY HEAD (ft.)	K TOTAL	LOSS (ft.)					
55	0.09	3.03	0.28	0.28				
70	0.15	3.03	0.45		0.45			
76	0.17	3.03	0.53			0.53		
95	0.27	3.03	0.83				0.83	
115	0.40	3.03	1.21					1.21

4. SUM OF ALL MINOR LOSSES (ft.).	0.28	0.45	0.53	0.83	1.21
5. SUM OF ALL LOSSES (STEP 2 + STEP 3+ STEP 4).	0.64	1.03	1.20	1.86	2.69

6. STATIC HEAD					
a. MAX. STATIC.	9.38	9.38	9.38	9.38	9.38
b. MIN. STATIC.	10.50	10.50	10.50	10.50	10.50
7. TOTAL DYNAMIC HEAD (TDH)					
a. TDH max. .(STEP 5 + STEP 6a).	10.02	10.41	10.58	11.24	12.07
b. TDH max. .(STEP 5 + STEP 6b).	11.14	11.53	11.70	12.36	13.19

8. SYSTEM HEAD CURVES

C VALUE = 14 120

FLOW (GPM)	TDH max. (FT.)	TDH min. (FT.)
0	9.38	10.50
55	10.02	11.14
70	10.41	11.53
76	10.58	11.70
95	11.24	12.36
115	12.07	13.19

TECHNICAL BROCHURE
B3887BF R2

WS_BF Series

Model 3887BF

SUBMERSIBLE SEWAGE PUMP

BUILT IN THE USA
ENGINEERED, ASSEMBLED & TESTED

GOULDS WATER TECHNOLOGY
a xylem brand

FEATURES

Impeller: Cast iron, semi-open, non-clog, dynamically balanced with pump out vanes for mechanical seal protection.

Casing: Cast iron flanged volute type for maximum efficiency. Designed for easy installation on A10-20 slide rail or base elbow rail systems.

Mechanical Seal: SILICON CARBIDE VS. SILICON CARBIDE sealing faces for superior abrasive resistance, stainless steel metal parts, BUNA-N elastomers.

Shaft: Corrosion-resistant, 300 series stainless steel. Threaded design. Locknut on all models to guard against component damage on accidental reverse rotation.

Fasteners: 300 series stainless steel.

Capable of running dry without damage to components.

Designed for continuous operation when fully submerged.

EXTENDED WARRANTY AVAILABLE FOR RESIDENTIAL APPLICATIONS.

AGENCY LISTINGS

Tested to UL 778 and CSA 22.2 108 Standards
By Canadian Standards Association
File #LR38549

APPLICATIONS

Specifically designed for the following uses:

- Homes
- Water transfer
- Sewage systems
- Light industrial
- Dewatering/Effluent
- Commercial applications

Anywhere waste or drainage must be disposed of quickly, quietly and efficiently.

SPECIFICATIONS

Pump

- Solids handling capabilities: 2" maximum
- Capacities: up to 185 GPM
- Total heads: up to 38 feet TDH
- Discharge size: 2" NPT threaded companion flange as standard. 3" option available but must be ordered separately. (Order no. A1-3)
- Temperature: 104°F (40°C) continuous
  140°F (60°C) intermittent.

MOTORS

- Fully submerged in high grade turbine oil for lubrication and efficient heat transfer. All ratings are within the working limits of the motor.
- Class B insulation

Single phase (60 Hz):

- Capacitor start motors for maximum starting torque.
- Built-in overload with automatic reset.
- SJTOW or STOW severe duty oil and water resistant power cords.
- ⅓ – 1 HP models have NEMA three prong grounding plugs.

Three phase (60 Hz):

- Class 10 overload protection must be provided in separately ordered starter unit.
- STOW power cords all have bare lead cord ends.

- **Bearings:** Upper and lower heavy duty ball bearing construction.
- **Designed for Continuous Operation:** Pump ratings are within the motor manufacturer's recommended working limits, can be operated continuously without damage when fully submerged.
- **Power Cable:** Severe duty rated, oil and water resistant. Epoxy seal on motor end provides secondary moisture barrier in case of outer jacket damage and to prevent oil wicking. Standard cord is 20'. Optional lengths are available.
- **Motor Cover O-ring:** Assures positive sealing against contaminants and oil leakage.

MOTOR AND MODEL INFORMATION

Order Number	HP	Phase	Volts	RPM	Impeller Diameter (in.)	Maximum Amps	Locked Rotor Amps	KVA Code	Full Load Efficiency	Resistance		Weight (lbs.)
										Start	Line-Line	
WS0311BF	0.33	1	115	1750	4.69	10.7	30.0	M	54	11.9	1.7	63
WS0318BF			208			6.8	19.5	K	51	9.1	4.2	
WS0312BF			230			4.9	14.1	L	53	14.5	8.0	
WS0511BF	0.5		115		5.00	14.5	31.1	J	55	9.3	1.4	65
WS0518BF			208			8.0	19.5	K	51	9.1	4.2	
WS0512BF			230			7.3	16.5	J	54	11.7	5.6	
WS0538BF		3	200			3.8	12.3	K	75	-	6.7	
WS0532BF			230			3.3	9.7	K	75	-	9.9	
WS0534BF			460			1.7	4.9	K	75	-	39.4	
WS0537BF			575			1.4	4.3	K	68	-	47.8	
WS0718BF	0.75	1	208		5.38	11.0	39.0	K	65	2.6	1.4	85
WS0712BF			230			9.4	24.8	J	57	4.8	2.3	
WS0738BF		3	200			4.1	21.2	H	74	-	4.3	
WS0732BF			230			3.6	17.3	J	76	-	5.6	
WS0734BF			460			1.8	8.9	J	76	-	22.4	
WS0737BF			575			1.5	7.3	J	71	-	29.2	
WS1018BF	1	1	208		5.75	14.0	39.0	K	65	2.6	1.4	
WS1012BF			230			12.3	30.5	H	60	4.3	1.8	
WS1038BF		3	200			6.0	21.2	H	74	-	4.3	
WS1032BF			230			5.8	17.3	J	76	-	5.6	
WS1034BF			460			2.9	8.9	J	76	-	22.4	
WS1037BF			575			2.4	7.3	J	71	-	29.2	

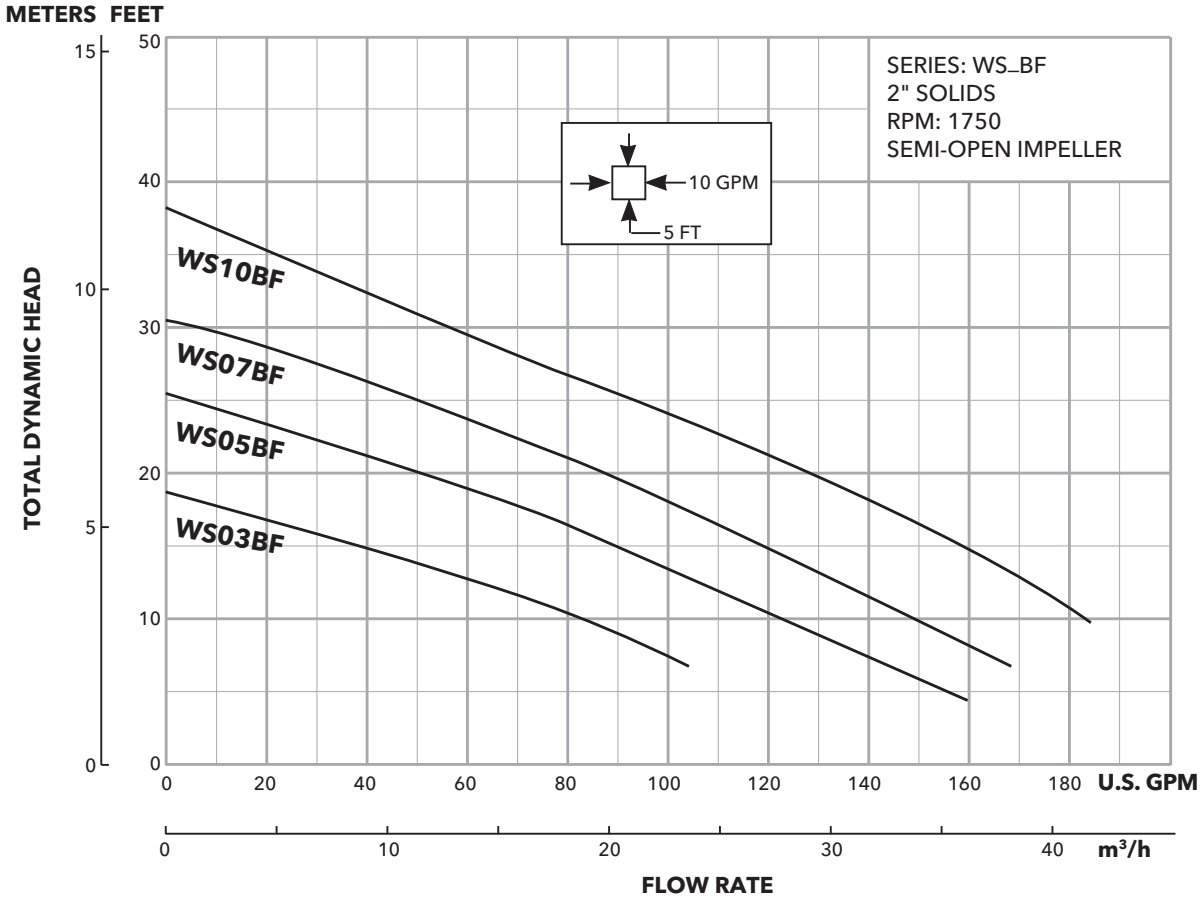

PERFORMANCE RATINGS (gallons per minute)

Order No.		WS03BF	WS05BF	WS07BF	WS10BF
HP ▶		⅓	½	¾	1
RPM ▶		1750	1750	1750	1750
Total Head Feet of Water	10 ▶	80	122	145	183
	15	36	90	116	152
	20	–	50	86	123
	25	–	–	48	95
	30	–	–	–	58
	35	–	–	–	20

COMPONENTS

Item No.	Description
1	Impeller
2	Casing
3	Mechanical Seal
4	Motor Shaft
5	Motor
6	Ball Bearings
7	Power Cable
8	Casing O-Ring

* For available repair parts, see repair parts book.

DIMENSIONS

(All dimensions are in inches. Do not use for construction purposes.)

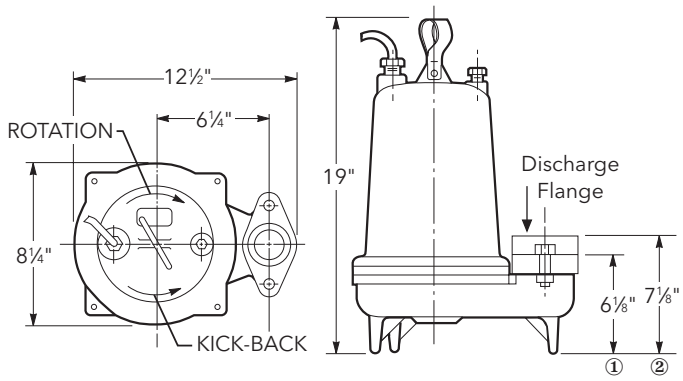

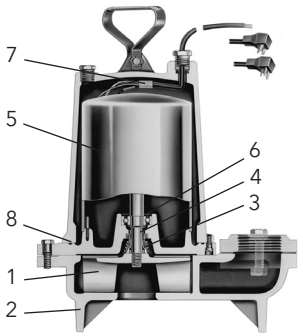

Discharge Flange:

① 2" NPT standard
② 3" NPT optional (order an A1-3)

xylem
Let's Solve Water

Xylem Inc.
2881 East Bayard Street Ext., Suite A
Seneca Falls, NY 13148
Phone: (866) 325-4210
Fax: (888) 322-5877
www.gouldswatertechnology.com

Goulds is a registered trademark of Goulds Pumps, Inc. and is used under license.
© 2016 Xylem Inc. B3887BF R2 September 2016

APPENDIX C

MANUFACTURER'S PROCESS CALCULATIONS

PES Project #	BJB-022522-SC(Rev5)	Date:	4/7/22
Job Name:	Summit Club		
QTY & Flow			

BESST DESIGN CALCULATIONS

1) **B_x** Actual Sludge Load [kg BOD_5 / kg VSS / d]

$$B_x = B \times 1.02^{(tmin-20)}$$
$$B_x = 0.120 \times 1.02^{(10-20)}$$
$$B_x = 0.0984 \text{ kg } BOD_5 \text{ / kg VSS / d}$$

2) **A** Sludge Age [days]

$$A = (1 / (YB_x)) \times (1-0.5((YB_x) / k_{ac})) + (Sqrt(1 + ((YB_x) / 2k_{ac})^2))$$
$$A = (1/ (0.60 \times 0.0984)) \times (1- 0.5 \times((0.60 \times 0.0984) / 0.090))+ (Sqrt (1 + (0.60 \times 0.0984) / (2 \times 0.090)^2))$$
$$A = 29.1936 \text{ days}$$

3) **k_d** Actual Rate of Decay [d^{-1}]

$$k_d = k_{ac} / (1 + Ak_{ac})$$
$$k_d = 0.090 / (1+ (29.1936) (0.090))$$
$$k_d = 0.0248 \text{ } d^{-1}$$

4) **X** Sludge Concentration [kg ss / m^3]

$$X = 1000 \times V_x / KI$$
$$X = 1000 \times 0.600) / 100$$
$$X = 6.0000 \text{ kg ss / } m^3$$

PES Project #	BJB-022522-SC(Rev5)	Date:	4/7/22
Job Name:	Summit Club		
QTY & Flow	0		

BESST DESIGN CALCULATIONS, Cont'd.

5) $\mathbf{X_v}$ Volatile Suspended Solids Concentration [kg VSS / m^3]

$\mathbf{X_v}$ = (X)(p)
$\mathbf{X_v}$ = 6.0000 x 0.65
$\mathbf{X_v}$ = 3.9000 kg VSS / m^3

6) **v** Actual Hydraulic Loading [m / h]

v = Lesser of v_l or v_c, where v_l = 1
$\mathbf{v_c}$ = $(N_x / X) \times e^{0.03(tmin-20)}$
$\mathbf{v_c}$ = (6.0000 / 6.0000) ($e^{0.03 * (10 - 20)}$)
$\mathbf{v_c}$ = 0.7408 m / h

7) $\mathbf{V_B}$ Aeration Volume [m^3]

$\mathbf{S_R}$ = S_T - (0.966(p)(NL))
$\mathbf{V_B}$ = $(Q(S_O - S_R)) / X_v B_x$
$\mathbf{V_B}$ = ((170.326)(0.2400 - 0.0037) / (3.900)(0.0984)
$\mathbf{V_B}$ = 104.82 m^3

8) $\mathbf{S_S}$ Clarifier Surface Area [m^2]

$\mathbf{S_S}$ = $((Q_Q)(Q) / 24v$
$\mathbf{S_S}$ = ((3)(170.326)/ (24 * 0.7408)
$\mathbf{S_S}$ = 28.739 m^2

9) $\mathbf{V_S}$ Clarifier Volume [m^3]

$\mathbf{V_S}$ = S_S / SV
$\mathbf{V_S}$ = 28.739 / 0.63
$\mathbf{V_S}$ = 45.618 m^3

PES Project #	BJB-022522-SC(Rev5)	Date:	4/7/22
Job Name:	Summit Club		
QTY & Flow	0		

BESST DESIGN CALCULATIONS, Cont'd.

10) $\mathbf{P_X}$ Net Mass of Volatile Suspended Solids Produced [kg VSS / d]

$\mathbf{P_X} = (Y / (1 + Ak_d))(Q)(S_O - S_R)$
$\mathbf{P_X} = (0.60 / (1 + (29.1936) (0.0248))(170.33)(0.2400 - 0.0037)$
$\mathbf{P_X} = 14.004$ kg VSS / d

11) $\mathbf{P_t}$ Sludge Production [kg ss / d]

$\mathbf{P_t} = P_X / p$
$\mathbf{P_t} = 14.004 / 0.6500$
$\mathbf{P_t} = 21.544$ kg ss / d

12) $\mathbf{V_N}$ Nitrification Volume [m^3]

$\mathbf{V_N} = (Q(N_O - N)) / (p_N m_U X_V)$
$\mathbf{V_N} = (170.326 (0.0400 - 0.0010)) / ((0.0450)(0.6085)(3.9000))$
$\mathbf{V_N} = 62.149$ m^3

13) $\mathbf{V_D}$ Denitrification Volume [m^3]

$\mathbf{V_D} = (QN_OY) / (0.75 m_Z X_V)$
$\mathbf{V_D} = (170.33 ((0.0400)(0.60))) / (0.75 (0.0750)(3.9000))$
$\mathbf{V_D} = 18.634$ m^3

14) $\mathbf{V_A}$ Volume of Aeration [m^3]

$\mathbf{V_A}$ = Larger of V_{AB} or V_N
$\mathbf{V_{AB}} = V_B - V_D((1 + Ak_d) / (2.77(Am_Z)))$
$\mathbf{V_{AB}} = 104.82 - 18.634 ((1 + (29.1936)(0.0248)) /$
$(2.77 (29.1936)(0.0750))$
$\mathbf{V_{AB}} = 99.526$
$\mathbf{V_A} = 99.526$ m^3

PES Project #	BJB-022522-SC(Rev5)	Date:	4/7/22
Job Name:	Summit Club		
QTY & Flow	0		

BESST DESIGN CALCULATIONS, Cont'd.

15) **V_T** Total Volume of Reactor [m^3]

$$\mathbf{V_T} = V_A + V_D + V_S$$
$$\mathbf{V_T} = 99.526 + 18.634 + 45.618$$
$$\mathbf{V_T} = 163.78 \ m^3$$

16) **O_2** Oxygen Consumption [kg O_2 / d]

$$\mathbf{O_2} = Q((S_O - S_R) / 0.68) - 1.42P_X + 4.57Q(N_O - N)$$
$$\mathbf{O_2} = 170.33 \ ((0.2400 - 0.0037) / 0.68) - 1.42 (14.004) + 4.57 (170.33) (0.0400 - 0.0010)$$
$$\mathbf{O_2} = 69.655 \ kg\ O_2 / d$$

17) **Nm** Air Consumption [Nm^3 / h]

$$\mathbf{Nm} = O_2(c_S / (c_S - 2))(o_k / (0.024a))$$
$$\mathbf{Nm} = 69.655 (8.1224 / (8.1224 - 2)) (1.3000 / (0.024 (30)))$$
$$\mathbf{Nm} = 166.85 \ Nm^3 / h$$

BESST PROGRAM AND FORMULA LISTING

The following variable and formula lists represent the program listing for the computer model used to design and size the BESST system. Not all of the formulas are listed due to copyright and patent protection. Formulas that are NOT shown are mainly sub-formulas of those listed. For formula verification see Metcalf & Eddy: Wastewater Engineering; and K.R. Imhoff: Taschenbuch def Stadtenwasterung. 28. Auflage, Oldenbo Munchen - Wien 1993.

INPUT VALUES

1.)	**B**	**Sludge Load (kg BOD / kg VSS)**		**0.03 to 0.20**
2.)	**N_X**	**Flux Flow (kg ds / m^2 / h)** function of temperature (use @ 20 degrees Celsius)		**6.00**
3.)	**V_L**	**Limit Hydraulic Loading (m / h)**		**0.99 to 1.1**
4.)	**V_X**	**Sludge Volume (mL / L)**		**4.0 to 0.7**
5.)	**KI**	**Sludge Index (mL / g)**		**70 to 120**
6.)	**p**	**Volatile Suspended Solids (%)**		**0.62 to 0.68**
7.)	**Y**	**Maximum Yield Coefficient (kg VSS / kg BOD)**		**0.53 to 0.6**
8.)	**k_{ac}**	**Decay Rate (d)** constant		**0.09**
9.)	**Q**	**Flow Rate (m^3 / d)**		
10.)	**Q_Q**	**Flow Variation**		**1.5 to 3**
11.)	**S_O**	**Influent BOD (kg / m^3)**		
12.)	**S_T**	**Effluent BOD (kg / m^3)**		
13.)	**N_O**	**Influent Ammonia (kg / m^3)**		
14.)	**N**	**Effluent Ammonia (kg / m^3)**	typically	**0.005**

INPUT VALUES

15.)	**N_3**	**Effluent Nitrates N-NO_3 (kg / m^3)**	typically	**0.001 to 0.015**
16.)	**NL_O**	**Influent TSS (kg / m^3)**		
17.)	**NL**	**Effluent TSS (kg / m^3**		
18.)	**min**	**Minimum Water Temperature (^oC)**		
19.)	**max**	**Maximum Water Temperature (^oC)**		
20.)	**a**	**Oxygen Transfer Coefficient (g / Nm^3)**		**15 to 50**
21.)	**SV**	**Ratio, Separation Surface to Separation Volume**		
22.)	**m_i**	**Specific Growth Rate of Nitrificants**	constant	**1.37**
23.)	**pH**	**pH**		**6.0 to 8.0**
24.)	**m_{id}**	**Specific Growth Rate of Denitrificants**	constant	**0.1 to 0.3**
25.)	**O_k**	**Peak Load of Aeration**	constant	**1.3**

Nitrification and Denitrification

Nitrogen is removed by the nitrification and denitrification processes. Nitrification is autotropic and all Purestream *ES*, LLC integrated bioreactors are designed for complete nitrification of ammonia to NO_3 (pleas see Metcalf & Eddy, Third Edition, Chapter 11-6).

Denitrification, however, is heterotropic and requires a carbon source. Conventional plants' "separate sludge denitrification" requires that carbon is added, typically in the form of methanol. This adds to operating costs, and if used in excess, to increased BOD_5 content. BESST technology's "single-sludge denitrification" approach uses an endogenous carbon source to maintain dentrifiers. Influent is combined with nitrified mixe liquor in the anoxic compartment providing the carbon source needed for denitrification. Relatively high mixe liquor recycle rates are employed and sufficient denitrification retention times provided.

Total nitrogen reduction ($\mathbf{N_T}$) is a subject of not only providing sufficient anoxic volume for denitrification and keeping temperature above a certain minimum, but also a function of Recycled Activated Sludge (RAS) flow rate. The efficiency of $\mathbf{N_T}$ reduction is expressed as follows:

$$\eta = (1 - 1/(1 + n)) \times 100$$

Where n = RAS flow multiple of average flow Q.

The following are typical efficiencies and RAS flow multiples used / required:

	n	η (%)
Domestic	2	66
	3	75
	4	80
Slaughterhouse Wastewater	14	93
Hog Manure	29	97

Phosphorous Reduction

BESST technology delivers not only high efficiency reduction of organic matter, but also increased efficiency of phosphorous removal. Two processes, biological and chemical precipitation are employed with advantage

The mechanics of biological phosphorous removal, known as "Luxury Uptake", are due to exposure of activated sludge to alternating oxic and anoxic conditions. Under these conditions, the cells store more energy in the form of phosphorous than needed for their survival. If strictly oxic conditions are maintained during subsequent clarification, phosphorous will be retained by the cells and will eventually be removed with the excess sludge. Unlike most other methods of clarification, these conditions are maintained by the BESS process, and biological phosphorous reduction to less than 3 mg/L are readily achievable.

The basic reaction involved in the precipitation of phosphorous with iron is as follows:

$$Fe^{+3} + H_n(PO_4)^{n-3} \blacklozenge \quad FePO_4 + nH^+$$

In the case of iron, 1 mole will precipitate 1 mole of phosphate. The advantage of the process is its low chemical consumption, close to stoichiometric, and consequently, the reduction of ballast sludge production. Followed by microfiltration, reductions to 0.5 mg/L are possible.

If yet further reduction of phosphorous is required, ferric sulfate precipitation after the bioreactor followed by microfiltration must be used.

February 28, 2022
Project: Summit Club 45,000 gpd

SLUDGE AIRLIFT CALCULATIONS AND DATA

A. Maximum flow at six times average daily flow

$\frac{45{,}000 \times 6}{1440}$ = 188 GPM total

B. Two (2) 4" airlifts provided, each rated at 94 GPM

C. See performance curve attached for 4" airlift

At Lift (H_L) = 1'
Flow = 94 GPM
Submergence (H_S) = 9'

% Subm. = $\frac{9}{10}$ x 100 = 90%
Required Air = 12 CFM per airlift

At Lift (H_L) = 2'
Flow = 94 GPM
Submergence (H_S) = 9'

% Subm. = $\frac{9}{11}$ x 100 = 81.8%
Required Air = 18 CFM per airlift

At actual lift (H_L) = 1.5', use 15 CFM per sludge airlift

D. Minimum flow at four times average daily flow

$\frac{45{,}000 \times 4}{1440}$ = 125 GPM total

E. Two (2) 4" airlifts provided, each rated at 63 GPM

F. See performance curve attached for 4" airlift

At Lift (H_L) = 1'
Flow = 63 GPM
Submergence (H_S) = 9'

% Subm. = $\frac{9}{10}$ x 100 = 90%
Required Air = 10 CFM per airlift

At Lift (H_L) = 2'
Flow = 63 GPM
Submergence (H_S) = 9'

% Subm. = $\frac{9}{11}$ x 100 = 81.8%
Required Air = 16 CFM per airlift

At actual lift (H_L) = 1.5', use 13 CFM per sludge airlift

February 28, 2022
Project: Summit Club 45,000 gpd

SKIMMER AIRLIFT CALCULATIONS AND DATA

A. Maximum flow at two times average daily flow

$$\frac{45{,}000 \times 2}{1440} = 63 \text{ GPM total}$$

B. Two (2) 2.5" airlifts provided, each rated at 32 GPM

C. See performance curve attached for 2.5" airlift

At Lift (H_L) = 1'	At Lift (H_L) = 2'
Flow = 32 GPM	Flow = 32 GPM
Submergence (H_S) = 5'	Submergence (H_S) = 5'
% Subm. = $\frac{5}{6} \times 100 = 83.3\%$	% Subm. = $\frac{5}{7} \times 100 = 71.4\%$
Required Air = 3 CFM per airlift	Required Air = 7 CFM

At actual lift (H_L) = 1.5', use 5 CFM per sludge airlift

WasteWater Treatment Systems

TYPICAL PERFORMANCE CURVES FOR A 4-INCH AIR LIFT

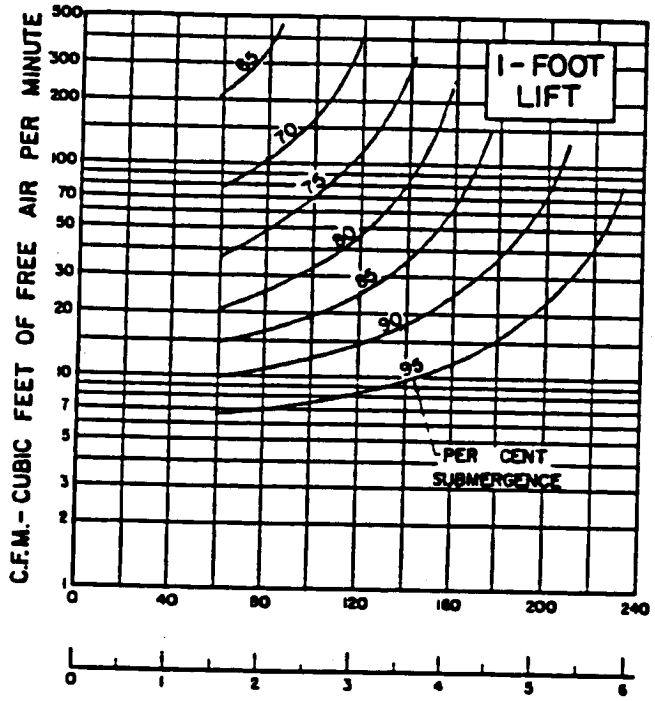

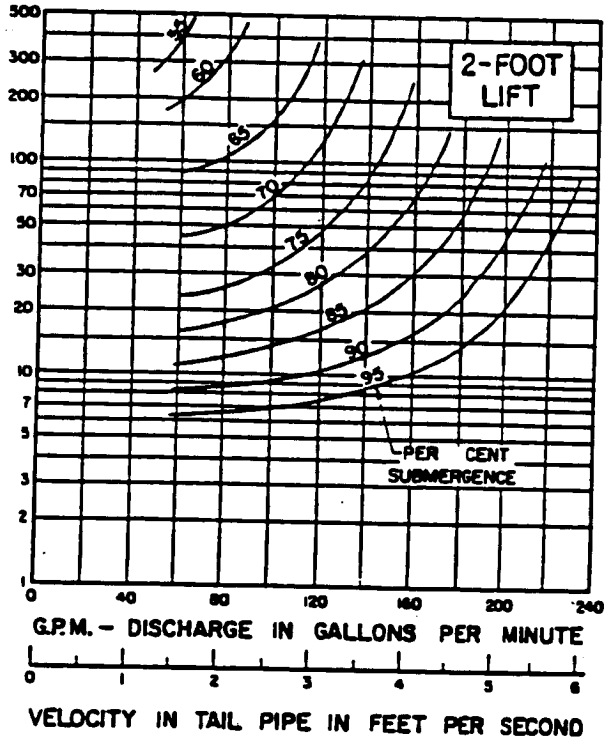

NOTES:

1. THE AIR LIFT PERFORMANCE CURVES ON THIS CHART ARE TYPICAL FOR PUMPING CLEAR WATER AND ARE INTENDED TO BE USED FOR ESTIMATING.
2. THE PER CENT SUBMERGENCE = $\frac{H_S}{H_S + H_L} \times 100$.
3. IT IS SUGGESTED THAT THE CURVES BE NOT EXTENDED BEYOND THE LIMITS SHOWN BECAUSE THE APPROXIMATE MAXIMUM DISCHARGE FOR EACH CONDITION IS INDICATED.
4. FOR LIFTS BETWEEN THOSE INDICATED ON THIS CHART USE A STRAIGHT ARITHMETIC PROPORTION WHEN INTERPOLATING VALUES.

EXAMPLE 1:

GIVEN: LIFT, $H_L = 5'$; SUBM., $H_S = 13'$.
DESIRED DISCH. = 100 G.P.M.

FIND: PER CENT SUBMERGENCE = $\frac{13}{13+5} \times 100 = 72$
AIR REQ'D. = 24 C.F.M. (FREE AIR)
VELOCITY IN 4" TAIL PIPE = 2.6 F.P.S.

EXAMPLE 2:

GIVEN: LIFT, $H_L = 5.5'$; SUBM., $H_S = 12.5'$.
DESIRED VEL. IN 4" TAIL PIPE = 3.0 F.P.S.

FIND: DISCH. FROM 4" AIR LIFT = 117 G.P.M.
PER CENT SUBM. = $\frac{12.5}{12.5+5.5} \times 100 = 69.3$.
AIR REQ'D.
= (AIR @ H = 5') $- \frac{5.5-5.0}{7.0-5.0}$ (DIFF. AIR @ H = 5' & 7'.
= $40 - 0.25(40 - 30)$
= 38 C.F.M. (FREE AIR).

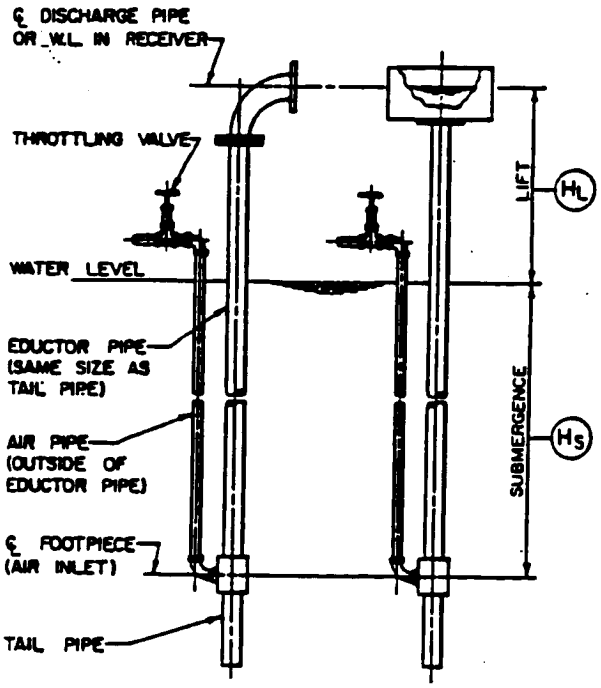

TYPICAL AIR LIFTS
FOR WHICH CURVES ARE APPLICABLE

purestream inc.
WASTEWATER TREATMENT EQUIPMENT
P.O. Box 68 Florence, KY 41022-0068 Phone (859) 371-9898 Fax (859) 371-3577

engineering data sheet

Chicago PUMP

section 8630.4

JAN., 1972 K-6291-2.5

AIR LIFT PUMP

$2\frac{1}{2}$" SIZE

TYPICAL PERFORMANCE CURVES

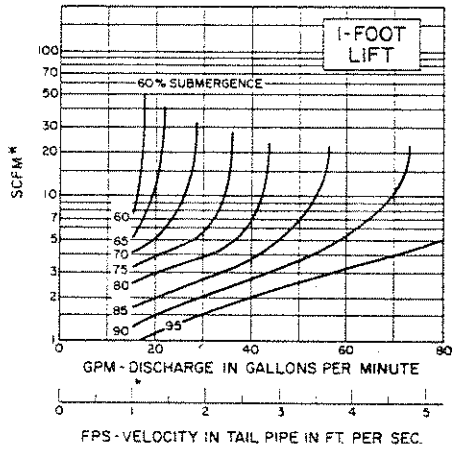

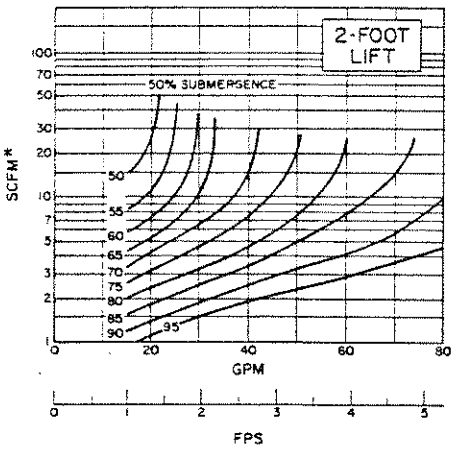

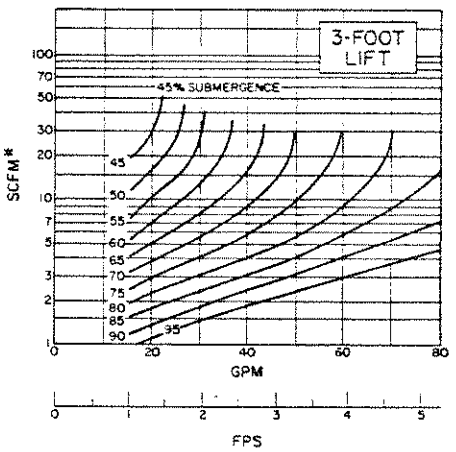

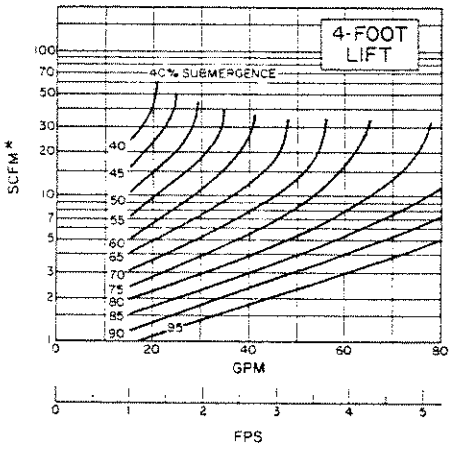

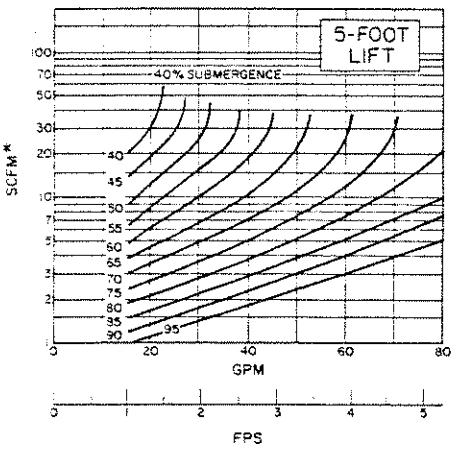

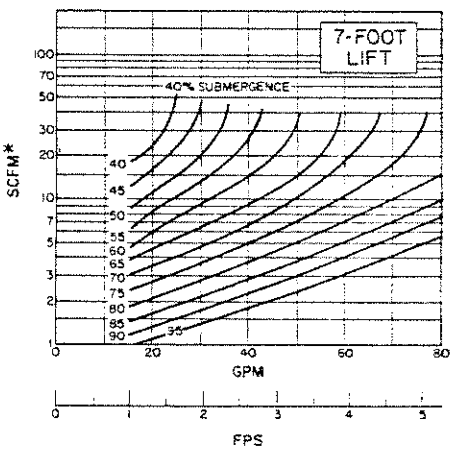

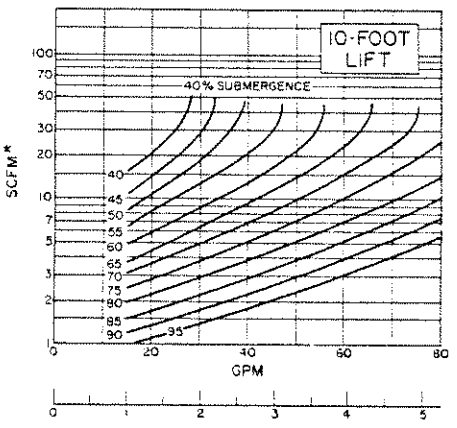

NOTES:

1. THE AIR LIFT PERFORMANCE CURVES ON THIS CHART ARE TYPICAL FOR PUMPING CLEAR WATER AND ARE INTENDED TO BE USED FOR ESTIMATING.
2. THE PER CENT SUBMERGENCE = $\frac{H_S}{H_S + H_L} \times 100$
3. IT IS SUGGESTED THAT THE CURVES NOT BE EXTENDED BEYOND THE LIMITS SHOWN BECAUSE THE APPROXIMATE MAXIMUM DISCHARGE FOR EACH CONDITION IS INDICATED.
4. FOR LIFTS BETWEEN THOSE INDICATED ON THIS CHART USE A STRAIGHT ARITHMETIC PROPORTION WHEN INTERPOLATING VALUES.

EXAMPLE:

GIVEN: LIFT, $H_L = 3'$, SUBM, $H_S = 12'$
DESIRED DISCH. = 40 GPM

FIND: PER CENT SUBMERGENCE = $\frac{12'}{12' + 3'} \times 100 = 80\%$

AIR REQ'D = 4 SCFM
VELOCITY IN $2\frac{1}{2}$" TAIL PIPE = 2.6 FPS

* STANDARD CUBIC FEET OF AIR PER MINUTE AT 14.7 PSIA AND 70° F.

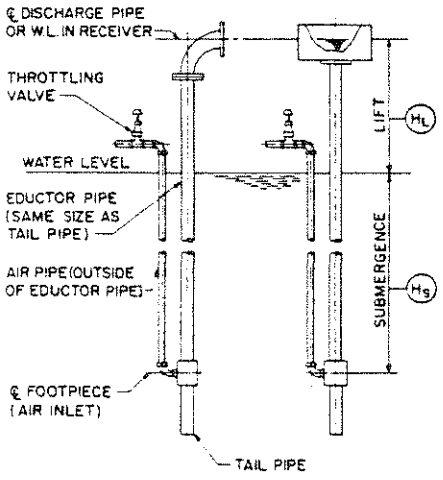

© FMC CORPORATION 1972

APPENDIX D

BLOWER PERFORMANCE DATA

PROCESS BLOWER

KAESER COMPRESSORS

OMEGA PLUS ROTARY BLOWERS
- RECOMMENDATIONS BLOWERS -

Customer: Summit Club-Process/Airlift **Prepared By:** David W. Martine

INPUT DATA:

Operating mode: Gauge pressure
Flow medium : Humid Air
Kind of package: Com-paK Plus on frequency control
Specific heat constant κ : 1.40
Inlet temperature: 90 °F
Specific weight at standard conditions : 0.0760 lb/ ft³
Inlet pressure: 14.7 psia
Pressure difference : 6.0 psig
Inlet flow: 160 icfm
Discharge pressure : 20.7 psia
Air humidity: 80 [%]

Technical data:

Package: BB 69C
Blower: OMEGA 22P
Motor power: 10.0 hp
Operating voltage: 208V/60Hz

Blower speed(60Hz): 5125 rpm
Connection ANSI:2
% of maximum speed: 86
Blower: OMEGA 22P

Performance data:	**min. frequency**	**Design point**	**max. frequency**	
Frequency:	18.0	55.4	60.0	Hz
Speed:	1540	4730	5130	rpm
Inlet air flow Q1*:	32	160	176	icfm
Inlet air flow Q1 (standard):	30	148	163	scfm
Standard conditions 14.7psia, 68°F and 0 % RH				
Discharge temperature*:	216	167	165	°F
Blower shaft power*:	2.1	6.0	6.6	bhp
Motor shaft power :			7.2	bhp

		without sound enclosure	with sound enclosure
Sound pressure level**:	**at fmax**	82dB(A)	69dB(A)
Sound pressure level**:	**at 60 Hz**	82dB(A)	69 dB(A)
Sound power level**:	**at 60 Hz**	96dB(A)	85 dB(A)
Dimension [inches] (W x L x H)		26x 26 x 38	31x 38 x 47
Estimated Weight		ca. 386 lbs	ca. 672 lbs

IGBT Frequency controlled **208V ± 5 % 60 Hz**

The stated control range can vary depending on manufacturer and type of the frequency converter.
Standard motor with impulse peak resistance in accordance with IEC 60034-1 for operation with a IGBT frequency converter.

*** Performance data to DIN ISO 1217, PART 1, ANNEX C**
**** Measured to DIN EN ISO 2151, figures ± 3 dB(A), with sound isolated pipework.**

Motor shaft power includes belt losses in addition to dirty filter losses of 0.6 psig (40 mbar)

© 2013Kaeser Compressors,Inc.All Rights RESERVED

Customer: Summit Club-Process/Airlift **Prepared By:** David W. Martine

Kind of package: Com-paK Plus on frequency control Operating mode:Gauge pressure

Inlet temperature: 90 °F
Inlet pressure: 14.7 psia
Input inlet flow: 160 icfm

Valve set pressure: **10.4** **psig**

Package: **BB 69C**
Blower: OMEGA 22P
Motor power: 10.0 hp
Operating voltage: 208V/60Hz

Blower speed(60Hz): 5125 rpm
Connection ANSI 2
% of maximum speed: 86
Fan voltage 208V/3Ph/60Hz

NOTE: ACCESSORIES SHOWN ARE INTENDED FOR AIR USE ONLY.

Accessories:		**yes**	**no**
Unloaded start up valve:	AFM5	☐	☒
Check plate:	2 1/2"	☒	☐
Instrument/ sensor:			
Temperature gauge with switch point:		☒	☐
Pressure gauge:		☒	☐
Filter differential pressure switch:		☐	☒
oil level sensor		☐	☒
speed monitor		☐	☒
Auxiliary heating:		☐	☒
Omega P-GRD:		☐	☒

	yes	**no**
Sound enclosure:	☒	☐
Suction from ambient:	☒	☐
Suction from pipe:	☐	☒
Optional for package with sound enclosure		
Sound enclosure for outdor installation:	☐	☒
Frequency converter (FC):		
Frequency converter (FC) by customer:	☒	☐
Kaeser FC type OFC:	☐	☒

Standard equipment with s. encl.: 1x 2" Blowoff valve, pressure gauge, filter with maintenance indicator

Standard equipment without s. encl.: 1x 2" Blowoff valve, filter with maintenance indicator

Comments for project:

© 2013 Kaeser Compressors,Inc.All Rights RESERVED

Kaeser Com-paK Installation Data Sheet

BB52C

Package	Blower	Horsepower
BB52C	Omega 21P	3,5,7.5,10

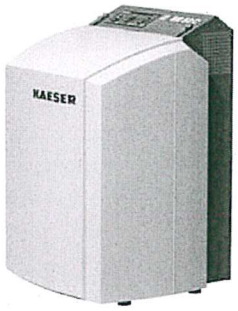

Electrical Data Drive Motor

						wye-delta starting (2-wire per phase)			direct online (1-wire per phase)		
Hp	Voltage (3ph/60Hz)	FLA +/- 10%	Nominal Eff	Insulation Class	Enclosure Type	Jumper Connection	Disconnect Fuse	Wire Size (75°C or higher)	Jumper Connection	Disconnect Fuse	Wire Size (75°C or higher)
3	208	9.1	86.5	F	TEFC	YY -> ΔΔ	10 AMP	14 AWG	ΔΔ	10 AMP	14 AWG
	230	8.2				YY -> ΔΔ	10 AMP	14 AWG	ΔΔ	10 AMP	14 AWG
	460	4.1				Y -> Δ	6 AMP	14 AWG	Δ	6 AMP	14 AWG
5	208	13.5	88.5	F	TEFC	YY -> ΔΔ	20 AMP	14 AWG	ΔΔ	20 AMP	12 AWG
	230	12.2				YY -> ΔΔ	15 AMP	14 AWG	ΔΔ	20 AMP	14 AWG
	460	6.1				Y -> Δ	10 AMP	14 AWG	Δ	10 AMP	14 AWG
7.5	208	18.4	89.9	F	TEFC	YY -> ΔΔ	25 AMP	14 AWG	ΔΔ	30 AMP	10 AWG
	230	17.6				YY -> ΔΔ	25 AMP	14 AWG	ΔΔ	30 AMP	10 AWG
	460	8.8				Y -> Δ	10 AMP	14 AWG	Δ	15 AMP	14 AWG
10	208	25	90.8	F	TEFC	YY -> ΔΔ	35 AMP	14 AWG	ΔΔ	40 AMP	8 AWG
	230	23				YY -> ΔΔ	30 AMP	14 AWG	ΔΔ	35 AMP	8 AWG
	460	11.5				Y -> Δ	20 AMP	14 AWG	Δ	20 AMP	12 AWG

Notes:
1. Disconnect fuses should be of dual element time delay design.
2. Breaker should be suitable for a heavy duty starting load and of inverse time delay design that complies to regulations outlined in NEC 430.52
3. Fuse and wire sizes determined in accordance to NEC 240.6, 430.52 and tables 250.122, 430.248, 430.250, 430.252.

Enclosure Fan Data

Power	Voltage (60Hz)	Phase (60Hz)	Current Draw	Jumper Connection	Quantity	Enclosure Type	Fan Type	Flow
110W	115	1	3.42	Capacitor	1	TEFC	Radial	280 CFM
80W	230	1	0.60	Capacitor	1	TEFC	Radial	280 CFM
80W	208	3	0.61	Δ	1	TEFC	Radial	280 CFM
120W	230	3	0.68	Δ	1	TEFC	Radial	280 CFM
120W	460	3	0.37	Y	1	TEFC	Radial	280 CFM
120W	575	3	0.28	Y	1	TEFC	Radial	280 CFM

Notes:
1.) Nominal power in Watts.
2.) Current in A (+/- 10%).
3.) Default fan selection is 230/460V. If other voltage is required, it must be noted at time of order.
4.) Fan requires separate power supply.
5.) Fan should run at the same time as main motor. If fan is able to run for 15 minutes after machine is turned off, it will improve thermal conditions inside enclosure.

BB52C

Oil System Data	
Drive End Capacity	0.15 quarts
Gear End Capacity	0.13 quarts
Oil Type (Synthetic)	SB 220

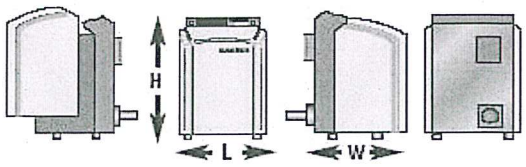

Package Connections

Hp	Cable Entry: Drive Motor	Cable Entry: Fan Motor	Length (in.) L	Width (in.) W	Height (in.) H	Floor (sq ft)	Weight (lb)	Connection Size (in.)	Type
3	3 x 1" NPT	2 × M16	31 1/2	28 3/8	44	6 1/5	382	2	Tube
5							424	2	Tube
7.5							463	2	Tube
10							474	2	Tube

Safety Devices

Discharge Temperature Gauge with Switch	Motor Winding PTC's
Range: 120 - 400°F (50 - 200°C) **Switching point:** adjustable **Switching:** 1 = common, 2 = NC, 4 = NO **Contacts:** 5A / 24VDC non-inductive NC 2 NO 4 1 Common Blower discharge temperature switch should be wired into control system to shut down blower operation when switch point is achieved.	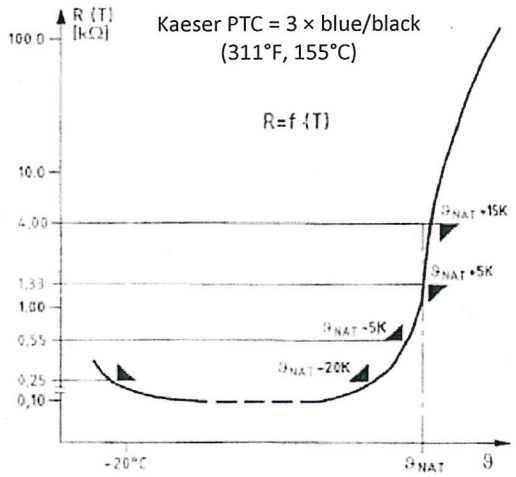 Motor winding PTC's require use of a control module. Kaeser part number 7.2710.2 can be purchased and integrated into control scheme for this purpose.

BB52C

Ventilation of Blower Room		
Air Inlet Opening	1	1.0 sq. ft
Cooling Fan Capacity (forced ventilation)	2	500 CFM
Max Heat Rejection	3	4,700 BTU / HR

Ventilation values based on 190 CFM @ 15 PSIG ΔP, 20Hp and ambient inlet. Max. room temp. = 104°F and cooling air temp = 95°F. Discharge piping length = 5 ft.

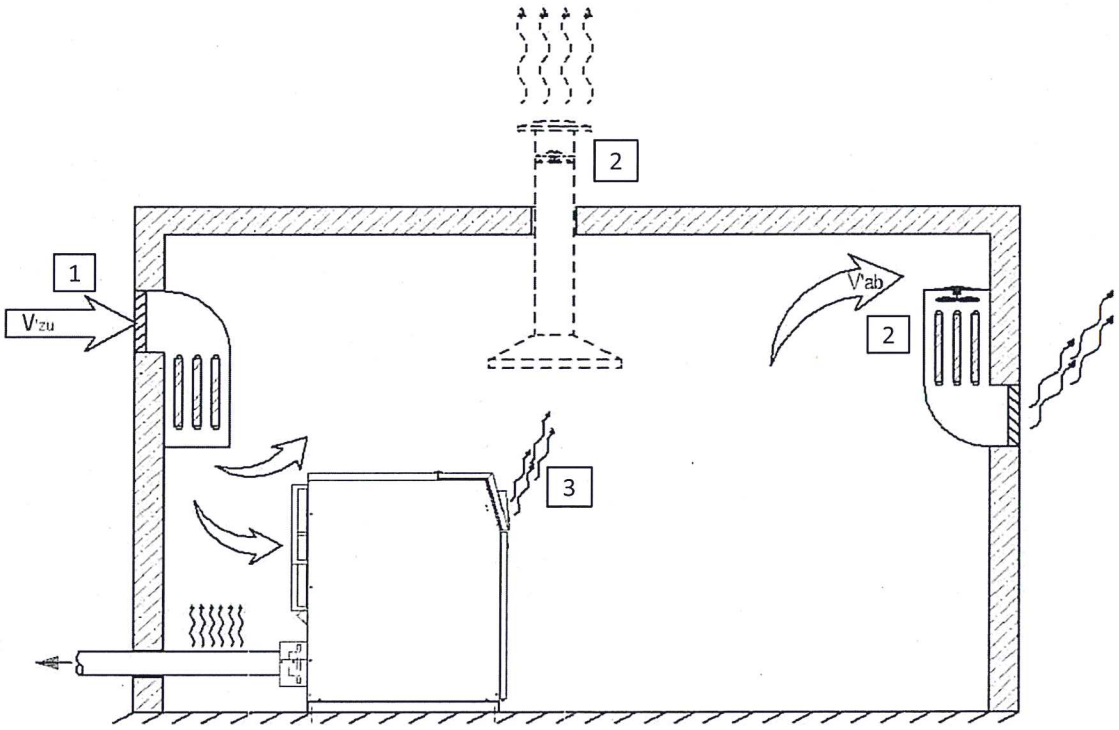

It is recommended to extract the exhaust air from the upper third of the room as this is where the heat collects. The room ventilation openings should be arranged that the current of cooling air flowing through the room passes over the blower inlet and exhaust ports and, if possible, should leave no stagnant air in the room. (A thermal short circuit must be avoided, i.e. discharged cooling air must not find its way to the cooling air inlet.)
The blower must not be positioned so near to a wall that the inflow of cooling air is obstructed.

Pipework should be insulated against heat emission.

If the blower station is located in the middle of a large hall its exhaust air can be extracted by means of a duct positioned above the exhaust port (illustrated in broken lines).

EQUALIZATION TANK &

SLUDGE HOLDING TANK BLOWER

Customer: Summit Club-EQ_Sludge Holding **Prepared By:** David W. Martine

INPUT DATA:

Operating mode: Gauge pressure
Kind of package: Com-paK Plus on frequency control
Inlet temperature: 90 °F
Inlet pressure: 14.7 psia
Inlet flow: 80 icfm

Flow medium : Humid Air
Specific heat constant κ : 1.40
Specific weight at standard conditions : 0.0760 lb/ ft³
Pressure difference : 6.0 psig
Discharge pressure : 20.7 psia
Air humidity: 80 [%]

Technical data:

Package: **BB 52C**
Blower: OMEGA 21P
Motor power: 5.0 hp
Operating voltage: 208V/60Hz

Blower speed(60Hz): 3490 rpm
Connection ANSI:2"
% of maximum speed: 56
Blower: OMEGA 21P

Performance data:	**min. frequency**	**Design point**	**max. frequency**	
Frequency:	22.0	58.4	60.0	Hz
Speed:	1280	3400	3490	rpm
Inlet air flow Q1*:	14	80	85	icfm
Inlet air flow Q1 (standard):	13	74	79	scfm
Standard conditions 14.7psia, 68°F and 0 % RH				
Discharge temperature*:	253	172	172	°F
Blower shaft power*:	1.5	3.5	3.5	bhp
Motor shaft power :			3.9	bhp

		without sound enclosure	with sound enclosure
Sound pressure level**:	**at fmax**	82dB(A)	72dB(A)
Sound pressure level**:	**at 60 Hz**	82dB(A)	72 dB(A)
Sound power level**:	**at 60 Hz**	97dB(A)	87 dB(A)
Dimension [inches] (W x L x H)		31x 31 x 37	31x 31 x 44
Estimated Weight		ca. 260 lbs	ca. 414 lbs

IGBT Frequency controlled **208V ± 5 % 60 Hz**

The stated control range can vary depending on manufacturer and type of the frequency converter.
Standard motor with impulse peak resistance in accordance with IEC 60034-1 for operation with a IGBT frequency converter.

*** Performance data to DIN ISO 1217, PART 1, ANNEX C**
**** Measured to DIN EN ISO 2151, figures ± 3 dB(A), with sound isolated pipework.**

Motor shaft power includes belt losses in addition to dirty filter losses of 0.6 psig (40 mbar)

© 2013Kaeser Compressors,Inc.All Rights RESERVED

Customer: Summit Club-EQ_Sludge Holding **Prepared By:** David W. Martine

Kind of package: Com-paK Plus on frequency control Operating mode: Gauge pressure

Inlet temperature: 90 °F
Inlet pressure: 14.7 psia
Input inlet flow: 80 icfm

Valve set pressure: **9.6** **psig**

Package: **BB 52C**
Blower: OMEGA 21P
Motor power: 5.0 hp
Operating voltage: 208V/60Hz

Blower speed(60Hz): 3490 rpm
Connection ANSI 2"
% of maximum speed: 56
Fan voltage 208V/3Ph/60Hz

NOTE: ACCESSORIES SHOWN ARE INTENDED FOR AIR USE ONLY.

Accessories:		**yes**	**no**
Unloaded start up valve:	AFM4	☐	☒
Check plate:	G2"	☒	☐
Instrument/ sensor:			
Temperature gauge with switch point:		☒	☐
Pressure gauge:		☒	☐
Filter differential pressure switch:		☐	☒
oil level sensor		☐	☒
speed monitor		☐	☒
Auxiliary heating:		☐	☒
Omega P-GRD:		☐	☒

	yes	**no**
Sound enclosure:	☒	☐
Suction from ambient:	☒	☐
Suction from pipe:	☐	☒
Optional for package with sound enclosure		
Sound enclosure for outdor installation:	☐	☒
Frequency converter (FC):		
Frequency converter (FC) by customer:	☒	☐
Kaeser FC type OFC:	☐	☒

Standard equipment with s. encl.: 1x 1 1/4" Blowoff valve, pressure gauge, filter with maintenance indicator

Standard equipment without s. encl.: 1x 1 1/4" Blowoff valve, filter with maintenance indicator

Comments for project:

© 2013 Kaeser Compressors,Inc.All Rights RESERVED

Kaeser Com-paK Installation Data Sheet

BB52C

Package	Blower	Horsepower
BB52C	Omega 21P	3,5,7.5,10

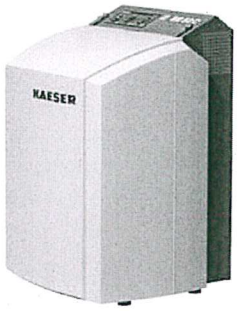

Electrical Data Drive Motor

						wye-delta starting (2-wire per phase)			direct online (1-wire per phase)		
Hp	Voltage (3ph/60Hz)	FLA +/- 10%	Nominal Eff	Insulation Class	Enclosure Type	Jumper Connection	Disconnect Fuse	Wire Size (75°C or higher)	Jumper Connection	Disconnect Fuse	Wire Size (75°C or higher)
3	208	9.1	86.5	F	TEFC	YY -> ΔΔ	10 AMP	14 AWG	ΔΔ	10 AMP	14 AWG
	230	8.2				YY -> ΔΔ	10 AMP	14 AWG	ΔΔ	10 AMP	14 AWG
	460	4.1				Y -> Δ	6 AMP	14 AWG	Δ	6 AMP	14 AWG
5	208	13.5	88.5	F	TEFC	YY -> ΔΔ	20 AMP	14 AWG	ΔΔ	20 AMP	12 AWG
	230	12.2				YY -> ΔΔ	15 AMP	14 AWG	ΔΔ	20 AMP	14 AWG
	460	6.1				Y -> Δ	10 AMP	14 AWG	Δ	10 AMP	14 AWG
7.5	208	18.4	89.9	F	TEFC	YY -> ΔΔ	25 AMP	14 AWG	ΔΔ	30 AMP	10 AWG
	230	17.6				YY -> ΔΔ	25 AMP	14 AWG	ΔΔ	30 AMP	10 AWG
	460	8.8				Y -> Δ	10 AMP	14 AWG	Δ	15 AMP	14 AWG
10	208	25	90.8	F	TEFC	YY -> ΔΔ	35 AMP	14 AWG	ΔΔ	40 AMP	8 AWG
	230	23				YY -> ΔΔ	30 AMP	14 AWG	ΔΔ	35 AMP	8 AWG
	460	11.5				Y -> Δ	20 AMP	14 AWG	Δ	20 AMP	12 AWG

Notes:
1. Disconnect fuses should be of dual element time delay design.
2. Breaker should be suitable for a heavy duty starting load and of inverse time delay design that complies to regulations outlined in NEC 430.52
3. Fuse and wire sizes determined in accordance to NEC 240.6, 430.52 and tables 250.122, 430.248, 430.250, 430.252.

Enclosure Fan Data

Power	Voltage (60Hz)	Phase (60Hz)	Current Draw	Jumper Connection	Quantity	Enclosure Type	Fan Type	Flow
110W	115	1	3.42	Capacitor	1	TEFC	Radial	280 CFM
80W	230	1	0.60	Capacitor	1	TEFC	Radial	280 CFM
80W	208	3	0.61	Δ	1	TEFC	Radial	280 CFM
120W	230	3	0.68	Δ	1	TEFC	Radial	280 CFM
120W	460	3	0.37	Y	1	TEFC	Radial	280 CFM
120W	575	3	0.28	Y	1	TEFC	Radial	280 CFM

Notes:
1.) Nominal power in Watts.
2.) Current in A (+/- 10%).
3.) Default fan selection is 230/460V. If other voltage is required, it must be noted at time of order.
4.) Fan requires separate power supply.
5.) Fan should run at the same time as main motor. If fan is able to run for 15 minutes after machine is turned off, it will improve thermal conditions inside enclosure.

BB52C

Oil System Data	
Drive End Capacity	0.15 quarts
Gear End Capacity	0.13 quarts
Oil Type (Synthetic)	SB 220

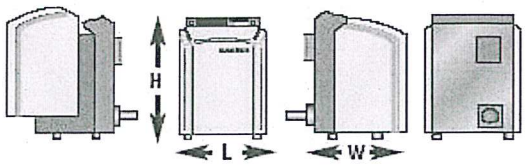

Package Connections

Hp	Cable Entry: Drive Motor	Cable Entry: Fan Motor	Length (in.) L	Width (in.) W	Height (in.) H	Floor (sq ft)	Weight (lb)	Connection Size (in.)	Type
3	3 x 1" NPT	2 × M16	31 1/2	28 3/8	44	6 1/5	382	2	Tube
5							424	2	Tube
7.5							463	2	Tube
10							474	2	Tube

Safety Devices

Discharge Temperature Gauge with Switch	Motor Winding PTC's
Range: 120 - 400°F (50 - 200°C) **Switching point:** adjustable **Switching:** 1 = common, 2 = NC, 4 = NO **Contacts:** 5A / 24VDC non-inductive NC 2 NO 4 1 Common Blower discharge temperature switch should be wired into control system to shut down blower operation when switch point is achieved.	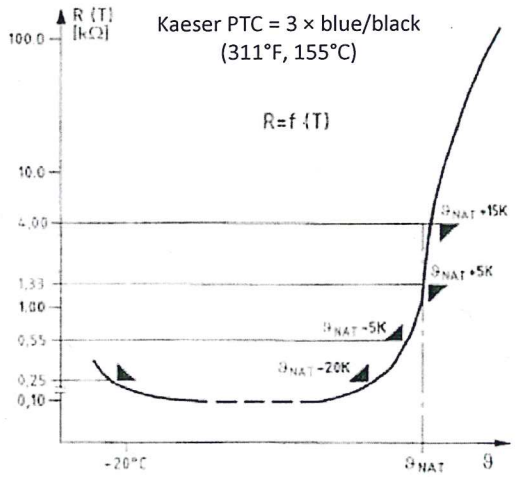 Motor winding PTC's require use of a control module. Kaeser part number 7.2710.2 can be purchased and integrated into control scheme for this purpose.

BB52C

Ventilation of Blower Room		
Air Inlet Opening	1	1.0 sq. ft
Cooling Fan Capacity (forced ventilation)	2	500 CFM
Max Heat Rejection	3	4,700 BTU / HR

Ventilation values based on 190 CFM @ 15 PSIG ΔP, 20Hp and ambient inlet. Max. room temp. = 104°F and cooling air temp = 95°F. Discharge piping length = 5 ft.

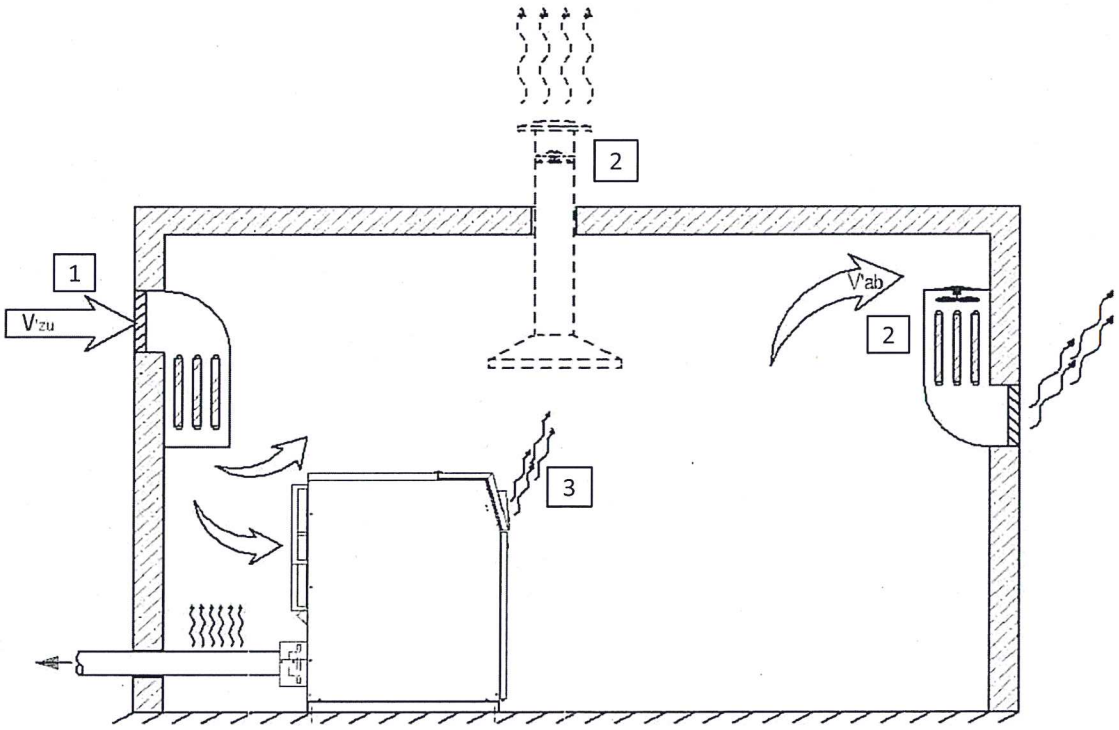

It is recommended to extract the exhaust air from the upper third of the room as this is where the heat collects. The room ventilation openings should be arranged that the current of cooling air flowing through the room passes over the blower inlet and exhaust ports and, if possible, should leave no stagnant air in the room. (A thermal short circuit must be avoided, i.e. discharged cooling air must not find its way to the cooling air inlet.)
The blower must not be positioned so near to a wall that the inflow of cooling air is obstructed.

Pipework should be insulated against heat emission.

If the blower station is located in the middle of a large hall its exhaust air can be extracted by means of a duct positioned above the exhaust port (illustrated in broken lines).

TERTIARY FILTER BLOWER

KAESER
OMEGA BLOWERS

OMEGA PLUS ROTARY BLOWERS
- PACKAGE RECOMMENDATIONS -

04/19/22

Customer: Summit Club-Tertiary Filter **Prepared By:** David W. Martine

INPUT DATA:

Operating mode:	Gauge pressure		Flow medium:	Humid Air	
Kind of package:	Com-paK Plus		Specific heat constant κ	1.40	
Inlet temperature :	90	°F	Specific weight at standard conditions :	0.076	lb/ ft³
Inlet pressure :	14.7	psi	Pressure difference :	7.0	psig
Air humidity:	80	[%]	Discharge pressure :	21.7	psi

Technical data:

NOTE: ACCESSORIES SHOWN ARE INTENDED FOR AIR USE ONLY.

Package: BB 69C

Blower: OMEGA 22P
Motor power: 10.0 hp
Operating voltage: 208V/60Hz

Blower speed: 5125 rpm
Connection ANSI: 2 1/2"
% of maximum speed: 85
Volumetric efficiency: 0.84

Performance data:

	max. load	design point
Blower: OMEGA 22P		
Pressure difference Δp:	8.8 psig	7.0 psig
Inlet flow Q1*:	169 icfm	173 icfm
Inlet air flow Q1 (standard) : Standard conditions 14.7 psia, 68°F and 0 % RH		160 scfm
Discharge temperature*:	205 °F	180 °F
Motor shaft power :	9.9 bhp	8.2 bhp
Blower shaft power*:		7.5 bhp
	without sound enclosure	with sound enclosure
Sound pressure level** :	82 dB(A)	69 dB(A)
Sound power level** :	96 dB(A)	85 dB(A)
Dimension [inches] (W x L x H)	26x 26 x 38	31x 38 x 47
Estimated Weight	ca. 386 lbs	ca. 672 lbs

*** Performance data to DIN ISO 1217, part 1, annex C**

****Measured to DIN EN ISO 2151, figures ± 3 dB(A), with sound isolated pipework**

Motor shaft power includes belt losses in addition to dirty filter losses of 0.6 psig (40 mbar).

© 2013 Kaeser Compressors,Inc.All Rights RESERVED

Customer: Summit Club-Tertiary Filter **Prepared By:** David W. Martine

Kind of package: Com-paK Plus

Operating mode: Gauge pressure

Inlet temperature : 90 °F

Inlet pressure : 14.7 psi

Input inlet flow: 160 icfm

Valve set pressure: 10.4 psig

Package: BB 69C

Blower: OMEGA 22P

Motor power: 10.0 hp

Operating voltage: 208V/60Hz

Blower speed: 5125 rpm

Connection ANSI: 2 1/2"

% of maximum speed: 85

Fan voltage: 208V/3Ph/60Hz

NOTE: ACCESSORIES SHOWN ARE INTENDED FOR AIR USE ONLY.

Accessories:

	yes	no
Unloaded start up valve: AFM5	☐	☒
Check plate: 2 1/2"	☒	☐
Instruments/ sensor:		
Temperature gauge with switch point:	☒	☐
Pressure gauge:	☒	☐
Filter differential pressure switch:	☐	☒
oil level sensor:	☐	☒
speed monitor:	☐	☒

	yes	no
Sound enclosure:	☒	☐
Inlet silencer-suction from ambient:	☒	☐
Inlet silencer-suction from pipe:	☐	☒
Optional for package with sound enclosure		
Sound enclosure for outdor installation:	☐	☒
Auxiliary heating:	☐	☒
Omega P-GRD:	☐	☒

Standard equipment with s. encl.: 1x 2" Blowoff valve, pressure gauge, filter with maintenance indicator

Standard equipment without s. encl.: 1x 2" Blowoff valve, filter with maintenance indicator

Comments for project:

© 2013 Kaeser Compressors,Inc.All Rights RESERVED

Kaeser Com-paK Installation Data Sheet

BB52C

Package	Blower	Horsepower
BB52C	Omega 21P	3,5,7.5,10

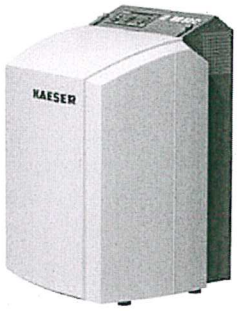

Electrical Data Drive Motor

						wye-delta starting (2-wire per phase)			direct online (1-wire per phase)		
Hp	Voltage (3ph/60Hz)	FLA +/- 10%	Nominal Eff	Insulation Class	Enclosure Type	Jumper Connection	Disconnect Fuse	Wire Size (75°C or higher)	Jumper Connection	Disconnect Fuse	Wire Size (75°C or higher)
3	208	9.1	86.5	F	TEFC	YY -> ΔΔ	10 AMP	14 AWG	ΔΔ	10 AMP	14 AWG
	230	8.2				YY -> ΔΔ	10 AMP	14 AWG	ΔΔ	10 AMP	14 AWG
	460	4.1				Y -> Δ	6 AMP	14 AWG	Δ	6 AMP	14 AWG
5	208	13.5	88.5	F	TEFC	YY -> ΔΔ	20 AMP	14 AWG	ΔΔ	20 AMP	12 AWG
	230	12.2				YY -> ΔΔ	15 AMP	14 AWG	ΔΔ	20 AMP	14 AWG
	460	6.1				Y -> Δ	10 AMP	14 AWG	Δ	10 AMP	14 AWG
7.5	208	18.4	89.9	F	TEFC	YY -> ΔΔ	25 AMP	14 AWG	ΔΔ	30 AMP	10 AWG
	230	17.6				YY -> ΔΔ	25 AMP	14 AWG	ΔΔ	30 AMP	10 AWG
	460	8.8				Y -> Δ	10 AMP	14 AWG	Δ	15 AMP	14 AWG
10	208	25	90.8	F	TEFC	YY -> ΔΔ	35 AMP	14 AWG	ΔΔ	40 AMP	8 AWG
	230	23				YY -> ΔΔ	30 AMP	14 AWG	ΔΔ	35 AMP	8 AWG
	460	11.5				Y -> Δ	20 AMP	14 AWG	Δ	20 AMP	12 AWG

Notes:
1. Disconnect fuses should be of dual element time delay design.
2. Breaker should be suitable for a heavy duty starting load and of inverse time delay design that complies to regulations outlined in NEC 430.52
3. Fuse and wire sizes determined in accordance to NEC 240.6, 430.52 and tables 250.122, 430.248, 430.250, 430.252.

Enclosure Fan Data

Power	Voltage (60Hz)	Phase (60Hz)	Current Draw	Jumper Connection	Quantity	Enclosure Type	Fan Type	Flow
110W	115	1	3.42	Capacitor	1	TEFC	Radial	280 CFM
80W	230	1	0.60	Capacitor	1	TEFC	Radial	280 CFM
80W	208	3	0.61	Δ	1	TEFC	Radial	280 CFM
120W	230	3	0.68	Δ	1	TEFC	Radial	280 CFM
120W	460	3	0.37	Y	1	TEFC	Radial	280 CFM
120W	575	3	0.28	Y	1	TEFC	Radial	280 CFM

Notes:
1.) Nominal power in Watts.
2.) Current in A (+/- 10%).
3.) Default fan selection is 230/460V. If other voltage is required, it must be noted at time of order.
4.) Fan requires separate power supply.
5.) Fan should run at the same time as main motor. If fan is able to run for 15 minutes after machine is turned off, it will improve thermal conditions inside enclosure.

BB52C

Oil System Data	
Drive End Capacity	0.15 quarts
Gear End Capacity	0.13 quarts
Oil Type (Synthetic)	SB 220

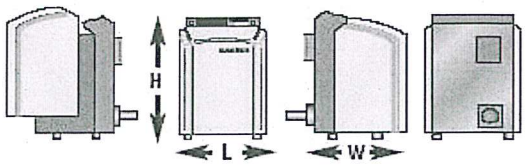

Package Connections

Hp	Cable Entry: Drive Motor	Cable Entry: Fan Motor	Length (in.) L	Width (in.) W	Height (in.) H	Floor (sq ft)	Weight (lb)	Connection Size (in.)	Type
3	3 x 1" NPT	2 × M16	31 1/2	28 3/8	44	6 1/5	382	2	Tube
5							424	2	Tube
7.5							463	2	Tube
10							474	2	Tube

Safety Devices

Discharge Temperature Gauge with Switch	Motor Winding PTC's
Range: 120 - 400°F (50 - 200°C) **Switching point:** adjustable **Switching:** 1 = common, 2 = NC, 4 = NO **Contacts:** 5A / 24VDC non-inductive NC 2 NO 4 1 Common Blower discharge temperature switch should be wired into control system to shut down blower operation when switch point is achieved.	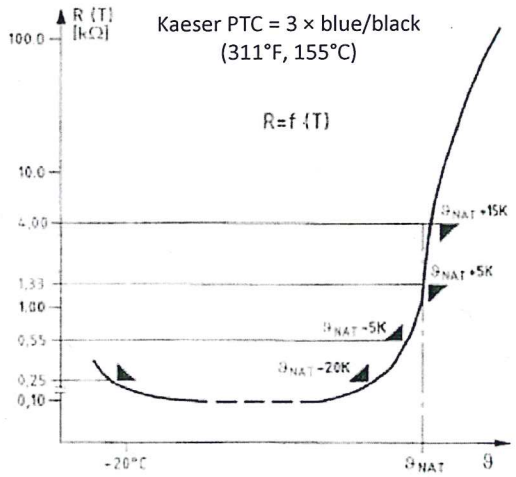 Motor winding PTC's require use of a control module. Kaeser part number 7.2710.2 can be purchased and integrated into control scheme for this purpose.

BB52C

Ventilation of Blower Room		
Air Inlet Opening	1	1.0 sq. ft
Cooling Fan Capacity (forced ventilation)	2	500 CFM
Max Heat Rejection	3	4,700 BTU / HR

Ventilation values based on 190 CFM @ 15 PSIG ΔP, 20Hp and ambient inlet. Max. room temp. = 104°F and cooling air temp = 95°F. Discharge piping length = 5 ft.

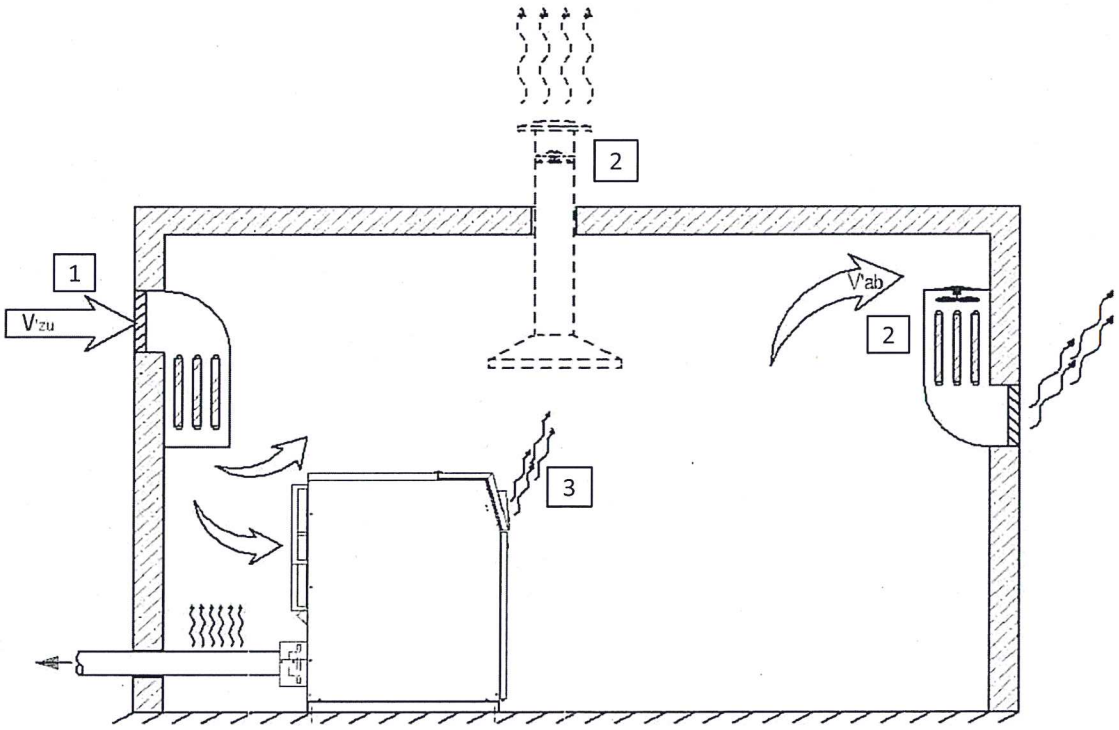

It is recommended to extract the exhaust air from the upper third of the room as this is where the heat collects. The room ventilation openings should be arranged that the current of cooling air flowing through the room passes over the blower inlet and exhaust ports and, if possible, should leave no stagnant air in the room. (A thermal short circuit must be avoided, i.e. discharged cooling air must not find its way to the cooling air inlet.)
The blower must not be positioned so near to a wall that the inflow of cooling air is obstructed.

Pipework should be insulated against heat emission.

If the blower station is located in the middle of a large hall its exhaust air can be extracted by means of a duct positioned above the exhaust port (illustrated in broken lines).

APPENDIX E

DISINFECTION EQUIPMENT CUTS

Non-contact UV disinfection systems

Dry · Simple · Intelligent · Energy Efficient

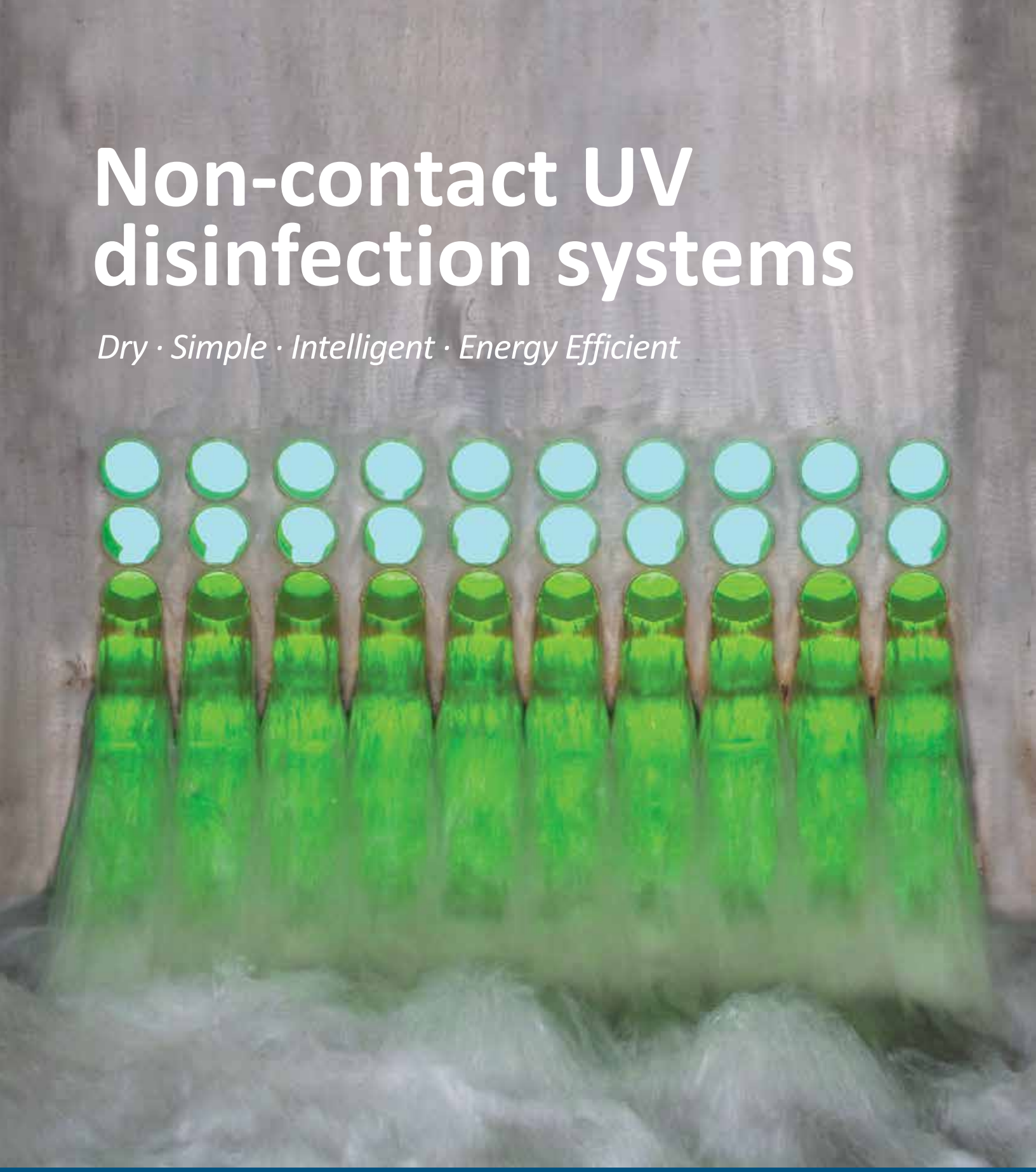

ENAQUA™
A GRUNDFOS COMPANY

Designed and manufactured in USA

The right choice

UV is the most cost effective and environmental friendly disinfection solution for wastewater.

About UV Disinfection

Ultraviolet light irradiation is a proven disinfection process using short wave length 254nm Ultraviolet (UV) energy to inactivate harmful microorganisms. UV radiation disrupts the DNA of pathogenic organisms such as bacteria, viruses and molds, leaving them unable to reproduce. UV has been used to disinfect various types of effluent from low-quality combined sewer overflow (CSO) to high-quality tertiary effluent since early 1900's.

UV – The preferred disinfection method in municipal wastewater

To comply federal Clean Water Act, and other regulations for indicator organisms, municipal wastewater must be disinfected before discharging or reusing. There are multiple options for chemical disinfection, but only one non-chemical disinfection technology. UV is the preferred disinfection method for municipal wastewater discharge or water reuse applications various chemical disinfection technologies. Currently more than 20% of wastewater treatment plants in the United States use UV as their preferred disinfection technology and this percentage has been increasing year over year.

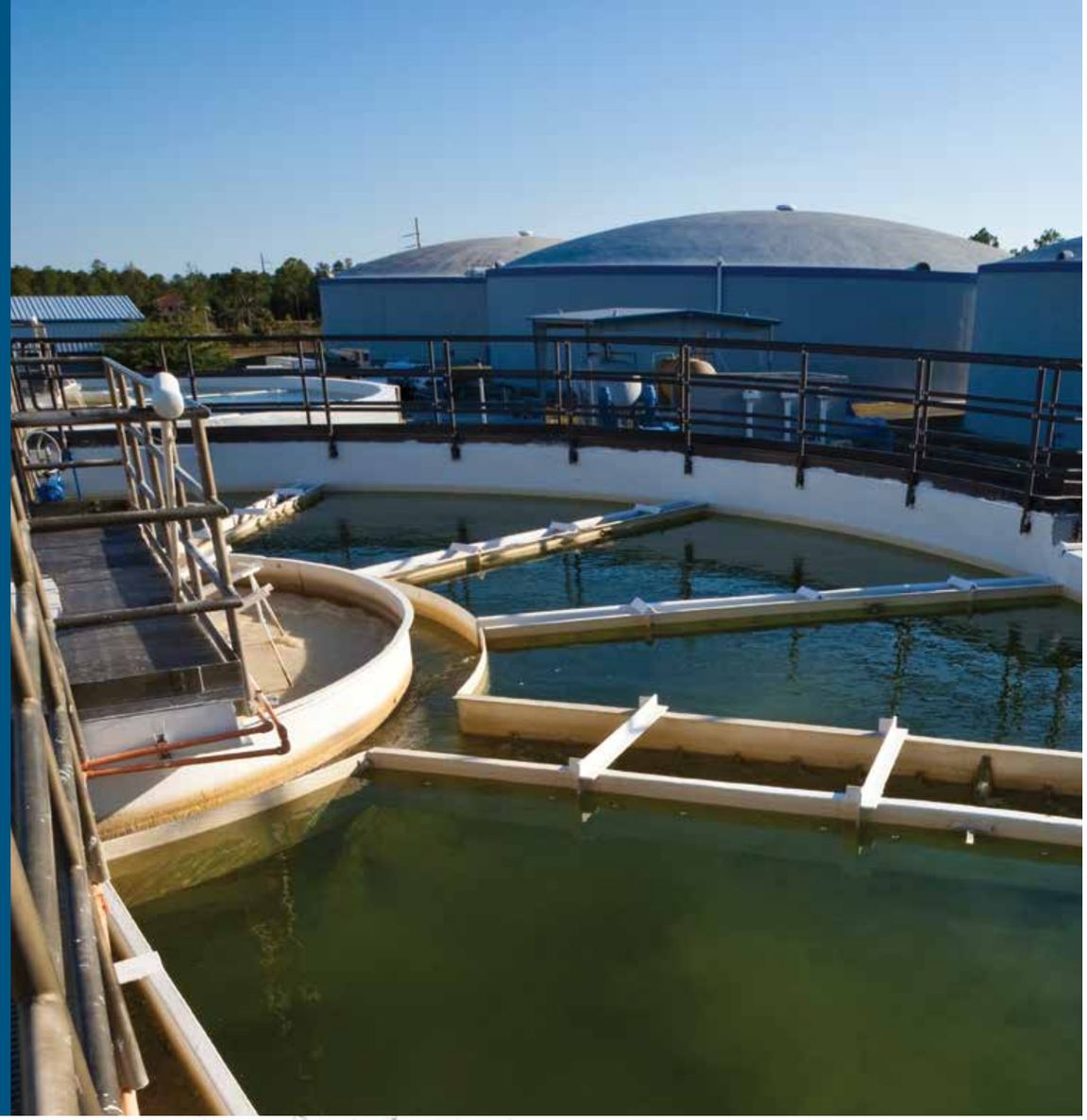

Enaqua – a history of innovation

1985	1990	1992	1993	1997	1999	2003	2007	2009	2012	2013	2015	2017
Enaqua founded									**Acquisition by Grundfos**			
First Non-Contact UV System Water Technology Consulting	Patented Non-Contact Opaque Fluid UV System	Chemical Recovery RO Systems Brackish Water RO Systems	Municipal UV Waste-water System	Distribution of Membrane Products	Large Municipal UV Waste-water Systems	Seawater De-salination RO Systems	UV Web-based Control System	UV / UF / RO Municipal Waste-water Systems	Ensure Dosing System(EDS)* SMART Lamps*	$11 Million UV/ UF/ RO Chemical Recovery System	Validation test NWRI Title 22 and T1	Approval for CA Title 22 recycled water

**Patent pending*

Advantages & benefits

Compared to conventional chlorination

	Ultraviolet light	Sodium hypochlorite	Chlorine gas
Disinfection effectiveness	High	High*	High*
Disinfection by products	No	Yes	Yes
Safety risks	Low	High	High
De-chlorination required	No	Yes	Yes
Contact channel	Small	Large	Large
pH dependency, Corrosion	No	Yes	Yes
O&M Cost	Low	High	Medium
Capital Investment	Medium	Low	High

**Cryptosporidium and Giardia are resistant against chlorination*

Third party validated technology, approved for CA Title 22 Recycled Water.

Enaqua is the first non-contact UV system supplier to have applied and received Third Party Validation, as a result of continuous efforts improving the Non-Contact UV disinfection technology. The validation testing and reports were conducted in 2015 by Carollo Engineers in accordance with the following protocols:

1. UV - Disinfection Guidelines for Drinking Water and Water Reuse (National Water Research Institute [NWRI]), August 2012
   - 53% to 80.0 % UVT range validated*
2. Uniform Protocol for Wastewater UV Validation Applications (International Ultraviolet Association [IUVA], 2011) – 36.0% to 81.0% UVT validated range*
   - MS2 Bacteriophage
   - T1 Coliphage

carollo

Validation Test Certification

**Please contact Enaqua for validation range, parameters, and other technical details.*

UV made simple – features at a glance

All of Enaqua's Non-Contact UV disinfection systems are built out of standard modules with high customization flexibility. The UV reactors are offered for both In-pipe or In-Channel configurations with variable plug & play inlets and outlets (page 10).

The systems are very easy to install as they are prefabricated and self-contained.

1 SMART Lamps
Cost efficient non-amalgam SMART lamp (page 9)

AFP™ Tubes
Fouling resistant virtually self-maintaining (page 6)

2 Ensure Dosing System (EDS)
Intelligent monitoring, control and FAIL SAFE ensures compliance at all times (page 8)

3 Electrical panel
Simple, compact and operator friendly HMI

4 Flow & Level pacing
Optimize energy consumption & life of consumables

5 Heat Exchange System
Controls reactor temperature for optimal UVC output using Effluent, plant W3 water, Potable, or Closed Loop system

6 UV Intensity Monitor
UV Sensor placed outside of AFP™ tubes – Dry without fouling

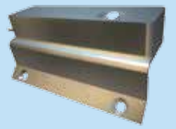

7 Individually fused and switched lamp racks
No cranes required, simple maintenance (page 7)

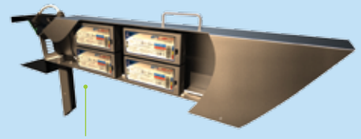

Single lamp ballast
Non-prorated Warranty up to 24 on/off cycles per day

8 Controlled Water Level Downstream
No level control mechanism required – simple hydraulic design

Always dry – AFP™ Non-Contact UV Technology

Enaqua – The Pioneer in cost effective Non-Contact UV design

Enaqua's innovative non-contact UV technology means no more repairing and replacing submerged components. Effluent flows through Enaqua's AFP tubes leaving the UV lamps, electronics and other components- accessible, and easy to maintain in the dry body of the UV reactor.

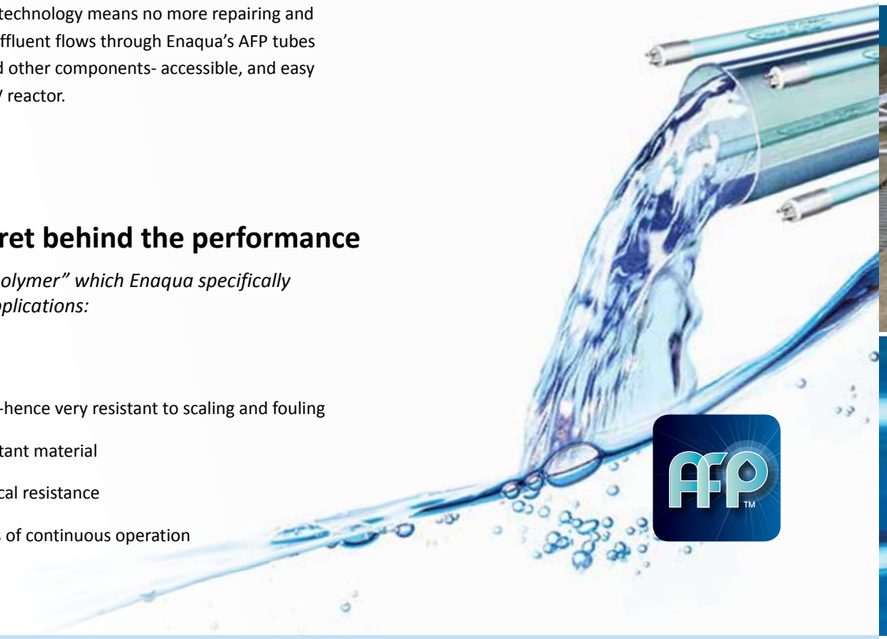

AFP™ tubes – The secret behind the performance

AFP stands for "Activated Fluoropolymer" which Enaqua specifically developed for Non-Contact UV applications:

- High transmissivity of UVC
- AFP Tubes have no micro-structure-hence very resistant to scaling and fouling
- Durable, flexible, and fracture resistant material
- Long term UVC stability and Chemical resistance
- Multiple plants with over 20+ years of continuous operation

Technologies in comparison

ENAQUA AFP™
Non-Contact Technology

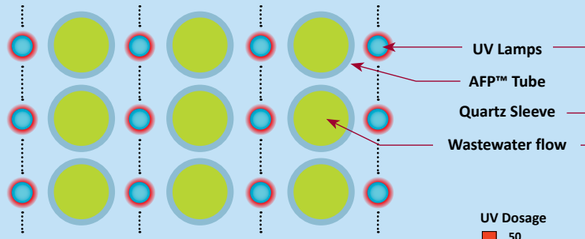

Low cost high output lamps
No quartz sleeves
Fouling and Scaling Resistant AFP tube
Turbulent flow provides self-cleaning of AFP™ tube
No AFP tube replacement needed under normal operating conditions
Simple pipe hydraulics makes UV disinfection easy to predict
Level Control Devices typically not required

Quartz Sleeve UV
traditional Contact Technology

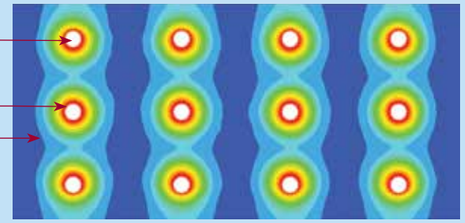

High cost amalgam lamps
Fragile quartz sleeves with risk of mercury and glass contamination
Fouling-prone quartz sleeves
Cleaning system required
Quartz sleeves need to be replaced over time
Channel hydraulics makes UV disinfection less predictable
Level control devices increase footprint

Simple – maintenance made clean, fast and easy

Enaqua's Non-Contact UV technology system maintenance is simple:

Enaqua's Non-Contact UV	Traditional Contact UV
	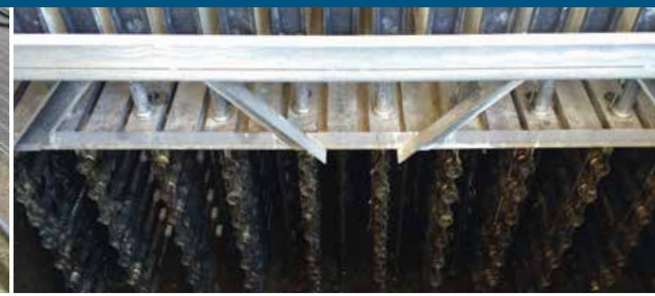
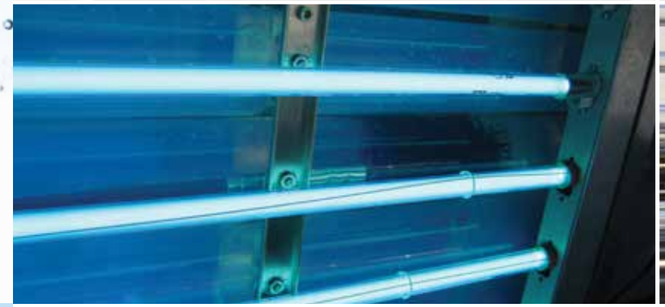	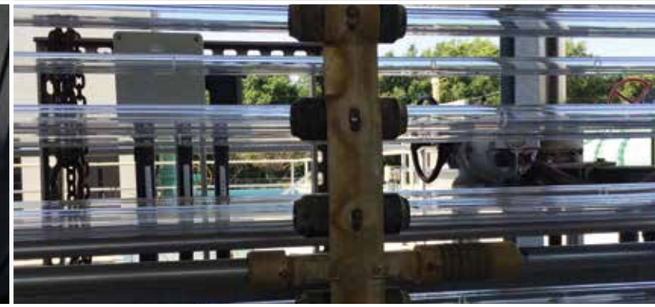

No more:

- High cost amalgam lamps
- Dirty and fouled quartz sleeves
- Problems with quartz cleaning devices
- Need to interrupt or remove any hydraulic seals
- Heavy duty cranes required for system maintenance
- Minimize Civil and Structural construction costs
- Time consuming lamp replacements
- Algae growth on the lamp racks
- Quartz sleeves to break and replace*
- SCADA programming

**No AFP™ tube replacement under normal conditions (20+ year history)*

Typical lamp replacement time

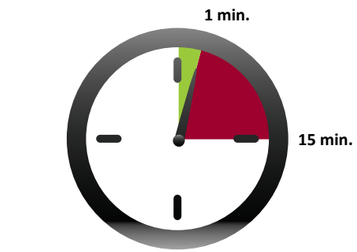

1 minute – Enaqua's Non-Contact UV

15 minutes – Traditional Contact UV

Intelligence – you don't want to miss...

Where Energy Efficiency matters

The Ensure Dosing System (EDS) is the most comprehensive monitoring and control system in the industry.

SCADA built in – Full system control and performance monitoring wherever and whenever you want:

- No special hardware and software requirements
- Simple connection via web browser
- Multiple Levels of Access
- Remote monitoring and control via Internet
- Stand-alone WiFi control e.g. with iPad®
- SCADA integration with ModBUS TCP/IP
- Remote troubleshooting
- Email and text notification

Fail Safe – Intuitive protection

Enaqua's FAIL SAFE intelligence ensures compliance at all times. In case a lamp in one stage fails, the system will command selected lamps in a redundant stage to power-on to compensate for any UV dosage reduction (see application example).

Stage 1

Lamp fault in stage 1: Alarm Alerts

Stage 2

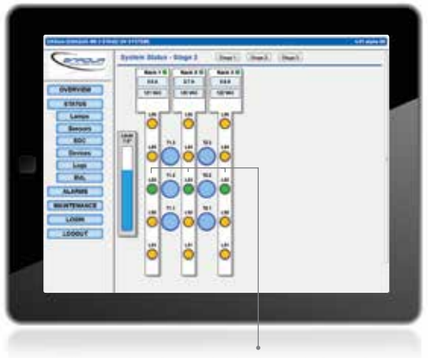

Automatically energizes ONLY selective lamps in Stage 2 to ensure disinfection while optimizing use of energy and consumables

Ipad® is a registered trademark of Apple

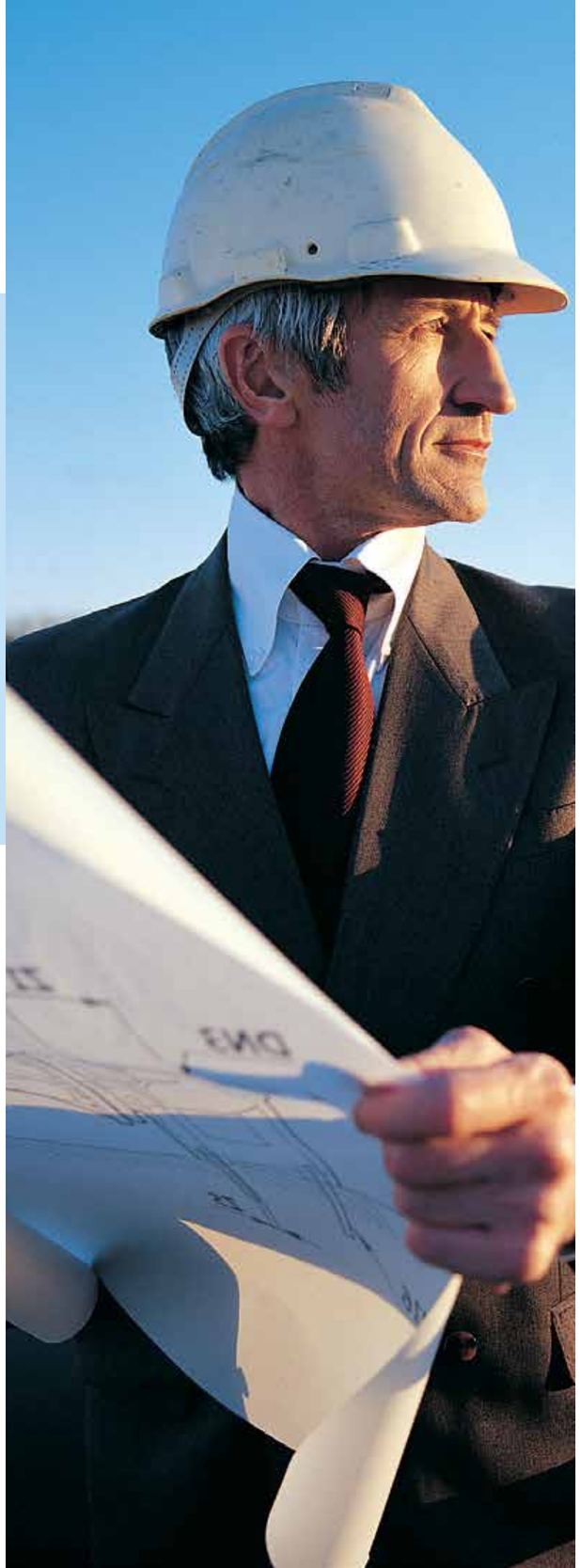

SMART Lamps – Advanced lamp control

Enaqua's Low Pressure High Output (LPHO) lamps are equipped with a unique Smart Lamp Technology, a microchip integrated with the lamp connector identifies each UV lamp with a unique ID, monitors and logs lamp status, run time, lamp cycles, etc.

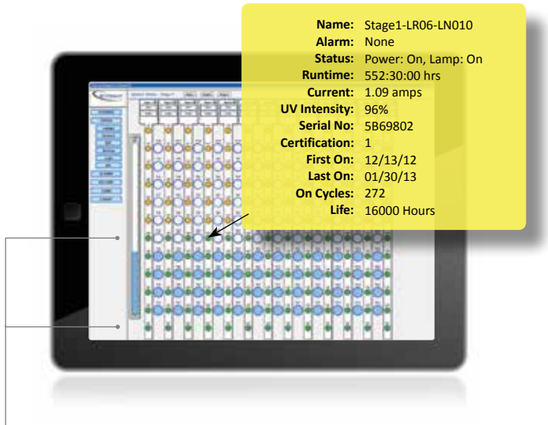

Flow & Level Pacing – Best energy efficiency

Enaqua's Flow & Level Pacing system automatically turns on only lamps which are required. This improves lamp and ballast life and reduces power consumption compared to systems that use "dimming".

Annual Energy Cost Comparison

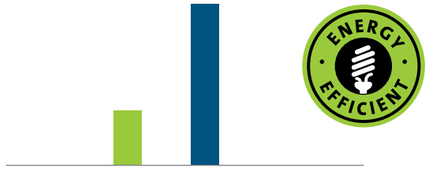

$13,346
Enaqua EDS

$34,528
Traditional Dimming Systems

Actual comparison of bid guaranteed UV energy costs for Wastewater Plant, Peak 28MGD, Average 6MGD, $0.10/kWh.

Features and functions

For specific selection and sizing please contact Enaqua

		M3	M4	M5	C-Series	D-Series	E-Series
Maximum F low and Pressure							
Flow Range*1	MGD	0.03 - 0.12	0.04 - 0.17	0.2 - 0.5	0.5 - 10	0.5 - 21	0.5 - 27
	gpm	20 - 80	30 - 120	140 - 350	350 - 6944	350 - 14600	380 - 18500
	m3/h	5 - 18	6.8 - 27	32 - 80	80 - 1600	80 - 3300	80 - 4200
Max. Operating Pressure	psi	40*2	40*2	40*2	20	15	10
	bar	2.8	2.8	2.8	1.4	1.0	0.7
Mechanical data							
Max. Number of AFP™ Tubes	pcs	2	2	6	180	160	140
Max. UV Lamps per Stage	pcs		8		228	204	180
Inlet and Outlet Configuration	inch	Flange 2	Flange 4, 6	Flange 8, 10	In-Channel or Flange Options		
Wetted Materials		AFP™, 304SS Option: 316SS, PVC, CPVC		AFP™, 304SS Option: 316SS			
Multistage Design		–	–	Option	Option	Option	
Electrical data							
Operating Voltage at 50/60 Hz	V, 1PH	120, 220			220		
	V, 3PH	–		220, 380, 415, 480*3			
Ballast Type		Auto Ranging 110-277 VAC 50/60 Hz with 5 Year Warranty					
Controls							
LCD Status Display		✓	✓	✓	Option	Option	Option
Hand-Off-Automatic Switch		✓*4	✓*4	✓	✓	✓	✓
Control Light: Alarm/Running		–	–	✓	Option	Option	Option
Individual Lamp Rack Fuse and Switch		✓	✓	✓	✓	✓	✓
UV Status LEDs in Lamp Racks		–	✓	✓	✓	✓	✓
Ensure Dosing System (EDS)		Option	Option	Option	✓	✓	✓
SMART Lamps		✓	✓	✓	✓	✓	✓
Flow & Level Pacing		–	–	–	Option	Option	Option
Fail Safe		Option	Option	Option	Option	Option	Option
UV Sensor		Option	Option	Option	✓	✓	✓
Heat Exchange System (Lamp Temperature Control)		Ambient Air Exchange			Air to Air. Air to Liquid using Effluent, plant W3 water, Potable, or Closed Loop system		

*1 Design consideration 65% UVT, ~30 mJ/cm², Contact Enaqua for more details
*2 Max pressure for High Pressure Option: 80 psi (5.5 bar)
*3 Three-phase voltage requires neutral wire
*4 On/Off switch only

M Series UV reactors

– compact uv reactors ideal for small treatment plants for surface discharge, reuse, and industrial applications.

M3 Series
Flow rates up to 80 gpm (18.2 m³/ h)

M4 Series
Flow rates up to 120 gpm (27.25 m³/ h)

M5 Series
Flow rates up to 360 gpm (81.8 m³/ h)

C1, C2, C3 & D1, D2, D3 UV series reactors

– medium size uv reactors for surface discharge, reuse, and industrial applications.

C1 & D1 Series
In pipe UV reactors , single or double banks- for Flow rates up to 2.0 MGD (315.4 m³/ h).

C2 & D2 Series
In pipe UV reactors, single or double banks- for Flow rates up to 4.2 MGD (662.5 m³/ h).

C3 & D3 Series
In pipe UV reactors, single or double banks- for Flow rates up to 6.0 MGD (946.4 m³/ h).

4 – 11 Series UV reactors

– large uv reactors offered "in-pipe" or " in-channel" configurations.

C Series "In pipe" or "In Channel"
Multi Bank UV reactors for Flow rates up to 24.0 + MGD . Applications– UV disinfection for surface discharge, Reuse, industrial appli-cation, Etc.

C Series "In Pipe " Reactor

C Series "In Channel" Reactor

D Series "In pipe" or "In Channel"
Multi Bank UV reactors for Flow rates up to 36 + MGD . Applications– UV disinfec-tion for surface discharge, CSO, Industrial Applications, Etc.

D Series "In Pipe " Reactor

D Series "In Channel" Reactor

E Series "In Channel"
Multi Bank UV reactors for Flow rates up to 100 + MGD . Applications– UV disinfection for surface discharge, CSO, Etc.

Designed and manufactured in USA

Enaqua – UV made simple
Non-contact UV disinfection

- The **Engineer's Choice** for State-of-the-Art Technology
- The **City Manager's Choice** for Low Capital Cost
- The **Superintendent's Choice** for Low O&M Cost
- The **Operator's Choice** for Simple Operation
- The **Contractor's Choice** for Simple Installation
- The **Finance Director's Choice** for Lowest 20 Years Capital and Operations Cost Potential

ENAQUA
1350 Specialty Drive, Ste. D/F
Vista, CA 92081 USA
Tel: +1.760.599.2644
Fax: +1.760.599.2642
www.enaqua.com

ENAQUA INFO
info@enaqua.com

ENAQUA SERVICE
service@enaqua.com

ENAQUA SALES
sales@enaqua.com

ENAQUA™
A GRUNDFOS COMPANY

The name Enaqua, the Enaqua logo, AFP, AFP840, AFP logo, Activated Fluoropolymer are registered trademarks owned by Grundfos Holding A/S or Grundfos A/S, Denmark. All rights reserved worldwide. 0418/EWT/12728-BrandBox

REVISIONS				
ECM	REV.	DESCRIPTION	DATE	APPROVED
	A	INITIAL RELEASE	10/29/2019	DSM
	B	UPDATED MODEL	10/29/2019	DSM

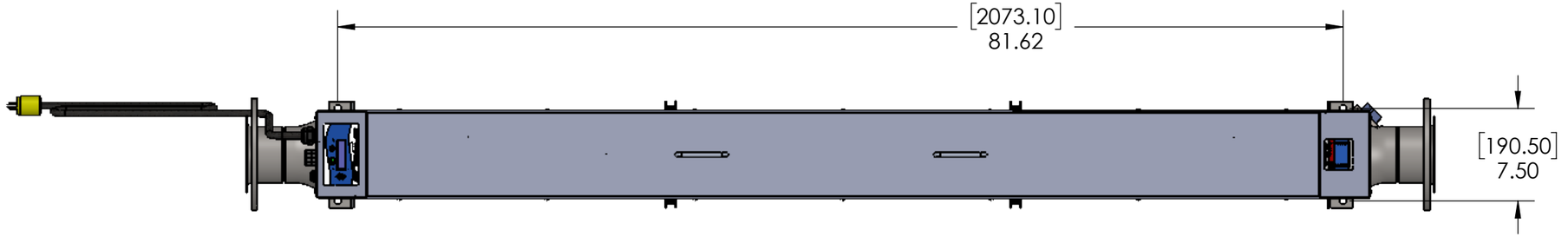

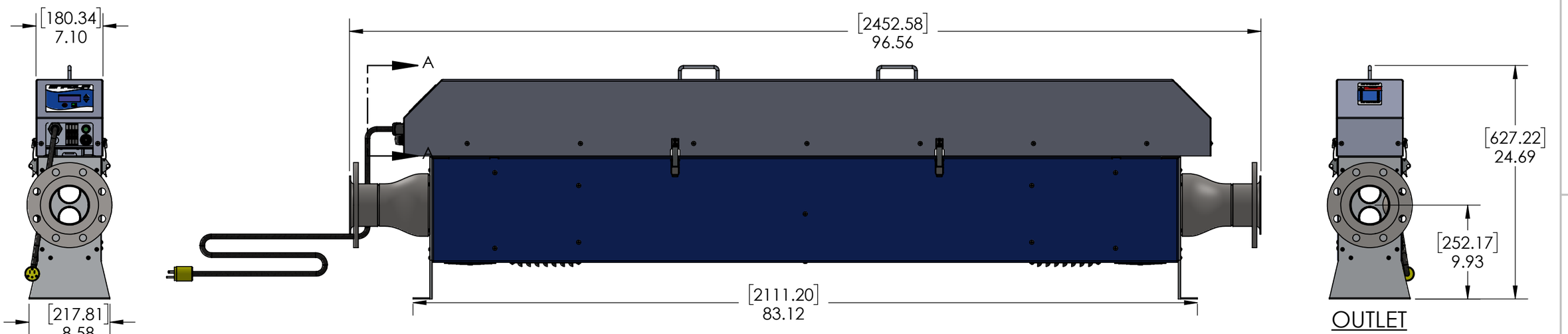

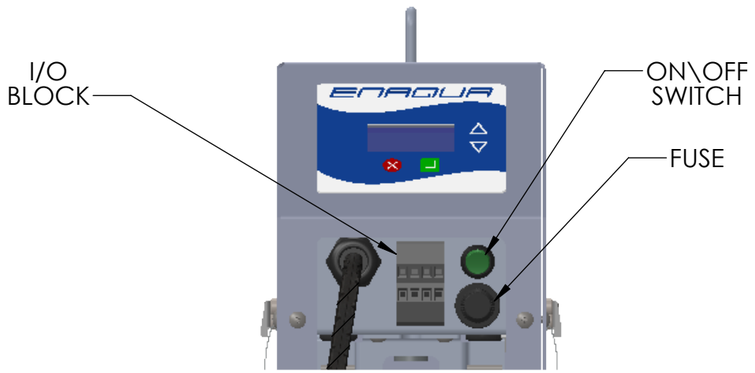

SECTION A-A
SCALE 1 : 4

NOTES (UNLESS OTHERWISE SPECIFIED):

1. REMOVE ALL SHARP EDGES AND BURRS.
2. DRAWING IS IN ACCORDANCE WITH ASME Y14.5-2009.
3. ALL DIMENSIONS ARE IN INCHES AND/OR [MILLIMETERS].

UNLESS OTHERWISE SPECIFIED:
DIMENSIONS ARE IN INCHES[mm]
TOLERANCES: ANGLES:
X.X ± .1[2.54] X ± 1°[25.4]
X.XX ± .03[.76] .X ± .5°[12.7]
X.XXX ± .010[.25] .XX ± .25°[6.4]
FRACTIONS: X/X ± 1/16[1.59]

PROPRIETARY AND CONFIDENTIAL
THE INFORMATION CONTAINED IN THIS DRAWING IS THE SOLE PROPERTY OF ENAQUA. ANY REPRODUCTION IN PART OR AS A WHOLE WITHOUT THE WRITTEN PERMISSION OF ENAQUA IS PROHIBITED.

ERP NO.: M4-P8M
SERIES: M SERIES
MATERIAL:
FINISH:
DO NOT SCALE DRAWING

APPROVALS		
TITLE	NAME	DATE
DRAWN BY	D MCBAIN	10/29/2019
DWG. Q.A.		
BUYER CKD.		
MFG. APPR.		
ENG. APPR.		

WEIGHT (LBS.): 123.95

ENAQUA A GRUNDFOS COMPANY
1350 SPECIALTY DRIVE, STE. D/F, VISTA,CA 92081

TITLE: M4:P8M

SIZE	DWG. NO.	REV
B	M4-P8M	B

SCALE: 3:32 SHEET 1 OF 1

APPENDIX F

SAMPLING LOCATIONS

PROCESS CONTROL MONITORING LOCATIONS

Permittee shall take samples and measurements to meet the monitoring requirements at the locations indicated below.

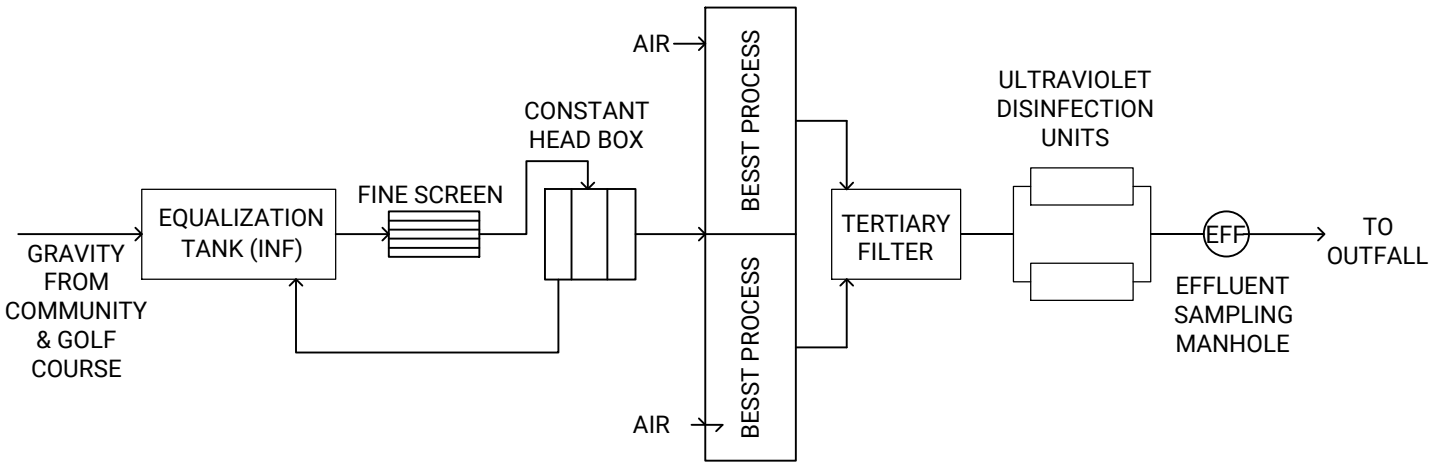

PROCESS CONTROL MONITORING LOCATION DESCRIPTION

Influent (INF): Sample taken in influent pump station
Effluent (EFF): Sample taken in effluent sampling manhole

DRAWING No. 1

STP SITE PLAN

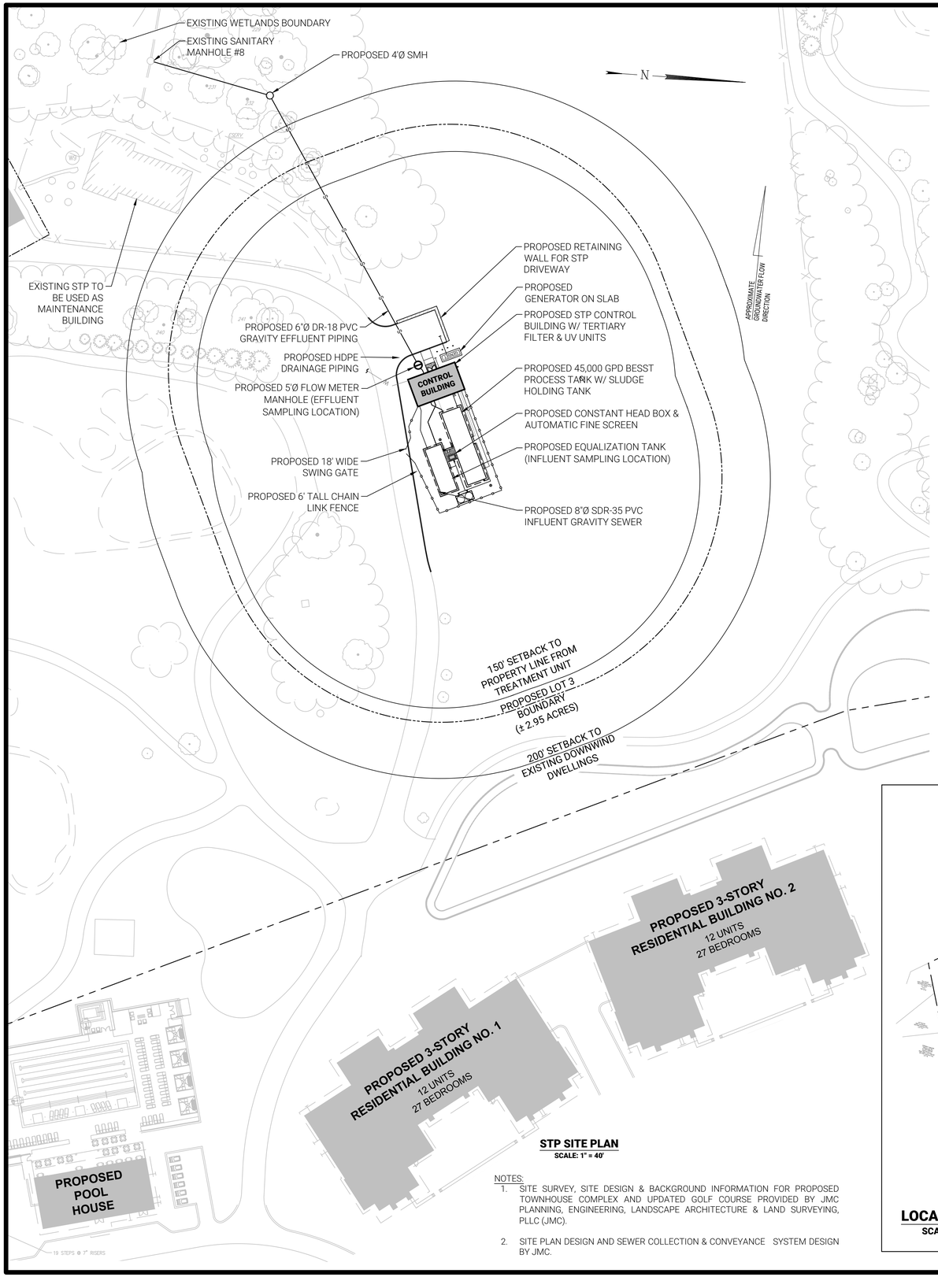

STP SITE PLAN
SCALE: 1" = 40'

NOTES:
1. SITE SURVEY, SITE DESIGN & BACKGROUND INFORMATION FOR PROPOSED TOWNHOUSE COMPLEX AND UPDATED GOLF COURSE PROVIDED BY JMC PLANNING, ENGINEERING, LANDSCAPE ARCHITECTURE & LAND SURVEYING, PLLC (JMC).
2. SITE PLAN DESIGN AND SEWER COLLECTION & CONVEYANCE SYSTEM DESIGN BY JMC.

DESIGN SANITARY FLOW:

USE	AREA (s.f.)	EMPLOYEES	SEATS/ STATIONS	GOLFERS	BEDROOMS	SWIMMERS	USAGE RATE (gpd/units)**	USAGE (gpd)
Townhomes	-	-	-	-	162	-	110.0	17,820
Bar/Lounge	-	-	35	-	-	-	16.0	560
Restaurant	-	-	252	-	-	-	28.00	7,056
Golf Tournament	-	-	-	144	-	-	16.0	2,304
Country Club	-	20	-	-	-	-	12.0	240
Golf Course	-	15	-	-	-	-	12.0	180
Seasonal GC Staff	-	-	-	-	12	-	60.00	720
Pool	3,850	-	-	-	-	257	8.00	2,053
Spas	240	-	-	-	-	24	8	192
Excess Pool Deck	8,517	-	-	-	-	170	8	1,363
WWTP	-	-	-	-	-	-	55	55
Proposed Total Flow	-	-	-	-	-	-	-	32,543
Future Townhomes	-	-	-	-	36	-	110	3,960
Future Guest Cottages	-	-	-	-	40	-	110	4,400
Future Total Flow	-	-	-	-	-	-	-	8,360
Total Design Flow	12,607	35	287	144	174	451	-	40,903
SAY	-	-	-	-	-	-	-	45,000

**NOTES:
1. THE PROJECTED FLOW RATES ARE BASED ON THE TYPICAL PER-UNIT HYDRAULIC LOADING RATES FROM TABLE B-3 IN "NEW YORK STATE DESIGN STANDARDS FOR INTERMEDIATE SIZED WASTEWATER TREATMENT SYSTEMS," 2014.
2. HYDRAULIC LOADING RATES ARE DECREASED BY 20 PERCENT IN INSTALLATIONS SERVING PREMISES EQUIPPED WITH WATER-SAVING PLUMBING FIXTURES AS DICTATED BY SECTION B.6.B IN THE NYS DEC DESIGN STANDARDS.

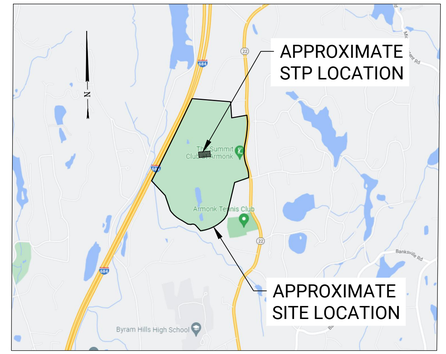

KEY MAP
SCALE: 1"=1500'

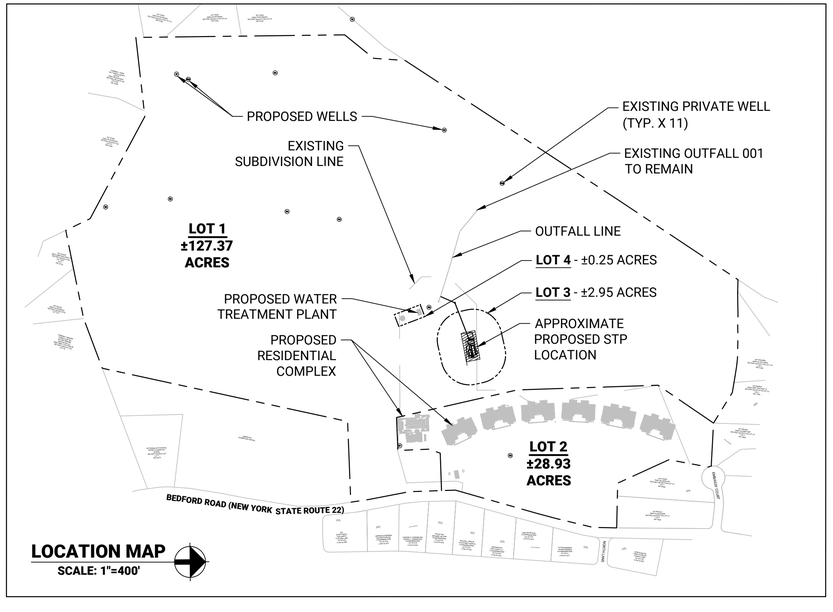

LOCATION MAP
SCALE: 1"=400'

WCDH APPROVAL STAMP

No.	REVISION DESCRIPTION	DATE	BY

OWNER:
SUMMIT CLUB PARTNERS, LLC
568 BEDFORD ROAD (NY-22)
ARMONK, NY 10504

APPLICANT:
SUMMIT CLUB PARTNERS, LLC
568 BEDFORD ROAD (NY-22)
ARMONK, NY 10504

STATE OF NEW YORK · MATTHEW P. SCHEINER · 087181 · LICENSED PROFESSIONAL ENGINEER

Matthew P. Scheiner, P.E.
NY State License No. 087181

STP SITE PLAN

THE SUMMIT CLUB AT ARMONK SEWAGE TREATMENT PLANT

SITUATED IN

ARMONK
TOWN OF NORTH CASTLE,
WESTCHESTER COUNTY, NEW YORK

WCTM: DISTRICT 003, SECTION 101.02, BLOCK 1, LOT 28.1 & 28.2

R&M ENGINEERING
Robinson & Muller Engineers, P.C.
50 Elm Street
Huntington, NY 11743
Office: (631) 271-0576
Fax: (631) 271-0592
www.rmengineering.com

DWN. BY:	SNM	CHK'D. BY:	MPS	SCALE:	AS NOTED	SHEET:
DATE:	SEPT 2022	DATE:	SEPT 2022	JOB No.:	2021-201	1

DRAWING No. 2

HYDRAULIC PROFILE

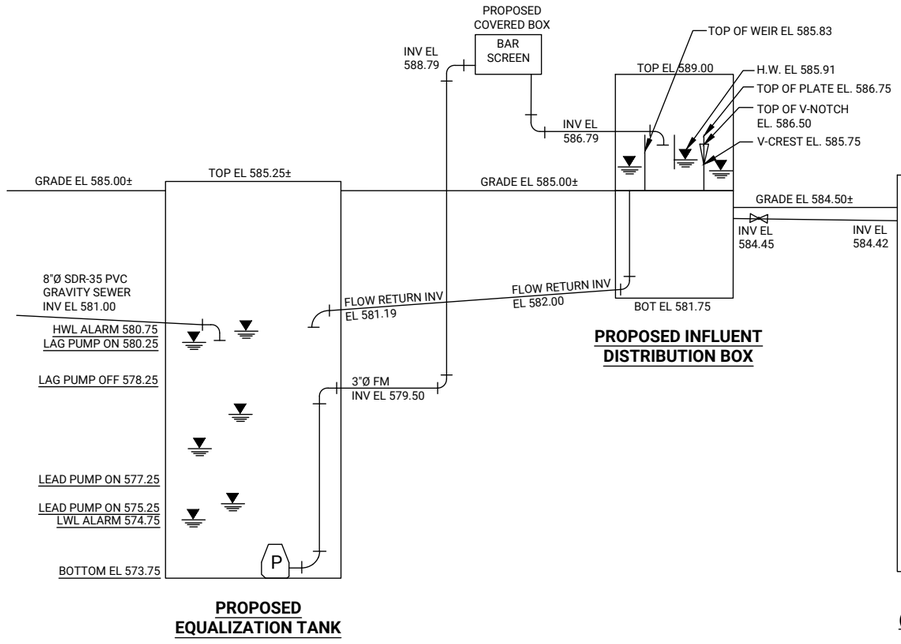

PROPOSED EQUALIZATION TANK

PROPOSED INFLUENT DISTRIBUTION BOX

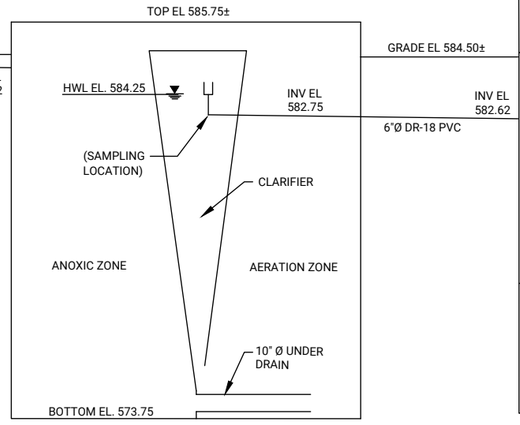

PROPOSED BESST SYSTEM TANK (WATER ELEVATIONS SET BY MANUFACTURER)

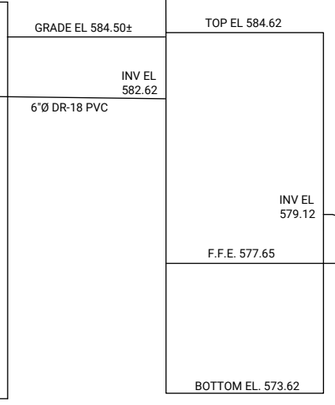

PROPOSED TERTIARY FILTER

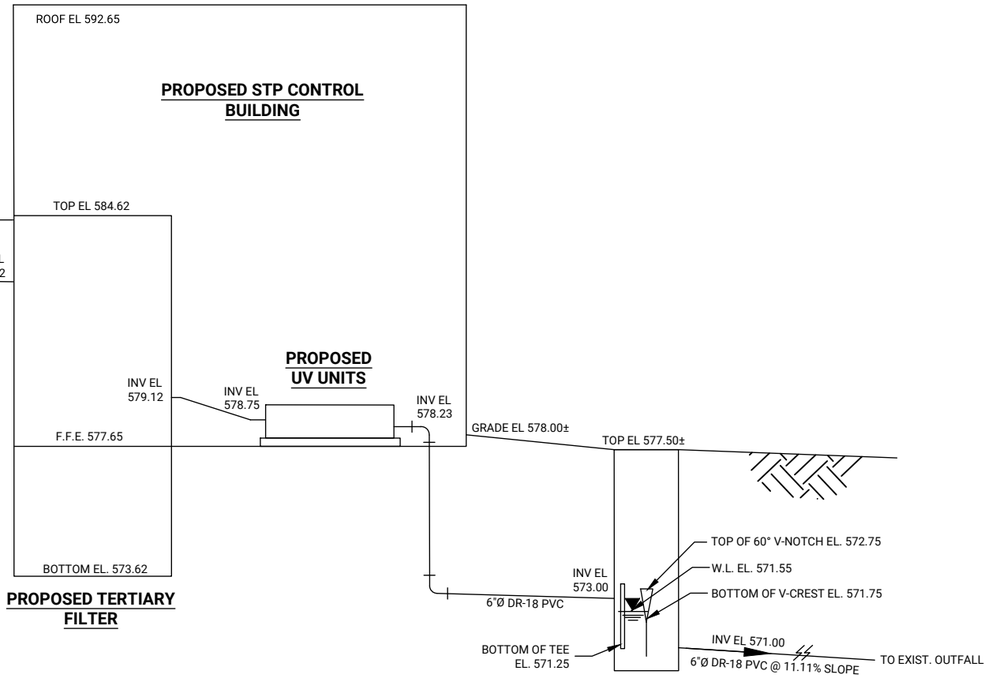

PROPOSED SAMPLING MANHOLE & EFFLUENT FLOW METER CHAMBER (SMH-2A)

HYDRAULIC PROFILE

SCALE: N.T.S

SUMMIT CLUB SEWAGE TREATMENT PLANT REPLACEMENT

TOWN OF NORTH CASTLE, WESTCHESTER COUNTY, NEW YORK

STP HYDRAULIC PROFILE

R&M ENGINEERING

Robinson & Muller Engineers, P.C.
50 Elm Street
Huntington, NY 11743
Office: (631) 271-0576
Fax: (631) 271-0592
www.rmengineering.com

REVISION DATE:	SEPT 2022
SCALE:	NOT TO SCALE
JOB No.:	2021-201
SHEET:	2

DRAWING No. 3

MANUFACTURER'S STP LAYOUT

NOTES:
1. PLANT TO BE SHIPPED BLOWER MOTOR UNIT(S), CONTROL PANEL, GRATING, HANDRAIL, MIXERS LOOSE FOR FIELD INSTALLATION BY OTHERS.
2. BLOWER MOTOR UNITS SHALL BE PROVIDED BY D. W. MARTINE AND ASSOCIATES.

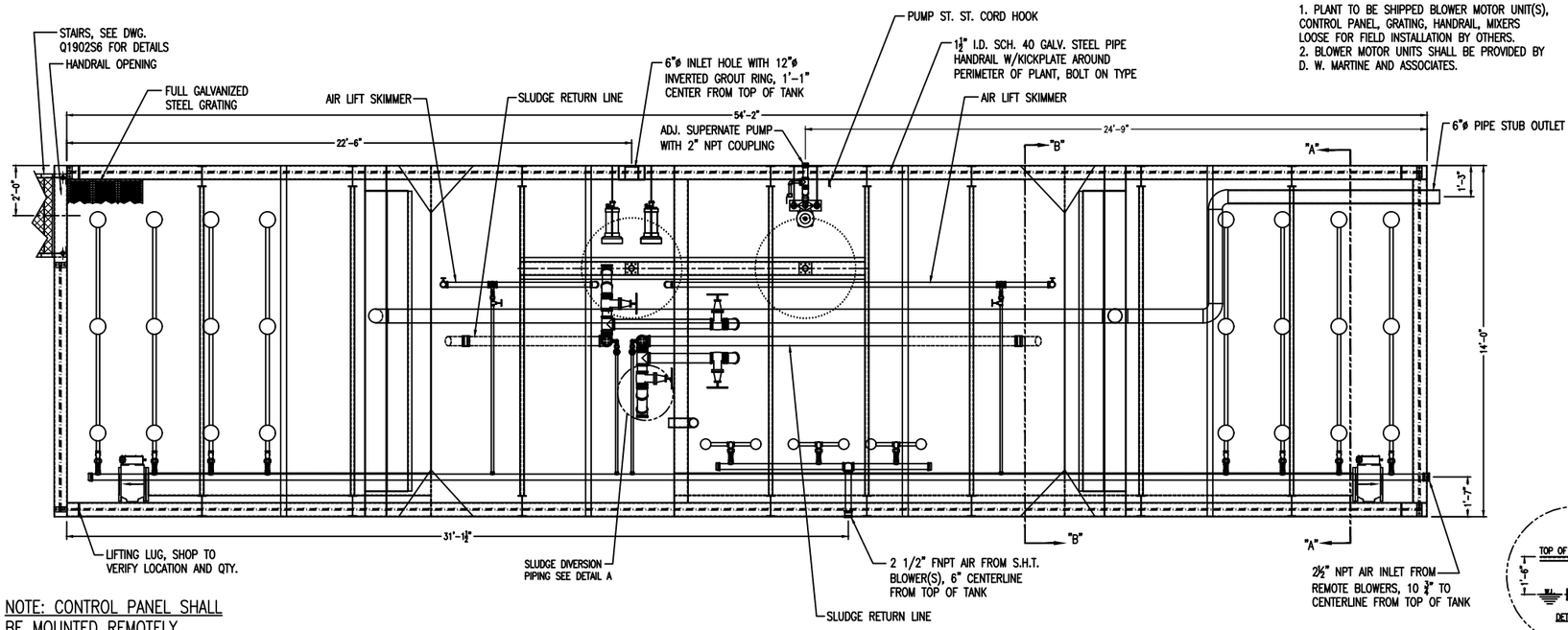

PLAN VIEW

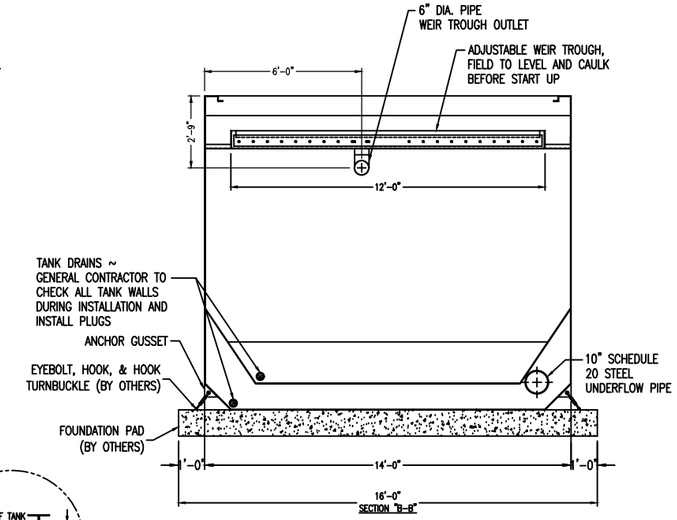

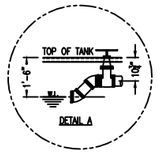

NOTE: CONTROL PANEL SHALL BE MOUNTED REMOTELY.

NOTE: BLOWERS PROVIDED BY D. W. MARTINE AND ASSOCIATES

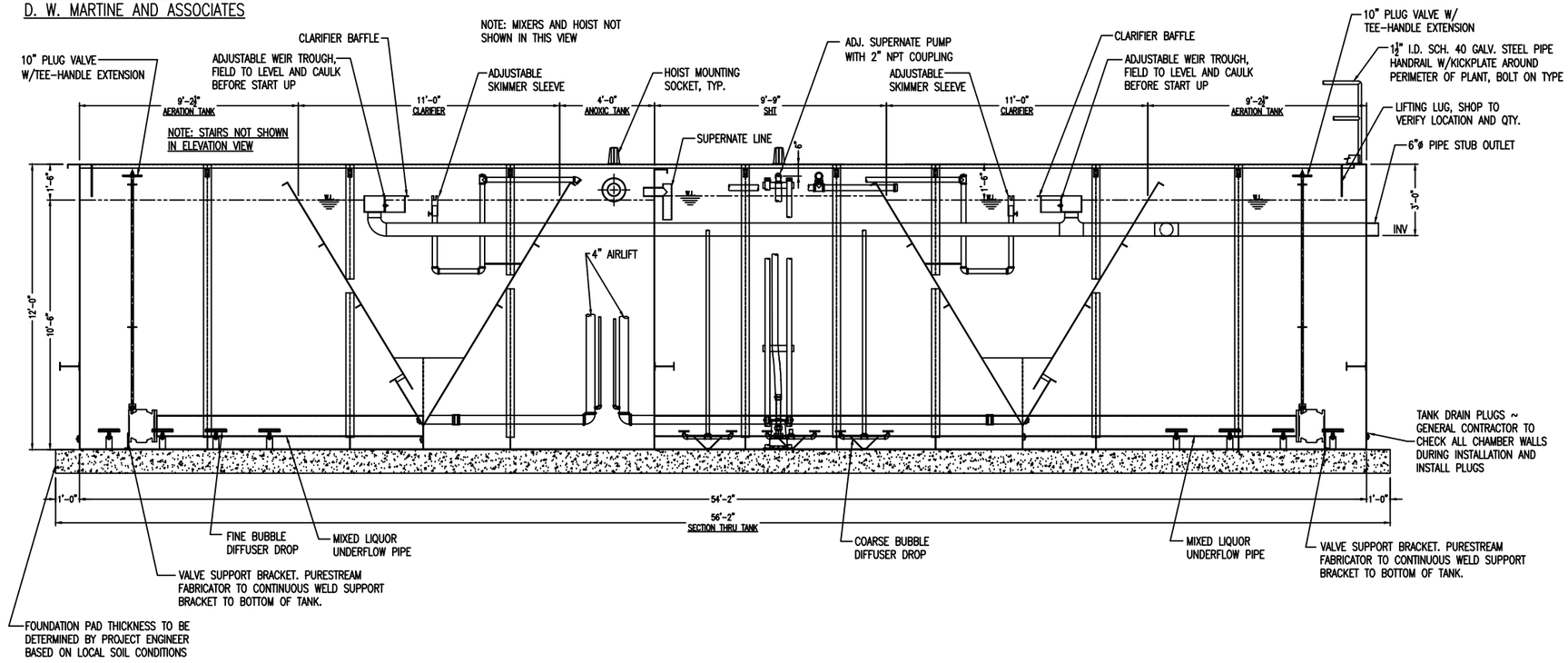

PROTECTION AGAINST CORROSION

AFTER COMPLETE WELDING AND FABRICATION OF THE TANK, THE FOLLOWING WILL OCCUR:

SURFACE PREPARATION:
ALL SURFACES SHALL RECEIVE A SSPC-10 NEAR WHITE METAL FINISH OBTAINING A 1.5 TO 3.0 MIL SURFACE PROFILE.

PAINT:
INTERIOR AND EXTERIOR APPLICATION THICKNESS SHALL BE 8 TO 10 MILS D.F.T. OF TNEMEC 46H-413 COAL TAR EPOXY OR EQUAL.

COLOR: BLACK FINISH: SATIN

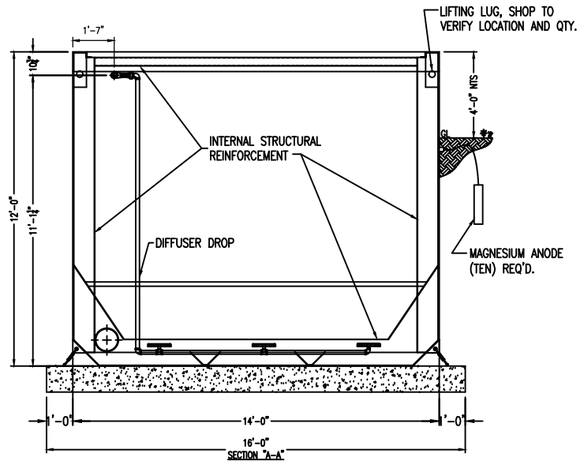

DESIGN DATA					
MODEL NUMBER	DESIGN FLOW G.P.D.	ANOXIC TANK VOLUME GALLON	CLARIFIER VOLUME GALLON	AERATION TANK VOLUME GALLON	SLUDGE HOLDING VOLUME GALLON
PES-45	45,000	7,434	12,144 total	26,295 total	13,757

THESE DRAWINGS AND MATERIAL ARE THE PROPERTY OF PURESTREAM / ES L.L.C. AND ARE NOT TO BE USED FOR THE MANUFACTURE, USE OR SALE OF ANY EQUIPMENT FOR OTHERS, OR COPIED, REPRODUCED, DELIVERED OR DISCLOSED TO OTHERS WITHOUT OUR EXPRESS WRITTEN PERMISSION, AND ARE TO BE RETURNED TO US PROMPTLY UPON OUR REQUEST. BESST (BIOLOGICALLY ENGINEERED SINGLE SLUDGE TREATMENT) IS A PATENTED (U.S. PATENT NO. 6,620,322) PROCESS.

NOTE:
THIS TANK STRUCTURE IS REINFORCED TO WITHSTAND NORMAL PRESSURES FROM THE SOIL AND FROM THE INTERIOR HYDROSTATIC LOAD ON ABOVE GRADE INSTALLATIONS. IF THERE IS A GROUND WATER PROBLEM, NOTIFY YOUR ENGINEER AND PURESTREAM IMMEDIATELY. PURESTREAM WILL NOT BE RESPONSIBLE FOR DAMAGE TO THE TANK STRUCTURE OR EQUIPMENT DUE TO GROUND WATER.

REVISIONS
R1, REVISED AS REQUESTED, PAT, 1-17-22
R2, REVISED AS REQUESTED, PAT, 1-27-22
R3, REVISED AS REQUESTED, PAT, 4-6-22
R4, REVISED AS REQUESTED, PAT, 4-8-22
R5, ADDED S.H.T. PUMP, PAT, 4-26-22

JOB NO: Q1902
JOB NAME: SUMMIT CLUB (WESTCHESTER)
LOCATION: NY
DRAWN BY: PAT
DATE: 12-15-21

PURESTREAM/ES

DESCRIPTION: BIOLOGICALLY ENGINEERED SINGLE SLUDGE TREATMENT PREFABRICATED STEEL SEWAGE TREATMENT SYSTEM

SCALE: NONE (24)
DRG. SIZE D
PART# DRG.NO. Q1902S1-R5

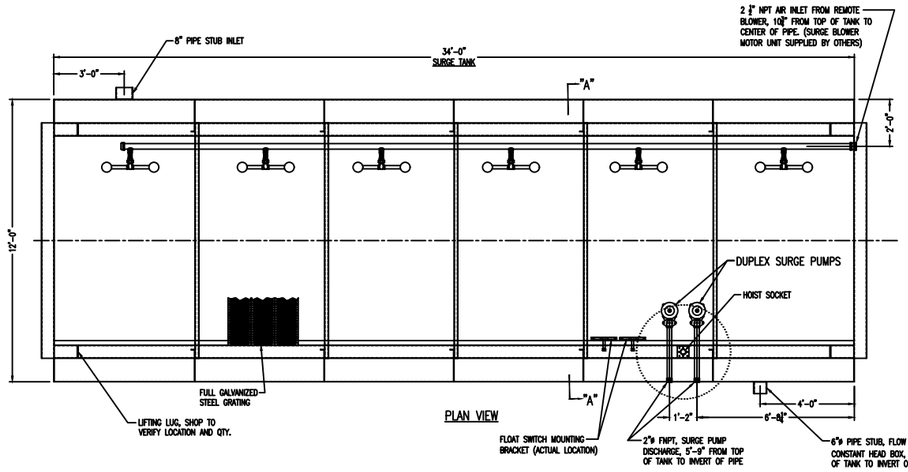

PLAN VIEW

NOTE: CONTROL PANEL SHALL BE MOUNTED REMOTELY.

NOTE: BLOWERS PROVIDED BY D. W. MARTINE AND ASSOCIATES

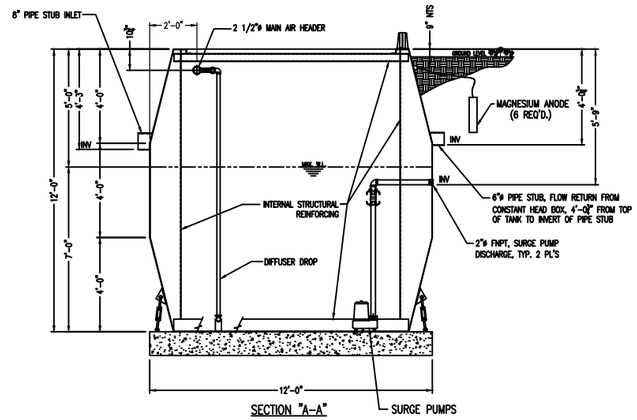

SECTION "A-A"

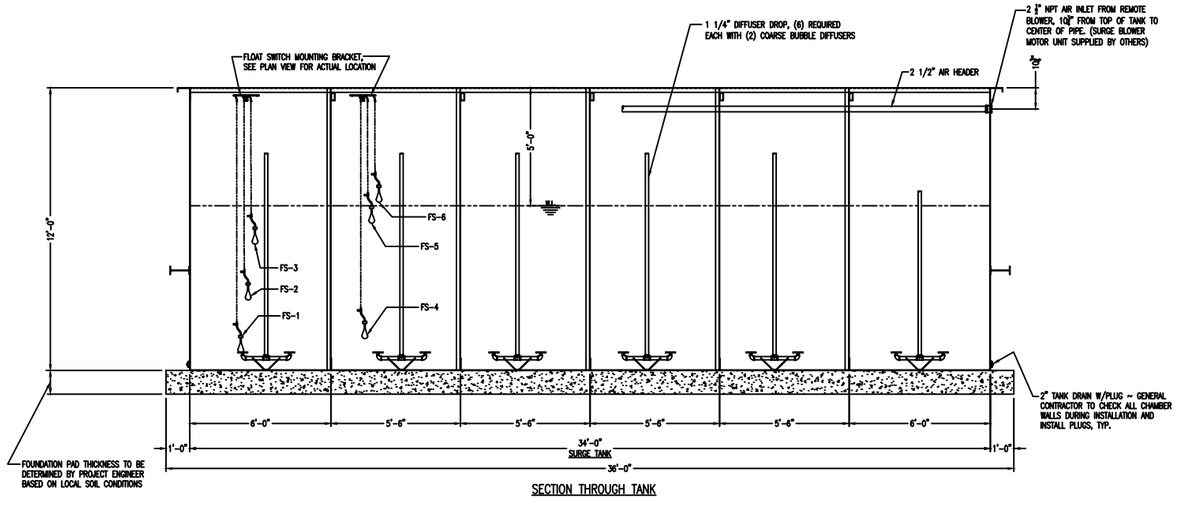

SECTION THROUGH TANK

FLOAT SWITCH LEGEND	
LS-1	SURGE TANK LOW LEVEL ALARM
LS-2	SURGE LAG PUMP OFF
LS-3	SURGE LEAD PUMP ON
LS-4	SURGE LEAD PUMP OFF
LS-5	SURGE LAG PUMP ON
LS-6	SURGE TANK HIGH WATER ALARM

NOTES:
1. PLANT TO BE SHIPPED BLOWER MOTOR UNIT(S), PUMPS CONTROL PANEL, GRATING, ANODES, HANDRAIL LOOSE FOR FIELD INSTALLATION BY OTHERS.
2. FLOAT SWITCH ELEVATION SHALL BE DETERMINED BY OTHERS.
3. BLOWER MOTOR UNITS SHALL BE PROVIDED BY D. W. MARTINE AND ASSOCIATES.

PROTECTION AGAINST CORROSION

AFTER COMPLETE WELDING AND FABRICATION OF THE TANK, THE FOLLOWING WILL OCCUR:

SURFACE PREPARATION:
ALL SURFACES SHALL RECEIVE A SSPC-10 NEAR WHITE METAL FINISH OBTAINING A 1.5 TO 3.0 MIL SURFACE PROFILE.

PAINT:
INTERIOR AND EXTERIOR APPLICATION THICKNESS SHALL BE 8 TO 10 MILS D.F.T. OF TNEMEC 46H-413 COAL TAR EPOXY OR EQUAL.

COLOR: BLACK FINISH: SATIN

NOTE:
THIS TANK STRUCTURE IS REINFORCED TO WITHSTAND NORMAL PRESSURES FROM THE SOIL AND FROM THE INTERIOR HYDROSTATIC LOAD ON ABOVE GRADE INSTALLATIONS. IF THERE IS A GROUND WATER PROBLEM, NOTIFY YOUR ENGINEER AND PURESTREAM IMMEDIATELY. PURESTREAM WILL NOT BE RESPONSIBLE FOR DAMAGE TO THE TANK STRUCTURE OR EQUIPMENT DUE TO GROUND WATER.

THESE DRAWINGS AND MATERIAL ARE THE PROPERTY OF PURESTREAM / ES L.L.C. AND ARE NOT TO BE USED FOR THE MANUFACTURE, USE OR SALE OF ANY EQUIPMENT FOR OTHERS, OR COPIED, REPRODUCED, DELIVERED OR DISCLOSED TO OTHERS WITHOUT OUR EXPRESS WRITTEN PERMISSION, AND ARE TO BE RETURNED TO US PROMPTLY UPON OUR REQUEST. BESST (BIOLOGICALLY ENGINEERED SINGLE SLUDGE TREATMENT) IS A PATENTED (U.S. PATENT NO. 6,620,322) PROCESS.

SURGE TANK VOLUME GALLON
15,051

REVISIONS	REVISIONS
R6, REVISED AS REQUESTED, PAT, 4-21-22	R1, REVISED AS REQUESTED, PAT, 1-17-22
	R2, REVISED AS REQUESTED, PAT, 1-27-22
	R3, REVISED AS REQUESTED, PAT, 4-6-22
	R4, REVISED AS REQUESTED, PAT, 4-8-22
	R5, REVISED AS DISCUSSED, PAT, 4-11-22

JOB NO: Q1902
JOB NAME: SUMMIT CLUB (WESTCHESTER)
LOCATION: NY
DRAWN BY: PAT
DATE: 12-15-21

PURESTREAM/ES
DESCRIPTION: SURGE TANK
SCALE: 32
DRG. SIZE: D
PART# DRG.NO. Q1902S2-R6

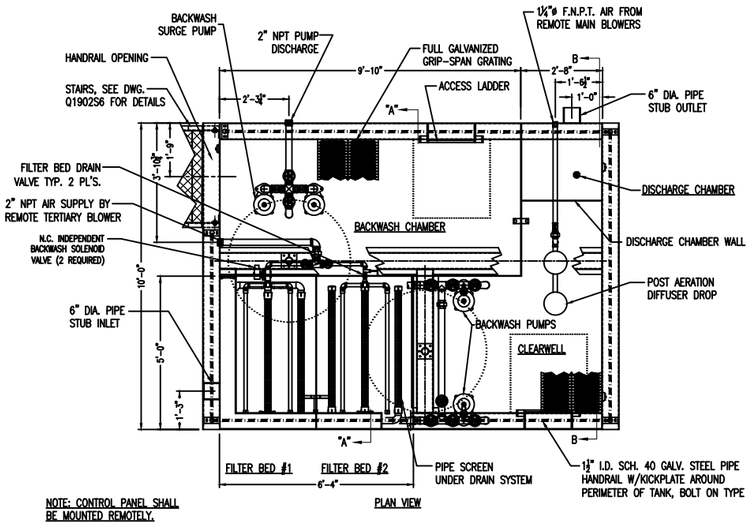

PLAN VIEW

NOTE: CONTROL PANEL SHALL BE MOUNTED REMOTELY.

NOTE: BLOWERS PROVIDED BY D. W. MARTINE AND ASSOCIATES

NOTE: CONTROL PANEL SHALL BE MOUNTED REMOTELY.

NOTE: BLOWERS PROVIDED BY D. W. MARTINE AND ASSOCIATES

PROTECTION AGAINST CORROSION

AFTER COMPLETE WELDING AND FABRICATION OF THE TANK, THE FOLLOWING WILL OCCUR:

SURFACE PREPARATION:
ALL SURFACES SHALL RECEIVE A SSPC-10 NEAR WHITE METAL FINISH OBTAINING A 1.5 TO 3.0 MIL SURFACE PROFILE.

PAINT:
INTERIOR AND EXTERIOR APPLICATION THICKNESS SHALL BE 8 TO 10 MILS D.F.T. OF TNEMEC 46H-413 COAL TAR EPOXY OR EQUAL.

COLOR: BLACK FINISH: SATIN

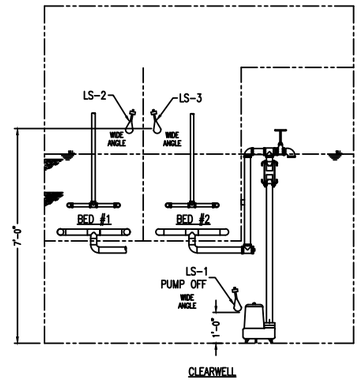

CLEARWELL

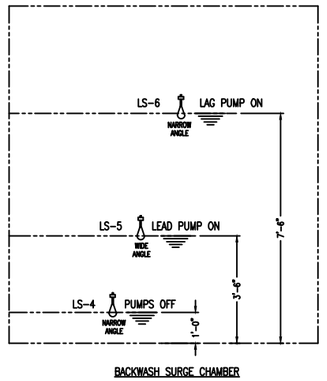

BACKWASH SURGE CHAMBER

FLOAT SWITCH SETTINGS

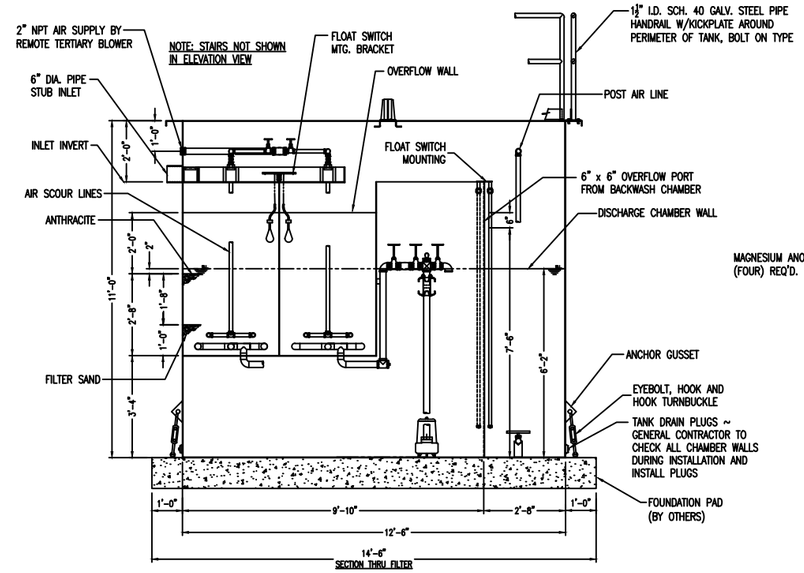

SECTION THRU FILTER

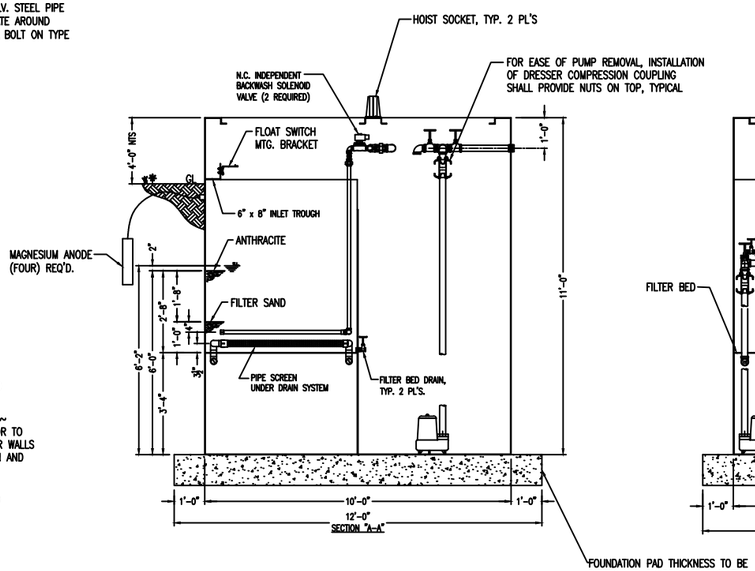

SECTION "A-A"

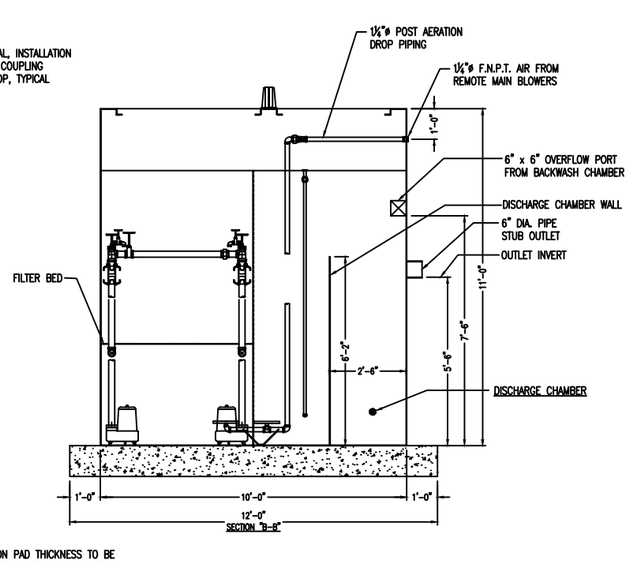

SECTION "B-B"

DESIGN DATA				
MODEL NO.	DESIGN FLOW G.P.D.	CLEARWELL VOL. GAL.	BACKWASH CHAMBER VOL. GAL.	FILTER BED TOTAL SQ. FT.
PST-31.5	45,000	2,520	2,520	31.5

THESE DRAWINGS AND MATERIAL ARE THE PROPERTY OF PURESTREAM INC. AND ARE NOT TO BE USED FOR THE MANUFACTURE, USE OR SALE OF ANY EQUIPMENT FOR OTHERS, OR COPIED, REPRODUCED, DELIVERED OR DISCLOSED TO OTHERS WITHOUT OUR EXPRESS WRITTEN PERMISSION, AND ARE TO BE RETURNED TO US PROMPTLY UPON OUR REQUEST.

NOTE:
THIS TANK STRUCTURE IS REINFORCED TO WITHSTAND NORMAL PRESSURES FROM THE SOIL AND FROM THE INTERIOR HYDROSTATIC LOAD ON ABOVE GRADE INSTALLATIONS. IF THERE IS A GROUND WATER PROBLEM, NOTIFY YOUR ENGINEER AND PURESTREAM IMMEDIATELY. PURESTREAM WILL NOT BE RESPONSIBLE FOR DAMAGE TO THE TANK STRUCTURE OR EQUIPMENT DUE TO GROUND WATER.

REVISIONS
R1. REVISED AS REQUESTED, PAT, 1-17-22
R2. REVISED AS REQUESTED, PAT, 1-27-22
R3. REVISED AS REQUESTED, PAT, 4-6-22

JOB NO: Q1902
JOB NAME: SUMMIT CLUB (WESTCHESTER)
LOCATION: NY
DRAWN BY: PAT
DATE: 12-15-21

PURESTREAM INC.
DESCRIPTION: PREFABRICATED SEWAGE TREATMENT TERTIARY FILTER
SCALE: 24
DRG. SIZE: D
PART# DRG.NO. Q1902S5-R3

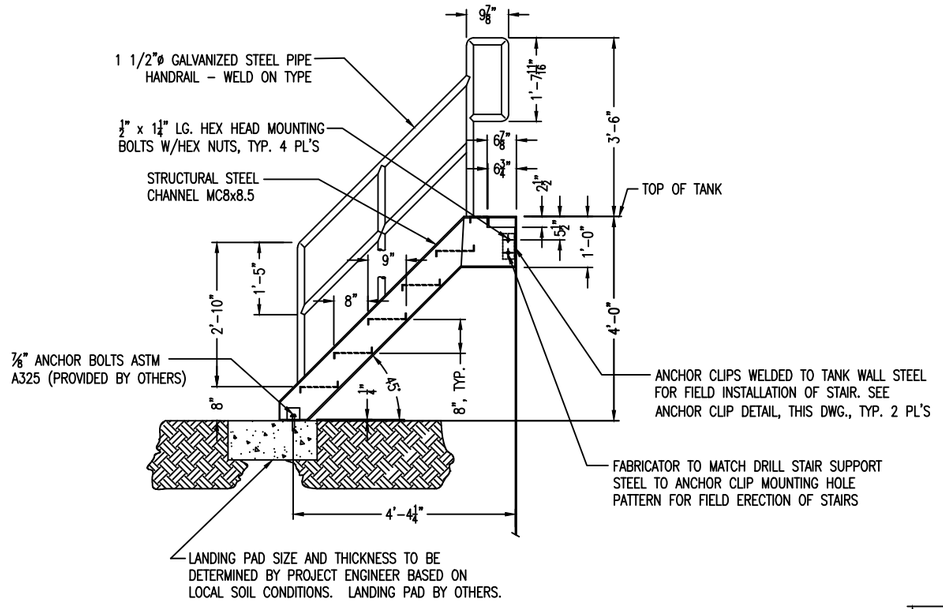

ELEVATION VIEW

(TWO) STAIR ASSEMBLIES REQ'D.

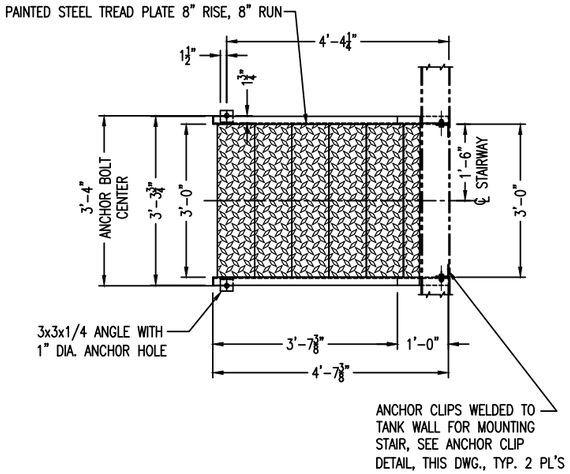

HANDRAIL NOT SHOWN IN THIS VIEW

PLAN VIEW

(TWO) STAIR ASSEMBLIES REQ'D.

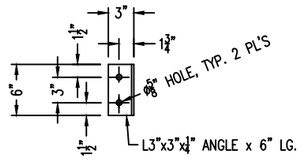

STAIR MOUNTING ANGLE CLIP DETIAL

2X SCALE

(TWO REQ'D.)

(TWO) STAIR ASSEMBLIES REQ'D.

NOTES:
LADDER SHALL BE HOT DIPPED GALVANIZED.
SEE PLANS FOR LOCATION OF STAIRS

FABRICATOR TO PROVIDE LOOSE FASTENERS PER STAIR ASSEMBLY

(4) ½" x 1¼" LG. HEX HEAD MOUNTING BOLTS W/HEX NUTS

REVISIONS	JOB NO: Q1902	PIPESTREAM INC.	
R1, 4'-0" HIGH, PAT, 4-6-22	JOB NAME: SUMMIT CLUB	DESCRIPTION	45° ACCESS LADDER, 4'-0" HEIGHT TREAD PLATE
	LOCATION: NY		
	DRAWN BY: PAT / DATE: 1-18-22	SCALE: 19.2	DRG. SIZE C / PART& DRG.NO. Q1902S6-R1

R&M ENGINEERING

CONTRACT DOCUMENTS
PLANS AND SPECIFICATIONS

Summit Club at Armonk

Sewage Treatment Plant

Armonk
Town of North Castle
Westchester County, NY 10504

R&M Job No.: 2021-201

Prepared for

Summit Club Partners, LLC
568 Bedford Road (NY-22)
Armonk, NY 10504

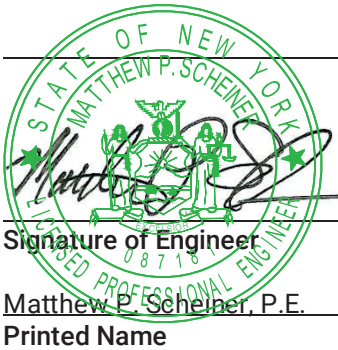

Signature of Engineer

Matthew P. Scheiner, P.E.
Printed Name

Partner, R&M Engineering
Title

September 15, 2022
Date

SUMMIT CLUB AT ARMONK
SEWAGE TREATMENT PLANT
TOWN OF NORTH CASTLE, NEW YORK

TABLE OF CONTENTS

		PAGE NO.
ADVERTISEMENT FOR BIDS		A-1
INSTRUCTIONS TO BIDDERS		
1.	Definitions	IB-1
2.	Submission of Bids	IB-3
3.	Interpretations and/or Addenda	IB-3
4.	Examination of Site and Contract Documents	IB-4
5.	Modification of Bids	IB-4
6.	Withdrawal of Bids	IB-4
7.	Statement of Bidder's Qualifications	IB-4
8.	Subcontractors	IB-5
9.	Consideration of Bids	IB-5
10.	Acceptance of Bid	IB-5
11.	Determination of the Low Bid	IB-6
12.	Insurance	IB-6
13.	Execution of Agreement (Contract)	IB-6
14.	Assignment	IB-7
15.	Soil Conditions	IB-7
16.	Contract Time - Liquidated Damages	IB-8
17.	Sales and Use Tax Exemptions	IB-8
18.	Regulatory Agencies	IB-8
19.	Guarantee	IB-9
PROPOSAL FORMS		
	Proposal General	P-1
	Proposal Certification	P-3
	Price Schedule - Lump Sum Contract	P-7
	Receipt of Addenda	P-8
	Basis of Award	P-9
	Time for Completion Date	P-9
	Bidder’s Declaration	P-10
	Certification of Examination	P-10
	Bidding Contractor’s Performance Record	P-11
	Specimen - Bid Bond	P-13
	Acknowledgement By Contractor	P-15
	Specimen – Certificate of Surety	P-17
	Non-Collusive Bidding Certification	P-18
	Performance Bond Information Form	P-19
	Statement of Compliance with Bidding Requirements	P-20

TABLE OF CONTENTS

PAGE NO.

CONTRACT FORMS

Specimen - Agreement	C-1
Certificate of Insurance	C-6
Specimen – Performance Bond	C-7
Acknowledgements to Performance Bond	C-9
Specimen – Payment Bond (Labor and Material Bond)	C-11
Acknowledgements to Payment Bond	C-15
Notice of Award	C-17
Acceptance of Notice of Award	C-18
Notice to Proceed	C-19
Receipt and Acceptance of Notice to Proceed	C-19
Specimen – Change Order	C-20

GENERAL CONDITIONS

G1	Scope of Work	G.C.-1
G2	Plans and Specifications	G.C.-2
G3	Other Contracts	G.C.-4
G4	Obstructions Encountered	G.C.-4
G5	Superintendence and Workmen	G.C.-5
G6	Nondiscrimination Provisions	G.C.-5
G7	Work Subject to Control of Engineer	G.C.-5
G8	Authority and Duties of Inspectors	G.C.-7
G9	Inspection and Correction of Work	G.C.-7
G10	Inspection of Facilities by Regulatory Agencies	G.C.-8
G11	Contractor's Responsibility	G.C.-8
G12	Notification to Utilities and Authorities	G.C.-9
G13	Subletting	G.C.-9
G14	Insurance	G.C.-9
G15	Accident Prevention	G.C.-13
G16	Indemnification of the Owner and the Engineer	G.C.-13
G17	Notice to Proceed and Time for Completion	G.C.-14
G18	Extension of Time	G.C.-14
G19	Default in Completion	G.C.-15

TABLE OF CONTENTS

		PAGE NO.
G20	Strikes	G.C.-16
G21	Liquidated Damages	G.C.-16
G22	Weather	G.C.-16
G23	Working Hours - Holidays and Overtime	G.C.-17
G24	Working Site	G.C.-17
G25	Changes in Plans and Specifications	G.C.-17
G26	Extra Work	G.C.-18
G27	Claims and Disputes	G.C.-22
G28	Changes Not To Affect Bond	G.C.-23
G29	Measurement	G.C.-23
G30	Basis of Payment	G.C.-23
G31	Partial Payments	G.C.-24
G32	Substantial and Final Certificates	G.C.-25
G33	Acceptance of Final Certificate	G.C.-26
G34	Release of Retainage and Reinspection of Work	G.C.-26
G35	Scope of Payments	G.C.-27
G36	Right to Withhold Payments	G.C.-27
G37	Release of Liens	G.C.-28
G38	Right to Use Work	G.C.-28
G39	Notice of Warning and Stop Work Order	G.C.-28
G40	Guarantee Period	G.C.-29
G41	Termination of Contract	G.C.-29
G42	Patent Rights	G.C.-30
G43	Permits	G.C.-31
G44	Laws and Ordinances	G.C.-31
G45	Liability of Contractor	G.C.-31
G46	Substitute Bond	G.C.-32
G47	No Waiver	G.C.-32
G48	No Limitation of Liability	G.C.-32
G49	Legal Address	G.C.-32
G50	Excess Cost of Engineering, Inspection and Testing	G.C.-33
G51	“As-Built” Drawings	G.C.-34
G52	Maintenance of Substance Abuse/Drug-Free Environment	G.C.-34
G53	Provisions Required by Law Deemed Inserted	G.C.-34
G54	Compensation	G.C.-35

TABLE OF CONTENTS

		PAGE NO.
DIVISION 1- GENERAL REQUIREMENTS		
01005	Specification Format	01005-1
01010	Summary of Work	01010-1
01018	Items Provided By Owner	01018-1
01020	Cash Allowances	01020-1
01041	Project Coordination	01041-1
01052	Field Surveys and Layout	01052-1
01060	Codes and Standards	01060-1
01070	Abbreviations and Symbols	01070-1
01090	Definitions and Standards	01090-1
01150	Measurement and Payment	01150-1
01300	Submittals	01300-1
01410	Testing Laboratory Services	01410-1
01420	Final Inspection	01420-1
01500	Temporary Facilities and Controls	01500-1
01545	Protection of Persons, Work and Property	01545-1
01600	Material and Equipment	01600-1
01666	Leakage Testing	01666-1
01710	Cleaning Up	01710-1
DIVISION 2- SITE-WORK		
02210	Grading	02210-1
02221	Excavating, Trenching and Backfilling	02221-1
02250	Soil Compaction	02250-1
02513	Bituminous Asphalt Paving	02513-1
02610	Pipe and Pipe Fittings (Underground)	02610-1
02705	Underground Non-Pressure Piping	02705-1
02706	Underground Pressure Piping	02706-1
DIVISION 3- CONCRETE		PAGE NO.
03200	Concrete Reinforcement	03200-1
03300	Cast-In-Place Concrete	03300-1
03400	Precast Concrete Structures	03400-1

TABLE OF CONTENTS

		PAGE NO.
DIVISION 4- MASONRY		
Not Utilized		
DIVISION 5- METALS		
05520	Aluminum Access Doors	05520-1
DIVISION 6- WOOD AND PLASTICS		
Not Utilized		
DIVISION 7- THERMAL AND MOISTURE PROTECTION		
Not Utilized		
DIVISION 8 - DOORS		
Not Utilized		
DIVISION 9- FINISHES		
09900	Paints and Coatings	09900-1
DIVISION 10- SPECIALTIES		
10300	Automatic Telephone Dialer	10300-1
10822	Fire Extinguishers and Accessories	10822-1
DIVISION 11- EQUIPMENT		
11330	Automatic Fine Screen	11330-1
11350	Odor Control System	11350-1
11351	Ultraviolet Disinfection	11351-1
11372	Blowers	11372-2
11400	BESST	11400-1
11600	Laboratory Furniture & Equipment	11600-1
11610	Tools and Miscellaneous Supplies	11610-1
11702	Instrumentation	11702-1

TABLE OF CONTENTS

PAGE NO.

DIVISION 12 - FURNISHINGS

Not Utilized

DIVISION 13- SPECIAL CONSTRUCTION

Not Utilized

DIVISION 14 – CONVEYING EQUIPMENT

Not Utilized

DIVISION 15- MECHANICAL

15010	Basic Mechanical Requirements	15010-1
15055	Basic Piping Materials and Methods	15055-1
15060	Pipe and Pipe Fittings – Exposed	15060-1
15080	Piping Specialties	15080-1
15100	Valves	15100-1
15140	Supports and Anchors	15140-1

DIVISION 16- ELECTRICAL

16100	Raceways and Boxes	16100-1
16110	Hangers and Supports	16110-1
16120	Wire and Cable (600 Volts and Below)	16120-1
16130	Wiring Devices	16130-1
16140	Grounding	16140-1
16142	Electrical Connections for Equipment	16142-1
16220	Generator	16220-1
16230	Automatic AC Transfer Switch (ATS)	16230-1
16426	Main Service Equipment And Metering	16426-1
16430	Motor Starters and Disconnects	16430-1
16431	Disconnects	16431-1
16440	Panelboards	16440-1
16500	Luminaries and Accessories	16500-1
16610	Fire Alarm	16610-1

ADVERTISEMENT FOR BIDS

SUMMIT CLUB AT ARMONK
SEWAGE TREATMENT PLANT
TOWN OF NORTH CASTLE, NEW YORK

Sealed bids for the construction of the Summit Club at Armonk Sewage Treatment Plant will be received by Summit Club Partners, LLC at 568 Bedford Road, Armonk, New York 10504, Attention Jeff Mendell until 2:00 P.M. prevailing time on _____.

At the above specified time and place, bids will be opened. No bids will be read aloud.

The project will consist of one (1) overall Combined Contract consisting of General Construction, Plumbing, Heating and Ventilation, Mechanical and Electrical Work required to construct as a minimum, an influent concrete box, an equalization tank, a BESST sewage treatment plant (STP), consisting of BESST tank and equipment components, interconnecting piping, STP control building superstructure, electrical wiring, and an extension of the existing outfall line to discharge.

Copies of the Plans, Specifications and other Contract Documents may be examined at the office of Robinson & Muller Engineers, P.C. (R&M) at 50 Elm Street, Huntington, New York 11743, between the hours of 10:00 A.M. and 4:00 P.M. daily except Saturdays, Sundays and Holidays. One (1) copy of said documents may be obtained from R&M for a cost of One Hundred Dollars ($100.00) per set. Deposit checks shall be made payable to the order of Summit Club Partners LLC. No deposits will be refunded.

Bids must be made on the Standard Proposal Forms provided in the Bid Specification Book in the manner designated therein and must be enclosed in a sealed envelope, bearing the name and address of the bidder and name of the project on the outside; addressed to, Summit Club Partners LLC, c/o Jeff Mendell, at Summit Club Partners LLC at 568 Bedford Road, Armonk, New York 10504. Bids must be accompanied by a Certified Check or Bid Bond for ten percent (10%) of the amount bid, not to exceed $20,000.00.The Standard Proposal Forms are part of the Specifications Book which must be completed and submitted with the Bid.

The certified check shall be made payable to the order of Summit Club Partners LLC or a copy of a satisfactory Bid Bond, executed by the Bidder and an acceptable surety. Summit Club Partners LLC shall have the right in addition to retaining the amount of the Bid Security, to proceed against any bidder for any additional damages which may occur by reason of the Bidder's refusal or failure to enter into a Contract, if such Contract is offered.

The successful Bidder will be required to furnish and pay for a satisfactory 100% Performance and Payment Bonds.

In addition to any Bonds required to be delivered at the time of execution of any Contract, the successful Bidder shall also provide such other Certificates of Insurance and comply with such other requirements as may be contained in the Bid Specifications or Information for Bidders.

No part of the work under this Contract may be sublet without the written permission of Summit Club Partners LLC or the Engineer. The Contractor shall demonstrate to the Owner and the Engineer that he has the manpower, equipment and technical resources to complete all required work within the prescribed completion date.

Bidders must examine the Specifications and the site of the work and must satisfy themselves by such means as they prefer as to the actual conditions and requirements of the work.

Summit Club Partners LLC reserves the right to reject any or all Bids, to waive any informalities or to accept the Bid which, in its judgment, will be in the best interest of Summit Club Partners LLC.

Summit Club at Armonk
c/o Summit Club Partners LLC

BY: Jeff Mendell

INSTRUCTIONS TO BIDDERS

I. DEFINITIONS

A. Whenever the following terms or pronouns in place thereof are used in the Contract Documents, they shall be interpreted as follows:

"Owner"/"Agent".....	Summit Club Partners LLC
"Engineer"/"Consulting Engineer"	The firm of Robinson & Muller, Engineers, P.C. (R&M) at 50 Elm Street, New York Avenue, Huntington, New York 11743. The term "Engineer" shall also mean the technicians and assistants engaged by the Engineer to the extent of the particular duties entrusted to them.
"Attorney".....	The Attorney representing the Owner.
"Inspector".....	The person or persons employed by the Engineer to make inspections of the work performed and materials furnished by the Contractor.
"Bidder".....	Any individual, partnership, firm or corporation submitting a bona fide proposal to the Owner for the work contemplated.
"Contractor".....	The person or persons or partnership or corporation contracting to perform the Work to be done under the Contract Documents or the legal representative of such party or parties.
"Surety".....	The corporate body which is surety on the Contractor's bonds for the payment of all debts for materials and labor used or employed in the execution of the Contract and for the acceptable performance of the Work.
"Proposal"..... "Bid"	The form furnished by Owner properly filled in and executed and submitted as a bid for the performance of the Work.
"Project"..... "Work"	The entire work to be executed under the Contract.

"Plans"..... "Drawings"	The drawings or reproductions of drawings pertaining to the Work to be performed or to any structure connected therewith.
"Specifications".....	The descriptions, directions, provisions and requirements contained in the Contract Documents, together with all written agreements made or to be made pertaining to the method and manner of performing the Work, or to the quantities and qualities of materials to be furnished under the Contract.
"Addendum".....	Any written interpretation, clarification, amendment or addition to the Plans, Specifications, or other Contract Documents.
"Contract".....	The Contract covering the performance of the Work and the furnishing of materials required as evidenced by the Contract Documents.
"Regulatory Agency"	The New York State Department of Environmental Conservation, the Westchester County Department of Health, various Town agencies and Westchester Department of Public Works.
"Contract Documents".....	The Contract executed by the Owner and the Contractor, the Advertisement, Instructions to Bidders, Bid Forms, Contract, Bonds, General Conditions, Technical Specifications, all Addenda, the Plans, and all supplemental agreements made or to be made.
"State".....	The State in which the Project is located.

B. "As required", "as directed", "as permitted", "as ordered", "as designated", "as prescribed", or words of like import shall mean that the "requirement", "direction", "permission", "order", "designation", or "prescription" of the Engineer is understood and similarly the words "approved", "acceptable", "satisfactory", or words of like import shall mean approved by, or acceptable to, or satisfactory to the Engineer.

2. SUBMISSION OF BIDS

A. Submit Bids on the Bid Forms furnished. Properly fill in all blank spaces for bid prices, in indelible ink or typed, in both words and numerals. In case of conflict, words take precedence and shall be binding on the Bidder. Bid Proposal shall not be qualified, modified, limited or restricted in any way.

B. Enclose Bid Proposal in a sealed, opaque envelope plainly marked with the title of the Project and name and street address of the Bidder on the outside; post office boxes are not acceptable. When sent by mail, preferably registered, enclose the sealed Bid in an additional envelope similarly marked and addressed to Owner. No Bid will be considered unless filed on or before the time and at the place designated by the Owner. The Bids will be opened by the Owner or its representative but not be read aloud.

Bids received after the time fixed for the opening will not be considered and will be returned to Bidders unopened.

C. The Bidder shall furnish with the Bid Forms and Proposal the following completed and signed items:

1. An acknowledgement that all Addenda have been received.

2. A Bidding Contractor's Performance Record Statement – indicating among other requirements, records of similar work performed, including any work done on sewage and sewage related projects such as construction of sewage treatment plants, installation of sanitary sewers, sewage force mains and sewage pump stations similar to that included in this project, name of Owner, dollar amount of contract, description of the type of work, name of Engineer in charge, and address and phone number of Engineer.

3. Bid security – A certified check or Bid Bond.

4. Certificate of Surety (Performance Bond).

D. The information required under C1 or C2 above shall be furnished on the forms included in this book.

E. Before award is made to a Bidder who is not a resident of the State, Bidder shall designate a proper agent in the State on whom services of process can be made in the event of litigation.

3. INTERPRETATIONS AND/OR ADDENDA

A. No oral interpretation will be made to any Bidder as to the meaning of the Contract Documents or any part thereof. Every request for such an interpretation shall be made in writing to Engineer. To be given consideration all written inquiries must be received by Engineer five (5) or more days prior to the date set

for the receipt of Bids. Every interpretation made to a Bidder will be in the form of an Addendum to the Contract Documents. All Addenda will be mailed to each person holding Contract Documents, but it shall be the Bidder's responsibility to make inquiry as to the Addenda issued. All such Addenda shall become part of the Contract Documents and all Bidders shall be bound by such Addenda, whether or not received by the Bidders.

B. All Bidders are required to complete the "Acknowledgement of Receipt of Addenda" included in the Bid Forms.

C. The Bidder shall request clarification of all matters of confusion or conflict in the Contract Documents. Bid strategy should not be based on the Bidder's unilateral interpretation of the Contract Documents. No future claims arising out of the Bidder's interpretations as such will be considered.

4. EXAMINATION OF SITE AND CONTRACT DOCUMENTS

A. Each Bidder shall visit the site, walk or drive the route of the proposed Work and fully acquaint himself with the existing conditions and permit requirements there relating to the Work to be performed in order to be fully informed with respect to the facilities involved, the difficulties and the restrictions attending the performance of the Contract. The Bidder shall thoroughly examine and familiarize himself with the Contract Documents. The Contractor, by the execution of the Agreement, shall in no way be relieved of any obligation under it due to his failure to examine the Contract Documents or to visit the site and acquaint himself with the conditions there existing, and the Owner will be justified in rejecting any claim based on facts regarding which the Contractor should have been on notice as a result thereof.

5. MODIFICATION OF BIDS

A. Written or telegraphic modifications of Bids may be accepted if received in accordance with the requirements for the submission of Bids as provided above. Bidders are cautioned that if, in the opinion of Owner or Engineer, such modifications are not explicit, or are in any sense subject to misinterpretation, then the Bid so amended or modified will be subject to rejection.

6. WITHDRAWAL OF BIDS

A. Negligence on the part of the Bidder in preparing the Bid confers no right for the withdrawal of the Bid after it has been opened. Any Bidder upon properly notarized written request will be given permission to withdraw the Bid not later than the time set for opening. At the time of opening of the Bids, when such Bid is included, it will be returned to the Bidder unread.

7. STATEMENT OF BIDDER'S QUALIFICATIONS

A. Each Bidder shall complete the Contractor’s Certificate of Experience and Performance which is included herein. Owner shall have the right to take such

steps as it deems necessary to determine the ability of the Bidder to perform the obligations under the Contract, and the Bidder shall furnish Owner all such information and data for this purpose as the Owner may request. The right is reserved to reject any Bid where an investigation of the available evidence or information does not satisfy Owner that the Bidder is qualified to carry out properly the terms of the Contract. The issuing of Bid Documents and acceptance of a bid by Owner shall not be construed as prequalification of that Bidder.

B. Bidders shall be experienced in the kind of work to be performed, have the necessary equipment therefor, and sufficient capital to properly execute the Work within the time allowed. Bids received from bidders who have previously failed to complete contracts within the time required, or who have previously performed similar work in an unsatisfactory manner, may be rejected.

C. A bid may be rejected if the Bidder cannot demonstrate the necessary ability, personnel, plant and equipment, and financial resources to commence the Work at the time prescribed and thereafter to prosecute, timely progress and complete the Work within the time frames specified. A bid may be rejected if the Bidder is already obligated for the performance of other work which may delay the commencement, prosecution, or completion of the Work.

8. SUBCONTRACTORS

A. Upon request of the Owner, and within twenty-four (24) hours of such request, the bidder shall submit a list of subcontractors proposed for the performance of the Work. At the option of the Bidder, alternate subcontractors may be included in the list, provided that the use of such alternate subcontractors is approved by the Owner and shall not result in any change in the Contract Price stated on the Bid Form.

9. CONSIDERATION OF BIDS

A. The right is reserved, as the interest of the Owner may require, to reject any or all Bids, to waive any informality in Bids received, to reject any items of any Bid, to obtain new Bids, or to proceed to do the Work otherwise, when the best interest of the Owner may be promoted thereby.

10. ACCEPTANCE OF BID

A. The acceptance of a Bid will be a notice in writing signed by a duly authorized representative of the Owner and no other act of the Owner and/or Engineer shall constitute the acceptance of a Bid. The acceptance of a Bid shall bind the successful Bidder to execute the Agreement as provided hereinafter. The rights and obligations provided for in the Contract shall become effective and binding upon the parties only with its formal execution by the successful Bidder and Owner.

11. DETERMINATION OF THE LOW BID

A. The Owner may exercise the right to reject any or all Bids for any reason whatever or for no stated reason. The Owner may award the Contract to the lowest responsible Bidder on the basis of the Total Lump Sum Bid as stated in the Bid Form, who furnished adequate security therefor and complied with all requirements of the bidding requirements and these Instructions to Bidders, after investigations are made to determine the Bidder's responsibility and capability, and based upon the acceptability by the Owner of the list of subcontractors proposed for the Work by the Bidder.

12. INSURANCE

A. The General Conditions require the Contractor to maintain in force during the performance of the Work policies of Workmen's Compensation Insurance, Employers Liability Insurance and Bodily Injury Liability and Property Damage Insurance, and various other insurance, covering the operations of the Contractor and the use of all motor vehicles employed by the Contractor. Original policies, properly executed conformed copies, as well as Certificates of Insurance, evidencing the fact that the Contractor has procured the required insurance shall be filed with the Owner at the time of the execution of the Contract. Bidders are directed to examine the General Conditions for the details of the insurance requirements.

Subcontractors shall be bound by the same insurance requirements as the Contractor.

13. EXECUTION OF AGREEMENT (CONTRACT)

A. The Bidder whose Bid has been accepted will be required to appear at the place and at the time designated by the Owner, in person; or if a firm or corporation, a legally authorized representative shall so appear, and shall execute the Agreement as specified in the Bid Forms. The Owner may elect to mail the Agreement to the Bidder whose bid has been accepted.

B. In addition, the successful Bidder, within the period stipulated, shall procure, execute and deliver to the Owner and maintain, at his own cost and expense, the following bonds as required by the General Conditions:

Performance Bond - In an amount not less than 100% of the Contract Price.

Labor and Material Bond - In an amount not less than 100% of the Contract Price.

C. The Bonds shall stand as security for faithful performance of the Contract and for the payment of all persons performing labor on the Project under the Contract and furnishing materials in connection with the Contract. The bonds shall be in the form of the specimen bonds annexed hereto. The surety on the bonds shall be a corporate surety and shall meet the requirements stated under Bid Security hereof except that the amount of the bonds may exceed the limit for which the

United States Treasury Department has qualified the surety if the excess is reinsured with surety companies that are qualified on the United States Treasury Department list for an amount equal to the amount of the reinsurance. Written evidence of how any excess survey ship has been placed by the surety signing the bond shall accompany the bonds.

D. If the Contractor is a partnership, the bonds shall be signed by each of the individuals who are general partners; if a corporation, the bonds shall be signed in the correct corporate name by a duly authorized officer, agent or attorney-in-fact. There shall be executed an appropriate number of counterparts of the bonds corresponding to the number of counterparts of the Contract. Each executed bond shall be accompanied by:

1. Appropriate acknowledgements of the respective parties;

2. Appropriate duly certified copy of Power of Attorney or other certificate of authority where bond is executed by agent, officer, or other representative of Contractor or Surety; and

3. A duly certified extract from By-Laws or resolutions of Surety under which Power of Attorney or other certificate of authority of its agent, officer, or representative was issued.

E. Failure or refusal of the Bidder whose Bid is accepted to execute the Agreement as hereinbefore provided shall constitute a breach by such Bidder of the Agreement created by the acceptance of the Bid, and in such event, Owner at his option, may determine that such Bidder has abandoned the Contract. Thereupon, such Bidder's Bid and the acceptance thereof shall be null and void and Owner shall be entitled to take action to recover money damages. Such damages shall include the amount of the total Contract finally accepted in excess of that of the originally successful Bidder, losses arising from delays in Owner's construction program, and all other items of cost to Owner resulting from such breach. In the recovery of the damages specified above, Owner may proceed against the bidder or take such other action as Owner may deem best in the interest of the Owner.

14. ASSIGNMENT

A. The successful Bidder to whom the Contract shall be let, granted or awarded shall not assign, transfer, convey, sublet or otherwise dispose of the Contract or of Contractor’s right, title or interest therein or Contractor’s power to execute such Contract, to any person or corporation without the prior consent in writing of Owner.

15. SOIL CONDITIONS

A. The Bidder shall examine and investigate the nature, character, condition and behavior of the soil and subsoil, inasmuch as the Bidder who is awarded the Contract will be held wholly responsible therefor and must assume all risk in connection therewith. Where borings or other exploration data are shown on

plans or made available to the Bidder, it is understood that such data were obtained in the usual manner and with reasonable care and are to be interpreted and used as the bidders see fit. There is no expressed or implied agreement that all of the depths or character of the material have been precisely indicated, and the bidders are cautioned to take into account that conditions affecting the Work may differ from those indicated.

B. If the Bidder desires to obtain information as to soil conditions, at his own expense, he must first obtain permission from the Town and the Owner or other persons or corporations legally responsible for or holding title or control of the property to be tested before making borings or digging test pits on the site of the work. The Bidder is urged to conduct subsurface investigations, as necessary to support preparation of the bid.

C. Soil conditions information, if available, may be examined at the offices of the Engineer.

D. No representations of any kind made by anyone concerning the nature, character or conditions of the soil or sub-soil, test borings, test pits, or other exploration data made or compiled by the Owner or others shall be construed by the Bidder as indicative of the soil or sub-surface conditions which may be encountered, and the Owner or Engineer accepts no responsibility for such conditions. No claims emanating out of a difference in the conditions expected and encountered will be considered, honored or allowed.

16. CONTRACT TIME - LIQUIDATED DAMAGES

A. The number of days for the completion of the Work is set forth in the Bid Form and will be included in the executed Agreement. Provisions for liquidated damages are set forth in the Bid Form and the Agreement. All time limits stated in the Contract Documents are of the essence of the Agreement.

17. SALES AND USE TAX EXEMPTIONS

A. The Owner is not a tax exempt organization.

18. REGULATORY AGENCIES

A. The Bidder is made aware that all work is to be performed in compliance with all local, Town, County, State and Federal Agencies having jurisdiction over the work to be performed on this project. Specific attention is directed to the following agencies where compliance to permits or approvals are necessary:

1) New York State Department of Environmental Conservation
2) Westchester County Department of Health
3) Westchester County Department of Public Works
4) Various Town of North Castle Departments and Fire Marshall's office.

19. GUARANTEE

A. The Owner will require a one (1) year guarantee of all work performed by the contractor from the date of acceptance by the regulatory agencies, in addition to the standard guarantees of a minimum of one (1) year from all equipment manufacturers except in instances where the specifications require more than a one (1) year guarantee for equipment.

END OF SECTION

NO TEXT
THIS PAGE WAS INTENTIONALLY LEFT BLANK

PROPOSAL GENERAL

SUMMIT CLUB AT ARMONK
SEWAGE TREATMENT PLANT
TOWN OF NORTH CASTLE, NEW YORK

TO: Summit Club Partners LLC
568 Bedford Road, Armonk, New York 10504
Attention: Jeff Mendell

To Whom It May Concern:

1. The undersigned hereby declares that he has carefully examined all Contract Documents including the Drawings for the Work, all Specifications and related documents including those incorporated by reference, and all Addenda thereto, and that he has personally inspected the site and has satisfied himself as to the nature and location of the Work, the general and local conditions, particularly those bearing upon transportation, disposal, handling and storage of materials, availability of labor, water, electric power, roads and uncertainties of weather, groundwater table or other physical conditions at the site, the conformation and condition of the ground, the character, quality and quantity of surface and subsurface materials to be encountered, the character of equipment and facilities needed prior to and during the execution of the Work and all other matters which can in any way affect the Work or the cost thereof, and understands that, in submitting this bid and signing the various bid proposal forms he waives all rights to plead any misunderstanding regarding the same.

2. The undersigned further understands and agrees to furnish and provide all the necessary material, machinery, plant, implements, tools, labor, services, skill and other items of whatever nature required, and to do and perform all the work necessary under the Contract, to complete the work in accordance with the Contract Documents and to accept in full compensation therefor the prices stated in the Price Schedule attached hereto.

3. In submitting this Bid, the undersigned further agrees:

   A. That Owner reserves for any reason whatever or for no stated reason, the right to reject this Bid, but that this Bid shall remain open and shall not be withdrawn for a period of ninety (90) days from the date the Bids are scheduled for submission.

   B. That if awarded the Contract, the Contractor will fully complete the Work by the date stated herein. Physical construction shall not commence until a Notice to Proceed is issued by the Owner or Engineer, and all conditions of the Notice to Proceed shall have been fully complied with.

4. By submission of this Bid, each Bidder certifies, and in the case of a joint Bid each party thereto certifies as to his own organization, that this Bid has been arrived at independently, without consultation, communication, or agreement as to any matter relating to this Bid with any other Bidder or with any competitor.

5. The Work proposed herein shall be completed within Three Hundred Sixty Five (365) consecutive calendar days from the date of the Notice to Proceed which shall be issued within ten (10) calendar days of the signing of the Contract. In the event the undersigned fails to complete the Work by said date, or within the time to which such completion may have been extended in accordance with the Contract Documents, he agrees to pay to Owner liquidated damages in the sum of Five Hundred ($500.00) dollars for each calendar day of delay in completing the Work.

PROPOSAL CERTIFICATION

THIS BID IS HEREBY RESPECTFULLY SUBMITTED BY: _____

Dated _____

If an Individual, Partnership or Non-Incorporated Organization:

Name of Bidder _____

By_____ _____
Signature Title

Address of Bidder _____ Zip _____

Telephone Number of Bidder _____

Names and Addresses of Principals of the Firm:

_____
_____
_____

a) If a Corporation:

Name of Bidder_____

By_____ _____
Signature Title

Address of Bidder _____ Zip _____

Telephone Number of Bidder _____

Incorporated Under the Laws of the State of _____

Names and Addresses of Corporation's Officers:

(President) _____ _____
(Vice Pres) _____
(Treasurer) _____
(Secretary) _____

b) If a Partnership:

Name of Bidder_____

By_____ _____
Signature Title

Address of Bidder _____ Zip _____

Telephone Number of Bidder _____

Names and Addresses of Partners:

_____ _____

_____

_____

_____

c) If an Individual:

Name of Bidder_____

By_____ _____
Signature Title

Address of Bidder _____ Zip _____

Telephone Number of Bidder _____

(Form of Affidavit where BIDDER is a Corporation)

STATE OF NEW YORK)
SS:
COUNTY OF)

_____ being duly
sworn, deposes and says: That I reside at _____
in the City (Town)_____
that I am the _____ of_____
_____
the corporation described in and which executed the foregoing instrument; that I know the seal of said corporation; that the seal affixed to the said instrument is such corporate seal and was so affixed by order of the Board of Directors of said corporation; that I signed my name thereto by like order; and that I have knowledge of the several matters therein stated and they are in all respects true.

Subscribed and sworn to before me this_____ day of _____

Notary Public, County of_____

(Form of Affidavit where BIDDER is a Partnership)

STATE OF NEW YORK)
SS:
COUNTY OF)

_____ being duly
sworn, deposes and says: That I am a member of _____
_____
the firm described in and which executed the foregoing Bid; that I duly subscribed the name of the firm thereunto on behalf of the firm; and that the several matters therein stated are in all respects true.

Subscribed and sworn to before me this_____ day of _____

Notary Public, County of_____

(Form of Affidavit where BIDDER is an Individual)

STATE OF NEW YORK)
SS:
COUNTY OF)

_____ being duly sworn, deposes and says: That I am the person described in and who executed the foregoing Bid and that the several matters therein stated are in all respects true.

Subscribed and sworn to before me this_____ day of _____

Notary Public, County of_____

PRICE SCHEDULE – LUMP SUM CONTRACT

SUMMIT CLUB AT ARMONK
SEWAGE TREATMENT PLANT
TOWN OF NORTH CASTLE, NEW YORK

BID DATE: _____

PROPOSAL ITEM NO. 1 – FURNISH AND INSTALL ALL LABOR, EQUIPMENT, AND MATERIALS NECESSARY TO CONSTRUCT AN INFLUENT EQUALIZATION TANK, BESST SEWAGE TREATMENT PLANT AND APPURTENANCES, STP CONTROL BUILDING AND ASSOCIATED EQUIPMENT, ODOR CONTROL SYSTEM, UV DISINFECTION SYSTEM AND EXTENSION OF GRAVITY OUTFALL LINE INCLUDING BUT NOT LIMITED TO ALL SITE WORK, GENERAL CONSTRUCTION, PLUMBING, HEATING AND VENTILATION, RELATED MECHANICAL AND ELECTRICAL WORK, AND INSTALLATION OF UNDERGROUND PIPING AND STRUCTURES COMPLETE AND READY FOR APPROVAL OF OPERATION BY THE OWNER, REGULATORY AGENCIES AND THE ENGINEER.

Lump sum price for all Work shown, specified and described in the Contract Documents or as may reasonably be required for the construction of the new Sewage Treatment Plant, complete and ready for operation.

Lump Sum

_____ Dollars
(In Words)

and _____Cents $_____
(In Words) (In Numerals)

NOTE: The Contractor shall include the sum of $20,000.00 in Bid Proposal No. 1 - lump sum bid as a cash allowance for testing services. Refer to Section 01020. Unused funds from the $20,000.00 allowance shall be returned to the Owner.

RECEIPT OF ADDENDA

The undersigned acknowledges the receipt of the following Addenda, but he agrees that he is bound by all Addenda whether or not listed herein:

ADDENDUM NUMBER AND DATE

Number 1 – Dated _____

Number 2 – Dated _____

Number 3 – Dated _____

Number 4 – Dated _____

BASIS OF AWARD

The Owner reserves the right to award the Contract to the Bidder who submits the lowest Bid and offers the Owner the lowest responsible Bid within the current or revised project budget.

TIME FOR COMPLETION DATE

Since time is of the essence, this Contract must be completed within 365 consecutive calendar days from date of Notice to Proceed. Failure to complete all work within this Three Hundred Sixty Five (365) days will result in enforcement of liquidated damages at the rate of $500.00 per day. No work shall be performed on Saturday, Sunday or holidays, without the prior written expressed approval of the Owner.

The Contractor is further advised that if he fails to perform all work in a timely fashion in compliance with these Plans and Specifications he will be held responsible for all costs incurred by the Owner which may be incurred, such as a payment of fines, interest or penalties resulting from Contractor's lack of completion of all requirements of these Contract Documents within the time allocated. Award of the Contract shall be contingent upon approval of the Contractor by the Owner.

Herewith is a Certified Check or Bid Bond for the following Contract (equal to at least ten percent (10%) but not to exceed $20,000.00 of the Total Bid).

_____ Dollars and _____ Cents

($_____)

payable to the Owner as a surety that the undersigned will enter into a Contract for the work within ten (10) days of date of Notice of Award of Contract. The undersigned proposes to commence work and order materials within ten (10) days after signing of the Contract and to complete the work in accordance with the following schedule and guarantees the work performed and the materials furnished for a period of one (1) year after the final acceptance of the work by the Regulatory Agencies, Owner, and the Engineer.

The Owner reserves the right to award the Contract to whichever responsible Bidder whose Proposal results in the least cost to the Owner and/or serves the best interest of the Owner in its sole judgment.

BIDDER'S DECLARATION

The undersigned, as Bidder, declares that the only person or persons interested in this Bid or Proposal as principal or principals is or are named herein and that no other person that herein named has any interest in this Proposal or in the Contract proposed to be taken; this bid or Proposal is made without any connection with any other person or persons making a Bid or Proposal for the same purpose, the Bid or Proposal is in all respects without fraud or collusion, that he has examined the site of the work, the Form of Contract and Specifications, and the Drawings therein referred to, and has read the ADVERTISEMENT, INSTRUCTIONS TO BIDDERS, PROPOSAL FORMS, CONTRACT, BONDS, GENERAL CONDITIONS and TECHNICAL SPECIFICATIONS hereto attached and has reviewed the plans comprising the work described herein and fully understands all the same; that he proposes and agrees, if this Proposal is accepted, that he will contract with the Owner in the Form of a Contract accompanying this Bid, to perform all the work required in accordance with the Plans and Instructions to Bidders, Proposal Forms, Contract, Bonds, General Conditions and Technical Specifications.

CERTIFICATION OF EXAMINATION

The Bidder certifies herewith that he has carefully examined the Plans and Specifications, that he is familiar with the Insurance and administrative requirements of the Contract and that he is fully aware of the materials specified.

Further, the Bidder has personally examined or had an agent examine the work site and that he is fully aware of the confines of the work site.

With consideration of the above, the time schedule, stipulations and the liquidated damages specified, the Bidder submits his Bid.

BIDDER: _____

SIGNED BY: _____

TITLE: _____

DATE: _____

BIDDING CONTRACTOR'S PERFORMANCE RECORD

How many years has your organization been in business as a Contractor under your present business name?

_____

How many years' experience in construction of major sewage treatment and disposal facilities including sewage pump stations and force mains.

(a) As a General Contractor?_____; (b) As a Subcontractor?_____

What is the construction experience of the principal individuals of your organization?

_____

_____

_____

_____

_____

_____

Have you ever failed to complete any work awarded to you? _____ If so, where and why?

_____

_____

Has any officer or partner of your organization ever failed to complete a construction contract handled in his own name?

_____

If so, state name of individual, name of Owner, location and type of project, and reason for the

failure to complete._____

_____.

BIDDING CONTRACTOR'S PERFORMANCE RECORD: List the last ten (10) related projects completed by you.

Name of Owner	Name & Location Of Project-Type of Work	Prime or Subcont.?	Engineer in Charge for Owner	Contract Price	Date Compl.	Was Time* Extension Necessary?	Were Any Penalties Imposed?	Claims or Stop Notices Filed?

*Explain "YES" answers below:

_____

_____

SPECIMEN
BID BOND

KNOW ALL MEN BY THESE PRESENTS, that we, the undersigned

_____ as Principal, and _____ as Surety, are hereby held and firmly bound unto _____. as Owner in the penal
(Name of Owner)

sum of _____ for the payment of which, will and truly to be made, we hereby jointly and severally bind ourselves, successors and assigns.

Signed this _____ day of _____. The condition of the above obligation is such that whereas the Principal has submitted to _____ a certain Bid, attached hereto and hereby made a part hereof to enter into a Contract in writing, for the _____.
(Project Name)

NOW THEREFORE:

a. If said Bid shall be rejected, or in the alternate.

b. If said Bid shall be accepted and the Principal shall execute and deliver a Contract in the Form of Contract attached hereto (properly completed in accordance with said Bid) and shall furnish a Bond for his faithful performance of said Contract, and for the payment for all persons performing labor or furnishing materials in connection therewith, and shall in all other respects perform the agreement created by the acceptance of said Bid, then this obligation shall be void, otherwise same shall remain in force and effect; it being expressly understood and agreed that the liability of the Surety for any and all claims hereunder shall, in no event, exceed the penal amount of this obligation as herein stated.

The Surety, for value received, hereby stipulates and agrees that the obligations of said Surety and its Bond shall be in no way impaired or affected by an extension of the time in which _____ may accept such Bid; and said Surety does hereby waive notice of
(Name of Owner)
any such extension.

IN WITNESS WHEREOF, the Principal and the Surety have hereunto set their hands and seals, and such of them as are corporations have caused their corporate seals to be hereto affixed and these presents to be signed by their proper officers, the day and year first set forth above.

_____
Principal

_____
Surety

BY _____

IMPORTANT – Surety companies executing Bonds must appear on the Treasury Department's most current list (Circular 570 as amended) and be authorized to transact business in the State where the project is located.

ACKNOWLEDGEMENT BY CONTRACTOR
(If an Individual)

STATE OF NEW YORK)
) SS:
COUNTY OF _____)

On this _____ day of _____, 20___
before me personally came _____ to me known to be the person described in, and who executed the foregoing instrument and who acknowledged that he executed the same.

_____
Notary Public

No. _____

(SEAL) Term Expires _____

ACKNOWLEDGEMENT BY CONTRACTOR
(If a Partnership)

STATE OF NEW YORK)
) SS:
COUNTY OF _____)

On this _____ day of _____, 20___
before me personally came _____ to me known and known to me to be a member of_____
the firm described in and which executed the foregoing instrument and he acknowledged to me the he subscribed the name of said firm thereto on behalf of said firm for the purpose therein mentioned.

_____
Notary Public

No. _____

(SEAL) Term Expires _____

ACKNOWLEDGEMENT BY CONTRACTOR
(If a Corporation)

STATE OF NEW YORK)
) SS:
COUNTY OF _____)

On this _____ day of _____, 20___
before me personally came _____ to me known, who being by me duly sworn, did depose and say that he
resides at _____ Street in _____
of _____ State of _____
that he is the _____ of the
_____ the corporation described in and which executed the foregoing instrument; that he knows the seal of said
corporation; that the seal affixed to said instrument is such corporate seal; that it is so affixed by order of the Board of Directors of said corporation, and that he signed his name thereto by like order.

_____
Notary Public

No. _____

(SEAL) Term Expires _____

SPECIMEN

CERTIFICATE OF SURETY

The undersigned hereby certify that they are the duly authorized agents of
_____
_____
_____
duly authorized to do business in the State of New York, and agree to furnish to
_____
(Name of Owner)
a Surety Bond for the faithful performance of any and all provisions contained in the Specifications and Contract. The maximum amount that we will be surety for is $_____.

_____
Surety Company or Agent

BY _____

WITNESS:

_____

The terms of the Surety Company for furnishing the Bond are hereby accepted.

_____
Name of Bidder

BY _____

_____
Title

NON-COLLUSIVE BIDDING CERTIFICATION

By submission of this Bid, each Bidder and each person signing on behalf of any Bidder certifies, and in the case of a joint Bid each party thereto certifies as to its own organization, under penalty of perjury, that to the best of knowledge and belief:

(1) The prices in this Bid have been arrived at independently without collusion, consultation, communication, or agreement, for the purpose of restricting competition, as to any matter relating to such prices with any other Bidders or with any competitor;

(2) Unless otherwise required by law, the prices which have been quoted in this Bid have not been knowingly disclosed by the Bidder and will not knowingly be disclosed by the Bidder prior to opening, directly or indirectly, to any other Bidder or to any competitor;

(3) No attempt has been made or will be made by the Bidder to induce any other person, partnership or corporation to submit or not to submit a Bid for the purpose of restricting competition;

(4) The person signing this Bid or Proposal, under the penalties of perjury, affirms the truth thereof.

DATED _____

_____
(Signature of Bidder)

_____
(Name of Corporation)

(CORPORATE SEAL) _____
(Title)

PERFORMANCE BOND INFORMATION FORM

Project: _____
Name of Project

_____

_____
Name of Owner

Name of Contract _____

Name of Contractor _____

Address _____

_____

Bonding Company or Person Issuing Security Bond _____

_____

Address _____

_____

Bonding Company Agent _____

Address _____

_____

Amount of Bond $_____

Duration of Bond From_____ To _____

Identification Number of Bond_____

IMPORTANT: THIS FORM MUST BE FILLED IN BY BIDDER

STATEMENT OF COMPLIANCE WITH BIDDING REQUIREMENTS

_____hereby certify that _____ have furnished all information required in the Proposal Form and the following have been executed:

- Proposal Certification
- Price Schedule – Lump Sum Contract
- Receipt of Addenda
- Certified Check or Bid Bond (to be attached to bid)
- Certificate of Examination
- Bidding Contractor's Performance Record
- Specimen – Bid Bond and Acknowledgement by Contractor
- Specimen – Certificate of Surety
- Non-Collusive Bidding Certification
- Performance Bond Information Form
- Statement of Compliance With Bidding Requirements

IMPORTANT: THIS FORM MUST BE FILLED IN BY BIDDER

CONTRACT FORMS

SPECIMEN AGREEMENT

THIS AGREEMENT, made this _____ day of _____, by and between _____, hereinafter called "OWNER" and
(Name of Owner)
_____ doing business as (an Individual) or (a Corporation) (a Partnership), hereinafter called "Contractor".

WITNESSETH: That for and in consideration of the payments and agreements hereinafter mentioned:

1. The Contractor will commence and complete the construction of:

_____
Name of Project
_____

_____
Name of Owner

2. The Contractor will furnish all of the material, supplies, tools, equipment, labor and other services necessary for the construction and completion of the project described herein.

3. The Contractor will commence the work required by the Contract Documents within ten (10) calendar days after the date of the Notice to Proceed and will complete the same within Three Hundred and Sixty Five (365) consecutive calendar days, unless the period for completion is extended otherwise by the Contract Documents.

4. The Contractor agrees to perform all of the work described in the Contract Documents and comply with the terms therein for the sum of _____ Dollars and _____ Cents ($_____), as shown in the Proposal. The Contractor is advised that time is of the essence in this Agreement and failure to complete all work within Three Hundred and Sixty Five (365) consecutive calendar days will result in imposition of liquidated damages.

5. The term “Contract Documents” means and includes the following:

   A. Advertisement
   B. Instructions to Bidders
   C. Proposal Forms

      - Proposal Information
      - Proposal Certification
      - Proposal - Price Schedule
      - Receipt of Addenda
      - Addendum Number and Date
      - Basis of Award
      - Time for Completion
      - Certified Check or Bid Bond
      - Bidders Declaration
      - Certificate of Examination
      - Bidding Contractor’s Performance Record
      - Specimen – Bid Bond (if used) and Acknowledgement by Contractor
      - Specimen – Certificate of Surety
      - Non-Collusive Bidding Certification
      - Performance Bond – Information Form
      - Statement of Compliance with Bidding Requirements

   D. Agreement

      - Agreement
      - Certificates of Insurance
      - Certificate of Owner’s Attorney
      - Performance Bond
      - Acknowledgements to Performance Bond
      - Payment Bond (Labor and Material Bond)
      - Acknowledgements to Payment Bond
      - Notice of Award
      - Receipt and Acceptance of Notice of Award
      - Notice to Proceed
      - Receipt and Acceptance of Notice to Proceed
      - Specimen Change Order

   E. General Conditions

      - Division 0

   F. Technical Specifications

      - Division 1 through Division 16 except Divisions 4,6,7,8,12, 13 and 14

G. Drawings:
Drawings Prepared by Robinson & Muller Engineers, P.C. include:

0 – Cover
STP1 – Overall Site Plan
STP2 – STP Site Plan
STP3 – Process Flow Diagram & Hydraulic Profile
STP4 – Equalization Tank Details
STP5 – Constant Head Box, Flow Meter Pit, Screen, & Odor Control
STP6 – BESST Details
STP7 – Tertiary Filter and UV Disinfection Details
STP8 – Control Building Plan & Blower Details
STP9 – Sanitary Details
STP10 – Miscellaneous Details
STR-1 – Structural Details

Drawings Prepared by Emtec Consultants, Professional Engineers, PLLC
Drawings E-1 through E-10 and FA-1 & FA-2 inclusive:

E-1 – Electrical Symbols, Abbreviations and Notes
E-2 – Electrical Site Plan
E-3 – Electrical Lighting Plan
E-5 – Electrical Power Plan
E-6 – Electrical Details
E-7 – Electrical Details
E-8 – Electrical Details
E-9 – Electrical Details
E-10 – Electrical One Line Diagram and Panel Schedules
FA-1 – Fire Alarm Notes, Symbols, Riser and I/O Matrix
FA-2 – Fire Alarm Plan and Details

H. Addenda (If Issued)

No. _____, dated_____

No. _____, dated_____

No. _____, dated_____

No. _____, dated_____

I. Change Orders and any modifications issued during the course of the project.

J. Any and all other documents included in or referenced by the foregoing documents.

6. The Owner will pay to the Contractor in the manner and at such times as set forth in the General Conditions such amounts as required by the Contract Documents.

7. Contractor agrees to bind every subcontractor by the terms of the Contract Documents.

8. This Agreement shall be binding upon all parties hereto and their respective heirs, executors, administrators, successors, and assigns. IN WITNESS WHEREOF, the parties hereto have executed, or caused to be executed by their duly authorized officials, this Agreement in five (5) counterparts, each of which shall be deemed an original on the date first above written.

OWNER:

_____
(Name of Owner)

BY: _____

NAME:_____
(Please Type)

TITLE_____

(SEAL)

ATTEST:

_____

NAME _____

TITLE _____

CONTRACTOR:

_____

BY _____

NAME _____
(Please Print)

ADDRESS _____

_____

(SEAL)

ATTEST:

_____

NAME _____

TITLE: _____

CERTIFICATES OF INSURANCE

_____ hereby certifies that _____ has submitted to the Owner, Proof of Insurance in the form and in the amounts required by the Contract Documents, including all requirements for Hold Harmless Clauses.

_____
Contractor

BY _____

_____
Witness

CERTIFICATE OF OWNER'S ATTORNEY

I, the undersigned _____, the duly authorized and acting legal representative of and counsel to _____ do hereby certify as follows:

I have examined the foregoing Contract and Performance Bond and Payment Bond (Labor and Material Bond) and the manner of the execution thereof; insurance policies, the Terms and Conditions of the Contract Documents and I am of the opinion that the foregoing agreements constitute valid and legally binding obligations upon the parties executing the same in accordance with the terms, conditions and provisions thereof.

_____
Attorney

DATE _____

SPECIMEN

PERFORMANCE BOND

KNOW ALL MEN BY THESE PRESENTS, that,_____
_____
a (Corporation, Partnership or Individual) duly organized under the laws of the State of New York, with its principal office at _____
_____
hereinafter referred to as the "principal", and _____
_____
(Name of Surety)
hereinafter referred to as the "surety" are held and firmly bound to _____,
(Name and Address of Owner)
hereinafter referred to as the "Owner", or to its successors and assigns, in the penal sum of_____
Dollars, lawful money of the United States, for the payment of which said sum of money well and truly to be made, we, and each of us, bind ourselves, our heirs, executors, administrators, successors and assigns, jointly and severally, firmly by these presents.

WHEREAS, the Principal is about to enter, or has entered, into a Contract in writing with the Owner, for the construction of the _____
(Name and Location of Project)
dated _____, a copy of which is hereby made a part of this Bond as though herein set forth in full;

NOW, THEREFORE, the conditions of this obligation are such that if the Principal, his or its representatives or assigns, shall well and faithfully perform the said Contract and all modifications, amendments, additions, and alterations thereto that may hereafter be made during the original term thereof, and any extensions thereof which may be granted by the Owner, with or without notice to the Surety, and during any guaranty period, according to its terms and its true intent and meaning, and if he or it shall satisfy all claims and demands incurred under such Contract, and shall fully indemnify and save harmless the Owner from all cost and damage which the Owner may suffer by reason of failure so to do, and shall fully reimburse and repay the Owner for all outlay and expense which the Owner may incur in making good any such default, including fees of architects, engineers and attorneys of the Owner, if any, occasioned by such default, then this obligation shall be void, otherwise the same to remain in full force and effect.

The Surety, for value received, hereby stipulates and agrees if requested to do so by the Owner, to be performed under the Contract, pursuant to the terms, conditions, and covenants thereof, if, for any cause, the Principal fails or neglects fully so to perform and complete such Work. The Surety further agrees to commence such Work of completion within twenty (20) days after written notice thereof from the Owner and to complete such Work within such time as the Owner may fix.

The Surety, for value received, for itself and its successors and assigns, hereby stipulates and agrees that the obligation or said Surety and its bond shall be in no way impaired or affected by any extension of time, modifications, omission, addition, or change in or to the said Contract or the Work to be performed thereunder, or by any payment thereunder before the time required therein, or by any waiver of any provisions thereof, or by any assignment, subletting or other transfer thereof of any Work to be performed or any monies due or to become due thereunder; and said Surety does hereby waive notice of any and all of such extensions, modifications, omissions, additions, changes, payments, waivers, assignments, subcontract and transfers, and hereby expressly stipulates and agrees that any and all things done and omitted to be done by and in relation to assignees, subcontractors and other transferees, shall have the same effect as to said Surety as though done or omitted to be done by or in relation to said Principal.

IN WITNESS WHEREOF, the Principal and the Surety have hereunto set their hands and seals, and such of them as are corporations have caused their corporate seals to be hereunto affixed and these presents to be signed by their proper officers, this _____ day of _____ .

(SEAL) _____

Principal

By:_____

(SEAL) _____

Surety

By:_____

ACKNOWLEDGEMENTS TO PERFORMANCE BOND

SURETY COMPANY

STATE OF NEW YORK)
: ss.:
COUNTY OF)

On this _____ day of_____, in the year _____, before me personally came _____
to me known, who being by me duly sworn, did depose and say that (s)he resides at_____ and is the _____ of _____
the corporation described in and which executed the foregoing Bond; that (s)he knows the seal of said corporation; that the seal affixed to the foregoing Bond is such corporate seal; that it was so affixed by order of the Board of Directors of said corporation, and that by like order (s)he thereto signed his/her name and official designation.

_____
Notary Public

PRINCIPAL, IF A CORPORATION

STATE OF NEW YORK)
: ss.:
COUNTY OF)

On this _____ day of _____, in the year _____, before me personally came _____ to me known, who being by me duly sworn, depose and say that (s)he resides at_____
and is the _____ of_____
the corporation described in and which executed the foregoing Bond; that (s)he knows the seal of said corporation; that the seal affixed to the foregoing Bond is such corporate seal; that it was so affixed by order of the Board of Directors of said corporation, and that by like order (s)he thereto signed his/her name and official designation.

_____
Notary Public

PRINCIPAL, IF A PARTNERSHIP

STATE OF NEW YORK)
: ss.:
COUNTY OF)

On this ____ day of _____, in the year _____, before me personally came_____
to me known and known to me to be a member of_____
the firm described in and which executed the foregoing bond, and (s)he acknowledged to me that (s)he subscribed the name of said firm thereto on behalf of said firm for the purpose therein mentioned.

_____
Notary Public

SPECIMEN

PAYMENT BOND
(LABOR AND MATERIAL BOND)

KNOW ALL MEN BY THESE PRESENTS, That we, _____
_____
a (Corporation, Partnership or Individual) duly organized under the laws of the State of New York, with its principal office at_____
_____
hereinafter referred to as the "principal", and_____
_____
(Name of Surety)
hereinafter referred to as the "surety" are held and firmly bound to
_____
(Name and Address of Owner)
hereinafter referred to as the "Owner", or to its successors and assigns, in the penal sum of_____
lawful money of the United States, for the payment of which said sum of money well and truly to be made, we, and each of us, bind ourselves, our heirs, executors, administrators, successors and assigns, jointly and severally, firmly by these presents.

WHEREAS, the Principal is about to enter, or has entered, into a Contract in writing with the Owner, for the construction of the _____
(Name and Location of the Project)
dated_____, a copy of which is hereby made a part of this Bond as though herein set forth in full;

NOW, THEREFORE, the conditions of this obligation are such that if the Principal, his or its representatives or assigns, and Subcontractors to whom Work under this Contract is sublet, and his or her successors and assigns, shall promptly pay or cause to be paid all lawful claims for;

(a) Wages and compensation for labor performed and services rendered by all persons engaged in the prosecution of the Work under said Contract, and any amendment or extension thereof or addition thereto, whether such persons be agents, servants or employees of the Principal or of any such Subcontractor, including all persons so engaged who perform the work of laborers or mechanics at or in the vicinity of the site of the Project, regardless of any contractual relationship between the Principal or such Subcontractors, or his or their successors or assigns, on the one hand, and such laborers or mechanics on the other, but not including office employees not regularly stationed at the site of the Project; and

(b) Materials and supplies (whether incorporated in the permanent structure or not), as well as fuels, oils, implements or machinery furnished, used or consumed by said Principal or any Subcontractor at or in the vicinity of the site of the Project in the prosecution

of the work under said Contract and any amendment or extension thereof or addition thereto;

then this obligation shall be void; otherwise to remain in full force and effect.

This Bond is subject to the following additional conditions, limitations and agreements:

(a) The Principal and Surety agree that this Bond shall be for the benefit of any materialman or laborer having just claim, as well as the Owner.

(b) All persons who have performed labor, rendered services or furnished materials and supplies, as aforesaid, shall have a direct right of action against the Principal and his, its or their successors and assigns, and the Surety herein, or against either or both, or any of them and their successors and assigns. Such persons may sue in their own name, and may prosecute the suit to judgement and execution without the necessity of joining with any other person as party plaintiff.

(c) The Principal and Surety agree that neither of them will hold the Owner liable for any judgement for costs or otherwise, obtained by either or both of them against the laborer or materialism in a suit brought by either a laborer or materialman under this Bond for monies allegedly due for performing work or furnishing material.

(d) The Surety or its successors and assigns shall not be liable for any compensation recoverable by an employee or laborer under the Workmen's Compensation Law.

(e) In no event shall the Surety, or its successors or assigns, be liable for a greater sum than the penalty of this Bond or be subject to any suit, action or proceeding hereon that is instituted by any person, firm, or corporation hereunder later than two years after the complete performance of said Contract and final settlement thereof.

The Principal, for himself and his successors and assigns, and the Surety, for itself and its successors and assigns, do hereby expressly waive any objection that might be interposed as to the right of the Owner to require a bond containing the foregoing provisions, and they do hereby further expressly waive any defense which they or either of them might interpose to an action brought hereon by any person, firm or corporation, including Subcontractors, materialmen, and third persons, for work, labor, services, supplies or material performed, rendered, or furnished as aforesaid upon the ground that there is no law authorizing the Owner to require the foregoing provisions to be placed in this Bond.

And the Surety, for value received, for itself and its successors and assigns, hereby stipulates and agrees that the obligation or said Surety and its bonds shall be in no way impaired or affected by any extension of time, modification, omission, addition, or change in or of the said Contract or the Work to be performed thereunder, or by any payment thereunder before the time required therein or by any waiver of the provisions thereof, or by any assignment, subletting or other transfer thereof or any part thereof, or of any Work to be performed, or any monies due or to become due thereunder; and said Surety does hereby waive notice of any and all of such extensions, modifications, omissions, additions, changes, payments, waivers, assignments, subcontracts, and transfers, and hereby

expressly stipulates and agrees that any and all things done and omitted to be done and in relation to assignees, Subcontractors, and other transferees shall have the same effect as to said Surety as though done or omitted to be done by or in relation to said Principal.

IN WITNESS WHEREOF, the Principal and the Surety have hereunto set their hands and seals, and such of them as are corporations have caused their corporate seals to be hereunto affixed and these presents to be signed by their proper officers, this _____ day of _____.

(SEAL)
Principal

_____

By:_____

(SEAL)

_____

Surety

By:_____

ACKNOWLEDGEMENTS TO PAYMENT BOND

SURETY COMPANY

STATE OF NEW YORK)
: ss.:
COUNTY OF)

On this _____ day of _____, in the year _____, before me personally came _____ to me known, who being by me duly sworn, did depose and say that (s)he resides at _____
and is the _____ of _____
the corporation described in and which executed the foregoing Bond; that (s)he knows the seal of said corporation; that the seal affixed to the foregoing Bond is such corporate seal; that it was so affixed by order of the Board of Directors of said corporation, and that by like order (s)he thereto signed his/her name and official designation.

_____
Notary Public

PRINCIPAL, IF A CORPORATION

STATE OF NEW YORK)
: ss.:
COUNTY OF)

On this _____ day of _____, in the year _____, before me personally came _____ to me known, who being by me duly sworn, did depose and say that (s)he resides at _____
and is the _____ of _____
the corporation described in and which executed the foregoing Bond; that (s)he knows the seal of said corporation; that the seal affixed to the foregoing Bond is such corporate seal; that it was so affixed by order of the Board of Directors of said corporation, and that by like order (s)he thereto signed his/her name and official designation.

_____
Notary Public

PRINCIPAL, IF A PARTNERSHIP

STATE OF NEW YORK)
: ss.:
COUNTY OF)

On this _____ day of _____, in the year _____, before me personally came _____
to me known and known to me to be a member of _____
the firm described in and which executed the foregoing bond, and (s)he acknowledged to me that (s)he subscribed the name of said firm thereto on behalf of said firm for the purpose therein mentioned.

_____
Notary Publ

NOTICE OF AWARD

TO:

_____

_____

_____

PROJECT: _____
Name of Project

_____

_____
Name of Owner

To Whom It May Concern:

The OWNER has considered the BID Proposal submitted by you for the above described Project on _____.

You are hereby notified that your BID has been accepted in the amount of $_____.

* You are required by the Contract Documents to execute the Agreement and furnish the required Contractor's Performance Bond, Payment Bond (Labor and Material Bond) and certificates of Insurance within seven (7) calendar days from the date of this Notice to you.

If you fail to execute said Agreement and to furnish said Bonds within seven (7) calendar days from the Date of this Notice, said Owner will be entitled to consider all your rights arising out of the Owner's acceptance of your BID as abandoned. The OWNER will be entitled to such other rights as may be granted by law.

You are required to return an acknowledged copy of this NOTICE OF AWARD to the OWNER.

Dated this _____ day of _____

BY:_____

TITLE:_____

* Proof of reinsurance in excess of New York Surety Company's authorized bonding limit for any one (1) project, must be submitted with the Performance and Payment (Labor and Material) Bonds. The Surety on the reinsurance must meet the applicable provisions of the "Instructions to Bidders".

RECEIPT AND ACCEPTANCE OF NOTICE OF AWARD

Receipt and acceptance of the above NOTICE OF AWARD is hereby acknowledged:

BY:_____, this _____
the _____ day of _____.

BY: _____

TITLE: _____

NOTICE TO PROCEED

DATE_____

TO: _____

_____

_____

To Whom It May Concern:

This shall serve as a Notice to Proceed relative to furnishing and installing all labor, equipment, materials, supplies, tools and other services required to construct the _____.
(Name of Project)

You are hereby notified to commence work in accordance with the Agreement dated _____, on or before _____. You are to complete the work within _____ consecutive calendar days thereafter. The date of completion of all work is therefore _____.

You are required to return the acknowledged acceptance of Acceptance of Notice to the Engineer.

BY: _____

TITLE: _____

RECEIPT AND ACCEPTANCE OF NOTICE TO PROCEED

Receipt and acceptance of the above NOTICE TO PROCEED is hereby acknowledged by:

_____

this _____ day of _____ .

BY: _____

TITLE: _____

SPECIMEN

CHANGE ORDER

Change Order No._____
Date_____
Agreement Date_____

NAME OF PROJECT: _____
(Name of Project)
_____

_____
(Name of Owner)

OWNER: _____

CONTRACTOR: _____

The following changes are hereby made to the Contract Documents:

Justification:

1. Original CONTRACT PRICE $_____

2. Current CONTRACT PRICE
(adjusted by previous CHANGE ORDER(S)) $_____

3. The CONTRACT PRICE due to this CHANGE
ORDER will be (increased) (decreased) by $_____

4. The new CONTRACT PRICE including this
Change Order will be 2 ± 3 = 4) $_____

Change to CONTRACT TIME _____

The CONTRACT TIME will be (increased) (decreased) by _____ calendar days.

The date for completion of all work will be _____ (Date).

Approvals Required:

To be effective, this Change Order must be approved by the Owner.

Requested By: _____ (Contractor)

Recommended By: _____ (Engineer)

Accepted By: _____ (Owner)

THIS FORM MUST ACCOMPANY ALL SUPPORTING DATA, AS REQUESTED BY THE ENGINEER, NECESSARY TO EVALUATE THE CLAIM.

GENERAL CONDITIONS

G1. SCOPE OF WORK

A. The Contractor shall furnish all labor, materials, equipment, plant, power, water, light, heat, fuel, tools, appliances, supplies and all other means of construction necessary or proper for executing and completing the Contract; restore to their original conditions, all surfaces disturbed; pay cost of all insurance; bear all losses due to the nature of the Work and costs incidental to suspension or discontinuance of the Work except as otherwise provided; assume all responsibility of whatever nature or kind, indemnify the Owner and Engineer from all claims; secure and pay for all permits unless otherwise provided; conform to all county, state, municipal or federal regulations, legislation and requirements; abide by all rules and regulations of railroad and utility companies whenever or wherever jurisdiction of these agencies prevails; do all work necessary to conform the Project to the Contract Documents; leave intact the work of all adjoining contractors unless otherwise ordered by the Engineer; perform and complete the Work in a manner best calculated to permit construction, consistent with safety of life and property and satisfactory to the Engineer and in strict accordance with the Contract Documents; protect the Work during construction, clean up the Work during and after construction, and maintain it until final acceptance as hereinafter provided.

B. The Contractor shall do all work and pay all costs of protecting, supporting, maintaining, repairing if damaged, relocating and restoring all surface, sub-surface or overhead structures and all other property including pipes, conduits, ducts, tubes, chambers and appurtenances, public or private, in the vicinity of the Work except as otherwise specified.

C. The Contractor shall do all extra work, as ordered in writing by the Engineer pursuant to the Owner's authorizations, and compensation therefor shall be in accordance with EXTRA WORK.

G2. PLANS AND SPECIFICATIONS

A. The Contractor will be furnished with two (2) sets of Plans and Specifications which have been approved by the regulatory agency or agencies having jurisdiction over the project. One (1) copy of the Plans and Specifications furnished to the Contractor shall be kept constantly at the site of the Work. The inspectors for the regulatory agency or regulatory agencies or representatives of the Engineer will not recognize or use any Plans and Specifications not approved by the agency or agencies. Anything shown on the Plans and not mentioned in the Specifications or mentioned in the Specifications and not shown on the Plans, and all work and materials necessary for the completion of the Work according to the intent and meaning of the Contract Documents, shall be furnished, performed, and done, as if the same were both mentioned in the Specifications and shown on the Drawings. Any conflict or inconsistency between the Plans and Specifications, or any discrepancy between the figures and scale of drawings shall be submitted by the Contractor to the Engineer, whose decision thereon shall be conclusive.

B. In the event the meaning of any portions of the Specifications or Drawings or any supplementary drawings or instructions of the Engineer is doubtful, the same shall be understood to call for the best type of construction, both as to materials and workmanship, which reasonably can be interpreted.

C. The Engineer will make all necessary explanations as to the meaning and intent of the Plans and Specifications, and shall give all orders contemplated therein or thereby or in every case in which a difficult or unforeseen condition shall arise in the performance of the Work.

D. All materials and workmanship shall be strictly in accordance with the Plans and Specifications.

E. The Plans show the approximate size, arrangement and location of the Work. During construction, exact lines, grades, shapes and dimensions will be established, and the Contractor shall construct the Work exactly in accordance therewith, subject however to changes as provided for in CHANGES IN PLANS AND SPECIFICATIONS and EXTRA WORK.

F. The figures shown on the Plans after the word "elevation", or abbreviation of it, shall mean the distance in feet above the datum adopted by the Engineer. If the Contractor has any doubt or question as to such datum, he shall ascertain the datum being used from the Engineer.

G. Any errors or omissions in the Plans and Specifications may be corrected by the Engineer, when such corrections are necessary for the proper fulfillment of their intentions as construed by him.

H. Any Work that may reasonably be inferred from the Specifications or Drawings as being required to produce the intended result shall be provided whether or not specifically called for. Work, materials or equipment described in words which so applied have a well known technical or trade meaning shall be deemed to refer to such recognized standards.

I. The Drawings show the sizes, materials, elevation and locations of underground and exposed utilities, structures and other physical features, upon which Engineer has relied in the preparation of the Drawings and Specifications, and which have been determined from the best available information, by actual surveys or furnished and taken from the records of utility companies and drawings of existing facilities. Neither Owner nor Engineer assumes responsibility for the possibility that utilities, structures and objects other than those shown on the Drawings may be encountered or that actual sizes, materials, elevations and locations may be different from those shown. It is the Contractor's sole responsibility to coordinate all conflicts with utilities. The Owner will assume no liability for conflicts, delays, damages, or other impacted costs arising out of conflicts with utilities or coordination problems with utilities.

J. Where detailed information may be required for the Work, Contractor shall, at his expense, furnish all labor, tools, equipment and all other items and do whatever is necessary to verify and substantiate the conditions and to definitely establish the information required. Because of the nature of the Work, minor adjustments may be required in the Work to meet existing conditions. Contractor shall make such adjustments at no additional cost to Owner.

K. The Drawings indicate the extent and general arrangement of the Work. Any proposed departures from the Drawings, deemed necessary by Contractor to accommodate the materials and equipment he proposes to provide, shall be submitted to Engineer as soon as practical with complete details, designs, reasons for the departure and any other information Engineer may require. Departures from the Drawings, without Engineer's approval, are not permitted. All costs associated with approved changes shall be borne by Contractor.

L. If any parts of the Contract Documents are in conflict with the requirements of a public authority having jurisdiction over the Work, then the public authority's requirements shall govern. However, where the requirements of the Contract Documents exceed those of the public authority, then the Contract Documents shall govern.

M. The organization of the Specifications into divisions, sections, and articles, and the arrangement of Drawings shall not control Contractor in dividing the Work among subcontractors or in establishing the extent of Work to be performed by any trade. Whenever the provisions of the Contract Documents may conflict with any agreement or regulations of any kind in force among members of any trade association, union or council which regulates or distinguishes that work shall or shall not be included in the work of any particular trade, Contractor shall make all necessary arrangements on his own to reconcile any such conflict of provisions without recourse to Engineer or Owner.

N. The Table of Contents, titles, headings, running headlines and marginal notes contained in the Contract Documents are solely to facilitate reference to various provisions of the Contract Documents and in no way affect, limit or cast light on the interpretation of the provisions to which they refer.

G3. OTHER CONTRACTS

A. The Owner reserves the right to do work by other contractors or by its own forces, and to permit public utility companies and others to do work during the progress and within the limits of or adjacent to the Project, and the Contractor shall conduct his operations and cooperate with such other parties so as to cause as little interference as possible with such other work. The Contractor agrees to make no claim against the Owner for additional payment due to delays or other conditions created by the operation of such other parties. If there is a difference of opinion as to the respective rights of the Contractor and others doing the work, within the limits of or adjacent to the Project, the Engineer shall decide as to the respective rights of the various parties involved in order to secure completion of the Work in a satisfactory manner, and his decision shall be final and binding on the Contractor.

B. If any portion of the Work of the Contractor or any of his subcontractors depends for proper execution or results upon the work of any other contractor, the Contractor shall inspect same and promptly give to the Engineer notice of all defects in the work of such other contractor as renders it unsuitable for proper execution and completion of the Work. The Contractor shall further notify the Engineer of all delays by such other contractor, in the performance of his work, as will affect the timely performance of the Work. The failure of the Contractor to so inspect and give notice shall constitute an acceptance by him (but not by the Owner) of the work of such other contractor as fit and proper for the reception of the Work, except as to defects developing in the work of such other contractor after the execution of the Work, and an acknowledgment of the timely performance by such other contractor of his work.

G4. OBSTRUCTIONS ENCOUNTERED

A. The Owner and the Engineer expressly disclaim all responsibility for the accuracy or completeness of the information given on the Drawings with regard to existing structures and pipelines.

B. In the case where the Contractor discovers an obstruction not indicated on the Drawings or not described via specification reference, he shall immediately notify the Engineer of the obstruction's existence. The Engineer will determine if the obstruction is to be relocated or removed. Compensation for this extra work shall be as outlined in "Extra Work".

G5. SUPERINTENDENCE AND WORKMEN

A. The Contractor shall employ a competent superintendent, foremen, and experienced mechanics and laborers and others skilled in the particular duties entrusted to them. When requested, the Contractor shall furnish to the Engineer, the qualifications of the superintendent, foremen, or any other individuals delegated with important functions connected with the Project.

B. Whenever the Engineer or regulatory agency representative informs the Contractor or his representative in charge that any person on the Work is incompetent or disorderly, or is working contrary to the Specifications or the instructions of the Engineer, or that the Engineer knows that the person has been incompetent or disorderly on this or any previous work, or is objectionable, that person shall thereupon be immediately dismissed from the job and shall not be given employment on any work connected with the Contract.

C. When requested Contractor shall deliver to the Engineer a record of the numbers, salaries and classifications of men employed upon the Work each day of the job.

D. The Contractor shall not permit the use of intoxicating liquors on or about the Project nor shall he permit anyone suffering from the effects thereof to remain on the Work.

E. The Contractor shall give preference in employment to local labor whenever qualified local labor is available, and he shall be the judge of the qualifications of local labor.

G6. NONDISCRIMINATION PROVISIONS

A. During the performance of this Contract, the Contractor agrees that in the hiring of employees for the performance of work under this contract or any subcontract hereunder, neither the Contractor, any Subcontractor, nor any person acting on behalf of such Contractor or a Subcontractor, shall by reason of race, creed, color, sex, age or national origin discriminate against anyone who is qualified and available to perform the work to which the employment relates.

B. That neither the Contractor, Subcontractor, nor any person on his behalf shall, in any manner discriminate against or intimidate any employees hired for the performance of work under this contract on account of race, creed, color, sex, age or national origin.

G7. WORK SUBJECT TO CONTROL OF ENGINEER

A. In the performance of the Work, the Contractor shall abide by all orders, directions and requirements of the Engineer issued within the limitations of the Contract Documents.

B. In the event the Contractor is not personally present at the Work, he shall have present at the Work a qualified superintendent to represent him and with power to act and be the recipient of orders and to obey all the instructions of the Engineer. If proper provision for the carrying out of this stipulation is not made, then the Contractor shall be held responsible for the execution of such orders and instructions as the Engineer may deem necessary to give to any foreman or other employee about the Work, and the Engineer may order the Work stopped until a duly authorized representative of the Contractor appears and receives his instructions. No claim for damages nor any extension of time in which to complete the Work by reason of such delay will be allowed the Contractor.

C. The Engineer shall in all cases, subject to the power and authority of the Owner, determine classifications, quantities, quality, acceptability and fitness of the several kinds of work which are to be paid for under the Contract; he shall interpret the Plans and Specifications, and all extra work orders and shall determine all questions in relation to the Work and the construction thereof.

D. The Contractor shall employ no plant, equipment, materials, methods or men to which the Engineer objects, and shall remove no plant, materials, equipment or other facilities from the site of the Work without the Engineer's permission.

E. Engineer will have authority to disapprove or reject Work which is "defective", which term is hereinafter used to describe Work that is unsatisfactory, faulty or defective, or does not conform to requirements of the Contract Documents or does not meet the requirements of any inspection, test, or approval or has been damaged prior to approval of final payment.

F. Whenever, in Engineer's opinion, it is necessary or advisable for the implementation of the intent of the Contract Documents, the Engineer will have authority to require special inspection or testing of the Work, whether or not such Work be then fabricated, installed or completed.

G. Engineer will be the interpreter of the requirements of the Contract Documents and the judge of the performance thereunder. In his capacity as interpreter and judge he will endeavor to secure faithful performance by both Owner and Contractor. He will not show partiality to either and will not be liable for the result of any interpretation or decision rendered in good faith. Claims, disputes and other matters relating to the execution and progress of the Work or the interpretation of or performance under the Contract Documents shall be referred to Engineer for decision; which he will render in writing within a reasonable time.

H. Neither Engineer's authority to act under this Article or elsewhere in the Contract Documents nor any decision made by him in good faith either to exercise or not exercise such authority shall give rise to any duty or responsibility of Engineer to Contractor, any subcontractor, any material man, fabricator, supplier or any of their agents or employees or any other person performing any of the Work.

I. Engineer will not be responsible for or have control or charge over the acts or omissions of Contractor, or any subcontractors, or any of his or their suppliers, agents, or employees or any other persons at the site or otherwise performing any of the Work, and he will not be responsible for Contractor's failure to perform the Work in accordance with the Contract Documents.

G8. AUTHORITY AND DUTIES OF INSPECTORS

A. Inspectors who are employees of the Engineer, are authorized to inspect all work done and materials furnished. Such inspection extends to all parts of the Work, and to the preparation or manufacture of the materials to be used. In case of a dispute arising between the Contractor and the Inspector as to materials furnished or the manner of performing the Work, the Inspector will have the authority to reject material or suspend the Work until the question at issue can be referred to and decided by the Engineer. The Inspector is not authorized to revoke, alter, enlarge, relax or release any requirements of the Contract Documents, nor to approve or accept any portion of the Work, nor to issue instructions contrary to the Plans and Specifications. The Inspector shall in no case act as foreman or perform other duties for the Contractor, nor interfere with the management of the Work by the Contractor. All advice which the Inspector may give the Contractor shall in no way be construed as binding the Engineer or the Owner in any way, nor as releasing the Contractor from the requirement for fulfillment of the terms of the Contract.

G9. INSPECTION AND CORRECTION OF WORK

A. All materials furnished and work done will be subject to inspection by the Engineer, other representatives including but not limited to the Owner, the Westchester County Department of Health and where applicable, and the Town Fire Marshal and Building Department. The Engineer will condemn all work or materials not found in accordance with the Specifications, and such condemned work and materials shall be removed, and other work and materials furnished in accordance therewith. All materials rejected by the Engineer as being unfit for the fulfillment of the particular clause in the Specifications to which they refer shall be removed from the Work within a period of twenty-four hours, or a shorter period if the Engineer so directs. Should the Contractor refuse to remove the unfit work and materials as ordered, then the Engineer may stop the Contractor from proceeding with the Work and the Owner may supply personnel, equipment and materials to remove the condemned work and materials, at the cost and expense of the Contractor.

B. The inspection or supervision, or failure to inspect or supervise, or the presence of any employee of the Owner during the execution of the Work, or any failure on the part of the Engineer or any of his authorized agents to detect inferior work or materials and condemn the same, shall not be construed to imply an acceptance of such work or materials; nor shall it be construed as barring the Owner, at any subsequent time, from the recovery of such sum of money from the Contractor as may be needed to construct or build anew all portions of the Work in which

fraud was practiced, improper work executed, or improper material furnished and built into the Work.

C. The Contractor shall furnish all necessary facilities should it be desirable at any time to make an examination of the work already completed. Should any portion of the Work be found defective in any respect, the expense of the examination shall be borne by the Contractor. If all is found satisfactory, the expense will be paid for as Extra Work unless otherwise specified elsewhere in the Contract Documents. If, in the opinion of the Owner, it is undesirable to reconstruct or correct any portion of the Work injured or not performed in accordance with the Contract Documents, the compensation to be paid to the Contractor thereunder shall be reduced by such amount as may be equitable under all circumstances.

G10. INSPECTION OF FACILITIES BY REGULATORY AGENCIES

A. Representatives of Westchester County Department of Health, the New York State Department of Environmental Conservation and any other regulatory agencies shall have access to the work wherever it is in progress or preparation and the Contractor shall provide facilities for such access and inspection.

G11. CONTRACTOR'S RESPONSIBILITY

A. The Contractor shall be conclusively presumed to be acquainted with all existing conditions and to guarantee that all work, materials and equipment shall, upon final completion of the Work, be turned over to the Owner in a complete and perfect condition. The Contractor shall be responsible for the proper care, maintenance and protection of all work, materials, and equipment, until the entire Contract is completed and all work, materials, and equipment are found in good condition and accepted. The Contractor shall be responsible for the entire Work until completed and accepted by the Engineer and the Owner.

B. The Contractor shall, at all times, provide the Owner, the Engineer, assistants and inspectors under him, and all county, state and federal agencies having jurisdiction, with necessary facilities for determining both on the Work and at the places of manufacture, that all work being performed, and all materials and equipment being manufactured are strictly in accordance with the Contract Documents. A seven-day notification in writing, stipulating the time and place where the manufacturing is to be done, shall be given the Engineer prior to the commencement of manufacture of any materials and equipment, in order that a representative of the Owner may be present, if so desired, to observe and inspect the operations.

C. Until final acceptance of the Work by the regulatory agencies and the Owner, the Contractor shall be responsible for all damage to the Work, including action of the elements and all other causes. The Contractor shall continuously and adequately protect the Work against damage from any cause.

G12. NOTIFICATION TO UTILITIES AND AUTHORITIES

A. The Contractor shall within ten (10) days of receipt of a Notice to Proceed, request a mark-out of all existing utilities within the work area by the appropriate central locating agency. No work shall proceed until the mark-out is complete.

B. In addition the Contractor shall notify, in writing, the water, gas, electric and telephone companies, and all other utility companies and authorities having facilities which are subject to interference, 72 hours in advance of the proposed time to perform work in the area, in order that they may take such precautions as are necessary to protect their property.

G13. SUBLETTING

A. The Contractor shall not assign, transfer, or sublet the Contract, in whole or in part, to any other person or in any way abridge the terms of the Contract Documents, without express resolution of the Owner, but rather shall keep it in the Contractor's name and control until completed and accepted by the regulatory agencies, Engineer and the Owner. The Contractor shall, likewise, not assign any of the money payable under the Contract.

B. Approval by the Owner of the subletting of any part of the Work, shall not under any circumstances relieve the Contractor or his Surety of any liabilities or obligations under the terms of the Contract Documents, nor shall it create any contractual relations between any subcontractor and the Owner.

C. Should a subcontractor violate any of the terms of these Specifications, the Owner may, at its option, require the Contractor to end and terminate such subcontract.

D. In the event approval is given for the subletting of part of the Project, the agreement between the subcontractor and the Contractor will be subject to examination by the Engineer and the approval of the Owner. Copies of all subcontracts shall be filed with the Owner. Under no conditions will the subletting of the entire Work be allowed.

G14. INSURANCE

As a minimum, the following insurance shall be maintained:

A. The Contractor shall not commence work under the Contract until he has obtained all the insurance required under this article, and such insurance has been approved by the Owner, nor shall any subcontractor be permitted to commence work on his subcontract until similar insurance has been so obtained by such subcontractor submitted to the Contractor, who shall review same for compliance with these requirements and if found to meet these requirements, submit same to the Owner for approval by the Owner. All insurance required shall be maintained in force until all work to be performed under the terms of the Contract is satisfactorily completed.

B. Compensation Insurance - The Contractor shall provide Workmen's Compensation and Employers' Liability Insurance in accordance with the statutes of the state in which the Work is being executed, and all other applicable laws and regulations, for all employees engaged in work under the Contract, and in case any such work is sublet, the Contractor shall require the subcontractor to provide similar insurance unless his employees are covered by the Contractor and the insurance policies and endorsements thereto furnished by the Contractor so stipulate. If any class of employees engaged in hazardous work under the Contract cannot, for any reason, be protected by the Workmen's Compensation and Employers' Liability Insurance, the Contractor shall provide adequate insurance for the protection of such class of employees.

C. Bodily Injury Liability (Public Liability) and Property Damage Insurance The Contractor shall carry:

1. Bodily Injury Liability Insurance, in an amount not less than $2,000,000.00 for injuries, including accidental death, to any one person and, subject to the same limit for each person, in an amount not less than $5,000,000.00 on account of one accident.

2. Contractor's Property Damage Insurance, in an amount not less than $2,000,000.00 for damages on account of any one accident and in an amount not less than $2,000,000.00 for damages on account of all accidents. The insurance shall provide, during the life of the Contract, for the following special hazards: blasting and explosion, collapse, underground damage coverage of all utilities and appurtenances, tree damage in locations where work is to be performed, collapse of or structural injury to any structure due to excavation, pile driving or cofferdam work, shoring or demolition of any structure or removal or rebuilding of any structural support thereof.

   It shall provide adequate protection for the Contractor and his subcontractors against damage claims which may arise from any operations under the Contract, whether such operation be by the insured or by anyone directly or indirectly employed by him. The policy shall also provide for reinstatement of full coverage after payment of each claim.

3. Each policy shall contain a Hold Harmless clause covering the liability set forth in the Article entitled INDEMNIFICATION OF THE OWNER AND ENGINEER, specifically naming the Owner by name and the firm of Robinson & Muller Engineers, P.C. (R&M) and its employees, sub-consultants, etc. as additional named insured.

D. Owner's Protective Liability Insurance – To protect the Owner and Engineer and their employees from claims arising from the operation of the Contractor and its Subcontractors for damages for personal injury and property damage as defined above and for the amount specified above under Bodily Injury Liability and

Property Damage Insurance. In addition, the policy shall contain the following provisions:

The presence of the Owner's Engineer or representatives on the site of the work shall not invalidate any policy of insurance. Any policy shall not be invalidated by reason of any violation of any of the terms of any policy issued to the Contractor. Policy shall be in the amounts specified above for Bodily Injury Liability and Property Damage Insurance.

E. Automobile Liability and Property Damage Insurance - The Contractor shall carry Automobile Liability Insurance in the same limit required in C.1., and Automobile Property Damage Insurance in an amount not less than $500,000.00, covering motor vehicles owned by the Contractor, and insurance in the same limits for injuries and property damage resulting from use of motor vehicles not owned by the Contractor but which are operated in connection with the Work being performed under this Contract.

F. Builder's Risk Insurance - The Contractor shall procure and maintain, during the life of this Contract, Fire, Vandalism, Malicious Mischief, Water Damage, Lightning and Extended Coverage Insurance, and Flood Insurance, each in an amount equal to the bid price of the Contract, covering the structures and equipment involved in the Contract and the material stored at the site.

G. Personal Injury Liability Insurance - To protect the Owner and Engineer and their employees from claims arising from the employees of the Contractor and his subcontractors for damages of personal injury being described as willful torts, to wit: false arrest, detention and/or imprisonment, malicious prosecution, libel, slander and/or defamation of character, invasion of privacy, wrongful eviction and/or wrongful entry; in the amounts specified above for Comprehensive General Liability Insurance.

H. "Hold Harmless" Clause: Responsibility for Injuries to Persons or Property - The Contractor shall be solely responsible for all physical injuries (including death) to persons (including, but not limited to, employees of the Contractor and subcontractors and employees of the Owner and the Engineer), or damage to property (including, but not limited to, property of the Owner or the Contractor or subcontractors) occurring on account of or in connection with the performance of the work hereunder or sustained by an employee of the Contractor or subcontractor, Owner or Engineer or other persons while at the site of the work, and shall indemnify and save harmless the Owner and Engineer from loss and liability upon any and all claims on account of such injuries to persons (including death) or damage to property, and from all costs and expenses in suits which may be brought against the Owner and Engineer on account of any such injuries to persons or damage to property, irrespective of the actual cause of the accident and irrespective of whether it shall have been due to negligence of the Contractor or his Engineer and their respective agents, servants and employees.

The Contractor shall be solely responsible to the Owner or others for all injuries to persons or damage to property therein occurring on account of the

performance of work under this Contract whether due to negligence, fault or default of the Contractor, and irrespective whether it shall have been due to the negligence, fault or default of the Owner, the Engineer, its respective agents, servants or employees. The Contractor shall fully protect, indemnify and save harmless the Owner and the Engineer and their employees from loss and from liability upon any and all claims on account of such injuries to employees or other persons or damage to property on account of any work done by the Contractor and from any costs and expenses in suits which may be brought against the Owner and/or the Engineer or their employees for such damages or injuries.

The obligation of the Contractor to indemnify and save harmless the Owner and the Engineer and their employees as hereinabove set forth is absolute and not dependent upon any questions of negligence on the part of the Contractor, the subcontractors, the Owner, the Engineer and employees, their respective agents, servants or employees. The approval by the Owner, or the Engineer of the methods of doing the work or the failure of the Owner, or the Engineer to call attention to improper or inadequate methods or to require a change in methods or to direct the Contractor to take any particular thing shall not excuse the Contractor in case of any such injury to persons or damage to property owned by Owner or others.

I. Limitation of Liability - The Contractor and all subcontractors agree to limit the negligent acts, errors or omissions, such that the total aggregate liability of the Owner and the Engineer, due to the Engineer's possible professional negligent acts, errors or omissions, to those named shall not exceed Fifty Thousand Dollars ($50,000) or 5% of the Contract award amount, whichever is greater.

J. Cost and Proof of Carriage of Insurance - The Contractor shall furnish the Owner with copies of all insurance policies, each of which shall contain the following provisions: "Such insurance shall not be canceled, terminated, modified or changed by either Contractor or Insurance Company, except on thirty (30) days prior written notice sent by the Insurance Company via certified mail to the Owner and Engineer." Canceled insurance policies shall be replaced in kind before cancellation becomes effective.

K. The term "caused by accident" in the standard policy shall be broadened by the inclusion of the term "occurrence."

L. Proof of Insurance - The Contractor shall furnish the Owner, for its file, satisfactory proof that it carries the insurance required, by submitting the original insurance policies and endorsements thereto or properly executed conformed copies. Each insurance policy and endorsement thereto shall contain an undertaking by the insurance carrier not to cancel the policy except upon thirty (30) days prior written notice to the Owner by certified mail.

M. The original policies and endorsements thereto shall specifically refer to the Project covered under the Contract and shall state that the insurance, as provided, conforms to the requirements of this Article.

N. Each and every subcontractor shall be bound by these same terms of insurance and shall furnish originals of policies to the Owner.

G15. ACCIDENT PREVENTION

A. During the performance of the Work, the Contractor shall exercise all reasonable precautions for the protection of persons and property. The safety provisions of applicable laws and building and construction codes shall be observed. Machinery, equipment and all other physical hazards shall be guarded in accordance with the safety provisions of the Manual of Accident Prevention in Construction, published by the Associated General Contractors of America, to the extent that such provisions are not inconsistent with federal, state or municipal laws or regulations.

B. If any operation, practice or condition is deemed by the Engineer to be unsafe, he will notify the Contractor to take corrective action, and that operation or practice shall be promptly discontinued until the required remedial action upon the affected portion of the Work is complete.

C. The Contractor is not permitted to store materials, move construction equipment, or commit any action, that would cause loading on the side walls of open trenches, whether sheeted or not. Storage of materials or equipment, or movement thereof, shall be permitted only at a distance from the side walls of the trenches equal to or greater than the depth of the trench.

D. The Contractor shall keep in his office, on site, ready for immediate use, all articles necessary for giving first aid to the injured. He shall also have standing arrangement for the immediate removal and hospital treatment of all persons who may be injured on the Work.

E. Nothing in the foregoing paragraphs shall be construed as relieving the Contractor from full responsibility at all times for safe prosecution of the Work in accordance with the latest OSHA regulations.

G16. INDEMNIFICATION OF THE OWNER AND THE ENGINEER

A. The Contractor shall pay and make good all losses and damages arising out of all causes connected with the Contract, and shall indemnify and save harmless the Owner and the Engineer from all claims, liability, and responsibility, of every nature and kind, for losses, damages, and injuries, which any person or persons may sustain or suffer by reason of or in any way arising out of the Contract. The Contractor shall defend every suit, of any nature, which may be brought against the Owner or any of its officers, agents, or the Engineer, by reason of, or connected with, the work, labor, or materials and equipment furnished under the Contract, and shall pay all costs and expenses of every kind, character, and nature whatever, accruing upon or arising out of the Contract.

G17. NOTICE TO PROCEED AND TIME FOR COMPLETION

A. Inasmuch as the provisions of the Contract relating to the time for performance and completion of the Work are for the purposes of enabling the Owner to proceed with the construction of an improvement in accordance with a predetermined program, and inasmuch as failure to complete the Work within the period herein specified may result in damage or loss to the Owner, time is of the essence of the Contract.

B. Work shall commence as stipulated in Article 3 of the attachment to the Specimen Agreement. Thereafter, the Contractor shall notify the Engineer in writing, forty-eight (48) hours in advance of the date he intends to actually begin work.

C. Time for completion of the Work shall be in accordance with that stipulated in the Agreement.

D. The date for completion will be calculated from the date the Owner signed the Contract. The Contractor shall prosecute the Work with diligence from day to day, and complete it at the time fixed.

E. For the purpose of defining completion date, the Project will be considered complete when all Work covered by the Contract has been performed and all installations and equipment have been tested and are ready for permanent use as authorized and as acceptable by the regulatory agencies. Removal of the Contractor's plant and equipment and other minor adjustments which do not prevent use of the Project will not be a factor in establishing the completion date.

F. Notwithstanding the foregoing, the Engineer will establish the date of substantial completion when the project is accepted and ready for operation, and no large or major items of work are as yet outstanding. At such time, the Engineer will issue a Certificate of Substantial Completion and a punch list, itemizing the items of work remaining. The punch list will include "minor" items only, as defined solely by the Engineer. Any prior punch lists, which include "major" or significant items, as defined by the Engineer, shall not be a criteria in establishing the date of substantial completion.

G18. EXTENSION OF TIME

A. If the Contractor is delayed or obstructed in the prosecution of the Work by the neglect, delay, or default of any other contractors having a contract with the Owner for adjoining or contiguous work, or by any neglect, delay or default attributable to the Owner, or by any damage that may happen to the Work by fire, unavoidable accident or any unusual action of the elements, he shall be entitled to such an extension of time for the completion of the Work as the Engineer certifies to as being just and reasonable; provided, however, that the Contractor shall make a claim in writing to the Owner for such extension of time within five (5) days after the date of the alleged cause for such delay occurred. This

paragraph is subject to the requirements of General Conditions Article relating to WEATHER.

B. A reasonable and proper extension of time for completion of the Work may be allowed to the Contractor on account of extra work that may be ordered in accordance with the terms of the Contract, and as evaluated by the Engineer.

C. If the satisfactory execution and completion of the Contract shall require work or material in significantly greater amounts or quantities than those set forth in the Contract, then the Contract time for completion will be reviewed for possible extension.

D. Should the completion of the Contract be delayed in any manner whatsoever by reason of negligence on the part of the Contractor, the Owner may grant an extension of Contract time for completion, provided that the Contractor shall compensate the Owner for all engineering, inspection and related costs incurred by the Owner as a result of the granting of such permission. Likewise, should the Contractor be given approval to work on Saturdays, Sundays or state and federal holidays, he shall compensate the Owner for all engineering, inspection, and related costs involved as a consequence thereof. Such compensation will be deducted from the Contractor's payments, and will be equal to the sums billed to the Owner by the Engineer and/or others.

E. No claim for damages shall be made by the Contractor for any delay or hindrance from any cause whatsoever in the progress of the Work or any section or portion thereof. If, for any reason, there shall be any delay in the acquisition of lands, easements, or interests therein, and the Contractor shall thereby be delayed in the performance of the Work, the Contractor will be given an extension of time for the date of completion, but the Contractor shall not thereby be released from any obligations under the Contract nor be entitled to additional compensation therefore.

F. It is incumbent upon the Contractor to determine which, if any, of the required lands and easements have been obtained by the Owner, and to devise his construction schedule accordingly. Scheduling of manpower and equipment shall also be performed in consideration of these requirements. No claims will be acknowledged for idle equipment, loss of anticipated profits, or other similar circumstances.

G19. <u>DEFAULT IN COMPLETION</u>

A. The Engineer will determine the number of calendar days that the Contractor is in default in completing the Work and will make recommendations regarding the same to the Owner. The decision of the Owner regarding the duration of default shall be final in the case and shall be binding and conclusive upon all parties to the Contract.

G20. STRIKES

A. The Contractor shall adjust his schedule and performance to nullify time lost due to any and all strikes, or other labor troubles over which he has control, and no allowance will be made for such delays in the time limit herein named.

G21. LIQUIDATED DAMAGES

A. Inasmuch as the damages and losses to the Owner which will result from a failure by the Contractor to complete the Work within the period specified, extended as herein provided, are not readily subject to certain computation, but may include fines or penalties, payments to Contractees necessitated by not having sanitary facilities completed and ready for operation by the required date of completion, interest on moneys borrowed for construction, additional engineering, legal and/or auditing costs, inspector's wages and loss from the inability of the Owner to enter into possession, the damages to the Owner for delay in case of such failure on the part of the Contractor shall be liquidated in the sum as stipulated in the Proposal Forms for each consecutive calendar day in excess of the time specified. Liquidated damages for concurrent contracts are computed and assessed separately for each contract. The Owner is fully authorized and empowered to deduct and retain the amount of all damages determined as hereinbefore stipulated, for each calendar day that the Contractor is in default in completing the Work, from any monies due or to become due the Contractor under the provisions of the Contract, at any time after such damages are so incurred. In the event such damages exceed the amount of all moneys due or to become due, the Contractor or his surety shall pay the balance to the Owner.

G22. WEATHER

A. During unsuitable weather, all work shall stop when such work would be liable to injury by the elements, and the Contractor shall transfer his personnel and materials to those parts of the Work where weather conditions will not have an adverse affect on the workmanship or materials furnished. The Contractor shall not be entitled to any damages on account of such changes or suspension and he shall protect all work that might be injured by the elements and make good all work that is injured.

B. Notwithstanding the contents of A. above, the Contractor shall not be entitled to extension of the Contract Time, nor to claims for additional compensation, occasioned by delays or damages due to inclement weather conditions, it being agreed and understood that inclement weather conditions are a normal occurrence in the climatic region of the Project. Abnormal weather conditions, as determined by the Engineer, may be considered valid grounds for an extension of the Contract Time, but not for additional compensation to the Contractor.

G23. WORKING HOURS - HOLIDAYS AND OVERTIME

A. The work day for the Engineer and his staff shall begin at 8:00 a.m. and end at 4:30 p.m., excepting Saturdays, Sundays, and State holidays. If the Contractor wishes to prosecute any portion of the Work beyond these hours, he shall first obtain permission from the Engineer, notifying him each time in advance, giving him ample time in which to procure an engineer and/or inspector for the work and notify the Owner for his representative to be present if required.

B. The Contractor shall compensate the Owner for the additional engineering and Regulatory Agency personnel inspection costs involved, including the services of the Engineer's and the Owner's and Regulatory Agency personnel, and such compensation shall be deducted from the Contractor's monthly payment. Said compensation will be in the exact sum billed to the Owner by the Engineer or others.

G24. WORKING SITE

A. The Contractor, in all cases, will be required to confine his operations to the limits of the construction right-of-way, or in the instance where the site is owned by the Owner, within the property lines. If the Contractor requires additional space, it will be his responsibility to negotiate and pay for same and to obtain written approval from the Owner of the land.

G25. CHANGES IN PLANS AND SPECIFICATIONS

A. The Owner reserves the right to make changes in the Plans and Specifications or to increase or decrease the nature or scope of work at any time before or after construction has commenced.

B. Except as hereinafter provided, no such change shall be binding upon the Contractor nor require the payment of additional compensation to the Contractor, unless it has been ordered in writing by the Engineer who has been specifically authorized thereto in writing by the Owner.

C. Except as hereinafter provided, no oral agreement, conversation or understanding between the Contractor and the Engineer or any Inspector or anyone representing the Owner before or after the execution of the Contract shall affect or modify any of the terms or obligations of the Contract Documents, nor excuse the performance of any work in any manner contrary to the terms of the Contract Documents.

D. The Contractor shall comply with all oral instructions of the Engineer which require no more than an increase or decrease in quantities of those items covered by unit prices bid in the Proposal. He shall also comply with oral instructions of the Engineer which require no more than a change in location or elevation of pipelines or appurtenances covered by a lump sum price bid in the Proposal which reasonably could be interpreted as involving no additional costs.

E. For all work performed by the Contractor pursuant to such oral instructions which involves an increase in the quantities contained in the Proposal, payment will be made under the unit prices applicable to the work actually done in accordance with the actual amount of such work done. If such oral instructions decrease the quantities or amount of work, no payment will be made to the Contractor to compensate him for any loss of anticipated profit on the work omitted.

F. In the case of work performed by the Contractor pursuant to oral instructions involving a lump sum price contained in the Proposal, no additional compensation shall be paid. If any change involves a decrease in the amount of work to be performed, a suitable credit shall be given to the Owner for the work omitted. The amount of credit shall be determined from the breakdown of lump sum prices furnished by the Contractor under BASIS OF PAYMENT, or from other data which will substantiate the cost of work to be omitted.

G. If the Contractor proceeds with the performance of any work in accordance with oral instructions of the Engineer, it shall be conclusively presumed that the unit prices or lump sum prices stated in the Contractor's Proposal apply to such work and no additional or different compensation shall be paid.

H. If the Contractor does not concede that the unit prices or lump sum price in his Proposal should be applicable to any work required to be performed under oral instructions of the Engineer, he shall notify the Engineer that such unit prices or lump sum prices do not apply and, in such case, the oral instructions of the Engineer shall not be effective unless confirmed in writing as hereinabove provided.

I. The Contractor shall not vary in any manner from the Drawings and Specifications except with the written permission of the Engineer. All engineering analysis, review or redesign required, due to the Contractor's changes or proposed changes in construction from the clear intent of the Contract Plans and Specifications, shall be performed by the Engineer, or, at the Engineer's option, shall be performed by others and reviewed by the Engineer. The cost of either engineering service shall be computed at the Engineer's standard fee schedule, and shall be borne by the Contractor.

G26. EXTRA WORK

A. The Contractor shall perform extra work, for which there is no provision included in the Contract, whenever, to complete fully the Work as contemplated, it is deemed necessary or desirable by written direction of the Engineer, and such extra work shall be done in accordance with the Specifications therefor, or in the best workmanlike manner as directed. This extra work will be paid for at a unit price or lump sum to be agreed upon previously in writing by the Contractor and the Engineer, after approval in writing by the Owner.

B. The Owner, without invalidating the contract, may make changes by altering, adding to or deducting from the work, the contract sum being adjusted accordingly. All such work shall be executed in conformity with the terms and

conditions of the original contract, unless otherwise provided in the order for same. Any claim for extension of time caused thereby shall be adjusted at the time of ordering such change.

C. No instructions, either written or verbal shall be construed as an order for changes unless it be in the form of a Change Order, bearing the signed approval of the Owner and Engineer, and the signed acceptance of the Contractor, except in the case of disagreement as to value of changes, when the Contractor's signature to the orders will not be mandatory. Change Order shall describe or enumerate the work to be performed and state the price, if any, to be added to or deducted from the contract sum. If the nature of the work is such that a Change Order, as above, cannot be issued until the work has been advanced sufficiently to obtain exact quantities, said work will be authorized in writing by the Engineer, with the accompanying statement that a Change Order will be issued when the necessary information is at hand. The Owner may require that the Contractor provide unit prices prior to issuing a Change Order.

D. Except as provided in the above paragraph, no change shall be made, unless in pursuance of a Change Order, and no claim for an addition to the contract sum shall be valid unless so ordered. If the Contractor believes that any instructions, by drawing or otherwise, involves extra cost under his contract, he shall give the Engineer written notice thereof and await instructions before proceeding to execute such work.

E. The value of any change shall be determined by one or more of the following methods:

1. By prices specifically named in the specifications or proposals;

2. By acceptance of agreed unit prices based on estimated cost plus overhead and profit as applicable;

3. By an estimate of the actual cost of labor and material, cost to be determined as the work progresses but not to exceed a predetermined figure, to which overhead and profit may be added as defined in Paragraphs H(1) and H(2) below (i.e., - time and material with an upset limit on cost).

4. By actual cost of labor and materials, cost to be determined as the work progresses, to which overhead and profit may be added as defined in Paragraphs H(1) and H(2) below (i.e., - time and material with no upset limit on cost).

5. By the acceptance of lump sum price determined from an approved detailed estimate of cost.

The Engineer shall be the final authority on which pricing method will apply; however, when the proposal contains a unit price item for the item of work to be

performed, the value of the change will only be as determined by the unit price bid regardless of the quantity involved.

F. Overhead shall be defined as an allowance to compensate for all costs, charges and expenses, direct or indirect, except for the actual cost of labor and material as defined by Paragraph G. Overhead shall be considered to include, but not be limited to insurance (other than as mentioned in Paragraph G), bond or bonds, field and office supervisors and assistants above the level of foreman, use of small tools and minor equipment, incidental job burdens, general office expense, and the like.

G. Actual cost of labor and material shall be defined as the amount paid for the following items, to the extent determined reasonable and necessary:

1. Cost of materials delivered to the job site for incorporation into the contract work.

2. Wages paid to workmen and foremen and wage supplements paid to labor organizations in accordance with current labor agreements.

3. Premiums or taxes paid by the Contractor for workmen's compensation insurance, unemployment insurance, FICA tax and other payroll taxes as required by law, net of actual and anticipated refunds and rebates.

4. Sales taxes paid as required by law. (See also Information for Bidders to determine Owner’s tax exempt status).

5. Allowance for use of construction equipment (exclusive of hand tools and minor equipment), as approved for use by the Engineer. The rate on self-owned equipment used for periods of under one week will be the Associated Equipment Distributor's published monthly rate divided by 22 days to establish a daily rate and divided again by eight hours to establish an hourly rate. Equipment used for periods of 5 days or more will be billed at a rate equal to 45% of the published monthly rate. In the alternative, the Engineer may approve for reimbursement a rate representing the allocable costs of ownership. Self-owned equipment is defined to include equipment rented from controlled or affiliated companies. Rented equipment will be paid for at the actual rental cost. Gasoline, oil and grease required for operation and maintenance will be paid for at the actual cost. When, in the opinion of the Contractor, and as approved by the Engineer, suitable equipment is not available on the site, the moving of said equipment to and from the site will be paid for at actual cost.

6. When the material furnished is used material, its value shall be pro-rated to the value of new material, but should be no more than its cost. When, in the opinion of the Engineer, the salvage value of salvageable material furnished exceeds the cost of salvage, a suitable credit shall be given the Owner.

H. Regardless of the method used to determine the value of any change, the Contractor will be required to submit evidence satisfactory to the Engineer to substantiate each and every item that constitutes his proposal. The amounts allowed for overhead and profit shall not exceed the applicable percentages as established in the two following paragraphs:

1. If the work is done directly by the Contractor, overhead in an amount not to exceed ten (10) percent may be added if Method E(3) or E(4) is used, and to the cost of the labor and materials plus overhead there may be added up to ten (10) percent for profit. The percentages for overhead and profit should vary according to the nature, extent and complexity of the work involved, but in no case shall exceed the percentages set forth in this paragraph. No percentages for overhead and profit will be allowed on the premium portion of overtime pay.

2. If the work is done by a subcontractor, the subcontractor's overhead in the amount not to exceed five (5) percent may be added to the cost of labor and materials if Methods E (3) or E (4) is used and to the cost of labor and materials plus overhead there may be added up to ten (10) percent for the contractor's combined overhead and profit. No percentage for overhead and profit will be allowed on the premium portion of overtime pay.

I. When in the judgment of the Engineer an emergency exists, the Engineer shall have the authority to order such extra work as is required to meet the emergency. The Engineer will report to the Owner the existence of the emergency and the extra work necessitated thereby within twenty-four (24) hours after the extra work pursuant to the emergency has been ordered. The Owner may then make a decision as to the continuation of the emergency work and may approve or disapprove the completion of the extra work ordered pursuant thereto and the Owner's decision shall be final in the matter. In the event the Owner disapproves completion of said emergency work, the Contractor will be paid for such work as has been performed prior to receipt of notice to discontinue the same. Payment for the work performed will be on the basis described in E4.

J. The Engineer will certify to the Owner the amount and value of the extra work and the Contractor shall furnish to the Engineer such itemized statements of the cost of the extra work as the Engineer requires and shall give the Engineer access to all accounts, bills and vouchers relating thereto.

K. No order for extra work, nor the doing of any extra work, at any time or place, shall in any manner or extent relieve the Contractor or the Surety on his bond or bonds from any of their obligations under the Contract Documents. All extra work orders being given and all extra work being done, under and in accordance with the Contract, are to be considered a part of the same and subject to each and every one of the terms and requirements of the Contract Documents, and fully covered by the bond or bonds furnished by the Contractor.

L. It shall not constitute extra work entitling the Contractor to additional compensation if the Engineer shall order changes or increases in plant or personnel to maintain the scheduled rate of progress in the Work to be done under the Contract. Approval by the Engineer of materials or equipment substituted by the Contractor for those specified shall likewise not constitute extra work.

M. The form of change orders will generally follow that as exemplified in the Contract Forms.

N. Payment for completed work encompassed in change orders will be made to the Contractor when the change order has been formally approved by the Owner.

G27. CLAIMS AND DISPUTES

A. Should the Contractor be of the opinion, at any time or times, that he is entitled to any additional compensation whatsoever over and above the compensation stipulated in these Contract Documents, for damages, losses, costs, and/or expenses alleged to have been sustained, suffered, or incurred by him in connection with the Project, he shall, in each instance, within five (5) days after such alleged damages, losses, costs, and/or expenses shall have been sustained, suffered, or incurred, make a written claim therefor to the Engineer or Owner. On or before the fifteenth (15th) day of the calendar month succeeding that in which such damages, losses, costs, and/or expenses shall have been sustained, suffered or incurred, the Contractor shall file with the Engineer or Owner a written itemized statement of the details and amount of such claim of damage, loss, cost and/or expense, and unless such claim and statement shall be thus made and filed, in each such instance, the Contractor's claim for such additional compensation shall be held and taken to be absolutely invalidated, and he shall not be entitled to any compensation on account of such alleged damages, loss, cost and/or expense.

B. The Contractor shall produce for the Owner's examination, upon notice from the Owner, all his books of account, bills, invoices, payrolls, subcontracts, time books, progress records, daily reports, bank deposit books, bank statements, checkbooks and cancelled checks, showing all of his actions and transactions in connection with or relating to or arising by reason of his claim, and submit himself and persons in his employment and in his subcontractors' employment for examination under oath by any person designated by the Owner to investigate any claims made against the Owner under the Contract, such examination to be made at the offices of the Contractor. Any claims which cannot be settled among the aforementioned parties shall be determined in a court of competent jurisdiction with no arbitration permitted, unless so desired by the Owner.

C. The Contractor shall proceed diligently, pending and subsequent to the determination of the Owner with respect to any such disputed matter, with the performance of the Contract and in accordance with all instructions of the Owner and the Engineer. The Contractor is advised and acknowledges that extensive time may be required to review, discuss, confirm and process claims. Likewise,

the Contractor is not entitled to stop all or any portion of the Work pending the resolution of claims.

D. No person has power to waive or modify any of the foregoing provisions, and in any action against the Owner to recover any sum in excess of the sum certified by the Owner to be due under or by reason of the Contract, the Contractor must allege in his complaint and prove at the trial, compliance with the provisions of this Article.

E. Nothing in this Article shall in any way affect the Owner's right to obtain an examination before trial or a discovery and inspection in any action that might be instituted by or against the Owner or the Contractor.

F. The provisions of this Article shall constitute a condition precedent to the right of the Contractor to institute litigation to recover money damages from the Owner.

G28. CHANGES NOT TO AFFECT BOND

A. It is distinctly agreed and understood that any changes made in Plans and Specifications for the Work, whether such changes increase or decrease the amount thereof, or any change in the manner or time of payments made by the Owner to the Contractor shall in no way annul, release or affect the liability of the Contractor or the surety on the bond or bonds given by the Contractor.

G29. MEASUREMENT

A. Unless specifically stated in detail in the Specifications, no extra measurements or customary measurements of any kind shall be allowed in measuring the Work, but only the actual lengths, areas, solid contents, number or weights, as required by terms of the Contract Documents shall be considered.

G30. BASIS OF PAYMENT

A. The Owner will pay, and the Contractor shall accept, the unit and/or the lump sum prices stipulated in the Proposal attached hereto as full compensation for furnishing all materials, and for doing all Work contemplated and specified in the Contract Documents. The prices shall cover the cost of all plant and tools and of all labor and materials, together with all expenses of moving and shipping equipment, as well as all royalties for patents, patented articles, material, appliances, processes, compositions, combinations, means, and things of whatever kind that shall be furnished or needed, to complete the entire Work in all details ready for the purpose for which it is intended.

B. On lump sum items, or lump sum contracts, the Contractor shall submit to the Engineer for approval prior to the start of work under the Contract, a schedule showing a breakdown of the labor, materials, and equipment and other costs used in the preparation of the bid. This shall be in sufficient detail to indicate separate figures for excavation, concrete, reinforcing steel, equipment and all

other items making up the lump sum price. Cost breakdown shall be separately itemized for each structure in the Project. Where the cost breakdown includes items for Bond Payment, Job Set-Up, or Job Mobilization, these items will be paid for at 25% each for the first four months for which payment is otherwise due. This schedule shall be used in computing the periodic estimate which is issued monthly and as a basis for negotiations concerning any credits which may arise during the execution of the Project.

C. Refer to Sections 01150 and other applicable sections of the specifications for additional requirements relative to measurement and payment.

G31. PARTIAL PAYMENTS

During the progress of the Work, payments will be made as follows:

A. The Engineer, in consultation with the Contractor, will within the first ten days of each month, estimate the amount of work done and materials and equipment built into the Work during the previous calendar month. The quantities so determined will be used as the basis for a periodic estimate whenever the value of said monthly work exceeds one thousand ($1,000.00) dollars and shall indicate the value of the work performed and materials and equipment built into the Work in accordance with the Contract. As soon as practicable thereafter, the Owner will pay the Contractor an amount equal to ninety percent (90%) of the value of such work, materials and equipment indicated on the periodic estimate, less the amount of all previous payments. The remaining ten percent (10%) shall be deducted from each and every estimate made under the entire Contract, and shall be retained until such time as stipulated in Articles G31-G33.

B. The monthly estimate of the Engineer will be approximate and no claim shall be made by the Contractor for additional payments based on any error in any periodic estimate.

C. Payment may at any time be withheld if the Work is not proceeding in accordance with the Contract, or if, in the judgement of the Engineer, the Contractor is not complying with the requirements of the Contract Documents.

D. All work covered by partial payment made shall thereupon become the sole property of the Owner but this provision shall not be construed as relieving the Contractor of the sole responsibility for the care and protection of the work upon which payments have been made or the restoration of any damaged work, or as a waiver of the right of the Owner to require the fulfillment of all items of the Contract Documents.

E. The Contractor may receive compensation for materials delivered to the site provided:

1. A cancelled check or an original of a paid bill from the supplier is submitted to the Engineer indicating that the Contractor has paid the supplier for the material or equipment.

2. The material or piece of equipment is properly stored and protected from the elements and/or vandalism. The Engineer is afforded the ability to inspect the material or piece of equipment.

3. A bill is delivered to the Engineer at the time of delivery itemizing the subject material or equipment. Payment will be made for on-site material and/or equipment in the amount of 70% of the gross amount of the paid invoice. This payment will be subject to the normal retainage of the partial estimate.

4. The Engineer has agreed to the pre-purchasing of the materials.

G32. SUBSTANTIAL AND FINAL CERTIFICATES

A. Upon substantial completion of the Work, and acceptance thereof by the Engineer and the Owner, and as soon thereafter as practicable, the Engineer will prepare a Certificate of Substantial Completion, which will indicate the value of work performed and materials and equipment furnished, and the exact aggregate amount of the compensation to which the Contractor will become entitled under the terms of the Contract.

B. Attached to the Certificate of Substantial Completion will be a punch list. The Engineer will calculate and itemize, in the Certificate of Substantial Completion, either (a) the sum of money which, in the Engineer's opinion, would be necessary to expend if the Owner were to contract with others for the final completion of the work and satisfaction of all punch list items; or (b) the sum of money represented in the Contractor's bid schedule for the punch list items; whichever is greater.

C. This punch list shall not be considered all inclusive and any outstanding contract requirements discovered by the Owner or the Engineer shall be repaired, replaced, and corrected prior to the Final Inspection. The Engineer shall provide written notice of such additional outstanding work items.

D. The Certificate of Substantial Completion will be submitted to the Owner and a copy furnished to the Contractor. Upon approval of the Certificate of Substantial Completion by Owner, and as soon as practicable thereafter, the Owner will pay to the Contractor an amount equal to one hundred percent (100%) of the total compensation to which the Contractor is entitled for the performance of the Contract, less the amount of previous payments, less the sum as stipulated under B. above for remaining punch list work and retainage as stipulated hereinbefore.

E. Upon issuance of the Certificate of Substantial Completion, the one-year guarantee period shall commence for all work other than items represented on the punch list. The one-year guarantee period for punch list items will begin upon issuance of the Final Certificate.

F. Upon final completion of the Work in accordance with the Contract and acceptance thereof by the Engineer and the Owner, and as soon thereafter as

practicable, the Engineer will prepare a Final Certificate which will indicate the value of the work performed and materials and equipment furnished, and exact aggregate amount of the compensation to which the Contractor will become entitled under the terms of this Contract.

G. The Final Certificate will be submitted to the Owner and a copy furnished to the Contractor. Upon approval of the Final Certificate by the Owner, and as soon as practicable thereafter, the Owner will pay the Contractor an amount equal to one hundred percent (100%) of the total compensation to which the Contractor is entitled for the performance of the Contract, less the amount of all previous payments and 50% of the total retainage. The Performance and Labor and Material Bonds and 50% of the total retainage will be retained for one year from the date of final completion, as determined by the Engineer as a guarantee against defects of materials, equipment, workmanship or other Contract performance and shall remain in full force and effect until released in writing by the Engineer or other representatives of the Owner.

H. Negotiable bearer bonds, if utilized and accepted by Owner in lieu of the remaining 50% of total retainage, may be submitted by the Contractor.

G33. ACCEPTANCE OF FINAL CERTIFICATE

A. The Contractor shall be conclusively deemed to have accepted the Final Certificate as a correct statement of the total liability of the Owner and of the compensation paid and to be paid to the Contractor by the Owner unless within seven (7) days after delivery of his copy of the Final Certificate to him, the Contractor shall return such copy to the Owner together with a statement of his objections to such certificate and of any claim for damages or compensation in excess of the amounts shown on the Certificate. The acceptance by the Contractor of the Final Certificate approved by the Owner shall constitute a release and shall discharge the Owner from all further claims by the Contractor arising out of or relating to the Contract.

G34. RELEASE OF RETAINAGE AND REINSPECTION OF WORK

A. Retainage will be released in accordance with Articles G31 through G33 hereinbefore.

B. Within one (1) year after the date of final completion as determined by the Engineer, the Owner may make, or cause to be made, a reinspection of the Work. If the Work is found satisfactory and in accordance with the Contract Documents, the Owner will approve the termination of the Contract.

C. In the event the inspection discloses the existence of defects in the materials, equipment, or workmanship or other noncompliances with the Contract Documents, the Contractor shall be required to immediately make good and rectify all defects. Any item of equipment which has failed to maintain the performance or other salient requirements of these specifications, shows undue wear, or other deleterious effects, will be considered defective. If the Contractor

shall fail or neglect to satisfy the requirements of the Owner with respect to making the necessary corrections, then the Owner may proceed to have the Work executed by others and the cost and expense thereof will be borne by the Contractor and his Sureties. Correction of defects and noncompliance and payment for such by the Contractor or his Sureties shall terminate the Contract and release all parties hereunder subject to INSPECTION AND CORRECTION OF WORK.

G35. SCOPE OF PAYMENTS

A. The Contractor shall receive and accept the compensation as herein provided, in full payment for (1) furnishing all materials, labor, tools, and equipment, (2) performing all Work contemplated and embraced under the Contract, (3) all loss or damage arising out of the nature of the Work, or from the action of the elements, or from any unforeseen difficulties or obstructions which may arise or be encountered during the prosecution of the Work, (4) all risks of every description connected with the prosecution of the Work, until its final acceptance by the Owner, (5) all expenses incurred by, or in consequence of, the suspension or discontinuance of the said prosecution of the Work as herein specified, (6) all actual or alleged infringements of patent, trademark, or copyright, and (7) for completing the Work and the whole hereof, in an acceptable manner, according to the Plans, Specifications, and other Contract Documents. The payment of any partial or final estimate shall in no way or in no degree prejudice or affect the obligation of the Contractor, at his own cost and expense, to renew or replace all defects and imperfections, or damages. The Engineer shall be the sole judge, and the said Contractor shall be liable to the Owner for failure so to do.

G36. RIGHT TO WITHHOLD PAYMENTS

A. The Owner may withhold from the Contractor so much of any approved payments due him as may in the judgement of the Owner be necessary:

1. To assure the payment of any lien, stop work notice or claim filed with the Owner for work, labor or materials, done, performed, or delivered and used in the prosecution of the Work herein provided for (whether in strictly legal form or otherwise);

2. To protect the Owner from loss due to defective work not remedied or through any improper or defective machinery, implements or appliances used by the Contractor or for failure of the Contractor to fully comply with all requirements of the Contract; or

3. To protect the Owner from loss due to injury to persons or damage to the work or property of other contractors, subcontractors, or others, caused by the act or neglect of the Contractor or any of his subcontractors.

B. The Owner shall have the right as agent for the Contractor to apply any amounts so withheld in such manner as it may deem proper to satisfy such claims or to

secure such protection. Such application of such money shall be deemed payments for the account of the Contractor.

C. Before release to the Contractor of any funds retained under this provision, the Contractor shall furnish satisfactory written evidence to the Owner that the claim or claims have been fully paid or satisfied.

G37. RELEASE OF LIENS

A. Neither the final payment nor any part of the retained percentage shall become due until the Contractor shall deliver to the Owner, a complete release of all liens arising out of his work, or subcontractor's work or in lieu thereof, receipts in full and an affidavit showing that so far as he has knowledge or information the releases and receipts include all labor and materials for which a lien could be fulfilled; if any subcontractor refused to furnish a release or receipt in full, the Contractor may furnish a bond satisfactory to the Owner to indemnify the Owner against any lien. If any lien remains unsatisfied after all payments are made, the Contractor shall refund to the Owner, all monies that the latter may be compelled to pay in discharging the lien, including all costs and reasonable attorney's fees.

B. The Contractor shall indemnify and hold the Owner and Engineer harmless from all liens, or claims of rights to enforce liens, against the tract or the improvements arising out of any work to be performed or labor or materials to be furnished under this Agreement. Neither final payment by the Owner nor acceptance of the Work shall constitute a waiver of this indemnity, and if any lien or claim shall at any time be filled, the Contractor shall refund to the Owner all monies the Owner may be compelled to pay in discharging the lien, including all costs and reasonable attorney's fees.

G38. RIGHT TO USE WORK

A. The Owner may enter upon and use the whole or any portion of the Work which may be in condition to use at any time previous to its final acceptance by the Owner. Such use shall not constitute or be evidence of acceptance by the Owner or the Engineer of the whole or any part of the material or equipment furnished or work performed under this Contract.

G39. NOTICE OF WARNING AND STOP WORK ORDER

A. If the Contractor shall fail to make prompt payment to persons supplying labor, materials, or equipment for the Work, or refuse or fail to supply enough properly skilled workmen, or proper materials, or refuse or fail to prosecute the Work or any part hereof in accordance with the Contract Documents with such diligence as will insure its completion within the period specified (or any duly authorized extension thereof), or fail to complete the Work within said period, or fail or refuse to comply with laws, ordinances, codes, and instructions of the Engineer, then the Engineer may forward by registered or certified mail to the Contractor, at the address given in the Contract, a Notice of Warning, and in the event the

Contractor fails to comply with said Notice of Warning within five (5) days from receipt thereof, the Owner shall have the right to terminate the Contract.

B. In the event a Stop Work Order is issued, the Contractor shall coordinate with the Engineer to determine and remedy the situation for which the Stop Work Order is issued. Irrespective of any conditions indicating that the Contractor has or has not created just cause for the Engineer to issue a Stop Work Order, it shall be conclusively understood and agreed that a minimum of two (2) working days shall elapse without any claim for loss on the part of the Contractor during that two (2) working day period. If the duration of the Stop Work Order exceeds two (2) working days, and the Contractor wishes to file claim for costs incurred, he may so file, subject to the conditions of the section designated CLAIMS AND DISPUTES, however such claim shall specifically exclude the aforementioned two (2) working day period.

C. Nothing in the foregoing shall be construed to mean that the Contractor is entitled to a claim for losses incurred after the two (2) working day period has elapsed. Rather, the meaning is simply that there can be no claim for losses incurred during the two (2) working day period.

D. The requirements and conditions of this Article apply to each and every Notice of Warning and/or Stop Work Order issued throughout the course of the Work.

G40. GUARANTEE PERIOD

A. If, at any time during the guarantee period, any portion of the Work shall, in the opinion of the Engineer, and/or the Owner, require repairing, replacing, or rebuilding, the Contractor shall start such repairs within five (5) days after the receipt of notice from the Owner, and if the Contractor shall fail or neglect to start such repairs within the said five (5) days, the Owner may employ such other person or persons as it may deem proper to make such repairs and pay the costs thereof out of any sum retained from the Contract, provided nothing herein contained shall limit the liability of the Contractor or his Surety to the Owner for nonperformance of the Contractor's obligation at any time.

B. The guarantee period shall commence upon acceptance of the Certificate of Substantial Completion and the Final Certificate, as specified herein.

G41. TERMINATION OF CONTRACT

The Owner may terminate the contract if:

A. The Contractor shall be adjudged bankrupt or make an assignment for the benefit of creditors; or

B. A receiver or liquidator shall be appointed for the Contractor or for any of his property and shall not be dismissed within twenty (20) days after such appointment, or the proceedings in connection therewith shall not be stayed on appeal within the said twenty (20) days; or

C. The Contractor shall abandon the Work; or

D. The Contractor shall fail to make prompt payments to persons supplying labor, materials or equipment for the Work after Notice of Warning from the Engineer; or

E. The Contractor shall refuse or fail, after Notice of Warning from the Engineer, to supply enough properly skilled workmen or proper materials or proper workmanship, or shall unnecessarily or unreasonably delay the Work; or

F. The Contractor shall refuse or fail after Notice of Warning from the Engineer to prosecute the Work or any part thereof in accordance with the Contract Documents; or

G. The Contractor shall refuse or fail after Notice of Warning from the Engineer to prosecute the Work or any part thereof with such diligence as will insure its completion within the period herein specified (or any duly authorized extension thereof) or shall fail to complete the Work within said period; or

H. The Contractor shall fail or refuse after Notice of Warning from the Engineer to comply with laws, ordinances, codes or the instructions of the Engineer or otherwise be guilty of a substantial violation of any provision of the Contract.

Then, and in any such event, the Owner without prejudice to any other rights or remedy it may have, may by seven (7) days' notice to the Contractor terminate the employment of the Contractor and his right to proceed, either as to the entire Work, or, at the option of the Owner, as to any portion thereof as to which delay shall have occurred, and may take possession of the Work and such materials and supplies as may be on the site of the Work and may complete the Work by contract or otherwise, as the Owner may deem expedient. In such case, the Contractor shall not be entitled to receive further payment until the Work is finished. If the unpaid balance of the compensation to be paid the Contractor hereunder shall exceed the expense of so completing the Work (including compensation for additional managerial, administrative, engineering and inspection services and all damages for delay), such excess will be paid to the Contractor. If such expense shall exceed such unpaid balance, the Contractor and his Sureties shall be liable to the Owner for such excess.

G42. PATENT RIGHTS

A. The Contractor shall be responsible for all fees and licenses for all patented inventions or private contrivances, articles, or arrangements that may be used upon, or in connection with all or any part or division of the Project, during construction, erection, operation or maintenance, and the Owner shall be protected and held harmless by the Contractor against all demands for such fees or claims. The Contractor shall further defend the Owner, Engineer, and all other agents against all suits which may be brought by reason of any claim, or claims, for damages arising out of alleged patent infringement or similar claims.

G43. PERMITS

A. The Contractor's attention is directed to all phases of the Work wherein the authority for permits or licenses is vested in private companies, corporations or in federal, state, county or municipal agencies. He shall familiarize himself with the procedure in securing such permits or licenses and approvals as are necessary, accept full responsibility for obtaining the same, and comply with the stipulations contained therein. Unless otherwise specified, the Contractor is required to pay the cost and expense of securing the permits and licenses and all other costs connected therewith. The Contractor will not be required to pay for permits issued by the Owner, or his agents. The Owner will cooperate with the Contractor to the extent reasonably required to facilitate obtaining permits and approvals.

G44. LAWS AND ORDINANCES

A. In the execution of the Contract, the Contractor shall observe and obey all federal, state, county and local laws, ordinances, codes and regulations relating to the performance of the Contract, including, but not limited to, labor employed thereon, materials supplied, obstructing streets and highways, maintaining signals, storing, handling and use of explosives and all other general ordinances and state statutes affecting him or his employees or his work hereunder in his relations with the Owner or any other persons, and also all laws, codes and ordinances controlling or limiting the Contractor while engaged in executing the Work under the Contract.

B. As a condition of the Contract, the Contractor shall and does hereby agree to comply with all requirements of the labor laws and other laws of the state in which the Work is being executed.

G45. LIABILITY OF CONTRACTOR

A. Whenever the Contractor is required by existing state, federal, local, and/or municipal laws, ordinances, rules or regulations, or by any state, federal, local, and/or municipal laws, ordinances, rules or regulations that may be enacted hereafter pertaining to the Work to be done under this Contract, to secure any permits or licenses to carry on any operation or operations in connection with the performance of this Contract and/or to act under the direction or supervision of the Owner, official, and/or employee, in connection with any such operation or operations, the Contractor shall be solely liable for all suits, actions, costs and damages of every kind and description resulting or which may result, directly or indirectly, from any such operation or operations, and shall indemnify and save harmless the Owner and Engineer from all suits, actions, costs and damages of every kind and description arising or which may arise, directly or indirectly, from the said operation or operations.

G46. SUBSTITUTE BOND

A. If, at any time, the Contractor's Surety or Sureties, or the carriers of the insurance herein specified to be written, become insolvent, or, in a reasonable judgement of the Owner, become unsafe or unsound, then upon five (5) days' written notice from the Owner to the Contractor, the Contractor shall substitute such Surety or insurance carrier with other surety or carrier as shall be satisfactory to the Owner. All additional premiums caused by such substitution shall be paid for by the Contractor, without additional compensation therefor.

G47. NO WAIVER

A. Neither the inspection by the Owner or Engineer, or any of their employees, nor any order, measurement or certificate by the Engineer, nor any order by the Owner for the payment of any money, nor any payment for, or acceptance of the whole or part of the Work by the Engineer or the Owner, nor any extension of time, nor any possession taken by the Owner or its employees, shall operate as a waiver of any provision of the Contract, or of any power herein reserved to the Owner, or any right to damages herein provided; nor shall any waiver of any breach of the Contract constitute a waiver of any other or subsequent breach. Each remedy provided in the Contract shall be construed as cumulative, that is, in addition to each and every other remedy herein provided.

C. No modifications of the Contract or waiver of any of its terms or provisions, except as herein provided, shall be made by or on behalf of the Owner, excepting by a resolution duly adopted by said Owner, and duly entered in the Owner's official minutes.

G48. NO LIMITATION OF LIABILITY

A. It is understood and agreed that all of the duties, liabilities, and/or obligations imposed upon or assumed by the Contractor and the Surety, or either of them, by or under the Contract Documents, shall be taken and construed to be cumulative and that the mention of any specific duty, liability, or obligation imposed upon or assumed by the Contractor and/or Surety under the Contract Documents shall not be taken or construed as a limitation or restriction imposed upon or assumed by the Contractor and/or the Surety by or under the Contract Documents.

G49. LEGAL ADDRESS

A. The address given in the Bid Form upon which the Contract is founded is hereby designated as the place where notices, letters, and other communications to the Contractor shall be mailed or delivered. The delivery at the above named place, or the depositing in a post-paid wrapper directed to the above place, in any post office box, regularly maintained by the United States Postal Service, of any notice, letter or other communication to the Contractor shall be deemed a sufficient delivery thereof to the Contractor. Such address may be changed at any time by an instrument in writing, executed and acknowledged by the Contractor, and delivered to the Owner. Nothing herein contained shall be deemed to preclude or

render inoperative the delivery of any notice, letter, or other communication to the Contractor personally.

B. Bidder must provide a street address in their proposal. No bids will be accepted with only a post office box.

G50. EXCESS COST OF ENGINEERING, INSPECTION AND TESTING

A. Owner will charge to Contractor and will deduct from the partial and final payments for the Work all excess engineering, inspection and testing charges incurred by Owner in connection with the following:

1. Services and other similar charges required as a result of Contractor's and subcontractor's errors, omissions or failure to conform to the requirements of the Contract Documents.

2. Services required to examine and evaluate any changes or alternates proposed by Contractor solely for the convenience of the Contractor.

3. Services as a result of Contractor's proposed substitution of materials or equipment.

4. Services as a result of changes by Contractor in dimensions, weights, power requirements, etc., of the equipment, materials, and accessories furnished.

5. Services for the review of resubmissions of previously "approved" (no exception taken) or "approved as noted" (furnish as corrected) shop drawings.

6. Services for the review of shop drawings submitted more than three (3) times for the same portion of the Work, item or equipment.

7. Testing Laboratory charges and engineering and inspection expenses in connection with any overtime work.

8. Services as a result of Contractor not completing the Work within the specified time.

9. Services as a result of Contractor working overtime. Overtime work means work beyond 8 hours per day, beyond 40 hours per week, and on Saturdays, Sundays and legal state or federal holidays.

10. All charges to Contractor by Owner will be at actual cost invoiced to Owner. Owner will provide Contractor with copies of all bills and invoices to substantiate the charges to Contractor.

G51. "AS-BUILT" DRAWINGS

A. The Contractor shall keep accurate records of all deviations of his work (locations, elevations, dimensions, substitutions, etc.) from that shown on the Drawings and Specifications, and indicate the actual construction with red lines and notes on a set of the agency approved drawings. These records shall be made kept correct as the construction progresses.

B. At the 90% completion of the project, the Contractor shall turn over a copy of the set of drawings to the Engineer signed and sealed by a licensed land surveyor as an aid for the Engineer's preparation of "As-Built Drawings". The Contractor shall complete the mark up of the drawings and submit the final set of changes to the Engineer at the 100% completion of the project.

G52. MAINTENANCE OF SUBSTANCE ABUSE/DRUG-FREE ENVIRONMENT

A. The Contractor shall establish and maintain a project environment that is free from the effects of substance abuse. This policy is designed to protect property, equipment, and operations and the safety of the Contractors and sub-contractors personnel and also the personnel of the Owner and Engineer present at the site. A drug-free workplace shall be maintained at all times during the duration of this Contract.

B. Contractor and sub-contractor employees shall not be under the influence of any substance including drugs, legal or illegal, which adversely affects their ability to perform their duties in any way.

C. The unlawful manufacture, distribution, dispensation, possession, or use of a controlled substance on the project site is absolutely prohibited.

D. Maintenance of Substance Abuse/Drug-Free Environment during all phases of the project shall be the responsibility of the Contractor.

G53. PROVISIONS REQUIRED BY LAW DEEMED INSERTED

A. Each and every provision of law and clause required by law to be inserted in the Contract shall be deemed to be inserted herein and the Contract shall be read and enforced as though it were included herein, and if through mistake or otherwise any such provision is not inserted, or is not correctly inserted, then upon the application of either party, the Contractor shall forthwith be physically amended to make such insertion.

B. If the Contract contains any unlawful provisions not an essential part of the general structure of the Contract and which shall not appear to have been a controlling or material inducement in the making thereof, the same shall be deemed stricken from the Contract without affecting the binding force of the remainder.

G54. COMPENSATION

A. Unless otherwise specified, all items of cost required to fulfill the General Conditions and the various provisions of the Technical Specifications of the Contract so as to result in a complete operable system shall be included in the price or prices bid in the Proposal for the Contract upon which a bid is being submitted.

END OF SECTION

NO TEXT
THIS PAGE WAS INTENTIONALLY LEFT BLANK

PART 1 - GENERAL

1.01 DESCRIPTION

A. The purpose of this Section is to generally describe the format in which the Specifications are prepared. This Section shall be considered only as a supplementary aid to the Contractor, presented for purposes of aiding comprehension of the Specifications.

1.02 GENERAL FORMAT

A. The Specifications, and particularly the technical sections, are arranged generally according to the Construction Specifications Institute (CSI) format.

B. Most legal, administrative, and related requirements are specified in the Instructions to Bidders, Proposal Forms, Contract Forms and Bonds and the General Conditions.

C. Most technical and construction related requirements are specified in the technical sections, which are grouped into sixteen (16) major divisions according to trade or type of work. All sixteen major divisions are not utilized on any particular contract.

D. Technical sections are arranged in numerical order, however section numbers will not be consecutive from section to section. Page numbering is subordinate to each section.

E. Most sections are generally broken down into three (3) parts:

1. PART 1 – GENERAL

2. PART 2 – PRODUCTS

3. PART 3 - EXECUTION

All three (3) parts may not always be utilized, and in some cases the titles of some parts is other than the three (3) above mentioned titles.

F. Paragraph designations are subordinate to each part.

G. The Contractor is advised that the format described hereinabove is general and flexible in nature. There is some overlapping of specified information between the various portions of the Specifications. In all cases, the entire requirements of the Contract Documents, as a whole, shall apply.

1.03 EXPLANATIONS

A. Descriptions - Many technical sections begin with a paragraph entitled "DESCRIPTION", or similar wording. In such paragraphs, a brief description of the work generally specified in that Section is presented. These descriptions shall not be construed to be all-inclusive, but merely brief general descriptions, as noted above, presented for purposes of aiding the location of particular subject matter in the Specifications. Again, all requirements of the entire Contract Documents apply, whether specifically mentioned in said descriptions or not.

B. Related Work Specified Elsewhere - Some technical sections include a paragraph which lists some of the related work specified elsewhere in the Contract Documents. Such listings and enumerations are not meant to be all-inclusive, rather, they are merely presented as a means of aiding the Contractor in locating some of the other Specification sections wherein work is specified which has a particularly close interrelationship with the work specified in that Section. It shall be clearly understood that all of the Work, and all of the Specifications sections and other portions of the Contract Documents, are interrelated, and that total of all requirements set forth in all of the Contract Documents shall be met.

C. The imperative sense is utilized, in as much as is practical in these Specifications. It shall be understood that all imperative statements made in the Contract Documents apply to the Contractor, upon whom the requirements of such statements are imposed.

PART 2 - PRODUCTS
(NOT UTILIZED)

PART 3 - EXECUTION
(NOT UTILIZED)

END OF SECTION

PART 1 - GENERAL

1.01 PROJECT/WORK IDENTIFICATION:

A. Contract Documents: Indicate the work of the Contract and related requirements and conditions that have an impact on the project.

B. Summary of References: Work of the Contract can be summarized by references to the Advertisement, Instructions to Bidders, Proposal Forms, Contract, Bonds, General Conditions, Technical Specification Sections, Drawings, addenda and modifications to the contract documents issued subsequent to the initial printing of this project manual and including but not necessarily limited to printed material referenced by any of these. It is recognized that work of the contract is also unavoidably affected or influenced by governing regulations, natural phenomenon including weather conditions and other forces outside the contract documents.

C. Abbreviated Written Summary: Briefly and without force and effect upon the contract documents, items of work of the Contract can be summarized as follows: (This listing is not to be considered as a complete listing of all items in this contract.)

1. General Construction – Site Work

a. Clear and rough grade the site of the STP within the project limits as shown on the Drawings.

b. Furnish and install temporary fencing around the STP area of the site.

c. Excavate for influent concrete box, equalization tank, BESST tank, equalization tank and control building foundations, and generator and odor control slabs. Provide for permit acquisition, dewatering and lawful disposal of water removed from excavations as required for the proper installation of below grade structures and tanks. Excavate for trenching for additional outfall sewer piping for STP discharge.

d. Furnish and install reinforced concrete tank slabs and control building footings.

e. Backfill and compact to 95% optimum density around below grade concrete structures, treatment and sludge holding tanks.

f. Place STP Control Building, complete as shown on the

Architectural Drawings by Granoff Architects, including odor control system.

g. Furnish and install below grade precast concrete structures including influent concrete constant head box, flow meter vault, and flow meter sanitary manhole.

h. Furnish and install all influent and effluent below grade piping including waste sewer piping from the STP control building.

i. Furnish and install 1/4" pea gravel over balance of treatment area and provide pavement to limits of fence lines.

j. Backfill, grade and compact around all structures.

k. Furnish and install perimeter chain link fencing with double entrance gates.

l. Install Bituminous Asphalt entrance driveway.

m. Furnish and install 1" PVC water service to Control Building from water main. Furnish and install RPZ valve in control building in accordance with Westchester County Department of Health (WCDH) and any and all regulatory agencies' rules and regulations.

2. Mechanical Work

a. Furnish and install factory fabricated BESST below grade Sewage Treatment Plant complete with treatment and sludge holding tank and an Equalization Tank including hold down straps, interior piping, valves fittings, pumps and Process Control Panels and Lighting Arresting System.

b. Furnish and install all influent and effluent sanitary sewer and potable water piping, valves and fittings.

c. Furnish two (2) explosion proof, non-clog submersible Goulds influent submersible sewage pumps with level and alarm controls.

d. Furnish and install type 316 stainless steel lifting rails, chains and hoist for each influent sewage pump.

e. Furnish and install influent concrete constant head box complete with type 316 stainless steel V notches, broad crested weirs, and baffles.

f. Furnish and install influent pump piping, valves, fittings and supports.

g. Furnish and install odor control system, slab, and associated piping, fittings, and valves.

h. Furnish and install effluent flow meter in a precast concrete vault, piping, valves and fittings.

i. Furnish and install blowers with VFD control in precast control building and associated piping, valves, and fittings.

j. Furnish and install lab bench with lab sink and all required sanitary and hot and cold water supply piping. Provide and wire commercial hot water heater.

k. Furnish and install emergency eye wash and shower with floor drain.

l. Furnish and install fire exhauster(s).

m. Furnish and install required laboratory equipment as per WCDH requirements

n. Furnish and install all mechanical hardware of type 316 stainless steel, where applicable.

3. Electrical Work

a. Furnish and install new secondary underground electrical services.

b. Furnish and install stand-by generator set complete with weatherproof and sound proof enclosure and residential grade silencer.

c. Furnish and install meter pan, main fused disconnect switch and automatic transfer switch.

d. Furnish and install NEMA 12 Main Distribution Panel, Lighting Panel and Pump Station Control Panel.

e. Install BESST sewage treatment plant Control Panels, including lightning protection system. Furnish and install all power wiring, control and alarm wiring as required by the BESST STP manufacturers specifications to result in a complete operable BESST system with surge protection.

f. Install equalization tank Control Panels, including lightning protection system. Furnish and install all power wiring, control and alarm wiring as required by the equalization tank manufacturers specifications with surge protection.

g. Furnish and install STP control building power and control wiring, including lighting fixtures, outlets, conduits, fitting conductors, etc.

h. Furnish and install STP control building exhaust fan.

i. Furnish and install electrical unit heater with thermostatic controls per plan.

j. Furnish and install below grade telephone conduit complete with pull wires and circuit wiring for control building telephone and remote dialer.

k. Furnish and install remoter dialer.

l. Furnish and install lightning arrester system.

m. Furnish and install exterior flood light system with photo cell.

1.02 USE OF THE SITE:

A. General: Confine operations at the site to the areas permitted under the Contract. Portions of the site beyond areas on which work is indicated are not to be disturbed. Conform to site rules and regulations affecting the work while engaged in project construction.

1. Coordinate work performed for the sewage treatment plant construction with possible other construction being performed on other areas of this site.

2. Do not unreasonably encumber the site with materials or equipment. Confine stockpiling of materials to an area adjacent to the proposed sewage treatment plant and within a protective fenced-in area.

3. Lock automotive type vehicles, such as passenger cars and trucks and other mechanized or motorized construction equipment, when parked and unattended, so as to prevent unauthorized use. Do not leave such vehicles or equipment unattended with the motor running or the ignition key in place.

4. Do not block entrance roadways to the project site.

5. All buildings, pits or pipe lines under construction shall be properly secured at the end of the work day by the installation of temporary removable 6 ft. high chain link fencing.

1.03 COORDINATION:

A. General: The work of this Contract includes coordination of the entire work of the project, including control of site utilization, from beginning of construction activity through project close-out and warranty periods.

1.04 MISCELLANEOUS PROVISIONS:

A. General: Except as otherwise indicated, comply with applicable requirements of Division-15 sections for mechanical provisions within units of General (Division 2-14) Work. Except as otherwise indicated, comply with applicable requirements of Division-16 sections for electrical provisions within units of General (Division 2-15) Work.

B. Service Connections: Refer to Division-15 and Division-16 sections for the characteristics of the mechanical and electrical services to be connected to units of general work. Provide units manufactured or fabricated for proper connection to and utilizations of available services, as indicated. Except as otherwise indicated, final connection of mechanical services to general work is defined as being mechanical work, and final connection of electrical services to general work is defined as electrical work.

C. Electrical Requirements: Except as otherwise indicated, comply with applicable provisions of The National Electrical Code (NEC) and standards by National Electrical Manufacturer's Association (NEMA), for electrical components of general work. Provide Underwriters Laboratories listed and labeled products where applicable.

PART 2 - PRODUCTS
(NOT UTILIZED)

PART 3 - EXECUTION

3.01 LIMITS OF CONSTRUCTION AND PROJECT COORDINATION

A. The Contractor shall coordinate the work under this contract so as to achieve operational status prior to the time stipulated in the agreement.

B. The Contractor shall be responsible for coordination of work and for the connection of the new facilities to utility service lines: electric, gas, telephone, water service and sanitary sewer lines.

C. The Contractor shall coordinate the work of the testing laboratory.

D. The following limits of construction shall apply to the Contractor(s) for the construction of the new sewage treatment plant and effluent disposal system under this Contract(s).

1. Electric and telephone services from utility sources shall be obtained and provided for the sewage treatment plant.

2. Potable water and gas service shall be obtained from on site water mains and gas mains to be installed on the project site by others. RPZ installation for the water line to the sewage treatment plant and disinfection of potable water system installed at the sewage treatment plant shall be performed by this Contractor.

3. This Contractor shall complete all site work and final grade the site for the proposed sewage treatment plant site.

4. The Contractor shall provide all new primary and secondary electrical service for the sewage treatment plant from the Con Edison power grid to be extended onto the site.

END OF SECTION

PART 1 – GENERAL

1.01 DESCRIPTION

A. This Section defines items provided by Owner and the Contractor's limitations in their use.

1.02 LANDS AND EASEMENTS

A. Owner has acquired the lands as delineated on the Drawings.

1.03 SUBSURFACE EXPLORATIONS

A. Contractor may make his own borings, explorations, and observations to determine soil, water, and other subsurface conditions. Contractor shall plan the Work based upon his own findings.

B. Compensation for test pits will be made only when ordered by the Engineer.

1.04 ELECTRICAL USAGE

A. Contractor shall provide connections to existing Con Edison electrical facilities, for all necessary temporary electrical service required for construction of the sewage treatment plant. Power costs shall be borne by the Contractor. Should electrical facilities not exist on site, Contractor will be responsible for providing and paying for wattage charges for temporary electrical power for his operations.

1.05 WATER AND TEMPORARY FACILITIES

A. Contractor shall provide connections to on-site water service for all necessary temporary potable water service for construction of the sewage treatment plant, should on site water facilities be installed at the time this Contractor performs his work.

B. The Contractor shall provide temporary on site portable sanitary facilities for the use of his employees, subcontractors, engineers, inspectors, etc.

PART 2 - PRODUCTS
(NOT UTILIZED)

PART 3 - EXECUTION

(NOT UTILIZED)

END OF SECTION

PART 1 - GENERAL

1.01 DESCRIPTION

A. This Section covers the cash allowances contained in the Price Schedule and included in the Contract Price, and defines the costs which will, and will not, be paid for out of the stipulated allowances.

1.02 PAYMENTS TO BE MADE OUT OF ALLOWANCES

A. General - Eligible charges described in this Paragraph 1.02 will be the only charges which will be paid for out of the stipulated allowances.

B. CASH ALLOWANCE FOR TESTING LABORATORY SERVICES REQUIRED UNDER SECTION 01410.

1. The actual charges made for infield and laboratory tests required under Section 01410 shall be paid for out of this cash allowance. Prior to each partial payment, the Contractor shall submit a certified invoice from the testing lab listing and detailing the total costs incurred since the last invoice. The invoice shall include man-hours, tests conducted, date of tests, test results and associated costs.

2. The Contractor shall include $20,000.00 in the lump sum bid for Item No. 1 in the Price Schedule – Lump Sum Contract for testing services connected with Section 01410.

1.03 SUBMITTALS

A. See Section 01300

B. All backup information to substantiate the invoice amount as required by the Engineer.

1.04 CHANGES TO STIPULATED ALLOWANCE

A. If actual cost differs from the stipulated allowance, the Contract Price will be adjusted accordingly.

PART 2 - PRODUCTS
(NOT UTILIZED)

PART 3 - EXECUTION

(NOT UTILIZED)

END OF SECTION

PART 1 - GENERAL

1.01 DESCRIPTION OF WORK:

A. Minimum administrative and supervisory requirements necessary for coordination of work on the project to be fulfilled by the Contractor include but are not necessarily limited to the following:

1. Coordination and meetings with representatives of the regulatory agencies, Owner and Engineer;
2. Administrative and supervisory personnel;
3. Surveys and records or reports;
4. Limitations for use of site;
5. Special reports;
6. General installation provisions;
7. Cleaning and protection.

1.02 COORDINATION AND MEETINGS:

A. Preconstruction Conference: Prior to the commencement of construction by the Contractor, representatives of the Owner, Engineer and Contractor shall hold a preconstruction conference with the Westchester Department of Health in Mount Kisco to discuss construction procedures and all other matters that affect the completion of the Contract Work. Prior to this time, the Contractor shall have submitted his progress schedule and list of subcontractors to the Engineer so that these can be discussed in detail at the conference.

The Contractor shall provide all shop drawings, schedules, etc. to the satisfaction of Westchester County Department of Health (WCDH). All work shall be inspected by representatives of WCDH. The Contractor shall satisfy and schedule WCDH inspections which are mandatory for all work performed.

B. Monthly Coordination Meetings: The Contractor shall attend monthly general project coordination meetings at regularly scheduled times that are convenient for the attendance of all parties involved. These meetings are in addition to specific meetings held for other purposes, such as regular project meetings and special preinstallation meetings.

1.03 LIMITATIONS ON USE OF THE SITE:

A. General: Limitations on site usage as well as specific requirements that impact site utilization are indicated on the drawings and by Section 01010. In addition to these limitations and requirements, the Contractor shall administer allocation of available space equitably among his subcontractors and other entities needing access and space, so as to

produce the best overall efficiency in performance of the total work of the project. The Contractor shall schedule deliveries so as to minimize space and time requirements for storage of materials and equipment on site.

B. The Owner shall designate equipment storage and vehicle parking areas to be used and maintained by the Contractor. The Contractor shall be responsible for protecting and securing his equipment.

PART 2 - PRODUCTS
(NOT UTILIZED)

PART 3 - EXECUTION

3.01 CLEANING AND PROTECTION:

A. General: During handling and installation of work at the project site, the contractor shall clean and protect work in progress and adjoining work in the basis of continuous maintenance. Apply protective covering on installed work where it is required to ensure freedom from damage or deterioration at the time of substantial completion.

B.

1. Clean and perform maintenance on installed work as frequently as necessary through the remainder of the construction period. Adjust and lubricate operable components to ensure operability without damaging effects.

C. Limiting Exposure of Work: To the extent possible through reasonable control and protection methods, the Contractor shall supervise performance of the work in such a manner and by such means which will ensure that none of the work, whether completed or in progress, will be subjected to harmful, dangerous, damaging or otherwise deleterious exposure during the construction period.

3.02 CONSERVATION AND SALVAGE:

A. General: It is a requirement for the Contractor's supervision and administration of the work that construction operations be carried out with the maximum possible consideration given to conservation of energy, water and materials. In addition, maximum consideration shall be given to salvaging materials and equipment involved in performance of the work, but not incorporated therein.

END OF SECTION

PART 1 - GENERAL

1.01 DESCRIPTION

A. Work covered by this Section includes field surveys as required to stake and layout the Work, and for other reasons relative to the Work. Work in this section to be paid for by the Contractor.

1.02 QUALITY ASSURANCE

A. All survey, layout and related work shall be performed by persons fully qualified to do such work, as approved by the Engineer.

PART 2 - PRODUCTS

2.01 GENERAL

A. Provide all surveys, to the accuracy required by the Engineer, by regulatory agencies, or as required for the proper execution of the Work.

2.02 MATERIALS

A. Provide all materials as required to properly perform the layout. All materials shall be of good professional quality and in first-class condition.

PART 3 - EXECUTION

3.01 LINES AND GRADES

A. The Contractor shall, with his own Licensed Land Surveyor, establish one bench mark for grades and for structures and thereafter obtain working or construction lines or grades as needed and in accordance with the base measurements, subject to the review of the Owner’s licensed project Surveyor.

3.02 AS-BUILT INFORMATION

A. The Contractor shall furnish to the Engineer, records of all as-built information, including slab, equipment and piping sizes, locations and elevations. Information shall be provided to the Engineer prior to the 90% completion of the work.

END OF SECTION

NO TEXT
THIS PAGE WAS INTENTIONALLY LEFT BLANK

PART 1 - GENERAL

1.01 CODES, STANDARDS, AND SPECIFICATIONS

A. Whenever reference is made to any published standards, codes, or standard specifications, it shall mean the latest standard code, specification or tentative specification of the technical society, organization or body referred to, which is in effect on the date shown on the Drawings, except where a specific date of a standard or code is specified. Where specified articles, sections, paragraphs or other subdivisions of the referenced publications are not stated, the referenced publication shall apply in full, except where specifically noted otherwise.

B. When required by Engineer, furnish satisfactory evidence that materials and methods are in compliance with the referenced standards and codes.

1.02 ABBREVIATIONS - ORGANIZATIONS

A. The following is a partial list of abbreviations which may be used in the Specifications, and the organizations to which they refer:

AA	Aluminum Association
AAN	American Association of Nurserymen
AASHTO	American Assoc. of State Highway & Transportation Officials
ACI	American Concrete Institute
AGA	American Gas Association
AIA	American Institute of Architects
AISC	American Institute of Steel Construction
AISI	American Iron and Steel Institute
AMCA	Air Movement and Controls Association
ANSI	American National Standards Institute
AREA	American Railway Engineering Association
ARI	Air Conditioning & Refrigeration Institute
ASA	Acoustical Society of America
ASCE	American Society of Civil Engineers
ASHRAE	American Society of Heating, Refrigeration and Air Conditioning Engineers
ASME	American Society of Mechanical Engineers
ASTM	American Society for Testing and Materials
AWPA	American Wood Preservers' Association
AWS	American Welding Society
AWWA	American Water Works Association
CBM	Certified Ballast Manufacturers
DEC	State of New York Department of Environmental Conservation

DEP	State of New York Department of Environmental Protection
DHUD	U.S. Department of Housing & Urban Development
EIA	Electronic Industries Association
EPA	U.S. Environmental Protection Agency (USEPA)
ETL	Electrical Testing Laboratories, Inc.
FM	Factory Mutual Laboratories
FHA	Farmers Home Administration, U.S. Department of Agriculture
FS	Federal Specification
IEEE	Institute of Electrical & Electronics Engineers
IPCEA	Insulated Power Cable Engineers Association
NBFU	National Board of Fire Underwriters
NEC	National Electrical Code
NEMA	National Electrical Manufacturers Association
NFPA	National Fire Protection Association
OSHA	U.S. Occupational Safety & Health Administration
PS	Product Standard
WCDHS	Westchester County Department of Health
WCDPW	Westchester County Department of Public Works
SCS	U.S. Soil Conservation Service
SDI	Steel Door Institute
UL	Underwriters Laboratories, Inc.
WWPA	Western Wood Products Association

PART 2 - PRODUCTS

(NOT UTILIZED)

PART 3 - EXECUTION

(NOT UTILIZED)

END OF SECTION

PART 1 - GENERAL

1.01 DESCRIPTION

A. This Section lists and defines various common abbreviations which are used throughout the Contract Documents.

B. Abbreviations of organizations, county and federal agencies which publish standards, codes, and regulations are defined in Section 01060 - CODES AND STANDARDS.

C. Other abbreviations and symbols may be found in legends and elsewhere on the Drawings. Piping material abbreviations are contained in the piping Sections.

D. Should an abbreviation or symbol not be specifically defined, it shall carry the standard definition commonly used in the industry.

E. Whenever any doubt arises as to what an abbreviation or symbol means, notify Engineer and he will issue a definition in writing.

1.02 ABBREVIATIONS

A. The following is a list of commonly used abbreviations which may be found in the Contract Documents, and the meanings ascribed to them:

A.C. or ac	Alternating Current
a or A	Amperes
AFF	Above Finished Floor
amp or Amp	Amperes
Alum.	Aluminum
Asph.	Asphalt
Aux.	Auxiliary
Bit. Conc.	Bituminous Concrete
CB	Circuit Breaker
Cl. Class	Class
cm	Centimeter
C.O.	Cleanout
Conc.	Concrete
Cont.	Continuous
Cu.	Cubic
cc	Cubic Centimeters

C.F.	Cubic Feet
CFM or cfm	Cubic Feet Per Minute
CFS or cfs	Cubic Feet Per Second
C.Y.	Cubic Yards
CT	Current Transformer
D.C. or dc	Direct Current
Dia.	Diameter
DWG. or Dwg.	Drawing
Dr.	Drive
Ea. or ea.	Each
EF	Each Face
EW	Each Way
Eff. or eff.	Efficiency
El. or Elev.	Elevation
Fin. Gr.	Finished Grade
fps	Feet Per Second
Ft. or ft.	Feet
ftg.	Footing
g.	Grams
Ga. or ga.	Gauge
Gal. or gal.	Gallon
Galv.	Galvanized
GPD or gpd	Gallons Per Day
GPM or gpm	Gallons Per Minute
H-O-A	Hand-off-automatic
Hz.or hz.	Hertz
I.D.	Inside Diameter
Inv.	Invert
IP	Instrument Panel
KVA or kva	Kilovolts-amperes
Kw or kw	Kilowatts
kwh or KWH	Kilowatt-hours
Lbs. or lbs.	Pounds
L.F.	Linear Feet
LPA	Lighting Panel "A"
L.S.	Lump Sum
m.	Meters
mA.	Milliamperes
Max. or max.	Maximum
MCC	Motor Control Center
mg.	Milligrams
MGD or mgd	Million Gallons Per Day
mi.	Miles
Min. or min.	Minimum
mm	Millimeters
No. or no.	Number
nom.	Nominal

N.T.S.	Not To Scale
O.D.	Outside Diameter
Oz. or oz.	Ounce
pb	Pushbutton
PPD	Pounds Per Day
P/B	Pullbox
pri.	Primary
psf	Pounds Per Square Foot
psi	Pounds Per Square Inch
psig	Pounds Per Square Inch, Gauge Pressure
PT	Potential Transformer
Pvt. or Pvmt.	Pavement
R.	Radius
R.O.W.	Right-of-Way
Sch.	Schedule
sec.	Secondary or Seconds
Sq. or sq.	Square
S.F.	Square Feet
S/S/P	Stop-start-pilot Station
Std. or std.	Standard
S.Y.	Square Yards
T&B	Top and Bottom
Typ.	Typical
U.O.N.	Unless Otherwise Noted
V or v	Volts
Vac or VAC	Alternating Current Voltage
Vdc or VDC	Direct Current Voltage
V.F.	Vertical Feet
Vol.	Volume
W or w	Watts
Yd. or yd.	Yards

1.03 SYMBOLS

A. The following is a list of commonly used symbols which may be found in the Contract Documents, and the meanings ascribed to them:

P Phase, Diameter, or Round (as applicable)
D Degrees (F. = Fahrenheit C. = Centigrade)
' Feet or Minutes
" Inches or Seconds
Number or Pound
/ Per or Divided By

PART 2 - PRODUCTS
(NOT UTILIZED)

PART 3 - EXECUTION
(NOT UTILIZED)

END OF SECTION

PART 1 - GENERAL

1.01 DESCRIPTION OF REQUIREMENTS:

A. General: This section specifies procedural and administrative requirements for compliance with governing regulations and codes and standards imposed upon the Work. These requirements include obtaining permits, licenses, inspections, releases and similar documentation, as well as payments, statements and similar requirements associated with regulations, codes and standards.

1. The term "Regulations" is defined to include laws, statues, ordinances and lawful orders issued by governing authorities, as well as those rules, conventions and agreements within the construction industry which effectively control the performance of the Work regardless of whether they are lawfully imposed by governing authority or not.

1.02 DEFINITIONS:

A. General Explanation: Certain terms in contract documents are defined in this article. Definitions and explanations contained in this section are not necessarily complete but are general for the Work to the extent that they are stated more explicitly in another element of the contract documents.

B. General Requirements: Provisions and requirements of other Division-1 sections apply to the entire work of the Contract and, where so indicated, to other elements which are included in the project.

C. Indicated: The term "indicated" is a cross-reference to graphic representations, notes or schedules on the drawings, to other paragraphs or schedules in the specifications, and to similar means of recording requirements in contract documents. Where terms such as "shown", "noted", "scheduled", and "specified" are used in lieu of "indicated", it is for the purpose of helping the reader locate the cross-reference, and no limitation of location is intended except as specifically noted.

D. Directed, Requested, etc. Terms such as "directed", "requested", "authorized", "selected", "approved", "required", "accepted", and "permitted" mean "directed by the Engineer", "requested by the Engineer", and similar phrases. However, no such implied meaning will be interpreted to extend the Engineer's responsibility into the Contractor's area of construction supervision.

E. Approve: Where used in conjunction with the Engineer's response to submittals, requests, applications, inquiries, reports and claims by the Contractor, the term "approved" will be held to limitations of the Engineer's responsibilities and duties as specified in General Conditions. In no case will the Engineer's approval be interpreted as a release of the Contractor from responsibilities to fulfill requirements of contract documents or acceptance of the Work, unless otherwise provided by requirements of the contract documents.

F. Project Site: The term "project site" means the space available to the Contractor for performance of the Work, either exclusively or in conjunction with others performing other construction as part of the overall project. The extent of the project site is shown on the drawings and may or may not be identical with the description of the land upon which the project is to be built.

G. Furnish: The term "furnish" is used to mean "supply and deliver to the project site, ready for unloading, unpacking, assembly, installation, and similar operations."

H. Install: The term "install" is used to describe operations at project site including the actual "unloading, unpacking, assembly, erection, placing, anchoring, applying, working to dimension, finishing, curing, protecting, cleaning and similar operations."

I. Provide: The term "provide" means "to furnish and install, complete and ready for the intended use."

J. Installer: The "installer" is "the entity" (person or firm) engaged by the Contractor, its subcontractor or sub-subcontractor for performance of a particular element of construction at the project site, including installation, erection, application and similar required operations. It is a requirement that installers are experienced in the operations they are engaged to perform.

K. Testing Laboratories: A "testing laboratory" is an independent entity engaged to perform specific inspections or tests of the Work, either at the project site or elsewhere, and to report, and (if required) interpret results of those inspections or tests.

1.03 DRAWING SYMBOLS:

A. General: Except as otherwise indicated, graphic symbols used on the drawings are those symbols recognized in the construction industry for the purposes indicated.

1.04 INDUSTRY STANDARDS:

A. Applicability of Standards: Except where more explicit or stringent requirements are written into the contract documents, applicable construction industry standards have the same force and effect as if bound into or copies directly into the contract documents. Such industry standards are made a part of the contract documents by reference. Individual specification sections indicate which codes and standards the Contractor must keep available at the project site for reference.

1. Referenced standards (standards referenced directly in the contract documents) take precedence over standards that are not referenced but generally recognized in the industry for applicability to the Work.

2. Unreferenced standards are not directly applicable to the Work, except as general requirements of whether the Work complies with recognized construction industry standards.

B. Publication Dates: Except as otherwise indicated, where compliance with an industry standard is required, comply with standard in effect as of date of contract documents.

C. Conflicting Requirements: Where compliance with two or more standards is specified, and where these standards establish different or conflicting requirements for minimum quantities or quality levels, the most stringent requirement will be enforced, unless the contract documents specifically indicate otherwise. Refer requirements that are different, but apparently equal, and uncertainties as to which quality level is more stringent to the Engineer for a decision before proceeding.

D. Copies of Standards: The contract documents require that each entity performing work be experienced in that part of the Work being performed. Each entity is also required to be familiar with industry standards applicable to that part of the Work. Copies of applicable standards are not bound with the contract documents.

1. Where copies of standards are needed for proper performance of the Work, the Contractor is required to obtain such copies directly from the publication source.

E. Abbreviations and Names: Trade association names and titles of general standards are frequently abbreviated. Where acronyms or abbreviations are used in the specifications or other contract documents they are defined to mean the recognized name of the trade association, standards generating organization, governing authority or other entity applicable to the context of the text provision.

F. Abbreviations and Names: Trade association names and titles of general standards are frequently abbreviated. The following acronyms or abbreviations as referenced in contract documents are defined to mean the associated names. Both names and addresses are subject to change, and are believed to be, but are not assured to be, accurate and up-to-date as of date of contract documents.

1. AASHTO — American Association of State Highway and Transportation Officials
444 North Capitol Street,
Suite 225
Washington, DC 20001
(202) 624-5800

2. ACI — American Concrete Institute
P.O. Box 19150
Detroit, MI 48219
(313) 532-2600

3. AI — Asphalt Institute
Asphalt Institute Building
College Park, MD 20740
(301) 277-4258

4. AISC — American Institute of Steel Construction
400 N. Michigan Avenue, 8th Floor
Chicago, IL 60611
(312) 670-2400

5. AISI — American Iron and Steel Institute
1000 Sixteenth Street NW
Washington, DC 20036
(202) 452-710 0

6. AITC — American Institute of Timber Construction
333 W. Hampden Avenue
Englewood, CO 80110
(303) 761-3212

7. ANSI — American National Standards Institute
1430 Broadway
New York, NY 10018
(212) 354-3300

8. APA — American Plywood Association
P.O. Box 11700
Tacoma, WA 98411
(206) 565-6600

9. API	American Petroleum Institute 1220 L Street NW Washington, DC 20005 (202) 682-8000
10. ASHRAE	American Society of Heating, Refrigeration and Air-Conditioning Engineers 1791 Tullie Circle NE Atlanta, GA 30329
11. ASME	American Society of Mechanical Engineers 345 East 47th Street New York, NY 10017 (212) 705-7722
12. ASPE	American Society of Plumbing Engineers 3617 Thousand Oaks Blvd., Suite 210 Westlake, CA 91362 (805) 495-7120
13. ASTM	ASTM 655 Fifteenth Street NW Washington, DC 20005 (202) 639-4025
14. AWS	American Welding Society P.O. Box 351040 550 Le Jeune Road NW Miami, FL 33135 (305) 443-9353
15. AWWA	American Water Works Association 6666 W. Quincy Avenue Denver, CO 80235 (303) 794-7711
16. IEEE	Institute of Electrical and Electronic Engineers 345 E. 47th Street New York, NY 10017 (212) 705-7900
17. IESNA	Illuminating Engineering Society of North America 345 E. 47th Street New York, NY 10017 (212) 705-7900

18. ISA	Instrument Society of America P.O. 12277; 67 Alexander Drive Research Triangle Park, NC 27709 (919) 549-8411
19. NAPA	National Asphalt Pavement Association Calvert Building, Suite 620 6811 Kenilworth Avenue Riverdale, MD 20737 (301) 779-4880
20. NEC	National Electric Code (by NFPA)
21. NECA	National Electrical Contractors Association 7315 Wisconsin Avenue Bethesda, MD 20814 (301) 657-3110
22. NEMA	National Electrical Manufacturers Association 2101 L Street NW, Suite 300 Washington, DC 20037 (202) 457-8400
23. NFPA	National Fire Protection Association Batterymarch Park Quincy, MA 02269 (617) 770-3000
24. UL	Underwriters Laboratories 333 Pfingsten Road Northbrook, IL 60062 (312) 272-8800

G. Federal Government Agencies: Names and titles of federal government standard or specification producing agencies are frequently abbreviated.

The following acronyms or abbreviations as referenced in the contract documents indicate names of standard or specification producing agencies of the federal government. Names and addresses are subject to change but are believed to be, but are not assured to be, accurate and up-to-date as of the date of the contract documents.

1. EPA	Environmental Protection Agency 401 M Street SW Washington, DC 20590 (202) 829-3535

2. OSHA — Occupational Safety and Health Administration
(U.S. Department of Labor)
Government Printing Office
Washington, DC 20402
(202) 783-3238

3. PS — Produce Standard of NBS
(U.S. Department of Commerce)
Government Printing Office
Washington, DC 20402
(202) 783-3238

4. Westchester County Agencies: Names of Westchester County Regulatory Agencies are as follows:

1. Westchester County Department of Public Works
Engineering Design and Construction
148 Martine Avenue
White Plains, New York 10601
Robert S. Donnelly, P.E., Director of Design Coordination
(914) 995-8110

2. Westchester County Department of Health
Bureau of Environmental Quality
25 Moore Avenue
Mount Kisco, New York 10549
Heather McVeigh, P.E, Associate Engineer
(914) 864-7333

PART 2 – PRODUCTS
(NOT UTILIZED)

PART 3 - EXECUTION
(NOT UTILIZED)

END OF SECTION

NO TEXT
THIS PAGE WAS INTENTIONALLY LEFT BLANK

PART 1 - GENERAL

1.01 DESCRIPTION

A. All items of work shall be included in the Lump Sum Bid as described on the bid forms.

1.02 SUBMITTALS

A. See Section 01300.

B. Copies of all invoices required for payments out of cash allowance(s).

C. Monthly Applications For Payment.

PART 2 - PRODUCTS
(NOT UTILIZED)

PART 3 - EXECUTION

3.02 REQUIRED MEASUREMENTS

Item No.	Measurements
Lump Sum Bid	**Summit Club at Armonk Sewage Treatment Plant including, equalization tank and piping, distribution box, treatment process tank and piping, STP control building, tertiary filter, ultraviolet disinfection units, effluent outfall piping, and odor control device, etc. Complete and ready for operation.** **No measurements shall be made in connection with this item.**

PART 4 - PAYMENTS

4.01 GENERAL REQUIREMENTS AND STIPULATIONS

A. No separate payments will be made for the Work under this Contract except for the pay items stipulated in this Part 4. All costs in connection with the Work shall be included in the Price Schedule – Lump Sum Proposals.

B. The pay item shall be full compensation for all costs in connection with the item including, but not limited to, (1) the furnishing of all materials, labor, equipment, tools, and all incidentals, (2) the installation of all materials, equipment, facilities, accessories and appurtenant items, (3) proper share of overhead and profit, (4) excavation, trenching, backfilling, dewatering, shoring and testing, (5) restoration of surfaces, (6) all temporary facilities and controls and (7) all related and incidental work and items necessary or required to complete the Work and to provide completely connected, operational and approved systems capable of performing as required.

4.02 PAY ITEMS

A. The names of the following pay items or Contracts is the abbreviated form of the Bid Items or Contracts as contained on the Price Schedule – Lump Sum Proposals in the Bid Forms. The name, as shown below or on the Bid Form, shall not be construed to represent a complete description of all of the Work included under such item or Contract and is provided only as a means of identification and for ease of conversation.

	Payments
Total Bid	Summit Club Sewage Treatment Plant including but not limited to furnishing and installing a factory fabricated buried BESST treatment plant and equalization tank, complete with all interconnecting piping and wiring as recommended by Purestream, STP control building, tertiary filter, ultraviolet disinfection system, flow meter vault and meter, stand-by generator, odor control system, effluent disposal system, site preparation, final grading, fencing and access driveway. Lump Sum payment for all work shown, specified and described in the Contract Documents for a sewage treatment plant including but not limited to General Construction, Site Work, Mechanical, Electrical, Heating and Ventilating, Plumbing, Odor Control, complete and ready for operation including the cash allowances of $20,000.

END OF SECTION

PART 1 - GENERAL

1.01 DESCRIPTION

A. This Section generally describes the types of submittals required during construction, procedures for making submittals, the preparation of submittals and the times submittals are required.

B. Additional submissions are required by the Instruction to Bidders and the General Conditions. Such submittals generally include such things as the Bids and Bidding Documents, insurance policies, bonds and insurance coverage, Applications for Payment, requests for Change Orders, guarantees, permits, certifications and documents required by Federal, State and Local authorities, submissions required by utility companies and other persons, firms or organizations and other such submittals.

C. The requirements of this Section are general in nature and basically apply to all Sections of the Specifications. Additional submissions and more specific requirements on submissions are contained in the various Specification Sections. In each individual Section, no attempt was made to cover or repeat the submissions contained in this Section and, therefore, the total of all submissions required are the combination of those described in this Section plus those specified in the various other Sections.

1.02 IDENTIFICATION OF SUBMITTALS

A. Completely identify each submittal and resubmittal by showing at least the following information (attached form may be used):

1. Name of Project;

2. Name, address and telephone number of Contractor and Contractor's stamp of approval, indicating that the submission has been thoroughly checked by Contractor for conformance and fit;

3. Name, address and telephone number of individual, firm or organization who will be doing the fabrication, supplying or manufacturing of equipment and materials and the name of the individual who may be contacted for further information;

4. Drawing number and Specification Section number to which submittal applies;

5. The location, service, equipment designation and other information to specifically indicate the item for which approval is requested;

6. Whether it is an original submittal (first submission) or a resubmittal (second, third, etc. submission);

7. "Shop drawing transmittal" form (specimen attached herein);

Note: Submissions not containing the above will be returned to Contractor, unreviewed by Engineer.

1.03 COORDINATION OF SUBMITTALS

A. Prior to submitting to Engineer, fully coordinate all interrelated work. As a minimum, do the following:

1. Determine and verify all field dimensions and conditions, materials, catalog numbers and similar data;

2. Coordinate with all trades, subcontractors, other contractors, public agencies, and utility companies and secure all necessary approvals, in writing;

3. Clearly indicate any deviations from the Contract Documents.

B. Make submittals in groups containing all associated items which in some way depend upon each other. This also applies to color charts, as one color may not be able to be selected without the selection of other colors so as to form a color coordinated group. Engineer may elect not to review partial, incomplete submissions, whereupon he will notify Contractor of the additional submissions which are required before a review can be made.

1.04 TIMING OF SUBMITTALS

A. Make submittals far enough in advance of scheduled dates of installation to provide time for reviews, for securing necessary approvals, for possible revisions and resubmittals, and for placing orders and securing delivery. The Engineer will review submittals in a manner as expedient as possible, however, no representation is made as to the amount of time which will be utilized for review.

B. Submissions may be returned unreviewed, rejected for several reasons, approved conditioned upon submission of related items or for other reasons set forth in the Contract Documents.

C. Make submissions well in advance as the returning, rejecting or disapproval of submissions or other similar circumstances are possible

and are deemed "avoidable delays" as defined in the General Conditions. Costs for these delays or those attributed to Contractor's tardiness in making submittals shall be borne by the Contractor.

1.05 DESTINATION OF SUBMITTALS

A. Unless otherwise specified, copies of every submission shall be sent to Engineer's office as follows:

Robinson & Muller Engineers, P.C.
50 Elm Street
Huntington, New York 11743

B. Submittals which are stamped “approved” or “approved as noted” by the Engineer will be forwarded to Westchester County Department of Public Works and/or Westchester County Department of Health for their review and comment. The Contractor will receive the agency reviewed submittals after return of same to the Engineer by the agency. Final determination of Westchester County Agency relative to acceptance of shop drawing is binding.

1.06 CLARITY OF SUBMITTALS

A. All printed materials shall be neat, clean, clear and legible, and of such quality that they can be easily reproduced by normal photocopying or blueprinting machines. Copies not conforming to this paragraph may be returned to Contractor, unreviewed.

1.07 CONTRACTOR'S REPRESENTATION

A. By making a submission, Contractor represents that he has determined and verified all field measurements, field construction criteria, materials, catalog numbers and similar data, and that he has checked and coordinated each submission with other contracts at or adjacent to the Project site and with the requirements of the Contract Documents.

1.08 ENGINEER'S REVIEW

A. Engineer will review and comment on each submission conforming to the requirements of this Section. Engineer's review and comments shall be considered as a gratuitous service, given as assistance in interpreting the requirements of the Contract, and in no way shall it relieve Contractor of any of his responsibilities under the Contract. Engineer's review will be only for conformance with the design concept of the Project and will be confined to general arrangement and compliance with the Contract Documents only, and will not be for the purpose of checking dimensions, weights, clearances, fitting, tolerances, interferences, or coordination of

trades or contractors. The approval of a separate item does not represent approval of an assembly in which the item functions.

B. Submittals will be marked as follows:

APPROVED - The content of this submittal has been reviewed by the Engineer and been found to be in general compliance with the Contract Documents. No further submission of this submittal is required and the information contained in the submittal may be built into the Work in accordance with the terms and conditions of the Contract Documents.

APPROVED AS NOTED - The content of this submittal has been reviewed by the Engineer and has been found in general to be in compliance with the Contract Documents. The notations made on the submittal, by the Engineer, shall be incorporated into the Work in accordance with the terms and conditions of the Contract Documents. No further submission of this submittal is required.

RESUBMIT - The content of this submittal has been reviewed by the Engineer, and this review has indicated that additional data and/or modifications to the submitted data or other changes are required to bring the work represented in this submittal into compliance with the Contract Documents. This submittal shall be reviewed and remarked in accordance with the Engineer's comments, by the Contractor, and resubmitted to the Engineer for another review. The information contained on the resubmittal shall not be incorporated into the Work until the drawing is returned to the Contractor with an "Approved" or "Approved as Noted" stamp.

DISAPPROVED - The content of this submittal has been reviewed by the Engineer and this review has indicated that the work displayed in the submittal is not in compliance with the Contract Documents. The Contractor shall submit another submittal for this portion of the Work, which complies with the Contract Documents.

C. No payment will be made on any item for which a submission is required if such submission:

1. has not been made;

2. has been made but was not stamped "Approved" by Engineer;

3. has been made and stamped "Approved As Noted", but Contractor has not complied with Engineer's notes marked on the submittal;

4. has been made and stamped "Approved", but item provided does not conform to the shop drawing nor to the Contract Documents.

1.09 RESUBMISSIONS

A. Prepare new and additional submissions, make required corrections, and resubmit corrected copies until approved. On, or with, resubmittals, clearly describe revisions and changes made, other than the corrections requested by Engineer, which did not appear on the previous submissions.

1.10 CONTRACTOR'S RESPONSIBILITIES

A. Engineer's approval of submittals shall not relieve Contractor of responsibility for any deviation from the requirements of the Contract Documents unless Contractor has informed Engineer, in writing, of such deviation at the time of submission and Engineer has given written approval to the specific deviation, nor shall Engineer's approval relieve Contractor from responsibility for errors or omissions in the submittals.

B. No portion of the Work requiring a submission shall be commenced until the submission has been approved by Engineer and the respective Westchester County Agency.

PART 2 - SUBMITTALS

2.01 CERTIFICATIONS

A. Submit certifications of compliance whenever required by the Specifications or Engineer. Certifications shall be complete and exact, they shall be properly authenticated by the written signature, in ink, of manufacturer, officer or duly authorized representative of the person, firm or organization issuing such certification, and they shall guarantee that the materials or equipment are in complete conformance with the requirements of these Specifications.

2.02 SHOP DRAWINGS

A. Submit shop drawings for all fabricated work, for all manufactured items, and for all other items specifically required by the Specifications. Submit each shop and layout drawing to Engineer in the form of a reproducible transparency accompanied by a black and white print.

B. After the submittal has been reviewed and the transparency annotated, Engineer will have three blueprints made and will keep these for his records. Engineer will return the transparency to Contractor.

C. **Submit at least eight (8) copies of each standard drawing, catalog cut, or other material for which no transparency is available. Contractor is to provide a digital copy of all submittals. If a resubmission is not required, Engineer will retain five copies and return the remaining three (3) copies to Contractor.**

D. Subcontractors must submit shop drawings directly to Contractor for checking. Thoroughly check subcontractors' shop drawings for measurements, sizes of members, details, materials, and conformance with the Contract Documents. Return submittals which are found to be inaccurate or in error. Do not submit to Engineer until corrections have been made. ***No shop drawing submittals to be submitted directly to the Engineer by a subcontractor of the contractor.***

E. Clearly show the relation of the various parts, and, where the Work depends upon field measurements, make measurements and include them on the shop drawings before submitting to Engineer.

F. Reference all submissions to clearly indicate the Specification Section, location, service and function of each particular item. Submissions for a single item, or group of related items, shall be complete. When submitting manufacturers' catalogs, pamphlets or other data sheets, in lieu of prepared shop drawings, specifically identify in ink the items for which approval is being sought.

G. If the shop drawings contain any departures from the Contract requirements, specifically describe them in Contractor's letter of transmittal. Where such departures require revisions to layouts or structural changes to the Work as shown, Contractor shall, at his own expense, prepare and submit revised layout and structural drawings. Make drawings the same size as the Contract Drawings.

2.03 OPERATION AND MAINTENANCE DATA

A. Submit complete operation and maintenance manuals for valves, hydrants, pumps, motors, stand-by generator, all power or electrically driven equipment, and for other items for which routine operation and maintenance will be required.

B. Suitably bind O&M Manuals and data sheets into volumes for specific systems, structures, and the like.

C. Submit six (6) copies of the bound and indexed O&M Manual Volume to the Engineer, prior to the 75% completion point of the Work. Further, submit individual O&M Manuals and data sheets, as required, for sub-systems and

portions of the Work, along with other submittals and shop drawings relating thereto.

D. Operation and maintenance manuals shall include, as a minimum, installation, adjustment, operation and maintenance instructions, lubrication schedules, troubleshooting guides and the manufacturer's and service representative's name, address and telephone number. Submit manuals in duplicate, before the equipment is delivered to the Project site.

E. Complete and bind O&M Manual copies of the attached "Equipment Record Sheet" for each piece of equipment. Additional forms are available from Engineer at cost of reproduction, handling, and mailing.

2.04 TEST RESULTS AND INSTALLATION

A. Whenever tests are required on materials and equipment, such tests shall be performed, and the test results submitted to Engineer. Do not deliver to the Project or incorporate into the Work any materials or equipment for which Engineer has not issued a written approval or acceptance of the required tests, test results and as-built drawings.

PART 3 - EXECUTION

(NOT UTILIZED)

Shop Drawing Transmittal

Project Name:	Summit Club at Armonk Sewage Treatment Plant
Engineer's Name, Address and Phone No.	Robinson & Muller Engineers, P.C. 50 Elm Street, Huntington, NY 11743 (631) 271-0576
Shop Drawing Submittal No.	
Engineer's Project No.:	2021-201
Contractor's Project No.:	
W.C.D.P.W./WCDH Project No.:	
W.C.D.H.S. Reference No.:	
Name of Subcontractor:	
Date of Submission:	
No. of Times Previously Submitted:	
Date of Previous Submission:	
Supplier Name and Phone No:	
Manufacturer Name and Phone No:	
Specification Section Number:	
Specification Paragraph Number:	
Drawing Sheet Number:	
Detail Reference Number:	
Applicable Standards:	
Remarks/Deviations:	

Contractor's Certification Statement

By this submittal, I hereby represent that I have determined and verified all field measurements, field construction criteria, materials, dimensions, catalog numbers and similar data and I have reviewed and approved this submittal and checked and coordinated each item with other applicable approved Shop Drawings and all Contract requirements.

Hereby certified by: _____

SIGNATURE, NAME OF CONTRACTOR

Engineer's Shop Drawing Stamp	W.C.D.H.S./W.C.D.P.W. Shop Drawing Stamp

PART 1 – GENERAL

1.01 DESCRIPTION

A. This Section covers the requirements for utilizing the services of an approved independent testing laboratory to perform tests and inspections to determine compliance with these Specifications.

B. Sampling and testing methods and procedures can also be found in the following Sections:

Soil Compaction 02250
Concrete Testing 03300

C. **Testing Laboratory Services connected with this Section shall be paid for out of a Cash Allowance. A Cash Allowance of $20,000 shall be included in the price bid to the Owner and be used for all laboratory testing services.**

1.02 QUALITY ASSURANCE

A. In order to establish compliance with the Contract Documents, materials shall be thoroughly and completely tested, examined and evaluated before they are incorporated into the Work. During and after installations, additional tests, examinations, and evaluations shall be made to determine continued compliance throughout the course of the Work.

B. Testing laboratory shall be a reputable, experienced firm which is capable of performing all of the required testing and a firm which is regularly engaged as a testing laboratory.

C. Perform all sampling and testing in strict accordance with specified procedures and use the materials, instruments, apparatus, and equipment required by the codes, regulations and standards. Where specific testing requirements or procedures are not described, perform the testing in accordance with all pertinent codes and regulations and with recognized standards for testing.

D. In the event that samples and test specimens are not properly taken, handled, stored or delivered, or if other requirements of this Section are not complied with, Engineer reserves the right to delegate any or all of this work to others, or to take whatever action he deems necessary to ensure that sampling and testing are properly accomplished, for which all costs shall be borne by Contractor.

E. Engineer further reserves the right to disapprove of the use of a specific testing laboratory, even after prior approval, if the laboratory fails to meet or comply with the requirements of this Section. If this should occur, the Contractor shall immediately dispose of the testing laboratory's services and retain the services of a different laboratory acceptable to Engineer.

1.03 SUBMITTALS

A. See Section 01300.

B. Within **fifteen (15) days** after the date the Owner signed the Agreement, submit brochures or other documentation from **three (3)** testing laboratories, clearly indicating experience, location, qualifications of staff, available equipment and facilities, standard fees, other pertinent information, and descriptions of any limitations or restrictions. Based upon this material, Engineer will select one firm to be the primary testing laboratory, and one firm which will act as a stand-by.

C. **Certified copies signed and sealed by a Professional Engineer registered in the State of New York for each test result. Mail copies directly from the laboratory to Engineer. Contractor shall make arrangements with the laboratory to secure his own copies**.

1.04 DELIVERY, STORAGE AND HANDLING

A. Extreme care shall be exercised in the taking, storage, handling and delivery of samples and test specimens to avoid breakage, damage and disturbance.

B. Provide all required storage facilities.

C. Carefully deliver all samples and test specimens to the laboratory.

1.05 SCHEDULING

A. Except where otherwise specified, Engineer will determine the number of samples to be taken, the date and time samples will be taken and tests made, the number and type of tests to be performed, who will collect the samples, how they will be handled and stored, and when laboratory personnel are required on site.

B. Engineer will notify Contractor of his decision to take samples and/or have tests made and provide him with the pertinent information. Contractor is responsible for notifying the testing laboratory and for having the testing performed, on schedule.

C. In addition to the above, Contractor shall make his own arrangements for the sampling and testing of materials he proposes to incorporate into the Work. This shall not be paid for out of the cash allowance.

D. Notify Engineer at least 24 hours in advance of the times at which scheduled samples or tests will be conducted.

E. If samples and/or tests cannot be taken or performed when required, delay the Work until such time that they can be accomplished. Where possible, any work which has been installed but has not been sampled or tested as required, shall be tested by other means. Upon Engineer's request, uncover any work which has been buried or covered and perform special tests designated by Engineer. If the work cannot be tested by other means, Engineer may declare the work unacceptable. All costs associated with noncompliance and for special testing shall be borne by the Contractor and not be paid for out of the cash allowance.

F. Should the testing laboratory be scheduled to take or collect samples or to perform tests and finds that it is unable to do so as a result of delays in construction, inclement weather, or any other reason, reschedule the tasks for a date acceptable to Engineer.

G. Plan all work and operations to allow for the taking and collection of samples and allow adequate time for the performance of tests. Delay the progress of questionable work until the receipt of the certified test reports.

PART 2 - PRODUCTS

2.01 TESTING LABORATORY

The testing laboratory shall meet the following criteria:

A. Be capable of performing all of the required tests.

B. Be regularly engaged in performing the types of services required.

C. Have adequate facilities, materials, equipment and personnel to perform the services.

D. Have an adequately trained, experienced and qualified staff.

E. Have at least one (1) registered professional engineer licensed in the State of New York who shall be capable of performing field tests, supervising laboratory testing, and who can interpret test results. The professional engineer shall be thoroughly knowledgeable in materials, soils, asphalt paving and concrete.

F. Must be able to be on the Project site within 4 hours after being notified.

2.02 TEST REPORTS

A. Each report shall be in writing and shall include the testing method used, the test results, the specified results, the exact location of where the test specimens were taken, the date taken, Project identification, Contractor's name, and other pertinent information required for a complete and meaningful test report.

B. Each report shall be signed and certified by a responsible officer of the testing agency.

C. Mail reports directly to Engineer within 24 hours after the sample is taken, except in those instances where tests cannot be immediately performed because of required curing or incubation periods, or lengthy testing procedures.

D. The laboratory shall verbally communicate test results to Engineer, when he requests same. This does not eliminate nor replace the requirements for a written report.

PART 3 – EXECUTION

3.01 COOPERATION WITH TESTING LABORATORY

A. Allow representatives of the testing laboratory access to the Work at all times.

B. Provide all equipment, labor, materials and facilities required by the laboratory to properly perform its functions.

C. Cooperate with and assist laboratory personnel during the performance of their work.

3.02 TEST SPECIMENS AND SAMPLES

A. Test specimens and samples shall be taken by the person(s) designated in other Sections, or as directed by Engineer. Do field sampling and testing in the presence of Engineer.

B. Provide all materials, equipment, facilities and labor for securing samples and test specimens and for performing all field testing.

END OF SECTION

PART 1 - GENERAL

1.01 DESCRIPTION

A. Work covered by this Section includes the requirements for meeting satisfactory conditions for final inspection of the Work.

B. Related work specified elsewhere includes the requirements of the entire Contract Documents, all conditions of which shall be met prior to final inspection of the Work.

1.02 QUALITY ASSURANCE

A. The Contractor shall turn the Work over to the Owner in perfect operating condition as compared to the Contract Documents. Make such adjustments in the Work, additional tests, and all else as may be necessary, in the opinion of the Engineer, in order that all parts of the Project covered by such Contract will operate together, properly, in accordance with the intent of the Contract Documents.

B. Upon completion of the Work and just prior to final inspection, remove from the premises all plant, machinery, equipment, surplus rock, lumber, forms, debris and all other materials. The entire jobsite and the Work shall be in a clean and finished state.

1.03 FINAL INSPECTION

A. Upon receipt of written notice from the Contractor that the Work under the Contract is complete and all tests and adjustments in the Work made, the Engineer and the WCDH will make a final inspection and will notify the Contractor of all instances in which the Work fails to comply with the Drawings and Specifications as well as any defects which he may discover. The Contractor shall thereupon immediately rebuild, alter or restore the Work so that it will comply with the Drawings and Specifications and remedy all defects at his own cost and expense and to the satisfaction of the Engineer and the WCDPW.

B. Furnish all labor, equipment and materials required by the Engineer to perform the various types of inspections, including communication equipment, vehicles, power winches, paint thickness gauges, electrical instruments and all else required and as approved by the Engineer.

C. All machinery, equipment, controls, systems and subsystems shall be in proper, clean, and adjusted operating conditions. The Contractor shall demonstrate to the complete satisfaction of the Engineer and WCDH that all items of the project are constructed, installed and operating as required

by these specifications and in accordance with manufacturer's installation and operation instructions.

D. Upon satisfactory completion of all alterations, repairs, or other work as directed by the Engineer, the Final Certificate will be issued.

PART 2 - PRODUCTS
(NOT UTILIZED)

PART 3 - EXECUTION
(NOT UTILIZED)

END OF SECTION

PART 1 - GENERAL

1.01 DESCRIPTION OF REQUIREMENTS:

A. This section specifies administrative and procedural requirements for temporary services and facilities, including such items as temporary utility services, temporary construction and support facilities, and project security and protection.

1. Use Charges: Cost for usage charges for temporary electrical and water utility services as defined elsewhere are chargeable to the Owner.

B. Temporary utility services required for use at the project site include but are not limited to the following:

1. Water service and distribution;
2. Temporary electric power and light;
3. Temporary sanitary facilities;
4. Temporary equipment storage trailer(s);
5. Solid waste dumpster(s).

1.02 QUALITY ASSURANCE:

A. Regulations: Comply with requirements of local laws and regulations governing construction and local industry standards, in the installation and maintenance of temporary services and facilities, including but not limited to the following:

1. Building Codes, including local requirements for permits, testing and inspection;
2. Health and safety regulations;
3. Utility company regulations and recommendations governing temporary utility services;
4. Police and Fire Department rules and recommendations;
5. Police and Rescue Squad recommendations;
6. Environmental protection regulations governing use of water and energy, and the control of dust, noise and other nuisances.

B. Trade Jurisdictions: The assigned responsibilities for the installation and operation of temporary utilities are not intended to interfere with the normal application of trade regulations and union jurisdictions applicable to the Work.

1.03 JOB CONDITIONS:

A. General: Provide each temporary service and facility ready for use at each location when the service or facility is first needed to avoid delay in performance of the work. Maintain, expand as required and modify temporary services and facilities as needed throughout the progress of the work. Do not remove until services or facilities are no longer needed or are replaced by the authorized use of completed permanent facilities.

B. Conditions of Use: Operate temporary services and facilities in a safe and efficient manner. Do not overload temporary services or facilities, and do not permit them to interfere with the progress of the work. Do not allow unsanitary conditions, public nuisances or hazardous conditions to develop or persist on the site.

1. Temporary Utilities: Do not permit the freezing of pipes, flooding or the contamination of water sources.

2. Security and Protection: Maintain site security and protection facilities in a safe, lawful and publicly acceptable manner. Take necessary measures to prevent erosion of the site.

PART 2 - PRODUCTS

2.01 MATERIALS AND EQUIPMENT:

A. General: Provide new materials and equipment for temporary services and facilities; used materials and equipment that are undamaged and in serviceable condition may be used, if acceptable to the Engineer. Provide only materials and equipment that are recognized as being suitable for the intended use, by compliance with appropriate standards.

B. Electrical Service: Comply with applicable NEMA, NECA and UL standards and governing regulation for materials and layout of temporary electric service, including those requirements included in Division-16 sections.

C. Voltage Difference: Provide identification warning signs at power outlets which are other than 110-120 volt power. Provide polarized outlets for plug-in type outlets, to prevent insertion of 110-120 volt plugs into higher voltage outlets.

D. Electrical Power Cords: Use only grounded extension cords; use "hard-service" cords where exposed to abrasion and traffic. Use single lengths or use waterproof connectors to connect separate lengths of electric cords, if single lengths will not reach areas of work.

E. Self-Contained Toilet Units: Provide one (1) single-occupant self-contained toilet unit of the chemical, aerated recirculation, or combustion type, properly vented and fully enclosed with a glass fiber reinforced polyester shell or similar non-absorbent material.

PART 3 - EXECUTION

3.01 INSTALLATION, GENERAL:

A. Power Distribution System: Provide circuits of adequate size and proper characteristics for each use. In general run wiring overhead and rise vertically where wiring will be least exposed to damage from construction operations.

B. Collection and Disposal of Wastes:

1. General: Establish a system for daily collection and disposal of waste materials from construction areas and elsewhere on the site. Enforce requirements strictly. Do not hold collected materials at the site longer than 7 days during normal weather or 3 days when the daily temperature is expected to rise above 80 deg F (27 deg C). Handle waste materials that are hazardous, dangerous, or unsanitary separately from other inert waste by containerizing appropriately. Dispose of waste material in a lawful manner.

a. Burying or burning of waste materials on the site will not be permitted.

b. Washing waste materials down sewers or into waterways will not be permitted.

3.02 SECURITY AND PROTECTION FACILITIES INSTALLATION:

A. General: Provide a reasonably neat and uniform appearance in security and protection facilities acceptable to the Engineer and the Owner.

B. Barricades, Warning Signs and Lights:

1. General: Comply with recognized standards and code requirements for the erection of substantial, structurally adequate barricades where needed to prevent accidents and losses. Paint with appropriate colors, graphics and warning signs to inform personnel at the site and the public, of the hazard being protected against. Provide lighting where appropriate and needed, including flashing red lights where appropriate.

3.03 OPERATION, TERMINATION AND REMOVAL:

A. Supervision: Enforce strict discipline in use of temporary services and facilities at the site. Limit availability of temporary services and facilities to essential and intended uses to minimize waste and abuse. Do not permit temporary installations to be abused or endangered. Do not allow hazardous, dangerous or unsanitary conditions to develop or persist on the project site.

B. Maintenance: Operate and maintain temporary services and facilities in good operating condition throughout the time of use and until removal is authorized. Protect from damage by freezing temperatures and similar elements.

C. Protection: Prevent water filled piping from freezing, by use of ground covers, insulation, by keeping drained or by temporary heating. Maintain distinct markers for underground lines. Protect from damage during excavation operations.

D. Termination and Removal: Unless the Engineer requests that it be maintained for a longer period of time, remove each temporary service and facility promptly when the need for it or a substantial portion of it has ended, or when it has been replaced by the authorized use of a permanent facility, or no later than substantial completion. Complete, or, if necessary, restore permanent work which may have been delayed because of interference with the temporary service or facility. Repair damaged work, clean exposed surfaces and replace work which cannot be satisfactorily repaired.

END OF SECTION

PART 1 - GENERAL

1.01 DESCRIPTION

A. Work covered by this Section includes requirements for protection of persons and the public in general, during the course of the Work.

B. Related work specified elsewhere includes:

General Conditions
Temporary Facilities and Controls – 01500

C. Install and maintain fencing to protect the public from open excavations.

PART 2 - PRODUCTS

2.01 GENERAL

A. Comply with the requirements of Section 01600, MATERIAL AND EQUIPMENT.

2.02 SNOW FENCES (EXCAVATION PROTECTION)

A. Posts - Six feet (6') high, steel fence posts, located at 8' O.C.

B. Fencing - Four feet (4') high wooden lath, durably bound together at 4" O.C. Bind fencing to posts at top and bottom with a wire of a thickness gauge equal to that of the fencing wire.

PART 3 - EXECUTION

3.01 PERFORMANCE

A. Conduct all operations so as to interfere as little as possible with the possible work of other Contractors on adjacent site projects. Maintain fences, install shoring, provide watchmen, maintain red lights, post danger signs warning against the hazards created by the construction work, and take these and such other precautions as may be necessary to protect life and property. The Contractor is responsible for all damages occasioned in any way by his act or neglect, or that of his agents, employees or workmen.

3.02 WATCHMEN AND HAZARD ELIMINATION

A. The Contractor shall maintain the work area in a safe and secure condition throughout the entire contract. A watchman shall be employed by the Contractor as he deems necessary to ensure safe and secure areas. The appearance of the Owner's personnel within the work area will not relieve the Contractor of his responsibilities in this regard. If the Engineer deems the Contractor's operation to be unsafe or unsecure, the Engineer reserves the right to order the Contractor to provide a 24-hour attendance of the work area by watchmen at no additional cost to the Owner.

3.03 UTILITIES

A. Various water mains, electrical conduit, gas mains, process piping, storm sewers, drains, telephone conduits and other underground and overhead utilities are located in and adjacent to the Contract area.

In all cases, whether underground structures or utilities have or have not been delineated, the Owner and Engineer accept no responsibility for their location and such locations as shown are to be considered approximate only.

B. In some instances, and in order to conform with the OSHA requirements, power lines may have to be temporarily de-energized or relocated. This work will normally be performed by the respective utility company and compensation shall be made at a rate equal to the Utility company's invoiced bill, plus 15% thereof to cover all of the Contractor's items of expense and profit. If the utility company allows the Contractor to perform any or all of the work described above, compensation for that portion shall be paid for as specified under EXTRA WORK. Compensation for relocation of utilities will be made only when so approved by the Engineer, prior to the prosecution of that portion of the Work, to relocate a utility. Where utilities are relocated or otherwise worked on, due to the Contractor's negligence, or strictly for the convenience of the Contractor, no compensation will be made therefor.

C. Ensure that utility valve boxes and manholes are readily accessible at all times. Do not store materials over such facilities. Should it become necessary to cover boxes or manholes with spoil, devise a method for locating them quickly, and assist the utility company in uncovering them. All such facilities shall be left uncovered during non-working hours.

D. Use proper caution when excavating in and around utility service facilities. Machine excavation shall not come within one and one-half (1-1/2) feet from the designated location of a utility line except for pavement materials when in a roadway. After locating and verifying the location of the utility line, utilizing hand tools, the Contractor may proceed with the careful use of power equipment.

E. If an underground facility is accidentally contacted or disturbed, immediately notify the utility owner. Take protective measures as required by the owner of the utility. The Contractor shall make good all direct or indirect damage that may be done to any utility structure in the execution of the Work. The liability of the Contractor is absolute and is not dependent upon any question of negligence on his part or on the part of his agents, servants, or employees. The absence of any order from the Engineer directing the Contractor to take any particular precaution, or to refrain from performing any particular action, shall not excuse the Contractor in case of such damage. Special precautions shall be taken by the Contractor to protect his men, equipment and property of others while working in the vicinity of utilities.

F. Prior to backfilling, respective utility representatives shall be given an opportunity to inspect all uncovered facilities. Damaged utilities will be repaired by the respective utility company before backfilling, all at the Contractor's expense.

G. Where underground utilities, except for existing storm and sanitary sewers, conflict with the Contract Work, the work involved in relocating or otherwise modifying such existing utilities will in general be performed by the respective utility companies. The Contractor shall provide every means of access to accommodate the utility companies in the performance of their work. The Contractor shall pay the utility company's bill for the relocation work and compensation therefor shall be as described in Paragraph B above.

H. Additional earth excavation and backfill required for the relocation of utilities shall be provided by the Contractor unless otherwise required by the utility company.

END OF SECTION

NO TEXT
THIS PAGE WAS INTENTIONALLY LEFT BLANK

PART 1 - GENERAL

1.01 DESCRIPTION

A. This Section covers general requirements for products and the criteria which must be met by Contractor when he desires to utilize substitute products. In order to determine the total requirements of each Specifications Section, this Section shall be used in conjunction with all other Sections and the requirements contained herein shall be in addition to the requirements set forth in all other Sections.

1.02 QUALITY ASSURANCE

A. In addition to Contractor's warrantees and guarantees on materials and equipment required under the General Conditions, Contractor is solely responsible to see that all materials, equipment, products and the finished Work complies accurately and completely with the Contract Documents. Contractor should test and inspect all materials and items of Work prior to ordering and installation, to satisfy himself that all Contract requirements are being met.

B. The Engineer may check all or any portion of the Work and Contractor shall afford all necessary assistance to Engineer in carrying out such checks. Such checking by Engineer shall not relieve Contractor of any responsibilities for the accuracy or completeness of the Work.

C. Should any dispute arise as to the quality or fitness of workmanship, equipment, materials or articles, the decision shall rest with Engineer, and shall be based upon the requirements of this Contract.

1.03 SUBMITTALS

A. Promptly submit guarantees set forth in relevant Sections of the specifications for equipment and items of work.

1.04 GUARANTEES

A. Whenever a manufacturer, supplier or other person or firm furnishes, offers to furnish or normally furnishes a guarantee, whether required by the Specifications or not and no matter how long the guarantee period is, Contractor shall accept or secure all such guarantees and furnish same to Engineer. Contractor shall also fill out and send to manufacturers all warranty and guarantee documents required by them in order to affect such warranties and guarantees, with a copy to Owner.

B. All guarantees and warranties shall be effective for the maximum period as follows:

1. As specified elsewhere herein for specific products.

2. For a period of one year from the date of completion of the Work.

3. For the time period normally guaranteed or warranted by the manufacturer.

PART 2 - PRODUCTS

2.01 MATERIALS AND EQUIPMENT

A. All materials, equipment and accessories shall be new and unused and shall be essentially the standard product of a manufacturer of established good reputation and regularly engaged in the production and fabrication of such material or equipment.

B. Owner reserves the right to reject any material or equipment manufacturer who, although he appears to be qualified and meets the technical requirements, does not provide satisfactory evidence indicating adequate and prompt post-installation repair and maintenance service, as required to suit the operational requirements of Owner.

C. Whenever it is required that Contractor shall furnish materials or manufactured articles or shall do work for which no detailed specifications are set forth, the materials or manufactured articles shall be of the best grade in quality and workmanship obtainable on the market from firms of established good reputation, or, if not ordinarily carried in stock, shall conform to the usual standards for first-class materials or articles of the kind required. Perform Work in full conformity and harmony with the intent to secure the best standard of construction and equipment of the Work as a whole or in part.

2.02 NAMEPLATES

A. Each unit of equipment shall have the manufacturer's name or trademark on a corrosion-resistant nameplate securely affixed in a conspicuous place. The manufacturer's name or trademark may be cast integrally with stamp, or otherwise permanently marked upon the item of equipment. Such other information as the manufacturer may consider necessary for complete identification shall be shown on the nameplate.

2.03 SUBSTITUTIONS

A. Names - The Drawings and Specifications list acceptable manufacturers, commercial names, trademarks, brands and other product, material and equipment designations. Such names are provided to establish the required type, quality and other salient requirements of a procurement.

B. Equals - An item equal to that named or described on the Drawings or in the Specifications may be provided by Contractor if approved by the Engineer.

C. Submissions - When Contractor wishes to propose a substitute, he shall make written application to Engineer for approval of such a substitute certifying in writing that the proposed substitute will perform adequately the functions called for by the general design, be similar and of equal substance to that specified and be suited to the same use and capable of performing the same function as that specified; stating whether or not its incorporation in or use in connection with the Project is subject to the payment of any license fee or royalty; and identifying all variations of the proposed substitute from that specified and indicating available maintenance service. Contractor shall further submit complete descriptive literature and performance data together with samples of the materials, where feasible. Include full information concerning differences in cost. **Any savings in cost resulting from substitutions shall be passed on to Owner and all additional costs shall be borne by Contractor.**

D. Determination of Equals - In all cases, Engineer shall be the sole judge as to whether a proposed product is to be approved and Contractor shall have the burden of proving the same, at his own cost and expense, to the satisfaction of Engineer. The Contractor shall abide by Engineer's decision when proposed substitute items are judged to be unacceptable and shall, in such instances, propose another substitute or furnish the item specified or indicated. A proposed product which utilizes more energy is sufficient cause for immediate rejection. The Contractor shall have and make no claim for an extension of time or for damages by reason of the time taken by Engineer in considering a substitution proposed by Contractor or by reason of the failure of Engineer to approve a substitution proposed by Contractor.

E. Use of Substitutes - No substitute shall be ordered or installed without the written approval of Engineer nor without such performance guarantee and bonds as Owner may require, which shall be furnished at Contractor's expense.

F. Redesigns - The designs shown on the Drawings are based upon the dimensions, weight, performance and other characteristics of the product(s) so named in the Schedules or otherwise of the first acceptable manufacturer listed under the product specified. The use of a product by

any other acceptable manufacturer or by a manufacturer proposed by Contractor and accepted by Engineer may require changes in dimensions, elevations, structures, auxiliary equipment, piping, electrical, mechanical, controls or other Work to provide a complete satisfactory operating installation. The Contractor shall submit to Engineer, for approval, all necessary drawings and details showing such changes to verify conformance with the overall plant structural and architectural requirements and overall plant operating performance. The Contract Price shall include all costs in connection with the preparation of new drawings and details and all changes to construction work to accommodate the proposed equipment and including all engineering expenses in connection therewith.

G. The design shown on the Drawings and specified herein are based on the use of particular products. The cost of all redesign necessary to permit the use of a proposed substitute product shall be borne solely by the Contractor. Such redesign, at the Engineer's option, may be performed by the Engineer. Compensation to the Engineer for services rendered in connection with redesigns and determinations of equals shall be at the Engineer's standard fee schedule, which amounts shall be paid to the Engineer by the Owner and deducted from monies due or to become due the Contractor under this Contract.

H. **As the Engineer is the sole judge as to the determination of equals and since the magnitude of the expenses involved for redesign or modifications may be difficult to determine during the bidding period, the Contractor is advised to base his bid on the manufacturers specified.**

PART 3 - EXECUTION

3.01 INSPECTIONS - PREPARATIONS

A. Prior to work under any Section, carefully inspect the Work of all other trades and verify that all such Work is in conformance with the Contract Documents and is complete to the point where the Work under that Section may properly commence. Extreme care shall be exercised so as to avoid the need to remove and replace Work and to avoid unnecessary cutting and patching.

B. Inspect all surfaces to be sure that they have been properly prepared before applying new Work to such surfaces.

C. Make all required measurements in the field to ensure proper and adequate fit of all items.

D. Verify that all Work can be installed in strict accordance with the Drawings and the approved shop drawings. Immediately report discrepancies to Engineer.

E. Do not proceed with the Work under any Section until conditions are proper.

3.02 INSTALLATION/APPLICATION/PERFORMANCE/ERECTION

A. All materials and equipment shall be applied, installed, connected, erected, used, cleaned and conditioned in accordance with the instructions of the applicable manufacturer, fabricator or processors, except as otherwise provided in the Contract Documents.

B. All Work shall be done in a workmanlike manner and set to proper lines and grades.

C. Where performance criteria are specified, do all Work necessary to attain the required end results.

3.03 FIELD QUALITY CONTROL

A. Neither observations by Engineer nor inspections, tests or approvals by other persons shall relieve Contractor from his obligations to perform the Work in accordance with the requirements of the Contract Documents.

B. If the Contract Documents, laws, ordinances, rules, regulations or orders of any public authority having jurisdiction require any Work to specifically be inspected, tested or approved by some public body, Contractor shall assume full responsibility therefor, pay all costs in connection therewith

and furnish Engineer the required certificates of inspection, testing or approval.

C. The Owner reserves the right to independently perform laboratory tests on random samples of material or performance tests on equipment delivered to the site. These tests, if made, will be conducted in accordance with the appropriate referenced standards or Specification requirements. The entire shipment represented by a given sample, samples or piece of equipment may be rejected on the basis of the failure of samples or pieces of equipment to meet specified test requirements. All rejected materials or equipment shall be removed from the site, whether stored or installed in the Work, and the required replacements shall be made, all at no additional cost to Owner.

3.04 ADJUST AND CLEAN

A. Upon the completion of installations, and as a condition of its acceptance, visually inspect all Work, adjust all components for proper alignment and use and touch-up all abrasions and scratches to make them completely invisible.

B. Thoroughly examine all materials and equipment with protective or decorative finishes for defects and damage prior to being covered. In the case of buried items of Work, restore protective surface covers so as to conform to the Contract requirements prior to being backfilled, buried or embedded, as the case may be. In the case of exposed items of Work, for which a decorative finish is required, all scratches, discolorations, unmatched colors, disfigurations, and damages shall be repaired and touched-up so as to provide a neat, clean finish, uniform in color.

3.05 UNCOVERING WORK

A. Unless otherwise specified or directed by Engineer, no Work shall be covered until it has been inspected, tested, and authorized to be covered by Engineer. If any Work is covered without the consent of Engineer, it must, if requested by Engineer, be uncovered for his observation and replaced at Contractor's expense.

B. If any Work has been covered with Engineer's consent and Engineer considers it necessary or advisable that covered work by inspected or tested, Contractor, at Engineer's request, shall uncover, expose or otherwise make available for observation, inspection or testing as Engineer may require, that portion of the Work in question, furnishing all necessary labor, material and equipment. If it is found that such Work is defective Contractor shall bear all the expenses of such uncovering, exposure, observation, inspection and testing and of satisfactory reconstruction, including compensation for additional engineering services, and an

appropriate deductive Change Order shall be issued. If, however, such Work is not found to be defective, Contractor shall be allowed an increase in the Contract Price or an extension of the Contract Time, or both, directly attributable to such uncovering, exposure, observation, inspection, testing and reconstruction if he makes a claim therefor as provided in the General Conditions.

3.06 PROTECTION

A. During the progress of the Work, and up to the date of final acceptance, Contractor shall be solely responsible for the care and protection of all Work and materials covered by this Contract. All work and materials shall be protected against damage or loss from any cause whatsoever and Contractor shall rebuild, replace, restore and make good all injuries, losses, damages, re-erection and repairs occasioned or rendered necessary, to all or any portions of the Work, and at Contractor's expense.

B. Neither Owner nor any of its officers, employees or agents assume any responsibility for collecting indemnity from any persons causing damage to the Work of Contractor.

3.07 DEFECTIVE WORK

A. The repair, removal, replacement and correction of defective Work is a part of this Contract and shall be promptly done in accordance with the requirements set forth in the General Conditions. All costs in connection with the correction of defective Work shall be borne by Contractor.

B. Any item of equipment which fails to maintain the performance or other salient requirements of these specifications, shows undue wear, or other deleterious effects during the maintenance period, shall be considered defective.

END OF SECTION

NO TEXT
THIS PAGE WAS INTENTIONALLY LEFT BLANK

PART 1 - GENERAL

1.01 DESCRIPTION

A. This Section covers the requirements for performing leakage tests on process tanks and pipelines and is one of the several bases for acceptance of the Work.

B. All pressure pipes and non-pressure pipes shall be tested for leakage.

C. Definitions:

1. Leakage (or exfiltration) - The quantity of water to be supplied into the newly laid pipe or tank, any valved section thereof, or other appurtenance, necessary to maintain the specified leakage test pressure after the pipe has been filled with water and the air expelled.

2. Infiltration - The quantity of water which enters into any pipe or other appurtenance when the static groundwater elevation is at the minimum elevation above the pipe or appurtenance as specified hereinafter.

1.02 QUALITY ASSURANCE

A. Prior to final acceptance of the Work, all process tanks, pressure pipes and non-pressure and non-pressure pipes shall meet specific leakage requirements of Westchester County Department of Public Works and Westchester County Department of Health, as a minimum. These leakage requirements must be satisfied by the basic materials alone. Where joint fillers and the like have been specified, primarily to protect jointing materials, and secondarily to provide a factor of safety, they shall not be applied until after leakage tests have been completed and have been accepted by Engineer.

B. Every test must be witnessed by Engineer and any test not so witnessed will be considered as not having been performed. Contractor shall pretest the Work and shall not request Engineer to witness the final test until he is reasonably certain that the test will yield results within the acceptable limits.

C. No work shall be closed or covered up until it has been duly inspected and approved for proper and satisfactory construction and installation, and compliance with Plans and Specifications. Should incomplete or unapproved work be covered, the Contractor shall, at his own expense, uncover all work so that it may be properly inspected and approved. After such inspection and approval, he shall properly

repair and replace all work found defective, unsatisfactory, and not in accord with the Plans and Specifications, and after such repair and replacement, he shall bring all work to the completeness and status as it was before it was closed and covered, all at his own expense.

D. Successful completion of required tests shall be in no way interpreted as relieving the Contractor of responsibility for defects which become apparent subsequent to the time of testing. It shall be the sole right of the Engineer to determine whether defects exist and the Contractor shall retest all portions of the Work deemed necessary by the Engineer prior to final approval of the Project.

1.03 SUBMITTALS

A. See Section 01300.

B. Complete details and specifications on testing apparatus.

C. Certified test results on forms approved by Engineer.

1.04 SEQUENCING AND SCHEDULING

A. Notify Engineer at least 48 hours in advance of a scheduled test so that the test may be witnessed.

B. Test process tanks prior to backfilling.

C. Test underground gravity and pressure piping as soon as the pipe is laid and prior to backfilling.

D. At Engineer's discretion, additional sections of pipelines may be required to be tested as soon as pipe is laid and prior to backfilling when working conditions or the standard of workmanship have been altered.

PART 2 - MATERIALS

2.01 TESTING APPARATUS

A. Provide all labor, pumps, plugs, measuring equipment and other apparatus, complete, and as required to perform all testing.

B. Provide clean water, air, nitrogen and other materials as required to accomplish all testing.

C. Provide plugs and caps capable of withstanding the test pressures.

D. Provide all temporary flanges, plugs, bulkheads, thrust blocks, weighing, bracing and other items necessary to prevent joints from separating, and to prevent any injuries or damage.

PART 3 - EXECUTION

3.01 PREPARATION

A. Pipe Displacement Tests - Provide one person to assist Engineer in conducting pipe displacement tests prior to performing leakage tests.

B. Bracing Pressure Piping - Plug open ends, adequately block bends, tees, ends, and other fittings, and do whatever is necessary to brace the piping system so that it will safely withstand the pressures developed under the tests and so that no damage or injury will occur to the pipeline, people or property.

C. Protection - Before tests are conducted, isolate or remove any regulator, gauge, trap, or other apparatus or equipment which may be damaged by test pressures.

3.02 GENERAL

A. Trapped Air - Trapped air may cause a false indication of the rate of leakage. Points of concern include ends of lines, stubs, and high points in pipelines. No credit will be made for this condition and no adjustment will be made to the allowable leakage. Where trapped air is suspected of causing a test failure, do whatever is necessary to evacuate the air and repeat the tests until the actual leakage is equal to or less than the allowable rate of leakage.

B. Water Absorption - No credit will be given for absorption of water in pipe and manhole walls. If necessary, fill pipes and tanks with water well in advance of testing and allow them to soak in order to eliminate or minimize the effects of absorption.

3.03 TESTS FOR NON-PRESSURE PIPING AND PROCESS TANKS

A. General

1. Leakage shall be determined by exfiltration testing. Engineer reserves the right to require infiltration testing.

2. Air testing of non-pressure piping is not permitted except for locating points of leakage and where pipes cannot be hydrostatically tested.

3. Leakage testing shall include the process tanks, connecting non-pressure pipe, and all other appurtenances on the section being tested.

4. Generally limit test sections to non-adjacent structures. Tanks and manholes may be tested simultaneously with pipes.

5. Adequately plug ends of all structure connections, stubs and all other openings from which water may escape.

6. Use clean water for exfiltration tests.

7. Determine groundwater levels by installing test holes or test pits at intervals not to exceed 1,000', when directed by Engineer.

B. Exfiltration Test On Pipes and Tanks

1. The minimum water level required for testing pipes and tanks is the higher of either 4' above the crown of the upstream (highest) end of the pipe being tested and 1 ft. from the top of each process tank structure. Where such a water level will produce an internal hydrostatic pressure in excess of the capabilities of the piping system, Engineer will prescribe test modifications or require that other methods of testing be utilized.

2. For pipe testing, install a watertight plug in the downstream end and a watertight plug in the upstream end fitted with a 2" diameter, clear rigid tube installed in a vertical position to facilitate observation of water levels. Tube shall be long enough to obtain the required head and made of extruded

Lucite acrylic, Polycarbonate (Lexan), Tenite butyrate or other plastic material. Glass is unacceptable.

3. Fill pipe with water and conduct test, continually adding water from a graduated container to keep water in tube at a constant level.

4. Upon satisfactorily completing the test, remove the downstream plug in the presence of Engineer. Do not touch nor remove the upstream plug until approved by Engineer. Remove test water from tanks to a level determined by the Engineer.

3.04 TESTS FOR PRESSURE PIPES

A. General

1. Leakage testing shall include the main exiting pipe, service connections, and all other appurtenances on the section of pipeline being tested.

2. All pipes shall be tested prior to applying insulation and before they are concealed or furred-in.

3. Provide all necessary gauges. Gauges shall be standard pressure type with a minimum 6" diameter dial and a pressure range not in excess of 50% of the maximum required test pressure.

4. Provide and maintain at the site a gauge stand with an approved laboratory calibrated test gauge. Periodically check test gauges used for testing against the test gauge, and whenever requested by Engineer.

5. Where it is absolutely necessary for testing, tap pipes and insert approved plugs after testing is completed.

6. Provide a hand or motor driven pump to maintain the required test pressure constant throughout the duration of the test. If a water pump is used, pump water from a container with a known volume of water. If an air or inert gas pump is used, leakage shall be determined and calculated by the cycling of the pump.

B. Underground Pipes

1. Conduct leakage test in accordance with AWWA C600.

3.05 ALLOWABLE LEAKAGE

A. The maximum allowable leakage for the various process tanks and piping systems is contained on the form LEAKAGE TESTING REQUIREMENTS, attached to this Section or as determined by the Regulatory Agencies.

B. It is the intent of this Contract to secure piping systems with leakage, in each section of pipe and within each structure, equal to, or less than that specified. It is also the intent to secure a piping system free from visible drips, streams, and leaks. Therefore, even if a portion of the system meets the requirements for allowable leakage, visible leaks are not permitted and shall be stopped.

C. Leakage tests will be considered satisfactorily passed when the rate of leakage is equal to or less than the stipulated allowances, there is no evidence of visible leaks, and there is no evidence of other system defects.

3.06 RETESTING

A. Pipes and tanks not passing the tests shall have all defects corrected to the satisfaction of Engineer, and shall be retested and recorrected as often as is necessary until the test requirements have been met.

B. It is the intent of this Contract to obtain work meeting test requirements on their own and solely through the use of the normal integral sealing components. Joint leaks shall not be stopped through the use of concrete, caulking, mortar, or other patching materials. Leaking pipe joints shall be rejoined or replaced if necessary.

C. Methods other than rejoining, resetting or replacing joint seals shall require the written approval of Engineer.

LEAKAGE TESTING REQUIREMENTS

ITEM TESTED	TEST Testing Fluid	TEST Pressure	TEST Duration Hrs.(2)	ALLOWABLE LEAKAGE(1) Underground/Exposed Infil	ALLOWABLE LEAKAGE(1) Underground/Exposed Exfil
NON-PRESSURE PIPING					
Less than 75' from water(3)	WATER	4'	4	-	25
	WATER	4'		25	-
Between 75-200' from water(3)	WATER	4'	4	-	50
	WATER	4'		50	-
More than 200' from water(3)	WATER	4'	4	100	
	WATER	4'		100	
PRESSURE PIPING (See Notes 4, 5 and 6)	100 psig			-0-	-0-

----------NOTES----------

1. Maximum allowable leakage in gallons/day/inch diameter/mile of pipe. Where a percentage is shown, the loss shall not exceed the percentage of the starting test pressure.

2. After steady state flow conditions exist, a sufficient amount of time to accurately determine the leak.

3. Water means a well, a water supply, or any surface water.

4. Test 200 psig for 30 minutes. After correction of any defects, test at 50 psig for 6 hours.

5. Nitrogen may be used in lieu of air.

6. Water for pipes carrying liquids, air or nitrogen for lines carrying gases.

END OF SECTION

NO TEXT
THIS PAGE WAS INTENTIONALLY LEFT BLANK

PART 1 - GENERAL

1.01 DESCRIPTION

A. This Section contains the general requirements for maintaining the site, buildings and the Work in a neat, clean condition at all times.

1.02 CLEANING UP

A. At all times, maintain the premises and the site free from accumulations of waste materials and rubbish and litter caused by Contractor's employees or Work, or the employees or work of any of his subcontractors.

B. On or before completion of the Work, thoroughly clean all pits, pipes, manholes, channels, tanks, chambers, conduits, handrails, grating and all other items of Work and the premises entered upon, and dismantle and remove all temporary structures, tools, scaffolding, surplus materials, supplies, equipment and rubbish.

C. Should Contractor fail to comply with the requirements of this paragraph within twenty-four hours after written notice from the Engineer, then Owner may perform whatever work is necessary by whatever means he may deem expedient and all expenses incurred by Owner will be charged to and paid for by Contractor.

D. Keep buildings, structures and other enclosed areas free from unattended combustible material and leave the Work "broom clean".

E. Keep interior surfaces free from debris and accumulated materials.

PART 2 - PRODUCTS
(NOT UTILIZED)

PART 3 - EXECUTION
(NOT UTILIZED)

END OF SECTION

NO TEXT
THIS PAGE WAS INTENTIONALLY LEFT BLANK

PART 1 - GENERAL

1.01 DESCRIPTION

A. Work covered by this Section includes site grading as may be required to properly conduct the work required to construct this project as shown on the drawings.

B. Definitions: See Section 02221.

1.02 QUALITY ASSURANCE

A. All finished grades shall be as shown on the Drawings or as specified by the Engineer.

B. When placing fill or constructing embankments, moisten or dry fill material to the proper moisture content as determined by ASTM D1557, Method C.

1.03 SUBMITTALS

A. See Section 01300.

B. Certified copies of all results of maximum density tests and field compaction density tests.

C. Gradations of gravel for pavements.

D. Gradations of other materials to be used.

1.04 DELIVERY, STORAGE AND HANDLING

A. Delivery of borrow materials to the site or removal of soil from the site shall be done in a manner which will not cause any nuisance or allow spillage of materials from the transporting vehicle.

B. Materials which are required to be stored shall be stored in an orderly manner and at a sufficient distance away from banks of excavations and trenches to avoid overloading and prevent slides or cave-ins. Do not store materials on, over or adjacent to structures or utilities which may collapse due to the added weight.

C. Promptly remove materials not specified to be stored or reused. Burning of materials at the site is not permitted.

D. Obstruction of roads, driveways, sidewalks or interference with drainage, leaching pools, gutters, ditches or drainage channels with stored material is not permitted. If materials cannot be stored at the site to avoid such obstructions and interferences, they shall be stored away from the site and brought back when and as needed.

E. No material shall be excavated, stored or grade in regulated wetlands or open State waters unless so permitted by State Wetlands or dewatering permits.

1.05 JOB CONDITIONS

A. Keep ground surface well drained but avoid erosion. Do not place fill in water or over ice or snow.

B. Filling with frozen materials or when materials already in place are frozen, is not permitted.

C. All disturbed soil or stock piled materials shall be protected against erosion immediately after disturbance is completed or soil stockpiled. Proper soil erosion and sediment control measures shall be in place in a timely manner as required by the Engineer, Owner, Regulatory Agencies or as specified in the Soil Erosion and Sediment Control Permit.

D. Minimum soil erosion and sediment control measures shall include but not be limited to installation of desilting basins, scour holes, hay bales, silt fences, hydro seeding, mulch with tack coating, etc.

1.06 SCHEDULING AND SEQUENCING

A. Schedule the Work with Engineer and afford him adequate time and space to make all required inspections.

B. Schedule work and coordinate operations with the approved testing laboratory. If the laboratory cannot be available to perform required tests, grading and filling operations may have to be delayed in order to accomplish certain field tests.

PART 2 - PRODUCTS

2.01 FILL MATERIAL

A. Unless otherwise specified or directed by Engineer, all fill material shall be structural fill as specified in Section 02221.

B. To the extent it is available, fill material shall consist of approved on-site materials. When there is insufficient approved materials on-site, import approved additional material from off-site, at no additional cost to the Owner.

PART 3 - EXECUTION

3.01 INSPECTION

A. Verify that all boundaries of temporary and permanent easements and property lines are clearly marked in the field and that the Work will not violate these boundaries.

B. Ascertain and verify the locations and character of structures, underground lines and subsurface conditions and verify that the Work will not adversely affect them.

C. Employ a competent surveyor to provide adequate benchmarks in the vicinity of the work to provide all workmen including subcontractor with proper horizontal and vertical control to ensure all fills, cuts, structures, utilities, etc. are constructed at the proper location and elevations.

D. Provide copies of all field survey notes to the Engineer/Owner for his use in observing the construction.

E. Verify that grade stakes have been properly and accurately set prior to commencement of work.

F. Do not begin operations until conditions are satisfactory.

3.02 DISPOSAL OF MATERIALS

A. Use approved on-site materials to the extent they are available.

B. Remove from the site all unsuitable material encountered during construction. Do not store or stockpile unsuitable material at the Project site and do not incorporate unsuitable material into the Work.

3.03 SITE GRADING

A. Rough grade the portions of the site which must be raised or lowered in order to properly execute the work under other Sections.

B. Uniformly grade the work area to the lines, grades and elevations shown on the Drawings. Finished surfaces shall be reasonably smooth, compacted and free from irregular surface changes. Unless otherwise specified, the finish shall be equivalent to that ordinarily obtainable from either blade grader or scraper operations.

3.04 PREPARATION OF PAVEMENT SUBGRADES

A. Shape the entire sub grade to the required line, grade and cross section. Remove and dispose of all soft and unsuitable material and replace with an approved material. Remove and dispose of all boulders and ledge rock. Break off to a depth of not less than 6" below the sub grade. Fill resulting depressions with an approved material.

B. Roll sub grade with a roller weighing not less than 10 tons and achieve the required compaction densities specified in Section 02250. Reshape, wet and aerate sub grade, as required. Compact the entire width of the area to receive pavement, plus the areas within 5' of and parallel and adjacent to the edges of the pavement. Compact the full depth of embankments to the required density. Where cuts are encountered, thoroughly roll and compact until no further consolidation is apparent.

C. When pavements cannot be placed immediately after the preparation of the sub grade, the entire sub grade shall be reshaped and compacted to the required line, grade and cross section.

D. After rolling, the surface of the sub grade shall not show any deviation in excess of 3/8" when tested with a 10' straightedge applied both parallel to and at right angles to the centerline of the area. The elevation of the finished sub grade shall not vary more than 0.05' from the established grade and cross section.

E. Do not disturb the finished sub grade by traffic or other operations and protect and maintain in a satisfactory condition until the overlying pavement is placed.

3.05 SUBGRADE PROTECTION

A. Keep excavations shaped and well drained. Where ruts or erosion occur, add additional fill and reshape and recompact before placing paving materials.

B. The storage or stockpiling of material on prepared sub grades is not permitted.

C. All sub grades will be inspected by Engineer and paving materials shall not be placed prior to receipt of Engineer's approval. The placing of paving materials on a muddy, spongy, weaving or frozen sub grade is not permitted.

3.06 FIELD QUALITY CONTROL

A. Soils testing shall be performed by the approved independent testing laboratory in accordance with Section 02250 - Soil Compaction.

B. Engineer will establish the date, time, location, number, and types of soils tests required.

END OF SECTION

NO TEXT
THIS PAGE WAS INTENTIONALLY LEFT BLANK

PART 1 - GENERAL

1.01 DESCRIPTION

A. Work covered by this Section includes excavating, trenching and backfilling for the installation of underground lines, structures and foundations.

1.02 QUALITY ASSURANCE

A. Moisten or dry backfill to the proper moisture content as determined in accordance with ASTM D1557, Method C.

B. All sub grades shall be approved by Engineer before pipes or structures are installed or concrete is placed.

C. Provide and maintain suitable temporary crossings over open trenches.

D. When excavating in or adjacent to the traveled roadway, take whatever measures are necessary to protect the road surfaces from becoming undermined.

E. The Owner and Engineer do not guarantee that all required excavation can be executed by use of machinery. In some cases, after execution of test pits, it may be necessary to revise proposed alignments, which may preclude the use of machinery.

F. The Contractor, without permission of the Engineer, shall not remove from the line of the Work, before all backfilling has been completed, any sand, gravel, earth, or any material which may be suitable and required for the refilling or construction. All excess material, including rock, stone, earth, and pipe shall be removed and the surrounding area thoroughly cleaned. All excess excavated materials shall be hauled to and disposed of at the place or places as designated by the Owner.

G. The existing ground elevations as shown on the Drawings are believed to be reasonably correct. The Contractor shall satisfy himself, however, by actual examination of the sites of the Work, as to the existing elevations and the amount of work required under this Section.

H. Where pavement, curbing, sidewalk and/or utilities exist and where the soil characteristics are such that appropriate side slopes of the trench cannot be maintained, the Contractor shall furnish and place adequate sheeting and bracing.

I. The Contractor is advised that the use of a steel box will not be approved as a substitute for sheeting. Under proper conditions, it may be approved for use to satisfy certain obligations of the Contractor as required for protection of personnel.

1.03 SUBMITTALS

A. See Section 01300.

B. Gradations of other materials proposed for use in the Work.

C. Details of proposed sheeting shall be submitted to the Engineer. No sheeting shall be installed until written acceptance is received from the Engineer. Design and supporting calculations shall be prepared and signed and sealed by a registered New York State Professional Engineer retained by the Contractor.

1.04 DELIVERY, STORAGE AND HANDLING

A. Store excavated materials meeting the requirements for backfill in an orderly manner at a sufficient distance away from banks of excavations and trenches to avoid overloading and to prevent slides or cave-ins. Do not store materials on, over or adjacent to structures or utilities which may collapse or become damaged due to the added weight. Remove excess excavated material promptly and dispose of away from the work site.

B. Promptly remove materials not specified to be stored or reused. Burning of materials is not permitted.

C. Obstruction of roads, parking lots, driveways, sidewalks or interferences with drainage along gutters, ditches or drainage channels with stored material is not permitted. If materials cannot be stored to avoid such obstructions and interferences, they shall be stored away from the work area and brought back when and as needed.

D. No construction activity, access, storage or other use shall take place beyond the limiting boundaries as shown on the Drawings or if not shown as directed by the Engineer, the Engineer may require the Contractor to install and maintain moveable 6’ chain link fences along the boundaries, where such boundaries are violated.

1.05 JOB CONDITIONS

A. Maintain excavations and trenches free of groundwater, sewage, storm water, ice and snow during the progress of the Work and until the finished Work is safe from injury.

B. Protect sub grades against freezing by means of insulated blankets, salt hay, or other methods.

C. Backfilling with frozen materials or when materials already in place are frozen is not permitted.

1.06 SCHEDULING AND SEQUENCING

A. Do not backfill until the following conditions are met:

1. Work in General - Engineer and testing laboratory have completed all inspections and tests.

B. Except as noted above, or required by other Sections, or when approved or directed by Engineer, backfill pipe excavations as soon as the pipe has been inspected and alignment tested and accepted by the Engineer. Backfill other excavations as soon as possible after all inspections and tests have been completed and above requirements have been met. Pressure and leakage testing at the discretion of the Engineer may be performed before or after backfilling.

1.07 TESTING

A. Refer to FIELD QUALITY CONTROL in Part 3 of this Section, and the various other sections relating to particular materials and methods.

B. Laboratory testing for compliance with Specification requirements shall be conducted by an approved independent laboratory acceptable to the Engineer. Testing shall be performed as specified in FIELD QUALITY CONTROL, in the number and places as designated by the Engineer to assure compliance with the Specifications.

PART 2 - PRODUCTS

2.01 MATERIALS AND DEFINITIONS

A. Concrete Excavation - Excavation of solid concrete structures or pavements, including reinforcement and the necessary treatment thereto, which is of sufficient size and strength such as not to be readily removable in the same manner as earth excavation, which shall require cutting with a masonry saw, and which shall specifically exclude loose concrete rubble.

B. Earth - Clay, loam, sand, gravel, topsoil, and other materials not classified as rock, boulders, masonry, or concrete.

C. Backfill General Fill or General Backfill - Earth which shall specifically exclude all organic and perishable materials, frozen materials, stones larger than 3" in diameter (for structure backfill) or 6" in diameter (pipe trench backfill), and having no more than 10% of such stones, rocks, cobbles, or boulders. In the area around pipes and to 1' above the pipe, no pebbles over 1" in diameter shall be present.

D. Select Fill or Select Backfill - Sand, gravel, and similar amounts of stones, pebbles, or lumps not over 2" in largest dimension, and which does not contain clay, loam, organic material, debris, or frozen material.

E. Granular (Structural) Fill - Clean well-graded mixture of sand and gravel, conforming to the following gradation:

Sieve Size	Percent Finer by Weight
4"*	100
#4	30-85
#40	5-50
#200	0-8

* Maximum size shall be smaller where necessary for fine grading.

F. Gravel or Crushed Stone - Clean, granular material, having a minimum particle size of 1/4" and a maximum particle size of 3/4", and which shall be roughly angular in nature, with minimal roundness at particle edges and corners, and which shall specifically exclude "pea gravel", unless otherwise noted.

2.02 TIMBER

A. All timber for sheeting, lagging, soldier beams, and foundations, which will remain in the Work, shall conform in quality to what is known as merchantable lumber and shall be sound, live timber, free from sap, large cracks, shakes, loose or decayed knots, worm holes and other imperfections which may impair its strength or durability.

2.03 STEEL

A. Steel Sheet Piling- ASTM A328.

B. Steel Shapes - ASTM A36.

C. The finished material shall be free from injurious defects and shall have a workmanlike finish.

PART 3 - EXECUTION

3.01 PREPARATION

A. Prior to Work of this Section, become thoroughly familiar with the site conditions and all portions of the Work covered by this Section.

B. Ascertain and verify the locations and character of structures, underground lines and subsurface conditions and verify that the work will not adversely affect them.

3.02 TRENCH

A. General - The bedding required for underground pipe is specified in Sections 02610, 02705 and 02706.

3.03 EXCAVATING

A. Excavate for structures, tanks, pipes and sub-grades for pavement restoration or construction to the elevations indicated on the Drawings or as required and extend a sufficient distance from foundation walls, piers, footings and curbs to provide adequate clearances for construction operations, including sheeting and bracing, if required, and for inspection purposes.

B. Where unsuitable materials not meeting structural fill requirements extend below planned bearing levels, the unsuitable material shall be removed as required.

C. Trim approximately the last four inches of excavation sub-grade in earth with a smooth edged bucket or by hand just prior to placement of concrete or concrete reinforcement.

D. The Contract price shall include excavation to the specified structure, pipe line, tank, and pavement sub grade.

E. The Contract price shall include excavating and disposing of unsuitable soils, furnishing, placing and compacting granular (structural) fill, dewatering, and other related work.

3.04 SHEETING AND BRACING

A. Provide and maintain adequate sheeting and bracing as required for the safety and protection of the Work, persons and adjacent property and structures in accordance with Federal, State and Local laws, codes, ordinances and standards.

B. Engineer may, at his discretion, order sheeting and bracing to be cut-off and left-in-place. Where, in the opinion of Contractor, damage may result from withdrawing sheeting, he shall immediately notify Engineer for verification. Sheeting ordered left-in-place adjacent to piping shall be cut off not less than 12" over the top of the pipe.

C. Contractor is fully responsible for the adequacy of all sheeting and bracing used and for all damages resulting from improper quality, strength, placing, maintenance or removal of sheeting and bracing.

D. The Contractor shall be responsible for supporting and maintaining trenches and excavations. Provide adequate sheeting or shoring at the sides and end of excavations constructed of timbers or other ordered or specified.

E. All sheeting shall be continuous and shall be driven plumb at least twelve (12) inches below the proposed work unless otherwise specified, and where required, steel sheeting shall be properly interlocked. Special shapes shall be supplied for corners or changes in direction of steel sheeting and if required shall be built up by welding.

F. Where required, piling shall be driven to the full depth before excavation is started. Piling shall be of ample weight and cross section for the service intended and shall be adequately braced with timbers or structural steel. Timber sheeting shall be tongue and groove where necessary.

G. Trench sheeting shall be left-in-place until backfill has been carried to an elevation not less than twelve inches above top of pipe and shall then be cut off. The upper portion shall be removed unless otherwise directed. In quicksand, or soft ground, sheeting shall be driven to such depth below the bottom of trench as may be directed.

H. Soldier beams shall be driven vertically into the ground below the bottom of the proposed excavation. As excavation proceeds, lagging shall be placed between the flanges of the soldier beams. Walers and cross braces shall be erected as required. Soldier beams, lagging and bracing will not be considered to support and underpin adjacent structures.

I. Vibratory equipment shall not be used for sheeting extraction within 20 feet of a soil-supported structure.

3.05 MATERIALS

A. Remove unsuitable materials in excavations and trench bottoms, which are incapable of supporting pipes or structures, to the extent and depths directed by Engineer, and properly dispose of off-site. Refill and compact the excavation with Structural Fill. Refill and compact pipe trench with Select Fill.

B. Whenever the material encountered is, in Contractor's opinion, incapable of providing adequate support, he shall immediately notify Engineer for verification.

3.06 DISPOSAL OF EXCAVATED MATERIALS

A. All suitable excavated materials shall be utilized for backfill. All excess excavated material shall become the property of the Contractor. Dispose of said material as specified below.

B. All other surplus materials, rubbish, and material unsuitable for backfill, shall become the property of the Contractor and disposed of by him in a manner satisfactory to the Engineer. Site of said disposal shall be in accordance with all applicable local laws and ordinances. When so directed by the Owner, such disposal site shall be the local or regional landfill.

3.07 PREPARATION FOR BACKFILLING

A. Immediately prior to backfilling, remove all rubbish, debris, forms and similar materials from the excavation.

B. Do not backfill until the conditions of Paragraph 1.06 are met.

3.08 BACKFILLING TRENCHES

A. 12" Over Pipes - See Section 02610.

B. Remainder of Trench - Other Areas - Select Fill or General Backfill placed in not greater than 6" compacted layers, or as so required by road opening permits and/or the direction of the proper road authority.

C. During the Winter, Spring and Autumn months, protect the backfill material from frost. No payment will be made for additional backfill substituted for backfill material which has become frozen and unsuitable for use.

D. The Contractor is hereby advised that further limitations may exist that restrict the maximum permitted thickness of layers of backfill. Various municipal agencies have established rules and regulations governing the manner in which certain aspects of the required work may be accomplished. All such requirements shall be fulfilled by the Contractor.

E. Where required by governing agencies, utility companies, the Engineer, or as shown on the Drawings or designated in the Specifications, provide select backfill in lieu of standard backfill.

F. Where necessary to replace rock or other unsuitable material, furnish and place suitable backfill material, to the extent that such material is available from other portions of the Contract. If not available from other portions of the Contract, purchase additional backfill from an approved borrow pit.

G. Additional requirements for backfilling are specified under the various Sections covering pipe and paving.

3.09 FILLING AND BACKFILLING AT STRUCTURES

A. Against foundation walls uniformly spread and deposit backfill against walls in horizontal layers, not over 6" in compacted thickness. Take special precautions to prevent wedging action against the walls.

B. In open areas uniformly spread and deposit granular (structural) backfill in horizontal layers not exceeding 6" measured before compaction.

C. Do not backfill or fill until a minimum period of seven (7) days has elapsed since the placing and setting of supporting slabs. During the placement of fill or backfill, maintain the water level at all times at a sufficient depth below the surface to prevent saturation of the fill within two feet of the surface.

D. Perform backfilling or fill around structures such that the maximum differential in height of backfill or fill shall not exceed five feet. During the placement of backfill or fill, maintain the water level at all times at a sufficient depth below the surface to prevent saturation of the fill within two feet of the surface.

E. Begin compaction of backfill at the walls and work away from the walls. Hand guided power compaction equipment shall be used within five feet of walls.

F. In unpaved areas, backfill with Select Fill or General Backfill.

G. Any loose or disturbed material at the bottom of the foundation excavations should be removed or compacted thoroughly with hand-guided vibratory compactors prior to placement of concrete or backfill materials.

H. General fill shall be used to fill any abandoned existing structures except where granular structural fill would be required elsewhere by the plans and specifications.

I. Additional requirements for backfilling are specified under the various sections covering pipelines and roadway paving.

J. ***Backfill stainless steel BESST tanks per manufacturer requirements and precautions.***

3.10 TOP OF BACKFILL

A. Carry backfill up to pavement sub grade, or landscape sub grade. If paving is to be done at a later date, carry backfill up to temporary pavement sub grade, as determined by Owner.

B. Cover over Pipe - Immediately notify Engineer when the depth of cover over any pipe is less than 5'.

3.11 COMPACTION REQUIREMENTS

A. See Section 02250.

3.12 FIELD QUALITY CONTROL

A. Soils testing shall be performed by the approved independent testing laboratory in accordance with Section 02250 - Soil Compaction.

3.13 ADJUST AND CLEAN

A. Any trenches or excavations which have been backfilled and show any evidence of settlement or being improperly backfilled, or have been tested and failed, shall be re-excavated to the depth required for proper compaction and then properly refilled and compacted.

B. Replace or repair any pipe or structure which has been damaged or displaced.

END OF SECTION

NO TEXT
THIS PAGE WAS INTENTIONALLY LEFT BLANK

PART 1 - GENERAL

1.01 DESCRIPTION

A. This Section covers the requirements for soils compaction.

1.02 QUALITY ASSURANCE

A. The taking of samples and the performing of field compaction density tests and laboratory maximum density tests shall be done by the approved independent testing laboratory.

B. Provide at least one person who shall be present at all times during the soil compaction operations and who shall be thoroughly familiar with the various types of compaction equipment, proper compacting techniques and methods, and soils behavior, and who shall direct the compaction operations.

C. **Soil tests will be paid for out of the cash allowance.** Contractor to provide a sum of twenty thousand ($20,000.00) dollars in his cost to construct the sewage treatment plant. Unused funds to be returned to owner.

1.03 SUBMITTALS

A. See Section 01300.

B. Copies of the results of the laboratory maximum density tests, certified by the Testing Laboratory.

C. List and description of proposed compaction equipment.

1.04 JOB CONDITIONS

A. Compaction shall not take place in freezing weather or when materials to be compacted are frozen, too wet or moist, or too dry.

B. Schedule the Work to allow ample time for laboratory tests and to permit the collecting of samples and the performing of field density tests during the backfilling and compaction operations.

C. Protect pipes, structures and all other subsurface work from displacement or injury during compaction operations.

PART 2 - PRODUCTS

2.01 COMPACTION

A. Utilize the proper compaction methods and equipment to suit the soils and conditions encountered.

2.02 LABORATORY TEST REPORTS

A. As a minimum, the laboratory maximum density testing reports shall contain the following:

1. Laboratory's name.
2. Date, time and specific location from which sample was taken and name of person who collected the sample.
3. Moisture - Density Curve plotted on graph paper to as large a scale as is practical with all points used to derive the curve being clearly visible.
4. Designation of the test method used.
5. The maximum density and optimum moisture content.
6. A description of the sample.
7. The date the test was performed and the person who performed the test.
8. The Project name, identification and Contractor's name.
9. The signature of a responsible officer of the Testing Laboratory certifying to the information contained in the report.

B. As a minimum, the field compaction density testing reports shall contain the following:

1. Laboratory's name.
2. Date, time, depth and specific location at which the test was made and the person's name who performed the test.
3. Designation of the test method used.
4. Designation of the material being tested.

5. Test number.

6. In place dry density and moisture content.

7. Maximum density and optimum moisture content.

8. Percentage of maximum density achieved.

9. The Project name, identification and Contractor's name.

10. The signature of a responsible officer of the Testing Laboratory certifying to the information contained in the report.

2.03 OTHER MATERIALS

A. All other materials which are required to achieve adequate compaction shall be as selected by Contractor subject to approval of Engineer.

PART 3 - EXECUTION

3.01 MONITORING

A. All monitoring shall be subject to review by the Engineer or the Testing Laboratory at the request of the Engineer.

B. Verify that layers of material are no thicker than the maximum thicknesses specified in other Sections.

C. Verify that moisture content is nearly optimum.

D. Do not begin compaction operations until conditions are satisfactory.

3.02 PERFORMANCE

A. Compaction densities shown are percentages of the maximum density obtainable at optimum moisture content as determined by ASTM D1557, Method C.

B. Moisten or dry each layer of material to achieve optimum moisture content. Unless otherwise specified or directed by Engineer, compact each layer of material to the following required minimum densities:

Location	Density
Under concrete slabs, foundations, precast concrete structures, pipe lines and footings…..	95%

3.03 FIELD QUALITY CONTROL

A. Perform a laboratory maximum density test for each type of soil proposed for use or encountered in the Work. Determine optimum moisture content in accordance with ASTM D1557, Method C.

B. Engineer will notify Contractor of the time, date and exact location of all field compaction density tests. Frequency of field density tests shall be performed in accordance with the Engineer's requirements.

C. Field density and moisture testing shall conform to the requirements of ASTM D1556 or D2922 and ASTM D3017. Soils shall be described in accordance with ASTM D2488, Visual-Manual Procedure.

3.04 COORDINATION

A. See Section 01410 for requirements as they apply to making arrangements with the approved testing laboratory.

B. Provide all assistance and cooperation during testing and coordinate operations to allow ample time for the required sampling and testing.

3.05 ADJUST AND CLEAN

A. Replace or repair any pipe, structure or other Work which has been displaced, damaged, or injured.

B. Compacted soils not meeting compaction densities shall be re-excavated, recompacted and retested until all requirements are met.

END OF SECTION

PART 1 – GENERAL

1.01 CONTRACT DOCUMENTS

A. Work of this Section shall comply with the requirements of the Conditions of the Contract, with all Sections of DIVISION 1 – GENERAL REQUIREMENTS, with this Section, with the Plans and all other Contract Documents.

1.02 WORK INCLUDED

A. Work covered by this Section includes the requirements for furnishing and installing bituminous asphalt and concrete pavements as required for the Work.

B. Definitions:

1. Pavement Area – The full width of hard bituminous surface. It shall also include all paved gutters within the right-of-way.

2. Shoulder Area – All areas within the right-of-way and outside the pavement area.

3. Shoulder Opening – Work done completely within the shoulder area as defined above.

1.03 QUALITY ASSURANCE

A. Provide at least one person who shall be present at all times during the execution of this portion of the Work and who shall be thoroughly qualified and experienced in the placing of the type of pavements specified and who shall direct all work performed under this Section.

B. Use only personnel thoroughly trained and experienced in the skills required for installing and finishing asphalt and concrete pavements and in operating the required equipment.

C. Comply with the proper road authority standards such as New York State Department of Transportation, Westchester County Department of Public Works, etc.

D. All testing shall be performed by an approved testing laboratory. The Engineer may use the testing laboratory for inspection services.

E. Use only the materials and job-mix formula approved by the Engineer and/or proper road authority. Failure to consistently meet the approved job-mix formula shall be sufficient cause for the Engineer to prohibit the use of

asphalt supplier and rejection of all bituminous asphalt or concrete pavements installed.

F. Secure and pay for all permits.

G. Comply with the recommendations of the Asphalt Institute.

H. All finished paved surfaces shall be smooth, even and free from surface defects and irregularities. Edges shall be straight and shall meet existing pavements smoothly. Pavement shall present a smooth, continuous, and workmanlike appearance, free from patch work, rough edges, spalling areas, potholes, depressions, bumps, and other defects. The complete finished installation shall meet with the complete approval of the Engineer and the proper road authority with respect to appearance as well as structural integrity and other criteria.

1.04 SOURCE QUALITY CONTROL

A. All bituminous asphalt shall be supplied from State approved and inspected asphalt plants, approved by the Engineer.

B. All materials and the asphalt plant will be subject to inspections and tests by the proper road authority, Engineer and by the approved testing laboratory. Provide all equipment, materials, facilities, and labor as required thereof.

C. Perform one bituminous asphalt composition analysis for each grade of bituminous asphalt per 1,000 tons of asphalt supplied and installed. A minimum of three analyses shall be performed.

D. Perform sieve analysis of each type of gravel, broken stone, backfill material when requested, and other materials used.

1.05 JOB-MIX FORMULA

A. No paving shall commence until a job-mix formula has been submitted to and approved by the Engineer. The required job-mix formula shall be prepared by the approved testing laboratory and shall comply with New York State Department of Transportation or the proper road authority specifications. Provide all testing as required to clearly show that materials met specification requirements.

1.06 SUBMITTALS

A. Proposed job-mix formula and certified materials tests as required under Paragraph 1.04.

B. Name, address and telephone number of the asphalt plant proposed for use and a certification that the plant conforms to the requirements of these specifications.

C. Name and description of pavers, rollers and other equipment proposed for use.

D. Certified test reports on the tests required under Part 2 of this Section.

E. Methods and procedures for correcting defective, damaged or deficient work.

1.07 DELIVERY, STORAGE AND HANDLING

A. Hauling equipment shall conform to NYSS. The Contractor is advised that length of haul, manner of haul, temperature of asphalt, and similar criteria shall be properly controlled such that the job-mix of asphalt, when placed, is identical to that specified, approved, and as it left the asphalt plant. Segregation of aggregates, whether occasioned by hauling operations, improper mixing at the asphalt plant, or for other reasons, will result in rejection of the pavement. Clusters and pockets of aggregate in the finished pavement surface, with voids surrounding the aggregates, are unacceptable and will be rejected.

B. Store materials in a manner to assure good drainage, to preclude the inclusion of foreign matter and to preserve the gradation. Separate materials with bulkheads or other approved means.

2.01 TRENCH BACKFILL MATERIAL

A. In Pavement Area – Backfill material for the pavement area shall have prior approval of the Engineer. Acceptable backfill material shall be sound, hard, durable, stone, run of bank gravel, sand or other acceptable granular material, the particles of which shall be of such a size that, of that portion passing the 4" square sieve, not more than 70 percent by weight shall pass the number 40 mesh-sieve, and not more than 10 percent, by weight, shall pass the number 200 mesh-sieve, as determined by washing through the sieve in accordance with ASTM D422.

2.02 BITUMINOUS ASPHALT PAVEMENT

A. Bituminous asphalt pavements shall be constructed with approved materials as stipulated in NYSS, Section 400. Job-mix formulas shall be formulated and submitted by the State approved batching plant, through the paving contractor.

B. Course Thicknesses:

1. Base Course: In accordance with the proper road authority requirements as presented on the paving schedule included on the plans.

2. Binder Course (if required): In accordance with the proper road authority requirements as presented on the paving schedule included on the plans.

3. Top Course: In accordance with the proper road authority requirements as presented on the paving schedule included on the plans.

C. Fine aggregates and coarse aggregates (retained on a 1/8” screen) shall conform in all respects to the requirements of NYSS, Section 703-01 and 703-02 respectively. Additional NYSS requirements may apply for high-friction pavements (Types 6F, 7F, 8F and 9F).

D. Bituminous asphalt materials shall comply with NYSS, Section 702.

2.03 MIXES

A. All bituminous asphalt shall be mixed at the approved asphalt mixing plant in accordance with NYSS.

PART 3 – EXECUTION

3.01 INSPECTION

A. Prior to the work of this Section, carefully inspect the installed work of all other trades and verify that all such work is complete, tested and approved by the Engineer and to the point where this installation may be properly performed. Particular attention shall be given to items such as pipelines so as to avoid excavating pavements at a later date.

3.02 BACKFILLING TRENCHES

A. Shoulder Trenches:

1. Shoulder trenches outside of pavement area shall be backfilled and compacted within 6" of the surface. The final 6" shall consist of shoulder stone, or other approved material, thoroughly rolled and compacted to the original grade of the shoulder and conforming to grade and crown of road pavement.

2. Should settlement or washouts occur, or the shoulder area otherwise become not ride able due to trench excavation or restoration, the trench shall be brought up to grade by the addition of additional shoulder stone which shall be rerolled and compacted.

3. Where steep grades or serious water conditions are encountered, the Engineer, at his discretion, may require that shoulder openings be wholly or partly backfilled with 1-1/2" crushed stone chinked with finer material and/or that the opening be topped with 2" bituminous Concrete Binder Course.

B. Pavement Area Trenches:

1. When excavation falls within the pavement area, the pavement shall be scored to prevent excessive breaking of the pavement. In the case of longitudinal trenches and small openings along the edge of the existing pavement, the scoring line shall be a minimum of 18" from the edge of the existing pavement wearing course.

C. All Trenches:

1. Backfilling for both shoulder and pavement areas shall be done in accordance with Section 02200, except as modified herein. Backfill shall be deposited in layers not to exceed 6" in depth before compaction. Equipment to be used for compaction may include vibrating tampers of the mechanical or pneumatic type, impact type rammers, trench rollers, or any other type of equipment which will produce the required degree of compaction subject, however, to the requirements of Section 02200 and the section(s) in which the pipe is specified. Compaction shall be 95% of maximum Modified Proctor Density.

2. The Engineer may require a field demonstration of compaction equipment before approving it for use. Rolling and compaction shall be done in the longitudinal direction of the trench. If the moisture content of the soil is outside of the limits required to achieve 95% of maximum density, the Engineer will require that addition of water or the use of drier soil so that the required degree of compaction will be achieved.

3. The backfill material, previously compacted, shall be cut out to a depth sufficient to allow for the installation of the entire pavement, from surface to the prepared sub-grade. This includes the sub-base course, the base course, and the binder course of bituminous concrete material. All places where the edge of the pavement has been broken outside the neat scoring lines shall be rescored and the road metal removed. Working lengths for this operation shall be

selected so that the binder course pavement shall be re-laid within three days after the opening is made.

3.03 SUBGRADE PREPARATION

A. Prepare the sub grade as specified above and obtain Engineer's approval prior to proceeding beyond this point. Sub grade shall be to the proper lines, grades, and cross section to allow for the installation of the required thicknesses of the various pavement materials to be installed and which will result in the finished surface at proper lines, grades and cross section. The line and grade of the sub base shall be as shown on the Contract Drawings.

3.04 BASE AND/OR BINDER COURSE INSTALLATION

A. The finish top of the base or binder course shall be flush with the grade of the existing pavement. In the case of longitudinal trenches along the edge of the existing pavement, the base or binder course shall be laid to a width 6" beyond the existing edge of pavement and in no case shall be less than 2 feet wide. In such event the final wearing surface shall be laid to an outside line to match the existing gutter or edge of pavement.

B. The finish surface pavement shall not be placed until after a suitable waiting period has elapsed, to allow traffic to further compact and prove the suitability of the binder course. A minimum of 45 calendar days shall be allowed for this waiting period.

C. During the waiting period while base or binder course is in place, the Contractor shall be responsible for maintaining this base or binder course in a safe, ride able condition. Should any settlement or other defect develop, the Contractor shall immediately protect the area with lights, barricades, signs or other safety devices as may be needed, and keep it protected until repairs have been made. Should a settlement of less than 4" occur, it shall be repaired within 24 hours by patching with additional base or binder course materials. If excessive (over 4") settlements occur, indicating a pavement in this area shall be removed, the foundation soil shall be recompacted or removed and replaced if necessary, and the base or binder course shall be replaced.

3.05 SURFACE COURSE INSTALLATION

A. After final settlement has occurred, the Contractor shall place a finished pavement course which shall overlap each edge of the trench base or binder course pavement by 12". The Contractor shall remove both the base/binder course and existing pavements to a minimum depth as shown on the plans using a suitable size milling machine. Prior to placing the finish pavement course, a tack coat shall be applied to the edges of all pavement area to be overlaid, at a rate of 0.05 gallons per square yard.

B. Roll the surface course with a ten-ton static or equivalent vibratory roller, as specified by the proper road authority.

3.06 MANHOLE CASTING AND OTHER APPURTENANCES

A. Manhole frames shall be set so that the surface plane of the top of the frame meets the finish surface of the finish pavement course. Frames and covers of existing manholes that are in the area of pavement replacement shall be adjusted as described above for new manhole frames. In no case shall manhole frames and covers protrude above the finish pavement surface. Likewise, frames and covers shall not site in depressions, nor be paved over. In order to accomplish the above intent, and during the period after manhole installations and prior to finish pavement installations, temporary pavement shall be feathered from the surface plane of the manhole casting to the surface plane of the temporary pavement for a circumferential distance as determined by the Engineer. Riser rings may not be used to adjust manhole castings.

3.07 FIELD QUALITY CONTROL

A. Meet the requirements of Section 02210, 02221, Division 3, and the other appropriate sections.

B. Except where otherwise specified, the Engineer will select the date, time, location, number and type of tests required. The Contractor shall coordinate all testing with the approved testing laboratory and shall provide his fullest cooperation and assistance. All sampling and testing shall be done in the presence of the Engineer.

C. Run gradations of gravel base and gravel shoulders and for all other materials which may be proposed.

Additional gradations shall be provided when a previous gradation does not meet specification requirements and when a new source of material is proposed.

D. Thickness tests may be conducted on the sub-base, base, binder, and surface courses. The Contractor shall retain the services of a qualified laboratory to core bore pavements at locations and intervals to be selected by the Engineer. These tests may be conducted on an average of one test every 200'. Core samples shall be taken by the testing laboratory in accordance with AASHTO T168. If deficiencies in thickness are found, the Contractor shall submit his proposal for correcting the deficiencies to the Engineer for approval, and appropriate credits or adjustments in prices made by the Contractor.

E. The taking of an average of one sample for every 300 tons of asphaltic concrete, or a minimum of three (3) for each day's placement, may be ordered by the Engineer. Samples shall be taken in accordance with AASHTO T168, cored. These samples will be used to check thicknesses and when ordered by the Engineer, they shall be used for running extraction, specific gravity, and gradation tests.

F. Provide, for the Engineer's use, a sturdy shank dial thermometer, an armored thermometer, straight edge, 4' level and a thickness measuring device. Minimum lay down temperatures shall be as per the proper road authority's requirement.

3.08 ADJUST AND CLEAN

A. When specified conditions and tolerances are not met, do all work required to correct the deficiencies in a manner approved by the Engineer.

B. If any irregularities or defects remain after compaction is completed, the entire affected area of the surface course shall be promptly removed and sufficient new material placed to form a true and even surface. Roll all minor surface projects, joints, and minor honeycombed areas to a smooth finish. The final surface shall be of uniform texture conforming to the line, grade and cross section shown on the Drawings, existing, or as directed by the Engineer.

C. If settlement occurs, do all work required to eliminate the settlement in a manner approved by the Engineer.

D. Replace all asphaltic concrete where cores and samples were taken and blend in with surrounding pavement.

E. Clean all paved surfaces of dirt, stones and other debris and remove and dispose of all-site all discarded mix, trans and other debris.

F. All centerline, edge of pavement, cross walk parking, stop bars, directional arrow, stop markings, etc., pavement markers shall be repainted by the contractor as directed by the Engineer or proper road authority. The cost of replacing and repainting line stripping and/or road reflector (if present) shall be included in the contract price and cost of pavement restoration.

END OF SECTION

PART 1 - GENERAL

1.01 DESCRIPTION

A. This Section includes the material and bedding requirements for all pipe and pipe fittings for underground pressure and non-pressure piping.

B. Related work specified elsewhere includes:

Pipe and Manhole Leakage Testing	01666
Excavating, Trenching & Backfilling	02221
Underground Non-Pressure Piping	02705
Underground Pressure Piping	02706
Pipe & Pipe Fittings (Exposed)	15060
Valves	15100

C. Abbreviations:

CUP	-	Copper Pipe
CLDI/DIP	-	Cement Lined Ductile Iron Pipe
PVC	-	Polyvinyl Chloride
STP	-	Steel Pipe
SS	-	Stainless Steel

1.02 QUALITY ASSURANCE

A. Pipe and pipe fittings shall be produced in a plant of recognized reputation that is regularly engaged in the production of pipe conforming to the specified standards. Pipe and pipe fittings of the same type shall be the product of a single manufacturer, unless otherwise approved by the Engineer.

B. All pipe shall be manufactured in a plant of a member of the following organizations:

Pipe	Organization
DIP	Ductile Iron Pipe Research Association
PVC	Plastics Pipe Institute
STP	Steel Pipe Fabrications Association
CUP	Copper Development Association
SS	Tube & Pipe Association
FMA	Fabricator and Manufacturer's Association International

1.03 SOURCE QUALITY CONTROL

A. General - The manufacturers shall test and furnish certificates covering all pipe and fittings supplied under this Section. Select test samples from the run of pipe proposed to be furnished to the Project. Unless Engineer elects to witness such testing, the manufacturer shall select the samples for

testing. Advise Engineer at least two (2) week in advance of the time and location of the testing.

B. DIP

1. Perform one mill analysis and load test from each 2,500 linear feet or fractional part thereof for each size pipe. Report on dimensions and weight of pipe and hydrostatic test on each straight pipe.

C. PVC

1. Sewer Piping (Non-Pressure) - Perform the following tests:

a) Pipe shall be subjected to the Drop Impact Test in accordance with ASTM D2444.

No shattering or splitting shall be evident when the following energy is impacted:

Pipe Size, Inches	Energy, Ft.-Lbs.
4	150
6	210
8	210
10	220
12	220
15	220

b) Joints - ASTM D3212.

c) Pipe Stiffness - ASTM D2412.

d) The pipe shall be tested for flattening, and shall show no evidence of splitting, cracking, or breaking when a six inch (6") long specimen is compressed between parallel plates to a deflection of forty percent (40%) of the outside diameter of the pipe, said compression being applied and completed within two to five minutes.

2. Process Piping (Pressure)

a) The pipe shall pass the flattening test per AWWA C900a-92.

b) Minimum quick burst strength shall be as follows, when tested in accordance with ASTM D1599:

Pressure Class	Min. Burst Pressure, psi
150	755

D. CUP

1. Perform one mill analysis per type or grade of material used.

2. Report on dimensions and weight of pipe.

E. Additional Testing - In addition to the tests required above, Owner may perform additional testing on pipe delivered to the Project site.

1.04 OTHER TESTS

A. Various test and checks shall be performed, as specified in Section 01666, to determine compliance with the Specifications and Drawings. The Contractor is advised that failure of a test is suitable grounds for the Engineer to order that portion of the Work removed and reconstructed, if necessary, to meet the requirements of the Contract Documents.

1.05 SUBMITTALS

A. See Section 01300.

B. Shop Drawings, catalog cuts, and manufacturer's literature for all pipe and pipe fittings, to include coatings and linings, material specifications, dimensions, tolerances, and all related data.

C. Test certificates for the manufacturers' tests required under Paragraph 1.03.

D. Pipe manufacturers' Certificates of Compliance on pipe, with each lot of pipe supplied. Immediately turn certificates over to Engineer. Materials delivered to the site without accompanying certificates will be subject to rejection.

1.06 DELIVERY, STORAGE AND HANDLING

A. Each length of pipe delivered to the site shall be clearly marked with the name of the manufacturer, class of pipe and pipe diameter. Store in accordance with manufacturer's approved instructions.

B. Carefully handle all pipes and fittings when loading and unloading. Lift pipes and fittings by hoists or lower on skid-ways in a manner to avoid shock. Lower pipe into trench with derricks, rope or other suitable equipment.

C. Do not dump or drop pipe and fittings. Those that are dumped or dropped are subject to rejection by Engineer.

D. **Store PVC pipe under canvas or other opaque material which will allow air circulation but will eliminate the direct rays from the sun.**

E. Comply with all other recommendations of the manufacturers.

PART 2 - PRODUCTS

2.01 ACCEPTABLE MANUFACTURERS

A. Manufacturers of pipe, fittings, and appurtenances shall be members of the appropriate technical organization to which their product(s) applies.

Acceptable manufacturers are listed below, however, this does not preclude the use of an unnamed manufacturer's products, when submitted to and approved by the Engineer.

MATERIAL	ACCEPTABLE MANUFACTURER(S)
CLDI/DIP	American Ductile Iron; U.S. Pipe & Foundry Co.; Clow Corp; Griffin Pipe
PVC	Johns-Manville; Clow
CUP	Revere Copper & Brass Co.
STP	U.S. Steel, Armco, Inc. Bethlehem Steel Corp.; or equal
S.S.	Rath Manufacturing Co., Janesville WI or equal

2.02 MATERIALS - GENERAL

A. All pipe delivered to the jobsite shall be clearly marked at the factory with the class of pipe, the manufacturer's identification, and all else as required by the codes, standards, and specifications referred to under this Section. Omission of this information will be cause for rejection of pipe.

B. Caps and Plugs - Watertight, of similar manufacture and producing the same joint conditions as the pipe on which the cap or plug is placed.

C. Pipe Adaptors - Joint pipes of different materials with adaptors specifically manufactured for that purpose and as approved by the Engineer. Where dissimilar materials join, such that galvanic action may produce corrosion, provide dielectric couplings to preclude damage to the materials.

D. Force mains, water lines, and other pressurized lines, shall be laid with pressure pipe of the size, type, class, and strength as shown on the Drawings or specified in the Schedule. Fittings shall be mechanical restrained joint, as required and specified hereinafter. Fittings shall be made suitable to withstand the test pressures and loadings as specified in Section 01666.

E. Connections to Water Lines - Use fittings and adaptors as shown on the Drawings.

F. For replacement of existing pipelines, use materials and bedding to match the existing conditions, unless otherwise specified.

2.03 COPPER PIPE

A. Tubing

1. Underground installations - Soft annealed, Type K. Furnish in straight lengths or coils as required.

B. Pipe Bedding - Compacted sand and gravel.

2.04 DUCTILE IRON PIPE (UNDERGROUND)

A. Pipe - As specified in Section 15060.

B. Fittings - All underground cement lined ductile iron fittings shall be mechanical joint in accordance with ANSI/AWWA C110/A21.10 with the joint meeting the requirements of ANSI/AWWA C111/A21.11. The fitting joints shall be restrained using Megalug series 1100 joint restraints as manufactured by Ebaa Iron Sales, Inc. or equal. All fittings shall be cement lined with bituminous seal coat per AWWA C104.

C. Pipe Joints -

1. Mechanical - AWWA C111

2. Push-on - AWWA C111, "Fastite" as manufactured by American-Ductile Iron, "Tyton" as manufactured by U.S. Pipe & Foundry Co., "Ball-Tite" as manufactured by Clow, or equal.

3. Mechanical, Restrained - AWWA C111, except, provide mechanical joint retainer glands with set screws in lieu of follower gland.

D. Class - Class 53

E. Lining - Comply with the requirements of Section 15060. All ductile iron pipe shall be lined.

F. Coatings - Comply with the requirements of Section 15060. All ductile iron pipe shall be coated.

G. Pipe Bedding

1. In paved areas, use type 5 bedding per American Ductile Iron Pipe Division of American Cast Iron Pipe Company.

   Utilize gravel or crushed stone up to pipe centerline, with maximum particle size of 3/4". Utilize general fill from centerline up, with maximum particle size of 3/4" around pipe and to 1' above pipe. Fill remainder of trench in accordance with Section 02221. Compact entire trench in accordance with Section 02250.

2. In unpaved areas, use type 5 bedding as above, or use type 4 bedding with maximum particle size as above and with general fill from top of sand, gravel or crushed stone. Fill and compact remainder of trench in accordance with Sections 02221 and 02250.

2.05 POLYVINYL CHLORIDE PIPE

A. Sewer Piping (Non-Pressure)

1. Acceptable Products - "Ring-Tite Gravity Sewer Pipe" as manufactured by Johns-Manville, equivalent by Clow, Certain-Teed, Robintech, Carlon, or equal.

2. Materials - ASTM 3034; SDR 35 (or less); Stiffness: 46 psi minimum, at 5% deflection per ASTM D2412 or as shown on Drawings.

3. Standard Laying Length - Twenty feet (20'). Laying lengths of twelve and one-half feet (12'-6"') and random lengths of lesser or intermediate length may be utilized, subject to the conditions outlined in other sections.

4. Joints - Of the integral wall bell and spigot type with a solid cross section rubber ring, factory assembled, and securely locked in place to prevent displacement during assembly. Each spigot end shall be clearly marked, for the entire circumference, indicating the proper distance of insertion into the adjoining bell end, such marking being placed so as to adequately allow for expansion and contraction of the pipeline over the full range of temperature fluctuations which may occur in the final installation.

The rubber sealing ring gasket shall permit the pipe to expand, contract, and deflect, maintaining an adequate compressive force against the sealing surfaces so as to affect a continuous and positive seal under all conditions of the joint tolerances, and shall meet the requirements of ASTM F477. The sealing ring shall be the only element depended on to make the joint flexible and watertight.

5. Joint Lubricant - As recommended by the manufacturer.

6. Fittings - Of identical manufacture as the pipe with respect to strength, material, physical properties, joints, and all other pertinent criteria.

B. Process Piping (Pressure)

1. Acceptable Products - "Blue Brute Ring Tite" as manufactured by Johns-Manville, equivalent by Clow, or equal.

2. Materials - AWWA C900; Pressure Class: 150.

3. Standard Laying Length - Twenty feet (20').

4. Joint - Of the integral wall bell and spigot type with a solid cross section rubber or synthetic rubber sealing ring meeting the requirements of ASTM D1869 and ASTM F477. Sealing rings shall be of such design and construction as to properly and adequately withstand constant exposure to raw sewage, sewage gases, and related deleterious substances which are normally encountered in municipal sewers and force mains. Sealing rings shall further be marked, with a positive means of quickly identifying the proper intended use therefore, and the correct direction of insertion in the bell end of the pressure pipe. Each spigot end shall be clearly marked, for the entire circumference, indicating the proper distance of insertion into the adjoining bell end, such marking being placed so as to adequately allow for expansion and contraction of the pipeline over the full range of temperature fluctuations which may occur in the final installation.

   The sealing ring shall be the only element depended on to make the joint flexible and watertight. Thrust restraint shall be by restrained joints.

5. Joint Lubricant - As recommended by the manufacturer.

6. Fittings - Fittings for PVC pressure pipe shall be of cement lined seal coated ductile iron. Fittings shall be of the mechanical

restrained joint type and shall utilize the proper rubber sealing ring gasket for mechanical joints. In all other respects, fittings shall meet the requirements previously specified except that the joint restraints shall be Megalug Series 1100 PV or equal.

C. Embedment Materials for PVC Pipe

1. Embedment materials include a number of processed materials plus the soil types defined according to the United Soil Classification System (USCS) in ASTM D2487.

2.06 STEEL PIPE

A. Comply with the specifications contained in Section 15060.

PART 3 - EXECUTION

3.01 INSTALLATION

A. Pipe installations are specified in other Division 2 Sections under which the pipes are furnished and installed.

3.02 FIELD QUALITY CONTROL

A. In the presence of Engineer, inspect each length of pipe delivered to the job for flaws, cracks, dimensional tolerances and compliance with the applicable specifications.

B. Provide Engineer with suitable templates, calipers, feeler gauges and other equipment for checking pipes and fittings. Only pipes and fittings accepted by Engineer, and so marked, shall be installed in the Work.

END OF SECTION

PART 1 - GENERAL

1.01 DESCRIPTION

A. Work covered by this Section includes the furnishing and installation of underground non-pressure piping, where shown on the Drawings.

B. Related work specified elsewhere includes:

Leakage Testing	01666
Excavating, Trenching & Backfilling	02221
Soil Compaction	02250
Pipe and Pipe Fittings	02610
Underground Pressure Piping	02706

1.02 QUALITY ASSURANCE

A. Provide at least one person who shall be present at all times during the execution of this portion of the work and who shall be thoroughly familiar with the types of materials being installed, pipe loadings and the material manufacturers' recommended methods of installation and who shall direct all work performed under this Section.

B. Pipe installation shall be done by skilled workers and each pipe laying crew shall have a pipe laying foreman.

C. Accurately install pipe to the lines and grades shown on the Drawings, or as directed by Engineer, so that inverts are smooth and do not permit any water to be trapped or pond between structures or within manholes.

D. A full circle shall be visible at the far end, when looking through pipes running from structure to structure.

E. Deflections at joints are not permitted without the written consent of Engineer and then shall be no more than one-half the manufacturer's recommended allowable deflection.

F. Notify Engineer in advance whenever an existing pipeline conflicts with the proposed locations of the Work.

1.03 SUBMITTALS

A. See Section 01300.

B. Details of proposed methods and procedures for connecting to existing structures or pipes.

1.04 HANDLING

A. Carefully handle all pipes and fittings when loading and unloading. Lift by hoists or lower on skidways in a manner to avoid shock and damage to the pipe.

B. Use backhoes, ropes or other suitable equipment for lowering pipe into trenches where required due to weight of material and for the safety and protection of workmen, materials, equipment, property and the Work. Take particular care to avoid damaging the pipe, its coating or its lining.

1.05 JOB CONDITIONS

A. In the event that a water main or water service must be shut off because of an accidental interruption, immediately notify Engineer and the Water Utility or private owner, as applicable, to make arrangements to restore service and to provide temporary service, if required.

B. The Drawings indicate the required pipe sizes and locations of all piping, manholes, structures and appurtenances. Verify all locations and immediately notify Engineer of any discrepancies or conflicts.

C. Approval of Engineer is required prior to changing the location of any of the Work due to field conditions. Changes in pipe sizes are prohibited without a written consent from Engineer.

D. All installed piping shall form completely connected systems including connections to valves, equipment, structures, existing facilities and appurtenances specified in other Sections to result in a satisfactorily operating installation.

PART 2 - PRODUCTS

2.01 PIPE, PIPE FITTINGS

A. Materials are specified in Section 02610.

PART 3 - EXECUTION

3.01 INSPECTION

A. Verify that trench conditions and pipe bedding are properly provided in accordance with Sections 02221 and 02610.

B. Verify that pipe and fittings are in full compliance with these Specifications.

C. Reinspect each length of pipe, fittings, and joints and remove from the Project site any damaged or defective materials.

D. Do not install pipe until conditions are satisfactory.

E. Inspect each stretch of completed pipeline prior to backfilling, to ensure compliance with the Contract Documents. Do not continue with backfilling operations prior to inspection by the Engineer.

3.02 PREPARATION

A. Thoroughly clean pipe and fitting interiors, joint surfaces and gaskets prior to installation. Maintain pipes and fittings clean.

3.03 PIPE INSTALLATION - GENERAL

A. Carefully lower pipes and fittings into the trench. Apply joint lubricant in accordance with the manufacturer's recommendations. Join pipe sections and fittings.

B. Select pipe and fittings so that there will be as small a deviation as possible at the joints and so that inverts present a smooth surface. Pipe and fittings which do not fit together to form a tight-fitting joint are not permitted.

C. Use only mechanical cutters for cutting pipe.

D. Install pipes to the required lines and grades as given by the Engineer using an approved method of control. Engineer reserves the right to disapprove a method of control, including those previously approved, if, in Engineer's opinion, the method of control is not providing the accuracy required under the Contract. Pipes which are installed underground water level (which is temporarily depressed by dewatering for construction purposes) shall be ballasted for stability, by use of continuous concrete collars.

E. Maintain cleanliness of installed pipe and fitting interiors throughout the Work. Plug ends when pipe installation is not in progress so that dirt, foreign matter, water, animals and people do not enter the pipe. Drainage of construction excavations through sanitary sewers is not permitted.

F. Maintain the excavation free of water during the progress of the Work. No pipes shall be laid in water nor shall there by any joints made up in water. No separate allowance for pumping or otherwise removing water will be made. All slides or cave-ins of the trenches or cuts shall be remedied at the expense of the Contractor, and to the satisfaction of the Engineer.

G. Make connections between pipes of different materials with approved adaptors. The encasement of adaptor made connections with concrete is not permitted.

H. Commence pipe laying at the lowest point, with the spigot ends pointing in the direction of flow.

I. All adjustments to the line and grade of pipe laid on earth foundation shall be done by scraping away or filling in the earth under the barrel of the pipe, and not by blocking or wedging. Where excavation has been carried too deep but not in excess of six (6) inches, the Contractor may replace with suitable material and compact same to provide a firm foundation.

J. Wherever the excavation has been carried to a depth in excess of six (6) inches, due to the Contractor's negligence, the Engineer may order broken stone or gravel refill without additional compensation to the Contractor. In all cases the trench under the joint shall be excavated to permit an even bearing for the barrel of the pipe.

K. When unsuitable materials and/or conditions are encountered, the Engineer may direct the excavation to continue below grade and the trench filled with gravel or crushed stone foundation, or the Engineer may order other corrective measures.

L. Where required, holes and spaces to be used for joints shall be sufficiently large to leave the joint of each pipe free and not resting on the ground at any point. Every joint shall be made up in the trench.

3.04 DUCTILE IRON PIPE INSTALLATIONS

A. In addition to the requirements of AWWA C600 and this Section, note the following if mechanical joint pipe is used.

B. In laying mechanical joint pipe, take care that the spigot is centrally located in the bell. All surfaces with which the rubber gasket comes in contact shall be brushed thoroughly with a wire brush just prior to assembly, to remove all loose rust or foreign material which may be present. The same surfaces and rubber gasket shall be brushed with lubricant just prior to slipping the gasket over the spigot end and into the bell. When tightening bolts on mechanical joint pipe, it is essential that the gland be brought up toward the pipe flange evenly, maintaining approximately the same distance between the gland and the face of the flange at all points around the

socket. This may be done by partially tightening the bottom bolt first, then the top bolt, next the bolts at either side, and last, the remaining bolts. Repeat this process until the proper joint tightness is attained. Overstressing of bolts to compensate for poor installation will not be permitted.

3.05 FIELD QUALITY CONTROL

A. Provide Engineer with bench mark data, level, and all other materials, equipment and labor which he may request for the purposes of checking the installed work.

B. Afford Engineer access to the Work so that he may spot check the installations or check each length of pipe immediately after it has been installed or check it at any time after installation.

C. Inspect pipe joints and verify that they have been properly installed and made up and free from sags and deflections.

D. Perform leakage tests in accordance with Section 01666 and make any repairs and replacements necessary to meet the stipulated limits.

E. Check piping to determine if any displacement of the pipe has occurred, after trench has been backfilled to full depth, by flashing a light between structures. If the illuminated interior of the pipe line shows poor alignment, displaced pipe, or any other defects, remove and reinstall piping until all requirements are met.

3.06 ADJUST AND CLEAN

A. Correct any section of piping that is found defective in material, alignment, grade, joints or damaged.

B. In the event that dirt, debris or any other foreign material has entered any portion of the piping, flush the piping with clean water. Continue the flushing process until the piping is clean, as determined by Engineer.

END OF SECTION

NO TEXT
THIS PAGE WAS INTENTIONALLY LEFT BLANK

PART 1 - GENERAL

1.01 DESCRIPTION

A. Work covered by this Section includes the furnishing and installation of underground pressure piping for all water supply and sewage force mains.

1.02 QUALITY ASSURANCE

A. Provide at least one person who shall be present at all times during the execution of this portion of the Work and who shall be thoroughly familiar with the types of materials being installed, pipe loadings and the material manufacturers' recommended methods of installation and who shall direct all work performed under this Section.

B. Pipe installation shall be done by skilled workers and each pipe laying crew shall have a pipe laying foreman.

C. Accurately install pipe to the lines, grades and depths designated on the Drawings.

D. Deflections at joints, if approved by Engineer, shall be no more than 50 percent of the manufacturer's recommendation.

1.03 SUBMITTALS

A. See Section 01300.

B. Details of proposed methods and procedures for connecting to existing structures or pipes.

1.04 HANDLING

A. See Section 02705.

PART 2 - PRODUCTS

2.01 PIPE, PIPE FITTINGS AND PIPE BEDDING

A. Materials are specified in Sections 02221 and 02610.

2.02 VALVES, VALVE BOXES AND HYDRANTS

A. As specified on the Drawings or Section 15100.

2.03 CONNECTIONS TO EXISTING PIPELINES

A. Use fittings and adaptors as shown on the Drawings or as required to make the connection.

B. Provide all labor, material and equipment for making connections to existing pipelines.

2.04 PIPE ADAPTORS

A. Join pipes of different pipe classes and sizes with adaptors specially manufactured for that purpose and acceptable to Engineer.

PART 3 - EXECUTION

3.01 INSPECTION

A. Verify that points of connections to existing pipes have been excavated, elevations taken and given to Engineer, and Engineer has issued an authorization to proceed with the work as shown, or with modifications.

B. Verify that trench conditions and pipe bedding are properly provided in accordance with Sections 02221 and 02610.

C. All pipe and fittings shall be in full compliance with these Specifications.

D. Re-inspect each length of pipe, fittings and joints and remove from the Project site any damaged or defective materials.

E. Do not install pipe until conditions are satisfactory.

F. Inspect each stretch of completed pipeline prior to backfilling, to ensure compliance with the Contract Documents.

3.02 PREPARATION

A. Thoroughly clean interiors of pipes, fittings and appurtenances, joint surfaces, and gaskets prior to installation.

3.03 PERFORMANCE

A. Force mains shall be laid with a constant uphill slope, having no intermediate high points unless specifically ordered in writing by the Engineer, and unless an air release chamber is specified and provided.

3.04 PIPE INSTALLATION - GENERAL

A. Carefully lower pipes and fittings into the trench. Apply joint lubricant in accordance with the approved manufacturer's recommendations. Join pipe sections and fittings.

B. Select pipe and fittings so that there will be as small a deviation as possible at the joints and so that inverts present a smooth surface. Pipe and fittings which do not fit together to form a tight-fitting joint are not permitted.

C. Use only mechanical cutters for cutting pipe.

D. Install pipes to the required lines and grades using an approved method of control. Engineer reserves the right to disapprove a method of control, including those previously approved, if, in Engineer's opinion, the method of control is not providing the accuracy required under the Contract. Pipes which are installed underground water level which (is temporarily depressed by dewatering for construction purposes) shall be blasted for stability by use of continuous concrete collars.

E. Maintain cleanliness of installed pipe and fitting interiors throughout the Work.Plug ends when pipe installation is not in progress so that dirt, foreign matter, water, animals and people do not enter the pipe. Drainage of construction excavations through installed pipes is not permitted.

F. Maintain the excavation free of water during the progress of the Work. No pipes shall be laid in water nor shall there be any joints made up in water. No separate allowance for pumping or otherwise removing water will be made. All slides or cave-ins of the trenches or cuts shall be remedied at the expense of the Contractor, and to the satisfaction of the Engineer.

G. Make connections between pipes of different materials with approved adaptors. The encasement of adaptor made connections with concrete is not permitted.

H. Install pipe with plain ends pointing in the direction of the flow.

3.05 INSTALLATIONS

A. Ductile Iron Pipe - In laying mechanical and push-on joint pipe, take care that the spigot is centrally located in the bell. All surfaces with which the rubber gasket comes in contact shall be brushed thoroughly with a wire brush just prior to assembly, to remove all loose rust or foreign material which may be present. The same surfaces and rubber gasket shall be brushed with lubricant just prior to slipping the gasket over the spigot end and into the bell. When tightening bolts on mechanical joint pipe, it is essential that the gland be brought up toward the pipe flange evenly, maintaining approximately the same distance between the gland and the

face of the flange at all points around the socket. This may be done by partially tightening the bottom bolt first, then the top bolt, next the bolts at either side, and last, the remaining bolts. Repeat this process until the proper joint tightness is attained. Overstressing of bolts to compensate for poor installation shall not be permitted.

B. Pressure PVC (DR18) - Follow manufacturer's written procedure for pipe installation.

3.06 ANCHORING PRESSURE PIPES

A. Anchor all connections to piping such as tees, bends, reducers, dead end caps, and hydrants. Anchor by means of any of the following:

MECHANICAL JOINT RETAINER GLANDS AT ALL FITTING AND TIE RODS ON ONE PIPE JOINT ON EACH SIDE OF FITTINGS. INSTALL CONCRETE THRUST BLOCKS AT ALL FITTINGS.

B. Metal harness and tie rods at fittings and one pipe joint on each side of fitting. Complete harness assembly shall be given two (2) brush coats of approved asphaltum paint after assembly and tightening following proper surface preparation.

3.07 CONNECTIONS TO EXISTING PIPES

A. Where noted on the Drawings or as directed by the Engineer, the Contractor shall make connections to existing pipe.

B. Provide necessary adaptors, spool pieces and specials required to make the connections.

C. It shall be the Contractor's responsibility to shut off and drain existing pipelines as needed and to the satisfaction of the Engineer, in order to effect connections.

3.08 FIELD QUALITY CONTROL

A. Provide Engineer with bench mark data, level, and all other materials, equipment and labor which he may request for the purposes of checking the installed work.

B. Afford Engineer access to the Work so that he may spot check the installations, or check each length of pipe immediately after it has been installed, or check it at any time after installation.

C. Inspect pipe joints and verify that they have been properly installed and made up, and free from sags, high spots, and excessive deflections.

D. Perform leakage tests in accordance with Section 01666 and make any repairs and replacements necessary to meet the stipulated limits.

3.09 ADJUST AND CLEAN

A. Any section of piping that is found defective in material, alignment, grade, joint or otherwise, shall be corrected.

B. In the event that dirt, debris or any other foreign material has entered any portion of the piping, flush the piping with clean water. Continue the flushing process until the piping is clean, as determined by Engineer.

END OF SECTION

NO TEXT
THIS PAGE WAS INTENTIONALLY LEFT BLANK

PART 1 - GENERAL

1.01. SUMMARY

This Section specifies requirements for furnishing and installing concrete reinforcement.

1.02. REFERENCES

The following is a listing of the publications referenced in this Section:

ACI 315 Details and Detailing of Concrete Reinforcement

ACI 318 Building Code Requirements for Reinforced Concrete

ASTM A 82 Steel Wire, Plain, for Concrete Reinforcement

ASTM A 184 Fabricated Deformed Steel Bar Mats for Concrete Reinforcement

ASTM A 185 Steel Welded Wire, Fabric, Plain, for Concrete Reinforcement

ASTM A 615 Deformed and Plain Billet-Steel Bars for Concrete Reinforcement

Concrete Reinforcing Steel Institute (CRSI) - Manual of Standard Practice Placing Reinforcing Bars

1.03. DELIVERY, STORAGE, AND HANDLING

A. Deliver concrete reinforcement in bundles marked with metal tags indicating size, length, and mark number.

B. Store and handle materials to prevent corrosion, damage to coating or contamination that could impair bond.

1.04. SUBMITTALS

The following items shall be submitted to the Engineer, except as otherwise noted.

A. Shop Drawings

1. As per Division 1, "Shop Drawings, Catalog Cuts and Samples".
2. Details indicating placement, cover, splice locations, lap lengths, grade, bar size, length, mark number, bending schedule, bending diagram, type of coating, material used to repair coating, and types of chairs, spacers and tie wire for all concrete reinforcement.
3. All proposed changes to the size, spacing or arrangement of the reinforcing steel shown on the Contract Drawings shall be clearly flagged as such on the shop drawings.

B. Catalog Cuts, Material Certification and Test Results

1. As per Division 1, "Shop Drawings, Catalog Cuts and Samples".
2. Catalog cuts for chairs, spacers, and hangers.
3. Certified mill test reports for all concrete reinforcement.

C. Samples

1. As per Division 1, "Shop Drawings, Catalog Cuts and Samples".

PART 2 – PRODUCTS

2.01. MATERIALS

A. Reinforcing Bars: ASTM A 615, deformed, Grade 60, unless otherwise shown on the Contract Drawings.

B. Welded Wire Fabric: Types shall be as shown on the Contract Drawings and shall comply with the following:

1. Plain, ASTM A 185, flat sheets for size W5 and larger and coiled rolls for sizes below W5.

C. Deformed, ASTM A 497 flat sheets for sizes D5 and larger and coiled rolls for sizes below D5.

2.02. ACCESSORIES

A. Tie Wire: Provide minimum 16-gage, annealed type. Provide nylon, plastic, or epoxy-coated wire for use with epoxy-coated and galvanized reinforcing bars, if any.

B. Supports for Reinforcement: Provide bolsters, chairs, spacers, and other devices for spacing, supporting and fastening reinforcing bars and welded wire fabric in place. Use galvanized steel wire bar type supports complying with CRSI standards and as follows:

1. For supporting epoxy-coated reinforcing bars, use plastic coated supports, or supports fabricated from or coated with a dielectric material.

2. For slabs-on-grade, use supports with horizontal plate runners.

2.03. FABRICATION

A. Fabricate concrete reinforcement as shown on the Contract Drawings and on approved shop drawings, in accordance with ACI 315 "Tolerances".

B. Bend all concrete reinforcement cold. Heating of bars or wire fabric is prohibited.

PART 3 – EXECUTION

3.01. INSTALLATION

A. Place concrete reinforcement as shown on the Contract Drawings and on approved shop drawings. Where not shown on the Contract Drawings, comply with CRSI "Placing Reinforcing Bars".

B. Clean concrete reinforcement of loose rust, mill scale, earth, ice, and other materials that reduce or destroy bond with concrete.

C. Accurately position, support, and secure concrete reinforcement against displacement by formwork, construction, or concrete placement operations. Locate and support concrete reinforcement by chairs, runners, bolsters, spacers, and hangers in accordance with CRSI Manual of Standard Practice". Do not interfere with placement of embedded items.

D. When a vapor barrier is shown on the Contract Drawings, do not cut or puncture during concrete reinforcement placement.

E. Place concrete reinforcement to obtain covers shown on the Contract Drawings for concrete protection, or in accordance with ACI 318 "Concrete Protection for Reinforcement", if not shown on the Contract Drawings. Arrange, space and securely tie bars and bar supports to hold concrete reinforcement in position during concrete placement operations. Set ties so ends are directed into concrete, not toward exposed concrete surfaces.

F. Install welded wire fabric in lengths as long as practical. Lap adjoining pieces at least one full mesh and lace splices with wire, but in no case shall lap be less than requirements of ACI 318 "Splices of Welded Deformed Wire Fabric in Tension" or "Splices of Welded Plain Wire Fabric in Tension". Offset end laps in adjacent widths to prevent continuous laps in either direction.

G. After concrete placement, do not field bend partially embedded concrete reinforcement except as shown on the Contract Drawings.

END OF SECTION

PART 1 – GENERAL

1.01 CONTRACT DOCUMENTS

A. Comply with Contract Documents:

1. All Work of this Section shall comply with the requirements of the Conditions of the Contract (General, Supplementary and Special), with all Sections of Division 1 – General Requirements, with this Section, with the Drawings and with all other Contract Documents.

1.02 WORK INCLUDED

A. The Work of this Section of the Specification shall include all labor, materials, plants, tools, equipment, appliances and services necessary to complete the Work as shown in the Drawings, as specified herein, as required by job conditions, and as required by governing authorities having jurisdiction.

1.03 CODES AND STANDARDS: The Contractor shall comply with provisions of the following codes, specifications and standards, except where more stringent requirements are shown or specified:

ACI 301, “Specifications for Structural Concrete for Buildings”

ACI 318, “Building Code Requirements for Reinforced Concrete”

International Building Code

NYS Uniform Code Supplement

Concrete Reinforcing Steel Institute, “Manual of Standard Practice”

1.04 SUBMITTALS

A. Reinforcing steel, dimensioned layout (including embedded items) shop drawings as well as other items as required, shall be submitted to Engineer for acceptance in accordance with the requirements of the Contract Documents.

B. Design Mix: Submit test results and other data on each concrete mix design, including aggregate graduations for each mix. Submit proposed mix designs within 45 days after notice to proceed, or at least 30 days before initial placement of concrete, whichever date is earlier.

1.05 QUALITY ASSURANCE

A. Use adequate numbers of skilled workmen who are thoroughly trained and experienced in the necessary crafts and who are completely familiar with the specified requirements and the methods needed for proper performance of the work of this Section.

PART 2 – PRODUCTS

2.01 CONCRETE INGREDIENTS

A. Cement: A standard brand Portland cement, accepted by Engineer, conforming to ASTM C150, Type I, II. Cement shall be from a single domestic source.

B. Aggregate: Coarse and Fine Aggregate shall conform to ASTM C33.

C. Water shall be potable

D. Admixtures:

1. Water-Reducing: The admixture shall conform to ASTM C494.

2. Air Entraining: The admixture shall conform to ASTM C260.

3. Prohibited Admixtures: Calcium Chloride, thiocyanates or admixtures containing more than 0.05% chloride ions are not permitted

E. Fly Ash shall conform to ASTM C618, Class C or F except that maximum carbon content shall not exceed 3 percent and maximum percentage retained on the #325 sieve shall not exceed 20 percent. Fly ash shall be from a single, domestic source.

2.02 FORMS: The Contractor shall furnish and place all forms as required and shall remove them as directed.

2.03 REINFORCEMENT MATERIALS

A. Reinforcing Bars: ASTM A615, Grade 60, new billet steel, deformed, produced by domestic manufacturer. Rail, axle, or re-rolled steel shall not be used.

B. Welded Steel Wire Fabric: Flat Sheets, ASTM A497 for sizes D4.0 and larger and A185 for sizes less than W4.0, produced by a domestic manufacturer.

C. Bar and Mesh Supports: Support reinforcement securely on precast concrete blocks or other methods as accepted by the Engineer.

2.04 MISCELLANEOUS MATERIALS:

A. Non-Shrink Grout: Non-shrink grout shall be “Masterflow 713” by Master Builders, “Crystex” by L&M Constuction Chemical Inc., “Euco NS” by the Euclid Chemical Co. or other accepted by Owner’s Representative. The factory pre-mixed grout shall conform to ASTM E1107, “Standard Specification for Packaged Dry, Hydraulic-Cement Grout (Non-Shrink).”

B. Porous Fill under slabs-on-ground shall consist of clean, hard, durable, natural rock, free of organic matter, rock dust and other contaminants, and shall be well graded within the requirements of ASTM C33, Size #467. Material conforming to AASHTO Specification M80 will be accepted for use in the Work.

C. Vapor Barrier for slab-on-ground shall be Moistop Grade 395 by FortiFiber Corporation or Ply Bar Plus II by Glas-Kraft, Inc., or other accepted by Engineer. Lap sealant shall be the manufacturer’s recommended bonding material.

D. Drilled-In Anchors into Work shall be expansion type or adhesive type.

1. Expansion Type: Kwik Bold II by Hilti Fastening Systems, Tulsa, Oklahoma, Red Head Wedge Anchors, by ITT Phillips Drill Division, or other accepted by Engineer.

2. Adhesive Type: SET-XP by Simpson Strong-Tie, HIT RE500 by Red Head, or other accepted by Engineer.

2.05 CONCRETE

A. Concrete shall be air-entrained to 5+/- 1-1/2 percent, normal weight with compressive strength (f’c) of 4,000 psi minimum, a maximum slump of 5 +/- 1” inches, minimum 610 pounds of cement per cubic yard, and maximum water-cement ratio of 0.46.

B. Superplasticized Concrete: Prepare with a high-range, water-reducing admixture (HRWR). Contractor's mix design shall include also written descriptions of Contractor's methods for mixing, placing and conveying such concrete. HRWR mixes shall be prepared to provide concrete with 7 +/- 1-inch maximum slump while adhering to the water-cementituous ratio maximum specified. HRWR mixes shall arrive at the job site at 5 +/- 1 inch maximum slump, be verified, then high range water reducing admixture added to increase slump to an acceptable level.

C. Curing: All finished concrete shall be protected and kept moist continuously for a minimum of three days, and as directed.

D. Concrete slabs placed at air temperatures below 50° F shall contain non-corrosive accelerator.

E. Surface finish: Top shall be float finished or as directed.

END OF SECTION

PART 1 – GENERAL

1.01 SCOPE OF WORK

A. Furnish all labor, materials, and equipment to install precast concrete structures, frames and covers, access hatches, manhole rungs, ladders and appurtenances as shown on the Drawings and as specified herein.

1.02 RELATED WORK

A. Excavation, backfill and soil compaction are included in Sections 02221 and 02250.

B. Painting is included in Section 09900.

C. Cast-in-place concrete is included in Section 03300.

D. Reinforcing steel is included in Section 03210

1.03 SUBMITTALS

A. Shop drawings, product data, materials of construction, and details of installation shall be submitted in accordance with Section 01300. Submittals shall include the following:

1. Base sections, riser sections, eccentric and concentric conical top sections, flat slab tops, grade rings with notarized certificate indicating compliance with ASTM C478.

2. Pipe connection to manhole.

3. Manhole rungs, including method of installation and notarized certificate indicating compliance with pull-out resistance test specified in this Section.

4. Manhole frame and cover with notarized certificate indicating compliance with ASTM A48, Class 30.

5. Method of repair for minor damage to precast concrete sections.

B. Samples (if applicable)

C. Design Data

1. Precast concrete structures:

a. Eight copies of sectional plan(s) and elevations showing dimensions and reinforcing steel placement.

b. Eight copies of structural calculations including assumptions.

c. Eight copies of concrete design mix.

D. Test Reports

1. Precast concrete structures:

a. Six copies of concrete test cylinder reports from an approved testing laboratory certifying conformance with specifications.

1.04 REFERENCE STANDARDS

A. American Society for Testing and Material (ASTM)

1. ASTM A48 – Specification for Gray Iron Castings

2. ASTM A615 – Standard Specification for deformed and Plan Billet-Steel Bars for Concrete Reinforcement.

3. ASTM C32 - Specification for Sewer Manhole Brick (made from clay or slate)

4. ASTM C33 – Specification for Concrete Aggregates

5. ASTM C150 – Standard Specification for Portland Cement

6. ASTM C207 – Specification for Hydrated Lime for Masonry Purpose.

7. ASTM C443 - Specification for Joints for Circular Concrete Sewer and Culvert Pipe, Using Rubber Gaskets.

8. ASTM C478 – Standard Specification for Precast Reinforced Concrete Manhole Sections.

9. ASTM D4101 – Specification for Propylene Plastic Injection and Extrusion Materials.

B. American Concrete Institute (ACI)

1. ACI318 – Building Code Requirements for Reinforced Concrete.

2. ACI350R – Concrete Sanitary Engineering Structures.

C. Occupational Safety and Health Administration (OSHA)

D. Westchester County Department of Health (WCDH)

E. Where reference is made to one of the above standards, the revision in effect at the time of bid opening shall apply.

1.05 QUALITY ASSURANCE

A. All material shall be new and unused.

B. Materials' quality, manufacturing process and finished sections are subject to inspection and approval by Engineer, the WCDPW and WCDH. Inspection may be made at place of manufacture, at work site following delivery, or both.

C. Materials shall be examined for compliance with ASTM specifications, these specifications and approved manufacturer's drawings. Additional inspection criteria shall include: appearance, dimensions, blisters, cracks and soundness.

D. Materials shall be rejected for failure to meet any Specification requirement. Rejection may occur at place of manufacture, at work site or following installation. Mark for identification rejected materials and remove from work site immediately. Rejected materials shall be replaced at no cost to Owner.

PART 2 – PRODUCTS

2.01 GENERAL

A. Reference to a manufacturer's name and model or catalog number is for the purpose of establishing the standard of quality and general configuration desired.

B. Like items of material/equipment shall be the end products of one manufacturer in order to provide standardization for appearance, operation, maintenance, spare parts and manufacturer's service.

C. Provide lifting lugs or holes in each precast section for proper handling.

2.02 PRECAST CONCRETE SECTIONS

A. Precast concrete base sections, riser sections, transition top sections, eccentric cones, flat slab tops and grade rings shall conform to ASTM C478 and WCDPW standards and meet the following requirements:

1. Bottom slab thickness shall equal the riser wall thickness or top slab thickness, whichever is greater, or as shown on the drawings.

2. Riser and transition top sections shall have tongue and groove joints.

3. Sections shall be cured by an approved method.

4. Precast concrete sections shall be shipped after concrete has attained at least 4,000 psi compressive strength at 28 days.

5. Design precast concrete base, riser, transition top, flat slab top and grade ring for a minimum H-20 loading plus earth load.

6. Mark date of manufacture, name and trademark of manufacturer on the inside of each precast section.

7. Construct and install precast concrete base as shown on the drawings.

8. Provide integrally cast knock-out precast concrete panels at locations, and with sizes shown on drawings. Knock-out panels shall have no reinforcing steel.

9. Each joint shall be sealed using a butyl rubber seal, meeting the requirements of Federal Spec. SS-S-00210 (GSA-FSS).

2.03 ACCESS HATCH

A. Access hatches to be aluminum with stainless steel hardware, designed for H-20 loading and anchored to new concrete. Access hatch to be as manufactured by Halliday Products or equal. Size as shown on drawings.

2.04 LADDER

A. Contractor shall provide and install fiberglass ladder in the wet well valve chamber and flow meter chamber. Ladder shall be supported at every 4'-0'' o/c using stainless steel fasteners. Ladder rungs shall be 1'' dia. Or 1-1/4''x1-1/4''x 1/4'' square tube with factory applied non-skid solid bar grit safety surface. Side rails shall be 1-3/4''x 1-3/4'' x 1/4'' square tube. Ladders shall be as manufactured by FibreGrate or approved equal. Ladder in wet well shall be provided with stainless steel safety climb with ladder up post.

2.05 BRICK MASONRY

A. Bricks shall be sound, hard, uniformly burned, regular and uniform in shape and size. Underburned or salmon brick shall not be acceptable. Only whole brick shall be used.

1. Bricks for channels and shelves shall conform to ASTM C32, Grade SS except that the mean of five tests for absorption shall not exceed 8 percent and no individual brick exceed 11 percent.

2. Bricks for raising manhole frames to finished grade shall conform to ASTM C62.

B. Mortar shall be composed of one part Portland cement, two parts sand, and hydrated lime not to exceed 10 lbs to each bag of cement. Portland cement shall be ASTM C150, Type II; hydrated lime shall confirm to ASTM C207.

2.06 MANHOLE FRAME AND COVER

A. Manhole frames and covers shall be of good quality, strong, tough, even grained cast iron, smooth, free from scale, lumps, blisters, sand holes and defects of any kind which render them unfit for the service for which they are intended. Manhole covers and frame seats shall be machined to a true surface. Castings shall be thoroughly cleaned and subject to hammer inspection. Cast iron shall conform to ASTM A48, Class 30. Manhole frame and cover shall be “Type F” as manufactured by Campbell Foundry or approved equal.

2.07 JOINTING PRECAST STRUCTURES

A. Seal tongue and groove joints of precast structure sections with preformed flexible joint sealant.

B. Completed joint shall withstand 15 psi internal water pressure without leakage or displacement of gasket or sealant.

2.08 MANHOLE RUNGS

A. Manhole rungs shall be either of the following type:

1. Steel reinforced, copolymer polypropylene 14-inch wide, M.A. Industries, Inc., PF Series or equal. Copolymer polypropylene shall conform to ASTM D4101 Classification PP200 B33450 Z02. Steel reinforcing shall be continuous throughout rung.

2.09 PIPE CONNECTIONS TO PRECAST SECTIONS

A. Connect pipe to precast sections in the following ways:

1. Flexible sleeve – Integrally cast sleeve in precast section or install sleeve in a formed or cored opening. Fasten pipe in sleeve with stainless steel clamp(s). Coat stainless steel clamp(s) with bituminous material to protect from corrosion. Flexible sleeve shall be Lock Joint Flexible Sleeve; Kor-N-Seal connector; PSX Press-Seal Gasket or equal.

2. Compression gasket – Integrally cast compression gasket in precast section. Insert pipe into compression gasket. Compression gasket shall A-Loc, or equal.

PART 3 – EXECUTION

3.01 INSTALLATION

A. Precast Structure Installation

1. Precast structure shall be constructed to the dimensions shown on the drawings and as specified in these specifications. Protect all work against flooding and flotation.

2. Place precast base on a bed of 12-inch screened gravel as shown on the drawings. Set manhole base grade so that a maximum adjustment of 8 inches is required to bring the manhole frame and cover to final grade. Set base grade of other precast structures so that no top adjustment is needed.

a. Use precast grade rings or brick and non-shrink mortar to adjust manhole frame and cover to final grade.

3. Set precast concrete barrel sections and structures plumb with a ¼ inch maximum out of plumb tolerance allowed. Seal joints of precast barrel sections with preformed flexible joint sealant in sufficient quantity to fill 75 percent of the joint cavity. Fill the outside and inside joint with non-shrink mortar and finished flush with the adjoining surfaces.

4. Allow joints to set for 14 hours before backfilling unless a shorter period is specifically approved by the Engineer.

5. Plug holes in the concrete barrel sections required for handling with a non-shrinking grout or non-shrinking grout in combination with concrete plugs. Finish flush on the inside.

6. Core holes in precast sections to accommodate pipes prior to setting precast sections in place to prevent jarring, which may loosen the mortar joints.

7. Backfill carefully and evenly around precast sections in 12” lifts and compaction.

B. Pipe Connections

1. Construct manhole pipe connections, including pipe stubs, as specified above. Close or seal pipe stubs for future connections with a gasketed watertight plug.

C. Manhole Rung Installation

1. Steel Reinforced Polypropylene Plastic Manhole Rungs

a. Preform holes for manhole rungs during casting of the riser and cone sections, using tapered form pins specifically made for preforming manhole-rung holes.

b. Drive manhole rungs into preformed holes after concrete has developed a compressive strength of 4,000 psi.

c. Alternatively, cast manhole rungs into riser and cone sections when concrete is placed.

d. Drilling holes for manhole rungs may be used to accommodate field conditions when approved by the Engineer. Drill holes of diameter, spacing and depth required by manhole-rung manufacturer.

D. Setting Manhole Frame and Cover

1. Set manhole covers and frames in a full mortar bed. Utilize bricks a maximum of 8 inches thick, to assure frame and cover are set to the finished grade. Set manhole frame and cover to final grade prior to placement of permanent paving.

3.02 LEAKAGE TESTS FOR WET WELL

A. The Engineer will visually inspect structure(s) for possible cracks, voids, etc before backfilling of structures is allowed. Seal all joints to the satisfaction of the Engineer.

B. An exfiltration test on the wet well shall be performed in the presence of the Engineer, the WCDPW and WCDH representative.

3.01 CLEANING

A. Thoroughly clean all new structures of all silt, debris and foreign matter of any kind, prior to final inspections.

END OF SECTION

PART 1 - GENERAL

1.01 DESCRIPTION

A. Work covered by this Section includes the furnishing and installation of aluminum access doors as shown and required.

1.02 QUALITY ASSURANCE

A. “Specifications for Aluminum Structures” of the Aluminum Association.

B. Provide at least one person who shall be present at all times during the execution of this portion of the Work and who shall be thoroughly familiar with the type of materials being installed and the best methods for their installation and who shall direct all work performed under this Section.

C. All welding shall be performed by operators who have been recently qualified, as prescribed in "Qualification Procedure" of the American Welding Society, to perform the type of work required.

1.03 SOURCE QUALITY CONTROL

A. One mill analysis per type of material, unless otherwise specified elsewhere in these Specifications for particular materials.

1.04 SUBMITTALS

A. See Section 01300.

B. Fabrication and shop drawings, clearly indicating all sizes and materials.

C. Copies of all mill analyses.

D. Proposed methods for protection of dissimilar materials.

1.05 DELIVERY, STORAGE AND HANDLING

A. Carefully deliver, store and handle all aluminum access doors to avoid penetration of finishes, scratching or marring of exposed surfaces, bending, twisting, deforming and any other types of damages.

B. Take particular care in storing ferrous metals to avoid rusting.

PART 2 - PRODUCTS

2.01 ALUMINUM ACCESS DOORS

A. Stainless steel compression spring assist

B. Auto-lock stainless steel hold open arm with release handle

C. Stainless steel hinges and attaching hardware

D. Stainless steel slam lock with removable key.

E. Built-in neoprene cushion/gasket

F. Non-ozone depleting bituminous coating

G. AASHTO H-20 loading capacity

H. 25-year guarantee

Aluminum access doors/hatches shall be as manufactured by Halliday Products, Orlando, Florida and as a minimum shall be the following or as shown on the drawings:

24" x 42" – Single Leaf Model H1C2442 (Constant Head Box)
30" x 30" – Single Leaf Model H1C3030 (Flow Meter Manhole)

2.02 SPECIFICATIONS

A. Doors shall have a 1/4" thick, mill finish, extruded aluminum channel frame, incorporating a continuous concrete anchor.

B. 1-1/2" drainage coupling shall be located in the front left corner of the channel frame.

C. Bituminous coating shall be applied to the frame exterior where it will come into contact with concrete.

D. Door panels shall be 1/4" aluminum diamond plate, reinforced to meet AASHTO H-20 loading. PSF, and shall not protrude into the channel frame when in the open position.

E. Doors shall open to 90 degrees and automatically lock with stainless steel hold open arms with aluminum release handles.

F. Hold open arms shall incorporate enclosed stainless steel compression spring assists.

G. Doors shall close flush with the frame and rest on a built-in neoprene cushion/gasket.

H. Hinges and all fastening hardware shall be stainless steel.

I. Units shall lock with a stainless-steel slam lock with removable key and have a non-corrosive handle.

J. Units shall be guaranteed against defects in material and/or workmanship for a period of 25 years.

PART 3 - EXECUTION

3.01 PREPARATION

A. Make all necessary field measurements prior to shop drawing submittal to ensure precise fit of all items and verify that the aluminum access doors installed in strict accordance with the original design.

B. Do not proceed with fabrication or installation until conditions are satisfactory.

3.02 COORDINATION

A. Provide templates and setting drawings for embedments. Deliver and install all items at the proper time so that items to be embedded will be available when required.

3.03 DISSIMILAR MATERIALS

A. Aluminum - Do not allow aluminum to come in contact with other metallic materials (except zinc, zinc coated metals and stainless steel), concrete, absorbent materials likely to be continuously or repeatedly wet, or wood containing wood preservatives (other than pentachlorophenol, Wolman salts, creosote or zinc naphthenate). Aluminum surfaces which may contact dissimilar materials shall be protected with a coating of asphalt or zinc chromate primer, separated by a gasket or by any other approved method. Fasteners shall be stainless steel.

B. Stainless Steel - Protect stainless steel from contact with all other metallic materials, except aluminum, in the same manner as that specified for aluminum. Use only stainless-steel fasteners.

C. Other Materials - Protect all other dissimilar materials in the same manner as that specified for aluminum and use only fasteners of like material.

3.04 FABRICATION

A. Fabricated metal work shall be well formed to shape and size, with sharp lines and angles. Shearing and punching operations shall leave clean, true lines and surfaces. Weld or high strength bolt all permanent connections. All curved work shall be evenly sprung.

B. Castings shall be sound and free from warp, holes or other defects that impair their strength or appearance. Exposed surfaces shall have a smooth finish and sharp, well defined lines and arises. Machine joints, where required, shall be milled to a close fit. Provide necessary rabbets, lugs and brackets so that work can be assembled in a neat and substantial manner.

C. Conceal all fastenings where practicable. If impracticable, submit other methods of fastening for approval. The thickness of metal and details of assembly and supports shall give ample strength and stiffness. Joints which will be exposed to the weather when erected shall be formed to exclude water. Provide all holes and connections for the work of other trades.

D. Perform all welding in accordance with the "Structural Welding Code" of the American Welding Society. Welding shall be continuous along entire area of contact, except where tack welding is permitted. Tack welding is not permitted on exposed surfaces. Corners of structural shapes shall be mired.

E. Supplementary parts necessary to complete each item, though such work is not definitely shown or specified, shall be included. All miscellaneous metal work, where not shown in detail on the Drawings, shall be designed by the fabricator in accordance with good accepted standard practice.

F. Details shall be designed for appearance as well as utility. Protruding members, joints, corners, and the like shall be finished in appearance.

3.05 INSTALLATION

A. Work shall be in conformity with the Drawings, and with approved shop drawings, accurately located and set to required grades and levels, securely fastened in place, and complete in every respect.

B. Items to be cast into concrete shall be accurately positioned and securely held in place while concrete is being placed. Attachment to metal shall be by welding or bolting, as approved. Required holes in metal shall be drilled to proper size; burning of holes is not permitted.

C. Provide built-in anchors and bolts at all locations where practicable. Where impracticable, use expansion bolts to attach work to concrete and solid

masonry and toggle bolts for attaching to hollow masonry. Expansion bolts are not permitted for use on work which is subject to vibration or movement.

3.06 ADJUST AND CLEAN

A. After initial installation, make all final adjustments which may be required.

B. Touch-up all shop coatings damaged during transportation, storage, or installation, or where voids exist, using the primer paint used for the original shop coats. Runs, sags, drips and rust on exposed surfaces are not permitted.

C. Remove all protective coverings, clean all metal of all foreign materials and repair or replace defective work.

3.07 PROTECTION

A. Protect the work at all times and repair or replace any damaged work.

END OF SECTION

NO TEXT
THIS PAGE WAS INTENTIONALLY LEFT BLANK

PART 1 – GENERAL

1.01 SCOPE

Work of this Section shall include all labor, materials, equipment, plant and incidentals required to complete all painting and all spray-on sealant application as indicated on the Drawings and specified herein below.

1.02 WORK NOT INCLUDED

A. Do not include painting which is specified under other Sections.

B. Unless otherwise indicated, painting is not required on surfaces in concealed areas and inaccessible areas such as furred spaces, utility tunnels, pipe spaces, and duct shafts.

C. Metal surfaces of anodized aluminum, stainless steel, chromium plate, copper, bronze, and similar finished materials will not require painting under this Section except as may be specified herein.

D. Do not paint any moving parts of operating equipment such as vents, etc., unless otherwise indicated.

E. Do not paint over any required labels or equipment identification, performance rating, name, or nomenclature plates.

1.03 DEFINITIONS

The term "paint", as used herein, means all coating systems materials including primers, emulsions, epoxy, enamels, sealers, fillers and other applied materials, whether used as prime, intermediate or finish coats.

1.04 QUALITY ASSURANCE

A. Qualification of Manufacturer: Products used in the work of this Section shall be produced by manufacturers regularly engaged in the manufacture of similar items and with a history of successful production acceptable to the County Engineer.

B. Qualifications of Workmen:

1. Provide at least one person who shall be present at all times during execution of the work of this Section, who shall be thoroughly familiar with the specified requirements and the materials and methods needed for their execution, and who shall direct all work performed under this Section.

2. Provide adequate numbers of workmen skilled in the necessary crafts and properly informed of the methods and materials to be used.

3. All work of this Section shall be performed in the most professional workmanlike fashion. The County Engineer shall be the sole judge of all completed work.

C. Paint Coordinator:

1. Provide finish coats which are compatible with the prime coats used.

2. Review other Sections of these Specifications as required, verifying the prime coats to be used and assuring compatibility of the total coating system for the various substrata.

3. Upon request, furnish information on the characteristics of the specific finish materials to ensure that compatible prime coats are used.

4. Provide barrier coats over non-compatible primers, or existing coatings, or remove the primer and re-prime as required.

5. Notify the County Engineer in writing of anticipated problems in using the specified coating systems over prime coating supplied under other Sections.

1.05 SUBMITTALS

A. Manufacturer's Data: Within 15 calendar days after award of the contract, submit:

1. Complete materials list of all items proposed to be furnished and installed under this Section.

2. Manufacturer's specifications and other data required to demonstrate compliance with the specified requirements.

3. For information only, submit two (2) copies of manufacturer's specifications, including paint analysis and application instructions for each material. Indicate by transmittal, that a copy of each manufacturer's instructions has been distributed to the applicator.

Upon receipt of review comments, make all revisions and corrections, and resubmit if so required.

B. Samples:

1. Following the selection of colors and glosses by the County Engineer, as described in Paragraph 2.1.D below, submit samples for the County Engineer’s review.

a. Provide two samples of each color and each gloss for each

material on which the finish is specified to be applied.

b. Except as otherwise directed by the County Engineer, samples shall be approximately 12" square.

c. If so directed by the County Engineer, submit samples during progress of the work of this Section in the form of actual application of the approved materials on actual surfaces to be painted.

2. Revise and resubmit each sample, as required, until the County Engineer's approval of gloss, color, and texture is achieved.

1.06 PRODUCT HANDLING

A. Delivery of Materials: Deliver all materials to the job site in original, new, and unopened containers bearing the manufacturer's name and label showing at least the following information:

1. Name or title of the material;

2. Fed. Spec. number, if applicable;

3. Manufacturer's stock number;

4. Manufacturer's name;

5. Contents by volume for major constituents;

6. Thinning instructions;

7. Application instructions.

B. Storage of Materials: Provide proper storage to prevent damage to, and deterioration of, paint materials.

C. Protection: Use all means necessary to protect the materials of this Section before, during, and after installation and to protect the work and materials of all other trades.

D. Replacements: In the event of damage, immediately make all repairs and replacements necessary to the approval of the County Engineer and at no additional cost to the County.

1.07 JOB CONDITIONS

A. Surface Temperatures: Do not apply solvent-thinned paints when the temperature of surfaces to be painted and the surrounding air temperature are below 45 degrees F, unless otherwise permitted by the manufacturer's printed instructions

as approved by the County Engineer.

B. Weather Conditions: Do not apply paint in snow, rain, fog, or mist; or when the relative humidity exceeds 85%, or to damp or wet surfaces; unless otherwise permitted by the manufacturer's printed instructions as approved by the County Engineer. Applications may be continued during inclement weather within the temperature limits specified by the paint manufacturer during application and drying periods.

1.08 EXTRA STOCK

A. Amount: Upon completion of the work of this Section, deliver to the user agency, an extra stock equaling 10% of each color, type and gloss of paint used on the work.

B. Packaging: Tightly seal each container and clearly label with the contents and location used.

PART 2 – PRODUCTS

2.01 MATERIALS

A. Design is based on use of paint products manufactured by Benjamin Moore, and the materials of that manufacturer are named in the Painting Schedule. Equal products of Sherwin Williams, PPG Industries, or Con-Lux Coatings approved in advance by the County Engineer may be substituted.

B. Spray-on sealant shall be a VOC compliant, 100% acrylic water-repellent transparent sealer. Product shall be 'White Roc W by Sonneborn, Degussa Construction Chemicals or approved equal.

C. General: Provide the best quality grade of the various types of coatings as regularly manufactured by paint materials manufacturers approved by the County. Materials not displaying the manufacturer's identification as a standard "best grade" will not be acceptable.

D. Durability: Provide paints of durable and washable quality. Do not use paint materials which will not withstand normal washing as required to remove pencil marks, ink, ordinary soil, and similar material without showing discoloration, loss of gloss, staining, or other damage.

E. Colors and Glosses: The County Engineer will select colors to be used in the various types of paint specified and will be the sole judge of acceptability of the various glosses obtained from the materials proposed to be used in the work.

F. Undercoats and Thinners: Provide undercoat paint produced by the same manufacturer as the finish coat. Use only the thinners recommended by the paint

manufacturer, and use only to the recommended limits. Insofar as practicable, use undercoat, finish coat, and thinner material as parts of a unified system of paint finish.

G. Standards: Provide paint materials which meet or exceed the standards listed for each application in the Painting Schedule in Part Three of this Section.

2.03 OTHER MATERIALS

All other materials, not specifically described but required for a complete and proper installation of the work of this Section, shall be new, first-quality of their respective kinds, and as selected by the Contractor subject to the approval of the County Engineer.

PART 3 – EXECUTION

3.01 SURFACE CONDITIONS

A. Inspection: Prior to installation of the work of this Section, carefully inspect the installed work of all other trades and verify that all such work is complete to the point where this installation may properly commence. Verify that painting may be completed in strict accordance with the original design and with the manufacturers' recommendations as approved by the County Engineer.

B. Discrepancies: Do not proceed in areas of discrepancy until all such discrepancies have been fully resolved.

3.02 MATERIALS PREPARATION

A. General:

1. Mix and prepare painting materials in strict accordance with the manufacturer's recommendations as approved by the County Engineer.

2. Store materials not in actual use in tightly covered containers.

3. Maintain containers used in storage, mixing, and application of paint in a clean condition, free from foreign materials and residue.

B. Stirring: Stir all materials before application to produce a mixture of uniform density, and as required during the application of materials. Do not stir into the material any film which may form on the surface. Remove the film and, if necessary, strain the material before using.

3.03 SURFACE PREPARATION

A. General:

1. Perform all preparation and cleaning procedures in strict accordance with the paint manufacturer's recommendations as approved by the County Engineer.

2. Remove all removable items which are in place and are not scheduled to receive paint finish, or provide surface-applied protection prior to surface preparation and painting operations.

3. Following completion of painting in each space or area, reinstall the removed items by using workmen skilled in the necessary trades.

B. Preparation of Metal Surfaces:

1. Thoroughly clean all surfaces until they are completely free from dirt, oil and grease.

2. On galvanized surfaces, use solvent for the initial cleaning and then treat the surface thoroughly with phosphoric acid etch. Remove all etching solution before proceeding.

3. Allow to dry thoroughly before application of paint.

3.04 PAINT APPLICATION

A. General:

1. Slightly vary the color of succeeding coats. Do not apply additional coats until the complete coat has been inspected and approved. Only the inspected and approved coats of paint will be considered in determining the number of coats applied. All coatings shall be applied to the mil thicknesses recommended by the paint manufacturer for each coat.

2. Sand and dust between applications of enamel coats to remove all defects visible to the unaided eye from a distance of five feet.

3. On all removable panels and all hinged panels, paint the back sides to match the exposed sides.

B. Drying:

1. Allow sufficient drying time between coats. Modify the period as recommended by the material manufacturer to suit adverse weather conditions.

2. Oil-base and oleo-resinous solvent-type paints shall be considered dry for recoating when the paint feels firm, does not deform or feel sticky under moderate pressure of the thumb, and the application of another coat of

paint does not cause lifting or loss of adhesion of the undercoat.

C. Brush Application: Brush out and work all brush coats onto the surface in an even film. Cloudiness, spotting, holidays, laps, brush marks, runs, sags, ropiness, and other surface imperfections will not be acceptable.

D. Spray Application:

1. Confine spray application to metal framework and similar surfaces where hand brush work would be inferior.

2. Wherever spray application is used, apply each coat to provide the equivalent hiding or brush-applied coats. Do not double back with spray equipment for the purpose of building up film thickness of two coats in one pass.

E. Completed work shall match the approved samples for color, texture, and coverage. Remove, refinish, or repaint all work not in compliance with specific requirements.

3.05 PAINTING SCHEDULE

A. General: Painting and finishing required under this Section is specified as follows:

1. Pre-primed exterior ferrous metal (High Gloss Finish/Alkyd):
Prime Coat: 'Iron Clad Retardo' Rust Inhibitive Paint
Finish: Two coats 'Impervo' Enamel

2. Interior plaster and drywall (Eggshell Finish/Latex):
Prime Coat: Latex Quick Dry Prime Seal
Finish: Two coats Regal Aquavelvet.

3. Interior wood to receive paint (Semi-Gloss/Alkyd):
Prime Coat: 'Moore's Alkyd Enamel Underbody
Finish: Two coats Alkyd Dulamel

END OF SECTION

NO TEXT
THIS PAGE WAS INTENTIONALLY LEFT BLANK

PART 1 - GENERAL

1.0 GENERAL

A. The Automatic dialer shall be a self-contained microprocessor-controlled system capable of monitoring and controlling up to 40 alarm channels, with the capability of immediately controlling 16 channels. The system shall be modular in construction, allowing up to 4 input/output Expansion Cards to be installed and configured for operation by the user by means of the built-in keypad and remotely by touch-tone phone. Characteristics of Input and Output channels include Universal Input and Digital Relay Output.

B. Upon detection of any alarm or status change, the system shall commence dialing telephone numbers from a list associated with the particular alarm condition(s) or combination thereof and deliver a voice message identifying and describing the alarm condition(s). The alarm message shall be delivered in digitized human voice using messages recorded by the user. The system will continue to call telephone numbers in succession until a positive acknowledgement of the alarm message is received. Acknowledgement is accompanied by depressing tone keys from the called telephone, or by calling the system back within a programmed time period. The alarm may also be acknowledged using the local keypad. In addition, the system shall be able to receive incoming telephone calls. Upon answering, the system shall recite a menu of options and allow access to remote operation and programming.

C. The system shall be FCC registered for direct connection to the telephone network. The system shall have a one-year warranty from the manufacturer. The system shall be a Sensaphone® Express II by Phonetics, Inc.

1.1 I/O CHANNEL ATTRIBUTES AND FEATURES

A. Inputs

1. The system shall come standard with 8 universal input channels. Up to 32 additional universal input channels may be installed by the user. Twelve (12) additional channels shall be immediately installed for the use of a total of eighteen (18) channels immediately upon installation. All input channels shall be user-configurable as:

    a. NO or NC digital dry contact, using 0.8mA loop current
    b. 4-20mA analog, using custom look up table
    c. 0-5V analog, using custom look up table
    d. Pulse count
    e. Temperature from thermistor, using 2.8K or 10K devices (-80°F to 300°F)
    f. Time accumulator

2. The system shall have the following built-in monitoring features:

a. AC power failure detection
b. Sound level monitoring
c. Low battery detection

3. All monitored channels, including built-in monitoring features, shall allow keyboard and remote touch-tone programming of pertinent operational data including, but not limited to:

a. Input type (NO/NC, 4-20mA and 0-5V analog, pulse count, thermistor, time accumulator
b. High and Low limits (-9999 to +9999)
c. Input recognition time (0 seconds to 12 hours)
d. Alarm reset time (0 seconds to 12 hours)
e. Phone Contact list for each channel
f. Enable/disable for each channel to dialout for alarm

B. Outputs

The system shall have one built-in SPST latching 2A 250VAC relay output. The output may be programmed to switch automatically on alarm or manually via keyboard or Touch-Tone™ phone. Up to sixteen (16) additional relay output channels may be installed by the user.

1.3 COMMUNICATIONS FEATURES

A. Telephone Specifications

The system shall connect to a standard 2-wire telephone line using pulse or tone dialing methods, with loop start only. The system shall recognize ringer frequencies from 16 to 60 Hz. No leased or dedicated lines shall be required. The system shall also be capable of being used on the same telephone line as other answering devices. Call progress detection shall ensure that the alarm dialout is not hindered by no-answers or busy signals.

B. Telephone Numbers

1. The system shall be capable of dialing up to 48 telephone numbers, 40 digits each. There shall be a capacity to program, retain and use three separate lists based on a calling schedule of weekday, weeknight and weekend. Each list shall contain up to 16 phone numbers. In addition, individual phone contact lists may be programmed for each input channel.

2. The system shall allow local keypad and remote touch-tone programming of the following telephone dialing information:

a. Dialing method (Automatic, pulse, tone)
b. Retries on busy (0 to 15)
c. Message repetitions (0 to 10)

d. Maximum number of calls (0 to 65,535)
e. Call delay time (0 seconds to 12 hours)
f. Intercall delay time (0 seconds to 12 hours)

C. Voice Messages

1. The System shall have the ability to record, store and reproduce voice messages and to use those messages to articulate the location and status of the monitored channels. In absence of user-recorded voice messages, the system shall articulate channel status using the internally resident vocabulary. All digitized speech message data shall be stored in nonvolatile memory with a 3V lithium battery backup. Such battery backup shall be capable of protecting speech memory for at least 2 years of complete power outage.

2. There shall be one recorded identification message for the system, and one recorded alarm message for each input channel. A message may also be recorded for each output channel on the optional output expansion card. Message length shall be selectable from 5 to 11 seconds per input or output channel.

1.4. PROGRAMMING

A. Local Programming

The System shall contain an integral, sealed, alphanumeric keypad for the purpose of locally programming all system data. Programming is assisted by synthesized voice guidance. All operational data, system setup and configuration data, and all information regarding the monitored I/O channels shall be displayed on the LCD display panel. No display manipulation shall be required to view and assess the status of I/O points.

B. Remote Programming

The system shall be remotely programmable using a standard touch-tone telephone. All operational data, system setup and configuration data, and information regarding I/O channels shall be accessible and programmable. A user-programmable security password shall protect the system from unauthorized tampering. Remote programming shall be aided by menu-style voice guidance.

1.5. SYSTEM FEATURES

A. Power

The system shall be provided with a UL/CSA listed 15VAC grounded power transformer that the user may plug into a 120V AC outlet, ±20%, 60Hz. The unit shall provide battery backed by 12 volts DC (up to 100mA) and 24 volts DC (up to 400mA) to power 4-20mA current loops or other external devices.

B. Battery Backup

The system shall have a built-in 12V 3 AH sealed lead-acid rechargeable battery. This battery shall support approximately 6-12 hours of continued system operation in the absence of AC power.

C. Local Visual Indication

Each input shall have a corresponding LED that will indicate the alarm and acknowledgement status of each input. The system shall also have an LCD display that will list information about the current system status and input/output status.

D. Data Log

The system shall be capable of logging the input values on a user-defined time period via a serial printer. The system shall also log all system and alarm activity including, but not limited to: programming changes, alarms occurring and clearing, acknowledgments, call-ins, and alarm dialouts. The system shall be able to print the log information to a printer hooked up to its built-in RS232 serial port.

E. Halt Mode

The system shall be capable of entering a halt mode upon user command in which all inputs shall be disabled and dialout prevented. Halt mode shall end automatically after a preprogrammed time period.

F. Diagnostics and Testing

System diagnostics shall be performed each time the unit is started. The system shall be capable of performing a simulated alarm dialout for testing. The dialout can be requested locally or remotely.

G. Security

The system shall allow the user to lock the keypad to prevent unauthorized local or remote access unless a security password it entered.

1.6 REMOTE OPERATION FEATURES

A. Status Report

The system shall allow the user to call into the unit at any time using any standard telephone to obtain full status report of all monitored channels. The status report shall be articulated using the resident voice-synthesized English vocabulary, in combination with digitized user-recorded voice messages.

B. Acknowledgement

An alarm on any monitored channel may be acknowledged remotely by pressing tones on a touch-tone telephone keypad or by calling the system back within a specified time period. An alarm may also be acknowledged.

1.7 ENCLOSURE AND ENVIRONMENTAL

A. Enclosure

The system shall be housed in a NEMA-4X fiberglass enclosure with a latched window cover and shall be internally constructed such that modular plug-in expansion cards may be used to facilitate field upgrades, repair, and maintenance.

B. Electrical Protection

Power and telephone connections shall have internal spike and surge protection using metal oxide varistors. All input channels shall have fault protected input circuits.

C. Additional Electrical Surge Protection

Additional Power and Telephone line surge protection shall be available from the manufacturer. When so installed, the system shall be fully warranted against any damage caused by transient surges entering the system through Power or Telephone lines.

D. Environmental

The system shall function over an operating range of 32°F - 120°F at up to 0 – 90% RH, non-condensing. The system may be stored over the temperature range of 0° - 130°F.

E. Maintenance

The system manufacturer shall have in-house service facilities and technical assistance available during normal business hours, Monday – Friday 8AM – 5PM (EST).

F. Safety Approvals

The system shall be approved by a Nationally Recognized Testing Laboratory (NRTL) to UL Standard 1950 “Information Technology Equipment” and CSA Standard 22.22 #950.

1.8 SUBMITTALS

Submit product data in accordance with Section 01300.

PART 2 – PRODUCTS

2.1 AUTOMATIC TELEPHONE DIALER MODEL

A. Contractor shall furnish Sensaphone Model FGD-6700 Express II or approved equal.

2.2 ALARM INPUTS

A. Unless otherwise specified elsewhere, the eighteen (18) input channels shall be designated for:

1. Equalization Tank Float High Water Level Alarm
2. Equalization Tank Float Low Water Level Alarm
3. Equalization Tank Control Panel Power Failure
4. Equalization Tank Control Panel Common Alarm
5. BESST Blower Failure Alarm
6. BESST Mixer Failure Alarm
7. BESST Control Panel Sludge High Level Alarm
8. BESST Control Panel Power Failure
9. Influent Screen High Water Level Alarm
10. Tertiary Filter Backwash Pump Low Water Level Alarm
11. Tertiary Filter Backwash Surge Pump High Water Level Alarm
12. Tertiary Filter Control Panel Power Failure
13. Tertiary Filter Control Panel Common Alarm
14. Power Failure
15. Power Operating on Generator
16. Spare

PART 3 - EXECUTION
(NOT UTILIZED)

END OF SECTION

PART 1 - GENERAL

1.01 CONTRACT DOCUMENTS

A. All work of this section shall comply with the requirements of the conditions of the Contract with all sections of DIVISION 1 - GENERAL REQUIREMENTS, with this section, with the drawings and with all other Contract Documents.

1.02 UL-LISTED PRODUCTS

Provide new UL-listed fire extinguishers bearing UL "Listing Mark" for type, rating, and classification of extinguishers indicated.

1.03 SUBMITTALS

Submit product data in accordance with Section 01300.

1.04 MANUFACTURERS

Subject to compliance with requirements, provide products by one of the following:

A. J. L. Industries
B. Johnson-Lee, Div. of W. F. Lee Corp.
C. Larsen's Manufacturing Co.

PART 2 - PRODUCTS

2.01 FIRE EXTINGUISHERS

Provide fire extinguishers of Multi-Purpose carbon dioxide type: UL-Rated 10B:C, 10-lb. Nominal capacity, in aluminum container.

2.02 MOUNTING BRACKETS

Manufacturer's standard, of proper size for type and capacity of extinguisher indicated. Provide brackets for extinguishers not located in cabinet.

A. Identify all bracket-mounted extinguishers with red letter decals spelling "FIRE EXTINGUISHER" applied to wall surface. Letter size, style and location selected by Engineer.

PART 3 - EXECUTION

3.01 INSTALLATION

A. Install one (1) fire extinguisher in the STP Control Building, in accordance with manufacturer's directions for type of mounting required at height and location and to comply with applicable regulations of governing authorities.

END OF SECTION

PART 1 – GENERAL

1.01 DESCRIPTION

A. Scope: This section of the specifications covers the labor, materials, equipment and installation necessary to install one (1) Model MB260T 2MM automatic bar type fine screen with appurtenances for a complete operating system. Items of equipment include fine screen, slide gates, fabricated enclosure, removable baskets, anchors and fasteners. All equipment items shall be supplied by a single supplier to insure a complete working system.

B. One (1) Mechanically Cleaned Bar Screen will be used at the headworks of the wastewater treatment plant to remove debris including stringy rag-like materials from the influent sewage. The screen shall not become blinded by rags or hair or other particles during operation. Screenings shall be continuously discharged by a mechanical scraper arm to the screw compactor located at grade.

C. Design Data:

a. Model Number: MB260T
b. Type: Mechanically Cleaned Tapered Bar Screen
c. Screen Opening: 2mm
d. Screen Angle: 65°
e. Screen Length: 3’-11”
f. Screen Width: 8¼”
g. Tank Width: 1’- 6”
h. Tank Length: 3’-3”
i. Tank Height: 1’- 11”
j. Screen Discharge Height: 1 - 6½”
k. Application Peak Flow: 179 gpm
l. Wastewater: Domestic 200-500mg/L TSS
m. Power: 1/50 HP, 40 Watt, 3Ø, 208Volt, 60hz
n. Material: Main Frame, Micro Bar, Head Shaft, Rake Chain, Tail Shaft, Rake Chain Sprocket: Stainless steel 304L
o. Level Sensors: Included

1.02 QUALITY ASSURANCE

A. Acceptable Manufacturer: Or-Tec Inc, Blue Whale Micro Bar Screen. Alternative manufacturers/suppliers wishing to be considered for this project shall submit to the Engineer at least 2 weeks prior to Bid Date a full qualification package detailing full compliance with this specification. Manufacturers not meeting the performance, experience, and quality requirements of this project will not be pre-approved. Any alternative

manufacturers gaining approval by the Engineer will be identified via Addendum prior to the Bid Date.

B. The contract documents provide details of a complete equipment installation for the purpose specified. It shall be the responsibility of the Contractor to coordinate all the details required for a complete operating system, such as protective coatings, piping and wiring. The Contractor shall provide for all work required to properly install, adjust and place into operation a complete working system.

C. Washed and Dewatered Screenings Quality: Shall be capable of passing the US Environmental Protection Agency Paint Filter Test (EPA SW-846/9095) for disposal in a municipal landfill.

D. Manufacturer's Services: Manufacturer's personnel, for the equipment specified herein, shall be present at the job site for a minimum of one (1) day, travel time excluded, for inspection of installation, certification of field testing and adjustment, equipment start up, training and reviewing the Operations Manual. Two (2) additional one (1) day site visits will be scheduled by a factory trained service technician to review screen operation and ensure equipment is optimized. Additional field service will be provided, if needed, at a reasonable fee.

1.03 SUBMITTALS

A. Information required for approval by the Engineer prior to incorporation into the project shall include the following as a minimum requirement:

1. Certified dimension prints detailing all required concrete block-outs, anchor bolt locations and conduit stub-outs.

2. Specifications for all electrical and mechanical components and complete wiring diagrams for all the automatic functions.

3. Manufacturer's recommended procedures for jobsite storage and handling of equipment.

B. Operation and Maintenance Manuals: Prior to delivery of equipment and updated as required during installation of the equipment, the manufacturer shall furnish complete and detailed installation, operation and maintenance manuals which shall include the following as a minimum requirement:

1. Assembly, installation and adjustment instructions.

2. Maintenance instructions.

3. Complete descriptive literature of all materials and components furnished.

4. Erection drawings with equipment mark numbers.

1.04 WARRANTY

The manufacturer shall warrant the fine screens and other associated manufacturer supplied equipment against defects in material or workmanship for a period of two (2) years from the date of acceptance by the regulatory agencies.

PART 2 – PRODUCTS

2.01 STRUCTURE

A. The Micro Bar screen shall consist of a tapered-bar screen panel, two side frames, two chains with multiple, penetrating, cushion mounted rakes, a drive motor, a screen tank, level sensors and a control panel. Equipment shall be installed so as not to obstruct the flow of sewage to bar screen. Screen components including shapes (rods, angles, and channels) pipes, sheets, side frames and guides, bar rack, rake assembly, scraper assembly, shafting, discharge chute, fasteners and anchor bolts shall be manufactured from Type 304 stainless steel. Mechanical Screens with any of these items manufactured from materials other than 304 stainless steel shall not be acceptable. The screen shall be installed in Type 316 stainless steel tank with inlet flange, outlet flange, level sensors, and manual overflow screens.

2.02 TAPERED-BAR SCREEN PANEL

A. Screen panel face shall consist of a parallel array of tapered bars with even spaces between them. This opening shall be 2mm. Screens with larger openings between the bars allow more non-organic material, such as hair or other stringy material, to enter the plant and therefore shall not be acceptable for this project. The lower end of each bar shall have a notch at the bottom side, and the bars shall be clamped at the notch points by a lower spacer beam. The upper end of each bar shall be curved downwards so that it passes through the screenings lead plate and is inserted into the sectional bar holes of the upper spacer beam which is located at the bottom side of the screenings lead plate. The screens tapered bars shall extend 5” above the highest possible water level in the channel. Tapered bars are used rather than flat bar stock as tapered bars only have one pinch point making it easier to clean the gap between the bars. Screens which use flat bar for the screen array have a continual pinch point between them

making the gap between the bars prone to blocking. For this reason, use of flat bar stock in place of tapered bars shall not be acceptable.

B. The mid-section of the bar is cross-supported by v-notched support beams at 12" ~ 20" intervals. Screen bars shall be readily replaceable individually from the front of the screen without the need to remove the screen from the wastewater channel. Screens with screen bars that are not individually replaceable from the front of the screen shall not be acceptable for this project.

C. All material for tapered bars, lower spacer beam, upper spacer beam, screenings lead plate and the support beams shall be made of 304 Stainless Steel. This tapered-bar screen panel shall be mounted and bolted between a pair of side frames. Screens which utilize material other than stainless steel as the main screen media shall not be acceptable for this project.

D. The screen shall be a self-cleaning system using only the penetrating rake teeth to fully clean the gaps between the tapered bars and keep the screen operational. No water shall be required by the screen for any purpose. No brushes, rotating or otherwise, shall be required by the screen for any purpose. Screens that utilize brushes or require wash water shall not be acceptable for this project. Screens that use perforated flat panels in place of a bar screen will also not be acceptable.

2.03 SIDE FRAMES

A. A pair of side frames shall support the tapered bar screen panel between them. Bearings for head sprockets and bushings for tail sprockets with head shaft and tail shafts shall be mounted on them. Head bearings shall be heavy duty ball bearing with easy to access grease points. Tail sprocket bushings shall be graphite immersed phenol resin developed specifically for wastewater.

B. Guide rails shall be attached at the inside of the frames to ensure the systems chains and rakes run true. The guide rails shall be made of UHMW. Guide rails made of any material other than UHMW shall not be acceptable for this project as UHMW guide rails reduce the friction between the chain rollers and guide rails by 85% over standard stainless steel guide rails. This lower friction greatly decreases wear. Frames shall be made of 304 Stainless Steel plate of sufficient thickness to prevent deflection.

2.04 CHAINS, RAKES AND SPROCKETS

A. Rakes shall travel up the screen face cleaning the between the tapered bars openings with their penetrating teeth cleaning while lifting the captured

solids up to the top of the machine. The UHMW PE rakes shall be mounted on the chains on both sides of the side frames.

B. The rakes shall travel at approximately 12 ~ 15 feet/min. The rakes shall be mounted on the chain at no more than 48” intervals.

C. Rake assembly shall be guided over the discharge chute and the accumulated debris shall be removed by a scraper attached to the side frames. Scraper shall be designed to pivot to achieve effective cleaning of bar screen openings with the rake. The rake scraper shall be made of Type 304 stainless steel.

D. Discharge material from screen shall be directed to a tapered chute. Chute shall have a minimum slope of 55 degrees. The discharge chute shall be made of Type 304 stainless steel.

E. Screen chain head shaft sprockets and idling tail sprockets provided shall be manufactured of Type 304 stainless steel. Sprockets manufactured from materials other than Type 304 stainless steel shall not be acceptable. Sprockets shall be fitted to head shaft using precisely cut keyways.

F. Shafts provided shall be Type 304 stainless steel, straight and true, sized to transmit required power to the head sprockets.

G. Head shaft shall be equipped with heavy duty, grease-lubricated, adjustable, take-up bearing assemblies.

H. Tail shaft shall be equipped with heavy duty, lubrication-free, sealed graphite immersed phenol resin bushings. Screens with underwater bearings that require lubrication shall not be acceptable. Tail shaft bushing shall have a 5-year warranty.

I. The self-tensioning apparatus of the rake chains makes the static tension of the chain zero. By causing the chain to operate at zero tension, wear and tear on the chain is decreased. Designs which cause chains to operate above zero tension shall not be acceptable for this project. The chain shall be made of 304 Stainless Steel.

J. Heat tracing for the dead plate shall be provided. Temperature regulation shall be automatically monitored and adjusted by an adjustable thermostat. The heat trace will keep the system operational in -13°C. There will be a thermostat supplied to regulate the set point. The heating cable will be wrapped in a way to provide maximum heat efficiency. UL recognized self-regulating heating cable of 220 Volt Power, 5 watt/ft, 150°F process temperature shall be used. A terminal box for wiring power cable shall be equipped for the screen. Heat tracing shall be turned on and off by a thermostat equipped in the control panel of the screen and compactor.

K. Screen shall be capable of operating based on level sensor or I/O. Screen shall also be capable of operating continuously (24/7) when there is a continuous flow present if required. Screens which cannot operate according to all these parameters will not be acceptable.

2.05 DRIVE MOTOR

A. Equipment shall be provided complete with drive motors of totally enclosed geared induction type. A torque limiter combined with limit switch shall be provided between the motor and the head shaft in order to disconnect mechanical power in emergency situations.

B. System shall use a 15-watt, 230/460 VAC, 3 phase, 60hZ motor. Systems which require larger motors shall not be acceptable for this project.

2.06 SCREEN TANK

A. Then screen will be supplied with a stainless steel, structural tank which will support and contain the screen. The screen tank will be fabricated from 11-gauge Type 316 stainless steel. The tank shall be designed to be self-emptying.

B. The screen inlet with a be a 3” flange and the screen outlet will be 6” flanged

C. The screen tank shall be provided with two (2) Manual Screen Overflows

2.07 LEVEL SENSORS

A. Two (2) Level sensors shall be installed in the screen tank. These shall have the following functionality;
High: Screen-On / High High: Alarm.

2.08 CONTROL PANEL

A. The control panel shall be a NEMA 4X 304 stainless steel enclosure suitable for outdoor use and shall contain all electrical controls, wires, starters, terminals, relays, overloads, fuses and labels required for operation of the screen and ancillary equipment described herein. All controls shall be mounted in a single enclosure. Systems which require multiple control enclosures shall not be acceptable for this project.

B. The system shall be fully operational in both manual and automatic modes. The system mode selector switch shall allow the operator to select the desired mode. No other changes or programming by the operator shall be required.

C. In manual mode the screen will start and operate until it is turned off. In automatic mode the system will turn on based on a signal from the level

sensor provided or operate continuously if there is continuous flow to the screen. When using level sensors, the screen will operate for one minute based on the signal. If at the end of one minute the signal from the level sensor is still made the screen will operate for one more minute. When the level sensor in no longer made the screen will turn off and wait for the next signal.

D. The front of the control panel door shall include a main disconnect breaker switch (power on/off). In the off position all power to the control panel shall be off. An electronic over current monitor shall continuously monitor the motor and shall shut the motor down and alarm the panel in the event of over current draw. Manual reset shall be required.

E. The control panel shall contain the following. All switches and switching functions shall be clearly indicated by suitably engraved labels:

1. Nema 4X stainless steel outdoor duty enclosure housing:
2. Main disconnect, "thru the door" with door interlock.
3. Full voltage non reversing motor starter (IEC)
4. Control transformer with primary and secondary fusing.
5. Control power on/reset push button
6. Screen running green pilot light
7. General Red Fault Alarm
8. Hand/Off/Automatic Switch
9. Electronic Over Current Relay
10. Elapsed time meter
11. Lot, control relays, terminal blocks and related accessories
12. E-stop mushroom red pushbutton with twist reset
13. UL Listed Enclosure suitable for wall mounting
14. Dry contact outputs for Screen Run, General Fault, Over Current

PART 3 – EXECUTION

3.01 INSTALLATION

A. General: Install screen and associated components as shown on the plans and in accordance with manufacturer's instructions.

3.02 TESTING AND INSPECTION

A. General: Notify Owner and Engineer in writing when the installation is complete and ready for testing and start up.

B. Inspect components for proper installation, wiring and piping.

C. Operate all components and check for proper operation. Make necessary adjustments.

END OF SECTION

PART 1 – GENERAL

1.01 SCOPE OF WORK

A. Furnish a pre-engineered Odor Control System as hereinafter specified. The Odor Control System shall consist of two complete, parallel systems designed to function with one system in service at a time.

B. These Specifications are intended to give a general description of system requirements. They are intended to cover the furnishing, delivery and installation of all materials, equipment, and appurtenances for the complete Odor Control System.

C. It is the intention that the pre-engineered Odor Control System is to be supplied by one vendor and installed and paid for by the Contractor.

D. The Contractor shall provide the installation labor and material, all ductwork, electrical controls and system wiring, and all other component and appurtenance to provide a fully operational system.

1.02 WARRANTY

A. All equipment supplied under this Section of the Specifications shall be warranted for a period that is the earlier of one year from startup or 18 months from shipment.

B. The equipment shall be warranted to be free from defects in workmanship, design, and materials. If any part of the equipment should fail during the warranty period, it shall be repaired or replaced, at the sole discretion of the Manufacturer, as per the Manufacturer's standard Terms and Conditions.

1.03 DESCRIPTION OF SYSTEM

A. The Manufacturer shall furnish two (2) complete, pre-engineered odor control systems. The Manufacturer of the Odor Control Systems shall be responsible for the design and fabrication of the complete systems within the limits specified herein. Site preparation shall be the responsibility of the Contractor as described and as specified.

B. Odor Control Systems – Design Basis (2 Req.)

1. Foul Air Flow Rate (acfm) 304
2. System Inlet Pressure (in. wcg.): -2.0 (estimated)
3. Average Inlet H2S Level (ppm.): <5
4. Peak Inlet H2S Level (ppm.): <10

5. H_2S Removal Efficiency (%) > 99.0
6. Fan Total Static Pressure (in. wcg.): 6.0
7. Carbon Adsorber Dimensions (in.): 36" dia. by 4'-6" SWH

C. Ventilation Fan

1. Manufacturer: Cincinnati Fan Company
2. Model: PB10A
3. Drive: Direct Drive
4. Arrangement: 4 HM, Inlet Flange Mount
5. Rotation: Clockwise
6. Capacity (acfm): 304
7. Total Static Pressure (in. wcg.): 5.0
8. Fan Speed (rpm): 3450
9. Fan bhp (@304 acfm): 0.58
10. Motor
    HP: 0.75
    Speed (rpm): 3450
    Enclosure: TEFC, Class I, DIV2, Group D
    Voltage, Single-Phase (V.): 115/208-230
11. Sound Attenuator: LD4

D. Media System

First Stage

1. Type: SweetAire PC 30
2. Base Material: Activated Carbon
3. Particle Type, Size: Pelletized, 4 mm
4. Volume of Media (lbs.): 420
5. Bed Depth (in.): 24
6. Media Diff. Pressure Drop (in. wcg.): 2.0
7. Media Bulk Density (lbs./cu.ft.): 30

Second Stage

1. Type: SweetAire PP 700
2. Base Material: KMnO4 Impregnated Zeolite
3. Particle Type, Size: Granular, 4 x 6 Mesh
4. Volume of Media (lbs.): 420
5. Bed Depth (in.): 12
6. Media Diff. Pressure Drop (in. wcg.): 1.0
7. Media Bulk Density (lbs./cu.ft.): 60

1.04 QUALITY ASSURANCE

A. All components of the carbon adsorber systems shall be provided by a single manufacturer who shall have sole-source responsibility for the equipment elements detailed herein.

B. The manufacturer of the systems shall be recognized in the design and production of carbon adsorption air treatment systems. Upon request, the manufacturer shall provide with the submittal data, a list of five (5) carbon adsorption air treatment installations associated with the treatment of hydrogen sulfide and other malodorous compounds. The list shall include contact names, telephone numbers, and length of service for each named installation.

1.05 SUBMITTALS

A. Copies of all materials required establishing compliance with the specifications shall be submitted to the Owner's Engineer in the form of a booklet or binder. Submittals shall include at least the following:

1. Plan view drawing showing arrangement of treatment units and associated ductwork.

2. Product drawings and cutsheets, descriptive literature, bulletins, and catalogs on all equipment including but not limited to the following.

   a. Detailed physical drawings of the treatment units to include all external piping connections and associated sizes, and materials of construction.
   b. Control system schematic diagrams indicating necessary field connections.
   c. Control panel component manufacturer's data sheets.
   d. Product data sheets for the blower and drive motor including performance curve with operating point and data.
   e. Specification data for the activated carbon media.

B. List all exceptions taken to the specifications along with backup documentation as to why the exception has been taken. If it is impossible to conform with certain details of the Specifications due to different manufacturing techniques, describe and justify completely all non-conforming aspects.

1.06 PRODUCT HANDLING

A. All equipment items shall be properly protected so that no damage or deterioration will occur from the time of shipment until installation is completed and the units and equipment are ready for operation.

B. All exposed blower and equipment openings shall be protected.

C. Proper care shall be taken to protect mechanical parts from the entrance of water during shipment, storage, and handling.

D. Each box or package shall be properly marked to show its contents.

PART 2 – PRODUCTS

2.01 MANUFACTURERS

A. The odor control system components specified under this section shall be the end products of Sierra Environmental Technologies, Wildwood, MO. (636) 273-5189 to ensure that the unit integrity and quality of the completed assembly meets the original design specification and performance criteria.

B. Substitutions. Substitutions shall be considered only if the Engineer has received a written request at least two weeks prior to bid date. Bidders shall be notified by addendum if substitutions are acceptable. Requests for substitutions shall include technical and any other information required for evaluation.

2.02 OPERATING CONDITIONS

A. The odor control system shall be suitable for long-term operation under the following operating conditions.

1.	Duty:	Continuous
2.	Ambient environment:	Outdoor
3.	Ambient Temp. (°F):	-30 to 100
4.	Project site elevation (ft. MSL):	550 (average)
5.	Total air flow (SCFM):	304 each unit
6.	Average influent H_2S conc. (ppm):	<5
7.	Maximum influent H_2S conc. (ppm):	<10
8.	Removal required (%):	>99% H_2S

2.03 CAST ALUMINUM FANS

A. One (1) cast aluminum fan shall be as manufactured by Cincinnati Fan, Model PB10A, will mounted on the odor control housekeeping pad. The fans shall be equipped with a direct-drive 3/4 HP 1/60/208-230/460V premium efficiency, TEFC motor. The fan shall have a Teflon shaft seal and a stainless steel motor shaft. The discharge of the fan shall be equipped with a slide damper, connecting ductwork, and a galvanized steel sound attenuator unit.

2.04 FIBERGLASS (FRP) VESSELS

A. The vessels shall be fabricated from premium vinyl ester fire-retardant resin such as CORVE8441LH or approved equal.
B. Vessels shall be manufactured per ASTM D3299, D4097, and PS 15-69, as applicable.
C. See Part 4, "Odor Control System Schedule" for requirements.
D. Vessel design shall include a flat flanged bottom and a flat, gasket top with fiberglass grating media support system with polypropylene media retention screen.
E. Vessels shall be designed to contain the specified media.
F. Vessels shall be 36" diameter by 54" high.
G. Each vessel shall have an 6" diameter FRP pipe stub inlet with FERNCO connectors, ¾" FNPT drain fitting with PVC ball valve, two (2) 1" diameter FNPT half coupling carbon sample ports.
H. All mounting hardware shall be 316SS.

2.05 MEDIA SYSTEM – TWO-STAGE

A. First Stage Media – The first stage media (lower bed) shall consist of a bed of high H2S capacity activated carbon. The 4 mm pelletized carbon, SWEETAIRE PC30, has an H2S capacity of 0.3 gms H2S/cc carbon. This equates to an H2S capacity of 70% by weight. By comparison, caustic impregnated carbon has an H2S capacity of only 26% by weigh. The first bed of activated carbon, 14.4 cu. ft. (420 lbs.) is designed to remove most of the H2S in the system.

B. Second Stage Media – After passing through the first bed of media, the foul air will pass through a bed of potassium permanganate (KMnO4) impregnated zeolite granular media to remove the balance of the malodors. The secondary media, SweetAire PP600, will provide secondary removal of any remaining H2S as well as any other malodorous compounds that may be in the air stream. The secondary bed of media shall contain 7.0 cu.ft. (420 lbs.) of media.

2.06 ELECTRICAL CONTROL PANELS

A. The operation of each system shall be controlled by an electrical control panel with a type 304 stainless steel NEMA 4X enclosure. Refer to the project plans for the location of the panel. Two (2) combination starter electrical control panels; each with a disconnect switch, overload protection, auxiliary contacts, ON/OFF hand control and one (1) green "Running", and one red "Stopped" indicator light on the front door of the enclosure shall be provided. The electrical control panels shall be shipped loose to be field-mounted and field wired to the supply power service to the fan motors

PART 3 – EXECUTION

3.01 INSTALLATION

A. Installation by the manufacturer of each equipment item shall be in strict accordance with the Engineer's instructions and recommendations in the locations shown on the drawings.

3.02 INSPECTION, START-UP, AND OPERATOR TRAINING

A. A representative from the Manufacturer shall be present to perform the required inspection, start-up, and operator training services for the system. The Engineer will schedule this service with the Manufacturer's representative and his intended system operators.

3.03 TESTING

A. After all equipment has been completely installed according to the direction of the Manufacturer tests shall be performed in the presence of the Owner, representative of Westchester County Department of Public Works, Westchester County Department of Health and the Engineer to indicate that the System operates satisfactorily and will meet the design criteria set forth in Section 1.03B of the Specification. Visual inspection will be made at this time for any discrepancies, which shall be corrected. The field test shall demonstrate correct mechanical operation after system start-up. Field tests shall include all equipment included under this section.

END OF SECTION

NO TEXT
THIS PAGE WAS INTENTIONALLY LEFT BLANK

PART 1 – GENERAL

1.01 SCOPE OF WORK

A. Furnish all labor, materials, equipment, and incidentals required and install complete, ready for operation and field test five (5) new rotary positive displacement tri-lobe blowers and appurtenances, as shown on the Drawings and as specified herein.

B. These Specifications are intended to give a general description of what is required, but do not cover all details that will vary in accordance with the requirements of the equipment application. It is, however, intended to cover the furnishing, delivery, complete installation and field testing of all materials, equipment and all appurtenances required to complete the Work of this Section, whether specifically mentioned in these Specifications or not. It is the Bidder's responsibility to comply with all the aspects of these specifications. Costs for evaluating proposals for similar or alternate equipment will be borne by the Bidder.

C. The entire blower package and its components shall comply with all applicable safety and environmental regulations. This specification does not limit the responsibility of the Bidder, who is expected to supply high quality equipment.

1.02 SUBMITTALS

A. Information of all materials required to establish compliance with this Section. Submittals shall include at least the following as required by Division 1300:

B. Certified shop and installation drawings showing materials, details of construction, dimensions and connections to work of other Sections.

C. The materials list should include complete bill of materials for all equipment.

1. Blower Data
2. Manufacturer of all components supplied
3. Model numbers of all component supplied
4. RPM
5. Capacity - acfm
6. Discharge pressure
7. Weights of each item of equipment
8. dBA noise level
9. Maximum gear tip speed and rotor tip speed (fpm)
10. List of recommended spare parts broken down into on hand parts and long term for 2 years operation and 3 to 5 years operation.
11. HP required at rated capacity and pressure
12. Rated maximum pressure rise of blowers
13. Bearing Life
14. Instrumentation data sheet

15. Motor Data
16. Valves
17. V-belt data
18. General arrangement drawings
19. ASME PTC – 9 Performance Test Results

D. Complete blower package operating and maintenance instructions, hard copy and electronic copy, shall be furnished for all equipment included under these specifications.

1.03 QUALITY ASSURANCE

A. Qualifications

1. All blowers and appurtenances furnished under this Section shall be furnished by a single manufacturer who is fully experienced, reputable and qualified in the manufacture of the equipment to be furnished. Blower Stage Manufacturer shall also provide a written warranty for the blower and blower package and shall state that they have reviewed the design and application and that the equipment has not been misapplied or the package been poorly designed.

2. The equipment shall be designed, constructed and installed in accordance with the best practices and methods and shall operate satisfactorily when installed as shown on the Drawings.

3. All equipment specified in this section shall be designed and manufactured by KAESER and supplied by DW Martine & Associates, LLC, 1221 Route 22E, Lebanon, New Jersey 08833 (908-236-8145).

1.04 SYSTEM DESCRIPTION

A. All of the equipment specified herein is intended to be standard equipment for use in an Aeration system.

1. The blowers shall provide air for process air for the BESST Process units, mixing for the sludge holding tank, equalization tank, and tertiary filter as well as air for the airlift pumps.

1.05 DELIVERY, STORAGE AND HANDLING

A. All equipment shall be completely factory assembled, skid mounted, crated, and delivered to protect against damage during shipment.

B. Factory assembled parts and components shall not be dismantled for shipment. Contractor shall not be required to do any job site assembly of the blower package and shall not disassemble any factory assembled component without blower manufacturer's written approval.

C. Finished surfaces of all exposed flanges shall be protected by wooden blank flanges, strongly built and securely bolted thereto.

D. Finished iron or steel surfaces not painted shall be properly protected to prevent rust and corrosion. No shipment shall be made until approved by the Contractor in writing.

E. All equipment delivered to the site shall be stored as specified in section entitled "General Equipment Stipulations" of these specifications, and in accordance with the manufacturer's instructions.

1.06 MAINTENANCE

A. Spare Parts and tools

1. Furnish the following minimum spare parts in accordance with the requirements of part 2 of these specifications:

   a. One complete set of bearings, gaskets, seals, V-belts, as required for each blower.
   b. One additional set of filter elements for each air inlet filter for each blower.
   c. One set of motor bearing.
   d. One year supply of oil

2. Spare parts shall be properly bound and labeled for easy identification without opening the packaging and suitably protected for long term storage in a humid environment. One set of Tools required for changing oil and performing belt maintenance shall be provided for each blower.

PART 2 - PRODUCTS

2.01 GENERAL

1) The use of a manufacturer's name and model number is for the purpose of establishing the standard of quality and general configuration desired. Products of other CE certified manufacturers will be considered in accordance with the General Conditions.

2) The blower package shall be a Com-paK Plus as manufactured by Kaeser Compressors, Inc., or an approved equal, which meets all the requirements of this specification. Alternate blower selections must be shown on a List of Exceptions to the Specifications with itemized descriptions of how the selection differs from the specifications.

3) Nameplates stating the name of the manufacturer, blower/blower package model number, blower/blower package serial number, the rated capacity, speed, and other pertinent data, shall be attached to each blower/blower package.

4) Nameplates stating the name of the manufacturer, the motor model number, the motor serial number, the rated horsepower, speed, voltage, amps, rated service factor, and other pertinent data, shall be attached to the motor.

2.02 CONSTRUCTION

A. Blower Type

The blowers shall be positive displacement, rotary tri-lobe type, designed for air or other inert gas service, and belt driven via electric motor.

B. Casing

The casing shall be made of high strength, close grained, cast iron, and shall be adequately ribbed to resist deflection and facilitate cooling. The casing shall be precision machined to allow for minimum clearances. The design of the housing shall allow for vertical and horizontal blower installation with minimal modification. The casing design shall incorporate channels at the discharge port to minimize pulsation.

C. Rotor Assemblies

The rotor assemblies shall be one piece and precision machined from high strength, close grain, spheroidal graphite ductile iron allowing smooth, efficient operation at all rated speeds and pressures. Rotors shall be closed-end using a threaded plug. The integral shafts shall be designed to carry higher loads than calculated for the maximum design load and shall incorporate replaceable seal ring wear sleeves. The rotor assemblies shall be statically and dynamically balanced. Removal of material from the face of the rotor for balancing purposes is not allowed. The rotors shall be a tri-lobe design in order to minimize pulsation and noise.

D. End Plates

1) The gear-end plate shall be cast iron. The drive-end plate shall be integral to the blower casing ensuring heavy-duty construction, long life, and maximum machine noise attenuation in all applications. Bearing fits shall be precision machined to ensure accurate positioning of the rotors in the casing. Replaceable seal wear inserts shall be provided on the drive-end and gear-end plates.

2) The end plate covers shall be heavy-duty cast iron with a precision machined sealing face. Aluminum oil sump covers are not allowed.

E. Timing Gears

1) The rotor timing gears shall be precision machined from case hardened and ground alloy steel. Each timing gear shall be straight cut and beveled to eliminate axial bearing loads and ensure long life as well as quiet operation.

2) Gears shall be finish ground on a precision grinder to ensure concentricity. The timing gear set shall be taper-mounted on the rotors for improved rebuild ability and accurate timing. Keyed, hub mounted, or taper-pinned timing gear mounting designs are not acceptable.

F. Bearings

All four shaft support locations shall incorporate large, heavy-duty cylindrical roller bearings designed to handle extreme radial loads without sacrificing product integrity and reliability. The minimum acceptable L10 design life at the blower's maximum rated speed and maximum rated differential pressure shall be no less than 70,000 hours.

G. Lubrication

Both the gear-end and the drive-end of the blowers shall be oil splash lubricated for minimal maintenance and long service life. Grease lubricated bearings are not acceptable. The lubrication design shall ensure adequate lubrication of the timing gears and bearings.

H. Seals

1) There shall be four (4) piston ring type labyrinth seals at each end of each rotor to minimize leakage and maintenance costs.

2) The cavity between the air-side and oil-side seals shall be vented through threaded ports to allow external purging or containment of any lubricating oil or process gas that may have migrated past the seals. Enough ports shall be incorporated in the design to ensure that the cavity is vented from the bottom no matter what the blower drive-to driven shaft orientation is utilized.

3) A vent cavity shall be provided on all four (4) sets of piston ring type labyrinth seals. The two (2) vent holes located on the bottom side of the blower shall be left open. The vent holes at other locations shall be closed off with threaded metal plugs.

4) The input drive shaft seal shall be a high temperature radial lip type seal with Viton elastomers. The seal design shall incorporate a replaceable wear sleeve on the input drive shaft.

I. Drive Motors

1) Drive motors shall be designed, manufactured, and tested in accordance with the latest revised editions of NEMA MG-1, IEC, IEEE, ANSI, and AFBMMA standards as applicable and shall be capable of continuous operation.

2) The motor nameplate horsepower rating shall not be exceeded at the design speed.

3) The temperature rise of the motor windings shall not exceed IEC and NEMA

standards when the motor is operated continuously at the rated horsepower, rated voltage, and rated frequency in ambient conditions of 40°C.

4) The motors shall conform to the following:

Mounting:	Horizontal
Type:	Squirrel Cage Induction
Enclosure:	Totally Enclosed – Fan Cooled
Service Factor:	1.15
Duty Cycle:	Continuous
Ambient Temperature Rating:	32.2°C
Starting Current:	6X Full Load Current Maximum
Winding Insulation:	Class F
Temperature Rise:	Class B
Voltage/Frequency/Phase:	208/60/3
Bearing Lubrication:	Oil, Oil Mist, or Grease (with grease addition fittings and grease relief fittings)
Speeds:	Single Speed

2.03 BLOWER PACKAGES

1. The packaged blowers are to be standard engineered designs of a CE certified manufacturer regularly engaged in the production of packaged blowers to ensure single source accountability and shall include the following listed standard features:

   a) The packages shall be driven through V-belts and sheaves. The drive assembly shall be of the high-capacity type, oil and heat resistant, with a minimum service factor of 1.5.

   b) Automatic tensioning of the V-belts by use of a pivoting, swing frame motor base with adjustable spring assistance and visual indication of V-belt tension shall be provided to ensure the V-belts remain properly tensioned with minimal maintenance and the extend V-belt, sheave, and bearing life. Adjustment of the tensioning device shall be accomplished without removal of the guard or loosening of the motor mounting bolts.

   c) The drive guard shall be the manufacturer's standard sheet metal with provision for ventilation. The installed guard shall be fully enclosed, easily removable, and designed to meet current OSHA recommendations and CE standards.

   d) The base shall be elevated, rigid, fabricated steel design with a solid sub-base. The absorptive-type discharge silencer shall be integral to the frame in order to minimize space requirements. The blower shall be mounted horizontally for a compact frame.

   e) To prevent transmission of vibration and noise, as well as secure the package to the foundation, the base shall include vibration isolators made of rubber in a steel

footing equipped with mounting holes for anchoring purposes.

f) Oil drains from the blower drive-end and gear-end lubricating oil sumps shall be piped to the front of the base for ease of maintenance. The drain valves shall be a ball valve with a fully retained and gasketed threaded cap.

g) The inlet filter shall be integral to the inlet silencer and shall include a washable and reusable polyester element for minimal pressure drop.

h) The inlet silencer shall be of the absorptive type, directly connected to the inlet port of the blower, and shall be mounted horizontally.

i) The discharge silencer shall be of the absorptive type with an integral pulsation dampener and directly connected to the outlet port of the blower. The discharge silencer shall be mounted horizontally and shall be integral to the base frame.

j) The relief valve shall be spring loaded and factory installed in a location to protect the blower from excessive differential pressures. The relief valve exhaust shall be piped out of the enclosure.

k) An elastomeric compensator/flex connector shall be provided for connection of the packaged blower to the system piping to reduce transmission of structure borne noise as well as prevent unacceptable loading of the silencer connection and blower casing.

l) A sound enclosure shall be provided. The sound enclosure shall be sheet steel construction with powder coat finish. It shall have acoustic foam insulation and shall provide sound attenuation of up to 20 dB(A). The enclosure shall have a hinged panel on top and a removable panel on the front of the package to allow maintenance access. Panels shall incorporate locking closures. An installed, integral ventilation fan, sized to provide adequate cooling of the package, shall be provided.

m) A pressure gauge shall be provided, pre-piped and panel mounted, on the sound enclosure.

n) A temperature gauge, with adjustable switching point and contact, shall be provided pre-piped and panel mounted on the sound enclosure.

o) A filter differential pressure gauge shall be provided pre-piped and panel mounted on the sound enclosure.

p) The blower package shall be designed to allow all preventive maintenance to be performed from the font of the package. All utility connections and process connections shall be at the rear of the package.

q) The blower package shall be capable of being installed directly adjacent to another blower packages of similar design and shall be capable of mounting next to the

wall without maintenance interference.

r) A pressure switch shall be provided on each blower discharge piping for controls specified in section 11702.

2.04 CONTROL PANEL

1. Blowers shall be controlled through the BESST Control Panel specified in section 11400.

2.05 FACTORY TESTING

1. All critical dimensions of the blower components actually provided by the manufacturer shall be verified and documented prior to assembly.

2. The rotating parts of each blower actually provided by the manufacturer shall be statically and dynamically balanced before final assembly. The blower alone shall operate without excessive vibration. Removal of material from the face of the rotors for balancing purposes is not allowed.

3. Each blower actually provided by the manufacturer shall be slip tested. The Slip RPM shall be documented. Each bare blower provided by the manufacturer shall be operated at its maximum rated speed and differential pressure for thirty (30) minutes. A document certifying that the supplied blowers conform to the design specifications shall be provided.

4. On completion of final assembly of the packaged blower and prior to shipment, each packaged blower shall be mechanically run for a minimum of fifteen (15) minutes.

2.06 QUALITY ASSURANCE

1. The blowers and equipment covered by this specification are intended to be standard blower equipment, of proven ability, as manufactured by a reputable CE certified manufacturer having at least two (2) years' experience in the production of such blowers. The blowers furnished shall be designed, constructed, and installed in accordance with the best practice and methods and shall operate satisfactorily when installed.

2. All equipment furnished under this specification shall be new, unused, and shall be the standard product of a manufacturer having a successful record of manufacturing and servicing the equipment and systems specified herein for a minimum of two (2) years.

2.07 WARRANTY

1. The manufacturer and contractor shall warrant the blower package being supplied to the owner against all defects in workmanship and materials for a period of twenty-four (24) months from date of acceptance by the regulatory agencies.

2. The manufacturer's warranty period shall run concurrently with the contractor's warranty period. No exception to this provision shall be allowed. The contractor shall be responsible for proper storage of the equipment so as to remain in "as shipped" condition. If the equipment remains in storage at the job site for longer than six (6) months before installation, the contractor shall provide factory service personnel for a complete inspection of the equipment. Any work necessary to restore the equipment to "as shipped" condition shall be the responsibility of the contractor.

PART 3 – EXECUTION

3.01 INSTALLATION

A. The Contractor shall install the blowers in accordance with the manufacturer's written instructions and as directed on site by the Manufacturer's representative. The Contractor shall be responsible for coordinating related items, not covered in this section of the specifications, such as piping, fittings, additional valves, supports, motor controls and wiring.

B. Blower shall not, under any conditions be allowed to sit out-of-doors unprotected. During actual installation of each unit, blower package shall be covered with a waterproof material in the event of any precipitation and also at all times that construction does not require exposure of the equipment. Covering shall be securely anchored.

C. Blower and motor alignment shall be performed by representatives of the blower manufacturer. Prior to initial starting of blower, a written report shall be supplied to the Engineer by the blower manufacturer's service representative verifying alignment and motor rotation direction of each unit and certify that the blower is properly installed.

D. The blower and accessories shall be installed, tested, adjusted, and installation certified by the blower supplier.

E. The blower supplier shall supply blower packages shipped completely pre-assembled. Only the electrical connections to the drive motor, pipe connections and anchoring in place shall be performed on site by the contractor.

3.02 FIELD TESTING

A. The manufacturer shall provide one (1) trip (one 8-hour day) to the project site for equipment installation assistance to the Contractor by a qualified factory authorized representative.

B. After installation of all equipment has been completed and as soon as conditions permit, the manufacturer shall provide one (1) trip (one 8-hour day) to conduct an acceptance test under actual operating conditions, to determine the operation is satisfactory and free from excessive vibration as defined by the blower manufacturer.

The test shall consist of 3 hours operation of each blower with readings taken and recorded at 30-minute intervals.

C. If required, Contractor shall make any changes, at his own expense, to the installation that may be necessary to assure satisfactory operation. Contractor shall be held liable for changes needed in the installation.

D. After the equipment has been placed into operation by the Owner for a minimum of forty-five (45) calendar days, the equipment manufacturer shall provide one (1) eight (8) hour day of equipment follow-up for equipment inspection and Owner review. This visit shall be coordinated with the Engineer.

BLOWER PERFORMANCE

TABLE 1

	Process Air/Air Lift	SHT/EQ	Tertiary Filter
1. Quantity of Blowers	2	2	1
2. Rated Inlet (ACFM)/Blower	148.0 cfm	74.0	160.0
3. Discharge Pressure Rise (psig)	20.7	20.70	21.70
4. Blower Package Inlet Pressure (psia)	14.70	14.70	14.70
5. Motor HP (Maximum)	10.0	5.0	10.0
6. Maximum Blower Speed (rpm)	5,125	3,490	5,125
7. Inlet Temperature	90°F	90°F	90°F
8. Ambient Relative Humidity (%)	80	80	80
9. Est. Free Field Noise @ 3 Ft. (dB)	69	72	69
10. Package	BB69C	BB52C	BB69C

END OF SECTION

PART 1 - GENERAL

1.01 DESCRIPTION

A. This Section of the Contract Documents covers the requirements for supplying all labor, materials, equipment, and services necessary to furnish and install a fully automatic dual biologically engineered single sludge treatment system (BESST) as it is specified herein and shown on the Contract Drawings. The system shall be as manufactured by Purestream, Inc. The system shall be complete, and without restricting the generality of the following, shall include the following:

1. One (1) equalization tank
2. Two (2) aeration zones;
3. One (1) anoxic zone;
4. Two (2) clarifiers;
5. One (1) sludge holding tank;
6. Accessories and miscellaneous appurtenant devices as specified herein;
7. Spare parts as specified herein.

The BESST plant shall be a welded structural grade ASTM-A36 steel rectangular tank structure divided into seven major sections: one anoxic compartment, two clarifiers, two aeration compartments, and a sludge storage tank. The equalization tank shall be provided separate from the BESST tank and constructed of structural grade ASTM-A36 steel.

The principal items of equipment in each unit shall include fine bubble air diffusers in the aeration tanks, coarse bubble air diffusers in the sludge storage tank, mixers, sludge airlift pumps, skimmer air lifts, effluent troughs, blower assemblies complete with necessary motors, necessary electrical controls and all necessary internal piping, valves, and accessory equipment as herein specified.

The treatment plant structure shall be reinforced to withstand normal pressures from the soil, and from the interior hydrostatic load.

B. The system shall be composed of sewage treatment equipment necessary to meet the effluent requirements of paragraph 1.05 herein, when treating raw domestic sewage having constituent concentrations equal to or less than that specified in paragraph 1.05.

C. Mechanical/Electrical start-up, and operations/maintenance training and process start-up training, as specified herein, shall be the responsibility of the sewage treatment equipment supplier (manufacturer) and shall be included in the manufacturer's proposal to the Contractor.

D. All equipment shall be installed by the Contractor as detailed on the drawings. All electrical work shall be as shown on the electrical drawings and be performed by the Contractor in accordance with Division 16 and all applicable codes.

E. The Contractor shall furnish one (1) complete set of Contract Documents, including addenda if any, to the equipment supplier. The equipment supplier shall certify on the shop drawing cover sheet that shop drawings have been prepared based on receipt of this information. The Engineer will not begin shop drawing review until said certification is provided.

1.02 QUALITY ASSURANCE

A. The sewage treatment system equipment specified herein shall be furnished by one single Supplier. The Supplier shall be responsible for the development, design, fabrication, assembly, delivery, and proper sustained operation of the system in order to meet the requirements of paragraph 1.05 but does not require that all equipment and accessories be the products of one single manufacturer.

B. Consideration will be given only to manufacturers who can demonstrate that their units comply with these Specifications of having had successful and documented experience of the size, quality, performance and reliability to that specified, and who have demonstrated this criterion to the Engineer. The Supplier shall furnish proof of successful operating experience for the proposed system during the last three (3) years on ten (10) installations for systems using the BESST system. Only manufacturers with at least two (2) successful installations in Westchester County, New York, will be allowed. The list shall contain the name of the facility, contact name, address, phone number, design flow, effluent parameters and years in operation.

C. The final system shall be designed and furnished to achieve the conditions of service specified in paragraph 1.05 of this Section.

D. The specifications have been prepared based on Biologically Engineered Single Sludge Treatment (BESST) system sewage treatment equipment as manufactured by Purestream. BESST equipment is to be used in the lump sum bid for the project. All bidders must provide their bid utilizing the BESST system pricing to be considered a responsive bidder. The bid shall be submitted to the Owner on the basis of named equipment in this specification without regard to “or equal”.

E. If Contractor elects, he may submit a deduct price for substitute equipment in his bid for process equipment. **The deduct price offered by the bidder for alternate process equipment shall include an allowance of $20,000 (Twenty Thousand dollars) for additional engineering required to review an alternate process, in addition where applicable, to engineering fees as**

specified in Section 01600-2-03-G if the alternate is selected and acceptable to the Owner.

F. If alternate equipment is proposed and acceptable to the Owner, the Supplier shall prepare and submit for review, the necessary structural, electrical, instrumentation, and mechanical drawings as required by the Engineer. The supplier shall prepare and submit for review along with the required drawings, a specific listing of the material, design and construction differences between the proposed equipment and the specified equipment. This material shall be submitted within two (2) weeks of the bid opening, if requested by the Engineer.

G. Bidders shall not use the price for substitute equipment in preparing the price bid in the Proposal for this project.

H. The Contractor shall remain fully responsible for design revisions, mechanical, structural, and electrical as a result of utilization of substitute equipment.

I. All work to revise the Contract Documents, in the event of substitution, shall be prepared under the responsible charge of (a) licensed New York Professional Engineer(s) with experience in design of sewage treatment facilities. Bidder shall submit with his information the name of and qualifications of the Engineer(s) selected by Bidder. It is understood that the Bidder's Engineer(s) will accept design responsibility for any and all alterations made.

J. A signed and sealed Basis of Design Engineer's Report shall be prepared for submission for substitute evaluation purposes if offered by Bidder and acceptable to the Owner.

K. All work associated with accommodating alternate equipment shall be at no additional cost, including engineering and legal fees, to the Owner even if the proposed substitution is subsequently rejected by the Owner, Engineer, or regulatory agencies.

1.03 WARRANTY

A. The **Supplier** shall provide a Warranty Certificate typed on company letterhead and signed by an authorized officer of the Supplier. The certificate shall be witnessed by a notary public in the state in which the company headquarters is located. The Warranty Certificate shall be submitted, verbatim and without exception, as follows:

B. Assuming the sewage treatment equipment will be operated in strict accordance with the written operating instructions provided by the sewage treatment equipment manufacturer (Purestream) and the influent parameters are equal to or less than that shown in paragraph 1.05 but will

provide a sufficient organic loading to maintain an active biological mass needed to ensure the effluent requirements are attained, the BESST process will meet the requirements of the SPDES Permit. The treatment equipment shall be capable of treating 45,000 gallons per day of raw sewage containing up to 240 mg/l BOD_5, 240 mg/l total suspended solids, 40 mg/L TKN and 18 mg/L total phosphorus. The Supplier shall guarantee that the following effluent requirements are consistently achieved:

BOD_5	Less than 5 mg/l
Suspended Solids	Less than 10 mg/l
Free Ammonia	Less than 1 mg/l

C. In addition, the Supplier shall guarantee all components of the system specified to be furnished by this Contract to be free from defects in design, materials, and workmanship for a period of two (2) years commencing from the date accepted by the regulatory agencies.

D. During the guarantee period, if any part or equipment component is defective or fails to perform when operating at design conditions and if the equipment has been installed and is being operated and maintained in accordance with the written instructions provided by the wastewater equipment system manufacturer, the Supplier shall repair or exchange such defective part(s) and arrange for installation with the construction contractor, at no cost to the Owner.

E. The replacement or repair of parts normally consumed in service shall include bulbs and lubrication. These parts only shall be considered as part of routine maintenance and upkeep and shall not be considered eligible for exchange free of charge under the Warranty.

F. Agreed upon this _____ day
(date)
by _____ of
(name of authorized agent)

_____, who,
(name of Supplier)
by signing this document, affirms he/she is legally authorized to submit this warranty on behalf of the Supplier.

_____
AUTHORIZED SIGNATURE

_____
DATE

_____
NOTARY

1.04 DELIVERY, STORAGE AND HANDLING

A. All equipment shall be delivered directly to the site, the costs of which shall be the Supplier's responsibility.

B. All equipment deliveries shall be accompanied with a parts list listing the part description and its corresponding parts number. All parts shall be packaged and listed separately. The part number shall be written on the package, crate, or container.

C. All equipment and components shall be furnished as complete assemblies with all internal wiring, piping, valving, and control devices. Items shall be delivered as complete assemblies except where partial disassembly is required by transportation regulations and for protection of components.

D. All system equipment shall be blocked off the ground and suitably protected for outdoor storage by the Contractor. Provide tarping as necessary to protect components against the weather. All equipment shall be stored at location(s) acceptable to the Engineer. Prepare all equipment for short term storage as recommended by the particular equipment manufacturer.

E. The Supplier shall contact the Contractor at least two (2) weeks prior to the date the equipment is scheduled to be shipped.

F. Deliveries will not be accepted on weekends and state and federal holidays.

G. Do not use tape for marking part numbers.

H. The Supplier shall ship all equipment with installation instructions contained in a watertight, plastic, and zippered envelope.

I. The control panel(s) shall be crated and shipped with the approved schematic diagram. The diagram shall be stored inside the panel(s) in a pocket within the door, in a watertight, plastic and zippered envelope. The panel(s) shall be shipped in the locked position.

J. Spare parts shall be packaged in **one separate box**, **or crate** with the words "SPARE PARTS" printed on all sides of the container. The Contractor shall unpack this container in the presence of the Engineer.

1.05 PERFORMANCE AND DESIGN REQUIREMENTS

A. The sewage treatment equipment to be supplied under this Contract shall be designed to meet the following requirements:

1. BESST System Treatment

Capacity (Average Daily Flow)	45,000 gpd

2. BESST System treatment capacity (peak daily flow). . . . . 176,850 gpd

3. Influent Water Quality:

BOD5	240 mg/l
TSS	240 mg/l
TKN	40 mg/l

4. Required Effluent Quality:

BOD_5	less than 5 mg/l
Total Suspended solids	less than 10 mg/l
Settleable Solids	less than 0.1 ml/l
Ammonia	less than 0.9 mg/l (Summer) less than 1.8 mg/l (Winter)
Total Phosphorus*	less than 1.0 mg/l
Fecal Coliform	200 No./100 ml (30-day geometric Mean)
pH	6.5 - 8.5 SU

*The BESST system can achieve phosphorus removal to 3 mg/l, and an alum dosing system shall be provided at the STP for removal down to below 1 mg/L.

B. Plant Effluent Guarantee

1. The sewage equipment manufacturer shall guarantee, in writing, that the equipment supplied herein will consistently produce a plant effluent having the concentrations equal to or less than that specified in paragraph 1.05 (A) (4).

2. The "EFFLUENT GUARANTEE" shall be typed on company letterhead and signed by an authorized officer of the manufacturer. The guarantee shall be witnessed by a notary public in the state in which the company headquarters is located. "Performance and design requirements are to be met for the designed system operation under dual basin process train only. The system shall also be able to be operated as a single basin.

C. BESST Functional Requirement

1. The manufacturer of the BESST system shall be completely responsible for the proper design of their system, including but not limited to sewage treatment equipment, clarifiers, sludge pumps, and controls. All equipment shall perform as specified

and the completed installation shall operate in accordance with the requirements of the plans and specifications.

1.06 FIELD SERVICES

A. The Supplier shall provide the services of an experienced, authorized, and factory trained representative(s) of the sewage equipment manufacturer at the site of the Work to provide mechanical/electrical start-up, mechanical/electrical training, process start-up, process training and installation certification. The times specified below are exclusive of travel time to and from the sewage treatment plant site and do not relieve the Supplier from providing sufficient service to place the equipment in satisfactory operation and to obtain the specified performance. The following services are required as a minimum:

1. Services of a field representative to advice on the BESST field installation shall be provided. The services of the field representative shall include five (5) days, exclusive of travel time, and one (1) travel trip during the time that the equipment is being installed. The contractor shall notify the manufacturer a minimum of ten working days prior to the time that the field services are desired.

2. The contractor shall notify Purestream when the installation of the BESST equipment has been completed. A representative of the supplier shall inspect the installation. The Owner shall be advised in writing of any corrections or adjustments that are required for the BESST equipment installation. After the BESST installation has been completed to the supplier's satisfaction, a letter of certification that all equipment is installed in accordance with its instructions and that the BESST® equipment is ready for operation, shall be furnished.

3. Upon receipt of a letter from the Engineer certifying that the BESST installation is ready for start-up, the services of a field person for a total of six (6) days, and two (2) trips shall be provided. The field person shall do a functional check of each item furnished and start-up of the process. During this time, the field representative shall provide operation training, which shall include familiarization with the BESST process, its requirement and review of the Operation and Maintenance Manuals.

B. ALL UNUSED FIELD SERVICE DAYS SHALL BE CREDITED TO THE OWNER AT A RATE OF $750.00 PER DAY.

1.07 SUBMITTALS

A. The Supplier shall submit all information in package form in accordance with Section 01300 of these Specifications.

B. The information shall come complete from the Supplier and contain certification that the submittal is complete without exception. The information shall come in package form properly identified and referenced to each and every item required under this project. Do not submit information until all items are provided.

C. Submit the following items:

1. A technical specification for all proposed equipment. The specifications shall address how the proposed equipment meets or does not meet the specified unit. Highlight the specification in blue highlighting marker to point out where the proposed equipment differs from the specified unit.

2. Complete design calculations showing total power requirements, kinetic design, sludge production rates, sludge age, etc. sealed by a registered professional engineer.

3. Anchoring plan(s) for all wastewater treatment equipment showing dimensions, weights, anchor sizes and locations.

4. Individual catalog cuts and dimensional prints for all equipment, piping (hose), valves, operators, fittings, and miscellaneous devices and equipment.

5. Field wiring diagrams for all valve operators.

6. Field wiring diagram for all motors.

7. Field wiring diagram for liquid level controls.

8. Control panel(s) layout drawings for panel face and panel interior.

9. Schematic diagram for the control panel.

10. Catalog cuts of **ALL** electrical devices installed in the control panel such as breakers, starters, relays, controllers, blocks, transformer(s), clocks, timers, pilot lights, switches, selector switches, PLC, etc.

11. Nameplate and escutcheon plate schedule for the control panel devices.

12. Catalog cuts of painting system(s), if applicable.

13. Pump performance curves for all pumps specified herein. Include dimensional layout drawings, anchor locations and required pump clearance with rails. Submit curves showing duty point. Submit cuts of base elbow, rail brackets, rails and chain.

14. Spare parts list specified to be furnished under this section.

15. Warranty Certificate.

16. Delivery, storage and handling instructions.

17. Plant Effluent Guarantee.

18. Installation certification.

D. Submit **eight (8) copies** of a detailed operation and maintenance manual. All information shall be bound in a 3 arch-ring 8½" x 11" metal hinge, vinyl, large capacity binder by National or equal. The O&M Manual shall be properly indexed and chaptered and contain the following information:

1. **All approved shop drawings.**

2. Step-by-step troubleshooting guide.

3. Lubrication schedule.

4. Maintenance instructions and schedules.

5. The “Treatment Process” Chapter which shall generally include description of the process and theory of the BESST process. Include written description of the control panel functions. Provide description of each phase of treatment, sampling requirements for process control and detailed calculations necessary for process adjustments.

6. Spare parts list.

7. Step-by-step operating procedure for general process adjustments (air, waste sludge, etc.).

8. Complete listing of all equipment forming the system and a corresponding address and telephone number of the manufacturer or supplier of each particular piece of equipment.

9. All information contained in the O & M Manual which is larger than the 8½" x 11" format shall be folded and placed in a plastic

envelope and bound in the binder. The title of the information shall be visible.

1.10 SERVICE CONDITIONS

A. Provisions shall be made for lubrication, adjustment, or replacement of all parts. Corresponding parts of multiple units shall be interchangeable.

PART 2 – PRODUCTS

2.01 GENERAL

A. The performance and design requirements for the system are as specified in Part 1.

B. Materials

1. The equipment furnished shall be designed and constructed in accordance with the best practices and methods and for continuous service at maximum conditions. All parts shall be so designed and proportioned so as to have liberal strength, stability and stiffness and to be fully suitable for the intended conditions of service.

2. Provisions shall be made for easy lubrication, adjustment, or replacement of all parts. Except as otherwise specified, steel plates and shapes shall have a minimum thickness of 1/4 inch, sheet metal shall be 14 gauge minimum.

All welding shall be in accordance with the latest applicable codes of the American Welding Society. All materials used shall be new and of the best quality and fully suitable in every respect for the service intended.

After complete welding and fabrication of the tanks, all surfaces shall receive a SSPC-10 near white metal finish obtaining a 1.5 to 3.0 mil surface profile. Painting of the interior and exterior surface of the tanks shall be 16 to 20 mils D.F.T. of Tnemec 46H-413 Coal Tar Epoxy or equal, black in color and with finish of satin.

For cathodic protection, sixteen (16) packaged 17-lb magnesium anodes shall be provided in total. They shall be buried on opposite sides of the structures and shall be connected by means of heavy copper wires furnished with the anodes and solderless

connectors factory-installed on the plant structure. Installation of anodes are by the Contractor.

3. S.S. adhesive anchors and all S.S. mounting hardware, unless otherwise shown or specified, shall be furnished by the manufacturer and installed by the Contractor and shall be as shown on the shop drawings.

C. Nameplates

1. Stainless steel nameplates giving the name of the manufacturer and all pertinent design data and serial numbers shall be attached to each unit and each ancillary piece of equipment.

2. Refer to control panel paragraph for legend plate specifications.

2.02 INFLUENT EQUALIZATION TANK

A. An influent equalization tank shall be located outside of the sewage treatment plant to receive raw sewage and pump sewage to automatic bar screen, as shown on the contract drawings. There shall be two (2) raw sewage submersible equalization pumps to supply influent to distribution box. The tank shall be a separate part of the plant and have a design capacity of 15,051 gallons. The tank shall be provided with baffles where necessary to ensure circular flow without dead spots where sewage solids can accumulate and become septic.

B. Non-clog plastic coarse bubble diffusers shall be so spaced to ensure proper mixing in the tank and located at the bottom of the chamber. Diffused air shall be supplied by the equalization tank blower.

C. Two (2) pumps shall be supplied to pump the sewage into the constant head box at a controlled rate, and each pump shall have a capacity of 90 GPM at 15 feet total dynamic head. The pumps shall be Goulds Model 3887 at 0.5 HP, 230V, three phase, 60 Hz.

2.03 INFLUENT SCREENING DEVICE

A. One (1) automatic influent screening device shall be provided as specified in specification section 11330 and as shown on the Contract Drawings.

2.04 ANOXIC ZONE

A. One anoxic compartment shall be located at the inlet of the treatment plant, as shown on the Contract Drawings, and shall receive the equalized raw, screened sewage. The total volume of the compartment shall be a minimum of 7,434 gallons. Within the compartment, there shall be two (2) airlift pump, 4 inches in diameter, with the suction ends directly connected

to the bottom of each clarifier to facilitate the return of activated sludge to the anoxic zone as well as two (2) airlift pump, 2 inches in diameter with their suction end routed over the clarifier walls to facilitate the return of skimmings from the clarifiers to the anoxic zone. In addition, located at the bottom of the compartment, there shall be mixed liquor transfer pipes that will enable the liquid in the compartment to move, in a plug flow fashion, into the aeration compartments.

B. To ensure complete mixing at all times, there shall be two (2) explosion proof submerged mixers supplied well as one (1) shelf spare.

2.04 CLARIFIER

A. Two clarifiers shall be located as shown on the contract drawings. The clarifiers shall be of the self-regulating type relative to flow, with a minimum total surface area of 308.0 square feet, and a minimum total volume of 12,144 gallons (6,072 gallons each). The primary function of the clarifiers will be that of a sludge blanket clarifier separating the sludge floc from the clear, treated water.

On the aeration zone sides of the clarifiers' wall, and as shown on the contract drawings, there shall be an inlet structure to the clarifiers which will be of sufficient size to allow a stream of aerated wastewater to enter at the bottom of the clarifier cone where the sludge floc will begin to develop. Specific design of this inlet structure shall be as shown on the drawings.

At the clarifiers surface, and located as shown on the drawings, will be a baffled effluent trough with an adjustable galvanized steel weir plate. Effluent from this trough will flow by gravity to downstream process(es) as required.

The clarifiers shall be fabricated of structural grade steel.

2.05 GRATING

A. Grating panels shall be provided to cover the entire BESST plant and separate surge tank. The grating panels shall provide access to the plant equipment and offer safety protection for the system operator.

Grating panels shall consist of one piece steel plank, a maximum of 11 ¾" wide and 2" deep. Each panel shall be so supported as to have a safe uniform load carrying capacity of 120 lbs/sq. ft. at 5'-6" maximum unsupported length.

An anti-skid surface, designed for skid resistance in all directions, shall be provided by a series of shoe-gripping ridges and slots approximately 1/16"

high on the transverse tread ribs. Grating shall be manufactured from galvanized carbon steel sheets of commercial quality.

2.06 FASTENERS

A. Fasteners for mounting trough assembly as well as for weir plates shall be type 316 stainless steel.

2.07 AERATION ZONES

A. Two (2) aeration zones shall have a minimum total capacity of 26,295 gallons (13,147.50 gallons each), and will be complete with air header, diffuser drops with adjustable gas cocks, and fine bubble diffusers in sufficient quantity and placement to assure even distribution throughout the compartment. Each air diffuser shall be connected to the air header with a 1 1/4" Schedule 40 type galvanized steel drop pipe. The drop pipe shall be connected to the air header in a manner that will permit raising the drop pipe and diffusion device above the water surface quickly and without disturbing air flow to the other diffusers or requiring emptying of the compartment contents. The air diffusion device shall have an efficiency such that an adequate supply of oxygen is maintained in the aeration tank to treat the sewage load for which the plant is designed.

2.08 SLUDGE STORAGE TANK

A. A sludge storage tank shall be provided to hold wasted sludge prior to off-site disposal. The tank shall be integral to the main treatment plant and shall have a volume of 13,757 gallons. The tank shall have a supernatant return "T" pipe positioned to facilitate gravity flow of the returned supernatant to the anoxic zone of the treatment plant. A valve shall be provided on each "T" supernatant pipe for shut off purposes. The tank shall be aerated by non-clog plenum coarse bubble diffusers so spaced to ensure proper mixing of the tank contents and located parallel to and near the bottom of the chamber. Diffused air shall be supplied by the sludge storage tank blower. The tank shall be constructed of galvanized steel plate, suitably reinforced for its intended service.

A supernatant decant pump shall be located in the sludge storage tank as shown on the contract drawings. The pump shall be equipped with a slide rail system and a flexible hose to allow the pump to draw off liquid from various levels of the tank. The pump shall be a Goulds 3887 submersible pump capable of pumping 90 gallons per minute at 15 feet total dynamic head. The pump motor shall be 0.5 HP, 230V, three phase, 60 cycles.

One (1) high water level switch with mounting hooks shall be provided for sludge storage tank.

2.09 SUBMERGED MIXERS (ANOXIC ZONE)

A. To facilitate denitrification and to ensure complete conversion of nitrates, the manufacturer of the sewage treatment plant equipment shall furnish two (2) submersible mixers for installation in the anoxic zone of the sewage treatment plant and one (1) shelf spare for a total of three (3) submersible mixers. Each mixer by Sigma shall be equipped with an explosion proof 0.75 HP submersible electric motor, suitable for operation on 230 volt, three phase, 60 Hz service. The mixers will be provided with over temperature sensors.

B. Each mixer shall be of the direct-driven, close-coupled, submersible type, and all components of the mixer, including motor, shall be capable of continuous underwater operation. The motor and propeller shall operate at a speed of 828 RPM. The propeller and its protective shroud shall be constructed of stainless steel.

C. Mounting of the mixers shall be done with the use of a guide bar mounting assembly to facilitate its vertical adjustment within the tank, or removal from the tank when necessary. A winch device shall be provided for this purpose. A total of three (3) mixers shall be supplied, two installed and one as a common spare.

2.10 TERTIARY FILTER

A. One (1) tertiary filtration unit shall be furnished inside the STP control building as shown on the contract drawings and shall be a Purestream Model PST-31.5. The filter shall include the filter beds, clear well chamber, and backwash facilities. The unit shall be capable of treating secondary effluent at the design load referenced in this specification section.

The tertiary filter shall consist of a rectangular structure with all necessary baffles and partitions and all side walls, bottom, and partitions shall be of structural grade ¼” steel plate and all reinforcing and bracing shall have a minimum thickness of ¼”.

All welding shall be in accordance with the latest applicable codes of the American Welding Society. All materials used shall be new and of the best quality and fully suitable in every respect for the service intended.

B. The filtration system shall consist of two filter cells, each having a surface area of 15.75 sq. ft. and each being capable of treating 2 GPM/sq. ft. Each cell shall contain an air scour manifold and have a manually operated drain valve.

12” of filter sand under 20” of anthracite coal shall be provided in each filter bed . The filter sand shall have an effective size of 1.0 to 2.0 mm and a

uniform coefficient of less than 1.65. The anthracite coal shall have an effective size of 2.0 to 2.2 mm and a uniform coefficient of less than 1.65.

C. The filter under drain system shall consist of six lateral corrosion-resistant ABS “cycolac” type plastic under drains of the continuous slot, wire-wound design. The 0.02” inlet slots shall be formed to prevent clogging. Discharge from the under drains shall be by gravity through the backwash piping and pumps.

D. An integral clear well for storage of the filtered water for backwashing shall be provided with a minimum capacity of 2,520 gallons. The clear well shall contain the backwash pumps and filter discharge piping. A vertical riser shall be provided in the filter discharge piping to maintain a minimum of 2” of liquid over the surface of each filter bed. A clean out plug shall be provided in each discharge line, and a clear well overflow shall be included to maintain the required clear well volume and permit gravity discharge.

A post aeration diffuser drop with two (2) fine bubble diffusers shall be supplied in the clear well compartment and diffused air shall be provided by the tertiary filter blower.

E. The two (2) submersible backwash pumps provided in the filter shall be Goulds Model 3887 capable of pumping 145 GPM at 10 feet total dynamic head with a 0.75 HP, 230V, 60 Hz electric motor. Valves shall be provided in the pump discharge piping to allow either pump to backwash either filter bed. The discharge piping for the pumps shall be Schedule 40 steel pipe with malleable iron pipe fittings.

F. The integral backwash surge chamber shall be provided as shown on the contract drawings to provide storage for backwash water and incoming flow during backwash. The minimum volume of the chamber shall be 2,520 gallons. Two (2) backwash surge pumps shall be furnished and installed for returning backwash to the secondary treatment plant. Provision shall be made for recycling a portion of the discharge to reduce the rate of return to the secondary treatment plant.

The two (2) submersible backwash surge pumps shall be Goulds Model 3887 capable of pumping 36 GPM at 15 feet total dynamic head with a 0.33 HP, 230V, single phase, 60 Hz electric motor. The discharge piping for the pumps shall be Schedule 40 steel pipe with malleable iron pipe fittings.

G. A trough shall be provided as an extension of the inlet trough and shall contain a stop gate to permit a manual bypass of the filter beds for maintenance. An overflow trough shall be provided at the maximum water elevation in the backwash surge chamber to serve as a bypass in the event of a power failure results in plugging and overflow of the filter bed into the backwash surge chamber.

H. The air scour system consisting of airlines and air scour assemblies shall be furnished. Diffused air to scour to the surface of the sand during shall be supplied by an air line assembly which shall be easily removed from the filter. It shall be equipped with an air regulating valve permitting adjustment of the air flow or complete shut off. The air scour lines shall be perforated Schedule 40 PVC pipe and fittings and solenoid valves shall be provided in the air scour piping to each filter bed to allow the filter bed to be air scoured independently. Air shall be supplied on the basis of 4 cfm per square foot of filter beds.

2.10 PORTABLE HOIST

I. Three (3) portable hoists shall be provided to facilitate removal of the mixers, sludge decant pump, equalization pumps, backwash pumps, and backwash surge pumps from the tanks. The hoists shall be constructed of Type 316 stainless steel and include 30 feet of stainless-steel lifting cable with a safety hook and a hand winch. Each hoist shall have a maximum capacity of 1,000 pounds and be Model No. D8B36D, as manufactured by Halliday. Five (5) stainless steel hoist mounting sockets, one located at the mixers area, one at the area of the sludge decant pump, one at the equalization pumps, and two for the tertiary filter shall be bolted to the tank walls of the anoxic zone, sludge holding tank, equalization tank and tertiary filter, as indicated on the construction drawings.

2.11 ACCESS LADDER

A. A 45° access ships ladder shall be mounted to the tertiary filter as shown on the contract drawings. It shall consists of structural steel stair stringer channels joined by ¼" thick formed steel tread plate stair steps. The access ladder shall be hot dipped galvanized and galvanized steel handrails shall be furnished with the ladder. The ladder shall be shipped un-mounted and bolted in placed on the end of the tank by the Contractor.

2.12 BLOWERS

A. Refer to Specification Section 11372 Rotary Positive Displacement Blowers.

2.13 ELECTRICAL CONTROLS

A. BESST Control Panel:

1. Prewired NEMA 12 painted carbon steel enclosure PLC control panel complete with motor starters, circuit breakers, controls, and alternators. Also included shall be Four (4) manually controlled VFD units for use with the four (4) process/airlift, equalization and sludge holding tank blowers (the tertiary filter blower is not VFD controlled) along with five (5) pressure transducers for use with the process/airlift, equalization tank, sludge holding tank, tertiary

filter and spare blowers for low- and high-pressure monitoring. Transducers shall be shipped loose for installation by the installing contractor.

2. Alarm Dialer shall be provided on the wall as shown on the drawings: Alarm dialer shall be as specified in Section 10300.

3. Equipment listing - an entire bill of materials, as well as shop drawings for process control equipment to be used for the plant, may be found at the end of this section.

2.14 WELDING

A. All structural steel members shall be joined by electric arc welding, with fillets of adequate section for the joint involved. Where required for additional sectional strength, such welds shall be continuous inside and out.

2.15 DISSOLVED OXYGEN METER

A. A portable microprocessor based dissolved oxygen meter shall be provided for determining dissolved oxygen levels in the sewage treatment plant. It shall be equal to Oakton Model DO EW-35640-90 450 and include a waterproof floating housing, a DO meter kit and a foam lined hard carrying case.

2.16 SPARE PARTS AND EQUIPMENT

A. The supplier shall supply the following spare parts and equipment:

1. 15 pilot lights.

2. One (1) spare CMOS containing the program.

3. One (1) spare PLC input card for shelf storage.

4. One (1) spare PLC output cared for shelf storage.

5. One (1) set of spare parts which are recommended by the manufacturer for the mixer.

6. One (1) shelf spare anoxic mixer.

PART 3 – EXECUTION

3.01 INSTALLATION

A. All equipment and appurtenant devices shall be installed in strict accordance with the written instructions provided by the manufacturer. Verbal instructions provided by the field representative shall be confirmed in writing by the manufacturer and faxed to the Engineer within 24 hours of said instruction.

3.02 INSTALLATION CERTIFICATION

A. The manufacturer (through the Contractor) shall provide written certification that the equipment was installed properly.

END OF SECTION

PART 1 - GENERAL

1.01 DESCRIPTION

A. All work covered by this section includes all labor, equipment and material necessary to furnish and install laboratory furniture, testing apparatus and supplies as specified.

1.02 QUALITY ASSURANCE

A. Laboratory furniture shall be manufactured by Fisher Hamilton Scientific Inc.

B. Laboratory equipment apparatus and chemicals shall be manufactured by HACH Co. unless otherwise specified.

1.03 WARRANTY

A. The supplier shall provide a warranty certificate typed on company letterhead and signed by an authorized officer of the supplier. The certificate shall be witnessed by a notary public in the state in which the company headquarters is located.

B. The supplier shall guarantee the lab furniture specified to be furnished by this Section to be free from defects in design, materials, and workmanship for a period of one (1) year commencing on the date the system was placed in permanent and consistent operation but not to exceed 18 months from date of delivery.

C. During the guarantee period if any part is found to be defective or fails to perform and if the unit has been installed and is being operated and maintained in accordance with the written instructions provided by the Supplier, the Contractor shall repair or exchange such defective part(s) free of any and all charges. The costs of labor and all other expenses resulting from the repair or replacement of the defective part(s) and from installation of part(s) furnished by this warranty shall be borne solely by the Contractor.

1.04 SUBMITTALS

A. All submittals shall comply with the requirements contained in Section 01300.

B. The following submittals are required:

1. Shop scaled plan and section drawings of unit, and all pipe connections detailed within the drawings.

2. Fabrication drawing of the unit.

3. Warranty Certificate.

1.05 DELIVERY STORAGE AND HANDLING

A. The units shall be shipped and stored and handled in accordance with the written instructions supplied by the Manufacturer.

PART 2 – PRODUCTS

2.01 LABORATORY FURNITURE

A. Provide Combination Emergency shower and eyewash by Bradley model No. S19-310AC or approved equal.

2.02 LABORATORY EQUIPMENT, APARATUS AND CHEMICALS

A. Equipment

1. One (1) portable DR 900 color meter by HACH Co. with accessories for analysis of:

Amonia Nitrogen	0-50 mg/l
Nitrate Nitrogen	0-30 mg/l
Nitrite Nitrogen	0-0.35 mg/l

Provide all required chemicals for 100 tests.

2. Provide one (1) stereo binocular microscope boom by AmScope Model No. SE400-XYZ with 10X, 15X and 20X eye pieces, boom stand, gooseneck LED light, and dust cover and provide five (5) AmScope PP-95 reversible stage plates.

3. One (1) HQ40D Portable Multi Meter by HACH Co. HACH catalog No. HQ40D53000000 with accessories:

Field D.O. Probe HACH catalog No. LDO10105
pH probe, HACH catalog No. PHC20101

4. One (1) portable Royce Aqua 22 MLSS meter by Royce Water Technologies.

5. One (1) Sludge Judge HACH catalog No. 2506102.

6. One (1) 600 Amp Digital Clamp Meter, Klein Tools Model CL600.

7. One (1) Pocket Pro+ Multi 2 Tester for pH/conductivity/TDS/salinity HACH catalog number 9532800

B. APPARATUS	HACH CATALOG NO.	QTY.REQUIRED
1. Plastic Wash Bottle 1000 m1	620-16	1
2. Beaker, Polypropylene 600 m1	1080-52	2
3. Beaker, Polypropylene 250 m1	1080-46	2
4. Graduated cylinder, Polypropylene 10 ml	1081-38	1
5. Graduated cylinder, Polypropylene 50 m1	1081-41	1
6. Graduated cylinder, Polypropylene 100 m1	1081-42	1
7. Brush cylinder	687-00	2
8. Funnel	1083-70	2
9. 6’ Sampler	2929302	1
10. Settleometer Kit	2115700	2
11. Chlorine Test Kit Model CN-66T	223103	1
12. Safety Goggles	2927902	1
13. Ammonia Test Kit	224100	1
14. Alkalinity Test Kit	2444301	1
15. Buffer Solution Kit	2507200	1
C. CHEMICALS		
1. Deionized water	272-53	2
2. Nitrogen Nitrate Std. Sol.	307-49	1

3. Alconox Cleaning Agent	2088000	1

PART 3 - EXECUTION

3.01 INSTALLATION

A. Assemble in place all laboratory furniture in accordance with manufacturer's instructions. Mount cabinets at recommended height. Pipe sink as required with hot and cold water and pipe 4" diameter trapped drain to influent pumping station above high-water level. Hot water heater shall be 50-gallon electrical unit, installed at the location shown on the drawing.

B. Wax all exposed cabinet faces, wash and clean interior of drawers and cabinets.

3.02 EQUIPMENT, APPARATUS AND CHEMICALS FURNISHED

A. Hand over all equipment, apparatus and chemicals with necessary manuals, MSDS to Owner's representative.

B. Provide the services of a qualified equipment manufacturers representative to unpack, set-up, calibrate and test all equipment. Manufacturer's representative should also train treatment plant operator in use of all test equipment.

END OF SECTION

PART 1 - GENERAL

1.01 CONTRACT DOCUMENTS

A. All work of this section shall comply with the requirements of the conditions of the Contract, with all sections of the Specifications and with the Drawings and all other Contract Documents.

1.02 WORK INCLUDED

A. Provide all tools and miscellaneous supplies as supplies as specified herein.

PART 2 - PRODUCTS

2.01 TOOLS AND MISCELLANEOUS SUPPLIES

A. Furnish the following tools and supplies.

1.	Screw Drivers – Shock Proof Handles set 6 – assorted sizes	1
2.	Broom – street, ordinary, industrial type	1
3.	Purell Instant Antiseptic hand cleanser with refill Packed Model 7BC-83786 and 7BC-83784 as distributed by Lab Safety	1
4.	Chemical Resistant face shield Model 7A-6635 as Distributed by Labs Safety	1
5.	Paper Tower Dispenser	1
6.	Case of paper towels for dispenser	1
7.	Dust pan	1
8.	Trash can – large	
9.	Extension Light – Graybar Cat. 88072027	
10.	Manhole hook (30" long)	1
11.	Plastic garbage bags with ties	50

12.	Electric extension cord 25 feet (heavy duty - 14/3 AWG.)	2
13.	Toilet paper dispenser with 12 rolls of toilet paper	1
14.	Valve Key (6' long)	1

2.02 FIRST AID CABINET

A. The Contractor shall supply one (1) first aid cabinet with supplies for light industrial use as manufactured by Johnson and Johnson and supplied by Lab Safety Supplies (1-800-356-0783). First aid set shall be Model No. 7BC-52592. The first aid cabinet shall be mounted on the laboratory wall at the location directed by the Engineer.

END OF SECTION

PART 1 - GENERAL

1.01 DESCRIPTION

A. Work of this Section includes the furnishing of all labor, materials, equipment and services necessary to install flow instrumentation as specified herein and shown on the Drawings.

B. The unit shall be factory set for weir flow as shown on the Drawings.

1.02 QUALITY ASSURANCE

A. The equipment covered by these Specifications is intended to be standard equipment of proven ability as manufactured by reputable concerns. Equipment shall be designed, constructed and installed in accordance with the best practice of the trade, and shall operate satisfactorily when installed as shown on the Contract Drawings.

B. The Contractor's instrumentation supplier shall show satisfactory evidence that he maintains a fully equipped factory organization capable of furnishing adequate service of the equipment furnished, including replacement parts. The supplier shall be prepared to offer a service contract to the owner for the maintenance of the system after the warranty period expires.

C. The unit shall be manufactured by Milltronics.

1.03 WARRANTY

A. The Supplier shall provide a Warranty Certificate typed on the company letterhead and signed by an authorized officer of the Supplier. The certificate shall be witnessed by a notary public in the state in which the company headquarters is located.

B. The Supplier shall guarantee all components of the instrumentation equipment specified to be furnished by this section to be free from defects in design, materials and workmanship for a period of two (2) year commencing on the date of acceptance by the regulatory agencies.

C. During the guarantee period, if any part or equipment component is defective or fails to perform when operating at design conditions and if the equipment has been installed and is being operated and maintained in accordance with the written instructions provided by the Supplier, the Supplier shall repair or exchange such defective part(s) free of any and all charges. The cost of labor and all other expenses resulting from the repair or replacement of the defective part(s) and from installation of part(s) furnished by this Warranty shall be borne solely by the Supplier.

D. The replacement or repair of parts normally consumed in service shall include charts, ink, and light bulbs. These parts only shall be considered as part of routine maintenance and upkeep and shall not be considered eligible for exchange free of charge under the Warranty.

1.04 SUBMITTALS

A. Submit all information in accordance with Section 01300.

B. The Contractor shall submit copies of the manufacturer's warranty.

C. Submit Catalog cuts, equipment specifications and dimensional drawings.

D. List of spare parts

1.05 DELIVERY, STORAGE AND HANDLING

A. All instrumentation equipment which the Contractor elects to store on the site, shall be stored in a dry, heated enclosure, and not subject to adverse weather conditions or flooding, in a manner as directed by the instrumentation supplier and approved by the Engineer. No equipment shall be delivered to the site until provisions have been made to store and protect it properly.

B. All materials which are subject to damage from dampness shall be stored upon raised platforms at least 6" off floor or grade. All waste materials and debris shall be disposed of immediately.

C. The Contractor shall, in accordance with the instrumentation supplier's recommendations, take special care in the protection of all components. Protection of said equipment shall be continuous until the time the equipment is placed into permanent service.

1.06 FIELD SERVICES

A. The instrumentation supplier shall provide the services of an experienced, authorized and factory trained representative at the site of the Work to provide calibration, start-up, systems testing and operations and maintenance training. The times specified below shall not relieve the supplier from placing the systems in trouble and fault free operation

B. The Supplier shall include two (2) non-consecutive days in the bid price, dates to be selected by the Engineer.

PART 2 - PRODUCTS

2.01 ULTRASONIC MULTI-PURPOSE LEVEL CONTROLLER

A. The multi-purpose level transmitter system shall be a microprocessor-based echo-time measuring type providing an electronic output signal proportional to the level of material, space, volume, flow or differential as may be required. It shall consist of a transmitter and one or two transducers connected by up to 1200 feet of cable.

B. Transducer:

1. Operating principle: Acoustic impulses emitted from an ultrasonic transducer are reflected back from the material surface and are received by the transducer.

   The transit time of pulse travel from generation to echo is measured. The elapsed time is proportional to the distance between the transducer face and material surface.

2. Primary Sensor: The acoustic transducer shall contain a polarized Zirconium crystal with acoustic impedance matching face and transformer.

   a. The range of the transducer shall be a minimum of 1 to 50 feet

   b. Transducer housing shall be Kynar

   c. Process connection shall be 1” NPT

   d. Operating temperature shall be -40° to 203°F

C. Transmitter:

1. Enclosure shall be NEMA 4X polycarbonate

2. Power supply shall be 100 - 230 VAC +/- 15% @ 50/60 Hz

3. Power consumption shall be 36 VA

4. Operating temperature shall be -5º to 122º F. Internally mounted heater and thermostat assemblies shall be enclosed at temperatures below -5º F.

5. Outputs:

   a. 4-20ma/20-4ma/0-20ma/20-0ma into 750 ohms.

   b. 6 relays, 4 Form A & 2 Form C, rated at 5A @ 250 VAC, non-inductive

6. Inputs

   a. One (1) 4 – 20 or 0 – 20 mA from an alternate device, scaleable

   b. Two (2) discrete 10 – 50 switching level

7. Control and Programming

   a. Unit shall be capable of entering all parameter via the following methods:

      ii) Hand held infrared keypad
      iii) Dolphin Plus PC based software

   b. All programming shall be achievable without opening enclosure once field installation is completed.

8. Communications

   a. Transceiver shall be capable of communications to customer's devices via each of the following methods:

      i) RS-232 running Modbus RTU or ASCII via RJ-11 connector
      ii) RS-485 running Modbus RTU or ASCII via terminal blocks
      iii) Optional RS-485 External Modem kit

iv) Smart linx interface to Allen-Bradley RIO, Profibus DP, and Device net

9. Transmitter shall process all echoes from stored memory that is continually updated after echo enhancement.

10. The echoes shall be processed comparing returns for largest echo and first echo returned. The patented Sonic Intelligence shall compare the various returns and select the echo with the greatest confidence factor.

D. Transducer Performance

1. Range shall be 1 - 50 feet (depending on transducer used)

2. Accuracy shall be +/- 0.25% of range or 6 mm, whichever is greater.

3. Resolution shall be 0.1% of program range or 2 mm, whichever is greater

4. Maximum separation between transmitter and transducer shall be 1200 feet

5. FM approved for Class I, Div. 2, Groups C & D Class II, Div. 2, Groups E, F, & G

6. Shall accept submersible shield

E. Indication

1. Display shall be a multi-field back lit LCD

2. Individual alarm status lights on LCD display

F. Equipment

The multi-purpose level controller shall be a Siemens-Milltronics HydroRanger with an Echomax™ XRS-5, XPS-10 or XPS-15 transducer and chart recorder or approved equal.

G. Operator Functions

1. Calibration

a. Calibration of the multi-purpose level controller shall be accomplished by the entry of all operating data through the removable keypad via infrared link or Dolphin Plus PC based software. No other equipment shall be required.

b. Internal self-diagnostics shall be available to assist in maintenance of the multi-purpose level controller.

2. Transmitter Function Details

The following functions shall be provided:

a. The controller shall provide an isolated 4-20ma or 0-20ma (or reversed) signal proportional to space, material, volume, flow or differential into a maximum of 750 ohms.

b. The controller shall be capable of reading the differential, head or level as outlined in the instrumentation schedule.

c. The transducer shall be permanently mounted at the measuring site and shall be installed in accordance with the manufacturer's recommendations.

d. The transducer shall transmit and receive an acoustic signal to accurately measure material flow and level.

e. The output shall be proportional to level, flow rate or volume from 0 to 100 % with a resolution of 0.1%.

f. Operational range shall be adjustable by entering new data via infrared keypad.

g. The controller shall be capable of zero to full scale simulation to assure proper operation with regards to flow charts or pump control parameters.

h. There shall be no internal potentiometers or switches used in programming or adjusting the transmitter.

i. The power to operate the transducers shall come solely from the transmitter over the signal interconnection cable.

j. The 6 alarm relays shall be programmable for level, rate of change of level, differential level, time sampling, volume sampling, pump control, loss of echo or temperature.

k. The controller shall have an EEPROM memory and shall not require a battery to ensure protection of stored data.

PART 3 – EXECUTION

3.01 INSTALLATION

A. Follow manufacturer's recommendation for the minimum separation between the transducer face and the maximum expected material level.

B. Mount the transducer to ensure a clear path to the material surface.

C. Additional transducer cable and mA output signal cable shall have 2 – 3 copper conductors, twisted with shield and drain wire.

D. Wiring between the transmitter and the transducer shall be routed through grounded metal conduit.

E. The manufacturer shall calibrate the unit within seven (7) days of Contractor's request.

END OF SECTION

NO TEXT
THIS PAGE WAS INTENTIONALLY LEFT BLANK

PART 1 - GENERAL

1.01 CONTRACT DOCUMENTS

A. All work of this section shall comply with the requirements of the conditions of the Contract, with all sections of the Specification and with the Drawings and all other Contract Documents.

1.02 SUMMARY

A. This Section includes general administrative and procedural requirements for mechanical installations. The following administrative and procedural requirements are included in this Section to expand the requirements specified in Division 1:

1. Submittals.
2. Coordination drawings.
3. Record documents.
4. Maintenance manuals.
5. Rough-ins.
6. Mechanical installations.
7. Cutting and patching.

1.03 SUBMITTALS

A. General: Follow the procedures specified in Section 01300.

1.04 DELIVERY, STORAGE, AND HANDLING

A. Deliver products to the project properly identified with names, model numbers, types, grades, compliance labels, and other information needed for identification.

PART 2 - PRODUCTS
(NOT UTILIZED)

PART 3 - EXECUTION

3.01 ROUGH-IN:

A. Verify final locations for rough-ins with field measurements and with the requirements of the actual equipment and piping to be connected.

B. Refer to equipment specifications and the Contract Drawings for rough-in requirements.

3.02 MECHANICAL INSTALLATIONS

A. General: Sequence, coordinate, and integrate the various elements of mechanical systems, materials, and equipment. Comply with the following requirements:

1. Coordinate mechanical systems, equipment, and materials installation with wastewater treatment components.

2. Verify all dimensions by field measurements.

3. Construct required openings in tankage during progress of construction.

4. Coordinate the installation of required supporting devices and sleeves to be set in concrete and other structural components, as they are constructed.

5. Sequence, coordinate, and integrate installations of mechanical materials and equipment for efficient flow of the Work. Give particular attention to large equipment requiring positioning inside the process tankage.

6. Where mounting heights are not detailed or dimensioned, install systems, materials, and equipment to provide the maximum headroom possible or as directed by the Engineer.

7. Coordinate connection of mechanical systems with exterior underground piping and services. Provide required connection for each service.

8. Install systems, materials, and equipment to conform with approved submittal data, including coordination drawings, to greatest extent possible. Conform to arrangements indicated by the Contract Documents, recognizing that portions of the Work are shown only in diagrammatic form. Where coordination requirements conflict with individual system requirements, refer conflict to the Engineer.

9. Install systems, materials, and equipment level and plumb, parallel and perpendicular to other systems and components, where installed exposed in finished spaces.

10. Install mechanical equipment to facilitate servicing, maintenance, and repair or replacement of equipment components. As much as practical, connect equipment for ease of disconnecting, with minimum of interference with other installations. Extend grease fittings to an accessible location.

11. Install piping systems, giving right-of-way priority to piping required to be installed at a specified slope.

3.03 CUTTING AND PATCHING

A. General: Perform cutting and patching so as to protect adjacent work.

B. Perform cutting, fitting, and patching of mechanical equipment and materials required to:

1. Uncover Work to provide for installation of ill-timed Work.

2. Remove and replace defective Work.

3. Remove and replace Work not conforming to requirements of the Contract Documents.

4. Remove samples of installed Work as specified for testing.

5. Install equipment and materials in existing structures.

6. Upon written instructions from the Engineer, uncover and restore Work to provide for Engineer observation of concealed Work.

END OF SECTION

NO TEXT
THIS PAGE WAS INTENTIONALLY LEFT BLANK

PART 1 - GENERAL

1.01 CONTRACT DOCUMENTS

A. All work of this section shall comply with the requirements of the conditions of the Contract, with all sections of the Specification and with the Drawings and all other Contract Documents.

1.02 SUMMARY

A. This Section specifies piping materials and installation methods common to more than one section of Division 15 and includes joining materials, piping specialties, and basic piping installation instructions.

B. Related Work Specified Elsewhere Includes:

Pipe and Pipe Fittings Underground	02610
Underground Non-Pressure Piping	02705
Underground Pressure Piping	02706
Pipe and Pipe Fittings - Exposed	15060
Piping Specialties	15080
Valves	15100
Supports and Anchors	15140

C. All pipes must be manufactured in USA unless otherwise approved by the regulatory agencies.

1.03 SUBMITTALS

A. Refer to Section 01300 for administrative and procedural requirements for submittals.

B. Submit product data on the following items:

1. Mechanical Sleeve Seals

C. Submit welders' certificates specified in Quality Assurance below.

1.04 QUALITY ASSURANCE:

A. Welder's Qualifications: All welders shall be qualified in accordance with ASME Boiler and Pressure Vessel Code, Section IX, Welding and Brazing Qualifications.

B. Welding procedures and testing shall comply with ANSI Standard B31.1.0 - Standard Code for Pressure Piping, Power Piping, and The American Welding Society, Welding Handbook.

C. Soldering and Brazing procedures shall conform to ANSI B9.1 Standard Safety Code for Mechanical Refrigeration.

1.05 DELIVERY, STORAGE, AND HANDLING:

A. Provide factory-applied plastic end-caps on each length of pipe and tube, except for hub-and-spigot. Maintain end-caps through shipping, storage and handling to prevent pipe-end damage and prevent entrance of dirt, debris, and moisture.

B. Protect stored pipes and tubes. Elevate above grade and enclose with durable, waterproof wrapping. When stored inside, do not exceed structural capacity of the floor.

C. Protect flanges, fittings, and specialties from moisture and dirt by inside storage and enclosure, or by packaging with durable, waterproof wrapping.

PART 2 - PRODUCTS

2.01 MANUFACTURERS:

A. Manufacturer uniformity: Conform with the requirements specified in Section 01600.

B. Manufacturer: Subject to compliance with requirements, provide piping materials and specialties from one of the following:

1. Mechanical Sleeve Seals:

a. Link Seal or equal.

2.02 PIPE AND FITTINGS:

A. Refer to the individual piping system specification sections in Division 15 for specifications on piping and fittings relative to that particular system.

2.03 JOINING MATERIALS:

A. Welding Materials: Comply with Section II, Part C, ASME Boiler and Pressure Vessel Code for welding materials appropriate for the wall thickness and chemical analysis of the pipe being welded.

B. Brazing Materials: Comply with SFA-5.8, Section II, ASME Boiler and Pressure Vessel Code for brazing filler metal materials appropriate for the materials being joined.

C. Soldering Materials: Refer to individual piping system specifications for solder appropriate for each respective system.

D. Gaskets for Flanged Joints: Gasket material shall be full-faced for cast-iron flanges and raised-face for steel flanges. Select materials to suit the service of the piping system in which installed, and which conform to their respective ANSI Standard (A21.11, B16.20, or B16.21). Provide materials that will not be detrimentally affected by the chemical and thermal conditions of the fluid being carried.

2.04 PIPING SPECIALTIES:

A. Unions: Malleable-iron, Class 150 for low pressure service and class 250 for high pressure service; hexagonal stock, with ball-and-socket joints, metal-to-metal bronze seating surfaces; female threaded ends.

B. Sleeves:

1. Steel Sleeves: Schedule 40 galvanized, welded steel pipe, ASTM A53, Grade A.

C. Mechanical Sleeve Seals: Modular mechanical type, consisting of interlocking synthetic rubber links shaped to continuously fill annular space between pipe and sleeve, connected with bolts and pressure plates which cause rubber sealing elements to expand when tightened, providing watertight seal and electrical insulation

PART 3 - EXECUTION

3.01 PREPARATION:

A. Ream ends of pipes and tubes and remove burrs. Bevel plain ends of steel pipe.

B. Remove scale, slag, dirt, and debris for both inside and outside of piping and fittings before assembly.

3.02 INSTALLATIONS:

A. General Locations and Arrangements: Drawings (plans, schematics, and diagrams) indicate the general location and arrangement of the piping systems. Location and arrangement of piping layout take into

consideration pipe sizing and friction loss, expansion, pump sizing, and other design considerations. So far as practical, install piping as indicated. Refer to individual system specifications for requirements for shop drawing submittals.

B. Install piping free of sags or bends and with ample space between piping to permit proper insulation applications.

C. Install exposed piping at right angles or parallel to walls. Diagonal runs are not permitted, unless expressly indicated on the Drawings.

D. Install piping tight to slabs, walls, and other permanent elements of the tankage.

E. Locate groups of pipes parallel to each other, spaced to permit servicing of valves.

F. Wall Penetrations: Seal pipe penetrations through walls using sleeves and mechanical sleeve seals.

3.03 FITTINGS AND SPECIALTIES:

A. Use fittings for all changes in direction and all branch connections.

B. Remake leaking joints using new materials.

C. Install unions adjacent to each valve, and at the final connection to each piece of equipment and plumbing fixture having 2" and smaller connections, and elsewhere as indicated.

D. Install Flanges in piping 2-1/2" and larger, or where indicated, adjacent to each valve, and at the final connection to each piece of equipment.

3.04 JOINTS:

A. Steel Pipe Joints:

1. Pipe 2" and Smaller: Thread pipe with tapered pipe threads in accordance with ANSI B2.1. Cut threads full and clean using sharp dies. Ream threaded ends to remove burrs and restore full inside diameter. Apply pipe joint lubricant or sealant suitable for the service for which the pipe is intended on the male threads at each joint and tighten joint to leave not more than 3 threads exposed.

2. Pipe Larger Than 2":

a. Weld pipe joints (except for exterior water service pipe) in accordance with ASME Code for Pressure Piping, B31.

b. Install flanges on all valves, apparatus, and equipment. Weld pipe flanges to pipe ends in accordance with ASME B31.1.0 Code for Pressure Piping. Clean flange faces and install gaskets. Tighten bolts to torque specified by manufacturer of flange and flange bolts, to provide uniform compression of gaskets.

B. Non-ferrous Pipe Joints:

1. Brazed And Soldered Joints: For copper tube and fitting joints, braze joints in accordance with ANSI B31.1.0 - Standard Code for Pressure Piping, Power Piping and ANSI B9.1 - Standard Safety Code for Mechanical Refrigeration.

2. Thoroughly clean tube surface and inside surface of the cup of the fittings, using very fine emory cloth, prior to making soldered or brazed joints. Wipe tube and fittings clean and apply flux. Flux shall not be used as the sole means for cleaning tube and fitting surfaces.

C. Joints for other piping materials are specified within the respective piping system sections.

3.05 FIELD QUALITY CONTROL:

A. Testing: Refer to individual piping system specification sections.

END OF SECTION

NO TEXT
THIS PAGE WAS INTENTIONALLY LEFT BLANK

PART 1 - GENERAL

1.01 DESCRIPTION

A. This Section includes the material and installation requirements for interior and exposed process and chemical system piping.

B. Refer to other Division 15 Sections for related piping requirements for small diameter water distribution systems.

C. Refer to Division 2 Sections for pipe and pipe fitting material and installation requirements for underground pipe.

1.02 QUALITY ASSURANCE

A. Pipe and pipe fittings shall be produced in a plant of recognized reputation that is regularly engaged in the production of pipe conforming to the specified standards. Pipe and pipe fittings of the same type shall be the product of a single manufacturer.

B. Pipe manufacturer shall be a member of:

1. Ductile Iron - Ductile Iron Pipe Research Association

2. PVC Pipe - Uni-Bell Plastic Piping Association

3. Steel - Steel Pipe Fabricators Association

C. Acceptable manufacturers of pipe and pipe accessories shall be:

1. Ductile Iron -U.S. Pipe and Foundry Company, American Cast Iron Pipe Company, Clow Corporation, or equal.

2. PVC Pipe - Certain-Teed Products Corporation, Johns-Manville, IDEX, Inc., or equal.

3. Steel - U.S. Steel, Armco or equal.

4. Stainless Steel - All Stainless, Inc., Rath Manufacturing Co., Jonesville, WI or equal.

5. All pipes must be manufactured in USA unless otherwise approved by WCDH.

1.03 SOURCE QUALITY CONTROL

A. General - The manufacturers shall test and furnish certificates covering pipe and fittings supplied under this Section. Select test samples from the run of pipe proposed to be furnished to the Project. Unless Engineer elects to witness such testing, the manufacturer shall select the samples for testing. Advise Engineer at least two (2) weeks in advance of the time and location of the testing.

B. Factory Tests - Pipe shall be tested as follows:

1. Ductile Iron Pipe

Test	In Accordance With
Hydrostatic Test	AWWA C151
Tensile Test	AWWA C151
Impact Test	AWWA C151
Low Temperature Impact Test	AWWA C151

2. Polyvinyl Chloride Pipe - Schedule 40, 80, 120(ASTM D1785)

Test	In Accordance With
Sustained Pressure Test	ASTM D1785, D1598
Quick Burst Test	ASTM D1785, D1599
Dimensions and Tolerances	ASTM D1785, D2122
Eccentricity	ASTM D1785
Flattening Immersion Test	ASTM D1785, D2152
Acetone Immersion Test	ASTM D1785, D2152

3. Steel Pipe - Carbon Steel (ASTM A53, AWWA C200)

Test	In Accordance With
Hydrostatic Test	AWWA C200
Weld Test	AWWA C200
Chemical Analysis	ASTM A53, A370
Tensile Test	ASTM A53, A370
Bending Test	ASTM A53, A370
Flattening Test	ASTM A53, A370

C. Additional Testing - In addition to the tests required above, Owner may perform additional testing on pipe delivered to the Project site.

1.04 SUBMITTALS

A. See Section 01300.

B. Brochures containing sizes, dimensions, specifications and technical data, coating information, etc. as well as complete information and instructions pertaining to the storage, handling, installation and inspection of pipe, fittings and joints furnished.

C. Test certificates for the manufacturers' tests required under Paragraph 1.03.

D. Pipe manufacturers' Certificates of Compliance on pipe, with each lot of pipe supplied. Immediately turn certificates over to Engineer. Materials delivered to the site without accompanying certificates will be subject to rejection.

E. Contractor shall prepare and submit a pipe schedule for all pipe to be used for this Project.

1.05 DELIVERY, STORAGE AND HANDLING

A. Each length of pipe delivered to the site shall be clearly marked with the name of the manufacturer, class of pipe and pipe diameter. Store in accordance with manufacturer's approved instructions.

B. Carefully handle all pipes and fittings when loading and unloading. Lift pipes and fittings by hoists or lower on skid-ways in a manner to avoid shock. Lower pipe into trench with derricks, rope or other suitable equipment.

C. Do not dump or drop pipe and fittings. Those that are dumped or dropped are subject to rejection by Engineer.

D. Store PVC pipe under canvas or other opaque material which will allow air circulation but will eliminate the direct rays from the sun.

E. Comply with all other recommendations of the manufacturers.

1.06 JOB CONDITIONS

A. The Drawings indicate the required pipe sizes and general arrangement of piping and equipment. Verify locations in the field and immediately notify Engineer of any discrepancies or conflicts.

B. Approval of the Engineer is required prior to changing the locations of any of the Work due to field conditions. Changes in pipe sizes are prohibited without a written consent from Engineer.

C. Determine the locations and character of all inserts for hangers, chases, sleeves and other openings in the construction required for the piping work. Obtain this information well in advance of the construction progress so as not to delay the Work. Coordinate final locations of all built-in items with work of other trades to prevent interferences.

D. Installed piping shall form completely connected systems, ready for operation, including connections to valves, equipment, and appurtenances specified in other Sections. Do not install work that connects to equipment until complete Shop Drawings of such equipment have been approved by Engineer. Any work installed prior to approval of Shop Drawings shall be at Contractor's risk.

PART 2 - PRODUCTS

2.01 DUCTILE IRON PIPE AND FITTINGS (EXPOSED)

A. Pipe shall be centrifugally cast with primary graphite in Modular or spherulitic form. Pipe shall be 60-42-10 grade with matrix predominately ferrite and shall conform to AWWA C151 and Federal Specification WW-P-421D with thickness Class 53.

B. Pipe weight shall not vary more than 5 percent for pipe greater than 12 inches in diameter and 6 percent for pipe 12 inches in diameter and smaller. Each length of pipe shall have the weight, class or nominal thickness, the manufacturer's name or trademark and the letters "DI" or "DUCTILE" cast or stamped on the pipe by the manufacturer.

C. All interior and exposed ductile iron pipe and fittings shall be cement lined per AWWA C104 with bituminous seal coat per AWWA C104.

D. Flanges for both ductile iron pipe and fittings shall be cast solid or factory assembled by the pipe manufacturer and faced accurately at right angles to the axis of the pipe and shall be adequate for potable water service of 250 psi working pressure. Flanges shall conform to AWWA C110 for fittings and AWWA 115 for pipe. The bolt circle and bolt holes shall match those of Class 125 flanges shown in ANSI B16.1 and shall be joined with valves specified in Section 15100.

E. Flanged joints shall be made up with bolts conforming to ANSI B18.2.1 and nuts conforming to ANSI B18.2.2 with 1/8" thick ring or full-face rubber gasket placed between the flanges.

2.02 POLYVINYL CHLORIDE PIPE

A. PVC Schedule 40, 80, 120 - (ASTM D1785)

1. Pipe and fittings shall be PVC 1120 or PVC 1220 pressure rated pipe extruded from Class 12454-A or Class 12454-B material as defined in ASTM D1785. Pipe shall conform in all respects to the requirements of ASTM D1785.

2. Each length of pipe shall be clearly marked at 5-foot intervals with the nominal pipe size, material designation code, schedule size and pressure rating, ASTM designation D1785 and the manufacturer's name or trademark.

3. Joints shall be threaded, solvent cemented or flanged as indicated on the Pipe Schedule.

a. Solvent cement - ASTM D2564

b. Pipe threads - American Standard Taper

c. Gaskets - Soft rubber full face, flat type

d. Nuts, bolts & washers - Metal, torqued as recommended by the manufacturer.

4. Fittings and couplings shall conform with the following:

a. SCH 80 (threaded) - ASTM D2464

b. SCH 40 (socket type) - ASTM D2466

c. SCH 80 (socket type) - ASTM D2467

2.03 STEEL PIPE

A. Small diameter (less than 6 inch) steel pipe shall be "black iron" meeting the requirements of ASTM A120 or A53. Fittings and pipe ends shall be flanged or threaded as indicated in the Pipe Schedule.

1. Flanged - American Standard 125lb., flat face.

2. Threaded - American Standard Taper (ANSI B2.1).

2.04 STAINLESS STEEL PIPE

A. Stainless steel piping shall be Schedule 40 and be class 304.

PART 3 - EXECUTION

3.01 INSPECTION

A. Inspect the Work of other trades and verify that such Work is completed and accurate and that the work under this Section may properly proceed.

B. Verify that equipment shop drawings have been submitted and have been approved by Engineer.

C. Make necessary field measurements to ensure precise fit of all items. Utilize approved shop drawings for equipment dimensions.

D. Reinspect each length of pipe, fitting, and other pipeline appurtenances before installation for conformance, defects, and errors.

E. Do not install piping systems until conditions are satisfactory.

3.02 PREPARATION

A. Thoroughly clean interior of pipes, fittings, valves and appurtenances, joint surfaces, and gaskets before installation.

B. Tighten valve stuffing boxes and check in open and closed positions to ensure that parts are in satisfactory working condition. See Section 15100 for additional requirements.

3.03 PIPE INSTALLATION - GENERAL

A. Pipe installations shall be complete in every respect, insuring systems which will operate satisfactorily and quietly, free from unusual movement and vibration.

B. Cutting, fitting, repairing, and finishing of masonry, concrete, metal, and carpentry work that may be required for the installation of piping shall be done by craftsmen skilled in their respective trades.

C. Use only proper and suitable tools and appliances for the safe and convenient handling and installing of the pipe and fittings. Take care to prevent damage to any interior or exterior coatings.

D. Piping, connecting to equipment, shall be provided with unions or companion flanges located so that piping may be readily dismantled from equipment. See Section 15080 for unions required in other locations. Also, provide restrained or harnessed flexible couplings on inlet and discharge piping of equipment so that the equipment will be free from forces

transmitted by the piping. This provision for eliminating pipe strain shall be provided, whether shown on the Drawings or not.

E. Make connections between dissimilar metals with dielectric unions.

F. Install piping so that it will be free to expand and contract without injury to itself or its supporting structure. Provide self-equalizing type expansion joints in all runs of 90' or more, or more often where shown on the Drawings. Furnish and install guides and anchors.

G. In structural slabs less than 4" thick, pipes having "D" over 1" are prohibited. "D" is the maximum outside diameter or dimension of the pipe. In structural slabs 4" and thicker, "D" shall not exceed 1-3/8". Where pipes are permitted in the slab, the center-to-center spacing shall not be closer than 3 "D" and in no case less than 2" clear.

H. Provide wall sleeves castings, or pipes for piping passing through walls and floors, accurately located before concrete is placed. Sleeves for piping shall be as shown on the Drawings.

I. Where pipes pass through walls of rooms containing chlorine, chlorination equipment, hazardous gases, wastewater or sludge gases, or high moisture or humidity levels, fill annular spaces between pipe and wall sleeves with lead wool and hemp (on the poor side) and silicone caulking (on the clean side) to provide a gas- and moisture tight installation.

J. Accurately cut pipe with mechanical cutters. Install pipe without springing or forcing, and in true, level and square lines. Carefully fit pipe to the equipment, without forcing either the pipe or equipment. After the piping has been placed, check the equipment for level and alignment.

3.04 INSTALLATION OF FLANGED PIPING

A. Bring all joints in exact alignment and insert gaskets and bolts or studs in their proper places. Uniformly tighten bolts or studs around the joints. Where stud bolts are used, apply equal torque to each nut on the studs.

3.05 FIELD QUALITY CONTROL

A. Inspect all piping systems.

B. Perform leakage tests in accordance with Section 01666.

C. When requested by Engineer, verify that no forces are being transmitted to equipment by unbolting or unscrewing pipe joints at equipment connections.

3.06 ADJUST AND CLEAN

A. Carefully examine pipes and fittings for defects and do not install pieces which are known to be defective.

B. Piping installed out of alignment, installed at the wrong elevation, containing defective joints, or otherwise defective, shall be replaced.

C. Remove any dirt, debris, or other foreign material which has entered any portion of the piping, prior to testing and startup. Water and moisture are foreign materials in gaseous chlorine and other gaseous piping systems.

INTERIOR/EXPOSED PIPE SCHEDULE

PIPE DESIGNATION*	PIPE TYPE
ALUM DOSING CONDUIT, STP BLDG. TO BESST TANK	SCH. 80 PVC
STP BUILDING SANITARY WASTE FORCE MAIN	SCH.80 PVC
EQ TANK DISCHARGE FM (INSIDE TANK)	SCH. 40 TYPE 316 S.S.
PUMP DISCHARGE FM (OUTSIDE TANK)	SCH. 40 TYPE 316 S.S
CONSTANT HEAD BOX PIPING	DR-18 PVC
EFFLUENT PIPING	DR-18 PVC
PROCESS AIR PIPING	SCH. 40 TYPE 304 S.S.
SHT/EQ AIR PIPING	SCH. 40 TYPE 304 S.S.
TERTIARY FILTER AIR	SCH. 40 TYPE 304 S.S.
SLUDGE SUPERNATANT	SCH. 80 PVC
ODOR CONTROL PIPING	SCH. 80 PVC
WATER SUPPLY	TYPE K COPPER

END OF SECTION

PART 1 - GENERAL

1.01 DESCRIPTION

A. Work covered by this Section includes the furnishing and installation of piping specialties, including, but not limited to, unions, gauges and other specialty items.

B. Related work specified in other Sections includes:

Basic Piping Materials and Methods	15055
Pipe and Pipe Fittings - Exposed	15060
Valves	15100

1.02 QUALITY ASSURANCE

A. The items in this Section are specified in a general manner and for normal conditions. Where corrosive liquids or gases are involved, or where materials are encountered which require special construction, use materials adequate for the service intended.

B. All pipes must be manufactured in USA unless otherwise approved by the regulatory agencies.

1.03 SUBMITTALS

A. See Section 01300.

B. Catalog cuts, technical data, and installation, operation and maintenance instructions for each item to be provided.

C. Manufacturers' Certifications of Compliance.

PART 2 - PRODUCTS

2.01 UNIONS

A. Use Required - For pipes with threaded, soldered, solvent cemented, or welded joints, provide unions at piping connections to each piece of equipment, at intervals of not more than 50' in straight runs of pipe, at each valve or cock (except where valves and cocks have union ends), and elsewhere as required to adequately service the piping system and equipment.

B. For Steel and Iron Pipe - A.A.R. 300 lb. malleable iron, brass to brass or brass to iron seats, ground joint.

C. For Copper Pipe - Wrought copper, solder joint, copper to copper unions.

D. For Plastic Pipe - PVC body with Viton seals.

2.02 PRESSURE, VACUUM AND COMPOUND GAUGES

A. Use Required - Where shown on the Drawings or specified, and on the suction and discharge of dry pit pumps and discharge lines of submersible pumps, and blowers with discharge piping 2" and larger.

B. Gauge - ANSI B40.1, Grade 2A, dial type utilizing a Bourdon tube, complete with weatherproof case and 4-1/2" dial.

C. Scales

1. Water & Gas - In psig with range to about two times the operating pressure.

2. Pumps - In psig when pump TDH is specified in psi, otherwise, in feet of water with range about two times the maximum operating pressure, but not less than 10% above the shut-off head.

3. Vacuum - 30" of mercury, minimum.

D. Standard Gauge Accessories - Provide each gauge with pressure sensing tubing, main pipeline pressure tap, a shut-off cock, and an air bleed.

E. Gauge Snubber - Provide a snubber with each gauge which may be subjected to rapid pressure changes so that pointers do not vibrate during operation.

F. Gauge Guard - Provide a gauge guard with each gauge connected to a pipeline carrying sewage, sludge, a high solids content liquid, and corrosive liquids and gases. Provide a diaphragm of a material which is inert to the

liquid or gas being sensed. Fill guard with a temperature stable instrument oil in the cavity between the diaphragm and the gauge.

G. Gauges for submersible pumps shall be remote mounted at an area to preclude physical damage and effects of freezing.

2.03 SLEEVES AND WALL PIPES

A. Whenever pipelines pass through any new concrete walls, floors, or partitions whether inside or outside the structure, cast iron or steel sleeves, or cast iron wall pipes shall be inserted in the forms at the proper elevation and set in the concrete work when placed. Wall pipes shall be installed in walls which contain water on one side only. Wall pipes and sleeves shall be provided with water stops.

B. Where wall pipe ends are flanged or are mechanical joint bells, they shall be drilled and tapped for stud bolts.

C. All sleeves and wall pipes shall meet the requirements of applicable AWWA standards, conforming to the requirements for, and pressure rating of, the pipe line in which installed.

D. Whenever the Contractor is required to make a penetration through an existing wall, a controlled oversized hole shall be cored, and the hole grouted, in accordance with the applicable portions of these Specifications. All waterproofing membranes disturbed shall be repaired and reflashed.

E. Install a "Link-Seal" by Thunderline Corp., equivalent by O.Z. Gedney, or equal, between wall and piping. Such shall be installed on the most accessible side. Fill voids behind seal with silicone caulking compound.

2.04 FLEXIBLE COUPLINGS

A. Where shown on the Drawings, and where needed to allow construction of piping systems, stress relief, or other purposes, the Contractor shall install flexible sleeve couplings as manufactured by the Dresser Manufacturing Company, Rockwell International, or equal. Coupling type shall be Dresser Style 138, Dresser Style 38, or equal for ductile iron and steel pipe. Equivalent type couplings shall be used for piping systems of other materials. (E.g. PVC, fiberglass, etc.). Locations shall be as approved by the Engineer.

B. Material requirements are as follows:

1. Cast Couplings

a. Sleeves - Grey iron, ASTM A126, Class B with smooth inside taper.

b. Followers - Malleable iron, ASTM A47, Grade 32510 or ductile iron ASTM A536.

c. Bolts and Nuts - High strength low alloy steel with heavy hex nuts, AWWA C111.

2. Steel Couplings

a. Sleeves - ASTM A53, A512 or other with minimum yield strength of 30,000 psi.

b. Followers - As above, or steel AISI C1018.

c. Bolts and Nuts - As specified in Paragraph B.1 above.

2.05 FLANGED ADAPTORS

A. Where shown on the Drawings, as specified, and where required, the Contractor shall install flanged adaptors as manufactured by the Dresser Manufacturing Company, Rockwell International, or equal.

B. Material requirements shall be as specified. With flanges conforming to the requirements of Section 15060 as applicable for the particular pipe installed.

2.06 OTHER MATERIALS

A. Provide any materials not specifically shown or described but required for a complete and proper installation. Select the materials and submit shop drawings to Engineer for approval.

PART 3 – EXECUTION

3.01 INSTALLATION

A. Carefully install work in accordance with the manufacturers' recommended installation instructions.

END OF SECTION

PART 1 - GENERAL

1.01 DESCRIPTION

A. Work covered by this Section includes the furnishing and installation of interior and exposed process valves and appurtenances where shown on the Drawings and specified herein.

B. Also included are underground valves and stops where shown on the Drawings and specified herein.

C. Related work specified elsewhere includes:

Pipe and Pipe Fittings Underground	02610
Underground Pressure Piping	02706
Pipe and Pipe Fittings - Exposed	15060

D. Provide all valves and auxiliary equipment required for complete and proper operation of all systems, whether or not they are specifically described.

1.02 QUALITY ASSURANCE

A. Similar types of valves shall each be the product of a single manufacturer and the same models shall be identical, with all parts interchangeable.

B. Acceptable products are specified in Part 2. Equivalent products of other manufacturers will be acceptable.

C. Valves shall be of ample strength to withstand and operate satisfactorily under the specified pressures.

D. Unless otherwise specified, perform shop tests with a hydrostatic water pressure equal to twice the rated pressure. Any valve which leaks or shows sign of defects is not permitted.

E. Single Source Responsibility: Comply with the requirements specified in Division 1.

F. American Society of Mechanical Engineers (ASME) Compliance: Comply with ASME B31.9 for building services piping and ASME B31.1 for power piping.

G. Manufacturers Standardization Society of the Valve and Fittings Industry (MSS) Compliance: Comply with the various MSS Standard Practices referenced.

1.03 SUBMITTALS

A. See Section 01300.

B. Catalog cuts, with cut-aways, and technical data.

C. Manufacturers' Certification of Compliance.

D. Manufacturers' installation instructions, including any limitations on installation.

E. Operation, maintenance, and spare parts data.

1.04 DELIVERY, STORAGE, AND HANDLING

A. Preparation For Transport: Prepare valves for shipping as follows:

1. Ensure valves are dry and internally protected against rust and corrosion.

2. Protect valve ends against damage to threads, flange faces, and weld-end preps.

3. Set valves in best position for handling. Set globe and gate valves closed to prevent rattling; set ball and plug valves open to minimize exposure of functional surfaces; set butterfly valves closed or slightly open; and block swing check valves in either closed or open position.

B. Storage: Use the following precautions during storage:

1. Do not remove valve end protectors unless necessary for inspection; then reinstall for storage.

2. Protect valves from weather. Store valves indoors. Maintain valve temperature higher than the ambient dew point temperature. If outdoor storage is necessary, support valves off the ground or pavement in watertight enclosures.

C. Handling: Use a sling to handle valves whose size requires handling by crane or lift. Rig valves to avoid damage to exposed valve parts. Do not use hand wheels and stems as lifting or rigging points.

PART 2 - PRODUCTS

2.01 MANUFACTURERS

A. Manufacturer: Subject to compliance with requirements, provide products from one of the manufacturers listed in valve schedule.

2.02 VALVE FEATURES, GENERAL

A. Valve Design: Rising stem or rising outside screw and yoke stems.

B. Pressure and Temperature Ratings: As scheduled and required to suit system pressures and temperatures.

C. Sizes: Same size as upstream pipe, unless otherwise indicated.

D. Operators: Provide the following special operator features:

1. Hand wheels, fastened to valve stem, for valves other than quarter turn.

2. Lever handles, on quarter-turn valves 6-inch and smaller. Provide with square heads; provide one wrench for every valve.

3. Chain-wheel operators, for valves 2-1/2-inch and larger, installed 72 inches or higher above finished floor elevation. Extend chains to an elevation of 5'-0" above finished floor elevation.

E. Extended Stems: Where insulation is indicated or specified, provide extended stems arranged to receive insulation.

F. Bypass and Drain Connections: Comply with MSS SP-45 bypass and drain connections.

G. End Connections: As indicated in the valve specifications.

1. Threads: Comply with ANSI B1.20.1.

2. Flanges: Comply with ANSI B16.1 for cast iron, ANSI B16.5 for steel, and ANSI B16.24 for bronze valves.

3. Solder-Joint: Comply with ANSI B16.18.

a. Caution: Where soldered end connections are used, use solder having a melting point below 840 deg F for gate, globe, and check valves; below 421 deg F for ball valves.

2.03 BALL VALVES

A. Ball Valves, 1 Inch and Smaller: Rated for 150 psi saturated steam pressure, 400 psi WOG pressure; two-piece construction; with bronze body conforming to ASTM B 62, standard (or regular) port, chrome-plated brass ball, replaceable "Teflon" or "TFE" seats and seals, blowout-proof stem, and vinyl-covered steel handle. Provide solder ends for domestic hot and cold water service.

B. Ball Valves, 1-1/4-Inch to 2-Inch: Rated for 150 psi saturated steam pressure, 400 psi WOG pressure; 3-piece construction; with bronze body conforming to ASTM B 62, conventional port, chrome-plated brass ball, replaceable "Teflon" or "TFE" seats and seals, blowout proof stem, and vinyl-covered steel handle. Provide solder ends for domestic hot and cold water service.

2.04 BUTTERFLY VALVES

A. Butterfly Valves, 2-1/2-Inch and Larger: AWWA C-504. The valve body shall be cast iron conforming to ASTM A48, Class 40 or A 126, Class B. Ends shall be flanged. The disc shall be constructed of ASTM A 48, Class 40 cast iron for valves 12-inches and smaller and ASTM A 536, Grade 65-45-12 ductile cast iron for valves 14" and larger. The valve seat shall be BUNA-N or natural rubber and EPDM for air services.

2.05 CHECK VALVES

A. Swing Check Valves, 2-Inch and Smaller: MSS SP-80; Class 125, cast-bronze body and cap conforming to ASTM B 62; with horizontal swing, Y-pattern, and bronze disc; and having threaded or solder ends. Provide valves capable of being reground while the valve remains in the line.

Provide Class 150 valves meeting the above specifications, with threaded end connections, where system pressure requires or where Class 125 valves are not available.

B. Swing Check Valves, 2-1/2-Inch and Larger: AWWA C508 200 psi working pressure, cast iron body and bolted cap conforming to ASTM A 126, Class B; horizontal swing, stainless steel hinge pin, and bronze disc with bronze disc ring; and flanged ends. Provide valves capable of being refitted while the valve remains in the line. Valve shall be Cushion Swing Checks as manufactured by Golden-Anderson or equal.

C. Ball Check Valves, Horizontal or Vertical, Above Grade, Above or Below Grade Installations: cast iron ASTM-A-126-3 body Class 125 flanged ends with bolted cover for inspection and removal of ball. Interior housing shall allow free and unobstructed flow with no projections or pockets to trap solid material. Positive seating of ball shall be ensured without the use of

springs or other mechanical means. Ball shall be of cast iron ASTM-A-126-B construction, coated with vulcanized BUNA-N rubber. Valve shall be operable in the horizontal or vertical position and equipped with a sinking ball. Valve shall be capable of 150 psi working pressure. Valve shall be as manufactured by ITT FLYGT Model 5087 or equal.

2.06 VALVE BOXES

A. Required - Valve boxes are required on all buried valves.

B. Box - Two-piece, cast iron, slide type with 5-1/4" shafts, recessed cover, upper section and lower section, Clow F-2452, Mueller H. 10360 W/H-10361, or approved equal.

C. Cover - Cast in the cover the word, "WATER" or "SEWAGE", as applicable.

D. Seals - Seal valve box covers and each slide section to exclude surface water and the entrance of dirt. Use rubber "O" ring gaskets or a 5/8" rope impregnated with a non-hardening tar compound equal to E-Z Rise Seal Pack.

E. Spare Seals - Furnish spare seals in a quantity equal to 5% of the total number, or footage, used in the Work.

F. Coatings - Two coats of asphaltic varnish, inside and outside, applied by manufacturer.

G. Handles - Furnish one (1) operator handle at 7'-6" long.

2.07 PLUG VALVES

A. Valves shall be of the non-lubricated eccentric type equipped with resilient faced, balanced plugs and shall be furnished with end connections as shown on the plans.

B. Port area for valves less than 6" shall be at least 80% of full pipe area. Port areas of 6" and larger valves shall be at least 100% of full pipe area.

C. Valve bodies shall be of ASTM A126, Class B cast iron. All exposed nuts, bolts, springs, washers, etc. shall be zinc plated for corrosion resistance. Resilient plug facings shall be of Nitrile Butadiene suitable for use with septic sewage (hydrogen sulfide).

D. Valves shall be furnished with corrosive resistant seats. Seats in 3" and larger valves shall have a welded-in overlay of high nickel content on all surfaces containing the plug face.

E. Valves shall be furnished with replaceable, permanently lubricated, stainless steel sleeve-type bearings in the upper and lower journals.

F. Valve pressure ratings shall be as follows and shall be established by hydrostatic tests as specified by ANSI Standard B16.1-1976. Pressure ratings shall be 175 psi for valves through 12", 150 psi for valves in sizes 14" through 36". Valves shall provide drip-tight shutoff up to the full pressure ratings. Valves shall be capable of providing drip-tight shutoff up to the full valve rating with pressure in either direction.

G. Valve shaft seals, bearings and seats shall comply with applicable portions of AWWA C504 and 507.

H. Valves shall be as manufactured by DeZurik, or equal.

PART 3 - EXECUTION

3.01 EXAMINATION

A. Examine valve interior through the end ports for cleanliness, freedom from foreign matter, and corrosion. Remove special packing materials, such as blocks used to prevent disc movement during shipping and handling.

B. Actuate valve through an open-close and close-open cycle. Examine functionally significant features, such as guides and seats made accessible by such actuation. Following examination, return the valve closure member to the shipping position.

C. Examine threads on both the valve and the mating pipe for form (i.e., out-of-round or local indentation) and cleanliness.

D. Examine mating flange faces for conditions that might cause leakage. Check bolting for proper size, length, and material. Check gasket material for proper size, material composition suitable for service, and freedom from defects and damage.

E. Prior to valve installation, examine the piping for cleanliness, freedom from foreign materials, and proper alignment.

F. Replace defective valves with new valves.

3.02 VALVE ENDS SELECTION

A. Select valves with the following ends or types of pipe/tube connections:

1. Copper Tube Size, 2-Inch and Smaller: Solder ends.

2. Steel Pipe Sizes, 2-Inch and Smaller: threaded or flanged as shown on the Drawings.

3. Steel Pipe Sizes 2-1/2 Inch and Larger: Flanged.

3.03 VALVE INSTALLATIONS

A. General Application: Use gate, ball, and butterfly valves for shut-off duty; globe, ball, and butterfly for throttling duty. Refer to piping system specification sections and contract drawings for specific valve applications and arrangements.

B. Locate valves for easy access and provide separate support where necessary.

C. Install valves and unions for each fixture and item of equipment arranged to allow equipment removal without system shutdown. Unions are not required on flanged devices.

D. Install valves in horizontal piping with stem at or above the center of the pipe.

E. Install valves in a position to allow full stem movement.

F. Installation of Check Valves: Install for proper direction of flow as follows:

1. Swing Check Valves: Horizontal position with hinge pin level.

2. Ball Check Valves: Horizontal or vertical position, between flanges.

3.04 SOLDER CONNECTIONS

A. Cut tube square and to exact lengths.

B. Clean end of tube to depth of valve socket with steel wool, sand cloth, or a steel wire brush to a bright finish. Clean valve socket in same manner.

C. Apply proper soldering flux in an even coat to inside of valve socket and outside of tube.

D. Open gate and globe valves to fully open position.

E. Remove the cap and disc holder of swing check valves having composition discs.

F. Insert tube into valve socket, making sure the end rests against the shoulder inside valve. Rotate tube or valve slightly to ensure even distribution of the flux.

G. Apply heat evenly to outside of valve around joint until solder will melt upon contact. Feed solder until it completely fills the joint around tube. Avoid hot spots or overheating valve. Once the solder starts cooling, remove excess amounts around the joint with a cloth or brush.

3.05 THREADED CONNECTIONS

A. Note the internal length of threads in valve ends, and proximity of valve internal seat or wall, to determine how far pipe should be threaded into valve.

B. Align threads at point of assembly.

C. Apply appropriate tape or thread compound to the external pipe threads (except where dry seal threading is specified).

D. Assemble joint, wrench tight. Wrench on valve shall be on the valve end into which the pipe is being threaded.

3.06 FLANGED CONNECTIONS

A. Align flange surfaces parallel.

B. Assemble joints by sequencing bolt tightening to make initial contact of flanges and gaskets as flat and parallel as possible. Use suitable lubricants on bolt threads. Tighten bolts gradually and uniformly with a torque wrench.

C. For dead-end service, butterfly valves require flanges both upstream and downstream for proper shutoff and retention.

3.07 FIELD QUALITY CONTROL

A. Tests: After piping systems have been tested and put into service, but before final adjusting and balancing, inspect valves for leaks. Adjust or replace packing to stop leaks; replace valves if leak persists.

3.08 ADJUSTING AND CLEANING

A. Cleaning: Clean mill scale, grease, and protective coatings from exterior of valves and prepare valves to receive finish painting or insulation.

VALVE PRESSURE/TEMPERATURE CLASSIFICATION SCHEDULES
VALVE SCHEDULE

Gate Valves - 2 Inch and Smaller:

	THREADED		SOLDER	
MANUFACTURER	NRS	RS	NRS	RS
Crane	438	428	1701S	1700S
Grinnell	3000	3010	3000SJ	3010SJ
Hammond	IB645	IB640	IB647	IB635
Jenkins	370	47	1240	1242
Lunkenheimer	2129	2127	2133	2132
Milwaukee	105	148	115	1149
Nibco	T113	T111	S113	S111
Powell	507	500	1822	1821
Stockham	B103	B-100	B-104	B-108

Butterfly Valves - 2-1/2 Inch and Larger:

The following model number refers to AWWA C-504 butterfly valves:

MANUFACTURER	FLANGED	MECHANICAL JOINT
Clow	F-5365	F-5370

Ball Valves - 1 Inch and Smaller:

MANUFACTURER	THREADED ENDS	SOLDER ENDS
Conbraco (Apollo)	70-100	70-200
Crane	9302	9322
Grinnell	3500	3500SJ
Jenkins	900T	902T
Metraflex	IT	IS
Nibco	T-580	S-580
Stockham	S-216 BR-R-T	S-216 BR-R-S
Watts	B-6000	B-6001

Ball Valves - 1-1/4 Inch to 2 Inch:

MANUFACTURER	THREADED ENDS	SOLDER ENDS
Conbraco (Apollo)	82-100	82-200
Grinnell	3810	3810SJ
Nibco	T-590-Y	S-590-Y
Powell	4201R	x
Stockham	S-216 BR-R-T	S-216 BR-R-S
Watts	B-6800	B-6801

For grooved end connections, use Victaulic Series 721.

Swing Check Valves - 2 Inch and Smaller:

MANUFACTURER	CLASS 125 THREADED ENDS	SOLDER ENDS	CLASS 150 THREADED ENDS
Crane	37	1342	137
Grinnell	3300	3300SJ	3320
Hammond	IB940	IB941	IB946
Jenkins	92-A	1222	92-A
Lunkenheimer	2144	2145	230-70
Milwaukee	509	1509	510
Nibco	T-413	S-413	T-433
Powell	578	1825	596
Stockham	B-319	B-309	B-321

For grooved connections, use Victaulic Series 712.

Swing Check Valves - 2-1/2 Inch and Larger:

MANUFACTURER	175 PSI

Golden Anderson – Cushion Swing Check

END OF SECTION

NO TEXT
THIS PAGE WAS INTENTIONALLY LEFT BLANK

PART 1 – GENERAL

1.01 DESCRIPTION

A. Work covered by this Section includes the furnishing and installation of interior and exposed process valves and appurtenances where shown on the Drawings and specified herein.

B. Also included are underground valves and stops where shown on the Drawings and specified herein.

C. Related work specified elsewhere includes:

Pipe and Pipe Fittings Underground	02610
Underground Pressure Piping	02706
Pipe and Pipe Fittings - Exposed	15060

D. Provide all valves and auxiliary equipment required for complete and proper operation of all systems, whether or not they are specifically described.

1.01 RELATED DOCUMENTS

A. Requirements of the following Sections apply to this Section:

Pipe and Pipe Fittings – Exposed	15060
Piping Specialties	15080

1.02 SUMMARY

A. This section includes the following:

1. Horizontal-piping hangers and supports.
2. Vertical-piping clamps.
3. Hanger-rod attachments.
4. Building attachments.
5. Saddles and shields.
6. Spring hangers and supports.
7. Miscellaneous materials.
8. Pipe alignment guides.
9. Anchors.
10. Equipment supports.

1.03 DEFINITIONS

A. Terminology used in this section is defined in MSS SP-90.

1.04 SUBMITTALS

A. General: Submit the following in accordance with conditions of contract and Division 1 specification sections.

B. Product data, including installation instructions for each type of support and anchor. Submit pipe hanger and support schedule showing Manufacturer's figure number, size, location, and features for each required pipe hanger and support.

C. Product certificates signed by the manufacturer of hangers and supports certifying that their products meet the specified requirements.

D. Welder certificates signed be Contractor certifying that welders comply with requirements specified under "Quality Assurance" Article.

E. Maintenance data for supports and anchors for inclusion in Operating and Maintenance Manual specified in Division 1 and Division 15 Section "Basic Mechanical Requirements."

F. Submit detail of pipe support anchorage.

1.05 QUALITY ASSURANCE

A. Quality welding processes and welding operators in accordance with AWS D1.1 "Structural Welding Code - Steel."

1. Certify that each welder has satisfactorily passed AWS qualification tests for welding processes involved and, if pertinent, has undergone recertification.

B. Qualify welding processes and welding operators in accordance with ASME "Boiler and Pressure Vessel Code," Section IX, "Welding and Brazing Qualifications."

C. Regulatory Requirements: Comply with BOCA plumbing code pertaining to product materials and installation of supports and anchors.

PART 2 - PRODUCTS

2.01 MANUFACTURED UNITS

A. Hangers and support components shall be factory fabricated of materials, design, and manufacturer complying with MSS SP-58.

1. Components shall have galvanized coatings where installed for piping and equipment that will not have field-applied finish.

2. Pipe attachments shall have nonmetallic coating for electrolytic protection where attachments are in direct contact with copper tubing.

3. All pipe hangers and supports in process area shall be stainless steel class 316.

B. Thermal Hanger Shield Inserts: 100-psi average compressive strength, waterproofed calcium silicate, encased with a sheet metal shield. Insert and shield shall cover entire circumference of the pipe and shall be of length indicated by manufacturer for pipe size and thickness of insulation.

2.02 MISCELLANEOUS MATERIALS

A. Stainless Steel Plates, Shapes, and Bars type 304 unless directly exposed to sewage – type 316.

B. Cement Grout: Portland cement (ASTM C 150, Type I or Type III) and clean uniformly graded, natural sand (ASTM C 404, Size No. 2). Mix ratio shall be 1.0 part cement to 3.0 parts sand, by volume, with minimum amount of water required for placement and hydration.

C. Pipe Alignment Guides: Factory fabricated, of cast semisteel or heavy fabricated steel, consisting of bolted two-section outer cylinder and base with two-section guiding spider that bolts tightly to pipe. Length of guides shall be as recommended by manufacturer to allow indicated travel.

PART 3 - EXECUTION

3.01 EXAMINATION

A. Examine sub states and conditions under which supports and anchors are to be installed. Do not proceed with installing until unsatisfactory conditions have been corrected.

3.02 INSTALLATION OF HANGERS AND SUPPORTS

A. General: Install hangers, supports, clamps and attachments to support piping properly from structure; comply with MSS SP-69 and SP-89. Arrange for grouping of parallel runs of horizontal piping supported together on field-fabricated, heavy-duty trapeze hangers where possible. Install supports with maximum spacing complying with MSS SP-69. Where piping of various sizes is supported together by trapeze hangers, space hangers for smallest pipe size or install intermediate supports for smaller diameter pipe as specified above for individual pipe hangers.

B. Space attachments within maximum piping span length indicated in MSS SP-69. Install additional attachments at concentrated loads, including valves, flanges, guides, strainers, expansion joints, and at changes in direction of piping.

C. Install hangers and supports complete with necessary bolts, rods, nuts, washers, and other accessories.

D. Field-Fabricated, Heavy-Duty Steel Trapezes: Fabricate from steel shapes selected for loads required; weld steel in accordance with AWS D-1.1.

E. Install hangers and supports to allow controlled movement of piping systems, to permit freedom of movement between pipe anchors, and to facilitate action of expansion joints, expansion loops, expansion bends and similar units.

F. Load Distribution: Install hangers and supports so that piping live and dead loading and stresses from movement will not be transmitted to connected equipment.

G. Pipe Slopes: Install hangers and supports to provide indicated pipe slopes, and so that maximum pipe deflections allowed by ASME B31.9 Building Services Piping Code is not exceeded.

H. Insulated Piping: Comply with the following installation requirements.

1. Clamps: Attach clamps, including spacers (if any), to piping with clamps projecting through insulation; do not exceed pipe stresses allowed by ASME B31.9.

2. Saddles: Install protection saddles MSS Type 39 where insulation without vapor barrier is indicated. Fill interior voids with segments of insulation that match adjoining pipe insulation.

3. Shields: Install protective shields MSS Type 40 on cold water piping that has vapor barrier. Shields shall span an arc of 180 degrees and shall have dimensions in inches not less than the following:

NPS	LENGTH	THICKNESS
¼ THROUGH 3½	12	0.048
4	12	0.060
5 & 6	18	0.060
8 THROUGH 14	24	0.075
16 THROUGH 24	24	0.105

4. Pipes 8 inches and larger shall have wood inserts.

5. Insert material shall be at least as long as the protective shield.

6. Thermal Hanger Shields: Install where indicated, with insulation of same thickness as piping.

3.03 INSTALLATION OF ANCHORS

A. Install anchors at proper locations to prevent stresses from exceeding those permitted by ASME B31.9 and to prevent transfer of loading and stresses to connected equipment.

B. All high piping shall be supported as noted on the Drawings.

C. Fabricate and install anchors by welding steel shapes, plates, and bars to piping and to structure. Comply with ASME B31.9 and with AWS Standards D1.1.

D. Anchor Spacings: Install anchors at ends of principal pipe runs, at intermediate points in pipe runs between expansion loops and bends. Make provisions for preset of anchors as required to accommodate both expansion and contraction of piping.

3.04 INSTALLATION OF PIPE ALIGNMENT GUIDES

A. Install pipe alignment guides on piping that adjoins expansion joints and elsewhere as required.

B. Anchor to building substrate.

C. Equipment Bases: Unless otherwise noted, all equipment, panels and the like shall be set on concrete house keeping pads which are a minimum of 6" high and extend a minimum of 3" past the edge of the equipment.

3.05 EQUIPMENT SUPPORTS

A. Fabricate structural steel stands to suspend equipment from structure above or support equipment above floor.

B. Grouting: Place grout under supports for piping and equipment.

C. Equipment Bases: Unless otherwise noted, all equipment, panels and the like shall be set on concrete housekeeping pads which are a minimum of 6 inches high and extend a minimum of 3 inches past the edge of the equipment.

3.06 METAL FABRICATION

A. Cut, drill, and fit miscellaneous metal fabrications for pipe anchors and equipment supports. Install and align fabricated anchors in indicated locations.

B. Fit exposed connections together to form hairline joints. Field weld connections that cannot be shop welded because of shipping size limitations.

C. Field Welding: Comply with AWS D1.1 for procedures of manual shielded metal-arc welding, appearance and quality of welds made, methods used in correcting welding work, and the following:

1. Use materials and methods that minimize distortion and develop strength and corrosion resistance of base metals.

2. Obtain fusion without undercut or overlap.

3. Remove welding flux immediately.

4. Finish welds at exposed connections so that no roughness shows after finishing, and so that contours welded surfaces to match adjacent contours.

3.07 ADJUSTING

A. Hanger Adjustment: Adjust hangers to distribute loads equally on attachments and to achieve indicated slope of pipe.

B. Touch-up Painting: Immediately after erection of anchors and supports, clean field welds and abraded areas of shop paint and paint exposed areas with same material as used for shop painting to comply with SSPC-PA-1 requirements for touch-up of field-painting surfaces.

1. Apply by brush or spray to provide a minimum dry film thickness of 2.0 mils.

C. Touch-Up Painting: Cleaning and touch-up painting of field welds, bolted connections, and abraded areas of the shop paint on miscellaneous metal is specified in Division 9 section "Painting" of these specifications.

D. For galvanized surfaces clean welds bolted connections and abraded areas and apply galvanizing repair paint to comply with ASTM A 780.

END OF SECTION

NO TEXT
THIS PAGE WAS INTENTIONALLY LEFT BLANK

RESOLUTION OF APPROVAL FOR AREA VARIANCE

ZONING BOARD OF APPEALS
TOWN OF NORTH CASTLE

----------X

In the matter of the Application of

SUMMIT CLUB PARTNERS, LLC

----------X

WHEREAS, the applicant, SUMMIT CLUB PARTNERS, LLC, 570 Bedford Road, Armonk, NY 10504 and known on the Tax Assessment Map of the Town of North Castle as Section 101.02, Block 1, Lot 28.2 and located in the R2A Zoning District, has applied for the following variance from the provisions of the zoning code of the Town of North Castle. In order to obtain site plan approval for 73 residential units, the applicant is requesting the following variance:

Section 355-15-G(1)(a) of the Town Code where the maximum fence height permitted is 6 feet and ten feet are proposed for the tennis courts, requiring a variance of 4 feet.

WHEREAS, prior to the hearing, members of the Board of Appeals conducted an inspection of the premises and surrounding neighborhood; and whereas on August 4, 2022 the Board conducted a duly noticed public hearing on the application, at which time all interested parties had the opportunity to be heard; and

WHEREAS, The Zoning Board of Appeals was referred this variance from the Planning Board of the Town of North Castle by letter dated July 12, 2022 as part of the record.

WHEREAS, the applicant has submitted proof of proper notice to nearby property owners required to receive notice thereof:

NOW, THEREFORE, the Board of Appeals makes the following findings:

1. The requested activity is a Type 2 action under the State Environmental Quality Review Act.

2. The variance is not substantial.

3. That the effect of any increased population density which may thus be produced upon available services facilities is not significant.

4. There will be no substantial change to the character of the neighborhood nor a substantial detriment to adjoining properties.

5 That the difficulty cannot be alleviated by some other method feasible for the applicant to pursue.

6. That in view of the manner in which the difficulty arose and considering all of the above factors, the `interests of justice will be served by allowing the variance.

7. That the variance would not cause adverse aesthetic, environmental or ecological impacts on the property or on the surrounding area.

NOW, THEREFORE, BE IT RESOLVED, that the application for relief by the granting of the variance from the requirements of the Zoning Code of the Town of North Castle is hereby granted.

Motion by: **LESTER BERKELHAMER**

Seconded by: **ROBERT GREER**

LESTER BERKELHAMER	**voting YES**
JOSEPH MONTICELLI	**voting YES**
SCOTT STOPNIK	**voting YES**
ROBERT GREER	**voting YES**
JOHN STIPO	**voting YES**

THERE BEING FIVE (5) VOTES IN FAVOR, THE RESOLUTION IS GRANTED BY ORDER OF THE BOARD OF APPEALS.

DATED: 10/9/22

Joseph Monticelli, Chairman

Gerald Reilly, Esq.

I HEREBY CERTIFY this to be a true copy of a resolution approved by the vote of the Zoning Board of Appeals of the Town of North Castle at a meeting held on August 4, , 2022 at the Town Hall, 15 Bedford Road, Armonk, New York.

Lori J. Zawacki, Secretary

LASBERG CONSTRUCTION
ASSOCIATES, INC.

SUMMIT CLUB
ARMONK, N.Y.
BLASTING PLAN
OCTOBER 21, 2022

INTRODUCTION:

This Blasting Plan describes the blasting operations that may occur during construction of the Summit Club Project. The purpose of this Blasting Plan is to provide project-specific information concerning blasting procedures, including the safe use and storage of explosives, and the measures and best management practices (BMPs) that will be implemented to prevent potential adverse impacts to human health, safety, and the environment from the use of explosives during blasting activities.

The exact scope of blasting to be undertaken and quantities of rock is undetermined at this time. This Report will be updated as required upon receipt of the forthcoming additional subsurface investigation and the hiring of a licensed Blasting Subcontractor.

REGULATORY OVERVIEW:

The project shall comply with all conditions within this plan as well all requirements and regulations included in Part ll Chapter 122 of the Town of North Castle Code. The project shall also comply with all Federal Occupational Safety and Health Administration (OSHA) and Federal Bureau of Alcohol, Tobacco, and Firearms (BATF) regulations regarding the use and storage of explosives.

As there may be conflicts between the laws and regulations governing the use and storage of explosives, the project will comply with the most stringent provisions.

LOCATION:

Blasting will occur primarily at terrain where rock is encountered below grade, where it cannot be removed with traditional excavation and earth moving equipment. It is anticipated that rock will be encountered in various areas throughout the project where excavation is required for the installation of building foundations and utilities.

PROCEDURES:

The project shall contract with a qualified, experienced, and licensed blasting contractor to perform the work. The Blasting Contractor shall use current and professionally accepted methods, products, and procedures to maximize safety during blasting operations. Blasting procedures will be carried out according to and in compliance with applicable laws, and will be closely monitored by the Project Construction Manager, Lasberg Construction Associates, Inc. as well as the project Geotechnical Engineer, Carlin Simpson Associates.

Blasting procedures will be conducted according to the following four basic principles:

1. The blast will produce fractured rock of appropriate dimensions.
2. The blast will prevent/minimize production of flyrock and air blast hazards.
3. The blast will minimize peak particle velocities.
4. The blast will be scaled/sized to minimize overblasting.

The project shall provide a description of all structures and utilities, residential dwellings, garages, tennis courts, etc. within 500' of the blast site.

The Blasting Contractor shall furnish the Town of North Castle with a Certificate of Insurance issued by a company to do business in the Ste of New York in accordance with Town requirements. Additionally, the Blasting Contractor shall provide the Town with an Indemnification and Hold Harmless Agreements.

Notices shall be sent to all property owners within 500' of the blast site.

Blasting shall only occur between the hours of 8:00 AM and 5:00 PM Monday through Saturday. No blasting shall be conducted on Sunday and Federal holidays.

SAFETY MEASURES:

Safe storage and use of explosive materials will be a top priority during construction. The project will conduct pre-blast surveys of all structures within 500 feet and will employ the services of a testing lab to monitor the vibration seismic impacts at all times when blasting operations are being conducted.

All personnel responsible for handling explosives and present in and around blasting sites will be fully informed and trained in applicable safety precautions/procedures.

The Blasting Contractor shall use a signaling system to alert workers of an impending blast. The signaling system will be comprised of the following components:

1. Warning Signal: 5 minutes prior to the blasting signal, a 1-minute series of long, audible signals will be sounded at the blast site.
2. Blasting Signal: 1 minute prior to a blast, a series of short, audible signals will be sounded at the blast site.
3. All-clear Signal: Following inspection of the blast area, a prolonged, audible signal will be sounded at the blast site.

Signage shall be posted at key access points to ensure the public does not accidently enter a blast zone. Before blasting, the Blasting Supervisor will make sure the blasting area is clear. Following detonation, the blasting area will be inspected for undetonated or misfired explosives. Once the area has been inspected, the "all-clear" signal will sound.

Blasting mats shall be used to prevent flyrock from exiting the blast area.

MISCELLANEOUS:

- Rock Hammering: At various stages of the project the size, location and quantity of rock may require the use of a pneumatic chipping hammer. All rock hammering shall be conducted in accordance of the Town of North Castle Code.

- Upon contracting with a Blasting Contractor, the project shall revise this Plan as required.

END

LASBERG CONSTRUCTION
ASSOCIATES, INC.

SUMMIT CLUB
ARMONK, N.Y.
PRELIMINARY ROCK CRUSHING PLAN
OCTOBER 21, 2022

INTRODUCTION:

This Rock Crushing Plan describes the crushing operations that may occur during construction of the Summit Club Project. The purpose of this Crushing Plan is to provide project-specific information concerning crushing procedures, including the measures and best management practices (BMPs) that will be implemented to prevent potential adverse impacts to human health, safety, and the environment during crushing activities.

The exact scope of crushing to be undertaken and quantities of rock is undetermined at this time. This plan will be updated as required upon receipt of the forthcoming additional subsurface investigation and the hiring of a Site Contractor.

REGULATORY OVERVIEW:

The project shall comply with all conditions within this plan as well all requirements and regulations included in the Town of North Castle Code. The project shall also comply with all Federal Occupational Safety and Health Administration (OSHA).

As there may be conflicts between the laws and regulations governing the use and storage of explosives, the project will comply with the most stringent provisions.

LOCATION:

Rock crushing will occur in close proximity to where rock removal is conducted, and approximately as depicted on the attached "Preliminary Rock Crushing Plan" dated 10-21-22.

DURATION AND HOURS OF OPERATION:

Rock crushing shall be conducted between the hours of 8:00 AM and 5:00 PM Monday through Saturday. No rock crushing shall take place on Sunday of federal holidays. The duration of the rock crushing activity shall be further defined upon receipt of additional sub surface information.

PROCEDURES:

Blasted rock shall be stockpiled in a segregated area near the crusher. Once process through the crusher, the processed rock shall be neatly stockpile for future use. During the crushing operation, the site contractor shall use dust containment measures to limit the amount of dust dispersed into the air.

SUMMIT CLUB
Armonk, New York
PRELIMINARY ROCK CRUSHING PLAN

LASBERG CONSTRUCTION ASSOCIATES, INC.

Crusher

Precrush Stockpile

Crushed Stockpile

PROPOSED BUILDING NO. 3 – 12 UNITS (REFER TO PLANS PREPARED BY GRANOFF ARCHITECTS) (GARAGE PARKING SPACES: 24 STANDARD & 1 ACCESSIBLE) FFE 640.05 GARAGE 629.05

PROPOSED BUILDING NO. 4 – 12 UNITS (REFER TO PLANS PREPARED BY GRANOFF ARCHITECTS) (GARAGE PARKING SPACES: 24 STANDARD & 1 ACCESSIBLE) FFE 640.05 GARAGE 629.05

PROPOSED BUILDING NO. 5 – 12 UNITS (REFER TO PLANS PREPARED BY GRANOFF ARCHITECTS) (GARAGE PARKING SPACES: 24 STANDARD & 1 ACCESSIBLE) FFE 647.10 GARAGE 636.10

PROPOSED BUILDING NO. 6 – 12 UNITS (REFER TO PLANS PREPARED BY GRANOFF ARCHITECTS) (GARAGE PARKING SPACES: 24 STANDARD & 1 ACCESSIBLE) FFE 647.10 GARAGE 636.10

PROPOSED 2.5:1 SLOPE

ROAD B

BEDFORD ROAD (NEW YORK STATE ROUTE 22)

PROPOSED TOTAL LIMIT OF DISTURBANCE (±801,547 S.F. ±18.4 AC.) (INCLUDES TRENCHING TO WATER SUPPLY WELLS)

PROPOSED 2.5:1 SLOPE OR STEEPER ROCK FACE AS COORDINATED WITH GEOTECHNICAL ENGINEER.

N/F COHEN
DEED CN 402901416
SECTION 2 BLOCK 8 TAX LOT 5-2
LOT 7
FM 13842

N/F NDOCAJ
DEED CN 502423090
SECTION 2 BLOCK 8 TAX LOT 5-1
LOT 8
FM 13842

MATCHLINE A–A

SARA RICHELSON
17 EVERGREEN DRIVE

LEGEND

- EXISTING PROPERTY LINE
- ADJACENT PROPERTY LINE
- EXISTING EASEMENT LINE
- EXISTING WETLAND LINE AND DELINEATION (WF-63, WF-64, WF-65)
- EXISTING BUILDING OVERHANG
- EXISTING BUILDING LINE
- EXISTING PAVEMENT EDGE
- EXISTING CURB LINE
- EXISTING CONTOUR
- EXISTING INDEX CONTOUR
- EXISTING STONE WALL
- EXISTING RETAINING WALL
- EXISTING GUIDE RAIL
- EXISTING FENCE
- EXISTING DRAIN INLET
- EXISTING MANHOLE
- EXISTING UTILITY POLE
- EXISTING LIGHT POLE
- EXISTING SIGN
- PROPOSED BUILDING LINE
- PROPOSED CONCRETE CURB
- PROPOSED CONCRETE SIDEWALK
- PROPOSED DROP CURB AND RAMP
- 200 PROPOSED FINISHED GRADE
- 191.00+ PROPOSED SPOT GRADE
- SMH PROPOSED SANITARY SEWER MANHOLE
- MH PROPOSED STORM DRAIN MANHOLE
- CI PROPOSED TYPE CI DRAIN INLET
- DI PROPOSED TYPE DI DRAIN INLET
- PROPOSED HEADWALL
- OCS PROPOSED SUBSURFACE DRAINAGE OUTLET CONTROL STRUCTURE
- PROPOSED RETAINING WALL (DESIGN BY OTHERS)
- DP-2 BORING LOCATION AND DESIGNATION
- PROPOSED LIMIT OF DISTURBANCE

NOTES:

1. EXISTING CONDITIONS DEPICTED ON THIS PLAN HAVE BEEN TAKEN FROM SURVEY TITLED, "TOPOGRAPHIC MAP," PREPARED BY JMC, LAST REVISED 03/06/2013, SUPPLEMENTED WITH AN UPDATED SURVEY LAST REVISED 01/17/2022. PORTIONS OF EXISTING TOPOGRAPHY HAVE BEEN PROVIDED BY WESTCHESTER COUNTY GIS.
2. GEOTECHNICAL BORING/TEST PIT LOCATIONS DEPICTED ON THIS PLAN WERE TAKEN FROM THE GEOTECHNICAL REPORT ENTITLED, "REPORT ON SUBSURFACE SOIL AND FOUNDATION INVESTIGATION", DATED 10/16/2013, PREPARED BY CARLIN–SIMPSON & ASSOCIATES.
3. ALL STORMWATER MANAGEMENT PRACTICES SHALL REMAIN UNDISTURBED AND BE PROTECTED FROM HEAVY MACHINERY TRAFFIC DURING CONSTRUCTION. HOWEVER DURING CONSTRUCTION OF THE PRACTICE THE CONTRACTOR SHALL MINIMIZE AND AVOID HEAVY MACHINERY TRAFFIC TO THE MAXIMUM EXTENT PRACTICABLE. THERE SHALL BE NO STORAGE OF MATERIALS WITHIN AREAS TO BE USED FOR STORMWATER MANAGEMENT PRACTICES. THE CONTRACTOR SHALL INSTALL CONSTRUCTION FENCE AROUND THE PRACTICE TO DISCOURAGE VEHICLE TRAFFIC.

(PROPOSED GRADE) +TW BW +FW (PROPOSED GRADE)

RETAINING WALL SPOT GRADE LEGEND

CUT & FILL ANALYSIS		
	REQUIRED CUT (CUBIC YARDS)	REQUIRED FILL (CUBIC YARDS)
OVERALL	52,900	48,000
PHASE 1	29,200	35,400
PHASE 2	17,000	11,400
PHASE 3	6,700	1,200

10/21/22

No.	Revision	Date	By
1.	RESPONSE TO TOWN COMMENTS	01/11/2021	NC
2.	RESPONSE TO TOWN COMMENTS	03/08/2021	NC
3.	RESPONSE TO TOWN COMMENTS	06/14/2021	NC
4.	RESPONSE TO TOWN COMMENTS	01/10/2022	NC
5.	RESPONSE TO TOWN COMMENTS	03/08/2022	NC
6.	RESPONSE TO TOWN COMMENTS	05/09/2022	NC

Revised Edition Obsolete

APPLICANT/OWNER:
SUMMIT CLUB PARTNERS, LLC
568 BEDFORD ROAD (NY–22)
ARMONK, NY 10504

ARCHITECT:
GRANOFF ARCHITECTS
330 RAILROAD AVENUE
GREENWICH, CT 06830

JMC Planning, Engineering, Landscape Architecture & Land Surveying, PLLC
JMC Site Development Consultants, LLC
John Meyer Consulting, Inc.
120 BEDFORD ROAD • ARMONK, NY 10504
voice 914.273.5225 • fax 914.273.2102
www.jmcpllc.com

JMC

SITE GRADING PLAN (NORTH)

THE SUMMIT CLUB AT ARMONK (RESIDENTIAL PHASE)
568 & 570 BEDFORD ROAD (NY–22)
TOWN OF NORTH CASTLE, NEW YORK

ANY ALTERATION OF PLANS, SPECIFICATIONS, PLATS AND REPORTS BEARING THE SEAL OF A LICENSED PROFESSIONAL ENGINEER OR LICENSED LAND SURVEYOR IS A VIOLATION OF SECTION 7209 OF THE NEW YORK STATE EDUCATION LAW, EXCEPT AS PROVIDED FOR BY SECTION 7209, SUBSECTION 2.

APPROVED BY TOWN OF NORTH CASTLE PLANNING BOARD RESOLUTION, DATED _____

_____ DATE: _____
CHRISTOPHER CARTHY, CHAIRMAN,
TOWN OF NORTH CASTLE PLANNING BOARD

ENGINEERING DRAWINGS REVIEWED BY TOWN CONSULTING ENGINEER

_____ DATE: _____
JOSEPH M. CERMELE, P.E.
KELLARD SESSIONS CONSULTING, P.C.
CONSULTING TOWN ENGINEER

Drawn:	NC	Approved:	AG
Scale:	1" = 30'		
Date:	11/23/2020		
Project No:	20101		
20101-GRADING	GRAD NORTH	GRAD.scr	
Drawing No:	C–201		

NOT FOR CONSTRUCTION

COPYRIGHT © 2022 by JMC - All rights Reserved. No part of this document may be reproduced, stored in a retrieval system, or transmitted in any form or by means, electronic, mechanical, photocopying, recording, or otherwise without the prior written permission of JMC. Any modifications or alterations to this document without the prior written permission of JMC shall render them void and unusable.